01.04-10/1/2000-02022

Final
Expanded Preliminary Assessment/ Site Investigation
U.S. Naval Ammunition Storage Detachment
Vieques Island, Puerto Rico
VOLUME II - APPENDICES

Prepared for

Department of the Navy
Atlantic Division
Naval Facilities Engineering Command

Under the
LANTDIV CLEAN II Program
Contract No. N62470-95-D-6007
CTO-031

Prepared by

CH2MHILL

Tampa, Florida

October2000

February 25, 2000

Mr. Miguel A. Maldanado Negrón
Chief, CORE & RPM Divisions
Environmental Quality Board
National Bank Plaza
431 Ponce de Leon Avenue
Hato Rey, PR 00917

Subject: Draft No Further Response Action Planned – Decision Document, Sites 1, 2, and 3, Naval Ammunition Support Department, Vieques Island, U. S. Naval Station Roosevelt Roads

Dear Mr. Maldanado:

This letter has been prepared to provide responses to the Environmental Quality Board's comments on the above-referenced Draft No Further Response Action Planned document, which were contained in the Board's letter dated December 31, 1996 (copy attached) to Ms. Madeline Rivera, Director, Environmental Engineering Division at U. S. Naval Station Roosevelt Roads.

The comments and responses are presented below.

1. *Comment (Page 1 [1st page 1], Paragraphs 1 and 2): Editorial comments.*

   Response: Concur

2. *Comment (Page 1 [2nd page 1], Paragraph 2): Editorial comments.*

   Response: Concur

3. *Comment (Page 1 [2nd page 1], Paragraph 3, 2nd sentence): Add the word "Military" at the beginning of the sentence.*

   Response: Concur

4. *Comment (Page 1 [2nd page 1], Paragraph 3, 1st sentence): Confusing – Is it 30,800 total acres or 53,400 total acres, of which 22,600 acres are located on Vieques Island? Please specify.*

   Response: This sentence will be revised to indicate that the Navy owns a total of 22,600 acres on the Island of Vieques, including approximately 8,000 acres on the western tip of the island that is occupied by the Naval Ammunition Support Department (NASD), where Sites 1, 2, and 3 are located.

5. *Comment (Page 1 [2nd page 1], Paragraph 4,1st sentence): Please be more specific. What is the distance between Site 1 and the probable point of entry (PPE) in the quebrada? What is the name of the quebrada? What is the distance between the PPE and the mouth of the quebrada in the sea?*

   Response: This sentence will be expanded to provide the following information:

   - The distance between Site 1 and the PPE in the quebrada is approximately 50 feet.
   - The quebrada is unnamed.
   - The distance between the PPE and the mouth of the quebrada is approximately 2,500 feet. A more accurate estimate of this estimate will be developed in an expanded Preliminary Assessment/Site Investigation to be completed by August 2000.

6. *Comment (Page 2, Paragraph 2, 2nd sentence): Is this road the same as Route 70 (Dirt road shown in Figure 3)? If so, change the text so it could be in accordance with the maps.*

   Response: North Shore Road is the same as Route 200. The text and Figure 3 will be modified so that the designations of the road will be consistent.

7. *Comment (Page 2, Paragraph 2, 3rd sentence): Is this bridge (Laguna Kiani Bridge) the same as the metal bridge shown in Figure 3? See our request above.*

   Response: The Laguna Kiani Bridge is the same bridge designated as the metal bridge shown in Figure 3. Figure 3 will be modified to identify the bridge as the Laguna Kiani Bridge.

8. *Comment (Page 2, Paragraph 3, 1st sentence): A map of this site (Site 3) and its surroundings is not provided. Please do so.*

   A map of Site 3 will be provided.

9. *Comment (Page 2, Paragraph 4): Please indicate if there are any threatened or endangered species or sensitive environments protected by the Puerto Rico Department of Natural Resources nearby (i.e., Laguna El Pobre, Laguna Kiani, mangrove swamp, etc.).*

   Response: An expanded PA/SI, which will include an ecological risk assessment, will be performed by August 2000. The assessment will address the presence of any threatened or endangered species or sensitive environments protected by the Puerto Rico Department of Natural Resources nearby.

10. *Comment (Page 2, Paragraph 5): What about onsite workers or military personnel? What is the distance to the nearest resident?*

    Response: An expanded PA/SI, which will include a human health risk assessment, will be performed by August 2000. The assessment will address the presence of onsite

workers and military personnel relative to Site 3, as well as the distance to the nearest resident.

11. *Comment (Page 2, Paragraph 7): Please indicate their location (six groundwater supply wells on NASD) on a map. Was this information (presence of six water supply wells on NASD) taken into consideration for the PRE score and the HRS packages.*

    Response: A map will be provided showing the location of the six water supply wells on NASD, providing the information is available. The six water supply wells on NASD were not considered in the HRS ranking because the wells have been closed.

12. *Comment (Page 3, Paragraph 1): It is not clear or specified if these six wells (six water supply wells on NASD) are still in use or on standby status. Please specify.*

    Response: The six supply wells have been closed.

13. *Comment (Page 3, Paragraph 3, last sentence): Editorial comment.*

    Response: Concur

14. *Comment (Page 4, Paragraph 1, 1st sentence): Should it (drones) read drums? State what a drone is.*

    The text will be expanded to explain that a drone is a remote controlled aircraft that is used for target practice in military training exercises.

15. *Comment (Page 4, Paragraph 1, last sentence): This sentence is only a speculation. Please provide documentation that will support this claim.*

    Response: The text will be expanded to include documentation regarding the reactions between mixed-amine fuel (MAF) and inhibited red fuming nitric acid (IRFNA) resulting in inert byproducts.

16. *Comment (Page 4, Paragraphs 3-5): Please provide a copy of all these previous investigations. Please provide a copy of these results (results of EPA's Hazard Ranking System).*

    Response: A copy of the Initial Assessment Study (Naval Energy and Environmental Support Activity, September 1984), Confirmation Study (Environmental Science and Engineering, April 1988), and Preliminary Assessment/Site Investigation (Baker Environmental, Inc., October 1992), including the results of EPA's Hazard Ranking System, will be provided to the Puerto Rico Environmental Quality Board.

17. *Comment (Page 5, last paragraph): Please wait until the Puerto Rico Environmental Quality Board (PREQB) indicates that this document (NFRAP Decision Document) is complete and agrees with the NFRAP decisions before doing so (Issuance of public notice in local newspapers).*

    Response: Concur

18. *Comment (Page 6, Paragraphs 1 and 3): Editorial comments.*

    Response: Concur

19. *Comment (Page 7, Paragraph 3): Considering the site history, explain why the samples not tested for total metals (i.e., organic)?*

    Response: An expanded PA/SI will be performed that will include additional soil sampling at Site 1 for the CERCLA Target Analyte List (TAL), which will include total metals. The expanded PA/SI will be completed by August 2000.

20. *Comment (Page 7, Paragraph 5): Action level of 2 mg/kg in soil was exceeded. Please explain why (no additional soil and sediment sampling was performed at Site 1 during the second round of the Confirmation Study)?*

    Response: An expanded PA/SI will be performed that will include additional soil sampling at Site 1 for the TAL (including total chromium). The total chromium concentrations in the soil will be re-assessed during the expanded PA/SI, which will be completed by August 2000.

21. *Comment (Page 8, Paragraphs 2 and 3): The results (sediment and soil sampling results for total chromium and lead) are high enough to warrant a Toxicity Characteristic Leaching Procedure (TCLP). Please explain the rationale for not performing it to the samples taken. See Table 1 of 40 CFR Part 261.24 (enclosed). According to this Table, an extract of only 5 mg/L for both chromium and lead is enough to equal the Maximum Regulatory Level.*

    Response: The regulatory intent of the TCLP is to determine if a solid waste is a characteristic hazardous waste, whereby if a solid waste is determined to be a TCLP characteristic hazardous waste, it must be managed in accordance with the hazardous waste management regulations contained in 40 CFR Parts 264/265. The toxicity characteristic regulations (40 CFR Part 261.24) do not apply to the assessment of potential environmental contamination and the potential human health and ecological risks posed by environmental contamination.

    An expanded PA/SI of Site 3 will be performed to re-assess potential chromium and lead contamination at the site, and the expanded PA/SI will also include a human health and ecological risk assessment. If the results of the expanded PA/SI indicate that the contaminant concentrations do not exceed applicable criteria, and/or do not pose a significant risk to human health or the environment, the site will be recommended for NFRAP.

    In the event that significant contaminant concentrations are detected in the soil and/or sediment at Site 3 during the expanded PA/SI, and excavation and removal of these materials are determined to be the approved remedial action, then TCLP testing of these materials will be performed to determine the proper disposal method for these materials.

22. *Comment (Page 8, Paragraph 3, 3rd sentence): Speculation. Please refer to comments on page 4.*

    Response: The text will be expanded to provide documentation concerning the chemical reactions of the fuel components disposed at Site 3, which would result in the release of the contaminants in a gaseous state to the atmosphere or formation of inert byproducts.

23. *Comment (Page 9, Paragraphs 4 and 5): Why were groundwater samples taken from monitoring wells installed during the Confirmation Study instead of the six (6) potable water wells inside the NASD mentioned on pages 2 and 3? Please explain the rationale for doing so if, according to the HRS, only targets or receptors should be considered?*

    Please specify which (metals are commonly found in paint).

    Response: The six water supply wells at NASD have been closed. The groundwater monitoring wells were installed and sampled to assess potential groundwater contamination, which may migrate to nearby surface waters as potential receptors.

    Metals commonly found in paint include lead and chromium.

24. *Comment Page 9, last paragraph): Are these surface water areas (lagoons surrounding Site 1) used for swimming?*

    Response: No, the lagoons surrounding Site 1 are not used for swimming.

25. *Comment (Page 11, Paragraph 2, last sentence): Please explain why no ecological assessment of risks has been conducted at Sites 1, 2, and 3, if twenty-one species are on, or proposed for inclusion on, the federal list of endangered and threatened species list in the NASD area.*

    Response: An expanded PA/SI, including an ecological risk assessment of the sites on NASD, will be performed by August 2000.

26. *Comment (Page 11, Section titled "Data Analysis and Risk Assessment): Please provide copies of all the sampling analytical results and validation reports (e.g., all lab results with data qualifiers, CLP lab used, and the name of the chemist validating the results)*

    Response: This information will be provided.

27. *Comment (Page 11, Paragraph 1, 1st bullet): Since Puerto Rico and its territories are within EPA's Region II, only guidances from this Region should be used or referenced. Please explain why a guidance from Region II was not used instead?*

    Response: EPA Region II does not provide any guidance or risk based criteria for evaluating potentially contaminated sites, and EPA Region II has delegated regulatory authority for the NASD sites to PREQB. An expanded PA/SI will be performed and we propose that the sampling data be evaluated relative to EPA Region III and IV risk based criteria for soil and groundwater. The expanded PA/SI will be completed by August 2000.

28. *Comment (Page 11, Paragraph 4): Which metals (concentrations detected at the NASD sites were compared with concentrations found in more than 400 soil samples collected on Vieques Island by the U. S. Geological Survey (USGS) between 1970 and 1991 (Marsh 1992)?*

    Please provide a copy of the reference of Marsh 1992.

    Response: Chromium and lead were the metals that were detected in the soil at Sites 1 and 2, and the detected concentrations for these metals were compared to the concentrations detected in background samples collected by the USGS.

    A copy of the Marsh 1992 reference will be provided to PREQB.

29. *Comment (Page 12, Paragraphs 2 and 4): See comment on previous page (page 11 - regarding the use of EPA Region III guidance when Puerto Rico and its territories are in EPA Region II).*

    Response: EPA Region II does not provide any guidance or risk based criteria for evaluating potentially contaminated sites, and EPA Region II has delegated regulatory authority for the NASD sites to PREQB. An expanded PA/SI will be performed and we propose that the sampling data be evaluated relative to EPA Region III and IV risk based criteria for soil and groundwater. The expanded PA/SI will be completed by August 2000.

30. *Comment (Page 13, Paragraph 2): Speculation. Please refer to comments on pages 4 and 8.*

    Response: The text will be expanded to provide documentation concerning the chemical reactions of the fuel components disposed at Site 3, which would result in the release of the contaminants in a gaseous state to the atmosphere or formation of inert byproducts.

    In addition, an expanded PA/SI will be performed at Site 3 to assess potential contamination and the expanded PA/SI will be completed by August 2000. The sampling results will allow a definitive evaluation of potential contamination at Site 3.

31. *Comment (Page 12, Paragraph 4): Why were the background samples <u>not</u> taken from existing or newly installed wells on Vieques? Please provide the depth at which the (background) samples at Puerto Rico and Vieques were taken. Were the samples filtered or unfiltered?*

    Response: Background groundwater samples were not collected from wells on Vieques during the Confirmation Study. The U.S. EPA sampled three PRASA operated wells on September 27 and 28, 1999. The three wells are typically used during emergency situations (e.g. hurricanes) when there are interuptions in the normal water supply from the pipeline that runs from the mainland to Vieques. PRASA informed EPA on December 3, 1999 that these wells are permanently closed. Two private wells located on the north and south coast of Vieques were also tested. Additional background wells have been installed along the western perimeter of Camp Garcia. Data from all of these wells will be available as background for future investigations. Well depth and sampling information (filtered/unfiltered) will be provided.

An expanded PA/SI of the sites on NASD will be performed and the background well sampling data on Vieques mentioned above will be used in the evaluation of groundwater sampling data collected from the NASD sites during the expanded PA/SI, which will be completed by August 2000.

32. *Comment (Page 14, Paragraph 2, 4th sentence): Please use another word (other than slightly) since total chromium concentration is 5 times above MCL and 2 ½ times above background. The word "slightly" is definitely misleading.*

    Response: This discussion will be replaced with a discussion of new groundwater sampling data to be collected in an expanded PA/SI, to be completed by August 2000. We propose that the new groundwater sampling data be evaluated relative to EPA Regions III and IV risk based criteria for soil and groundwater (in the absence of EPA Region II criteria).

33. *Comment (Page 14, Paragraph 2, last sentence): Please explain this claim that "Concentrations of all four metals were within the same order of magnitude as the background concentrations."*

    Response: This paragraph will be replaced with a discussion of new groundwater sampling data to be collected as part of an expanded PA/SI, to be completed by August 2000. We propose that the new groundwater sampling data be evaluated relative to EPA Regions III and IV risk based criteria for groundwater (in the absence of EPA Region II criteria).

34. *Comment (Page 16, Paragraph 1): Speculation. Please refer to comments on pages 4, 8, and 13.*

    Response: The text will be expanded to provide documentation concerning the chemical reactions of the fuel components disposed at Site 3, which would result in the release of the contaminants in a gaseous state to the atmosphere or formation of inert byproducts.

    In addition, an expanded PA/SI will be performed at Site 3 to assess potential contamination and the expanded PA/SI will be completed by August 2000. The sampling results will allow a definitive evaluation of potential contamination at Site 3.

35. *Comment (Page 16, Paragraph 2): In order to make this claim, a TCLP must be performed. Refer to comments on page 8.*

    Response: The regulatory intent of the TCLP is to determine if a solid waste is a characteristic hazardous waste, whereby if a solid waste is determined to be a TCLP characteristic hazardous waste, it must be managed in accordance with the hazardous waste management regulations contained in 40 CFR Parts 264/265. The toxicity characteristic regulations (40 CFR Part 261.24) do not apply to the assessment of potential environmental contamination and the potential human health and ecological risks posed by environmental contamination.

An expanded PA/SI of the NASD sites will be performed to re-assess potential contamination at the sites, and the expanded PA/SI will also include a human health and ecological risk assessment. If the results of the expanded PA/SI indicate that the contaminant concentrations do not exceed applicable criteria, and/or do not pose a significant risk to human health or the environment, the site will be recommended for NFRAP.

In the event that significant contaminant concentrations are detected in the soil and/or sediment at the sites during the expanded PA/SI, and excavation and removal of these materials are determined to be the approved remedial action, then TCLP testing of these materials will be performed to determine the proper disposal method for these materials.

36. *Comment (Page 16, Paragraph 2, 3rd sentence): What about trespassers (as mentioned under "Receptors" on page 10)? Are children not a concern?*

    Response: An expanded PA/SI, which will include a human health risk assessment, will be performed for the NASD sites. The expanded PA/SI will be completed by August 2000, and the human health risk assessment will address all reasonable potential exposures that may occur at the sites.

We hope that you find that these responses adequately address your comments. We recognize, however, that many of our responses refer to the planned expanded PA/SI as a future means to provide additional information to more adequately address your comments. We will work diligently to ensure that the expanded PA/SI will achieve this goal.

To this end, we will be submitting the Workplan for the Expanded PA/SI in mid March 2000 for your review and approval. We would greatly appreciate your expedited review of the Workplan so that we can initiate and complete the Expanded PA/SI as quickly as possible. We are committed to work on a fast-track basis with the goal of reaching resolution of all of the sites on NASD so that the facility can be turned over to the Commonwealth of Puerto Rico by December 31, 2000 (in keeping with deadline agreed to between President Clinton and Governor Rosello).

If you have any questions regarding these responses, please contact me.

Sincerely,

LANTDIV

Chris Penny
Naval Technical Representative

APPENDIX A

Responses to Comments from EPA and EQB

April 7, 2000

Helen Shannon
USEPA Region II
Federal Facilities Section
290 Broadway
New York, NY 10007-1866

Subject: Response to Comments on Work Plan for Expanded PA/SI at NASD Vieques

Dear Helen:

Presented below are the response to USEPA comments on the draft work plan for the expanded PA/SI at NASD Vieques, Puerto Rico. The first group of comments was received from you via e-mail on March 16, 2000. A second group of comments from Nicoletta Diforte was received via e-mail on March 20, 2000. A final general comment was received from you via e-mail on March 21, 2000. Responses to each comment are listed in italics.

Comments from Helen Shannon on March 16, 2000

I. General

1. Inconsistencies were found between the draft work plan and the March 2nd presentation. CERCLA Process Naval Ammunition Support Department document (e.g., eco/human risk assessment is not mentioned in the workplan, explosives sampling). Specifics are discussed below.

Response: *Sections on ecological surveys and risk assessment have been added to the Final Work Plan. Explosives were added to the analyte list for SWMU-04 Inactive Waste Explosive Open Burn Area and SWMU-06.*

2. The work plan should discuss the ecological survey and the Qualitative Ecological and Human Health Risk Assessment which the Navy has stated will be done in the March 2 aforementioned document. This should be discussed at the beginning of the workplan (e.g., Introduction section). A schedule discussing when these assessments will be conducted as well as when documents will be prepared should be given.

Response: *See response to comment no. 1 above. Qualitative Ecological and Human Health Risk Assessments have been included in the Final Work Plan. The schedule for field activities and reporting is included in Section 6 of the Work Plan.*

II. Specific Comments

A. SWMU-04 - Inactive Waste Explosive Open Burn Area

1. Explosives should be included in the sampling. Please add this in the work plan.

Response: *Explosives have been added to the analyte list for SWMU-04.*

B. SWMU 5- IRFNA/MAF 4 Disposal Site

1. Under Sampling Rationale: As per March 2 document, the work plan should specify the # of surface and subsurface soil samples for the ditch that will be taken.

Response: *The Final Work Plan specifies that four soil borings will be completed at SWMU- 05. At each soil boring one suface soil and four subsurface soil samples will be collected from the ditch.*

C. SWMU 14 - Wash Rack Area

1. The 1988 RFA (RCRA Facility Assessment) recommends sampling of the "unlined ditch" which discharges water from the unit. As per our phone conference, please briefly discuss the strategy on sampling of ditches based on proximity of other waste units.

Response: *Fifteen surface soil samples will be collected from the unlined ditches which drain the area from SWMU-14, SWMU-15, AOC-E, AOC-F, and AOC-C. Surface soil and subsurface soil samples will be collected in the immediate vicinity of the Wash Rack (SWMU 14) to differentiate contamination by SWMU-14 from other sources of contamination. The utilities, including storm drains will be mapped using surface geophysics.*

D. SWMU 15 - Waste Transportation Vehicle Area

1. Per our phone conference, please indicate that the drums are no longer on site and have been properly disposed.

Response: *Text has been added to the Work Plan which indicates that the drums are no longer on site and were shipped to Naval Station Roosevelt Roads (NSRR) for proper disposal.*

E. UIC - Septic System Site

1. Please indicate the depth of the tank and the rationale for selecting sampling depths of the subsurface soil samples.

Response: *The sampling plan for the septic tank investigation was initially developed by the PREQB. The depth of the tank is approximately 4 feet. Subsurface soil samples will be collected at 5, 10, 15, 20, and 25 feet to delineate the vertical extent of contamination, if any, within the soils. In addition, groundwater monitoring wells will be installed to assess groundwater quality impacts..*

F. Site 2016 UST AOCE

1. The 3 proposed new well locations do not appear to all be downgradient of the UST as indicated in the text. Please correct this accordingly in the text.

Response: *Figure 2-12 in the Work Plan has been revised to show two proposed wells downgradient and one proposed well cross-gradient. The text has also been revised appropriately.*

2. Sampling parameters are not indicated in the work plan (e.g., TAL, TCL). (The March 2 document did indicate this.) Please correct this in the work plan.

Response: *The Work Plan has been revised to show the sampling parameters for AOC-E, which include the TAL, TCL lists.*

Comments from Nicoletta Diforte on March 21, 2000

General -

- the depth for collecting surface soils should be stated.
- ***Response:*** *Surface soil samples will be collected from zero to six inches.*

- A rationale should be provided for terminating sampling at 5 feet. A justification should be provided for not analyzing samples through the entire depth.
- ***Response:*** *This is a preliminary assessment. If contamination is found at a depth of five feet, additional sampling will be conducted. Additional sampling will be conducted as part of a second phase of investigation for the preliminary assessment. The results of this investigation will determine which sites can be recommended for no further action and which sites will require additional investigations through the CERCLA process.*

- Consideration should be given to analyzing some percentage of samples with depth. Field screening techniques should also be considered to determine what sample depths will be analyzed (e.g., visual contamination, OVA readings, etc.)
Response: *The soil samples will be field screened with an organic vapor meter (OVM). Samples with the highest OVM reading or the most visual contamination will*

be analyzed.

- Low flow groundwater sample collection methods should be considered, if background metals are an issue.
  Response: *Low-flow groundwater sampling methods will be used where applicable. The depth to water in most areas of the NASD is greater than 25 feet. At these depths to water, a peristaltic pump cannot be used. Low-flow submersible pumps with the lowest flow setting will be used for groundwater sampling where the depth to groundwater is greater than 25 feet.*

- Where wells are already installed, groundwater flow diagrams should be provided to verify that the wells are truly downgradient.
  Response: *Groundwater flow maps will be developed at the sites where groundwater monitoring wells are installed..*

Section 1 - Include a brief discussion of all the SWMUs & AOC identified in the RFA and why some are not being addressed in this work plan (e.g., the RFA said sampling was not needed).
Response: *A brief discussion about why some SWMUs are not addressed in this work plan was added to Section 2.*

Section 2.1.3 - Include explosives in the list of parameters to be analyzed.
Response: *Explosives has been added to the parameter list for SWMU-04 and SWMU-06.*

Section 2.2.3 - Use of vapor sampling field techniques to determine if there is volatile contamination in the vadose zone, or if LNAPL may be present should be considered. Based on the photograph, it seems that the entire area where the release occurred is not being sampled. The areal extent should be expanded. Do the analyses include chemicals that are specific to the fuels released (e.g., amine fuels, nitric acid, nitrogen-containing compounds)? If not, expand the list of parameters. The spring should be resampled to ensure a concurrent, complete data set.
Response: *The most likely area affected by the release is being sampled. The release occurred in 1975 (25 years ago). The fuel was reportedly discharged to the adjacent quebrada. The most likely release area is the ditch (shown in the photograph) which drains the area from Bldg. 422 towards the quebrada. The spring is not in the same drainage basin as the quebrada and therefore was not proposed to be sampled. According to the Final Preliminary Assessment Report for Sites 1,2,3(October, 1992), the spring used by the Cooperative de Cos Ganaderos is located 2,000 feet downgradient of the drainage divide separating the spring's groundwater system from the groundwater system where fuel materials were disposed.*

Section 2.5.1 - The narrative gives the impression that waste paints and solvents are still being disposed of on a monthly basis in this area.

Response: *The text of the work plan has been modified. Waste paints and solvents are no longer disposed of in this area. Furthermore, the site inspection did not identify areas where paints or solvents were disposed of. Waste paints and solvents are transported to NSRR for proper disposal.*

Section 2.7.3 - Provide an explanation of why no subsurface soil samples are being collected. Verify that Napalm constituents are included in the analyses. The discussion mentions groundwater samples, but there is no discussion of well placement. Please revise.
Response: *The text of the work plan has been modified. The constituents of napalm include fuel and gel and are included in the current parameter list. The fuel is highly volatile and most likely evaporated and/or biodegraded before migrating through the clayey surface soils. However, a downgradient monitoring well will be installed to assess if assess if any fuel has impacted the groundwater..*

Section 2.10 - Was the UST work done under EQB oversight? If so, provide a discussion.
Response: *The text of the work plan has been modified. The UST work was completed under EQB oversight. A report titled "Site Characterization Report for Site 2016" was submitted to EQB in August 1998.*

Comments received from Helen Shannon on March 21, 2000

In the Introduction section of the WP, it would be helpful to have a little more background with regard to Western Vieques. Specifically, something should be mentioned that the Navy did a Preliminary Assessment and Site Investigation which EPA evaluated for HRS purposes and that the site did not score for the National Priorities List (NPL). Also, state that the Work Plan includes areas that need further investigation before the property can be transferred to the PR government as mandated by the President.

Response: *The Introduction section of the work plan has been modified to address the above comments.*

Sincerely,

LANTDIV

Chris Penny
Navy Technical Representative

TPA\Document1

Response to EPA Review Comments on the Draft Master Quality Assurance Plan and Work Plan, May 2000

For
Naval Ammunition Support Detachment
Vieques Island, Puerto Rico
Master Work Plan, QAPP, FSP, DMP, IDW, and SOPS
May 2000 (Comments received via e-mail from EPA on 6/6/00)

By
CH2M HILL

General Comments

1. *1. Any and all deviations to the Work Plan/QAPP/FSP should be reported to the appropriate contacts of the Puerto Rico Environmental Quality Board, U.S. EPA, Department of the Navy and CH2M HILL.*

Response:

Any deviation to the Work Plan/QAPP/FSP will be reported to the Puerto Rico Environmental Quality Board (EQB) and U.S. EPA.

2. *2.Verify that the analytical methods proposed will address all of the known contaminants of concern, defined by historic site activity. Perchlorate should be added to the list of analytes for this site since there has been prior use or storage of waste munitions, fuels, propellants, loose powder and primers (e.g., SWMU-04 and SWMU-06).*

Response:

The analytical methods covers all known contaminants of concern based on the most current knowledge of historical site activities. Perchlorate has been added to the analytical list for SMWU-4, SWMU-6, and SWMU-7 to investigate the potential presence of UXOs based on each site's historic activities.

Master Work Plan - Project Management Plan

3. *1. Subsection 2.1.1 SWMU 04 - Inactive Waste Explosive Open Burn/Detonation Range, page 2-1: See General Comment #2 above.*

Response:

Comment noted and addressed in response number 2.

4. *2. Subsection 2.1.3 SWMU 06 - Mangrove Disposal Site, page 2-3: See General Comment #2 above.*

Response:

Comment noted and addressed in response number 2.

5. *3. Subsection 2.1.5 SWMU 10 - Waste Paint and Solvents Disposal Site, page 2-3: It should be clarified why groundwater will not be characterized at this location.*

Response:

The groundwater was not investigated at this site because contamination of this media is not suspected. The presence of a confining layer of silt and clay soils at the surface within the investigation area surrounding the paint storage shed has ruled out the potential migration of waste paint and solvents to the underlying groundwater. The approximate depth to groundwater is 36 feet which was obtained from nearby wells in the public works area.

6. *4. Subsection 2.1.9 AOC E - UST Site 2016, page 2-4: It is indicated in this section that this location will be resampled to determine the extent of benzene contamination due to the exceedances of PREQB soil and groundwater target levels. Since this area is a known waste oil tank site, it is recommended that metals, volatile organic compounds (VOCs), and semi-volatile organic compounds (SVOCs) be added to the list of analytes for this AOC.*

Response:

The samples will be analyzed for metals, volatile organic compounds (VOCs), and semi-volatile organic compounds (SVOCs). In addition, pesticides and PCBs will also be analyzed.

7. *5. Section 2.2 Data Management, page 2-5: It is stated in this Section that analytical results will be validated by CH2M HILL subcontractors in accordance EPA Region 3 guidance.*

7a. *a. In lieu of using the National Functional Guidelines for Organic and Inorganic Data Review and EPA Region 3 Data Validation (DV) guidance, the data validation protocols preferred are those developed by Region 2. The regional SOPs are more detailed and define specific acceptance/performance criteria as well as subsequent qualifier codes applicable to organic and inorganic data. For those methods that do not have a corresponding DV SOP developed by Region 2, the QA/QC criteria provided in the method should be used. The QAPP should state the criteria and corresponding actions to be employed if acceptance criteria are not met. The Region 2 protocols can be found at:* http://www.epa.gov/region02/smb/sops.htm

Response:

The data validation will be conducted in accordance with EPA Region 2 guidance.

7b. *b. Use of the regional data validation procedures requires examination of the organic and inorganic sample raw data (e.g., chromatograms, spectra, quant reports, and instrument print-outs).*

Response:

Data validation will be provided of all laboratory data by CH2M HILL's subcontractor, Heartland.

8. *3. Provide information regarding the subcontractor data validation company to be employed. This is to include the company name and qualifications of those personnel involved in this project.*

Response:

Data validation will be provided of all laboratory data by CH2M HILL's subcontractor. The specific qualifications of the data validation subcontractor will be provided.

9. *6. Section 2.3 Assessment of Risks, page 2-6: It is recommended that all aspects of this project and sections of the master project plans pertaining to the human health risk assessment be submitted to an EPA Region 2 Risk Assessor for review and comment. All aspects of this project and sections of the master project plans pertaining to the ecological risk assessment should be submitted to the EPA Region 2 Biological Technical Assistance Group for review and comment.*

   It is indicated in Section 2.3 that a qualitative human health and ecological risk assessment will be conducted following the applicable guidance. However, the guidance documents referenced in this section are generally used for quantitative risk assessments. Clarification is needed as to how the qualitative risk assessment will be conducted. In addition a detailed description of the qualitative risk assessment process should be provided in the plan.

Response:

Human health risk assessment aspects of this project will be forwarded to the Region 2 Federal Facilities Project Managers for the NASD site for review and comment. Ecological risk assessment aspects of this project will be forwarded to the Region 2 Federal Facilities Project Managers for the NASD site for review and comment. The qualitative risk assessment for this project will consist of a screening of laboratory data to EPA Region 3 Risk Based Criteria (RBCs) and to background concentrations. Due to the extremely tight schedule for this project, procedures for the risk based screening will be included in the draft Expanded PA/SI report.

10. *7.T he U.S. EPA Exposure Factors Handbook was last updated in 1997. The reference to this document should be revised.*

Response:

The reference will be updated.

11. *8. Prior to conducting the dermal exposure assessment, contact a Region 2 Risk Assessor for the most recent update of the dermal exposure assessment guidance (Risk Assessment Guidance for Superfund (RAGS), Part E, Interim Final.*

Response:

If a dermal exposure assessment is required, a Region 2 Risk Assessor will be contacted.

Master Field Sampling Plan

12. *1. Subsection 2.1.1 Field Measurements, page 2-1: Oxidation reduction potential should be added to the list of field measurement parameters when conducting groundwater sampling.*

Response:

The oxidation reduction potential (ORP) will be added to this section and will be measured in the field during the groundwater sampling activities.

13. *2. Subsection 2.1.5 Surface Water Sampling, page 2-5: It is recommended that surface water samples be preserved after collection of the sample or collected in a separate container and then transferred to the sample container to ensure that the preservative is not rinsed from the sample container during collection. For volatile organic samples, the surface water sample should be collected in a glass container and then transferred to the sample vial containing the preservative.*

The sample pH must be checked immediately after sample collection to ensure that the sample is preserved properly. Samples collected for volatile organic analysis should be checked on a separate aliquot (test vial).

Response:

All surface water samples will be collected in a separate clean glass container provided by the laboratory and transferred to the appropriate sample container. This method will ensure no loss of preservative from the sample container. Sample pH will be checked to ensure proper preservation is attained according to the respective method.

13. *3. Table 2-1, Required Containers, Preservatives and Holding Times for Water Samples: It should be noted that amber glass sample containers are used for the collection of SVOCs and Pesticides/PCBs. This table should be revised to indicate the proper glassware.*

Response:

The table will be revised to state that amber glass containers will be used for the collection of SVOCs, pesticides, and PCBs.

14. *4. Sections 2.6 and 2.8 Surface and Subsurface Soil Sampling, pages 2-8 and 2-9: A detailed description of the procedure to be used for the collection of soil samples for volatile organic analysis should be specified or referenced in these sections. For example, several SOPs were submitted for the collection of soil samples (Soil Sampling, Shallow Soil Sampling and Soil Sampling for VOCs Using the EnCore□ Sampler). In addition, it is indicated in Table 3-2 of the Work Plan that soil/sediment samples will be collected using the Encore□ sampler. It should be clarified when and where each of the procedures specified in the SOPs will be used. It is recommended that soils samples for volatile organic analysis be collected using the EnCore□/similar type sampler or using field preservation methods as prescribed in SW-846 Method 5035.*

Response:

Specific field procedures will be discussed with the field team members prior to collecting soil samples. The EnCore™ sampler will be used to collect the VOC fraction

for all soil samples except in cases where fluid sediments are encountered. Also, the EnCore™ method will be referenced in the text.

16. *5. Table 2-2, Required Containers, Preservatives and Holding Times for Soil and Sediment: Clarify the appropriate sample container and preservative to be used for soil and sediment samples collected for volatile organic analysis. See comment #4 above.*

Response:

The table will be revised to specify the use of En Core™ sample containers for soil and sediment samples for volatile organic analysis.

6. Section 2.9 Monitoring Well Installation, page 2-9:

17. *1. The record keeping process to document the construction, installation, development, testing and maintenance of the monitoring well network should be incorporated into the plan.*

Response:

All monitoring well installation activities will be recorded in the field notebook. A specific field notebook will be developed with field forms, boring log forms, well development forms, a construction log, and a sampling log for each well.

18. *2. Figures for each SWMU and AOC with the proposed monitoring well locations should be provided.*

Response:

Figures will be provided for each SWMU and AOC with the proposed monitoring well locations.

19. *7. Subsection 2.9.1 Monitoring Well Construction, page 2-10: It was recommended in this section that the monitoring wells be constructed of 4-inch diameter Polyvinyl Chloride (PVC) casing and screen. It is stated in the Work Plan that VOCs are a concern at this site, therefore, stainless steel may be indicated as the necessary casing and screen construction material since it is durable and essentially inert if organic contaminant concentrations are detected.*

Stainless steel may react with acidic or saline groundwater, therefore, pH and conductivity data collected during the groundwater screening/sample collection should be thoroughly reviewed. The rationale for using PVC well casing and screen versus stainless steel should be provided.

Response:

Monitoring wells will be constructed of 2-inch diameter PVC casing and screen which should adequately address any site concerns regarding VOCs. The proximity of the SWMU's to the nearby ocean and potential acidity concerns with the presence of mineral soils provide sufficient justification for adhering to PVC well construction material.

19. *8. Subsection 2.9.2 Monitoring Well Development, page 2-11: Specify the measurement criteria (nephelometric turbidity unit (NTU)) to be used during the well development procedure.*

Response:

Temperature, pH, and conductivity will be measured during well development. Turbidity will be measured at the end of well development and will not serve as a criterion for final well development.

20. *9. Section 2.10 Monitoring Well Abandonment, page 2-11: Clarify why the well abandonment procedures will be conducted in accordance with the District of Columbia requirements since the site is located in Puerto Rico.*

Response:

Well abandonment will be conducted in accordance with Puerto Rico Environmental Quality Board and U.S. Navy requirements, whichever is applicable.

22. *10. Section 2.11 Groundwater Sampling from Monitoring Wells, page 2-12: It is recommended that all groundwater monitoring well sample collection procedures including: purging; stabilization of monitoring parameters; sample collection; and decontamination of equipment should be conducted in accordance with EPA Region II Groundwater Sampling Procedure, Low Stress (Low Flow) Purging and Sampling, March 1998. This SOP can be found at the following Website: http://www.epa.gov/region2/smb/sops.htm.*

Using the EPA Region II Ground water Sampling Procedure (Low Flow) SOP, March 1998 should eliminate the need to filter groundwater samples.

Response:

Low flow purging and sampling methods in accordance with EPA groundwater sampling SOP will be used for collection of groundwater from the monitoring wells.

23. *11. Section 2.18 Land Surveying, page 2-15: It should be clarified why surveying activities will be conducted by a qualified surveying subcontractor licensed in the District of Columbia since the site is located in Puerto Rico.*

Response:

All surveying activities will be reviewed by a professional land surveyor licensed in Puerto Rico.

24. *12. Section 3.2 Sample Shipping Procedures, page 3-2: It is recommended that all bottles be prepared in accordance with the OSWER Directive 9240,0-05A "Specifications and Guidance for Contaminant-Free Sample Containers."*

It should be clarified whether custody seals will be used on each sample container to prevent tampering.

Response:

All sample containers will be prepared by the laboratory and will be contaminant free. Custody seals will be used on all the sample coolers to prevent tampering during shipment and during storage of samples.

Quality Assurance Project Plan

24. *1. Section 4.1 High Level DQOs, page 4-1: It is indicated in this section that a qualitative human health and ecological risk assessment will be conducted. It is recommended that all aspects of this project and sections of the master project plans pertaining to the human health and ecological risk assessments be submitted to an EPA Region 2 Risk Assessor and the EPA Region 2 Biological Technical Assistance Group for review and comment.*

Response:

All aspects pertaining to human health and ecological risk assessments will be submitted to an EPA Region 2 Risk Assessor and the EPA Region 2 Biological Technical Assistance Group for review and comment.

25. *2. Section 4.4 ARARs, page 4-5: Clarify the use of the Region III Risk Based Criteria in Table 4-2 and Region 4 Ecological Risk Assessment Bulletins (supplement to RAGS) in Table 4-3, as these criteria may not be appropriate since the site is located on Vieques Island, Puerto Rico within Region 2.*

Response:

Region 3 Risk Based Criteria are appropriate for Vieques Island, Puerto Rico. The Region 3 criteria are currently being used for Roosevelt Roads Naval Station, Puerto Rico and have been accepted by EPA Region 2 for risk assessment work in Puerto Rico.

26. *3. Section 7.1 Field Equipment Calibration, page 7-1: Field Equipment calibration logs should be maintained on site. Reference standards used in the field for instrument calibration should be labeled with an expiration date and recorded in the log. This information would be checked during a field audit.*

Response:

A field log book will be kept onsite in which all calibration records will be kept. The calibration reference standard lot numbers and expiration dates will also be recorded during field calibration of the instruments in the log book.

27. *4. Section 8.0 Analytical Procedures, page 8-1: The laboratory's qualifications (i.e. Laboratory Quality Assurance Plan (LQAP), certifications, SOPs for the analytical methods to be performed, performance evaluation (PE) sample results, etc.) should be*

provided in the Plan. LQAPs should be provided for those laboratories providing analytical services for this project. Only those LQAPs that pertain to the current analytical services, including the relevant SOPs need be provided. It is recommended that, at a minimum, the selected laboratory be required to demonstrate their capability to perform the required analyses by submitting current State certifications and/or recent documentation of acceptable analysis of Performance Evaluation (PE) samples (within the past 6 months). The certifications and/or PE samples must be specific to the analysis and media required for this project.

Response:

Appropriate laboratory certifications and/or PE samples will be submitted.

29. *5. Table 8-1 of the QAPP should be revised to indicate the most current CLP Statement of Work and/or SW-846 analytical methods as follows:*

Analysis	***Methodology***
Organophosphorus pesticides	*SW-846 Method 8141A*
Chlorinated Herbicides	*SW-846 Method 8151A*
Corrosivity	*SW-846 Method 9040B*
Reactivity	*SW-846 Method 9010B (cyanide distillation) and 9030B (acid soluble/insoluble sulfides)*
TCL VOCs,SVOCs,Pesticides and PCBs	*U.S. EPA CLP SOW OLM04.2*
TAL Metals	*U.S. EPA CLP SOW ILM04.1*

Response:

Table 8-1 will be revised to incorporate the above information.

Master Data Management Plan

30. *In accordance with Region 2 policy, all data (except that used for screening purposes) must be validated. The specific data validation (DV) SOPs which will be used should be provided. It is recommended that the USEPA Region 2, Data Validation SOPs be used to the extent applicable. These can be found at the following Website: http://www.epa.gov/region2/smb/sops.htm. For those methods that do not have a corresponding DV SOP developed by Region 2, the QA/QC criteria provided in the method should be used. The QAPP should state the criteria and corresponding actions to be employed if acceptance criteria are not met.*

Response:

The EPA Region 2 data validation SOPs will be used, where appropriate.

Master Investigation-Derived Waste (IDW) Management Plan

31. *1. Section 2.2 Liquid IDW, page 2-3: It is stated in this section that "If groundwater is extracted from a background location where contamination is not expected, or if previous investigations have confirmed that contamination does not exist at the site, the groundwater will not be contained during field activities." It is recommended that all IDW liquids, including those from background locations be contained in the appropriate containers, sealed labeled and properly stored on site until groundwater analytical results are obtained and it is determined that contaminant concentrations were not detected or are below the ARARs. Discharging groundwater to the ground surface may require permission from local authorities.*

Response:

All IDW material (solid or liquid) will be contained and drummed until the results from the laboratory analyses will become available. No discharge to the ground surface will occur without a full analysis of the data and permission from local authorities.

32. *2. Section 3.1 Minimization of IDW Volume, page 3-1: It is stated that IDW soil generated during trenching activities will be used to backfill the excavation. A contingency plan should be provided if contaminated soils are encountered during these activities.*

Response:

All IDW soils generated will be contained until laboratory analyses have been completed. The laboratory data (hazardous or nonhazardous) will determine the fate of the soil generated during trenching activities. Any hazardous soil will be drummed and disposed via a waste management contractor with the proper manifestation logs.

Attachment 2, CH2M HILL Standard Operating Procedures (SOPs)

33. *An SOP for documentation and records (e.g., field notebooks, sample logs, calibration logs) should be provided in this attachment.*

Response:

An SOP for documentation and records will be provided.

34. *1. SOP Field Filtering, page 9.4-1: Using the EPA Region II Groundwater Sampling (Low Flow) SOP, March 1998 should eliminate the need to filter groundwater samples in the field.*

Response:

Low flow techniques will be employed for the collection of ground water. The use of filters will be determined in the field depending on the site conditions.

35. *2. SOP Direct-Push Groundwater Sample Collection, page 6.2-1: If the method described in this SOP should fail, additional direct push methods (e.g., Hydropunch® samplers, well points) should be provided as a contingency.*

Response:

Other direct push methods will described as a contingency should the provided method fail.

36. *3. SOP Low-Flow Groundwater Sampling from Monitoring Wells, page 6.3-1: It is recommended that all groundwater monitoring well sample collection procedures including: purging; stabilization of monitoring parameters; and sample collection should be conducted in accordance with EPA Region II Ground water Sampling Procedure, Low Stress (Low Flow) Purging and Sampling, March 1998. This SOP can be found at the following Website:* http://www.epa.gov/region2/smb/sops.htm.

Response:

Low flow techniques will be employed for the collection of ground water activities.

4. SOP Decontamination of Drilling Rigs and Equipment, page 10.1-1:

37. *1. Use of a 10% nitric acid solution is recommended for use in decontaminating equipment when inorganic parameters are of concern. Similarly, when collecting samples undergoing organic analyses, an acetone only or methanol followed by hexane rinse is recommended.*

Response:

A nitric acid rinse will be performed of all non-stainless steel equipment used for collecting samples on future field sampling activities. These comments were received on June 2, 2000, after the initial phase of field work (April 1 – May 5, 2000) was completed. Similarly, an appropriate organic solvent will be used to rinse all equipment used for collecting organic sample fractions for future field work.

38. *b.The specific decontamination procedures for all sampling equipment should be better described in this SOP.*

The required decontamination procedures for all sampling equipment are as follows:

1. *Wash and scrub with a tap water and low phosphate detergent*
2. *Tap water rinse*
3. *Rinse with 10% HNO_3, ultrapure*
4. *Tap water rinse*

5. *An acetone only or a methanol followed by hexane rinse (solvents must be pesticide grade or better)*
6. *Thorough rinse with deionized demonstrated analyte free water*
7. *Air dry, and*
8. *Wrap in aluminum foil for storage or transport.*

Response:

This decontamination procedure will be added to rinse all sampling equipment prior to collection of samples for future sampling events.

39. *3. Records verifying the use of analyte free water should be available on site and kept in the project files.*

Response:

Records such as brand name and lot number of the analyte free water used will be kept in the field log.

40. *5. SOP Soil Sampling for VOCs Using the EnCore□ Sampler, page 4.8-1: It is recommended that the attached procedure (Procedures For Collecting Samples When Using EnCore□ Samplers for Analysis Through the USEPA Contact Laboratory Program) be used when collecting soil samples using the EnCore□ sampler for volatile organic analysis. Volume requirements should be verified with the selected laboratory.*

Response:

The EnCore™ sampler will be used to collect soil samples destined for organic analyses.

COMMENTS FOR THE NAVAL AMMUNITION SUPPORT DETACHMENT
DRAFT MASTER QUALITY ASSURANCE PROJECT PLAN
DRAFT WORK PLAN
MARCH 2000

General Comments

Several references are made throughout these documents to the Master Work Plan, Standard Operating Procedures, Appendices to the Master Work Plan, the Master Sampling and Analysis Plan, the Master Field Sampling Plan. These documents were not submitted for review with the Work Plan or QAPP. Therefore, any reference made to these documents regarding sampling, analytical and data validation procedures could not be verified for their appropriateness.

Response:
The entire draft Master Work Plan will be submitted May 5, 2000. This document includes the Project Management Plan, Field Sampling Plan, Quality Assurance Project Plan, Data Management Plan, Investigative Derived Waste Management Plan, Health and Safety Plan, Checklists, and Standard Operating Procedures.

It is stated in Section 1.0 of the QAPP that all field sampling and laboratory analyses will be conducted in accordance with the Navy Installation Restoration Laboratory Quality Assurance Guide, Interim Guidance Document (NFESC, February 1996). Since this document was not included with the submittal, we could not verify compliance with the 1999 Interim Final QA/R-5, *EPA Requirements For QAPPs For Environmental Data Operations*, which defines the current EPA requirements for QAPPs. Guidance on preparing QAPPs may be found in a companion document, 1998 QA/G-5, *EPA Guidance For QAPPs*. Both of these reference documents can be found on the EPA Internet address (http://es.epa.gov/ncerqa/qa/qa_docs.html)

The routine elements of a Quality Assurance Project Plan, specified in EPA QA/R-5 (interim final 11/99) are as follows:

-Project/Task Organization
-Problem Definition/Background
-Project/Task Description
-Quality Objectives ans Criteria for Measurement Data
-Special Training Requirements/Certifications
-Documentation and Records
-Sampling Process Design
-Sampling Methods Requirements
-Sample handling and Custody Requirements
-Analytical Methods Requirements
-QC Requirements

-Instrument/Equipment Testing, Inspection and Maintenance Requirements
-Inspection/Acceptance Requirements for Supplies and Consumables
-Data Acquisition Requirements
-Data Quality Management
-Assessments and Response Actions
-Reports to Management
-Data Review, validation, and Verification Requirements
-Validation and Verification Methods
-Reconciliation with User Requirements.

Only those elements listed above which differ from that specified in the previously submitted QAPP need be addressed.

Response:
The QAPP has been modified to include all of the elements listed in the above outline.

The QAPP is to contain the names, titles, and dated signatures of approving officials from those organizations involved in this activity. In addition, a distribution list containing the individuals and their organizations who will receive a copy of the approved QAPP (and any subsequent modifications) should be provided. This is to include all field personnel involved in sampling and/or on-site analysis.

Response:
The names, titles, and dated signatures of approving officials have been added to the QAPP. A distribution list has been added to the QAPP. Copies will be provided to all field personnel.

The individuals included in the Organizational Chart (Figure 3-1) of the QAPP should be named and their responsibilities clearly defined.

Response:
Figure 3-1 has been modified to include the names of individuals listed in the organizational chart. A description of each position and their responsibility has been added to the QAPP.

Each SWMU specific SAP should reference the pertinent sampling, analytical and data validation SOPs for the activities to be performed at each SWMU.

A discussion of the acceptance and performance criteria (DQOs) as applicable to the project specific action levels or ARARs should be incorporated into the plan. In addition, a tabular presentation of the ARARs should be included. Ensure that laboratory analytical methods selected will be appropriate when comparing the ARARs to method reporting limits. In this instance, it will be necessary to use low concentration methods in order to comply with drinking water standards.

Any and all deviations to the Work Plan/QAPP/FSP should be reported to the appropriate contacts of the Puerto Rico Environmental Quality Board, U.S. EPA, Department of the Navy and CH2MHILL.

Sampling Comments

Ensure that the specifics of drilling methods, well construction procedures, sampling procedures, and analytical methods are provided in the documents referenced in this Work Plan and QAPP.

Prior to implementing the sampling program, verify that the analytical methods proposed will address all of the known contaminants of concern, defined by historic site activity and all of the materials known to have been disposed of or burned on this site.

When collecting groundwater samples, EPA recommends following the 3/16/98 Region 2 Low Stress (Low Flow) Groundwater Sampling SOP. This SOP can be located at the web site listed in comment #6 above.

It is indicated in Table 3-2 of the Work Plan that soil/sediment samples will be collected using the Encore™ sampler. The SOP for using Encore™ samplers should be included in the QAPP or Master SAP.

Duplicate soil samples collected for volatile organic analysis should be collected as collocated samples. These samples are not to be homogenized or split.

Reference standards used in the field for instrument calibration should be labeled with an expiration date and recorded in the log. This information would be checked during a field audit.

Records verifying the use of analyte free water for trip blanks should be available on site.

Region 2 requires use of temperature blanks in coolers to verify that the samples have been maintained at 4°C. The temperature blank should consist of a sample container filled with non-preserved water (potable or distilled) and included in each cooler containing samples (soil and aqueous) being sent for analysis. The container should be labeled "COOLER TEMPERATURE INDICATOR" and dated. Temperature of the blank should be taken and recorded on the chain of custody record immediately upon receipt at the laboratory, prior to inventory and refrigeration.

Laboratory/Analytical Comments

The designated laboratory for this project should be determined and named. The laboratory's qualifications (i.e. Laboratory Quality Assurance Plan (LQAP), certifications, SOPs for the analytical methods to be performed, performance evaluation (PE) sample results, etc.) should be stated in the Plan.

The laboratory SOP for SW-846 Method 8330 to be followed for explosives in soil and aqueous matrices should be provided in the Plan.

Table 8-1 of the QAPP should be revised to indicate the most current Statement of Work for low concentration VOCs analysis in water, which is, Low Concentration Organic Analysis (OLC02.1), February 1996.

Data Validation Comments

1. Provide information regarding the subcontractor data validation company to be employed. This is to include the company name and individual personnel qualifications for those involved in this project.

2. In lieu of using the National Functional Guidelines for Organic and Inorganic Data Review, the data validation protocols preferred are those developed by Region 2. The regional SOPs are more detailed and define specific acceptance/performance criteria as well as subsequent qualifier codes applicable to organic and inorganic data. The Region 2 protocols can be found at:

   http://www.epa.gov/region02/smb/sops.htm.

Please note, use of the regional data validation procedures requires examination of the organic and inorganic sample raw data, e.g. chromatograms, spectra, quant reports, and instrument print-outs.

EPA COMMENTS ON NAVY'S DRAFT
EXPANDED PA/SI NASD VIEQUES
FACILITY REPORT - AUGUST 2000

I. General Comments

1. It is recommended that a summary table be included in the Final PA/SI report indicating for all 10 potentially contaminated areas, the contaminants found for each media and the recommendations for further investigation. It should also be highlighted in this table that because metals were found at similar concentrations as background samples an additional soil background investigation is recommended by the Navy to verify background conditions at NASD.

Response:
A summary table will be included in the final PA/SI report listing the contaminants found at each of the ten sites at levels exceeding screening criteria. The table will also show which sites are proposed for further study through the RI/FS process and which sites are recommended for additional background studies.

2. Some indication as to how the soil background investigation will be conducted should be given in the Final PA/SI report (e.g., how uncontaminated areas will be chosen, will any off-site samples be taken such as in area between Eastern and Western Vieques,etc.).

Response:
Details of the proposed background investigation will be provided in a separate work plan. The background samples will be collected at NASD at locations that have not been impacted by industrial or waste disposal activities. This work will be conducted concurrently with the Phase II PA/SI field work in December 2000 and the results will be presented in the report for the Phase II PA/SI study.

3. For every SWMU/AOC, please highlight in the text pertaining to each media sampled, the range of concentrations for each contaminant relative to the screening criteria specifically where exceedances have occurred.

Response:
Based on the results of the background investigation and a Preliminary Risk Evaluation (PRE) additional contaminants will be screened out as contaminants that are not site related. We propose that the text will provide a detailed description of the contaminant concentrations that exceed screening criteria after the background study and PRE are completed.

4. Please compare soil sample data to EPA's soil screening guidance levels. Include this information in the analytical data summary tables of the Final PA/SI.

Response:
The EPA soil screening level (SSL) will be added to the analytical data summary tables for the migration to groundwater with a dilution factor of 20.

II. QA Comments

1. Information regarding the specific qualifications of the data validation subcontractor firm hired by CH2M Hill needs to be provided to EPA. The Navy concurred with this request in responses to comments yet did not include this in the draft PA/SI.

Response:

Qualifications of the data validation subcontractor will be provided in the appendix of the Final PA/SI report.

2. Information regarding the analytical laboratory used, Progress Environmental Labs, Tampa, FL. also needs to be provided to EPA. Specifically this includes: the laboratory's Quality Assurance Plan, state certifications and/or recent documentation (within the past 6 months) of acceptable analysis of Performance Evaluation Materials specific to the analytes and media of interest in Vieques, and copies of the SOPs used by the lab in generating the data submitted. The Navy's responses to comments indicated that this would be provided to EPA but it was not included in the draft PA/SI report.

Response:

Qualification data for Progress Environmental Labs will be provided in the appendix of the Final PA/SI report.

III. Specific Comments

1. p. 1-1 paragraph 2 - It states that "through an Environmental Baseline Survey, the Navy has identified 10 potentially contaminated areas." This is not true since these 10 areas were identified prior to the EBS (e.g., previous Navy SI, RFA, etc.). The seven newly identified areas not addressed in the Expanded PA/SI report were identified through the EBS. Please correct this in the Final Expanded PA/SI.

Response:

The Final Expanded PA/SI will be corrected. The 10 sites were identified through a previous SI and RFA.

2. p. 1-3 - paragraph 1 - last sentence - Why is EPA Region II mentioned here?

Response:

The background information was originally referenced from the Consent Order for the Atlantic Fleet Weapons Training Facility. This reference will be deleted.

3. p. 1-7 - Groundwater section - It should state in this section that GW is not used for drinking, water is piped in from the mainland, and that GW is used occasionally for emergency purposes.

Response:

The text will be revised to incorporate the above groundwater information. Additionally, the groundwater downgradient from all of the ten sites is not even used for emergency purposes (there are no supply wells downgradient of any of the sites).

4. SWMU 4 - p. 3-6 - Why were iron and thallium not analyzed in background samples? Please explain this.

Response:

The background samples were collected under a RCRA investigation using the Appendix IX metals list, which does not include iron and thallium.

5. SWMU 5- p. 5-6 - GW results - Please indicate in this section that Arocholor is a PCB.

Response:

Arochlor will be designated as a PCB in the text.

6. SWUM 7 - p.6-3 - GW sampling - It is stated that the "sampling plan called for resampling of 3 existing monitoring wells. However, existing monitoring wells (MW02 and MW03) could not be located." Please give an explanation as to why these wells could not be found.

Response:

Wells MW02 and MW03 were installed in 1985 by ESE and surveyed coordinates of these wells were not provided in the ESE report. The area is totally overgrown with very thick vegetation. Two full days were spent trying to locate these wells, but they could not be found. The wells were replaced with new wells in the same general area.

7. Procedures for the Qualtitative Ecological Survey and Qual. Human Risk Assessment should be discussed sequentially under the Field Investigation section. Also, please indicate in the Final Expanded PA/SI report if a Quantitative Ecological and Human Health Risk Assessment will be performed.

Response:

The Qualitative Human Health Risk Assessment procedures will be presented immediately after the Qualitative Ecological Survey procedures. The laboratory field sampling protocol will be moved to the end of Section 2. A preliminary risk evaluation, including a quantitative assessment, will be presented in a separate report including the proposed background study. In the event that the background study shows that site related contaminants are impacting ecologically sensitive receptors, then a quantitative ecological risk assessment will be performed.

IV. Navy's Responses to Comments

1. The Navy's letter dated April 7,2000 to Helen Shannon should indicate that comments for the Draft Master Quality Assurance Plan from our QA reviewer were e-mailed to you on 6/6/00.

Response:

The date the comments were e-mailed (6/6/00) will be included in the response to comments letter.

2. Responses to EPA comments on Draft Master Quality Assurance Plan and Work Plan

a. Comment # 9 and 24 - Navy's response indicates that human health and ecological risk aspects of the project will be submitted to an EPA Region 2 risk assessor for human health and the BTAG for ecological risk. Please correct this to indicate that this information will be sent to the Region 2 Federal Facility Project Managers for the NASD site.

Response:

The response will be corrected, indicating risk aspects of the project will be sent to the Region 2 Federal Facility Project Managers for the NASD site.

Also, last sentence indicates procedures for the risk screening will be included in the draft report - please correct this to state draft Expanded PA/SI report.

Response:

Draft report will be changed to Expanded PA/SI report.

GOVERNMENT OF PUERTO RICO/OFFICE OF THE GOVERNOR
Environmental Quality Board

October 16, 2000

MR. BYRON C. BRANT, P.E.
HEAD ENVIRONMENTAL
TECHNICAL SUPPORT SECTION
LANTDIV ENVIRONMENTAL DIVISION

SUBJECT: COMMENTS ON:
DRAFT EXPANDED PRELIMINARY ASSESSMENT/
SITE INVESTIGATION (PA/SI)
U.S. NAVAL AMMUNITION STORAGE DETACHMENT,
(NASD)
VIEQUES ISLAND, PUERTO RICO

Dear Mrs. Brant:

Presented below are the comments on the Draft Expanded Preliminary Assessment/Site Investigation (PA/SI) at U.S. Naval Ammunition Storage Detachment (NASD) Vieques, Puerto Rico. These comments are subject to the approval of the Site Specific Work Plan and the Master Work Plan after being incorporated the comments already made by EPA and EQB.

Section 2: Field Investigation Procedure

In page 2-14, explain the last sentence of: the 2nd. paragraph: "No field samples were flagged for these compounds due to blank contamination", the last sentence of the 3rd. paragraph: "No field samples were qualified for blank contamination for these compounds", and the last sentence of the 4th. paragraph: "However, no samples were qualified due to metallic blank contamination".

Response:
After data validation by Heartland and Assoc., it was determined that no data qualifiers were required for the analyses of the samples collected at the site due to contamination of the field blank samples. The sample blanks indicated that the data were usable.

In page 2-17, Section 2.13.7 it says: "Sample results at, or near the Method Detection Limit (MDL) may be false positives caused by instrument noise or low-level background shifts enhanced by a matrix, rather than a true analyte signal. Additionally, concentrations reported at up to 5 times the MDL should be recognized as lacking accuracy or precision". Are these sample points re-sampled or is it unnecessary? Why the concentrations reported at up to 5 times

the MDL should be recognized as lacking accuracy or precision and what did they do with these samples? Are these results compared with the applicable MCLs?

Response:
This language is meant to place a lower confidence level on results for metals near the MDL. It is simply recognizing the limitations of the laboratory instruments. Any data that were questionable were qualified during the data validation process, for example a "J" qualifier means the value was estimated. However, the data validation concluded that the data is usable.

Section 3: SWMU 4 (Inactive open burn/detonation unit):

UXO Result Report: Sector A: 9 transects were cut. In a visual inspection numerous live UXO/OE items and OEW scrap was located. 4 MWs installed and 5 soil samples taken. Sector B: 5 transects were cut. 4 soil samples taken and 4 MWs installed. Type of UXO/OE located: 20mm HE, MK 230 fuze, Elec. blasting cap, Small Arms, Auxiliary Booster, 60mm mortar fuze. Sector C: 4 transects were cut. . In a visual inspection numerous live UXO/OE items and OEW scrap was located. No soil sampling or monitoring well installation took place in this sector.

Comment: Why no soil sampling or monitoring well installation took place in Sector C?
Concur with the conclusion that additional investigations should be made due to the determination that the actual extent of the contamination cannot be determined.

Response:
The time for the investigation was limited to 6 weeks. Additional wells could not be installed during this time-frame. The purpose of the investigation was to identify if contamination was present. The next phase of the investigation will delineate the extent of the UXO derived contamination through additional investigations that are recommended for this site.

Lab. Analytical Results: The preliminary background criteria obtained was from data collected from Camp García (Baker Environmental, Inc., Nov. 1999). Is this data from 1999 or the report was from 1999?

Response:
The samples were collected in August 1999 and the report was submitted November 4, 1999.

This area was inactive since 1980 and the background have to be taken from data collected before 1980 to determine if the affected area was from military practices. Due to the wastes found is obvious that are from military practices and the background levels established shows that the area is contaminated with these wastes. Comparing the actual results with these background levels is going to demonstrate that the area is still contaminated despite the concentrations could have been decreased due to natural attenuation.

Response:
The background samples for the Baker study were collected along the western property boundary of the Eastern Maneuver Area which is located several miles west of the Live Impact

Area. The study concluded that no explosive related contaminants were detected in these soil samples. However, the Navy recognizes that to provide a more representative indication of background conditions, background soil samples should be collected at NASD. As a result, additional background samples will be collected from undisturbed areas near each site.

Groundwater Results:

Unfiltered (total metals) found: aluminum, barium, cadmium, iron, and manganese at concentrations exceeding the MCL and/or tap water RBC criteria.

Filtered metals (dissolved) found: barium and cadmium above the RBC criteria and manganese above the MCL.

In page 3-5, last paragraph, it says that "Aluminum, barium, cadmium, iron, and manganese were detected in all wells at relatively similar concentrations, indicating that the detections are likely the result of background concentrations and are not site-related".

Comments: These metals concentrations and the VOCs, SVOCs, and PCBs were compared with the established background concentrations at Camp García. What criteria they used to choose Camp García to establish background concentrations and not a cleaner area and/or nearest this site? We have to remember that at different sites they manage different wastes so the background has to be near each site but in a "virgin" area. Can these metals be a product of the type of wastes managed in this area? **The data from MW-5 through MW-8 had not been validated at the time of this draft report and was not included. Data will be included in the final report.**

Response:
At the time of the sampling, the Camp Garcia samples were the best background data available. Additional background studies are proposed. Background groundwater samples will be collected from upgradient from each site at locations that have not been impacted by waste disposal activities..

Table 3-1: Groundwater Analytical Data Summary:

Comments: Why the background concentration of some parameters were not included in the table and the MCL concentration of some parameters were not included in the table? What is MT, and T? The flags used to identified sample results have to be evaluated by a chemist. In page 2-10, second paragraph, it says that "Data that were not within the acceptance limit were appended with a qualifying flag, which consist of a single or double-letter abbreviation that reflects a problem with the data. In this table there are some results that were not flagged but there are no screening criteria, so to what criteria they compare these results?
Note: The GW flow goes to NE direction while the sea border the south of the site (Figure 3-2 and 3-3).

Response:
The background samples collected at Camp Garcia were under a RCRA program using the Appendix IX metals list and the samples at NASD were collected under a CERCLA program using the TAL metals list, which is a different list of metals. In the table, "M" indicates the value is above the Federal MCL, "T" indicates the value is above the tapwater RBC, and "MT"

indicates the value is above both the Federal MCL and the tapwater RBC. The M, T, and MT are not laboratory qualifiers, they are used to show what screening criteria were exceeded. An explanation of these abbreviation will be provided in the table. For some chemicals there are no screening criteria available.

Surface Soil Results:

Analytical results indicate detections of aluminum, arsenic, iron, lead, thallium, vanadium, 2,4,6-trinitrotoluene, 2,4-dinitrotoluene, and hexahydro-1,3,5-trinitro-1,3,5,7-tetrazocine at concentrations above the residentisl RBC and/or leachability screening criteria.

In page 3-6, Section 3.6.2, second paragraph, it says that "Arsenic and vanadium were not detected above background criteria and therefore are not likely to be site-related." If in the place where they took the background sample exists concentrations of some metals, you have to compare with other background samples taken in other places more distant from the military areas. It is obvious that if Camp García is near the area, you are going to find concentration of some metals product of military debris. If arsenic, for example, is found under background concentration but there are concentrations of arsenic, you can not say that is not site-related if you don't compare this result with other more virgin backgrounds. Iron and thallium were not analyzed in background samples but they concluded that the above level detections are representative of background because concentrations were detected in most samples collected and is not site-related. Why did they say is not site-related?

Response:
A new background study will be conducted during the Phase II PA/SI investigation at NASD. Samples will be collected from areas that are not impacted by waste disposal activities In addition, iron and thallium will be analyzed from the soil samples..

In same page 3-6, Section 3.6.2, second paragraph, last sentence, it says that "The detection of **aluminum** at SB04 and **lead** at SB06 were appreciably higher than the other samples, and may be attributed to site activities". How is that? In the case of aluminum, concentrations in soil may be site-related and the detection in GW is not site-related? They said that in GW are no site-related but all the sites have similar concentrations and in soil there are points with higher concentrations and is site-related. Is this a valid argument?

Response:
Aluminum was detected 3 times higher than the other samples and lead was detected 10 times higher than the other samples, which indicates that this may be attributed to site activities. This will be confirmed by the results of the background investigation. The depth to water averages 16.3 feet at the site and the aquifer materials appear to have a very low permeability, and the differences detected between the background and site groundwater were not as great as the differences in soil. Therefore, groundwater concentrations may not be influenced by surface contaminants. This assessment will also be confirmed based on the results of the background investigation.

The explosive derived constituents **2,4,6-trinitrotoluene**, **2,4-dinitrotoluene**, and **hexahydro-1,3,5-trinitro-1,3,5,7-tetrazocine** were detected above the residential RBCs and/or leachability criteria, and are likely attributed to site activities.

Comment: In Table 3-2 of Surface Soil Analytical Data Summary they included results of MWs 5 – 8 and they also included the results of SBs 1 - 12. What happened with soil borings 13 - 16 used for a second surface geophysical survey or this soil borings were converted in MWs 5 - 8?

Response:
The soil samples were collected during the installation of monitoring wells MW-5, 6, 7,and 8. This will be explained in the text.

Subsurface Soil Results:

"Arsenic and barium were detected in SB05 above background criteria and above respective leachability criteria. Because these metals were detected in all samples collected at the site it is likely that the detected concentrations are representative of background and are not site-related." How can you compare these results with a contaminated background area and determine that is not site-related?

Response:
Additional background samples will be collected at NASD from a " areas not impacted by waste activities during the NASD Phase II investigation.

Comment: In Table 3-3 of Subsurface Soil Analytical Data Summary they include results of MWs 5 - 8. They include the results of SBs 1 - 12. What happened with soil borings 13 - 16 used for a second surface geophysical survey or this soil borings were converted in MWs 5 - 8? They include some results of these soil borings 13 - 16 in Figure 3-4 (4-6') but not in Table 3-3.

Response:
Borings 13-16 are monitoring wells MW-5,6,7, and 8. The soil samples were collected during the well installation. This will be explained in the text

Conclusions and Recommendations:
In page 3-7, Section 3.7, it says that "The data indicate that the metals detected in groundwater and subsurface soil are indicative of site background levels. Additional background studies will be conducted in November 2000 to verify background levels of metals in soils at NASD".
Comments: The additional background studies are going to be from the same background place? How can the use of the same background place for all distant sites and sites with different wastes may affect the results comparison criteria?

Response:
The additional background studies will collect samples from e areas in the vicinity of each site that have not been impacted by waste activities.

Groundwater:

They concluded that the metal concentrations detected indicated that they are similar concentrations due to background levels in GW at the site. So, "no evidence exists to suggest that a release of hazardous materials to GW has occurred as a result of site-related activities. As a result, no additional GW investigations are recommended".

Comments: In soil there were high concentrations of some of these metals. Did they evaluate the possibility of migration to GW? They recommend no additional investigation but they did not say anything of establishing monitoring activities due to possible migration in the future of contamination found in soil.

Response:
In the final report, the soil data will be compared to soil screening levels for groundwater migration.

Surface Soil:

"Evidence exists to suggest that a release of site-related materials to surface soil has occurred as a result of site-related activities. It is recommended that additional surface soil samples be collected to delineate the extent of the site-related constituents."

Comments: Did they evaluate the possibility of using other background areas for comparison criteria?

Response:
The additional background studies will collect samples from areas in the vicinity of each site that have not been impacted by waste activities..

Subsurface Soil:

"No evidence exists to suggest that a release of hazardous materials to subsurface soils has occurred at this site as a result of site-related activities. Therefore, no additional subsurface soil investigations are recommended for this site. However, an additional soil background investigation is recommended to characterize the background metal concentrations within the soils at NASD."

Comments: Did they evaluate the possibility of a double check of subsurface soil results after finishing an additional soil background investigation?

Response:
The additional background study will include both surface and subsurface soil samples. The results of the background investigation will be compared to all the previous soil analyses to re-assess if any site-related contaminant are present at each site.

Section 4: SWMU-5 (IRFNA/MAF-4 Disposal Site):

Activities performed in April 2000.

"Data compared to applicable regulatory screening and preliminary background values.
This inactive unit is the site where, in 1975, approx. 7,000 pounds of fuel was emptied from leaking drums into a low spot in a road near Bldg. 422. The Quebrada where the disposal took place is in the probable recharge area for one of the few springs on the island that flows year-round. The site is less than two miles from Cattle Cooperative Well 3PW01 and a spring, both of which were used by the local cattle cooperative until 1992. The fuel contained 5,275 pounds of IRFNA and 1,775 pounds of MAF-4 which were emptied into the Quebrada. Much of the material has likely volatilized or biodegraded."

"During a previous investigation, one nearby spring was sampled for pH and Priority Pollutants. Zinc was the only constituent detected from this sampling, with a concentration of 0.469mg/L. No soil borings were installed at this site location."

4 SB were installed to depths of 6 - 21 feet along the ditch. Soil and GW samples were taken. Samples were analyzed for VOCs, SVOCs, and explosives.

Field Screening Results: The results indicate that OVM readings ranged from -0.1 to 9.5 ppm.
Laboratory Results: Background criteria were obtained from data collected from Camp García.

Response:
The additional background studies will collect samples from areas in the vicinity of each site that has not been impacted by waste activities.

Surface Soil Results:

"Analytical results indicate a single detection of benzo(a)pyrene at levels slightly above the residential RBC at SB01. This constituent is a potential byproduct that may be derived from the asphalt pavement located adjacent to the sampling site."

Comments: In Table 4-1, why are there three other parameters that exceed more the residential RBC and were not mentioned?

Response:
We are not aware of three other parameters that exceed the RBCs. Our interpretation is that all other parameters are either below the RBC or "U" which means undetected.

Subsurface Soil Results:

"No constituents were detected above screening criteria."

Conclusions and Recommendations:

No evidence exists to indicate that a release of hazardous materials to surface or subsurface soil has occurred as a result of spill or site-related activities. As a result, no additional surface soil sampling is recommended and no additional subsurface soil investigations are recommended.
Comments: In page 4-3, Section 4.4 it says that "Figure 4-1 is a site map with the soil and groundwater sampling locations." There are no results of GW sampling and in Figure 4-1 no MWs were marked.

Response:
The typographical error on page 4-3 will be corrected. Groundwater will be deleted.

Section 5: SWMU-6 (Mangrove Disposal Site):

Groundwater: Evidence exists to indicate that a release of site-related materials to groundwater has occurred as a result of site-related activities.

Comments: Concur with the conclusion of further assessment for the groundwater.

Response:
Comment noted. The proposed investigations for this site will be submitted to you in a work plan for your approval prior to conducting the investigations.

Surface Soil: Evidence exists to indicate that a release of site-related materials to groundwater has occurred as a result of site-related activities.

Comments: Concur with the conclusion that an additional background soil investigation is recommended to further characterize the background metal concentrations in soils. Also, additional soil sampling is recommended to delineate the extent of PAHs in the soils.

Response:
Comment noted. The proposed investigations will be submitted to you in a future work plan.

Subsurface Soil: Arsenic concentrations were all below the soil background criteria and were detected at similar concentrations, indicating that the detections are likely indicative of background conditions and are not site-related.

Comments: Concur that an additional soil background investigation should be made to confirm the range of background metal concentrations within the soils.

Response:
Comment noted.

Section 6: SWMU 07 (Quebrada Disposal Site):

Surface Soil Results: Metals were detected in surface soil samples at concentrations indicative of site background levels. Benzo(a)pyrene was detected in two surface soil samples at relatively low concentrations. Benzo(a)pyrene was the only constituent detected that may be present as a result of site-related activities.

Comments: Concur that additional surface soil sampling should be made to delineate the extent of benzo(a)pyrene. In addition, a soil background investigation is necessary to verify the range of background concentrations of metals within the soils of NASD.

Response:
Comment noted.

Section 7: SWMU 10 (Waste Paint and Solvents Disposal Site:

Field investigations included only the collection of 10 surface soil samples and 10 subsurface soil samples.

Comment: Why groundwater sampling was not included?

Response:
The sample locations were identified based on areas where releases of the site contaminants would most likely occur. The contaminants of concern that were analyzed (paints and solvents) were not detected in either surface soils or subsurface soils that were collected at a depth of five feet. Based on this information, it is unlikely that any site related contaminants would migrate past these locations, through 40 feet of low permeability clay, to reach the water table. As a result, groundwater samples were not proposed for this site.

Surface Soil Results: Metals were detected at concentrations indicative of site background levels.

Comment: Lead was detected in SB03 and SB04 at concentrations above the Residential RBC Screening Criteria. An additional soil sampling on this boring is recommended at different sampling depths. In addition, concur that a soil background investigation should be made to characterize the range of metal concentrations in soils.

Response:
Comment noted. Results will be re-evaluated after additional background study. No additional sampling is recommended at this time.

Subsurface Soil Results: Arsenic was detected at concentrations above the Leachability Screening Criteria and indicative of site background levels. Lead was detected at concentrations above the background levels.

Comment: An additional soil sampling on this boring is recommended at different sampling depths. In addition, concur that a soil background investigation should be made to characterize the range of metal concentrations in soils.

Response:
Comment noted. Results will be re-evaluated after additional background study. No additional sampling is recommended at this time.

Section 8: SWMU 14 (Wash Rack):

Surface Soil Results: Metals were detected at concentrations indicative of site background levels.

Comment: Concur that a background soil investigation need to be done to verify that the metals detected are within the background range for NASD.

Response:
Comment noted.

Subsurface Soil Results: Arsenic was detected at concentrations indicative of site background levels.

Comment: Concur that a background soil investigation need to be done to verify that the metals detected are within the background range for NASD.

Response:
Comment noted.

Section 9: SWMU 15 (Waste Transportation Vehicle)

Surface Soil Results: Metals were detected at concentrations indicative of site background levels.

Comment: Concur that a soil background investigation need to be done to confirm the background metal concentrations in the soils at NASD.

Response:
Comment noted.

Section 10: AOC C (Drainage Ditch Near Transportation Shop)

Surface Soil Results: Metals were detected at concentrations indicative of site background levels.

Comment: Concur that an additional soil background investigation need to be done to verify the background soil conditions at NASD.

Subsurface Soil Results: Metals were detected at concentrations below background levels.

Comment: Concur that an additional soil background investigation need to be done to verify the background soil conditions of NASD.

Response:
Comments noted.

Section 11: AOC E (UST Site 2016)

Previous investigations results showed that petroleum hydrocarbons were detected in one soil boring at a concentration of 42,000 mg/kg which is above the PREQB target level of 100 mg/kg. Based on this result, and because of exceedances of PREQB target levels, natural attenuation was cited for natural reduction of contaminant concentrations.

Comment: In this PA/SI field investigation no soil samples were taken to verify the success of the natural attenuation at present. Soil sampling is suggested to characterize the soil in this SWMU.

Response:
Site AOC-E has been recommended for further study, including soil and groundwater sampling. Based on this study the several remediation alternatives will be evaluated. If natural attenuation is a selected alternative soil sampling will be conducted to verify that this is an effective remedial alternative.

Groundwater: Petroleum constituents were detected and free product was measured in AOC E-MW 01. Evidence exists to suggest that a release of petroleum hydrocarbons to groundwater has occurred as a result of site-related activities. Concur that additional investigations are recommended to delineate the extent of the petroleum hydrocarbons within the groundwater at the site. In addition, concur with the recommendation that the free product have to be remediated.

Response:
Comments noted.

Section 12: AOC F (UIC Septic System Site)

Subsurface Soil Results: Metals were detected at concentrations indicative of site background levels.

Comment: Concur that a soil background investigation is recommended to characterize the soil background conditions at NASD.

Response:
Comment noted.

HEARTLAND ENVIRONMENTAL SERVICES, INC.

FIRM PROFILE

Firm: Heartland Environmental Services, Inc.
4127 Plaza 94 South
St. Charles, MO 63304
Office: (636) 936-1332
Fax: (636) 936-1335

Officers:

Paul B. Humburg	President
Eugene M. Watson	Vice-President

Environmental Services Offered:

- X Data Validation
- X PARCC Reports
- X Electronic Data Management
- X Laboratory Audits
- X Phase I Environmental Site Assessments

Heartland ESI Qualifications:

Heartland Environmental Services, Inc. (Heartland ESI), a federally qualified small business located in St. Charles, Missouri, has been performing data validation, PARCCs reporting, electronic data management, laboratory audits, and Phase I Environmental Site Assessments for eleven (11) years. Heartland ESI has over 60 years of collective environmental experience among their employees. Heartland ESI has validated data for the NEESA, HAZWRAP, CERCLA, RCRA, USACE, Army Corps, AFCEE, USAEC, and NYSDEC ASP environmental programs; has been approved for data validation in all EPA Regions, and has extensively worked with CLP, RCRA, and CFR40 methods in matrices that include, but are not limited to hazardous and mixed waste.

HEARTLAND ENVIRONMENTAL SERVICES, INC.

SUMMARY OF FIRM CAPABILITIES

The following information is a summary of Heartland ESI's capabilities:

Heartland ESI data validators have extensive hands-on CLP and RCRA laboratory experience with the CLP, SW-846, CFR40, and miscellaneous methods; which includes, extraction, analysis, data management, QA/QC protocols, and data reporting of the methods. In addition, the data validators have a thorough understanding and experience in applying the National Functional Guidelines, along with regional modifications, as they apply to CLP and non-CLP methodologies.

Heartland ESI routinely provides PARCCs reporting services for sites requiring risk assessment. The PARCC report is comprehensive with raw data tables and narratives which evaluate and summarize biases and trends for the various analytical parameters of the site specific QAPP.

Electronic data management is performed on a variety of database software formats and is provided to clients via modem transfer or diskette deliverable. All database files are manually edited to reflect the validated laboratory concentrations and data qualifiers.

Heartland ESI provides QAPP review and laboratory audits based on client specific needs and regional EPA requirements. All audits are performed in conjunction with the client's needs and all findings are strictly proprietary to the client. Heartland ESI's laboratory auditing team delivers over 40 years of hands-on analytical laboratory experience which enables us to detect less than obvious laboratory non compliances.

Heartland ESI carries the following insurance policies: General Liability, Umbrella Liability, Automobile Liability, and Errors and Omissions.

HEARTLAND ENVIRONMENTAL SERVICES, INC.

DATA VALIDATION

Heartland ESI has been performing data validation for over eleven (11) years. During this time period, Heartland ESI and its employees have developed a comprehensive understanding of the *National Functional Guidelines for Organic Data Review, February, 1994* and the *Laboratory Data Validation Functional Guidelines for Evaluating Inorganic Analyses, February, 1994*; in addition to the various USEPA regional and state modifications of these guidelines. Specific regions, agencies, and programs that have approved Heartland ESI include, but are not limited to:

- All EPA regions
- NYSDEC
- NJDEP
- NEESA
- AFCEE
- Army Corps
- CERCLA
- RCRA
- USAEC

All of Heartland ESI's data validators must meet our internal criteria prior to the validation of analytical data, which is as follows: minimum two (2) years laboratory experience performing CLP and RCRA analysis and data reduction on the fraction to be validated, EPA approved mass spectral interpretation specialist (where applicable), and a college degree (B.A. or B.S.) in a science field.

Heartland ESI's standard data validation report consists of four main parts: a cover letter, data assessment narrative, amended Form Is, and supporting documentation. The cover letter is designed to summarize and identify, in a concise manner, the Sample Delivery Group (SDG) and fractions for which the validation were performed. Sampling dates, number of samples, QA/QC level, sample cross references, etc. are examples of additional information that is presented with each cover letter.

The second part of the validation report, the data assessment narrative, is presented for each analytical fraction that is validated. The data assessment narrative addresses each of the sections outlined in the appropriate guidance, and details any non compliance or outlier that is discovered during the course of the validation. All instances of non compliance and/or outlier data that results in qualification or rejection of the data is assigned a numeric specific finding which corresponds to the amended Form Is. In addition, all observations and data trends noted by the validator are discussed in this segment.

HEARTLAND ENVIRONMENTAL SERVICES, INC.

DATA VALIDATION

The amended Form Is are the third portion of the data validation report. All compound results requiring qualification are qualified according to the *National Functional Guidelines for Organic Data Review* or the *Laboratory Data Validation Functional Guidelines for Evaluating Inorganic Analyses*, or EPA region and State modifications. Non compliances noted in the data assessment narrative are applied to the Form 1s with the proper qualifier and numeric reference to the specific finding. In addition, all Form 1s are initialed and dated by the data validator.

The fourth section of the validation report is supporting documentation. This segment is composed of the Regional Worksheets or the Heartland ESI proprietary Data Validation Worksheets which the validator utilized while performing the data validation. The Heartland ESI proprietary Data Validation Worksheets contain general guidance and professional judgement criteria which have been developed over years of experience. Documented within these worksheets are the interpretation of the functional guidelines, methodology requirements, sample calculations, and explanations of the validator's professional judgement.

Heartland ESI will customize our validation to meet our client's specifications. Heartland ESI has extensive experience in adapting data validation services to meet our client's specific validation requirements and SOPs. Previous projects have shown that the technical knowledge and experience of our staff allows us to readily implement new validation procedures. The client's specifications are fulfilled by using designated validation worksheets other than our proprietary forms, reporting formats tailored to the client's specific requirements, and utilizing specific software.

All Heartland ESI data validation reports undergo an extensive secondary review prior to release to the client to ensure a quality report.

HEARTLAND ENVIRONMENTAL SERVICES, INC.

PARCC REPORTS

Heartland ESI evaluates validated data for PARCCs criteria included in the Data Quality Objectives (DQOs) of the site specific Work Plan. Precision, accuracy, representativeness, comparability, and completeness (PARCC) are key ingredients to this report which is used primarily in risk assessment. All PARCC reports consists of comprehensive tables and narratives which evaluate the various parameters for biases and trends which may indicate possible exposure pathways. The following sections present a brief description of PARCCs criteria.

Precision is a measure of the agreement or repeatability of a set of replicate results obtained from duplicate laboratory analyses of samples collected from the same location/depth interval. Precision is calculated from laboratory analytical data and cannot be measured directly. Precision is expressed as the Relative Percent Difference (RPD) between analytical values for two samples divided by the average of their analytical values. Precision is evaluated using field duplicate samples and laboratory split samples (for example, MS/MSD samples). Precision for environmental samples and their duplicates is assessed using a maximum RPD of 20 Percent for the water matrix and 35 Percent for the soil matrix. Precision for MS/MSD/MD samples is assessed by using the target analyte specific RPD criteria for the spiked compounds and the sample duplicates.

Accuracy is a measure of the agreement between an experimental determination and the true value of the parameter being measured. Accuracy can be calculated from the analytical data and is not measured directly. Accuracy is used to identify the bias in a given measurement system (i.e. laboratory conditions, sample matrix, and sampling conditions). Accuracy is assessed by reviewing the Percent Recovery (%R) between the true value of the spike analyte and the actual analytical value. For the organic analyses, each of the samples is spiked with a surrogate compound and a designated field sample is spiked in duplicate (MS/MSD) with a known mixture of target compounds; and for inorganic analyses, each chosen matrix spike and matrix duplicate pair is spiked with a known reference material before digestion. Each of these approaches provides a measure of the matrix effects on the analytical accuracy.

Representativeness is a qualitative measure of the degree to which sample data accurately and precisely represent a characteristic environmental condition. Representativeness is a subjective parameter and is used to evaluate the efficacy of the sampling plan design. Representativeness is evaluated using the field and laboratory QC blank sample results. QC blank samples are equipment rinseate blanks, field blanks, trip blanks, laboratory method blanks for organic analysis and laboratory preparation blanks for inorganic analysis. Positive detection of target analytes in the QC blank samples identify contaminants that possibly are introduced to the

associated environmental sample during sample collection, transport or laboratory analysis. Representativeness is also evaluated using the defined extraction and analytical holding time requirements set forth in the site Work Plan or the analytical methodology.

Comparability is qualitative measure designed to express the confidence with which one data set may be compared to another. Factors that affect comparability are: sample collection and handling techniques, sample matrix type, and analytical method. Comparability is limited by the other PARCC parameters because only when precision and accuracy are known can data sets be compared with confidence.

Completeness is defined as the percentage of measurements that are judged to be valid compared to the total number of measurements made. Valid usable data are values that were not qualified as rejected (R qualifier) during data validation. Completeness equals the total number of analytes for each matrix minus the total number of rejected analytes divided by the total number of analytes multiplied by 100.

HEARTLAND ENVIRONMENTAL SERVICES, INC.

ELECTRONIC DATA MANAGEMENT

Heartland ESI performs electronic data management for all clients that supply an electronic file (database) of each SDG. All databases that are provided to Heartland ESI by the client or laboratory are not initially screened for accuracy or systematic computer errors. All edits to the database are performed manually and entail amending the laboratory reported concentrations and laboratory qualifiers. Validated data will only be amended with the data qualifiers outlined in the site specific Quality Assurance Project Plan (QAPP) or the functional guidelines. All electronic files are maintained in an Electronic Data Log which contains the client name, site, SDG number, release number, electronic fractions amended, completion date, and submission date. All electronic files are maintained for a one (1) year period unless prior arrangements have been made with an officer of Heartland ESI.

Heartland ESI reads and produces electronic data files in the following formats: WordPerfect, Word, dBASE IV, Access, Lotus 1-2-3, Quattro Pro, PARADOX, Fox Pro, and Excel, etc..

HEARTLAND ENVIRONMENTAL SERVICES, INC.

SUMMARY OF TECHNICAL PERSONNEL

Heartland ESI has over 60 years of collective environmental experience in their employees. The table found below briefly summarizes the title and years experience in the environmental field for each technical employee.

Technical Personnel	Title	Years of Environmental Experience
Paul B. Humburg	President	20
Eugene M. Watson	Vice-President	15
Jacqueline A. Cleveland	Senior Chemist	10
Laura A. Maschhoff	Environmental Chemist	10
Erica K. Ketcham	Environmental Chemist	5

Technical Personnel Experience and Qualification Overview:

Paul B. Humburg, President

Inorganics Validation & Oversight, Program Management
B.S. Chemistry, 20 years experience, including: 8 years CLP GFAA/ICAP and wet chemistry analyses: 8 years inorganic supervisor for a commercial CLP laboratory; 3 years assistant Operations Manager for CLP and Mixed (Radioactive) Waste laboratory; and 11 years exclusively data validation.

Eugene M. Watson, Vice President

Organics Validation & Oversight, Program Manager, PARCCs, Environmental Site Assessments B.S. Biology with Chemistry minor, 15 years experience, including: 1 year as Laboratory Manager for CLP and Mixed Waste laboratory, 2 years as organics supervisor for a commercial CLP laboratory; 5 years as a GC/MS chemist for a CLP laboratory; 2 years as a GC/HPLC chemist in a CLP laboratory; and 11 years exclusively data validation; 4 years environmental site assessments.

Jacqueline A. Cleveland, QA Manager

Organic and Inorganic Validation , PARCCs
B.S. Chemistry, 10 years experience, including: 2 years CLP GC and 2 years CLP ICP/AA analytical experience; and 8 years exclusively data validation.

HEARTLAND ENVIRONMENTAL SERVICES, INC.

SUMMARY OF TECHNICAL PERSONNEL

Laura A. Maschhoff, Senior Chemist

Organic Validation, Environmental Site Assessments

B.S. Chemistry 10 years experience, including: 5 years GC/MS and GC CLP analytical experience; 2 years HPLC experience; 5 years exclusively data validation; 4 years environmental site assessments.

Erica K. Ketcham, Environmental Chemist

Organic Validation, Environmental Site Assessments

B.S. Science, M.S. Agronomy, 2 years GC analytical experience, 5 years exclusively data validation., 4 years environmental site assessments.

Paul B. Humburg

President
Heartland Environmental Services, Inc

EMPLOYMENT

President 1989-Present

HEARTLAND ENVIRONMENTAL SERVICES, INC. , ST. CHARLES, MO

Program Manager/Inorganics Supervisor. Responsible for Program Oversight and Technical Management of the Inorganic Data Validation Group. Provides data validation support and specialized technical support to federal and industrial clients in organic and inorganic data useability; laboratory operations; waste characterization; and other related areas.

Laboratory Manager/Assistant Vice President 1986-1989

COMMERCIAL ENVIRONMENTAL LABORATORY ST. LOUIS, MO

Supervised the inorganic and radiological extraction and instrumentation laboratories. Responsible for scheduling of all laboratory activities, developing staff to meet laboratory needs and requirements, and providing technical expertise in environmental methods, such as CLP, RCRA, and USATHAMA.

Laboratory Manager 1984-1986

COMMERCIAL ENVIRONMENTAL LABORATORY ST. LOUIS, MO

Supervised the Inorganic laboratories. Responsible for scheduling of personnel, analyses and instrument maintenance. Provided documentation review and implementation of laboratory QA/QC protocols.

Inorganic Chemist and Safety Manager 1977-1984

COMMERCIAL ENVIRONMENTAL LABORATORY ST. LOUIS, MO

Performed extraction, analysis, and documentation review of Inorganic data in diverse matrices, including hazardous waste and mixed waste.

EDUCATION

Bachelor of Science **1977** University of Missouri - St. Louis (UMSL) St. Louis, MO

Major: B.S. Chemistry

SKILLS

X Program Management for NEESA, HAZWRAP, SUPERFUND, DOD, and DOE data validation activities, PARCCs reporting and electronic data management.

X Specialized in data validation of Inorganics; including, but not limited to: CLP Inorganic methods; SW846 3000, 6000, 7000, and 9000 series methods; and Methods for Chemical Analysis of Water and Waste, EPA 600.

X Lead Laboratory Auditor specializing laboratory procedures and practices as they apply to the CLP, NEESA, and HAZWRAP programs.

X EPA approved data validator: all EPA Regions, NYSDEC, and NJDEP.

X Designed and implemented data validation SOPs for an industrial client.

Eugene M. Watson

Vice President

Heartland Environmental Services, Inc.

EMPLOYMENT

Vice President **1990-Present**

HEARTLAND ENVIRONMENTAL SERVICES, INC. ST. CHARLES, MO

Program Manager/Organics Supervisor. Responsible for Program Oversight and Technical Management of the Organic Data Validation Group. Provide data validation support and specialized technical support to federal and industrial clients in organic and inorganic data useability and PARCC reporting; electronic data management; laboratory operations; waste characterization; and other related areas.

Laboratory Manager **1990**

COMMERCIAL ENVIRONMENTAL LABORATORY ST. LOUIS, MO

Supervised the organic, inorganic, and radiological extraction and instrumentation laboratories. Responsible for scheduling of all laboratory activities, developing staff to meet laboratory needs and requirements, and providing technical expertise in environmental methods, such as CLP, RCRA, and USATHAMA.

GC/MS and GC Supervisor **1988-1990**

COMMERCIAL ENVIRONMENTAL LABORATORY ST. LOUIS, MO

Supervised the GC/MS, GC and HPLC laboratories. Responsible for scheduling of personnel, analyses and instrument maintenance. Provided mass spectral interpretation, documentation review and implementation of laboratory QA/QC protocols.

GC/MC, GC, HPLC Chemist **1984-1988**

COMMERCIAL ENVIRONMENTAL LABORATORIES (2) ST. LOUIS, MO

Performed extraction, analysis, and documentation review of Dioxin/Furans, VOAs, SVOAs, P/As, Nitroaromatics, and various other compounds in diverse matrices, including hazardous waste and mixed waste.

EDUCATION

Bachelor of Art **1984**

BLACKBURN COLLEGE CARL

Major: B.A. Biology

Minor: Chemistry

SKILLS

X Program Management for NEESA, HAZWRAP, SUPERFUND, DOD, and DOE data validation activities, PARCCs reporting and electronic data management..

X Specialized in data validation of GC/MS, GC, and HPLC organics; including, but not limited to: Dioxin/Furans (high and low resolution); CLP GC/MS and GC methods; SW846 8000 series methods; CFR40 500 and 600 series methods; USATHAMA HPLC methods; and various TO- series air methods.

PUBLICATIONS

M. Dulaney, P. Baxter, T. Glover, G. Watson, and A Conrad. "Soil and Sediment Dioxin Analytical Variability at Risk-Based Concentrations". Fundamental and Applied Toxicology, Volume 30, No. 1, Part 2, March 1996.

Jacqueline A. Cleveland

QA Manager

Heartland Environmental Services, Inc.

EMPLOYMENT

Senior Chemist **1992-Present**

HEARTLAND ENVIRONMENTAL SERVICES, INC. ST. CHARLES, MO

QA Manager, PARCCs Administrator/Organics and Inorganics Validation. Provides data validation support and specialized technical support to federal and industrial clients in organic and inorganic data useability; PARCCs management, administration, and reporting; electronic data management; laboratory operations; waste characterization and other related areas.

GC Chemist **1990-1992**

COMMERCIAL ENVIRONMENTAL LABORATORY ST. LOUIS, MO

Lead GC chemist responsible for analyses of organic compounds, specifically pesticides and herbicides, and instrument maintenance. Provided documentation review and implementation of laboratory QA/QC protocols.

QA Assistant **1989-1990**

COMMERCIAL ENVIRONMENTAL LABORATORY ST. LOUIS, MO

Review of laboratory data for quality assurance section. Certification of laboratory sections to meet CLP and state Program goals and guidelines.

Inorganic Chemist **1988-1989**

COMMERCIAL ENVIRONMENTAL LABORATORY ST. LOUIS, MO

Inorganic chemist responsible for analyses of inorganic compounds by AA, ICP, and various inorganic techniques; and instrument maintenance. Provided documentation review and implementation of laboratory QA/QC protocols.

EDUCATION

Bachelor of Science **1988**

ILLINOIS COLLEGE JACKS

Major: B.S. Chemistry

SKILLS

X Organic and Inorganic Data Validation for NEESA, HAZWRAP, SUPERFUND, DOD, and DOE activities.

X Specialized in data validation of GC and HPLC organics; including, but not limited to: organochlorine and organophosphorus pesticides, Aroclors, herbicides, nitroaromatics; CLP GC methods; SW846 8000 series methods; CFR40 500 and 600 series methods; and USATHAMA HPLC methods.

X Laboratory Auditor specializing laboratory procedures and practices as they apply to the CLP, NEESA, and HAZWRAP programs.

X EPA approved data validator: all EPA Regions, NYSDEC, and NJDEP.

X PARCCs management and information specialist.

X Electronic data management specialist.

Laura A. Maschhoff

Senior Chemist

Heartland Environmental Services, Inc.

EMPLOYMENT

Environmental Chemist **1995-Present**

HEARTLAND ENVIRONMENTAL SERVICES, INC. ST. CHARLES, MO

Organics Validation. Provides data validation support and specialized technical support to federal and industrial clients in organic data useability, laboratory operations, waste characterization and other related areas.

Technical Representative **1994-1995**

ENVIRONMENTAL ANALYTICAL SALES FIRM ST. LOUIS, MO

Provided technical support for analytical sales. Support consisted of client interface; product information and troubleshooting; and application issues.

GC/MS and GC Chemist **1990-1994**

COMMERCIAL ENVIRONMENTAL LABORATORY ST. LOUIS, MO

GC/MS chemist responsible for analyses of organic compounds and instrument maintenance. Provided mass spectral interpretation, documentation review and implementation of laboratory QA/QC protocols.

HPLC Chemist **1988-1990**

PUBLICLY HELD ENVIRONMENTAL LABORATORY ST. LOUIS, MO

HPLC chemist responsible for analyses of organic compounds and instrument maintenance.

Provided documentation review and implementation of laboratory QA/QC protocols

EDUCATION

Bachelor of Science **1990**

UNIVERSITY OF MISSOURI AT ST. LOUIS (UMSL) ST. L

Major: B.S. Biology

Minor: Chemistry

SKILLS

X Organic Data Validation for NEESA, HAZWRAP, SUPERFUND, DOD, and DOE activities.

X Specialized in data validation of GC/MS and GC organics; including, but not limited to: Dioxin/Furans (high and low resolution), CLP GC/MS and GC methods, SW846 8000 series methods, CFR40 500 and 600 series methods, USATHAMA HPLC methods, and various TO- series air methods.

X Laboratory Auditor specializing laboratory procedures and practices as they apply to the CLP, NEESA, and HAZWRAP programs.

X EPA approved data validator: all EPA Regions, NYSDEC, and NJDEP.

X U.S. EPA approved Mass Spectral Interpretation Specialist.

X Certified Environmental Inspector.

Erica K. Ketcham

Environmental Chemist

Heartland Environmental Services, Inc.

EMPLOYMENT

Data Management Specialist **1995-Present**

HEARTLAND ENVIRONMENTAL SERVICES, INC. ST. CHARLES, MO

Electronic Data Management/PARCCs . Provides data validation support and specialized technical support to federal and industrial clients in organic data useability, laboratory operations, waste characterization and other related areas.

Research/Teaching Assistant **1992-1994**

MAJOR UNIVERSITY WEST LAFAYETTE, IN

Field research for two (2) years involving GC pesticides and herbicides.

EDUCATION

Master of Science **1994**

PURDUE UNIVERSITY WEST

Major: Agronomy

Bachelor of Science **1992**

PURDUE UNIVERSITY WEST

Major: Earth and Atmospheric Sciences

SKILLS

X Training GC Data Validation for NEESA, HAZWRAP, SUPERFUND, DOD, and DOE activities.

X Electronic Data Management specialist.

X PARCCs information specialist.

HEARTLAND ENVIRONMENTAL SERVICES, INC.

SUMMARY OF PROJECT MANAGEMENT

The project manager and QA manager proposed for this contract are as follows:

Project Manager

Mr. Eugene M. Watson, VP

Heartland ESI

4127 Plaza 94 South

St Charles, MO 63304

Direct Line: (636)949-5733

Mobile/Pager: (314)220-6756

QA Manager

Ms. Jackie Cleveland

Heartland ESI

4127 Plaza 94 South

St Charles, MO 63304

Direct Line: (636)980-1095

1010000 1000101 1100110

PEL Laboratories, Inc.

October 24, 2000

Mr. Marty Clasen
CH2M HILL
4350 W. Cypress Street
Suite 600
Tampa, FL 33607-4155

Dear Marty:

I have attached information regarding PEL Laboratories, Inc. Quality Assurance Plan, State of Florida certification, our Performance Evaluation Materials for 2000, and information regarding our Standard Operating Procedures specific to the analytes and media of interest in Vieques.

If you have any additional requirements, please give me a call at (813) 247-2805, extension 244.

Sincerely,

Kevin Dunham
President

4420 Pendola Point Road • Tampa, Florida 33619
(813) 247-2805 • FAX: (813) 248-1537

CERTIFICATIONS

FLORIDA DEPARTMENT OF HEALTH

State of Florida, Department of Health
Bureau of Laboratories

This is to certify that

E84207

Progress Environmental Laboratories
4420 Pendola Point Road
Tampa, FL 33619

has complied with Florida Administrative Code 64E-1, for the examination of Environmental samples in the following categories:

CWA - Metals, General Chemistry, Volatile Organics, Extractable Organics, Pesticides-Herbicides-PCB's;
RCRA - Metals, General Chemistry, Volatile Organics, Extractable Organics, Pesticides-Herbicides-PCB's ******

Continued certification is contingent upon successful on-going compliance with the NELAC Standards and FAC Rule 64E-1 regulations. Specific methods and analytes certified are on file at the Bureau of Laboratories, P. O. Box 210, Jacksonville, Florida 32231. Clients and customers are urged to verify with this agency the laboratory's certification status in Florida for particular methods and analytes.

EFFECTIVE JULY 1, 2000 **THROUGH JUNE 30, 2001**

GREAT SEAL OF THE STATE OF FLORIDA
IN GOD WE TRUST

Ming S. Chan, Ph.D.
Chief, Bureau of Laboratories
Florida Department of Health
DH Form 1629, 3/98

NON - TRANSFEABLE 207 – 154

COMPQAP LETTER

Department of Environmental Protection

Jeb Bush
Governor

Twin Towers Office Building
2600 Blair Stone Road
Tallahassee, Florida 32399-2400

David B. Struhs
Secretary

June 22, 2000

Kathleen Zinn
PEL Laboratories, Inc.
4420 Pendola Point Road
Tampa, FL 33619

Subject: Quality Assurance review; PEL Laboratories, Inc. Comprehensive QA Plan #900306; Approval Extension based on National Environmental Laboratory Program (NELAP) application

Dear Ms. Zinn:

The Florida Department of Environmental Protection (DEP) is in the process of initiating rulemaking to amend the Quality Assurance (QA) Rule, Chapter 62-160, Florida Administrative Code (F.A.C.). The proposed changes will require laboratories generating data under the QA Rule to be certified by the NELAP-compliant Florida Department of Health Laboratory Certification Program (DoH LCP). We will also propose the elimination of requirements for submittal of Comprehensive Quality Assurance Plans (CompQAPs) by field and laboratory organizations. These changes will simplify regulatory requirements by establishing a single set of quality standards for laboratories conducting work under the DEP QA Rule. In addition, the Department will propose that all fieldwork be conducted under a set of updated standard operating procedures for field activities.

We would like to simplify the transition to the NELAP certification program. Laboratories that have applied to become NELAP-certified will not be required to submit their annual CompQAP amendments. We will extend the renewal of the currently approved CompQAP for one year past the 2000 anniversary date.

Based on your NELAP application for certification with the DoH's LCP, the approval for your Comprehensive QA Plan **#900306** has been automatically extended. This extended approval applies to those analytical methods, sampling equipment configurations and documentation protocols included in your current Comp QA Plan that are approved for use as per:

- 62-160.400 (1), (3), (4) and (5), F.A.C.
- DEP Guidance Document #96-01, *DEP Approved Methods for Laboratory Analysis of Environmental Samples* (attached)
- 62-160.600, F.A.C. (record-keeping requirements)

Alternative of modified analytical methods, and analytical methods not included in the above approved references, are not approved even if listed in the referenced Comp QA Plan unless those methods have been previously approved by the submission of a validation data package(s). This submission must address all requirements in 62-160.400 (6), (7) and (8), F.A.C. The packages submitted for new analytes must also include a justification for the petition (permit compliance, clean up requirement, etc.).

If you have any questions, please contact me at (850) 921-9732 or by e-mail at Deborah.Koren@dep.state.fl.us.

Sincerely,

Deborah S. Koren
Environmental Assessment Section

Attachment (1): DEP Guidance Document #96-01

Cc: Steve Arms, FL DOH Laboratory Certification Program (w/out attachment)

COMPQAP STATEMENT OF INTENT

STATEMENT OF INTENT TO COMPLY WITH THE DEPARTMENT OF ENVIRONMENTAL PROTECTION STANDARD OPERATING PROCEDURES FOR LABORATORY OPERATIONS AND SAMPLE COLLECTION ACTIVITIES

FLORIDA DEPARTMENT OF ENVIRONMENTAL PROTECTION
Quality Assurance Section

Part I: STANDARD OPERATING PROCEDURES TO BE INCORPORATED INTO COMPREHENSIVE QA PLANS

Name of Organization: Progress Environmental Laboratories
Address: 4420 Pendola Point Road, Tampa, FL 33619-____
Comprehensive QA Plan Number: 900306

Check the specific protocols that your organization will be using while collecting and/or analyzing environmental samples. **Note: check only documents and protocols as listed in the "DEP Standard Operating Procedures for Laboratory Operations and Sample Collection Activities"(DEP-QA-001/92) dated September 30, 1992 for which your organization has current equipment capabilities.**

THIS FORM MUST BE ACCOMPANIED BY THE SUPPORTING DOCUMENTATION SPECIFIED IN DEP-QA-001/92

X **ORGANIZATION AND RESPONSIBILITY** (Chapter 3)

FIELD ACTIVITIES (Chapter 4):
Field Decontamination and Cleaning Protocols:
X Container Cleaning protocols (4.4.1):
- X Sample containers cleaned by organization
- X Sample containers obtained precleaned from commercial vendor
- X Sample containers obtained precleaned from laboratory with an approved Comprehensive QA Plan

X General Considerations and Reagents (4.1.1 through 4.1.3)
X Sampling Equipment (4.1.4)
X Pumps used only for Purging (4.1.8.1 and 4.1.8.2)
__ Automatic Samplers (4.1.5)
X Pumps used for Purging and Sampling (4.1.8.1 and 4.1.8.2)
X Field Filtration Equipment (4.1.6)
X Non-Sampling Equipment (Augers, etc.) (4.1.9)
X Teflon Tubing (4.1.7.1)
X Analyte-Free Water Containers (4.1.10)
X Non-teflon Tubing (4.1.7.2 through 4.1.7.5)
X Ice Chests and Shipping Containers (4.1.11)
X Field Meters, Flow Meters and Other Field Instruments including Lanyards, Well Sounders and Tapes (4.1.9)

Sampling Protocols:
X General (4.0)
Aqueous Matrices:
X General Concerns and Special Sample Handling Procedures (4.2.1 and 4.2.2)
X Surface Water (4.2.3)
X Drinking Water Supply System (4.2.8)
X Wastewater (4.2.4)
__ Temporary Well Points (4.2.9)
X Groundwater (4.2.5)
__ Air Stripper and Remedial Treatment Systems (4.2.10)
X Wells with in-place Plumbing (4.2.6)
__ Bioassay (4.2.11)
X Portable Well Sampling (4.2.7)

Solid Matrices:
X General Concerns and Special Sample Handling Procedures (4.3.1 and 4.3.3)
X Soil (4.3.4)
X Domestic Waste Sludges (Residuals) (4.3.8)
X Sediment (4.3.5)
X Sludges - Solid and Hazardous Wastes (4.3.9)
__ Fish Tissue (4.3.6)
X Liquid Hazardous Wastes (4.3.9)
__ Shellfish (4.3.7)
__ Macrobenthic Invertebrates (4.3.10)

Preservation, Holding Times and Containers Types:

X Aqueous samples - 40 CFR Part 136, Table II (4.4.2)
X Aqueous samples - 17-160.700, F.A.C., Table 4 (4.4.2)
X Aqueous samples - 17-160.700, F.A.C., Table 8 (4.4.2)
X Solid samples - 17-160.700, F.A.C., Table 5 (4.4.2)

PartI: STANDARD OPERATING PROCEDURES TO BE INCORPORATED INTO COMPREHENSIVE QA PLANS, Cont.

Preservatives are:
- X Provided by the laboratory in separate containers
- X Provided by the laboratory already premeasured into the containers
- __ Provided by the field consultant

Field-Related Activities:
- X Sample Dispatch (4.4.3)
- X Reagent and Standard Storage (4.4.4)
- X Field Waste Disposal (4.4.5)

SAMPLE CUSTODY AND DOCUMENTATION (Chapter 5):
- X General Requirements (5.1)
- X Preparation of Field-Sampling Supplies (5.2)
- X Custody and Documentation for Field Operations (5.3)
- X Custody and Documnetaion for Laboratory Operations (5.4)
- __ Electronic Data Documentation (5.5)
- __ Legal or Evidentiary Custody (5.6)

ANALYTICAL PROCEDURES (Chapter 6):
- X Laboratory Glassware Cleaning and Storage Protocols (6.1)
- X Laboratory Reagent Storage (6.2)
- X Laboratory Waste Disposal (6.3)

CALIBRATION PROCEDURES AND FREQUENCY (Chapter 7):
- X General Requirements and Documentation (7.1, 7.2, 7.8 and 7.9)
- X Standard Receipt and Traceability (Sec 7.3)
- X Frequency of Standard Preparation and Standard Storage (Sec 7.4)

Field:
- X General Requirements (7.5.1)
- X pH (7.5.2)
- X Temperature (7.5.3)
- X Dissolved Oxygen (7.5.4)
- __ Automatic Wastewater-type Samplers (7.5.8)
- X Specific Conductance (7.5.5)
- __ Chlorine Measurements (7.5.6)
- __ OVAs (7.5.7)

Laboratory:
- X Laboratory Instruments (7.6)
- X Support Equipment Calibration (7.7)

X **PREVENTATIVE MAINTENANCE** (Chapter 8.0)

QUALITY CONTROL REQUIREMENTS AND ROUTINES TO CALCULATE AND ASSESS PRECISION, ACCURACY AND METHOD DETECTION LIMITS (Chapter 9)
- X Documentation (Chapter 9.4)

Field Quality Control Requirements:
- X Minimum Field Quality Control Requirements (9.1.1)

Laboratory Quality Control Requirements:
- X Chemical Analysis (9.1.2.1)
- __ Microbiological Analysis (9.1.2.2)
- __ Toxicity (Bioassay) Tests (9.1.2.3)
- __ Macrobenthic Species Identification (9.1.2.4)
- X Formulae for Calculating and Assessing Precision and Accuracy (9.2)
- X Formulae for Calculating Method Detection Limits (9.3)

X **DATA REDUCTION, VALIDATION AND REPORTING** (Chapter 10)

X **CORRECTIVE ACTION** (Chapter 11)

X **PERFORMANCE AND SYSTEMS AUDITS** (Chapter 12)

__ **QUALITY ASSURANCE REPORTS** (Chapter 13)

SUMMARY OF SOP'S

SUMMARY OF CLP SOPs

Draft* SOPs or addendums to the EPA SW-846 methods are written for the following methods:

1) Volatiles Analysis by OLM04.2
2) Volatiles Analysis by OLC02.1
3) Semi-Volatiles Analysis by OLM04.2
4) Semi-Volatiles Analysis by OLM02.1
5) Pesticide/Aroclor Analysis by OLM04.2
6) Pesticide/Aroclor Analysis by OLM02.1
7) 8330 Analysis by SW-846
8) Metals Analysis by ILM04.0

*PEL Laboratories, Inc is currently undergoing further method development for CLP methodologies.

PE STUDIES

P E L Laboratories, Inc.
Brian Spann Laboratory Director 813-247-2805
4420 Pendola Point Rd.
Tampa FL 33619

Account# 1871

USEPA LAB ID FL00311

File: 1871 WP 061400.pdf created by Absolute Standards on 6/14/2000
Study # 0002 Open Date 4/15/2000
Study Type External PT Close Date 5/30/2000

EPA #	Component	Method Code	Method Description	</>	Reported Value	Assigned Value	Warning Low	Warning High	Acceptance Low	Acceptance High	Performance Evaluation
Part#55102 Lot#WP0002 RCRA Metals in Soil #1					NELAC Additional Analytes			Invoice# 42304		Units ug/g	
NA	Antimony	6010B	6010B		16.2	21.6	1.38	41.8	0	51.9	ACCEPT.
NA	Arsenic	6010B	6010B		31.1	42.0	30.6	53.3	24.9	59.0	ACCEPT.
NA	Barium	6010B	6010B		61.8	70.5	28.2	113	14.1	127	ACCEPT.
NA	Beryllium	6010B	6010B		35.0	47.6	19.0	76.1	9.52	85.6	ACCEPT.
NA	Boron					37.0	14.8	59.2	7.40	66.6	NO EVAL.
NA	Cadmium	6010B	6010B		18.8	25.5	19.7	31.4	16.7	34.3	CK. FOR ERR.
NA	Chromium	6010B	6010B		30.0	38.9	15.6	62.2	7.78	70.0	ACCEPT.
NA	Cobalt	6010B	6010B		35.2	42.0	16.8	67.2	8.40	75.6	ACCEPT.
NA	Copper	6010B	6010B		31.9	45.6	18.2	72.9	9.11	82.0	ACCEPT.
NA	Lead	6010B	6010B		63.6	96.2	73.6	119	62.3	130	CK. FOR ERR.
NA	Manganese	6010B	6010B		63.8	630	252	1008	126	1134	NOT ACCEPT.
NA	Mercury	7471A	7471A		21.7	26.6	10.6	42.6	5.32	47.9	ACCEPT.
NA	Molybdenum	6010B	6010B		25.8	59.3	23.7	94.9	11.9	107	ACCEPT.
NA	Nickel	6010B	6010B		48.0	65.2	53.4	77.0	47.5	82.8	CK. FOR ERR.
NA	Selenium	6010B	6010B		28.5	45.5	18.2	72.8	9.10	81.9	ACCEPT.
NA	Silver	6010B	6010B		64.3	88.0	35.2	141	17.6	158	ACCEPT.
NA	Sodium	6010B	6010B		20.0	213	85.0	340	42.5	383	NOT ACCEPT.
NA	Strontium					34.8	13.9	55.7	6.97	62.7	NO EVAL.
NA	Thallium	6010B	6010B		30.9	54.9	22.0	87.8	11.0	98.8	ACCEPT.
NA	Titanium					182	72.9	292	36.4	328	NO EVAL.
NA	Vanadium	6010B	6010B		46.6	61.1	24.4	97.8	12.2	110	ACCEPT.
NA	Zinc	6010B	6010B		67.2	56.8	22.7	90.9	11.4	102	ACCEPT.
Part#55103 Lot#WP0002 RCRA Metals in Soil #2					NELAC Additional Analytes			Invoice# 42304		Units ug/g	
NA	Aluminum	6010B	6010B		7190	7445	6606	8284	0	8704	ACCEPT.
NA	Calcium	6010B	6010B		9480	9959	8516	11402	0	12123	ACCEPT.
NA	Iron	6010B	6010B		22800	21084	17408	24759	0	26597	ACCEPT.
NA	Potassium	6010B	6010B		1100	878	426	1330	0	1556	ACCEPT.
NA	Magnesium	6010B	6010B		6410	6853	6254	7451	0	7751	ACCEPT.
NA	Tin	6010B	6010B		15.7	19.5	14.6	24.4	0	26.9	ACCEPT.
Part#55105 Lot#WP0002 RCRA Cyanide					NELAC Additional Analytes			Invoice# 42304		Units ug/g	
NA	Cyanide	9012A	9012A		10.4	11.2	.359	22	0	27.4	ACCEPT.

AbsoluteGrade PT Program — NIST-NVLAP CODE 200390-0 — WP Evaluation Report

P E L Laboratories, Inc.
Brian Spann Laboratory Director 813-247-2805
4420 Pendola Point Rd.
Tampa FL 33619

Account# 1871

USEPA LAB ID FL00311

File: 1871 WP 061400.pdf created by Absolute Standards on 6/14/2000
Study # 0002 Open Date 4/15/2000
Study Type External PT Close Date 5/30/2000

Part# 38066 Lot# WP0002 Toxaphene in Soil — Invoice# 42304 — Units ug/g

EPA #	Component	Method Code	Method Description	</>	Reported Value	Assigned Value	Warning Limits Low	Warning Limits High	Acceptance Limits Low	Acceptance Limits High	Performance Evaluation
NA	Toxaphene	393	8081A		5.82	6.25	4.45	8.04	3.55	8.94	ACCEPT.

P E L Laboratories, Inc.
Brian Spann Laboratory Director 813-247-2805
4420 Pendola Point Rd.
Tampa FL 33619

Account# 1871

USEPA LAB ID FL00311

File: 1871 WP 061400.pdf created by Absolute Standards on 6/14/2000
Study # 0002 Open Date 4/15/2000
Study Type External PT Close Date 5/30/2000

Part# 38068 Lot# WP0002 PE Semi-Volatiles in Soil - CLP Solid and Hazardous Waste Invoice# 42304 Units ug/g

EPA #	Component	Method Code	Method Description	</>	Reported Value	Assigned Value	Warning Limits Low	Warning Limits High	Acceptance Limits Low	Acceptance Limits High	Performance Evaluation
NA	bis(2-Chloroethyl) ether	404	8270C		272	329	133	525	35.6	623	ACCEPT.
NA	bis(2-Chloroisopropyl) ether	404	8270C		0	0	0	0	0	0	ACCEPT.
NA	bis(2-Chloroethoxy) methane	404	8270C		141	170	79.2	260	0	306	ACCEPT.
NA	4-Bromophenyl phenyl ether	404	8270C		291	375	179	571	82	669	ACCEPT.
NA	4-Chlorophenyl phenyl ether	404	8270C		261	325	239	411	196	454	ACCEPT.
NA	N-Nitrosodiphenylamine	404	8270C		0	0	0	0	0	0	ACCEPT.
NA	N-Nitrosodi-n-propylamine	404	8270C		0	0	0	0	0	0	ACCEPT.
NA	Benzyl butyl phthalate	404	8270C		165	205	86.8	323	27.6	382	ACCEPT.
NA	bis(2-Ethylhexyl) phthalate	404	8270C		124	146	106	186	86.4	205	ACCEPT.
NA	Diethyl phthalate	404	8270C		154	151	2.84	300	0	374	ACCEPT.
NA	Dimethyl phthalate	404	8270C		127	158	124	192	0	209	ACCEPT.
NA	Di-n-butyl phthalate	404	8270C		150	178	70.6	286	0	340	ACCEPT.
NA	Di-n-octyl phthalate	404	8270C		123	128	51.3	206	0	245	ACCEPT.
NA	4-Chloroaniline	404	8270C		0	0	0	0	0	0	ACCEPT.
NA	2-Nitroaniline	404	8270C		217	259	155	364	0	417	ACCEPT.
NA	3-Nitroaniline	404	8270C		54.8	88.1	0	207	0	266	ACCEPT.
NA	4-Nitroaniline	404	8270C		94.3	193	9.3	377	0	469	ACCEPT.
NA	2-Chloronaphthalene	404	8270C		113	137	110	163	0	177	ACCEPT.
NA	Dibenzofuran	404	8270C		224	275	224	326	0	352	ACCEPT.
NA	1,2-Dichlorobenzene	404	8270C		421	535	366	703	0	788	ACCEPT.
NA	1,3-Dichlorobenzene	404	8270C		125	189	160	217	0	232	CK. FOR ERR.
NA	1,4-Dichlorobenzene	404	8270C		155	205	142	267	0	299	ACCEPT.
NA	Hexachlorobenzene	404	8270C		53.3	84.4	34.1	135	0	160	ACCEPT.
NA	Hexachlorobutadiene	404	8270C		0	0	0	0	0	0	ACCEPT.
NA	Hexachloroethane	404	8270C		183	229	156	302	0	339	ACCEPT.
NA	Hexachlorocyclopentadiene	404	8270C		0	0	0	0	0	0	ACCEPT.
NA	1,2,4-Trichlorobenzene	404	8270C		151	187	125	250	0	282	ACCEPT.
NA	Carbazole	404	8270C		40.2	59.1	11.3	107	0	131	ACCEPT.
NA	2,4-Dinitrotoluene	404	8270C		210	235	148	322	0	365	ACCEPT.
NA	2,6-Dinitrotoluene	404	8270C		41.2	54.4	31.4	77.5	0	89	ACCEPT.
NA	Isophorone	404	8270C		0	0	0	0	0	0	ACCEPT.
NA	Nitrobenzene	404	8270C		0	0	0	0	0	0	ACCEPT.
NA	Acenaphthene	404	8270C		75.2	92.7	52.5	133	0	153	ACCEPT.
NA	Acenaphthylene	404	8270C		89.6	133	45.5	220	0	263	ACCEPT.
NA	Anthracene	404	8270C		188	260	231	289	0	303	CK. FOR ERR.

P E L Laboratories, Inc.
Brian Spann Laboratory Director 813-247-2805
4420 Pendola Point Rd.
Tampa FL 33619

Account# **1871**

USEPA LAB ID **FL00311**

File: **1871 WP 061400.pdf** created by Absolute Standards on **6/14/2000**
Study # **0002** Open Date **4/15/2000**
Study Type **External PT** Close Date **5/30/2000**

EPA #	Component	Method Code	Method Description	</>	Reported Value	Assigned Value	Warning Low	Warning High	Acceptance Low	Acceptance High	Performance Evaluation
NA	Benzo(a)anthracene	404	8270C		55.1	67.6	44.7	90.5	0	102	ACCEPT.
NA	Benzo(a)pyrene	404	8270C		98.6	117	61.5	172	0	199	ACCEPT.
NA	Benzo(b)fluoranthene	404	8270C		56.0	82	34.5	129	0	153	ACCEPT.
NA	Benzo(g,h,i)perylene	404	8270C		0	0	0	0	0	0	ACCEPT.
NA	Benzo(k)fluoranthene	404	8270C		0	0	0	0	0	0	ACCEPT.
NA	Chrysene	404	8270C		76.2	105	49.1	162	0	190	ACCEPT.
NA	Dibenzo(a,h)anthracene	404	8270C		0	0	0	0	0	0	ACCEPT.
NA	Fluoranthene	404	8270C		61.7	80	34.8	125	0	148	ACCEPT.
NA	Fluorene	404	8270C		71.6	94.7	71.4	118	0	130	ACCEPT.
NA	Indeno(1,2,3-cd)pyrene	404	8270C		0	0	0	0	0	0	ACCEPT.
NA	2-Methylnaphthalene	404	8270C		0	0	0	0	0	0	ACCEPT.
NA	Naphthalene	404	8270C		82.9	103	57.3	150	0	173	ACCEPT.
NA	Phenanthrene	404	8270C		49.9	62.1	43.4	80.9	0	90.2	ACCEPT.
NA	Pyrene	404	8270C		61.4	70.5	41.9	99.1	0	113	ACCEPT.
NA	4-Chloro-3-methylphenol	404	8270C		224	260	124	395	0	463	ACCEPT.
NA	2-Chlorophenol	404	8270C		54.8	60.8	36.9	84.7	0	96.6	ACCEPT.
NA	2,4-Dichlorophenol	404	8270C		76.5	94.1	30.5	158	0	190	ACCEPT.
NA	2,4-Dimethylphenol	404	8270C		8.3	11.3	0	23.8	0	30	ACCEPT.
NA	2,4-Dinitrophenol	404	8270C		64.3	52.3	0	149	0	198	ACCEPT.
NA	4,6-Dinitro-2-methylphenol	404	8270C		97.9	74.6	0	162	0	206	ACCEPT.
NA	o-Cresol (2-Methylphenol)	404	8270C		0	0	0	0	0	0	ACCEPT.
NA	p-Cresol (4-Methylphenol)	404	8270C		2.39	0	0	0	0	0	NOT ACCEPT.
NA	2-Nitrophenol	404	8270C		925	117	92.5	142	0	155	NOT ACCEPT.
NA	4-Nitrophenol	404	8270C		137	108	0	248	0	317	ACCEPT.
NA	Pentachlorophenol	404	8270C		42.6	53.8	1.77	106	0	132	ACCEPT.
NA	Phenol	404	8270C		0	0	0	0	0	0	ACCEPT.
NA	2,4,5-Trichlorophenol	404	8270C		0	0	0	0	0	0	ACCEPT.
NA	2,4,6-Trichlorophenol	404	8270C		143	158	97.7	219	0	249	ACCEPT.

P E L Laboratories, Inc.
Brian Spann Laboratory Director 813-247-2805
4420 Pendola Point Rd.
Tampa FL 33619

Account# 1871

USEPA LAB ID FL00311

File: 1871 WP 061400.pdf created by Absolute Standards on 6/14/2000
Study # 0002 Open Date 4/15/2000
Study Type External PT Close Date 5/30/2000

Part# 38084 Lot# WP0002 Soil Volatile Aromatics and 8021B List - Concentrate Invoice# 42304 Units ug/Kg

EPA #	Component	Method Code	Method Description	</>	Reported Value	Assigned Value	Warning Low	Warning High	Acceptance Low	Acceptance High	Performance Evaluation
0009	Bromodichloromethane	403	8260B		50.3	46.2	27.7	64.7	18.5	73.9	ACCEPT.
0061	Dibromochloromethane	403	8260B		34.0	30.2	18.1	42.2	12.1	48.3	ACCEPT.
NA	1,1-Dichloroethene	403	8260B		67.1	72.1	43.3	101	28.8	115	ACCEPT.
NA	cis-1,2-Dichloroethene	403	8260B		74.2	72.0	43.2	101	28.8	115	ACCEPT.
NA	trans-1,2-Dichloroethene	403	8260B		83.5	92.7	55.6	130	37.1	148	ACCEPT.
0063	Methylene chloride	403	8260B		24.5	28.1	16.9	39.3	11.2	44.9	ACCEPT.
NA	Bromochloromethane	403	8260B		38.0	34.0	20.4	47.6	13.6	54.4	ACCEPT.
0062	Bromoform	403	8260B		71.0	56.0	33.6	78.4	22.4	89.6	ACCEPT.
0058	Carbon tetrachloride	403	8260B		51.2	44.0	26.4	61.6	17.6	70.4	ACCEPT.
0055	Chloroform	403	8260B		34.2	32.1	19.3	45.0	12.8	51.4	ACCEPT.
NA	Dibromomethane	403	8260B		50.3	62.0	37.2	86.8	24.8	99.2	ACCEPT.
NA	1,1-Dichloroethane	403	8260B		0	0.000	0.000	0.000	0.000	0.000	ACCEPT.
NA	2,2-Dichloropropane	403	8260B		0	0.000	0.000	0.000	0.000	0.000	ACCEPT.
0059	Tetrachloroethene	403	8260B		18.5	22.0	13.2	30.8	8.81	35.2	ACCEPT.
0056	1,1,1-Trichloroethane	403	8260B		14.6	12.8	7.68	17.9	5.12	20.5	ACCEPT.
NA	1,2-Dibromo-3-chloropropane	403	8260B		87.4	84.1	50.5	118	33.6	135	ACCEPT.
NA	1,2-Dibromoethane	403	8260B		68.6	64.2	38.5	89.9	25.7	103	ACCEPT.
0054	1,2-Dichloroethane	403	8260B		29.6	26.0	15.6	36.5	10.4	41.7	ACCEPT.
NA	1,2-Dichloropropane	403	8260B		17.0	17.3	10.4	24.2	6.90	27.6	ACCEPT.
NA	1,3-Dichloropropane	403	8260B		0	0.000	0.000	0.000	0.000	0.000	ACCEPT.
NA	1,1-Dichloropropene	403	8260B		0	0.000	0.000	0.000	0.000	0.000	ACCEPT.
NA	cis-1,3-Dichloropropene	403	8260B		98.6	86.0	51.6	120	34.4	138	ACCEPT.
NA	trans-1,3-Dichloropropene	403	8260B		63.8	56.0	33.6	78.4	22.4	89.6	ACCEPT.
NA	Hexachlorobutadiene	403	8260B		72.3	78.0	46.8	109	31.2	125	ACCEPT.
NA	1,1,1,2-Tetrachloroethane	403	8260B		64.7	60.0	36.0	84.0	24.0	96.0	ACCEPT.
NA	1,1,2,2-Tetrachloroethane	403	8260B		21.1	22.1	13.3	30.9	8.83	35.3	ACCEPT.
NA	1,1,2-Trichloroethane	403	8260B		73.9	72.7	43.6	102	29.1	116	ACCEPT.
0057	Trichloroethene	403	8260B		8.50	7.02	4.21	9.82	2.81	11.2	ACCEPT.
NA	1,2,3-Trichloropropane	403	8260B		0	0.000	0.000	0.000	0.000	0.000	ACCEPT.
0065	Benzene	403	8260B		87.1	88.0	52.8	123	35.2	141	ACCEPT.
NA	Bromobenzene	403	8260B		0	0.000	0.000	0.000	0.000	0.000	ACCEPT.
NA	n-Butyl benzene	403	8260B		0	0.000	0.000	0.000	0.000	0.000	ACCEPT.
0066	Ethyl benzene	403	8260B		8.61	8.41	5.05	11.8	3.37	13.5	ACCEPT.
NA	p-Isopropyl toluene	403	8260B		84.1	92.0	55.2	129	36.8	147	ACCEPT.
NA	Naphthalene	403	8260B		0	0.000	0.000	0.000	0.000	0.000	ACCEPT.

P E L Laboratories, Inc.
Brian Spann Laboratory Director 813-247-2805
4420 Pendola Point Rd.
Tampa FL 33619

Account# 1871

USEPA LAB ID FL00311

File: **1871 WP 061400.pdf** created by Absolute Standards on **6/14/2000**
Study # **0002** Open Date **4/15/2000**
Study Type **External PT** Close Date **5/30/2000**

EPA #	Component	Method Code	Method Description	</>	Reported Value	Assigned Value	Warning Limits Low	Warning Limits High	Acceptance Limits Low	Acceptance Limits High	Performance Evaluation
NA	Styrene	403	8260B		77.2	76.2	45.7	107	30.5	122	ACCEPT.
0067	Toluene	403	8260B		4.14	4.00	2.40	5.61	1.60	6.41	ACCEPT.
NA	1,2,3-Trichlorobenzene	403	8260B		42.9	44.0	26.4	61.6	17.6	70.4	ACCEPT.
NA	1,2,4-Trichlorobenzene	403	8260B		100	94.5	56.7	132	37.8	151	ACCEPT.
NA	1,2,4-Trimethylbenzene	403	8260B		0	0.000	0.000	0.000	0.000	0.000	ACCEPT.
NA	1,3,5-Trimethylbenzene	403	8260B		0	0.000	0.000	0.000	0.000	0.000	ACCEPT.
NA	tert-Butyl benzene	403	8260B		0	0.000	0.000	0.000	0.000	0.000	ACCEPT.
NA	sec-Butyl benzene	403	8260B		0	0.000	0.000	0.000	0.000	0.000	ACCEPT.
0064	Chlorobenzene	403	8260B		51.0	50.0	30.0	70.0	20.0	80.0	ACCEPT.
NA	2-Chlorotoluene	403	8260B		0	0.000	0.000	0.000	0.000	0.000	ACCEPT.
NA	4-Chlorotoluene	403	8260B		0	0.000	0.000	0.000	0.000	0.000	ACCEPT.
0094	1,2-Dichlorobenzene	403	8260B		31.2	32.0	19.2	44.9	12.8	51.3	ACCEPT.
0096	1,3-Dichlorobenzene	403	8260B		0	0.000	0.000	0.000	0.000	0.000	ACCEPT.
0095	1,4-Dichlorobenzene	403	8260B		15.6	16.2	9.72	22.7	6.48	25.9	ACCEPT.
NA	Isopropylbenzene	403	8260B		0	0.000	0.000	0.000	0.000	0.000	ACCEPT.
NA	n-Propylbenzene	403	8260B		0	0.000	0.000	0.000	0.000	0.000	ACCEPT.
NA	Bromomethane	403	8260B		12.7	13.3	8.00	18.7	5.33	21.3	ACCEPT.
NA	Chloroethane	403	8260B		0	0.000	0.000	0.000	0.000	0.000	ACCEPT.
NA	Chloromethane	403	8260B		0	0.000	0.000	0.000	0.000	0.000	ACCEPT.
NA	Dichlorodifluoromethane	403	8260B		0	0.000	0.000	0.000	0.000	0.000	ACCEPT.
NA	Trichlorofluoromethane	403	8260B		0	0.000	0.000	0.000	0.000	0.000	ACCEPT.
NA	Vinyl chloride	403	8260B		30.5	38.0	22.8	53.2	15.2	60.9	ACCEPT.
NA	Methyl tert-butyl ether (MTBE)	403	8260B		67.4	64.0	38.4	89.6	25.6	102	ACCEPT.
NA	Total Xylenes	403	8260B		62.3	62.0	37.2	86.8	24.8	99.2	ACCEPT.

P E L Laboratories, Inc.
Brian Spann Laboratory Director 813-247-2805
4420 Pendola Point Rd.
Tampa FL 33619

Account# 1871

USEPA LAB ID FL00311

File: 1871 WP 061400.pdf created by Absolute Standards on 6/14/2000
Study # 0002 Open Date 4/15/2000
Study Type External PT Close Date 5/30/2000

EPA #	Component	Method Code	Method Description	</>	Reported Value	Assigned Value	Warning Low	Warning High	Acceptance Low	Acceptance High	Performance Evaluation
Part# 38101	Lot# WP0002	Chlorinated Pesticides in Soil			Chlorinated Pesticides				Invoice# 42304		Units ug/g
NA	Aldrin	393	8081A		3.05	3.57	2.54	4.59	0	5.11	ACCEPT.
NA	a-BHC	393	8081A		3.42	3.18	2.32	4.04	0	4.47	ACCEPT.
NA	b-BHC	393	8081A		2.40	2.69	2.15	3.23	0	3.5	ACCEPT.
NA	d-BHC	393	8081A		3.76	3.41	2.04	4.77	0	5.45	ACCEPT.
NA	g-BHC (Lindane)	393	8081A		2.77	2.82	2.15	3.49	0	3.82	ACCEPT.
NA	a-Chlordane	393	8081A		3.68	4.45	3.47	5.44	0	5.93	ACCEPT.
NA	g-Chlordane	393	8081A		5.83	6.7	4.76	8.63	0	9.6	ACCEPT.
NA	4,4'-DDD	393	8081A		4.87	5.39	3.99	6.8	0	7.5	ACCEPT.
NA	4,4'-DDE	393	8081A		3.60	4.22	3.15	5.29	0	5.82	ACCEPT.
NA	4,4'-DDT	393	8081A		2.43	2.88	2.14	3.62	0	3.99	ACCEPT.
NA	Dieldrin	393	8081A		7.35	7.53	5.63	9.43	0	10.4	ACCEPT.
NA	Endosulfan I	393	8081A		6.96	7.1	3.45	10.7	0	12.6	ACCEPT.
NA	Endosulfan II	393	8081A		1.79	2.16	1.52	2.8	0	3.13	ACCEPT.
NA	Endosulfan sulfate	393	8081A		4.61	4.12	1.25	7	0	8.43	ACCEPT.
NA	Endrin	393	8081A		2.16	2.68	1.12	4.24	0	5.02	ACCEPT.
NA	Endrin aldehyde	393	8081A		3.00	2.55	0	5.62	0	7.16	ACCEPT.
NA	Endrin ketone	393	8081A		2.24	2.25	1.3	3.21	0	3.69	ACCEPT.
NA	Heptachlor	393	8081A		4.65	5.55	3.71	7.39	0	8.31	ACCEPT.
NA	Heptachlor epoxide	393	8081A		2.48	2.87	2.22	3.51	0	3.83	ACCEPT.
NA	Methoxychlor	393	8081A		3.50	4.13	2.7	5.55	0	6.27	ACCEPT.
NA	trans-Nonachlor					2.38	0	5.26	0	6.71	NO EVAL.
Part# 38141	Lot# WP0002	Chlordane in Soil							Invoice# 42304		Units ug/g
NA	Chlordane	393	8081A		6.34	7.81	5.85	9.77	0.00	10.8	ACCEPT.
Part# 38142	Lot# WP0002	Aroclor in Soil							Invoice# 42304		Units ug/Kg
NA	Aroclor 1016	394	8082		0	0	0	0	0	0	ACCEPT.
NA	Aroclor 1221	394	8082		0	0	0	0	0	0	ACCEPT.
NA	Aroclor 1232	394	8082		0	0	0	0	0	0	ACCEPT.
NA	Aroclor 1242	394	8082		300	250	183	317	0	351	ACCEPT.
NA	Aroclor 1248	394	8082		0	0	0	0	0	0	ACCEPT.
NA	Aroclor 1254	394	8082		0	0	0	0	0	0	ACCEPT.
NA	Aroclor 1260	394	8082		0	0	0	0	0	0	ACCEPT.

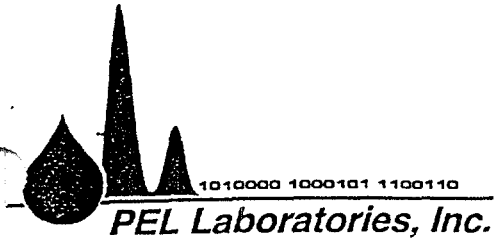

July 31, 2000

Stephen A. Arms
Florida Department of Health
P.O. Box 210
Jacksonville, FL 32231-0042

The following are explanations for the "not acceptable" results on the revised report for the April 2000 performance evaluations from Absolutegrade.

Method 8270C (p-Cresol "not acceptable")
This analyte could not be reanalyzed to verify the low level hit, because of the extremely high concentrations of other target compounds. It was believed to be contamination at the time of analysis, but the result was reported since it was a performance evaluation sample. On normal environmental samples, the diluted result would have been reported, which would have eliminated the effects of the contaminant.

Method 8270C (2-Nitrophenol "not acceptable")
The analyst who wrote up and verified the data did not see the decimal point for the result. This was a transcription error, and the result should have been reported as 92.5 which was passing. Better care will be taken writing up and reviewing the results against the raw data, and the original analyst was told to write bigger decimal points.

Method 6010B (Manganese "not acceptable")
The analyst who wrote up and verified the data thought there was a decimal point in the result. This was a transcription error, and the result should have been reported as 638 which was passing. Better care will be taken writing up and reviewing the results against the raw data, and the original analyst was told to upload all results to LIMS from the instrument for calculation.

Method 6010B (Sodium "not acceptable")
The preparation method for this sample required the use of all 10 grams in the sample vial, but no valid methodology exists to support digesting that much sample for metals. Although the directions for the performance evaluation sample specifically said " Do not subsample," the analysts had no choice. When they digested 0.5 grams of sample into 50 mL, the sodium value was below PEL Laboratories, Inc. reporting limit, and was reported as not detected. For future solid performance evaluation samples, they may increase the amount of sample slightly in the digestion, if an analyte comes up not detected.

Thank you very much,

Kathleen Zinn
Quality Assurance Officer
PEL Laboratories, Inc.

4420 Pendola Point Road • Tampa, Florida 33619
(813) 247-2805 • FAX: (813) 248-1537

Performance Summary

WP February 2000
Study Closing Date 03/17/2000

Product: Acid Extractables

Analyte	Product Level	Analyte Code	Reported Value	Assigned Value	Acceptance Range	Z-Score	Test Method	Evaluation
2,4,6-Trichlorophenol	WP		<5.00				SW846 8270C	
2,4-Dichlorophenol	WP		22.4	23.7	8.46-30.1	0.86	SW846 8270C	Acceptable
2,4-Dimethylphenol	WP		12.5	14	7.72-14.9	1.01	SW846 8270C	Acceptable
2,4-Dinitrophenol	WP		<5.00				SW846 8270C	
2-Chlorophenol	WP		29.0	32.8	12.4-41.5	0.41	SW846 8270C	Acceptable
2-Methyl-4,6-Dinitrophenol	WP		55.9	70.5	34.3-68	0.85	SW846 8270C	Acceptable
2-Nitrophenol	WP		19.3	20.2	8.85-23.8	1.2	SW846 8270C	Acceptable
4-Chloro-3-methylphenol	WP		16.1	18.4	7.06-23.8	0.25	SW846 8270C	Acceptable
4-Nitrophenol	WP		<5.00				SW846 8270C	
Pentachlorophenol	WP		<5.00				SW846 8270C	
Phenol	WP		7.46	17.6	0-20.7	0.62	SW846 8270C	Acceptable

Performance Summary

Product: Base Neutral Extractables

Analyte	Product Level	Analyte Code	Reported Value	Assigned Value	Acceptance Range	Z-Score	Test Method	Evaluation
1,2,4-Trichlorobenzene	WP		<5.00				SW846 8270C	
1,2-Dichlorobenzene	WP	94	75.3	92.4	27.8-110	0.48	SW846 8270C	Acceptable
1,3-Dichlorobenzene	WP		31.0	39.4	9.16-47.2	0.44	SW846 8270C	Acceptable
1,4-Dichlorobenzene	WP		31.0	38	5.2-47.5	0.65	SW846 8270C	Acceptable
2,4-Dinitrotoluene (2,4-DNT)	WP		22.2	24.6	11.9-28.1	0.82	SW846 8270C	Acceptable
2,6-Dinitrotoluene (2,6-DNT)	WP		28.6	28.6	16.2-32.5	1.58	SW846 8270C	Acceptable
2-Chloronaphthalene	WP		<5.00				SW846 8270C	
3,3'-Dichlorobenzidine	WP		<5.00				SW846 8270C	
4-Bromophenyl phenyl ether	WP		<5.00				SW846 8270C	
4-Chlorophenyl phenyl ether	WP		<5.00				SW846 8270C	
Acenaphthene	WP		21.1	23.5	11.1-28.1	0.53	SW846 8270C	Acceptable
Acenaphthylene	WP		<5.00				SW846 8270C	
Anthracene	WP		27.4	28.2	14.8-36.8	0.44	SW846 8270C	Acceptable
Benzidine	WP		<10.0				SW846 8270C	
Benzo(a)anthracene	WP		<5.00				SW846 8270C	
Benzo(a)pyrene	WP		<5.00				SW846 8270C	
Benzo(b)fluoranthene	WP		<5.00				SW846 8270C	
Benzo(ghi)perylene	WP		<5.00				SW846 8270C	
Benzo(k)fluoranthene	WP		<5.00				SW846 8270C	
Bis(2-Chloroethoxy)methane	WP		<5.00				SW846 8270C	
Bis(2-Chloroethyl)ether	WP		<5.00				SW846 8270C	
Bis(2-Chloroisopropyl)ether	WP		<5.00				SW846 8270C	
Bis(2-Ethylhexyl)phthalate	WP		7.40	23.6	0-45	1.86	SW846 8270C	Acceptable

Performance Summary

Butyl benzyl phthalate	WP	20.0	50.4	0-86.8	0.82	SW846 8270C	Acceptable
Chrysene	WP	<5.00				SW846 8270C	
Di-n-butyl phthalate	WP	<5.00				SW846 8270C	
Di-n-octyl phthalate	WP	<5.00				SW846 8270C	
Dibenzo(a,h)anthracene	WP	<5.00				SW846 8270C	
Diethyl phthalate	WP	29.0	52.4	0-80.6	0.36	SW846 8270C	Acceptable
Dimethyl phthalate	WP	18.8	83.3	0-118	1.51	SW846 8270C	Acceptable
Fluoranthene	WP	24.0	23	11.1-30.6	0.98	SW846 8270C	Acceptable
Fluorene	WP	24.9	24.6	13.1-30.5	1.07	SW846 8270C	Acceptable
Hexachlorobenzene	WP	<5.00				SW846 8270C	
Hexachlorobutadiene	WP	32.5	39.9	6.05-50.1	0.6	SW846 8270C	Acceptable
Hexachlorocyclopentadiene	WP	17.0	23.2	0-27.9	0.71	SW846 8270C	Acceptable
Hexachloroethane	WP	18.1	24.3	1.72-30.2	0.44	SW846 8270C	Acceptable
Indeno(1,2,3-cd)pyrene	WP	<5				SW846 8270C	
Isophorone	WP	24.3	23.4	6.67-32.5	1.09	SW846 8270C	Acceptable
N-nitrosodi-n-propylamine	WP	<5.00				SW846 8270C	
N-nitrosodimethylamine	WP	<5.00				SW846 8270C	
N-nitrosodiphenylamine	WP	<5.00				SW846 8270C	
Naphthalene	WP	22.0	25.2	11.6-29.4	0.51	SW846 8270C	Acceptable
Nitrobenzene (NB)	WP	39.0	41.2	9.6-54.6	0.92	SW846 8270C	Acceptable
Phenanthrene	WP	28.8	29.7	15.4-38.2	0.53	SW846 8270C	Acceptable
Pyrene	WP	33.1	32.5	14.3-45.9	0.57	SW846 8270C	Acceptable

Product: Chlordane (Total)

Analyte	Product Level	Analyte Code	Reported Value	Assigned Value	Acceptance Range	Z-Score	Test Method	Evaluation
Chlordane (Total)	WP	53	5.01	5.34	2.33-7.59	0.057	SW-846 8081A	Acceptable

Performance Summary

Product: Demand

Analyte	Product Level	Analyte Code	Reported Value	Assigned Value	Acceptance Range	Z-Score	Test Method	Evaluation
Biochemical Oxygen Demand	WP	38		93.2	44.6-132			
Carboneous BOD	WP	102		77.6	28.4-98.3			
Chemical Oxygen Demand	WP	36		150	115-172			
Total Organic Carbon	WP	37	58.0	55.5	46.3-63.9	0.99	SW-8469060	Acceptable

Product: Hexavalent Chromium

Analyte	Product Level	Analyte Code	Reported Value	Assigned Value	Acceptance Range	Z-Score	Test Method	Evaluation
Chromium, Hexavalent	WP		42.4	37.1	21.2-49.7	1.45	STDMTD3500D	Acceptable

Product: Minerals

Analyte	Product Level	Analyte Code	Reported Value	Assigned Value	Acceptance Range	Z-Score	Test Method	Evaluation
Alkalinity as CaCO3	WP	27		60.1	53.7-66.7			
Calcium	WP	23	25.4	24	21.2-27.5	0.96	SW-846 6010B	Acceptable
Chloride	WP	28		118	108-129			
Conductivity	WP	20		604	526-618			
Magnesium	WP	24	13.9	14.4	12.6-16.2	0.82	SW-846 6010B	Acceptable
Potassium	WP	26	14.7	13.1	11.2-15.2	2.24	SW846 6010B	Check for Error
Sodium	WP	25	53.8	54.7	49.3-60.2	0.55	SW-846 6010B	Acceptable
Sulfate	WP	30	28.7	27.2	21.6-32.1	1.03	USEPA375.4	Acceptable
Total Dissolved Solids	WP	21	275	306	237-393	1.54	USEPA160.1	Acceptable
Total Hardness as CaCO3	WP	22	121	119	108-132	0.25	STDMTD 2330B	Acceptable

APG Customer 1836
EPA Lab Code N/A

PEL Labs
4420 Pendola Point Road
Tampa, FL 33619

Performance Summary

WP February 2000
Study Closing Date 03/17/2000

Product: PCB's in Water

Analyte	Product Level	Analyte Code	Reported Value	Assigned Value	Acceptance Range	Z-Score	Test Method	Evaluation
Aroclor 1016/1242 Sample 1	WP	40	<1.00				SW846 8082	
Aroclor 1016/1242 Sample 2	WP	40	<1.00				SW846 8082	
Aroclor 1232 Sample 1	WP	42	<1.00				SW846 8082	
Aroclor 1232 Sample 2	WP	42	<1.00				SW846 8082	
Aroclor 1248 Sample 1	WP	44	4.67	4.94	2.05-6.98	0.18	SW846 8082	Acceptable
Aroclor 1248 Sample 2	WP	44	<1.00				SW846 8082	
Aroclor 1254 Sample 1	WP	45	<1.00				SW846 8082	
Aroclor 1254 Sample 2	WP	45	<1.00				SW846 8082	
Aroclor 1260 Sample 1	WP	46	<1.00				SW846 8082	
Aroclor 1260 Sample 2	WP	46	3.26	3.99	2.11-5.22	0.79	SW846 8082	Acceptable

PEL Labs
4420 Pendola Point Road
Tampa, FL 33619

Performance Summary

Product: Pesticides

Analyte	Product Level	Analyte Code	Reported Value	Assigned Value	Acceptance Range	Z-Score	Test Method	Evaluation
4,4'-DDD	WP	49	1.69	2.05	1-2.87	0.77	SW-846 8081A	Acceptable
4,4'-DDE	WP	50	0.520	0.69	0.32-0.94	1.1	SW-846 8081A	Acceptable
4,4'-DDT	WP	51	3.07	4.28	1.96-5.8	1.27	SW-846 8081A	Acceptable
Aldrin	WP	47	0.794	1.01	0.26-1.37	0.14	SW-846 8081A	Acceptable
alpha-BHC	WP		<0.100				SW-846 8081A	
beta-BHC	WP		2.61	3.22	1.63-4.43	0.89	SW-846 8081A	Acceptable
delta-BHC	WP		<0.1				SW-846 8081A	
Dieldrin	WP	48	0.744	0.8	0.41-1.11	0.13	SW-846 8081A	Acceptable
Endosulfan I	WP		2.17	2.85	1.53-3.59	1.15	SW-846 8081A	Acceptable
Endosulfan II	WP		<0.100				SW-846 8081A	
Endosulfan sulfate	WP		<0.100				SW-846 8081A	
Endrin	WP		<0.100				SW-846 8081A	
Endrin aldehyde	WP		<0.100				SW-846 8081A	
gamma-BHC	WP		<0.100				SW-846 8081A	
Heptachlor	WP	52	1.62	2.15	0.57-3	0.39	SW-846 8081A	Acceptable
Heptachlor epoxide	WP	78	0.478	0.6	0.3-0.77	0.8	SW-846 8081A	Acceptable
Methoxychlor	WP		<0.100				SW-846 8081A	

Product: pH

Analyte	Product Level	Analyte Code	Reported Value	Assigned Value	Acceptance Range	Z-Score	Test Method	Evaluation
pH	WP	19	8.07	7.97	7.75-8.2	1.33	USEPA150.1	Acceptable

Performance Summary

Product: Total Cyanide

Analyte	Product Level	Analyte Code	Reported Value	Assigned Value	Acceptance Range	Z-Score	Test Method	Evaluation
Total Cyanide	WP	71	0.590	0.57	0.39-0.73	0.53	USEPA335.2	Acceptable

Product: Toxaphene

Analyte	Product Level	Analyte Code	Reported Value	Assigned Value	Acceptance Range	Z-Score	Test Method	Evaluation
Toxaphene	WP		2.66	2.98	1.1-4.44	0.2	SW-846 8081A	Acceptable

Product: TPH Diesel (DRO)

Analyte	Product Level	Analyte Code	Reported Value	Assigned Value	Acceptance Range	Z-Score	Test Method	Evaluation
TPH Diesel (DRO)	WP		0.250	0.16	0-0.32	1.75	SW846 8015B	Acceptable

Product: TPH Gasoline (GRO)

Analyte	Product Level	Analyte Code	Reported Value	Assigned Value	Acceptance Range	Z-Score	Test Method	Evaluation
TPH Gasoline (GRO)	WP		0.178	0.34	0.12-0.43	1.92	SW846 8015	Acceptable

Performance Summary

Product: Trace Metals

Analyte	Product Level	Analyte Code	Reported Value	Assigned Value	Acceptance Range	Z-Score	Test Method	Evaluation
Aluminum	WP	1	230	250	201-302	1.25	SW-846 6010B	Acceptable
Antimony	WP	16	282	277	187-336	0.81	SW-846 6010B	Acceptable
Arsenic	WP	2	118	120	96.8-143	0.26	SW-846 6010B	Acceptable
Barium	WP		770	787	698-865	0.43	SW-846 6010B	Acceptable
Beryllium	WP	3	192	200	169-226	0.53	SW-846 6010B	Acceptable
Boron	WP			349	306-397			
Cadmium	WP	4	351	355	303-404	0.12	SW-846 6010B	Acceptable
Chromium	WP	6	327	334	290-379	0.47	SW-846 6010B	Acceptable
Cobalt	WP	5	147	150	130-169	0.47	SW-846 6010B	Acceptable
Copper	WP	7	476	487	442-536	0.83	SW-846 6010B	Acceptable
Iron	WP	8	1050	1000	883-1130	0.98	SW-846 6010B	Acceptable
Lead	WP	12	633	637	556-716	0.11	SW-846 6010B	Acceptable
Manganese	WP	10	727	750	674-834	1.01	SW-846 6010B	Acceptable
Mercury	WP	9	5.46	5.41	3.97-6.83	0.13	SW-846 6010B	Acceptable
Molybdenum	WP	74	311	310	265-355	0.067	SW-846 6010B	Acceptable
Nickel	WP	11	1500	1510	1370-1690	0.57	SW-846 6010B	Acceptable
Selenium	WP	13	1470	1500	1200-1740	0	SW-846 6010B	Acceptable
Silver	WP	17	162	168	143-192	0.74	SW-846 6010B	Acceptable
Strontium	WP	75		148	126-170			
Thallium	WP	18	272	270	216-315	0.42	SW-846 6010B	Acceptable
Titanium	WP	76		181	155-205			
Vanadium	WP	14	1960	2010	1810-2200	0.76	SW-846 6010B	Acceptable
Zinc	WP	15	504	500	441-564	0.049	SW-846 6010B	Acceptable

APG Customer 1836
EPA Lab Code N/A

PEL Labs
4420 Pendola Point Road
Tampa, FL 33619

Print Date March 28, 2000

Performance Summary

WP February 2000
Study Closing Date 03/17/2000

Product: Volatiles

Analyte	Product Level	Analyte Code	Reported Value	Assigned Value	Acceptance Range	Z-Score	Test Method	Evaluation
1,1,1-Trichloroethane	WP	56	24.8	27.4	17.9-36.1	0.72	SW-846 8260B	Acceptable
1,1,2,2-Tetrachloroethane	WP		<1.00				SW-846 8260B	
1,1,2-Trichloroethane	WP		5.65	5.83	3.76-8.29	0.49	SW-846 8260B	Acceptable
1,1-Dichloroethane	WP		<1.00				SW-846 8260B	
1,1-Dichloroethene	WP		<1.00				SW-846 8260B	
1,2-Dichlorobenzene	WP	94	20.8	21.4	14.9-27.6	0.19	SW-846 8260B	Acceptable
1,2-Dichloroethane	WP	54	57.8	59.8	41.3-79.5	0.41	SW-846 8260B	Acceptable
1,2-Dichloropropane	WP		15.7	15.5	10.6-20.5	0.12	SW-846 8260B	Acceptable
1,3-Dichlorobenzene	WP	96	43.4	43.3	30.5-54	0.28	SW-846 8260B	Acceptable
1,4-Dichlorobenzene	WP	95	27.4	30	20.6-39	0.78	SW-846 8260B	Acceptable
Benzene	WP	65	53.3	56.5	40.8-72.6	0.64	SW-846 8260B	Acceptable
Bromodichloromethane	WP	60	9.86	9.36	6.37-12.4	0.46	SW-846 8260B	Acceptable
Bromoform	WP	62	20.0	19.9	12.2-27.4	0.079	SW-846 8260B	Acceptable
Carbon tetrachloride	WP	58	33.2	35.1	21.8-49.5	0.54	SW-846 8260B	Acceptable
Chlorobenzene	WP	64	57.6	61	42.9-77.7	0.47	SW-846 8260B	Acceptable
Chloroform	WP	55	42.1	44.5	30.9-57.1	0.44	SW-846 8260B	Acceptable
cis-1,3-Dichloropropene	WP		<1.00				SW-846 8260B	
Dibromochloromethane	WP	61	12.0	11.7	6.29-16.8	0.29	SW-846 8260B	Acceptable
Ethylbenzene	WP	66	68.8	71.3	47.4-93.4	0.21	SW-846 8260B	Acceptable
Methylene chloride	WP	63	50.6	51.9	32.8-71.4	0.23	SW-846 8260B	Acceptable
Tetrachloroethene	WP	59	7.84	10.2	6.65-13.5	1.98	SW-846 8260B	Acceptable
Toluene	WP	67	52.1	54.2	39-67.6	0.25	SW-846 8260B	Acceptable
trans-1,2-Dichloroethene	WP		<1.00				SW-846 8260B	

Performance Summary

trans-1,3-Dichloropropene	WP		18.0	18	10-24.7	0.25	SW-846 8260B	Acceptable
Trichloroethene	WP	57	30.7	32.5	21.1-42.1	0.26	SW-846 8260B	Acceptable

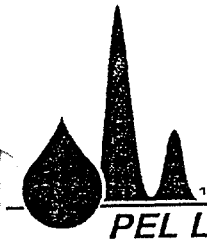

PEL Laboratories, Inc.

May 3, 2000

Stephen A. Arms
Florida Department of Health
P.O. Box 210
Jacksonville, FL 32231-0042

The following are explanations for the "not acceptable" results on the revised report for the February 2000 performance evaluations from APG.

Method 160.2 and 160.3 (Total Solids and Total Suspended Solids "not acceptable")
I wrote the two results in each others places. There was a peer check on the data, but because of the way it printed on our lab's report, it was not caught. In the future more care will be taken to double check for transcription errors. Actually both results were within the acceptance ranges if they would have been reported correctly.

Method 365.2 (Total Phosphorous "not acceptable")
The batch LCS recovery was close to the internal upper limit for acceptance. The WP sample was also on the high side. Although the recovery was within the ±20% limits for our lab, the acceptance criteria for the study had more narrow requirements.

PEL Laboratories, Inc. is currently analyzing our first round of testing of solid PTs for the RCRA NELAP accreditation, and will be ordering in samples this month for the Clean Water Act methods accreditation. Will we be able to use the few wet chemistry PT results from this and our previous study to apply under the CWA for NELAP? The main reason we did another WP with our SW-846 methods was to keep some of our clients happy.

Thank you very much,

Kathleen Zinn
Quality Assurance Officer
PEL Laboratories, Inc.

4420 Pendola Point Road • Tampa, Florida 33619
(813) 247-2805 • FAX: (813) 248-1537

APPENDIX B

Soil Boring Logs

SWMU-4

SOIL BORING LOGS

CH2MHILL

PROJECT NUMBER	BORING NUMBER	
139322.FI.60	SWMU4 MW-1	SHEET 1 OF 1

SOIL BORING LOG

PROJECT : NASD PA/SI VIEQUES LOCATION : BURN PIT SILT

ELEVATION : DRILLING CONTRACTOR : GEOWORKS

DRILLING METHOD AND EQUIPMENT USED : AIR ROTARY HAMMER

WATER LEVELS : 27 FT START : 1300 Hr (4/19/00) END : 0930 Hr (4/20/00) LOGGER : G. SILVA

DEPTH BELOW SURFACE (FT)	INTERVAL (FT)	RECOVERY (IN)	#/TYPE	STANDARD PENETRATION TEST RESULTS 6"-6"-6" (N)	CORE DESCRIPTION: SOIL NAME, USCS GROUP SYMBOL, COLOR, MOISTURE CONTENT, RELATIVE DENSITY, OR CONSISTENCY, SOIL STRUCTURE, MINERALOGY.	COMMENTS: DEPTH OF CASING, DRILLING RATE, DRILLING FLUID LOSS, TESTS, AND INSTRUMENTATION. OVM (ppm):	Breathing Zone Above Hole
	0-2"				SILT WITH SAND (ML) LIGHT BROWN, DRY	0.0	0.0
					SILT SAND (SM). YELLOWISH ORANGE, DRY.		
5					SAME AS ABOVE	0.0	0.0
10					WELL GRADED FINE TO COARSE SAND, YELLOWISH ORANGE	0.0	0.0
15					SAME AS ABOVE	0.0	0.0
20					SAME AS ABOVE SLIGHTLY MOIST	0.0	0.0
25					SAME AS ABOVE VERY MOIST	0.0	0.0 APROX. DEPTH OF WATER TABLE 27' BGS
30					SAME AS ABOVE	0.0	0.0
35					SAME AS ABOVE	0.0	0.0
40					SAME AS ABOVE	0.0	0.0
45					SAME AS ABOVE TO 49 FT	0.0	0.0

CH2MHILL

PROJECT NUMBER	BORING NUMBER	
139322.FI.60	SWMU4 MW-2	SHEET 1 OF 1

SOIL BORING LOG

PROJECT : NASD PA/SI VIEQUES — LOCATION : BURN PIT SILT

ELEVATION : — DRILLING CONTRACTOR : GEOWORKS

DRILLING METHOD AND EQUIPMENT USED : AIR ROTARY HAMMER

WATER LEVELS : 22 FT — START : 835 Hr (4/20/00) — END : 1500 Hr (4/27/00) — LOGGER : G. SILVA

DEPTH BELOW SURFACE (FT)	INTERVAL (FT)	RECOVERY (IN)	#/TYPE	STANDARD PENETRATION TEST RESULTS 6"-6"-6"-6" (N)	CORE DESCRIPTION: SOIL NAME, USCS GROUP SYMBOL, COLOR, MOISTURE CONTENT, RELATIVE DENSITY, OR CONSISTENCY, SOIL STRUCTURE, MINERALOGY.	COMMENTS: DEPTH OF CASING, DRILLING RATE, DRILLING FLUID LOSS, TESTS, AND INSTRUMENTATION. OVM (ppm):	Breathing Zone Above Hole
0	0-2"				SILT WITH SAND (ML) LIGHT BROWN, DRY	0.0	0.0
					SILT SAND (SM). YELLOWISH ORANGE, DRY.		
5					SAME AS ABOVE	0.0	0.0
10					WELL GRADED FINE TO COARSE SAND, YELLOWISH ORANGE, SLIGHTLY MOIST	0.0	0.0
15					SAME AS ABOVE	0.0	0.0
20					SAME AS ABOVE VERY MOIST	0.0	0.0
						APROX. DEPTH OF WATER TABLE 22' BGS	
25					SAME AS ABOVE	0.0	0.0
30					SAME AS ABOVE	0.0	0.0
35							
40							

CH2MHILL

PROJECT NUMBER	BORING NUMBER	
139322.FI.60	SWMU4 MW-3	SHEET 1 OF 1

SOIL BORING LOG

PROJECT : NASD PA/SI VIEQUES — LOCATION : DOWN GRADIENT BURN PIT SITE

ELEVATION : — DRILLING CONTRACTOR : GEOWORKS INC.

DRILLING METHOD AND EQUIPMENT USED : AIR ROTARY HAMMER

WATER LEVELS : 35 FT — START : 845 Hr (4/24/2000) — END : 1330 Hr (4/27/00) — LOGGER : G. SILVA

DEPTH BELOW SURFACE (FT)	INTERVAL (FT)	RECOVERY (IN)	#/TYPE	STANDARD PENETRATION TEST RESULTS 6"-6"-6"-6" (N)	CORE DESCRIPTION: SOIL NAME, USCS GROUP SYMBOL, COLOR, MOISTURE CONTENT, RELATIVE DENSITY, OR CONSISTENCY, SOIL STRUCTURE, MINERALOGY.	COMMENTS: DEPTH OF CASING, DRILLING RATE, DRILLING FLUID LOSS, TESTS, AND INSTRUMENTATION. OVM (ppm): Breathing Zone Above Hole
	0-1"				SANDY SILT (ML) YELLOWISH ORANGE	
5	5'-6'				SILT SAND (SM). LIGHT BROWN, SLIGHTLY MOIST	
10	10'-11'				WELL GRADED FINE TO MEDIUM SAND (SW), SLIGHTLY MOIST	
	15'-16'				SAME AS ABOVE, FINE TO COARSE SAND (SW) MOIST	
20	20'21'				POORLY GRADED FINE SAND LIGHT GRAY (SP) MOIST.	
25	25'26'				SAME AS ABOVE	
30					SAME AS ABOVE, SOME CLAY	VERY MOIST SOIL
35					SAME AS ABOVE	WATER TABLE OBERVEDS
40						STOPPED DRILLING

CH2MHILL

PROJECT NUMBER	BORING NUMBER	
139322.FI.60	SWMU4 MW-4	SHEET 1 OF 1

SOIL BORING LOG

PROJECT : NASD PA/SI VIEQUES — LOCATION : DOWN GRADIENT WELL NEAR POND

ELEVATION : — DRILLING CONTRACTOR : GEOWORKS INC.

DRILLING METHOD AND EQUIPMENT USED : AIR ROTARY HAMMER

WATER LEVELS : 9 FT — START : — END : — LOGGER : G. SILVA

DEPTH BELOW SURFACE (FT)	INTERVAL (FT)	RECOVERY (IN)	#/TYPE	STANDARD PENETRATION TEST RESULTS 6"-6"-6"-6" (N)	CORE DESCRIPTION: SOIL NAME, USCS GROUP SYMBOL, COLOR, MOISTURE CONTENT, RELATIVE DENSITY, OR CONSISTENCY, SOIL STRUCTURE, MINERALOGY.	COMMENTS: DEPTH OF CASING, DRILLING RATE, DRILLING FLUID LOSS, TESTS, AND INSTRUMENTATION. OVM (ppm): Breathing Zone / Above Hole
	0-6"				SANDY SILT (ML) YELLOWISH ORANGE	0.0 0.0
	6"-2'					
5						
	5'-6'				SILT SAND (SM). LIGHT BROWN, SLIGH MOIST	0.0 0.0 APROX. WATER TABLE DEPT SOIL DAMD SOIL WET WATER TABLE
10						
	10'-11'				WELL GRADED FINE TO MEDIUM SAND (SW), SLIGHTLY MOIST	0.0 0.0
15						
	15'-16'				SAME AS ABOVE, FINE TO COARSE SAND (SW) MOIST	0.0 0.0
	18'-19'					
20						STOPPED DRILLING SET WELL TD=18'
25						
30						
35					SAME AS ABOVE	WATER TABLE OBERVEDS
40						STOPPED DRILLING

CH2MHILL

PROJECT NUMBER	BORING NUMBER	
139322.FI.60	SWMU4 MW-5	SHEET 1 OF 1

SOIL BORING LOG

PROJECT : NASD PA/SI VIEQUES — LOCATION : NW BURN PIT

ELEVATION : — DRILLING CONTRACTOR : GEOWORKS INC.

DRILLING METHOD AND EQUIPMENT USED : AIR ROTARY HAMMER

WATER LEVELS — START : 5/31/00 — END : 5/31/00 — LOGGER : M. CLASEN

DEPTH BELOW SURFACE (FT)	INTERVAL (FT)	RECOVERY (IN)	#/TYPE	STANDARD PENETRATION TEST RESULTS 6"-6"-6"-6" (N)	CORE DESCRIPTION: SOIL NAME, USCS GROUP SYMBOL, COLOR, MOISTURE CONTENT, RELATIVE DENSITY, OR CONSISTENCY, SOIL STRUCTURE, MINERALOGY.	COMMENTS: DEPTH OF CASING, DRILLING RATE, DRILLING FLUID LOSS, TESTS, AND INSTRUMENTATION. OVM (ppm): Breathing Zone	Above Hole
	0-2'		cuttings	NA	SANDY SILT (ML) PALE YELLOWISH ORANGE (10YR 8/6) SOFT, DRY	0-1' 0.8	1.1
5	5-7'		cuttings	NA	SANDY SILT (ML). PALE YELLOWINSH ORANGE (10YR 8/6) SOFT, DRY	0.0	0.0
10	10-12'		cuttings	NA	SANDY SILT (ML) DARK YELLOWISH ORANGE (10YR 6/6) SOFT DAMP	0.0	0.0
	15'-17'		cuttings	NA	WELL GRADED SAND (SW) DARK YELLOWISH ORANGE (10 YR 6/6), FINE SILT TO 1/4" PEBBLES, DAMP	0.0	0.0
20	20-22'		cuttings	NA	WELL GRADED SAND (SW) PALE YELLOWISH BROWN (10YR 6/2) FINE SILT TO GRAVEL, DAMP	0.0	0.0
25	25-27'		cuttings	NA	AS ABOVE	0.0	0.0
30	30-35'		cuttings	NA	SILTY SAND (SM) PALE YELLOWISH BROWN (10YR 6/2), >15% SILT, WELL GRADED SAND, WET@33'	0.0	0.0
35	35-40		cuttings	NA	SAME AS ABOVE	0.0	0.0
40	40-45		cuttings	NA	SAME AS ABOVE	0.0	0.0
45							

CH2MHILL

PROJECT NUMBER	BORING NUMBER	
139322.FI.60	SWMU4 MW-6	SHEET 1 OF 1

SOIL BORING LOG

PROJECT : NASD PA/SI VIEQUES LOCATION : WEST SIDE BURN PIT

ELEVATION : DRILLING CONTRACTOR : GEOWORKS INC.

DRILLING METHOD AND EQUIPMENT USED : AIR ROTARY HAMMER

WATER LEVELS ~33' START : 5/31/00 END : 6/1/00 LOGGER : M. CLASEN

DEPTH BELOW SURFACE (FT)	INTERVAL (FT)	RECOVERY (IN)	#/TYPE	STANDARD PENETRATION TEST RESULTS 6"-6"-6"-6" (N)	CORE DESCRIPTION: SOIL NAME, USCS GROUP SYMBOL, COLOR, MOISTURE CONTENT, RELATIVE DENSITY, OR CONSISTENCY, SOIL STRUCTURE, MINERALOGY.	COMMENTS: DEPTH OF CASING, DRILLING RATE, DRILLING FLUID LOSS, TESTS, AND INSTRUMENTATION. OVM (ppm): Breathing Zone	Above Hole
0	0-5'		cuttings	NA	SANDY SILT (ML) PALE YELLOWISH ORANGE (10YR 8/6) SOFT, DRY TRACE GRAVEL	0.0	0.0
5	5-10'		cuttings	NA	SANDY SILT (SM). PALE YELLOWINSH ORANGE (10YR 8/6) SOFT, DAMP, TRA GRAVEL	0.0	0.0
10	10-15'		cuttings	NA	SANDY SILT (SM) DARK YELLOWISH ORANGE (10YR 6/6) >15% SILT FINE SOME GRAVEL, DAMP	0.0	0.0
15	15'-20'		cuttings	NA	SILTY SAND (SM) DARK YELLOWISH ORANGE (10 YR 6/6),>15% SILT FINE SOME GRAVEL, DAMP	0.0	0.0
20	20-25		cuttings	NA	AS ABOVE	0.0	0.0
25	25-30		cuttings	NA	AS ABOVE	0.0	0.0
30	30-35		cuttings	NA	SILTY SAND (SM) DARK YELLOWISH ORANGE (10YR 6/6), >15% SILT, FINE SOME GRAVEL, WET @ 35'	0.0	0.0
35	35-40		cuttings	NA	SAME AS ABOVE	0.0	0.0
40	40-45					0.0	0.0
45						TD 45'	

CH2MHILL

PROJECT NUMBER	BORING NUMBER		
139322.FI.60	SWMU4 MW-7	SHEET 1	OF 1

SOIL BORING LOG

PROJECT : NASD PA/SI VIEQUES — LOCATION :WEST SIDE BURN PIT

ELEVATION : — DRILLING CONTRACTOR : GEOWORKS INC.

DRILLING METHOD AND EQUIPMENT USED : AIR ROTARY HAMMER

WATER LEVELS — START : 6/2/00 — END : — LOGGER : M. CLASEN

DEPTH BELOW SURFACE (FT)	INTERVAL (FT)	RECOVERY (IN)	#/TYPE	STANDARD PENETRATION TEST RESULTS 6"-6"-6"-6" (N)	CORE DESCRIPTION: SOIL NAME, USCS GROUP SYMBOL, COLOR, MOISTURE CONTENT, RELATIVE DENSITY, OR CONSISTENCY, SOIL STRUCTURE, MINERALOGY.	COMMENTS: DEPTH OF CASING, DRILLING RATE, DRILLING FLUID LOSS, TESTS, AND INSTRUMENTATION. OVM (ppm): Breathing Zone	Above Hole
	0-2'		cuttings	NA	SILTY SAND (SM) PALE YELLOWISH ORANGE (10YR 8/6) 15% SILT, WELL GRADED SAND, FINE, DRY	0.0	0.0
5	5-7'		cuttings	NA	AS ABOVE, DRY	0.0	0.0
	8-10'		cuttings	NA	SILTY SAND (SM) PALE YELLOWISH ORANGE (10YR 8/6)TRACE QUARTZ,	0.0	0.0
10					PEBBLES, FINE, DRY		
	15'-17'		cuttings	NA	SILTY SAND (SM) PALE YELLOWISH ORANGE (10YR 6/2)TRACE QUARTZ, PEBBLES, DAMP	0.0	0.0
20	17-22'		cuttings	NA	SILTY SAND (SM) AS ABOVE	0.0	0.0
	22-27'		cuttings	NA	SILTY SAND (SM) AS ABOVE	0.0	0.0
25							
	27-32'		cuttings	NA	SILTY SAND (SM) PALE YELLOWISH BROWN (10YR 6/2) TRACE QUARTZ PEBBLES, DAMP	0.0	0.0
30							
	32-37'		cuttings	NA	SILTY SAND AS ABOVE, WET @ 31'	0.0	0.0
35							
	37-42'		cuttings	NA	SILTY SAND (SM) AS ABOVE WET	0.0	0.0
					DRILLED OUT TO 45'		
40							
45							

CH2MHILL

PROJECT NUMBER	BORING NUMBER	
139322.FI.60	SWMU4 MW-8	SHEET 1 OF 1

SOIL BORING LOG

PROJECT : NASD PA/SI VIEQUES — LOCATION : N OF BURN PIT

ELEVATION : — DRILLING CONTRACTOR : GEOWORKS INC.

DRILLING METHOD AND EQUIPMENT USED : AIR ROTARY HAMMER

WATER LEVELS — START : 6/2/00 — END : 6/2/00 — LOGGER : M. CLASEN

DEPTH BELOW SURFACE (FT)	INTERVAL (FT)	RECOVERY (IN)	#/TYPE	STANDARD PENETRATION TEST RESULTS 6"-6"-6"-6" (N)	CORE DESCRIPTION: SOIL NAME, USCS GROUP SYMBOL, COLOR, MOISTURE CONTENT, RELATIVE DENSITY, OR CONSISTENCY, SOIL STRUCTURE, MINERALOGY.	COMMENTS: DEPTH OF CASING, DRILLING RATE, DRILLING FLUID LOSS, TESTS, AND INSTRUMENTATION. OVM (ppm): Breathing Zone	Above Hole
	0-2'		cuttings	NA	SILTY SAND (SM) VERY PALE ORANGE (10YR 8/2) VERY FINE DRY, TRACE QUARTZ	0.0	0.0
5	6-8'		cuttings	NA	SILTY SAND AS ABOVE, DRY	0.0	0.0
10	8-13'		cuttings	NA	SILTY SAND (SM)	0.0	0.0
	13-18'		cuttings	NA	SILTY SAND (SM) MODERATE YELLOW	0.0	0.0
15					BROWN (10YR 5/4), >15% SILT TRACE QUARTZ PEBBLES, DAMP		
	18-23'		cuttings	NA	SILTY SAND (SM) AS ABOVE, DAMP	0.0	0.0
20							
	23-28'		cuttings	NA			
25							
	28-33'		cuttings	NA	SILTY SAND (SM) PALE YELLOWISH BI	0.0	0.0
30					(10 YR 6/2) TRACE QUARTZ PEBBLES DAMP		
	33-38'		cuttings	NA	SILTY SAND (SM) AS ABOVE, NO PEBBLES	0.0	0.0
35							
	38-43'		cuttings	NA	SILTY SAND (SM) PALE YELLOWISH	0.0	0.0
40					BROWN (10YR 6/2) FINE TRACE QUARTZ PEBBLES, DAMP		
	43-48'		cuttings	NA	SILTY SAND (SM) AS ABOVE	0.0	0.0
45							
	48-53'		cuttings	NA	SILTY SAND	0.0	0.0
50							
	53-60'		cuttings	NA	SILTY SAND	0.0	0.0
					WATER TABLE ~ 55		
60						TD 58 '	

CH2MHILL

PROJECT NUMBER	BORING NUMBER	
139322.FI.60	SWMU4-SB01	SHEET 1 OF 1

SOIL BORING LOG

PROJECT : PA/SI VIEQUES LOCATION : NASD SWMU4

ELEVATION : DRILLING CONTRACTOR : GEOWORKS

DRILLING METHOD AND EQUIPMENT USED : HSA - MOBILEDRILL - HANDAUGER AT SURFACE

WATER LEVELS : N/A START : 4/18/2000 09:45 END : 4/18/2000 10:15 LOGGER : K. KARVAZY

DEPTH BELOW SURFACE (FT)	INTERVAL (FT)	RECOVERY (IN)	#/TYPE	STANDARD PENETRATION TEST RESULTS 6"-6"-6"-6" (N)	CORE DESCRIPTION: SOIL NAME, USCS GROUP SYMBOL, COLOR, MOISTURE CONTENT, RELATIVE DENSITY, OR CONSISTENCY, SOIL STRUCTURE, MINERALOGY.	COMMENTS: DEPTH OF CASING, DRILLING RATE, DRILLING FLUID LOSS, TESTS, AND INSTRUMENTATION. OVM (ppm): Breathing Zone Above Hole
	0-6"				SANDY SILT WITH GRAVEL AND ORGANIC ACCRETIONS. MODERATE BROWN.	HANDAUGER
5	4-6'				SANDY CLAY WITH SOME GRAVEL. VERY HARD. LIGHT BROWN	HSA 3.3 PPM MINIRAE
10						
20						
25						
30						
35						
40						

CH2MHILL

PROJECT NUMBER	BORING NUMBER	
139322.FI.60	SWMU4-SB02	SHEET 1 OF 1

SOIL BORING LOG

PROJECT : PA/SI VIEQUES LOCATION : NASD-SWMU4 TRANSECT 4

ELEVATION : DRILLING CONTRACTOR : GEOWORKS

DRILLING METHOD AND EQUIPMENT USED : HS/ HSA

WATER LEVELS : N/A START : 4/18/2000 10:00 END : 4/18/2000 10:30 LOGGER : K. KARVAZY

DEPTH BELOW SURFACE (FT)	INTERVAL (FT)	RECOVERY (IN)	#/TYPE	STANDARD PENETRATION TEST RESULTS 6"-6"-6"-6" (N)	CORE DESCRIPTION: SOIL NAME, USCS GROUP SYMBOL, COLOR, MOISTURE CONTENT, RELATIVE DENSITY, OR CONSISTENCY, SOIL STRUCTURE, MINERALOGY.	COMMENTS: DEPTH OF CASING, DRILLING RATE, DRILLING FLUID LOSS, TESTS, AND INSTRUMENTATION. OVM (ppm): Breathing Zone Above Hole
0	0-6"				SANDY SILT WITH GRAVEL AND ORGANIC ACCRETIONS. MODERATE BROWN.	HANDAUGER
5	4-6'				SANDY CLAYEY SILT. MODERATE BROWN DRY.	1 PPM (MINI RAE)
10						
15						
20						
25						
30						
35						
40						

CH2MHILL

PROJECT NUMBER	BORING NUMBER	
139322.FI.60	SWMU4-SB03	SHEET 1 OF 1

SOIL BORING LOG

PROJECT : PA/SI VIEQUES LOCATION : NASD-SWMU4 TRANSECT

ELEVATION : DRILLING CONTRACTOR : GEOWORKS

DRILLING METHOD AND EQUIPMENT USED : HSA

WATER LEVELS : N/A START : 4/18/2000 11:00 END : 4/18/2000 11:30 LOGGER : K. KARVAZY

DEPTH BELOW SURFACE (FT)	INTERVAL (FT)	RECOVERY (IN)	#/TYPE	STANDARD PENETRATION TEST RESULTS 6"-6"-6"-6" (N)	CORE DESCRIPTION: SOIL NAME, USCS GROUP SYMBOL, COLOR, MOISTURE CONTENT, RELATIVE DENSITY, OR CONSISTENCY, SOIL STRUCTURE, MINERALOGY.	COMMENTS: DEPTH OF CASING, DRILLING RATE, DRILLING FLUID LOSS, TESTS, AND INSTRUMENTATION. OVM (ppm): Breathing Zone Above Hole
	0-6"				SANDY SILT HIGH ORGANIC CONTENT LESS GRAVEL THAN SB01 AND SB02. SLIGHTLY MOIST.	
5	4-6'				SILTY CLAYEY SAND. VERY HARD, DRY. ORANGE BROWN COLOR. WELL GRADED WITH GRAVEL.	0.1 PPM MINI RAE HAS
10						
20						
25						
30						
35						
40						

CH2MHILL

PROJECT NUMBER	BORING NUMBER	
139322.FI.60	SWMU4-SB04	SHEET 1 OF 1

SOIL BORING LOG

PROJECT : PA/SI VIEQUES LOCATION : SWMU4 TRANSECT 8 SB04

ELEVATION : DRILLING CONTRACTOR : GEOWORKS

DRILLING METHOD AND EQUIPMENT USED : HSA

WATER LEVELS : N/A START : 4/18/2000 13:30 END : 4/18/2000 14:30 LOGGER : K. KARVAZY

DEPTH BELOW SURFACE (FT)	INTERVAL (FT)	RECOVERY (IN)	#/TYPE	STANDARD PENETRATION TEST RESULTS 6"-6"-6"-6" (N)	CORE DESCRIPTION: SOIL NAME, USCS GROUP SYMBOL, COLOR, MOISTURE CONTENT, RELATIVE DENSITY, OR CONSISTENCY, SOIL STRUCTURE, MINERALOGY.	COMMENTS: DEPTH OF CASING, DRILLING RATE, DRILLING FLUID LOSS, TESTS, AND INSTRUMENTATION. OVM (ppm): Breathing Zone Above Hole
	0-6"				SANDY SILT HIGH ORGANIC CONTENT SOME GRAVEL. SLIGHTLY MOIST. DARK BROWN.	HAND AUGER
5	4-6'				SILTY SAND WITH GRAVEL/ ROCK 1/4"-1/2" LIGHT BROWN DRY	MINI RAE ND
10						
15						
20						
25						
30						
35						
40						

CH2MHILL

PROJECT NUMBER	BORING NUMBER	
139322.FI.60	SWMU4-SB05	SHEET 1 OF 1

SOIL BORING LOG

PROJECT : PA/SI VIEQUES LOCATION : NASD, SWMU4 TRANSECT 8

ELEVATION : DRILLING CONTRACTOR : GEOWORKS

DRILLING METHOD AND EQUIPMENT USED : HSA

WATER LEVELS : N/A START : 4/18/2000 14:40 END : 4/18/2000 16:15 LOGGER : K. KARVAZY

DEPTH BELOW SURFACE (FT)	INTERVAL (FT)	RECOVERY (IN)	#/TYPE	STANDARD PENETRATION TEST RESULTS 6"-6"-6"-6" (N)	CORE DESCRIPTION: SOIL NAME, USCS GROUP SYMBOL, COLOR, MOISTURE CONTENT, RELATIVE DENSITY, OR CONSISTENCY, SOIL STRUCTURE, MINERALOGY.	COMMENTS: DEPTH OF CASING, DRILLING RATE, DRILLING FLUID LOSS, TESTS, AND INSTRUMENTATION. OVM (ppm): Breathing Zone Above Hole
	0-6"				SANDY SILT, HARD, DRY. LIGHT-MODERATE BROWN. SOME GRAVEL ~1/4".	HAND AUGER
5	4-6'				SANDY SILT WITH SOME GRAVEL, WELL GRADED. LIGHT ORANGE BROWN.	HSA
10						
15						
20						
25						
30						
35						
40						

CH2MHILL

PROJECT NUMBER	BORING NUMBER	
139322.FI.60	SWMU4-SB06	SHEET 1 OF 1

SOIL BORING LOG

PROJECT : NASD PA/SI VIEQUES LOCATION : SB06, SWMU4 TRANSECT 8

ELEVATION : DRILLING CONTRACTOR :

DRILLING METHOD AND EQUIPMENT USED : AIR ROTARY HAMMER

WATER LEVELS : N/A START : 4/19/2000 10:30 END : 4/19/2000 11:00 LOGGER : K. KARVAZY

DEPTH BELOW SURFACE (FT)	INTERVAL (FT)	RECOVERY (IN)	#/TYPE	STANDARD PENETRATION TEST RESULTS 6"-6"-6"-6" (N)	CORE DESCRIPTION: SOIL NAME, USCS GROUP SYMBOL, COLOR, MOISTURE CONTENT, RELATIVE DENSITY, OR CONSISTENCY, SOIL STRUCTURE, MINERALOGY.	COMMENTS: DEPTH OF CASING, DRILLING RATE, DRILLING FLUID LOSS, TESTS, AND INSTRUMENTATION. OVM (ppm): Breathing Zone Above Hole
	0-6"				SANDY SILT, MOIST. SOME GRAVEL. MODERATE BROWN.	HAND AUGER
5	4-6'				SILTY SAND, WELL GRADED, WITH SOME GRAVEL. LIGHT ORANGE-BROWN.	AIR HAMMER
10						
15						
20						
25						
30						
35						
40						

CH2MHILL

PROJECT NUMBER	BORING NUMBER	
139322.FI.60	SWMU4-SB07	SHEET 1 OF 1

SOIL BORING LOG

PROJECT : NASD PA/SI VIEQUES LOCATION : SB07-ROAD

ELEVATION : DRILLING CONTRACTOR : GEOWORKS

DRILLING METHOD AND EQUIPMENT USED : AIR ROTARY HAMMER

WATER LEVELS : N/A START : 4/19/2000 11:30 END : 4/19/2000 13:30 LOGGER : K. KARVAZY

DEPTH BELOW SURFACE (FT)	INTERVAL (FT)	RECOVERY (IN)	#/TYPE	STANDARD PENETRATION TEST RESULTS 6"-6"-6"-6" (N)	CORE DESCRIPTION: SOIL NAME, USCS GROUP SYMBOL, COLOR, MOISTURE CONTENT, RELATIVE DENSITY, OR CONSISTENCY, SOIL STRUCTURE, MINERALOGY.	COMMENTS: DEPTH OF CASING, DRILLING RATE, DRILLING FLUID LOSS, TESTS, AND INSTRUMENTATION. OVM (ppm): Breathing Zone Above Hole
	0-6"				SANDY SILT, DRY. MODERATE BROWN.	
5	4-6'				SILTY SAND, WELL GRADED. YELLOWISH ORANGE. SOME GRAVEL ANGULAR-WELL ROUNDED. 1/4" D	AIR HAMMER 0.0 PPM. MINI RAE
10						
20						
25						
30						
35						
40						

CH2MHILL

PROJECT NUMBER	BORING NUMBER	
139322.FI.60	SWMU4-SB08	SHEET 1 OF 1

SOIL BORING LOG

PROJECT : NASD PA/SI VIEQUES — LOCATION : SB04-ROAD, SB08

ELEVATION : — DRILLING CONTRACTOR : GEOWORKS

DRILLING METHOD AND EQUIPMENT USED : AIR ROTARY HAMMER

WATER LEVELS : N/A — START : 13:00 — END : 13:30 — LOGGER : K. KARVAZY

DEPTH BELOW SURFACE (FT)	INTERVAL (FT)	RECOVERY (IN)	#/TYPE	STANDARD PENETRATION TEST RESULTS 6"-6"-6"-6" (N)	CORE DESCRIPTION: SOIL NAME, USCS GROUP SYMBOL, COLOR, MOISTURE CONTENT, RELATIVE DENSITY, OR CONSISTENCY, SOIL STRUCTURE, MINERALOGY.	COMMENTS: DEPTH OF CASING, DRILLING RATE, DRILLING FLUID LOSS, TESTS, AND INSTRUMENTATION. OVM (ppm): Breathing Zone Above Hole
	0-6"				SILTY SAND, WELL GRADED. SOME GRAVEL-ANGULAR TO ROUNDED. YELLOWISH ORANGE.	
5	4-6'				SILTY SAND, WELL GRADED. WITH SOME GRAVEL SUB ROUNDED TO ROUNDED YELLOWISH ORANGE	
10						
15						
20						
25						
30						
35						
40						

CH2MHILL

PROJECT NUMBER	BORING NUMBER	
139322.FI.60	SWMU4-SB09	SHEET 1 OF 1

SOIL BORING LOG

PROJECT : NASD PA/SI VIEQUES LOCATION : SB09 SWMU4

ELEVATION : DRILLING CONTRACTOR : GEOWORKS

DRILLING METHOD AND EQUIPMENT USED : AIR ROTARY HAMMER

WATER LEVELS : N/A START : 13:30 END : 13:45 LOGGER : K. KARVAZY

DEPTH BELOW SURFACE (FT)	INTERVAL (FT)	RECOVERY (IN)	#/TYPE	STANDARD PENETRATION TEST RESULTS 6"-6"-6"-6" (N)	CORE DESCRIPTION: SOIL NAME, USCS GROUP SYMBOL, COLOR, MOISTURE CONTENT, RELATIVE DENSITY, OR CONSISTENCY, SOIL STRUCTURE, MINERALOGY.	COMMENTS: DEPTH OF CASING, DRILLING RATE, DRILLING FLUID LOSS, TESTS, AND INSTRUMENTATION. OVM (ppm): Breathing Zone Above Hole
	0-6"				SAND WITH SOME SILT. WELL GRADED. ORANGISH BROWN.	HANDAUGER
5	4-6'				SAND WITH SOME SILTY. DARK GRAY, VERY MOIST, ORGANIC COLOR. POORLY GRADED	28 PPM. MINI RAE AIR HAMMER
10						
20						
25						
30						
35						
40						

CH2MHILL

PROJECT NUMBER	BORING NUMBER	
139322.FI.60	SWMU4-SB10	SHEET 1 OF 1

SOIL BORING LOG

PROJECT : NASD PA/SI VIEQUES LOCATION : SB10-ROAD SWMU4

ELEVATION : DRILLING CONTRACTOR : GEOWORKS

DRILLING METHOD AND EQUIPMENT USED : AIR ROTARY HAMMER

WATER LEVELS : N/A START : 14:00 END : 14:30 LOGGER : K. KARVAZY

DEPTH BELOW SURFACE (FT)	INTERVAL (FT)	RECOVERY (IN)	#/TYPE	STANDARD PENETRATION TEST RESULTS 6"-6"-6"-6" (N)	CORE DESCRIPTION: SOIL NAME, USCS GROUP SYMBOL, COLOR, MOISTURE CONTENT, RELATIVE DENSITY, OR CONSISTENCY, SOIL STRUCTURE, MINERALOGY.	COMMENTS: DEPTH OF CASING, DRILLING RATE, DRILLING FLUID LOSS, TESTS, AND INSTRUMENTATION. OVM (ppm): Breathing Zone Above Hole
0	0-6"				SAND WITH SOME SILT. YELLOWISH ORANGE SOME GRAVEL 1/4".	HANDAUGER
5	4-6'				ORANGE BROWN SAND WITH SILT. ORGANIC ACCRETIONS. INTERMIXED WITH POCKETS OF COARSE WHITE SAND MOIST.	12 PPM. MINI RAE AIR HAMMER
10						
15						
20						
25						
30						
35						
40						

CH2MHILL

PROJECT NUMBER	BORING NUMBER	
139322.FI.60	SWMU4-SB11	SHEET 1 OF 1

SOIL BORING LOG

PROJECT : NASD PA/SI VIEQUES — LOCATION : SWMU4 BACKGROUND SB11

ELEVATION : — DRILLING CONTRACTOR : GEOWORKS

DRILLING METHOD AND EQUIPMENT USED : AIR ROTARY HAMMER

WATER LEVELS : N/A — START : 4/19/2000 11:00 (SS) — END : 4/19/2000 13:30 (— LOGGER : K. KARVAZY

DEPTH BELOW SURFACE (FT)	INTERVAL (FT)	RECOVERY (IN)	#/TYPE	STANDARD PENETRATION TEST RESULTS 6"-6"-6"-6" (N)	CORE DESCRIPTION: SOIL NAME, USCS GROUP SYMBOL, COLOR, MOISTURE CONTENT, RELATIVE DENSITY, OR CONSISTENCY, SOIL STRUCTURE, MINERALOGY.	COMMENTS: DEPTH OF CASING, DRILLING RATE, DRILLING FLUID LOSS, TESTS, AND INSTRUMENTATION. OVM (ppm): Breathing Zone Above Hole
	0-6"				ORANGE-BROWN SANDY SILT. POORLY GRADED.	HANDAUGER
5	4-6'				MEDIUM SAND WITH SILT. YELLOWISH ORANGE POORLY GRADED.	0.0 PPM. MINI RAE
10						
20						
25						
30						
35						
40						

CH2MHILL

PROJECT NUMBER	BORING NUMBER	
139322.FI.60	SWMU4-SB12	SHEET 1 OF 1

SOIL BORING LOG

PROJECT : NASD PA/SI VIEQUES LOCATION : SWMU4 BACKGROUND SB12

ELEVATION : DRILLING CONTRACTOR : GEOWORKS

DRILLING METHOD AND EQUIPMENT USED : AIR ROTARY HAMMER

WATER LEVELS : N/A START : 4/19/2000 13:00 END : 4/19/2000 13:45 LOGGER : K. KARVAZY

DEPTH BELOW SURFACE (FT)	INTERVAL (FT)	RECOVERY (IN)	#/TYPE	STANDARD PENETRATION TEST RESULTS 6"-6"-6"-6" (N)	CORE DESCRIPTION: SOIL NAME, USCS GROUP SYMBOL, COLOR, MOISTURE CONTENT, RELATIVE DENSITY, OR CONSISTENCY, SOIL STRUCTURE, MINERALOGY.	COMMENTS: DEPTH OF CASING, DRILLING RATE, DRILLING FLUID LOSS, TESTS, AND INSTRUMENTATION. OVM (ppm): Breathing Zone Above Hole
0	0-6"				SILTY SAND, POORLY GRADED. LIGHT ORANGE BROWN	HANDAUGER
5	4-6'				SILTY SAND. SLIGHTLY MOIST. YELLOWISH ORANGE.	0.0 PPM. MINI RAE
10						
15						
20						
25						
30						
35						
40						

SWMU-5

SOIL BORING LOGS

CH2MHILL

PROJECT NUMBER	BORING NUMBER	
139322.FI.60	SWMU5-SB01	SHEET 1 OF 1

SOIL BORING LOG

PROJECT : NASD - VIEQUES, PUERTO RICO LOCATION : IRFNA/MAF 4 DISPOSAL SITE

ELEVATION : DRILLING CONTRACTOR : GEOWORKS

DRILLING METHOD AND EQUIPMENT USED : AUGER/SPLIT SPOON

WATER LEVELS : START : 4/13/00 12:50 PM END : 4/13/00 LOGGER : Bob Trebble

DEPTH BELOW SURFACE (FT)	INTERVAL (FT)	RECOVERY (IN)	#/TYPE	STANDARD PENETRATION TEST RESULTS 6"-6"-6"-6" (N)	CORE DESCRIPTION: SOIL NAME, USCS GROUP SYMBOL, COLOR, MOISTURE CONTENT, RELATIVE DENSITY, OR CONSISTENCY, SOIL STRUCTURE, MINERALOGY.	COMMENTS: DEPTH OF CASING, DRILLING RATE, DRILLING FLUID LOSS, TESTS, AND INSTRUMENTATION. OVM (ppm): Breathing Zone	Above Hole
	0.5			HAND COLLECT	GRAVELS/SANDS/STAINING	0.1	0.1
5		2"		50/2"	SILTS, SOME P-GRAVELS, DRY, BROWNISH IN CUTTINGS, GRAVELS TO 2" ANGULAR	0.1	0.1
10		2"		50/2"	CUTTINGS-SILTS, SOME CLAY DAMP, BROWN	0.1	3.5
		2"		50/2"	SILTS, CLAYS, GRAVELS, DAMP, BROWN	0.1	9.5
20		4"		50/4"	SILTS, SOME GRAVELS, DRY, BROWN-TAN-CUTTINGS END OF BORING AT 19.0' BGS.	0	2.4
25							
30							
35							
40							

CH2MHILL

PROJECT NUMBER	BORING NUMBER	
139322.FI.60	SWMU5-SB02	SHEET 1 OF 1

SOIL BORING LOG

PROJECT : NASD - VIEQUES, PUERTO RICO — LOCATION : IRFNA/MAF 4 DISPOSAL SITE

ELEVATION : — DRILLING CONTRACTOR : GEOWORKS

DRILLING METHOD AND EQUIPMENT USED : AUGER/SPLIT SPOON

WATER LEVELS : — START : 4/14/00 9:00 AM — END : 4/14/00 — LOGGER : B. Trebble

DEPTH BELOW SURFACE (FT)	INTERVAL (FT)	RECOVERY (IN)	#/TYPE	STANDARD PENETRATION TEST RESULTS 6"-6"-6"-6" (N)	CORE DESCRIPTION: SOIL NAME, USCS GROUP SYMBOL, COLOR, MOISTURE CONTENT, RELATIVE DENSITY, OR CONSISTENCY, SOIL STRUCTURE, MINERALOGY.	COMMENTS: DEPTH OF CASING, DRILLING RATE, DRILLING FLUID LOSS, TESTS, AND INSTRUMENTATION. OVM (ppm): Breathing Zone	Above Hole
	0.5			HAND COLLECT hand auger to 4 ft	GRAVELS/SANDS SAMPLED 2-4 ft	0.1	0.1
5		20"			SILTS, SOME P-GRAVELS, DRY, BROWNISH IN CUTTINGS, GRAVELS TO 2" ANGULAR SAMPLED FROM 4-5 ft and 5-6ft	0.1	0.1
10					REFUSAL at 6 FT END OF BORING		
15							
20							
25							
30							
35							
40							

CH2MHILL

PROJECT NUMBER	BORING NUMBER	
139322.FI.60	SWMU5-SB03	SHEET 1 OF 1

SOIL BORING LOG

PROJECT : NASD - VIEQUES, PUERTO RICO LOCATION : IRFNA/MAF 4 DISPOSAL SITE

ELEVATION : DRILLING CONTRACTOR : GEOWORKS

DRILLING METHOD AND EQUIPMENT USED : AUGER/SPLIT SPOON

WATER LEVELS : START : 4/14/00 11:00 AM END : 4/14/00 LOGGER : B. Trebble

DEPTH BELOW SURFACE (FT)	INTERVAL (FT)	RECOVERY (IN)	#/TYPE	STANDARD PENETRATION TEST RESULTS 6"-6"-6"-6" (N)	CORE DESCRIPTION: SOIL NAME, USCS GROUP SYMBOL, COLOR, MOISTURE CONTENT, RELATIVE DENSITY, OR CONSISTENCY, SOIL STRUCTURE, MINERALOGY.	COMMENTS: DEPTH OF CASING, DRILLING RATE, DRILLING FLUID LOSS, TESTS, AND INSTRUMENTATION. OVM (ppm): Breathing Zone / Above Hole
	0.5			HAND COLLECT	GRAVELS/SANDS SAMPLED FROM 2-4 FT	0.1 / 0.1
5		20"			SILTS, SOME P-GRAVELS, DRY, BROWNISH IN CUTTINGS, GRAVELS TO 2" ANGULAR SAMPLED FROM 4-6 FT	0.1 / 0.1
10					REFUSAL AT 6 FT END OF BORING	
15						
20						
25						
30						
35						
40						

CH2MHILL

PROJECT NUMBER	BORING NUMBER	
139322.FI.60	SWMU5-SB04	SHEET 1 OF 1

SOIL BORING LOG

PROJECT : NASD - VIEQUES, PUERTO RICO LOCATION : IRFNA/MAF 4 DISPOSAL SITE

ELEVATION : DRILLING CONTRACTOR : GEOWORKS

DRILLING METHOD AND EQUIPMENT USED : AUGER/SPLIT SPOON

WATER LEVELS : START : 4/17/00 9:50 AM END : 4/17/00 LOGGER : BOBT

DEPTH BELOW SURFACE (FT)	INTERVAL (FT)	RECOVERY (IN)	#/TYPE	STANDARD PENETRATION TEST RESULTS 6"-6"-6"-6" (N)	CORE DESCRIPTION: SOIL NAME, USCS GROUP SYMBOL, COLOR, MOISTURE CONTENT, RELATIVE DENSITY, OR CONSISTENCY, SOIL STRUCTURE, MINERALOGY.	COMMENTS: DEPTH OF CASING, DRILLING RATE, DRILLING FLUID LOSS, TESTS, AND INSTRUMENTATION. OVM (ppm): Breathing Zone / Above Hole
	0.5			HAND COLLECT	GRAVELS/SANDS SAMPLED 2-4 FT	0.1 / 0.1
5	4 to 6	20"			SILTS, SOME P-GRAVELS, DRY, BROWNISH IN CUTTINGS, GRAVELS TO 2" ANGULAR SAMPLED 4-6 FT	0.1 / 0.1
	6 to 8	18"			CUTTINGS-SILTS, SOME CLAY DAMP, BROWN SAMPLED 6-8 FT	0.1 / 0.1
10					REFUSAL AT 8 FT END OF BORING	
15						
20						
25						
30						
35						
40						

SWMU-6

SOIL BORING LOGS

CH2MHILL

PROJECT NUMBER	BORING NUMBER	
139322.FI.60	SWMU6-SB01	SHEET 1 OF 1

SOIL BORING LOG

PROJECT : NASD - VIEQUES, PUERTO RICO LOCATION : VIEQUES, PUERTO RICO

ELEVATION : DRILLING CONTRACTOR : N/A

DRILLING METHOD AND EQUIPMENT USED : HAND AUGER 4" SST

WATER LEVELS : 1.5' START : 4/24/00 END : 4/24/00 LOGGER : B. COLLOM

DEPTH BELOW SURFACE (FT)	INTERVAL (FT)	RECOVERY (IN)	#/TYPE	STANDARD PENETRATION TEST RESULTS 6"-6"-6"-6" (N)	CORE DESCRIPTION: SOIL NAME, USCS GROUP SYMBOL, COLOR, MOISTURE CONTENT, RELATIVE DENSITY, OR CONSISTENCY, SOIL STRUCTURE, MINERALOGY.	COMMENTS: DEPTH OF CASING, DRILLING RATE, DRILLING FLUID LOSS, TESTS, AND INSTRUMENTATION. OVM (ppm): Breathing Zone Above Hole
	0-0.5	6"		N/A	SILTY SAND , DARK GREY W/WHITE COARSE GRAINS, SAND FINE TO COARSE, VERY HI ORGANICS, GRADES QUICKLY DARKER W/DEPTH, LOOSE, MOIST, H2S ODOR	HAND AUGERING W6-SB01-SS COLLECTED AT 1300
0.5						
1.0						
	1-1.5	6"		N/A	TOP 0.2' ARE AS ABOVE BOTTOM 0.3' GRADES QUICKLY SILTIER WITH EVEN MORE ORGANICS, DARK BROWN SILT W/TRACE GRAVEL, H2S ODOR, WOOD FIBER, SOFT, MOIST.	HAND AUGERING W6-SB01-SB COLLECTED AT 1315
2.0					WATER AT 1.5'	
2.5						
3.0						
3.5						
4.0						

CH2MHILL

PROJECT NUMBER	BORING NUMBER	
139322.FI.60	SWMU6-SB02	SHEET 1 OF 1

SOIL BORING LOG

PROJECT : NASD - VIEQUES, PUERTO RICO LOCATION : VIEQUES, PUERTO RICO

ELEVATION : DRILLING CONTRACTOR : N/A

DRILLING METHOD AND EQUIPMENT USED : HAND AUGER 4" SST

WATER LEVELS : 1.2' START : 4/24/00 END : 4/24/00 LOGGER : B. COLLOM

DEPTH BELOW SURFACE (FT)	INTERVAL (FT)	RECOVERY (IN)	#/TYPE	STANDARD PENETRATION TEST RESULTS 6"-6"-6"-6" (N)	CORE DESCRIPTION: SOIL NAME, USCS GROUP SYMBOL, COLOR, MOISTURE CONTENT, RELATIVE DENSITY, OR CONSISTENCY, SOIL STRUCTURE, MINERALOGY.	COMMENTS: DEPTH OF CASING, DRILLING RATE, DRILLING FLUID LOSS, TESTS, AND INSTRUMENTATION. OVM (ppm): Breathing Zone Above Hole
0.5	0-0.5	6"		N/A	SILTY SAND W/TRACE GRAVEL, MED. BROWN, + GETTING QUICKLY DARKER W/DEPTH, SAND FINE TO COARSE W/WHITE COARSE GRAINS, GRAVEL ROUND 1/2" HIGH ORGANICS, LOOSE MOIST.	HAND AUGERING W6-SB02-SS COLLECTED AND DUPLICATE SAMPLE COLLECTED: NDA-104FDI AT 1340
1.0	0.7-1.2	6"		N/A	SILTY SAND TOP 0.3' BUT CHANGES TO SANDY SILT DARK BROWN, VERY HI ORGANICS, WOOD FIBERS, H2S ODOR SOFT, MOIST.	HAND AUGERING W6-SB02-SB COLLECTED AND DUPLICATE SAMPLE COLLECTED: NDA-106FDI TIME AT 1400
1.5					WATER AT 1.2'	
2.0						
2.5						
3.0						
3.5						
4.0						

CH2MHILL

PROJECT NUMBER	BORING NUMBER	
139322.FI.60	SWMU6-SB03	SHEET 1 OF 1

SOIL BORING LOG

PROJECT : NASD - VIEQUES, PUERTO RICO LOCATION : VIEQUES, PUERTO RICO

ELEVATION : DRILLING CONTRACTOR :

DRILLING METHOD AND EQUIPMENT USED : HAND AUGER 4" SST

WATER LEVELS : 1.5' START : 4/24/00 END : 4/24/00 LOGGER : B. COLLOM

DEPTH BELOW SURFACE (FT)	INTERVAL (FT)	RECOVERY (IN)	#/TYPE	STANDARD PENETRATION TEST RESULTS 6"-6"-6"-6" (N)	CORE DESCRIPTION: SOIL NAME, USCS GROUP SYMBOL, COLOR, MOISTURE CONTENT, RELATIVE DENSITY, OR CONSISTENCY, SOIL STRUCTURE, MINERALOGY.	COMMENTS: DEPTH OF CASING, DRILLING RATE, DRILLING FLUID LOSS, TESTS, AND INSTRUMENTATION. OVM (ppm): Breathing Zone Above Hole
	0-0.5	6"		N/A	SILTY SAND, MED. BROWN, SAND FINE TO COARSE, ROOTS + ORGANICS, LOOSE MOIST, GLASS FRAGMENTS	HAND AUGERING W6-SB03-SS COLLECTED AT 0945
0.5						
1.0						
	1-1.5	6"		N/A	SILTY SAND, MED. BROWN, CHANGES TO DARK GREY AT 1', SAND FINE TO COARSE, ROOTS + ORGANICS, GLASS FRAG, LOOSE, MOIST, H2S ODOR.	HAND AUGERING W6-SB03-SB COLLECTED AT 1000
					WATER AT 1.5'	
2.0						
2.5						
3.0						
3.5						
4.0						

CH2MHILL

PROJECT NUMBER	BORING NUMBER	
139322.FI.60	SWMU6-SB04	SHEET 1 OF 1

SOIL BORING LOG

PROJECT : NASD - VIEQUES, PUERTO RICO LOCATION : VIEQUES, PUERTO RICO

ELEVATION : DRILLING CONTRACTOR : N/A

DRILLING METHOD AND EQUIPMENT USED : HAND AUGER 4" SST

WATER LEVELS : 0.7' START : 4/24/00 END : 4/24/00 LOGGER : B. COLLOM

DEPTH BELOW SURFACE (FT)	INTERVAL (FT)	RECOVERY (IN)	#/TYPE	STANDARD PENETRATION TEST RESULTS 6"-6"-6"-6" (N)	CORE DESCRIPTION: SOIL NAME, USCS GROUP SYMBOL, COLOR, MOISTURE CONTENT, RELATIVE DENSITY, OR CONSISTENCY, SOIL STRUCTURE, MINERALOGY.	COMMENTS: DEPTH OF CASING, DRILLING RATE, DRILLING FLUID LOSS, TESTS, AND INSTRUMENTATION. OVM (ppm): Breathing Zone Above Hole
	0-0.5	6"		N/A	SILTY SAND W/GRAVEL, MED BROWN SAND FINE TO MED., GRAVEL ANGULAR HIGORGANICS, ROOTS, GLASS FRAGS., LOOSE, MOIST, H2S ODOR.	HAND AUGERING W6-SB04-SS COLLECTED AT 1010
0.5						
	0.5-0.7	6"		N/A	AS ABOVE, NO GRAVEL, H2S ODOR	HAND AUGERING W6-SB04-SB COLLECTED AT 1015
1.0					WATER LVEL AT 0.7'	
1.5						
2.0						
2.5						
3.0						
3.5						
4.0						

CH2MHILL

PROJECT NUMBER	BORING NUMBER	
139322.FI.60	SWMU6-SB05	SHEET 1 OF 1

SOIL BORING LOG

PROJECT : NASD - VIEQUES, PUERTO RICO LOCATION : VIEQUES, PUERTO RICO

ELEVATION : DRILLING CONTRACTOR : N/A

DRILLING METHOD AND EQUIPMENT USED : HAND AUGER 4" SST

WATER LEVELS : 3.5' START : 4/24/00 END : 4/24/00 LOGGER : B. COLLOM

DEPTH BELOW SURFACE (FT)	INTERVAL (FT)	RECOVERY (IN)	#/TYPE	STANDARD PENETRATION TEST RESULTS 6"-6"-6"-6" (N)	CORE DESCRIPTION: SOIL NAME, USCS GROUP SYMBOL, COLOR, MOISTURE CONTENT, RELATIVE DENSITY, OR CONSISTENCY, SOIL STRUCTURE, MINERALOGY.	COMMENTS: DEPTH OF CASING, DRILLING RATE, DRILLING FLUID LOSS, TESTS, AND INSTRUMENTATION. OVM (ppm): Breathing Zone Above Hole
	0-0.5	6"		N/A	SILTY SAND, MED-BROWN, SAND IS FINE TO COARSE, HI ORGANICS, LOOSE, MOIST	HAND AUGERING W6-SB05-SS COLLECTED AT 1030
0.5						
1.0						
2.0						
						HAND AUGERING W6-SB05-SS COLLECTED AT 1040
2.5						
					WATER AT 3.5'	
3.0	3-3.5	6"		N/A	SILTY, SAND DARK GREY, SAND FINE TO COARSE, HI ORGANICS, LOOSE, MOIST, H2S ODOR.	
	2.3-3.0	6"		N/A		
3.5						
4.0						

CH2MHILL

PROJECT NUMBER	BORING NUMBER	
139322.FI.60	SWMU6-SB06	SHEET 1 OF 1

SOIL BORING LOG

PROJECT : NASD - VIEQUES, PUERTO RICO LOCATION : VIEQUES, PUERTO RICO

ELEVATION : DRILLING CONTRACTOR : N/A

DRILLING METHOD AND EQUIPMENT USED : HAND AUGER 4" SST

WATER LEVELS : 2.5' START : 4/24/00 END : 4/24/00 LOGGER : B. COLLOM

DEPTH BELOW SURFACE (FT)	INTERVAL (FT)	RECOVERY (IN)	#/TYPE	STANDARD PENETRATION TEST RESULTS 6"-6"-6"-6" (N)	CORE DESCRIPTION: SOIL NAME, USCS GROUP SYMBOL, COLOR, MOISTURE CONTENT, RELATIVE DENSITY, OR CONSISTENCY, SOIL STRUCTURE, MINERALOGY.	COMMENTS: DEPTH OF CASING, DRILLING RATE, DRILLING FLUID LOSS, TESTS, AND INSTRUMENTATION. OVM (ppm): Breathing Zone Above Hole
	0-0.5	6"		N/A	SAND W/SILT + GRAVEL, LT. BROWN, SAND FINE TO COARSE, GRAVEL IS 1/4" ANGULAR, LOOSE, DRY, TRACE FRAGMENTS OF CLOTH + GLASS.	HAND AUGERING W6-SB06-SS COLLECTED AT 1410
0.5						
1.0						
1.5						
2.0	1.8-23	6"		N/A	SILTY, SAND W/GRAVELS, DRY GREY BROWN SAND FINE TO COARSE, GRAVEL 1/4" TO 1/2" ANGULAR, LOOSE, MOIST	HAND AUGERING W6-SB06-SS COLLECTED AT 1420
2.5					WATER AT 2.5'	
3.0						
3.5						
4.0						

CH2MHILL

PROJECT NUMBER	BORING NUMBER	
139322.FI.60	SWMU6-SB07	SHEET 1 OF 1

SOIL BORING LOG

PROJECT : NASD - VIEQUES, PUERTO RICO LOCATION : VIEQUES, PUERTO RICO

ELEVATION : DRILLING CONTRACTOR : N/A

DRILLING METHOD AND EQUIPMENT USED : HAND AUGER 4" SST

WATER LEVELS : 3.0' START : 4/24/00 END : 4/24/00 LOGGER : B. COLLOM

DEPTH BELOW SURFACE (FT)	INTERVAL (FT)	RECOVERY (IN)	#/TYPE	STANDARD PENETRATION TEST RESULTS 6"-6"-6"-6" (N)	CORE DESCRIPTION: SOIL NAME, USCS GROUP SYMBOL, COLOR, MOISTURE CONTENT, RELATIVE DENSITY, OR CONSISTENCY, SOIL STRUCTURE, MINERALOGY.	COMMENTS: DEPTH OF CASING, DRILLING RATE, DRILLING FLUID LOSS, TESTS, AND INSTRUMENTATION. OVM (ppm): Breathing Zone Above Hole
	0-0.5	6"		N/A	SAND W/SILT + GRAVEL, LT. BROWN, SAND FINE TO COARSE, GRAVEL IS 1/4" TO 3/4" ANGULAR, LOOSE, DRY	HAND AUGERING W6-SB07-SS COLLECTED 4/20/00 AT 1450
0.5						
1.0						
2.0						
	2.3-3.0	8"	#######	N/A	SILTY, SAND W/GRAVELS, MED. GREY, SAND FINE TO COARSE (CORAL), GRAVEL SUBANGULAR 1/4" TO 1/2", LOOSE, MOIST WATER AT 3'	HAND AUGERING W6-SB07-SS COLLECTED AT 1510
2.5						
3.0						
3.5						
4.0						

CH2MHILL

PROJECT NUMBER	BORING NUMBER	
139322.FI.60	SWMU6-SB08	SHEET 1 OF 1

SOIL BORING LOG

PROJECT : NASD - VIEQUES, PUERTO RICO LOCATION : VIEQUES, PUERTO RICO

ELEVATION : DRILLING CONTRACTOR : N/A

DRILLING METHOD AND EQUIPMENT USED : HAND AUGER 4" SST

WATER LEVELS : 3.0' START : 4/20/00 END : 4/20/00 LOGGER : B. COLLOM

DEPTH BELOW SURFACE (FT)	INTERVAL (FT)	RECOVERY (IN)	#/TYPE	STANDARD PENETRATION TEST RESULTS 6"-6"-6" (N)	CORE DESCRIPTION: SOIL NAME, USCS GROUP SYMBOL, COLOR, MOISTURE CONTENT, RELATIVE DENSITY, OR CONSISTENCY, SOIL STRUCTURE, MINERALOGY.	COMMENTS: DEPTH OF CASING, DRILLING RATE, DRILLING FLUID LOSS, TESTS, AND INSTRUMENTATION. OVM (ppm): Breathing Zone Above Hole
0.5	0-0.5	6"		N/A	SILTY SAND W/TRACE GRAVEL, DARK BROWN, SAND IS FINE TO COARSE, GRAVEL ANGULAR 1/4", LOOSE, DRY, SOME ROOTS +OTHER ORGANICS, SOME PAPER FRAGMENTS	HAND AUGERING W6-SB08-SS COLLECTED AT 1525
1.0						
1.5						
2.0						
2.5	2.3-3.0	6"		N/A	SILTY, SAND W/GRAVELS, DARK GREY, SAND FINE TO MED. GRAVEL 1/4" TO 1/2" ANGULAR, LOOSE, MOIST	HAND AUGERING W6-SB08-SB COLLECTED AT 1600
3.0					WATER AT 3.0'	
3.5						
4.0						

CH2MHILL

PROJECT NUMBER	BORING NUMBER	
139322.FI.60	SWMU6-MW1	SHEET 1 OF 1

SOIL BORING LOG

PROJECT : NASD - VIEQUES, PUERTO RICO (PA/SI) LOCATION : MANGROVE AREA UPGRADIENT

ELEVATION : DRILLING CONTRACTOR : GEOWORKS INC.

DRILLING METHOD AND EQUIPMENT USED : POST HOLE 0-4' HOLLOW STEM AUGER 4'-15' 8 1/4" DIA. BIT

WATER LEVELS : 7FT START : 4/24/00 END : 4/24/00 LOGGER : G. SILVA

DEPTH BELOW SURFACE (FT)	INTERVAL (FT)	RECOVERY (IN)	#/TYPE	STANDARD PENETRATION TEST RESULTS 6"-6"-6"-6" (N)	CORE DESCRIPTION: SOIL NAME, USCS GROUP SYMBOL, COLOR, MOISTURE CONTENT, RELATIVE DENSITY, OR CONSISTENCY, SOIL STRUCTURE, MINERALOGY.	COMMENTS: DEPTH OF CASING, DRILLING RATE, DRILLING FLUID LOSS, TESTS, AND INSTRUMENTATION. OVM (ppm): Breathing Zone / Above Hole
	0-1				SILTY SAND W/GRAVEL, (SM) GREENISH GRAY, SLIGHTLY MOIST	0.0 0.0
5						
	5-6				FINE SAND WITH CRUSH SHELL FINE, MARINE FISH SMELL	0.0 0.0 VERY WET WATER TABLE APPROX. 7FT
10						
	10-11				SAME AS ABOVE, VERY WET	0.0 0.0
	15-16				SAME AS ABOVE	STOPPED DRILLING @15' BGS.
20						
25						
30						
35						
40						

CH2MHILL

PROJECT NUMBER	BORING NUMBER	
139322.FI.60	SWMU6-MW2	SHEET 1 OF 1

SOIL BORING LOG

PROJECT : NASD - VIEQUES, PUERTO RICO (PA/SI) LOCATION : MANGROVE AREA

ELEVATION : DRILLING CONTRACTOR : GEOWORKS INC.

DRILLING METHOD AND EQUIPMENT USED : POST HOLE (0-4') HAND AUGER (4'-)

WATER LEVELS : 3FT START : 4/24/00 END : 4/24/00 LOGGER : G. SILVA

DEPTH BELOW SURFACE (FT)	INTERVAL (FT)	RECOVERY (IN)	#/TYPE	STANDARD PENETRATION TEST RESULTS 6"-6"-6"-6" (N)	CORE DESCRIPTION: SOIL NAME, USCS GROUP SYMBOL, COLOR, MOISTURE CONTENT, RELATIVE DENSITY, OR CONSISTENCY, SOIL STRUCTURE, MINERALOGY.	COMMENTS: DEPTH OF CASING, DRILLING RATE, DRILLING FLUID LOSS, TESTS, AND INSTRUMENTATION. OVM (ppm): Breathing Zone / Above Hole
	0-1				SILTY SAND W/ORGANIC MATERIAL AND	0.0 0.0
	1-4				ROOTS, VERY MOIST, (0-1')	
					DECOMPOSED SWMAP MUD (SM) SAND	DEPTH TO GROUND WATER 3FT
					ORGANIC MATERIAL VERY WET (1'-4')	STRONG ODOR, ROTTEN
5					DARKGREY	EGG SMELL
	5-6				CRUSHED SHELL WITH DECOMPOSED	0.0 0.0
					ORGANIC MARINE/LAGOON LIGHT GREY	
					GREENISH, WET	
10						
	10-11				SAME AS ABOVE	0.0 0.0
						STOPPED DRILLING @11'
15						
20						
25						
30						
35						
40						

CH2MHILL

PROJECT NUMBER	BORING NUMBER	
139322.FI.60	SWMU6-MW3	SHEET 1 OF 1

SOIL BORING LOG

PROJECT : NASD - VIEQUES, PUERTO RICO (PA/SI) LOCATION : MANGROVE ADJACENT TO LAGOON

ELEVATION : DRILLING CONTRACTOR : GEOWORKS INC.

DRILLING METHOD AND EQUIPMENT USED : HAND AUGER 3 1/2"-INCH

WATER LEVELS : 7FT START : 4/25/00 END : 4/25/00 LOGGER : G. SILVA

DEPTH BELOW SURFACE (FT)	INTERVAL (FT)	RECOVERY (IN)	#/TYPE	STANDARD PENETRATION TEST RESULTS 6"-6"-6"-6" (N)	CORE DESCRIPTION: SOIL NAME, USCS GROUP SYMBOL, COLOR, MOISTURE CONTENT, RELATIVE DENSITY, OR CONSISTENCY, SOIL STRUCTURE, MINERALOGY.	COMMENTS: DEPTH OF CASING, DRILLING RATE, DRILLING FLUID LOSS, TESTS, AND INSTRUMENTATION. OVM (ppm): Breathing Zone / Above Hole
	0-6"				POORLY GRADED SILTY SAND (SM)	0.0 0.0
	6"-3"				VERY MOIST (0-6")	
					LARGE COBBLES SANDY SLUDGE	GROUND WATER DEPTH
	3'-3 1/2"				DARK GREY, WET (6"-3")	STRONG ODOR DECOMPOSITION)
5					SHELL LAYER CRUSHED 3'-3 1/2'	
	5'-6'				CRUSHED SHELL WITH LAGOON	0.0 0.0
					MARINE FISH SMELL	VERY WET WATER 7FT
					MUD, LIGHT GRAY, ROTTEN	TABLE APPROX.
					EGG SMELL, WET	
10						
	10'-12'				SAME AS ABOVE	0.0 0.0
						STOPPED DRILLING @12' BGS.
20						
25						
30						
35						
40						

CH2MHILL

PROJECT NUMBER	BORING NUMBER	
139322.FI.60	SWMU6-MW4	SHEET 1 OF 1

SOIL BORING LOG

PROJECT : NASD - VIEQUES, PUERTO RICO (PA/SI) LOCATION : MANGROVE DOWNGRADIENT

ELEVATION : DRILLING CONTRACTOR : GEOWORKS INC.

DRILLING METHOD AND EQUIPMENT USED : HAND AUGER

WATER LEVELS : START : 4/25/00 END : 4/25/00 LOGGER : G. SILVA

DEPTH BELOW SURFACE (FT)	INTERVAL (FT)	RECOVERY (IN)	#/TYPE	STANDARD PENETRATION TEST RESULTS 6"-6"-6"-6" (N)	CORE DESCRIPTION: SOIL NAME, USCS GROUP SYMBOL, COLOR, MOISTURE CONTENT, RELATIVE DENSITY, OR CONSISTENCY, SOIL STRUCTURE, MINERALOGY.	COMMENTS: DEPTH OF CASING, DRILLING RATE, DRILLING FLUID LOSS, TESTS, AND INSTRUMENTATION. OVM (ppm): Breathing Zone / Above Hole
	0-6"				POORLY GRADED SILTY SAND (SM) VERY MOIST, LIGHT BROWN (0-6")	DEPTH TO GROUND WATER
	2'-3'					ROTTEN EGG SMELL
5					DECOMPOSED ORGANIC MARSHLIKE MATERIAL SHELL FRAGMENTS VERY WET	
	5'-6'				SAME AS ABOVE	0.0 0.0
10						
	10'-11'				SAME AS ABOVE	0.0 0.0
						STOPPED HAND AUGER @11'
15						
20						
25						
30						
35						
40						

SWMU-7

SOIL BORING LOGS

CH2MHILL

PROJECT NUMBER	BORING NUMBER	
139322.FI.70	SWMU7-2R	SHEET 1 OF 3

SOIL BORING LOG

PROJECT : VIEQUES PA/SI — LOCATION : QUEBRADA

ELEVATION : — DRILLING CONTRACTOR : GEOWORKS INC

DRILLING METHOD AND EQUIPMENT USED : AIR ROTARY HAMMER

WATER LEVELS : — START : — END : — LOGGER : G. SILVA

DEPTH BELOW SURFACE (FT)	INTERVAL (FT)	RECOVERY (IN)	#/TYPE	STANDARD PENETRATION TEST RESULTS 6"-6"-6" (N)	CORE DESCRIPTION: SOIL NAME, USCS GROUP SYMBOL, COLOR, MOISTURE CONTENT, RELATIVE DENSITY, OR CONSISTENCY, SOIL STRUCTURE, MINERALOGY.	COMMENTS: DEPTH OF CASING, DRILLING RATE, DRILLING FLUID LOSS, TESTS, AND INSTRUMENTATION. OVM (ppm): Breathing Zone / Above Hole
	0-1				SAND SILT (ML) YELLOWISH ORANGE DRY	0.0 0.0
5	5-6'				SAME AS ABOVE	0.0 0.0
	7-8'				AT 7' SOLID ROCK, SAPORITE, HARD DRILLING, LIGHT GRAY, DRY	
10	10-11'				SAME AS ABOVE	0.0 0.0
15	15-16				SAME AS ABOVE, SOLID ROCK	0.0 0.0
20	20-21				SAME AS ABOVE, GREENISH GRAY	0.0 0.0
25	25-26				SAME AS ABOVE	0.0 0.0
30						

CH2MHILL

PROJECT NUMBER	BORING NUMBER	
139322.FI.70	SWMU7-2R	SHEET 2 OF 3

SOIL BORING LOG

PROJECT : VIEQUES PA/SI — LOCATION : QUEBRADA

ELEVATION : — DRILLING CONTRACTOR : GEOWORKS INC

DRILLING METHOD AND EQUIPMENT USED : AIR ROTARY HAMMER

WATER LEVELS : — START : — END : — LOGGER : G. SILVA

DEPTH BELOW SURFACE (FT)	INTERVAL (FT)	RECOVERY (IN)	#/TYPE	STANDARD PENETRATION TEST RESULTS 6"-6"-6"-6" (N)	CORE DESCRIPTION: SOIL NAME, USCS GROUP SYMBOL, COLOR, MOISTURE CONTENT, RELATIVE DENSITY, OR CONSISTENCY, SOIL STRUCTURE, MINERALOGY.	COMMENTS: DEPTH OF CASING, DRILLING RATE, DRILLING FLUID LOSS, TESTS, AND INSTRUMENTATION. OVM (ppm): Breathing Zone / Above Hole
30	30-31				SAME AS ABOVE	0.0 / 0.0
35	35-36				SAME AS ABOVE	0.0 / 0.0
40	40-41				SAME AS ABOVE	0.0 / 0.0
45	45-46				SAME AS ABOVE	0.0 / 0.0
50	50-51				SAME AS ABOVE	0.0 / 0.0
55	55-56				SAME AS ABOVE	0.0 / 0.0
60						

CH2MHILL

PROJECT NUMBER	BORING NUMBER	
139322.FI.70	SWMU7-2R	SHEET 3 OF 3

SOIL BORING LOG

PROJECT : VIEQUES PA/SI — LOCATION : QUEBRADA

ELEVATION : — DRILLING CONTRACTOR : GEOWORKS INC

DRILLING METHOD AND EQUIPMENT USED : AIR ROTARY HAMMER

WATER LEVELS : — START : — END : — LOGGER : G. SILVA

DEPTH BELOW SURFACE (FT)	INTERVAL (FT)	RECOVERY (IN)	#/TYPE	STANDARD PENETRATION TEST RESULTS 6"-6"-6" (N)	CORE DESCRIPTION: SOIL NAME, USCS GROUP SYMBOL, COLOR, MOISTURE CONTENT, RELATIVE DENSITY, OR CONSISTENCY, SOIL STRUCTURE, MINERALOGY.	COMMENTS: DEPTH OF CASING, DRILLING RATE, DRILLING FLUID LOSS, TESTS, AND INSTRUMENTATION. OVM (ppm): Breathing Zone / Above Hole
60	60-61				SOLID ROCK, SAPORITE GREENISH GRAY	0.0 0.0
65	65-66				SAME AS ABOVE	0.0 0.0
70	70-71				SAME AS ABOVE	0.0 0.0
75	75-76				SAME AS ABOVE, LIGHT GRAY GROUND WATER @ APPROX 75' BGS	0.0 0.0
80	78-81				SAME AS ABOVE	0.0 0.0
85	85-87				SAME AS ABOVE	STOPPED DRILLING 87' BGS
90						

CH2MHILL

PROJECT NUMBER	BORING NUMBER	
139322.FI.70	SWMU7-3R	SHEET 1 OF 2

SOIL BORING LOG

PROJECT : VIEQUES PA/SI — LOCATION : QUEBRADA

ELEVATION : — DRILLING CONTRACTOR : GEOWORKS INC

DRILLING METHOD AND EQUIPMENT USED : AIR ROTARY HAMMER

WATER LEVELS : — START : — END : — LOGGER : G. SILVA

DEPTH BELOW SURFACE (FT)	INTERVAL (FT)	RECOVERY (IN)	#/TYPE	STANDARD PENETRATION TEST RESULTS 6"-6"-6"-6" (N)	CORE DESCRIPTION: SOIL NAME, USCS GROUP SYMBOL, COLOR, MOISTURE CONTENT, RELATIVE DENSITY, OR CONSISTENCY, SOIL STRUCTURE, MINERALOGY.	COMMENTS: DEPTH OF CASING, DRILLING RATE, DRILLING FLUID LOSS, TESTS, AND INSTRUMENTATION. OVM (ppm): Breathing Zone	Above Hole
	0-1				SAND SILT (ML) LIGHT BROWN, DRY	0.0	0.0
5	5-6'				SILTY SAND WELL GRADED (SM) DRY, LIGHT BROWN	0.0	0.0
10	10-11'				SOLID ROCK, SAPORITE, GREENISH GRAY, HARD DRILLING, DRY	0.0	0.0
15	15-16				SAME AS ABOVE	0.0	0.0
20	20-21				SAME AS ABOVE	0.0	0.0
25	25-26				SAME AS ABOVE	0.0	0.0

CH2MHILL

PROJECT NUMBER	BORING NUMBER	
139322.FI.70	SWMU7-3R	SHEET 2 OF 2

SOIL BORING LOG

PROJECT : VIEQUES PA/SI — LOCATION : QUEBRADA

ELEVATION : — DRILLING CONTRACTOR : GEOWORKS INC

DRILLING METHOD AND EQUIPMENT USED : AIR ROTARY HAMMER

WATER LEVELS : — START : — END : — LOGGER : G. SILVA

DEPTH BELOW SURFACE (FT)	INTERVAL (FT)	RECOVERY (IN)	#/TYPE	STANDARD PENETRATION TEST RESULTS 6"-6"-6"-6" (N)	CORE DESCRIPTION: SOIL NAME, USCS GROUP SYMBOL, COLOR, MOISTURE CONTENT, RELATIVE DENSITY, OR CONSISTENCY, SOIL STRUCTURE, MINERALOGY.	COMMENTS: DEPTH OF CASING, DRILLING RATE, DRILLING FLUID LOSS, TESTS, AND INSTRUMENTATION. OVM (ppm): Breathing Zone / Above Hole
30	30-31				SAME AS ABOVE	0.0 0.0
35	35-36				SAME AS ABOVE	0.0 0.0
40	40-41				SAME AS ABOVE	0.0 0.0
45	45-46				SAME AS ABOVE	0.0 0.0
50	50-51				SAME AS ABOVE, A LOT OF WATER IS BEING PRODUCED FROM FORMATION, AT 50' ROCK CHIPS VERY MOIST TO WET, WATER TABLE.	0.0 0.0
55	55-56				SAME AS ABOVE	0.0 0.0
60					SAME AS ABOVE	STOPPED DRILLING

SWMU-10

SOIL BORING LOGS

CH2MHILL

PROJECT NUMBER	BORING NUMBER	
139322.FI.60	W10SB01	SHEET 1 OF 1

SOIL BORING LOG

PROJECT : NASD, VIEQUES, PUERTO RICO LOCATION :

ELEVATION : DRILLING CONTRACTOR : CH2M HILL/GEOWORKS

DRILLING METHOD AND EQUIPMENT USED :

WATER LEVELS : N/A START : 4/4/2000 END : 4/4/2000 LOGGER : H. HERNANDEZ

DEPTH BELOW SURFACE (FT)	INTERVAL (FT)	RECOVERY (IN)	#/TYPE	STANDARD PENETRATION TEST RESULTS 6"-6"-6"-6" (N)	CORE DESCRIPTION: SOIL NAME, USCS GROUP SYMBOL, COLOR, MOISTURE CONTENT, RELATIVE DENSITY, OR CONSISTENCY, SOIL STRUCTURE, MINERALOGY.	COMMENTS: DEPTH OF CASING, DRILLING RATE, DRILLING FLUID LOSS, TESTS, AND INSTRUMENTATION. OVM (ppm):	Breathing Zone	Above Hole
	0-3'				SILT SAND FINE/DRY W/CLAY	PID	0-6"	0.5 PPM
					3' SILTY SAND W/DIME-SIZED CLAY CLUMPS			
5	4-6'	18"		8-10-11-11	MEDIUM GRAVEL TRACE CLAY/SILT REDDISH BROWN TRACE OF ROCKS UP TO 2" DIAMETER	PID	4-6'	0.1 PPM
					* NOTE: END OF BORING @ 6'			
10								
20								
25								
30								
35								
40								

CH2MHILL

PROJECT NUMBER	BORING NUMBER	
139322.FI.60	W10SB02	SHEET 1 OF 1

SOIL BORING LOG

PROJECT : NASD, VIEQUES, PUERTO RICO LOCATION :

ELEVATION : DRILLING CONTRACTOR : CH2M HILL/GEOWORKS

DRILLING METHOD AND EQUIPMENT USED :

WATER LEVELS : N/A START : 4/4/2000 END : 4/4/2000 LOGGER : E. CABALE

DEPTH BELOW SURFACE (FT)	INTERVAL (FT)	RECOVERY (IN)	#/TYPE	STANDARD PENETRATION TEST RESULTS 6"-6"-6"-6" (N)	CORE DESCRIPTION: SOIL NAME, USCS GROUP SYMBOL, COLOR, MOISTURE CONTENT, RELATIVE DENSITY, OR CONSISTENCY, SOIL STRUCTURE, MINERALOGY.	COMMENTS: DEPTH OF CASING, DRILLING RATE, DRILLING FLUID LOSS, TESTS, AND INSTRUMENTATION.	OVM (ppm): Breathing Zone	Above Hole
					SILT SAND FINE/DRY W/CLAY	PID	0-6"	0 PPM
	0-3				3' SILTY SAND W/DIME-SIZED CLAY CLUMPS			
5	4-6	13		6-4-5-7	MEDIUM GRAVEL TRACE CLAY/SILT REDDISH BROWN TRACE OF ROCKS UP TO 2" DIAMETER	PID	4-6'	0 PPM
					* NOTE: END OF BORING @ 6'			
10								
15								
20								
25								
30								
35								
40								

CH2MHILL

PROJECT NUMBER	BORING NUMBER	
139322.FI.60	W10SB03	SHEET 1 OF 1

SOIL BORING LOG

PROJECT : NASD, VIEQUES, PUERTO RICO LOCATION :

ELEVATION : DRILLING CONTRACTOR : CH2M HILL/GEOWORKS

DRILLING METHOD AND EQUIPMENT USED :

WATER LEVELS : N/A START : 4/4/2000 END : 4/4/2000 LOGGER : E. CABALE

DEPTH BELOW SURFACE (FT)	INTERVAL (FT)	RECOVERY (IN)	#/TYPE	STANDARD PENETRATION TEST RESULTS 6"-6"-6"-6" (N)	CORE DESCRIPTION: SOIL NAME, USCS GROUP SYMBOL, COLOR, MOISTURE CONTENT, RELATIVE DENSITY, OR CONSISTENCY, SOIL STRUCTURE, MINERALOGY.	COMMENTS: DEPTH OF CASING, DRILLING RATE, DRILLING FLUID LOSS, TESTS, AND INSTRUMENTATION.	OVM (ppm): Breathing Zone	Above Hole
					SILT SAND FINE/DRY W/CLAY	PID	0-6"	0.1 PPM
	0-3				3' SILTY SAND W/DIME-SIZED CLAY CLUMPS			
5	4-6	14		5-8-10-14	MEDIUM GRAVEL TRACE CLAY/SILT REDDISH BROWN TRACE OF ROCKS UP TO 2" DIAMETER	PID	4-6'	0 PPM
					* NOTE: END OF BORING @ 6'			
10								
20								
25								
30								
35								
40								

CH2MHILL

PROJECT NUMBER	BORING NUMBER	
139322.FI.60	W10SB04	SHEET 1 OF 1

SOIL BORING LOG

PROJECT : NASD, VIEQUES, PUERTO RICO LOCATION :

ELEVATION : DRILLING CONTRACTOR : CH2M HILL/GEOWORKS

DRILLING METHOD AND EQUIPMENT USED :

WATER LEVELS : N/A START : 4/4/2000 END : 4/4/2000 LOGGER : E. CABALE

DEPTH BELOW SURFACE (FT)	INTERVAL (FT)	RECOVERY (IN)	#/TYPE	STANDARD PENETRATION TEST RESULTS 6"-6"-6"-6" (N)	CORE DESCRIPTION: SOIL NAME, USCS GROUP SYMBOL, COLOR, MOISTURE CONTENT, RELATIVE DENSITY, OR CONSISTENCY, SOIL STRUCTURE, MINERALOGY.	COMMENTS: DEPTH OF CASING, DRILLING RATE, DRILLING FLUID LOSS, TESTS, AND INSTRUMENTATION. OVM (ppm):	Breathing Zone	Above Hole
					SILT SAND FINE/DRY W/CLAY	PID	0-6"	0 PPM
	0-3				3' SILTY SAND W/DIME-SIZED CLAY CLUMPS			
5	4-6	24		8-15-22-21	MEDIUM GRAVEL TRACE CLAY/SILT REDDISH BROWN TRACE OF ROCKS UP TO 2" DIAMETER	PID	4-6'	0 PPM
					* NOTE: END OF BORING @ 6'			
10								
15								
20								
25								
30								
35								
40								

CH2MHILL

PROJECT NUMBER	BORING NUMBER	
139322.FI.60	W10SB05	SHEET 1 OF 1

SOIL BORING LOG

PROJECT : NASD, VIEQUES, PUERTO RICO LOCATION :

ELEVATION : DRILLING CONTRACTOR : CH2M HILL/GEOWORKS

DRILLING METHOD AND EQUIPMENT USED :

WATER LEVELS : N/A START : 4/4/2000 END : 4/4/2000 LOGGER : E. CABALE

DEPTH BELOW SURFACE (FT)	INTERVAL (FT)	RECOVERY (IN)	#/TYPE	STANDARD PENETRATION TEST RESULTS 6"-6"-6"-6" (N)	CORE DESCRIPTION: SOIL NAME, USCS GROUP SYMBOL, COLOR, MOISTURE CONTENT, RELATIVE DENSITY, OR CONSISTENCY, SOIL STRUCTURE, MINERALOGY.	COMMENTS: DEPTH OF CASING, DRILLING RATE, DRILLING FLUID LOSS, TESTS, AND INSTRUMENTATION.	OVM (ppm): Breathing Zone	Above Hole
					SILT SAND FINE/DRY W/CLAY	PID	0-6"	0 PPM
	0-3				3' SILTY SAND W/DIME-SIZED CLAY CLUMPS			
5	4-6	14		5-11-20-29	MEDIUM GRAVEL TRACE CLAY/SILT REDDISH BROWN TRACE OF ROCKS UP TO 2" DIAMETER	PID	4-6'	0.2 PPM
					* NOTE: END OF BORING @ 6'			
10								
20								
25								
30								
35								
40								

CH2MHILL

PROJECT NUMBER	BORING NUMBER	
139322.FI.60	W10SB06	SHEET 1 OF 1

SOIL BORING LOG

PROJECT : NASD, VIEQUES, PUERTO RICO LOCATION :

ELEVATION : DRILLING CONTRACTOR : CH2M HILL/GEOWORKS

DRILLING METHOD AND EQUIPMENT USED :

WATER LEVELS : N/A START : 4/4/2000 END : 4/4/2000 LOGGER : E. CABALE

DEPTH BELOW SURFACE (FT)	INTERVAL (FT)	RECOVERY (IN)	#/TYPE	STANDARD PENETRATION TEST RESULTS 6"-6"-6"-6" (N)	CORE DESCRIPTION: SOIL NAME, USCS GROUP SYMBOL, COLOR, MOISTURE CONTENT, RELATIVE DENSITY, OR CONSISTENCY, SOIL STRUCTURE, MINERALOGY.	COMMENTS: DEPTH OF CASING, DRILLING RATE, DRILLING FLUID LOSS, TESTS, AND INSTRUMENTATION. OVM (ppm): Breathing Zone / Above Hole
					SILT SAND FINE/DRY W/CLAY	PID 0-6" 0 PPM
	0-3				3' SILTY SAND W/DIME-SIZED CLAY CLUMPS	
5	4-6	13		6-9-16-18	MEDIUM GRAVEL TRACE CLAY/SILT REDDISH BROWN TRACE OF ROCKS UP TO 2" DIAMETER	PID 4-6' 0.3 PPM
					* NOTE: END OF BORING @ 6'	
10						
15						
20						
25						
30						
35						
40						

CH2MHILL

PROJECT NUMBER	BORING NUMBER	
139322.FI.60	W10SB07	SHEET 1 OF 1

SOIL BORING LOG

PROJECT : NASD, VIEQUES, PUERTO RICO LOCATION :

ELEVATION : DRILLING CONTRACTOR : CH2M HILL/GEOWORKS

DRILLING METHOD AND EQUIPMENT USED :

WATER LEVELS : N/A START : 4/4/2000 END : 4/4/2000 LOGGER : E. CABALE

DEPTH BELOW SURFACE (FT)	INTERVAL (FT)	RECOVERY (IN)	#/TYPE	STANDARD PENETRATION TEST RESULTS 6"-6"-6"-6" (N)	CORE DESCRIPTION: SOIL NAME, USCS GROUP SYMBOL, COLOR, MOISTURE CONTENT, RELATIVE DENSITY, OR CONSISTENCY, SOIL STRUCTURE, MINERALOGY.	COMMENTS: DEPTH OF CASING, DRILLING RATE, DRILLING FLUID LOSS, TESTS, AND INSTRUMENTATION.	OVM (ppm): Breathing Zone	Above Hole
					SILT SAND FINE/DRY W/CLAY	PID	0-6"	0 PPM
	0-3				3' SILTY SAND W/DIME-SIZED CLAY CLUMPS			
5	4-6	24		5-12-17-21	MEDIUM GRAVEL TRACE CLAY/SILT REDDISH BROWN TRACE OF ROCKS UP TO 2" DIAMETER	PID	4-6'	0 PPM
					* NOTE: END OF BORING @ 6'			
10								
20								
25								
30								
35								
40								

CH2MHILL

PROJECT NUMBER	BORING NUMBER	
139322.FI.60	W10SB08	SHEET 1 OF 1

SOIL BORING LOG

PROJECT : NASD, VIEQUES, PUERTO RICO LOCATION :

ELEVATION : DRILLING CONTRACTOR : CH2M HILL/GEOWORKS

DRILLING METHOD AND EQUIPMENT USED :

WATER LEVELS : N/A START : 4/4/2000 END : 4/4/2000 LOGGER : E. CABALE

DEPTH BELOW SURFACE (FT)	INTERVAL (FT)	RECOVERY (IN)	#/TYPE	STANDARD PENETRATION TEST RESULTS 6"-6"-6"-6" (N)	CORE DESCRIPTION: SOIL NAME, USCS GROUP SYMBOL, COLOR, MOISTURE CONTENT, RELATIVE DENSITY, OR CONSISTENCY, SOIL STRUCTURE, MINERALOGY.	COMMENTS: DEPTH OF CASING, DRILLING RATE, DRILLING FLUID LOSS, TESTS, AND INSTRUMENTATION. OVM (ppm): Breathing Zone / Above Hole
					SILT SAND FINE/DRY W/CLAY	PID 0-6" 0 PPM
	0-3				3' SILTY SAND W/DIME-SIZED CLAY CLUMPS	
5	4-6	20		4-8-15-16	MEDIUM GRAVEL TRACE CLAY/SILT REDDISH BROWN TRACE OF ROCKS UP TO 2" DIAMETER	PID 4-6' 0 PPM
					* NOTE: END OF BORING @ 6'	
10						
15						
20						
25						
30						
35						
40						

CH2MHILL

PROJECT NUMBER	BORING NUMBER	
139322.FI.60	W10SB09	SHEET 1 OF 1

SOIL BORING LOG

PROJECT : NASD, VIEQUES, PUERTO RICO LOCATION :

ELEVATION : DRILLING CONTRACTOR : CH2M HILL/GEOWORKS

DRILLING METHOD AND EQUIPMENT USED :

WATER LEVELS : N/A START : 4/4/2000 END : 4/4/2000 LOGGER : E. CABALE

DEPTH BELOW SURFACE (FT)	INTERVAL (FT)	RECOVERY (IN)	#/TYPE	STANDARD PENETRATION TEST RESULTS 6"-6"-6"-6" (N)	CORE DESCRIPTION: SOIL NAME, USCS GROUP SYMBOL, COLOR, MOISTURE CONTENT, RELATIVE DENSITY, OR CONSISTENCY, SOIL STRUCTURE, MINERALOGY.	COMMENTS: DEPTH OF CASING, DRILLING RATE, DRILLING FLUID LOSS, TESTS, AND INSTRUMENTATION. OVM (ppm):	Breathing Zone	Above Hole
					SILT SAND FINE/DRY W/CLAY	PID	0-6"	0 PPM
	0-3				3' SILTY SAND W/DIME-SIZED CLAY CLUMPS			
5	4-6	13		3-10-14-17	MEDIUM GRAVEL TRACE CLAY/SILT REDDISH BROWN TRACE OF ROCKS UP TO 2" DIAMETER	PID	4-6'	0 PPM
					* NOTE: END OF BORING @ 6'			
10								
20								
25								
30								
35								
40								

CH2MHILL

PROJECT NUMBER	BORING NUMBER	
139322.FI.60	W10SB10	SHEET 1 OF 1

SOIL BORING LOG

PROJECT : NASD, VIEQUES, PUERTO RICO LOCATION :

ELEVATION : DRILLING CONTRACTOR : CH2M HILL/GEOWORKS

DRILLING METHOD AND EQUIPMENT USED :

WATER LEVELS : N/A START : 4/4/2000 END : 4/4/2000 LOGGER : E. CABALE

DEPTH BELOW SURFACE (FT)	INTERVAL (FT)	RECOVERY (IN)	#/TYPE	STANDARD PENETRATION TEST RESULTS 6"-6"-6"-6" (N)	CORE DESCRIPTION: SOIL NAME, USCS GROUP SYMBOL, COLOR, MOISTURE CONTENT, RELATIVE DENSITY, OR CONSISTENCY, SOIL STRUCTURE, MINERALOGY.	COMMENTS: DEPTH OF CASING, DRILLING RATE, DRILLING FLUID LOSS, TESTS, AND INSTRUMENTATION.	OVM (ppm): Breathing Zone	Above Hole
					SILT SAND FINE/DRY W/CLAY	PID	0-6"	0 PPM
	0-3				3' SILTY SAND W/DIME-SIZED CLAY CLUMPS			
5	4-6	13		6-14-14-19	MEDIUM GRAVEL TRACE CLAY/SILT REDDISH BROWN TRACE OF ROCKS UP TO 2" DIAMETER	PID	4-6'	0.2 PPM
					* NOTE: END OF BORING @ 6'			
10								
15								
20								
25								
30								
35								
40								

SWMU-14

SOIL BORING LOGS

CH2MHILL

PROJECT NUMBER	BORING NUMBER	
139322.FI.60	SWMU14-SB01	SHEET 1 OF 1

SOIL BORING LOG

PROJECT : PA/SI VIEQUES LOCATION : NASD SWMU14

ELEVATION : DRILLING CONTRACTOR : GEOWORKS

DRILLING METHOD AND EQUIPMENT USED : HSA - MOBILEDRILL - HANDAUGER AT SURFACE

WATER LEVELS : N/A START : 4/05/2000 10:20 END : 4/05/2000 10:45 LOGGER : H. HERNANDEZ

DEPTH BELOW SURFACE (FT)	INTERVAL (FT)	RECOVERY (IN)	#/TYPE	STANDARD PENETRATION TEST RESULTS 6"-6"-6" (N)	CORE DESCRIPTION: SOIL NAME, USCS GROUP SYMBOL, COLOR, MOISTURE CONTENT, RELATIVE DENSITY, OR CONSISTENCY, SOIL STRUCTURE, MINERALOGY.	COMMENTS: DEPTH OF CASING, DRILLING RATE, DRILLING FLUID LOSS, TESTS, AND INSTRUMENTATION. OVM (ppm): Breathing Zone Above Hole
	0-6"				SANDY SILT, FINE GRAYISH BROWN, DRY.	HANDAUGER 9.6 ppm in sample ambient 2.1 pppm
5	4-6'	17"	SS-01	4-11-14-17	SANDY CLAY, FINE TO MEDIUM GRAINED REDDISH BROWN TO GRAY, DRY	HSA 40.9 ppm in spoon ambient 2.1 ppm
10						
15						
20						
25						
30						
35						
40						

CH2MHILL

PROJECT NUMBER	BORING NUMBER	
139322.FI.60	SWMU14-SB02	SHEET 1 OF 1

SOIL BORING LOG

PROJECT : PA/SI VIEQUES — LOCATION : NASD SWMU14

ELEVATION : — DRILLING CONTRACTOR : GEOWORKS

DRILLING METHOD AND EQUIPMENT USED : HSA - MOBILEDRILL - HANDAUGER AT SURFACE

WATER LEVELS : N/A — START : 4/05/2000 11:00 END : 4/05/2000 11:30 — LOGGER : H. HERNANDEZ

DEPTH BELOW SURFACE (FT)	INTERVAL (FT)	RECOVERY (IN)	#/TYPE	STANDARD PENETRATION TEST RESULTS 6"-6"-6"-6" (N)	CORE DESCRIPTION: SOIL NAME, USCS GROUP SYMBOL, COLOR, MOISTURE CONTENT, RELATIVE DENSITY, OR CONSISTENCY, SOIL STRUCTURE, MINERALOGY.	COMMENTS: DEPTH OF CASING, DRILLING RATE, DRILLING FLUID LOSS, TESTS, AND INSTRUMENTATION. OVM (ppm): Breathing Zone Above Hole
	0-6"				SANDY SILT, FINE GRAYISH BROWN, DRY.	HANDAUGER 3.8 ppm in sample ambient 2.9 pppm
5	4-6'	14"	SS-01	6-12-17-27	SANDY CLAY, FINE TO MEDIUM GRAI REDDISH BROWN TO GRAY, DRY	HSA 60.7 ppm in spoon ambient 8.1 ppm
10						
15						
20						
25						
30						
35						
40						

CH2MHILL

PROJECT NUMBER	BORING NUMBER	
139322.FI.60	SWMU14-SB03	SHEET 1 OF 1

SOIL BORING LOG

PROJECT : PA/SI VIEQUES LOCATION : NASD SWMU14

ELEVATION : DRILLING CONTRACTOR : GEOWORKS

DRILLING METHOD AND EQUIPMENT USED : HSA - MOBILEDRILL - HANDAUGER AT SURFACE

WATER LEVELS : N/A START : 4/05/2000 11:30 END : 4/05/2000 12:00 LOGGER : H. HERNANDEZ

DEPTH BELOW SURFACE (FT)	INTERVAL (FT)	RECOVERY (IN)	#/TYPE	STANDARD PENETRATION TEST RESULTS 6"-6"-6"-6" (N)	CORE DESCRIPTION: SOIL NAME, USCS GROUP SYMBOL, COLOR, MOISTURE CONTENT, RELATIVE DENSITY, OR CONSISTENCY, SOIL STRUCTURE, MINERALOGY.	COMMENTS: DEPTH OF CASING, DRILLING RATE, DRILLING FLUID LOSS, TESTS, AND INSTRUMENTATION. OVM (ppm): Breathing Zone Above Hole
	0-6"				SANDY SILT, FINE GRAYISH BROWN, DRY.	HANDAUGER 0.8 ppm in sample ambient 0.7 pppm
5	4-6'	13"	SS-01	9-14-16-21	SANDY CLAY, FINE TO MEDIUM GRAINE REDDISH BROWN TO GRAY, DRY	HSA 1.3 ppm in spoon ambient 0.3 ppm
10						
15						
20						
25						
30						
35						
40						

CH2MHILL

PROJECT NUMBER	BORING NUMBER	
139322.FI.60	SWMU14-SB04	SHEET 1 OF 1

SOIL BORING LOG

PROJECT : PA/SI VIEQUES LOCATION : NASD SWMU14

ELEVATION : DRILLING CONTRACTOR : GEOWORKS

DRILLING METHOD AND EQUIPMENT USED : HSA - MOBILEDRILL - HANDAUGER AT SURFACE

WATER LEVELS : N/A BEGIN: 4/05/2000 12:50 END : 4/05/2000 13:00 LOGGER : H. HERNANDEZ

DEPTH BELOW SURFACE (FT)	INTERVAL (FT)	RECOVERY (IN)	#/TYPE	STANDARD PENETRATION TEST RESULTS 6"-6"-6"-6" (N)	CORE DESCRIPTION: SOIL NAME, USCS GROUP SYMBOL, COLOR, MOISTURE CONTENT, RELATIVE DENSITY, OR CONSISTENCY, SOIL STRUCTURE, MINERALOGY.	COMMENTS: DEPTH OF CASING, DRILLING RATE, DRILLING FLUID LOSS, TESTS, AND INSTRUMENTATION. OVM (ppm) Breathing Zone Above Hole
	0-6"				SANDY SILT, FINE GRAYISH BROWN, DRY.	HANDAUGER 2.2 ppm in sample ambient 0.9 pppm
5	4-6'	14"	SS-01	5-16-38-27	SANDY CLAY, FINE TO MEDIUM GRA REDDISH BROWN TO GRAY, DRY	HSA 1.6 ppm in spoon ambient 0.6 ppm
10						
15						
20						
25						
30						
35						
40						

CH2MHILL

PROJECT NUMBER	BORING NUMBER	
139322.FI.60	SWMU14-SB05	SHEET 1 OF 1

SOIL BORING LOG

PROJECT : PA/SI VIEQUES LOCATION : NASD SWMU14

ELEVATION : DRILLING CONTRACTOR : GEOWORKS

DRILLING METHOD AND EQUIPMENT USED : HSA - MOBILEDRILL - HANDAUGER AT SURFACE

WATER LEVELS : N/A BEGIN: 4/05/2000 13:30 END : 4/05/2000 14:30 LOGGER : H. HERNANDEZ

DEPTH BELOW SURFACE (FT)	INTERVAL (FT)	RECOVERY (IN)	#/TYPE	STANDARD PENETRATION TEST RESULTS 6"-6"-6"-6" (N)	CORE DESCRIPTION: SOIL NAME, USCS GROUP SYMBOL, COLOR, MOISTURE CONTENT, RELATIVE DENSITY, OR CONSISTENCY, SOIL STRUCTURE, MINERALOGY.	COMMENTS: DEPTH OF CASING, DRILLING RATE, DRILLING FLUID LOSS, TESTS, AND INSTRUMENTATION. OVM (ppm): Breathing Zone Above Hole
	0-6"				SANDY SILT, FINE GRAYISH BROWN, DRY.	HANDAUGER 0.6 ppm in sample ambient 0.5 pppm
5	4-6'	15"	SS-01	5-9-38-21	SANDY CLAY, FINE TO MEDIUM GRAINE REDDISH BROWN TO GRAY, DRY	HSA 9.5 ppm in spoon ambient 1.0 ppm
10						
15						
20						
25						
30						
35						
40						

CH2MHILL

PROJECT NUMBER	BORING NUMBER	
139322.FI.60	SWMU14-SB06	SHEET 1 OF 1

SOIL BORING LOG

PROJECT : PA/SI VIEQUES LOCATION : NASD SWMU14

ELEVATION : DRILLING CONTRACTOR : GEOWORKS

DRILLING METHOD AND EQUIPMENT USED : HSA - MOBILEDRILL - HANDAUGER AT SURFACE

WATER LEVELS : N/A BEGIN: 4/05/2000 14:30 END : 4/05/2000 15:00 LOGGER : H. HERNANDEZ

DEPTH BELOW SURFACE (FT)	INTERVAL (FT)	RECOVERY (IN)	#/TYPE	STANDARD PENETRATION TEST RESULTS 6"-6"-6"-6" (N)	CORE DESCRIPTION: SOIL NAME, USCS GROUP SYMBOL, COLOR, MOISTURE CONTENT, RELATIVE DENSITY, OR CONSISTENCY, SOIL STRUCTURE, MINERALOGY.	COMMENTS: DEPTH OF CASING, DRILLING RATE, DRILLING FLUID LOSS, TESTS, AND INSTRUMENTATION. OVM (ppm): Breathing Zone Above Hole
	0-6"				SANDY SILT, FINE GRAYISH BROWN, DRY.	HANDAUGER 1.1 ppm in sample ambient 0.4 pppm
5	4-6'	13"	SS-01	4-12-17-23	SANDY CLAY, FINE TO MEDIUM GRAINED REDDISH BROWN TO GRAY, DRY	HSA 12.4 ppm in spoon ambient 1.1 ppm
10						
15						
20						
25						
30						
35						
40						

CH2MHILL

PROJECT NUMBER	BORING NUMBER	
139322.FI.60	SWMU14-SB07	SHEET 1 OF 1

SOIL BORING LOG

PROJECT : PA/SI VIEQUES LOCATION : NASD SWMU14

ELEVATION : DRILLING CONTRACTOR : GEOWORKS

DRILLING METHOD AND EQUIPMENT USED : HSA - MOBILEDRILL - HANDAUGER AT SURFACE

WATER LEVELS : N/A BEGIN: 4/05/2000 15:00 END : 4/05/2000 15:30 LOGGER : H. HERNANDEZ

DEPTH BELOW SURFACE (FT)	INTERVAL (FT)	RECOVERY (IN)	#/TYPE	STANDARD PENETRATION TEST RESULTS 6"-6"-6"-6" (N)	CORE DESCRIPTION: SOIL NAME, USCS GROUP SYMBOL, COLOR, MOISTURE CONTENT, RELATIVE DENSITY, OR CONSISTENCY, SOIL STRUCTURE, MINERALOGY.	COMMENTS: DEPTH OF CASING, DRILLING RATE, DRILLING FLUID LOSS, TESTS, AND INSTRUMENTATION. OVM (ppm): Breathing Zone Above Hole
	0-6"				SANDY SILT, FINE GRAYISH BROWN, DRY.	HANDAUGER 1.1 ppm in sample ambient 0.8 pppm
5	4-6'	20"	SS-01	7-12-13-15	SANDY CLAY, FINE TO MEDIUM GRAINED REDDISH BROWN TO GRAY, DRY	HSA 2.3 ppm in spoon ambient 0.4 ppm
10						
15						
20						
25						
30						
35						
40						

CH2MHILL

PROJECT NUMBER	BORING NUMBER	
139322.FI.60	SWMU14-SB08	SHEET 1 OF 1

SOIL BORING LOG

PROJECT : PA/SI VIEQUES LOCATION : NASD SWMU14

ELEVATION : DRILLING CONTRACTOR : GEOWORKS

DRILLING METHOD AND EQUIPMENT USED : HSA - MOBILEDRILL - HANDAUGER AT SURFACE

WATER LEVELS : N/A BEGIN: 4/06/2000 09:30 END : 4/06/2000 09:50 LOGGER : H. HERNANDEZ

DEPTH BELOW SURFACE (FT)	INTERVAL (FT)	RECOVERY (IN)	#/TYPE	STANDARD PENETRATION TEST RESULTS 6"-6"-6"-6" (N)	CORE DESCRIPTION: SOIL NAME, USCS GROUP SYMBOL, COLOR, MOISTURE CONTENT, RELATIVE DENSITY, OR CONSISTENCY, SOIL STRUCTURE, MINERALOGY.	COMMENTS: DEPTH OF CASING, DRILLING RATE, DRILLING FLUID LOSS, TESTS, AND INSTRUMENTATION. OVM (ppm): Breathing Zone Above Hole
	0-6"				SANDY SILT, FINE GRAYISH BROWN, DRY.	HANDAUGER 0.3 ppm in sample ambient 0.0 pppm
5	4-6'	14"	SS-01	10-10-14-22	SANDY CLAY, FINE TO MEDIUM GRAINED REDDISH BROWN TO GRAY, DRY	HSA 0.0 ppm in spoon ambient 0.0 ppm
10						
15						
20						
25						
30						
35						
40						

CH2MHILL

PROJECT NUMBER	BORING NUMBER	
139322.FI.60	SWMU14-SB09	SHEET 1 OF 1

SOIL BORING LOG

PROJECT : PA/SI VIEQUES LOCATION : NASD SWMU14

ELEVATION : DRILLING CONTRACTOR : GEOWORKS

DRILLING METHOD AND EQUIPMENT USED : HSA - MOBILEDRILL - HANDAUGER AT SURFACE

WATER LEVELS : N/A BEGIN: 4/06/2000 09:50 END : 4/06/2000 10:15 LOGGER : H. HERNANDEZ

DEPTH BELOW SURFACE (FT)	INTERVAL (FT)	RECOVERY (IN)	#/TYPE	STANDARD PENETRATION TEST RESULTS 6"-6"-6"-6" (N)	CORE DESCRIPTION: SOIL NAME, USCS GROUP SYMBOL, COLOR, MOISTURE CONTENT, RELATIVE DENSITY, OR CONSISTENCY, SOIL STRUCTURE, MINERALOGY.	COMMENTS: DEPTH OF CASING, DRILLING RATE, DRILLING FLUID LOSS, TESTS, AND INSTRUMENTATION. OVM (ppm): Breathing Zone Above Hole
	0-6"				SANDY SILT, FINE GRAYISH BROWN, DRY.	HANDAUGER 0.0 ppm in sample ambient 0.0 pppm
5	4-6'	NA	HA	NA	SANDY CLAY, FINE TO MEDIUM GRAINED REDDISH BROWN TO GRAY, DRY	HANDAUGER 0.0 ppm in spoon ambient 0.0 ppm
10						
15						
20						
25						
30						
35						
40						

CH2MHILL

PROJECT NUMBER	BORING NUMBER	
139322.FI.60	SWMU14-SB10	SHEET 1 OF 1

SOIL BORING LOG

PROJECT : PA/SI VIEQUES LOCATION : NASD SWMU14

ELEVATION : DRILLING CONTRACTOR : GEOWORKS

DRILLING METHOD AND EQUIPMENT USED : HSA - MOBILEDRILL - HANDAUGER AT SURFACE

WATER LEVELS : N/A BEGIN: 4/06/2000 10:20 END : 4/06/2000 10:40 LOGGER : H. HERNANDEZ

DEPTH BELOW SURFACE (FT)	INTERVAL (FT)	RECOVERY (IN)	#/TYPE	STANDARD PENETRATION TEST RESULTS 6"-6"-6"-6" (N)	CORE DESCRIPTION: SOIL NAME, USCS GROUP SYMBOL, COLOR, MOISTURE CONTENT, RELATIVE DENSITY, OR CONSISTENCY, SOIL STRUCTURE, MINERALOGY.	COMMENTS: DEPTH OF CASING, DRILLING RATE, DRILLING FLUID LOSS, TESTS, AND INSTRUMENTATION. OVM (ppm): Breathing Zone Above Hole
	0-6"				SANDY SILT, FINE GRAYISH BROWN, DRY.	HANDAUGER 0.0 ppm in sample ambient 0.0 pppm
5	4-6'	19"	S01	4-10-10-13	SANDY CLAY, FINE TO MEDIUM GRAINED REDDISH BROWN TO GRAY, DRY	HANDAUGER 0.2 ppm in spoon ambient 0.0 ppm
10						
15						
20						
25						
30						
35						
40						

CH2MHILL

PROJECT NUMBER	BORING NUMBER	
139322.FI.60	SWMU14-SB11	SHEET 1 OF 1

SOIL BORING LOG

PROJECT : PA/SI VIEQUES LOCATION : NASD SWMU14

ELEVATION : DRILLING CONTRACTOR : GEOWORKS

DRILLING METHOD AND EQUIPMENT USED : HSA - MOBILEDRILL - HANDAUGER AT SURFACE

WATER LEVELS : N/A BEGIN: 4/06/2000 10:45 END : 4/06/2000 11:00 LOGGER : H. HERNANDEZ

DEPTH BELOW SURFACE (FT)	INTERVAL (FT)	RECOVERY (IN)	#/TYPE	STANDARD PENETRATION TEST RESULTS 6"-6"-6"-6" (N)	CORE DESCRIPTION: SOIL NAME, USCS GROUP SYMBOL, COLOR, MOISTURE CONTENT, RELATIVE DENSITY OR CONSISTENCY, SOIL STRUCTURE, MINERALOGY.	COMMENTS: DEPTH OF CASING, DRILLING RATE, DRILLING FLUID LOSS, TESTS, AND INSTRUMENTATION. OVM (ppm): Breathing Zone Above Hole
	0-6"				SANDY SILT, FINE GRAYISH BROWN, DRY.	HANDAUGER 0.0 ppm in sample ambient 0.0 pppm
5	4-6'	13"	SS-01	5-6-7-7	SANDY CLAY, FINE TO MEDIUM GRAIN REDDISH BROWN TO GRAY, DRY LESS DENSE	HANDAUGER 0.1 ppm in spoon ambient 0.0 ppm
10						
15						
20						
25						
30						
35						
40						

CH2MHILL

PROJECT NUMBER	BORING NUMBER	
139322.FI.60	SWMU14-SB12	SHEET 1 OF 1

SOIL BORING LOG

PROJECT : PA/SI VIEQUES LOCATION : NASD SWMU14

ELEVATION : DRILLING CONTRACTOR : GEOWORKS

DRILLING METHOD AND EQUIPMENT USED : HSA - MOBILEDRILL - HANDAUGER AT SURFACE

WATER LEVELS : N/A BEGIN: 4/06/2000 11:00 END : 4/06/2000 11:30 LOGGER : H. HERNANDEZ

DEPTH BELOW SURFACE (FT)	INTERVAL (FT)	RECOVERY (IN)	#/TYPE	STANDARD PENETRATION TEST RESULTS 6"-6"-6"-6" (N)	CORE DESCRIPTION: SOIL NAME, USCS GROUP SYMBOL, COLOR, MOISTURE CONTENT, RELATIVE DENSITY, OR CONSISTENCY, SOIL STRUCTURE, MINERALOGY.	COMMENTS: DEPTH OF CASING, DRILLING RATE, DRILLING FLUID LOSS, TESTS, AND INSTRUMENTATION. OVM (ppm): Breathing Zone Above Hole
	0-6"				SANDY SILT, FINE GRAYISH BROWN, DRY.	HANDAUGER 0.0 ppm in sample ambient 0.0 pppm
5	4-6'	17"	SS-01	4-7-9-9	SANDY CLAY, FINE TO MEDIUM GRAINED REDDISH BROWN TO GRAY, DRY LESS DENSE	HANDAUGER 0.0 ppm in spoon ambient 0.0 ppm
10						
15						
20						
25						
30						
35						
40						

CH2MHILL

PROJECT NUMBER	BORING NUMBER	
139322.FI.60	SWMU14-SB13	SHEET 1 OF 1

SOIL BORING LOG

PROJECT : PA/SI VIEQUES LOCATION : NASD SWMU14

ELEVATION : DRILLING CONTRACTOR : GEOWORKS

DRILLING METHOD AND EQUIPMENT USED : HSA - MOBILEDRILL - HANDAUGER AT SURFACE

WATER LEVELS : N/A BEGIN: 4/06/2000 12:50 END : 4/06/2000 13:25 LOGGER : H. HERNANDEZ

DEPTH BELOW SURFACE (FT)	INTERVAL (FT)	RECOVERY (IN)	#/TYPE	STANDARD PENETRATION TEST RESULTS 6"-6"-6"-6" (N)	CORE DESCRIPTION: SOIL NAME, USCS GROUP SYMBOL, COLOR, MOISTURE CONTENT, RELATIVE DENSITY, OR CONSISTENCY, SOIL STRUCTURE, MINERALOGY.	COMMENTS: DEPTH OF CASING, DRILLING RATE, DRILLING FLUID LOSS, TESTS, AND INSTRUMENTATION. OVM (ppm): Breathing Zone Above Hole
	0-6"				SANDY SILT, FINE GRAYISH BROWN, DRY.	HANDAUGER 0.0 ppm in sample ambient 0.0 pppm
5	4-6'	14"	SS-01	5-10-11-18	SANDY CLAY, FINE TO MEDIUM GRAINE REDDISH BROWN TO GRAY, DRY	HANDAUGER 0.2 ppm in spoon ambient 0.0 ppm
10						
15						
20						
25						
30						
35						
40						

CH2MHILL

PROJECT NUMBER	BORING NUMBER	
139322.FI.60	SWMU14-SB14	SHEET 1 OF 1

SOIL BORING LOG

PROJECT : PA/SI VIEQUES LOCATION : NASD SWMU14

ELEVATION : DRILLING CONTRACTOR : GEOWORKS

DRILLING METHOD AND EQUIPMENT USED : HSA - MOBILEDRILL - HANDAUGER AT SURFACE

WATER LEVELS : N/A BEGIN: 4/06/2000 13:40 END : 4/06/2000 13:55 LOGGER : H. HERNANDEZ

DEPTH BELOW SURFACE (FT)	INTERVAL (FT)	RECOVERY (IN)	#/TYPE	STANDARD PENETRATION TEST RESULTS 6"-6"-6"-6" (N)	CORE DESCRIPTION: SOIL NAME, USCS GROUP SYMBOL, COLOR, MOISTURE CONTENT, RELATIVE DENSITY, OR CONSISTENCY, SOIL STRUCTURE, MINERALOGY.	COMMENTS: DEPTH OF CASING, DRILLING RATE, DRILLING FLUID LOSS, TESTS, AND INSTRUMENTATION. OVM (ppm): Breathing Zone Above Hole
	0-6"				SANDY SILT, FINE GRAYISH BROWN, DRY.	HANDAUGER 3.0 ppm in sample ambient 0.1 pppm
5	4-6'	19"	SS-01	4-10-16-24	SANDY CLAY, FINE TO MEDIUM GRAINED REDDISH BROWN TO GRAY, DRY	HANDAUGER 0.0 ppm in spoon ambient 0.0 ppm
10						
15						
20						
25						
30						
35						
40						

CH2MHILL

PROJECT NUMBER	BORING NUMBER	
139322.FI.70	SWMU-14-MW1	SHEET 1 OF 3

SOIL BORING LOG

PROJECT : NASD, VIEQUES, PUERTO RICO — LOCATION : SWMU 14-MW-1 (W14-MW01)

ELEVATION : APPROX. 25' ASL — DRILLING CONTRACTOR : GEOWORK INC.

DRILLING METHOD AND EQUIPMENT USED : AIR ROTARY

WATER LEVELS : — START : 1500 — END : — LOGGER : G. SILVA

DEPTH BELOW SURFACE (FT)	INTERVAL (FT)	RECOVERY (IN)	#/TYPE	STANDARD PENETRATION TEST RESULTS 6"-6"-6"-6" (N)	CORE DESCRIPTION: SOIL NAME, USCS GROUP SYMBOL, COLOR, MOISTURE CONTENT, RELATIVE DENSITY, OR CONSISTENCY, SOIL STRUCTURE, MINERALOGY.	COMMENTS: DEPTH OF CASING, DRILLING RATE, DRILLING FLUID LOSS, TESTS, AND INSTRUMENTATION. OVM (ppm): Breathing Zone	Above Hole
	0-1				SILT WITH ROCK (SM) LIGHT BROWN DRY	0.0	0.0
	2-4				SANDY SILT (SM) BROWN MED MOIST FINE		
5							
	5-6				SANDY SILT (SM) BROWN MED MOIST	0.3	0.0
10							
	10-11				SAME AS ABOVE	0.2	0.0
	15-16				SAME AS ABOVE, WITH FEW ROCKS	0.0	0.0
20							
	20-21				SILTY SAND MED (SM) WITH FEW, 1/4" ROCKS	0.0	0.0
25							
	25-26				CLAYEY SAND (CL) MOIST, BROWN	0.0	0.0
						STOPPED DRILLING, 1630 HRS TO PREPARE NEEDED EQUIPMENT PLANE RES.	

CH2MHILL

PROJECT NUMBER	BORING NUMBER	
139322.FI.70	SWMU-14-MW1	SHEET 2 OF 3

SOIL BORING LOG

PROJECT : NASD, VIEQUES, PUERTO RICO LOCATION : SWMU 14-MW-1 (W14-MW01)

ELEVATION : APPROX. 25' ASL DRILLING CONTRACTOR : GEOWORK INC.

DRILLING METHOD AND EQUIPMENT USED : AIR ROTARY

WATER LEVELS : START : 1500 04/03/2000 END : 1254 4/4/00 LOGGER : G. SILVA

DEPTH BELOW SURFACE (FT)	INTERVAL (FT)	RECOVERY (IN)	#/TYPE	STANDARD PENETRATION TEST RESULTS 6"-6"-6"-6" (N)	CORE DESCRIPTION: SOIL NAME, USCS GROUP SYMBOL, COLOR, MOISTURE CONTENT, RELATIVE DENSITY, OR CONSISTENCY, SOIL STRUCTURE, MINERALOGY.	COMMENTS: DEPTH OF CASING, DRILLING RATE, DRILLING FLUID LOSS, TESTS, AND INSTRUMENTATION. OVM (ppm): Breathing Zone / Above Hole
30	30-31				CLAYEY SAND (CL) SLIGTY MOIST	0.0 0.0 ppm RESUMED DRILLING 04/04/2000 8:15 AM
35	35-36				SILT (CL) YELLOWISH ORANGE SEMI LOOSE TO LOOSE	0.3 0.0 ppm
40	40-41				SAME AS ABOVE	0.2 0.0 ppm
45	45-46				CLAY (SM) DARK YELLOWISH ORANGE MINOR ROCKS DRY	0.0 0.0
50	50-51				SILTY (SM) PALE YELLOWISH ORANGE DRY	0.0 0.0
55	55-56				SILT (SM) GRAYISH YELLOW FRIABLI SAPROLITE	0.0 0.0

CH2MHILL

PROJECT NUMBER	BORING NUMBER	
139322.PP.WP	SWMU-14-MW1	SHEET 3 OF 3

SOIL BORING LOG

PROJECT : NASD, VIEQUES, PUERTO RICO LOCATION : SWMU 14-MW-1 (W14-MW01)

ELEVATION : DRILLING CONTRACTOR : GEOWORK INC.

DRILLING METHOD AND EQUIPMENT USED : AIR ROTARY

WATER LEVELS : START : END : 1254 4/4/00 LOGGER : G. SILVA

DEPTH BELOW SURFACE (FT)	INTERVAL (FT)	RECOVERY (IN)	#/TYPE	STANDARD PENETRATION TEST RESULTS 6"-6"-6"-6" (N)	CORE DESCRIPTION: SOIL NAME, USCS GROUP SYMBOL, COLOR, MOISTURE CONTENT, RELATIVE DENSITY, OR CONSISTENCY, SOIL STRUCTURE, MINERALOGY.	COMMENTS: DEPTH OF CASING, DRILLING RATE, DRILLING FLUID LOSS, TESTS, AND INSTRUMENTATION. OVM (ppm): Breathing Zone / Above Hole
60	60-61				SILT (SM) LIGHT OLIVE BROWN SLIGHTY DAMP	0.0 0.0
						WATER TABLE 917 HR
65	65-66				SAME AS ABOVE	0.0 0.0
70	69-70				SAME AS ABOVE DUST YELLOW GREEN	0.0 0.0 STOPPED DRILLING AT 70' BGS
80						
85						

CH2MHILL

PROJECT NUMBER	BORING NUMBER	
139322.PP.WP	SWMU-14-MW2	SHEET 1 OF 2

SOIL BORING LOG

PROJECT : NASD, VIEQUES, PUERTO RICO LOCATION : SWMU 14 (W14-MW02)

ELEVATION : DRILLING CONTRACTOR : GEOWORK INC.

DRILLING METHOD AND EQUIPMENT USED : AIR ROTARY

WATER LEVELS : START : 1600 END : LOGGER : G. SILVA

DEPTH BELOW SURFACE (FT)	INTERVAL (FT)	RECOVERY (IN)	#/TYPE	STANDARD PENETRATION TEST RESULTS 6"-6"-6"-6" (N)	CORE DESCRIPTION: SOIL NAME, USCS GROUP SYMBOL, COLOR, MOISTURE CONTENT, RELATIVE DENSITY, OR CONSISTENCY, SOIL STRUCTURE, MINERALOGY.	COMMENTS: DEPTH OF CASING, DRILLING RATE, DRILLING FLUID LOSS, TESTS, AND INSTRUMENTATION. OVM (ppm): Breathing Zone / Above Hole
	0-1				SILT SAND (SM) WITH BROWN DRY	0.0 / 0.0 HAND AUGER 0-4'
5	5-6				SAME AS ABOVE (SM) MED BROWN VERY MOIST	0.0 / 0.0
10	10-11				CLAYEY SAND ( ) WITH ROCK VERY MOIST MODERATE YELLOW BROWN	0.0 / 0.0 VERY EASY ADVANCE, VERY LOOSE CAVITY LIKE
15	15-16				SAND ( ) MODERATE REDISH BROWN, DRY	0.0 / 0.0
20	20-21				SAND ( ) MODERATE YELLOW BROWN, DRY	HARD DRILLING
25	25-26				SILT ( ) DUSKY YELLOW DRY, DENSE	0.0 / 0.0

CH2MHILL

PROJECT NUMBER	BORING NUMBER	
139322.PP.WP	SWMU-14-MW2	SHEET 2 OF 2

SOIL BORING LOG

PROJECT : NASD, VIEQUES, PUERTO RICO — LOCATION : SWMU 14 (W14-MW02)

ELEVATION : — DRILLING CONTRACTOR : GEOWORK INC.

DRILLING METHOD AND EQUIPMENT USED : AIR ROTARY

WATER LEVELS : — START : — END : — LOGGER : G. SILVA

DEPTH BELOW SURFACE (FT)	INTERVAL (FT)	RECOVERY (IN)	#/TYPE	STANDARD PENETRATION TEST RESULTS 6"-6"-6" (N)	CORE DESCRIPTION: SOIL NAME, USCS GROUP SYMBOL, COLOR, MOISTURE CONTENT, RELATIVE DENSITY, OR CONSISTENCY, SOIL STRUCTURE, MINERALOGY.	COMMENTS: DEPTH OF CASING, DRILLING RATE, DRILLING FLUID LOSS, TESTS, AND INSTRUMENTATION. OVM (ppm): Breathing Zone / Above Hole
30	30-31				SAME AS ABOVE	0.0 0.0 MORE CUTTING ARE PRODUCED
35	35-36				ROCKY SILT ( ) DUSKY YELLOW SLIGHTLY MOIST	0.0 0.0 BORING WALLS MAY BE COLLAPSING
40					ROCKY SILT ( ) DUSKY YELLOW SLIGHTLY MOIST	0.0 0.0
					ROCK ANGULAR PULVERIZED ( ) YELLOWISH GRAY, DRY	HARD DRILLING
50					SAME AS ABOVE	
					STOP DRILLIG @ 52'	STOPPED DRILLING
55						0.0 0.0

SWMU-15

SOIL BORING LOGS

CH2MHILL

PROJECT NUMBER	BORING NUMBER	
139322.FI.60	SWMU 15-MW01	SHEET 1 OF 2

SOIL BORING LOG

PROJECT : NASD, VIEQUES, PUERTO RICO — LOCATION : NASD-SWMU 15

ELEVATION : — DRILLING CONTRACTOR : GEOWORK INC.

DRILLING METHOD AND EQUIPMENT USED : AIR ROTARY

WATER LEVELS : 43 FT — START : 4/14/00 — END : 4/14/00 — LOGGER : B. TREBBLE

DEPTH BELOW SURFACE (FT)	INTERVAL (FT)	RECOVERY (IN)	#/TYPE	STANDARD PENETRATION TEST RESULTS 6"-6"-6"-6" (N)	CORE DESCRIPTION: SOIL NAME, USCS GROUP SYMBOL, COLOR, MOISTURE CONTENT, RELATIVE DENSITY, OR CONSISTENCY, SOIL STRUCTURE, MINERALOGY.	COMMENTS: DEPTH OF CASING, DRILLING RATE, DRILLING FLUID LOSS, TESTS, AND INSTRUMENTATION. OVM (ppm): Breathing Zone	Above Hole
					SANDS, SILTS, SOME FINE GRAVELS	BG-0.0	0.0 0.3
5					FINE SANDS, GRAVELS, SOME SILTS TAN, DAMP.		0.0 0.2
10					FINE SANDS, GRAVELS, SOME CLAYS, DAMP.		0.0 0.4
					SILTY SANDS, BROWN, DAMP		0.0 0.3
					SILTY SANDS, SOME CLAY, DAMP LIGHT BROWN/TAN		0.0 0.2
20					HARDPAN, CLAYS, SANDS, TAN, DRY		0.0 0.2
					SANDS, SMOLE GRAVELS, TAN, DAMP		
25					SANDS, SOME CLAYS, TAN, DAMP		

CH2MHILL

PROJECT NUMBER	BORING NUMBER	
139322.FI.60	SWMU 15-MW01	SHEET 2 OF 2

SOIL BORING LOG

PROJECT : NASD, VIEQUES, PUERTO RICO LOCATION : NASD-SWMU 15

ELEVATION : DRILLING CONTRACTOR : GEOWORK INC.

DRILLING METHOD AND EQUIPMENT USED : AIR ROTARY

WATER LEVELS : 43FT START : 4/14/00 END : 4/14/00 LOGGER : B. TREBBLE

DEPTH BELOW SURFACE (FT)	INTERVAL (FT)	RECOVERY (IN)	#/TYPE	STANDARD PENETRATION TEST RESULTS 6"-6"-6"-6" (N)	CORE DESCRIPTION: SOIL NAME, USCS GROUP SYMBOL, COLOR, MOISTURE CONTENT, RELATIVE DENSITY, OR CONSISTENCY, SOIL STRUCTURE, MINERALOGY.	COMMENTS: DEPTH OF CASING, DRILLING RATE, DRILLING FLUID LOSS, TESTS, AND INSTRUMENTATION. OVM (ppm): Breathing Zone	Above Hole
30					DIENTE (WHITE), SANDS, TAN, DRY	BG-0.0	0.0 / 0.8
					SANDS, SOME CLAYS, TAN, DAMP	0.0	0.0 / 0.2
35					AS ABOVE	0.0	0.0 / 0.1
40						0.0	0.0 / 0.2
					SANDS, GRAVELS (ROUNDED) MOIST, BROWN		
					SANDS, WET, BROWN	0.0	0.0 / 0.3
45					SANDS, SATURATED, BROWN NO ODOR	0.0	0.0 / 0.2
50					SANDS, SOME CLAYS, SATURATED, TAN, BROWN	0.0	0.0 / N/A
					AS ABOVE	N/A	N/A / N/A
					END OF HOLE -53'		

AOC-C

SOIL BORING LOGS

CH2MHILL

PROJECT NUMBER	BORING NUMBER	
139322.FI.60	AOC-C SB-16	SHEET 1 OF 1

SOIL BORING LOG

PROJECT : PA/SI VIEQUES — LOCATION : NASD AOC-C SEPTIC TANK

ELEVATION : — DRILLING CONTRACTOR : GEOWORKS

DRILLING METHOD AND EQUIPMENT USED : HSA - MOBILEDRILL - HANDAUGER AT SURFACE

WATER LEVELS : N/A — START : 4/07/2000 08:00 — END : 4/07/2000 09:45 — LOGGER : H. HERNANDEZ

DEPTH BELOW SURFACE (FT)	INTERVAL (FT)	RECOVERY (IN)	#/TYPE	STANDARD PENETRATION TEST RESULTS 6"-6"-6" (N)	CORE DESCRIPTION: SOIL NAME, USCS GROUP SYMBOL, COLOR, MOISTURE CONTENT, RELATIVE DENSITY, OR CONSISTENCY, SOIL STRUCTURE, MINERALOGY.	COMMENTS: DEPTH OF CASING, DRILLING RATE, DRILLING FLUID LOSS, TESTS, AND INSTRUMENTATION. OVM (ppm): SAMPLE / AMBIENT
	0-6"			NA	SILTY SAND, FINE TO MEDIUM GRAINED MEDIUM BROWN, DRY	HANDAUGER
5	4-6'	16"	SS-01	5-14-22-34	SANDY CLAY HARD, REDDISH BROWN, DRY	HSA 0.2 PPM / 0.0 PPM
10	9-11'	18"	SS-02	6-14-19-20	SILTY CLAY REDDISH BROWN, DRY	10.9 PPM / 0.0 PPM
15	14-16'	16"	SS-03	3-9-13-12	SILTY CLAY, TRACE SAND REDDISH BROWN, DRY	3.2 PPM / 0.0 PPM
20	19-21'	18"	SS-04	17-29-28-19	SILTY CLAY, SOME SAND REDDISH BROWN, DRY	21.9 PPM / 0.0 PPM
25	24-26'	24"	SS-05	17-13-19-24	SILTY CLAY, SOME SAND REDDISH BROWN, DAMP NO ODOR, MINIRAE NOT WORKING	NA / 0.0 PPM
30						
35						
40						

CH2MHILL

PROJECT NUMBER	BORING NUMBER	
139322.FI.60	AOC-C SB-17	SHEET 1 OF 1

SOIL BORING LOG

PROJECT : PA/SI VIEQUES — LOCATION : NASD AOC-C SEPTIC TANK

ELEVATION : — DRILLING CONTRACTOR : GEOWORKS

DRILLING METHOD AND EQUIPMENT USED : HSA - MOBILEDRILL - HANDAUGER AT SURFACE

WATER LEVELS : N/A — START : 4/07/2000 10:10 — END : 4/07/2000 12:30 — LOGGER : H. HERNANDEZ

DEPTH BELOW SURFACE (FT)	INTERVAL (FT)	RECOVERY (IN)	#/TYPE	STANDARD PENETRATION TEST RESULTS 6"-6"-6"-6" (N)	CORE DESCRIPTION: SOIL NAME, USCS GROUP SYMBOL, COLOR, MOISTURE CONTENT, RELATIVE DENSITY, OR CONSISTENCY, SOIL STRUCTURE, MINERALOGY.	COMMENTS: DEPTH OF CASING, DRILLING RATE, DRILLING FLUID LOSS, TESTS, AND INSTRUMENTATION. OVM (ppm): SAMPLE / AMBIENT
	0-6"			NA	SILTY SAND, FINE TO MEDIUM GRAINED MEDIUM BROWN, DRY	HANDAUGER
5	4-6'	14"	SS-01	4-9-16-21	SANDY CLAY HARD, REDDISH BROWN, DRY	HSA 0.9 PPM / 0.0 PPM
10	9-11'	24"	SS-02	5-7-12-15	SILTY CLAY REDDISH BROWN, DRY	NA / 0.0 PPM
15	14-16'	21"	SS-03	5-9-10-9	SILTY CLAY, TRACE SAND REDDISH BROWN, DRY	NA / NA
20	19-21'	18"	SS-04	8-10-12-16	SILTY CLAY, SOME SAND REDDISH BROWN, DRY	NA / NA
25	24-26'	24"	SS-05	8-11-19-30	SILTY CLAY, SOME SAND REDDISH BROWN, DAMP NO ODOR, MINIRAE NOT WORKING	NA / NA
30						OVM HAVING MOISTURE PROBLEMS
35						
40						

CH2MHILL

PROJECT NUMBER	BORING NUMBER	
139322.FI.60	AOC-C SB-18	SHEET 1 OF 1

SOIL BORING LOG

PROJECT : PA/SI VIEQUES — LOCATION : NASD AOC-C SEPTIC TANK

ELEVATION : — DRILLING CONTRACTOR : GEOWORKS

DRILLING METHOD AND EQUIPMENT USED : HSA - MOBILEDRILL - HANDAUGER AT SURFACE

WATER LEVELS : N/A — START : 4/10/2000 09:50 — END : 4/10/2000 011:5 — LOGGER : H. HERNANDEZ

DEPTH BELOW SURFACE (FT)	INTERVAL (FT)	RECOVERY (IN)	#/TYPE	STANDARD PENETRATION TEST RESULTS 6"-6"-6"-6" (N)	CORE DESCRIPTION: SOIL NAME, USCS GROUP SYMBOL, COLOR, MOISTURE CONTENT, RELATIVE DENSITY, OR CONSISTENCY, SOIL STRUCTURE, MINERALOGY.	COMMENTS: DEPTH OF CASING, DRILLING RATE, DRILLING FLUID LOSS, TESTS, AND INSTRUMENTATION. OVM (ppm): SAMPLE / AMBIENT
	0-6"			NA	SILTY SAND, FINE TO MEDIUM GRAINED MEDIUM BROWN, DRY	HANDAUGER
5	4-6'	13"	SS-01	6-11-16-17	SANDY CLAY HARD, REDDISH BROWN, DRY	HSA 1.1 PPM / 0.0 PPM
10	9-11'	21"	SS-02	4-7-9-11	SILTY CLAY REDDISH BROWN, DRY	0.3 PPM / 0.0 PPM
15	14-16'	21"	SS-03	4-11-16-15	SILTY CLAY, TRACE SAND REDDISH BROWN, DRY	0.3 PPM / 0.0 PPM
20	19-21'	20"	SS-04	16-12-21-29	SILTY CLAY, SOME SAND REDDISH BROWN, DRY	1.9 PPM / 0.0 PPM
25	24-26'	24"	SS-05	6-14-25-29	SILTY CLAY, SOME SAND REDDISH BROWN, DAMP	1.9 PPM / 0.0 PPM
30						
35						
40						

CH2MHILL

PROJECT NUMBER	BORING NUMBER	
139322.FI.60	AOC-C SB-19	SHEET 1 OF 1

SOIL BORING LOG

PROJECT : PA/SI VIEQUES LOCATION : NASD AOC-C SEPTIC TANK

ELEVATION : DRILLING CONTRACTOR : GEOWORKS

DRILLING METHOD AND EQUIPMENT USED : HSA - MOBILEDRILL - HANDAUGER AT SURFACE

WATER LEVELS : N/A START : 4/10/2000 13:35 END : 4/10/2000 15:42 LOGGER : H. HERNANDEZ

DEPTH BELOW SURFACE (FT)	INTERVAL (FT)	RECOVERY (IN)	#/TYPE	STANDARD PENETRATION TEST RESULTS 6"-6"-6"-6" (N)	CORE DESCRIPTION: SOIL NAME, USCS GROUP SYMBOL, COLOR, MOISTURE CONTENT, RELATIVE DENSITY, OR CONSISTENCY, SOIL STRUCTURE, MINERALOGY.	COMMENTS: DEPTH OF CASING, DRILLING RATE, DRILLING FLUID LOSS, TESTS, AND INSTRUMENTATION. OVM (ppm): SAMPLE	AMBIENT
	0-6"			NA	SILTY SAND, FINE TO MEDIUM GRAINED MEDIUM BROWN, DRY	HANDAUGER	
5	4-6'	18"	SS-01	5-14-22-30	SANDY CLAY HARD, REDDISH BROWN, DRY	HSA 0.1 PPM	0.0 PPM
10	9-11'	21"	SS-02	5-10-10-8	SILTY CLAY REDDISH BROWN, DRY	0.0 PPM	0.0 PPM
15	14-16'	19"	SS-03	3-5-7-9	SILTY CLAY, TRACE SAND REDDISH BROWN, DRY	0.0 PPM	0.0 PPM
20	19-21'	21"	SS-04	10-15-23-21	SILTY CLAY, SOME SAND REDDISH BROWN, DRY	1.4 PPM	0.0 PPM
25	24-26'	21"	SS-05	7-16-29-42	SILTY CLAY, SOME SAND REDDISH BROWN, DAMP NO ODOR, MINIRAE NOT WORKING	NA	0.0 PPM
30							
35							
40							

CH2MHILL

PROJECT NUMBER	BORING NUMBER	
139322.FI.60	AOC-C-MW-1	SHEET 1 OF 2

SOIL BORING LOG

PROJECT : VIEQUES, PA/SI — LOCATION : DOWNGRADIENT OLD SEPTIC

ELEVATION : — DRILLING CONTRACTOR : GEOWORK INC.

DRILLING METHOD AND EQUIPMENT USED : AIR ROTARY HAMMER

WATER LEVELS : — START : 900 4/18/00 — END : 1600 4/20/00 — LOGGER : G. SILVA

DEPTH BELOW SURFACE (FT)	INTERVAL (FT)	RECOVERY (IN)	#/TYPE	STANDARD PENETRATION TEST RESULTS 6"-6"-6"-6" (N)	CORE DESCRIPTION: SOIL NAME, USCS GROUP SYMBOL, COLOR, MOISTURE CONTENT, RELATIVE DENSITY, OR CONSISTENCY, SOIL STRUCTURE, MINERALOGY.	COMMENTS: DEPTH OF CASING, DRILLING RATE, DRILLING FLUID LOSS, TESTS, AND INSTRUMENTATION. OVM (ppm): Breathing Zone	Above Hole
	0-1				SILTY CLAY (CL) WITH ROCK DENSE, DRY GRAVISH ORANGE	0.0	0.0
5	5-6				SILTY CLAY (CL) LIGHT BROWN MOIST DENSE	0.0	0.0
10	10-11				SILTY (SM) LIGHT BROWN SLIGHTLY MOIST	0.0	0.0
					SILTY SAND (SM) FINE, POORLY GRADED SL MOIST		
	15-16				MEDIUM SILTY SAND (SM) W/ROCK SLIGHTLY MOIST	0.0	0.0
20	20-21				COARSE SILTY SAND (SM) LIGHT BROWN, MOIST	0.0	0.0
25	25-26				MEDIUM SILTY SAND SLIGHTLY MOIST (SM)	0.0	0.0

CH2MHILL

PROJECT NUMBER	BORING NUMBER	
139322.FI.60	AOC-C-MW-1	SHEET 2 OF 2

SOIL BORING LOG

PROJECT : VIEQUES, PA/SI — LOCATION : DOWNGRADENT OLD SEPTIC

ELEVATION : — DRILLING CONTRACTOR : GEOWORK INC.

DRILLING METHOD AND EQUIPMENT USED : AIR ROTARY HAMMER

WATER LEVELS : — START : 900 4/18/00 — END : 1600 4/20/00 — LOGGER : G. SILVA

DEPTH BELOW SURFACE (FT)	INTERVAL (FT)	RECOVERY (IN)	#/TYPE	STANDARD PENETRATION TEST RESULTS 6"-6"-6"-6" (N)	CORE DESCRIPTION: SOIL NAME, USCS GROUP SYMBOL, COLOR, MOISTURE CONTENT, RELATIVE DENSITY, OR CONSISTENCY, SOIL STRUCTURE, MINERALOGY.	COMMENTS: DEPTH OF CASING, DRILLING RATE, DRILLING FLUID LOSS, TESTS, AND INSTRUMENTATION. OVM (ppm): Breathing Zone / Above Hole
	30-31				SILTY CLAY (CL) WITH SAND DARK YELLOWISH ORANGE	0.0 / 0.0
35					MED SILTY SAND WELL GRADED (SM) SLIGHTLY MOIST	
	35-36				SAME AS ABOVE, VERY MOIST	0.0 / 0.0
40						
	40-41				SAME AS ABOVE, VERY MOIST	0.0 / 0.0
45						
	45-46				SAME AS ABOVE	0.0 / 0.0
50						
55						

AOC-E

SOIL BORING LOGS

CH2MHILL

PROJECT NUMBER	BORING NUMBER	
139322.FI.60	AOC-E-MW-4	SHEET 1 OF 2

SOIL BORING LOG

PROJECT : VIEQUES, PA/SI, NASD — LOCATION : NASD-AOC-E

ELEVATION : — DRILLING CONTRACTOR : GEOWORK INC.

DRILLING METHOD AND EQUIPMENT USED : AIR ROTARY HAMMER

WATER LEVELS : — START : 4/13/00 — END : 4/17/00 — LOGGER : K. KARVAZY

DEPTH BELOW SURFACE (FT)	INTERVAL (FT)	RECOVERY (IN)	#/TYPE	STANDARD PENETRATION TEST RESULTS 6"-6"-6"-6" (N)	CORE DESCRIPTION: SOIL NAME, USCS GROUP SYMBOL, COLOR, MOISTURE CONTENT, RELATIVE DENSITY, OR CONSISTENCY, SOIL STRUCTURE, MINERALOGY.	COMMENTS: DEPTH OF CASING, DRILLING RATE, DRILLING FLUID LOSS, TESTS, AND INSTRUMENTATION. OVM (ppm): Breathing Zone	Above Hole
	0-1				0-6" ROAD BASE-ROCK 6" SANDY SILT, LIGHT BROWN, SLIGHTLY MOIST	0-4' POST HOLE	
5	5-6				SANDY CLAY (CL), MODERATE BROWN	0.0	0.0
10	10-11				SANDY SILT (ML), MODERATE BROWN	0.0	0.0
	15-16				SILTY SANDY (SM), MODERATE BROWN	0.0	0.0
20	20-21				WELL GRADED SILTY SAND (SM), MODERATE BROWN	0.0	0.0
25	25-26				SAME AS ABOVE	0.0	0.0

CH2MHILL

PROJECT NUMBER	BORING NUMBER	
139322.FI.60	AOC-E-MW-4	SHEET 2 OF 2

SOIL BORING LOG

PROJECT : VIEQUES, PA/SI, NASD — LOCATION : NASD-AOC-E

ELEVATION : — DRILLING CONTRACTOR : GEOWORK INC.

DRILLING METHOD AND EQUIPMENT USED : AIR ROTARY HAMMER

WATER LEVELS : — START : 4/13/00 — END : 4/17/00 — LOGGER : K. KARVAZY

DEPTH BELOW SURFACE (FT)	INTERVAL (FT)	RECOVERY (IN)	#/TYPE	STANDARD PENETRATION TEST RESULTS 6"-6"-6"-6" (N)	CORE DESCRIPTION: SOIL NAME, USCS GROUP SYMBOL, COLOR, MOISTURE CONTENT, RELATIVE DENSITY, OR CONSISTENCY, SOIL STRUCTURE, MINERALOGY.	COMMENTS: DEPTH OF CASING, DRILLING RATE, DRILLING FLUID LOSS, TESTS, AND INSTRUMENTATION. OVM (ppm): Breathing Zone / Above Hole
	30-31				SAME AS ABOVE	0.0 / 0.0
	32-33				SANDY SILT (ML), LIGHT BROWN, SLIGHTLY MOIST, SOME ROCK - ROUNDED.	
35	35-36				SAME AS ABOVE, LESS ROCK	0.0 / 0.0
	38-39				GREYISH ORANGE SANDY SILT (ML) WITH SOME DAY FINES	
40	40-41				SILTY FINE SAND (ML) VERY PALE ORANGE	VERY DISTINCT COLOR CHANGE NO ODORS DETECTED
45	45-46				FINED SILTY SAND W/GRAVEL VERY PALE ORANGE	0.0 / 0.0
50	50-51				SAME AS ABOVE	STOPPED DRILLING
55						

CH2MHILL

PROJECT NUMBER	BORING NUMBER	
139322.FI.60	AOC-E-MW-5	SHEET 1 OF 2

SOIL BORING LOG

PROJECT : VIEQUES, PA/SI, NASD — LOCATION : DOWN GRADIENT

ELEVATION : — DRILLING CONTRACTOR : GEOWORK INC.

DRILLING METHOD AND EQUIPMENT USED : AIR ROTARY

WATER LEVELS : — START : 4/14/00 — END : 4/17/00 — LOGGER : G. SILVA

DEPTH BELOW SURFACE (FT)	INTERVAL (FT)	RECOVERY (IN)	#/TYPE	STANDARD PENETRATION TEST RESULTS 6"-6"-6"-6" (N)	CORE DESCRIPTION: SOIL NAME, USCS GROUP SYMBOL, COLOR, MOISTURE CONTENT, RELATIVE DENSITY, OR CONSISTENCY, SOIL STRUCTURE, MINERALOGY.	COMMENTS: DEPTH OF CASING, DRILLING RATE, DRILLING FLUID LOSS, TESTS, AND INSTRUMENTATION. OVM (ppm): Breathing Zone / Above Hole
	0-1				SANDY SILT, LIGHT BROWN, SLIGHTLY MOIST	
5						
	5-6				SILTY CLAY WITH SAND (CL) GRAYISH BROWN, SLIGHTLY MOIST MED. DENSE	PID=4.3 PPM CUTTING PETRO ODOR PRESENT
10						
	10-11				SAME AS ABOVE	8.1 PPM 0.0
	12-13				SANDY CLAY (CL) OLIVE GRAY VERY MOIST	VERY DISCOLORED, STRONG PETRO ODOR, PID=17.3
					SAME AS ABOVE	
					SILTY MED. SAND (ML) OLIVE GRAY, LOOSE MATERIAL	STRONG ODOR @ 18' BGS PID=34.2 PPM
20						
					SAME AS ABOVE	0.0 0.0
25						
					WELL GRADED SILTY SAND (SM) MODERATE BROWN.	0.0 0.0

CH2MHILL

PROJECT NUMBER	BORING NUMBER	
139322.FI.60	AOC-E-MW-5	SHEET 2 OF 2

SOIL BORING LOG

PROJECT : VIEQUES, PA/SI, NASD — LOCATION : DOWN GRADIENT

ELEVATION : — DRILLING CONTRACTOR : GEOWORK INC.

DRILLING METHOD AND EQUIPMENT USED : AIR ROTARY HAMMER

WATER LEVELS : — START : 4/14/00 — END : 4/17/00 — LOGGER : G. SILVA

DEPTH BELOW SURFACE (FT)	INTERVAL (FT)	RECOVERY (IN)	#/TYPE	STANDARD PENETRATION TEST RESULTS 6"-6"-6"-6" (N)	CORE DESCRIPTION: SOIL NAME, USCS GROUP SYMBOL, COLOR, MOISTURE CONTENT, RELATIVE DENSITY, OR CONSISTENCY, SOIL STRUCTURE, MINERALOGY.	COMMENTS: DEPTH OF CASING, DRILLING RATE, DRILLING FLUID LOSS, TESTS, AND INSTRUMENTATION. OVM (ppm): Breathing Zone / Above Hole
	30-31				SAME AS ABOVE	0.0 / 0.0
					SANDY SILT (ML), LIGHT BROWN, SLIGHTLY MOIST, SOME ROCK - SOME ROUNDED ROCK	
35	35-36				SAME AS ABOVE, LESS ROCK	0.0 / 0.0
40	40-41				SILTY FINE SANDS (ML) VERY PALE ORANGE	0.0 / 0.0
45	45-46				FINED SILTY SAND W/GRAVEL VERY PALE ORANGE	0.0 / 0.0
50	50-51				SAME AS ABOVE	0.0 / 0.0
55						

CH2MHILL

PROJECT NUMBER	BORING NUMBER	
139322.FI.60	AOC-E-MW-6	SHEET 1 OF 2

SOIL BORING LOG

PROJECT : VIEQUES, PA/SI, NASD — LOCATION : NASD AOC-E

ELEVATION : — DRILLING CONTRACTOR : GEOWORK INC.

DRILLING METHOD AND EQUIPMENT USED : AIR ROTARY HAMMER

WATER LEVELS : 42 FT — START : 4-17-00 — END : 4-26-00 — LOGGER : B. COLLOM

DEPTH BELOW SURFACE (FT)	INTERVAL (FT)	RECOVERY (IN)	#/TYPE	STANDARD PENETRATION TEST RESULTS 6"-6"-6"-6" (N)	CORE DESCRIPTION: SOIL NAME, USCS GROUP SYMBOL, COLOR, MOISTURE CONTENT, RELATIVE DENSITY, OR CONSISTENCY, SOIL STRUCTURE, MINERALOGY.	COMMENTS: DEPTH OF CASING, DRILLING RATE, DRILLING FLUID LOSS, TESTS, AND INSTRUMENTATION. OVM (ppm): Breathing Zone / Above Hole
	0-	N/A		N/A	SILT W/SAND & GRAVEL MED. GREY BROWN, SAND FINE TO MED. GRAVEL 1/4" TO 1/2", ANGULAR DRY.	PID PPM=0 — 0 / 0 0-4' DWG W/POST HOLE DIGGER
5	5-6				SANDY SILT, (SM) LIGHT BROWN SLIGTLY MOIST	0 / 0 / 0
10	10-11				SILTY SAND, MEDIUM WELL GRADED (SM) SLIGHTLY MOIST	0 / 0
	15-16				SAME AS ABOVE	0 / 0
20	20-21				SILT (ML) YELLOWS ORANGE DRY, WITH FINE GRAVEL	0 / 0
25					SANDY SILT, WITH MEDIUM SAND (SM) SLIGHTLY MOIST	0.1 / 0 / 0

CH2MHILL

PROJECT NUMBER	BORING NUMBER	
139322.FI.60	AOC-E-MW-6	SHEET 2 OF 2

SOIL BORING LOG

PROJECT : VIEQUES, PA/SI, NASD — LOCATION : AOC-E-MW6

ELEVATION : — DRILLING CONTRACTOR : GEOWORK INC.

DRILLING METHOD AND EQUIPMENT USED : AIR ROTARY HAMMER

WATER LEVELS : 42 FT — START : 4/17/00 — END : 4/26/00 — LOGGER : G. SILVA

DEPTH BELOW SURFACE (FT)	INTERVAL (FT)	RECOVERY (IN)	#/TYPE	STANDARD PENETRATION TEST RESULTS 6"-6"-6"-6" (N)	CORE DESCRIPTION: SOIL NAME, USCS GROUP SYMBOL, COLOR, MOISTURE CONTENT, RELATIVE DENSITY, OR CONSISTENCY, SOIL STRUCTURE, MINERALOGY.	COMMENTS: DEPTH OF CASING, DRILLING RATE, DRILLING FLUID LOSS, TESTS, AND INSTRUMENTATION. OVM (ppm): Breathing Zone / Above Hole
	30-31				SILT W/ SOME MED SAND (SM) SLIGHTLY MOIST, LIGHT BROWN	0.0 / 0.0
35	35-36				LEAM CLAY, (CL) YELLOWIGH ORANGE, SLIGHTLY MOIST	0.0 / 0.0
	37-38				SANDY CLAY (CL) YELLOWISH ORANGE, SLIGHTLY MOIST	0.0 / 0.0
40	40-41				SILTY SAND WITH SOME FINE GRAVEL (SM) MOIST	0.0 / 0.0 @ 40' SOIL IS MORE MOIST NEW WATER TABLE INTERFACE
45	45-46				SILTY SAND WITH CLAY, MED SAND. (SM) VERY MOIST	0.0 / 0.0
50						
55						

AOC-F

SOIL BORING LOGS

CH2MHILL

PROJECT NUMBER	BORING NUMBER	
139322.FI.60	AOC-F SB-01	SHEET 1 OF 1

SOIL BORING LOG

PROJECT : PA/SI VIEQUES LOCATION : NASD AOC-C SEPTIC TANK

ELEVATION : DRILLING CONTRACTOR : GEOWORKS

DRILLING METHOD AND EQUIPMENT USED : HSA - MOBILEDRILL - HANDAUGER AT SURFACE

WATER LEVELS : N/A START : 4/11/2000 10:00 END : 4/11/2000 13:40 LOGGER : H. HERNANDEZ

DEPTH BELOW SURFACE (FT)	INTERVAL (FT)	RECOVERY (IN)	#/TYPE	STANDARD PENETRATION TEST RESULTS 6"-6"-6"-6" (N)	CORE DESCRIPTION: SOIL NAME, USCS GROUP SYMBOL, COLOR, MOISTURE CONTENT, RELATIVE DENSITY, OR CONSISTENCY, SOIL STRUCTURE, MINERALOGY.	COMMENTS: DEPTH OF CASING, DRILLING RATE, DRILLING FLUID LOSS, TESTS, AND INSTRUMENTATION. OVM (ppm): SAMPLE	AMBIENT
	0-6"			NA	SILTY SAND, FINE TO MEDIUM GRAINED MEDIUM BROWN, DRY	HANDAUGER	
5	4-6'	18"	SS-01	5-9-10-10	SANDY SILT REDDISH BROWN, SOME GRAY, DRY	HSA 0.5 PPM	0.0 PPM
10	9-11'	17"	SS-02	3-15-20-28	SILTY CLAY REDDISH BROWN, DRY	2.5 PPM	0.0 PPM
15	14-16'	16"	SS-03	8-33-52-R	SILTY CLAY, TRACE SAND REDDISH BROWN, DRY	22.9 PPM NO ODOR	0.0 PPM
20	19-21'	5"	SS-04	50 FOR 5" R	FINE SAND (WEATHERED GRANODIORITE) VERY HARD, LIGHT BROWN, DRY	3.5 PPM	0.0 PPM
25	24-26'	9"	SS-05	30-50 FOR 3" R	SILTY CLAY, SOME SAND REDDISH BROWN, DAMP	1.7 PPM	0.0 PPM
30							
35							
40							

CH2MHILL

PROJECT NUMBER	BORING NUMBER	
139322.FI.60	AOC-F SB-02	SHEET 1 OF 1

SOIL BORING LOG

PROJECT : PA/SI VIEQUES LOCATION : NASD AOC-C SEPTIC TANK

ELEVATION : DRILLING CONTRACTOR : GEOWORKS

DRILLING METHOD AND EQUIPMENT USED : HSA - MOBILEDRILL - HANDAUGER AT SURFACE

WATER LEVELS : N/A START : 4/11/2000 14:05 END : 4/11/2000 16:10 LOGGER : H. HERNANDEZ

DEPTH BELOW SURFACE (FT)	INTERVAL (FT)	RECOVERY (IN)	#/TYPE	STANDARD PENETRATION TEST RESULTS 6"-6"-6" (N)	CORE DESCRIPTION: SOIL NAME, USCS GROUP SYMBOL, COLOR, MOISTURE CONTENT, RELATIVE DENSITY, OR CONSISTENCY, SOIL STRUCTURE, MINERALOGY.	COMMENTS: DEPTH OF CASING, DRILLING RATE, DRILLING FLUID LOSS, TESTS, AND INSTRUMENTATION. OVM (ppm): SAMPLE	AMBIENT
	0-6"			NA	SILTY SAND, FINE TO MEDIUM GRAINED MEDIUM BROWN, DRY	HANDAUGER	
5	4-6'	16"	SS-01	3-7-7-6	SANDY SILT REDDISH BROWN, SOME GRAY, DRY	HSA 0.0 PPM	0.0 PPM
10	9-11'	16"	SS-02	4-10-15-20	SILTY CLAY REDDISH BROWN, DRY	5.9 PPM	0.0 PPM
15	14-16'	15"	SS-03	4-20-56-R	SILTY CLAY, TRACE SAND REDDISH BROWN, DRY	1.9 PPM	0.0 PPM
20	19-21'	10"	SS-04	23-50 FOR 5" R	FINE SAND (WEATHERED GRANODIORITE) VERY HARD, LIGHT BROWN, DRY	3.0 PPM	0.0 PPM
25	24-26'	2"	SS-05	50 FOR 2" R	SILTY CLAY, SOME SAND REDDISH BROWN, DAMP	0.0 PPM	0.0 PPM
30							
35							
40							

CH2MHILL

PROJECT NUMBER	BORING NUMBER	
139322.FI.60	AOC-F SB-03	SHEET 1 OF 1

SOIL BORING LOG

PROJECT : PA/SI VIEQUES LOCATION : NASD AOC-C SEPTIC TANK

ELEVATION : DRILLING CONTRACTOR : GEOWORKS

DRILLING METHOD AND EQUIPMENT USED : HSA - MOBILEDRILL - HANDAUGER AT SURFACE

WATER LEVELS : N/A START : 4/12/2000 09:30 END : 4/12/2000 13:40 LOGGER : H. HERNANDEZ

DEPTH BELOW SURFACE (FT)	INTERVAL (FT)	RECOVERY (IN)	#/TYPE	STANDARD PENETRATION TEST RESULTS 6"-6"-6"-6" (N)	CORE DESCRIPTION: SOIL NAME, USCS GROUP SYMBOL, COLOR, MOISTURE CONTENT, RELATIVE DENSITY, OR CONSISTENCY, SOIL STRUCTURE, MINERALOGY.	COMMENTS: DEPTH OF CASING, DRILLING RATE, DRILLING FLUID LOSS, TESTS, AND INSTRUMENTATION. OVM (ppm): SAMPLE / AMBIENT
	0-6"			NA	SILTY SAND, FINE TO MEDIUM GRAINED MEDIUM BROWN, DRY	HANDAUGER
5	4-6'	13"	SS-01	5-4-4-4	SANDY SILT REDDISH BROWN, SOME GRAY, DRY	HSA 0.0 PPM / 0.0 PPM
10	9-11'	20"	SS-02	3-9-18-26	SILTY CLAY REDDISH BROWN, DRY	35.0 PPM / 0.0 PPM NO ODOR
15	14-16'	6"	SS-03	10-50 FOR 4" R	SILTY CLAY, TRACE SAND REDDISH BROWN, DRY	13.8 PPM / 0.0 PPM NO ODOR
20	19-21'	0"	SS-04	NA	NA NA	NA / 0.0 PPM
25	24-26'	0"	SS-05	NA	NA	NA / 0.0 PPM
30						
35						
40						

CH2MHILL

PROJECT NUMBER	BORING NUMBER	
139322.FI.60	AOC-F SB-04	SHEET 1 OF 1

SOIL BORING LOG

PROJECT : PA/SI VIEQUES LOCATION : NASD AOC-C SEPTIC TANK

ELEVATION : DRILLING CONTRACTOR : GEOWORKS

DRILLING METHOD AND EQUIPMENT USED : HSA - MOBILEDRILL - HANDAUGER AT SURFACE

WATER LEVELS : N/A START : 4/12/2000 13:55 END : 4/12/2000 15:20 LOGGER : H. HERNANDEZ

DEPTH BELOW SURFACE (FT)	INTERVAL (FT)	RECOVERY (IN)	#/TYPE	STANDARD PENETRATION TEST RESULTS 6"-6"-6"-6" (N)	CORE DESCRIPTION: SOIL NAME, USCS GROUP SYMBOL, COLOR, MOISTURE CONTENT, RELATIVE DENSITY, OR CONSISTENCY, SOIL STRUCTURE, MINERALOGY.	COMMENTS: DEPTH OF CASING, DRILLING RATE, DRILLING FLUID LOSS, TESTS, AND INSTRUMENTATION. OVM (ppm): SAMPLE / AMBIENT
	0-6"			NA	SILTY SAND, FINE TO MEDIUM GRAINED MEDIUM BROWN, DRY	HANDAUGER
5	4-6'	13"	SS-01	4-8-17-14	SANDY SILT REDDISH BROWN, SOME GRAY, DRY	HSA 0.0 PPM / 0.0 PPM
10	9-11'	18"	SS-02	7-20-37-41	SILTY CLAY REDDISH BROWN, DRY	2.9 PPM / 0.0 PPM
	12-14'	17"	SS-03	8-15-21-26	SILTY CLAY REDDISH BROWN, DRY	9.9 PPM / 0.0 PPM NO ODOR
15	14-16'	6"	SS-04	50 FOR 6" R	SILTY CLAY, TRACE SAND REDDISH BROWN, DRY	0.0 PPM / 0.0 PPM
20					STOPPED DRILLING AT 16 FT DUE TO REFUSAL (HARD ROCK)	
25						
30						
35						
40						

CH2MHILL

PROJECT NUMBER	BORING NUMBER	
139322.FI.70	AOC-F-MW1	SHEET 1 OF 2

SOIL BORING LOG

PROJECT : VIEQUES NASD — LOCATION : SEPTIC TANK

ELEVATION : — DRILLING CONTRACTOR : GEOWORKS INC.

DRILLING METHOD AND EQUIPMENT USED : AIR ROTARY HAMMER

WATER LEVELS : — START : — END : — LOGGER : G. SILVA

DEPTH BELOW SURFACE (FT)	INTERVAL (FT)	RECOVERY (IN)	#/TYPE	STANDARD PENETRATION TEST RESULTS 6"-6"-6" (N)	CORE DESCRIPTION: SOIL NAME, USCS GROUP SYMBOL, COLOR, MOISTURE CONTENT, RELATIVE DENSITY, OR CONSISTENCY, SOIL STRUCTURE, MINERALOGY.	COMMENTS: DEPTH OF CASING, DRILLING RATE, DRILLING FLUID LOSS, TESTS, AND INSTRUMENTATION. OVM (ppm): Breathing Zone / Above Hole
	0-1				SILTY SAND ( ) LIGHT BROWN MED. DENSE, MOIST.	0-4' POST HOLE DIG 0.0 0.0
5	5-6				SILTY SAND ( ) LIGHT BROWN VERY MOIST, LOOSE.	0.0 0.0
10	10-11				SANDY SILT WITH GRAVEL ( ) LIGHT BROWN, MOIST.	0.0 0.0
					SILT ( ) YELLOWISH ORANGE SLIGHTY MOIST, DENSE	@ 12' CHANGE
	15-16				SAME AS ABOVE	0.0 0.0
20	20-21				SAME AS ABOVE, DARK, MUSKY YELLOW, WITH ROCK FRAGMENTS	0.0 0.0
25	25-26				SAME AS ABOVE	0.0 0.0
30	30-31				SAME AS ABOVE	0.0 0.0
35	35-36				SILTY ( ) DARK YELLOWISH ORANGE, DENSE, DRY	0.0 0.0 HARD DRILLING
40						

CH2MHILL

PROJECT NUMBER	BORING NUMBER	
139322.FI.70	AOC-F-MW1	SHEET 2 OF 2

SOIL BORING LOG

PROJECT : VIEQUES NASD LOCATION : SEPTIC TANK

ELEVATION : DRILLING CONTRACTOR : GEOWORKS INC.

DRILLING METHOD AND EQUIPMENT USED : AIR ROTARY HAMMER

WATER LEVELS : START : END : LOGGER : G. SILVA

DEPTH BELOW SURFACE (FT)	INTERVAL (FT)	RECOVERY (IN)	#/TYPE	STANDARD PENETRATION TEST RESULTS 6"-6"-6"-6" (N)	CORE DESCRIPTION: SOIL NAME, USCS GROUP SYMBOL, COLOR, MOISTURE CONTENT, RELATIVE DENSITY, OR CONSISTENCY, SOIL STRUCTURE, MINERALOGY.	COMMENTS: DEPTH OF CASING, DRILLING RATE, DRILLING FLUID LOSS, TESTS, AND INSTRUMENTATION. OVM (ppm): Breathing Zone / Above Hole
	40-41				SILT WITH ANGULAR ROCK ( ) LIGHT OLIVE	0.0 / 0.0
						WET MATERIAL WATER TABLE
45	45-46				SILTY ROCK ANGULAR 1/2" DIAM. LIGHT OLIVE GRAY, WET	0.0 / 0.0
50	50-51				SAME AS ABOVE	0.0 / 0.0

CH2MHILL

PROJECT NUMBER	BORING NUMBER	
139322.FI.70	AOC-F-MW2	SHEET 1 OF 2

SOIL BORING LOG

PROJECT : VIEQUES NASD DOWN GRADIENT SEPTIC TANK LOCATION : AOC-F-MW2

ELEVATION : DRILLING CONTRACTOR : GEOWORKS INC.

DRILLING METHOD AND EQUIPMENT USED : AIR ROTARY HAMMER

WATER LEVELS : START : 1116 END : LOGGER : G. SILVA

DEPTH BELOW SURFACE (FT)	INTERVAL (FT)	RECOVERY (IN)	#/TYPE	STANDARD PENETRATION TEST RESULTS 6"-6"-6"-6" (N)	CORE DESCRIPTION: SOIL NAME, USCS GROUP SYMBOL, COLOR, MOISTURE CONTENT, RELATIVE DENSITY, OR CONSISTENCY, SOIL STRUCTURE, MINERALOGY.	COMMENTS: DEPTH OF CASING, DRILLING RATE, DRILLING FLUID LOSS, TESTS, AND INSTRUMENTATION. OVM (ppm): Breathing Zone / Above Hole
	0-1				SILTY SAND (ML) DENSE PALE BROWN, DAY	0-4' POST HOLE DIG
5						ROTARY HAMMER
	5-6				SILTY CLAY (CL) MODERATE BROWN SLIGHTLY MOIST	0.0 0.0
10	10-11				SILTY CLAY (CL) GRAYISH ORANGE SLIGHTLY MOIST	0.0 0.0
	15-16				SILTY CLAY (ML) DARK YELLOWISH ORANGE MOIST SILT (ML) GRAYISH ORANGE VERY DENSE HARD DRY	0.0 0.0
20	20-21				SEDIMENTARY ROCK, GRAYISH ORANGE DRY BRITTLE SAPROLITE	0.0 0.0
25	25-26				SAME AS ABOVE	0.0 0.0
30	30-31				GRAVELY SILT (ML) DARK YELLOWISH ORANGE, MOIST	
35	35-36				SILTY WITH LITTLE GRAVEL (ML) DARK YELLOWISH ORANGE MOIST	
40						

CH2MHILL

PROJECT NUMBER	BORING NUMBER	
139322.FI.70	AOC-F-MW2	SHEET 2 OF 2

SOIL BORING LOG

PROJECT : VIEQUES NASD DOWN GRADIENT SEPTIC TANK LOCATION : AOC-F-MW2

ELEVATION : DRILLING CONTRACTOR : GEOWORKS INC.

DRILLING METHOD AND EQUIPMENT USED : AIR ROTARY HAMMER

WATER LEVELS : START : 1116 END : LOGGER : G. SILVA

DEPTH BELOW SURFACE (FT)	INTERVAL (FT)	RECOVERY (IN)	#/TYPE	STANDARD PENETRATION TEST RESULTS 6"-6"-6"-6" (N)	CORE DESCRIPTION: SOIL NAME, USCS GROUP SYMBOL, COLOR, MOISTURE CONTENT, RELATIVE DENSITY, OR CONSISTENCY, SOIL STRUCTURE, MINERALOGY.	COMMENTS: DEPTH OF CASING, DRILLING RATE, DRILLING FLUID LOSS, TESTS, AND INSTRUMENTATION. OVM (ppm): Breathing Zone Above Hole
	40-41				GRAVELY SILT (ML) DENSE, DRY PALE OLIVE	
						WATER AT 44' BGS
45	45-46				SAME AS ABOVE, WET	
50	50-52				SAME AS ABOVE	
						STOPPED DRILLING
55						
60						
65						
70						
75						

CH2MHILL

PROJECT NUMBER	BORING NUMBER	
139322.FI.70	AOC-F-MW3	SHEET 1 OF 2

SOIL BORING LOG

PROJECT : VIEQUES (NASD) LOCATION : DOWNGRADIENT

ELEVATION : DRILLING CONTRACTOR : GEOWORKS INC.

DRILLING METHOD AND EQUIPMENT USED : AIR ROTARY HAMMER

WATER LEVELS : START : END : LOGGER : G. SILVA

DEPTH BELOW SURFACE (FT)	INTERVAL (FT)	RECOVERY (IN)	#/TYPE	STANDARD PENETRATION TEST RESULTS 6"-6"-6"-6" (N)	CORE DESCRIPTION: SOIL NAME, USCS GROUP SYMBOL, COLOR, MOISTURE CONTENT, RELATIVE DENSITY, OR CONSISTENCY, SOIL STRUCTURE, MINERALOGY.	COMMENTS: DEPTH OF CASING, DRILLING RATE, DRILLING FLUID LOSS, TESTS, AND INSTRUMENTATION. OVM (ppm): Breathing Zone / Above Hole
	0-1				SILTY SAND WITH GRAVEL (ML) PALE YELLOWISH BROWN, DRY DENSE.	0.0 / 0.0 POST HOLE DIG 0'-4'
5	5-6				SILTY MED. SAND (ML) LIGHT BROWN, VERY MOIST	0.0 / 0.0
10	10-11				SILTY CLAY WITH SAND (CL) LIGHT BROWN, MOIST	0.0 / 0.0
15	15-16				SILTY (ML) DARK YELLOWISH ORANGE, SLIGHTLY MOIST WITH ROCK	0.0 / 0.0
20	20-21				SAME AS ABOVE, HARD DRILLING DRY	0.0 / 0.0
25	25-26				SAME AS ABOVE	0.0 / 0.0
30	30-31				ROCK SEDIMENTARY (ML) HARD GRAYISH ORANGE PINK.	0.0 / 0.0
35	35-36				SAME AS ABOVE, WET	WATER TABLE 0.0 / 0.0
40						

CH2MHILL

PROJECT NUMBER	BORING NUMBER	
139322.FI.70	AOC-F-MW3	SHEET 2 OF 2

SOIL BORING LOG

PROJECT : VIEQUES (NASD) LOCATION : AOC-F - SEPTIC TANK

ELEVATION : DRILLING CONTRACTOR : GEOWORKS INC.

DRILLING METHOD AND EQUIPMENT USED : AIR ROTARY HAMMER

WATER LEVELS : START : END : LOGGER : G. SILVA

DEPTH BELOW SURFACE (FT)	INTERVAL (FT)	RECOVERY (IN)	#/TYPE	STANDARD PENETRATION TEST RESULTS 6"-6"-6"-6" (N)	CORE DESCRIPTION: SOIL NAME, USCS GROUP SYMBOL, COLOR, MOISTURE CONTENT, RELATIVE DENSITY, OR CONSISTENCY, SOIL STRUCTURE, MINERALOGY.	COMMENTS: DEPTH OF CASING, DRILLING RATE, DRILLING FLUID LOSS, TESTS, AND INSTRUMENTATION. OVM (ppm): Breathing Zone / Above Hole
	40-41				CLAYEY SILT WITH ROCK (CL)	0.0 0.0
						STOPPED DRILLING AT 45'
45						
	45-46				CLAYEY SAND, (CL) PALE OLIVE WET	0.0 0.0

CH2MHILL

PROJECT NUMBER	BORING NUMBER	
139322.FI.70	AOC-F-MW4	SHEET 1 OF 2

SOIL BORING LOG

PROJECT : VIEQUES (NASD) LOCATION : AOC-FMW4 DOWNGRADIENT

ELEVATION : DRILLING CONTRACTOR : GEOWORKS INC.

DRILLING METHOD AND EQUIPMENT USED : AIR ROTARY

WATER LEVELS : START : END : LOGGER : G. SILVA

DEPTH BELOW SURFACE (FT)	INTERVAL (FT)	RECOVERY (IN)	#/TYPE	STANDARD PENETRATION TEST RESULTS 6"-6"-6"-6" (N)	CORE DESCRIPTION: SOIL NAME, USCS GROUP SYMBOL, COLOR, MOISTURE CONTENT, RELATIVE DENSITY, OR CONSISTENCY, SOIL STRUCTURE, MINERALOGY.	COMMENTS: DEPTH OF CASING, DRILLING RATE, DRILLING FLUID LOSS, TESTS, AND INSTRUMENTATION. OVM (ppm): Breathing Zone / Above Hole
	0-1				SANDY SILT WITH GRAVEL (ML) GRAYISH ORANGE, SLIGHTLY MOIST	0-4' POST HOLE DIG 0.0 / 0.0
5	5-6				GRAVELY CLAY (CL) MODERATE, YELLOWISH BROWN, MOIST	0.0 / 0.0
10	10-11				SANDY CLAY (CL) PALE BROWN, MOIST	0.0 / 0.0
	15-16				SAME AS ABOVE	0.0 / 0.0
	17-18				SILT (ML) DARK YELLOWISH ORANGE SLIGHTLY MOIST @ 17'	
20	20-21				SAME AS ABOVE	
25	25-26				SILT (ML) GRAYISH ORANGE, DRY DENSE	0.0 / 0.0
30	30-31				SILT SLIGHTLY CLAYEY (SM) DARK YELLOWISH ORANGE, SLIGHTLY MOIST, SOME ROCKS.	0.0 / 0.0
35	35-36				SAME AS ABOVE, MORE ROCK FRACCIONS LESS WEATHERED.	
40						

CH2MHILL

PROJECT NUMBER	BORING NUMBER	
139322.FI.70	AOC-F-MW4	SHEET 2 OF 2

SOIL BORING LOG

PROJECT : VIEQUES (NASD) PA/SI LOCATION : SEPTIC TANK

ELEVATION : DRILLING CONTRACTOR : GEOWORKS INC.

DRILLING METHOD AND EQUIPMENT USED : AIR ROTARY HAMMER

WATER LEVELS : START : END : LOGGER : G. SILVA

DEPTH BELOW SURFACE (FT)	INTERVAL (FT)	RECOVERY (IN)	#/TYPE	STANDARD PENETRATION TEST RESULTS 6"-6"-6"-6" (N)	CORE DESCRIPTION: SOIL NAME, USCS GROUP SYMBOL, COLOR, MOISTURE CONTENT, RELATIVE DENSITY, OR CONSISTENCY, SOIL STRUCTURE, MINERALOGY.	COMMENTS: DEPTH OF CASING, DRILLING RATE, DRILLING FLUID LOSS, TESTS, AND INSTRUMENTATION. OVM (ppm): Breathing Zone / Above Hole
	40-41				CLAYEY SILT WITH ROCK 1/4" (CL) MOIST	WATER TABLE
45	45-46				SAME AS ABOVE, WET	
50	50~				SANDY CLAY SILT (SM) WITH ROCK VERY WET	0.0 0.0

CH2MHILL

PROJECT NUMBER	BORING NUMBER	
139322.FI.70	AOC-F-MW5	SHEET 1 OF 2

SOIL BORING LOG

PROJECT : VIEQUES PA/SI — LOCATION : DOWNGRADIENT SEPTIC

ELEVATION : — DRILLING CONTRACTOR : GEOWORKS INC.

DRILLING METHOD AND EQUIPMENT USED : AIR ROTARY HAMMER

WATER LEVELS : — START : — END : — LOGGER : G. SILVA

DEPTH BELOW SURFACE (FT)	INTERVAL (FT)	RECOVERY (IN)	#/TYPE	STANDARD PENETRATION TEST RESULTS 6"-6"-6"-6" (N)	CORE DESCRIPTION: SOIL NAME, USCS GROUP SYMBOL, COLOR, MOISTURE CONTENT, RELATIVE DENSITY, OR CONSISTENCY, SOIL STRUCTURE, MINERALOGY.	COMMENTS: DEPTH OF CASING, DRILLING RATE, DRILLING FLUID LOSS, TESTS, AND INSTRUMENTATION. OVM (ppm): Breathing Zone	Above Hole
	0-1				SILT SAND (ML) DENSE, PALE BROWN, DRY.	0.0	0.0
5	5-6				SAME AS ABOVE, LIGHT BROWN, VERY MOIST.	0.0	0.0
10	10-11				SANDY CLAY (CL) PALE BROWN, MOIST	0.0	0.0
	15-16				SILT WITH ROCK (ML) HARD DRILLING VERY DRY PALE YELLOWISH ORANGE.	0.0	0.0
20	20-21				SILT (ML) DARK YELLOWISH ORANGE SLIGHTLY MOIST.	0.0	0.0
25	25-26				SAME AS ABOVE	0.0	0.0
30	30-31				SAME AS ABOVE	0.0	0.0
35	35-36				CLAYEY SILT WITH ROCKS (ML) GRAYISH ORANGE SLIGHTLY MOIST.	0.0	0.0
40							

CH2MHILL

PROJECT NUMBER	BORING NUMBER	
139322.FI.70	AOC-F-MW5	SHEET 2 OF 2

SOIL BORING LOG

PROJECT : VIEQUES PA/SI LOCATION : DOWNGRADIENT SEPTIC

ELEVATION : DRILLING CONTRACTOR : GEOWORKS INC.

DRILLING METHOD AND EQUIPMENT USED : AIR ROTARY HAMMER

WATER LEVELS : START : END : LOGGER : G. SILVA

DEPTH BELOW SURFACE (FT)	INTERVAL (FT)	RECOVERY (IN)	#/TYPE	STANDARD PENETRATION TEST RESULTS 6"-6"-6"-6" (N)	CORE DESCRIPTION: SOIL NAME, USCS GROUP SYMBOL, COLOR, MOISTURE CONTENT, RELATIVE DENSITY, OR CONSISTENCY, SOIL STRUCTURE, MINERALOGY.	COMMENTS: DEPTH OF CASING, DRILLING RATE, DRILLING FLUID LOSS, TESTS, AND INSTRUMENTATION. OVM (ppm): Breathing Zone / Above Hole
	40-41				CLAYEY SILT WITH SAND (ML) DUSKY YELLOW, MOIST.	0.0 0.0
	43-44				SANDY SILT, (ML) LIGHT OLIVE BROWN.	WATER TABLE
45	45-46				SAME AS ABOVE	STOPPED DRILLING

Summary of Organic Vapor Meter (OVM) Data Table

SUMMARY OF ORGANIC VAPOR METER (OVM) DATA

VIEQUES ISLAND, PUERTO RICO

SWMU4		
Soil Boring No.	**Depth (ft.)**	**OVM (ppm)**
SWMU4-SB01	4-6	3.3
SWMU4-SB02	4-6	1.0
SWMU4-SB03	4-6	0.1
SWMU4-SB07	4-6	0.0
SWMU4-SB09	4-6	28.0
SWMU4-SB10	4-6	12.0
SWMU4-SB11	4-6	0.0
SWMU4-SB12	4-6	0.0
SWMU4-MW1	0-1	0.0
SWMU4-MW1	4-5	0.0
SWMU4-MW1	5-6	0.0
SWMU4-MW1	10-11	0.0
SWMU4-MW1	15-16	0.0
SWMU4-MW1	20-21	0.0
SWMU4-MW1	25-26	0.0
SWMU4-MW1	30-31	0.0
SWMU4-MW1	35-36	0.0
SWMU4-MW1	40-41	0.0
SWMU4-MW1	45-49	0.0
SWMU4-MW2	0-2	0.0
SWMU4-MW2	2-5	0.0
SWMU4-MW2	5-7	0.0
SWMU4-MW2	10-12	0.0
SWMU4-MW2	15-17	0.0
SWMU4-MW2	20-22	0.0
SWMU4-MW2	25-27	0.0
SWMU4-MW2	30-31	0.0
SWMU4-MW4	0-2	0.0
SWMU4-MW4	5-6	0.0

SUMMARY OF ORGANIC VAPOR METER (OVM) DATA

VIEQUES ISLAND, PUERTO RICO

SWMU4-MW4	10-11	0.0
SWMU4-MW4	15-16	0.0
SWMU4-MW4	18-19	0.0
SWMU4-MW5	0-2	1.1
SWMU4-MW5	5-7	0.0
SWMU4-MW5	10-12	0.0
SWMU4-MW5	15-17	0.0
SWMU4-MW5	20-22	0.0
SWMU4-MW5	25-27	0.0
SWMU4-MW5	30-35	0.0
SWMU4-MW5	35-40	0.0
SWMU4-MW5	40-45	0.0
SWMU4-MW-6	0-5	0.0
SWMU4-MW-6	5-10	0.0
SWMU4-MW-6	10-15	0.0
SWMU4-MW-6	15-20	0.0
SWMU4-MW-6	20-25	0.0
SWMU4-MW-6	25-30	0.0
SWMU4-MW-6	30-35	0.0
SWMU4-MW-6	35-40	0.0
SWMU4-MW-6	40-45	0.0
SWMU4-MW-7	0-2	0.0
SWMU4-MW-7	5-7	0.0
SWMU4-MW-7	8-10	0.0
SWMU4-MW-7	15-17	0.0
SWMU4-MW-7	17-22	0.0
SWMU4-MW-7	22-27	0.0
SWMU4-MW-7	27-32	0.0
SWMU4-MW-7	32-37	0.0
SWMU4-MW-7	37-42	0.0
SWMU4-MW-8	0-2	0.0
SWMU4-MW-8	6-8	0.0

SUMMARY OF ORGANIC VAPOR METER (OVM) DATA

VIEQUES ISLAND, PUERTO RICO

SWMU4-MW-8	8-13	0.0
SWMU4-MW-8	13-18	0.0
SWMU4-MW-8	18-23	0.0
SWMU4-MW-8	23-28	0.0
SWMU4-MW-8	28-33	0.0
SWMU4-MW-8	33-38	0.0
SWMU4-MW-8	38-43	0.0
SWMU4-MW-8	43-48	0.0
SWMU4-MW-8	48-53	0.0
SWMU4-MW-8	53-60	0.0

SWMU5

Soil Boring No.	Depth (ft.)	OVM (ppm)
SWMU5-SB01	0-0.5	0.1
SWMU5-SB01	5-6	0.1
SWMU5-SB01	10-11	3.5
SWMU5-SB01	15-16	9.5
SWMU5-SB01	20-21	2.4
SWMU5-SB02	0-0.5	0.1
SWMU5-SB02	5-6	0.1
SWMU5-SB03	0-0.5	0.1
SWMU5-SB03	5-6	0.1
SWMU5-SB04	0-0.5	0.1
SWMU5-SB04	4-6	0.1
SWMU5-SB04	6-8	-0.1
SWMU6-MW1	0-1	0.0

SWMU6

Soil Boring No.	Depth (ft.)	OVM (ppm)
SWMU6-MW1	5-6	0.0
SWMU6-MW1	10-11	0.0

SUMMARY OF ORGANIC VAPOR METER (OVM) DATA

VIEQUES ISLAND, PUERTO RICO

SWMU6-MW1	15-16	0.0
SWMU6-MW2	0-1	0.0
SWMU6-MW2	1-4	0.0
SWMU6-MW2	5-6	0.0
SWMU6-MW2	10-11	0.0
SWMU6-MW3	0-4	0.0
SWMU6-MW3	5-6	0.0
SWMU6-MW3	10-12	0.0
SWMU6-MW4	0-2	0.0
SWMU6-MW4	2-3	0.0
SWMU6-MW4	5-6	0.0
SWMU6-MW4	10-11	0.0

SWMU7		
Soil Boring No.	**Depth (ft.)**	**OVM (ppm)**
SWMU7-2R	0-1	0.0
SWMU7-2R	5-6	0.0
SWMU7-2R	7-8	0.0
SWMU7-2R	10-11	0.0
SWMU7-2R	15-16	0.0
SWMU7-2R	20-21	0.0
SWMU7-2R	25-26	0.0
SWMU7-2R	30-31	0.0
SWMU7-2R	35-36	0.0
SWMU7-2R	40-41	0.0
SWMU7-2R	45-46	0.0
SWMU7-2R	50-51	0.0
SWMU7-2R	55-56	0.0
SWMU7-2R	60-61	0.0
SWMU7-2R	65-66	0.0
SWMU7-2R	70-71	0.0
SWMU7-2R	75-76	0.0

SUMMARY OF ORGANIC VAPOR METER (OVM) DATA

VIEQUES ISLAND, PUERTO RICO

SWMU7-2R	78-81	0.0
SWMU7-2R	85-87	0.0
SWMU7-3R	0-1	0.0
SWMU7-3R	5-6	0.0
SWMU7-3R	10-11	0.0
SWMU7-3R	15-16	0.0
SWMU7-3R	20-21	0.0
SWMU7-3R	25-26	0.0
SWMU7-3R	30-31	0.0
SWMU7-3R	35-36	0.0
SWMU7-3R	40-41	0.0
SWMU7-3R	45-46	0.0
SWMU7-3R	50-51	0.0
SWMU7-3R	55-56	0.0

SWMU10

Soil Boring No.	Depth (ft.)	OVM (ppm)
SWMU10-SB01	0-3	0.5
SWMU10-SB01	4-6	0.1
SWMU10-SB02	0-3	0.0
SWMU10-SB02	4-6	0.0
SWMU10-SB03	0-3	0.1
SWMU10-SB03	4-6	0.0
SWMU10-SB04	0-3	0.0
SWMU10-SB04	4-6	0.0
SWMU10-SB05	0-3	0.0
SWMU10-SB05	4-6	0.2
SWMU10-SB06	0-3	0.0
SWMU10-SB06	4-6	0.3
SWMU10-SB07	0-3	0.0
SWMU10-SB07	4-6	0.0
SWMU10-SB08	0-3	0.0

SUMMARY OF ORGANIC VAPOR METER (OVM) DATA

VIEQUES ISLAND, PUERTO RICO

SWMU10-SB08	4-6	0.0
SWMU10-SB09	0-3	0.0
SWMU10-SB09	4-6	0.0
SWMU10-SB010	0-3	0.0
SWMU10-SB10	4-6	0.2

SWMU14		
Soil Boring No.	**Depth (ft.)**	**OVM (ppm)**
SWMU14-SB01	4-6	40.9
SWMU14-SB02	4-6	60.7
SWMU14-SB03	4-6	1.3
SWMU14-SB04	4-6	1.6
SWMU14-SB05	4-6	9.5
SWMU14-SB06	4-6	12.4
SWMU14-SB07	4-6	2.3
SWMU14-SB08	4-6	0.0
SWMU14-SB09	4-6	0.0
SWMU14-SB010	4-6	0.2
SWMU14-SB011	4-6	0.1
SWMU14-SB012	4-6	0.0
SWMU14-SB013	4-6	0.2
SWMU14-SB014	4-6	0.0
SWMU14-MW1	0-1	0.0
SWMU14-MW1	2-4	0.0
SWMU14-MW1	5-6	0.3
SWMU14-MW1	10-11	0.2
SWMU14-MW1	15-16	0.0
SWMU14-MW1	20-21	0.0
SWMU14-MW1	25-26	0.0
SWMU14-MW1	30-31	0.0
SWMU14-MW1	35-36	0.3
SWMU14-MW1	40-41	0.2

SUMMARY OF ORGANIC VAPOR METER (OVM) DATA

VIEQUES ISLAND, PUERTO RICO

SWMU14-MW1	45-46	0.0
SWMU14-MW1	50-51	0.0
SWMU14-MW1	55-56	0.0
SWMU14-MW1	60-61	0.0
SWMU14-MW1	65-66	0.0
SWMU14-MW1	69-70	0.0
SWMU14-MW2	0-1	0.0
SWMU14-MW2	5-6	0.0
SWMU14-MW2	10-11	0.0
SWMU14-MW2	15-16	0.0
SWMU14-MW2	20-21	0.0
SWMU14-MW2	25-26	0.0
SWMU14-MW2	30-31	0.0
SWMU14-MW2	35-36	0.0
SWMU14-MW2	40-41	0.0
SWMU14-MW2	45-46	0.0
SWMU14-MW2	50-52	0.0
SWMU15		
Soil Boring No.	**Depth (ft.)**	**OVM (ppm)**
SWMU15-MW1	0-1	0.0
SWMU15-MW1	5-6	0.2
SWMU15-MW1	8-10	0.4
SWMU15-MW1	14-15	0.3
SWMU15-MW1	16-18	0.2
SWMU15-MW1	20-21	0.2
SWMU15-MW1	30-31	0.0
SWMU15-MW1	32-33	0.0
SWMU15-MW1	35-36	0.0
SWMU15-MW1	40-41	0.0
SWMU15-MW1	41-43	0.0
SWMU15-MW1	45-46	0.0
SWMU15-MW1	48-53	0.0

SUMMARY OF ORGANIC VAPOR METER (OVM) DATA

VIEQUES ISLAND, PUERTO RICO

AOC-C		
Soil Boring No.	**Depth (ft.)**	**OVM (ppm)**
AOC-C-SB16	4-6	0.0
AOC-C-SB16	9-11	0.0
AOC-C-SB16	14-16	0.0
AOC-C-SB16	19-21	0.0
AOC-C-SB16	24-26	0.0
AOC-C-SB17	4-6	0.0
AOC-C-SB17	9-11	0.0
AOC-C-SB18	4-6	0.0
AOC-C-SB18	9-11	0.0
AOC-C-SB18	14-16	0.0
AOC-C-SB18	19-21	0.0
AOC-C-SB18	24-26	0.0
AOC-C-SB18	4-6	0.0
AOC-C-SB18	9-11	0.0
AOC-C-SB18	14-16	0.0
AOC-C-SB18	19-21	0.0
AOC-C-SB18	24-26	0.0
AOC-C-MW1	0-1	0.0
AOC-C-MW1	5-6	0.0
AOC-C-MW1	10-11	0.0
AOC-C-MW1	15-16	0.0
AOC-C-MW1	20-21	0.0
AOC-C-MW1	25-26	0.0
AOC-C-MW1	30-31	0.0
AOC-C-MW1	35-36	0.0

SUMMARY OF ORGANIC VAPOR METER (OVM) DATA

VIEQUES ISLAND, PUERTO RICO

AOC-C-MW1	40-41	0.0
AOC-C-MW1	45-46	0.0

AOC-E		
Soil Boring No.	**Depth (ft.)**	**OVM (ppm)**
AOC-E-MW4	0-1	0.0
AOC-E-MW4	5-6	0.0
AOC-E-MW4	10-11	0.0
AOC-E-MW4	15-16	0.0
AOC-E-MW4	20-21	0.0
AOC-E-MW4	25-26	0.0
AOC-E-MW4	30-31	0.0
AOC-E-MW4	32-33	0.0
AOC-E-MW4	35-36	0.0
AOC-E-MW4	38-39	0.0
AOC-E-MW4	40-41	0.0
AOC-E-MW4	45-46	0.0
AOC-E-MW4	50-51	0.0
AOC-E-MW5	5-6	4.3
AOC-E-MW5	10-11	8.1
AOC-E-MW5	12-13	17.3
AOC-E-MW5	15-19	34.2
AOC-E-MW5	20-21	0.0
AOC-E-MW5	25-26	0.0
AOC-E-MW5	30-31	0.0
AOC-E-MW5	35-36	0.0
AOC-E-MW5	40-41	0.0
AOC-E-MW5	45-46	0.0
AOC-E-MW5	50-51	0.0
AOC-E-MW6	0-1	0.0
AOC-E-MW6	5-6	0.0
AOC-E-MW6	10-11	0.0

SUMMARY OF ORGANIC VAPOR METER (OVM) DATA

VIEQUES ISLAND, PUERTO RICO

AOC-E-MW6	15-16	0.0
AOC-E-MW6	20-21	0.0
AOC-E-MW6	25-26	0.1
AOC-E-MW6	30-31	0.0
AOC-E-MW6	35-36	0.0
AOC-E-MW6	37-38	0.0
AOC-E-MW6	40-41	0.0
AOC-E-MW6	45-46	0.0

AOC-F

Soil Boring No.	Depth (ft.)	OVM (ppm)
AOC-F-SB01	4-6	0.0
AOC-F-SB01	9-11	0.0
AOC-F-SB01	14-16	0.0
AOC-F-SB01	19-21	0.0
AOC-F-SB01	24-26	0.0
AOC-F-SB02	4-6	0.0
AOC-F-SB02	9-11	0.0
AOC-F-SB02	14-16	0.0
AOC-F-SB02	19-21	0.0
AOC-F-SB02	24-26	0.0
AOC-F-SB03	4-6	0.0
AOC-F-SB03	9-11	0.0
AOC-F-SB03	14-16	0.0
AOC-F-SB03	19-21	0.0
AOC-F-SB03	24-26	0.0
AOC-F-SB04	4-6	0.0
AOC-F-SB04	9-11	0.0
AOC-F-SB04	12-14	0.0
AOC-F-SB04	14-16	0.0
AOC-F-MW1	0-1	0.0

SUMMARY OF ORGANIC VAPOR METER (OVM) DATA

VIEQUES ISLAND, PUERTO RICO

AOC-F-MW1	5-6	0.0
AOC-F-MW1	10-11	0.0
AOC-F-MW1	15-16	0.0
AOC-F-MW1	20-21	0.0
AOC-F-MW1	25-26	0.0
AOC-F-MW1	30-31	0.0
AOC-F-MW1	35-36	0.0
AOC-F-MW1	40-41	0.0
AOC-F-MW1	45-46	0.0
AOC-F-MW1	50-51	0.0
AOC-F-MW2	0-1	0.0
AOC-F-MW2	5-6	0.0
AOC-F-MW2	10-11	0.0
AOC-F-MW2	15-16	0.0
AOC-F-MW2	20-21	0.0
AOC-F-MW2	25-26	0.0
AOC-F-MW2	30-31	0.0
AOC-F-MW2	35-36	0.0
AOC-F-MW2	40-41	0.0
AOC-F-MW2	45-46	0.0
AOC-F-MW2	50-52	0.0
AOC-F-MW3	0-1	0.0
AOC-F-MW3	5-6	0.0
AOC-F-MW3	10-11	0.0
AOC-F-MW3	15-16	0.0
AOC-F-MW3	20-21	0.0
AOC-F-MW3	25-26	0.0
AOC-F-MW3	30-31	0.0
AOC-F-MW3	35-36	0.0
AOC-F-MW3	40-41	0.0
AOC-F-MW3	45-46	0.0
AOC-F-MW4	0-1	0.0

SUMMARY OF ORGANIC VAPOR METER (OVM) DATA

VIEQUES ISLAND, PUERTO RICO

AOC-F-MW4	5-6	0.0
AOC-F-MW4	10-11	0.0
AOC-F-MW4	15-16	0.0
AOC-F-MW4	17-18	0.0
AOC-F-MW4	20-21	0.0
AOC-F-MW4	25-26	0.0
AOC-F-MW4	30-31	0.0
AOC-F-MW4	35-36	0.0
AOC-F-MW4	40-41	0.0
AOC-F-MW4	45-46	0.0
AOC-F-MW4	50-51	0.0
AOC-F-MW5	0-1	0.0
AOC-F-MW5	5-6	0.0
AOC-F-MW5	10-11	0.0
AOC-F-MW5	15-16	0.0
AOC-F-MW5	20-21	0.0
AOC-F-MW5	25-26	0.0
AOC-F-MW5	30-31	0.0
AOC-F-MW5	35-36	0.0
AOC-F-MW5	40-41	0.0
AOC-F-MW5	43-44	0.0
AOC-F-MW5	45-46	0.0

APPENDIX C

Well Construction Diagrams

CH2MHILL

PROJECT NUMBER	WELL NUMBER		
139322.FI.70	SWMU-4-MW-1	SHEET 1	OF 1

WELL COMPLETION DIAGRAM

PROJECT : VIEQUES PA/SI LOCATION : UPGRADIENT BURN PIT

DRILLING CONTRACTOR : GEOWORKS INC.

DRILLING METHOD AND EQUIPMENT USED : AIR ROTARY HAMMER

WATER LEVELS : ~27' bgs START : 1300 Hr (4/19/2000) END : 0930 Hr (4/20/00) LOGGER : G. SILVA

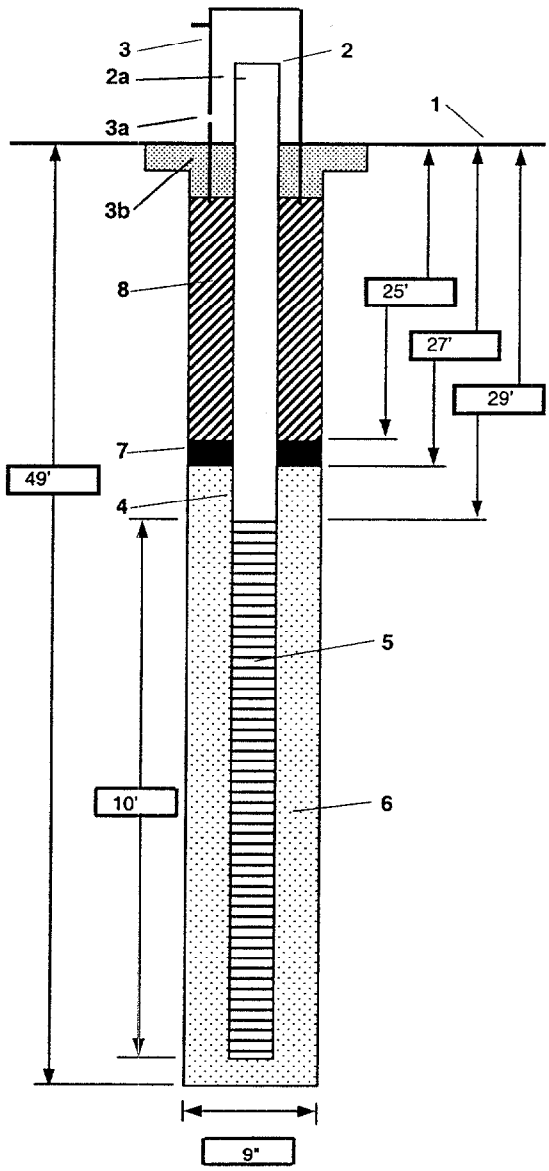

1- Ground elevation at well	See Surveyor Info
2- Top of casing elevation	See Surveyor Info
a) vent hole?	None
3- Wellhead protection cover type	Aboveground (Aluminum)
a) weep hole?	None
b) concrete pad dimensions	4' X 4' X 3"
4- Dia./type of well casing	2" DIA
	Sch 40 PVC
5- Type/slot size of screen	Sch 40 PVC
	10 slot
6- Type screen filter	Coarse Sand
a) Quantity used	3-40 lb Bags
7- Type of seal	Bentonite
a) Quantity used	3 Gallons
8- Grout	
a) Grout mix used	Cement Sand
b) Method of placement	Top Hole
c) Vol. of well casing grout	80 gallons
Development method	See Development Log
Development time	See Development Log
Estimated purge volume	See Development Log

Comments

CH2MHILL

PROJECT NUMBER	WELL NUMBER		
139322.FI.70	SWMU-4-MW-2	SHEET 1	OF 1

WELL COMPLETION DIAGRAM

PROJECT : Vieques (PA/SI) LOCATION : DOWN GRADIENT BURN PIT

DRILLING CONTRACTOR : GEOWORKS INC.

DRILLING METHOD AND EQUIPMENT USED : AIR ROTARY HAMMER

WATER LEVELS : ~43' bgs START : 835 Hr (4/20/00) END : 1500 Hr (4/27/00) LOGGER : G. SILVA

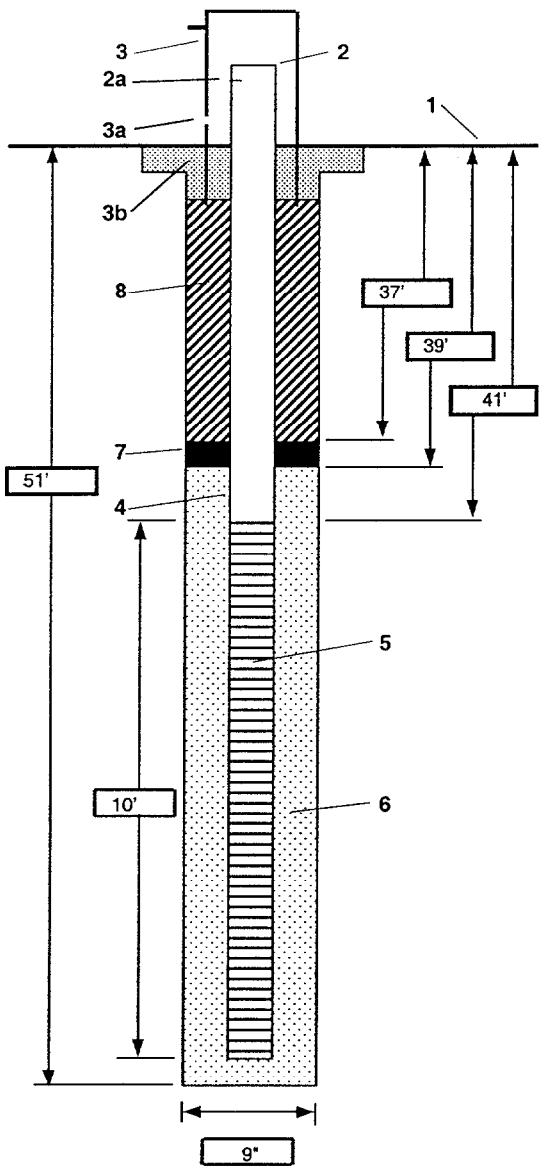

1- Ground elevation at well	See Surveyor Info
2- Top of casing elevation	See Surveyor Info
a) vent hole?	N/A
3- Wellhead protection cover type	Above Ground
a) weep hole?	None
b) concrete pad dimensions	4'X4'X3"
4- Dia./type of well casing	2" DIA
	Sch 40 PVC
5- Type/slot size of screen	Sch 40 PVC
	10 slot
6- Type screen filter	Coarse sand
a) Quantity used	4 - 40 lb bags
7- Type of seal	Bentonite pellets
a) Quantity used	4 gallons
8- Grout	
a) Grout mix used	Cement sand
b) Method of placement	Top hole
c) Vol. of well casing grout	100 gallons
Development method	See Development Log
Development time	See Development Log
Estimated purge volume	See Development Log

Comments

CH2MHILL

PROJECT NUMBER	WELL NUMBER		
139322.FI.70	SWMU-4-MW-3	SHEET 1	OF 1

WELL COMPLETION DIAGRAM

PROJECT : VIEQUES (PA/SI) LOCATION : DOWN GRADIENT BURN PIT

DRILLING CONTRACTOR : GEOWORKS INC.

DRILLING METHOD AND EQUIPMENT USED : AIR ROTARY HAMMER

WATER LEVELS : ~ 33 " bgs START : 845 Hr (4/24/2000) END : 1330 Hr (4/27/00) LOGGER : G. SILVA

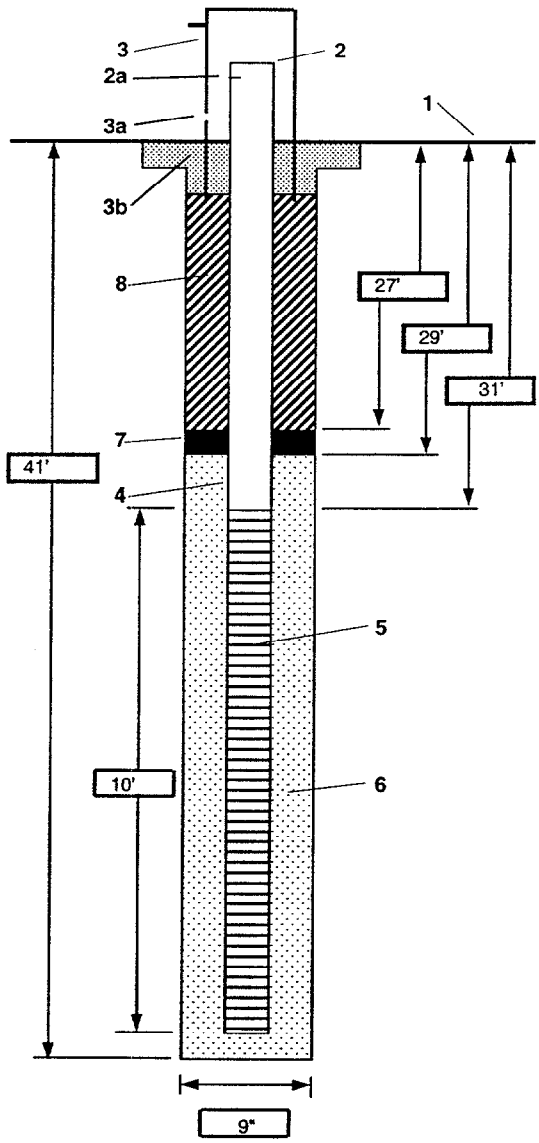

1- Ground elevation at well	See Surveyor Info
2- Top of casing elevation	See Surveyor Info
a) vent hole?	
3- Wellhead protection cover type	Above Ground
a) weep hole?	None
b) concrete pad dimensions	4'X4'X3"
4- Dia./type of well casing	2" DIA
	Sch 40 PVC
5- Type/slot size of screen	Sch 40 PVC
	10 slot
6- Type screen filter	Course Sand
a) Quantity used	4-40lb bags
7- Type of seal	Bentonite pellets
a) Quantity used	3 galoons
8- Grout	
a) Grout mix used	Cement sand
b) Method of placement	Top hole
c) Vol. of well casing grout	80 gallons
Development method	See Development Log
Development time	See Development Log
Estimated purge volume	See Development Log

Comments

CH2MHILL

PROJECT NUMBER	WELL NUMBER		
139322.FI.70	SWMU-4-MW-4	SHEET 1	OF 1

WELL COMPLETION DIAGRAM

PROJECT : LOCATION : DOWN GRADIENT BURN PIT

DRILLING CONTRACTOR : GEOWORKS INC.

DRILLING METHOD AND EQUIPMENT USED : AIR ROTARY HAMMER

WATER LEVELS : 10' START : END : LOGGER : G. SILVA

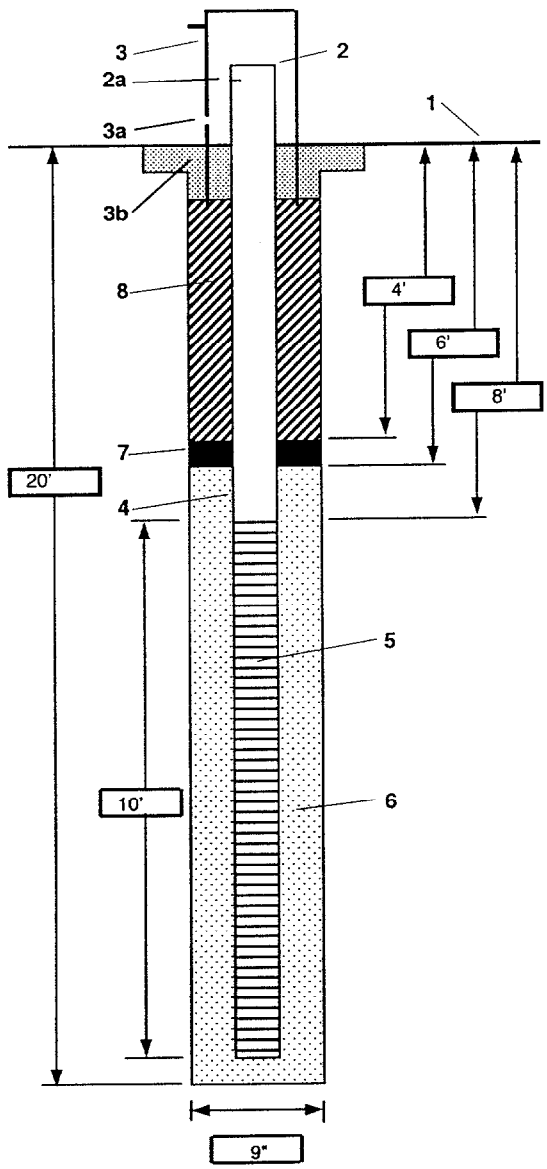

1- Ground elevation at well	See Surveyor Info
2- Top of casing elevation	See Surveyor Info
a) vent hole?	None
3- Wellhead protection cover type	Above Ground
a) weep hole?	None
b) concrete pad dimensions	4'X4'X3"
4- Dia./type of well casing	2" DIA
	Sch 40 PVC
5- Type/slot size of screen	Sch 40 PVC
	10 slot
6- Type screen filter	Coarse Sand
a) Quantity used	4 - 40 lb bag
7- Type of seal	Bentonite
a) Quantity used	3.5 gallons
8- Grout	
a) Grout mix used	Cement sand
b) Method of placement	Top Hole
c) Vol. of well casing grout	10 gallons
Development method	See Development Log
Development time	See Development Log
Estimated purge volume	See Development Log

Comments

CH2MHILL

PROJECT NUMBER	WELL NUMBER		
139322.FI.70	SWMU-4-MW-5	SHEET 1	OF 1

WELL COMPLETION DIAGRAM

PROJECT : NASD Vieques PA/SI LOCATION : SWMU-4

DRILLING CONTRACTOR : GEOWORKS INC.

DRILLING METHOD AND EQUIPMENT USED : AIR ROTARY HAMMER

WATER LEVELS : START : 5/31/00 END : 5/31/00 LOGGER : M. CLASEN

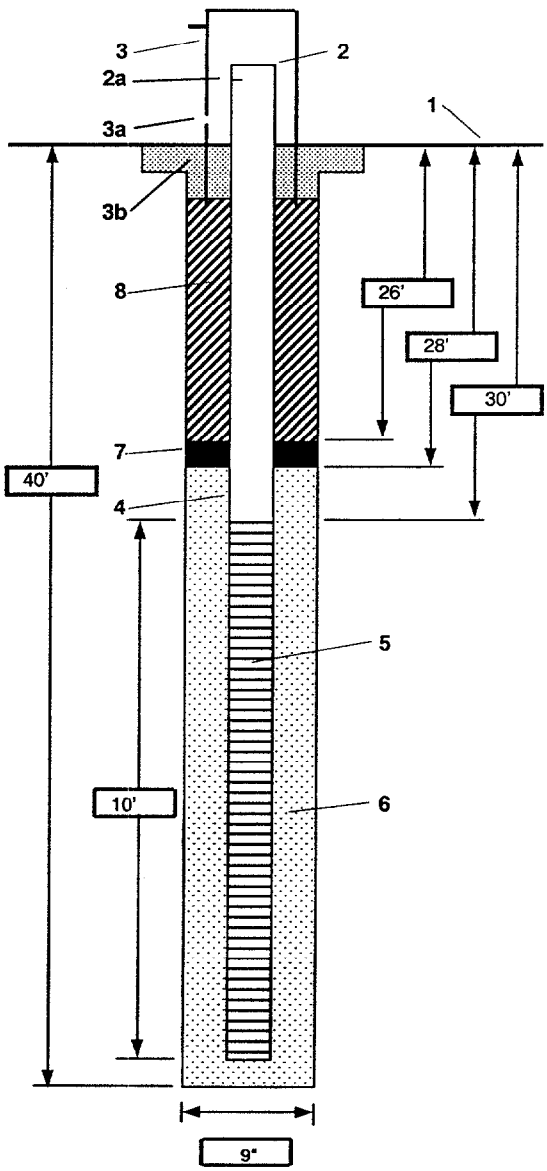

1- Ground elevation at well	See Surveyor Info
2- Top of casing elevation	See Surveyor Info
a) vent hole?	None
3- Wellhead protection cover type	Steel
a) weep hole?	None
b) concrete pad dimensions	3'x3'
4- Dia./type of well casing	2" DIA PVC
5- Type/slot size of screen	2" DIA PVC
	10 slot
6- Type screen filter	Coarse Sand
a) Quantity used	4 - 40 lb bag
7- Type of seal	Bentonite
a) Quantity used	3.0 gallons
8- Grout	
a) Grout mix used	6 gal sack
b) Method of placement	Tremie
c) Vol. of well casing grout	
Development method	Pumping/Swabbing
Development time	1.5 hours
Estimated purge volume	55 gallons

Comments

CH2MHILL

PROJECT NUMBER	WELL NUMBER		
139322.FI.70	SWMU-4-MW-6	SHEET 1	OF 1

WELL COMPLETION DIAGRAM

PROJECT : NASD Vieques PA/SI LOCATION : SWMU-4

DRILLING CONTRACTOR : GEOWORKS INC.

DRILLING METHOD AND EQUIPMENT USED : AIR ROTARY HAMMER

WATER LEVELS : 35' START : 5/31/00 END : 6/1/00 LOGGER : M. CLASEN

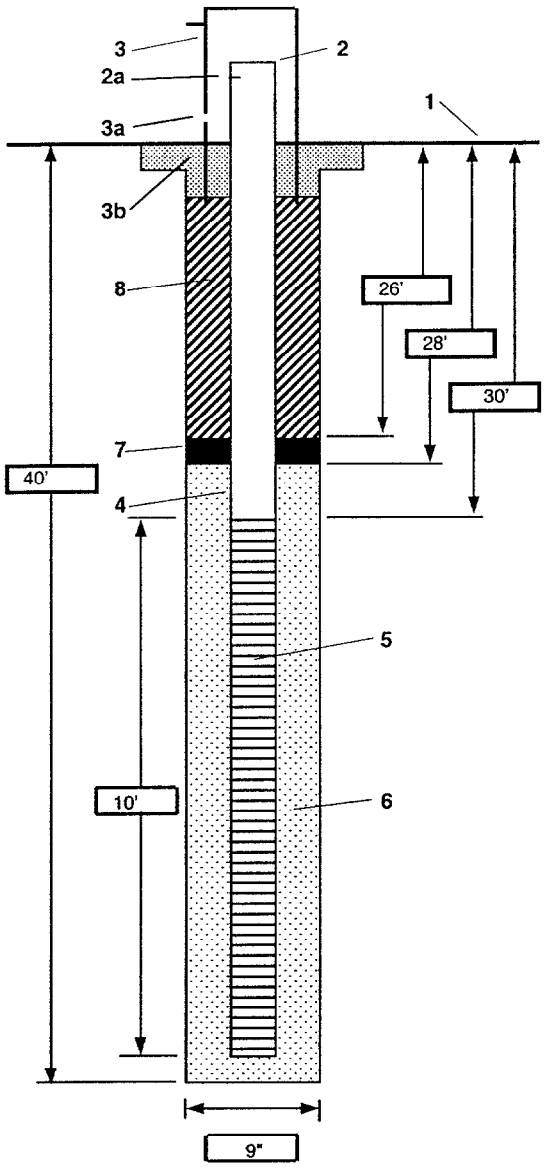

1- Ground elevation at well	See Surveyor Info
2- Top of casing elevation	See Surveyor Info
a) vent hole?	None
3- Wellhead protection cover type	Steel
a) weep hole?	None
b) concrete pad dimensions	3'x3'
4- Dia./type of well casing	2" DIA PVC
5- Type/slot size of screen	2" DIA PVC 10 slot PVC
6- Type screen filter	Coarse Sand
a) Quantity used	4 - 40 lb bag
7- Type of seal	Bentonite chips
a) Quantity used	3.0 gallons
8- Grout	
a) Grout mix used	6 gal sack
b) Method of placement	Tremie
c) Vol. of well casing grout	
Development method	Pumping/Swabbing
Development time	6 hours
Estimated purge volume	100 gallons

Comments

CH2MHILL

PROJECT NUMBER	WELL NUMBER		
139322.FI.70	SWMU-4-MW-7	SHEET 1	OF 1

WELL COMPLETION DIAGRAM

PROJECT : NASD Vieques PA/SI LOCATION : SWMU-4

DRILLING CONTRACTOR : GEOWORKS INC.

DRILLING METHOD AND EQUIPMENT USED : AIR ROTARY HAMMER

WATER LEVELS : 31' START : 6/2/00 END : 6/2/00 LOGGER : M. CLASEN

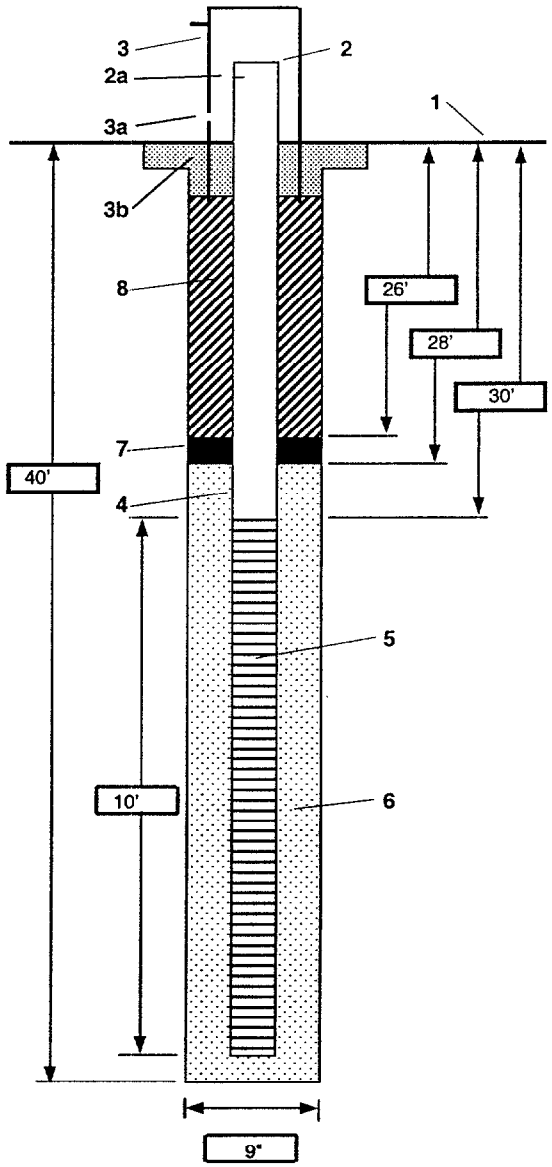

1- Ground elevation at well	See Surveyor Info
2- Top of casing elevation	See Surveyor Info
a) vent hole?	None
3- Wellhead protection cover type	Steel
a) weep hole?	None
b) concrete pad dimensions	3'x3'
4- Dia./type of well casing	2" DIA PVC
5- Type/slot size of screen	2" DIA PVC 10 slot PVC
6- Type screen filter	Coarse Sand
a) Quantity used	4 - 40 lb bag
7- Type of seal	Bentonite chips
a) Quantity used	3.0 gallons
8- Grout	
a) Grout mix used	6 gal sack
b) Method of placement	Tremie
c) Vol. of well casing grout	
Development method	Pumping/Swabbing
Development time	1 hour
Estimated purge volume	55 gallons

Comments

CH2MHILL

PROJECT NUMBER	WELL NUMBER		
139322.FI.70	SWMU-4-MW-8	SHEET 1	OF 1

WELL COMPLETION DIAGRAM

PROJECT : NASD Vieques PA/SI LOCATION : SWMU-4

DRILLING CONTRACTOR : GEOWORKS INC.

DRILLING METHOD AND EQUIPMENT USED : AIR ROTARY HAMMER

WATER LEVELS : 55' START : 6/2/00 END : 6/2/00 LOGGER : M. CLASEN

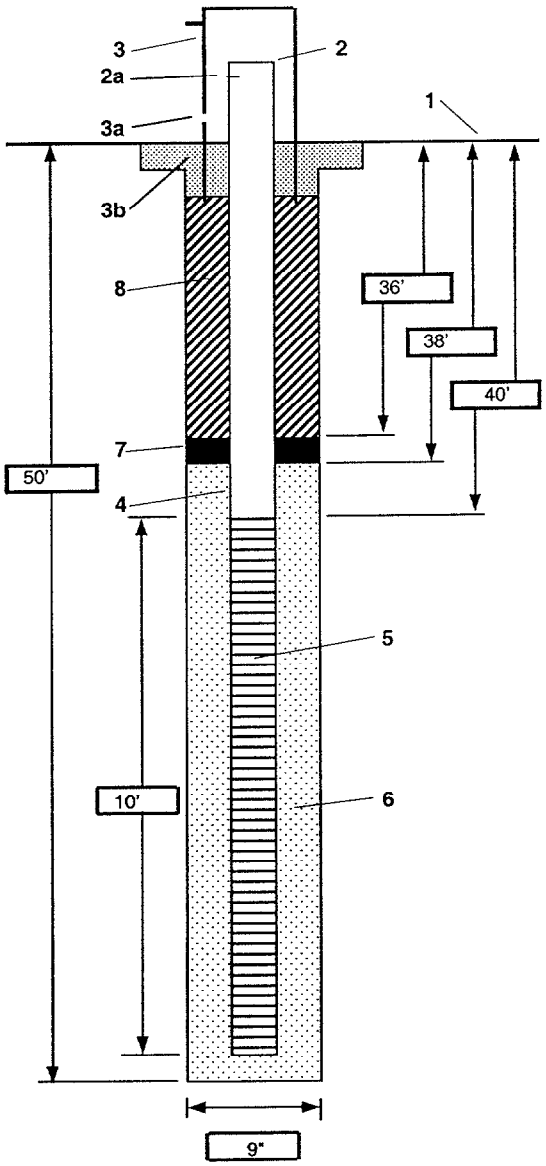

1- Ground elevation at well	See Surveyor Info
2- Top of casing elevation	See Surveyor Info
a) vent hole?	None
3- Wellhead protection cover type	Steel
a) weep hole?	None
b) concrete pad dimensions	3'x3'
4- Dia./type of well casing	2" DIA PVC
5- Type/slot size of screen	2" DIA PVC 10 slot PVC
6- Type screen filter	Coarse Sand
a) Quantity used	4 - 40 lb bag
7- Type of seal	Bentonite chips
a) Quantity used	3.0 gallons
8- Grout	
a) Grout mix used	6 gal sack
b) Method of placement	Tremie
c) Vol. of well casing grout	
Development method	Pumping/Swabbing
Development time	2.5 hours
Estimated purge volume	45 gallons

Comments

SWMU-6

WELL COMPLETION DIAGRAMS

CH2MHILL

PROJECT NUMBER	WELL NUMBER		
139322.FI.60	SWMU-6-MW-1	SHEET 1	OF 1

WELL COMPLETION DIAGRAM

PROJECT : VIEQUES (PA/SI) LOCATION : UPGRADIENT MANGROVE DUMP

DRILLING CONTRACTOR : GEOWORKS INC.

DRILLING METHOD AND EQUIPMENT USED : AIR ROTARY HAMMER

WATER LEVELS : START : 4/24/00 END : 4/24/00 LOGGER : G. SILVA

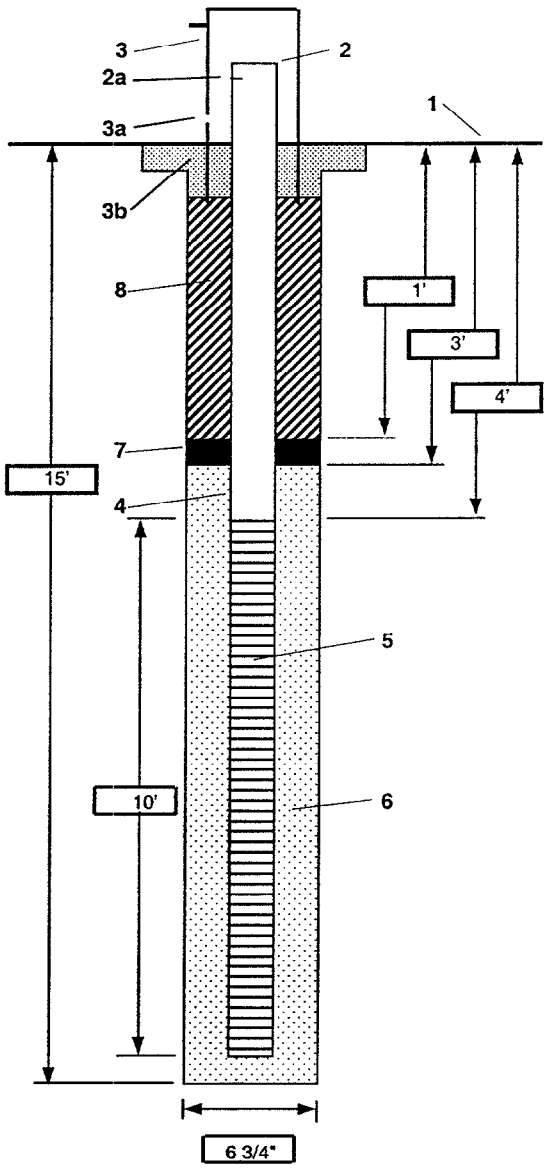

1- Ground elevation at well

2- Top of casing elevation
a) vent hole? N/A

3- Wellhead protection cover type ABOVE GROUND
a) weep hole? N/A
b) concrete pad dimensions 4' X 4' X 3'

4- Dia./type of well casing 2" / PVC

5- Type/slot size of screen PVC / 10 SLOT

6- Type screen filter SAND
a) Quantity used 5 - 40 lb BAGS

7- Type of seal BENTONITE PELLETS
a) Quantity used 5 - 40 lb BAGS

8- Grout
a) Grout mix used
b) Method of placement TOP CASING
c) Vol. of well casing grout

Development method GRUNFOS

Development time

Estimated purge volume

Comments

CH2MHILL

PROJECT NUMBER	WELL NUMBER		
139322.FI.60	SWMU-6-MW-2	SHEET 1	OF 1

WELL COMPLETION DIAGRAM

PROJECT : VIEQUES (PA/SI) LOCATION : MANGROVE ADJACENT TO LAGOON

DRILLING CONTRACTOR : GEOWORKS INC.

DRILLING METHOD AND EQUIPMENT USED : HAND AUGER

WATER LEVELS : START : 4/24/00 END : 4/24/00 LOGGER : G. SILVA

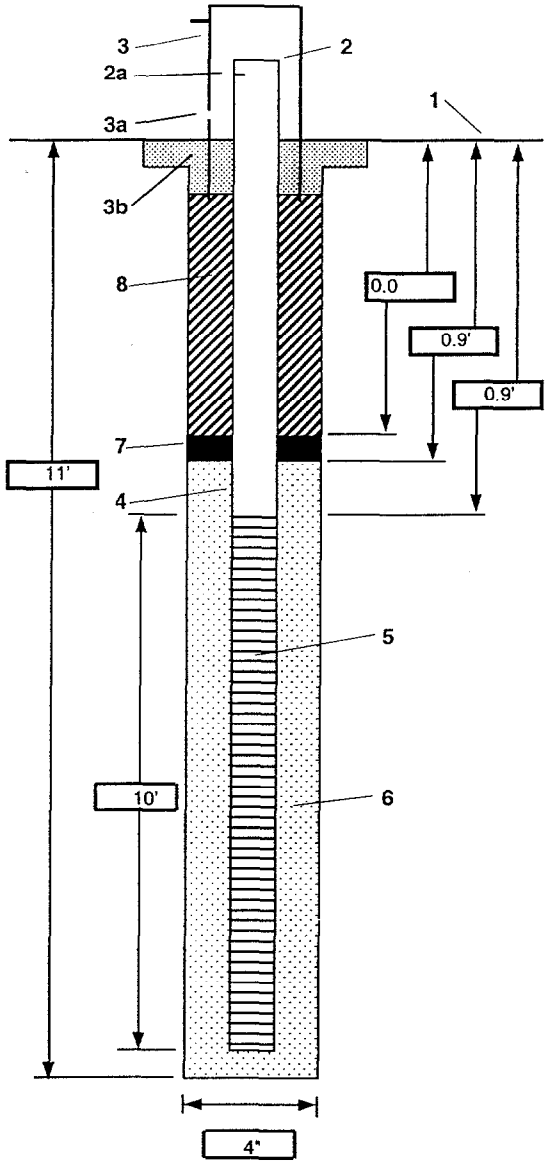

1- Ground elevation at well

2- Top of casing elevation
a) vent hole? N/A

3- Wellhead protection cover type ABOVE GROUND
a) weep hole? N/A
b) concrete pad dimensions 4' X 4' X 3'

4- Dia./type of well casing 2" / PVC

5- Type/slot size of screen PVC / 10 SLOT

6- Type screen filter SAND
a) Quantity used 5 - 40 lb BAGS

7- Type of seal BENTONITE PELLETS
a) Quantity used 3 GALS.

8- Grout
a) Grout mix used
b) Method of placement TOP CASING
c) Vol. of well casing grout

Development method PERISTALTIC

Development time

Estimated purge volume

Comments

CH2MHILL

PROJECT NUMBER	WELL NUMBER		
139322.FI.60	SWMU-6-MW-3	SHEET 1	OF 1

WELL COMPLETION DIAGRAM

PROJECT : VIEQUES (PA/SI) LOCATION : MANGROVE ADJACENT TO LAGOON

DRILLING CONTRACTOR : GEOWORKS INC.

DRILLING METHOD AND EQUIPMENT USED : HAND AUGER

WATER LEVELS : START : 4/25/00 END : 4/25/00 LOGGER : G. SILVA

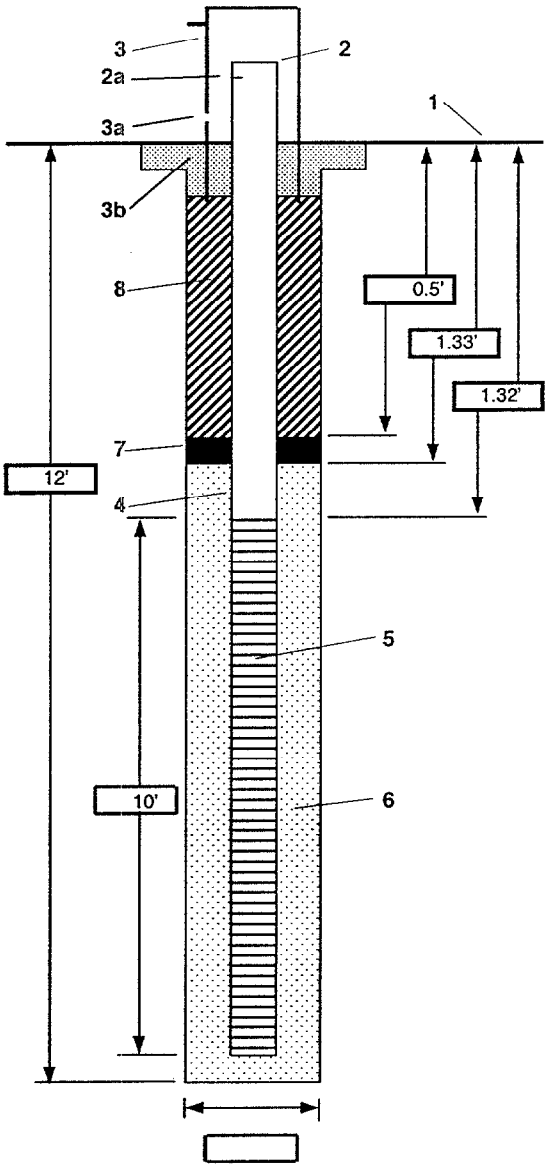

1- Ground elevation at well

2- Top of casing elevation
a) vent hole? N/A

3- Wellhead protection cover type ABOVE GROUND
a) weep hole? N/A
b) concrete pad dimensions 4' X 4' X 3'

4- Dia./type of well casing 2" / PVC

5- Type/slot size of screen PVC / 10 SLOT

6- Type screen filter SAND
a) Quantity used 5 - 40 lb BAGS

7- Type of seal BENTONITE PELLETS
a) Quantity used 3 GALS.

8- Grout
a) Grout mix used
b) Method of placement TOP CASING
c) Vol. of well casing grout

Development method GRUNFOS

Development time

Estimated purge volume

Comments

CH2MHILL

PROJECT NUMBER	WELL NUMBER		
139322.FI.60	SWMU-6-MW-4	SHEET 1	OF 1

WELL COMPLETION DIAGRAM

PROJECT : VIEQUES (PA/SI) LOCATION : MANGROVE DUMP SITE

DRILLING CONTRACTOR : GEOWORKS INC.

DRILLING METHOD AND EQUIPMENT USED : HAND AUGER

WATER LEVELS : START : 4/25/00 END : 4/25/00 LOGGER : G. SILVA

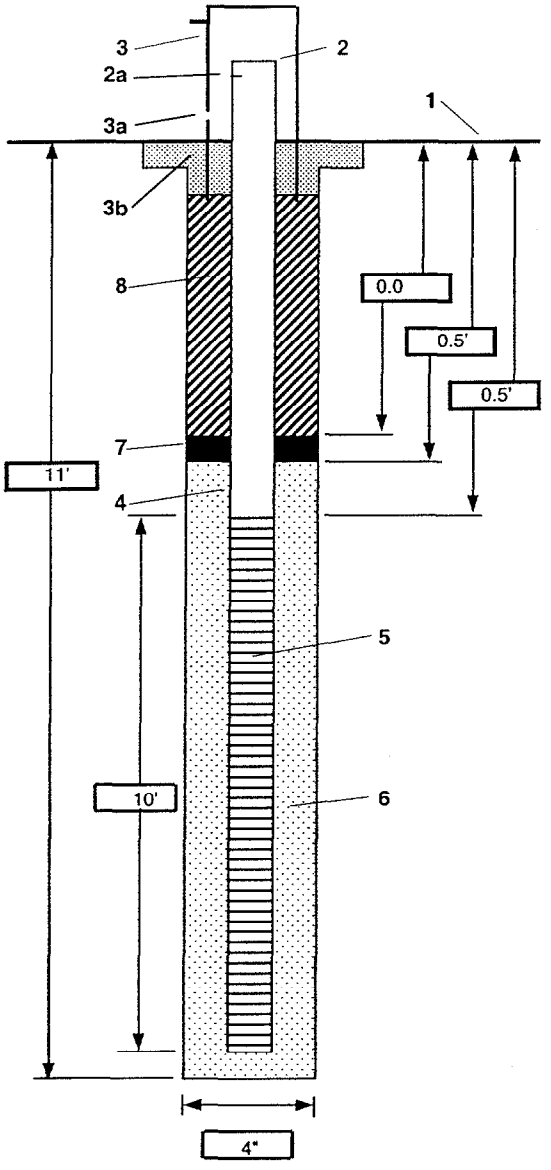

1- Ground elevation at well

2- Top of casing elevation
a) vent hole? N/A

3- Wellhead protection cover type ABOVE GROUND
a) weep hole? N/A
b) concrete pad dimensions 4' X 4' X 3'

4- Dia./type of well casing 2" / PVC

5- Type/slot size of screen PVC / 10 SLOT

6- Type screen filter SAND
a) Quantity used 5 - 40 lb BAGS

7- Type of seal BENTONITE PELLETS
a) Quantity used

8- Grout
a) Grout mix used
b) Method of placement TOP CASING
c) Vol. of well casing grout

Development method PERISTALTIC

Development time

Estimated purge volume

Comments

SWMU-7

WELL COMPLETION DIAGRAMS

CH2MHILL

PROJECT NUMBER	WELL NUMBER		
139322.FI.70	SWMU-7MW-2R	SHEET 1	OF 1

WELL COMPLETION DIAGRAM

PROJECT : VIEQUES (PA/SI) LOCATION : Quebrada Disposal Site

DRILLING CONTRACTOR : GEOWORKS INC.

DRILLING METHOD AND EQUIPMENT USED : Air Rotary Hammer

WATER LEVELS : 75' START : 1000 Hr (4/28/2000) END : 1400 Hr (5/1/2000) LOGGER : G. SILVA

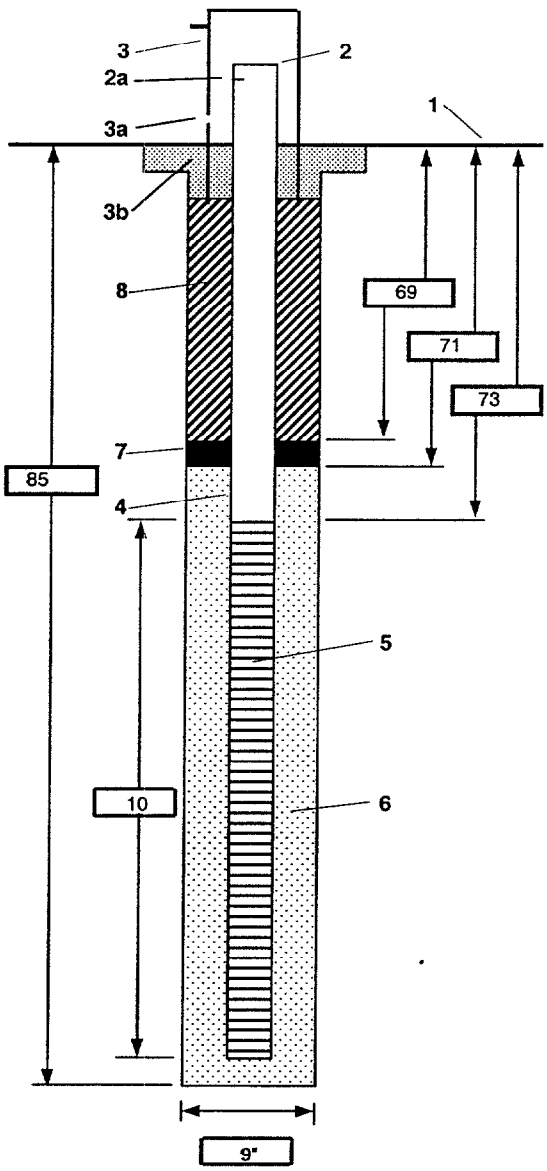

1- Ground elevation at well	See Surveyor Info
2- Top of casing elevation	See Surveyor Info
a) vent hole?	None
3- Wellhead protection cover type	Above Ground
a) weep hole?	None
b) concrete pad dimensions	4' X 4' X 3"
4- Dia./type of well casing	2-inch Sch 40 PVC
5- Type/slot size of screen	Sch 40 PVC 10 Slot
6- Type screen filter	SAND
a) Quantity used	5 - 40 lb BAGS
7- Type of seal	Bentonite Pellets
a) Quantity used	3 Gallons
8- Grout	
a) Grout mix used	Cement Sand
b) Method of placement	Top Casing
c) Vol. of well casing grout	150 gallons
Development method	See Development Log
Development time	See Development Log
Estimated purge volume	See Development Log

Comments

CH2MHILL

PROJECT NUMBER	WELL NUMBER		
139322.FI.70	SWMU-7-MW-3R	SHEET 1	OF 1

WELL COMPLETION DIAGRAM

PROJECT : VIEQUES (PA/SI) LOCATION : QUEBRADA DISPOSAL SITE

DRILLING CONTRACTOR : GEOWORKS INC.

DRILLING METHOD AND EQUIPMENT USED : AIR ROTARY HAMMER

WATER LEVELS : 47' START : 910 Hr (5/1/2000) END : 1300 Hr 5/2/200(LOGGER : G. SILVA

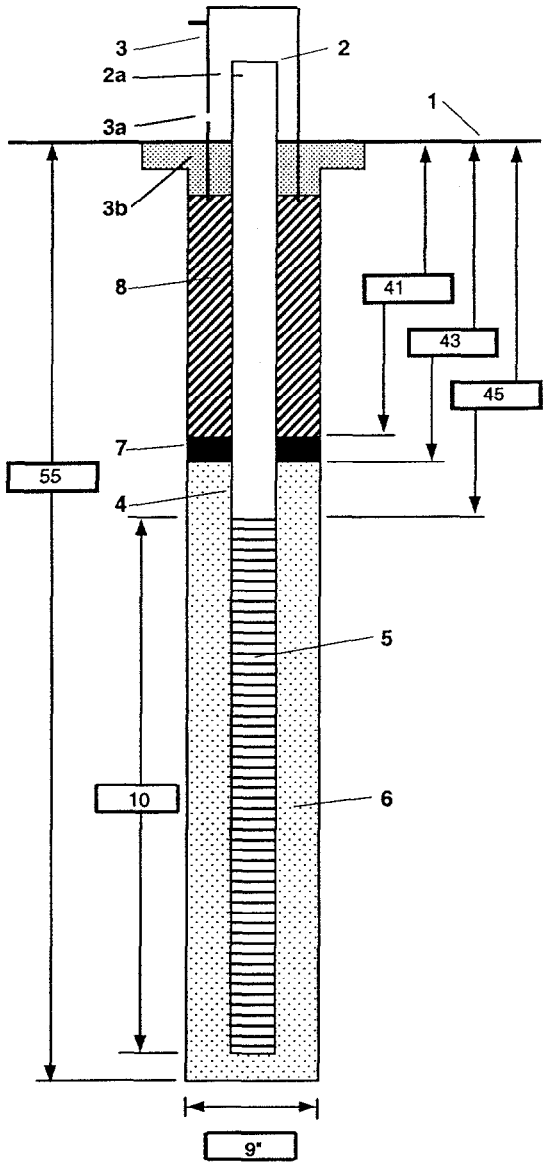

1- Ground elevation at well	See Surveyor Info
2- Top of casing elevation	See Surveyor Info
a) vent hole?	None
3- Wellhead protection cover type	Above Ground
a) weep hole?	None
b) concrete pad dimensions	4'X4'X3"
4- Dia./type of well casing	2-inch
	Sch 40 PVC
5- Type/slot size of screen	Sch 40 PVC
	10 Slot
6- Type screen filter	Coarse sand
a) Quantity used	5 Bags 40 lbs
7- Type of seal	Bentonite
a) Quantity used	3 Gallons
8- Grout	
a) Grout mix used	Cement sand
b) Method of placement	Top Hole
c) Vol. of well casing grout	110 gallons
Development method	See Development Log
Development time	See Development Log
Estimated purge volume	See Development Log

Comments

SWMU-14

WELL COMPLETION DIAGRAMS

CH2MHILL

PROJECT NUMBER	WELL NUMBER		
139322.FI.70	SWMU-14-MW1	SHEET 1	OF 1

WELL COMPLETION DIAGRAM

PROJECT : NASD, VIEQUES, PUERTO RICO LOCATION : Upgradient SWMU-14
DRILLING CONTRACTOR : GEOWORKS INC.
DRILLING METHOD AND EQUIPMENT USED : AIR ROTARY HAMMER
WATER LEVELS : 58' BGS START : 1330 Hr (4/2/00) END : 1100 Hr (4/7/00) LOGGER : G. SILVA

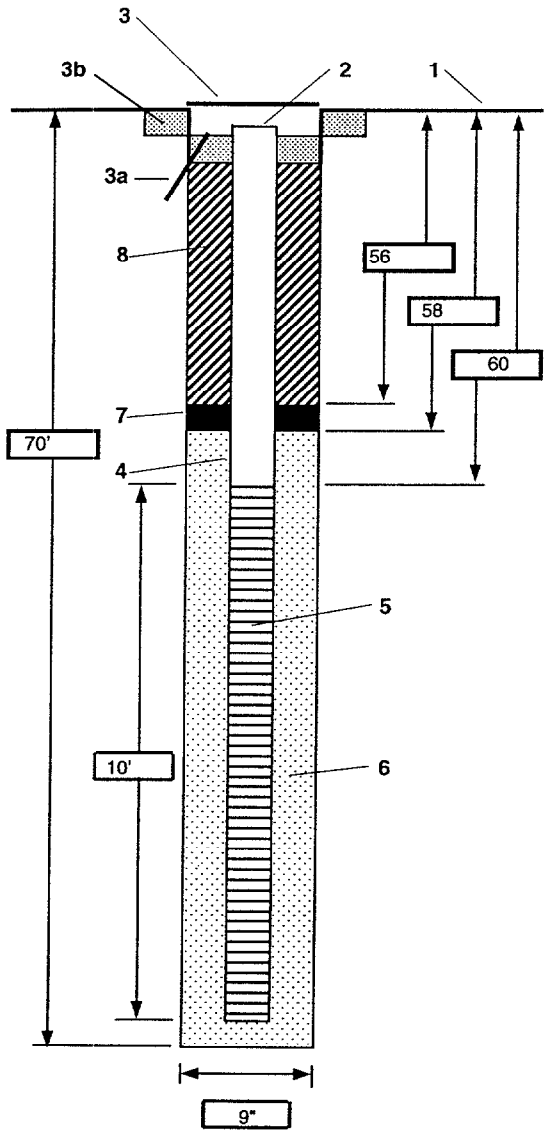

1- Ground elevation at well	42.25
2- Top of casing elevation	
3- Wellhead protection cover type	steel flush
a) drain tube?	None
b) concrete pad dimensions	3 ft. x 3 ft. x 3"
4- Dia./type of well casing	2-inch Sch. 40 PVC
5- Type/slot size of screen	10 slot Sch 40 PVC
6- Type screen filter	coarse sand
a) Quantity used	3.5- 40 lb bags
7- Type of seal	bentonite
a) Quantity used	3 gallons
8- Grout	
a) Grout mix used	6 gal/sack
b) Method of placement	Top hole
c) Vol. of well casing grout	140 gallons
Development method	pumping and swabbing
Development time	1 hour
Estimated purge volume	50 gallons

Comments

CH2MHILL

PROJECT NUMBER	WELL NUMBER		
139322.FI.70	SWMU-14 MW2	SHEET 1	OF 1

WELL COMPLETION DIAGRAM

PROJECT : Vieques (PA/SI)
LOCATION : SWMU-14 Down Gradient of Washrack
DRILLING CONTRACTOR : Geoworks Drilling
DRILLING METHOD AND EQUIPMENT USED : Airrotary Hammer
WATER LEVELS : 48-feet bgs START : 4/5/00 (1100 HR) END :4/2/00 (1330 HR) LOGGER : G. Silva

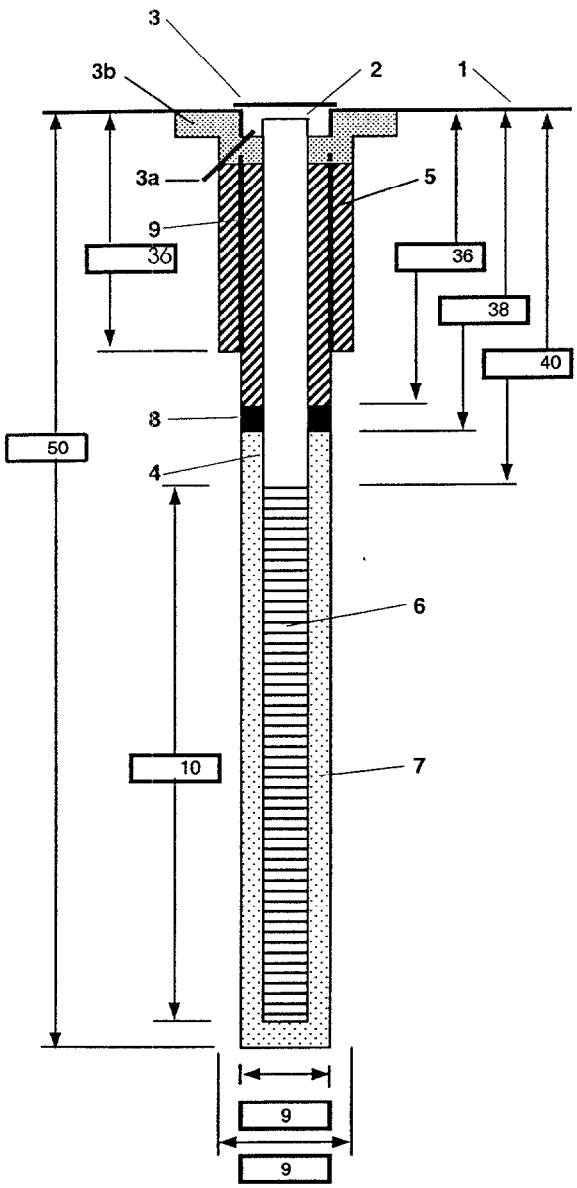

1- Ground elevation at well	See Surveyor Info
2- Top of casing elevation	See Surveyor Info
3- Wellhead protection cover type	Aboveground Completion
a) drain tube?	None
b) concrete pad dimensions	4'X4'X3"
4- Dia./type of well casing	2-inch
	Sch 40 PVC
5- Dia./type surface casing	4" x 4" square tube
	aboveground aluminum
6- Type/slot/size of screen	Sch 40 PVC
	10 slot
7- Type screen filter	Coarse sand
a) Quantity used	3- 401b bags
8- Type of seal	Bentonite Seal
a) Quantity used	5-Gallons
9- Grout	
a) Grout mix used	Cement Sand
b) Method of placement	Top
c) Vol.of surface casing grout	90 gallons
d) Vol. of well casing grout	N/A
Development method	See Development Log
Development time	See Development Log
Estimated purge volume	See Development Log

Comments

SWMU-15

WELL COMPLETION DIAGRAMS

CH2MHILL

PROJECT NUMBER	WELL NUMBER		
139322.FI.60	SWMU-15-MW01	SHEET 1	OF 1

WELL COMPLETION DIAGRAM

PROJECT : LOCATION : NASD-SWMU15

DRILLING CONTRACTOR : GEOWORKS

DRILLING METHOD AND EQUIPMENT USED : AIR ROTARY HAMMER

WATER LEVELS : 38.5 FT START : 4/14/00 END : 4/17/00 LOGGER : B. TREBBLE

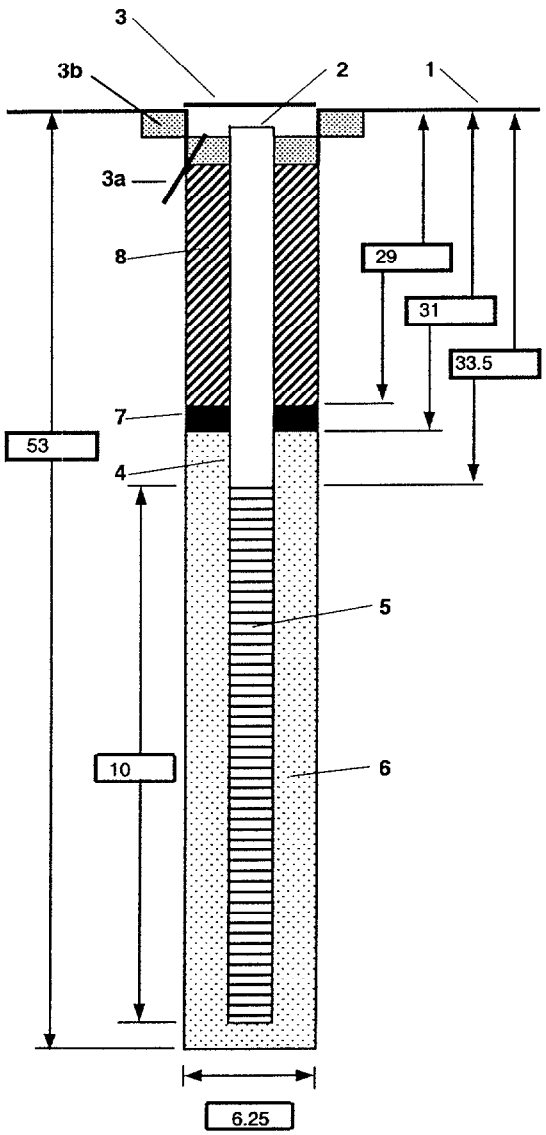

1- Ground elevation at well

2- Top of casing elevation

3- Wellhead protection cover type: FLUSH MOUNTED
- a) drain tube?: N/A
- b) concrete pad dimensions: 4' X 4' X 3'

4- Dia./type of well casing

5- Type/slot size of screen: PVC 10 SLOT SCH 40

6- Type screen filter: 10/30
- a) Quantity used: 3 X 100 LB BAGS

7- Type of seal: BETONITE
- a) Quantity used: 1 X 50 LB BAG

8- Grout
- a) Grout mix used
- b) Method of placement
- c) Vol. of well casing grout

Development method

Development time

Estimated purge volume

Comments SCREEN SET 33.5 - 43.5
STATIC WATER LEVEL 38.50 DURING WELL INSTALLATION

AOC-C

WELL COMPLETION DIAGRAMS

CH2MHILL

PROJECT NUMBER	WELL NUMBER	
139322.FI.70	AOC-C-MW-1	SHEET 1 OF 1

WELL COMPLETION DIAGRAM

PROJECT : VIEQUES (PA/SI) LOCATION : DOWN GRADIENT OLD SEPTIC TANK

DRILLING CONTRACTOR : GEOWORKS INC.

DRILLING METHOD AND EQUIPMENT USED : AIR ROTARY HAMMER

WATER LEVELS : 37' START : 900 Hr (4/18/2000) END : 1600 Hr \(4/20/2000) LOGGER : G. SILVA

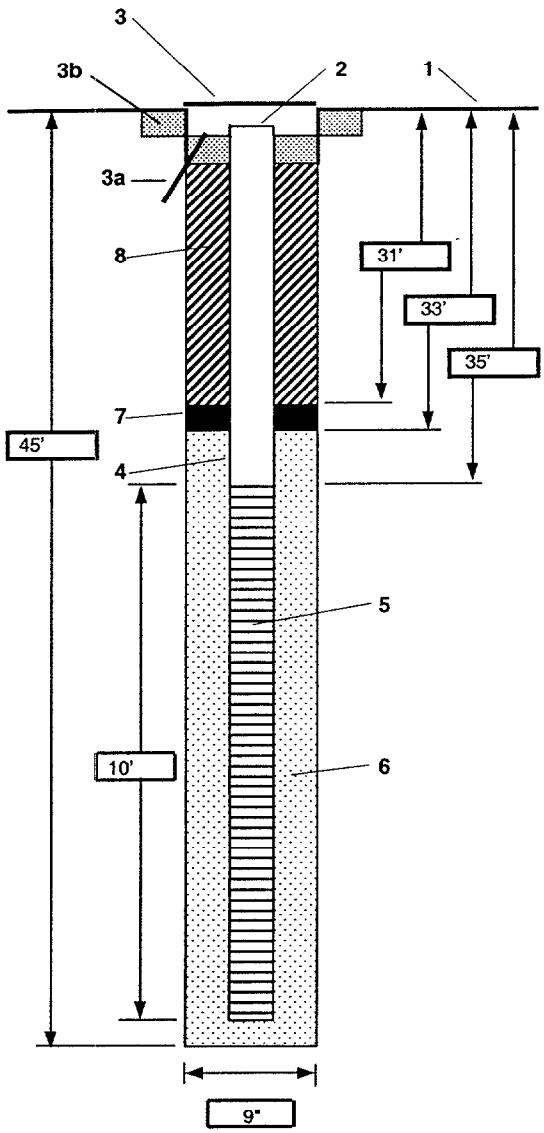

1- Ground elevation at well	See Surveyor Info
2- Top of casing elevation	See Surveyor Info
3- Wellhead protection cover type	Flush mounted
a) drain tube?	None
b) concrete pad dimensions	4' X 4' X 3"
4- Dia./type of well casing	2" DIA. Sch 40 PVC
5- Type/slot size of screen	0.010" Sch 40 PVC
6- Type screen filter	Course Sand
a) Quantity used	4- 40 lb bags
7- Type of seal	Bentonite
a) Quantity used	3 Gallons
8- Grout	
a) Grout mix used	Cement Sand
b) Method of placement	Top Hole
c) Vol. of well casing grout	85 gallons
Development method	See Development Log
Development time	See Development Log
Estimated purge volume	See Development Log

Comments

AOC-E

WELL COMPLETION DIAGRAMS

CH2MHILL

PROJECT NUMBER	WELL NUMBER		
139322.FI.70	AOC-E-MW-4	SHEET 1	OF 1

WELL COMPLETION DIAGRAM

PROJECT : VIEQUES (PA/SI) LOCATION : NEAR EXISTING WELL UST

DRILLING CONTRACTOR : GEOWORKS INC.

DRILLING METHOD AND EQUIPMENT USED : AIR ROTARY HAMMER

WATER LEVELS : 42' START : 900 Hr (4/13/2000) END : 1500 Hr (4/17/ LOGGER : G. SILVA

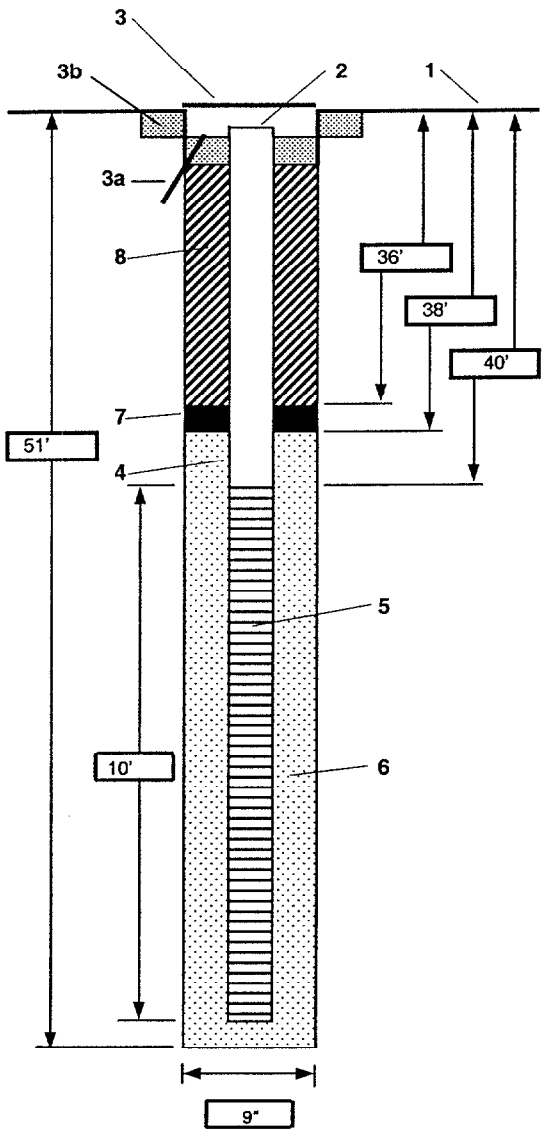

1- Ground elevation at well	See Surveyor Info
2- Top of casing elevation	See Surveyor Info
3- Wellhead protection cover type	Flush Mounted
a) drain tube?	None
b) concrete pad dimensions	4' X 4' X 3"
4- Dia./type of well casing	2" DIA.
5- Type/slot size of screen	Sch 40 PVC/10 SLOT
6- Type screen filter	Cement Sand
a) Quantity used	5 Bags
7- Type of seal	Bentonite
a) Quantity used	3 Gallons
8- Grout	
a) Grout mix used	Cement
b) Method of placement	Top Casing
c) Vol. of well casing grout	100 gallons
Development method	See Development Log
Development time	See Development Log
Estimated purge volume	See Development Log

Comments

CH2MHILL

PROJECT NUMBER	WELL NUMBER		
139322.FI.70	AOC-E-MW-5	SHEET 1	OF 1

WELL COMPLETION DIAGRAM

PROJECT : VIEQUES (PA/SI) LOCATION : NEAR FORMER UST LOCATION

DRILLING CONTRACTOR : GEOWORKS INC.

DRILLING METHOD AND EQUIPMENT USED : AIR ROTARY HAMMER

WATER LEVELS : 42' START : 1100 Hr. (4/14/2000) END : 4430 Hr (4/17/ LOGGER : G. SILVA

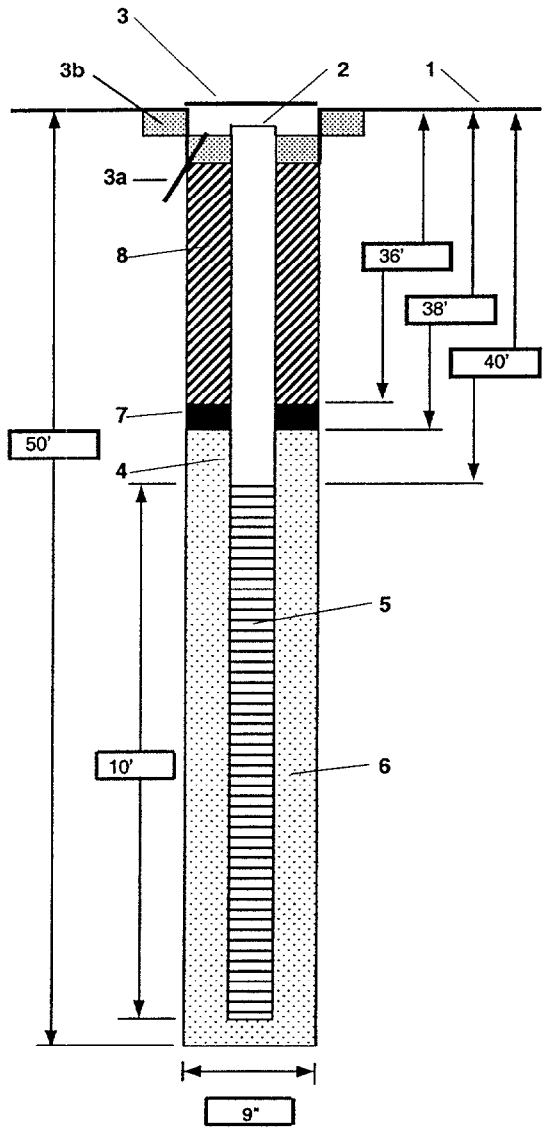

1- Ground elevation at well	See Surveyor Info
2- Top of casing elevation	See Surveyor Info
3- Wellhead protection cover type	Flush Mounted
a) drain tube?	None
b) concrete pad dimensions	4' X 4' X 3"
4- Dia./type of well casing	2" DIA. Sch 40 PVC
5- Type/slot size of screen	Sch 40 PVC/10 SLOT
6- Type screen filter	Coarse Sand
a) Quantity used	5 BAGS
7- Type of seal	Bentonite Pellets
a) Quantity used	3 Gallons
8- Grout	
a) Grout mix used	Cement Sand
b) Method of placement	Top Casing
c) Vol. of well casing grout	110 gallons
Development method	See Development Log
Development time	See Development Log
Estimated purge volume	See Development Log

Comments

CH2MHILL

PROJECT NUMBER	WELL NUMBER		
139322.FI.70	AOC-E-MW-6	SHEET 1	OF 1

WELL COMPLETION DIAGRAM

PROJECT : VIEQUES
LOCATION : NEAR FORMER UST NEAR CAR RACK
DRILLING CONTRACTOR : GEOWORKS INC.
DRILLING METHOD AND EQUIPMENT USED : AIR ROTARY HAMMER
WATER LEVELS : 38 ' START : 800 Hr (4/17/2000) END : 1500 Hr (4/26/2000) LOGGER : G. SILVA

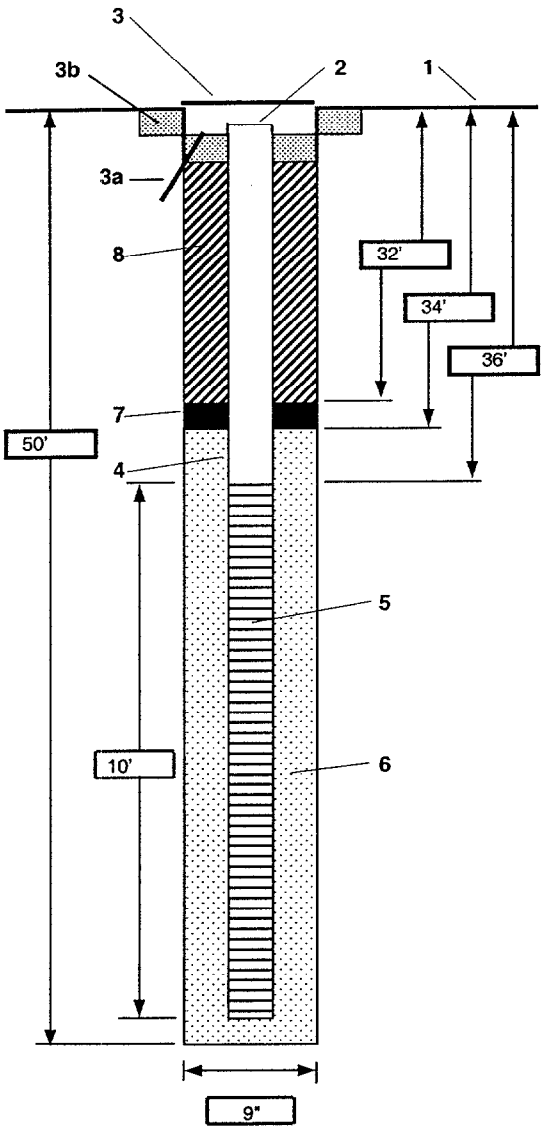

1- Ground elevation at well	See Surveyor Info
2- Top of casing elevation	See Surveyor Info
3- Wellhead protection cover type	Flush Mounted
a) drain tube?	None
b) concrete pad dimensions	4' X 4' X 3"
4- Dia./type of well casing	2-inch/Sch 40 PVC
5- Type/slot size of screen	Sch 40 PVC/10 slot
6- Type screen filter	Coarse Sand
a) Quantity used	5-40 LB. Bags
7- Type of seal	Bentonite Pellets
a) Quantity used	3 Gallons
8- Grout	
a) Grout mix used	Cement Sand
b) Method of placement	Top Casing
c) Vol. of well casing grout	115 gallons
Development method	See Development Log
Development time	See Development Log
Estimated purge volume	See Development Log

Comments

AOC-F

WELL COMPLETION DIAGRAMS

CH2MHILL

PROJECT NUMBER	WELL NUMBER		
139322.FI.70	AOC-F MW-1	SHEET 1	OF 1

WELL COMPLETION DIAGRAM

PROJECT : VIEQUES (PA/SI) LOCATION : UP GRADIENT SEPTIC TANK

DRILLING CONTRACTOR : GEOWORKS INC.

DRILLING METHOD AND EQUIPMENT USED : AIR ROTARY AIR

WATER LEVELS : 58' BGS. START : 1330 Hr (4/7/2000) END : 1500 (4/11/2000) LOGGER : G. SILVA

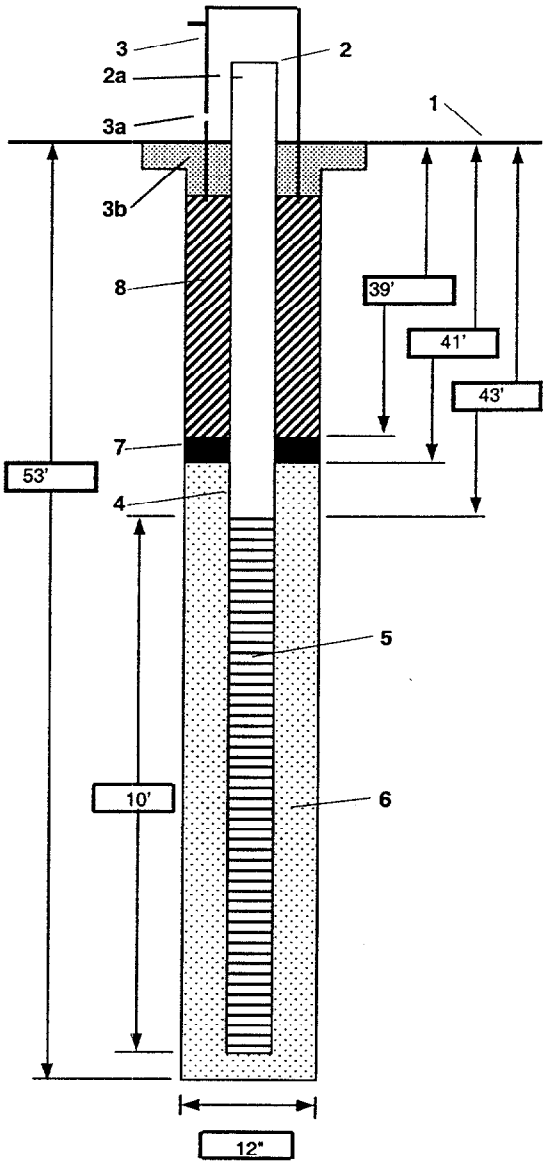

1- Ground elevation at well	See Surveyor Info
2- Top of casing elevation	See Surveyor Info
a) vent hole?	None
3- Wellhead protection cover type	Flush Mounted
a) weep hole?	None
b) concrete pad dimensions	4'X4'X3"
4- Dia./type of well casing	2-inch
	Sch 40 PVC
5- Type/slot size of screen	Sch 40 PVC
	10 Slot
6- Type screen filter	Coarse Sand
a) Quantity used	5 - 40 lb bags
7- Type of seal	Bentonite Pellets
a) Quantity used	4.5 gallons
8- Grout	
a) Grout mix used	Cement Sand
b) Method of placement	Top of Casing
c) Vol. of well casing grout	100 gallons
Development method	See Development Log
Development time	See Development Log
Estimated purge volume	See Development Log

Comments

CH2MHILL

PROJECT NUMBER	WELL NUMBER	
139322.FI.70	AOC-F MW-2	SHEET 1 OF 1

WELL COMPLETION DIAGRAM

PROJECT : VIEQUES (PA/SI) LOCATION : DOWN GRADIENT SEPTIC TANK

DRILLING CONTRACTOR : GEOWORKS INC.

DRILLING METHOD AND EQUIPMENT USED : AIR ROTARY HAMMER

WATER LEVELS : 42' START : 830 Hr (4/10/2000) END :1100 Hr (4/13/2000) LOGGER : G. SILVA

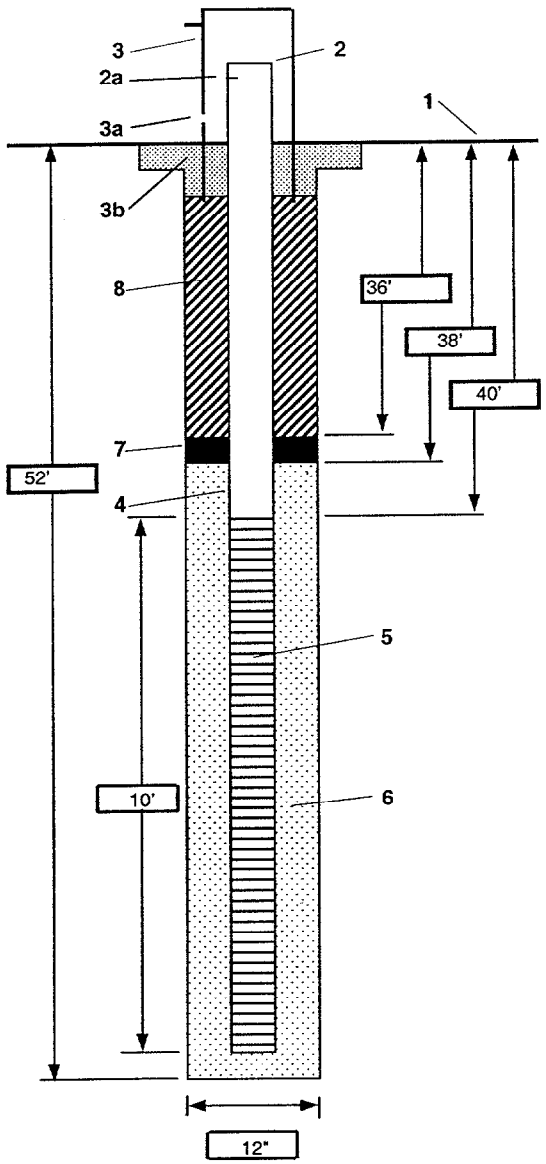

1- Ground elevation at well	See Surveyor Info
2- Top of casing elevation	See Surveyor Info
a) vent hole?	None
3- Wellhead protection cover type	Flush Mounted
a) weep hole?	None
b) concrete pad dimensions	4'X4'X3"
4- Dia./type of well casing	2-inch
	Sch 40 PVC
5- Type/slot size of screen	Sch 40 PVC
	10 Slot
6- Type screen filter	Coarse Sand
a) Quantity used	5 - 40 lb bags
7- Type of seal	Bentonite Pellets
a) Quantity used	3.5 gallosn
8- Grout	
a) Grout mix used	Cement Sand
b) Method of placement	Top of Casing
c) Vol. of well casing grout	110 gallons
Development method	See Development Log
Development time	See Development Log
Estimated purge volume	See Development Log

Comments

CH2MHILL

PROJECT NUMBER	WELL NUMBER		
139322.FI.70	AOC-F MW-3	SHEET 1	OF 1

WELL COMPLETION DIAGRAM

PROJECT : VIEQUES (PA/SI) LOCATION : DOWN GRADIENT SEPTIC TANK

DRILLING CONTRACTOR : GEOWORKS INC.

DRILLING METHOD AND EQUIPMENT USED : AIR ROTARY HAMMER

WATER LEVELS : 58' BGS. START : 1330 Hr (4/11/2000) END : 1600(4/14/2000) LOGGER : G. SILVA

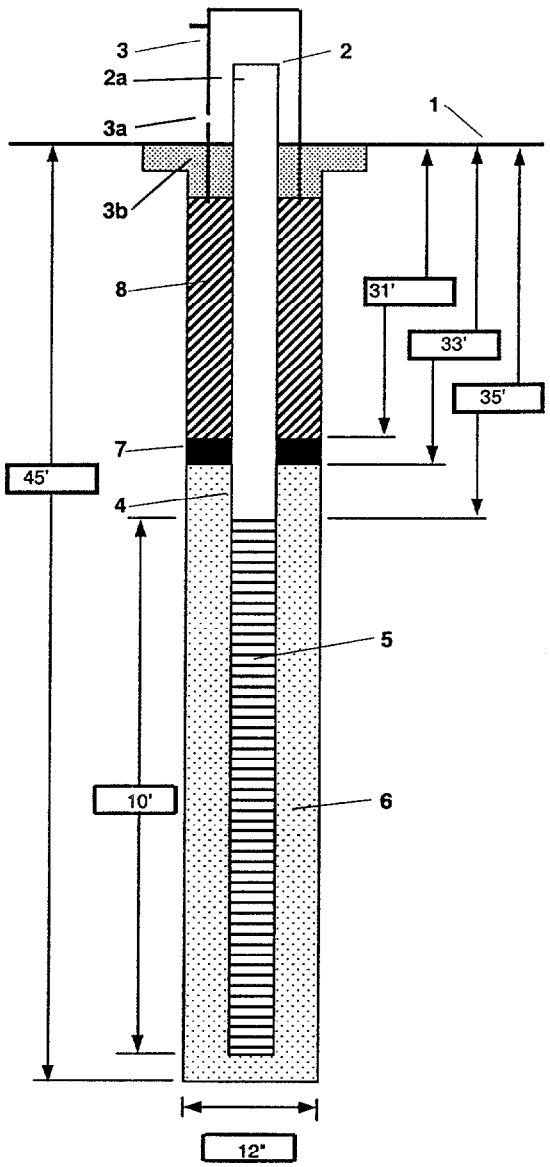

1- Ground elevation at well	See Surveyor Info
2- Top of casing elevation	See Surveyor Info
a) vent hole?	None
3- Wellhead protection cover type	Flush Mounted
a) weep hole?	None
b) concrete pad dimensions	4'X4'X3"
4- Dia./type of well casing	2-inch
	Sch 40 PVC
5- Type/slot size of screen	Sch 40 PVC
	10 Slot
6- Type screen filter	Coarse Sand
a) Quantity used	4-40 lb bags
7- Type of seal	Bentonite pellets
a) Quantity used	4 gallons
8- Grout	
a) Grout mix used	Cement Sand
b) Method of placement	Top Hole
c) Vol. of well casing grout	90 Gallons
Development method	See Development Log
Development time	See Development Log
Estimated purge volume	See Development Log

Comments

CH2MHILL

PROJECT NUMBER	WELL NUMBER		
139322.FI.70	AOC-F MW-4	SHEET 1	OF 1

WELL COMPLETION DIAGRAM

PROJECT : VIEQUES (PA/SI) LOCATION : DOWN GRADIENT SEPTIC TANK

DRILLING CONTRACTOR : GEOWORKS INC.

DRILLING METHOD AND EQUIPMENT USED : AIR ROTARY HAMMER

WATER LEVELS : 42" START : 800 Hr (4/12/2000) END : 1400 Hr (4/24/2000) LOGGER : G. SILVA

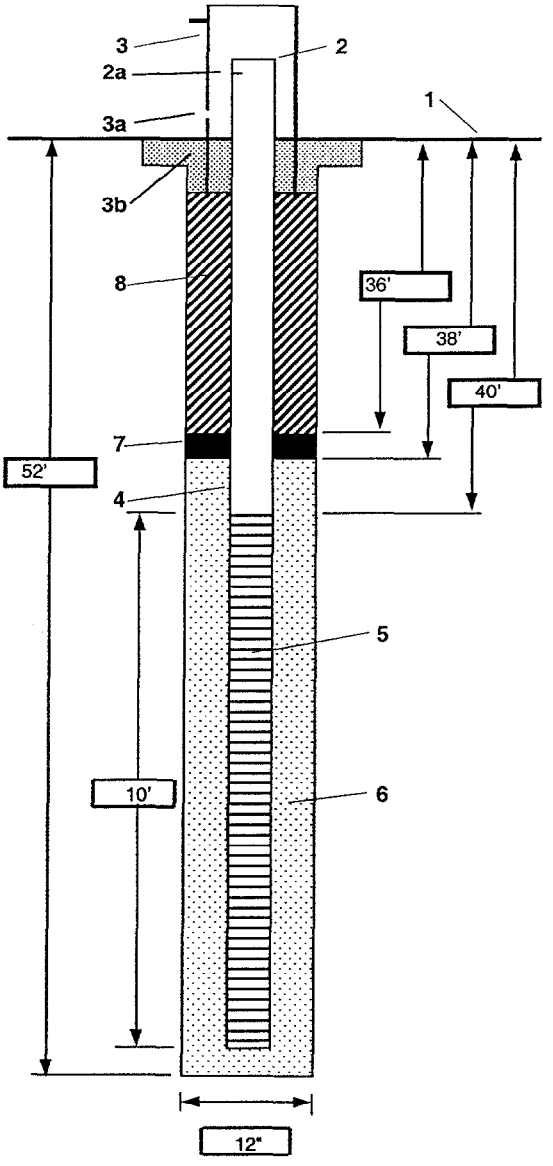

1- Ground elevation at well	See Surveyor Information
2- Top of casing elevation	See Surveyor Information
a) vent hole?	None
3- Wellhead protection cover type	Flush Mounted
a) weep hole?	None
b) concrete pad dimensions	4' X 4' X 3 1/2'
4- Dia./type of well casing	2-inch
	Sch 40 PVC
5- Type/slot size of screen	Sch 40 PVC
	10 Slot
6- Type screen filter	Coarce Sand
a) Quantity used	5 Bags
7- Type of seal	Bentonite pellets
a) Quantity used	4 gallons
8- Grout	
a) Grout mix used	Cement/Sand
b) Method of placement	Top Hole
c) Vol. of well casing grout	90 gallons
Development method	See Development Log
Development time	See Development Log
Estimated purge volume	See Development Log

Comments

CH2MHILL

PROJECT NUMBER	WELL NUMBER		
139322.FI.70	AOC-F MW-5	SHEET 1	OF 1

WELL COMPLETION DIAGRAM

PROJECT : VIEQUES (PA/SI) LOCATION : DOWN GRADIENT SEPTIC TANK

DRILLING CONTRACTOR : GEOWORKS INC.

DRILLING METHOD AND EQUIPMENT USED : AIR ROTARY HAMMER

WATER LEVELS : 45' START : 1400 Hr (4/12/2000) END : 1100 HR (4/17/2000 LOGGER : G. SILVA

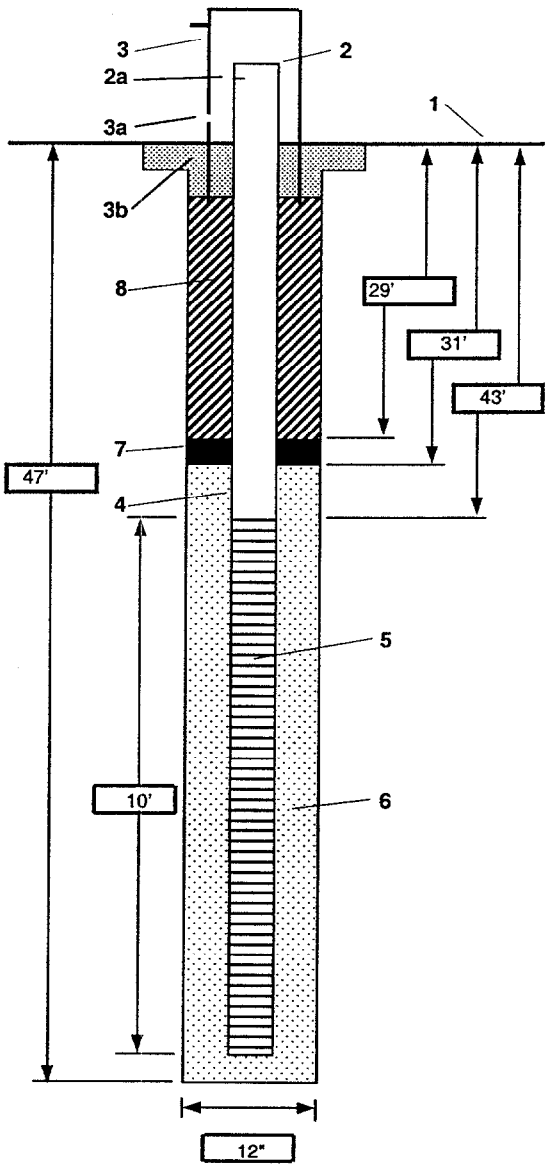

1- Ground elevation at well	See Surveyor Info
2- Top of casing elevation	See Surveyor Info
a) vent hole?	None
3- Wellhead protection cover type	Flush Mounted
a) weep hole?	None
b) concrete pad dimensions	4' X 4' X 3 1/2"
4- Dia./type of well casing	2-inch Sch 40 PVC
5- Type/slot size of screen	Sch 40 PVC 10 Slot
6- Type screen filter	Coarse Sand
a) Quantity used	4 - 40 lb bags
7- Type of seal	Bentonite pellets
a) Quantity used	3 Gallons
8- Grout	
a) Grout mix used	Cement Sand
b) Method of placement	Top Hole
c) Vol. of well casing grout	65 gallons
Development method	See Development Log
Development time	See Development Log
Estimated purge volume	See Development Log

Comments

APPENDIX D

Well Development Records

SWMU-4

MONITORING WELL DEVELOPMENT LOGS

CH2MHILL

PROJECT NUMBER	WELL NUMBER	
139322.FI.60	SWMU-4-MW-1	SHEET 1 OF 1

WELL DEVELOPMENT LOG

PROJECT : VIEQUES, P.R. NASD LOCATION : MW-1

DEVELOPMENT CONTRACTOR : CH2M HILL/GEOWORKS, INC.

DEVELOPMENT METHOD AND EQUIPMENT USED : SURGE/WHALE PUMP

START WATER LEVELS : 27.04 START : 4/27/00 1410 END : 4/27/00 1510 LOGGER : BOB TREBBLE

TD-39.90'

MAXIMUM DRAWDOWN DURING PUMPING: 6.60'

RANGE AND AVERAGE DISCHARGE RATE: 0.1

TOTAL QUANTITY OF WATER DISCHARGED: 20 GALS

DISPOSITION OF DISCHARGE WATER: 55 GAL DRUM

Time	Water Volume Discharged (gal)	Water Level (ft BTOC)	Turbidity (NTU)	Temperature (°C)	pH	Conductivity (µmhos/cm)	Remarks (color, odor, sheen, sediment, etc.)
1410	1	29.74	>100	28.6	6.68	24,595	PUMP AT 38'
1420	2	31.32	>100	29.7	6.56	24,417	PUMP AT 36'
1430	3	32.85	>100	28.4	6.50	24,110	PUMP AT 35'
1440	4	33.25	>100	28.5	6.52	23,960	
1450	5	33.56	>100	28.6	6.46	23,984	PUMP AT 33'
1500	15	33.65	>100	28.7	6.41	24,048	SALINITY 13.5
1510	20	33.64	>100	28.7	6.41	24,662	PUMP AT 32'

CH2MHILL

PROJECT NUMBER	WELL NUMBER	
139322.FI.60	SWMU-4-MW-2	SHEET 1 OF 1

WELL DEVELOPMENT LOG

PROJECT : VIEQUES, P.R. NASD LOCATION : MW-2

DEVELOPMENT CONTRACTOR : CH2M HILL/GEOWORKS, INC.

DEVELOPMENT METHOD AND EQUIPMENT USED : AIRLIFT & GRUNDFOS

START WATER LEVELS : ~ START : WL METER END : NOT WORKING LOGGER : MKC/GGO

DTB=35' SEDIMENT

MAXIMUM DRAWDOWN DURING PUMPING:

RANGE AND AVERAGE DISCHARGE RATE: 1.5 GPM MAX. - 1 GPM AVG

TOTAL QUANTITY OF WATER DISCHARGED: 35 GALS

DISPOSITION OF DISCHARGE WATER: DRUMMED

NO WELL CAP = NO PID READING

Time	Water Volume Discharged (gal)	Water Level (ft BTOC)	Turbidity (NTU)	Temperature (°C)	pH	Conductivity (µmhos/cm)	Remarks (color, odor, sheen, sediment, etc.)
1445	5		1008	29.17	7.27	6710	BROWN
1500	20		415	28.33	7.20	5837	SURGE - SILTY
1520	30		477	28.67	7.30	5865	SURGE - SILTY PUMPED DRY
1540	35		209	28.94	7.34	5974	SURGE - AMBER PUMPED DRY

CH2MHILL

PROJECT NUMBER	WELL NUMBER	
139322.FI.60	SWMU-4-MW-3	SHEET 1 OF 1

WELL DEVELOPMENT LOG

PROJECT : VIEQUES, P.R. NASD LOCATION : SWMU 4

DEVELOPMENT CONTRACTOR : CH2M HILL/GEOWORKS, INC.

DEVELOPMENT METHOD AND EQUIPMENT USED : AIRLIFT & GRUNDFOS

START WATER LEVELS : ~10.00' B/S START : WL METER END : NOT WORKING LOGGER : MKC/GGO

DTB=41.00'

MAXIMUM DRAWDOWN DURING PUMPING:

RANGE AND AVERAGE DISCHARGE RATE: 0.35 GPM UP TO 1.5 GPM

TOTAL QUANTITY OF WATER DISCHARGED: 45 GALS

DISPOSITION OF DISCHARGE WATER: DRUMMED

PID AFTER OPENING WELL = 0.2 PPM

Time	Water Volume Discharged (gal)	Water Level (ft BTOC)	Turbidity (NTU)	Temperature (°C)	pH	Conductivity (µmhos/cm)	Remarks (color, odor, sheen, sediment, etc.)
1314	1	10.00	661	27.50	7.12	23506	CLOUDY, SILTY, BROWN
1340	10		1105	28.60	6.89	23952	AMBER COLOR
1350	20		80.1	28.56	6.81	24580	SURGE
1400	30		92.1	28.07	6.69	24138	SURGE
1414	45		22.8	28.05	6.68	24119	CLEAR - NO ODOR

CH2MHILL

PROJECT NUMBER	WELL NUMBER	
139322.FI.60	SWMU-4-MW-4	SHEET 1 OF 1

WELL DEVELOPMENT LOG

PROJECT : VIEQUES, P.R. NASD LOCATION : SWMU 4

DEVELOPMENT CONTRACTOR : CH2M HILL/GEOWORKS, INC.

DEVELOPMENT METHOD AND EQUIPMENT USED : AIRLIFT & GRUNDFOS PUMP

START WATER LEVELS : 6.90' START : 6.90' END : MKC/GGO LOGGER : MKC/GGO

DTB=41.00'

MAXIMUM DRAWDOWN DURING PUMPING: DRY

RANGE AND AVERAGE DISCHARGE RATE: 0.25 GPM & SLOW RECHARGE

TOTAL QUANTITY OF WATER DISCHARGED: 25 GALS

DISPOSITION OF DISCHARGE WATER: DRUMMED

PID AFTER OPENING WELL = 0.1 PPM

Time	Water Volume Discharged (gal)	Water Level (ft BTOC)	Turbidity (NTU)	Temperature (°C)	pH	Conductivity (µmhos/cm)	Remarks (color, odor, sheen, sediment, etc.)
0950	1	6.71	342	28.07	6.55	22674	CLOUDY, SILTY, BROWN
0955	8	6.02	1192	30.27	7.11	20679	AMBER COLOR
1100	11	6.54	990	30.28	7.13	20372	SURGE
1245	15		1461	27.78	7.09	19612	SURGE
1300	20		1507	27.80	7.10	18644	CLEAR - NO ODOR
1310	25		1120	27.78	7.09	18712	CLOUDY - SURGE

CH2MHILL

PROJECT NUMBER	WELL NUMBER	
139322.FI.60	SWMU-4-MW-5	SHEET 1 OF 1

WELL DEVELOPMENT LOG

PROJECT : VIEQUES, P.R. NASD LOCATION : SWMU 4

DEVELOPMENT CONTRACTOR : CH2M HILL/GEOWORKS, INC.

DEVELOPMENT METHOD AND EQUIPMENT USED : SWAB & GRUNDFOS PUMP

START WATER LEVELS : 9.01' START : 6-3-00 END : LOGGER : M. CLASEN

MAXIMUM DRAWDOWN DURING PUMPING: 26'

RANGE AND AVERAGE DISCHARGE RATE: 0.25-1.0 GPM AVG 0.25

TOTAL QUANTITY OF WATER DISCHARGED: 55 GALS

DISPOSITION OF DISCHARGE WATER: 0-20 gal. Brown, Turbid. 20-50 gal clear

start 11:03 approx 1 gpm

after 11:30 0.3 gpm

Time	Water Volume Discharged (gal)	Water Level (ft BTOC)	Turbidity (NTU)	Temperature (°C)	pH	Conductivity (µmhos/cm)	Remarks (color, odor, sheen, sediment, etc.)
1115	7	35		28.60	7.35	26,794	brown, sediment
1130	20	26		28.70	7.16	25,300	light brown tr sediment
1200	30	22		28.50	7.12	25,460	clear no sediment
1245	55	26.9	10.4	28.60	7.12	25,475	clear no sediment

CH2MHILL

PROJECT NUMBER	WELL NUMBER	
139322.FI.60	SWMU-4-MW-6	SHEET 1 OF 1

WELL DEVELOPMENT LOG

PROJECT : VIEQUES, P.R. NASD LOCATION : SWMU 4

DEVELOPMENT CONTRACTOR : CH2M HILL/GEOWORKS, INC.

DEVELOPMENT METHOD AND EQUIPMENT USED : SWAB & GRUNDFOS PUMP

START WATER LEVELS : 11.80' START : 6-3-00 END : 6-4-00 LOGGER : M. CLASEN

MAXIMUM DRAWDOWN DURING PUMPING:

RANGE AND AVERAGE DISCHARGE RATE:

TOTAL QUANTITY OF WATER DISCHARGED:

DISPOSITION OF DISCHARGE WATER:

PID AFTER OPENING WELL = 0.1 PPM

Time	Water Volume Discharged (gal)	Water Level (ft BTOC)	Turbidity (NTU)	Temperature (°C)	pH	Conductivity (µmhos/cm)	Remarks (color, odor, sheen, sediment, etc.)
1422	10	42'		28.00	7.21	19203	BROWN, TURBID, SILTY
1440							PUMPED DRY
1542	25	22.8		27.91	7.05	19625	TAN, TURBID, SILTY
1800	36	23.1		27.80	6.67	19525	CLEAR, NO SILT
0950	55	23.1		28.08	7.05	19407	TAN, CLOUDY
1015	75	23.1		27.91	6.74	19178	CLEAR, NO SILT
1105	110	23.44		27.93	6.69	19531	CLEAR, NO SILT

CH2MHILL

PROJECT NUMBER	WELL NUMBER	
139322.FI.60	SWMU-4-MW-7	SHEET 1 OF 1

WELL DEVELOPMENT LOG

PROJECT : VIEQUES, P.R. NASD LOCATION : WEST SIDE OF BURN PIT

DEVELOPMENT CONTRACTOR : CH2M HILL/GEOWORKS, INC.

DEVELOPMENT METHOD AND EQUIPMENT USED : SWAB & GRUNDFOS PUMP

START WATER LEVELS : 17.35' START : 6-4-00 END : 6-4-00 LOGGER : M. CLASEN

MAXIMUM DRAWDOWN DURING PUMPING:

RANGE AND AVERAGE DISCHARGE RATE:

TOTAL QUANTITY OF WATER DISCHARGED:

DISPOSITION OF DISCHARGE WATER:

PID AFTER OPENING WELL = 0.1 PPM

Time	Water Volume Discharged (gal)	Water Level (ft BTOC)	Turbidity (NTU)	Temperature (°C)	pH	Conductivity (µmhos/cm)	Remarks (color, odor, sheen, sediment, etc.)
1115	18	26.9		28.66	6.65	14455	SLIGHTLY GREY, TURBID
1145	36	26.3		28.37	6.58	14315	CLEAR, NO SILT
1200	45	25.7		28.33	6.57	14735	CLEAR, NO SILT
1215	55	26.1		28.45	6.56	14824	CLEAR, NO SILT

CH2MHILL

PROJECT NUMBER	WELL NUMBER	
139322.FI.60	SWMU-4-MW-8	SHEET 1 OF 1

WELL DEVELOPMENT LOG

PROJECT : VIEQUES, P.R. NASD LOCATION : WEST SIDE OF BURN PIT

DEVELOPMENT CONTRACTOR : CH2M HILL/GEOWORKS, INC.

DEVELOPMENT METHOD AND EQUIPMENT USED : SWABBING & GRUNDFOS PUMP

START WATER LEVELS : 18.31' START : 6-5-00 END : 6-5-00 LOGGER : M. CLASEN

MAXIMUM DRAWDOWN DURING PUMPING:

RANGE AND AVERAGE DISCHARGE RATE:

TOTAL QUANTITY OF WATER DISCHARGED:

DISPOSITION OF DISCHARGE WATER:

PID AFTER OPENING WELL = 0.1 PPM

Time	Water Volume Discharged (gal)	Water Level (ft BTOC)	Turbidity (NTU)	Temperature (°C)	pH	Conductivity (µmhos/cm)	Remarks (color, odor, sheen, sediment, etc.)
1025	18	30.85	NA	28.48	7.72	7448	LIGHT BROWN VERY SILTY
1047	36	31.79	719	28.46	8.33	7511	A LITTLE MORE LIGHTER
1112	45	32.54	327	28.36	8.52	7468	A LITTLE MORE LIGHTER
1302	45	31.56	160	29.03	8.60	7459	CLEAR, NO SILT

SWMU-6

MONITORING WELL DEVELOPMENT LOGS

CH2MHILL

PROJECT NUMBER	WELL NUMBER	
139322.FI.60	SWMU-6-MW-1	SHEET 1 OF 1

WELL DEVELOPMENT LOG

PROJECT : VIEQUES PA/SI LOCATION : MANGROVE UPGRADIENT

DEVELOPMENT CONTRACTOR : CH2M HILL

DEVELOPMENT METHOD AND EQUIPMENT USED : PERISTALTIC PUMP

START WATER LEVELS : 5.17' START : 4/26/00 END : 4/26/00 LOGGER : G. SILVA

MAXIMUM DRAWDOWN DURING PUMPING: 0.10'

RANGE AND AVERAGE DISCHARGE RATE: 0.10'

TOTAL QUANTITY OF WATER DISCHARGED: 10.0

DISPOSITION OF DISCHARGE WATER: 50 GALLON DRUM

STICK UP OF CASING = 2.05'

TOC = 16.90'

Time	Water Volume Discharged (gal)	Water Level (ft BTOC)	Turbidity (NTU)	Temperature (°C)	pH	Conductivity (µmhos/cm)	Remarks (color, odor, sheen, sediment, etc.)
1255	0.0	4.25	>100	29.9	6.53	83,700	REMOVE SEDIMENT FROM BOTTOM
1305	~1.5	4.32	>100	29.9	6.58	83,510	LIGHT BROWN, CLEANING UP
1311	3.0	4.32	>100	29.5	6.49	81,030	LIGHT BROWN, CLEANING UP
1322	~5.0	4.35	58	29.7	6.46	78,450	SL. LESS CLOUDY
1327	6.0	4.35	40	29.8	6.43	77,880	SL. LESS CLOUDY
1334	8.0	4.35	20	29.9	6.42	76,800	SL. LESS CLOUDY
1345	10.0	4.35		30.1	6.42	75,512	SL. LESS CLOUDY

CH2MHILL

PROJECT NUMBER	WELL NUMBER	
139322.FI.60	SWMU-6-MW-2	SHEET 1 OF 1

WELL DEVELOPMENT LOG

PROJECT : VIEQUES PA/SI LOCATION : MANGROVE ADJACENT TO LAGOON

DEVELOPMENT CONTRACTOR : GEOWORKS INC.

DEVELOPMENT METHOD AND EQUIPMENT USED : PERISTALTIC PUMP

START WATER LEVELS : 5.17' START : 4/26/00 END : 4/26/00 LOGGER : G. SILVA

MAXIMUM DRAWDOWN DURING PUMPING:

RANGE AND AVERAGE DISCHARGE RATE:

TOTAL QUANTITY OF WATER DISCHARGED:

DISPOSITION OF DISCHARGE WATER:

STICK UP OF CASING = 4.40'

TOC = 14.90

Time	Water Volume Discharged (gal)	Water Level (ft BTOC)	Turbidity (NTU)	Temperature (°C)	pH	Conductivity (µmhos/cm)	Remarks (color, odor, sheen, sediment, etc.)
1034		5.93					SUCKED SEDIMENT DOT
1050	1.5	6.18	>100	28.7	7.02	76,090	DARK GREY, H2S
1057	3.0	6.24	90	27.9	6.69	72,800	DARK GREY, H2S
1106	5.0	6.24	30	27.9	6.68	72,950	DARK GREY, H2S
1117	7.0	6.24	10	28.1	6.77	73,164	DARK GREY, H2S
1124	8.0	6.24	7.5	28.1	6.64	73,144	DARK GREY, H2S

CH2MHILL

PROJECT NUMBER	WELL NUMBER	
139322.FI.60	SWMU-6-MW-3	SHEET 1 OF 1

WELL DEVELOPMENT LOG

PROJECT : VIEQUES PA/SI LOCATION : MANGROVE ADJACENT TO LAGOON

DEVELOPMENT CONTRACTOR : CH2M HILL

DEVELOPMENT METHOD AND EQUIPMENT USED : PERISTALTIC PUMP

START WATER LEVELS : 3.90' START : 4/27/00 END : 4/27/00 LOGGER : G. SILVA

MAXIMUM DRAWDOWN DURING PUMPING:

RANGE AND AVERAGE DISCHARGE RATE:

TOTAL QUANTITY OF WATER DISCHARGED:

DISPOSITION OF DISCHARGE WATER:

STICK UP OF CASING = 2.73'

DEPTH TO BOTTOM = 14.05'

Time	Water Volume Discharged (gal)	Water Level (ft BTOC)	Turbidity (NTU)	Temperature (°C)	pH	Conductivity (µmhos/cm)	Remarks (color, odor, sheen, sediment, etc.)
1430	0.0	3.9					
1437	1.0	3.92	>100	29.5	6.83	75,600	BROWN GRAY, H2S ODOR
1443	2.5	3.95	60	28.8	6.52	72,660	LESS CLOUDY H2S ODOR
1452	4.0	3.95	21	28.8	6.45	72,080	LESS CLOUDY H2S ODOR
1504	7.0	3.95	8	28.8	6.4	72,135	SLIGHT BROWN TINT
1511	8.0	3.95	4	29.9	6.39	72,250	SLIGHT BROWN TINT

CH2MHILL

PROJECT NUMBER	WELL NUMBER	
139322.FI.60	SWMU-6-MW-4	SHEET 1 OF 1

WELL DEVELOPMENT LOG

PROJECT : VIEQUES PA/SI LOCATION : MANGROVE SITE
DEVELOPMENT CONTRACTOR : CH2M HILL
DEVELOPMENT METHOD AND EQUIPMENT USED : PERISTALTIC PUMP
START WATER LEVELS : 5.17' START : 4/27/00 END : 4/27/00 LOGGER : G. SILVA

MAXIMUM DRAWDOWN DURING PUMPING: 0.5'
RANGE AND AVERAGE DISCHARGE RATE: 0.3 GPM
TOTAL QUANTITY OF WATER DISCHARGED: 11 GALS
DISPOSITION OF DISCHARGE WATER: DRUM
STICK UP OF CASING = 4.15'

Time	Water Volume Discharged (gal)	Water Level (ft BTOC)	Turbidity (NTU)	Temperature (°C)	pH	Conductivity (µmhos/cm)	Remarks (color, odor, sheen, sediment, etc.)
945	3	5.17	120	28.6	6.74	69,628	BROWN, H2S , NO SCREEN
953	6	5.68	55	28.6	6.71	69,657	LIGHT BROWN, H2S
1001	8	5.65	40	28.7	6.69	70,104	LIGHT BROWN, H2S
1005	10	5.63	25	28.8	6.69	70,226	LIGHT BROWN, H2S
1010	11	5.55	11	28.9	6.68	70,362	LIGHT BROWN, H2S

SWMU-7

MONITORING WELL DEVELOPMENT LOGS

CH2MHILL

PROJECT NUMBER	WELL NUMBER	
139322.FI.60	SWMU-7-MW-2R	SHEET 1 OF 1

WELL DEVELOPMENT LOG

PROJECT : NASD PA/SI LOCATION : SWMU-07 MW02

DEVELOPMENT CONTRACTOR : CH2M HILL

DEVELOPMENT METHOD AND EQUIPMENT USED : GRUNDFOS PUMP, TEFLON TUBING

START WATER LEVELS : 69.98 START : 1330 5/1/00 END : LOGGER : B. Collon/K. Karvazy

MAXIMUM DRAWDOWN DURING PUMPING: 1.56'

RANGE AND AVERAGE DISCHARGE RATE: ~0.5 gal/min

TOTAL QUANTITY OF WATER DISCHARGED: ~40 gal

DISPOSITION OF DISCHARGE WATER: BEC 5-1-00 TO DRUM, LABELED

Time	Water Volume Discharged (gal)	Water Level (ft BTOC)	Turbidity (NTU)	Temperature (°C)	pH	Conductivity (µmhos/cm)	Remarks (color, odor, sheen, sediment, etc.)
1345	0	69.98	>100	-	-	-	VERY CLOUDY
1400	7.0	71.70	>100	28.79	7.05	2,663	SLIGHTLY CLOUDY-CLEAR
1410	15.0	71.40	>100	29.02	6.30	2,683	SLIGHTLY CLOUDY
1420	21.0	71.38	90	29.19	6.72	2,709	CLEARING - SLIGHTLY CLOUDY
1430	25.0	71.36	>100	29.39	6.65	2,726	SLIGHTLY TURBID
1440	30.0	71.48	>100	29.2	6.28	2,721	SLIGHTLY TURBID
1450	35	71.51	63	29.34	6.35	2731	SLIGHTLY TURBID
1500	38	71.54	50	29.34	6.35	2733	SLIGHTLY TURBID
							PUMP OFF DEVELOPMENT COMPLETE

CH2MHILL

PROJECT NUMBER	WELL NUMBER	
139322.FI.60	SWMU-7-MW-3R	SHEET 1 OF 1

WELL DEVELOPMENT LOG

PROJECT : VIEQUES PA/SI LOCATION : SWMU-07

DEVELOPMENT CONTRACTOR : CH2M HILL

DEVELOPMENT METHOD AND EQUIPMENT USED :

START WATER LEVELS : 40.00' START : 5/1/00 1100 END : LOGGER : K. Karvazy/B. Collom

MAXIMUM DRAWDOWN DURING PUMPING: 3.65'

RANGE AND AVERAGE DISCHARGE RATE: 1 gpm to 0.5 gpm

TOTAL QUANTITY OF WATER DISCHARGED:

DISPOSITION OF DISCHARGE WATER: to drum and labeled

TOTAL DEPTH = 58.43'

DTW INITIAL = 40.00

Time	Water Volume Discharged (gal)	Water Level (ft BTOC)	Turbidity (NTU)	Temperature (°C)	pH	Conductivity (µmhos/cm)	Remarks (color, odor, sheen, sediment, etc.)
1100	0.0	40.00	>100	-	-	-	Clear off bottom of well, med brown cloudy
11.1	~10	43.20	>100	28.3	7.27	1,698	190 H2 sl. Less cloudy ~ 1 gpm Q
1115	~15	42.60	>100	29.3	7.09	1,705	less cloudy ~ 1 gpm Q
1120	~20	42.60	>100	29.1	7.05	1,715	no change 0 = ~ 1 gpm Q
1125	-	-	50	28.9	6.58	1,723	BEC 5-1-00 more turbid
1130	~25	43.73	>100	28.5	6.25	1,700	more turbid (moved pump)
1140	~35	43.70	>100	28.4	6.44	1,690	sl. More turbid (moved pump)
1150	~	43.65	110	28.4	6.63	1695	as above. (moved pump)
1155	~40	40.73	50	31.03	6.85	1769	170 Hz decrease Q to ~0.5 gpm
1200	~	40.65	30	32.30	6.99	1833	pump off, development complete

SWMU-14

MONITORING WELL DEVELOPMENT LOGS

CH2MHILL

PROJECT NUMBER	WELL NUMBER	
139322.FI.60	SWMU-14-MW1	SHEET 1 OF 1

WELL DEVELOPMENT LOG

PROJECT : NASD, VIEQUES, PUERTO RICO LOCATION : MW1

DEVELOPMENT CONTRACTOR : CH2M HILL/GEOWORKS INC.

DEVELOPMENT METHOD AND EQUIPMENT USED : SURGE/PUMP W/GRUNFOS PUMP

START WATER LEVELS : 43.05' START : 4/27/00 0830 END : 4/27 0940 LOGGER : B.TREBBLE

MAXIMUM DRAWDOWN DURING PUMPING: 1.46'

RANGE AND AVERAGE DISCHARGE RATE: 1.09 GPM

TOTAL QUANTITY OF WATER DISCHARGED: 50 GLS

DISPOSITION OF DISCHARGE WATER: 55 GALS. DRUM

Time	Water Volume Discharged (gal)	Water Level (ft BTOC)	Turbidity (NTU)	Temperature (°C)	pH	Conductivity (µmhos/cm)	Remarks (color, odor, sheen, sediment, etc.)
0835	4	44.45	>100	29.4	7.37	917	PUMP AT 69' TO CLEAN OUT SEDIMENTS
0845	14	44.45	46	29.1	6.76	894	
0850	19	44.46	26	29.1	7.19	889	
0855	24	44.31	53	29.3	7.13	890	PUMP AT 67'
0900	29	44.36	100	29.3	7.22	887	PUMP AT 66'
0905	33	44.29	100	29.6	7.22	890	PUMP AT 65'
0915	35	44.34	23	29.4	7.21	884	PUMP AT 63'
0920	39	44.40	19	29.3	7.2	881	PUMP AT 61
0925	45	44.40	21	29.3	7.19	878	PUMP AT 60.5'
0930	50						PUMP IN MIDDLE OF SCREEN
0940	END OF DEVELOPMENT						

CH2MHILL

PROJECT NUMBER	WELL NUMBER	
139322.FI.60	SWMU-14-MW2	SHEET 1 OF 1

WELL DEVELOPMENT LOG

PROJECT : NASD, VIEQUES, PUERTO RICO LOCATION : MW2

DEVELOPMENT CONTRACTOR : CH2M HILL/GEOWORKS INC.

DEVELOPMENT METHOD AND EQUIPMENT USED : SURGE/PUMP WHALE PUMP

START WATER LEVELS : 39.81' START : 4/25/00 1420 END : 4/26 0815 LOGGER : G. SILVA

TD=54.3>3'

MAXIMUM DRAWDOWN DURING PUMPING:

RANGE AND AVERAGE DISCHARGE RATE:

TOTAL QUANTITY OF WATER DISCHARGED:

DISPOSITION OF DISCHARGE WATER: 55 GALS. DRUM

Time	Water Volume Discharged (gal)	Water Level (ft BTOC)	Turbidity (NTU)	Temperature (°C)	pH	Conductivity (µmhos/cm)	Remarks (color, odor, sheen, sediment, etc.)
1420							
1430	2 GAL	45	>100	N/A	N/A	N/A	
1450	3 GAL	45	>100	29.8	7.97	890	
1505	5 GAL-DRY						
4/26 805	7 GAL	40.98	>100	28.9	7.85	832	
810	9 GAL	DRY	89	29.2	7.48	838	

SWMU-15

MONITORING WELL DEVELOPMENT LOGS

CH2MHILL

PROJECT NUMBER	WELL NUMBER	
139322.FI.60	SWMU15-MW01	SHEET 1 OF 1

WELL DEVELOPMENT LOG

PROJECT : NASD, VIEQUES, PUERTO RICO LOCATION : SWMU15 MW01

DEVELOPMENT CONTRACTOR : CH2M HILL/GEOWORKS INC.

DEVELOPMENT METHOD AND EQUIPMENT USED : SURGE/PUMP W/WHALE PUMP

START WATER LEVELS : 39.13' START : 4/25/00 1222 END :4/25/00 1310 LOGGER : B.TREBBLE

MAXIMUM DRAWDOWN DURING PUMPING: 0.24'

RANGE AND AVERAGE DISCHARGE RATE: 0.7 GPM

TOTAL QUANTITY OF WATER DISCHARGED: 40 GLS

DISPOSITION OF DISCHARGE WATER: 55 GALS. DRUM

Time	Water Volume Discharged (gal)	Water Level (ft BTOC)	Turbidity (NTU)	Temperature (°C)	pH	Conductivity (µmhos/cm)	Remarks (color, odor, sheen, sediment, etc.)
1222	3	39.29	>100	30.0	7.95	1083	PUMP ON BOTTOM OF WELL TO CLEANOUT 43.8' AT 7 GPM
1232	10	39.33	100	28.9	6.96	1033	
1235	13.5	39.30	46	29.0	6.94	1032	
1240	20	39.33	37	29.0	6.91	1030	PUMP AT 42.8' AT 7 GPM
1250	25	39.35	18	28.9	6.90	1027	PUMP AT 41.8' AT 7 GPM
1255	30	39.37	21	28.9	6.89	1024	PUMP AT 40.8' AT 7 GPM
1300	35	39.37	18	28.8	6.89	1023	PUMP AT 39.8'
							PUMP AT THE BOTTOM TO REMOVED SEDIMENTS

AOC-C

MONITORING WELL DEVELOPMENT LOGS

CH2MHILL

PROJECT NUMBER	WELL NUMBER	
139322.FI.60	AOC-C MW1	SHEET 1 OF 1

WELL DEVELOPMENT LOG

PROJECT : NASD, VIEQUES, PUERTO RICO LOCATION : MW1

DEVELOPMENT CONTRACTOR : CH2M HILL/GEOWORKS INC.

DEVELOPMENT METHOD AND EQUIPMENT USED : SURGE/PUMP GRUNFOS

START WATER LEVELS : 34.24' START : 4/19/00 1420 END : 4/25 1050 LOGGER : B. TREBBLE

TD=48.0 / 4/25 = 33.94'

MAXIMUM DRAWDOWN DURING PUMPING: 8.74'

RANGE AND AVERAGE DISCHARGE RATE: 0.25

TOTAL QUANTITY OF WATER DISCHARGED: 38 GALS

DISPOSITION OF DISCHARGE WATER: 55 GALS. DRUM

Time	Water Volume Discharged (gal)	Water Level (ft BTOC)	Turbidity (NTU)	Temperature (°C)	pH	Conductivity (µmhos/cm)	Remarks (color, odor, sheen, sediment, etc.)
1452	5	40.58	>100	30.1	6.68	1425	CLEAR BOTTOM OUT PUMP AT 47'
1456	6	40.80	>100	31.1	6.63	1431	TURBID - SLOW PRODUCE
1512	10	41.80	>100	30.1	6.58	1415	TURBID
1528	12	42.14	90	30.1	6.59	1412	MOVE PUMP TO 46' CLOUDY
1544	14	42.60	>100	30.7	6.60	1414	MOVE PUMP TO 45' CLOUDY
1600	20	42.98	<100	30.9	6.60	1416	MOVE PUMP TO 44' CLEAR
1615							MOVE PUMP TO 43'
1000	20	37.99	>100	27.7	7.20	1349	PUMP AT 43' @ .25 GPM
1008	22	37.55	>100	28.9	6.91	1371	
1016	24	37.60	>100	29.0	6.88	1374	
1024	26	37.60	>100	28.8	6.89	1374	MOVE PUMP TO 42'
1034	30	37.90	>100	29.0	6.90	1380	MOVE PUMP TO 41' @ 3 GPM
1044	36	37.70	>100	29.0	6.89	1384	MOVE PUMP TO 40'
1050							MOVE PUMP TO BOTTOM TO CLEAN OUT

AOC-E

MONITORING WELL DEVELOPMENT LOGS

CH2MHILL

PROJECT NUMBER	WELL NUMBER	
139322.FI.60	AOC-E MW4	SHEET 1 OF 1

WELL DEVELOPMENT LOG

PROJECT : NASD, VIEQUES, PUERTO RICO LOCATION : MW4

DEVELOPMENT CONTRACTOR : CH2M HILL/GEOWORKS INC.

DEVELOPMENT METHOD AND EQUIPMENT USED : SURGE/PUMP WITH WHALE PUMP

START WATER LEVELS : 37.20' START : 4/26/00 1025 END : LOGGER : B. TREBBLE

MAXIMUM DRAWDOWN DURING PUMPING:

RANGE AND AVERAGE DISCHARGE RATE: 0.1 GPM

TOTAL QUANTITY OF WATER DISCHARGED:

DISPOSITION OF DISCHARGE WATER: 55 GALS. DRUM

Time	Water Volume Discharged (gal)	Water Level (ft BTOC)	Turbidity (NTU)	Temperature (°C)	pH	Conductivity (µmhos/cm)	Remarks (color, odor, sheen, sediment, etc.)
1025	2 GAL	40.00	>100	30.3	7.15	1473	PUMP OF BOTTOM TO CLEAN OUT SEDIMENTS @ 0.1 GPM
1035	3 GAL	43.18	>100	30.6	6.9	1477	
1045	5 GAL	45.20	>100	30.1	6.9	1459	
1050	8 GAL	DRY					PUMP OFF
1245			>100	29.3	6.94	1381	PUMP ON AT 49.5' AT APPROX. 0.25 GPM
1250	13	DRY					PUMP OFF-WATER SLIGHTLY GETTING CLEAR
1515	18		>100	29.4	6.67	1355	PUMP ON
15							

CH2MHILL

PROJECT NUMBER	WELL NUMBER	
139322.FI.60	AOC-E MW5	SHEET 1 OF 1

WELL DEVELOPMENT LOG

PROJECT : NASD, VIEQUES, PUERTO RICO (PA/SI) LOCATION : MW5

DEVELOPMENT CONTRACTOR : CH2M HILL

DEVELOPMENT METHOD AND EQUIPMENT USED : SURGE/PUMP WITH WHALE PUMP

START WATER LEVELS : 37.73' START : 4/27/00 1030 END:4/27/00 LOGGER : B. TREBBLE

TD=50.40

MAXIMUM DRAWDOWN DURING PUMPING: 13.28' TO DRY

RANGE AND AVERAGE DISCHARGE RATE: 0.1 GPM

TOTAL QUANTITY OF WATER DISCHARGED:

DISPOSITION OF DISCHARGE WATER: 55 GALS. DRUM

Time	Water Volume Discharged (gal)	Water Level (ft BTOC)	Turbidity (NTU)	Temperature (°C)	pH	Conductivity (µmhos/cm)	Remarks (color, odor, sheen, sediment, etc.)
1103	3	42.90	>100	30.3	7.26	1251	PUMP ON BOTTOM 50' TO CLEAN OUT SEDIMENTS CLOUDY
1113	4	43.43	>100	31.6	7.07	1284	
1123	5	44.10	<100	31.6	7.03	1288	
1125	PUMP OF						LET RECHARGE
1250	PUMP ON	38.42	>100	30.7	7.19	1279	PUMP AT 48.0'
1300	6	42.90	>100	30.5	6.96	1273	
1310	7	45.07	>100	31.0	7.00	1306	
1320	8	46.73	>100	31.0	6.97	1283	

CH2MHILL

PROJECT NUMBER	WELL NUMBER	
139322.FI.60	AOC-E MW6	SHEET 1 OF 1

WELL DEVELOPMENT LOG

PROJECT : NASD, VIEQUES, PUERTO RICO LOCATION : MW6

DEVELOPMENT CONTRACTOR : CH2M HILL

DEVELOPMENT METHOD AND EQUIPMENT USED : SURGE/PUMP WITH WHALE PUMP

START WATER LEVELS : 37.66' START : 4/26/00 1332 END:4/26/00 1445 LOGGER : B. TREBBLE

TD=46.0

MAXIMUM DRAWDOWN DURING PUMPING: .29

RANGE AND AVERAGE DISCHARGE RATE: 0.45 GPM--0.69 GPM

TOTAL QUANTITY OF WATER DISCHARGED: 3 GALS

DISPOSITION OF DISCHARGE WATER: 55 GALS. DRUM

Time	Water Volume Discharged (gal)	Water Level (ft BTOC)	Turbidity (NTU)	Temperature (°C)	pH	Conductivity (µmhos/cm)	Remarks (color, odor, sheen, sediment, etc.)
1345	4	37.95	>100	29.7	7.33	1055	PUMP OF BOTTOM TO CLEAN OUT 46'-45.5'
1358	8	37.90	>100	29.1	6.92	1022	45.5' Q UP TO 0.6 GPM CLEANING UP
1405	12	37.90	>100	29.1	6.87	1018	PUMP TO 44.0' SLI LESS CLOUDY
1412	20	37.93	>100	29.0	6.85	1016	MUVE PUMP TO 42.5' & PUMP
1418	24	37.93	>100	29.1	6.84	1017	MUVE PUMP TO 41.0'
1424	28	37.91	47	29.1	6.83	1018	MUVE PUMP TO 40.0'
1430	32	37.90	26	29.1	6.82	1019	MUVE PUMP TO 38.5'
1440	36	37.90	32	29.2	6.83	1021	MUVE PUMP TO 36.5'
1445	END DEVELOPMENT						MUVE PUMP TO BOTTOM

AOC-F

MONITORING WELL DEVELOPMENT LOGS

CH2MHILL

PROJECT NUMBER	WELL NUMBER	
139322.FI.60	AOC-F-MW-1	SHEET 1 OF 1

WELL DEVELOPMENT LOG

PROJECT : VIEQUES, P.R. NASD LOCATION : MW-1

DEVELOPMENT CONTRACTOR : GEOWORKS, CH2M HILL

DEVELOPMENT METHOD AND EQUIPMENT USED : SURGE BLOCK, GRUNFOS PUMP

START WATER LEVELS : 30.20' START : 4/17/00 1425 END : 1630 LOGGER : BOB TREBBLE

MAXIMUM DRAWDOWN DURING PUMPING: 7.15'

RANGE AND AVERAGE DISCHARGE RATE: FINAL DTW = 30.25' BTOC

TOTAL QUANTITY OF WATER DISCHARGED: 80 GALLONS FINAL TD = 52.30' BTOC

DISPOSITION OF DISCHARGE WATER: 55 GALLON DRUM

.35 GPM

Time	Water Volume Discharged (gal)	Water Level (ft BTOC)	Turbidity (NTU)	Temperature (°C)	pH	Conductivity (µmhos/cm)	Remarks (color, odor, sheen, sediment, etc.)
1425	0.0	34.90	>100	29.2	7.50	956	TAN/BROWN NO ODOR PUMP INTAKE @ 51'
1430	1.5	36.73	>100	28.8	7.03	968	TAN/BROWN NO ODOR PUMP INTAKE @ 51'
1435	3.0	36.91	>100	29.0	6.97	974	TAN/BROWN NO ODOR PUMP INTAKE @ 51'
1440	4.5	37.06	>100	29.0	6.96	974	TAN/BROWN NO ODOR PUMP INTAKE @ 51'
1445	6.0	36.80	>100	28.44	6.93	961	TAN/BROWN NO ODOR PUMP INTAKE @ 51'
1450	7.5	36.78	>100	29.35	6.93	979	SL. LESS CLOUDY PUMP INTAKE @ 51'
1455	9.0	37.25	>100	29.11	6.93	976	SL. LESS CLOUDY PUMP INTAKE @ 51'
1500	10.5	37.10	>100	29.02	6.92	971	SL. LESS CLOUDY PUMP INTAKE @ 51'
1510	13.5	37.06	>100	28.99	6.91	975	CLOUDY/FINES PUMP INTAKE @ 49'
1520	17.0	37.06	>100	28.99	6.90	974	CLOUDY/FINES PUMP INTAKE @ 49'
1540	25.0	37.18	>100	28.95	6.90	987	CLOUDY/FINES PUMP INTAKE @ 49'
1600	35.0	37.16	>100	28.93	6.90	987	CLOUDY/FINES PUMP INTAKE @ 49'
1605	40.0	37.06	>100	29.04	6.90	1,005	CLOUDY/FINES PUMP INTAKE @ 47'
1610	45.0	37.10	105	29.00	6.89	988	SLIGHTLY CLOUDY PUMP INTAKE @ 47'
1615	50.0	37.00	40	28.92	6.88	986	SLIGHTLY CLOUDY PUMP INTAKE @ 47'
1620	55.0	36.77	27	28.86	6.88	984	CLEAR PUMP INTAKE @ 45'
1625	60.0	36.70	21	28.96	6.88	986	CLEAR PUMP INTAKE @ 43.5'
	70						CLEAN BOTTOM
	80	33.42	25	29.15	6.88	993	PUMP INTAKE MIDDLE OF SCREEN 48'

CH2MHILL

PROJECT NUMBER	WELL NUMBER	
139322.FI.60	AOC-F-MW-2	SHEET 1 OF 1

WELL DEVELOPMENT LOG

PROJECT : VIEQUES, P.R. NASD LOCATION : VIEQUES P.R.

DEVELOPMENT CONTRACTOR : CH2M HILL/GEOWORKS, INC.

DEVELOPMENT METHOD AND EQUIPMENT USED : SURGE/PUMP

START WATER LEVELS : 28.56' START : 4/18/00 0950 END : 4/18/00 1050 LOGGER : BOB TREBBLE

MAXIMUM DRAWDOWN DURING PUMPING: 1.32'

RANGE AND AVERAGE DISCHARGE RATE: .80 gal/min

TOTAL QUANTITY OF WATER DISCHARGED: 64 gal

DISPOSITION OF DISCHARGE WATER: 55 GAL DRUM

Time	Water Volume Discharged (gal)	Water Level (ft BTOC)	Turbidity (NTU)	Temperature (°C)	pH	Conductivity (µmhos/cm)	Remarks (color, odor, sheen, sediment, etc.)
0950	7	29.88	>100	28.4	7.70	1,512	TAN, FINES PUMP @ 49' (BOTTOM OF SCREEN)
1000	15	29.67	>100	28.0	7.07	1,446	TAN, FINES PUMP @ 49' (BOTTOM OF SCREEN)
1005	19	29.58	>100	28.2	7.05	1,444	TAN, FINES CLEAR PUMP @ 49' (BOTTOM OF SCREEN)
1015	27	29.58	40	28.1	7.01	1,423	PUMP @ 47' CLEAR
1021	32	29.60	23	28.1	7.00	1,417	
1030	40	29.32	18	28.2	6.99	1,413	PUMP @ 45' CLEAR
1040	48	29.32	18	28.2	6.97	1405	PUMP @ 43' CLEAR
1050	56	29.28	20	28.3	6.96	1400	PUMP @ 41'

CH2MHILL

PROJECT NUMBER	WELL NUMBER	
139322.FI.60	AOC-F-MW-3	SHEET 1 OF 1

WELL DEVELOPMENT LOG

PROJECT : VIEQUES, P.R. NASD LOCATION : MW-3

DEVELOPMENT CONTRACTOR : CH2M HILL/GEOWORKS, INC.

DEVELOPMENT METHOD AND EQUIPMENT USED : SURGE/PUMP GRUNFOS

START WATER LEVELS : 28.0' START : 4/19/00 1110 END : 4/19/00 1300 LOGGER : BOB TREBBLE

TD = 45.5'

MAXIMUM DRAWDOWN DURING PUMPING: 2.31'

RANGE AND AVERAGE DISCHARGE RATE: .8 gpm

TOTAL QUANTITY OF WATER DISCHARGED:

DISPOSITION OF DISCHARGE WATER: 55 GAL DRUM FINAL DTW = 28.13'

TD = 45.70'

Time	Water Volume Discharged (gal)	Water Level (ft BTOC)	Turbidity (NTU)	Temperature (°C)	pH	Conductivity (µmhos/cm)	Remarks (color, odor, sheen, sediment, etc.)
1110	7	30.18	>100	29.6	7.10	1466	CLEAN OUT SEDIMENTS ON BOTTOM - 44' TURBID
1120	15	30.18	>100	29.2	6.81	1461	CLOUDY
1130	23	30.08	90	29.2	6.76	1475	SEMI - CLEAR
1205	31	30.21	30	29.1	6.78	1488	PUMP @ 42' CLEAR
1215	39	29.98	30	29.2	6.75	1495	PUMP @ 40' CLEAR
1225	47	29.92	25	29.3	6.73	1501	PUMP @ 39' CLEAR
1230	53	29.97	25	29.3	6.72	1500	PUMP @ 36.5' CLEAR
1235	56	29.95	25	29.3	6.72	1507	PUMP @ 35.5' CLEAR
1235	PUMP TO BOTTOM TO CLEAN OUT SEDIMENTS.						

CH2MHILL

PROJECT NUMBER	WELL NUMBER	
139322.FI.60	AOC-F-MW-4	SHEET 1 OF 1

WELL DEVELOPMENT LOG

PROJECT : VIEQUES, P.R. NASD LOCATION : MW-4

DEVELOPMENT CONTRACTOR : CH2M HILL/GEOWORKS, INC.

DEVELOPMENT METHOD AND EQUIPMENT USED : SURGE/PUMP GRUNFOS

START WATER LEVELS : 27.80' START : 4/19/00 0910 END : 4/19/00 1020 LOGGER : BOB TREBBLE

TD = 49.50'

MAXIMUM DRAWDOWN DURING PUMPING:

RANGE AND AVERAGE DISCHARGE RATE: .8 gpm

TOTAL QUANTITY OF WATER DISCHARGED:

DISPOSITION OF DISCHARGE WATER: 55 GAL DRUM FINAL DTW = 27.84'

TD = 50.0'

Time	Water Volume Discharged (gal)	Water Level (ft BTOC)	Turbidity (NTU)	Temperature (°C)	pH	Conductivity (µmhos/cm)	Remarks (color, odor, sheen, sediment, etc.)
0910	7	28.40	>100	28.5	6.71	1467	PUMP AT 48.5' (BOTTOM) TO REMOVE SEDIMENTS
0920	11	28.42	80	28.8	6.62	1489	CLOUDY
0925	15	28.60	30	28.6	6.60	1482	CLEAR
0935	23	28.54	20	28.80	6.59	1487	PUMP @ 47' CLEAR
0945	31	28.53	20	28.70	6.59	1478	PUMP @ 46' CLEAR
0955	39	28.55	20	28.70	6.58	1479	PUMP @ 45' CLEAR
1005	47	28.60	20	28.60	6.58	1478	PUMP @ 44' CLEAR
1010	51	28.61	20	28.60	6.57	1472	PUMP @ 42' CLEAR
1015	55						PUMP AT BOTTOM TO REMOVE SEDIMENTS

CH2MHILL

PROJECT NUMBER	WELL NUMBER	
139322.FI.60	AOC-F-MW-5	SHEET 1 OF 1

WELL DEVELOPMENT LOG

PROJECT : VIEQUES, P.R. NASD LOCATION : MW-5

DEVELOPMENT CONTRACTOR : CH2M HILL/GEOWORKS, INC.

DEVELOPMENT METHOD AND EQUIPMENT USED : SURGE/PUMP

START WATER LEVELS : 27.81' START : 4/18/00 1310 END : 4/18/00 1500 LOGGER : BOB TREBBLE

MAXIMUM DRAWDOWN DURING PUMPING:

RANGE AND AVERAGE DISCHARGE RATE: .6 gpm

TOTAL QUANTITY OF WATER DISCHARGED: 88 gal

DISPOSITION OF DISCHARGE WATER: 55 GAL DRUM FINAL DTW = 27.84'

TD = 48.40'

Time	Water Volume Discharged (gal)	Water Level (ft BTOC)	Turbidity (NTU)	Temperature (°C)	pH	Conductivity (µmhos/cm)	Remarks (color, odor, sheen, sediment, etc.)
1310	7	28.52	>100	27.9	7.23	1491	CLEAN OUT BOTTOM OF SEDIMENTS (46')
1320	13	28.60	30	27.8	7.00	1473	CLEAR
1332	20	28.46	50	28.0	7.05	1492	CLEAR
1354	31	28.50	20	28.3	6.98	1476	PUMP SET @ 44' CLEAR
1405	40	28.45	40	28.6	6.97	1490	PUMP @ 44' CLEAR
1415	46	28.45	30	28.5	6.96	1484	PUMP @ 42' CLEAR
1430	57	28.46	20	28.5	6.95	1482	PUMP @ 40' CLEAR
1440	63	28.45	15	28.6	6.94	1485	PUMP @ 38' CLEAR
1448	68	28.46	20	28.6	6.92	1480	PUMP @ 37.5 CLEAR
1500	PUMP BOTTOM SEDIMENTS OUT 78 GALS.						
1505	PUMP MID SCREEN TILL CLEAR 88 GALS.						

ZOBELL SOLN—ORP

CH2M HILL
WELL SAMPLING NOTE SHEET

Equipment Calibration Data

Date	Instrument	Model No.	Serial No.	Calibration Data
6-9-00	YSI 610-D	610-D	218355R	PH 4, 7, 10. ~~6-9-00~~ JH 6-9 Conductivity 1,000 ms/cm JH/EC
6/12/00	YSI 610-DM	610-DM	17B0440AC	ph 4, 7, 10 Conductivity 0.99 ms/cm
6/12/00	YSI	610-DM	99A0644	pH 4, 7, 10 Conductivity 1,000 ms/cm

SIGNED/SAMPLER:

CH2M HILL
WELL SAMPLING NOTE SHEET

Equipment Calibration Data

Date	Instrument	Model No.	Serial No.	Calibration Data	field crew
6/3	YSI multiprobe	6820/ 610-DM	171919R	ORP - 100mV DO - 760 mm Hg pH - 4.0, 7.0 SpC - 1000 uhmos/cm	R. Gorsira K. Karvaz
6/3	turbidimeter	2020		NTU = 1, 10 calibration solutions	"
6/4	YSI multiprobe	(820/ 610-DM	171919R	ORP - 100mV (solution) DO - 760 mm Hg pH - 4.0/7.0 SpC - 1000 uhmos/cm	"
6/4	turbidimeter	2020	0792-2798	NTU - 1, 10 calibration soln.	"
6/5	YSI multiprobe	6820/ 610-DM	99BG44GVAC/ 1523794R	ORP - 100mV DO - 760 mm Hg pH 4, 7 SpC - 1000 uhmos/cm	K. Kaucny R. Gorsira
6/5	YSI multiprobe	6820/ 610-DM	99AG644/ 171919R	"	M. Close
6/5	turbidimeter	2020	792798	NTU - 1, 10	K. Kaucny R. Gorsira
6/5	turbidimeter	HACH 2100P	99C9000227Z5	NTU = 4.23, 44.3, 515	M. Close

SIGNED/SAMPLER:

APPENDIX E

Monitoring Well Purging and Sampling Logs

SWMU-4

MONITORING WELL PURGING AND SAMPLING LOGS

CH2M HILL
WELL SAMPLING FIELD SHEET

PROJECT#_____

WELL NUMBER: MW-01	SITE: SWMU-4
FIELD CREW: JENNIFFER OTTOSON & KEITH COATS	(leave blank if on previous page)

			CASING DIA.		GAL/FT OF CASING	
DEPTH TO WATER (FT):	27.24					
WELL DEPTH (FT):	- 39.90		2 IN.		0.1632	
WATER COLUMN (FT):	= 12.66		4 IN.		0.6528	
GAL/FT OF CASING	x 0.1632		6 IN.		1.4688	
CASING VOLUME (GAL)	= 2		8 IN.		2.611	
NO. OF VOLUMES min.(3)	x 3		10 IN.		4.0797	
PURGE VOLUME (GAL)	= 6.5		12 IN.		5.8748	

METHOD OF PURGING (circle one)

PUMP: SUB. CENT. PERIST.	OTHER:	BAILER : TEFLON, SS ,OTHER:
TIME ON: 0840		BAILER VOL.. (gal) .25 / .33
FLOW RATE (gpm): 0.25		REQUIRED PULLS:
PUMP TIME (min): 27		VOL. PURGED (gals):
VOL. PURGED (gals): 7		OTHER:

FIELD PARAMETERS	FIELD MEASUREMENTS					WITHIN10% Y / N
	1st	2nd	3rd	4th	5th	6th
TIME	840	848	856	904		
VOL. (gal)	0	2	4	7		
pH (s.units)	6.59	6.61	6.60	6.61		
ORP (mV)	124.0	102.0	131.3	127.7		
TEMP.(C)	29.53	30.84	30.90	30.92		
Salinity (ppt)	14.59	14.29	14.19	14.23		
DO (mg/L)						
Turbidity (NTU)	720	254	205	106		
COND.(umhos/cm)	26340	26422	26372	26295		

SAMPLE PARAMETERS ((GRAB) OR COMPOSITE):VOC, SVOC, PEST/PCB, METALS (FILT & UNFILT), EXP-W

FILTERED METALS COLLECTED(Y) N 1.0um (0.45um), OTHER:

OBSERVATIONS

COLOR: CLEAR , (AMBER) , TAN , BROWN , GREY , MILKY WHITE , OTHER:

ODOR: (NONE), LOW , MEDIUM , HIGH , VERY STRONG , H2S , FUEL LIKE , CHEMICAL ?, UNKNOWN

TURBIDITY: NONE , (LOW) , MEDIUM , HIGH , VERY TURBID. HEAVY SILTS

COMMENTS:

OTHER: PLEASE USE BACK OF SHT.FOR SKETCHING MAPS ,WELL LOCATION NOTES ECT. SEE BACK OF SHT Y / (N.)

Q.C. SAMPLE TYPE: DUPLICATE , EQUIPMENT BLANK , OTHER :

Q.C. PARAMETERS:

SAMPLE DATE/ TIME: 04/28/2000 / @ 0910

SIGNED/SAMPLER: _____

CH2M HILL
WELL SAMPLING FIELD SHEET

PROJECT#_____

WELL NUMBER: MW-01	SITE: SWMU-4
FIELD CREW: K. KARVAZY, R. GORSIRA	(leave blank if on previous page)

			CASING DIA.		GAL/FT OF CASING	
DEPTH TO WATER (FT):	27.28					
WELL DEPTH (FT):	43.42	-	2 IN.		0.1632	
WATER COLUMN (FT):	16.14	=	4 IN.		0.6528	
GAL/FT OF CASING	0.1632	x	6 IN.		1.4688	
CASING VOLUME (GAL)	2.5	=	8 IN.		2.611	
NO. OF VOLUMES min.(3)	3	x	10 IN.		4.0797	
PURGE VOLUME (GAL)	7.5	=	12 IN.		5.8748	

METHOD OF PURGING (circle one)

PUMP: (SUB.) CENT. PERIST.	OTHER:	BAILER : TEFLON, SS ,OTHER:
TIME ON: 1100	Whale pump until 1300	BAILER VOL.. (gal) .25 / .33
FLOW RATE (gpm): 0.05	at 1300 changed to grundfo	REQUIRED PULLS:
PUMP TIME (min):		VOL. PURGED (gals):
VOL. PURGED (gals):		OTHER:

FIELD PARAMETERS	FIELD MEASUREMENTS					WITHIN10% Y / N
	1st	2nd	3rd	4th	5th	6th
TIME	1128	1210	1310			
VOL. (gal)	2.5	5	7.5			
pH (s.units)	6.84	6.65	6.76			
ORP (mV)	33.6	46.7	19.0			
TEMP.(C)	30.24	30.05	30.51			
Salinity (ppt)	12.92	13.39	8.67			
DO (mg/L)	>.91/100	>30/>100	26.08/>100			
Turbidity (NTU)	550	30	400			
COND.(umhos/cm)	21.66	22.38	22.2			

SAMPLE PARAMETERS (GRAB OR COMPOSITE):VOC, SVOC, PEST/PCB, METALS (FILT & UNFILT), EXP-W

FILTERED METALS COLLECTED: Y / N 1.0um,0.45um, OTHER:

OBSERVATIONS

COLOR: CLEAR , AMBER , (TAN) , BROWN , GREY , MILKY WHITE , OTHER:

ODOR: (NONE , LOW) , MEDIUM , HIGH , VERY STRONG , H2S , FUEL LIKE , CHEMICAL ?, UNKNOWN

TURBIDITY: NONE , LOW (MEDIUM) , HIGH , VERY TURBID. HEAVY SILTS

COMMENTS:

OTHER: PLEASE USE BACK OF SHT.FOR SKETCHING MAPS ,WELL LOCATION NOTES ECT. SEE BACK OF SHT Y / N.

Q.C. SAMPLE TYPE: DUPLICATE , EQUIPMENT BLANK , OTHER :

Q.C. PARAMETERS:

SAMPLE DATE/ TIME: 06/04/2000 / @ 1315

SIGNED/SAMPLER: _____

CH2M HILL
WELL SAMPLING FIELD SHEET

PROJECT#_____

WELL NUMBER: MW-02	SITE: SWMU-4
FIELD CREW: JENNIFFER OTTOSON & KEITH COATS	(leave blank if on previous page)

			CASING DIA.		GAL/FT OF CASING	
DEPTH TO WATER (FT):	23.51					
WELL DEPTH (FT):	35.00	-	2 IN.		0.1632	
WATER COLUMN (FT):	11.49	=	4 IN.		0.6528	
GAL/FT OF CASING	0.1632	x	6 IN.		1.4688	
CASING VOLUME (GAL)	2	=	8 IN.		2.611	
NO. OF VOLUMES min.(3)	3	x	10 IN.		4.0797	
PURGE VOLUME (GAL)	6	=	12 IN.		5.8748	

METHOD OF PURGING (circle one)

PUMP: SUB. CENT. PERIST.	OTHER:	BAILER : TEFLON, SS ,OTHER:
TIME ON: 1430		BAILER VOL.. (gal) .25 / .33
FLOW RATE (gpm): 0.75		REQUIRED PULLS:
PUMP TIME (min): 10		VOL. PURGED (gals):
VOL. PURGED (gals): 6		OTHER:

FIELD PARAMETERS	FIELD MEASUREMENTS					WITHIN10% Y / N
	1st	2nd	3rd	4th	5th	6th
TIME	1430	1433	1436	1439		
VOL. (gal)	0	2	4	6		
pH (s.units)	7.53	7.32	7.27	7.26		
ORP (mV)	153.0	256.0	337.1	342.0		
TEMP.(C)	28.79	27.54	27.52	27.51		
Salinity (ppt)	3.52	3.28	3.28	3.29		
DO (mg/L)						
Turbidity (NTU)	745	275	160	105		
COND.(umhos/cm)	7128	6368	6354	6369		

SAMPLE PARAMETERS (GRAB OR COMPOSITE):VOC, SVOC, PEST/PCB, METALS (FILT & UNFILT), EXP-W

FILTERED METALS COLLECTED: Y / N 1.0um 0.45um, OTHER:

OBSERVATIONS

COLOR: CLEAR , AMBER , TAN , BROWN , GREY , MILKY WHITE , OTHER:

ODOR: NONE , LOW , MEDIUM , HIGH , VERY STRONG , H2S , FUEL LIKE , CHEMICAL ?, UNKNOWN

TURBIDITY: NONE , LOW , MEDIUM , HIGH , VERY TURBID. HEAVY SILT

COMMENTS:

OTHER: PLEASE USE BACK OF SHT.FOR SKETCHING MAPS ,WELL LOCATION NOTES ECT. SEE BACK OF SHT Y / N

Q.C. SAMPLE TYPE: DUPLICATE , EQUIPMENT BLANK , OTHER :

Q.C. PARAMETERS: COLLECT DUP @ MW-02

SAMPLE DATE/ TIME: 04/27/2000 / @ 1445

SIGNED/SAMPLER: _____

CH2M HILL
WELL SAMPLING FIELD SHEET

PROJECT#_____

WELL NUMBER: MW-02		**SITE: SWMU-4**			
FIELD CREW:	K. KARVAZY.,R. GORSIRA				(leave blank if on previous page)
DEPTH TO WATER (FT):	22.18	CASING DIA.		GAL/FT OF CASING	-
WELL DEPTH (FT): -	35.00	(2) IN.		(0.1632)	
WATER COLUMN (FT): =	12.88	4 IN.		0.6528	
GAL/FT OF CASING x	0.1632	6 IN.		1.4688	
CASING VOLUME (GAL) =	2.1	8 IN.		2.611	
NO. OF VOLUMES min.(3) x	3	10 IN.		4.0797	
PURGE VOLUME (GAL) =	6.6	12 IN.		5.8748	

METHOD OF PURGING (circle one)

PUMP: (SUB.) CENT. PERIST.	**OTHER:**	**BAILER** : TEFLON, SS ,OTHER:
TIME ON: 1035	whale pumps	BAILER VOL.. (gal) .25 / .33
FLOW RATE (gpm):		REQUIRED PULLS:
PUMP TIME (min):		VOL. PURGED (gals):
VOL. PURGED (gals):		OTHER:

FIELD PARAMETERS	**FIELD MEASUREMENTS**					WITHIN10% Y / N
	1st	2nd	3rd	4th	5th	6th
TIME	1130	1310	1315			
VOL. (gal)	2	4	6			
pH (s.units)	7.96	7.65	7.79			
ORP (mV)	9.7	24.2	22.6			
TEMP.(C)	32.21	27.19	26.95			
Salinity (ppt)	2.42	2.39	2.53			
DO (mg/L)	10.56/145.6	11.51/71.00	11.86			
Turbidity (NTU)						
COND.(umhos/cm)	4.59	4.76	4.74			

SAMPLE PARAMETERS (**GRAB** OR **COMPOSITE**):VOC, SVOC, PEST/PCB, METALS (FILT & UNFILT), EXP-W

FILTERED METALS COLLECTED: Y / N 1.0um,0.45um, OTHER:

OBSERVATIONS

COLOR: CLEAR , AMBER , (TAN) , BROWN , GREY , MILKY WHITE , OTHER: high sediment content initially

ODOR: (NONE) LOW , MEDIUM , HIGH , VERY STRONG , H2S , FUEL LIKE , CHEMICAL ?, UNKNOWN

TURBIDITY: NONE , LOW , MEDIUM , (HIGH) , VERY TURBID. HEAVY SILTS

COMMENTS:

Purge was extremely slow - whale pumps connected in series for better flow at 1300.

OTHER: PLEASE USE BACK OF SHT.FOR SKETCHING MAPS ,WELL LOCATION NOTES ECT. **SEE BACK OF SHT Y / N.**

Q.C. SAMPLE TYPE: DUPLICATE , EQUIPMENT BLANK , OTHER :

Q.C. PARAMETERS:

SAMPLE DATE/ TIME: 06/05/2000 / @ 1315

SIGNED/SAMPLER: _____

CH2M HILL
WELL SAMPLING FIELD SHEET

PROJECT#_____

WELL NUMBER: MW-03		**SITE: SWMU-4**			
FIELD CREW:	JENNIFFER OTTOSON & KEITH COATS				(leave blank if on previous page)
DEPTH TO WATER (FT):	18.34	CASING DIA.		GAL/FT OF CASING	
WELL DEPTH (FT): -	41.00	2 IN.		0.1632	
WATER COLUMN (FT): =	22.66	4 IN.		0.6528	
GAL/FT OF CASING x	0.1632	6 IN.		1.4688	
CASING VOLUME (GAL) =	4	8 IN.		2.611	
NO. OF VOLUMES min.(3) x	3	10 IN.		4.0797	
PURGE VOLUME (GAL) =	11	12 IN.		5.8748	

METHOD OF PURGING (circle one)

PUMP: (SUB.) CENT. PERIST.	**OTHER:**	**BAILER** : TEFLON, SS ,OTHER:
TIME ON: 1330		BAILER VOL.. (gal) .25 / .33
FLOW RATE (gpm): 0.75		REQUIRED PULLS:
PUMP TIME (min): 20		VOL. PURGED (gals):
VOL. PURGED (gals): 12		OTHER:

FIELD PARAMETERS	**FIELD MEASUREMENTS** 1st	2nd	3rd	4th	5th	WITHIN10% Y / N 6th
TIME	1330	1336	1342	1348	1352	
VOL. (gal)	0	4	8	11	13	
pH (s.units)	6.88	6.82	6.85	6.83	6.83	
ORP (mV)	136.9	143.5	135.1			
TEMP.(C)	28.54	28.63	28.61	28.66	28.67	
Salinity (ppt)		14.13	14.12	14.07	14.09	
DO (mg/L)						
Turbidity (NTU)	194	186	93	23	20	
COND.(umhos/cm)	25773	25121	25068	25077	25101	

SAMPLE PARAMETERS ((GRAB) OR **COMPOSITE**):VOC, SVOC, PEST/PCB, METALS (FILT & UNFILT), EXP-W

FILTERED METALS COLLECTED: Y / (N) 1.0um (0.45)m, OTHER:

OBSERVATIONS

COLOR: (CLEAR) , AMBER , TAN , BROWN , GREY , MILKY WHITE , OTHER:

ODOR: (NONE) , LOW , MEDIUM , HIGH , VERY STRONG , H2S , FUEL LIKE , CHEMICAL ?, UNKNOWN

TURBIDITY: NONE (LOW) , MEDIUM , HIGH , VERY TURBID. HEAVY SILTS

COMMENTS:

OTHER: PLEASE USE BACK OF SHT.FOR SKETCHING MAPS ,WELL LOCATION NOTES ECT. **SEE BACK OF SHT** Y / (N)

Q.C. SAMPLE TYPE: DUPLICATE , (EQUIPMENT BLANK) , OTHER :

Q.C. PARAMETERS:

SAMPLE DATE/ TIME: 04/27/2000 / @ 1400

SIGNED/SAMPLER: _____

CH2M HILL
WELL SAMPLING FIELD SHEET

PROJECT#_____

WELL NUMBER: MW-03	SITE: SWMU-4
FIELD CREW: K. KARVAZY, R. GORSIRA	(leave blank if on previous page)

DEPTH TO WATER (FT):	41	CASING DIA.		GAL/FT OF CASING	
WELL DEPTH (FT):	- 17.42	2 IN.		0.1632	
WATER COLUMN (FT):	= 22.4 23.58	4 IN.		0.6528	
GAL/FT OF CASING	x 0.1632	6 IN.		1.4688	
CASING VOLUME (GAL)	= 3.84	8 IN.		2.611	
NO. OF VOLUMES min.(3)	x 3	10 IN.		4.0797	
PURGE VOLUME (GAL)	= 11.54	12 IN.		5.8748	

METHOD OF PURGING (circle one)

PUMP: SUB. CENT. PERIST.	**OTHER:**	**BAILER** : TEFLON, SS ,OTHER:
TIME ON:		BAILER VOL.. (gal) .25 / .33
FLOW RATE (gpm):		REQUIRED PULLS:
PUMP TIME (min):		VOL. PURGED (gals):
VOL. PURGED (gals):		OTHER:

FIELD PARAMETERS	**FIELD MEASUREMENTS**					WITHIN10% Y / N
	1st	2nd	3rd	4th	5th	6th
TIME	1155	1230	1240	12.5		
VOL. (gal)	4	8	12	14		
pH (s.units)	7.44	7.3	7.25	7.21		
ORP (mV)	63.9	58.0	56.8	54.6		
TEMP.(C)	28.76	27.50	27.52	27.36		
Salinity (ppt)	5.39	10.8	10.71	10.71		
DO (mg/L)	15.89/7100	8.41/7100	8.5/7100	12.01/7100		
Turbidity (NTU)						
COND.(umhos/cm)	10.76	18.33	18.1	18.18		

SAMPLE PARAMETERS (**GRAB** OR **COMPOSITE**):VOC, SVOC, PEST/PCB, METALS (FILT & UNFILT), EXP-W

FILTERED METALS COLLECTED: Y / N 1.0um,0.45um, OTHER:

OBSERVATIONS

COLOR: (CLEAR), AMBER , TAN , BROWN , GREY , MILKY WHITE , OTHER:

ODOR: (NONE), LOW , MEDIUM , HIGH , VERY STRONG , H2S , FUEL LIKE , CHEMICAL ?, UNKNOWN

TURBIDITY: NONE , (LOW) , MEDIUM , HIGH , VERY TURBID. HEAVY SILTS clearwater

COMMENTS:

Water was extremely clear from purge begin time to end. Note do probe giving readings >100% 0z

OTHER: PLEASE USE BACK OF SHT.FOR SKETCHING MAPS ,WELL LOCATION NOTES ECT. **SEE BACK OF SHT Y / N.**

Q.C. SAMPLE TYPE: DUPLICATE , EQUIPMENT BLANK , OTHER :

Q.C. PARAMETERS:

SAMPLE DATE/ TIME: 06/05/2000 / @ 1250

SIGNED/SAMPLER: _____

CH2M HILL
WELL SAMPLING FIELD SHEET

PROJECT#_____

WELL NUMBER: MW-04	SITE: SWMU-4
FIELD CREW: JENNIFFER OTTOSON & KEITH COATS	(leave blank if on previous page)

			CASING DIA.		GAL/FT OF CASING	
DEPTH TO WATER (FT):	9.30					
WELL DEPTH (FT):	- 20.50		2 IN.		0.1632	
WATER COLUMN (FT):	= 11.20		4 IN.		0.6528	
GAL/FT OF CASING	x 0.1632		6 IN.		1.4688	
CASING VOLUME (GAL)	= 2		8 IN.		2.611	
NO. OF VOLUMES min.(3)	x 3		10 IN.		4.0797	
PURGE VOLUME (GAL)	= 5.5		12 IN.		5.8748	

METHOD OF PURGING (circle one)

PUMP: SUB. CENT (PERIST.)	OTHER:	BAILER : TEFLON, SS ,OTHER:
TIME ON: 1110		BAILER VOL.. (gal) .25 / .33
FLOW RATE (gpm): 0.25		REQUIRED PULLS:
PUMP TIME (min): 25		VOL. PURGED (gals):
VOL. PURGED (gals): 6		OTHER:

FIELD PARAMETERS	FIELD MEASUREMENTS					WITHIN 10% Y / N
	1st	2nd	3rd	4th	5th	6th
TIME	1110	1118	1126	1134		
VOL. (gal)	0	2	4	6		
pH (s.units)	6.98	6.83	6.75	6.76		
ORP (mV)	61.7	72.1	77.6	77.5		
TEMP.(C)	27.67	27.50	27.59	27.61		
Salinity (ppt)	11.95	12.8	12.8	12.77		
DO (mg/L)						
Turbidity (NTU)	55.7	40.1	115	691		
COND.(umhos/cm)	21130	22557	22360	22354		

SAMPLE PARAMETERS (GRAB OR COMPOSITE):VOC, SVOC, PEST/PCB, METALS (FILT & UNFILT), EXP-W

FILTERED METALS COLLECTED: Y / N 1.0um 0.45um. OTHER:

OBSERVATIONS

COLOR: CLEAR , AMBER , TAN , BROWN , GREY , MILKY WHITE , OTHER:

ODOR: NONE , LOW MEDIUM , HIGH , VERY STRONG , H2S , FUEL LIKE , CHEMICAL ?, UNKNOWN

TURBIDITY: NONE , LOW MEDIUM , HIGH , VERY TURBID. HEAVY SILTS

COMMENTS:

OTHER: PLEASE USE BACK OF SHT.FOR SKETCHING MAPS ,WELL LOCATION NOTES ECT. SEE BACK OF SHT Y / N.

Q.C. SAMPLE TYPE: DUPLICATE , EQUIPMENT BLANK , OTHER :

Q.C. PARAMETERS:

SAMPLE DATE/ TIME: 04/27/2000 / @ 1140

SIGNED/SAMPLER: _____

CH2M HILL
WELL SAMPLING FIELD SHEET

PROJECT#_____

WELL NUMBER: MW-04	SITE: SWMU-4

FIELD CREW: K. KARVAZY, R. GORSIRA (leave blank if on previous page)

		CASING DIA.		GAL/FT OF CASING	
DEPTH TO WATER (FT):	8.22				
WELL DEPTH (FT):	- 21.46	2 IN.		0.1632	
WATER COLUMN (FT):	= 13.24	4 IN.		0.6528	
GAL/FT OF CASING	x 0.1632	6 IN.		1.4688	
CASING VOLUME (GAL)	= 2.16	8 IN.		2.611	
NO. OF VOLUMES min.(3)	x 3	10 IN.		4.0797	
PURGE VOLUME (GAL)	= 6.45	12 IN.		5.8748	

METHOD OF PURGING (circle one)

PUMP: (SUB.) CENT. PERIST.	OTHER:	BAILER : TEFLON, SS ,OTHER:
TIME ON: 1715	Whale pump	BAILER VOL.. (gal) .25 / .33
FLOW RATE (gpm): 2		REQUIRED PULLS:
PUMP TIME (min):		VOL. PURGED (gals):
VOL. PURGED (gals):		OTHER:

FIELD PARAMETERS	FIELD MEASUREMENTS					WITHIN10% Y / N
	1st	2nd	3rd	4th	5th	6th
TIME	1730	17.36	1738			
VOL. (gal)	2	4.25	6.5			
pH (s.units)	7.3	7.2	7.20			
ORP (mV)	-62.5	-65.5	-58.7			
TEMP.(C)	27.91	27.74	27.64			
Salinity (ppt)	10.79	1097	10.94			
DO (mg/L)	3.61/48.9	6.51/88.1	6.52/88.2			
Turbidity (NTU)	550	400	450			
COND.(umhos/cm)	18.34	18.57	18.55			

SAMPLE PARAMETERS (**GRAB** OR **COMPOSITE**):VOC, SVOC, PEST/PCB, METALS (FILT & UNFILT), EXP-W

FILTERED METALS COLLECTED: Y / N 1.0um,0.45um, OTHER:

OBSERVATIONS

COLOR: CLEAR , AMBER , (TAN) BROWN , GREY , MILKY WHITE , OTHER:

ODOR: (NONE , LOW), MEDIUM , HIGH , VERY STRONG , H2S , FUEL LIKE , CHEMICAL ?, UNKNOWN slight odor

TURBIDITY: NONE , LOW , (MEDIUM) , HIGH , VERY TURBID. HEAVY SILTS

COMMENTS:

OTHER: PLEASE USE BACK OF SHT.FOR SKETCHING MAPS ,WELL LOCATION NOTES ECT. **SEE BACK OF SHT Y / N.**

Q.C. SAMPLE TYPE: DUPLICATE , EQUIPMENT BLANK , OTHER :

Q.C. PARAMETERS:

SAMPLE DATE/ TIME: 06/03/2000 / @ 1745

SIGNED/SAMPLER: _____

CH2M HILL
WELL SAMPLING FIELD SHEET

PROJECT#_____

WELL NUMBER: MW-05		**SITE: SWMU-4**			
FIELD CREW: J. HAYES, K. COATS				(leave blank if on previous page)	
DEPTH TO WATER (FT):	9.00	CASING DIA.		GAL/FT OF CASING	
WELL DEPTH (FT): -	43.40	2 IN.		0.1632	
WATER COLUMN (FT): =	34.4	4 IN.		0.6528	
GAL/FT OF CASING x	0.16	6 IN.		1.4688	
CASING VOLUME (GAL) =	5.6	8 IN.		2.611	
NO. OF VOLUMES min.(3) x	5.4	10 IN.		4.0797	
PURGE VOLUME (GAL) =	16.2	12 IN.		5.8748	

METHOD OF PURGING (circle one)

PUMP: SUB. CENT. PERIST.	**OTHER:**	**BAILER** : TEFLON, SS ,OTHER:
TIME ON:		BAILER VOL.. (gal) .25 / .33
FLOW RATE (gpm):		REQUIRED PULLS:
PUMP TIME (min):		VOL. PURGED (gals):
VOL. PURGED (gals):		OTHER:

FIELD PARAMETERS	FIELD MEASUREMENTS					WITHIN10% Y / N
	1st	2nd	3rd	4th	5th	6th
TIME	1415	1435	1455			
VOL. (gal)	5.5	11	16.5			
pH (s.units)	7.09	7.05	7.10			
ORP (mV)	44.2	40.4	38.8			
TEMP.(C)	27.98	27.75	27.77			
Salinity (ppt)	15.78	15.74	15.68			
DO (mg/L)	0.47	0.65	0.69			
Turbidity (NTU)	67	15.3	16			
COND.(umhos/cm)	27495	27239	27186			

SAMPLE PARAMETERS (**GRAB** OR **COMPOSITE**):

FILTERED METALS COLLECTED: Y / N 1.0um,0.45um, OTHER:

OBSERVATIONS

COLOR: (CLEAR) AMBER , TAN , BROWN , GREY , MILKY WHITE , OTHER:

ODOR: (NONE) LOW , MEDIUM , HIGH , VERY STRONG , H2S , FUEL LIKE , CHEMICAL ?, UNKNOWN

TURBIDITY: NONE (LOW) , MEDIUM , HIGH , VERY TURBID. HEAVY SILTS

COMMENTS:

OTHER: PLEASE USE BACK OF SHT.FOR SKETCHING MAPS ,WELL LOCATION NOTES ECT. **SEE BACK OF SHT Y / N.**

Q.C. SAMPLE TYPE: DUPLICATE , EQUIPMENT BLANK , OTHER :

Q.C. PARAMETERS:

SAMPLE DATE/ TIME: 06/12/2000 / @ 1140

SIGNED/SAMPLER: _____

CH2M HILL
WELL SAMPLING FIELD SHEET

PROJECT#_____

WELL NUMBER: MW-06	SITE: SWMU-4

FIELD CREW: J. HAYES, K. COATS, K. SWANSON (leave blank if on previous page)

		CASING DIA.		GAL/FT OF CASING	
DEPTH TO WATER (FT):	11.70				
WELL DEPTH (FT):	41.75	2 IN.		0.1632	
WATER COLUMN (FT): =	30.05	4 IN.		0.6528	
GAL/FT OF CASING x	0.1632	6 IN.		1.4688	
CASING VOLUME (GAL) =	4.8	8 IN.		2.611	
NO. OF VOLUMES min.(3) x	14.4	10 IN.		4.0797	
PURGE VOLUME (GAL) =		12 IN.		5.8748	

METHOD OF PURGING (circle one)

PUMP: SUB. CENT. PERIST.	**OTHER:**	**BAILER :** TEFLON, SS ,OTHER:
TIME ON:		BAILER VOL.. (gal) .25 / .33
FLOW RATE (gpm):		REQUIRED PULLS:
PUMP TIME (min):		VOL. PURGED (gals):
VOL. PURGED (gals):		OTHER:

FIELD PARAMETERS	FIELD MEASUREMENTS					WITHIN10% Y / N
	1st	2nd	3rd	4th	5th	6th
TIME	1004	1025	1050			
VOL. (gal)	4.8	9.6	15			
pH (s.units)	6.32	6.8	6.68			
ORP (mV)	111.1	94.0	99.7			
TEMP.(C)	28.41	28.02	27.73			
Salinity (ppt)	10.9	5.63	6.19			
DO (mg/L)	0.47	0.6	0.72			
Turbidity (NTU)	16.3	16.7	18.9			
COND.(umhos/cm)	19727	10629	11516			

SAMPLE PARAMETERS (**GRAB** OR **COMPOSITE**):

FILTERED METALS COLLECTED: Y / N 1.0um,0.45um, OTHER:

OBSERVATIONS

COLOR: CLEAR , AMBER , TAN , BROWN , GREY , MILKY WHITE , OTHER:

ODOR: NONE , LOW , MEDIUM , HIGH , VERY STRONG , H2S , FUEL LIKE , CHEMICAL ?, UNKNOWN

TURBIDITY: NONE , LOW , MEDIUM , HIGH , VERY TURBID. HEAVY SILTS

COMMENTS:

OTHER: PLEASE USE BACK OF SHT.FOR SKETCHING MAPS ,WELL LOCATION NOTES ECT. **SEE BACK OF SHT Y / N.**

Q.C. SAMPLE TYPE: DUPLICATE , EQUIPMENT BLANK , OTHER :

Q.C. PARAMETERS:

SAMPLE DATE/ TIME: 06/12/2000 / @ 1140

SIGNED/SAMPLER: _____

CH2M HILL
WELL SAMPLING FIELD SHEET

PROJECT#_____

WELL NUMBER: MW-07		**SITE: SWMU-4**			
FIELD CREW:	K. SWANSON, E. CABALE				(leave blank if on previous page)
DEPTH TO WATER (FT):	15.38	CASING DIA.		GAL/FT OF CASING	
WELL DEPTH (FT): -	42.40	**2 IN.**		**0.1632**	
WATER COLUMN (FT): =	27.02	**4 IN.**		**0.6528**	
GAL/FT OF CASING x	0.1632	**6 IN.**		**1.4688**	
CASING VOLUME (GAL) =	4.32	**8 IN.**		**2.611**	
NO. OF VOLUMES min.(3) x	13	**10 IN.**		**4.0797**	
PURGE VOLUME (GAL) =	13	**12 IN.**		**5.8748**	

METHOD OF PURGING (circle one)

PUMP: SUB. CENT. PERIST.	**OTHER:**	**BAILER** : TEFLON, SS ,OTHER:
TIME ON:		BAILER VOL.. (gal) .25 / .33
FLOW RATE (gpm):		REQUIRED PULLS:
PUMP TIME (min):		VOL. PURGED (gals):
VOL. PURGED (gals): 13		OTHER:

FIELD PARAMETERS	**FIELD MEASUREMENTS**					WITHIN10% Y / N
	1st	2nd	3rd	4th	5th	6th
TIME	1415	1430	1445	1500	1518	
VOL. (gal)	0.5	3	6	9	13	
pH (s.units)	7.14	6.76	6.67	1.62	6.6	
ORP (mV)	33.7	38.6	38.7	47.2	49.8	
TEMP.(C)	28.27	28.28	28.08	27.99	27.00	
Salinity (ppt)	8.03	8.09	9.44	9.75	9.95	
DO (mg/L)	4.35	4.36	3.23	3.4	3.7	
Turbidity (NTU)	5.2	15	141	18	19.3	
COND.(umhos/cm)	13.95	14.05	16.21	16.69	16.99	

SAMPLE PARAMETERS (**GRAB** OR **COMPOSITE**):

FILTERED METALS COLLECTED: (Y) / N 1.0um (0.45)um, OTHER:

OBSERVATIONS

COLOR: CLEAR , (AMBER) , TAN , BROWN , GREY , MILKY WHITE , OTHER:

ODOR: (NONE) LOW , MEDIUM , HIGH , VERY STRONG , H2S , FUEL LIKE , CHEMICAL ?, UNKNOWN

TURBIDITY: NONE (LOW) , MEDIUM , HIGH , VERY TURBID. HEAVY SILTS

COMMENTS:

OTHER: PLEASE USE BACK OF SHT.FOR SKETCHING MAPS ,WELL LOCATION NOTES ECT. **SEE BACK OF SHT Y / N.**

Q.C. SAMPLE TYPE: DUPLICATE , EQUIPMENT BLANK , OTHER :

Q.C. PARAMETERS:

SAMPLE DATE/ TIME: 06/12/2000 / @ 1520

SIGNED/SAMPLER: _____

CH2M HILL
WELL SAMPLING FIELD SHEET

PROJECT#_____

WELL NUMBER: MW-08	SITE: SWMU-4
FIELD CREW: K. SWANSON, K.COATS, J. HAPO	(leave blank if on previous page)

			CASING DIA.		GAL/FT OF CASING	
DEPTH TO WATER (FT):	18.32					
WELL DEPTH (FT):	51.50	-	2 IN.		0.1632	
WATER COLUMN (FT):	33.18	=	4 IN.		0.6528	
GAL/FT OF CASING	0.163	x	6 IN.		1.4688	
CASING VOLUME (GAL)	5.1	=	8 IN.		2.611	
NO. OF VOLUMES min.(3)	15.3	x	10 IN.		4.0797	
PURGE VOLUME (GAL)	15.3	=	12 IN.		5.8748	

METHOD OF PURGING (circle one)

PUMP: SUB. CENT. PERIST.	OTHER:	BAILER : TEFLON, SS ,OTHER:
TIME ON:		BAILER VOL.. (gal) .25 / .33
FLOW RATE (gpm):		REQUIRED PULLS:
PUMP TIME (min):		VOL. PURGED (gals):
VOL. PURGED (gals):		OTHER:

FIELD PARAMETERS	FIELD MEASUREMENTS					WITHIN10% Y / N
	1st	2nd	3rd	4th	5th	6th
TIME	1015	1035	1055	1120	1145	
VOL. (gal)	2.5	5	8	12	15	
pH (s.units)	7.07	7.1	6.92	6.97	7.02	
ORP (mV)	95.1	-45.3	-82.9	-17.3	17.1	
TEMP.(C)	28.69	27.49	27.49	27.65	27.81	
Salinity (ppt)	4.79	4.28	5.44	5.26	5.18	
DO (mg/L)	4.75	5.64	3.18	3.01	3.2	
Turbidity (NTU)	15	10.5	12.1	40.4	70	
COND.(umhos/cm)	9.612	10.23	9.71	9.427	9.29	

SAMPLE PARAMETERS (GRAB OR COMPOSITE):

FILTERED METALS COLLECTED (Y) N 1.0um, 0.45um, OTHER:

OBSERVATIONS

COLOR: (CLEAR) , AMBER , TAN , BROWN , GREY , MILKY WHITE , OTHER:

ODOR: (NONE) LOW , MEDIUM , HIGH , VERY STRONG , H2S , FUEL LIKE , CHEMICAL ?, UNKNOWN

TURBIDITY: (NONE) , LOW , MEDIUM , HIGH , VERY TURBID. HEAVY SILTS

COMMENTS: Raining off and on during purging & sampling

OTHER: PLEASE USE BACK OF SHT.FOR SKETCHING MAPS ,WELL LOCATION NOTES ECT. SEE BACK OF SHT Y / N.

Q.C. SAMPLE TYPE: DUPLICATE , EQUIPMENT BLANK , OTHER :

Q.C. PARAMETERS:

SAMPLE DATE/ TIME: 06/12/2000 / @ 1145

SIGNED/SAMPLER: _____

SWMU-6

MONITORING WELL PURGING AND SAMPLING LOGS

CH2M HILL
WELL SAMPLING FIELD SHEET

PROJECT#___139322.FI.60_____

WELL NUMBER: SWMU-6-MW1	SITE: NASD VIEQUES, PUERTO RICO
FIELD CREW: B COLLOM, K. KARVAZY	(leave blank if on previous page)

			CASING DIA.		GAL/FT OF CASING	
DEPTH TO WATER (FT): =	4.17					
WELL DEPTH (FT):	16.91		2 IN.		0.1632	
WATER COLUMN (FT): =	12.74		4 IN.		0.6528	
GAL/FT OF CASING x	0.163		6 IN.		1.4688	
CASING VOLUME (GAL) =	2.08		8 IN.		2.611	
NO. OF VOLUMES min.(3) x	6.23		10 IN.		4.0797	
PURGE VOLUME (GAL) =	~6.5		12 IN.		5.8748	

METHOD OF PURGING (circle one)

PUMP: SUB. CENT. PERIST.	**OTHER:**	**BAILER** : TEFLON, SS ,OTHER:
TIME ON: 1311	DEDICATED TUBING	BAILER VOL.. (gal) .25 / .33
FLOW RATE (gpm): 0.3		REQUIRED PULLS:
PUMP TIME (min):		VOL. PURGED (gals):
VOL. PURGED (gals): 6.5		OTHER: FINAL DTW=4.29

FIELD PARAMETERS	FIELD MEASUREMENTS					WITHIN10% Y / N
	1st	2nd	3rd	4th	5th	6th
TIME	1312	1318	1327	1336		
VOL. (gal)	<1	~2	~4.5	~6.5		
pH (s.units)	6.56	6.39	6.28	6.25		
ORP (mV)	-207	-269	-320	-329		
TEMP.(C)	30.4	29.9	29.86	29.9		
Salinity (ppt)	48.53	48.17	48.99	48.9		
DO (mg/L)	1.75/29.5%	0.49/8.5%	0.45/7.5%	0.48/8.3%		
Turbidity (NTU)						
COND.(umhos/cm)	78,282	77,091	78,197	78,096		

SAMPLE PARAMETERS (**GRAB** OR **COMPOSITE**) : TOTAL + DISS METALS, VOC'S, SVOC'S, PCB'S,PES

FILTERED METALS COLLECTED: (Y) / N 1.0um,0.45um, OTHER:

OBSERVATIONS

COLOR: CLEAR, (AMBER), TAN , BROWN , GREY , MILKY WHITE , OTHER:

ODOR: NONE , LOW , MEDIUM , HIGH , (VERY STRONG) , (H2S) , FUEL LIKE , CHEMICAL ?, UNKNOWN

TURBIDITY: NONE , LOW , MEDIUM , (HIGH) , VERY TURBID. HEAVY SILTS NTU = >100

COMMENTS: **PUMP INTAKE AT 8'**

OTHER: PLEASE USE BACK OF SHT.FOR SKETCHING MAPS ,WELL LOCATION NOTES ECT. **SEE BACK OF SHT Y / N.**

Q.C. SAMPLE TYPE: NONE DUPLICATE , EQUIPMENT BLANK , OTHER :

Q.C. PARAMETERS:

SAMPLE DATE/ TIME: 05/02/2000 1345 / @

SIGNED/SAMPLER: _____

CH2M HILL
WELL SAMPLING FIELD SHEET

PROJECT#___139322.FI.60_____

WELL NUMBER: SWMU-6-MW2	SITE: NASD VIEQUES, PUERTO RICO
FIELD CREW: B COLLOW, K. KARVAZY	(leave blank if on previous page)

		CASING DIA.		GAL/FT OF CASING	
DEPTH TO WATER (FT): =	4.81				
WELL DEPTH (FT): -	14.64	2 IN.		0.1632	
WATER COLUMN (FT): =	9.83	4 IN.		0.6528	
GAL/FT OF CASING x	0.163	6 IN.		1.4688	
CASING VOLUME (GAL) =	1.6	8 IN.		2.611	
NO. OF VOLUMES min.(3) x	4.8	10 IN.		4.0797	
PURGE VOLUME (GAL) =	5.0	12 IN.		5.8748	

METHOD OF PURGING (circle one)

PUMP: SUB. CENT. PERIST.	**OTHER:**	**BAILER** : TEFLON, SS ,OTHER:
TIME ON: 1223	DEDICATED TUBING	BAILER VOL.. (gal) .25 / .33
FLOW RATE (gpm): ~0.3		REQUIRED PULLS:
PUMP TIME (min): 18		VOL. PURGED (gals):
VOL. PURGED (gals): 5		OTHER: FINAL DTW=5.04

FIELD PARAMETERS	FIELD MEASUREMENTS					WITHIN10% Y / N
	1st	2nd	3rd	4th	5th	6th
TIME	1224	1230	1237	1241		
VOL. (gal)	<1	~2	~4	~5		
pH (s.units)	6.82	6.45	6.39	6.34		
ORP (mV)	-296	-308	-320	-325		
TEMP.(C)	28.7	27.9	28.02	28		
Salinity (ppt)	50.9	49.4	49.32	49.34		
DO (mg/L)	3.48/55.9%	0.70/11.6%	0.64/10.41%	0.49/8.2%		
Turbidity (NTU)						
COND.(umhos/cm)	78,512	76,054	76,034	76,001		

SAMPLE PARAMETERS (**GRAB** OR **COMPOSITE**) : TOTAL + DISS METALS, VOC'S, SVOC'S, PCB'S,PES

FILTERED METALS COLLECTED: Y / N 1.0um 0.45um, OTHER:

OBSERVATIONS

COLOR: CLEAR , AMBER , TAN , BROWN , GREY , MILKY WHITE , OTHER:

ODOR: NONE , LOW , MEDIUM , HIGH , VERY STRONG , H2S , FUEL LIKE , CHEMICAL ?, UNKNOWN

TURBIDITY: NONE , LOW , MEDIUM , HIGH , VERY TURBID. HEAVY SILTS 10 NTU

COMMENTS: PUMP INTAKE AT 9'

OTHER: PLEASE USE BACK OF SHT.FOR SKETCHING MAPS ,WELL LOCATION NOTES ECT. **SEE BACK OF SHT Y / N.**

Q.C. SAMPLE TYPE: NONE DUPLICATE , EQUIPMENT BLANK , OTHER :

Q.C. PARAMETERS:

SAMPLE DATE/ TIME: 05/02/2000 1255 / @

SIGNED/SAMPLER: _____

CH2M HILL
WELL SAMPLING FIELD SHEET

PROJECT# 139322.FI.60

WELL NUMBER: SWMU-6-MW3	SITE: NASD VIEQUES, PUERTO RICO
FIELD CREW: B COLLOW, K. KARVAZY	(leave blank if on previous page)

		CASING DIA.		GAL/FT OF CASING	
DEPTH TO WATER (FT): =	3.74				
WELL DEPTH (FT):	14.35	2 IN.		0.1632	
WATER COLUMN (FT): =	10.61	4 IN.		0.6528	
GAL/FT OF CASING x	0.163	6 IN.		1.4688	
CASING VOLUME (GAL) =	1.73	8 IN.		2.611	
NO. OF VOLUMES min.(3) x	5.19	10 IN.		4.0797	
PURGE VOLUME (GAL) =	5.5	12 IN.		5.8748	

METHOD OF PURGING (circle one)

PUMP: SUB. CENT. (PERIST.)	OTHER:	BAILER : TEFLON, SS ,OTHER:
TIME ON: 1030	DEDICATED TUBING	BAILER VOL.. (gal) .25 / .33
FLOW RATE (gpm): 0.3		REQUIRED PULLS:
PUMP TIME (min): 20		VOL. PURGED (gals):
VOL. PURGED (gals): 5.5		OTHER: FINAL DTW=3.79

FIELD PARAMETERS	FIELD MEASUREMENTS					WITHIN10% Y / N
	1st	2nd	3rd	4th	5th	6th
TIME	1031	1035	1042	1049		
VOL. (gal)	<1	~1.5	~3.5	~5.5		
pH (s.units)	6.85	6.35	6.24	6.22		
ORP (mV)	-325	-330	-315	-325		
TEMP.(C)	28.6	28.7	28.8	28.7		
Salinity (ppt)	49.9	48.2	48.2	48.4		
DO (mg/L)	1.14/19%	1.03/17.5%	0.91/15.4%	1.47/24.8%		
Turbidity (NTU)						
COND.(umhos/cm)	77,416	75,382	75,542	75,680		

SAMPLE PARAMETERS (GRAB) OR COMPOSITE) : TOTAL + DISS METALS, VOC'S, SVOC'S, PCB'S,PES

FILTERED METALS COLLECTED: (Y) / N 1.0um,(0.45)um, OTHER:

OBSERVATIONS

COLOR: CLEAR , (AMBER) , TAN , BROWN , GREY , MILKY WHITE , OTHER:

ODOR: NONE , LOW , MEDIUM , HIGH , (VERY STRONG) , (H2S) , FUEL LIKE , CHEMICAL ?, UNKNOWN

TURBIDITY: NONE , (LOW) , MEDIUM , HIGH , VERY TURBID. HEAVY SILTS 10 NTU

COMMENTS: PUMP INTAKE AT 9'

OTHER: PLEASE USE BACK OF SHT.FOR SKETCHING MAPS ,WELL LOCATION NOTES ECT. SEE BACK OF SHT Y / N.

Q.C. SAMPLE TYPE: NONE DUPLICATE , EQUIPMENT BLANK , OTHER :

Q.C. PARAMETERS:

SAMPLE DATE/ TIME: 05/02/2000 1100 / @

SIGNED/SAMPLER:

CH2M HILL
WELL SAMPLING FIELD SHEET

PROJECT# 139322.FI.60

WELL NUMBER: SWMU-6-MW4	SITE: NASD VIEQUES, PUERTO RICO
FIELD CREW: B COLLOW	(leave blank if on previous page)

			CASING DIA.		GAL/FT OF CASING	
DEPTH TO WATER (FT): =	4.10					
WELL DEPTH (FT): -	13.4		2 IN.		0.1632	
WATER COLUMN (FT): =	9.30		4 IN.		0.6528	
GAL/FT OF CASING x	0.163		6 IN.		1.4688	
CASING VOLUME (GAL) =	1.52		8 IN.		2.611	
NO. OF VOLUMES min.(3) x	4.56		10 IN.		4.0797	
PURGE VOLUME (GAL) =	4.6 GAL		12 IN.		5.8748	

METHOD OF PURGING (circle one)

PUMP: SUB. CENT (PERIST.)	OTHER:	BAILER : TEFLON, SS ,OTHER:
TIME ON: 0940	DEDICATED TUBING	BAILER VOL.. (gal) .25 / .33
FLOW RATE (gpm): 0.3		REQUIRED PULLS:
PUMP TIME (min): 17		VOL. PURGED (gals):
VOL. PURGED (gals): 5		OTHER: FINAL DTW=4.54

FIELD PARAMETERS	FIELD MEASUREMENTS					WITHIN10% Y / N
	1st	2nd	3rd	4th	5th	6th
TIME	942	948	953	957		
VOL. (gal)	<1	2	3	4.5		
pH (s.units)	6.73	6.48	6.4	6.34		
ORP (mV)	-279	-329	-325	-319		
TEMP.(C)	28.2	29.04	29.1	28.9		
Salinity (ppt)	49	46.48	45.9	45.9		
DO (mg/L)	3.6/62%	0.12/0%	0.16/2.7%	0.47/7.7%		
Turbidity (NTU)						
COND.(umhos/cm)	76,400	73,300	72,807	72,714		

SAMPLE PARAMETERS (GRAB) OR COMPOSITE) : TOTAL + DISS METALS, VOC'S, SVOC'S, PCB'S,PES

FILTERED METALS COLLECTED: (Y) N 1.0um, (0.45um, OTHER:

OBSERVATIONS

COLOR: CLEAR , (AMBER) , TAN , BROWN , GREY , MILKY WHITE , OTHER:

ODOR: NONE , LOW , MEDIUM , HIGH , (VERY STRONG) , (H2S) , FUEL LIKE , CHEMICAL ?, UNKNOWN

TURBIDITY: NONE , (LOW) , MEDIUM , HIGH , VERY TURBID. HEAVY SILTS 13 NTU

COMMENTS: PUMP INTAKE AT 8'

OTHER: PLEASE USE BACK OF SHT.FOR SKETCHING MAPS ,WELL LOCATION NOTES ECT. SEE BACK OF SHT Y / N.

Q.C. SAMPLE TYPE: NONE DUPLICATE , EQUIPMENT BLANK , OTHER :

Q.C. PARAMETERS:

SAMPLE DATE/ TIME: 05/02/2000 1000 / @

SIGNED/SAMPLER:

CH2M HILL
WELL SAMPLING FIELD SHEET

PROJECT#___139322.FI.60_____

WELL NUMBER: SWMU-6-MW1	SITE: NASD VIEQUES, PUERTO RICO
FIELD CREW: K. KARVAZY, R. GORSIRA	(leave blank if on previous page)

			CASING DIA.		GAL/FT OF CASING	
DEPTH TO WATER (FT): =	4.02					
WELL DEPTH (FT):	16.78		2 IN.		0.1632	
WATER COLUMN (FT):	=	12.76	4 IN.		0.6528	
GAL/FT OF CASING	x	0.1632	6 IN.		1.4688	
CASING VOLUME (GAL)	=	2.08	8 IN.		2.611	
NO. OF VOLUMES min.(3)	x	3	10 IN.		4.0797	
PURGE VOLUME (GAL)	=	6.24	12 IN.		5.8748	

METHOD OF PURGING (circle one)

PUMP: (SUB.) CENT. PERIST.	OTHER:	BAILER : TEFLON, SS ,OTHER:
TIME ON: 1730	WHALE PUMP	BAILER VOL.. (gal) .25 / .33
FLOW RATE (gpm): 2		REQUIRED PULLS:
PUMP TIME (min):		VOL. PURGED (gals):
VOL. PURGED (gals): 10		OTHER: FINAL DTW=4.29

FIELD PARAMETERS	FIELD MEASUREMENTS					WITHIN10% Y / N
	1st	2nd	3rd	4th	5th	6th
TIME	1235	1237	1240	1245		
VOL. (gal)	2	4	6	10		
pH (s.units)	6.60	6.00	0.00	6.60		
ORP (mV)	276.4	370.2	369.1	348.0		
TEMP.(C)	29.69	29.74	29.6	29.65		
Salinity (ppt)	51.24	52.28	50.88	49.95		
DO (mg/L) / %	1.72/3.06	5.58/98.3	4.54/79.5	4.48/78.1		
Turbidity (NTU)	650	250	50	45		
SP MMHOS COND.(umhos/cm)	74.14	75.72	74.12	72.76		

SAMPLE PARAMETERS (**GRAB** OR **COMPOSITE**) :

FILTERED METALS COLLECTED: Y / N 1.0um,0.45um, OTHER:

OBSERVATIONS

COLOR: CLEAR , AMBER , TAN , BROWN (GREY) , MILKY WHITE , OTHER:

ODOR: NONE , LOW , MEDIUM , (HIGH) , VERY STRONG , (H2S) , FUEL LIKE , CHEMICAL ?, UNKNOWN

TURBIDITY: NONE , LOW , MEDIUM , (HIGH) , VERY TURBID. HEAVY SILTS

COMMENTS:

OTHER: PLEASE USE BACK OF SHT.FOR SKETCHING MAPS ,WELL LOCATION NOTES ECT. **SEE BACK OF SHT Y / (N.)**

Q.C. SAMPLE TYPE: NONE DUPLICATE , EQUIPMENT BLANK , OTHER :

Q.C. PARAMETERS:

SAMPLE DATE/ TIME: 06/03/2000 / @ 1250

SIGNED/SAMPLER: _____

CH2M HILL
WELL SAMPLING FIELD SHEET

PROJECT# 139322.FI.60

WELL NUMBER: SWMU-6-MW2	SITE: NASD VIEQUES, PUERTO RICO
FIELD CREW: K. KARVAZY, R. GORSIRA	(leave blank if on previous page)

		CASING DIA.		GAL/FT OF CASING	
DEPTH TO WATER (FT): =	4.82				
WELL DEPTH (FT): -	14.44	2 IN.		0.1632	
WATER COLUMN (FT): =	9.62	4 IN.		0.6528	
GAL/FT OF CASING x	0.1632	6 IN.		1.4688	
CASING VOLUME (GAL) =	1.57	8 IN.		2.611	
NO. OF VOLUMES min.(3) x	3	10 IN.		4.0797	
PURGE VOLUME (GAL) =	4.7	12 IN.		5.8748	

METHOD OF PURGING (circle one)

PUMP: (SUB.) CENT. PERIST.	**OTHER:**	**BAILER** : TEFLON, SS ,OTHER:
TIME ON: 400		BAILER VOL.. (gal) .25 / .33
FLOW RATE (gpm): 2		REQUIRED PULLS:
PUMP TIME (min):		VOL. PURGED (gals):
VOL. PURGED (gals): 6		OTHER: FINAL DTW=5.04

FIELD PARAMETERS	FIELD MEASUREMENTS					WITHIN10% Y / N
	1st	2nd	3rd	4th	5th	6th
TIME	1405	1410	1415			
VOL. (gal)	2	4	6			
pH (s.units)	7.14	7.32	7.32			
ORP (mV)	-160	-185.6	-199.2			
TEMP.(C)	29.18	28.05	29.04			
Salinity (ppt)	73.05	43.16	43.16			
DO (mg/L) / %	2.0/32.3	1.56/25	1.47/24.8			
Turbidity (NTU)	450	450	400			
MMHOS **COND.(umhos/cm)**	63.97	64.03	64.03			

SAMPLE PARAMETERS (**GRAB** OR **COMPOSITE**) : TOTAL + DISS METALS, VOC'S, SVOC'S, PCB'S,PES

FILTERED METALS COLLECTED: Y / N 1.0um,0.45um, OTHER:

OBSERVATIONS

COLOR: CLEAR , AMBER , TAN , BROWN , GREY , MILKY WHITE , OTHER: (DARK GREY)

ODOR: NONE, (LOW) MEDIUM , HIGH , VERY STRONG, (H2S), FUEL LIKE , CHEMICAL ?, UNKNOWN

TURBIDITY: NONE , LOW , MEDIUM , (HIGH) , VERY TURBID. HEAVY SILTS

COMMENTS:

WATER READING STABILIZED DARK COLORED WATER, HIGH TURBIDITY REMAINED

OTHER: PLEASE USE BACK OF SHT.FOR SKETCHING MAPS ,WELL LOCATION NOTES ECT. **SEE BACK OF SHT Y / N.**

Q.C. SAMPLE TYPE: NONE DUPLICATE , EQUIPMENT BLANK , OTHER :

Q.C. PARAMETERS:

SAMPLE DATE/ TIME: 06/03/2000 1415 / @

SIGNED/SAMPLER:

CH2M HILL
WELL SAMPLING FIELD SHEET

PROJECT# 139322.FI.60

WELL NUMBER: SWMU-6-MW3	SITE: NASD VIEQUES, PUERTO RICO
FIELD CREW: K. KARVAZY, R. GORSIRA	(leave blank if on previous page)

		CASING DIA.		GAL./FT OF CASING	
DEPTH TO WATER (FT): =	5.82				
WELL DEPTH (FT):	14.3	2 IN.		0.1632	
WATER COLUMN (FT): =	8.48	4 IN.		0.6528	
GAL/FT OF CASING x	0.1632	6 IN.		1.4688	
CASING VOLUME (GAL) =	1.38	8 IN.		2.611	
NO. OF VOLUMES min.(3) x	3	10 IN.		4.0797	
PURGE VOLUME (GAL) =	4.15	12 IN.		5.8748	

METHOD OF PURGING (circle one)

PUMP: SUB. CENT. PERIST.	**OTHER:**	**BAILER** : TEFLON, SS ,OTHER:
TIME ON:		BAILER VOL.. (gal) .25 / .33
FLOW RATE (gpm):		REQUIRED PULLS:
PUMP TIME (min):		VOL. PURGED (gals):
VOL. PURGED (gals):		OTHER: FINAL DTW=3.79

FIELD PARAMETERS	**FIELD MEASUREMENTS**					WITHIN10% Y / N
	1st	2nd	3rd	4th	5th	6th
TIME						
VOL. (gal)	1.75	3.5	5.00	7.00		
pH (s.units)	6.69	6.67	6.69	6.71		
ORP (mV)	-384	-367.8	-363.2	-369.9		
TEMP.(C)	29.77	29.58	29.55	29.52		
Salinity (ppt)	42.66	42.68	42.64	42.60		
DO (mg/L) / %	3.34/56.3	6.48/100	7.27/>100	6.97/>100		
Turbidity (NTU)	9.1	9.2	6.5	6.9		
MMHOS **COND.(umhos/cm)**	63.41	63.42	63.39	63.36		

SAMPLE PARAMETERS (**GRAB** OR **COMPOSITE**) : TOTAL + DISS METALS, VOC'S, SVOC'S, PCB'S,PES

FILTERED METALS COLLECTED: Y / N 1.0um,0.45um, OTHER:

OBSERVATIONS

COLOR: CLEAR , AMBER , TAN , BROWN , GREY , MILKY WHITE , OTHER: TAN-YELLOW

ODOR: NONE , LOW , MEDIUM , HIGH , VERY STRONG , H2S , FUEL LIKE , CHEMICAL ?, UNKNOWN

TURBIDITY: NONE , LOW , MEDIUM , HIGH , VERY TURBID. HEAVY SILTS 10 NTU

COMMENTS:

OTHER: PLEASE USE BACK OF SHT.FOR SKETCHING MAPS ,WELL LOCATION NOTES ECT. **SEE BACK OF SHT Y / N.**

Q.C. SAMPLE TYPE: NONE DUPLICATE , EQUIPMENT BLANK , OTHER :

Q.C. PARAMETERS:

SAMPLE DATE/ TIME: 06/03/2000 / @

SIGNED/SAMPLER:

CH2M HILL
WELL SAMPLING FIELD SHEET

PROJECT# 139322.FI.60

WELL NUMBER: SWMU-6-MW4	SITE: NASD VIEQUES, PUERTO RICO
FIELD CREW: K. KARVAZY, R. GORSIRA	(leave blank if on previous page)

		CASING DIA.		GAL/FT OF CASING	
DEPTH TO WATER (FT): =	4.03				
WELL DEPTH (FT): -	13.47	2 IN.		0.1632	
WATER COLUMN (FT): =	9.44	4 IN.		0.6528	
GAL/FT OF CASING x	0.1632	6 IN.		1.4688	
CASING VOLUME (GAL) =	1.54	8 IN.		2.611	
NO. OF VOLUMES min.(3) x	3	10 IN.		4.0797	
PURGE VOLUME (GAL) =	4.62	12 IN.		5.8748	

METHOD OF PURGING (circle one)

PUMP: SUB. CENT. PERIST.	OTHER:	BAILER : TEFLON, SS ,OTHER:
TIME ON: 1545	DEDICATED TUBING	BAILER VOL.. (gal) .25 / .33
FLOW RATE (gpm):		REQUIRED PULLS:
PUMP TIME (min):		VOL. PURGED (gals):
VOL. PURGED (gals):		OTHER: FINAL DTW=4.54

FIELD PARAMETERS	FIELD MEASUREMENTS					WITHIN10% Y / N
	1st	2nd	3rd	4th	5th	6th
TIME						
VOL. (gal)	1.50	3.00	4.50	6.00	7.50	9.00
pH (s.units)	6.76	6.68	6.73	6.71	6.72	6.70
ORP (mV)	-304.5	-364.2	-365.9	-374.2	-379	-376
TEMP.(C)	29.07	29.33	29.01	28.99	28.96	29.04
Salinity (ppt)	42.11	42.10	42.44	42.35	42.51	42.46
DO (mg/L) / %	5.44/89.4	6.17/>100	5.07/83	5.27	3.70/60	2.98/49
Turbidity (NTU)	450	450	260	310	210	190
MMHOS COND.(umhos/cm)	62.64	62.67	63.10	62.98	63.18	63.10

SAMPLE PARAMETERS (**GRAB** OR **COMPOSITE**) :

FILTERED METALS COLLECTED: Y / N 1.0um,0.45um, OTHER:

OBSERVATIONS

COLOR: CLEAR , AMBER , TAN , BROWN , (GREY) , MILKY WHITE , OTHER: DARK GREY

ODOR: NONE , LOW , MEDIUM , HIGH , VERY STRONG , H2S , FUEL LIKE , CHEMICAL ?, UNKNOWN

TURBIDITY: NONE , LOW , MEDIUM , HIGH , VERY TURBID. HEAVY SILTS

COMMENTS:

OTHER: PLEASE USE BACK OF SHT.FOR SKETCHING MAPS ,WELL LOCATION NOTES ECT. **SEE BACK OF SHT Y / N.**

Q.C. SAMPLE TYPE: NONE DUPLICATE , EQUIPMENT BLANK , OTHER :

Q.C. PARAMETERS:

SAMPLE DATE/ TIME: 06/03/2000 / @

SIGNED/SAMPLER:

SWMU-7

MONITORING WELL PURGING AND SAMPLING LOGS

CH2M HILL
WELL SAMPLING FIELD SHEET

PROJECT# 139322.FI.60

WELL NUMBER:SWMU-7-MW1 (2)	SITE: QUEBRADA, NASD VIEQUES, PUERTO RICO
FIELD CREW: G. SILVA, B COLLOW	(leave blank if on previous page)

		CASING DIA.		GAL/FT OF CASING	
DEPTH TO WATER (FT): =	40.03				
WELL DEPTH (FT):	42.55	2 IN.		0.1632	
WATER COLUMN (FT): =	2.52	4 IN.		0.6528	
GAL/FT OF CASING x	0.163	6 IN.		1.4688	
CASING VOLUME (GAL) =	0.4	8 IN.		2.611	
NO. OF VOLUMES min.(3) x	1.23	10 IN.		4.0797	
PURGE VOLUME (GAL) =		12 IN.		5.8748	

METHOD OF PURGING (circle one)

PUMP: SUB. CENT. PERIST.	**OTHER:**	**BAILER** : TEFLON, SS ,OTHER:
TIME ON: 1458	DEDICATED TUBING	BAILER VOL.. (gal) .25 / .33
FLOW RATE (gpm): 0.1		REQUIRED PULLS:
PUMP TIME (min):		VOL. PURGED (gals):
VOL. PURGED (gals):		OTHER: FINAL DTW=

FIELD PARAMETERS	FIELD MEASUREMENTS					WITHIN10% Y / N
	1st	2nd	3rd	4th	5th	6th
TIME	1458	1502	1509	1515		
VOL. (gal)	0.2	1.0	2.5	~3		
pH (s.units)	6.75	6.49	6.54	6.65		
ORP (mV)	-151	-101	-82.4	-85		
TEMP.(C)	28.1	28.92	30.36	32.1		
Salinity (ppt)	1.16	1.12	1.08	1.08		
DO (mg/L)	5.64	5.25	4.70	4.09		
Turbidity (NTU)	120	12.89				
COND.(umhos/cm)/DTW	2427/4118	2371/41.10	2366/40.78	2408/		

SAMPLE PARAMETERS (**GRAB** OR **COMPOSITE**) :

FILTERED METALS COLLECTED: Y / N 1.0um,0.45um, OTHER:

OBSERVATIONS

COLOR: CLEAR , AMBER , TAN , BROWN , GREY , MILKY WHITE , OTHER:

ODOR: NONE , LOW , MEDIUM , HIGH , VERY STRONG , H2S , FUEL LIKE , CHEMICAL ?, UNKNOWN

TURBIDITY: NONE (LOW) , MEDIUM , HIGH , VERY TURBID. HEAVY SILTS NTU = 32.5

COMMENTS: PUMP INTAKE AT 8'

OTHER: PLEASE USE BACK OF SHT.FOR SKETCHING MAPS ,WELL LOCATION NOTES ECT. **SEE BACK OF SHT Y / N.**

Q.C. SAMPLE TYPE: NONE DUPLICATE , EQUIPMENT BLANK , OTHER :

Q.C. PARAMETERS:

SAMPLE DATE/ TIME: 05/03/2000 1345 / @

SIGNED/SAMPLER:

CH2M HILL
WELL SAMPLING FIELD SHEET

PROJECT#___139322.FI.70_____

WELL NUMBER:SWMU-7-MW2R	SITE:NASD VIEQUES, PUERTO RICO (QUEBRADA DUMPSITE)

FIELD CREW: (leave blank if on previous page)

		CASING DIA.		GAL/FT OF CASING	
DEPTH TO WATER (FT): =	68.14				
WELL DEPTH (FT):	84.60	2 IN.		0.1632	
WATER COLUMN (FT):	16.46	4 IN.		0.6528	
GAL/FT OF CASING	0.1632	6 IN.		1.4688	
CASING VOLUME (GAL)	2.68	8 IN.		2.611	
NO. OF VOLUMES min.(3)	8.05	10 IN.		4.0797	
PURGE VOLUME (GAL)	~8.0	12 IN.		5.8748	

METHOD OF PURGING (circle one)

PUMP: SUB. CENT. PERIST.	**OTHER:**	**BAILER** : TEFLON, SS ,OTHER:
TIME ON: 1234	DEDICATED TUBING	BAILER VOL.. (gal) .25 / .33
FLOW RATE (gpm): 0.3		REQUIRED PULLS:
PUMP TIME (min): 60		VOL. PURGED (gals):
VOL. PURGED (gals): 15		OTHER:

FIELD PARAMETERS	FIELD MEASUREMENTS					WITHIN10% Y / N
	1st	2nd	3rd	4th	5th	6th
TIME	1236	1246	1256	1302	1311	1319
VOL. (gal)	0.5	3.5	6	7.5	9.5	13
pH (s.units)	6.32	6.33	6.17	6.02	6.21	6.34
ORP (mV)						
TEMP.(C)	27.67	29.11	29.91	30.1	30.22	30.6
Turbidity	466	140	53.3	46.3	19.98	12
DO (mg/L)	3.4	5.27	5.92	6.26	6.71	6.94
COND.(umhos/cm)	2741	2794	2840	2850	2877	2903

SAMPLE PARAMETERS (**GRAB** OR **COMPOSITE**) :

FILTERED METALS COLLECTED: Y / N 1.0um,0.45um, OTHER:

OBSERVATIONS

COLOR: (CLEAR), AMBER , TAN , BROWN , GREY , MILKY WHITE , OTHER:

ODOR: (NONE), LOW , MEDIUM , HIGH , VERY STRONG , H2S , FUEL LIKE , CHEMICAL ?, UNKNOWN

TURBIDITY: (NONE) , LOW , MEDIUM , HIGH , VERY TURBID. HEAVY SILTS

COMMENTS:

OTHER: PLEASE USE BACK OF SHT.FOR SKETCHING MAPS ,WELL LOCATION NOTES ECT. **SEE BACK OF SHT Y / N.**

Q.C. SAMPLE TYPE: (DUPLICATE) EQUIPMENT BLANK , OTHER : MS/MSD

PARAMETERS: VOC,SVOC,PEST,PCB,METS(TOTAL),METS(FILT),EXPLOSIVES

SAMPLE DATE/ TIME: 05/02/2000 1337 / @ 1310

SIGNED/SAMPLER: _____

CH2M HILL
WELL SAMPLING FIELD SHEET

PROJECT#___139322.FI.60_____

WELL NUMBER: SWMU-7-3R	SITE:NASD VIEQUES, PUERTO RICO (QUEBRADA DUMPSITE)
FIELD CREW: ALICIA. GABRIEL S.	(leave blank if on previous page)

		CASING DIA.		GAL/FT OF CASING	
DEPTH TO WATER (FT): =	40.10				
WELL DEPTH (FT):	58.30	2 IN.		0.1632	
WATER COLUMN (FT): =	18.20	4 IN.		0.6528	
GAL/FT OF CASING	0.1632	6 IN.		1.4688	
CASING VOLUME (GAL)	2.97	8 IN.		2.611	
NO. OF VOLUMES min.(3)	8.91	10 IN.		4.0797	
PURGE VOLUME (GAL)	8.91	12 IN.		5.8748	

METHOD OF PURGING (circle one)

PUMP: SUB. CENT. PERIST.	**OTHER:**	**BAILER** : TEFLON, SS ,OTHER:
TIME ON: 1016	DEDICATED TUBING	BAILER VOL.. (gal) .25 / .33
FLOW RATE (gpm):		REQUIRED PULLS:
PUMP TIME (min):		VOL. PURGED (gals):
VOL. PURGED (gals):		OTHER:

FIELD PARAMETERS	FIELD MEASUREMENTS					WITHIN10% Y / N
	1st	2nd	3rd	4th	5th	6th
TIME	1016	1019	1026	1035	1042	
VOL. (gal)	0.5	3	6	9	12.5	
pH (s.units)	6.67	6.99	6.96	6.85	6.84	
ORP (mV)						
TEMP.(C)	27.82	28.1	28.52	28.08	28.09	
Turbidity	12.54	718	1358	416	95.3	
DO (mg/L)	1.83	2.71	4.05	4.34	4.56	
COND.(umhos/cm)	1799	1799	1780	1770	1768	

SAMPLE PARAMETERS (**GRAB** OR **COMPOSITE**) :

FILTERED METALS COLLECTED: Y / N 1.0um,0.45um, OTHER:

OBSERVATIONS

COLOR: CLEAR , AMBER , TAN , BROWN , GREY , MILKY WHITE , OTHER:

ODOR: NONE , LOW , MEDIUM , HIGH , VERY STRONG , H2S , FUEL LIKE , CHEMICAL ?, UNKNOWN

TURBIDITY: NONE , LOW , MEDIUM , HIGH , VERY TURBID. HEAVY SILTS

COMMENTS:

OTHER: PLEASE USE BACK OF SHT.FOR SKETCHING MAPS ,WELL LOCATION NOTES ECT. **SEE BACK OF SHT Y / N.**

Q.C. SAMPLE TYPE: DUPLICATE , EQUIPMENT BLANK , OTHER : NO QC @ THIS STATION

PARAMETERS: VOC,SVOC,PEST,PCB,METS(TOTAL),METS(FILT),EXPLOSIVES

SAMPLE DATE/ TIME: 05/02/2000 / @ 1050

SIGNED/SAMPLER: BALEY

CH2M HILL
WELL SAMPLING FIELD SHEET

PROJECT# 139322.FI.70

WELL NUMBER:SWMU-7-MW1		**SITE:NASD VIEQUES, PUERTO RICO SWMU07**			
FIELD CREW: K.KARVAZY, R. GORSIRA				(leave blank if on previous page)	
DEPTH TO WATER (FT): =	40.42	CASING DIA.		GAL/FT OF CASING	
WELL DEPTH (FT):	42.71	**2 IN.**		**0.1632**	
WATER COLUMN (FT): =	2.29	**4 IN.**		**0.6528**	
GAL/FT OF CASING x	0.1632	**6 IN.**		**1.4688**	
CASING VOLUME (GAL) =	0.0374	**8 IN.**		**2.611**	
NO. OF VOLUMES min.(3) x	3	**10 IN.**		**4.0797**	
PURGE VOLUME (GAL) =	1.12	**12 IN.**		**5.8748**	

METHOD OF PURGING (circle one)

PUMP: SUB. CENT. PERIST.	**OTHER:**	**BAILER:** TEFLON, SS ,OTHER:
TIME ON:	PUMP EXCHANGED FOR	BAILER VOL.. (gal) .25 / .33
FLOW RATE (gpm):	BAILER DUE TO LOW WATER	REQUIRED PULLS: 16
PUMP TIME (min):	LEVEL.	VOL. PURGED (gals): ~0.5
VOL. PURGED (gals):		OTHER: (BAILER NOT FILLED EACH PULL)

FIELD PARAMETERS	**FIELD MEASUREMENTS**					WITHIN10% Y / N
	1st	2nd	3rd	4th	5th	6th
TIME	1815	1820	1830			
VOL. (gal)	0.5	1.00	1.50			
pH (s.units)	7.19	7.21	7.15			
ORP (mV)	-85.7	-105	-115.6			
TEMP.(C)	26.91	26.70	26.66			
Salinity (ppt)	0.79	0.77	0.76			
DO (mg/L)	10.82	12.68/>100	12.26/>100			
Turbidity (NTU)	25	38	33			
COND.(umhos/cm)	1.572	1.53	1.51			

SAMPLE PARAMETERS (GRAB OR **COMPOSITE**) :

FILTERED METALS COLLECTED: Y / N 1.0um,0.45um, OTHER:

OBSERVATIONS

COLOR: CLEAR , AMBER , TAN , BROWN , GREY , MILKY WHITE , OTHER: Slight Yellow Color

ODOR: NONE , LOW , MEDIUM , HIGH , VERY STRONG , H2S , FUEL LIKE , CHEMICAL ?, UNKNOWN Organic odor

TURBIDITY: NONE , LOW , MEDIUM , HIGH , VERY TURBID. HEAVY SILTS

COMMENTS: COLLECTED FOR PERCHLORATE ONLY.
WATER HAS SLIGHT ORGANIC ODOR. ORGANIC DEBRIS IN PURGE WATER.

OTHER: PLEASE USE BAC

Q.C. SAMPLE TYPE: DUPLICATE , EQUIPMENT BLANK , OTHER :

PARAMETERS:

SAMPLE DATE/ TIME: 06/05/2000 / @ 1830

SIGNED/SAMPLER:

CH2M HILL
WELL SAMPLING FIELD SHEET

PROJECT# 139322.FI.70

WELL NUMBER:SWMU-7-MW2R	SITE:NASD VIEQUES, PUERTO RICO SWMU07
FIELD CREW: J. HAYES/E. CABALE	(leave blank if on previous page)

			CASING DIA.		GAL/FT OF CASING	
DEPTH TO WATER (FT): =	68.70					
WELL DEPTH (FT):	84.36		(2 IN.)		0.1632	
WATER COLUMN (FT):	=	15.66	4 IN.		0.6528	
GAL/FT OF CASING	x	0.163	6 IN.		1.4688	
CASING VOLUME (GAL)	=	2.55	8 IN.		2.611	
NO. OF VOLUMES min.(3)	x		10 IN.		4.0797	
PURGE VOLUME (GAL)	=	7.65	12 IN.		5.8748	

METHOD OF PURGING (circle one)

PUMP: SUB. CENT. PERIST.	**OTHER:**	**BAILER** : TEFLON, SS ,OTHER:
TIME ON:	PUMP EXCHANGED FOR	BAILER VOL.. (gal) .25 / .33
FLOW RATE (gpm):	BAILER DUE TO LOW WATER	REQUIRED PULLS:
PUMP TIME (min):	LEVEL.	VOL. PURGED (gals):
VOL. PURGED (gals):		OTHER:

FIELD PARAMETERS	FIELD MEASUREMENTS					WITHIN10% Y / N
	1st	2nd	3rd	4th	5th	6th
TIME	1135	1230	1235			
VOL. (gal)	3	6	10			
pH (s.units)	7.02	6.94	6.9			
ORP (mV)	60.4	64.2	66.7			
TEMP.(C)	27.19	27.13	27.11			
Salinity (ppt)	1.16	1.15	1.14			
DO (mg/L)	42.2	3.97	3.86			
Turbidity (NTU)	140	80	62			
COND.(umhos/cm)	2.208	2.224	2.216			

SAMPLE PARAMETERS (**GRAB** OR **COMPOSITE**) :

FILTERED METALS COLLECTED: Y / N 1.0um,0.45um, OTHER:

OBSERVATIONS

COLOR: (CLEAR) , AMBER , TAN , BROWN , GREY , MILKY WHITE , OTHER:

ODOR: (NONE) LOW , MEDIUM , HIGH , VERY STRONG , H2S , FUEL LIKE , CHEMICAL ?, UNKNOWN

TURBIDITY: (NONE) , LOW , MEDIUM , HIGH , VERY TURBID. HEAVY SILTS

NOTE: INITIALLY TURBID BUT CLEARED ONCE STARTED SAMPLING

COMMENTS: COLLECTED PERCHLORATES ONLY!

OTHER:

Q.C. SAMPLE TYPE: DUPLICATE , EQUIPMENT BLANK , OTHER :

PARAMETERS:

SAMPLE DATE/ TIME: 06/09/2000 / @ 1245

SIGNED/SAMPLER:

CH2M HILL
WELL SAMPLING FIELD SHEET

PROJECT# 139322.FI.70

WELL NUMBER:SWMU-7-MW3R	SITE:NASD VIEQUES, PUERTO RICO SWMU07
FIELD CREW: K.KARVAZY, R. GORSIRA	(leave blank if on previous page)

		CASING DIA.		GAL/FT OF CASING	
DEPTH TO WATER (FT): =	39.08				
WELL DEPTH (FT):	57.28	2 IN.		0.1632	
WATER COLUMN (FT): =	18.20	4 IN.		0.6528	
GAL/FT OF CASING x	0.1632	6 IN.		1.4688	
CASING VOLUME (GAL) =	2.97	8 IN.		2.611	
NO. OF VOLUMES min.(3) x	3	10 IN.		4.0797	
PURGE VOLUME (GAL) =	8.91	12 IN.		5.8748	

METHOD OF PURGING (circle one)

PUMP: SUB. CENT. PERIST.	**OTHER:**	**BAILER** : TEFLON, SS ,OTHER:
TIME ON:	PUMP EXCHANGED FOR	BAILER VOL.. (gal) .25 / .33
FLOW RATE (gpm):	BAILER DUE TO LOW WATER	REQUIRED PULLS:
PUMP TIME (min):	LEVEL.	VOL. PURGED (gals):
VOL. PURGED (gals):		OTHER:

FIELD PARAMETERS	FIELD MEASUREMENTS					WITHIN10% Y / N
	1st	2nd	3rd	4th	5th	6th
TIME	1715	1730	17.45			
VOL. (gal)	3	6	9			
pH (s.units)	7.52	7.44	7.5			
ORP (mV)	38.3	38.9	37.2			
TEMP.(C)	27.50	27.45	27.52			
Salinity (ppt)	0.64	0.64	0.63			
DO (mg/L) /%	5.24	6.4/80	9.0/>100			
Turbidity (NTU)	1.5	0.35	1.28			
COND.(umhos/cm)	1.303	1.28	1.28			

SAMPLE PARAMETERS (**GRAB** OR **COMPOSITE**) :

FILTERED METALS COLLECTED: Y / N 1.0um,0.45um, OTHER:

OBSERVATIONS

COLOR: (CLEAR), AMBER , TAN , BROWN , GREY , MILKY WHITE , OTHER: VERY CLEAR

ODOR: NONE , (LOW) , MEDIUM , HIGH , VERY STRONG , H2S , FUEL LIKE , CHEMICAL ?, UNKNOWN

TURBIDITY: NONE , LOW , MEDIUM , HIGH , VERY TURBID. HEAVY SILTS

COMMENTS:

OTHER:

Q.C. SAMPLE TYPE: DUPLICATE , EQUIPMENT BLANK , OTHER :

PARAMETERS:

SAMPLE DATE/ TIME: 06/05/2000 / @ 1245

SIGNED/SAMPLER:

SWMU-14

MONITORING WELL PURGING AND SAMPLING LOGS

CH2M HILL
WELL SAMPLING FIELD SHEET

PROJECT#_____

WELL NUMBER: MW-01		SITE: SWMU14			
FIELD CREW: JENNIFER OTTOSON AND KEITH COATS				(leave blank if on previous page)	
DEPTH TO WATER (FT):	43.22	CASING DIA.		GAL/FT OF CASING	
WELL DEPTH (FT):	70	2 IN.		0.1632	
WATER COLUMN (FT):	26.78	4 IN.		0.6528	
GAL/FT OF CASING	0.1632	6 IN.		1.4688	
CASING VOLUME (GAL)	4.5	8 IN.		2.611	
NO. OF VOLUMES min.(3)	3	10 IN.		4.0797	
PURGE VOLUME (GAL)	13.5	12 IN.		5.8748	

METHOD OF PURGING (circle one)

PUMP: (SUB) CENT. PERIST.	OTHER:	BAILER : TEFLON, SS ,OTHER:
TIME ON: 1015		BAILER VOL.. (gal) .25 / .33
FLOW RATE (gpm): 0.5		REQUIRED PULLS:
PUMP TIME (min): 30		VOL. PURGED (gals):
VOL. PURGED (gals): 14		OTHER:

FIELD PARAMETERS	FIELD MEASUREMENTS					WITHIN10% Y / N
	1st	2nd	3rd	4th	5th	6th
TIME	1015	1025	1035	1045		
VOL. (gal)	0	4.5	9	14		
pH (s.units)	7.2	7.19	7.11	7.11		
ORP (mV)	91.4	86.4	82.5	83		
TEMP.(C)	28.98	29.03	28.97	28.95		
Salinity (ppt)	0.45	0.45	0.44	0.44		
DO (mg/L)						
Turbidity (NTU)	881	758	480	18.4		
COND.(umhos/cm)	995	990	982	974		

SAMPLE PARAMETERS (GRAB OR COMPOSITE) : VOC, SVOC, PEST/PCB, METALS (FILT & UNFILT)

FILTERED METALS COLLECTED: Y N 1.0um,0.45um, OTHER:

OBSERVATIONS

COLOR: (CLEAR) , AMBER , TAN , BROWN , GREY , MILKY WHITE , OTHER:

ODOR: (NONE), LOW , MEDIUM , HIGH , VERY STRONG , H2S , FUEL LIKE , CHEMICAL ?, UNKNOWN

TURBIDITY: NONE (LOW) , MEDIUM , HIGH , VERY TURBID. HEAVY SILTS

COMMENTS:

OTHER: PLEASE USE BACK OF SHT.FOR SKETCHING MAPS ,WELL LOCATION NOTES ECT. SEE BACK OF SHT Y (N.)

Q.C. SAMPLE TYPE: DUPLICATE , (EQUIPMENT BLANK) , OTHER :

Q.C. PARAMETERS:

SAMPLE DATE/ TIME: 04/28/2000 / @ 1100

SIGNED/SAMPLER: _____

CH2M HILL
WELL SAMPLING FIELD SHEET

PROJECT#_____

WELL NUMBER: MW-02		**SITE: SWMU14**			
FIELD CREW: JENNIFER OTTOSON AND KEITH COATS				(leave blank if on previous page)	
DEPTH TO WATER (FT):	40.07	CASING DIA.		GAL/FT OF CASING	
WELL DEPTH (FT):	50	**2 IN.**		**0.1632**	
WATER COLUMN (FT):	9.93	**4 IN.**		**0.6528**	
GAL/FT OF CASING	0.1632	**6 IN.**		**1.4688**	
CASING VOLUME (GAL)	1.5	**8 IN.**		**2.611**	
NO. OF VOLUMES min.(3)	3	**10 IN.**		**4.0797**	
PURGE VOLUME (GAL)	5	**12 IN.**		**5.8748**	

METHOD OF PURGING (circle one)

PUMP: SUB. CENT. PERIST.	**OTHER:**	**BAILER** : TEFLON, SS ,OTHER:
TIME ON: 1140		BAILER VOL.. (gal) .25 / .33
FLOW RATE (gpm): 0.25		REQUIRED PULLS:
PUMP TIME (min): 20		VOL. PURGED (gals):
VOL. PURGED (gals): 5		OTHER:

FIELD PARAMETERS	**FIELD MEASUREMENTS**					WITHIN10% Y / N
	1st	2nd	3rd	4th	5th	6th
TIME	1140	1146	1152	1158		
VOL. (gal)	0	1.5	3	5		
pH (s.units)	7.46	7.52	7.57	7.59		
ORP (mV)	50.4	31.6	29.3	30.8		
TEMP.(C)	29.74	31.93	32.10	32.68		
Salinity (ppt)	0.38	0.39	0.41	0.42		
DO (mg/L)						
Turbidity (NTU)	475	360	502	468		
COND.(umhos/cm)	861	930	964	994		

SAMPLE PARAMETERS ((GRAB) OR **COMPOSITE**) : VOC, SVOC, PEST/PCB, METALS (FILT & UNFILT)
FILTERED METALS COLLECTED(Y)N 1.0um(0.45)m, OTHER:

OBSERVATIONS

COLOR: CLEAR , (AMBER) , TAN , BROWN , GREY , MILKY WHITE , OTHER:

ODOR: (NONE) , LOW , MEDIUM , HIGH , VERY STRONG , H2S , FUEL LIKE , CHEMICAL ?, UNKNOWN

TURBIDITY: NONE , (LOW) (MEDIUM) , HIGH , VERY TURBID. HEAVY SILTS

COMMENTS:

OTHER: PLEASE USE BACK OF SHT.FOR SKETCHING MAPS ,WELL LOCATION NOTES ECT. **SEE BACK OF SHT** Y (N.)

Q.C. SAMPLE TYPE: DUPLICATE , EQUIPMENT BLANK , OTHER :

Q.C. PARAMETERS:

SAMPLE DATE/ TIME: 04/28/2000 / @ 1200

SIGNED/SAMPLER: _____

SWMU-15

MONITORING WELL PURGING AND SAMPLING LOGS

CH2M HILL
WELL SAMPLING FIELD SHEET

PROJECT# 139322.FI.70

WELL NUMBER: SWMU15-MW-1	SITE: WASTE TRANSPORTATION VEHICLE AREA
FIELD CREW:	(leave blank if on previous page)

		CASING DIA.		GAL/FT OF CASING	
DEPTH TO WATER (FT):	=39.49				
WELL DEPTH (FT):	43.5	2 IN.		0.1632	
WATER COLUMN (FT):	= 4.01	4 IN.		0.6528	
GAL/FT OF CASING	x .1632	6 IN.		1.4688	
CASING VOLUME (GAL)	= .654	8 IN.		2.611	
NO. OF VOLUMES min.(3)	x 1.96	10 IN.		4.0797	
PURGE VOLUME (GAL)	= 0.2	12 IN.		5.8748	

METHOD OF PURGING (circle one)

PUMP: SUB. CENT. PERIST.	**OTHER:**	**BAILER** : TEFLON, SS ,OTHER:
TIME ON: 1356		BAILER VOL.. (gal) .25 / .33
FLOW RATE (gpm): 0.2		REQUIRED PULLS:
PUMP TIME (min): 25		VOL. PURGED (gals):
VOL. PURGED (gals): 5.5		OTHER:

FIELD PARAMETERS	FIELD MEASUREMENTS					WITHIN10% Y / N
	1st	2nd	3rd	4th	5th	6th
TIME	1356	1400	1405	1415	1421	
VOL. (gal)	1	1.5	2.5	3.5	5	
pH (s.units)	6.86	6.84	6.82	6.80	6.77	
ORP (mV)						
TEMP.(C)	31.24	32.72	33.62	33.67	33.9	
Salinity (ppt)						
DO (mg/L)	4.69	4.84	4.97	5.11	5.29	
Turbidity (NTU)	581	146	73	45	4.3	
COND.(umhos/cm)	930	951	973	969	971	

SAMPLE PARAMETERS (**GRAB** OR **COMPOSITE**):

FILTERED METALS COLLECTED: Y / N 1.0um,0.45um, OTHER:

OBSERVATIONS

COLOR: CLEAR , AMBER , TAN , BROWN , GREY , MILKY WHITE , OTHER:

ODOR: NONE , LOW , MEDIUM , HIGH , VERY STRONG , H2S , FUEL LIKE , CHEMICAL ?, UNKNOWN

TURBIDITY: NONE , LOW , MEDIUM , HIGH , VERY TURBID. HEAVY SILTS

COMMENTS:

OTHER: PLEASE USE BACK OF SHT.FOR SKETCHING MAPS ,WELL LOCATION NOTES ECT. **SEE BACK OF SHT Y / N.**

Q.C. SAMPLE TYPE: DUPLICATE , EQUIPMENT BLANK , OTHER :

PARAMETERS: VOC, SVOC, PEST, PCB, MET (TOTAL) & MET (FILT)

SAMPLE DATE/ TIME: 5/1/00 / @ 05/01/00 1430

SIGNED/SAMPLER: _____

AOC-C

MONITORING WELL PURGING AND SAMPLING LOGS

CH2M HILL
WELL SAMPLING FIELD SHEET

PROJECT#_____

WELL NUMBER:AOC-C-MW-01	SITE: DOWNGRADIENT SEPTIC TANK
FIELD CREW:	(leave blank if on previous page)

		CASING DIA.		GAL/FT OF CASING	
DEPTH TO WATER (FT):=	34.22		2" DIA		0.1632
WELL DEPTH (FT):	- 45	2 IN.		0.1632	
WATER COLUMN (FT):	= 10.78	4 IN.		0.6528	
GAL/FT OF CASING	x .1632	6 IN.		1.4688	
CASING VOLUME (GAL)	= 1.76	8 IN.		2.611	
NO. OF VOLUMES min.(3)	x 5.3	10 IN.		4.0797	
PURGE VOLUME (GAL)	=	12 IN.		5.8748	

METHOD OF PURGING (circle one)

PUMP: SUB. CENT. PERIST.	**OTHER:**	**BAILER** : TEFLON, SS ,OTHER:
TIME ON: 926		BAILER VOL.. (gal) .25 / .33
FLOW RATE (gpm): 0.3		REQUIRED PULLS:
PUMP TIME (min): 9.26		VOL. PURGED (gals):
VOL. PURGED (gals):		OTHER:

FIELD PARAMETERS	FIELD MEASUREMENTS					WITHIN10% Y / N
	1st	2nd	3rd	4th	5th	6th
TIME	926	935	942	952		
VOL. (gal)	1.0	3.0	6.0	9.0		
pH (s.units)	6.97	6.76	6.73	6.69		
ORP (mV)						
TEMP.(C)	29.24	31.82	31.80	31.98		
Salinity (ppt)						
DO (mg/L)	4.84	4.95	4.50	4.36		
Turbidity (NTU)	557	259	133	59.90		
COND.(umhos/cm)	1184.0	1234.8	1240.0	12.46		

SAMPLE PARAMETERS (**GRAB** OR **COMPOSITE**) :

FILTERED METALS COLLECTED: Y / N 1.0um,0.45um, OTHER:

OBSERVATIONS

COLOR: CLEAR , AMBER , TAN , (BROWN) , GREY , MILKY WHITE , OTHER:

ODOR: (NONE) LOW , MEDIUM , HIGH , VERY STRONG , H2S , FUEL LIKE , CHEMICAL ?, UNKNOWN

TURBIDITY: NONE , LOW , MEDIUM , HIGH , VERY TURBID. HEAVY SILTS

COMMENTS:

OTHER: PLEASE USE BACK OF SHT.FOR SKETCHING MAPS ,WELL LOCATION NOTES ECT. **SEE BACK OF SHT Y / N.**

Q.C. SAMPLE TYPE: DUPLICATE , EQUIPMENT BLANK , OTHER :

PARAMETERS: VOC, SVOC, PEST, PCB, MET (TOTAL) & MET (FILT)

SAMPLE DATE/ TIME: 05/01/2000 / @ 1250'

SIGNED/SAMPLER: _____

AOC-E

MONITORING WELL PURGING AND SAMPLING LOGS

CH2M HILL
WELL SAMPLING FIELD SHEET

PROJECT# 139322

WELL NUMBER: AOC-E MW-1	SITE: AOC-E UST 2016 NASD VIEQUES
FIELD CREW:	(leave blank if on previous page)

		CASING DIA.		GAL/FT OF CASING	
DEPTH TO WATER (FT):	=50.33				
WELL DEPTH (FT):	-36.66	2 IN.		0.1632	
WATER COLUMN (FT):	=	4 IN.		0.6528	
GAL/FT OF CASING	x	6 IN.		1.4688	
CASING VOLUME (GAL)	=	8 IN.		2.611	
NO. OF VOLUMES min.(3)	x	10 IN.		4.0797	
PURGE VOLUME (GAL)	=	12 IN.		5.8748	

METHOD OF PURGING (circle one)

PUMP: SUB. CENT. PERIST.	**OTHER:**	**BAILER** : TEFLON, SS ,OTHER:
TIME ON:		BAILER VOL.. (gal) .25 / .33
FLOW RATE (gpm):		REQUIRED PULLS:
PUMP TIME (min):		VOL. PURGED (gals):
VOL. PURGED (gals):		OTHER:

FIELD PARAMETERS	FIELD MEASUREMENTS					WITHIN10% Y / N
	1st	2nd	3rd	4th	5th	6th
TIME	SOIL-FREE PRODUCT (SEE COMMENTS)					
VOL. (gal)						
pH (s.units)						
ORP (mV)						
TEMP.(C)						
Salinity (ppt)						
DO (mg/L)						
Turbidity (NTU)						
COND.(umhos/cm)						

SAMPLE PARAMETERS (**GRAB** OR **COMPOSITE**) :

FILTERED METALS COLLECTED: Y / N 1.0um,0.45um, OTHER:

OBSERVATIONS

COLOR: CLEAR , AMBER , TAN , BROWN , GREY , MILKY WHITE , OTHER:

ODOR: NONE , LOW , MEDIUM , HIGH , VERY STRONG , H2S , FUEL LIKE , CHEMICAL ?, UNKNOWN

TURBIDITY: NONE , LOW , MEDIUM , HIGH , VERY TURBID.. HEAVY SILTS

COMMENTS: OIL/WATER INTERFACE DTW = 36.60 DT PRODUCT = 36.15
DTW = 36.35 DEPTH TO PROD. = 36.1

OTHER: PLEASE USE BACK OF SHT.FOR SKETCHING MAPS ,WELL LOCATION NOTES ECT. **SEE BACK OF SHT Y / N.**

Q.C. SAMPLE TYPE: DUPLICATE , EQUIPMENT BLANK , OTHER :

Q.C. PARAMETERS:

SAMPLE DATE/ TIME: 4/4/00 / @ 1000 am

SIGNED/SAMPLER: _____

CH2M HILL
WELL SAMPLING FIELD SHEET

PROJECT# 139322.FI.60

WELL NUMBER:AOC-E MW-2	**SITE: AOC-E UST 2016 NASD VIEQUES**
FIELD CREW:	(leave blank if on previous page)

		CASING DIA.		GAL/FT OF CASING	
DEPTH TO WATER (FT):	=50.25				
WELL DEPTH (FT):	-35.90	**2 IN.**		**0.1632**	
WATER COLUMN (FT):	=14.35	**4 IN.**		**0.6528**	
GAL/FT OF CASING	x 0.1632	**6 IN.**		**1.4688**	
CASING VOLUME (GAL)	=2.34	**8 IN.**		**2.611**	
NO. OF VOLUMES min.(3)	x 3	**10 IN.**		**4.0797**	
PURGE VOLUME (GAL)	= 7	**12 IN.**		**5.8748**	

METHOD OF PURGING (circle one)

PUMP: SUB. CENT. PERIST.	**OTHER:**	**BAILER** (TEFLON) SS ,OTHER:
TIME ON:		BAILER VOL.: (gal) .25 / (.33)
FLOW RATE (gpm):		REQUIRED PULLS: 21
PUMP TIME (min):		VOL. PURGED (gals):
VOL. PURGED (gals):		OTHER:

FIELD PARAMETERS	**FIELD MEASUREMENTS**					WITHIN10% Y / N
	1st	2nd	3rd	4th	5th	6th
TIME	1147	TDS=0.665 1230	1300			
VOL. (gal)	7	14	21			
pH (s.units)	7.44	7.18	6.98			
ORP (mV)	51.8	69.6	89.9			
TEMP.(C)	28.98	29.24	29.07			
Salinity (ppt)	0.49	0.50	0.50			
DO (mg/L)	1.75	3.11	3.53			
Turbidity (NTU)		992	795			
COND.(umhos/cm)	1080	1108	1099			

SAMPLE PARAMETERS (**GRAB** OR **COMPOSITE**) :

FILTERED METALS COLLECTED: Y / N 1.0um,0.45um, OTHER:

OBSERVATIONS

COLOR: CLEAR , AMBER , (TAN) , BROWN , GREY , MILKY WHITE , OTHER:

ODOR: (NONE), LOW , MEDIUM , HIGH , VERY STRONG , H2S , FUEL LIKE , CHEMICAL ?, UNKNOWN

TURBIDITY: NONE , LOW , MEDIUM , HIGH , VERY TURBID. (HEAVY SILTS)

COMMENTS:

OTHER: PLEASE USE BACK OF SHT.FOR SKETCHING MAPS ,WELL LOCATION NOTES ECT. **SEE BACK OF SHT Y / N.**

Q.C. SAMPLE TYPE: DUPLICATE , (EQUIPMENT BLANK) , OTHER :

Q.C. PARAMETERS:

SAMPLE DATE/ TIME: 04/04/2000 / @ 12:00

SIGNED/SAMPLER: _____

CH2M HILL
WELL SAMPLING FIELD SHEET

PROJECT# 139322.FI.60

WELL NUMBER:AOC-E MW-3	**SITE: AOC-E UST 2016 NASD VIEQUES**
FIELD CREW:	(leave blank if on previous page)

		CASING DIA.		GAL/FT OF CASING	
DEPTH TO WATER (FT):	=49.52				
WELL DEPTH (FT):	-36.14	**2 IN.**		**0.1632**	
WATER COLUMN (FT):	=13.38	**4 IN.**		**0.6528**	
GAL/FT OF CASING	x 0.1632	**6 IN.**		**1.4688**	
CASING VOLUME (GAL)	=2.18	**8 IN.**		**2.611**	
NO. OF VOLUMES min.(3)	x 3	**10 IN.**		**4.0797**	
PURGE VOLUME (GAL)	= 6.5	**12 IN.**		**5.8748**	

METHOD OF PURGING (circle one)

PUMP: SUB. CENT. PERIST.	**OTHER:**	**BAILER** : TEFLON, SS ,OTHER:	
TIME ON:		BAILER VOL.. (gal)	.25 / .33
FLOW RATE (gpm):		REQUIRED PULLS:	21
PUMP TIME (min):		VOL. PURGED (gals):	
VOL. PURGED (gals):		OTHER:	

FIELD PARAMETERS	**FIELD MEASUREMENTS**					WITHIN10% Y / N
	1st	2nd	3rd	4th	5th	6th
TIME	1435	TDS=0.665 1453	1506			
VOL. (gal)	2.5	5	7.5			
pH (s.units)	8.12	7.29	7.18			
ORP (mV)	70.7	90.5	98			
TEMP.(C)	28.87	28.76	28.7			
Salinity (ppt)	0.47	0.50	0.51			
DO (mg/L)	4.12	4.26	4.39			
Turbidity (NTU)	597	1133	1340			
COND.(umhos/cm)	958	1025	1031			

SAMPLE PARAMETERS (**GRAB** OR **COMPOSITE**) :

FILTERED METALS COLLECTED: Y / N 1.0um,0.45um, OTHER:

OBSERVATIONS

COLOR: CLEAR , AMBER , (TAN) , BROWN , GREY , MILKY WHITE , OTHER:

ODOR: NONE , LOW , MEDIUM , HIGH , VERY STRONG , H2S , FUEL LIKE , CHEMICAL ?, UNKNOWN

TURBIDITY: NONE , LOW , MEDIUM , (HIGH) , VERY TURBID. HEAVY SILTS

COMMENTS:

OTHER: PLEASE USE BACK OF SHT.FOR SKETCHING MAPS ,WELL LOCATION NOTES ECT. **SEE BACK OF SHT Y / N.**

Q.C. SAMPLE TYPE: DUPLICATE , EQUIPMENT BLANK , OTHER :

Q.C. PARAMETERS:

SAMPLE DATE/ TIME: 04/04/2000 / @ 14:00:00 PM

SIGNED/SAMPLER: _____

CH2M HILL
WELL SAMPLING FIELD SHEET

PROJECT# 139322

WELL NUMBER: AOC-E MW-4	SITE: NASD VIEQUES
FIELD CREW: JENNIFER OTTOSON & KEITH COATS	(leave blank if on previous page)

		CASING DIA.		GAL/FT OF CASING	
DEPTH TO WATER (FT):	=38.05				
WELL DEPTH (FT):	-50.80	2 IN.		0.1632	
WATER COLUMN (FT):	=12.75	4 IN.		0.6528	
GAL/FT OF CASING	x 0.1632	6 IN.		1.4688	
CASING VOLUME (GAL)	=2.3	8 IN.		2.611	
NO. OF VOLUMES min.(3)	x 3	10 IN.		4.0797	
PURGE VOLUME (GAL)	= 6.5	12 IN.		5.8748	

METHOD OF PURGING (circle one)

PUMP: (SUB.) CENT. PERIST.	**OTHER:**	**BAILER** : TEFLON, SS ,OTHER:
TIME ON:		BAILER VOL.. (gal) .25 / .33
FLOW RATE (gpm):		REQUIRED PULLS: 21
PUMP TIME (min):		VOL. PURGED (gals):
VOL. PURGED (gals):		OTHER:

FIELD PARAMETERS	FIELD MEASUREMENTS					WITHIN10% Y / N
	1st	2nd	3rd	4th	5th	6th
TIME		TDS=0.665				
VOL. (gal)	0	2	4	6.5		
pH (s.units)						
ORP (mV)						
TEMP.(C)			Pumped Dry			
Salinity (ppt)						
DO (mg/L)						
Turbidity (NTU)						
COND.(umhos/cm)						

SAMPLE PARAMETERS (GRAB) OR **COMPOSITE**) : VOC, SVOC, PEST/PCB, METALS (FILT & UNFILT)

FILTERED METALS COLLECTED: (Y) N 1.0um, (0.45um, OTHER:

OBSERVATIONS

COLOR: CLEAR , AMBER , TAN , BROWN , GREY , MILKY WHITE , OTHER:

ODOR: NONE , LOW , MEDIUM , HIGH , VERY STRONG , H2S , FUEL LIKE , CHEMICAL ?, UNKNOWN

TURBIDITY: NONE , LOW , MEDIUM , HIGH , VERY TURBID. HEAVY SILTS

COMMENTS: WELL PURGES DRY & VERY SLOW RECOVERY FROM DEVELOPMENT CREUS INFO. WE WILL COLLECT SAMPLES FIRST (OK FROM M. CLASEN) & THEN PURGE SMALL AMOUNT FOR READINGS. PUMPED DRY.

OTHER: PLEASE USE BACK OF SHT.FOR SKETCHING MAPS ,WELL LOCATION NOTES ECT. **SEE BACK OF SHT** Y (N)

Q.C. SAMPLE TYPE: DUPLICATE , EQUIPMENT BLANK , OTHER :

Q.C. PARAMETERS:

SAMPLE DATE/ TIME: 04/27/2000 / @ 9:45 AM

SIGNED/SAMPLER: _____

CH2M HILL
WELL SAMPLING FIELD SHEET

PROJECT# 139322.FI.70

WELL NUMBER:AOC-E-MW-5	SITE:NASD VIEQUES
FIELD CREW: JENNIFER OTTOSON & KEITH COATS	(leave blank if on previous page)

		CASING DIA.		GAL/FT OF CASING	
DEPTH TO WATER (FT):	=37.94				
WELL DEPTH (FT):	-50.00	2 IN.		0.1632	
WATER COLUMN (FT):	=12.06	4 IN.		0.6528	
GAL/FT OF CASING	x 0.1632	6 IN.		1.4688	
CASING VOLUME (GAL)	=1.97	8 IN.		2.611	
NO. OF VOLUMES min.(3)	x 5.90	10 IN.		4.0797	
PURGE VOLUME (GAL)	=	12 IN.		5.8748	

METHOD OF PURGING (circle one)

PUMP: SUB. CENT. PERIST.	OTHER:	BAILER : TEFLON, SS ,OTHER:
TIME ON: 1505		BAILER VOL.. (gal) .25 / .33
FLOW RATE (gpm): 0.20		REQUIRED PULLS: 21
PUMP TIME (min):		VOL. PURGED (gals):
VOL. PURGED (gals):		OTHER:

FIELD PARAMETERS	FIELD MEASUREMENTS					WITHIN10% Y / N
	1st	2nd	3rd	4th	5th	6th
TIME	15:55	TDS=0.665 16:01	16:09	16:16	16:26	
VOL. (gal)	0.25	1.25	2.5	4	7	
pH (s.units)	6.06	6.95	7.04	6.98	6.92	
ORP (mV)						
TEMP.(C)	30.11	33.4	34.83	33.77	34.65	
Salinity (ppt)						
DO (mg/L)	1.8	1.97	2.36	2.48	2.93	
Turbidity (NTU)	730	660	450	430	220	
COND.(umhos/cm)	1237	1305	1383	1336	1328	

SAMPLE PARAMETERS (**GRAB** OR **COMPOSITE**) : VOC, SVOC, PEST/PCB, METALS (FILT & UNFILT)

FILTERED METALS COLLECTED: Y / N 1.0um,0.45um, OTHER:

OBSERVATIONS

COLOR: CLEAR , AMBER , TAN , (BROWN) , GREY , MILKY WHITE , OTHER:

ODOR: (NONE), LOW , MEDIUM , HIGH , VERY STRONG , H2S , FUEL LIKE , CHEMICAL ?, UNKNOWN

TURBIDITY: NONE , (LOW) , MEDIUM , HIGH , VERY TURBID. HEAVY SILTS

COMMENTS:

OTHER: PLEASE USE BACK OF SHT.FOR SKETCHING MAPS ,WELL LOCATION NOTES ECT. **SEE BACK OF SHT Y / N.**

Q.C. SAMPLE TYPE: DUPLICATE , EQUIPMENT BLANK , OTHER :

Q.C. PARAMETERS:

SAMPLE DATE/ TIME: 05/01/2000 / @

SIGNED/SAMPLER: _____

CH2M HILL
WELL SAMPLING FIELD SHEET

PROJECT# 139322

WELL NUMBER:AOC-E MW-06	SITE: NASD VIEQUES
FIELD CREW: JENNIFER OTTOSON & KEITH COATS	(leave blank if on previous page)

		CASING DIA.		GAL/FT OF CASING	
DEPTH TO WATER (FT):	=37.84				
WELL DEPTH (FT):	-46.70	2 IN.		0.1632	
WATER COLUMN (FT):	= 8.86	4 IN.		0.6528	
GAL/FT OF CASING	x 0.1632	6 IN.		1.4688	
CASING VOLUME (GAL)	=1.5	8 IN.		2.611	
NO. OF VOLUMES min.(3)	x 3	10 IN.		4.0797	
PURGE VOLUME (GAL)	= 4.5	12 IN.		5.8748	

METHOD OF PURGING (circle one)

PUMP: (SUB.) CENT. PERIST.	**OTHER:**	**BAILER** : TEFLON, SS ,OTHER:
TIME ON: 0825		BAILER VOL.. (gal) .25 / .33
FLOW RATE (gpm): 0.25		REQUIRED PULLS: 21
PUMP TIME (min): 20		VOL. PURGED (gals):
VOL. PURGED (gals): 5		OTHER:

FIELD PARAMETERS	FIELD MEASUREMENTS					WITHIN10% Y / N
	1st	2nd	3rd	4th	5th	6th
TIME	8:25	TDS=0.665 8:31	8:37	8:43		
VOL. (gal)	0	1.5	3	4.5		
pH (s.units)	MISSED	7.14	7.14	7.14		
ORP (mV)	INITIAL	107.4	103.3	102.3		
TEMP.(C)	READINGS	30.46	30.54	30.58		
Salinity (ppt)		0.46	0.45	0.45		
DO (mg/L)						
Turbidity (NTU)		276	58	36		
COND.(umhos/cm)		1035	1030	1029		

SAMPLE PARAMETERS (GRAB) OR COMPOSITE) : VOC, SVOC, PEST/PCB, METALS (FILT & UNFILT)

FILTERED METALS COLLECTED (Y) N 1.0um (0.45um, OTHER:

OBSERVATIONS

COLOR: (CLEAR) AMBER , TAN , BROWN , GREY , MILKY WHITE , OTHER:

ODOR: (NONE) LOW , MEDIUM , HIGH , VERY STRONG , H2S , FUEL LIKE , CHEMICAL ?, UNKNOWN

TURBIDITY: NONE (, LOW) , MEDIUM , HIGH , VERY TURBID. HEAVY SILTS

COMMENTS:

OTHER: PLEASE USE BACK OF SHT.FOR SKETCHING MAPS ,WELL LOCATION NOTES ECT. **SEE BACK OF SHT** Y (N)

Q.C. SAMPLE TYPE: DUPLICATE , EQUIPMENT BLANK , OTHER :

Q.C. PARAMETERS:

SAMPLE DATE/ TIME: 04/27/2000 / @ 9:00 AM

SIGNED/SAMPLER: _____

AOC-F

MONITORING WELL PURGING AND SAMPLING LOGS

CH2M HILL
WELL SAMPLING FIELD SHEET

PROJECT#_____ WELL SCREENED FROM 43'-53'

WELL NUMBER: AOC-F-MW-01	SITE: AOC-F	PUMP PLACED AT 48'
FIELD CREW: RICK GORSIRA/KATIE SWANSON		(leave blank if on previous page)

		CASING DIA.		GAL/FT OF CASING	
DEPTH TO WATER (FT): =	30.3				
WELL DEPTH (FT): -	53	2 IN.		0.1632	
WATER COLUMN (FT): =	22.7	4 IN.		0.6528	
GAL/FT OF CASING x	0.16	6 IN.		1.4688	
CASING VOLUME (GAL) =	3.6	8 IN.		2.611	
NO. OF VOLUMES min.(3) x	10.8	10 IN.		4.0797	
PURGE VOLUME (GAL) =		12 IN.		5.8748	

METHOD OF PURGING (circle one)

PUMP: (SUB) CENT. PERIST.	OTHER:	BAILER : TEFLON, SS ,OTHER:
TIME ON: 13:28		BAILER VOL.. (gal) .25 / .33
FLOW RATE (lpm): 0.7 - 0.8		REQUIRED PULLS:
PUMP TIME (min): 32		VOL. PURGED (gals):
VOL. PURGED (l): 17		OTHER:

FIELD PARAMETERS	FIELD MEASUREMENTS					WITHIN10% Y / N
	1st	2nd	3rd	4th	5th	6th
TIME/WATER LEVEL (FT)	1330/30.34	1340/30.58	1345/30.48	1350/30.51	1355/30.55	1400/30.60
VOL. (gal)	0.2	1.5	5	8	10.5	13
pH (s.units)	7.34	7.16	7.09	7.05	6.99	6.95
ORP (mV)	97	94	91.2	93.8	95.6	97.3
TEMP.(C)	29.5	29.62	29.08	29.14	28.8	28.75
Salinity (ppt)	0.51	0.51	0.5	0.5	0.5	0.5
DO (mg/L)	3.35	2.18	1.77	1.8	1.93	2
COND.(umhos/cm)	1130	1133	1106	1109	1097	1091

SAMPLE PARAMETERS (**GRAB** OR **COMPOSITE**) : VOCS, SVOCS, PEST, PCBS, METALS (DISSOLVED & TOTAL)

FILTERED METALS COLLECTED (Y) N 1.0um, (0.45um), OTHER:

OBSERVATIONS

COLOR: CLEAR , AMBER , TAN , BROWN , GREY , MILKY WHITE , (OTHER) Slightly cloudy initially.

ODOR: (NONE) , LOW , MEDIUM , HIGH , VERY STRONG , H2S , FUEL LIKE , CHEMICAL ?, UNKNOWN

TURBIDITY: (NONE) , LOW , MEDIUM , HIGH , VERY TURBID. HEAVY SILTS

COMMENTS: PUMP PLACED AT 48' bgs, FLOW RATE WAS VARIABLE DUE TO FLOW CUTTING OUT AT VERY LOW RATES (IE 0.2L/MIN) FLOW WAS INCREASED SLIGHTLY IN ORDER TO ACHIEVE A MORE STABLE RATE.

OTHER: PLEASE USE BACK OF SHT.FOR SKETCHING MAPS ,WELL LOCATION NOTES ECT. **SEE BACK OF SHT Y / N.**

Q.C. SAMPLE TYPE: DUPLICATE , EQUIPMENT BLANK , OTHER : MS/MSD

PARAMETERS:

SAMPLE DATE/ TIME: 4/19/2000 / @ 14:00

SIGNED/SAMPLER: _____

CH2M HILL
WELL SAMPLING FIELD SHEET

PROJECT#_____

WELL NUMBER: AOC-F-MW-02		**SITE: AOC-F**			
FIELD CREW: Jennifer Ottoson & Keith Coats				(leave blank if on previous page)	
DEPTH TO WATER (FT): =	28.74	CASING DIA.		GAL/FT OF CASING	
WELL DEPTH (FT): -	50.00	**2 IN.**		**0.1632**	
WATER COLUMN (FT): =	21.26	**4 IN.**		**0.6528**	
GAL/FT OF CASING x	0.1632	**6 IN.**		**1.4688**	
CASING VOLUME (GAL) =	~4	**8 IN.**		**2.611**	
NO. OF VOLUMES min.(3) x	3	**10 IN.**		**4.0797**	
PURGE VOLUME (GAL) =	11	**12 IN.**		**5.8748**	

METHOD OF PURGING (circle one)

PUMP: (SUB) CENT. PERIST.	**OTHER:**	**BAILER** : TEFLON, SS ,OTHER:
TIME ON: 1007		BAILER VOL.. (gal) .25 / .33
FLOW RATE (gpm): 0.33		REQUIRED PULLS:
PUMP TIME (min): 60		VOL. PURGED (gals):
VOL. PURGED (gals): 12		OTHER:

FIELD PARAMETERS	FIELD MEASUREMENTS					WITHIN10% Y / N
	1st	2nd	3rd	4th	5th	6th
TIME	1007	1019	1031	1043	1105	
VOL. (gal)	0	3	6	9	12	
pH (s.units)	7.46	7.36	7.26	7.24	7.22	
ORP (mV)	74.4	63.0	65.1	63.4	63.1	
TEMP.(C)	28.59	29.47	29.60	29.20	29.21	
Salinity (ppt)	0.82	0.82	0.80	0.80	0.79	
DO (mg/L)	4.40	4.10	4.57	4.51	4.55	
COND.(umhos/cm)	1744	1778	1755	1730	1720	

SAMPLE PARAMETERS ((GRAB) OR **COMPOSITE**) : VOCS, SVOCS, PEST, PCBS, METALS (FIL AND UNFILT)

FILTERED METALS COLLECTED: (Y) N 1.0um,(0.45um, OTHER:

OBSERVATIONS

COLOR: (CLEAR), AMBER , TAN , BROWN , GREY , MILKY WHITE , OTHER:

ODOR: (NONE), LOW , MEDIUM , HIGH , VERY STRONG , H2S , FUEL LIKE , CHEMICAL ?, UNKNOWN

TURBIDITY: NONE (, LOW , MEDIUM , HIGH , VERY TURBID. HEAVY SILTS

COMMENTS:

OTHER: PLEASE USE BACK OF SHT.FOR SKETCHING MAPS ,WELL LOCATION NOTES ECT. **SEE BACK OF SHT Y /** (N.)

Q.C. SAMPLE TYPE: DUPLICATE , EQUIPMENT BLANK , OTHER :

PARAMETERS:

SAMPLE DATE/ TIME: 4/25/2000 / @ 11:00

SIGNED/SAMPLER: _____

CH2M HILL
WELL SAMPLING FIELD SHEET

PROJECT#_____

WELL NUMBER: AOC-F-MW-03		**SITE: AOC-F**			
FIELD CREW: Jennifer Ottoson & Keith Coats				(leave blank if on previous page)	
DEPTH TO WATER (FT): =	28.20	CASING DIA.		GAL/FT OF CASING	
WELL DEPTH (FT): -	45.00	**2 IN.**		**0.1632**	
WATER COLUMN (FT): =	16.80	**4 IN.**		**0.6528**	
GAL/FT OF CASING x	0.1632	**6 IN.**		**1.4688**	
CASING VOLUME (GAL) =	3	**8 IN.**		**2.611**	
NO. OF VOLUMES min.(3) x	3	**10 IN.**		**4.0797**	
PURGE VOLUME (GAL) =	8.5	**12 IN.**		**5.8748**	

METHOD OF PURGING (circle one)

PUMP: (SUB) CENT. PERIST.	**OTHER:**	**BAILER** : TEFLON, SS ,OTHER:
TIME ON: 1233		BAILER VOL.. (gal) .25 / .33
FLOW RATE (gpm): 0.33		REQUIRED PULLS:
PUMP TIME (min): 65		VOL. PURGED (gals):
VOL. PURGED (gals): 9		OTHER:

FIELD PARAMETERS	FIELD MEASUREMENTS					WITHIN10% Y / N
	1st	2nd	3rd	4th	5th	6th
TIME	1235	1247	1309	1321	1330	
VOL. (gal)	0	3	6	9	11	
pH (s.units)	7.44	7.37	7.36	7.26	7.25	
ORP (mV)	62.4	63.3	63.5	60.2	60.1	
TEMP.(C)	28.69	31.21	31.56	31.55	31.54	
Salinity (ppt)	0.80	0.82	0.82	0.82	0.82	
DO (mg/L)	2.28	3.15	3.26	3.28	3.25	
COND.(umhos/cm)	1720	1833	1848	1764	1770	

SAMPLE PARAMETERS ((GRAB) OR **COMPOSITE**) : VOCS, SVOCS, PEST, PCBS, METALS (FIL AND UNFILT)

FILTERED METALS COLLECTED: Y) N 1.0um,0.45um, OTHER:

OBSERVATIONS

COLOR: (CLEAR), AMBER , TAN , BROWN , GREY , MILKY WHITE , OTHER:

ODOR: (NONE), LOW , MEDIUM , HIGH , VERY STRONG , H2S , FUEL LIKE , CHEMICAL ?, UNKNOWN

TURBIDITY: NONE (, LOW , MEDIUM , HIGH , VERY TURBID. HEAVY SILTS

COMMENTS:

OTHER: PLEASE USE BACK OF SHT.FOR SKETCHING MAPS ,WELL LOCATION NOTES ECT. **SEE BACK OF SHT Y (N)**

Q.C. SAMPLE TYPE: DUPLICATE , EQUIPMENT BLANK , OTHER :

PARAMETERS:

SAMPLE DATE/ TIME: 4/25/2000 / @ 13:35

SIGNED/SAMPLER: _____

CH2M HILL
WELL SAMPLING FIELD SHEET

PROJECT#_____

WELL NUMBER: AOC-F-MW-04	SITE: AOC-F

FIELD CREW: Jennifer Ottoson & Keith Coats (leave blank if on previous page)

		CASING DIA.		GAL/FT OF CASING	
DEPTH TO WATER (FT): =	27.93				
WELL DEPTH (FT): -	50.00	2 IN.		0.1632	
WATER COLUMN (FT): =	22.07	4 IN.		0.6528	
GAL/FT OF CASING x	0.1632	6 IN.		1.4688	
CASING VOLUME (GAL) =	4	8 IN.		2.611	
NO. OF VOLUMES min.(3) x	3	10 IN.		4.0797	
PURGE VOLUME (GAL) =	11	12 IN.		5.8748	

METHOD OF PURGING (circle one)

PUMP: (SUB) CENT. PERIST.	OTHER:	BAILER : TEFLON, SS ,OTHER:
TIME ON: 1300		BAILER VOL.. (gal) .25 / .33
FLOW RATE (gpm): 0.33		REQUIRED PULLS:
PUMP TIME (min): 50		VOL. PURGED (gals):
VOL. PURGED (gals): 12		OTHER:

FIELD PARAMETERS	FIELD MEASUREMENTS					WITHIN10% Y / N
	1st	2nd	3rd	4th	5th	6th
TIME	1300	1312	1324	1336	1348	
VOL. (gal)	0	3	6	9	12	
pH (s.units)	7.37	7.30	7.16	7.15	7.16	
ORP (mV)	253.7	225.1	173.2	159.4	161.4	
TEMP.(C)	29.01	29.13	29.15	29.34	29.36	
Salinity (ppt)	0.73	0.73	0.70	0.70	0.69	
DO (mg/L)	5.40	4.67	4.70	4.40	4.44	
COND.(umhos/cm)	1571	1586	1522	1519	1521	

SAMPLE PARAMETERS (GRAB) OR COMPOSITE) : VOCS, SVOCS, PEST, PCBS, METALS (FILT AND UNFILT)

FILTERED METALS COLLECTED: Y/ N 1.0um,(0.45um, OTHER:

OBSERVATIONS

COLOR: (CLEAR) , AMBER , TAN , BROWN , GREY , MILKY WHITE , OTHER:

ODOR: (NONE) , LOW , MEDIUM , HIGH , VERY STRONG , H2S , FUEL LIKE , CHEMICAL ?, UNKNOWN

TURBIDITY: NONE , (LOW) , MEDIUM , HIGH , VERY TURBID. HEAVY SILTS

COMMENTS:

OTHER: PLEASE USE BACK OF SHT.FOR SKETCHING MAPS ,WELL LOCATION NOTES ECT. **SEE BACK OF SHT Y / (N.)**

Q.C. SAMPLE TYPE: DUPLICATE (EQUIPMENT BLANK) OTHER :

PARAMETERS:

SAMPLE DATE/ TIME: 4/25/2000 / @ 13:50

SIGNED/SAMPLER: _____

CH2M HILL
WELL SAMPLING FIELD SHEET

PROJECT#_____

WELL NUMBER: AOC-F-MW-05		SITE: AOC-F			
FIELD CREW:	K. SWANSON/B. TREBBLE				(leave blank if on previous page)
Initial DEPTH TO WATER (FT): =	27.88	CASING DIA.	FINAL WL 27.90	GAL/FT OF CASING	
WELL DEPTH (FT): -	47	2 IN.		0.1632	
WATER COLUMN (FT): =	19.1	4 IN.		0.6528	
GAL/FT OF CASING x	0.16	6 IN.		1.4688	
CASING VOLUME (GAL) =	3.05	8 IN.		2.611	
NO. OF VOLUMES min.(3) x	9.15	10 IN.		4.0797	
PURGE VOLUME (GAL) =	9.5	12 IN.		5.8748	

METHOD OF PURGING (circle one)

PUMP: SUB. CENT. PERIST.	**OTHER:**	**BAILER:** (TEFLON), SS, OTHER:
TIME ON:		BAILER VOL.: (gal) .25 / .33
FLOW RATE (gpm):		REQUIRED PULLS:
PUMP TIME (min):		VOL. PURGED (gals): 9.5
VOL. PURGED (gals):		OTHER:

FIELD PARAMETERS	**FIELD MEASUREMENTS**					WITHIN10% Y / N
	1st	2nd	3rd	4th	5th	6th
TIME/TURBIDITY	1410/94.2	1415/960	1425/935	1435/550		
VOL. (l)	0	3	6	9		
pH (s.units)	7.02	7.28	7.16	7.17		
ORP (mV)	74.0	82.4	82.5	95.2		
TEMP.(C)	27.97	27.34	27.25	27.35		
Salinity (ppt)	0.68	0.68	0.67	0.66		
DO (mg/L)	4.70	5.55	5.75	5.80		
COND.(umhos/cm)	1451	1438	1407	1395		

SAMPLE PARAMETERS (**GRAB** OR **COMPOSITE**): VOCS, SVOCS, PEST, PCBS, METALS (DISSOLVED & TOTAL)

FILTERED METALS COLLECTED: (Y) N 1.0um, (0.45um), OTHER:

OBSERVATIONS

COLOR: CLEAR , (AMBER) , TAN , BROWN , GREY , MILKY WHITE , OTHER:

ODOR: (NONE) , LOW , MEDIUM , HIGH , VERY STRONG , H2S , FUEL LIKE , CHEMICAL ?, UNKNOWN

TURBIDITY: NONE , LOW , (MEDIUM) , HIGH , VERY TURBID. HEAVY SILTS

COMMENTS: FULTZ PUMP WAS ATTEMPTED IN AM BUT WAS NOT FUNCTIONING. MARTY CLASEN WAS CONTACTED AND SAID A BAILER COULD BE USED TO SAMPLE THE WELL SINCE ALL 3 PUMPS ARE DOWN. 3 WELL VOLUMES BAILED FROM WELL, THE WELL WAS ALLOWED TO RECOVER FOR 10 MIN. PRIOR TO SAMPLING.

OTHER: PLEASE USE BACK OF SHT.FOR SKETCHING MAPS ,WELL LOCATION NOTES ECT. **SEE BACK OF SHT Y / N.**

Q.C. SAMPLE TYPE: DUPLICATE , EQUIPMENT BLANK , OTHER :

PARAMETERS:

SAMPLE DATE/ TIME: 4/20/2000 / @ 14:45

SIGNED/SAMPLER: _____

APPENDIX F

Surface Water Sampling Logs

CH2MHILL

Surface Water Field Data

STATION: W6 - STA. 1 | **CLOUD COVER:** Partly cloudy

FIELD CREW: R. Gorsira/K. Karvazy | **ANTECEDENT RAIN:** Sprinkles

DATE: 4/13/00 | **AMBIENT TEMPERATURE:** 80 F

TIME: 10:00 | **WIND VELOCITY & DIRECTION:** 10 mph E

TIDE STAGE: Mid-ebbing

STATION DESCRIPTION:

Mangrove-lined banks, old bridge crossing next to station

FIELD MEASUREMENTS **Mid**

Temp. (°C)	Conductivity (µmhos)	Salinity (ppt)	DO (mg/L)	pH (su)	Flow (ft/sec)	Flow Direction	Water depth	TDS
25.96	57425	37.48	4.93	7.62	0.5 ft	N	2.5	36.64

Sediment sample collected (Yes) No Secci ( ) N/A

Water sample collected (Yes) No

NOTES:

Similar conditions at station 2. H2S odor.

CH2MHILL

Surface Water Field Data

STATION: W6-STA 2 | **CLOUD COVER:** Partly cloudy

FIELD CREW: R. Gorsira/K. Karvazy | **ANTECEDENT RAIN:** Sprinkles in the early morning

DATE: 4/13/2000 | **AMBIENT TEMPERATURE:** 80 F

TIME: 0930 | **WIND VELOCITY & DIRECTION:** 5-10 mph E

TIDE STAGE: Mid ebbing

STATION DESCRIPTION:

Mangroves lined banks with scattered 20 rocks boulders on banks. Approx. 40 feet north of bridge crossing.

FIELD MEASUREMENTS **MID**

Temp. (°C)	Conductivity (µmhos)	Salinity (ppt)	DO (mg/L)	pH (su)	Flow (ft/sec)	Flow Direction	Water depth	TDS
25.83	57.291	37.47	5.32	7.54	1 ft/sec	North	2.5 ft	36.66

Sediment sample collected (Yes) No **Secci ( )** N/A

Water sample collected (Yes) No

NOTES:

Water color clear, medium turbidity, scattered leaf debris, soft muddy sand, fine grain sand, organic debris, with 10% gravel. Barnacles on boulders. Water level 2ft. Below grade H2S odor noticeable.

CH2MHILL

Surface Water Field Data

STATION: W6 - STA. 3 **CLOUD COVER:** Partly cloudy

FIELD CREW: R. Gorsira/K. Karvazy **ANTECEDENT RAIN:** Sprinkles

DATE: 4/13/00 **AMBIENT TEMPERATURE:** 80 F

TIME: 1045 **WIND VELOCITY & DIRECTION:** 10 mph E

TIDE STAGE: Mid depth ebbing

STATION DESCRIPTION:

Same as station 2.
Mangroves lined banks with scattered 20 rocks boulders on banks. Approx. 40 feet north of bridge crossing.
Metal debris stuck in mud along shoreline.

FIELD MEASUREMENTS MID

Temp. (°C)	Conductivity (µmhos)	Salinity (ppt)	DO (mg/L)	pH (su)	Flow (ft/sec)	Flow Direction	Water depth	TDS
25.97	57501	37.51	4.66	7.63	0.1 ft/sec	N	2	36.7

Sediment sample collected (Yes) No Secci ( ) N/A

Water sample collected (Yes) No

NOTES:

ORP 50.9
Several cassiopeia jellyfish resting on bottom, soft, black mud. Same as station 3. H2S odor.

CH2MHILL

Surface Water Field Data

STATION: W6 - STA. 4
CLOUD COVER: 30% clouds/sunny
FIELD CREW: R. Gorsira/K. Karvazy
ANTECEDENT RAIN:
DATE: 4/13/00
AMBIENT TEMPERATURE: 85 F
TIME: 1330
WIND VELOCITY & DIRECTION: 0-5 mph E
TIDE STAGE: Mid-low ebbing

STATION DESCRIPTION:

Stagnant pool, mangroves on banks.

FIELD MEASUREMENTS MID

Temp. (°C)	Conductivity (µmhos)	Salinity (ppt)	DO (mg/L)	pH (su)	Flow (ft/sec)	Flow Direction	Water depth	TDS
26.73	58298	37.48	4.07	7.56	0	N/A	1	36.7

Sediment sample collected (Yes) No Secci ( ) N/A

Water sample collected (Yes) No

NOTES:

ORP 79.5
Soft black mud with 20% sand, organic plant debris. Thick periphyton layer on bottom.
H2S odor apparat.

CH2MHILL

Surface Water Field Data

STATION: W6 - STA. 5
CLOUD COVER: 30%
FIELD CREW: R. Gorsira/K. Karvazy
ANTECEDENT RAIN: Sprinkles at noon
DATE: 4/13/00
AMBIENT TEMPERATURE: 85 F
TIME: 1315
WIND VELOCITY & DIRECTION: 0-5 mph E
TIDE STAGE: Mid depth ebbing

STATION DESCRIPTION:

Shallow stagnant pool, lined with mangroves on banks, periphyton growth on bottom sediment.

FIELD MEASUREMENTS MID

Temp. (°C)	Conductivity (µmhos)	Salinity (ppt)	DO (mg/L)	pH (su)	Flow (ft/sec)	Flow Direction	Water depth	TDS
27.5	59279	57.54	4.83	7.66	0	N/A	1	36.76

Sediment sample collected (Yes) No **Secci ( )** _____

Water sample collected (Yes) No

NOTES:

ORP 23
Shallow, exposed area approx. 20 ft. west of station 3. Soft, black mud, occasional shell fragments.
Leaf debris. H2S odor.

CH2MHILL

Surface Water Field Data

STATION: W6 - STA. 6
CLOUD COVER: less than 20%
FIELD CREW: R. Gorsira/K. Karvazy
ANTECEDENT RAIN: No Sprinkles
DATE: 4/13/00
AMBIENT TEMPERATURE: 90 F
TIME: 1430
WIND VELOCITY & DIRECTION: 0-7 mph E
TIDE STAGE: Low ebbing

STATION DESCRIPTION:

Mangrove lined shoreline, ±150 ft. west of second western dock, open water lagoon.

FIELD MEASUREMENTS MID

Temp. (°C)	Conductivity (µmhos)	Salinity (ppt)	DO (mg/L)	pH (su)	Flow (ft/sec)	Flow Direction	Water depth	TDS
26.55	58240	37.58	4.38	7.65	0	N/A	2	36.78

Sediment sample collected (Yes) No
Secci ( ) N/A
Water sample collected (Yes) No

NOTES:

ORP 93.8
Soft, black muck with 20-30% shell fragments.
H2S odor noticeable.

CH2MHILL

Surface Water Field Data

STATION: W6 - STA. 7
FIELD CREW: R. Gorsira/K. Karvazy
DATE: 4/13/00
TIME: 1410

CLOUD COVER: less than 20%
ANTECEDENT RAIN: None
AMBIENT TEMPERATURE: 90 F
WIND VELOCITY & DIRECTION: 5-10 mph E
TIDE STAGE: Low ebbing

STATION DESCRIPTION:

Mangrove lined shoreline, open water body, light chop

FIELD MEASUREMENTS MID

Temp. (°C)	Conductivity (µmhos)	Salinity (ppt)	DO (mg/L)	pH (su)	Flow (ft/sec)	Flow Direction	Water depth	TDS
26.85	58520	37.53	4.07	7.6	None	None	2	36.74

Sediment sample collected (Yes) No **Secci ( )** N/A

Water sample collected (Yes) No

NOTES:

ORP 97.7
Soft, black muck with shell fragments. Noted dead barnacles on mangroves approx. 1 ft. above water.
H2S odor present.

APPENDIX G

Geophysical Survey Reports

DRAFT REPORT

GEOPHYSICAL INVESTIGATION

NASD VIEQUES ISLAND
VIEQUES ISLAND, PUERTO RICO

Prepared For:

CH2MHILL

TAMPA, FLORIDA
APRIL 2000

SDII Global Corporation

Main Office
7381 114th Ave. North
Suite 405B
Largo, Florida 33773
727.544.5020
Fax 727.546.6282

April 25, 2000

Mr. Marty Clasen, P.G.
CH2M Hill
4350 West Cypress, Suite 600
Tampa, FL 33607

Subject: Draft Report - Geophysical Investigation
NASD Vieques Island
Vieques Island, Puerto Rico
SDII Project Number 1011475

Dear Mr. Clasen:

SDII Global Corporation (SDII) is pleased to submit the final report for the above referenced project. The purpose of the investigation was to utilize geophysical methods to determine the location of either underground utilities or buried ferrous metal debris across the various areas of the project site.

SDII appreciates the opportunity to have assisted CH2M Hill on this project. If you have any questions or comments about the report, please contact us.

Sincerely,

SDII GLOBAL CORPORATION

for

Michael J. Wightman, P.G.
Senior Geophysicist

TABLE OF CONTENTS

LIST OF FIGURES ii

1.0 INTRODUCTION 1-1

1.1 Background 1-1
1.2 Purpose 1-1
1.3 Scope of Work 1-1
1.3.1 Public Works Areas 1-1
1.3.2 SWMU-4 and SWMU-6 1-2
1.4 Site Description 1-2

2.0 METHODOLOGY 2-1

2.1 Public Works Area 2-1
2.1.1 Establish Transect Lanes 2-1
2.1.2 Time Domain Electromagnetics (EM-61) 2-1
2.1.2.1 TDEM Field Procedues 2-2
2.1.3 Conventional Utility Locating (CUL) 2-2
2.1.3.1 CUL Equipment and Procedures 2-2
2.1.3.2 CUL Field Procedures 2-3
2.2 SWMU 4 and SWMU-6 2-3
2.2.1 Magnetometery 2-3
2.2.2 Magnetometry Field Procedures 2-4

3.0 RESULTS 3-1
3.1 Public Works Area 3-1
3.1.1 SWMU-10 3-1
3.1.2 SWMU-14 3-1
3.1.3 ADCC Site 3-1
3.1.4 AOCF Site 3-2
3.2 SWMU-4 and SWMU-6 3-2
3.2.1 SWMU-4 3-2
3.2.2 SWMU-6 3-2

4.0 LIMITATIONS 4-1

5.0 REFERENCES 5-1

LIST OF FIGURES

Figure

1 Project Site Location Map

2 Site Plan Showing Approximate Location of Suspected Underground Utilities and Contour of TDEM Response-SWMU-10

3 Site Plan Showing Approximate Location of Suspected Underground Utilities and Contour of TDEM Response-SWMU-14

4 Site Plan Showing Approximate Location of Suspected Subsurface Features and Contour of TDEM Response-ADCC Site

5 Site Plan Contour of TDEM Response-AOCF Site

6 Contour Map of Magnetic Field Response-SWMU-4

7 Contour Map of Magnetic Field Response-SWMU-6

1.0 INTRODUCTION

1.1 Background

The project site was within the NASD on Vieques Island, Puerto Rico. CH2M Hill (CH2M) is conducting an environmental review of the site. The geophysical investigation was conducted at 6 areas. Four areas were surveyed for the presence of underground utilities. In the remaining two site areas, the location of buried ferrous (iron-bearing) metal debris was of concern.

1.2 Purpose

Time domain electromagnetics (TDEM) and conventional utility locating (CUL) equipment was used to map underground utilities in the four areas within the Public Works area. The four areas were SWMU-10, SWMU-14, ADCC Site and AOCF site. Magnetometry, with an integrated global positioning system for position control, was used for the mapping of buried ferrous metal debris within SWMU-4 and SWMU-6.

These geophysical methods have been used in similar investigations to help designate the targets of concern. However, each of the methods is limited in the ability to collect interpretable data. For TDEM to be effective, the target must be metallic and be of a sufficient mass to create an instrument response that can be distinguished from response associated with background or "noise" conditions. Magnetometry has limitations similar to TDEM with the added consideration that the target must be made of a ferrous metal. For the CUL method, the target utility must be close enough to the ground surface to be detected within the depth sensitivity range of the equipment.

1.3 Scope of Work

SDII implemented the following scope of work to complete this investigation:

1.3.1 Public Works Area

- Mobilize to the project site and perform a TDEM and CUL investigation throughout the four areas of the public works area as specified by CH2M personnel;

- Analyze the TDEM and CUL data in the field to designate underground utilities within the areas of investigation across the project site;
- Demobilize from the project site;

1.3.2 SWMU-4 and SWMU-10

- Mobilize to the project site and perform a magnetometer survey throughout the two areas as specified by CH2M personnel;
- Analyze the magnetic data to determine the lateral boundaries of ferrous metal debris with the surveyed areas the project site;
- Demobilize from the project site;

For each of the areas a final report was prepared that summarizes the geophysical methods, field procedures and results of the investigation.

1.4 Site Description

The project site is located at the NASD in Vieques, Puerto Rico (Figure 1). There were six areas of investigation. The four areas within the Public Works facility were SWMU-10 (Figure 2), SWMU-14 (Figure 3), ADCC site (Figure 4) and the AOCF site (Figure 5). The remaining two areas SWMU-4 (Figure 6) and SWMU-6 (Figure 7) were west of the Public Works Area.

SWMU-4 was a heavily vegetated area. Prior to the SDII field investigation, a total of nine paths were cleared within SWMU-4. The paths had an average width of approximately 20 feet (ft). In addition access roads were present along the northern and southern boundaries of the survey area.

SWMU-6 was within an oceanside mangrove swamp. A significant concentration of surficial ferrous metal debris was present in the area north of the road. The CH2M-proposed locations of wells for the two areas are provided on Figures 6 and 7.

METHODOLOGY

2.1 Public Works Area (SWMU-10, SWMU-14, ADCC Site and AOCF Site)

2.1.1 Establish Transect Lines

The geophysical survey was performed along a grid of transect lines across the area of investigation as specified by CH2M personnel. The CUL survey was performed in a random (sweeping) fashion across the site while the TDEM data were acquired along specific transect lines.

2.1.2 Time Domain Electromagnetics (EM-61)

The EM-61 method simply evaluates the magnitude of an induced secondary electromagnetic (EM) field developed from the rapid turn-off of a primary EM field. The TDEM method evaluates the magnitude of the secondary EM field a specific period of time after the primary EM field is shut off.

During an EM-61 measurement, an electrical current is caused to flow in a horizontal transmitter coil located near the ground. The current is maintained until a static magnetic field is established. The current is then rapidly terminated. This produces a strong electromotive force, which induces eddy (secondary) currents in the ground. The eddy currents are a result of induction caused by subsurface conductors. Immediately after the transmitter is shut off, the maximum density of the eddy currents is at the surface, beneath the transmitter coil. With increasing time, the strength of the eddy currents diminishes and the position of the maximum eddy current density diffuses downward and outward into the subsurface. The eddy currents induce a voltage in the receiver coil, which is proportional to eddy current strength. Monitoring the voltage output from the receiver coil with increasing time is equivalent to measuring conductivity as a function of depth. Measurements are made with the transmitter off. If no metals are present in the vicinity of the coils, the secondary field dies off rapidly such that output from the receiver coil reads nearly zero. If, on the other hand, metals are present in the area of the instrument, the secondary persists for a longer time and the instrument reading increases as the amount of metal increases.

Field measurements consist of the output voltage from the receiver coil registered at a particular ("late") time. By sensing only the response from the buried metal, the EM-61 is capable of detecting targets in highly conductive environments.

2.1.2.1 TDEM Field Procedures

The fieldwork was performed over a 3-day period on April 3-5, 2000. Survey transect lines were established by SDII personnel prior to the commencement of the geophysical survey at each site (Figures 2, 3, 4 and 5). Transects were established on 10-foot centers using a fiberglass measuring tape and marked on the ground surface using survey paint or wire pin flags. The EM-61 survey was performed using a transect spacing of 5 ft was used. Individual measurements were acquired at a 2.5 ft spacing along each transect line.

The TDEM data was contoured with SURFER for WINDOWS^{tm} software using the kriging method. Kriging is a geostatistical gridding method that determines the value and position of a contour line by calculating a weighted average between a particular data point and the surrounding data points. The selected contouring method controls only the positioning of the contour lines and does not affect the absolute value of the data at a particular point.

2.1.3 Conventional Utility Locating (CUL)

2.1.3.1 CUL Equipment and Principles

A SubSite 75R System was utilized during the completion of the fieldwork. Conventional utility locate equipment consists of a transmitter and a dual-function receiver. The receiver can be operated in a "passive" mode or in an "active" mode. The two modes of operation provide various levels of "detection" capabilities depending on the specific application in which the equipment is being used.

The CUL system is operated in the "active" mode by either inducing or conducting a signal in the underground utility being investigated. A transmitter is placed over and in line with a suspected buried utility. The transmitter induces a signal, which propagates along the buried utility. As the receiver is moved back and forth across the suspected path of the utility, the trace signal induces a signal into the receivers cable sensor. A visual and audio response indicates when the receiver is directly over the buried utility. Another means of detecting in the "active" mode utilizes a method to "conduct" a signal within the buried utility. To accomplish this, a cable from the transmitter is clamped onto an exposed section of the buried utility and a signal is conducted along the pipeline. This technique minimizes any interference caused by parasitic emissions from adjacent cables in

congested areas. When the system is utilized in the "passive" mode, the receiver is responding to a 60 Hertz cycle current energized by underground utilities.

Interference may occur when buried utilities intersect or are adjacent to each other. This effect, referred to as "bleed-off", may provide a false response to the identification of the tracked utility. "Bleed-off" is caused by utilities that may be energized in the "active" or "passive" mode.

2.1.3.2 CUL Field Procedures

The CUL survey was performed by "sweeping" an area of concern, or by attaching the transmitter to a specific, exposed utility to track its path and depth of occurrence.

2.2 SWMU-4 and SWMU-6

2.2.1 Magnetometry

A magnetometer measures the intensity of the total magnetic field in the area around the sensor. A Geometrics 858 Cesium Vapor magnetometer was used for this investigation. The 858 magnetometer measures the magnitude of the total magnetic field independent of instrument orientation.

In environmental and engineering applications, the primary use of a magnetometer is to evaluate perturbations in the magnetic field of the earth that are caused by subsurface anomalies. Perturbations in the total magnetic field caused by subsurface anomalies are the result of a complex relationship between the object and the magnetic field of the earth. The relationship is complex because the total field registered by the instrument is a vectorial representation of three factors which affect the magnitude of the response; (1) The ambient magnetic field of the earth, (2) The inductive contribution from the object, and (3) Any contributions to the total field by remanent or permanent magnetization. Accordingly, the observed intensity of the total field is dependent upon the position of the measuring device within the source field caused by the anomaly. The magnitude of the magnetic field of the earth is typically measured in gammas. The magnitude of the magnetic field in Puerto Rico ranges from 38,000 to 40,000 gammas (Dobrin, 1988).

The total intensity of the earth's magnetic field varies both spatially and temporally. Temporal variations are caused by distortions of the magnetic field by solar winds. Temporal variations are classified as either daily (diurnal), micro-pulsations (seconds to tens of minutes), or as solar storms that can last several days. Diurnal variations occur during daylight hours. The absolute magnitude and time rate of change of the variations, however, are not predicable. Diurnal variations can cause changes in the earth's ambient magnetic field to 100 gammas. Micropulsations are typically a relativity short-term phenomenon and their occurrence is random. Typical magnitude of changes caused micropulsations is in the range of 0.1 to 10's of gammas. The occurrence and duration of solar storms is also relatively unpredictable. Such storms can last one to several days and exhibit magnetic field variations of up to several 100 gammas.

In environmental or engineering applications, temporal variations are considered as noise sources that interfere with the measurements of interest. Depending upon the precision requirements of a study, temporal variations can be recorded by: (1) a second magnetometer placed at a fixed base station which records data on a preprogrammed time interval or (2) revisiting the same location on a site at a regularly timed basis (usually every 1 to 2 hours) using the same magnetometer as for the survey. Data collected during the survey can then be corrected to remove the effects of temporal variations.

Spatial variations in the earth's magnetic field are caused by the localized occurrence of magnetized minerals, iron objects, or cultural features of interest. Such variations cause two types of magnetism; induced and remanent (or permanent). Induced magnetization refers to the action of the material in enhancing the earth's magnetic field as the material itself acts as a magnet. The magnitude of the induced field is directly proportional to the strength of the ambient field and the ability of the material to act as a magnet (magnetic susceptibility). Remanent (with rocks) or permanent (with metals) magnetization is the magnetic field caused by the object or material independent of the ambient earth's magnetic field. The magnetic field variations caused by metal objects are a combination of both induced and permanent magnetization.

2.2.2 Magnetometry Field Procedures

The fieldwork was performed over a 3-day period on April 12- 14, 2000. The magnetic survey was performed by carrying the magnetometer equipment throughout the accessible portions of the study areas. Position control was obtained

using the Trimble AG132 global positioning system. The GPS system was operated in the differential correction mode utilizing the Omni-Star Satellite network. Using this system, a sub-meter position accuracy was obtained. A field computer, which is integrated into the system, recorded the magnetometer response and associated GPS position.

For SWMU-4, a minimum of four transects were performed along each of the cleared paths and on the roads to the north and south of the survey area. The transect lines were approximately 5 ft apart. Data readings were collected every second with a total of 5,723 measurements being collected. Wooden stakes were driven into the ground at the western end of each of the roads and paths. The position of the stakes and proposed well locations were recorded using the GPS system. The purpose of the wooded stakes was to assist CH2M personnel in future site activities.

For SWMU-6, transects were performed throughout the accessible portions of the survey area (Figure 7). Access through out the site was limited by dense vegetation. Data readings were collected every second with a total of 2,989 measurements being collected. Wooden stakes were driven into the ground at the locations shown on Figure 7. The position of the stakes and proposed well locations were recorded using the GPS system. The purpose of the wooded stakes was to assist CH2M personnel in future site activities. The centers of areas with significant concentrations of surficial ferrous metal debris are also provided on Figure 7.

Magnetic base stations were established at each site. The purpose of having a base station was to monitor the temporal variations of the magnetic field and to serve as a quality control measure. A base station measurement was taken before and after each magnetic survey. The typical range in base station values due to the temporal variations was less than 10 gammas. For the purposes of this investigation, a variation of 10 gammas was considered insignificant when compared to the magnitude of the anomalies produced by the landfill areas. As a result, it was not necessary to correct for the temporal variations.

The magnetometer data was contoured with SURFER for WINDOWS^{tm} software using either the minimum curvature or kriging method. Both methods are geostatistical gridding methods that determine the value and position of a contour line by calculating a weighted average between a particular data point and the surrounding data points. The selected contouring method controls only the

positioning of the contour lines and does not affect the absolute value of the data at a particular point.

3.0 RESULTS

3.1 Public Works Areas

3.1.1 SWMU-10

A single metallic water line was identified within the surveyed area of the project site (Figure 2). The water line was 0.5 to 1 ft below land surface (bls). The waterline was identified primarily with the CUL. However, an elevated TDEM response was observed in the area of the line. An elevated TDEM response was also observed around both the paint shed and hazardous waste storage container. It is not possible to determine whether the elevated response is due solely to metallic materials within the structures, or whether possible buried metallic debris is also present in these areas. The observed response around the structures is typical for metal-containing structures. Accordingly, it is likely that buried metallic debris is not present around the structures.

3.1.2 SWMU-14

Two types of underground utilities were identified in the survey area (Figure 3). A metallic waterline supplying the water spigot and sewer lines between the sewer grate and oil/water separator and between the oil/water separator and the discharge point at the concrete bulkhead. The water line was identified using the CUL. The sewer lines were identified by visual inspection. An elevated TDEM response was observed around the concrete slab for the truck wash area. The elevated TDEM response indicates that the concrete is likely rebar-reinforced. An elevated TDEM response was also observed around an immobile boat trailer and forklift in the eastern and western portions of the survey areas, respectively.

3.1.3 ADCC Site

Four types of underground utilities were identified in the survey area (Figure 4). An electrical line was identified, using the CUL, between the building and the above-ground storage tank (AST) near the southwest corner of the survey area. Two waterlines were present in the survey area. The water lines were identified using both the CUL and TDEM. The north/south trending water line in the eastern portion of the survey area appears to terminate near the above-ground trash can.

A north/south trending sanitary sewer line is present between the building and sewer manhole and vault. The sanitary sewer line between the building and vaults was identified using both the CUL and TDEM data. The vault associated with the manhole is approximately 10 ft in length. The size of the vault was determined by visual inspection. Four sanitary sewer lines extend from the northern most vault at the depths indicated on the figure. The four lines were identified by visual inspection. No elevated TDEM response was observed in the area of the northernmost vault indicating that the sewer lines are non-metallic.

A stormwater line was present along the northern and western boundaries of the project site (Figure 4). The position and estimated depths of the stormwater line was determined by visual inspection. The trend of the stormwater line was determined by interpolation of information obtained from the visual inspection.

3.1.4 AOCF Site

No underground utilities were identified within the survey area (Figure 5). An elevated TDEM response was observed in two areas. In the southernmost area, the elevated response is at least partially attributable to surficial metallic debris. No metallic debris was observed in the elevated-response area in the northeast corner of the survey area. It is suspected that buried metallic debris is present in this area.

3.2 SWMU-4 and SWMU-6

3.2.1 SWMU-4

A contour of the total magnetic field response is provided on Figure 6. High concentrations of buried ferrous metal debris appear to be present in the northern and southern portions of the survey area. Areas of buried ferrous metal debris appear to be concentrated into laterally limited areas, suggesting individual pits of buried material.

3.2.2 SWMU-6

A contour of the total magnetic field response is provided on Figure 7. High concentrations of buried ferrous metal debris appear to be present in the northern portion and under the road of the survey area. No ferrous debris appears to be

present in the southern portion of the survey area. Areas where significant concentrations of surficial ferrous debris are present are also provided on the figure. Surficial ferrous debris is present in the majority of the areas where an elevated magnetometer response was observed. It is not possible to determine whether buried ferrous metals are also present in these areas.

An elevated magnetometer response was observed in two relatively large areas where surficial ferrous metal debris was not present. The first area was in the northwestern portion of the survey area approximately centered about Longitude – 65.56145° and Latitude 18.1177°. The second area was in the western portion of the road. It is suspected that significant concentrations of buried ferrous metal are present in both these areas.

4.0 LIMITATIONS

The geophysical assessment of this site is based on our professional evaluation of the geophysical data gathered and our experience with the properties of geophysical equipment used for this project in the geological setting of the site area. The geophysical evaluation rendered in this report meets the standards of care of our profession. No other warranty or representation, either expressed or implied, is included or intended.

5.0 REFERENCES

Dobrin, M. B. and Savit, C. H., 1988. Introduction to Geophysical Prospecting, Fourth Edition. McGraw-Hill, Inc.

FIGURES

N

NOT TO SCALE

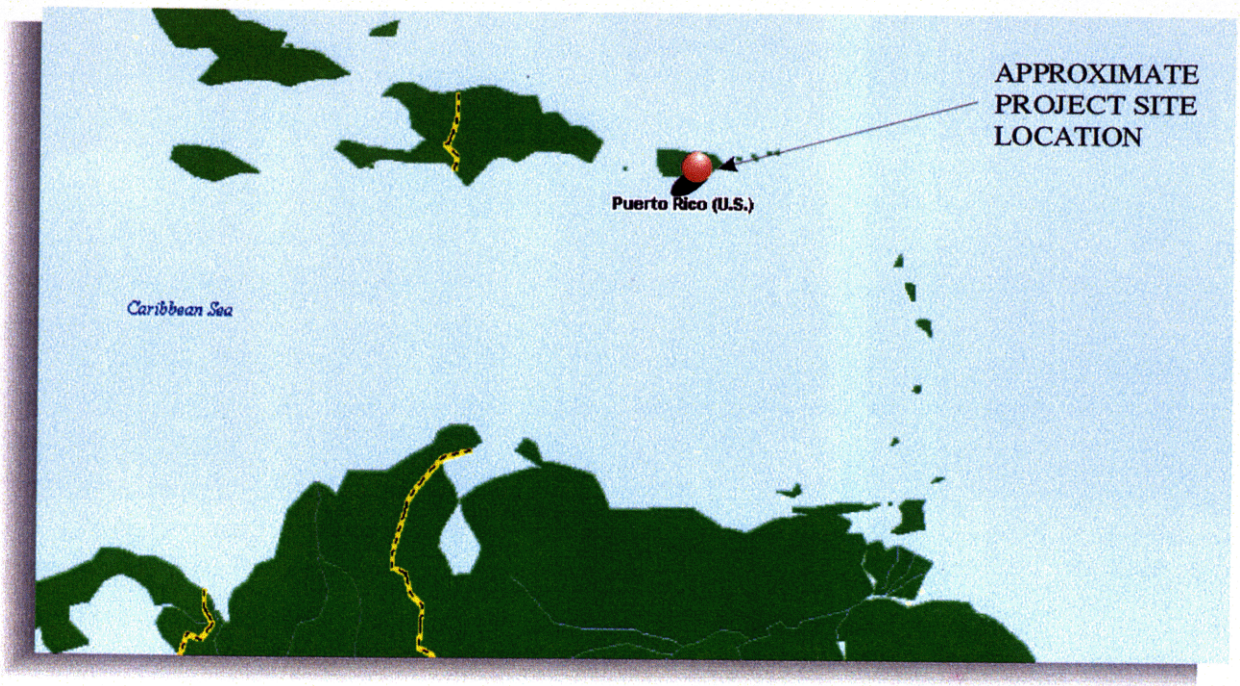

CH2M HILL
TAMPA, FL

SDII GLOBAL

PROJECT SITE LOCATION MAP
NASD VIEQUES ISLAND
VIEQUES ISLAND, PUERTO RICO

DESIGNED BY:	MJW	PROJECT NO.:	1011475	FIGURE
CHECKED BY:	MJW	DRAWING NO.:	LOC	1
DRAWN BY:	JMW	DATE:	04/24/00	

02022CB1Y

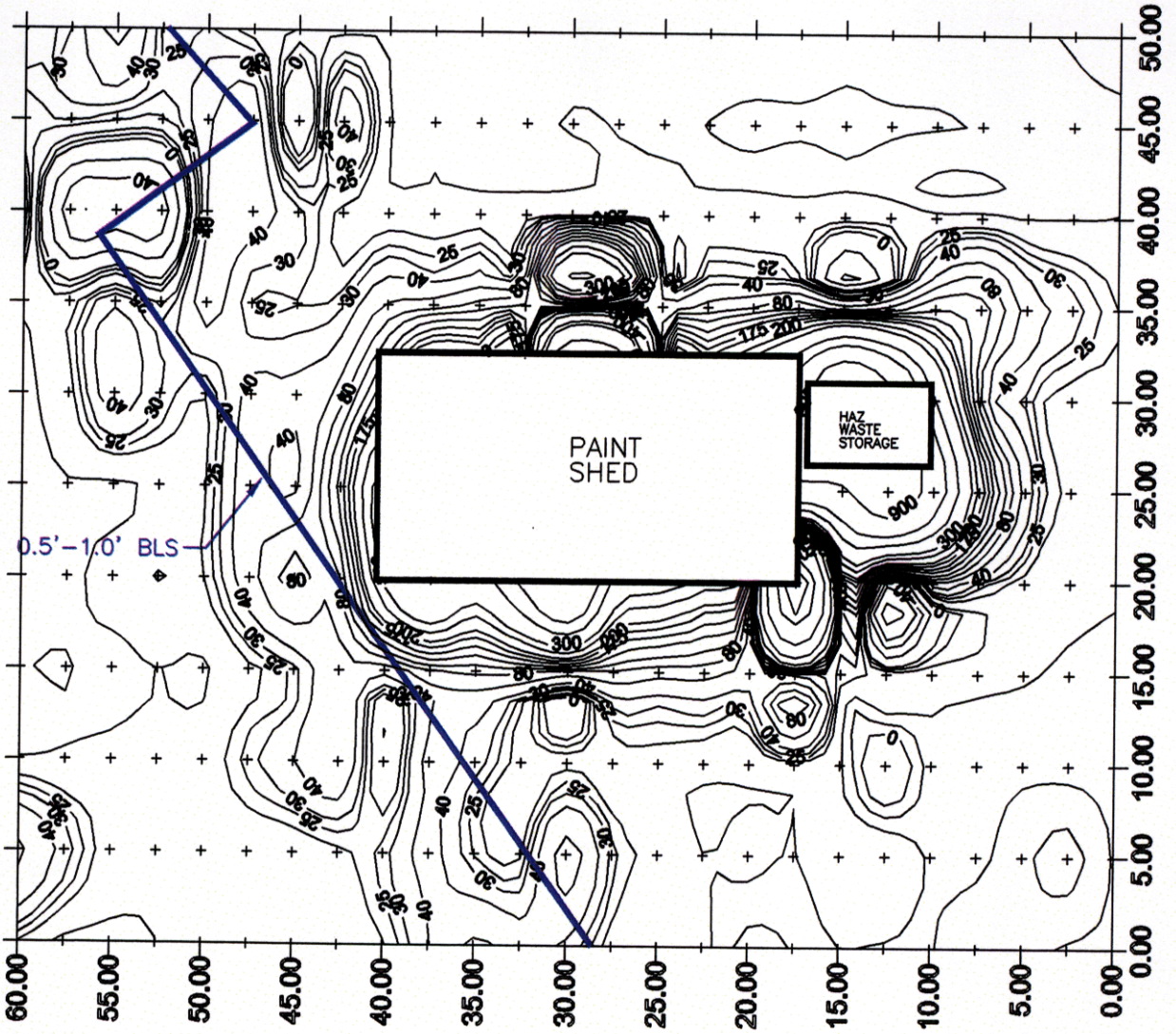

EXPLANATION

\+ TDEM STATION LOCATION

300 CONTOUR OF TDEM RESPONSE (IN MILLI-VOLTS)

APPROXIMATE LOCATION OF SUSPECTED UNDERGROUND WATER LINE

N

0 10'

SCALE

CH2MHILL TAMPA, FL	SDII GLOBAL CORPORATION	SITE PLAN SHOWING APPROXIMATE LOCATION OF SUSPECTED UNDERGROUND UTILITIES AND CONTOUR OF TDEM RESPONSE - SWMU-10 NASD VIEQUES ISLAND VIEQUES ISLAND, PUERTO RICO			
		DESIGNED BY: MJW CHECKED BY: MJW DRAWN BY: JMW	PROJECT NO.: 1011475 DRAWING NO.: 1475-2 DATE: 04/20/00	FIGURE 2	

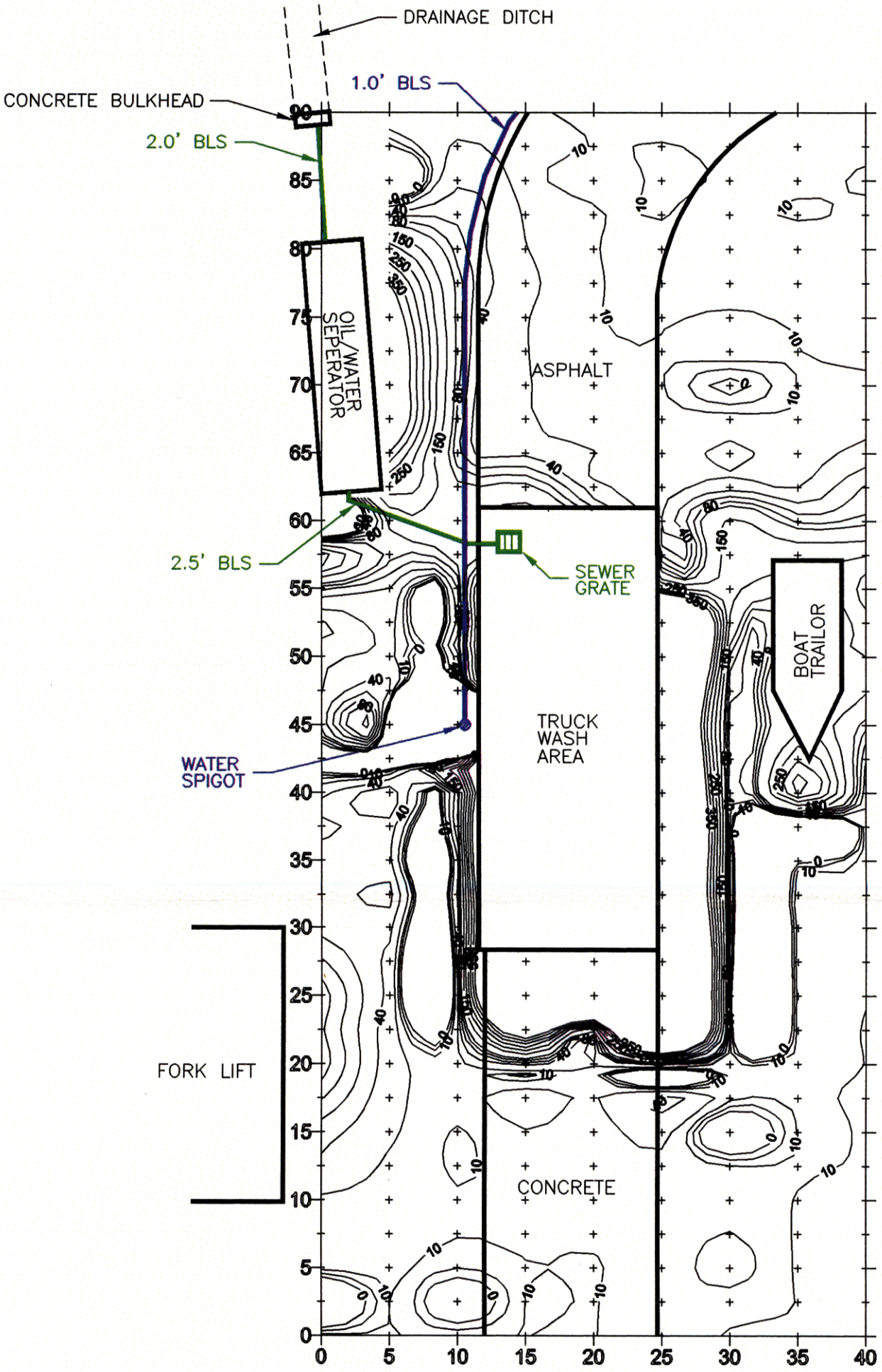

EXPLANATION

APPROXIMATE LOCATION OF SUSPECTED UNDERGROUND WATER LINES

APPROXIMATE LOCATION OF SUSPECTED UNDERGROUND SEWER LINES

\+ TDEM STATION LOCATION

CONTOUR OF TDEM RESPONSE (IN MILLI–VOLTS)

N

0 10'

CH2M HILL HERNDON, VA	SDII GLOBAL CORPORATION	SITE PLAN SHOWING APPROXIMATE LOCATION OF SUSPECTED UNDERGROUND UTILITIES AND CONTOUR OF TDEM REPONSE – SWMU–14 NASD VIEQUES ISLAND VIEQUES ISLAND, PUERTO RICO	
		Designed By: MJW Checked By: MJW Drawn By: JMW	Proj. No. 10111475 DWG 1475–3 Date: 04/20/00	FIGURE 3

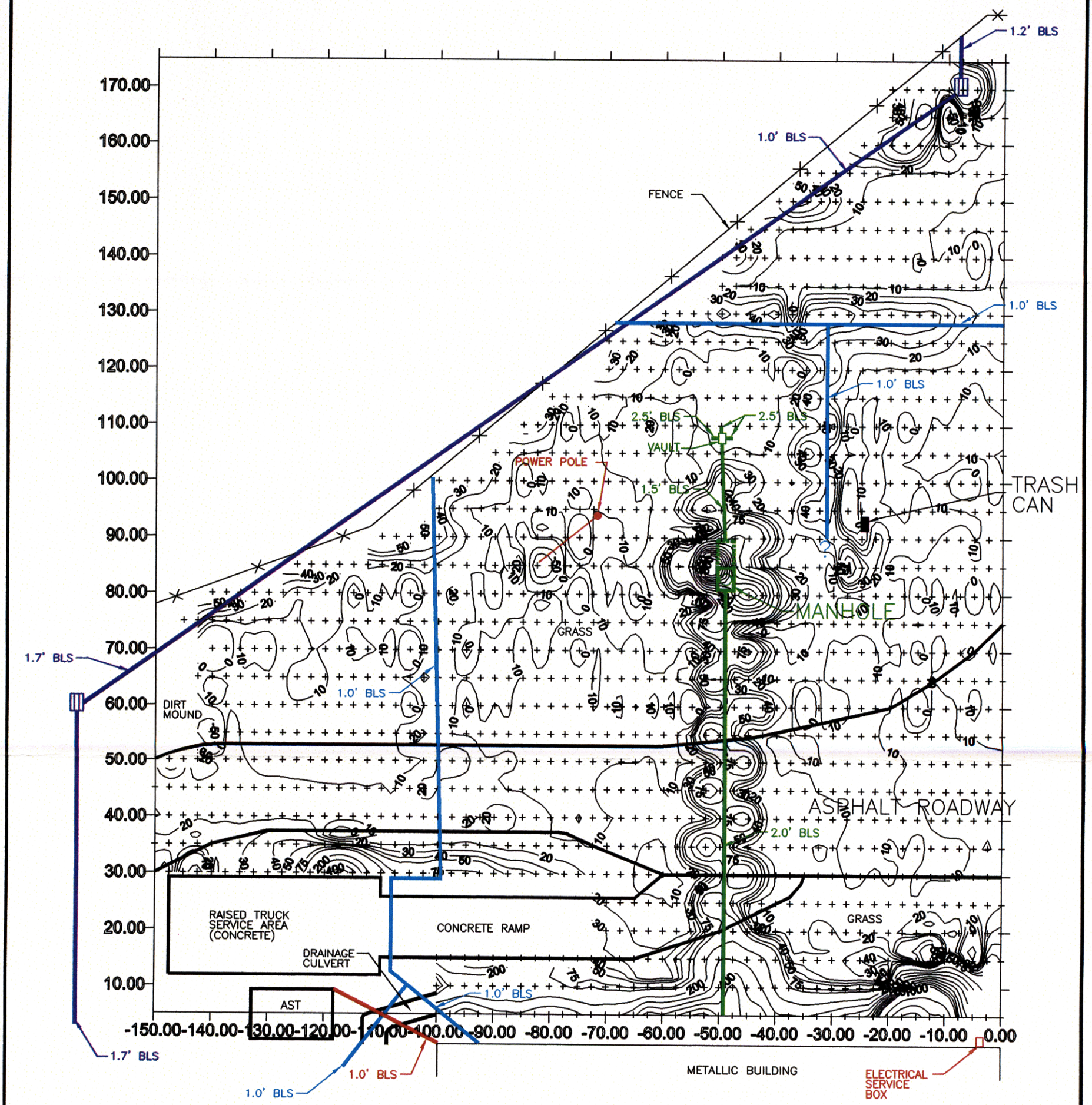

EXPLANATION

- APPROXIMATE LOCATION OF GPR TRANSECT LINES
- APPROXIMATE LOCATION OF SUSPECTED UNDERGROUND ELECTRIC LINE
- APPROXIMATE LOCATION OF SUSPECTED UNDERGROUND STORM WATER LINES
- APPROXIMATE LOCATION OF SUSPECTED UNDERGROUND SANITARY SEWER LINES
- APPROXIMATE LOCATION OF SUSPECTED UNDERGROUND WATER LINES
- \+ TDEM STATION LOCATION
- (20) CONTOUR OF TDEM RESPONSE (IN MILLI-VOLTS)

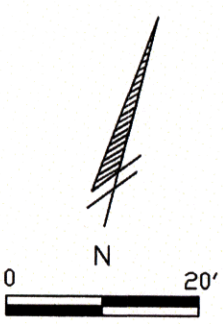

CH2M HILL TAMPA, FL	SDII GLOBAL CORPORATION	SITE PLAN SHOWING APPROXIMATE LOCATION OF SUSPECTED SUBSURFACE FEATURES AND CONTOUR OF TDEM RESPONSE – ADCC SITE NASD VIEQUES ISLAND VIEQUES ISLAND, PUERTO RICO		
		Designed By: MJW Checked By: MJW Drawn By: JMW	Proj. No. 10111475 DWG 1475-4 Date: 04/20/00	FIGURE 4

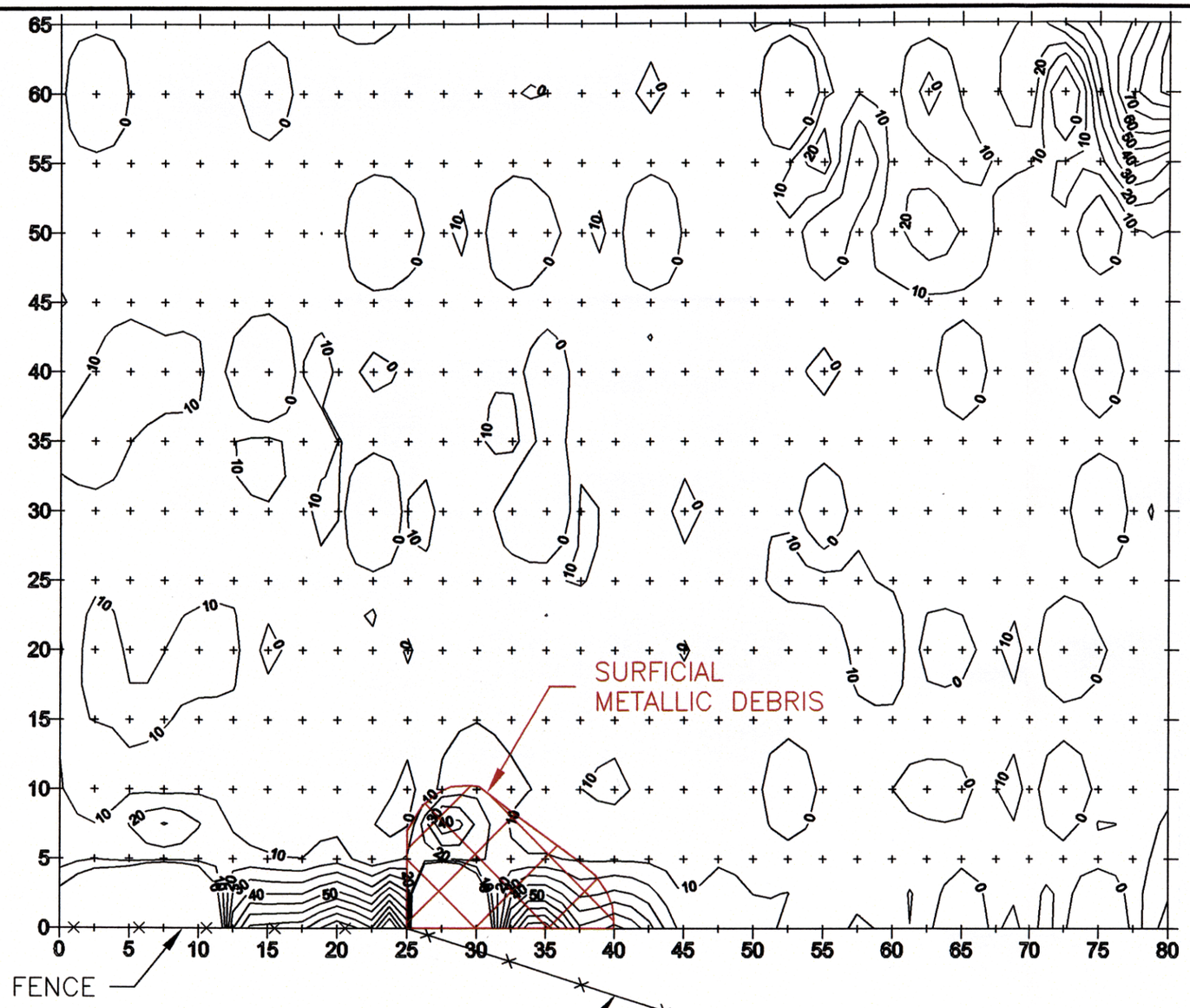

N

0 10′

SCALE

EXPLANATION

\+ TDEM STATION LOCATION

CONTOUR OF TDEM RESPONSE (IN MILLI–VOLTS)

CH2M HILL
TAMPA, FL

SDII GLOBAL
CORPORATION

SITE PLAN SHOWING CONTOUR
OF TDEM RESPONSE – AOCF SITE
NASD VIEQUES ISLAND
VIEQUES ISLAND, PUERTO RICO

Designed By:	MJW	Proj. No.	10111475	FIGURE
Checked By:	MJW	DWG	1475–5	5
Drawn By:	JMW	Date:	04/20/00	

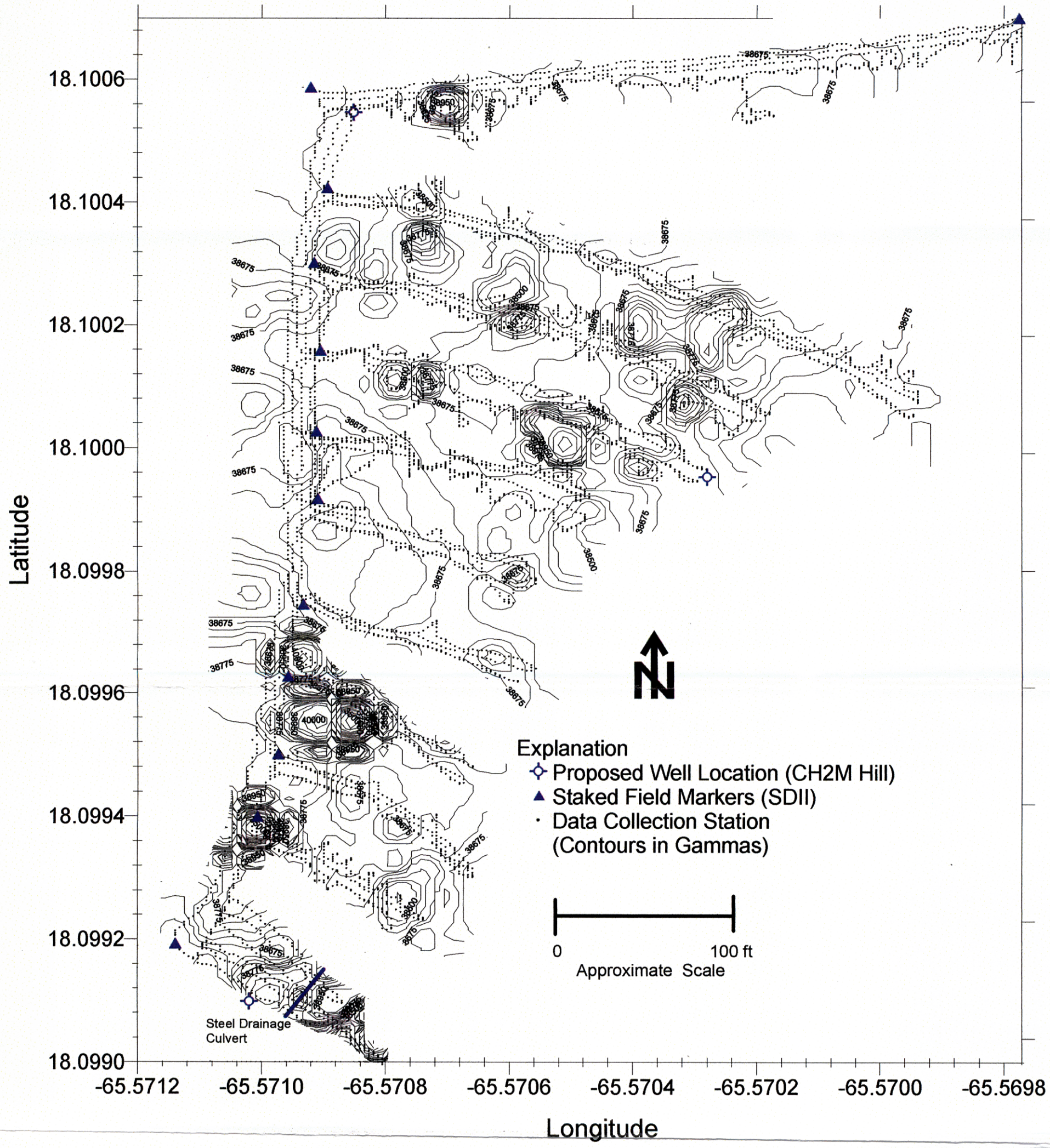

CH2M HILL TAMPA, FLOORIDA	SDII GLOBAL	CONTOUR MAP OF MAGNETIC FIELD RESPONSE SWMU-4 VIEQUES, NASD	FIGURE 6

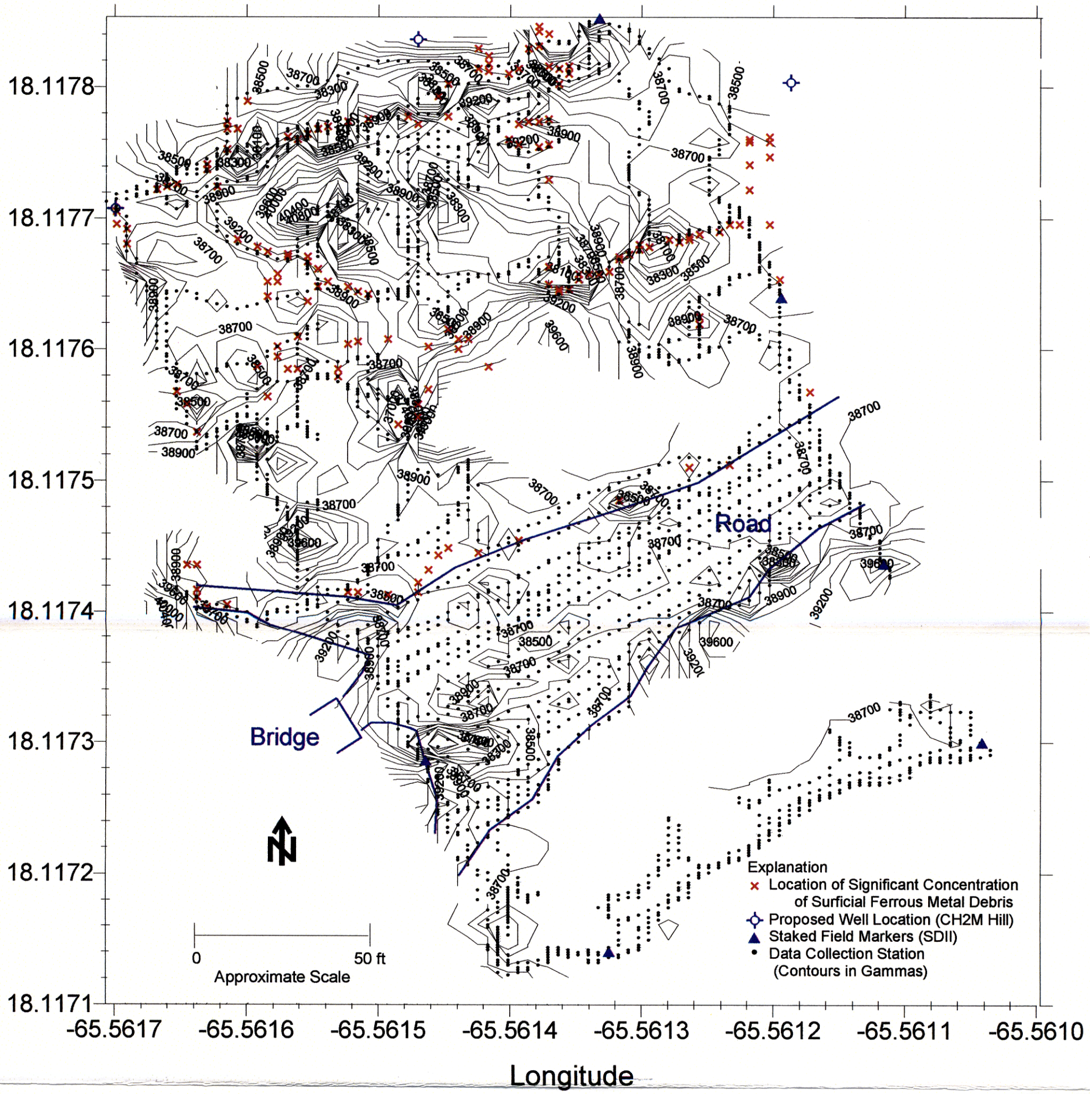

CH2M HILL TAMPA, FLOORIDA	SDII GLOBAL	CONTOUR MAP OF MAGNETIC FIELD RESPONSE SWMU-6 VIEQUES, NASD	FIGURE 7

DRAFT REPORT

GEOPHYSICAL INVESTIGATION-PHASE 2

NASD VIEQUES ISLAND
VIEQUES ISLAND, PUERTO RICO

Prepared For:

CH2MHILL

TAMPA, FLORIDA
JULY 2000

SDII Global Corporation

Main Office
7381 114th Ave. North
Suite 405B
Largo, Florida 33773
727.544.5020
Fax 727.546.6282

July 10, 2000

Mr. Marty Clasen, P.G.
CH2M Hill
4350 West Cypress, Suite 600
Tampa, FL 33607

Subject: Draft Report - Geophysical Investigation-Phase 2
NASD Vieques Island
Vieques Island, Puerto Rico
SDII Project Number 1011621

Dear Mr. Clasen:

SDII Global Corporation (SDII) is pleased to submit the final report for the above referenced project. The purpose of the investigation was to utilize geophysical methods to determine the location of buried ferrous metal debris in two areas north and south of the previously surveyed SWMU-4.

SDII appreciates the opportunity to have assisted CH2M Hill on this project. If you have any questions or comments about the report, please contact us.

Sincerely,

SDII GLOBAL CORPORATION

Michael J. Wightman, P.G.
Senior Geophysicist

TABLE OF CONTENTS

LIST OF FIGURES ii

1.0 INTRODUCTION 1-1

1.1 Background 1-1
1.2 Purpose 1-1
1.3 Scope of Work 1-1
1.4 Site Description 1-2

2.0 METHODOLOGY 2-1
2.1 Magnetometery 2-1
2.2 Magnetometry Field Procedures 2-2

3.0 RESULTS 3-1
3.1 Area 1 3-1
3.2 Area 2 3-1

4.0 LIMITATIONS 4-1

5.0 REFERENCES 5-1

LIST OF FIGURES

Figure

1 Project Site Location Map

2 Contour Map of Magnetic Field Response For Area 1-West of SWMU-4

3 Contour Map of Magnetic Field Response For Area 2-North of SWMU-4

1.0 INTRODUCTION

1.1 Background

The project site consisted of two areas north and west of the previously surveyed SWMU-4 at the NASD on Vieques Island, Puerto Rico (SDII Report 1011475, April 2000). As with the previous investigation, the location of buried ferrous (iron-bearing) metal debris was of concern.

1.2 Purpose

Magnetometry, with an integrated global positioning system for position control, was used for the mapping of buried ferrous metal debris within the survey areas. The magnetometry method has been used in similar investigations to help identify buried ferrous metal debris. However, the method is limited in the ability to collect interpretable data. For magnetometry to be effective, the target must be made of a ferrous metal and be of a sufficient mass to create an instrument response that can be distinguished from response associated with background or "noise" conditions.

1.3 Scope of Work

SDII implemented the following scope of work to complete this investigation:

1.3.1 Public Works Area

- Mobilize to the project site and perform a magnetometer survey within the accessible portions of the two areas specified by CH2M personnel;
- Analyze the magnetic data to determine the lateral boundaries of ferrous metal debris within the surveyed areas the project site;
- Demobilize from the project site;

Prepare a final report that summarizes the geophysical methods, field procedures and results of the investigation.

1.4 Site Description

The project site is located at the NASD in Vieques, Puerto Rico (Figure 1). There were two areas of investigation. Area 1 (Figure 2) was west of the previously surveyed SWMU-4. Area 2 (Figure 3) was north of the previously surveyed area.

Each of the areas was heavily vegetated. Prior to the SDII field investigation, paths were cleared within the areas to be surveyed. The paths had an average width of approximately 10 feet (ft). For Area 1, a perimeter road surrounded the survey area. Area 2 was bounded to the south by the main access road into SWMU-4. The locations of the CH2M-installed monitor wells are provided on Figures 2 and 3.

METHODOLOGY

2.1 Magnetometry

A magnetometer measures the intensity of the total magnetic field in the area around the sensor. A Geometrics 858 Cesium Vapor magnetometer was used for this investigation. The 858 magnetometer measures the magnitude of the total magnetic field independent of instrument orientation.

In environmental and engineering applications, the primary use of a magnetometer is to evaluate perturbations in the magnetic field of the earth that are caused by subsurface anomalies. Perturbations in the total magnetic field caused by subsurface anomalies are the result of a complex relationship between the object and the magnetic field of the earth. The relationship is complex because the total field registered by the instrument is a vectorial representation of three factors which affect the magnitude of the response; (1) The ambient magnetic field of the earth, (2) The inductive contribution from the object, and (3) Any contributions to the total field by remanent or permanent magnetization. Accordingly, the observed intensity of the total field is dependent upon the position of the measuring device within the source field caused by the anomaly. The magnitude of the magnetic field of the earth is typically measured in gamma's. The magnitude of the magnetic field in Puerto Rico ranges from 38,000 to 40,000 gamma's (Dobrin, 1988).

The total intensity of the earth's magnetic field varies both spatially and temporally. Temporal variations are caused by distortions of the magnetic field by solar winds. Temporal variations are classified as either daily (diurnal), micro-pulsations (seconds to tens of minutes), or as solar storms that can last several days. Diurnal variations occur during daylight hours. The absolute magnitude and time rate of change of the variations, however, are not predicable. Diurnal variations can cause changes in the earth's ambient magnetic field to 100 gamma's. Micropulsations are typically a relativity short-term phenomenon and their occurrence is random. Typical magnitude of changes caused micropulsations is in the range of 0.1 to 10's of gamma's. The occurrence and duration of solar storms is also relatively unpredictable. Such storms can last one to several days and exhibit magnetic field variations of up to several 100 gamma's.

In environmental or engineering applications, temporal variations are considered as noise sources that interfere with the measurements of interest.

Depending upon the precision requirements of a study, temporal variations can be recorded by: (1) a second magnetometer placed at a fixed base station which records data on a preprogrammed time interval or (2) revisiting the same location on a site at a regularly timed basis (usually every 1 to 2 hours) using the same magnetometer as for the survey. Data collected during the survey can then be corrected to remove the effects of temporal variations.

Spatial variations in the earth's magnetic field are caused by the localized occurrence of magnetized minerals, iron objects, or cultural features of interest. Such variations cause two types of magnetism; induced and remanent (or permanent). Induced magnetization refers to the action of the material in enhancing the earth's magnetic field as the material itself acts as a magnet. The magnitude of the induced field is directly proportional to the strength of the ambient field and the ability of the material to act as a magnet (magnetic susceptibility). Remanent (with rocks) or permanent (with metals) magnetization is the magnetic field caused by the object or material independent of the ambient earth's magnetic field. The magnetic field variations caused by metal objects are a combination of both induced and permanent magnetization.

2.2 Magnetometry Field Procedures

The fieldwork was performed over a 2-day period beween the dates of June 14 - 16, 2000. The magnetic survey was performed by carrying the magnetometer equipment throughout the accessible portions of the study areas. Position control was obtained using the Trimble AG132 global positioning system. The GPS system was operated in the differential correction mode utilizing the Omni-Star Satellite network. Using this system, a sub-meter position accuracy was obtained. A field computer, which is integrated into the system, recorded the magnetometer response and associated GPS position.

For both Area 1 and Area 2, a minimum of two transects were performed along each of the cleared paths and on the roads associated with the survey areas. The transect lines were approximately 5 ft apart. Data readings were collected every second. For Area 1 a total of 3,364 measurements were collected. For Area 2 a total of 4,246 measurements were collected. For Area 2, wooden stakes were driven into the ground at the southern end of each of the north/south trending transects. The purpose of the wooded stakes was to assist CH2M personnel in future site activities.

Magnetic base stations were established at each site. The purpose of having a base station was to monitor the temporal variations of the magnetic field and to serve as a quality control measure. A base station measurement was taken before and after each magnetic survey. The typical range in base station values due to the temporal variations was less than 10 gamma's. For the purposes of this investigation, a variation of 10 gamma's was considered insignificant when compared to the magnitude of the anomalies produced by the landfill areas. As a result, it was not necessary to correct for the temporal variations.

The magnetometer data was contoured with SURFER for WINDOWS^{tm} software using either the minimum curvature or kriging method. Both methods are geostatistical gridding methods that determine the value and position of a contour line by calculating a weighted average between a particular data point and the surrounding data points. The selected contouring method controls only the positioning of the contour lines and does not affect the absolute value of the data at a particular point.

3.0 RESULTS

Area 1

A contour of the total magnetic field response is provided on Figure 2. The background (no ferrous metals present) magnetic response was approximately 36,600 gamma's. Significant deviations from this level, either less than ot greater than, indicate the presence of buried metallic objects. The apparent background response is within the range for magnetic levels in the area of Puerto Rico (Dobrin, 1988). High concentrations of buried ferrous metal debris appear to be present in the northern portion of the survey area. Very little ferrous debris appears to be present in the southern portion of the survey area. Surficial ferrous debris is present in the several of the areas where an elevated magnetometer response was observed. It is not possible to determine whether buried ferrous metals are also present in these areas. The areas of elevated magnetic response near the monitor wells are at least partially and, in the areas surrounding MW-5 and MW-6 most likely completely, associated with the ferrous-metal protective posts surrounding each of the wells.

Area 2

A contour of the total magnetic field response is provided on Figure 3. The background (no ferrous metals present) magnetic response was approximately 38,600 gamma's. Significant deviations from this level, either less than or greater than, indicate the presence of buried metallic objects. High concentrations of buried ferrous metal debris appear to be present in several areas within the eastern portion of the survey area. Very little ferrous debris appears to be present in the western portion of the survey area. Surficial ferrous debris is present in the several of the areas where an elevated magnetometer response was observed. It is not possible to determine whether buried ferrous metals are also present in these areas.

4.0 LIMITATIONS

The geophysical assessment of this site is based on our professional evaluation of the geophysical data gathered and our experience with the properties of magnetometry used for this project in the geological setting of the site area. The geophysical evaluation rendered in this report meets the standards of care of our profession. No other warranty or representation, either expressed or implied, is included or intended.

5.0 REFERENCES

Dobrin, M. B. and Savit, C. H., 1988. Introduction to Geophysical Prospecting, Fourth Edition. McGraw-Hill, Inc.

FIGURES

N

NOT TO SCALE

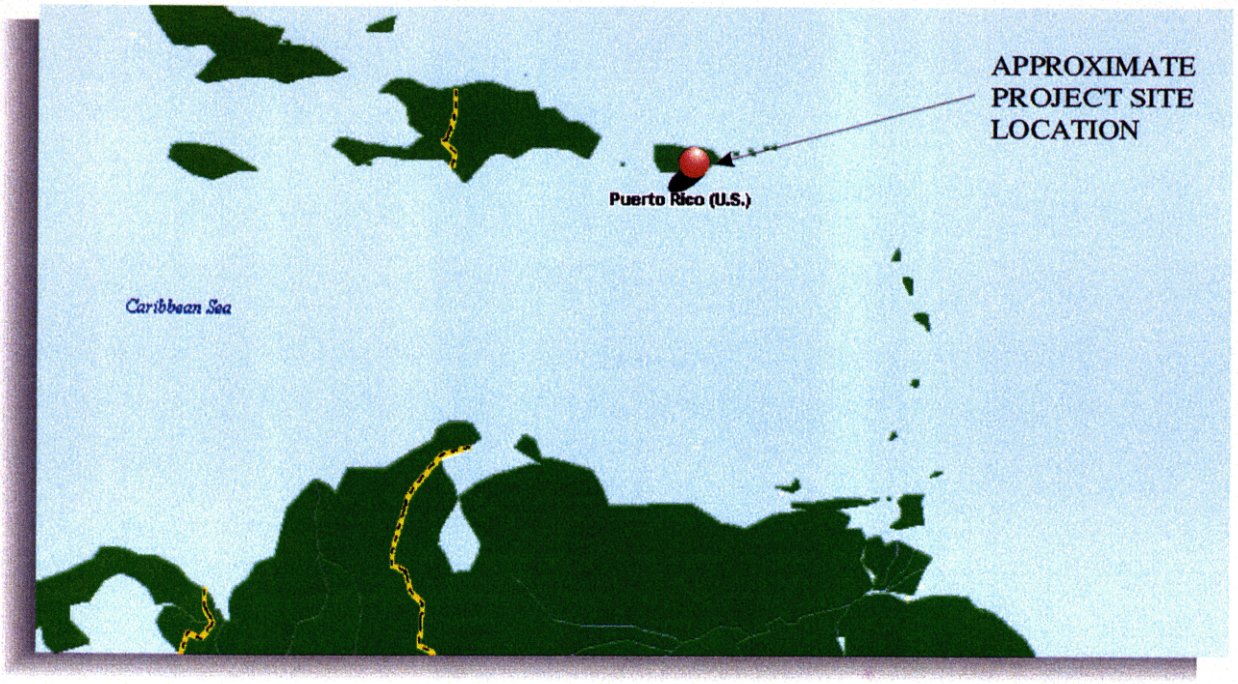

CH2M HILL
TAMPA, FL

SDII GLOBAL

PROJECT SITE LOCATION MAP
NASD VIEQUES ISLAND
VIEQUES ISLAND, PUERTO RICO

DESIGNED BY:	MJW	PROJECT NO.:	1011621	FIGURE
CHECKED BY:	MJW	DRAWING NO.:	LOC	1
DRAWN BY:	JMW	DATE:	07/10/00	

02022CB2Y

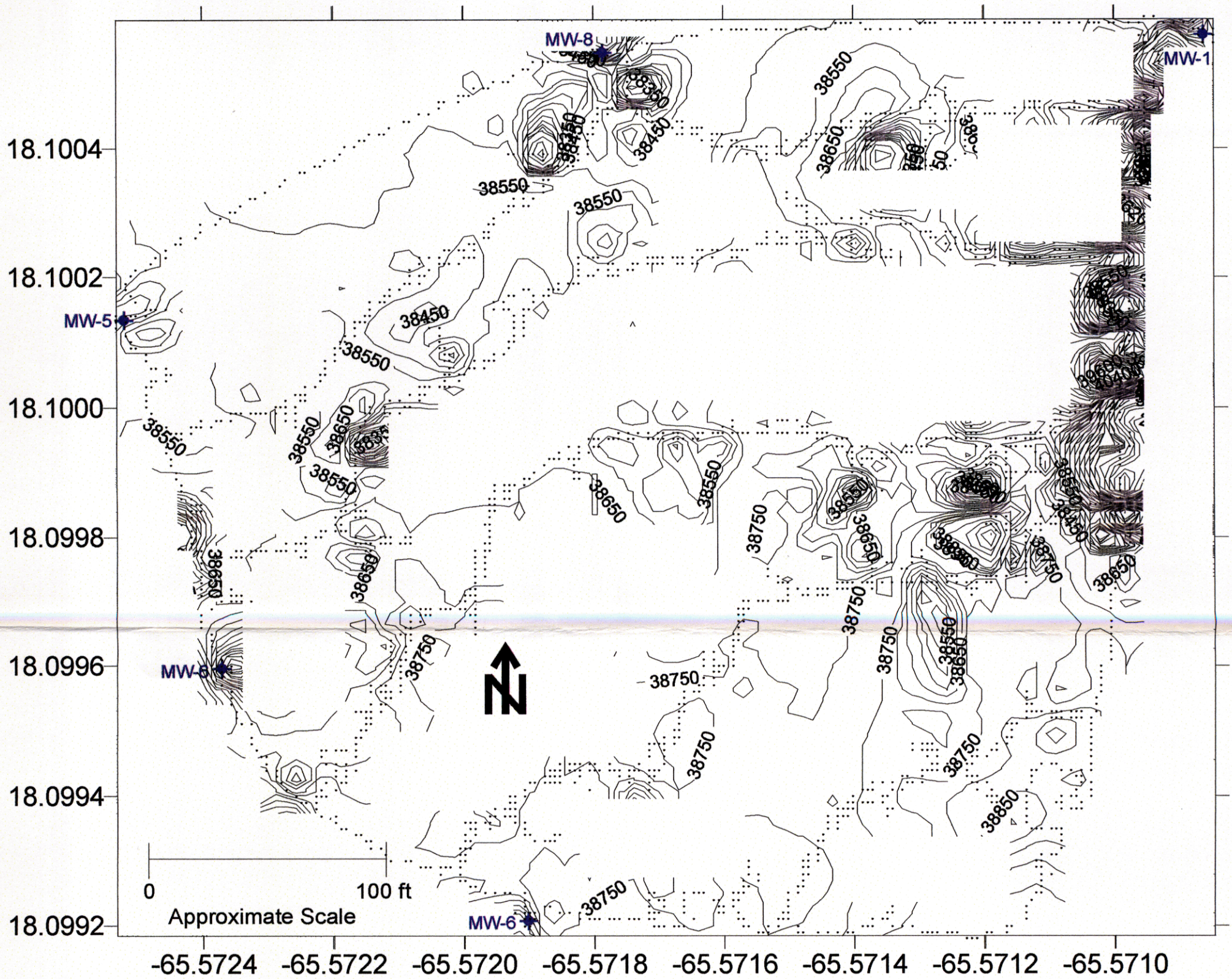

CH2M HILL TAMPA, FL	SDI GLOBAL	CONTOUR MAP OF MAGNETIC FIELD RESPONSE FOR AREA 1-WEST OF SWMU-4 VIEQUES, NASD	FIGURE 2

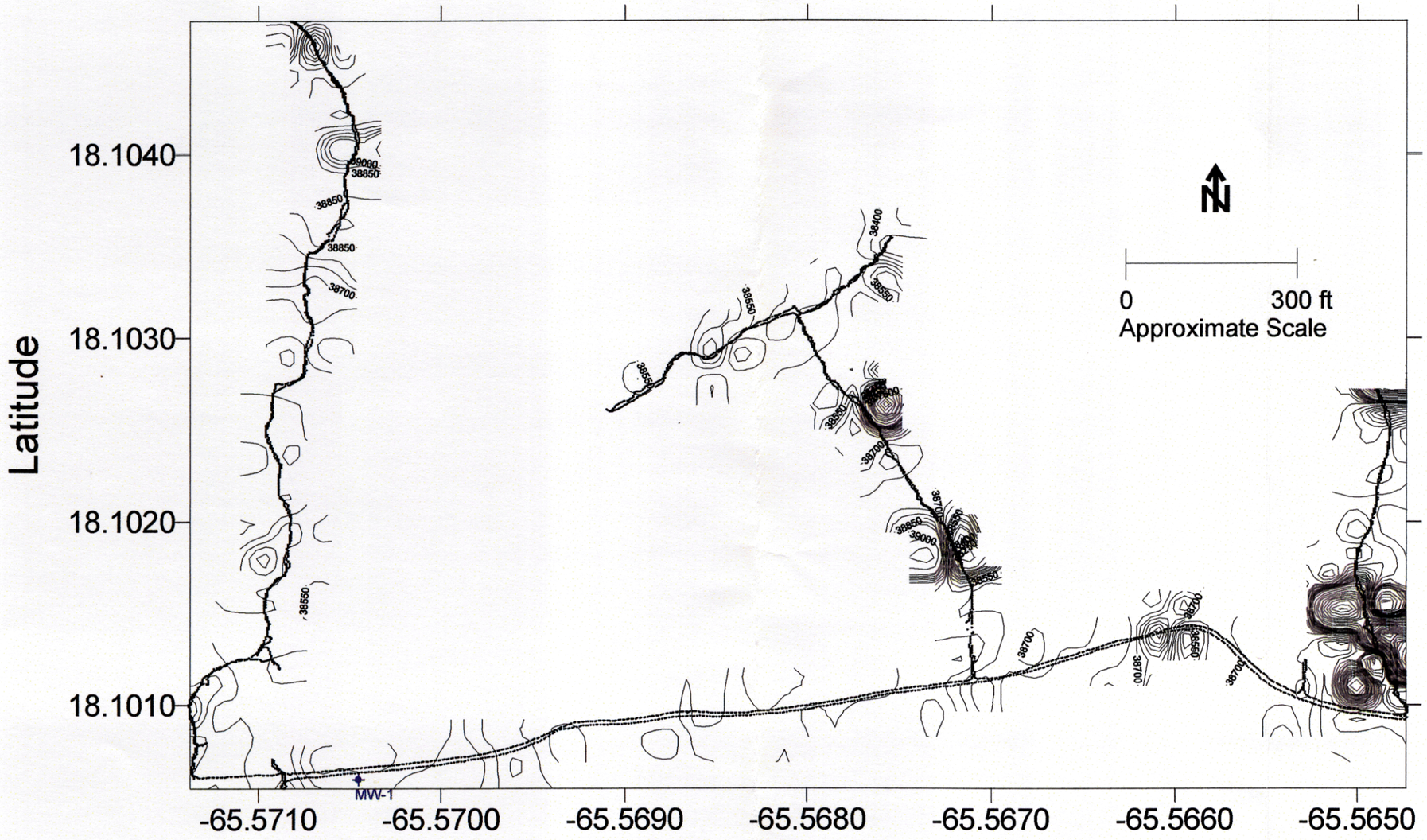

CH2M HILL TAMPA, FL	SDII GLOBAL	CONTOUR MAP OF MAGNETIC FIELD RESPONSE FOR AREA 1-WEST OF SWMU-4 VIEQUES, NASD	FIGURE 3

APPENDIX H

UXO Reports

OPERATIONS REPORT
UXO AVOIDANCE
PHASE 1 AND 2
VIEQUES, PUERTO RICO

Blackhawk Geometrics Project Number 2019CH2

Prepared For:
CH2M HILL

TABLE OF CONTENTS

CHAPTER 1: GENERAL 2

1.0 INTRODUCTION 2
1.1 SITE DESCRIPTION 2
1.2 PROJECT OBJECTIVES 2

CHAPTER 2: FIELD INVESTIGATION ACTIVITIES 3

2.0 GENERAL FIELD ACTIVITIES 3
2.1 WORK LOCATIONS 3
2.2 DESCRIPTION OF TASKS 3
2.2.1 Task 1: Soil Sampling and Monitoring Well Installation Support 3
2.2.2 Task 2: Brush Clearance and Escort for Geophysical Survey 4
2.2.3 Task 3: SWMU-04 Investigative Search for UXO/OE and OEW Scrap 4

CHAPTER 3: SUMMARY OF INVESTIGATION RESULTS 5

3.0 GENERAL SUMMARY 5
3.1 PHASE 1 SUMMARY– APRIL 8, 2000 THROUGH APRIL 29, 2000 5
3.1.1 PHASE-1 OPERATIONS SUMMARY 5
3.1.1.1 SWMU-04 Sector A Operations Summary 5
3.1.1.2 SWMU-05 Operation Summary 5
3.1.1.3 SWMU-06 Operations Summary 6
3.1.1.4 SWMU-07 Operations Summary 6
3.1.1.5 PHASE-1 DEMOBILIZATION 6
3.2 PHASE 2 SUMMARY – MAY 30, 2000 THROUGH MAY 10, 2000 6
3.2.1 PHASE-2 OPERATIONS SUMMARY 6
3.2.1.1 SWMU-04 Sector B Operation Summary 6
3.2.1.2 SWMU-04 Sector C Summary 6
3.2.1.3 SWMU-04 Investigative Search 7
3.2.5 PHASE-2 DE-MOBILIZATION 7
3.3 CONCLUSIONS 7

APPENDIX A SWMU-04 MAPS 7
APPENDIX B SWMU-04 UXO SUMMARY TABLE 8

Chapter 1: General

1.0 INTRODUCTION

This Report describes the procedures, methods and resources Blackhawk Geometrics (Blackhawk) used while performing Unexploded Ordnance (UXO) and Ordnance Explosive Waste (OE) location and avoidance operations at the Naval Ammunition Storage Detachment (NASD), Vieques Island, Puerto Rico (PR.). Blackhawk performed UXO Avoidance operations in two phases. The first phase (Phase 1) was conducted from April 8 through April 29, 2000. During this phase work was performed in SWMU-04 Sector (A), SWMU-05, SWMU-06 and SWMU-07. The second phase (Phase 2) of the operation was conducted from May 30, 2000 through June 9, 2000. All work during this phase was performed in SWMU-04 Sectors (B and C).

1.1 SITE DESCRIPTION

SWMU-04 is the former Open Burn/Open Detonation (OB/OD) area located on the western side of Vieques, PR. The actual boundary of SWMU-04 is believed to be 200 yards by ½ mile, however do to the heavy over growth of jungle vegetation, the actual boundaries could not be determined. SWMU-05 the IRFNA drain area, located near magazine 422, is a small grassy area approximately (5' by 15'). SWMU-06 is known as the Mangrove site. This swampy area is heavily over grown with vegetation, the approximate boundary of SWMU-06 is (150' by 110') with route 70 running through the center of the area. SWMU-07 the Household waste area, is located one (1) mile west of the NASD compound. The approximate boundary of this area is (200' by 50').

1.2 PROJECT OBJECTIVES

The field objectives for this project were as follows:

- Prepare a UXO Avoidance Plan (AP);
- Perform a visual surface sweep for ordnance and explosives ahead of the CH2M Hill geophysical search team on the SWMU-4 and SWMU-6 sites (Phase 1);
- Provide UXO safety support for intrusive sampling and well installation activities (Phase 1 and Phase 2).

Chapter 2: Field Investigation Activities

2.0 GENERAL FIELD ACTIVITIES

To ensure the safety of all field personnel and to accomplish the field objectives, Blackhawk performed the following tasks:

- Reviewed the AP for changes prior to commencing site activities;
- Provided UXO escort for geophysical surveys
- Provided UXO safety support for intrusive soil sampling and well installation activities;
- Conducted limited UXO clearance activities to eliminate an immediate UXO hazard to operations;
- Conducted limited UXO search within the SWMU-4 transects to help identify the boundaries of the UXO contamination;
- Prepared a report documenting Blackhawk's field activities at the site.

2.1 WORK LOCATIONS

Site activities occurred in SWMU-04 SWMU-05, SWMU-06 and SWMU-07. SWMU-04 was subdivided into three (3) search areas. Descriptions of the search areas are as follows:

- Sector (A): transects 1 through 9;
- Sector (B): transects 10 through 14; and,
- Sector (C): transect 15 through 18.

Blackhawk has included field maps which show the locations of the transects relative to permanent attributes at each Sector in SWMU-04. All Sector (C) measurements are referenced to monitoring well number 1 (MW-1).

SWMU-06 was subdivided into two (2) search areas as follows:

- North sector (6A) approximately (150' by 60')
- South sector (6B) to include route 70, approximately (150' by 50')

2.2 DESCRIPTION OF TASKS

Blackhawk provided UXO escort and support tasks in a systematic manner using approved operating techniques and methods. The specific tasks performed are described in the paragraphs that follow.

2.2.1 Task 1: Soil Sampling and Monitoring Well Installation Support

Visual and magnetometer searches were performed to provide access to each location where intrusive soil sampling took place and where a monitoring well was to be installed. Blackhawk personnel marked the access route and escorted the drill rig into position. Using visual and magnetometer search procedures, (10' by 10') areas were searched for UXO/OE and OE scrap. After the areas were deemed safe, soil sampling and drilling was performed.

At 2', 4', 6'and 8' depths, a check of the borehole was conducted using a magnetometer to insure the area beneath the drill bit was free of UXO/OE and drilling could safely continue. Monitoring wells (1-10) were installed during the Phase 1 effort (April 8 through April 29). Monitoring Wells (11-14) were installed during the Phase 2 effort (May 30 through June 9)

2.2.2 Task 2: Brush Clearance and Escort for Geophysical Survey

Blackhawk UXO personnel assisted in the clearance of brush and performed a visual search for UXO/OE in SWMU-04 transects 1 through 18. During phase 1 actives Blackhawk UXO personnel escorted the geophysical survey crew through SWMU-04 sector (A) transects (1-9) and in SWMU-06 sectors (6A and 6B).

2.2.3 Task 3: SWMU-04 Investigative Search for UXO/OE and OEW Scrap

Blackhawk UXO personnel performed a visual investigative search for UXO/OE and OE scrap, in and around the SWMU-04 area. A non-intrusive magnetometer search was also performed on access roads leading to SWMU-04 and in random areas of SWMU-04, searching for the presence of subsurface anomalies.

Chapter 3: Summary of Investigation Results

3.0 GENERAL SUMMARY

Blackhawk performed UXO Avoidance operations in two phases. The first phase was preformed from April 8, 2000 through April 29, 2000. During the phase I effort, work was performed in SWMU-04, sector (A), SWMU-05, SWMU-06 and SWMU-07. During the phase II effort, work was preformed in SWMU-04 sectors (B and C) this phase was from May 30, 2000 through June 9, 2000,

3.1 PHASE 1 SUMMARY– APRIL 8, 2000 THROUGH APRIL 29, 2000

The following operational tasks were performed during Phase 1:

- Escort for geophysical surveys in SWMU-04 and SWMU-06 (11 transects total surveyed);
- Safety support for intrusive soil sampling (22 sample sites);
- Safety support for well installation (10 wells);

In addition, at the request of the U.S. Navy, Blackhawk UXO personnel recovered and staged for pickup by Navy EOD, the UXO listed in Appendix B, UXO Summary Table.

3.1.1 PHASE-1 OPERATIONS SUMMARY

3.1.1.1 SWMU-04 Sector A Operations Summary

During SWMU-04 Phase 1 operations, efforts were preformed in Sector (A), transects 1 through 9 (see Appendix A. Site Maps). Prior to the arrival of the Blackhawk UXO technician, all nine (9) transects were cut through sector (A). A surface walk was conducted in each of the transects and numerous live UXO/OE items and OEW scrap was located and marked on the surface in each transect.

In order for CH2M HILL personnel to accomplish their objectives at SWMU-04 and at the request of US Navy personnel, UXO items deemed safe to move were placed in a holding area for pick-up by US Navy EOD personnel. After the nine (9) transects were cleared of surface UXO/OE (10' by 10') areas were cleared using a magnetometer for soil sampling and monitoring well installation. CH2M HILL personnel were allowed into the area to perform their assigned tasks, to install four (4) monitoring wells and take five (5) soil samples. The Blackhawk UXO technician escorted the geophysical survey crew through all nine (9) transects and assisted in the collection of data.

3.1.1.2 SWMU-05 Operation Summary

During the SWMU-05 operating effort, a visual search of the area was performed as well as a magnetometer sweep of the 5' by 15' area. No UXO/OE was found during these searches. CH2M HILL personnel were cleared into this area to take four (4) soil samples and install two (2) monitoring wells.

3.1.1.3 SWMU-06 Operations Summary

During efforts at the SWMU-06 site the area was subdivided into sector (6A and 6B). A visual search was performed in both sectors. Numerous amounts of OE scrap is located on the surface in sector (6A), (10' by 10') areas were cleared using a magnetometer for the installation of two (2) monitoring wells, one (1) in each sector. These 10' by 10' areas were also used to take eight (8) soil samples, four (4) soil samples in each sector. The Blackhawk UXO technician escorted the geophysical survey crew through both sectors and assisted in the collection of data.

3.1.1.4 SWMU-07 Operations Summary

During efforts at SWMU-07 the Blackhawk UXO technician performed a visual search of the area for surface UXO/OE (no UXO/OE was found). Two (2) 10' by 10' areas were cleared using a magnetometer for the installation of two (2) monitoring wells. These two (2) 10' by 10' areas were also used to take nine (9) soil samples

3.1.1.5 PHASE-1 DEMOBILIZATION

At the completion of all assigned objectives, Blackhawk Geometrics demobilized all project personnel and equipment from NASD, Vieques, PR. on April 29, 2000.

3.2 PHASE 2 SUMMARY – MAY 30, 2000 THROUGH MAY 10, 2000

The following operational tasks were performed during Phase 2:

- Safety support for intrusive soil sampling (4 sample sites);
- Safety support for well installation (4 wells);
- Safety support for brush clearance in (9 transects);
- Visual search for surface UXO/OE for the geophysical surveys in SWMU-04 sectors (B and C) transects (10 through 18);
- Assist in establishing the extent of UXO/OE contamination in SWMU-04.

3.2.1 PHASE-2 OPERATIONS SUMMARY

3.2.1.1 SWMU-04 Sector B Operation Summary

During Phase 2 operations, in SWMU-04 sector (B) the Blackhawk Geometrics UXO technicians assisted CH2M HILL personnel in the clearance of brush in Five (5) transects for a geophysical survey. A visual search was preformed in each of the five (5) transects. Numerous live UXO/OE items and OE scrap was located and marked in each transect (10 through 14). A detailed listing of the UXO/OE located is listed in Appendix (B). At the request of US Navy, Atlantic Division representative (Chris Penny), all live UXO/OE deemed safe to move was placed in a marked holding area for pick-up by US Navy EOD personnel at a later date. Four (4) 10' by 10' areas were cleared using a magnetometer for the soil sampling and monitoring well installation areas. A total of four (4) soil samples were taken and four (4) monitoring well were installed.

3.2.1.2 SWMU-04 Sector C Summary

During Phase 2 operations, in SWMU-04 sector C the Blackhawk UXO technicians assisted CH2M HILL personnel in the clearance of brush in four (4) transects for a geophysical survey.

Numerous live UXO/OE items and OE scrap were located and marked in each transect (15 through 18). A detailed listing of the UXO/OE located is listed in Appendix (B). These live UXO/OE deemed safe to move were also placed in a marked holding area for pick-up by US Navy EOD personnel at a later date. No soil sampling or monitoring well installation took place in sector C.

3.2.1.3 SWMU-04 Investigative Search

Blackhawk UXO technicians assisted US Navy and CH2M HILL personnel in establishing the boundaries and the extent of UXO/OE contamination from SWMU-04. A visual surface walk was conducted on access roads in and around SWMU-04, numerous live UXO/OE items and OEW scrap was located and marked on the access roads. A non-intrusive magnetometer search was also performed on the access roads leading to SWMU-04 and in random areas of SWMU-04, looking for the presence of magnetic anomalies. Numerous anomalies were found during this search.

3.2.5 PHASE-2 DE-MOBILIZATION

At the completion of all assigned objectives Blackhawk Geometrics demobilized all project personnel and equipment from NASD, Vieques PR. on June 9, 2000.

3.3 CONCLUSIONS

UXO/OE and OE scrap is present on the surface throughout SWMU-04 and SWMU-06. The actual extent of the contamination cannot be determined without additional investigations.

Appendix A
SWMU-04 Maps

Appendix B

SWMU-04UXO Summary Table

Sector	Transect	Type of UXO	Quantity
A	1	20mm HE	5
A	2	20mm HE	3
A	3	20mm HE	2
A	4	20mm HE	5
A	5	20mm HE	1
A	6	20mm HE	4
A	7	20mm HE	1
A	8	20mm HE	3
A	9	20mm HE	2
A	N/S access road	20mm HE	1
A	1	MK 230 fuze	3
A	2	MK 230 fuze	1
A	3	MK 230 fuze	2
A	4	MK 230 fuze	3
A	6	MK 230 fuze	2
A	7	MK 230 fuze	1
A	1	Elec. blasting cap	1
A	N/S access road	Small Arms	5
A	6	Auxiliary Booster	1
B	10	20mm HE	1
B	14	20mm HE	6
B	10	MK 230 fuze	1
B	12	MK 230 fuze	1
C	16	20mm HE	2
C	17	20mm HE	1
C	15	MK 230 fuze	2
C	18	60mm mortar fuze	1

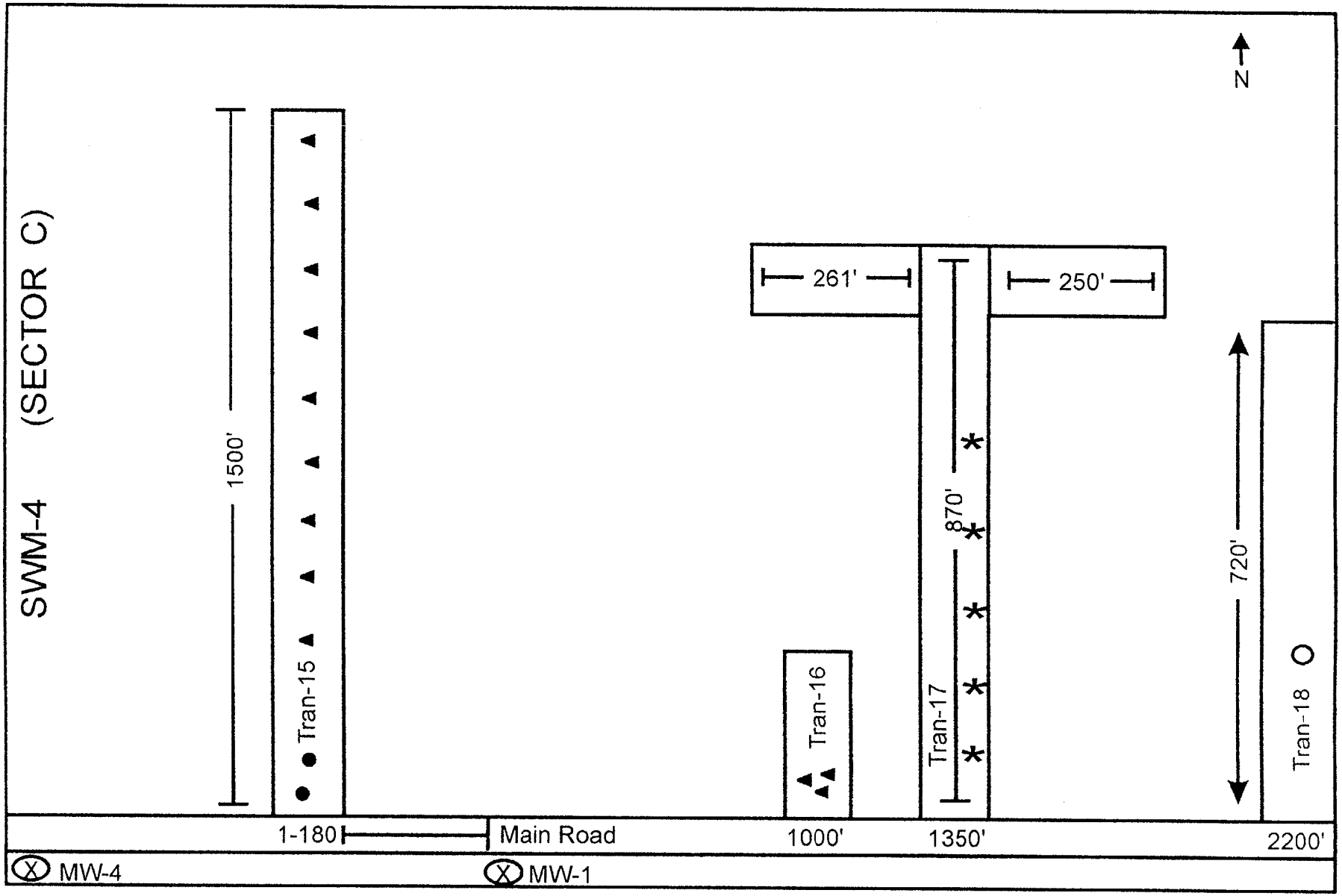

▲=20mm *=Frag ⊗=MW

●=MK 238 Fuze ○=60mm Fuze

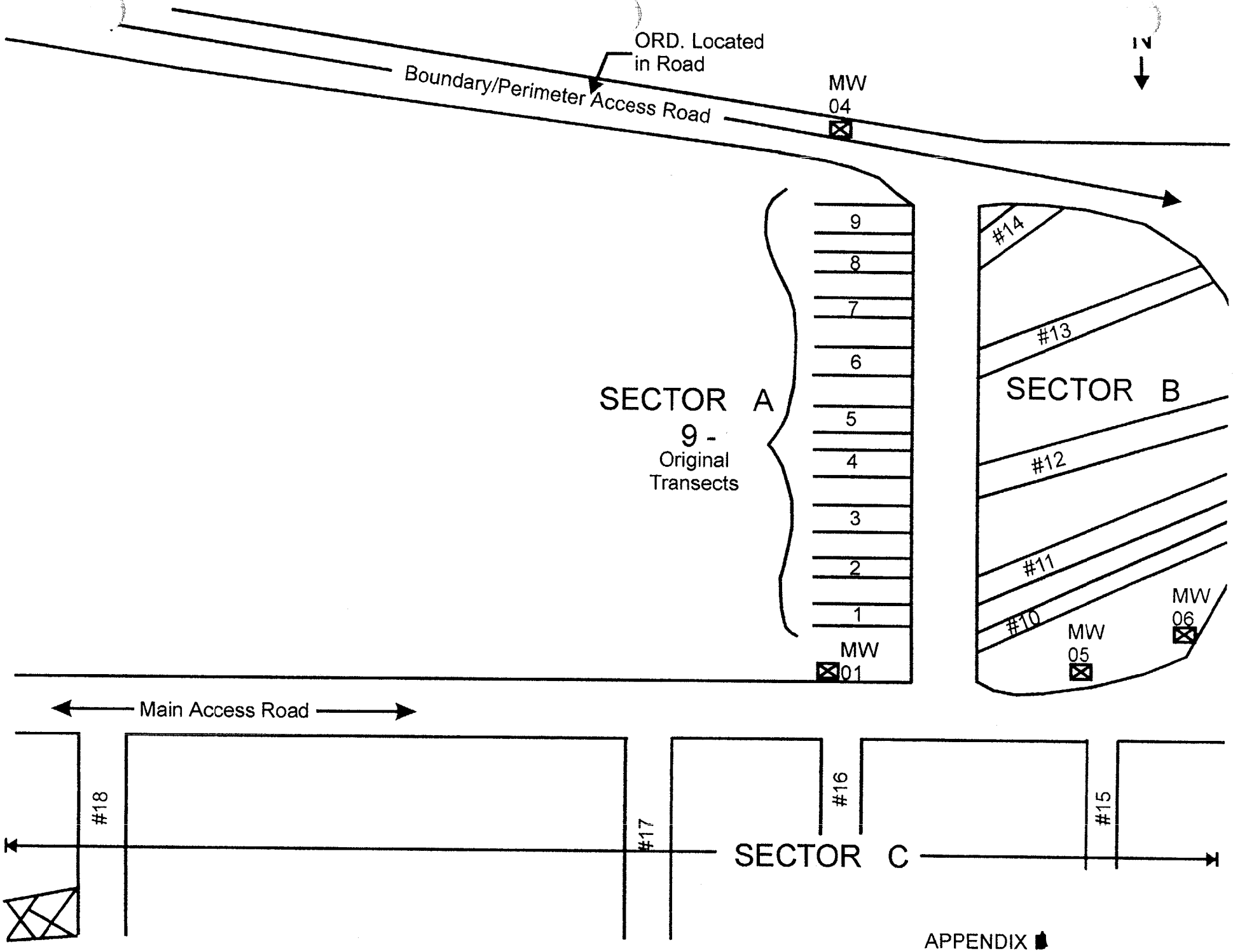
ORD. Located in Road
Boundary/Perimeter Access Road
MW 04
N
SECTOR A
9 - Original Transects
9
8
7
6
5
4
3
2
1
MW 01
#14
#13
SECTOR B
#12
#11
#10
MW 05
MW 06
Main Access Road
#18
#17
#16
#15
SECTOR C

APPENDIX

APPENDIX I

Qualitative Ecological Survey

HABITAT CHARACTERIZATION OF SOLID WASTE MANAGEMENT UNITS (SWMU) 4, SWMU 5, SWMU 6, SWMU 7, AND THE PUBLIC WORKS AREA NAVAL AMMUNITION SUPPORT (NASD) DETACHMENT, VIEQUES ISLAND, PUERTO RICO

Prepared for:

CH2M Hill

Prepared by:

Dr. Dan L. Wilkinson, Rudi Reinecke, Melissa Lopez-Rodriguez, Manuel Figueroa-Pagan, and Donna DeYoung

Geo-Marine, Inc.
550 E. 15th Street
Plano, Texas 75074

August 29, 2000

TABLE OF CONTENTS

Page

INTRODUCTION 1

SITE LOCATION 1

METHODS 1

RESULTS AND DISCUSSION 5

SWMU 4 5
- Vegetation Community Description 5
- Plant Community Health 9
- Wildlife Description 9
- Protected Species 9
- Food Web 10

SWMU 5 10
- Vegetation Community Description 10
- Plant Community Health 14
- Wildlife Description 15
- Protected Species 15
- Food Web 15

SWMU 6 15
- Vegetation Community Description 15
- Plant Community Health 17
- Wildlife Description 17
- Protected Species 19
- Food Web 20

SWMU 7 21
- Vegetation Community Description 21
- Plant Community Health 24
- Wildlife Description 24
- Protected Species 24
- Food Web 24

AOC Sites, SWMU 10, SWMU 14, and SWMU 15 25
- Vegetation Community Description 25
- Plant Community Health 25
- Wildlife Description 25
- Protected Species 31
- Food Web 31

CONCLUSION 31

LITERATURE CITED 32

APPENDIX A A-1

LIST OF FIGURES

		Page
1	NASD Location	2
2	Solid Waste Management Unit (SWMU) Locations in the Naval Ammunition Support Department (NASD) Vieques Island, Puerto Rico	3
3	Location of SWMU 4 and control site at NASD Vieques Island, Puerto Rico	6
4	SWMU 4, typical vegetation at the site	7
5	SWMU 4, typical scrub at the edge of the site	7
6	Generalized food web for the forested and herbaceous community types at NASD Vieques	11
7	Location of SWMU 5 and control site at NASD Vieques Island, Puerto Rico	12
8	SWMU 5, maintained area	13
9	SWMU 5, shrubby area within site	13
10	Location of SWMU 6 and control site at NASD Vieques Island, Puerto Rico	16
11	SWMU 6, typical vegetation, mangroves	18
12	SWMU 6, typical vegetation, drier area	18
13	Generalized food web for the mangrove community types at NASD Vieques	20
14	Location of SWMU 7 and control site at NASD Vieques Island, Puerto Rico	22
15	SWMU 7, typical vegetation	23
16	SWMU 7, vegetation located downstream	23
17	Location of SWMUs, AOCs, and control located in the NASD Public Works Area Vieques Island, Puerto Rico	26
18	SWMU 10 maintained area	27
19	SWMU 14 (wash rack to left) and SWMU 15 (right of light gravel area)	27
20	Control area southwest of SWMU 14	28
21	AOC C, drainage looking North	28
22	AOC E-UST, wash rack	29
23	AOC F-UIC, showing bare areas	29

LIST OF TABLES

		Page
1	Federally Listed Species Occurring or Potentially Occurring at NASD Vieques	4
2	Vegetation Observed at SWMU 4	8
3	Wildlife Observed at SWMU 4	9
4	Vegetation Observed at SWMU 5	14
5	Wildlife Observed at SWMU 5	15
6	Vegetation Observed at SWMU 6	19
7	Wildlife Observed at SWMU 6	19
8	Vegetation Observed at SWMU 7	21
9	Wildlife Observed at SWMU 7	24
10	Vegetation Observed at SWMU 10, SWMU 14, SWMU 15, AOC C, AOC E-UST, and AOC F-UIC	30
11	Wildlife Observed at AOC Sites, SWMU 10, SWMU 14, and SWMU 15	31

INTRODUCTION

As part of a Resource Conservation and Recovery Act (RCRA) facility investigation at Vieques, ecological risk assessments were conducted at 10 solid waste management unit (SWMU) sites. A habitat characterization was conducted at each SWMU in order to determine the presence of plant and animal species and to determine whether preferred habitat was present for any federally endangered or threatened plant and animal species.

SITE LOCATION

The Naval Ammunition Support Department (NASD) Vieques (approximately 8,265 acres) is operated by the Weapons Department of Naval Station Roosevelt Roads and is located on the western end of Vieques (Figure 1). This report covers 10 SWMU sites located at NASD Vieques (Figure 2). Four of the sites were separated geographically and were located in different plant communities. These sites, SWMU 4, SWMU 5, SWMU 6, and SWMU 7, are presented individually in this report. SWMU 4, an inactive Waste Explosive Open Burn/Detonation Range, is approximately 3 acres in size and is located on the western side of NASD. SWMU 5, IRFNA/MAF-4 Disposal Site, is located adjacent to magazine Building 422 and consists of a small ditch and ravine. SWMU 6, Mangrove Disposal Site, is located north of Laguna Kiani. SWMU 7, Quebrada Disposal Site, is approximately 5.0 acres in size and is located within a quebrada (drainage channel or ravine) located about 0.5 miles west of the NASD Public Works area.

Six of the SWMU sites (SWMU 10, SWMU 14, SWMU 15, AOC C, AOC E-UST, and AOC F-UIC) were located near each other and were potentially contaminated with similar debris; therefore, they were analyzed as one unit and are presented in the same section of this report. These six sites were all located in the NASD Public Works area.

METHODS

Vegetation communities were initially characterized into broad community types based on color signatures from true-color aerial photographs (November 4, 1999: scale, RF=1:6000). Different vegetation communities were delineated based on species composition and structure by viewing magnified stereo pairs of aerial photography. The community types were marked on overlying acetate for use in the field (May 15-19, 2000). Personnel walked transects through each of these SWMU to:

1. verify that the community types were identified and delineated correctly from the true color aerial photography;
2. identify the species composition of the dominant vegetation;
3. identify the wildlife species present in the SWMU sites;

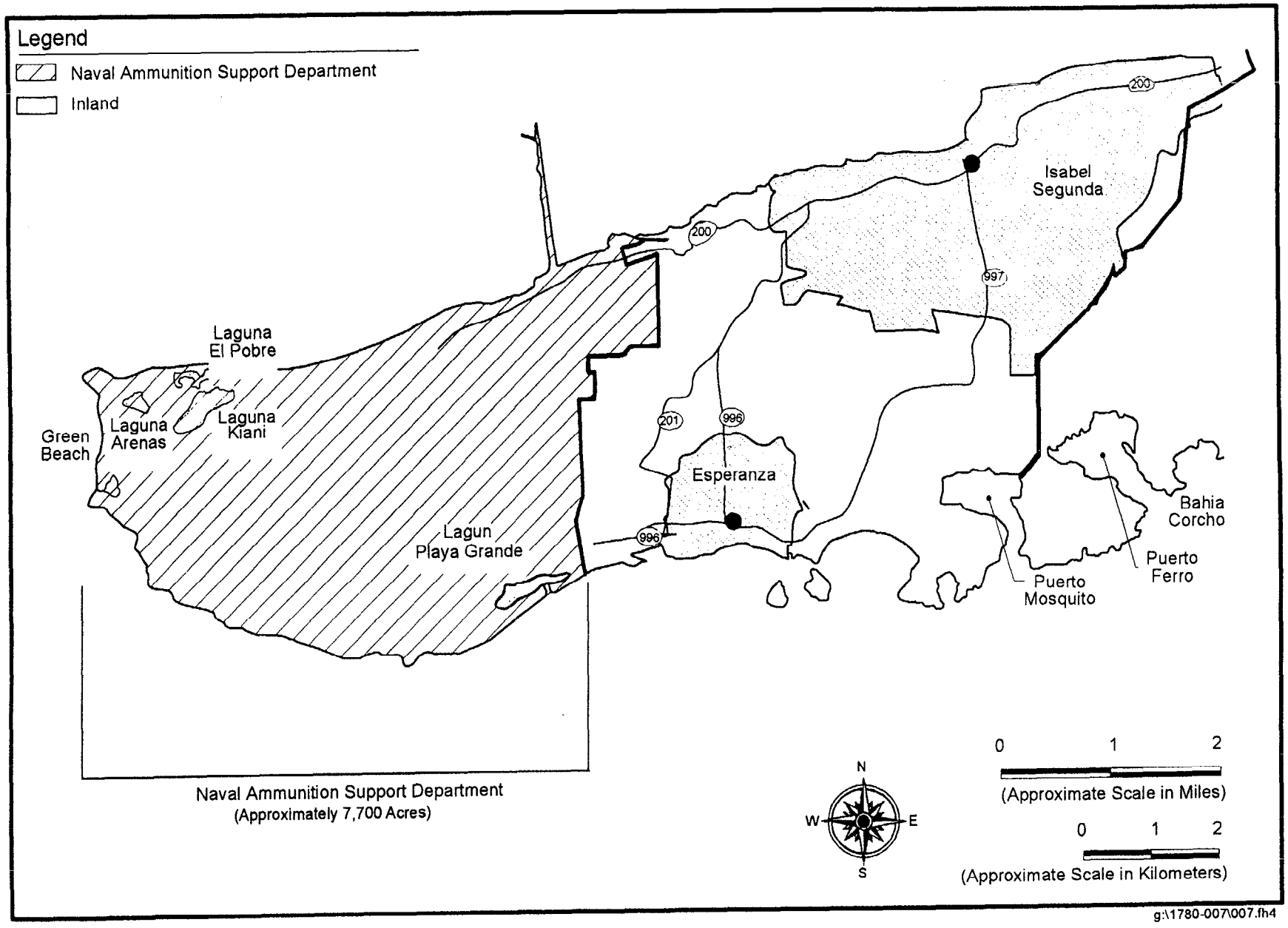

Figure 1. NASD Location.

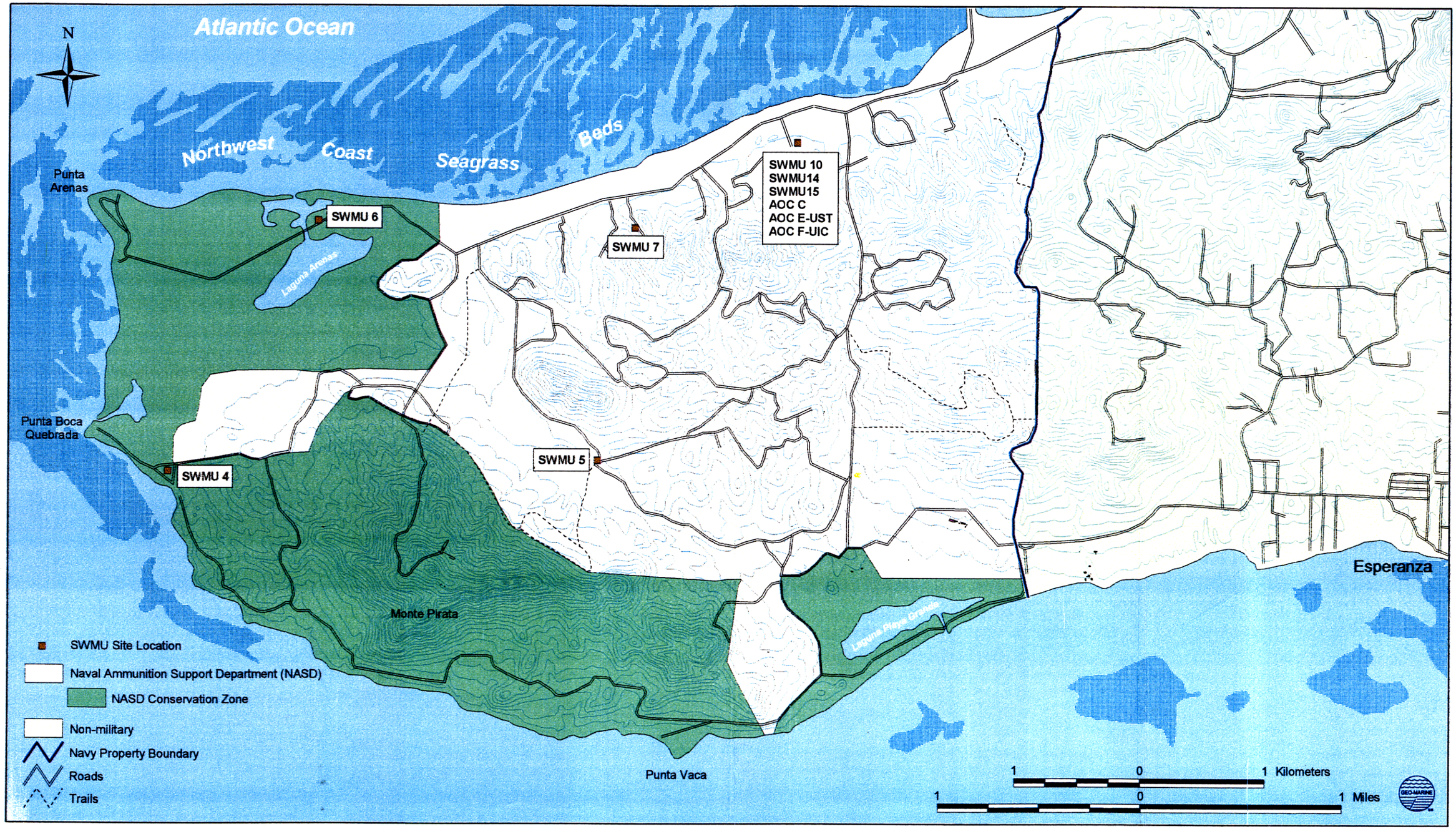

Figure 2. Solid Waste Management Unit (SWMU) Locations in the Naval Ammunition Support Department (NASD) Vieques Island, Puerto Rico.

02022C03Y

4. identify habitat that may potentially support federally designated threatened and endangered species within and contiguous to each SWMU; and
5. identify any obvious impacts potentially related to previous waste management activities.

The vegetation communities were verified by walking surveys through each community type previously identified with aerial photography. Most species were identified in the field; however, some specimens were collected for identification using reference books (Liogier 1985, 1988, 1994, 1995, 1997; Little and Wadsworth 1964; Little et al. 1964; and Acevedo-Rodriguez 1996) and herbarium specimens. Relative dominance and species structure were characterized from the visual observations within each community type and SWMU.

Wildlife species residing within or utilizing each SWMU habitat, and wildlife habitat were identified during the vegetation field surveys. A wildlife biologist characterized the habitats and determined the types of wildlife that could potentially inhabit the plant communities or SWMU sites. Any wildlife species that were observed were identified in the field with the use of 8 x 40 binoculars and reference guides (Raffaele 1989 and Raffaele et al 1998).

Fourteen federally listed species are known to occur or have the potential to occur on NASD Vieques (Table 1). Prior to conducting the fieldwork, a literature search was conducted for each federally protected species. During the May 15-19 surveys, biologists walked transects through each site and identified any federally protected species seen and noted the presence or absence of preferred habitat for the species.

Table 1

Federally Listed Species Occurring or Potentially Occurring at NASD Vieques

***Scientific Name* (Common Name)**	**Federal Status**
Plants	
Chaemacrista glandulosa var. *mirabilis* (Herb)	Endangered
Stahlia monosperma (Cobana negra)	Threatened
Calyptranthes thomasiana (Tree)	Endangered
Eugenia woodburyana (Evergreen tree)	Endangered
Reptiles and Amphibians	
Chelonia mydas (Green sea turtle)	Threatened
Dermochelys coriacea (Leatherback sea turtle)	Endangered
Eretmochelys imbricata (Hawksbill sea turtle)	Endangered
Birds	
Falco peregrinus tundrius (Arctic peregrine)	Threatened
Pelecanus occidentalis occidentalis (Brown pelican)	Endangered
Sterna dougalli dougalli (Roseate tern)	Endangered
Mammals	
Physeter macrocephalus (Sperm whale)	Endangered
Balaenoptera physalus (Fin whale)	Endangered
Megaptera novaeangliae (Humpback whale)	Endangered
Trichechas manatus (West Indian manatee)	Endangered

Source: NASD 1996

Past management activities at the SWMU sites may have potentially impacted the current vegetation communities. During the field surveys the biologists made visual observations to characterize the health of the plants in the SWMU sites. Indications of altered plant communities include: chlorotic leaves, epinasty (deformities of leaves and stems), patches of altered plant growth, absence of plants (bare ground), and changes in species composition. To determine if the SWMU sites contained altered plant communities, a nearby representative site was selected as a control. When altered plant communities were identified, the biologists made an effort to determine and record the probable cause (i.e., chemical, soil compaction, natural causes, etc.).

In addition to identification of wildlife in the field, existing literature sources were used to identify any additional species that may have occurred on the SWMU sites but were not observed. Most of the wildlife occurring in the area is bird species and these are presented in Appendix A. Species information and field data was used to generate a simplified food web for the sites. A food web is an interlocking pattern of several to many food chains that is helpful in determining ecosystem processes including those that may occur when a contaminant is introduced to a system.

RESULTS AND DISCUSSION

SWMU 4

Vegetation Community Description

SWMU 4, an inactive Waste Explosive Open Burn/Detonation Range, is approximately 3 acres in size and is located on the western side of NASD. The area is located on a hill that is completely surrounded by dirt roads (Figure 3). A high density of thorny shrubs dominates species composition on the site. Many areas of the site had both a shrub and a herbaceous stratum. With the two strata combined, the canopy cover was approximately 75-95 percent. Dominant shrubs identified on the site included *Acacia farnenciana, Prosopis glandulosa, Pithlcellobium dulce,* and *Zanthoxylum brevipes.* Another shrub that was present throughout the site and was dominant in some areas was *Leucaena leucocephala.* In certain areas there was an herbaceous stratum that was dominated by *Bothriochloa ischaemum, Commelina erecta, C. diffusa,* and *Lasiacis divaricata.* Vegetation photos are presented in Figures 4 and 5. The vegetation observed at SWMU 4 is presented in Table 2.

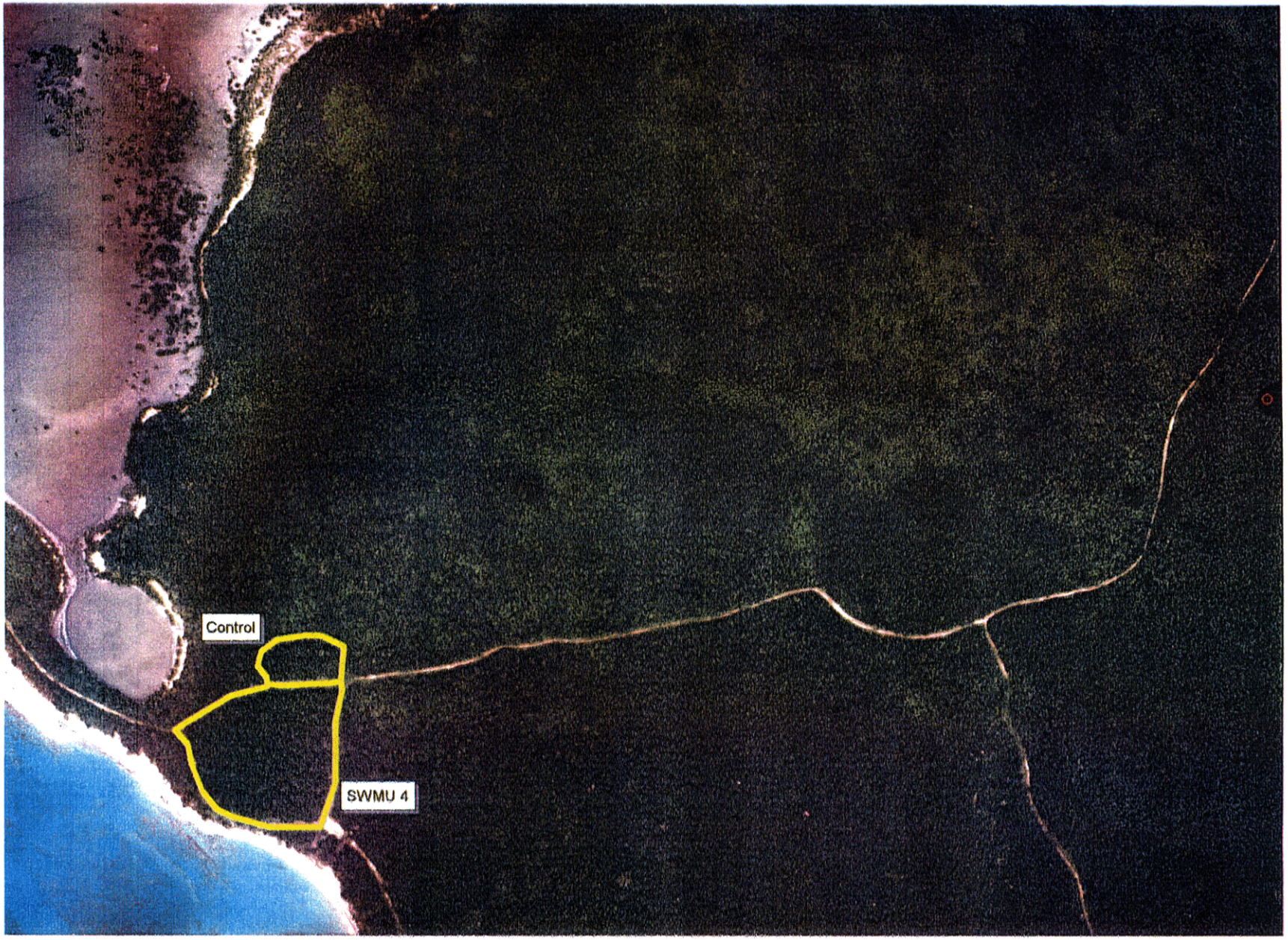

Figure 3. Location of SWMU 4 and control site at NASD Vieques Island, Puerto Rico.

Figure 4. SWMU 4, typical vegetation at the site.

Figure 5. SWMU 4, typical scrub at the edge of the site

Table 2

Vegetation Observed at SWMU 4

Common Name	Scientific Name	Stratum
Aroma, sweet acacia	*Acacia farnenciana*	S
None	*Acalypha poiretti*	H
Kitty katies, Tibet tree	*Albizia lebbek*	T
Bastard mahogany	*Andira inermis*	T
None	*Bothriochloa ischaemum*	H
Turpentine tree, almácigo	*Bursera simaruba*	T
Papaya	*Carica papaya*	S
Palo Blanco	*Casearia gianensis*	T
Trumpet tree	*Cecropia shreberiana*	T
Wist vine	*Centrosema virginianum*	V
Lime bush	*Citrus aurantifolia*	S
None	*Citrus lima*	T
French grass	*Commelina* spp.	H
Purple allamanda	*Cryptostegia grandiflora*	S
Brazilette, brizzlet, wild cherry	*Erythroxylum brevipes*	S
Wild coffee	*Faramea occidentalis*	S
Bastard cedar	*Guazuma ulmifolia*	T
Sea pusley	*Heliotropium curassavicum*	H
None	*Ipomea* sp.	V
Jazmin oloroso	*Jasminum fluminense*	V
Belly ache bush	*Jatropha gossypifolia*	S
Belly ache bush, body catta	*Jatropha gossypifolia*	S
None	*Lasiacis divaricata*	H
Rabbit food, hollow stalk	*Leonotis nepetifolia*	H
Tan tan, tanty, wild tamarind	*Leucaena leucocephala*	S
Beach milk vine	*Matelea maritime*	V
Cundeamor, jumbie pumpkin	*Momordica charantia*	V
None	*Oceoclades maculata*	H
Passion fruit, parcha	*Passiflora* sp.	V
Guamá americano, guamuchil	*Pithlcellobium dulce*	S
Mesquite	*Prosopis glandulosa*	S
Christmas tree, tintillo	*Randia aculeata*	S
None	*Rhynchosia reticulata*	V
None	*Stigmaphyllon periplocifolium*	V
Tamarind	*Tamarindus indica*	T
Tamarind	*Tamarindus indica*	T
Basket wiss, hoop vine	*Trichostygma octandrum*	S
Yerba socialista, socialist herb	*Vernonia cinera*	H
Yellow-sanders, aceitillo	*Zanthoxylum brevipes*	S
Yuyubi	*Ziziphus mauritiana*	T

S = shrub
T = tree
H = herbaceous
V = vine

Plant Community Health

Although some debris was found at SWMU 4, there was little evidence of past military activities. There were some indications from openings in the plant communities and from worn trails that horses (*Equus caballus*) occasionally graze throughout the site. No other plant stresses were observed in SWMU 4. The control site for SWMU 4 was located adjacent to the northern boundary of the SWMU 4 site. Canopy openings and trails made by horses were also observed in the control.

Wildlife Description

During the short duration of wildlife surveys conducted on this site, numerous wildlife species were observed utilizing the habitat of this site. Although no individual horses were observed within the site, there was sufficient evidence to indicate that horses use this habitat. The bird species observed at this habitat type consisted of coastal forest and shore species due to the close proximity to ocean. Numerous lizards (*Anolis* species) were also identified. There was no evidence that the SWMU site had an impact on the wildlife diversity or its habitat. Wildlife that was observed at SWMU 4 is presented in Table 3.

Table 3
Wildlife Observed at SWMU 4

English Name	Scientific Name	Local Name
Mammals		
Horse	*Equus caballus*	Horse, caballo
Mongoose	*Herpestes auropunctatus*	Not known
Reptiles and Amphibians		
Lizards	*Anolis* sp.	Not known
Birds		
Bananaquit	*Coereba flaveola*	Reinita Común
Common-ground Dove	*Columbina passerina*	Rolita
Smooth-billed Ani	*Crotophaga ani*	Garrapatero (Judio)
Adelaidae Warbler	*Dendroica adelaidae*	Reinita Mariposera
Yellow Warbler	*Dendroica petechia*	Canario de Mangle
Pearly-eyed Thrasher	*Margarops fuscatus*	Zorzal Pardo
Greater Antillean Grackle	*Quiscalus niger*	Mozambique (Chango)
Puerto Rican Lizard Cuckoo	*Saurothera vieilloti*	Pájaro Bobo Mayor
Loggerhead Kingbird	*Tyrannus caudifasciatus*	Clérigo
Gray Kingbird	*Tyrannus dominicensis*	Pitirre

Protected Species

Stahlia monosperma (Cobana negra), a federally threatened tree, has been found between the boundary of black mangrove (*Avicennia germinans*) communities, salt flats and the upland communities at NASD Vieques. This species is also known to occur in coastal forests of southeastern Puerto Rico (Little and Wadsworth 1964). The preferred habitat for *Stahlia monosperma* was not present at this site.

Federally threatened and endangered sea turtles such as the Green (*Chelonia mydas*), Hawksbill (*Eretmochelys imbricata*), and Leatherback sea turtles (*Dermochelys coriacea*), and endangered marine mammals such as the West Indian manatee (*Trichechas manatus*), Sperm whale (*Physeter macrocephalus*), Fin whale (*Balaenoptera physalus*), and Humpback whale (*Megaptera novaeangliae*) would not occur at this site because they require marine habitats.

The Artic peregrine falcon (*Falco peregrinus tundrius*) has been observed nearby at NAVSTA Roosevelt Roads (U.S. Navy 1998b). This species utilizes open grassland areas for potential feeding areas. This type of habitat was not present at or near this site.

Federally endangered marine birds such as the Brown pelican (*Pelecanus occidentalis occidentalis*) and the Roseate tern (*Sterna dougalli dougallii*) would most likely not occur at this terrestrial site. During these surveys, Brown pelicans were observed flying over the adjacent marine habitat, but not at SWMU 4.

Food Web

The information in a food web is very important when considering the potential for contaminants existing in the ecosystem. Many contaminants are passed from one trophic level to the next. A contaminant at the soil surface goes through a different process than a contaminant that has leached into the soil. The surface contaminant may be ingested by a decomposer such as a hermit crab and then passed on to the secondary consumer (i.e., a carnivorous bird). Leached contaminates are picked up by the primary producers and are then passed upwards in the food chain.

Figure 6 presents a generalized food web for the forested and herbaceous community types found at all SWMU sites except SWMU 6. The abundance within each of the food groups is represented by the size of their polygon in the figure. Dominant species are listed in each of the food groups except for plants, which were provided previously in this section.

SWMU 5

Vegetation Community Description

SWMU 5, IRFNA/MAF-4 Disposal Site, is located adjacent to magazine Building 422 and consists of a small ditch and ravine (Figure 7). There were two plant communities present at this site – the maintained grasslands of the small ditch and the non-maintained large ravine (quebrada). This ravine occurs as a long depression that was created during the construction of a road that leads to additional magazine buildings (243-249). The elevated road was blocking the natural water flow and was creating a hydrophytic plant community.

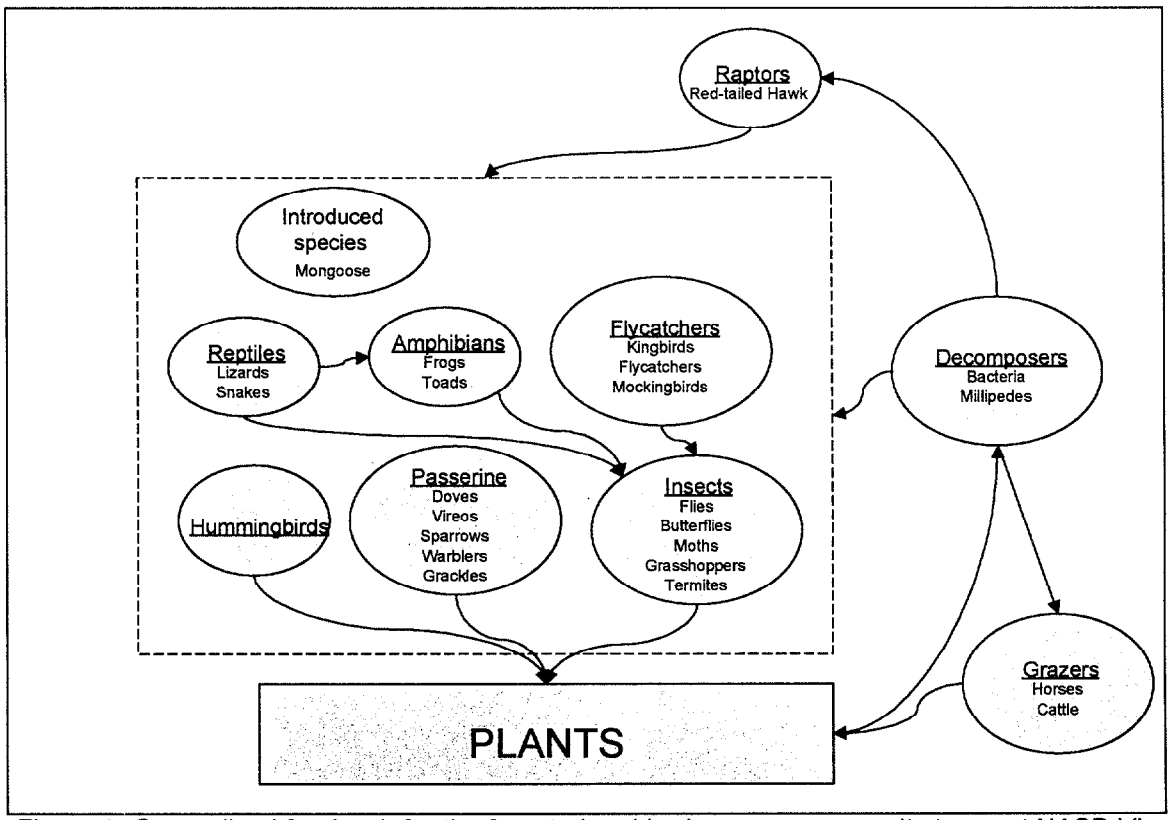

Figure 6. Generalized food web for the forested and herbaceous community types at NASD Vieques.

The non-maintained area consisting of a patchy canopy of various trees, shrubs, and herbaceous ground cover had 100 percent cover. *Eriochloa polystachya, Leonotis nepetifolia, Panicum maximum,* and *Commelina erecta* dominated the herbaceous canopy. Shrubs were mostly found along the hillside edges; these included *Randia aculeata, Erythroxylum brevipes, Acacia farnenciana,* and *Leucaena leucocephala.* There were a few trees (*Bursera simaruba* and *Tamarindus indica*) found throughout the site.

The small drainage ditch is located within the area where regular grounds maintenance occurs around Magazine Building 422. A regular disturbance by mowing has created a low-growing herbaceous community. Grasses dominated this drainage ditch and included *Bothriochloa ischaemum, Sporobolus indicus, Cynodon dactylon,* and *Scleria* sp. Vegetation photos are presented in Figures 8 and 9. The vegetation observed at SWMU 5 is presented in Table 4.

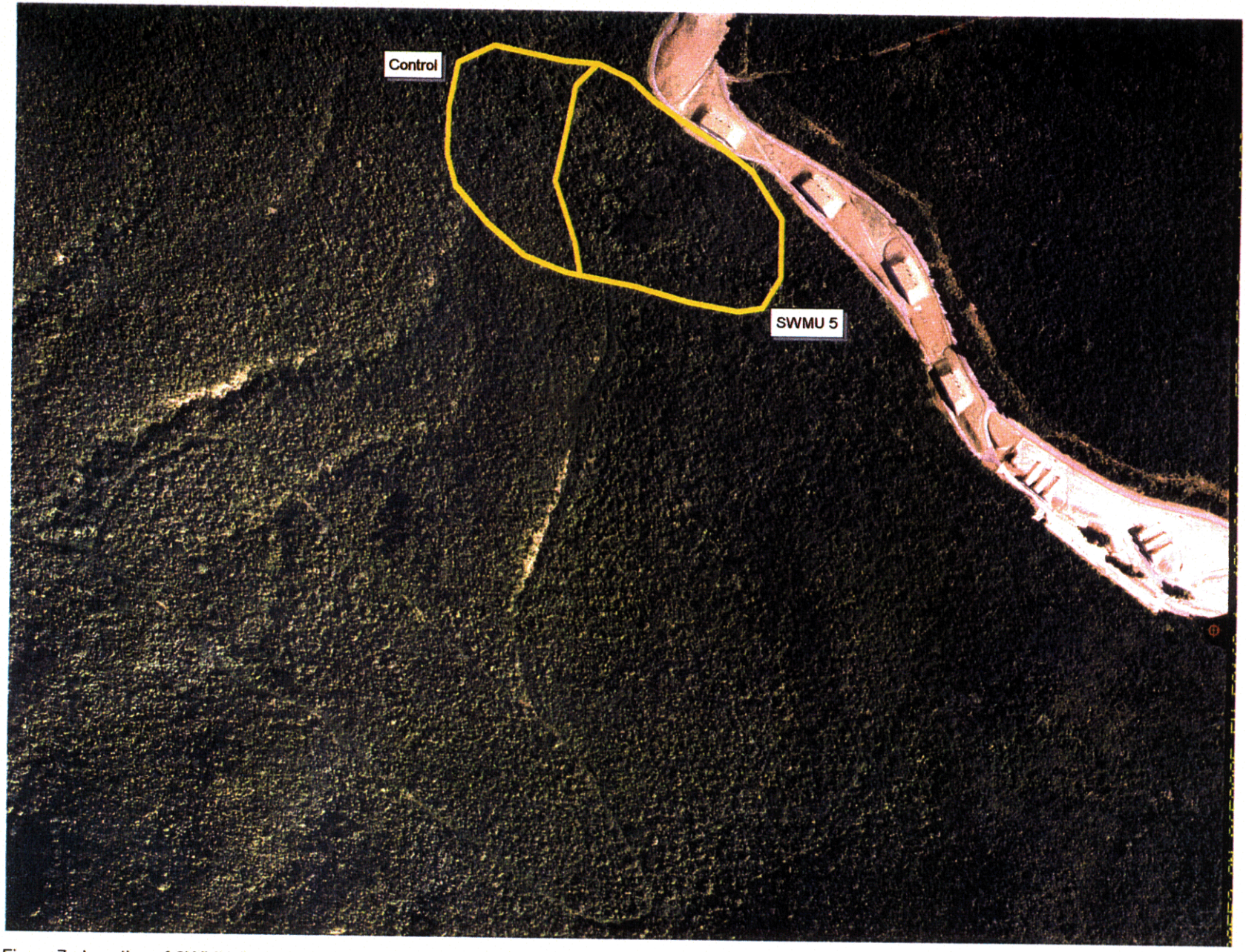

Figure 7. Location of SWMU 5 and control site at NASD Vieques Island, Puerto Rico.

Figure 8. SWMU 5, maintained area.

Figure 9. SWMU 5, shrubby area within site.

Table 4

Vegetation Observed at SWMU 5

Common Name	Scientific Name	Stratum
Aroma, sweet acacia	*Acacia farnenciana*	S
Better man better	*Achyranthes aspera*	H
Bastard mahogany, dog almond	*Andira inermis*	T
Cralita, coral vine, Mexican creeper	*Antigonon leptopus*	V
None	*Bothriochloa ischaemum*	H
Almácigo, turpentine-tree	*Bursera simaruba*	T
Pataka	*Cissampelos pareira*	No data
Palo blanco	*Casearia gianensis*	No data
Cafeillo Cimarron	*Casearia sylvestris*	No data
Wist vine	*Centrosema virginianum*	V
French grass	*Commelina erecta*	H
Bermuda grass	*Cynodon dactylon*	H
None	*Eriochloa polystachya*	H
Brazilette, brizzlet, wild cherry	*Erythroxylum brevipes*	S
Jazmin oloroso	*Jasminum fluminense*	V
Sage, cariaquillo	*Lantana* sp.	S
Quinino del pasto, lion's ear	*Leonotis nepetifolia*	H
Tan tan, tanty, wild tamarind	*Leucaena leucocephala*	S
Cundeamor	*Momordica charantia*	V
None	*Panicum maximum*	H
Parcha, passion fruit	*Passiflora edulis*	V
Indigo berry, ink berry	*Passiflora suberosa*	V
Christmas tree, tintillo, ink berry	*Randia aculeata*	S
Licorice, rain tree	*Samanea saman*	T
None	*Scleria* sp.	H
White button	*Spermacocce verticilata*	H
None	*Sporobolus indicus*	H
Chichery grape	*Tournefortia hirsutissima*	V
Tamarind	*Tamarindus indica*	T
Baske wiss	*Trichostigma octrandrum*	S,V
Aprín, India jujube	*Ziziphus mauritiana*	T

S = shrub
T = tree
H = herbaceous
V = vine

Plant Community Health

It was difficult to select a control for this community due to the effects of anthropomorphic disturbances (previous road construction) on the existing topography. The selected control was split into two areas so that an adequate comparison of the site could be accomplished. The non-maintained control area was adjacent to the southern border of the SWMU 5 site. The maintained control area was adjacent to the northern border of the maintained portion of SWMU 5. There were no differences identified in the vegetation communities with the exception of the drainage ditch that had some soil disturbance from recent soil removal during which some of the vegetation was trampled or cut.

Two dead animals were found near the site. One of the remains was the skeleton of a bovine species that died some time ago. The other animal was a horse that looked to have died more recently (less than five

days old). The cause of mortality of these animals is unknown, but they probably died due to natural causes and their presence was most likely coincidental.

Wildlife Description

During the short duration of wildlife surveys conducted on this site, numerous wildlife species were observed utilizing the habitat of this site. Although no horses were observed within the site, there was sufficient evidence to indicate that they frequent this habitat. The bird species observed at this habitat type consisted of coastal forest species (Table 5). Numerous lizards were also identified at this site. There was no evidence that the SWMU site had an impact on the wildlife or its habitat.

Table 5
Wildlife Observed at SWMU 5

English Name	Scientific Name	Local Name
Mammals		
Horse	*Equus caballus*	Horse, caballo
Mongoose	*Herpestes auropunctatus*	Not known
Reptiles and Amphibians		
Lizards	*Anolis sp.*	Not known
Birds		
Bananaquit	*Coereba flaveola*	Reinita Común
White-crowned Dove	*Columba leucocephala*	Paloma Cabeciblanca
Adelaidae Warbler	*Dendroica adelaidae*	Reinita Mariposera
Puerto Rican Lizard Cuckoo	*Saurothera vieilloti*	Pájaro Bobo Mayor
Gray Kingbird	*Tyrannus dominicensis*	Pitirre
Zenaida Dove	*Zenaida aurita*	Tórtola Cardosantera

Protected Species

There were no federally protected species or preferred habitat observed at this site. Terrestrial forested plant community dominated the sites and is not preferred habitat for any of the species.

Food Web

Figure 6 presents a generalized food web for the forested community type found at this SWMU site.

SWMU 6

Vegetation Community Description

SWMU 6, Mangrove Disposal Site, consists of black and red mangrove (*Rhizophora mangle*) communities located between Laguna Kiani and the Caribbean Sea (Figure 10). These communities were separated by position within the landscape. The red mangroves were located near open water where there is saturation/inundation of seawater while the black mangroves were located on higher land.

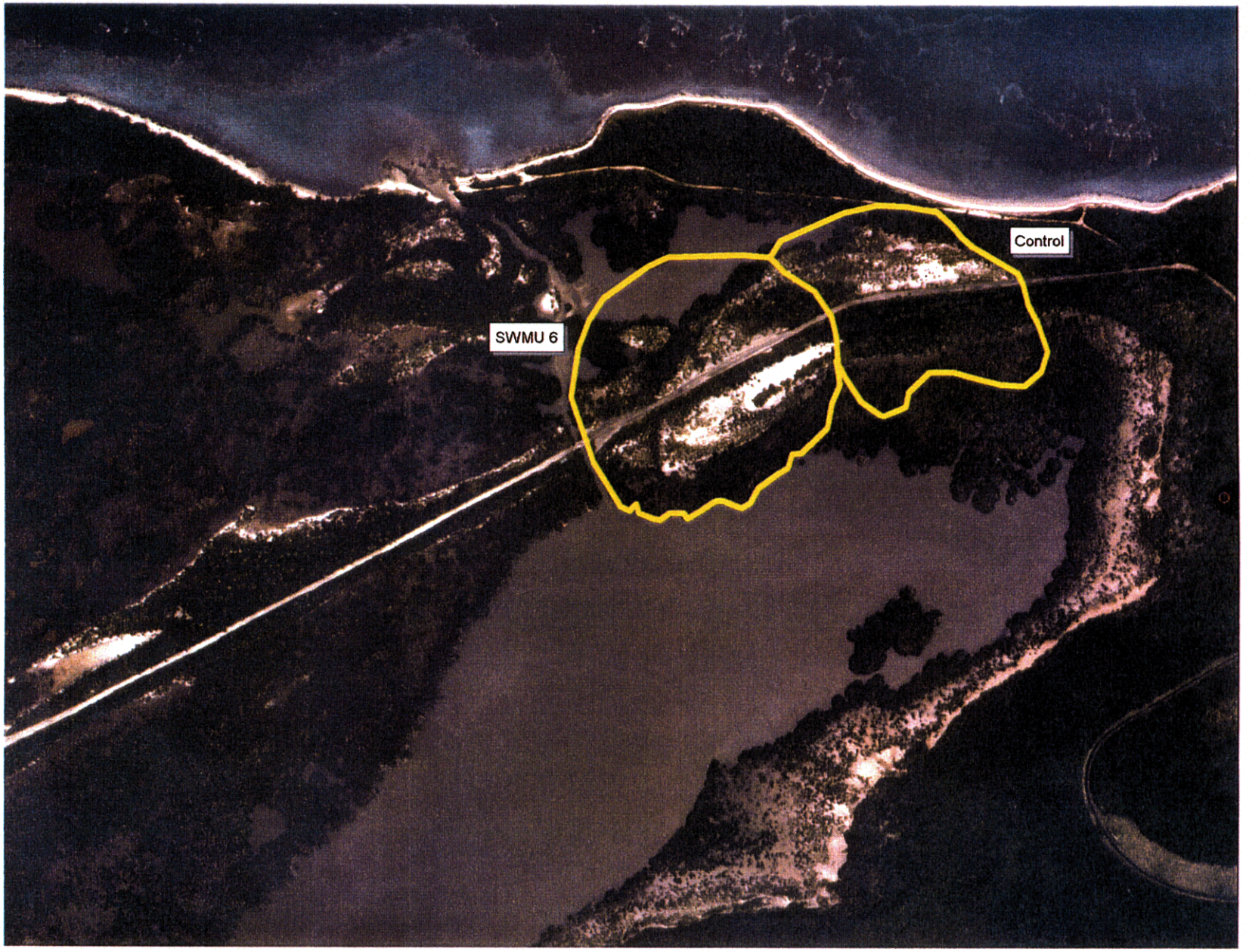

Figure 10. Location of SWMU 6 and control site at NASD Vieques Island, Puerto Rico.

The red mangrove community was sparsely vegetated (approximately 25 percent cover) with large pools of open water. Nearly all vegetation included short shrubs of red mangrove; no other vegetation was observed in this community. Numerous red mangrove seedlings were also observed in this site.

The black mangrove community also had sparse vegetation cover; there was approximately 25 percent cover. Plants were predominately short shrubs (8-15 feet); however, there were some patches of herbaceous vegetation located on higher topography. Black mangrove dominated the shrub vegetation, with *Laguncularia racemosa*, *Prosopis glandulosa*, and *Acacia farnesiana* also present. The herbaceous vegetation was dominated by *Sporobolus virginicus*. *Heliotropium curassavicum*, *Sesuvium portulacastrum*, and *Blutaparon vermiculare* were also identified. Vegetation photos are presented in Figures 11 and 12. The vegetation observed at SWMU 6 is presented in Table 6.

Plant Community Health

A control site was selected along the eastern boundary of the SWMU 6 site for plant community comparisons. These sites (control vs. SWMU 6) were essentially the same. The only difference was that the open areas of the black mangrove community in SWMU 6 were covered in debris. There were no observed stresses in the plant communities.

Wildlife Description

During the short duration of wildlife surveys conducted on this site, numerous wildlife species such as birds and lizards were observed utilizing the habitat of this site (Table 7). The mangrove communities had significant crab activity. The red mangrove community, with more water present, had more crab holes than the black mangrove. There was no evidence that the SWMU site had an impact on the wildlife or habitat.

Figure 11. SWMU 6, typical vegetation, mangroves

Figure 12. SWMU 6, typical vegetation, drier area.

Table 6

Vegetation Observed at SWMU 6

Common Name	Scientific Name	Stratum
Aroma, sweet acacia	*Acacia farnesiana*	S
Black mangrove	*Avicennia germinans*	S
Bay flower	*Blutaparon vermiculare*	H
None	*Croton discolor*	S
Purple allamanda	*Cryptostegia grandiflora*	S
None	*Heliotropium curassavicum*	H
None	*Jacquinia arborea*	S
None	*Jasminum fluminense*	V
Belly ache bush, body catta	*Jatropha gossypifolia*	S
White mangrove	*Laguncularia racemosa*	S
Sage, cariaquillo	*Lantana* sp.	S
None	*Mikania cordifolia*	V
Mesquite	*Prosopis glandulosa*	S
Tintillo, Christmas tree	*Randia aculeata*	S
Red mangrove	*Rhizophora mangle*	S
Bay flower, sea purslane, sea pusley	*Sesuvium portulacastrum*	H
None	*Sporobolus virginicus*	H
None	*Stigmaphyllon periplocifolium*	V
White cedar, pink cedar	*Tabebuia heterophylla*	T
Emajaguilla, portiatree	*Thespesia populnea*	T

S = shrub
T = tree
H = herbaceous
V = vine

Table 7
Wildlife Observed at SWMU 6

English Name	Scientific Name	Local Name
Reptiles and Amphibians		
Lizards	*Anolis* sp.	Not known
Birds		
Green Heron	*Butorides virescens*	Martinete
Bananaquit	*Coereba flaveola*	Reinita Común
White-crowned Dove	*Columba leucocephala*	Paloma Cabeciblanca
Yellow Warbler	*Dendroica petechia*	Canario de Mangle
Common Moorhen	*Gallinula chloropus*	Gallareta Común
Pearly-eyed Thrasher	*Margarops fuscatus*	Zorzal Pardo
Zenaida Dove	*Zenaida aurita*	Tórtola Cardosantera

Protected Species

There were no federally protected species or preferred habitat observed at this site which was dominated by black and red mangrove communities.

The federally endangered tree *Stahlia monosperma* is known to occur in coastal forests of southeastern Puerto Rico (Little and Wadsworth 1964). One of the two known *Stahlia monosperma* populations is

located on the eastern boundary of Laguna Kiani which is fairly close to SWMU 6. No individuals of *Stahlia monosperma* were found at SWMU 6. Although *Stahlia monosperma* has been found at NASD Vieques (in the boundary between black mangrove communities, salt flats and the upland communities), the habitat at SWMU is a mixed mangrove and therefore not preferred habitat.

Brown pelicans and roseate terns, both federally endangered marine birds, would most likely not occur at the site, but have been found adjacent to the site at Laguna Kiani. During the surveys, brown pelicans were observed flying over the adjacent marine habitat, but not at SWMU 7.

Food Web

Figure 13 presents a generalized food web for the mangrove community type found at SWMU 6. The abundance within each of the food groups is represented by the size of their polygon in the figure. Dominant species are listed in each of the food groups except for plants, which were provided previously in this section.

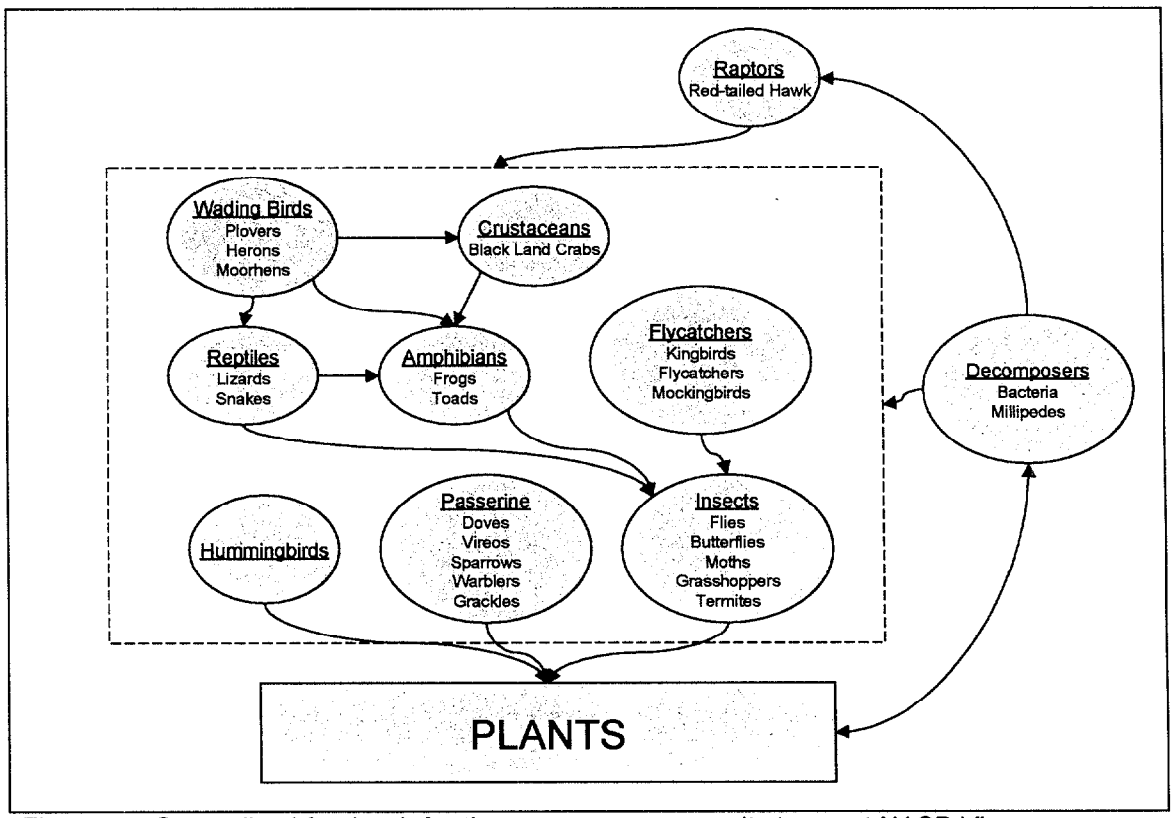

Figure 13. Generalized food web for the mangrove community types at NASD Vieques.

SWMU 7

Vegetation Community Description

SWMU 7, Quebrada Disposal Site, is located within a ravine approximately 0.5 miles west of the NASD Public Works area (Figure 14). This site had historically been used as a trash dump, but had been abandoned long enough for a shrub plant community to establish. This plant community had two canopy layers (shrub and tree), which provided nearly 100 percent canopy cover. The dense shrub and tree canopies provided little sunlight for an herbaceous canopy. *Lasiacis divaricata* was present in some areas. The dominant shrubs in this community consisted of *Leucaena leucocephala, Foresteria eggersiana,* and *Acacia retusa*. There was a lower density of trees than shrubs, but dominant tree species such as *Andira inermis* and *Cordia collococca* provided a significant contribution to the plant community. Vegetation photos are presented in Figures 15 and 16. The vegetation observed at SWMU 7 is presented in Table 8.

Table 8

Vegetation Observed at SWMU 7

Common Name	Scientific Name	Stratum
Catch and keep, white police	*Acacia retusa*	S
None	*Acacia westiana*	S
Bastard mahogany	*Andira inermis*	T
Palo blanco	*Casearia gianensis*	T
Pataka	*Cissampelos pareira*	V
Manjack, red manjack	*Cordia collococca*	T
Brazilette, brizzlet	*Erythroxylum brevipes*	S
Rocio, brizzlet	*Erthroxylum rotundifolium*	S
None	*Foresteria eggersiana*	S
Guaba,	*Inga vera*	T
None	*Ipomea* sp.	V
None	*Lasiacis divaricata*	H
Quinino del pasto, lion's ear	*Leonotis nepetifolia*	H
Zarcilla, tan tan, wild tamarind	*Leucaena leucocephala*	S
Congo root	*Petiveria alliacea*	SS
Black wattle	*Piper amalago*	S
Prickly mampoo	*Pisonia aculeata*	V/S
Christmas tree, tintillo	*Randia aculeata*	S
Cat's blood	*Rivina humilis*	H,S
None	*Securidaca virgata*	S
Basket wiss	*Serjania polyphylla*	V
Black hoopwood	*Trichostigma octrandrum*	T
Bran nettle, creeping cowitch	*Tragia volubilis*	H
Aceitillo, yellow-sanders	*Zanthoxylum monophyllum*	S
Yuyubi	*Ziziphus mauritiana*	T

S = shrub
T = tree
H = herbaceous
V = vine

Figure 14. Location of SWMU 7 and control site at NASD Vieques Island, Puerto Rico.

02022CB8Y

Figure 15. SWMU 7, typical vegetation

Figure 16. SWMU 7, vegetation located downstream

Plant Community Health

Despite a large amount of debris at the site, the plant community was very similar to the control. The control was located downstream of the site along the same ravine. The species composition and structure was similar between the two sites (control and SWMU 7). Additionally, no vegetation stresses were observed in SWMU 7.

Wildlife Description

During the short duration of wildlife surveys conducted on this site, numerous wildlife species were observed utilizing the habitat of this site. The bird species observed at this habitat type consisted of coastal forest and shore species due to the close proximity to Caribbean Sea (Table 9). Numerous lizards were also identified at this site. There was no evidence that the SWMU site had an impact on the wildlife or its habitat.

Table 9
Wildlife Observed at SWMU 7

English Name	Scientific Name	Local Name
Reptiles and Amphibians		
Lizards	*Anolis* sp.	Not known
Birds		
Red-tailed Hawk	*Buteo jamaicensis*	Guaraguao de Cola Roja
Bananaquit	*Coereba flaveola*	Reinita Común
Adelaidae Warbler	*Dendroica adelaidae*	Reinita Mariposera
Green-throated Carib	*Eulampis holosericeus*	Zumbador de Pecho Azul
Pearly-eyed Thrasher	*Margarops fuscatus*	Zorzal Pardo
Northern Mockingbird	*Mimus polyglottos*	Ruiseñor
Puerto Rican Lizard Cuckoo	*Saurothera vieilloti*	Pájaro Bobo Mayor
Louisiana Waterthrush	*Seiurus motacilla*	Pizpita de Rio
Loggerhead Kingbird	*Tyrannus caudifasciatus*	Clérigo
Gray Kingbird	*Tyrannus dominicensis*	Pitirre
White-winged Dove	*Zenaida asiatica*	Tórtola Aliblanca

Protected Species

There were no federally protected species or preferred habitat observed at this site. Terrestrial forested plant community dominated the sites, which is not preferred habitat for any of the species.

The federally endangered Brown pelican would most likely not occur at this terrestrial site. During the surveys Brown pelicans were observed flying over the adjacent marine habitat, but not at SWMU 7.

Food Web

Figure 6 presents a generalized food web for the forested community type found at this SWMU site.

AOC Sites, SWMU 10, SWMU 14, and SWMU 15

Vegetation Community Description

The SWMU 10, SWMU 14, SWMU 15, AOC C, AOC E-UST, and AOC F-UIC sites contained similar plant communities and were all located in the NASD Public Works area (Figure 17). The plant communities at these sites were dominated by herbaceous species due to grounds maintenance activities (mowing). A few shrubs with decumbent growth were present and there was approximately 70 to 85 percent ground cover at all the sites. The herbaceous plant community was dominated by several species, including: *Bothriochloa ishaemum, Digitaria ciliaris, Cynodon dactylon*, and *Commelina erecta.* Vegetation photos are presented in Figures 18 through 23. The vegetation observed at the NASP Public Works sites is presented in Table 10.

Plant Community Health

These sites have experienced regular disturbance from mowing that has resulted in a grassland community. Grounds maintenance is the primary factor affecting the species composition and structure of the sites. A control plot was selected within the Public Works area, southeast of SWMU 14.

There was no significant difference between any of the sites and the control. SWMU 10 had a greater abundance of *Digitaria ciliaris* and *Commelina erecta* than the control; however, this was most likely due to the shading effect of the associated buildings (both species are shade tolerant). AOC-C had a higher abundance of hydrophytic vegetation than the other sites because of the drainage ditches on the site. There was some surface disturbance (bare ground) at both AOC-E UST and AOC-F UIC due to the installation/maintenance of monitoring wells.

SWMU 15 was the only site that had evidence of stressed vegetation. There was a greater abundance of *Cynodon dactylon* growing at this site than other sites. *Cynodon dactylon* is an exotic and invasive grass species that can tolerate variable growing conditions. The presence of this species on any of these sites is not significant, due to the grounds maintenance. The decumbent growth form of this species indicates that this area had been compacted from heavy vehicles driving or parking on the site. The soil compaction may also limit the species diversity of the site. It appears that the site may have been a parking lot or vehicle staging area because some small patches of oil stained soil were observed in the south central portion of the site.

Wildlife Description

Wildlife observed at these sites is typical for developed areas on Vieques and is presented in Table 11. Two mammal species (horse and mongoose) were observed utilizing the sites. Numerous birds including

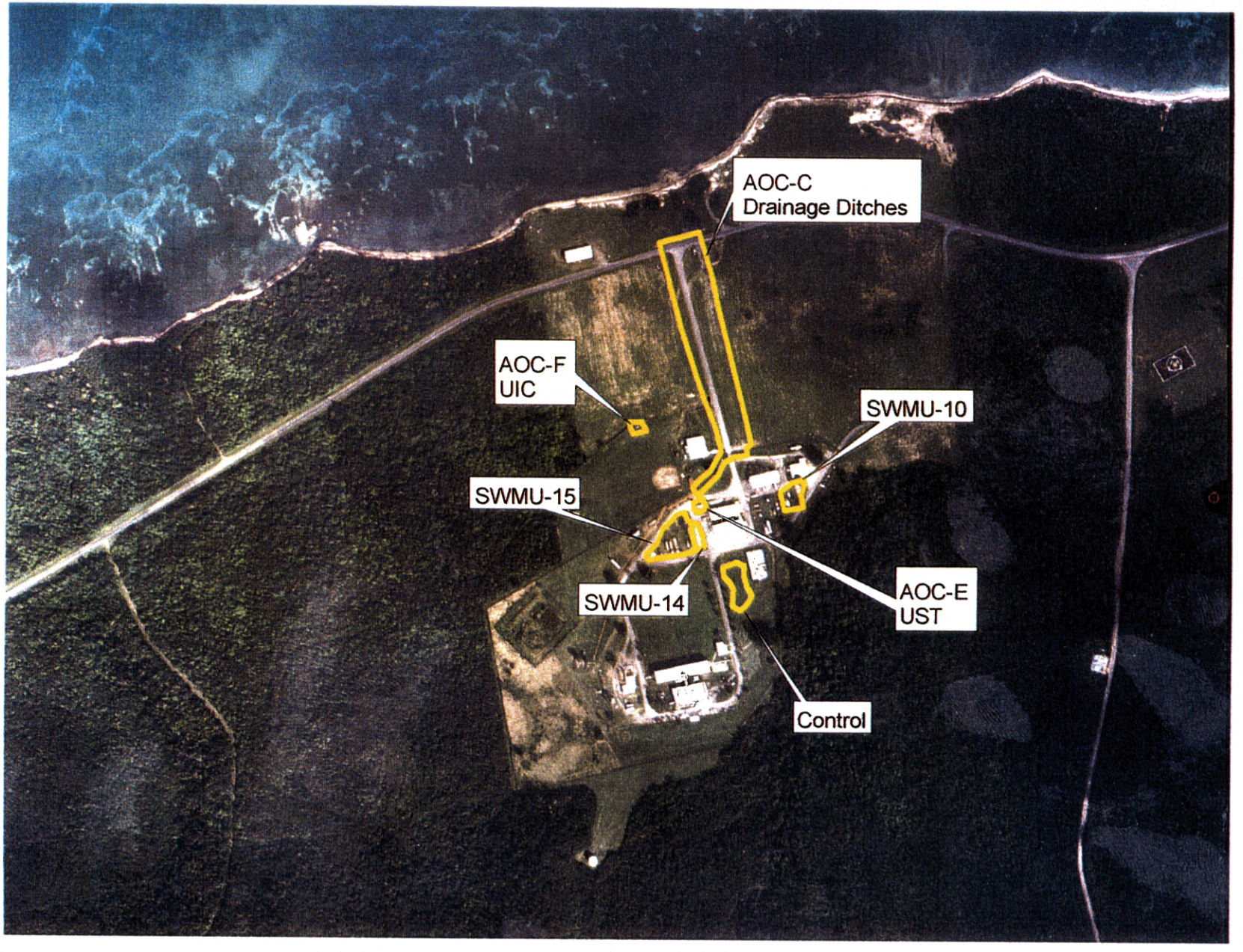

Figure 17. Location of SWMUs, AOCs, and control located in the NASD Public Works Area, Vieques Island, Puerto Rico.

02022CB9Y

Figure 18. SWMU 10, maintained area

Figure 19. SWMU 14 (wash rack to left) and SWMU 15 (right of light gravel area)

Figure 20. Control area southwest of SWMU 14.

Figure 21. AOC C, drainage looking North

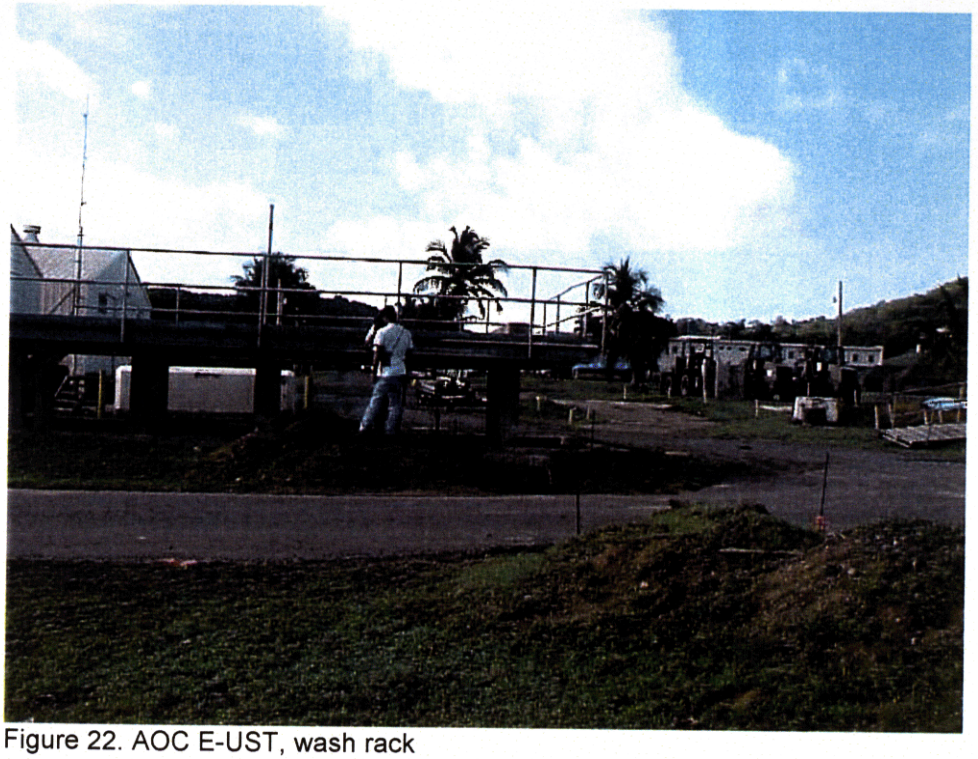

Figure 22. AOC E-UST, wash rack

Figure 23. AOC F-UIC, showing bare areas

Table 10

Vegetation Observed at SWMU 10, SWMU 14, SWMU 15, AOC C, AOC E-UST, and AOC F-UIC

Common Name	Scientific Name	Stratum
Better man better	*Achyranthes aspera*	H or SS
Lumboo, whitey mary	*Amaranthus viridis*	H
None	*Bothriochloa ischaemum*	H
Sandbur, sand-spurs	*Cenchrus brownii*	H
Sandbur	*Cenchrus echinatus*	H
None	*Cissus sicyoides*	H
French grass	*Commelina erecta*	H
Bermuda grass	*Cynodon dactylon*	H
None	*Cyperus flexuosus*	H
None	*Datura inoxia*	H
Jimsonweed	*Datura stramonium*	H
Zarzabacoa común, tick trefoil	*Desmodium incanum*	H/S
None	*Digitaria ciliaris*	H
None	*Echinochloa colona*	H
Dutch grass	*Eleusine indica*	H
None	*Eragrostis amabilis*	H
Siempreviva silvestre	*Gomphrena serrata*	H
Willy vine	*Ipomea tiliacea*	H
None	*Ludwigia octovalus*	H
None	*Panicum diffisum*	H
None	*Paspalidium germinatum*	H
Jump up an' kiss me, purslane	*Portulaca oleracea*	H
Mesquite	*Prosopis glandulosa*	S
Christmas pride	*Ruellia tuberosa*	H
None	*Schrankia uncinata*	H
Bejuco de sopla, jaboncillo	*Securidaca virgata*	S
None	*Sida* sp.	H
None	*Sporobulus indicus*	H
Barrow, node weed	*Synedrella nodiflora*	H
White cedar, pink cedar	*Tabebuia heterophylla*	T
None	*Tridax procumbens*	H
Yerba socialista, socialist herb	*Vernonia cinerea*	H
None	*Vernonia lineria*	H

S = shrub
T = tree
H = herbaceous
V = vine

Table 11

Wildlife Observed at AOC Sites, SWMU 10, SWMU 14, and SWMU 15

English Name	Scientific Name	Local Name
Mammals		
Mongoose	*Herpestes auropunctatus*	Not known
Horse	*Equus Caballus*	Caballo
Birds		
Red-tailed Hawk	*Buteo jamaicensis*	Guaraguao de Cola Roja
Killdeer	*Charadrius vociferous*	Playero Sabanero
Common-ground Dove	*Columbina passerina*	Rolita
Scaley-naped Pigeon	*Columda squamosa*	Paloma Turca
Snowy Egret	*Egretta thula*	Garza Blanca
Puerto Rico Woodpecker	*Melanerpes portoricensis*	Carpintero de Puerto Rico
Northern Mockingbird	*Mimus polyglottos*	Ruiseñor
Greater Antillean Grackle	*Quiscalus niger*	Mozambique (Chango)
Gray Kingbird	*Tyrannus dominicensis*	Pitirre
Black-Whiskered Vireo	*Vireo altiloquus*	Bien-te-veo
White-winged Dove	*Zenaida asiatica*	Tórtola Aliblanca
Zenaida Dove	*Zenaida aurita*	Tórtola Cardosantera

the Red-tailed hawk (*Buteo jamaicensis*) and Killdeer (*Charadrius vociferous*) were present during the surveys and utilize the habitat for feeding and/or breeding.

Protected Species

There were no federally protected species or preferred habitat observed at this site. The sites were dominated by maintained herbaceous grassland, which is not preferred habitat for any of the species except the Arctic peregrine falcon.

The Arctic peregrine falcon has been observed nearby at NAVSTA Roosevelt Roads (U.S. Navy 1998b), and potential feeding habitat for these birds is present on the site. Arctic peregrine falcons prefer edges and open areas to hunt prey. Foraging habitat within and/or near the site is present since the majority of the area is open grassland.

Food Web

Figure 6 presents a generalized food web for the herbaceous community type found at this SWMU site.

CONCLUSION

The past activities at all to the SWMU sites presented in this report have some degree of impacts on their ecosystems. However, these impacts appear to be limited to changes in species composition based on physical disturbances. The construction of roads and grounds maintenance is the only disturbances that

have caused noticeable differences. Wildlife at these sites seems to be healthy and utilizing the habitats to their fullest extent. Through these surveys, no federally protected species were identified at these sites.

LITERATURE CITED

Acevedo-Rodriguez, P. 1996. Flora of St. John; U.S. Virgin Islands. The New York Botanical Garden. Bronx, NY.

Liogier, H.A. 1985. Descriptive Flora of Puerto Rico and Adjacent Islands; Spermatophyta Vol. 1 Casuarinacae to Connaraceae. Editorial de la Universidad de Puerto Rico, Rio Piedras, Puerto Rico.

Liogier, H.A. 1988. Descriptive Flora of Puerto Rico and Adjacent Islands; Spermatophyta. Vol. 2. Leguminosae to Anacardiaceae. Editorial de la Universidad de Puerto Rico, Rio Piedras, Puerto Rico.

Liogier, H.A. 1994. Descriptive Flora of Puerto Rico and Adjacent Islands; Spermatophyta. Vol. 3. Cyrillaceae to Myrtaceae. Editorial de la Universidad de Puerto Rico, Rio Piedras, Puerto Rico.

Liogier, H.A. 1995. Descriptive Flora of Puerto Rico and Adjacent Islands; Spermatophyta. Vol. 4. Melastomataceae to Lentibulariaceae. Editorial de la Universidad de Puerto Rico, Rio Piedras, Puerto Rico.

Liogier, H.A. 1997. Descriptive Flora of Puerto Rico and Adjacent Islands; Spermatophyta. Vol. 5. Acanthaceae to Compositae. Editorial de la Universidad de Puerto Rico, Rio Piedras, Puerto Rico.

Liogier, H.A. and L.F. Wadsworth. 1982. Flora of Puerto Rico and Adjacent Islands: A Systematic Synopsis. Editorial de la Universidad de Puerto Rico, Rio Piedras, Puerto Rico.

Little, E.L., and F.H. Wadsworth. 1964. Common Trees of Puerto Rico and the Virgin Islands. Agriculture Handbook No. 249. U.S. Department of Agriculture, Forest Service, Washington, D.C.

Little, E.L., R. Woodbury, and F.H. Wadsworth. 1964. Trees of Puerto Rico and the Virgin Islands. Vol. 2. Agriculture Handbook No. 449. U.S. Department of Agriculture, Forest Service, Washington, D.C.

Oland, J.P. 1996. Personal Communication between Mr. James P. Oland, U.S. Fish and Wildlife Service, and Mr. John R. Alexander, Geo-Marine, Inc. October 4.

Post, W. and J.M. Wiley. 1976. The Yellow-shouldered Blackbird Present and Future. American Birds 30:13-20.

Raffaele, H. A. 1989. A Guide to the Birds of Puerto Rico and the Virgin Islands. . Princeton University Press. Princeton, New Jersey.

Raffaele, H., J. Wiley, O. Garrido, A. Keith, and J. Raffaele. 1998. A Guide to the Birds of the West Indies. Princeton University Press. Princeton, New Jersey.

U.S. Navy. 1996. Final Report. Survey of Potential Habitat for Yellow-shouldered Blackbird on U.S. Naval Station Roosevelt Roads, Puerto Rico. Legacy Resource Management Program. Atlantic Division, Naval Facilities Engineering Command, Norfolk, Virginia, and U.S. Naval Station Roosevelt Roads, Ceiba, Puerto Rico. 15 p.

U.S. Navy. 1998a. Draft Pre-Consultation Plan for the Puerto Rican Boa. Prepared by Geo-Marine, Inc. for Atlantic Division, Naval Facilities Engineering Command, Norfolk, Virginia, and U.S. Naval Security Group Activity, Ceiba, Puerto Rico.

U.S. Navy. 1998b. Final Integrated Natural Resource Management Plan. Atlantic Division, Naval Facilities Engineering Command, Norfolk, Virginia, and U.S. Naval Station Roosevelt Roads, Ceiba, Puerto Rico. 15 p.

APPENDIX A

Birds Potentially Occurring at NASD Vieques

Pied-billed grebe (*Podilymbus podiceps*)
Red-billed tropicbird (*Phaethon aethereus*)
Brown pelican (*Pelecanus occidentalis*)
Brown booby (*Sula leucogaster*)
Magnificent frigatebird (*Fregata magnificens*)
Great blue heron (*Ardea herodias*)
Louisiana heron (*Hydranassa tricolor*)
Snowy egret (*Egretta thula*)
Great egret (*Egretta alba*)
Striated heron (*Butorides striatus*)
Little blue heron (*Florida caerulea*)
Cattle egret (*Bubulcus ibis*)
Least bittern (*Ixobrychus exilis*)
Yellow-crowned night heron (*Nyctanassa violacea*)
Black-crowned night heron (*Nycticorax nycticorax*)
White-cheeked pintail (*Anas bahamensis*)
Blue-winged teal (*Anas discors*)
American widgeon (*Anas americana*)
Red-tailed hawk (*Buteo jamaicensis*)
Osprey (*Pandion haliaetus*)
Merlin (*Falcon columbarius*)
Clapper rail (*Rallus longirostris*)
American coot (*Fulica americana*)
Caribbean coot (*Fulica caribaea*)
Common gallinule (*Gallinula chloropus*)
Piping plover (Charadrius melodus)
Semipalmated plover (*Charadrius semipalmatus*)
Black-bellied plover (*Squatarola squatarola*)
Wilson's plover (*Charadrius wilsonia*)
Killdeer (*Charadrius vocifera*)
Ruddy turnstone (*Arenaria interpres*)
Black-necked stilt (*Himantopus himantopus*)
Whimbrel (*Numenius phaeopus*)
Spotted sandpiper (*Actitis macularia*)
Semipalmated sandpiper (*Calidris pusilla*)
Short-billed dowitcher (*Limnodromus griseus*)
Greater yellowlegs (*Tringa melanoleauca*)
Lesser yellowlegs (*Tringa flavipes*)
Willet (*Catoptrophorus semipalmatus*)
Stilt sandpiper (*Micropalama himantopus*)
Pectoral sandpiper (*Calidris melanotos*)
Laughing gull (*Larus atricilla*)
Royal tern (*Thalasseus maximus*)
Sandwich tern (*Thalasseus sandvicensis*)
Bridled tern (*Sterna anaethetus*)
Least tern (*Sterna albifrons*)
Brown noddy (*Anous stolidus*)
White-winged dove (*Zenaida asiatica*)
Zenaida dove (*Zenaida aurita*)
White-crowned pigeon (*Columba leucocephala*)
Mourning dove (*Zenaida macroura*)
Red-necked pigeon (*Columba squamosa*)
Common ground dove (*Columba passerina*)
Bridled quail dove (*Geotrygon mystacea*)

Birds Potentially Occurring at NASD Vieques (Continued)

Ruddy quail dove (*Geotrygon montana*)
Caribbean parakeet (*Aratinga pertinax*)
Smooth-billed ani (*Crotophaga ani*)
Yellow-billed cuckoo (*Coccyzus americanus*)
Mangrove cuckoo (*Coccyzus minor*)
Short-eared owl (*Asio flammeus*)
Chuck-will's-widow (*Caprimulgus carolinensis*)
Common nighthawk (*Chordeiles minor*)
Antillean crested hummingbird (*Orthorynchus cristatus*)
Green-throated carib (*Sericotes holosericeus*)
Antillean mango (*Anthracothorax dominicus*)
Belted kingfisher (*Ceryle alcyon*)
Gray kingbird (*Tyrannus dominicensis*)
Loggerhead kingbird (*Tyrannus caudifasciatus*)
Stolid flycatcher (*Myiarchus stolidus*)
Caribbean elaenia (*Elaenia martinica*)
Purple martin (*Progne subis*)
Cave swallow (*Petrochelidon fulva*)
Barn swallow (*Hirundo rustica*)
Northern mockingbird (*Mimus polyglottos*)
Pearly-eyed thrasher (*Maragarops fuscatus*)
Red-legged thrush (*Mimocichla plumbea*)
Black-whiskered vireo (*Vireo altiloquus*)
American redstart (*Setaophaga ruticilla*)
Parula warbler (*Parula americana*)
Prairie warbler (*Dendroica discolor*)
Yellow warbler (*Dendroica petechia*)
Magnolia warbler (*Dendroica magnolia*)
Cape May warbler (*Dendroica tigrina*)
Black-throated blue warbler (*Dendroica caerulescens*)
Adelaide's warbler (*Dendroica adelaidae*)
Palm warbler (*Dendroica palmarum*)
Black and white warbler (*Mniotilta varia*)
Ovenbird (*Seiurus aurocapillus*)
Northern water thrush (*Seiurus noveboracensis*)
Bananaquit (*Coerba flaveola*)
Striped-headed tanager (*Spindalis zena*)
Shiny cowbird (*Molothrus bonariensis*)
Black-cowled oriole (*Icterus dominicensis*)
Greater Antillean grackle (*Quiscalis niger*)
Yellow-shouldered blackbird (*Agelaius xanthomus*)
Hooded mannikin (*Lonchura cucullata*)
Yellow-faced grassquit (*Tiaris olivacea*)
Black-faced grassquit (*Tiaris bicolor*)
Least sandpiper (*Calidris minutilla*)
Western sandpiper (*Calidris mauri*)
Puerto Rican woodpecker (*Melanerpes portoricensis*)
Rock dove (*Columba livia*)
Puerto Rican emerald (*Chlorostilbon maugeus*)
Puerto Rican flycatcher (*Myiarchus antillarum*)
Pin-tailed whydah (*Vidua macroura*)
Spice finch (*Lonchura punctulata*)
Ruddy duck (*Oxyura jamaicensis*)
Peregrine falcon (*Falco peregrinus*)

Birds Potentially Occurring at NASD Vieques (Continued)

Marbled godwit (*Limosa fedoa*)
Puerto Rican lizard cuckoo (*Saurothera vieilloti*)
Prothonotary warbler (*Protonotaria citrea*)
Green-winged teal (*Anas carolinensis*)
Orange-cheeked waxbill (*Estrilda melpoda*)
Least grebe (*Tachybaptus dominicus*)
West Indian whistling duck (*Dendrocygna arborea*)
Puerto Rican screech owl (*Otus nudipes*)
Puerto Rican tody (*Todus mexicanus*)

Sources: Vila and Azar 1974, Weaver et al 1976, Pace 1989

APPENDIX J

Laboratory Data

SWMU 04 Groundwater Data

	Building	SWMU4		SWMU4		SWMU4		SWMU4		SWMU4		SWMU4		SWMU4	
	StationID	SWMU4-MW01		SWMU4-MW01		SWMU4-MW02		SWMU4-MW02		SWMU4-MW02		SWMU4-MW03		SWMU4-MW03	
	SampleID	NDA001		NDA332		NDA003		NDA003FD1		NDA333		NDA004		NDA334	
	DateCollected	04/28/2000		06/04/2000		04/27/2000		04/27/2000		06/05/2000		04/27/2000		06/05/2000	
	Depth	0 to 0		0 to 0		0 to 0		0 to 0		0 to 0		0 to 0		0 to 0	
Parameter	**Units**														
DISSOLVED METALS															
ALUMINUM, DISSOLVED	UG/L	27.8	J			25.8	U	25.8	U			25.8	U		
ANTIMONY, DISSOLVED	UG/L	1.4	U			1.4	U	1.4	U			1.4	U		
ARSENIC, DISSOLVED	UG/L	3.4	U			3.4	U	3.4	U			3.4	U		
BARIUM, DISSOLVED	UG/L	445	=			257	=	268	=			600	=		
BERYLLIUM, DISSOLVED	UG/L	0.3	U			0.3	U	0.3	U			0.3	U		
CALCIUM, DISSOLVED	UG/L	450000	=			96800	J	102000	J			826000	R		
CADMIUM, DISSOLVED	UG/L	2.2	J			0.25	J	0.43	J			3.5	J		
CHROMIUM, DISSOLVED	UG/L	4	J			0.83	J	1.1	J			1.9	J		
COBALT, DISSOLVED	UG/L	0.5	U			0.5	U	0.5	U			0.5	U		
COPPER, DISSOLVED	UG/L	1.9	U			5.5	J	4.6	J			4.4	J		
IRON, DISSOLVED	UG/L	12.2	J			12.2	U	12.2	U			12.2	U		
LEAD, DISSOLVED	UG/L	1.1	U			3.4	=	1.6	J			4	=		
MAGNESIUM, DISSOLVED	UG/L	527000	=			50800	=	52500	=			727000	=		
MANGANESE, DISSOLVED	UG/L	32.6	=			535	=	529	=			131	=		
MERCURY, DISSOLVED	UG/L	0.18	U			0.18	U	0.18	U			0.28	=		
NICKEL, DISSOLVED	UG/L	6.1	J			0.8	U	1.4	J			3.1	J		
POTASSIUM, DISSOLVED	UG/L	12500	J			6560	J	6880	J			18800	J		
SELENIUM, DISSOLVED	UG/L	6.8	=			2.1	U	2.1	U			4.1	J		
SILVER, DISSOLVED	UG/L	0.5	U			0.5	U	0.5	U			0.53	J		
SODIUM, DISSOLVED	UG/L	3070000	J			1040000	J	1060000	J			2660000	R		
THALLIUM, DISSOLVED	UG/L	2.7	U			2.7	U	2.7	U			2.7	U		
VANADIUM, DISSOLVED	UG/L	4.7	J			12.1	J	12.6	J			4.2	J		
ZINC, DISSOLVED	UG/L	30.8	=			10.9	J	4.2	J			8.1	J		
EXPLOSIVES															
2,6-DINITROTOLUENE	UG/L	5	U			5	U	5	U			5	U		
OCTAHYDRO-1,3,5,7-TETRANITRO-1,3,5,7-TETRAZOCINE	UG/L	5	UJ			5	U	5	U			5	U		
HEXAHYDRO-1,3,5-TRINITRO-1,3,5,7-TETRAZOCINE	UG/L	5	UJ			5	U	5	U			5	U		
1,3,5-TRINITROBENZENE	UG/L	5	UJ			5	U	5	U			5	U		
1,3-DINITROBENZENE	UG/L	5	UJ			5	U	5	U			5	U		
METHYL-2,4,6-TRINITROPHENYLNITRAMINE	UG/L	5	UJ			5	U	5	U			5	U		
NITROBENZENE	UG/L	5	U			5	U	5	U			5	U		
2,4,6-TRINITROTOLUENE	UG/L	5	UJ			5	U	5	U			5	U		
2,4-DINITROTOLUENE	UG/L	5	U			5	U	5	U			5	U		
2-NITROTOLUENE	UG/L	5	UJ			5	U	5	U			5	U		
4-NITROTOLUENE	UG/L	5	UJ			5	U	5	U			5	U		
3-NITROTOLUENE	UG/L	5	UJ			5	U	5	U			5	U		

SWMU 04 Groundwater Data

	Building	SWMU4		SWMU4		SWMU4		SWMU4		SWMU4		SWMU4		SWMU4	
	StationID	SWMU4-MW04		SWMU4-MW04		SWMU4-MW05		SWMU4-MW06		SWMU4-MW06		SWMU4-MW07		SWMU4-MW08	
	SampleID	NDA002		NDA335		NDB010		NDB011		NDB012FD1		NDB013		NDB014	
	DateCollected	04/27/2000		06/03/2000		06/12/2000		06/12/2000		06/12/2000		06/12/2000		06/12/2000	
	Depth	0 to 0		0 to 0		0 to 0		0 to 0		0 to 0		0 to 0		0 to 0	
Parameter	**Units**														
DISSOLVED METALS															
ALUMINUM, DISSOLVED	UG/L	25.8	U												
ANTIMONY, DISSOLVED	UG/L	1.4	U												
ARSENIC, DISSOLVED	UG/L	3.4	U												
BARIUM, DISSOLVED	UG/L	904	=												
BERYLLIUM, DISSOLVED	UG/L	0.3	U												
CALCIUM, DISSOLVED	UG/L	1020000	J												
CADMIUM, DISSOLVED	UG/L	4.3	J												
CHROMIUM, DISSOLVED	UG/L	1.1	J												
COBALT, DISSOLVED	UG/L	0.5	U												
COPPER, DISSOLVED	UG/L	4.1	J												
IRON, DISSOLVED	UG/L	12.2	U												
LEAD, DISSOLVED	UG/L	5.2	=												
MAGNESIUM, DISSOLVED	UG/L	712000	=												
MANGANESE, DISSOLVED	UG/L	1440	=												
MERCURY, DISSOLVED	UG/L	0.18	U												
NICKEL, DISSOLVED	UG/L	1.9	J												
POTASSIUM, DISSOLVED	UG/L	29800	J												
SELENIUM, DISSOLVED	UG/L	2.1	U												
SILVER, DISSOLVED	UG/L	0.5	U												
SODIUM, DISSOLVED	UG/L	1830000	J												
THALLIUM, DISSOLVED	UG/L	2.7	U												
VANADIUM, DISSOLVED	UG/L	3.7	J												
ZINC, DISSOLVED	UG/L	8.8	J												
EXPLOSIVES															
2,6-DINITROTOLUENE	UG/L	5	U			5	U	5	U	5	U	5	U	5	U
OCTAHYDRO-1,3,5,7-TETRANITRO-1,3,5,7-TETRAZOCINE	UG/L	5	U			5	U	5	U	5	U	5	U	5	U
HEXAHYDRO-1,3,5-TRINITRO-1,3,5,7-TETRAZOCINE	UG/L	5	U			5	U	5	U	5	U	5	U	5	U
1,3,5-TRINITROBENZENE	UG/L	5	U			5	U	5	U	5	U	5	U	5	U
1,3-DINITROBENZENE	UG/L	5	U			5	U	5	U	5	U	5	U	5	U
METHYL-2,4,6-TRINITROPHENYLNITRAMINE	UG/L	5	U			5	U	5	U	5	U	5	U	5	U
NITROBENZENE	UG/L	5	U			5	U	5	U	5	U	5	U	5	U
2,4,6-TRINITROTOLUENE	UG/L	5	U			5	U	5	U	5	U	5	U	5	U
2,4-DINITROTOLUENE	UG/L	5	U			5	U	5	U	5	U	5	U	5	U
2-NITROTOLUENE	UG/L	5	U			5	U	5	U	5	U	5	U	5	U
4-NITROTOLUENE	UG/L	5	U			5	U	5	U	5	U	5	U	5	U
3-NITROTOLUENE	UG/L	5	U			5	U	5	U	5	U	5	U	5	U

Parameter	Units	Building	SWMU4		SWMU4		SWMU4		SWMU4		SWMU4		SWMU4	
		StationID	SWMU4-MW01		SWMU4-MW01		SWMU4-MW02		SWMU4-MW02		SWMU4-MW02		SWMU4-MW03	SWMU4-MW03
		SampleID	NDA001		NDA332		NDA003		NDA003FD1		NDA333		NDA004	NDA334
		DateCollected	04/28/2000		06/04/2000		04/27/2000		04/27/2000		06/05/2000		04/27/2000	06/05/2000
		Depth	0 to 0		0 to 0		0 to 0		0 to 0		0 to 0		0 to 0	0 to 0
METALS														
ALUMINUM	UG/L		2900	=			635	J	513	J			1650	J		
ANTIMONY	UG/L		1.4	U			1.4	U	1.4	U			1.4	U		
ARSENIC	UG/L		3.4	U			3.4	U	3.4	U			3.4	U		
BARIUM	UG/L		486	=			280	=	277	=			671	=		
BERYLLIUM	UG/L		0.3	U			0.3	U	0.3	U			0.3	U		
CADMIUM	UG/L		2	J			0.38	J	0.4	J			3.6	J		
CALCIUM	UG/L		435000	=			103000	J	103000	J			853000	R		
CHROMIUM, TOTAL	UG/L		14.7	=			1.4	J	1.3	J			4.9	J		
COBALT	UG/L		0.5	U			0.56	J	0.5	U			0.52	J		
COPPER	UG/L		3.3	J			4.7	J	5.3	J			4.2	J		
IRON	UG/L		1830	J			488	=	390	=			1230	=		
LEAD	UG/L		1.8	J			2	J	1.4	J			4.2	=		
MAGNESIUM	UG/L		510000	=			52000	=	52300	=			751000	=		
MANGANESE	UG/L		154	=			560	=	553	=			217	=		
MERCURY	UG/L		0.18	U			0.18	U	0.18	J			0.18	U		
NICKEL	UG/L		11.8	J			1	J	0.95	J			4.8	J		
POTASSIUM	UG/L		14400	J			6990	J	6930	J			20100	J		
SELENIUM	UG/L		5.4	=			2.1	U	2.1	U			3.7	J		
SILVER	UG/L		0.5	U			0.5	U	0.5	U			0.5	U		
SODIUM	UG/L		3090000	J			1040000	J	1040000	J			2720000	R		
THALLIUM	UG/L		2.7	U			2.7	U	2.7	U			2.7	U		
VANADIUM	UG/L		9.3	J			14.2	J	12.9	J			7.5	J		
ZINC	UG/L		38.4	=			8.1	J	47.4	=			18.5	J		
MISCELLANEOUS														
PERCHLORATE	ug/L				16	U					20	=			16	U
PCB														
PCB-1016 (AROCHLOR 1016)	UG/L		0.22	U			0.22	U	0.24	U			0.23	U		
PCB-1260 (AROCHLOR 1260)	UG/L		0.22	U			0.22	U	0.24	U			0.23	U		
PCB-1221 (AROCHLOR 1221)	UG/L		0.44	U			0.44	U	0.47	U			0.46	U		
PCB-1232 (AROCHLOR 1232)	UG/L		0.22	U			0.22	U	0.24	U			0.23	U		
PCB-1242 (AROCHLOR 1242)	UG/L		0.22	U			0.22	U	0.24	U			0.23	U		
PCB-1248 (AROCHLOR 1248)	UG/L		0.22	U			0.22	U	0.24	U			0.23	U		
PCB-1254 (AROCHLOR 1254)	UG/L		0.22	U			0.22	U	0.24	U			0.23	U		
PESTICIDES														
ALPHA BHC (ALPHA HEXACHLOROCYCLOHEXANE)	UG/L		0.01	UJ			0.01	UJ	0.01	UJ			0.01	UJ		
BETA BHC (BETA HEXACHLOROCYCLOHEXANE)	UG/L		0.01	U			0.01	U	0.01	U			0.01	U		
DELTA BHC (DELTA HEXACHLOROCYCLOHEXANE)	UG/L		0.01	U			0.01	U	0.01	U			0.01	U		
GAMMA BHC (LINDANE)	UG/L		0.01	UJ			0.01	UJ	0.01	UJ			0.01	UJ		
HEPTACHLOR	UG/L		0.01	U			0.01	U	0.01	U			0.01	U		

SWMU 04 Groundwater Data

Parameter	Units	Building	SWMU4		SWMU4		SWMU4		SWMU4		SWMU4		SWMU4		SWMU4	
		StationID	SWMU4-MW04		SWMU4-MW04		SWMU4-MW05		SWMU4-MW06		SWMU4-MW06		SWMU4-MW07		SWMU4-MW08	
		SampleID	NDA002		NDA335		NDB010		NDB011		NDB012FD1		NDB013		NDB014	
		DateCollected	04/27/2000		06/03/2000		06/12/2000		06/12/2000		06/12/2000		06/12/2000		06/12/2000	
		Depth	0 to 0		0 to 0		0 to 0		0 to 0		0 to 0		0 to 0		0 to 0	
METALS																
ALUMINUM	UG/L		5420	J			219	=	1770	=	1510	=	7700	=	8580	=
ANTIMONY	UG/L		1.4	U			3.4	J	1.5	J	1.5	J	1.5	J	2.1	J
ARSENIC	UG/L		3.4	U			4.4	J	3.7	J	3.5	J	3.4	U	3.4	U
BARIUM	UG/L		943	=			219	=	335	=	326	=	238	=	838	=
BERYLLIUM	UG/L		0.3	U			0.3	U	0.3	U	0.3	U	0.3	U	0.3	U
CADMIUM	UG/L		4.6	J			0.2	U	0.2	U	0.2	U	0.2	U	0.2	U
CALCIUM	UG/L		1020000	J			679000	=	625000	=	606000	=	794000	=	100000	=
CHROMIUM, TOTAL	UG/L		3.6	J			0.55	J	1.1	J	0.5	U	2	J	1.6	J
COBALT	UG/L		3.5	J			1.6	J	0.89	J	0.89	J	5.3	J	6.2	J
COPPER	UG/L		10.8	J			3.3	J	3.2	J	3	J	2.9	J	123	=
IRON	UG/L		4600	=			86.1	J	1480	=	1320	=	7090	=	8080	=
LEAD	UG/L		6.7	=			1.1	U	1.8	J	1.1	U	2.7	J	7.6	=
MAGNESIUM	UG/L		697000	=			488000	=	476000	=	463000	=	665000	=	133000	=
MANGANESE	UG/L		1680	=			1750	=	1040	=	1020	=	2700	=	7210	=
MERCURY	UG/L		0.18	U			0.18	U	0.18	U	0.18	U	0.18	U	0.18	U
NICKEL	UG/L		3.8	J			3.3	J	3.8	J	4.1	J	5.9	J	6.4	J
POTASSIUM	UG/L		30000	J			28600	=	16800	=	16400	=	14900	=	10500	=
SELENIUM	UG/L		4.8	J			2.1	U	2.1	U	2.2	J	2.4	J	2.9	J
SILVER	UG/L		0.65	J			0.61	J	0.82	J	0.68	J	0.5	U	0.5	U
SODIUM	UG/L		1810000	J			3170000	=	2470000	=	2410000	=	1750000	=	1440000	=
THALLIUM	UG/L		2.7	U			2.7	U	3.1	J	2.7	U	2.7	U	2.7	U
VANADIUM	UG/L		15.7	J			3.8	J	4.4	J	4.5	J	21.4	J	24.9	J
ZINC	UG/L		39.5	=			2.5	U	2.5	U	2.5	U	29.3	=	36.7	=
MISCELLANEOUS																
PERCHLORATE	ug/L				16	U	8	U	8	U	8	U	8	U	8	U
PCB																
PCB-1016 (AROCHLOR 1016)	UG/L		0.24	U			0.23	U	0.22	U	116	U	108	U	0.22	U
PCB-1260 (AROCHLOR 1260)	UG/L		0.24	U			0.23	U	0.22	U	116	U	108	U	0.22	U
PCB-1221 (AROCHLOR 1221)	UG/L		0.47	U			0.46	U	0.44	U	233	U	216	U	0.44	U
PCB-1232 (AROCHLOR 1232)	UG/L		0.24	U			0.23	U	0.22	U	116	U	108	U	0.22	U
PCB-1242 (AROCHLOR 1242)	UG/L		0.24	U			0.23	U	0.22	U	116	U	108	U	0.22	U
PCB-1248 (AROCHLOR 1248)	UG/L		0.24	U			0.23	U	0.22	U	116	U	108	U	0.22	U
PCB-1254 (AROCHLOR 1254)	UG/L		0.24	U			0.23	U	0.22	U	116	U	108	U	0.22	U
PESTICIDES																
ALPHA BHC (ALPHA HEXACHLOROCYCLOHEXANE)	UG/L		0.01	UJ			0.01	U	0.01	U	0.01	U	0.01	U	0.01	U
BETA BHC (BETA HEXACHLOROCYCLOHEXANE)	UG/L		0.01	UJ			0.01	U	0.01	U	0.01	U	0.01	U	0.01	U
DELTA BHC (DELTA HEXACHLOROCYCLOHEXANE)	UG/L		0.01	J			0.01	=	0.01	=	0.01	U	0.01	U	0.01	U
GAMMA BHC (LINDANE)	UG/L		0.01	UJ			0.01	U	0.01	U	0.01	U	0.01	U	0.01	U
HEPTACHLOR	UG/L		0.01	UJ			0.01	U	0.01	U	0.01	U	0.01	U	0.01	U

SWMU 04 Groundwater Data

Parameter	Units	Building	SWMU4		SWMU4		SWMU4		SWMU4		SWMU4		SWMU4	
		StationID	SWMU4-MW01		SWMU4-MW01		SWMU4-MW02		SWMU4-MW02		SWMU4-MW02		SWMU4-MW03	SWMU4-MW03
		SampleID	NDA001		NDA332		NDA003		NDA003FD1		NDA333		NDA004	NDA334
		DateCollected	04/28/2000		06/04/2000		04/27/2000		04/27/2000		06/05/2000		04/27/2000	06/05/2000
		Depth	0 to 0		0 to 0		0 to 0		0 to 0		0 to 0		0 to 0	0 to 0
ALDRIN	UG/L		0.01	U			0.01	U	0.01	U			0.01	U
HEPTACHLOR EPOXIDE	UG/L		0.01	U			0.01	U	0.01	U			0.01	U
ALPHA ENDOSULFAN (ENDOSULFAN I)	UG/L		0.01	U			0.01	U	0.01	U			0.01	U
DIELDRIN	UG/L		0.02	U			0.02	U	0.02	U			0.02	U
p,p'-DDE	UG/L		0.02	U			0.02	U	0.02	U			0.02	U
ENDRIN	UG/L		0.02	U			0.02	U	0.02	U			0.02	U
BETA ENDOSULFAN (ENDOSULFAN II)	UG/L		0.02	U			0.02	U	0.02	U			0.02	U
p,p'-DDD	UG/L		0.02	U			0.02	U	0.02	U			0.02	U
ENDOSULFAN SULFATE	UG/L		0.02	U			0.02	U	0.02	U			0.02	U
p,p'-DDT	UG/L		0.02	U			0.02	U	0.02	U			0.02	U
METHOXYCHLOR	UG/L		0.11	U			0.11	U	0.12	U			0.11	U
ENDRIN ALDEHYDE	UG/L		0.02	U			0.02	U	0.02	U			0.02	U
ALPHA-CHLORDANE	UG/L		0.01	U			0.01	U	0.01	U			0.01	U
GAMMA-CHLORDANE	UG/L		0.01	U			0.01	U	0.01	U			0.01	U
ENDRIN KETONE	UG/L		0.02	U			0.02	U	0.02	U			0.02	U
TOXAPHENE	UG/L		1.1	U			1.1	U	1.2	U			1.1	U
SEMI-VOLATILES														
bis(2-CHLOROETHYL) ETHER (2-CHLOROETHYL ETHER)	UG/L		5	U			5	U	5	U			5	U
PHENOL	UG/L		5	U			5	U	5	U			5	U
2-CHLOROPHENOL	UG/L		5	U			5	U	5	U			5	U
1,3,5-TRINITROBENZENE	UG/L		5	UJ			5	U	5	U			5	U
1,3-DICHLOROBENZENE	UG/L		1	U			1	U	1	U			1	U
1,3-DINITROBENZENE	UG/L		5	UJ			5	U	5	U			5	U
1,4-DICHLOROBENZENE	UG/L		1	U			1	U	1	U			1	U
1,2-DICHLOROBENZENE	UG/L		1	U			1	U	1	U			1	U
bis(2-CHLOROISOPROPYL) ETHER	UG/L		5	U			5	U	5	U			5	U
2-METHYLPHENOL (o-CRESOL)	UG/L		5	U			5	U	5	U			5	U
HEXACHLOROETHANE	UG/L		5	U			5	U	5	U			5	U
N-NITROSODI-n-PROPYLAMINE	UG/L		5	U			5	U	5	U			5	U
CRESOLS, m & p	UG/L		5	U			5	U	5	U			5	U
NITROBENZENE	UG/L		5	U			5	U	5	U			5	U
ISOPHORONE	UG/L		5	U			5	U	5	U			5	U
2-NITROPHENOL	UG/L		5	U			5	U	5	U			5	U
2,4-DIMETHYLPHENOL	UG/L		5	U			5	U	5	U			5	U
bis(2-CHLOROETHOXY) METHANE	UG/L		5	U			5	U	5	U			5	U
2,4-DICHLOROPHENOL	UG/L		5	U			5	U	5	U			5	U
1,2,4-TRICHLOROBENZENE	UG/L		1	U			1	U	1	U			1	U
NAPHTHALENE	UG/L		5	U			5	U	5	U			5	U
4-CHLOROANILINE	UG/L		5	U			5	U	5	U			5	U
2-METHYLNAPHTHALENE	UG/L		5	U			5	U	5	U			5	U

SWMU 04 Groundwater Data

Parameter	Units	Building	SWMU4		SWMU4		SWMU4		SWMU4		SWMU4		SWMU4		SWMU4	
		StationID	SWMU4-MW04		SWMU4-MW04		SWMU4-MW05		SWMU4-MW06		SWMU4-MW06		SWMU4-MW07		SWMU4-MW08	
		SampleID	NDA002		NDA335		NDB010		NDB011		NDB012FD1		NDB013		NDB014	
		DateCollected	04/27/2000		06/03/2000		06/12/2000		06/12/2000		06/12/2000		06/12/2000		06/12/2000	
		Depth	0 to 0		0 to 0		0 to 0		0 to 0		0 to 0		0 to 0		0 to 0	
ALDRIN	UG/L		0.01	UJ			0.01	U	0.01	U	0.01	U	0.01	U	0.01	U
HEPTACHLOR EPOXIDE	UG/L		0.01	UJ			0.01	U	0.01	U	0.01	U	0.01	U	0.01	U
ALPHA ENDOSULFAN (ENDOSULFAN I)	UG/L		0.01	UJ												
DIELDRIN	UG/L		0.02	UJ			0.02	U	0.02	U	0.02	U	0.02	U	0.02	U
p,p'-DDE	UG/L		0.02	UJ			0.02	U	0.02	U	0.02	U	0.02	U	0.02	U
ENDRIN	UG/L		0.02	UJ			0.02	U	0.02	U	0.02	U	0.02	U	0.02	U
BETA ENDOSULFAN (ENDOSULFAN II)	UG/L		0.02	UJ			0.02	U	0.02	U	0.02	U	0.02	U	0.02	U
p,p'-DDD	UG/L		0.02	UJ			0.02	U	0.02	U	0.02	U	0.02	U	0.02	U
ENDOSULFAN SULFATE	UG/L		0.02	UJ			0.02	U	0.02	U	0.02	U	0.02	U	0.02	U
p,p'-DDT	UG/L		0.02	UJ			0.02	U	0.02	U	0.02	U	0.02	U	0.02	U
METHOXYCHLOR	UG/L		0.12	UJ			0.11	U	0.11	U	0.12	U	0.11	U	0.11	U
ENDRIN ALDEHYDE	UG/L		0.02	UJ			0.02	U	0.02	U	0.02	U	0.02	U	0.02	U
ALPHA-CHLORDANE	UG/L		0.01	UJ			0.01	U	0.01	U	0.01	U	0.01	U	0.01	U
GAMMA-CHLORDANE	UG/L		0.01	UJ			0.01	U	0.01	U	0.01	U	0.01	U	0.01	U
ENDRIN KETONE	UG/L		0.02	UJ			0.02	U	0.02	U	0.02	U	0.02	U	0.02	U
TOXAPHENE	UG/L		1.2	UJ			1.1	U	1.1	U	1.2	U	1.1	U	1.1	U
SEMI-VOLATILES																
bis(2-CHLOROETHYL) ETHER (2-CHLOROETHYL ETHER)	UG/L		6	U			6	U	6	U	6	U				
PHENOL	UG/L		6	U			6	U	6	U	6	U				
2-CHLOROPHENOL	UG/L		6	U			6	U	6	U	6	U				
1,3,5-TRINITROBENZENE	UG/L		5	U			5	U	5	U	5	U	5	U	5	U
1,3-DICHLOROBENZENE	UG/L		1	U			1	U	1	U	1	U	1	U	1	U
1,3-DINITROBENZENE	UG/L		5	U			5	U	5	U	5	U	5	U	5	U
1,4-DICHLOROBENZENE	UG/L		1	U			1	U	1	U	1	U	1	U	1	U
1,2-DICHLOROBENZENE	UG/L		1	U			1	U	1	U	1	U	1	U	1	U
bis(2-CHLOROISOPROPYL) ETHER	UG/L		6	U			6	U	6	U	6	U				
2-METHYLPHENOL (o-CRESOL)	UG/L		6	U			6	U	6	U	6	U				
HEXACHLOROETHANE	UG/L		6	U			6	U	6	U	6	U				
N-NITROSODI-n-PROPYLAMINE	UG/L		6	U			6	U	6	U	6	U				
CRESOLS, m & p	UG/L		6	U			6	U	6	U	6	U				
NITROBENZENE	UG/L		5	U			5	U	5	U	5	U	5	U	5	U
ISOPHORONE	UG/L		6	U			6	U	6	U	6	U				
2-NITROPHENOL	UG/L		6	U			6	U	6	U	6	U				
2,4-DIMETHYLPHENOL	UG/L		6	U			6	U	6	U	6	U				
bis(2-CHLOROETHOXY) METHANE	UG/L		6	U			6	U	6	U	6	U				
2,4-DICHLOROPHENOL	UG/L		6	U			6	U	6	U	6	U				
1,2,4-TRICHLOROBENZENE	UG/L		1	U			1	U	1	U	1	U	1	U	1	U
NAPHTHALENE	UG/L		6	U			6	U	6	U	6	U				
4-CHLOROANILINE	UG/L		6	U			6	U	6	U	6	U				
2-METHYLNAPHTHALENE	UG/L		6	U			6	U	6	U	6	U				

	Building	SWMU4		SWMU4		SWMU4		SWMU4		SWMU4		SWMU4		SWMU4	
	StationID	SWMU4-MW01		SWMU4-MW01		SWMU4-MW02		SWMU4-MW02		SWMU4-MW02		SWMU4-MW03		SWMU4-MW03	
	SampleID	NDA001		NDA332		NDA003		NDA003FD1		NDA333		NDA004		NDA334	
	DateCollected	04/28/2000		06/04/2000		04/27/2000		04/27/2000		06/05/2000		04/27/2000		06/05/2000	
	Depth	0 to 0		0 to 0		0 to 0		0 to 0		0 to 0		0 to 0		0 to 0	
Parameter	**Units**														
HEXACHLOROBUTADIENE	UG/L	5	U			5	U	5	U			5	U		
4-CHLORO-3-METHYLPHENOL	UG/L	5	U			5	U	5	U			5	U		
HEXACHLOROCYCLOPENTADIENE	UG/L	5	U			5	U	5	U			5	U		
2,4,6-TRICHLOROPHENOL	UG/L	5	U			5	U	5	U			5	U		
2,4,5-TRICHLOROPHENOL	UG/L	22	U			21	U	22	U			20	U		
2-CHLORONAPHTHALENE	UG/L	5	U			5	U	5	U			5	U		
2-NITROANILINE	UG/L	22	U			21	U	22	U			20	U		
ACENAPHTHYLENE	UG/L	5	U			5	U	5	U			5	U		
DIMETHYL PHTHALATE	UG/L	5	U			5	U	5	U			5	U		
2,6-DINITROTOLUENE	UG/L	5	U			5	U	5	U			5	U		
ACENAPHTHENE	UG/L	5	U			5	U	5	U			5	U		
3-NITROANILINE	UG/L	22	U			21	U	22	U			20	U		
2,4-DINITROPHENOL	UG/L	22	U			21	U	22	U			20	U		
DIBENZOFURAN	UG/L	5	U			5	U	5	U			5	U		
2,4-DINITROTOLUENE	UG/L	5	U			5	U	5	U			5	U		
4-NITROPHENOL	UG/L	22	U			21	U	22	U			20	U		
FLUORENE	UG/L	5	U			5	U	5	U			5	U		
4-CHLOROPHENYL PHENYL ETHER	UG/L	5	U			5	U	5	U			5	U		
DIETHYL PHTHALATE	UG/L	5	U			2	J	3	J			5	U		
4-NITROANILINE	UG/L	22	U			21	U	22	U			20	U		
4,6-DINITRO-2-METHYLPHENOL	UG/L	22	U			21	U	22	U			20	U		
N-NITROSODIPHENYLAMINE	UG/L	5	U			5	U	5	U			5	U		
4-BROMOPHENYL PHENYL ETHER	UG/L	5	U			5	U	5	U			5	U		
HEXACHLOROBENZENE	UG/L	5	U			5	U	5	U			5	U		
PENTACHLOROPHENOL	UG/L	22	U			21	U	22	U			20	U		
PHENANTHRENE	UG/L	5	U			5	U	5	U			5	U		
ANTHRACENE	UG/L	5	U			5	U	5	U			5	U		
DI-n-BUTYL PHTHALATE	UG/L	5	U			5	U	5	U			5	U		
FLUORANTHENE	UG/L	5	U			5	U	5	U			5	U		
PYRENE	UG/L	5	U			5	U	5	U			5	U		
BENZYL BUTYL PHTHALATE	UG/L	5	U			5	U	5	U			5	U		
3,3'-DICHLOROBENZIDINE	UG/L	5	U			5	U	5	U			5	U		
BENZO(a)ANTHRACENE	UG/L	5	U			5	U	5	U			5	U		
CHRYSENE	UG/L	5	U			5	U	5	U			5	U		
bis(2-ETHYLHEXYL) PHTHALATE	UG/L	3	J			7	U	5	U			5	U		
DI-n-OCTYLPHTHALATE	UG/L	5	U			5	U	5	U			5	U		
BENZO(b)FLUORANTHENE	UG/L	5	U			5	U	5	U			5	U		
BENZO(k)FLUORANTHENE	UG/L	5	U			5	U	5	U			5	U		
BENZO(a)PYRENE	UG/L	5	U			5	U	5	U			5	U		
INDENO(1,2,3-c,d)PYRENE	UG/L	5	U			5	U	5	U			5	U		

SWMU 04 Groundwater Data

	Building	SWMU4		SWMU4		SWMU4		SWMU4		SWMU4		SWMU4		SWMU4	
	StationID	SWMU4-MW04		SWMU4-MW04		SWMU4-MW05		SWMU4-MW06		SWMU4-MW06		SWMU4-MW07		SWMU4-MW08	
	SampleID	NDA002		NDA335		NDB010		NDB011		NDB012FD1		NDB013		NDB014	
	DateCollected	04/27/2000		06/03/2000		06/12/2000		06/12/2000		06/12/2000		06/12/2000		06/12/2000	
	Depth	0 to 0		0 to 0		0 to 0		0 to 0		0 to 0		0 to 0		0 to 0	
Parameter	**Units**														
HEXACHLOROBUTADIENE	UG/L	6	U			6	U	6	U	6	U				
4-CHLORO-3-METHYLPHENOL	UG/L	6	U			6	U	6	U	6	U				
HEXACHLOROCYCLOPENTADIENE	UG/L	6	U			6	U	6	U	6	U				
2,4,6-TRICHLOROPHENOL	UG/L	6	U			6	U	6	U	6	U				
2,4,5-TRICHLOROPHENOL	UG/L	22	U			23	U	22	U	22	U				
2-CHLORONAPHTHALENE	UG/L	6	U			6	U	6	U	6	U				
2-NITROANILINE	UG/L	22	U			23	U	22	U	22	U				
ACENAPHTHYLENE	UG/L	6	U			6	U	6	U	6	U				
DIMETHYL PHTHALATE	UG/L	6	U			6	U	6	U	6	U				
2,6-DINITROTOLUENE	UG/L	5	U			5	U	5	U	5	U	5	U	5	U
ACENAPHTHENE	UG/L	6	U			6	U	6	U	6	U				
3-NITROANILINE	UG/L	22	U			23	U	22	U	22	U				
2,4-DINITROPHENOL	UG/L	22	U			23	U	22	U	22	U				
DIBENZOFURAN	UG/L	6	U			6	U	6	U	6	U				
2,4-DINITROTOLUENE	UG/L	5	U			5	U	5	U	5	U	5	U	5	U
4-NITROPHENOL	UG/L	22	U			23	U	22	U	22	U				
FLUORENE	UG/L	6	U			6	U	6	U	6	U				
4-CHLOROPHENYL PHENYL ETHER	UG/L	6	U			6	U	6	U	6	U				
DIETHYL PHTHALATE	UG/L	6	U			6	U	6	U	6	U				
4-NITROANILINE	UG/L	22	U			23	U	22	U	22	U				
4,6-DINITRO-2-METHYLPHENOL	UG/L	22	U			23	U	22	U	22	U				
N-NITROSODIPHENYLAMINE	UG/L	6	U			6	U	6	U	6	U				
4-BROMOPHENYL PHENYL ETHER	UG/L	6	U			6	U	6	U	6	U				
HEXACHLOROBENZENE	UG/L	6	U			6	U	6	U	6	U				
PENTACHLOROPHENOL	UG/L	22	U			23	U	22	U	22	U				
PHENANTHRENE	UG/L	6	U			6	U	6	U	6	U				
ANTHRACENE	UG/L	6	U			6	U	6	U	6	U				
DI-n-BUTYL PHTHALATE	UG/L	6	U			6	U	6	U	6	U				
FLUORANTHENE	UG/L	6	U			6	U	6	U	6	U				
PYRENE	UG/L	6	U			6	U	6	U	6	U				
BENZYL BUTYL PHTHALATE	UG/L	6	U			6	U	6	U	6	U				
3,3'-DICHLOROBENZIDINE	UG/L	6	U			6	U	6	U	6	U				
BENZO(a)ANTHRACENE	UG/L	6	U			6	U	6	U	6	U				
CHRYSENE	UG/L	6	U			6	U	6	U	6	U				
bis(2-ETHYLHEXYL) PHTHALATE	UG/L	6	U			6	U	6	U	1	U				
DI-n-OCTYLPHTHALATE	UG/L	6	U			6	U	6	U	2	J				
BENZO(b)FLUORANTHENE	UG/L	6	U			6	U	6	U	6	U				
BENZO(k)FLUORANTHENE	UG/L	6	U			6	U	6	U	6	U				
BENZO(a)PYRENE	UG/L	6	U			6	U	6	U	6	U				
INDENO(1,2,3-c,d)PYRENE	UG/L	6	U			6	U	6	U	6	U				

	Building	SWMU4		SWMU4		SWMU4		SWMU4		SWMU4		SWMU4		SWMU4	
	StationID	SWMU4-MW01		SWMU4-MW01		SWMU4-MW02		SWMU4-MW02		SWMU4-MW02		SWMU4-MW03		SWMU4-MW03	
	SampleID	NDA001		NDA332		NDA003		NDA003FD1		NDA333		NDA004		NDA334	
	DateCollected	04/28/2000		06/04/2000		04/27/2000		04/27/2000		06/05/2000		04/27/2000		06/05/2000	
	Depth	0 to 0		0 to 0		0 to 0		0 to 0		0 to 0		0 to 0		0 to 0	
Parameter	**Units**														
DIBENZ(a,h)ANTHRACENE	UG/L	5	U			5	U	5	U			5	U		
BENZO(g,h,i)PERYLENE	UG/L	5	U			5	U	5	U			5	U		
CARBAZOLE	UG/L	5	U			5	U	5	U			5	U		
VOLATILES															
CHLOROMETHANE	UG/L	1	U			1	U	1	U			1	U		
VINYL CHLORIDE	UG/L	1	U			1	U	1	U			1	U		
BROMOMETHANE	UG/L	1	U			1	U	1	U			1	U		
1,3-DICHLOROBENZENE	UG/L	1	U			1	U	1	U			1	U		
CHLOROETHANE	UG/L	1	U			1	U	1	U			1	U		
1,1-DICHLOROETHENE	UG/L	1	U			1	U	1	U			1	U		
1,4-DICHLOROBENZENE	UG/L	1	U			1	U	1	U			1	U		
1,2-DICHLOROBENZENE	UG/L	1	U			1	U	1	U			1	U		
CARBON DISULFIDE	UG/L	1	U			1	U	1	U			1	U		
METHYLENE CHLORIDE	UG/L	2	U			2	U	2	U			2	U		
1,1-DICHLOROETHANE	UG/L	1	U			1	U	1	U			1	U		
ACETONE	UG/L	5	U			5	U	5	U			5	U		
METHYL ETHYL KETONE (2-BUTANONE)	UG/L	5	U			5	U	5	U			5	U		
CHLOROFORM	UG/L	1	U			1	U	1	U			1	U		
1,1,1-TRICHLOROETHANE	UG/L	1	U			1	U	1	U			1	U		
CARBON TETRACHLORIDE	UG/L	1	U			1	U	1	U			1	U		
BENZENE	UG/L	1	U			1	U	1	U			1	U		
1,2-DICHLOROETHANE	UG/L	1	U			1	U	1	U			1	U		
TRICHLOROETHYLENE (TCE)	UG/L	1	U			1	U	1	U			1	U		
1,2-DICHLOROPROPANE	UG/L	1	U			1	U	1	U			1	U		
1,2,4-TRICHLOROBENZENE	UG/L	1	U			1	U	1	U			1	U		
BROMODICHLOROMETHANE	UG/L	1	U			1	U	1	U			1	U		
cis-1,3-DICHLOROPROPENE	UG/L	1	U			1	U	1	U			1	U		
METHYL ISOBUTYL KETONE (4-METHYL-2-PENTANONE)	UG/L	5	U			5	U	5	U			5	U		
TOLUENE	UG/L	1	U			1	U	1	U			1	U		
trans-1,3-DICHLOROPROPENE	UG/L	1	U			1	U	1	U			1	U		
1,1,2-TRICHLOROETHANE	UG/L	1	U			1	U	1	U			1	U		
TETRACHLOROETHYLENE(PCE)	UG/L	1	U			1	U	1	U			1	U		
2-HEXANONE	UG/L	5	U			5	U	5	U			5	U		
DIBROMOCHLOROMETHANE	UG/L	1	U			1	U	1	U			1	U		
CHLOROBENZENE	UG/L	1	U			1	U	1	U			1	U		
ETHYLBENZENE	UG/L	1	U			1	U	1	U			1	U		
M,P-XYLENE (SUM OF ISOMERS)	UG/L	1	U			1	U	1	U			1	U		
O-XYLENE (1,2-DIMETHYLBENZENE)	UG/L	1	U			1	U	1	U			1	U		
STYRENE	UG/L	1	U			1	U	1	U			1	U		
BROMOFORM	UG/L	1	U			1	U	1	U			1	U		

SWMU 04 Groundwater Data

Parameter	Units	Building	SWMU4		SWMU4		SWMU4		SWMU4		SWMU4		SWMU4		SWMU4	
		StationID	SWMU4-MW04		SWMU4-MW04		SWMU4-MW05		SWMU4-MW06		SWMU4-MW06		SWMU4-MW07		SWMU4-MW08	
		SampleID	NDA002		NDA335		NDB010		NDB011		NDB012FD1		NDB013		NDB014	
		DateCollected	04/27/2000		06/03/2000		06/12/2000		06/12/2000		06/12/2000		06/12/2000		06/12/2000	
		Depth	0 to 0		0 to 0		0 to 0		0 to 0		0 to 0		0 to 0		0 to 0	
DIBENZ(a,h)ANTHRACENE	UG/L		6	U			6	U	6	U	6	U				
BENZO(g,h,i)PERYLENE	UG/L		6	U			6	U	6	U	6	U				
CARBAZOLE	UG/L		6	U												
VOLATILES																
CHLOROMETHANE	UG/L		1	U			1	U	1	U	1	U	1	U	1	U
VINYL CHLORIDE	UG/L		1	U			1	U	1	U	1	U	1	U	1	U
BROMOMETHANE	UG/L		1	U			1	U	1	U	1	U	1	U	1	U
1,3-DICHLOROBENZENE	UG/L		1	U			1	U	1	U	1	U	1	U	1	U
CHLOROETHANE	UG/L		1	U			1	U	1	U	1	U	1	U	1	U
1,1-DICHLOROETHENE	UG/L		1	U			1	U	1	U	1	U	1	U	1	U
1,4-DICHLOROBENZENE	UG/L		1	U			1	U	1	U	1	U	1	U	1	U
1,2-DICHLOROBENZENE	UG/L		1	U			1	U	1	U	1	U	1	U	1	U
CARBON DISULFIDE	UG/L		1	U			1	U	1	U	1	U	1	U	1	U
METHYLENE CHLORIDE	UG/L		2	U			2	U	2	U	2	U	2	U	2	U
1,1-DICHLOROETHANE	UG/L		1	U			1	U	1	U	1	U	1	U	1	U
ACETONE	UG/L		5	U			5	U	5	U	5	U	5	U	115	E
METHYL ETHYL KETONE (2-BUTANONE)	UG/L		5	U			5	U	5	U	5	U	5	U	4	J
CHLOROFORM	UG/L		1	U			1	U	1	U	1	U	1	U	1	U
1,1,1-TRICHLOROETHANE	UG/L		1	U			1	U	1	U	1	U	1	U	1	U
CARBON TETRACHLORIDE	UG/L		1	U			1	U	1	U	1	U	1	U	1	U
BENZENE	UG/L		1	U			1	U	1	U	1	U	1	U	1	U
1,2-DICHLOROETHANE	UG/L		1	U			1	U	1	U	1	U	1	U	1	U
TRICHLOROETHYLENE (TCE)	UG/L		1	U			1	U	1	U	1	U	1	U	1	U
1,2-DICHLOROPROPANE	UG/L		1	U			1	U	1	U	1	U	1	U	1	U
1,2,4-TRICHLOROBENZENE	UG/L		1	U			1	U	1	U	1	U	1	U	1	U
BROMODICHLOROMETHANE	UG/L		1	U			1	U	1	U	1	U	1	U	1	U
cis-1,3-DICHLOROPROPENE	UG/L		1	U			1	U	1	U	1	U	1	U	1	U
METHYL ISOBUTYL KETONE (4-METHYL-2-PENTANONE)	UG/L		5	U			5	U	5	U	5	U	3	J	5	U
TOLUENE	UG/L		1	U			1	U	1	U	1	U	0.3	U	0.5	J
trans-1,3-DICHLOROPROPENE	UG/L		1	U			1	U	1	U	1	U	1	U	1	U
1,1,2-TRICHLOROETHANE	UG/L		1	U			1	U	1	U	1	U	1	U	1	U
TETRACHLOROETHYLENE(PCE)	UG/L		1	U			1	U	1	U	1	U	1	U	1	U
2-HEXANONE	UG/L		5	U			5	U	5	U	5	U	5	U	5	U
DIBROMOCHLOROMETHANE	UG/L		1	U			1	U	1	U	1	U	1	U	1	U
CHLOROBENZENE	UG/L		1	U			1	U	1	U	1	U	1	U	1	U
ETHYLBENZENE	UG/L		1	U			1	U	1	U	1	U	1	U	1	U
M,P-XYLENE (SUM OF ISOMERS)	UG/L		1	U			1	U	1	U	1	U	0.3	J	0.4	J
O-XYLENE (1,2-DIMETHYLBENZENE)	UG/L		1	U			1	U	1	U	1	U	1	U	1	U
STYRENE	UG/L		1	U			1	U	1	U	1	U	1	U	1	U
BROMOFORM	UG/L		1	U			1	U	1	U	1	U	1	U	1	U

	Building	SWMU4		SWMU4		SWMU4		SWMU4		SWMU4		SWMU4		SWMU4	
	StationID	SWMU4-MW01		SWMU4-MW01		SWMU4-MW02		SWMU4-MW02		SWMU4-MW02		SWMU4-MW03		SWMU4-MW03	
	SampleID	NDA001		NDA332		NDA003		NDA003FD1		NDA333		NDA004		NDA334	
	DateCollected	04/28/2000		06/04/2000		04/27/2000		04/27/2000		06/05/2000		04/27/2000		06/05/2000	
	Depth	0 to 0		0 to 0		0 to 0		0 to 0		0 to 0		0 to 0		0 to 0	
Parameter	**Units**														
1,1,2,2-TETRACHLOROETHANE	UG/L	1	U			1	U	1	U			1	U		
XYLENES, TOTAL	UG/L	1	U			1	U	1	U			1	U		
BROMOCHLOROMETHANE	UG/L	1	U			1	U	1	U			1	U		
1,2-DIBROMO-3-CHLOROPROPANE	UG/L	1	U			1	U	1	U			1	U		
cis-1,2-DICHLOROETHYLENE	UG/L	1	U			1	U	1	U			1	U		
trans-1,2-DICHLOROETHENE	UG/L	1	U			1	U	1	U			1	U		
TOTAL 1,2-DICHLOROETHENE	UG/L	1	U			1	U	1	U			1	U		
ETHYLENE DIBROMIDE (1,2-DIBROMOETHANE)	UG/L	1	U			1	U	1	U			1	U		

SWMU 04 Groundwater Data

	Building	SWMU4		SWMU4		SWMU4		SWMU4		SWMU4		SWMU4		SWMU4	
	StationID	SWMU4-MW04		SWMU4-MW04		SWMU4-MW05		SWMU4-MW06		SWMU4-MW06		SWMU4-MW07		SWMU4-MW08	
	SampleID	NDA002		NDA335		NDB010		NDB011		NDB012FD1		NDB013		NDB014	
	DateCollected	04/27/2000		06/03/2000		06/12/2000		06/12/2000		06/12/2000		06/12/2000		06/12/2000	
	Depth	0 to 0		0 to 0		0 to 0		0 to 0		0 to 0		0 to 0		0 to 0	
Parameter	**Units**														
1,1,2,2-TETRACHLOROETHANE	UG/L	1	U			1	U	1	U	1	U	1	U	1	U
XYLENES, TOTAL	UG/L	1	U			1	U	1	U	1	U	0.3	J	0.4	J
BROMOCHLOROMETHANE	UG/L	1	U			1	U	1	U	1	U	1	U	1	U
1,2-DIBROMO-3-CHLOROPROPANE	UG/L	1	U			1	U	1	U	1	U	1	U	1	U
cis-1,2-DICHLOROETHYLENE	UG/L	1	U			1	U	1	U	1	U	1	U	1	U
trans-1,2-DICHLOROETHENE	UG/L	1	U			1	U	1	U	1	U	1	U	1	U
TOTAL 1,2-DICHLOROETHENE	UG/L	1	U			1	U	1	U	1	U	1	U	1	U
ETHYLENE DIBROMIDE (1,2-DIBROMOETHANE)	UG/L	1	U			1	U	1	U	1	U	1	U	1	U

SWMU 04 Surface Soil Data

Parameter	Units	Building	SWMU4		SWMU4		SWMU4		SWMU4		SWMU4		SWMU4		SWMU4	
		StationID	SWMU4-MW05		SWMU4-MW06		SWMU4-MW06		SWMU4-MW07		SWMU4-MW08		W4-SB01		W4-SB02	
		SampleID	NDB001		NDB003		NDB004FD1		NDB006		NDB008		NDA057		NDA059	
		DateCollected	06/06/2000		06/06/2000		06/06/2000		06/06/2000		06/06/2000		04/18/2000		04/18/2000	
		Depth	0 to 0.5		0 to 0.5		0 to 0.5		0 to 0.5		0 to 0.5		0 to 0.5		0 to 0.5	
EXPLOSIVES																
2,6-DINITROTOLUENE	UG/KG		261	U	260	U	261	U	257	U	246	U	306	U	127	J
OCTAHYDRO-1,3,5,7-TETRANITRO-1,3,5,7-TETRAZOCINE	UG/KG		261	U	260	U	261	U	257	U	246	U	306	U	261	U
HEXAHYDRO-1,3,5-TRINITRO-1,3,5,7-TETRAZOCINE	UG/KG		261	U	260	U	261	U	257	U	246	U	306	U	261	U
1,3,5-TRINITROBENZENE	UG/KG		261	U	260	U	261	U	257	U	246	U	306	U	261	U
1,3-DINITROBENZENE	UG/KG		261	U	260	U	261	U	257	U	246	U	306	U	261	U
METHYL-2,4,6-TRINITROPHENYLNITRAMINE	UG/KG		261	U	260	U	261	U	257	U	246	U	306	U	261	U
NITROBENZENE	UG/KG		261	U	260	U	261	U	257	U	246	U	306	U	261	U
2,4,6-TRINITROTOLUENE	UG/KG		261	U	260	U	261	U	257	U	246	U	306	U	261	U
2,4-DINITROTOLUENE	UG/KG		261	U	260	U	261	U	257	U	246	U	306	U	1980	J
2-NITROTOLUENE	UG/KG		261	U	260	U	261	U	257	U	246	U	306	U	261	U
4-NITROTOLUENE	UG/KG		261	U	260	U	261	U	257	U	246	U	306	U	261	U
3-NITROTOLUENE	UG/KG		261	U	260	U	261	U	257	U	246	U	306	U	261	U
METALS																
ALUMINUM	MG/KG		3350	=	2800	=	2820	=	2640	=	3890	=	4580	J	4040	J
ANTIMONY	MG/KG		0.15	U	0.15	U	0.15	U	0.15	U	0.14	U	0.17	UJ	0.15	J
ARSENIC	MG/KG		0.83	J	0.81	J	0.68	J	0.57	J	0.9	J	0.88	J	0.92	J
BARIUM	MG/KG		78.8	=	36.3	J	35.7	J	48.9	=	69.2	=	219	R	315	R
BERYLLIUM	MG/KG		0.24	J	0.19	J	0.19	J	0.13	J	0.25	J	0.21	J	0.2	J
CADMIUM	MG/KG		0.028	J	0.021	U	0.021	U	0.021	U	0.022	J	0.032	J	0.32	J
CALCIUM	MG/KG		784	J	440	J	470	J	586	J	693	J	708	J	833	J
CHROMIUM, TOTAL	MG/KG		1.4	J	1.4	J	1.5	J	1.4	J	1.6	J	2.3	J	2.5	=
COBALT	MG/KG		3.2	J	1.8	J	1.8	J	1.8	J	3	J	3.3	J	3.7	J
COPPER	MG/KG		6.2	=	2.1	J	1.9	J	2.9	J	10	=	10.7	=	38.4	=
IRON	MG/KG		6990	=	5450	=	5370	=	4580	=	7820	=	6670	J	7120	J
LEAD	MG/KG		10	=	4.9	=	5.2	=	5.2	=	8.2	=	12	J	20.1	J
MAGNESIUM	MG/KG		414	J	258	J	263	J	273	J	527	J	414	J	440	J
MANGANESE	MG/KG		399	=	417	=	311	=	285	=	311	=	337	R	345	R
MERCURY	MG/KG		0.013	U	0.013	U	0.013	U	0.0096	U	0.013	U	0.016	U	0.21	=
NICKEL	MG/KG		0.38	J	0.4	J	0.36	J	0.37	J	0.53	J	0.48	J	0.48	J
POTASSIUM	MG/KG		442	J	419	J	385	J	464	J	440	J	236	J	233	J
SELENIUM	MG/KG		0.53	J	0.65	J	0.38	J	0.34	J	0.65	J	0.26	U	0.23	U
SILVER	MG/KG		0.055	U	0.053	U	0.054	U	0.052	U	0.05	U	0.062	U	0.054	U
SODIUM	MG/KG		106	J	118	J	112	J	83.7	J	127	J	98.9	J	104	J
THALLIUM	MG/KG		0.68	J	0.62	J	0.57	J	0.42	J	0.89	J	0.34	U	0.29	U
VANADIUM	MG/KG		23.9	=	19.9	=	19.7	=	18.8	=	23.4	=	29	J	29.9	J
ZINC	MG/KG		13.8	=	5.1	=	4.5	=	4.7	=	16.7	=	14.1	=	93	=

SWMU 04 Surface Soil Data

Parameter	Units	Building	SWMU4		SWMU4		SWMU4		SWMU4		SWMU4		SWMU4	
		StationID	W4-SB03		W4-SB03		W4-SB04		W4-SB05		W4-SB06		W4-SB07	
		SampleID	NDA061		NDA062FD1		NDA065		NDA067		NDA069		NDA071	
		DateCollected	04/18/2000		04/18/2000		04/18/2000		04/18/2000		04/18/2000		04/19/2000	
		Depth	0 to 0.5		0 to 0.5		0 to 0.5		0 to 0.5		0 to 0.5		0 to 0.5	
EXPLOSIVES														
2,6-DINITROTOLUENE	UG/KG		259	U	256	U	309	U	268	UJ	255	UJ	292	U
OCTAHYDRO-1,3,5,7-TETRANITRO-1,3,5,7-TETRAZOCINE	UG/KG		259	U	256	U	309	U	268	UJ	255	UJ	292	U
HEXAHYDRO-1,3,5-TRINITRO-1,3,5,7-TETRAZOCINE	UG/KG		259	U	256	U	309	U	268	UJ	255	UJ	292	U
1,3,5-TRINITROBENZENE	UG/KG		259	U	256	U	309	U	268	UJ	255	UJ	292	U
1,3-DINITROBENZENE	UG/KG		259	U	256	U	309	U	268	UJ	255	UJ	292	U
METHYL-2,4,6-TRINITROPHENYLNITRAMINE	UG/KG		259	U	256	U	309	U	268	UJ	255	UJ	292	U
NITROBENZENE	UG/KG		259	U	256	U	309	U	268	UJ	255	UJ	292	U
2,4,6-TRINITROTOLUENE	UG/KG		259	U	256	U	309	U	268	UJ	255	UJ	292	U
2,4-DINITROTOLUENE	UG/KG		259	U	256	U	309	U	268	UJ	255	UJ	292	U
2-NITROTOLUENE	UG/KG		259	U	256	U	309	U	268	UJ	255	UJ	292	U
4-NITROTOLUENE	UG/KG		259	U	256	U	309	U	268	UJ	255	UJ	292	U
3-NITROTOLUENE	UG/KG		259	U	256	U	309	U	268	UJ	255	UJ	292	U
METALS														
ALUMINUM	MG/KG		4920	J	5600	J	11700	=	8480	=	5340	=	5080	=
ANTIMONY	MG/KG		0.15	UJ	0.15	UJ	0.18	UJ	0.27	J	0.14	UJ	0.17	UJ
ARSENIC	MG/KG		0.8	J	2	J	1.3	J	0.64	J	0.98	J	0.81	J
BARIUM	MG/KG		150	R	200	R	274	J	66.2	J	168	J	204	=
BERYLLIUM	MG/KG		0.19	J	0.24	J	0.54	J	0.3	J	0.36	J	0.27	J
CADMIUM	MG/KG		0.021	U	0.16	J	0.025	U	0.022	U	0.021	U	0.024	U
CALCIUM	MG/KG		1020	J	1430	J	1060	J	906	J	958	J	828	J
CHROMIUM, TOTAL	MG/KG		2.3	=	2.7	=	3.3	=	3.2	=	2.7	=	2.4	J
COBALT	MG/KG		3.2	J	5.3	J	3.3	J	1.3	J	4.9	J	2.5	J
COPPER	MG/KG		7.3	=	11.8	=	1.9	J	2.2	J	16.5	=	8.9	=
IRON	MG/KG		6170	J	7250	J	16000	=	8800	=	9320	=	8330	=
LEAD	MG/KG		11	J	16.4	J	8.2	=	6.3	=	75.4	=	8.6	=
MAGNESIUM	MG/KG		540	J	685	J	1040	J	929	J	529	J	848	J
MANGANESE	MG/KG		382	R	585	R	188	=	39.9	=	537	=	264	=
MERCURY	MG/KG		0.015	J	0.036	J	0.019	J	0.013	U	0.015	J	0.014	U
NICKEL	MG/KG		0.63	J	0.86	J	0.88	J	0.79	J	0.74	J	0.61	J
POTASSIUM	MG/KG		310	J	383	J	291	J	257	J	325	J	243	J
SELENIUM	MG/KG		0.22	U	0.43	J	0.6	J	0.23	U	0.41	J	0.25	U
SILVER	MG/KG		0.053	U	0.053	U	0.063	U	0.054	U	0.051	U	0.06	U
SODIUM	MG/KG		135	J	208	J	402	J	418	J	127	J	870	J
THALLIUM	MG/KG		0.43	J	0.4	J	0.64	J	0.29	U	0.46	J	0.59	J
VANADIUM	MG/KG		21.3	J	26.6	J	43.7	=	30.9	=	38	=	29.2	=
ZINC	MG/KG		12.8	=	17.5	=	9.9	=	7.8	=	22.4	=	12.5	=

	Building	SWMU4		SWMU4		SWMU4		SWMU4		SWMU4		SWMU4	
	StationID	W4-SB07		W4-SB08		W4-SB09		W4-SB10		W4-SB11		W4-SB12	
	SampleID	NDA072FD1		NDA074		NDA076		NDA078		NDA080		NDA082	
	DateCollected	04/19/2000		04/19/2000		04/19/2000		04/19/2000		04/19/2000		04/19/2000	
	Depth	0 to 0.5		0 to 0.5		0 to 0.5		0 to 0.5		0 to 0.5		0 to 0.5	
Parameter	**Units**												
EXPLOSIVES													
2,6-DINITROTOLUENE	UG/KG	128	UJ	262	U	259	U	133	U	407	R	466	R
OCTAHYDRO-1,3,5,7-TETRANITRO-1,3,5,7-TETRAZOCINE	UG/KG	128	UJ	262	U	259	U	2150	=	254	U	125	UJ
HEXAHYDRO-1,3,5-TRINITRO-1,3,5,7-TETRAZOCINE	UG/KG	128	UJ	262	U	259	U	12800	=	254	U	125	UJ
1,3,5-TRINITROBENZENE	UG/KG	128	UJ	262	U	259	U	133	U	254	U	125	UJ
1,3-DINITROBENZENE	UG/KG	128	UJ	262	U	259	U	133	U	254	U	125	UJ
METHYL-2,4,6-TRINITROPHENYLNITRAMINE	UG/KG	128	UJ	262	U	259	U	133	U	254	U	125	UJ
NITROBENZENE	UG/KG	128	UJ	262	U	259	U	133	U	407	R	466	R
2,4,6-TRINITROTOLUENE	UG/KG	128	UJ	262	U	259	U	5570	=	254	U	125	UJ
2,4-DINITROTOLUENE	UG/KG	128	UJ	262	U	259	U	133	U	407	R	466	R
2-NITROTOLUENE	UG/KG	128	UJ	262	U	259	U	133	U	254	U	125	UJ
4-NITROTOLUENE	UG/KG	128	UJ	262	U	259	U	133	U	254	U	125	UJ
3-NITROTOLUENE	UG/KG	128	UJ	262	U	259	U	133	U	254	U	125	UJ
METALS													
ALUMINUM	MG/KG	4510	=	4840	=	7600	=	4300	=	1960	=	1820	=
ANTIMONY	MG/KG	0.15	UJ	0.15	UJ	0.15	UJ	0.15	UJ	0.15	UJ	0.14	UJ
ARSENIC	MG/KG	0.68	J	1.2	J	0.67	J	0.6	J	0.36	U	0.36	J
BARIUM	MG/KG	187	=	313	=	276	=	226	=	81.8	=	56	=
BERYLLIUM	MG/KG	0.25	J	0.34	J	0.43	J	0.29	J	0.13	J	0.14	J
CADMIUM	MG/KG	0.021	U	0.021	U	0.021	U	0.021	U	0.021	U	0.02	U
CALCIUM	MG/KG	783	J	3470	=	4890	=	1010	J	1030	J	879	J
CHROMIUM, TOTAL	MG/KG	2.1	J	2.2	=	5.6	=	4.7	=	2.2	=	2	J
COBALT	MG/KG	2.3	J	2.7	J	5.9	J	3.5	J	3.4	J	2.5	J
COPPER	MG/KG	7.7	=	6	=	7.9	=	11.9	=	5.5	=	5	J
IRON	MG/KG	7130	=	9370	=	15700	=	8820	=	8950	=	8240	=
LEAD	MG/KG	8.2	=	5.2	=	8.5	=	7	=	4	=	4.4	=
MAGNESIUM	MG/KG	690	J	1660	=	2150	=	953	J	454	J	438	J
MANGANESE	MG/KG	265	=	171	=	692	=	207	=	435	=	273	=
MERCURY	MG/KG	0.012	U	0.011	U	0.012	U	0.013	U	0.012	U	0.012	U
NICKEL	MG/KG	0.54	J	0.94	J	2.2	J	0.9	J	0.77	J	0.62	J
POTASSIUM	MG/KG	226	J	262	J	403	J	282	J	350	J	312	J
SELENIUM	MG/KG	0.22	U	0.22	U	0.22	U	0.22	U	0.22	U	0.21	U
SILVER	MG/KG	0.053	U	0.053	U	0.053	U	0.053	U	0.053	U	0.051	U
SODIUM	MG/KG	838	J	785	J	1220	J	1170	J	51.3	J	54.5	J
THALLIUM	MG/KG	0.28	U	0.29	U	0.72	J	0.46	J	0.53	J	0.31	J
VANADIUM	MG/KG	26.1	=	29.6	=	55.1	=	30.6	=	30	=	28.9	=
ZINC	MG/KG	11.5	=	17.9	=	19.6	=	17.9	=	8.6	=	9.6	=

SWMU 04 Surface Soil Data

Parameter	Units	Building	SWMU4		SWMU4		SWMU4		SWMU4		SWMU4		SWMU4		SWMU4	
		StationID	SWMU4-MW05		SWMU4-MW06		SWMU4-MW06		SWMU4-MW07		SWMU4-MW08		W4-SB01		W4-SB02	
		SampleID	NDB001		NDB003		NDB004FD1		NDB006		NDB008		NDA057		NDA059	
		DateCollected	06/06/2000		06/06/2000		06/06/2000		06/06/2000		06/06/2000		04/18/2000		04/18/2000	
		Depth	0 to 0.5		0 to 0.5		0 to 0.5		0 to 0.5		0 to 0.5		0 to 0.5		0 to 0.5	
PCB																
PCB-1016 (AROCHLOR 1016)	UG/KG		36	U	35	U	35	U	35	U	33	U	41	UJ	35	UJ
PCB-1260 (AROCHLOR 1260)	UG/KG		36	U	35	U	35	U	35	U	33	U	41	UJ	35	UJ
PCB-1221 (AROCHLOR 1221)	UG/KG		73	U	71	U	71	U	70	U	67	U	83	UJ	72	UJ
PCB-1232 (AROCHLOR 1232)	UG/KG		36	U	35	U	35	U	35	U	33	U	41	UJ	35	UJ
PCB-1242 (AROCHLOR 1242)	UG/KG		36	U	35	U	35	U	35	U	33	U	41	UJ	35	UJ
PCB-1248 (AROCHLOR 1248)	UG/KG		36	U	35	U	35	U	35	U	33	U	41	UJ	35	UJ
PCB-1254 (AROCHLOR 1254)	UG/KG		36	U	35	U	35	U	35	U	33	U	41	UJ	35	UJ
PESTICIDES																
ALPHA BHC (ALPHA HEXACHLOROCYCLOHEXANE)	UG/KG		1.8	U	1.8	U	1.8	U	1.8	U	1.7	U	2.1	UJ	1.8	UJ
BETA BHC (BETA HEXACHLOROCYCLOHEXANE)	UG/KG		1.8	U	1.8	U	1.8	U	1.8	U	1.7	U	2.1	UJ	1.8	UJ
DELTA BHC (DELTA HEXACHLOROCYCLOHEXANE)	UG/KG		1.8	U	1.8	U	1.8	U	1.8	U	1.7	U	2.1	UJ	1.8	UJ
GAMMA BHC (LINDANE)	UG/KG		1.8	U	1.8	U	1.8	U	1.8	U	1.7	U	2.1	UJ	1.8	UJ
HEPTACHLOR	UG/KG		1.8	U	1.8	U	1.8	U	1.8	U	1.7	U	2.1	UJ	1.8	UJ
ALDRIN	UG/KG		1.8	U	1.8	U	1.8	U	1.8	U	1.7	U	2.1	UJ	1.8	UJ
HEPTACHLOR EPOXIDE	UG/KG		1.8	U	1.8	U	1.8	U	1.8	U	1.7	U	2.1	UJ	1.8	UJ
ALPHA ENDOSULFAN (ENDOSULFAN I)	UG/KG		1.8	U	1.8	U	1.8	U	1.8	U	1.7	U	2.1	UJ	1.8	UJ
DIELDRIN	UG/KG		3.6	U	3.5	U	3.5	U	3.5	U	3.3	U	4.1	UJ	3.6	UJ
p,p'-DDE	UG/KG		3.6	U	3.5	U	3.5	U	3.5	U	3.3	U	4.1	UJ	3.6	UJ
ENDRIN	UG/KG		3.6	U	3.5	U	3.5	U	3.5	U	3.3	U	4.1	UJ	3.6	UJ
BETA ENDOSULFAN (ENDOSULFAN II)	UG/KG		3.6	U	3.5	U	3.5	U	3.5	U	3.3	U	4.1	UJ	3.6	UJ
p,p'-DDD	UG/KG		3.6	U	3.5	U	3.5	U	3.5	U	3.3	U	4.1	UJ	3.6	UJ
ENDOSULFAN SULFATE	UG/KG		3.6	U	3.5	U	3.5	U	3.5	U	3.3	U	4.1	UJ	3.6	UJ
p,p'-DDT	UG/KG		3.6	U	3.5	U	3.5	U	3.5	U	3.3	U	4.1	UJ	3.6	UJ
METHOXYCHLOR	UG/KG		18	U	18	U	18	U	18	U	17	U	21	UJ	18	UJ
ENDRIN ALDEHYDE	UG/KG		3.6	U	3.5	U	3.5	U	3.5	U	3.3	U	4.1	UJ	3.6	UJ
ALPHA-CHLORDANE	UG/KG		1.8	U	1.8	U	1.8	U	1.8	U	1.7	U	2.1	UJ	1.8	UJ
GAMMA-CHLORDANE	UG/KG		1.8	U	1.8	U	1.8	U	1.8	U	1.7	U	2.1	UJ	1.8	UJ
ENDRIN KETONE	UG/KG		3.6	U	3.5	U	3.5	U	3.5	U	3.3	U	4.1	UJ	3.6	UJ
TOXAPHENE	UG/KG		185	U	179	U	181	U	178	U	170	U	211	UJ	182	UJ
SEMI-VOLATILES																
bis(2-CHLOROETHYL) ETHER (2-CHLOROETHYL ETHER)	UG/KG		511	U	468	U	445	U	427	U	427	U	563	UJ	465	UJ
PHENOL	UG/KG		511	U	468	U	445	U	427	U	427	U	563	UJ	465	UJ
2-CHLOROPHENOL	UG/KG		511	U	468	U	445	U	427	U	427	U	563	UJ	465	UJ
1,3,5-TRINITROBENZENE	UG/KG		261	U	260	U	261	U	257	U	246	U	306	U	261	U
1,3-DICHLOROBENZENE	UG/KG		511	U	468	U	445	U	427	U	427	U	563	UJ	465	UJ
1,3-DINITROBENZENE	UG/KG		261	U	260	U	261	U	257	U	246	U	306	U	261	U
1,4-DICHLOROBENZENE	UG/KG		511	U	468	U	445	U	427	U	427	U	563	UJ	465	UJ
1,2-DICHLOROBENZENE	UG/KG		511	U	468	U	445	U	427	U	427	U	563	UJ	465	UJ
bis(2-CHLOROISOPROPYL) ETHER	UG/KG		511	U	468	U	445	U	427	U	427	U	563	UJ	465	UJ

	Building	SWMU4		SWMU4		SWMU4		SWMU4		SWMU4		SWMU4	
	StationID	W4-SB03		W4-SB03		W4-SB04		W4-SB05		W4-SB06		W4-SB07	
	SampleID	NDA061		NDA062FD1		NDA065		NDA067		NDA069		NDA071	
	DateCollected	04/18/2000		04/18/2000		04/18/2000		04/18/2000		04/18/2000		04/19/2000	
	Depth	0 to 0.5		0 to 0.5		0 to 0.5		0 to 0.5		0 to 0.5		0 to 0.5	
Parameter	**Units**												
PCB													
PCB-1016 (AROCHLOR 1016)	UG/KG	34	UJ	35	UJ	41	UJ	36	UJ	33	UJ	39	UJ
PCB-1260 (AROCHLOR 1260)	UG/KG	34	UJ	35	UJ	41	UJ	36	UJ	33	UJ	39	UJ
PCB-1221 (AROCHLOR 1221)	UG/KG	70	UJ	71	UJ	84	UJ	72	UJ	68	UJ	80	UJ
PCB-1232 (AROCHLOR 1232)	UG/KG	34	UJ	35	UJ	41	UJ	36	UJ	33	UJ	39	UJ
PCB-1242 (AROCHLOR 1242)	UG/KG	34	UJ	35	UJ	41	UJ	36	UJ	33	UJ	39	UJ
PCB-1248 (AROCHLOR 1248)	UG/KG	34	UJ	35	UJ	41	UJ	36	UJ	33	UJ	39	UJ
PCB-1254 (AROCHLOR 1254)	UG/KG	34	UJ	35	UJ	41	UJ	36	UJ	33	UJ	39	UJ
PESTICIDES													
ALPHA BHC (ALPHA HEXACHLOROCYCLOHEXANE)	UG/KG	1.8	UJ	1.8	UJ	2.1	UJ	1.8	UJ	1.7	UJ	2	UJ
BETA BHC (BETA HEXACHLOROCYCLOHEXANE)	UG/KG	1.8	UJ	1.8	UJ	2.1	UJ	1.8	UJ	1.7	UJ	2	UJ
DELTA BHC (DELTA HEXACHLOROCYCLOHEXANE)	UG/KG	1.8	UJ	1.8	UJ	2.1	UJ	1.8	UJ	1.7	UJ	2	UJ
GAMMA BHC (LINDANE)	UG/KG	1.8	UJ	1.8	UJ	2.1	UJ	1.8	UJ	1.7	UJ	2	UJ
HEPTACHLOR	UG/KG	1.8	UJ	1.8	UJ	2.1	UJ	1.8	UJ	1.7	UJ	2	UJ
ALDRIN	UG/KG	1.8	UJ	1.8	UJ	2.1	UJ	1.8	UJ	1.7	UJ	2	UJ
HEPTACHLOR EPOXIDE	UG/KG	1.8	UJ	1.8	UJ	2.1	UJ	1.8	UJ	1.7	UJ	2	UJ
ALPHA ENDOSULFAN (ENDOSULFAN I)	UG/KG	1.8	UJ	1.8	UJ	2.1	UJ	1.8	UJ	1.7	UJ	2	UJ
DIELDRIN	UG/KG	3.5	UJ	3.5	UJ	4.2	UJ	3.6	UJ	3.4	UJ	4	UJ
p,p'-DDE	UG/KG	3.5	UJ	3.5	UJ	4.2	UJ	3.6	UJ	3.4	UJ	4	UJ
ENDRIN	UG/KG	3.5	UJ	3.5	UJ	4.2	UJ	3.6	UJ	3.4	UJ	4	UJ
BETA ENDOSULFAN (ENDOSULFAN II)	UG/KG	3.5	UJ	3.5	UJ	4.2	UJ	3.6	UJ	3.4	UJ	4	UJ
p,p'-DDD	UG/KG	3.5	UJ	3.5	UJ	4.2	UJ	3.6	UJ	3.4	UJ	4	UJ
ENDOSULFAN SULFATE	UG/KG	3.5	UJ	3.5	UJ	4.2	UJ	3.6	UJ	3.4	UJ	4	UJ
p,p'-DDT	UG/KG	3.5	UJ	3.5	UJ	4.2	UJ	3.6	UJ	3.4	UJ	4	UJ
METHOXYCHLOR	UG/KG	18	UJ	18	UJ	21	UJ	18	UJ	17	UJ	20	UJ
ENDRIN ALDEHYDE	UG/KG	3.5	UJ	3.5	UJ	4.2	UJ	3.6	UJ	3.4	UJ	4	UJ
ALPHA-CHLORDANE	UG/KG	1.8	UJ	1.8	UJ	2.1	UJ	1.8	UJ	1.7	UJ	2	UJ
GAMMA-CHLORDANE	UG/KG	1.8	UJ	1.8	UJ	2.1	UJ	1.8	UJ	1.7	UJ	2	UJ
ENDRIN KETONE	UG/KG	3.5	UJ	3.5	UJ	4.2	UJ	3.6	UJ	3.4	UJ	4	UJ
TOXAPHENE	UG/KG	177	UJ	180	UJ	213	UJ	183	UJ	171	UJ	203	UJ
SEMI-VOLATILES													
bis(2-CHLOROETHYL) ETHER (2-CHLOROETHYL ETHER)	UG/KG	469	UJ	523	UJ	421	UJ	378	UJ	320	UJ	554	UJ
PHENOL	UG/KG	469	UJ	523	UJ	421	UJ	378	UJ	320	UJ	554	UJ
2-CHLOROPHENOL	UG/KG	469	UJ	523	UJ	421	UJ	378	UJ	320	UJ	554	UJ
1,3,5-TRINITROBENZENE	UG/KG	259	U	256	U	309	U	268	UJ	255	UJ	292	U
1,3-DICHLOROBENZENE	UG/KG	469	UJ	523	UJ	421	UJ	378	UJ	320	UJ	554	UJ
1,3-DINITROBENZENE	UG/KG	259	U	256	U	309	U	268	UJ	255	UJ	292	U
1,4-DICHLOROBENZENE	UG/KG	469	UJ	523	UJ	421	UJ	378	UJ	320	UJ	554	UJ
1,2-DICHLOROBENZENE	UG/KG	469	UJ	523	UJ	421	UJ	378	UJ	320	UJ	554	UJ
bis(2-CHLOROISOPROPYL) ETHER	UG/KG	469	UJ	523	UJ	421	UJ	378	UJ	320	UJ	554	UJ

SWMU 04 Surface Soil Data

Parameter	Units	Building	SWMU4		SWMU4		SWMU4		SWMU4		SWMU4		SWMU4	
		StationID	W4-SB07		W4-SB08		W4-SB09		W4-SB10		W4-SB11		W4-SB12	
		SampleID	NDA072FD1		NDA074		NDA076		NDA078		NDA080		NDA082	
		DateCollected	04/19/2000		04/19/2000		04/19/2000		04/19/2000		04/19/2000		04/19/2000	
		Depth	0 to 0.5		0 to 0.5		0 to 0.5		0 to 0.5		0 to 0.5		0 to 0.5	
PCB														
PCB-1016 (AROCHLOR 1016)	UG/KG		35	UJ	35	UJ	35	UJ	35	UJ	34	UJ	33	UJ
PCB-1260 (AROCHLOR 1260)	UG/KG		35	UJ	35	UJ	35	UJ	35	UJ	34	UJ	33	UJ
PCB-1221 (AROCHLOR 1221)	UG/KG		70	UJ	71	UJ	70	UJ	70	UJ	69	UJ	68	UJ
PCB-1232 (AROCHLOR 1232)	UG/KG		35	UJ	35	UJ	35	UJ	35	UJ	34	UJ	33	UJ
PCB-1242 (AROCHLOR 1242)	UG/KG		35	UJ	35	UJ	35	UJ	35	UJ	34	UJ	33	UJ
PCB-1248 (AROCHLOR 1248)	UG/KG		35	UJ	35	UJ	35	UJ	35	UJ	34	UJ	33	UJ
PCB-1254 (AROCHLOR 1254)	UG/KG		35	UJ	35	UJ	35	UJ	35	UJ	34	UJ	33	UJ
PESTICIDES														
ALPHA BHC (ALPHA HEXACHLOROCYCLOHEXANE)	UG/KG		1.8	UJ	0.18	UJ	0.18	UJ	0.18	UJ	0.17	UJ	0.17	UJ
BETA BHC (BETA HEXACHLOROCYCLOHEXANE)	UG/KG		1.8	UJ	0.18	UJ	0.18	UJ	0.18	UJ	0.17	UJ	0.17	UJ
DELTA BHC (DELTA HEXACHLOROCYCLOHEXANE)	UG/KG		1.8	UJ	0.18	UJ	0.18	UJ	0.18	UJ	0.17	UJ	0.17	UJ
GAMMA BHC (LINDANE)	UG/KG		1.8	UJ	0.18	UJ	0.18	UJ	0.18	UJ	0.17	UJ	0.17	UJ
HEPTACHLOR	UG/KG		1.8	UJ	0.18	UJ	0.18	UJ	0.18	UJ	0.17	UJ	0.17	UJ
ALDRIN	UG/KG		1.8	UJ	0.18	UJ	0.18	UJ	0.18	UJ	0.17	UJ	0.17	UJ
HEPTACHLOR EPOXIDE	UG/KG		1.8	UJ	0.18	UJ	0.18	UJ	0.18	UJ	0.17	UJ	0.17	UJ
ALPHA ENDOSULFAN (ENDOSULFAN I)	UG/KG		1.8	UJ	0.18	UJ	0.18	UJ	0.18	UJ	0.17	UJ	0.17	UJ
DIELDRIN	UG/KG		3.5	UJ	0.35	UJ	0.35	UJ	0.35	UJ	0.34	UJ	0.34	UJ
p,p'-DDE	UG/KG		3.5	UJ	0.35	UJ	0.35	UJ	0.35	UJ	0.34	UJ	0.34	UJ
ENDRIN	UG/KG		3.5	UJ	0.35	UJ	0.35	UJ	0.35	UJ	0.34	UJ	0.34	UJ
BETA ENDOSULFAN (ENDOSULFAN II)	UG/KG		3.5	UJ	0.35	UJ	0.35	UJ	0.35	UJ	0.34	UJ	0.34	UJ
p,p'-DDD	UG/KG		3.5	UJ	0.35	UJ	0.35	UJ	0.35	UJ	0.34	UJ	0.34	UJ
ENDOSULFAN SULFATE	UG/KG		3.5	UJ	0.35	UJ	0.35	UJ	0.35	UJ	0.34	UJ	0.34	UJ
p,p'-DDT	UG/KG		3.5	UJ	0.35	UJ	0.35	UJ	0.35	UJ	0.34	UJ	0.34	UJ
METHOXYCHLOR	UG/KG		18	UJ	1.8	UJ	1.8	UJ	1.8	UJ	1.7	UJ	1.7	UJ
ENDRIN ALDEHYDE	UG/KG		3.5	UJ	0.35	UJ	0.35	UJ	0.35	UJ	0.34	UJ	0.34	UJ
ALPHA-CHLORDANE	UG/KG		1.8	UJ	0.18	UJ	0.18	UJ	0.18	UJ	0.17	UJ	0.17	UJ
GAMMA-CHLORDANE	UG/KG		1.8	UJ	0.18	UJ	0.18	UJ	0.18	UJ	0.17	UJ	0.17	UJ
ENDRIN KETONE	UG/KG		3.5	UJ	0.35	UJ	0.35	UJ	0.35	UJ	0.34	UJ	0.34	UJ
TOXAPHENE	UG/KG		178	UJ	18	UJ	18	UJ	18	UJ	17	UJ	17	UJ
SEMI-VOLATILES														
bis(2-CHLOROETHYL) ETHER (2-CHLOROETHYL ETHER)	UG/KG		413	UJ	448	UJ	419	UJ	440	UJ	407	R	466	R
PHENOL	UG/KG		413	UJ	448	UJ	419	UJ	440	UJ	407	R	466	R
2-CHLOROPHENOL	UG/KG		413	UJ	448	UJ	419	UJ	440	UJ	407	R	466	R
1,3,5-TRINITROBENZENE	UG/KG		128	UJ	262	U	259	U	133	U	254	U	125	UJ
1,3-DICHLOROBENZENE	UG/KG		413	UJ	448	UJ	419	UJ	440	UJ	407	R	466	R
1,3-DINITROBENZENE	UG/KG		128	UJ	262	U	259	U	133	U	254	U	125	UJ
1,4-DICHLOROBENZENE	UG/KG		413	UJ	448	UJ	419	UJ	440	UJ	407	R	466	R
1,2-DICHLOROBENZENE	UG/KG		413	UJ	448	UJ	419	UJ	440	UJ	407	R	466	R
bis(2-CHLOROISOPROPYL) ETHER	UG/KG		413	UJ	448	UJ	419	UJ	440	UJ	407	R	466	R

	Building	SWMU4		SWMU4		SWMU4		SWMU4		SWMU4		SWMU4		SWMU4	
	StationID	SWMU4-MW05		SWMU4-MW06		SWMU4-MW06		SWMU4-MW07		SWMU4-MW08		W4-SB01		W4-SB02	
	SampleID	NDB001		NDB003		NDB004FD1		NDB006		NDB008		NDA057		NDA059	
	DateCollected	06/06/2000		06/06/2000		06/06/2000		06/06/2000		06/06/2000		04/18/2000		04/18/2000	
	Depth	0 to 0.5		0 to 0.5		0 to 0.5		0 to 0.5		0 to 0.5		0 to 0.5		0 to 0.5	
Parameter	**Units**														
2-METHYLPHENOL (o-CRESOL)	UG/KG	511	U	468	U	445	U	427	U	427	U	563	UJ	465	UJ
HEXACHLOROETHANE	UG/KG	511	U	468	U	445	U	427	U	427	U	563	UJ	465	UJ
N-NITROSODI-n-PROPYLAMINE	UG/KG	511	U	468	U	445	U	427	U	427	U	563	UJ	465	UJ
CRESOLS, m & p	UG/KG	511	U	468	U	445	U	427	U	427	U	563	UJ	465	UJ
NITROBENZENE	UG/KG	261	U	260	U	261	U	257	U	246	U	306	U	261	U
ISOPHORONE	UG/KG	511	U	468	U	445	U	427	U	427	U	563	UJ	465	UJ
2-NITROPHENOL	UG/KG	511	U	468	U	445	U	427	U	427	U	563	UJ	465	UJ
2,4-DIMETHYLPHENOL	UG/KG	511	U	468	U	445	U	427	U	427	U	563	UJ	465	UJ
bis(2-CHLOROETHOXY) METHANE	UG/KG	511	U	468	U	445	U	427	U	427	U	563	UJ	465	UJ
2,4-DICHLOROPHENOL	UG/KG	511	U	468	U	445	U	427	U	427	U	563	UJ	465	UJ
1,2,4-TRICHLOROBENZENE	UG/KG	511	U	468	U	445	U	427	U	427	U	563	UJ	465	UJ
NAPHTHALENE	UG/KG	511	U	468	U	445	U	427	U	427	U	563	UJ	465	UJ
4-CHLOROANILINE	UG/KG	511	U	468	U	445	U	427	U	427	U	563	UJ	465	UJ
2-METHYLNAPHTHALENE	UG/KG	511	U	468	U	445	U	427	U	427	U	563	UJ	465	UJ
HEXACHLOROBUTADIENE	UG/KG	511	U	468	U	445	U	427	U	427	U	563	UJ	465	UJ
4-CHLORO-3-METHYLPHENOL	UG/KG	511	U	468	U	445	U	427	U	427	U	563	UJ	465	UJ
HEXACHLOROCYCLOPENTADIENE	UG/KG	511	U	468	U	445	U	427	U	427	U	563	UJ	465	UJ
2,4,6-TRICHLOROPHENOL	UG/KG	511	U	468	U	445	U	427	U	427	U	563	UJ	465	UJ
2,4,5-TRICHLOROPHENOL	UG/KG	1530	U	1400	U	1340	U	1280	U	1280	U	1690	UJ	1390	UJ
2-CHLORONAPHTHALENE	UG/KG	511	U	468	U	445	U	427	U	427	U	563	UJ	465	UJ
2-NITROANILINE	UG/KG	1530	U	1400	U	1340	U	1280	U	1280	U	1690	UJ	1390	UJ
ACENAPHTHYLENE	UG/KG	511	U	468	U	445	U	427	U	427	U	563	UJ	465	UJ
DIMETHYL PHTHALATE	UG/KG	511	U	468	U	445	U	427	U	427	U	563	UJ	465	UJ
2,6-DINITROTOLUENE	UG/KG	261	U	260	U	261	U	257	U	246	U	306	U	127	J
ACENAPHTHENE	UG/KG	511	U	468	U	445	U	427	U	427	U	563	UJ	465	UJ
3-NITROANILINE	UG/KG	1530	U	1400	U	1340	U	1280	U	1280	U	1690	UJ	1390	UJ
2,4-DINITROPHENOL	UG/KG	1530	U	1400	U	1340	U	1280	U	1280	U	1690	UJ	1390	UJ
DIBENZOFURAN	UG/KG	511	U	468	U	445	U	427	U	427	U	563	UJ	465	UJ
2,4-DINITROTOLUENE	UG/KG	261	U	260	U	261	U	257	U	246	U	306	U	1980	J
4-NITROPHENOL	UG/KG	1530	U	1400	U	1340	U	1280	U	1280	U	1690	UJ	1390	UJ
FLUORENE	UG/KG	511	U	468	U	445	U	427	U	427	U	563	UJ	465	UJ
4-CHLOROPHENYL PHENYL ETHER	UG/KG	511	U	468	U	445	U	427	U	427	U	563	UJ	465	UJ
DIETHYL PHTHALATE	UG/KG	511	U	468	U	445	U	427	U	427	U	563	UJ	465	UJ
4-NITROANILINE	UG/KG	1530	U	1400	U	1340	U	1280	U	1280	U	1690	UJ	1390	UJ
4,6-DINITRO-2-METHYLPHENOL	UG/KG	1530	U	1400	U	1340	U	1280	U	1280	U	1690	UJ	1390	UJ
N-NITROSODIPHENYLAMINE	UG/KG	511	U	468	U	445	U	427	U	427	U	563	UJ	170	J
4-BROMOPHENYL PHENYL ETHER	UG/KG	511	U	468	U	445	U	427	U	427	U	563	UJ	465	UJ
HEXACHLOROBENZENE	UG/KG	511	U	468	U	445	U	427	U	427	U	563	UJ	465	UJ
PENTACHLOROPHENOL	UG/KG	1530	U	1400	U	1340	U	1280	U	1280	U	1690	UJ	1390	UJ
PHENANTHRENE	UG/KG	511	U	468	U	445	U	427	U	427	U	563	UJ	465	UJ

SWMU 04 Surface Soil Data

	Building	SWMU4		SWMU4		SWMU4		SWMU4		SWMU4		SWMU4	
	StationID	W4-SB03		W4-SB03		W4-SB04		W4-SB05		W4-SB06		W4-SB07	
	SampleID	NDA061		NDA062FD1		NDA065		NDA067		NDA069		NDA071	
	DateCollected	04/18/2000		04/18/2000		04/18/2000		04/18/2000		04/18/2000		04/19/2000	
	Depth	0 to 0.5		0 to 0.5		0 to 0.5		0 to 0.5		0 to 0.5		0 to 0.5	
Parameter	**Units**												
2-METHYLPHENOL (o-CRESOL)	UG/KG	469	UJ	523	UJ	421	UJ	378	UJ	320	UJ	554	UJ
HEXACHLOROETHANE	UG/KG	469	UJ	523	UJ	421	UJ	378	UJ	320	UJ	554	UJ
N-NITROSODI-n-PROPYLAMINE	UG/KG	469	UJ	523	UJ	421	UJ	378	UJ	320	UJ	554	UJ
CRESOLS, m & p	UG/KG	469	UJ	523	UJ	421	UJ	378	UJ	320	UJ	554	UJ
NITROBENZENE	UG/KG	259	U	256	U	309	U	268	UJ	255	UJ	292	U
ISOPHORONE	UG/KG	469	UJ	523	UJ	421	UJ	378	UJ	320	UJ	554	UJ
2-NITROPHENOL	UG/KG	469	UJ	523	UJ	421	UJ	378	UJ	320	UJ	554	UJ
2,4-DIMETHYLPHENOL	UG/KG	469	UJ	523	UJ	421	UJ	378	UJ	320	UJ	554	UJ
bis(2-CHLOROETHOXY) METHANE	UG/KG	469	UJ	523	UJ	421	UJ	378	UJ	320	UJ	554	UJ
2,4-DICHLOROPHENOL	UG/KG	469	UJ	523	UJ	421	UJ	378	UJ	320	UJ	554	UJ
1,2,4-TRICHLOROBENZENE	UG/KG	469	UJ	523	UJ	421	UJ	378	UJ	320	UJ	554	UJ
NAPHTHALENE	UG/KG	469	UJ	523	UJ	421	UJ	378	UJ	320	UJ	554	UJ
4-CHLOROANILINE	UG/KG	469	UJ	523	UJ	421	UJ	378	UJ	320	UJ	554	UJ
2-METHYLNAPHTHALENE	UG/KG	469	UJ	523	UJ	421	UJ	378	UJ	320	UJ	554	UJ
HEXACHLOROBUTADIENE	UG/KG	469	UJ	523	UJ	421	UJ	378	UJ	320	UJ	554	UJ
4-CHLORO-3-METHYLPHENOL	UG/KG	469	UJ	523	UJ	421	UJ	378	UJ	320	UJ	554	UJ
HEXACHLOROCYCLOPENTADIENE	UG/KG	469	UJ	523	UJ	421	UJ	378	UJ	320	UJ	554	UJ
2,4,6-TRICHLOROPHENOL	UG/KG	469	UJ	523	UJ	421	UJ	378	UJ	320	UJ	554	UJ
2,4,5-TRICHLOROPHENOL	UG/KG	1410	UJ	1570	UJ	1260	UJ	1130	UJ	959	UJ	1660	UJ
2-CHLORONAPHTHALENE	UG/KG	469	UJ	523	UJ	421	UJ	378	UJ	320	UJ	554	UJ
2-NITROANILINE	UG/KG	1410	UJ	1570	UJ	1260	UJ	1130	UJ	959	UJ	1660	UJ
ACENAPHTHYLENE	UG/KG	469	UJ	523	UJ	421	UJ	378	UJ	320	UJ	554	UJ
DIMETHYL PHTHALATE	UG/KG	469	UJ	523	UJ	421	UJ	378	UJ	320	UJ	554	UJ
2,6-DINITROTOLUENE	UG/KG	259	U	256	U	309	U	268	UJ	255	UJ	292	U
ACENAPHTHENE	UG/KG	469	UJ	523	UJ	421	UJ	378	UJ	320	UJ	554	UJ
3-NITROANILINE	UG/KG	1410	UJ	1570	UJ	1260	UJ	1130	UJ	959	UJ	1660	UJ
2,4-DINITROPHENOL	UG/KG	1410	UJ	1570	UJ	1260	UJ	1130	UJ	959	UJ	1660	UJ
DIBENZOFURAN	UG/KG	469	UJ	523	UJ	421	UJ	378	UJ	320	UJ	554	UJ
2,4-DINITROTOLUENE	UG/KG	259	U	256	U	309	U	268	UJ	255	UJ	292	U
4-NITROPHENOL	UG/KG	1410	UJ	1570	UJ	1260	UJ	1130	UJ	959	UJ	1660	UJ
FLUORENE	UG/KG	469	UJ	523	UJ	421	UJ	378	UJ	320	UJ	554	UJ
4-CHLOROPHENYL PHENYL ETHER	UG/KG	469	UJ	523	UJ	421	UJ	378	UJ	320	UJ	554	UJ
DIETHYL PHTHALATE	UG/KG	91	J	523	UJ	38	J	378	UJ	320	UJ	554	UJ
4-NITROANILINE	UG/KG	1410	UJ	1570	UJ	1260	UJ	1130	UJ	959	UJ	1660	UJ
4,6-DINITRO-2-METHYLPHENOL	UG/KG	1410	UJ	1570	UJ	1260	UJ	1130	UJ	959	UJ	1660	UJ
N-NITROSODIPHENYLAMINE	UG/KG	469	UJ	523	UJ	421	UJ	378	UJ	320	UJ	554	UJ
4-BROMOPHENYL PHENYL ETHER	UG/KG	469	UJ	523	UJ	421	UJ	378	UJ	320	UJ	554	UJ
HEXACHLOROBENZENE	UG/KG	469	UJ	523	UJ	421	UJ	378	UJ	320	UJ	554	UJ
PENTACHLOROPHENOL	UG/KG	1410	UJ	1570	UJ	1260	UJ	1130	UJ	959	UJ	1660	UJ
PHENANTHRENE	UG/KG	469	UJ	523	UJ	421	UJ	378	UJ	320	UJ	554	UJ

	Building	SWMU4		SWMU4		SWMU4		SWMU4		SWMU4		SWMU4	
	StationID	W4-SB07		W4-SB08		W4-SB09		W4-SB10		W4-SB11		W4-SB12	
	SampleID	NDA072FD1		NDA074		NDA076		NDA078		NDA080		NDA082	
	DateCollected	04/19/2000		04/19/2000		04/19/2000		04/19/2000		04/19/2000		04/19/2000	
	Depth	0 to 0.5		0 to 0.5		0 to 0.5		0 to 0.5		0 to 0.5		0 to 0.5	
Parameter	**Units**												
2-METHYLPHENOL (o-CRESOL)	UG/KG	413	UJ	448	UJ	419	UJ	440	UJ	407	R	466	R
HEXACHLOROETHANE	UG/KG	413	UJ	448	UJ	419	UJ	440	UJ	407	R	466	R
N-NITROSODI-n-PROPYLAMINE	UG/KG	413	UJ	448	UJ	419	UJ	440	UJ	407	R	466	R
CRESOLS, m & p	UG/KG	413	UJ	448	UJ	419	UJ	440	UJ	407	R	466	R
NITROBENZENE	UG/KG	128	UJ	262	U	259	U	133	U	407	R	466	R
ISOPHORONE	UG/KG	413	UJ	448	UJ	419	UJ	440	UJ	407	R	466	R
2-NITROPHENOL	UG/KG	413	UJ	448	UJ	419	UJ	440	UJ	407	R	466	R
2,4-DIMETHYLPHENOL	UG/KG	413	UJ	448	UJ	419	UJ	440	UJ	407	R	466	R
bis(2-CHLOROETHOXY) METHANE	UG/KG	413	UJ	448	UJ	419	UJ	440	UJ	407	R	466	R
2,4-DICHLOROPHENOL	UG/KG	413	UJ	448	UJ	419	UJ	440	UJ	407	R	466	R
1,2,4-TRICHLOROBENZENE	UG/KG	413	UJ	448	UJ	419	UJ	440	UJ	407	R	466	R
NAPHTHALENE	UG/KG	413	UJ	448	UJ	419	UJ	440	UJ	407	R	466	R
4-CHLOROANILINE	UG/KG	413	UJ	448	UJ	419	UJ	440	UJ	407	R	466	R
2-METHYLNAPHTHALENE	UG/KG	413	UJ	448	UJ	419	UJ	440	UJ	407	R	466	R
HEXACHLOROBUTADIENE	UG/KG	413	UJ	448	UJ	419	UJ	440	UJ	407	R	466	R
4-CHLORO-3-METHYLPHENOL	UG/KG	413	UJ	448	UJ	419	UJ	440	UJ	407	R	466	R
HEXACHLOROCYCLOPENTADIENE	UG/KG	413	UJ	448	UJ	419	UJ	440	UJ	407	R	466	R
2,4,6-TRICHLOROPHENOL	UG/KG	413	UJ	448	UJ	419	UJ	440	UJ	407	R	466	R
2,4,5-TRICHLOROPHENOL	UG/KG	1240	UJ	1340	UJ	1260	UJ	1320	UJ	1220	R	1400	R
2-CHLORONAPHTHALENE	UG/KG	413	UJ	448	UJ	419	UJ	440	UJ	407	R	466	R
2-NITROANILINE	UG/KG	1240	UJ	1340	UJ	1260	UJ	1320	UJ	1220	R	1400	R
ACENAPHTHYLENE	UG/KG	413	UJ	448	UJ	419	UJ	440	UJ	407	R	466	R
DIMETHYL PHTHALATE	UG/KG	413	UJ	448	UJ	419	UJ	440	UJ	407	R	466	R
2,6-DINITROTOLUENE	UG/KG	128	UJ	262	U	259	U	133	U	407	R	466	R
ACENAPHTHENE	UG/KG	413	UJ	448	UJ	419	UJ	440	UJ	407	R	466	R
3-NITROANILINE	UG/KG	1240	UJ	1340	UJ	1260	UJ	1320	UJ	1220	R	1400	R
2,4-DINITROPHENOL	UG/KG	1240	UJ	1340	UJ	1260	UJ	1320	UJ	1220	R	1400	R
DIBENZOFURAN	UG/KG	413	UJ	448	UJ	419	UJ	440	UJ	407	R	466	R
2,4-DINITROTOLUENE	UG/KG	128	UJ	262	U	259	U	133	U	407	R	466	R
4-NITROPHENOL	UG/KG	1240	UJ	1340	UJ	1260	UJ	1320	UJ	1220	R	1400	R
FLUORENE	UG/KG	413	UJ	448	UJ	419	UJ	440	UJ	407	R	466	R
4-CHLOROPHENYL PHENYL ETHER	UG/KG	413	UJ	448	UJ	419	UJ	440	UJ	407	R	466	R
DIETHYL PHTHALATE	UG/KG	413	UJ	448	UJ	419	UJ	440	UJ	407	R	466	R
4-NITROANILINE	UG/KG	1240	UJ	1340	UJ	1260	UJ	1320	UJ	1220	R	1400	R
4,6-DINITRO-2-METHYLPHENOL	UG/KG	1240	UJ	1340	UJ	1260	UJ	1320	UJ	1220	R	1400	R
N-NITROSODIPHENYLAMINE	UG/KG	413	UJ	448	UJ	419	UJ	440	UJ	407	R	466	R
4-BROMOPHENYL PHENYL ETHER	UG/KG	413	UJ	448	UJ	419	UJ	440	UJ	407	R	466	R
HEXACHLOROBENZENE	UG/KG	413	UJ	448	UJ	419	UJ	440	UJ	407	R	466	R
PENTACHLOROPHENOL	UG/KG	1240	UJ	1340	UJ	1260	UJ	1320	UJ	1220	R	1400	R
PHENANTHRENE	UG/KG	413	UJ	448	UJ	419	UJ	440	UJ	407	R	466	R

SWMU 04 Surface Soil Data

	Building	SWMU4		SWMU4		SWMU4		SWMU4		SWMU4		SWMU4		SWMU4	
	StationID	SWMU4-MW05		SWMU4-MW06		SWMU4-MW06		SWMU4-MW07		SWMU4-MW08		W4-SB01		W4-SB02	
	SampleID	NDB001		NDB003		NDB004FD1		NDB006		NDB008		NDA057		NDA059	
	DateCollected	06/06/2000		06/06/2000		06/06/2000		06/06/2000		06/06/2000		04/18/2000		04/18/2000	
	Depth	0 to 0.5		0 to 0.5		0 to 0.5		0 to 0.5		0 to 0.5		0 to 0.5		0 to 0.5	
Parameter	**Units**														
ANTHRACENE	UG/KG	511	U	468	U	445	U	427	U	427	U	563	UJ	465	UJ
DI-n-BUTYL PHTHALATE	UG/KG	511	U	468	U	445	U	427	U	427	U	563	UJ	28	J
FLUORANTHENE	UG/KG	511	U	468	U	445	U	427	U	427	U	563	UJ	465	UJ
PYRENE	UG/KG	511	U	468	U	445	U	427	U	427	U	563	UJ	465	UJ
BENZYL BUTYL PHTHALATE	UG/KG	511	U	468	U	445	U	427	U	427	U	563	UJ	465	UJ
3,3'-DICHLOROBENZIDINE	UG/KG	1020	U	937	U	890	U	854	U	854	U	1130	UJ	929	UJ
BENZO(a)ANTHRACENE	UG/KG	511	U	468	U	445	U	427	U	427	U	563	UJ	465	UJ
CHRYSENE	UG/KG	511	U	468	U	445	U	427	U	427	U	563	UJ	465	UJ
bis(2-ETHYLHEXYL) PHTHALATE	UG/KG	511	U	468	U	445	U	427	U	427	U	563	UJ	41	J
DI-n-OCTYLPHTHALATE	UG/KG	511	U	468	U	445	U	427	U	427	U	563	UJ	465	UJ
BENZO(b)FLUORANTHENE	UG/KG	511	U	468	U	445	U	427	U	427	U	563	UJ	465	UJ
BENZO(k)FLUORANTHENE	UG/KG	511	U	468	U	445	U	427	U	427	U	563	UJ	465	UJ
BENZO(a)PYRENE	UG/KG	511	U	468	U	445	U	427	U	427	U	563	UJ	465	UJ
INDENO(1,2,3-c,d)PYRENE	UG/KG	511	U	468	U	445	U	427	U	427	U	563	UJ	465	UJ
DIBENZ(a,h)ANTHRACENE	UG/KG	511	U	468	U	445	U	427	U	427	U	563	UJ	465	UJ
BENZO(g,h,i)PERYLENE	UG/KG	511	U	468	U	445	U	427	U	427	U	563	UJ	465	UJ
CARBAZOLE	UG/KG	511	U	468	U	445	U	427	U	427	U	563	UJ	465	UJ
VOLATILES															
CHLOROMETHANE	UG/KG	12	U	11	U	11	U	12	U	10	U	10	U	11	U
VINYL CHLORIDE	UG/KG	12	U	11	U	11	U	12	U	10	U	10	U	11	U
BROMOMETHANE	UG/KG	12	U	11	U	11	U	12	U	10	U	10	U	11	U
1,3-DICHLOROBENZENE	UG/KG	511	U	468	U	445	U	427	U	427	U	563	UJ	465	UJ
CHLOROETHANE	UG/KG	12	U	11	U	11	U	12	U	10	U	10	U	11	U
1,1-DICHLOROETHENE	UG/KG	12	U	11	U	11	U	12	U	10	U	10	U	11	U
1,4-DICHLOROBENZENE	UG/KG	511	U	468	U	445	U	427	U	427	U	563	UJ	465	UJ
1,2-DICHLOROBENZENE	UG/KG	511	U	468	U	445	U	427	U	427	U	563	UJ	465	UJ
CARBON DISULFIDE	UG/KG	12	U	11	U	11	U	12	U	10	U	10	U	11	U
METHYLENE CHLORIDE	UG/KG	12	U	11	U	11	U	12	U	10	U	10	U	11	U
1,1-DICHLOROETHANE	UG/KG	12	U	11	U	11	U	12	U	10	U	10	U	11	U
ACETONE	UG/KG	33	=	50	=	52	=	25	=	229	E	62	J	663	R
METHYL ETHYL KETONE (2-BUTANONE)	UG/KG	12	U	2	U	11	U	12	U	10	U	10	R	11	R
CHLOROFORM	UG/KG	12	U	11	U	11	U	12	U	10	U	10	U	11	U
1,1,1-TRICHLOROETHANE	UG/KG	12	U	11	U	11	U	12	U	10	U	10	U	11	U
CARBON TETRACHLORIDE	UG/KG	12	U	11	U	11	U	12	U	10	U	10	U	11	U
BENZENE	UG/KG	12	U	11	U	11	U	12	U	10	U	10	U	11	U
1,2-DICHLOROETHANE	UG/KG	12	U	0.3	U	11	U	0.3	U	10	U	10	U	11	U
TRICHLOROETHYLENE (TCE)	UG/KG	12	U	11	U	11	U	12	U	10	U	10	U	11	U
1,2-DICHLOROPROPANE	UG/KG	12	U	11	U	11	U	12	U	10	U	10	U	11	U
1,2,4-TRICHLOROBENZENE	UG/KG	511	U	468	U	445	U	427	U	427	U	563	UJ	465	UJ
BROMODICHLOROMETHANE	UG/KG	12	U	11	U	11	U	12	U	10	U	10	U	11	U

	Building	SWMU4		SWMU4		SWMU4		SWMU4		SWMU4		SWMU4	
	StationID	W4-SB03		W4-SB03		W4-SB04		W4-SB05		W4-SB06		W4-SB07	
	SampleID	NDA061		NDA062FD1		NDA065		NDA067		NDA069		NDA071	
	DateCollected	04/18/2000		04/18/2000		04/18/2000		04/18/2000		04/18/2000		04/19/2000	
	Depth	0 to 0.5		0 to 0.5		0 to 0.5		0 to 0.5		0 to 0.5		0 to 0.5	
Parameter	**Units**												
ANTHRACENE	UG/KG	469	UJ	523	UJ	421	UJ	378	UJ	320	UJ	554	UJ
DI-n-BUTYL PHTHALATE	UG/KG	469	UJ	523	UJ	421	UJ	378	UJ	320	UJ	554	UJ
FLUORANTHENE	UG/KG	469	UJ	523	UJ	421	UJ	378	UJ	320	UJ	554	UJ
PYRENE	UG/KG	469	UJ	523	UJ	421	UJ	378	UJ	320	UJ	554	UJ
BENZYL BUTYL PHTHALATE	UG/KG	469	UJ	523	UJ	421	UJ	378	UJ	320	UJ	554	UJ
3,3'-DICHLOROBENZIDINE	UG/KG	938	UJ	1050	UJ	842	UJ	755	UJ	639	UJ	1110	UJ
BENZO(a)ANTHRACENE	UG/KG	469	UJ	523	UJ	421	UJ	378	UJ	320	UJ	554	UJ
CHRYSENE	UG/KG	469	UJ	523	UJ	421	UJ	378	UJ	320	UJ	554	UJ
bis(2-ETHYLHEXYL) PHTHALATE	UG/KG	469	UJ	523	UJ	421	UJ	378	UJ	320	UJ	554	UJ
DI-n-OCTYLPHTHALATE	UG/KG	469	UJ	523	UJ	421	UJ	378	UJ	320	UJ	554	UJ
BENZO(b)FLUORANTHENE	UG/KG	469	UJ	523	UJ	421	UJ	378	UJ	320	UJ	554	UJ
BENZO(k)FLUORANTHENE	UG/KG	469	UJ	523	UJ	421	UJ	378	UJ	320	UJ	554	UJ
BENZO(a)PYRENE	UG/KG	469	UJ	523	UJ	421	UJ	378	UJ	320	UJ	554	UJ
INDENO(1,2,3-c,d)PYRENE	UG/KG	469	UJ	523	UJ	421	UJ	378	UJ	320	UJ	554	UJ
DIBENZ(a,h)ANTHRACENE	UG/KG	469	UJ	523	UJ	421	UJ	378	UJ	320	UJ	554	UJ
BENZO(g,h,i)PERYLENE	UG/KG	469	UJ	523	UJ	421	UJ	378	UJ	320	UJ	554	UJ
CARBAZOLE	UG/KG	469	UJ	523	UJ	421	UJ	378	UJ	320	UJ	554	UJ
VOLATILES													
CHLOROMETHANE	UG/KG	12	U	12	U	12	U	12	U	11	U	12	U
VINYL CHLORIDE	UG/KG	12	U	12	U	12	U	12	U	11	U	12	U
BROMOMETHANE	UG/KG	12	U	12	U	12	U	12	U	11	U	12	U
1,3-DICHLOROBENZENE	UG/KG	469	UJ	523	UJ	421	UJ	378	UJ	320	UJ	554	UJ
CHLOROETHANE	UG/KG	12	U	12	U	12	U	12	U	11	U	12	U
1,1-DICHLOROETHENE	UG/KG	12	U	12	U	12	U	12	U	11	U	12	U
1,4-DICHLOROBENZENE	UG/KG	469	UJ	523	UJ	421	UJ	378	UJ	320	UJ	554	UJ
1,2-DICHLOROBENZENE	UG/KG	469	UJ	523	UJ	421	UJ	378	UJ	320	UJ	554	UJ
CARBON DISULFIDE	UG/KG	12	U	12	U	12	U	12	U	11	U	12	U
METHYLENE CHLORIDE	UG/KG	12	U	12	U	12	U	12	U	11	U	12	U
1,1-DICHLOROETHANE	UG/KG	12	U	12	U	12	U	12	U	11	U	12	U
ACETONE	UG/KG	33	J	14	J	718	R	15	R	382	R	12	U
METHYL ETHYL KETONE (2-BUTANONE)	UG/KG	12	R	12	R	12	R	12	R	11	R	12	U
CHLOROFORM	UG/KG	12	U	12	U	12	U	12	U	11	U	12	U
1,1,1-TRICHLOROETHANE	UG/KG	12	U	12	U	12	U	12	U	11	U	12	U
CARBON TETRACHLORIDE	UG/KG	12	U	12	U	12	U	12	U	11	U	12	U
BENZENE	UG/KG	12	U	12	U	12	U	12	U	11	U	12	U
1,2-DICHLOROETHANE	UG/KG	12	U	12	U	12	U	12	U	11	U	12	U
TRICHLOROETHYLENE (TCE)	UG/KG	12	U	12	U	12	U	12	U	11	U	12	U
1,2-DICHLOROPROPANE	UG/KG	12	U	12	U	12	U	12	U	11	U	12	U
1,2,4-TRICHLOROBENZENE	UG/KG	469	UJ	523	UJ	421	UJ	378	UJ	320	UJ	554	UJ
BROMODICHLOROMETHANE	UG/KG	12	U	12	U	12	U	12	U	11	U	12	U

SWMU 04 Surface Soil Data

	Building	SWMU4		SWMU4		SWMU4		SWMU4		SWMU4		SWMU4	
	StationID	W4-SB07		W4-SB08		W4-SB09		W4-SB10		W4-SB11		W4-SB12	
	SampleID	NDA072FD1		NDA074		NDA076		NDA078		NDA080		NDA082	
	DateCollected	04/19/2000		04/19/2000		04/19/2000		04/19/2000		04/19/2000		04/19/2000	
	Depth	0 to 0.5		0 to 0.5		0 to 0.5		0 to 0.5		0 to 0.5		0 to 0.5	
Parameter	**Units**												
ANTHRACENE	UG/KG	413	UJ	448	UJ	419	UJ	440	UJ	407	R	466	R
DI-n-BUTYL PHTHALATE	UG/KG	413	UJ	448	UJ	419	UJ	440	UJ	407	R	466	R
FLUORANTHENE	UG/KG	413	UJ	448	UJ	419	UJ	440	UJ	407	R	466	R
PYRENE	UG/KG	413	UJ	448	UJ	419	UJ	440	UJ	407	R	466	R
BENZYL BUTYL PHTHALATE	UG/KG	413	UJ	448	UJ	419	UJ	440	UJ	407	R	466	R
3,3'-DICHLOROBENZIDINE	UG/KG	826	UJ	896	UJ	838	UJ	881	UJ	814	R	932	R
BENZO(a)ANTHRACENE	UG/KG	413	UJ	448	UJ	419	UJ	440	UJ	407	R	466	R
CHRYSENE	UG/KG	413	UJ	448	UJ	419	UJ	440	UJ	407	R	466	R
bis(2-ETHYLHEXYL) PHTHALATE	UG/KG	413	UJ	448	UJ	419	UJ	440	UJ	407	R	466	R
DI-n-OCTYLPHTHALATE	UG/KG	413	UJ	448	UJ	419	UJ	440	UJ	407	R	466	R
BENZO(b)FLUORANTHENE	UG/KG	413	UJ	448	UJ	419	UJ	440	UJ	407	R	466	R
BENZO(k)FLUORANTHENE	UG/KG	413	UJ	448	UJ	419	UJ	440	UJ	407	R	466	R
BENZO(a)PYRENE	UG/KG	413	UJ	448	UJ	419	UJ	440	UJ	407	R	466	R
INDENO(1,2,3-c,d)PYRENE	UG/KG	413	UJ	448	UJ	419	UJ	440	UJ	407	R	466	R
DIBENZ(a,h)ANTHRACENE	UG/KG	413	UJ	448	UJ	419	UJ	440	UJ	407	R	466	R
BENZO(g,h,i)PERYLENE	UG/KG	413	UJ	448	UJ	419	UJ	440	UJ	407	R	466	R
CARBAZOLE	UG/KG	413	UJ	448	UJ	419	UJ	440	UJ	407	R	466	R
VOLATILES													
CHLOROMETHANE	UG/KG	11	UJ	10	U	10	U	11	U	10	U	13	U
VINYL CHLORIDE	UG/KG	11	UJ	10	U	10	U	11	U	10	U	13	U
BROMOMETHANE	UG/KG	11	UJ	10	U	10	U	11	U	10	U	13	U
1,3-DICHLOROBENZENE	UG/KG	413	UJ	448	UJ	419	UJ	440	UJ	407	R	466	R
CHLOROETHANE	UG/KG	11	UJ	10	U	10	U	11	U	10	U	13	U
1,1-DICHLOROETHENE	UG/KG	11	UJ	10	U	10	U	11	U	10	U	13	U
1,4-DICHLOROBENZENE	UG/KG	413	UJ	448	UJ	419	UJ	440	UJ	407	R	466	R
1,2-DICHLOROBENZENE	UG/KG	413	UJ	448	UJ	419	UJ	440	UJ	407	R	466	R
CARBON DISULFIDE	UG/KG	11	UJ	10	U	10	U	11	U	10	U	13	U
METHYLENE CHLORIDE	UG/KG	11	UJ	10	U	10	U	11	U	10	U	13	U
1,1-DICHLOROETHANE	UG/KG	11	UJ	10	U	10	U	11	U	10	U	13	U
ACETONE	UG/KG	41	R	60	R	10	R	14	R	10	R	13	R
METHYL ETHYL KETONE (2-BUTANONE)	UG/KG	11	R	10	R	10	R	11	R	10	R	13	R
CHLOROFORM	UG/KG	11	UJ	10	U	10	U	11	U	10	U	13	U
1,1,1-TRICHLOROETHANE	UG/KG	11	UJ	10	U	10	U	11	U	10	U	13	U
CARBON TETRACHLORIDE	UG/KG	11	UJ	10	U	10	U	11	U	10	U	13	U
BENZENE	UG/KG	11	UJ	10	U	10	U	11	U	10	U	13	U
1,2-DICHLOROETHANE	UG/KG	11	UJ	10	U	10	U	11	U	10	U	13	U
TRICHLOROETHYLENE (TCE)	UG/KG	11	UJ	10	U	10	U	11	U	10	U	13	U
1,2-DICHLOROPROPANE	UG/KG	11	UJ	10	U	10	U	11	U	10	U	13	U
1,2,4-TRICHLOROBENZENE	UG/KG	413	UJ	448	UJ	419	UJ	440	UJ	407	R	466	R
BROMODICHLOROMETHANE	UG/KG	11	UJ	10	U	10	U	11	U	10	U	13	U

	Building	SWMU4		SWMU4		SWMU4		SWMU4		SWMU4		SWMU4		SWMU4	
	StationID	SWMU4-MW05		SWMU4-MW06		SWMU4-MW06		SWMU4-MW07		SWMU4-MW08		W4-SB01		W4-SB02	
	SampleID	NDB001		NDB003		NDB004FD1		NDB006		NDB008		NDA057		NDA059	
	DateCollected	06/06/2000		06/06/2000		06/06/2000		06/06/2000		06/06/2000		04/18/2000		04/18/2000	
	Depth	0 to 0.5		0 to 0.5		0 to 0.5		0 to 0.5		0 to 0.5		0 to 0.5		0 to 0.5	
Parameter	**Units**														
cis-1,3-DICHLOROPROPENE	UG/KG	12	U	11	U	11	U	12	U	10	U	10	U	11	U
METHYL ISOBUTYL KETONE (4-METHYL-2-PENTANONE)	UG/KG	12	U	11	U	11	U	12	U	10	U	10	U	11	U
TOLUENE	UG/KG	12	U	11	U	11	U	12	U	10	U	0.4	J	11	U
trans-1,3-DICHLOROPROPENE	UG/KG	12	U	11	U	11	U	12	U	10	U	10	U	11	U
1,1,2-TRICHLOROETHANE	UG/KG	12	U	11	U	11	U	12	U	10	U	10	U	11	U
TETRACHLOROETHYLENE(PCE)	UG/KG	12	U	11	U	11	U	12	U	10	U	10	U	11	U
2-HEXANONE	UG/KG	12	U	11	U	11	U	12	U	10	U	10	U	11	U
DIBROMOCHLOROMETHANE	UG/KG	12	U	11	U	11	U	12	U	10	U	10	U	11	U
CHLOROBENZENE	UG/KG	12	U	11	U	11	U	12	U	10	U	10	U	11	U
ETHYLBENZENE	UG/KG	12	U	11	U	11	U	12	U	10	U	10	U	11	U
M,P-XYLENE (SUM OF ISOMERS)	UG/KG	12	U	11	U	11	U	12	U	10	U	10	U	11	U
O-XYLENE (1,2-DIMETHYLBENZENE)	UG/KG	12	U	11	U	11	U	12	U	10	U	0.3	J	11	U
STYRENE	UG/KG	12	U	11	U	11	U	12	U	10	U	10	U	11	U
BROMOFORM	UG/KG	12	U	11	U	11	U	12	U	10	U	10	U	11	U
1,1,2,2-TETRACHLOROETHANE	UG/KG	12	U	11	U	11	U	12	U	10	U	10	U	11	UJ
XYLENES, TOTAL	UG/KG	12	U	11	U	11	U	12	U	10	U	10	U	11	U

SWMU 04 Surface Soil Data

	Building	SWMU4		SWMU4		SWMU4		SWMU4		SWMU4		SWMU4	
	StationID	W4-SB03		W4-SB03		W4-SB04		W4-SB05		W4-SB06		W4-SB07	
	SampleID	NDA061		NDA062FD1		NDA065		NDA067		NDA069		NDA071	
	DateCollected	04/18/2000		04/18/2000		04/18/2000		04/18/2000		04/18/2000		04/19/2000	
	Depth	0 to 0.5		0 to 0.5		0 to 0.5		0 to 0.5		0 to 0.5		0 to 0.5	
Parameter	**Units**												
cis-1,3-DICHLOROPROPENE	UG/KG	12	U	12	U	12	U	12	U	11	U	12	U
METHYL ISOBUTYL KETONE (4-METHYL-2-PENTANONE)	UG/KG	12	U	12	U	12	U	12	U	11	U	12	U
TOLUENE	UG/KG	12	U	12	U	12	U	12	U	11	U	12	U
trans-1,3-DICHLOROPROPENE	UG/KG	12	U	12	U	12	U	12	U	11	U	12	U
1,1,2-TRICHLOROETHANE	UG/KG	12	U	12	U	12	U	12	U	11	U	12	U
TETRACHLOROETHYLENE(PCE)	UG/KG	12	U	12	U	12	U	12	U	11	U	12	U
2-HEXANONE	UG/KG	12	U	12	U	12	U	12	U	11	U	12	U
DIBROMOCHLOROMETHANE	UG/KG	12	U	12	U	12	U	12	U	11	U	12	U
CHLOROBENZENE	UG/KG	12	U	12	U	12	U	12	U	11	U	12	U
ETHYLBENZENE	UG/KG	12	U	12	U	12	U	12	U	11	U	12	U
M,P-XYLENE (SUM OF ISOMERS)	UG/KG	12	U	12	U	12	U	12	U	11	U	12	U
O-XYLENE (1,2-DIMETHYLBENZENE)	UG/KG	12	U	12	U	12	U	12	U	11	U	12	U
STYRENE	UG/KG	12	U	12	U	12	U	12	U	11	U	12	U
BROMOFORM	UG/KG	12	U	12	U	12	U	12	U	11	U	12	U
1,1,2,2-TETRACHLOROETHANE	UG/KG	12	UJ	12	UJ	12	UJ	12	UJ	11	UJ	12	U
XYLENES, TOTAL	UG/KG	12	U	12	U	12	U	12	U	11	U	12	U

	Building	SWMU4		SWMU4		SWMU4		SWMU4		SWMU4		SWMU4	
	StationID	W4-SB07		W4-SB08		W4-SB09		W4-SB10		W4-SB11		W4-SB12	
	SampleID	NDA072FD1		NDA074		NDA076		NDA078		NDA080		NDA082	
	DateCollected	04/19/2000		04/19/2000		04/19/2000		04/19/2000		04/19/2000		04/19/2000	
	Depth	0 to 0.5		0 to 0.5		0 to 0.5		0 to 0.5		0 to 0.5		0 to 0.5	
Parameter	**Units**												
cis-1,3-DICHLOROPROPENE	UG/KG	11	UJ	10	U	10	U	11	U	10	U	13	U
METHYL ISOBUTYL KETONE (4-METHYL-2-PENTANONE)	UG/KG	11	UJ	10	U	10	U	11	U	10	U	13	U
TOLUENE	UG/KG	11	UJ	10	U	10	U	11	U	10	U	13	U
trans-1,3-DICHLOROPROPENE	UG/KG	11	UJ	10	U	10	U	11	U	10	U	13	U
1,1,2-TRICHLOROETHANE	UG/KG	11	UJ	10	U	10	U	11	U	10	U	13	U
TETRACHLOROETHYLENE(PCE)	UG/KG	11	UJ	10	U	10	U	11	U	10	U	13	U
2-HEXANONE	UG/KG	11	UJ	10	U	10	U	11	U	10	U	13	U
DIBROMOCHLOROMETHANE	UG/KG	11	UJ	10	U	10	U	11	U	10	U	13	U
CHLOROBENZENE	UG/KG	11	UJ	10	U	10	U	11	U	10	U	13	U
ETHYLBENZENE	UG/KG	11	UJ	10	U	10	U	11	U	10	U	13	U
M,P-XYLENE (SUM OF ISOMERS)	UG/KG	11	UJ	10	U	10	U	11	U	10	U	13	U
O-XYLENE (1,2-DIMETHYLBENZENE)	UG/KG	11	UJ	10	U	10	U	11	U	10	U	13	U
STYRENE	UG/KG	11	UJ	10	U	10	U	11	U	10	U	13	U
BROMOFORM	UG/KG	11	UJ	10	U	10	U	11	U	10	U	13	U
1,1,2,2-TETRACHLOROETHANE	UG/KG	11	UJ	10	U	10	U	11	U	10	U	13	U
XYLENES, TOTAL	UG/KG	11	UJ	10	U	10	U	11	U	10	U	13	U

SWMU 04 Subsurface Soil Data

Parameter	Units	Building	SWMU4		SWMU4		SWMU4		SWMU4		SWMU4		SWMU4	
		StationID	SWMU4-MW05		SWMU4-MW06		SWMU4-MW07		SWMU4-MW08		W4-SB01		W4-SB02	
		SampleID	NDB002		NDB005		NDB007		NDB009		NDA058		NDA060	
		DateCollected	06/06/2000		06/06/2000		06/06/2000		06/06/2000		04/18/2000		04/18/2000	
		Depth	4 to 6		4 to 6		4 to 6		4 to 6		4 to 6		4 to 6	
EXPLOSIVES														
2,6-DINITROTOLUENE	UG/KG		283	U	256	U	253	U	288	U	270	U	265	U
OCTAHYDRO-1,3,5,7-TETRANITRO-1,3,5,7-TETRAZOCINE	UG/KG		283	U	256	U	253	U	288	U	270	U	265	U
HEXAHYDRO-1,3,5-TRINITRO-1,3,5,7-TETRAZOCINE	UG/KG		283	U	256	U	253	U	288	U	270	U	265	U
1,3,5-TRINITROBENZENE	UG/KG		283	U	256	U	253	U	288	U	270	U	265	U
1,3-DINITROBENZENE	UG/KG		283	U	256	U	253	U	288	U	270	U	265	U
METHYL-2,4,6-TRINITROPHENYLNITRAMINE	UG/KG		283	U	256	U	253	U	288	U	270	U	265	U
NITROBENZENE	UG/KG		283	U	256	U	253	U	288	U	270	U	265	U
2,4,6-TRINITROTOLUENE	UG/KG		283	U	256	U	253	U	288	U	270	U	265	U
2,4-DINITROTOLUENE	UG/KG		283	U	256	U	253	U	288	U	270	U	265	U
2-NITROTOLUENE	UG/KG		283	U	256	U	253	U	288	U	270	U	265	U
4-NITROTOLUENE	UG/KG		283	U	256	U	253	U	288	U	270	U	265	U
3-NITROTOLUENE	UG/KG		283	U	256	U	253	U	288	U	270	U	265	U
METALS														
ALUMINUM	MG/KG		3510	=	2030	=	2440	=	3140	=	7470	J	4610	J
ANTIMONY	MG/KG		0.16	U	0.15	U	0.15	U	0.17	U	0.16	UJ	0.15	UJ
ARSENIC	MG/KG		1.2	J	0.75	J	0.83	J	0.97	J	0.66	J	0.62	J
BARIUM	MG/KG		364	=	78.6	=	101	=	87.5	=	702	R	177	R
BERYLLIUM	MG/KG		0.29	J	0.26	J	0.26	J	0.2	J	0.37	J	0.27	J
CADMIUM	MG/KG		0.023	U	0.021	U	0.021	U	0.024	U	0.022	U	0.022	U
CALCIUM	MG/KG		976	J	470	J	961	J	1120	J	821	J	668	J
CHROMIUM, TOTAL	MG/KG		19	=	3.6	=	2	J	5.8	=	7	=	9.7	=
COBALT	MG/KG		6.1	J	2.1	J	1.9	J	3.7	J	3.6	J	4.4	J
COPPER	MG/KG		7.9	=	2.7	J	5.7	=	11.3	=	5.2	J	8.1	=
IRON	MG/KG		7700	=	6170	=	4920	=	6790	=	8390	J	5530	J
LEAD	MG/KG		11.9	=	4.2	=	4	=	8.6	=	7.8	J	10	J
MAGNESIUM	MG/KG		957	J	806	J	938	J	670	J	983	J	673	J
MANGANESE	MG/KG		696	=	362	=	412	=	367	=	956	R	703	R
MERCURY	MG/KG		0.014	U	0.016	U	0.013	U	0.014	U	0.0093	U	0.014	U
NICKEL	MG/KG		7.1	J	0.49	J	0.54	J	1.3	J	2.5	J	3.6	J
POTASSIUM	MG/KG		479	J	407	J	433	J	566	J	321	J	231	J
SELENIUM	MG/KG		0.41	J	0.22	U	0.33	J	0.38	J	0.26	J	0.23	U
SILVER	MG/KG		0.057	U	0.053	U	0.052	U	0.061	U	0.056	U	0.055	U
SODIUM	MG/KG		416	J	655	J	590	J	226	J	1220	=	740	J
THALLIUM	MG/KG		0.76	J	0.55	J	0.45	J	0.33	U	0.3	U	0.3	U
VANADIUM	MG/KG		31.6	=	19.4	=	14.7	=	19	=	35.5	J	23.2	J
ZINC	MG/KG		15	=	13.6	=	15.1	=	19	=	9.6	=	14.7	=
PCB														

Parameter	Units	Building	SWMU4		SWMU4		SWMU4		SWMU4		SWMU4		SWMU4	
		StationID	W4-SB03		W4-SB03		W4-SB04		W4-SB05		W4-SB06		W4-SB07	
		SampleID	NDA063		NDA064FD1		NDA066		NDA068		NDA070		NDA073	
		DateCollected	04/18/2000		04/18/2000		04/18/2000		04/18/2000		04/19/2000		04/19/2000	
		Depth	4 to 6		4 to 6		4 to 6		4 to 6		4 to 6		4 to 6	
EXPLOSIVES														
2,6-DINITROTOLUENE	UG/KG		269	UJ	266	U	261	U	272	U	255	U	261	U
OCTAHYDRO-1,3,5,7-TETRANITRO-1,3,5,7-TETRAZOCINE	UG/KG		269	UJ	266	U	261	U	272	U	255	U	261	U
HEXAHYDRO-1,3,5-TRINITRO-1,3,5,7-TETRAZOCINE	UG/KG		269	UJ	266	U	261	U	272	U	255	U	261	U
1,3,5-TRINITROBENZENE	UG/KG		269	UJ	266	U	261	U	272	U	255	U	261	U
1,3-DINITROBENZENE	UG/KG		269	UJ	266	U	261	U	272	U	255	U	261	U
METHYL-2,4,6-TRINITROPHENYLNITRAMINE	UG/KG		269	UJ	266	U	261	U	272	U	255	U	261	U
NITROBENZENE	UG/KG		269	UJ	266	U	261	U	272	U	255	U	261	U
2,4,6-TRINITROTOLUENE	UG/KG		269	UJ	266	U	261	U	272	U	255	U	261	U
2,4-DINITROTOLUENE	UG/KG		269	UJ	266	U	261	U	272	U	255	U	261	U
2-NITROTOLUENE	UG/KG		269	UJ	266	U	261	U	272	U	255	U	261	U
4-NITROTOLUENE	UG/KG		269	UJ	266	U	261	U	272	U	255	U	261	U
3-NITROTOLUENE	UG/KG		269	UJ	266	U	261	U	272	U	255	U	261	U
METALS														
ALUMINUM	MG/KG		7700	=	6200	=	7150	=	11500	=	7760	=	3050	=
ANTIMONY	MG/KG		0.15	UJ	0.15	UJ	0.15	UJ	0.15	UJ	0.15	UJ	0.14	UJ
ARSENIC	MG/KG		1.8	J	1.5	J	1.1	J	2.3	=	0.83	J	0.58	J
BARIUM	MG/KG		504	J	869	R	103	J	829	R	892	R	108	=
BERYLLIUM	MG/KG		0.6	J	0.52	J	0.47	J	1.3	=	0.38	J	0.66	J
CADMIUM	MG/KG		0.022	U	0.022	U	0.021	U	0.022	U	0.021	U	0.021	U
CALCIUM	MG/KG		1310	=	987	J	1000	J	2970	=	37000	=	611	J
CHROMIUM, TOTAL	MG/KG		10	=	7.8	=	4.5	=	3.7	=	7.8	=	3	=
COBALT	MG/KG		5.5	J	0.21	J	3.8	J	2.5	J	3.7	J	6	J
COPPER	MG/KG		10	=	6.3	=	3.1	J	4.7	J	9.7	=	4	J
IRON	MG/KG		16000	=	11700	=	10400	=	14200	=	10400	=	10000	=
LEAD	MG/KG		21.1	=	12.2	=	7.2	=	7.7	=	20.7	=	4.8	=
MAGNESIUM	MG/KG		1340	=	1180	=	1000	J	4620	=	2660	=	1160	=
MANGANESE	MG/KG		742	=	293	=	280	=	574	=	477	=	447	=
MERCURY	MG/KG		0.012	U	0.014	U	0.012	U	0.014	U	0.01	U	0.012	U
NICKEL	MG/KG		1.8	J	1.4	J	1.1	J	1.8	J	4.4	J	0.89	J
POTASSIUM	MG/KG		357	J	278	J	238	J	373	J	433	J	293	J
SELENIUM	MG/KG		0.23	U	0.32	J	0.22	U	0.23	U	0.22	U	0.29	J
SILVER	MG/KG		0.054	U	0.054	U	0.053	U	0.055	U	0.053	U	0.052	U
SODIUM	MG/KG		1510	J	1470	J	448	J	3730	J	1370	J	912	J
THALLIUM	MG/KG		0.97	J	0.76	J	0.51	J	0.64	J	0.29	U	0.31	J
VANADIUM	MG/KG		71.9	=	57.6	=	31.5	=	35	=	37.1	=	31.3	=
ZINC	MG/KG		14.8	=	10.1	=	13	=	26.1	=	20.6	=	14.9	=
PCB														

SWMU 04 Subsurface Soil Data

Parameter	Units	Building	SWMU4		SWMU4		SWMU4		SWMU4		SWMU4	
		StationID	W4-SB08		W4-SB09		W4-SB10		W4-SB11		W4-SB12	
		SampleID	NDA075		NDA077		NDA079		NDA081		NDA083	
		DateCollected	04/19/2000		04/19/2000		04/19/2000		04/19/2000		04/19/2000	
		Depth	4 to 6		4 to 6		4 to 6		4 to 6		4 to 6	
EXPLOSIVES												
2,6-DINITROTOLUENE	UG/KG		256	U	292	U	143	UJ	393	R	424	R
OCTAHYDRO-1,3,5,7-TETRANITRO-1,3,5,7-TETRAZOCINE	UG/KG		256	U	292	U	143	UJ	266	U	236	U
HEXAHYDRO-1,3,5-TRINITRO-1,3,5,7-TETRAZOCINE	UG/KG		256	U	292	U	143	UJ	266	U	236	U
1,3,5-TRINITROBENZENE	UG/KG		256	U	292	U	143	UJ	266	U	236	U
1,3-DINITROBENZENE	UG/KG		256	U	292	U	143	UJ	266	U	236	U
METHYL-2,4,6-TRINITROPHENYLNITRAMINE	UG/KG		256	U	292	U	143	UJ	266	U	236	U
NITROBENZENE	UG/KG		256	U	292	U	143	UJ	393	R	424	R
2,4,6-TRINITROTOLUENE	UG/KG		256	U	292	U	143	UJ	266	U	236	U
2,4-DINITROTOLUENE	UG/KG		256	U	292	U	143	UJ	393	R	424	R
2-NITROTOLUENE	UG/KG		256	U	292	U	143	UJ	266	U	236	U
4-NITROTOLUENE	UG/KG		256	U	292	U	143	UJ	266	U	236	U
3-NITROTOLUENE	UG/KG		256	U	292	U	143	UJ	266	U	236	U
METALS												
ALUMINUM	MG/KG		5850	=	5110	=	8500	=	6020	=	2080	=
ANTIMONY	MG/KG		0.15	UJ	0.17	UJ	0.16	UJ	0.15	UJ	0.15	UJ
ARSENIC	MG/KG		1.2	J	0.88	J	0.85	J	0.36	U	0.35	U
BARIUM	MG/KG		247	=	387	=	164	=	219	=	104	=
BERYLLIUM	MG/KG		0.43	J	0.38	J	0.55	J	0.26	J	0.16	J
CADMIUM	MG/KG		0.021	U	0.024	U	0.023	U	0.021	U	0.021	U
CALCIUM	MG/KG		2540	=	2050	=	8790	=	894	J	1090	=
CHROMIUM, TOTAL	MG/KG		6.4	=	3.7	=	5.7	=	14.7	=	1.9	J
COBALT	MG/KG		4.3	J	7.1	J	8	J	2.4	J	3	J
COPPER	MG/KG		6.8	=	7.7	=	7.2	=	2.3	J	3.4	J
IRON	MG/KG		13900	=	12000	=	22700	=	4470	=	6530	=
LEAD	MG/KG		7.7	=	9	=	7.5	=	5.6	=	4.6	=
MAGNESIUM	MG/KG		2950	=	1330	=	2380	=	538	J	382	J
MANGANESE	MG/KG		460	=	906	=	761	=	169	=	321	=
MERCURY	MG/KG		0.012	U	0.012	U	0.012	U	0.011	U	0.012	U
NICKEL	MG/KG		2.3	J	2.2	J	2	J	2	J	0.47	J
POTASSIUM	MG/KG		290	J	340	J	262	J	198	J	263	J
SELENIUM	MG/KG		0.22	U	0.25	U	0.24	U	0.22	U	0.22	U
SILVER	MG/KG		0.053	U	0.06	U	0.057	U	0.054	U	0.052	U
SODIUM	MG/KG		1420	J	653	J	1960	J	453	J	93.6	J
THALLIUM	MG/KG		0.64	J	0.77	J	1.1	J	0.29	U	0.33	J
VANADIUM	MG/KG		33.8	=	47.2	=	87.9	=	17.7	=	25.1	=
ZINC	MG/KG		24.5	=	15.8	=	13.6	=	8.1	=	6.6	=
PCB												

	Building	SWMU4		SWMU4		SWMU4		SWMU4		SWMU4		SWMU4	
	StationID	SWMU4-MW05		SWMU4-MW06		SWMU4-MW07		SWMU4-MW08		W4-SB01		W4-SB02	
	SampleID	NDB002		NDB005		NDB007		NDB009		NDA058		NDA060	
	DateCollected	06/06/2000		06/06/2000		06/06/2000		06/06/2000		04/18/2000		04/18/2000	
	Depth	4 to 6		4 to 6		4 to 6		4 to 6		4 to 6		4 to 6	
Parameter	**Units**												
PCB-1016 (AROCHLOR 1016)	UG/KG	38	U	35	U	34	U	40	U	37	UJ	36	UJ
PCB-1260 (AROCHLOR 1260)	UG/KG	38	U	35	U	34	U	40	U	37	UJ	36	UJ
PCB-1221 (AROCHLOR 1221)	UG/KG	76	U	71	U	69	U	80	U	74	UJ	73	UJ
PCB-1232 (AROCHLOR 1232)	UG/KG	38	U	35	U	34	U	40	U	37	UJ	36	UJ
PCB-1242 (AROCHLOR 1242)	UG/KG	38	U	35	U	34	U	40	U	37	UJ	36	UJ
PCB-1248 (AROCHLOR 1248)	UG/KG	38	U	35	U	34	U	40	U	37	UJ	36	UJ
PCB-1254 (AROCHLOR 1254)	UG/KG	38	U	35	U	34	U	40	U	37	UJ	36	UJ
PESTICIDES													
ALPHA BHC (ALPHA HEXACHLOROCYCLOHEXANE)	UG/KG	1.9	U	1.8	U	1.8	U	2	U	1.9	UJ	1.9	UJ
BETA BHC (BETA HEXACHLOROCYCLOHEXANE)	UG/KG	1.9	U	1.8	U	1.8	U	2	U	1.9	UJ	1.9	UJ
DELTA BHC (DELTA HEXACHLOROCYCLOHEXANE)	UG/KG	1.9	U	1.8	U	1.8	U	2	U	1.9	UJ	1.9	UJ
GAMMA BHC (LINDANE)	UG/KG	1.9	U	1.8	U	1.8	U	2	U	1.9	UJ	1.9	UJ
HEPTACHLOR	UG/KG	1.9	U	1.8	U	1.8	U	2	U	1.9	UJ	1.9	UJ
ALDRIN	UG/KG	1.9	U	1.8	U	1.8	U	2	U	1.9	UJ	1.9	UJ
HEPTACHLOR EPOXIDE	UG/KG	1.9	U	1.8	U	1.8	U	2	U	1.9	UJ	1.9	UJ
ALPHA ENDOSULFAN (ENDOSULFAN I)	UG/KG	1.9	U	1.8	U	1.8	U	2	U	1.9	UJ	1.9	UJ
DIELDRIN	UG/KG	3.8	U	3.5	U	3.4	U	4	U	3.7	UJ	3.7	UJ
p,p'-DDE	UG/KG	3.8	U	3.5	U	3.4	U	4	U	3.7	UJ	3.7	UJ
ENDRIN	UG/KG	3.8	U	3.5	U	3.4	U	4	U	3.7	UJ	3.7	UJ
BETA ENDOSULFAN (ENDOSULFAN II)	UG/KG	3.8	U	3.5	U	3.4	U	4	U	3.7	UJ	3.7	UJ
p,p'-DDD	UG/KG	3.8	U	3.5	U	3.4	U	4	U	3.7	UJ	3.7	UJ
ENDOSULFAN SULFATE	UG/KG	3.8	U	3.5	U	3.4	U	4	U	3.7	UJ	3.7	UJ
p,p'-DDT	UG/KG	3.8	U	3.5	U	3.4	U	4	U	3.7	UJ	3.7	UJ
METHOXYCHLOR	UG/KG	19	U	18	U	18	U	20	U	19	UJ	19	UJ
ENDRIN ALDEHYDE	UG/KG	3.8	U	3.5	U	3.4	U	4	U	3.7	UJ	3.7	UJ
ALPHA-CHLORDANE	UG/KG	1.9	U	1.8	U	1.8	U	2	U	1.9	UJ	1.9	UJ
GAMMA-CHLORDANE	UG/KG	1.9	U	1.8	U	1.8	U	2	U	1.9	UJ	1.9	UJ
ENDRIN KETONE	UG/KG	3.8	U	3.5	U	3.4	U	4	U	3.7	UJ	3.7	UJ
TOXAPHENE	UG/KG	193	U	180	U	176	U	204	U	117	UJ	186	UJ
SEMI-VOLATILES													
bis(2-CHLOROETHYL) ETHER (2-CHLOROETHYL ETHER)	UG/KG	468	U	467	U	407	U	527	U	460	UJ	478	UJ
PHENOL	UG/KG	468	U	467	U	407	U	527	U	460	UJ	478	UJ
2-CHLOROPHENOL	UG/KG	468	U	467	U	407	U	527	U	460	UJ	478	UJ
1,3,5-TRINITROBENZENE	UG/KG	283	U	256	U	253	U	288	U	270	U	265	U
1,3-DICHLOROBENZENE	UG/KG	468	U	467	U	407	U	527	U	460	UJ	478	UJ
1,3-DINITROBENZENE	UG/KG	283	U	256	U	253	U	288	U	270	U	265	U
1,4-DICHLOROBENZENE	UG/KG	468	U	467	U	407	U	527	U	460	UJ	478	UJ
1,2-DICHLOROBENZENE	UG/KG	468	U	467	U	407	U	527	U	460	UJ	478	UJ

SWMU 04 Subsurface Soil Data

Parameter	Units	Building	SWMU4		SWMU4		SWMU4		SWMU4		SWMU4		SWMU4	
		StationID	W4-SB03		W4-SB03		W4-SB04		W4-SB05		W4-SB06		W4-SB07	
		SampleID	NDA063		NDA064FD1		NDA066		NDA068		NDA070		NDA073	
		DateCollected	04/18/2000		04/18/2000		04/18/2000		04/18/2000		04/19/2000		04/19/2000	
		Depth	4 to 6		4 to 6		4 to 6		4 to 6		4 to 6		4 to 6	
PCB-1016 (AROCHLOR 1016)	UG/KG		35	UJ	35	UJ	35	UJ	36	UJ	35	UJ	35	UJ
PCB-1260 (AROCHLOR 1260)	UG/KG		35	UJ	35	UJ	35	UJ	36	UJ	35	UJ	35	UJ
PCB-1221 (AROCHLOR 1221)	UG/KG		72	UJ	72	UJ	70	UJ	72	UJ	71	UJ	71	UJ
PCB-1232 (AROCHLOR 1232)	UG/KG		35	UJ	35	UJ	35	UJ	36	UJ	35	UJ	35	UJ
PCB-1242 (AROCHLOR 1242)	UG/KG		35	UJ	35	UJ	35	UJ	36	UJ	35	UJ	35	UJ
PCB-1248 (AROCHLOR 1248)	UG/KG		35	UJ	35	UJ	35	UJ	36	UJ	35	UJ	35	UJ
PCB-1254 (AROCHLOR 1254)	UG/KG		35	UJ	35	UJ	35	UJ	36	UJ	35	UJ	35	UJ
PESTICIDES														
ALPHA BHC (ALPHA HEXACHLOROCYCLOHEXANE)	UG/KG		1.8	UJ	1.8	UJ	1.8	UJ	1.8	UJ	1.8	UJ	1.8	UJ
BETA BHC (BETA HEXACHLOROCYCLOHEXANE)	UG/KG		1.8	UJ	1.8	UJ	1.8	UJ	1.8	UJ	1.8	UJ	1.8	UJ
DELTA BHC (DELTA HEXACHLOROCYCLOHEXANE)	UG/KG		1.8	UJ	1.8	UJ	1.8	UJ	1.8	UJ	1.8	UJ	1.8	UJ
GAMMA BHC (LINDANE)	UG/KG		1.8	UJ	1.8	UJ	1.8	UJ	1.8	UJ	1.8	UJ	1.8	UJ
HEPTACHLOR	UG/KG		1.8	UJ	1.8	UJ	1.8	UJ	1.8	UJ	1.8	UJ	1.8	UJ
ALDRIN	UG/KG		1.8	UJ	1.8	UJ	1.8	UJ	1.8	UJ	1.8	UJ	1.8	UJ
HEPTACHLOR EPOXIDE	UG/KG		1.8	UJ	1.8	UJ	1.8	UJ	1.8	UJ	1.8	UJ	1.8	UJ
ALPHA ENDOSULFAN (ENDOSULFAN I)	UG/KG		1.8	UJ	1.8	UJ	1.8	UJ	1.8	UJ	1.8	UJ	1.8	UJ
DIELDRIN	UG/KG		3.6	UJ	3.6	UJ	3.5	UJ	3.6	UJ	3.5	UJ	3.5	UJ
p,p'-DDE	UG/KG		3.6	UJ	3.6	UJ	3.5	UJ	3.6	UJ	3.5	UJ	3.5	UJ
ENDRIN	UG/KG		3.6	UJ	3.6	UJ	3.5	UJ	3.6	UJ	3.5	UJ	3.5	UJ
BETA ENDOSULFAN (ENDOSULFAN II)	UG/KG		3.6	UJ	3.6	UJ	3.5	UJ	3.6	UJ	3.5	UJ	3.5	UJ
p,p'-DDD	UG/KG		3.6	UJ	3.6	UJ	3.5	UJ	3.6	UJ	3.5	UJ	3.5	UJ
ENDOSULFAN SULFATE	UG/KG		3.6	UJ	3.6	UJ	3.5	UJ	3.6	UJ	3.5	UJ	3.5	UJ
p,p'-DDT	UG/KG		3.6	UJ	3.6	UJ	3.5	UJ	3.6	UJ	3.5	UJ	3.5	UJ
METHOXYCHLOR	UG/KG		18	UJ	18	UJ	18	UJ	18	UJ	18	UJ	18	UJ
ENDRIN ALDEHYDE	UG/KG		3.6	UJ	3.6	UJ	3.5	UJ	3.6	UJ	3.5	UJ	3.5	UJ
ALPHA-CHLORDANE	UG/KG		1.8	UJ	1.8	UJ	1.8	UJ	1.8	UJ	1.8	UJ	1.8	UJ
GAMMA-CHLORDANE	UG/KG		1.8	UJ	1.8	UJ	1.8	UJ	1.8	UJ	1.8	UJ	1.8	UJ
ENDRIN KETONE	UG/KG		3.6	UJ	3.6	UJ	3.5	UJ	3.6	UJ	3.5	UJ	3.5	UJ
TOXAPHENE	UG/KG		182	UJ	182	UJ	178	UJ	184	UJ	180	UJ	180	UJ
SEMI-VOLATILES														
bis(2-CHLOROETHYL) ETHER (2-CHLOROETHYL ETHER)	UG/KG		382	UJ	351	UJ	344	UJ	360	UJ	404	UJ	383	UJ
PHENOL	UG/KG		382	UJ	351	UJ	344	UJ	360	UJ	404	UJ	383	UJ
2-CHLOROPHENOL	UG/KG		382	UJ	351	UJ	344	UJ	360	UJ	404	UJ	383	UJ
1,3,5-TRINITROBENZENE	UG/KG		269	UJ	266	U	261	U	272	U	255	U	261	U
1,3-DICHLOROBENZENE	UG/KG		382	UJ	351	UJ	344	UJ	360	UJ	404	UJ	383	UJ
1,3-DINITROBENZENE	UG/KG		269	UJ	266	U	261	U	272	U	255	U	261	U
1,4-DICHLOROBENZENE	UG/KG		382	UJ	351	UJ	344	UJ	360	UJ	404	UJ	383	UJ
1,2-DICHLOROBENZENE	UG/KG		382	UJ	351	UJ	344	UJ	360	UJ	404	UJ	383	UJ

	Building	SWMU4		SWMU4		SWMU4		SWMU4		SWMU4	
	StationID	W4-SB08		W4-SB09		W4-SB10		W4-SB11		W4-SB12	
	SampleID	NDA075		NDA077		NDA079		NDA081		NDA083	
	DateCollected	04/19/2000		04/19/2000		04/19/2000		04/19/2000		04/19/2000	
	Depth	4 to 6		4 to 6		4 to 6		4 to 6		4 to 6	
Parameter	**Units**										
PCB-1016 (AROCHLOR 1016)	UG/KG	34	UJ	39	UJ	38	UJ	34	UJ	34	UJ
PCB-1260 (AROCHLOR 1260)	UG/KG	34	UJ	39	UJ	38	UJ	34	UJ	34	UJ
PCB-1221 (AROCHLOR 1221)	UG/KG	70	UJ	80	UJ	77	UJ	70	UJ	70	UJ
PCB-1232 (AROCHLOR 1232)	UG/KG	34	UJ	39	UJ	38	UJ	34	UJ	34	UJ
PCB-1242 (AROCHLOR 1242)	UG/KG	34	UJ	39	UJ	38	UJ	34	UJ	34	UJ
PCB-1248 (AROCHLOR 1248)	UG/KG	34	UJ	39	UJ	38	UJ	34	UJ	34	UJ
PCB-1254 (AROCHLOR 1254)	UG/KG	34	UJ	39	UJ	38	UJ	34	UJ	34	UJ
PESTICIDES											
ALPHA BHC (ALPHA HEXACHLOROCYCLOHEXANE)	UG/KG	0.18	UJ	0.2	UJ	0.19	UJ	0.18	UJ	0.17	UJ
BETA BHC (BETA HEXACHLOROCYCLOHEXANE)	UG/KG	0.18	UJ	0.2	UJ	0.19	UJ	0.18	UJ	0.17	UJ
DELTA BHC (DELTA HEXACHLOROCYCLOHEXANE)	UG/KG	0.18	UJ	0.2	UJ	0.19	UJ	0.18	UJ	0.17	UJ
GAMMA BHC (LINDANE)	UG/KG	0.18	UJ	0.2	UJ	0.19	UJ	0.18	UJ	0.17	UJ
HEPTACHLOR	UG/KG	0.18	UJ	0.2	UJ	0.19	UJ	0.18	UJ	0.17	UJ
ALDRIN	UG/KG	0.18	UJ	0.2	UJ	0.19	UJ	0.18	UJ	0.17	UJ
HEPTACHLOR EPOXIDE	UG/KG	0.18	UJ	0.2	UJ	0.19	UJ	0.18	UJ	0.17	UJ
ALPHA ENDOSULFAN (ENDOSULFAN I)	UG/KG	0.18	UJ	0.2	UJ	0.19	UJ	0.18	UJ	0.17	UJ
DIELDRIN	UG/KG	0.35	UJ	0.4	UJ	0.38	UJ	0.35	UJ	0.34	UJ
p,p'-DDE	UG/KG	0.35	UJ	0.4	UJ	0.38	UJ	0.35	UJ	0.34	UJ
ENDRIN	UG/KG	0.35	UJ	0.4	UJ	0.38	UJ	0.35	UJ	0.34	UJ
BETA ENDOSULFAN (ENDOSULFAN II)	UG/KG	0.35	UJ	0.4	UJ	0.38	UJ	0.35	UJ	0.34	UJ
p,p'-DDD	UG/KG	0.35	UJ	0.4	UJ	0.38	UJ	0.35	UJ	0.34	UJ
ENDOSULFAN SULFATE	UG/KG	0.35	UJ	0.4	UJ	0.38	UJ	0.35	UJ	0.34	UJ
p,p'-DDT	UG/KG	0.35	UJ	0.4	UJ	0.38	UJ	0.35	UJ	0.34	UJ
METHOXYCHLOR	UG/KG	1.8	UJ	2	UJ	1.9	UJ	1.8	UJ	1.7	UJ
ENDRIN ALDEHYDE	UG/KG	0.35	UJ	0.4	UJ	0.38	UJ	0.35	UJ	0.34	UJ
ALPHA-CHLORDANE	UG/KG	0.18	UJ	0.2	UJ	0.19	UJ	0.18	UJ	0.17	UJ
GAMMA-CHLORDANE	UG/KG	0.18	UJ	0.2	UJ	0.19	UJ	0.18	UJ	0.17	UJ
ENDRIN KETONE	UG/KG	0.35	UJ	0.4	UJ	0.38	UJ	0.35	UJ	0.34	UJ
TOXAPHENE	UG/KG	18	UJ	20	UJ	19	UJ	18	UJ	17	UJ
SEMI-VOLATILES											
bis(2-CHLOROETHYL) ETHER (2-CHLOROETHYL ETHER)	UG/KG	401	UJ	441	UJ	466	UJ	393	R	424	R
PHENOL	UG/KG	401	UJ	441	UJ	466	UJ	393	R	424	R
2-CHLOROPHENOL	UG/KG	401	UJ	441	UJ	466	UJ	393	R	424	R
1,3,5-TRINITROBENZENE	UG/KG	256	U	292	U	143	UJ	266	U	236	U
1,3-DICHLOROBENZENE	UG/KG	401	UJ	441	UJ	466	UJ	393	R	424	R
1,3-DINITROBENZENE	UG/KG	256	U	292	U	143	UJ	266	U	236	U
1,4-DICHLOROBENZENE	UG/KG	401	UJ	441	UJ	466	UJ	393	R	424	R
1,2-DICHLOROBENZENE	UG/KG	401	UJ	441	UJ	466	UJ	393	R	424	R

SWMU 04 Subsurface Soil Data

	Building	SWMU4		SWMU4		SWMU4		SWMU4		SWMU4		SWMU4	
	StationID	SWMU4-MW05		SWMU4-MW06		SWMU4-MW07		SWMU4-MW08		W4-SB01		W4-SB02	
	SampleID	NDB002		NDB005		NDB007		NDB009		NDA058		NDA060	
	DateCollected	06/06/2000		06/06/2000		06/06/2000		06/06/2000		04/18/2000		04/18/2000	
	Depth	4 to 6		4 to 6		4 to 6		4 to 6		4 to 6		4 to 6	
Parameter	**Units**												
bis(2-CHLOROISOPROPYL) ETHER	UG/KG	468	U	467	U	407	U	527	U	460	UJ	478	UJ
2-METHYLPHENOL (o-CRESOL)	UG/KG	468	U	467	U	407	U	527	U	460	UJ	478	UJ
HEXACHLOROETHANE	UG/KG	468	U	467	U	407	U	527	U	460	UJ	478	UJ
N-NITROSODI-n-PROPYLAMINE	UG/KG	468	U	467	U	407	U	527	U	460	UJ	478	UJ
CRESOLS, m & p	UG/KG	468	U	467	U	407	U	527	U	460	UJ	478	UJ
NITROBENZENE	UG/KG	283	U	256	U	253	U	288	U	270	U	265	U
ISOPHORONE	UG/KG	468	U	467	U	407	U	527	U	460	UJ	478	UJ
2-NITROPHENOL	UG/KG	468	U	467	U	407	U	527	U	460	UJ	478	UJ
2,4-DIMETHYLPHENOL	UG/KG	468	U	467	U	407	U	527	U	460	UJ	478	UJ
bis(2-CHLOROETHOXY) METHANE	UG/KG	468	U	467	U	407	U	527	U	460	UJ	478	UJ
2,4-DICHLOROPHENOL	UG/KG	468	U	467	U	407	U	527	U	460	UJ	478	UJ
1,2,4-TRICHLOROBENZENE	UG/KG	468	U	467	U	407	U	527	U	460	UJ	478	UJ
NAPHTHALENE	UG/KG	468	U	467	U	407	U	527	U	460	UJ	478	UJ
4-CHLOROANILINE	UG/KG	468	U	467	U	407	U	527	U	460	UJ	478	UJ
2-METHYLNAPHTHALENE	UG/KG	468	U	467	U	407	U	527	U	460	UJ	478	UJ
HEXACHLOROBUTADIENE	UG/KG	468	U	467	U	407	U	527	U	460	UJ	478	UJ
4-CHLORO-3-METHYLPHENOL	UG/KG	468	U	467	U	407	U	527	U	460	UJ	478	UJ
HEXACHLOROCYCLOPENTADIENE	UG/KG	468	U	467	U	407	U	527	U	460	UJ	478	UJ
2,4,6-TRICHLOROPHENOL	UG/KG	468	U	467	U	407	U	527	U	460	UJ	478	UJ
2,4,5-TRICHLOROPHENOL	UG/KG	1400	U	1400	U	1220	U	1580	U	1380	UJ	1430	UJ
2-CHLORONAPHTHALENE	UG/KG	468	U	467	U	407	U	527	U	460	UJ	478	UJ
2-NITROANILINE	UG/KG	1400	U	1400	U	1220	U	1580	U	1380	UJ	1430	UJ
ACENAPHTHYLENE	UG/KG	468	U	467	U	407	U	527	U	460	UJ	478	UJ
DIMETHYL PHTHALATE	UG/KG	468	U	467	U	407	U	527	U	460	UJ	478	UJ
2,6-DINITROTOLUENE	UG/KG	283	U	256	U	253	U	288	U	270	U	265	U
ACENAPHTHENE	UG/KG	468	U	467	U	407	U	527	U	460	UJ	478	UJ
3-NITROANILINE	UG/KG	1400	U	1400	U	1220	U	1580	U	1380	UJ	1430	UJ
2,4-DINITROPHENOL	UG/KG	1400	U	1400	U	1220	U	1580	U	1380	UJ	1430	UJ
DIBENZOFURAN	UG/KG	468	U	467	U	407	U	527	U	460	UJ	478	UJ
2,4-DINITROTOLUENE	UG/KG	283	U	256	U	253	U	288	U	270	U	265	U
4-NITROPHENOL	UG/KG	1400	U	1400	U	1220	U	1580	U	1380	UJ	1430	UJ
FLUORENE	UG/KG	468	U	467	U	407	U	527	U	460	UJ	478	UJ
4-CHLOROPHENYL PHENYL ETHER	UG/KG	468	U	467	U	407	U	527	U	460	UJ	478	UJ
DIETHYL PHTHALATE	UG/KG	468	U	467	U	407	U	527	U	460	UJ	478	UJ
4-NITROANILINE	UG/KG	1400	U	1400	U	1220	U	1580	U	1380	UJ	1430	UJ
4,6-DINITRO-2-METHYLPHENOL	UG/KG	1400	U	1400	U	1220	U	1580	U	1380	UJ	1430	UJ
N-NITROSODIPHENYLAMINE	UG/KG	468	U	467	U	407	U	527	U	460	UJ	478	UJ
4-BROMOPHENYL PHENYL ETHER	UG/KG	468	U	467	U	407	U	527	U	460	UJ	478	UJ

	Building	SWMU4		SWMU4		SWMU4		SWMU4		SWMU4		SWMU4	
	StationID	W4-SB03		W4-SB03		W4-SB04		W4-SB05		W4-SB06		W4-SB07	
	SampleID	NDA063		NDA064FD1		NDA066		NDA068		NDA070		NDA073	
	DateCollected	04/18/2000		04/18/2000		04/18/2000		04/18/2000		04/19/2000		04/19/2000	
	Depth	4 to 6		4 to 6		4 to 6		4 to 6		4 to 6		4 to 6	
Parameter	**Units**												
bis(2-CHLOROISOPROPYL) ETHER	UG/KG	382	UJ	351	UJ	344	UJ	360	UJ	404	UJ	383	UJ
2-METHYLPHENOL (o-CRESOL)	UG/KG	382	UJ	351	UJ	344	UJ	360	UJ	404	UJ	383	UJ
HEXACHLOROETHANE	UG/KG	382	UJ	351	UJ	344	UJ	360	UJ	404	UJ	383	UJ
N-NITROSODI-n-PROPYLAMINE	UG/KG	382	UJ	351	UJ	344	UJ	360	UJ	404	UJ	383	UJ
CRESOLS, m & p	UG/KG	382	UJ	351	UJ	344	UJ	360	UJ	404	UJ	383	UJ
NITROBENZENE	UG/KG	269	UJ	266	U	261	U	272	U	255	U	261	U
ISOPHORONE	UG/KG	382	UJ	351	UJ	344	UJ	360	UJ	404	UJ	383	UJ
2-NITROPHENOL	UG/KG	382	UJ	351	UJ	344	UJ	360	UJ	404	UJ	383	UJ
2,4-DIMETHYLPHENOL	UG/KG	382	UJ	351	UJ	344	UJ	360	UJ	404	UJ	383	UJ
bis(2-CHLOROETHOXY) METHANE	UG/KG	382	UJ	351	UJ	344	UJ	360	UJ	404	UJ	383	UJ
2,4-DICHLOROPHENOL	UG/KG	382	UJ	351	UJ	344	UJ	360	UJ	404	UJ	383	UJ
1,2,4-TRICHLOROBENZENE	UG/KG	382	UJ	351	UJ	344	UJ	360	UJ	404	UJ	383	UJ
NAPHTHALENE	UG/KG	382	UJ	351	UJ	344	UJ	360	UJ	404	UJ	383	UJ
4-CHLOROANILINE	UG/KG	382	UJ	351	UJ	344	UJ	360	UJ	404	UJ	383	UJ
2-METHYLNAPHTHALENE	UG/KG	382	UJ	351	UJ	344	UJ	360	UJ	404	UJ	383	UJ
HEXACHLOROBUTADIENE	UG/KG	382	UJ	351	UJ	344	UJ	360	UJ	404	UJ	383	UJ
4-CHLORO-3-METHYLPHENOL	UG/KG	382	UJ	351	UJ	344	UJ	360	UJ	404	UJ	383	UJ
HEXACHLOROCYCLOPENTADIENE	UG/KG	382	UJ	351	UJ	344	UJ	360	UJ	404	UJ	383	UJ
2,4,6-TRICHLOROPHENOL	UG/KG	382	UJ	351	UJ	344	UJ	360	UJ	404	UJ	383	UJ
2,4,5-TRICHLOROPHENOL	UG/KG	1150	UJ	1050	UJ	1030	UJ	1080	UJ	1210	UJ	1150	UJ
2-CHLORONAPHTHALENE	UG/KG	382	UJ	351	UJ	344	UJ	360	UJ	404	UJ	383	UJ
2-NITROANILINE	UG/KG	1150	UJ	1050	UJ	1030	UJ	1080	UJ	1210	UJ	1150	UJ
ACENAPHTHYLENE	UG/KG	382	UJ	351	UJ	344	UJ	360	UJ	404	UJ	383	UJ
DIMETHYL PHTHALATE	UG/KG	382	UJ	351	UJ	344	UJ	360	UJ	404	UJ	383	UJ
2,6-DINITROTOLUENE	UG/KG	269	UJ	266	U	261	U	272	U	255	U	261	U
ACENAPHTHENE	UG/KG	382	UJ	351	UJ	344	UJ	360	UJ	404	UJ	383	UJ
3-NITROANILINE	UG/KG	1150	UJ	1050	UJ	1030	UJ	1080	UJ	1210	UJ	1150	UJ
2,4-DINITROPHENOL	UG/KG	1150	UJ	1050	UJ	1030	UJ	1080	UJ	1210	UJ	1150	UJ
DIBENZOFURAN	UG/KG	382	UJ	351	UJ	344	UJ	360	UJ	404	UJ	383	UJ
2,4-DINITROTOLUENE	UG/KG	269	UJ	266	U	261	U	272	U	255	U	261	U
4-NITROPHENOL	UG/KG	1150	UJ	1050	UJ	1030	UJ	1080	UJ	1210	UJ	1150	UJ
FLUORENE	UG/KG	382	UJ	351	UJ	344	UJ	360	UJ	404	UJ	383	UJ
4-CHLOROPHENYL PHENYL ETHER	UG/KG	382	UJ	351	UJ	344	UJ	360	UJ	404	UJ	383	UJ
DIETHYL PHTHALATE	UG/KG	382	UJ	351	UJ	344	UJ	360	UJ	404	UJ	383	UJ
4-NITROANILINE	UG/KG	1150	UJ	1050	UJ	1030	UJ	1080	UJ	1210	UJ	1150	UJ
4,6-DINITRO-2-METHYLPHENOL	UG/KG	1150	UJ	1050	UJ	1030	UJ	1080	UJ	1210	UJ	1150	UJ
N-NITROSODIPHENYLAMINE	UG/KG	382	UJ	351	UJ	344	UJ	360	UJ	404	UJ	383	UJ
4-BROMOPHENYL PHENYL ETHER	UG/KG	382	UJ	351	UJ	344	UJ	360	UJ	404	UJ	383	UJ

SWMU 04 Subsurface Soil Data

Parameter	Units	Building	SWMU4		SWMU4		SWMU4		SWMU4		SWMU4	
		StationID	W4-SB08		W4-SB09		W4-SB10		W4-SB11		W4-SB12	
		SampleID	NDA075		NDA077		NDA079		NDA081		NDA083	
		DateCollected	04/19/2000		04/19/2000		04/19/2000		04/19/2000		04/19/2000	
		Depth	4 to 6		4 to 6		4 to 6		4 to 6		4 to 6	
bis(2-CHLOROISOPROPYL) ETHER	UG/KG		401	UJ	441	UJ	466	UJ	393	R	424	R
2-METHYLPHENOL (o-CRESOL)	UG/KG		401	UJ	441	UJ	466	UJ	393	R	424	R
HEXACHLOROETHANE	UG/KG		401	UJ	441	UJ	466	UJ	393	R	424	R
N-NITROSODI-n-PROPYLAMINE	UG/KG		401	UJ	441	UJ	466	UJ	393	R	424	R
CRESOLS, m & p	UG/KG		401	UJ	441	UJ	466	UJ	393	R	424	R
NITROBENZENE	UG/KG		256	U	292	U	143	UJ	393	R	424	R
ISOPHORONE	UG/KG		401	UJ	441	UJ	466	UJ	393	R	424	R
2-NITROPHENOL	UG/KG		401	UJ	441	UJ	466	UJ	393	R	424	R
2,4-DIMETHYLPHENOL	UG/KG		401	UJ	441	UJ	466	UJ	393	R	424	R
bis(2-CHLOROETHOXY) METHANE	UG/KG		401	UJ	441	UJ	466	UJ	393	R	424	R
2,4-DICHLOROPHENOL	UG/KG		401	UJ	441	UJ	466	UJ	393	R	424	R
1,2,4-TRICHLOROBENZENE	UG/KG		401	UJ	441	UJ	466	UJ	393	R	424	R
NAPHTHALENE	UG/KG		401	UJ	441	UJ	466	UJ	393	R	424	R
4-CHLOROANILINE	UG/KG		401	UJ	441	UJ	466	UJ	393	R	424	R
2-METHYLNAPHTHALENE	UG/KG		401	UJ	441	UJ	466	UJ	393	R	424	R
HEXACHLOROBUTADIENE	UG/KG		401	UJ	441	UJ	466	UJ	393	R	424	R
4-CHLORO-3-METHYLPHENOL	UG/KG		401	UJ	441	UJ	466	UJ	393	R	424	R
HEXACHLOROCYCLOPENTADIENE	UG/KG		401	UJ	441	UJ	466	UJ	393	R	424	R
2,4,6-TRICHLOROPHENOL	UG/KG		401	UJ	441	UJ	466	UJ	393	R	424	R
2,4,5-TRICHLOROPHENOL	UG/KG		1200	UJ	1320	UJ	1400	UJ	1180	R	1270	R
2-CHLORONAPHTHALENE	UG/KG		401	UJ	441	UJ	466	UJ	393	R	424	R
2-NITROANILINE	UG/KG		1200	UJ	1320	UJ	1400	UJ	1180	R	1270	R
ACENAPHTHYLENE	UG/KG		401	UJ	441	UJ	466	UJ	393	R	424	R
DIMETHYL PHTHALATE	UG/KG		401	UJ	441	UJ	466	UJ	393	R	424	R
2,6-DINITROTOLUENE	UG/KG		256	U	292	U	143	UJ	393	R	424	R
ACENAPHTHENE	UG/KG		401	UJ	441	UJ	466	UJ	393	R	424	R
3-NITROANILINE	UG/KG		1200	UJ	1320	UJ	1400	UJ	1180	R	1270	R
2,4-DINITROPHENOL	UG/KG		1200	UJ	1320	UJ	1400	UJ	1180	R	1270	R
DIBENZOFURAN	UG/KG		401	UJ	441	UJ	466	UJ	393	R	424	R
2,4-DINITROTOLUENE	UG/KG		256	U	292	U	143	UJ	393	R	424	R
4-NITROPHENOL	UG/KG		1200	UJ	1320	UJ	1400	UJ	1180	R	1270	R
FLUORENE	UG/KG		401	UJ	441	UJ	466	UJ	393	R	424	R
4-CHLOROPHENYL PHENYL ETHER	UG/KG		401	UJ	441	UJ	466	UJ	393	R	424	R
DIETHYL PHTHALATE	UG/KG		401	UJ	441	UJ	466	UJ	393	R	424	R
4-NITROANILINE	UG/KG		1200	UJ	1320	UJ	1400	UJ	1180	R	1270	R
4,6-DINITRO-2-METHYLPHENOL	UG/KG		1200	UJ	1320	UJ	1400	UJ	1180	R	1270	R
N-NITROSODIPHENYLAMINE	UG/KG		401	UJ	441	UJ	466	UJ	393	R	424	R
4-BROMOPHENYL PHENYL ETHER	UG/KG		401	UJ	441	UJ	466	UJ	393	R	424	R

	Building	SWMU4		SWMU4		SWMU4		SWMU4		SWMU4		SWMU4	
	StationID	SWMU4-MW05		SWMU4-MW06		SWMU4-MW07		SWMU4-MW08		W4-SB01		W4-SB02	
	SampleID	NDB002		NDB005		NDB007		NDB009		NDA058		NDA060	
	DateCollected	06/06/2000		06/06/2000		06/06/2000		06/06/2000		04/18/2000		04/18/2000	
	Depth	4 to 6		4 to 6		4 to 6		4 to 6		4 to 6		4 to 6	
Parameter	**Units**												
HEXACHLOROBENZENE	UG/KG	468	U	467	U	407	U	527	U	460	UJ	478	UJ
PENTACHLOROPHENOL	UG/KG	1400	U	1400	U	1220	U	1580	U	1380	UJ	1430	UJ
PHENANTHRENE	UG/KG	468	U	467	U	407	U	527	U	460	UJ	478	UJ
ANTHRACENE	UG/KG	468	U	467	U	407	U	527	U	460	UJ	478	UJ
DI-n-BUTYL PHTHALATE	UG/KG	468	U	467	U	407	U	527	U	460	UJ	478	UJ
FLUORANTHENE	UG/KG	468	U	467	U	407	U	527	U	460	UJ	478	UJ
PYRENE	UG/KG	468	U	467	U	407	U	527	U	460	UJ	478	UJ
BENZYL BUTYL PHTHALATE	UG/KG	468	U	467	U	407	U	56	J	460	UJ	478	UJ
3,3'-DICHLOROBENZIDINE	UG/KG	936	U	933	U	815	U	1050	U	921	UJ	955	UJ
BENZO(a)ANTHRACENE	UG/KG	468	U	467	U	407	U	527	U	460	UJ	478	UJ
CHRYSENE	UG/KG	468	U	467	U	407	U	527	U	460	UJ	478	UJ
bis(2-ETHYLHEXYL) PHTHALATE	UG/KG	468	U	467	U	407	U	527	U	460	UJ	478	UJ
DI-n-OCTYLPHTHALATE	UG/KG	468	U	467	U	407	U	527	U	460	UJ	478	UJ
BENZO(b)FLUORANTHENE	UG/KG	468	U	467	U	407	U	527	U	460	UJ	478	UJ
BENZO(k)FLUORANTHENE	UG/KG	468	U	467	U	407	U	527	U	460	UJ	478	UJ
BENZO(a)PYRENE	UG/KG	468	U	467	U	407	U	527	U	460	UJ	478	UJ
INDENO(1,2,3-c,d)PYRENE	UG/KG	468	U	467	U	407	U	527	U	460	UJ	478	UJ
DIBENZ(a,h)ANTHRACENE	UG/KG	468	U	467	U	407	U	527	U	460	UJ	478	UJ
BENZO(g,h,i)PERYLENE	UG/KG	468	U	467	U	407	U	527	U	460	UJ	478	UJ
CARBAZOLE	UG/KG	468	U	467	U	407	U	527	U	460	UJ	478	UJ
VOLATILES													
CHLOROMETHANE	UG/KG	10	U	11	U	11	U	11	U	10	UJ	10	U
VINYL CHLORIDE	UG/KG	10	U	11	U	11	U	11	U	10	UJ	10	U
BROMOMETHANE	UG/KG	10	U	11	U	11	U	11	U	10	UJ	10	U
1,3-DICHLOROBENZENE	UG/KG	468	U	467	U	407	U	527	U	460	UJ	478	UJ
CHLOROETHANE	UG/KG	10	U	11	U	11	U	11	U	10	UJ	10	U
1,1-DICHLOROETHENE	UG/KG	10	U	11	U	11	U	11	U	10	UJ	10	U
1,4-DICHLOROBENZENE	UG/KG	468	U	467	U	407	U	527	U	460	UJ	478	UJ
1,2-DICHLOROBENZENE	UG/KG	468	U	467	U	407	U	527	U	460	UJ	478	UJ
CARBON DISULFIDE	UG/KG	10	U	11	U	11	U	11	U	10	UJ	10	U
METHYLENE CHLORIDE	UG/KG	10	U	11	U	11	U	11	U	10	UJ	10	U
1,1-DICHLOROETHANE	UG/KG	10	U	11	U	11	U	11	U	10	UJ	10	U
ACETONE	UG/KG	123	=	55	=	48	=	17	=	11	R	30	R
METHYL ETHYL KETONE (2-BUTANONE)	UG/KG	6	J	3	J	11	U	11	U	10	R	3	J
CHLOROFORM	UG/KG	10	U	11	U	11	U	11	U	10	UJ	10	U
1,1,1-TRICHLOROETHANE	UG/KG	10	U	11	U	11	U	11	U	10	UJ	10	U
CARBON TETRACHLORIDE	UG/KG	10	U	11	U	11	U	11	U	10	UJ	10	U
BENZENE	UG/KG	10	U	0.1	U	11	U	0.2	J	10	UJ	10	U

SWMU 04 Subsurface Soil Data

	Building	SWMU4		SWMU4		SWMU4		SWMU4		SWMU4		SWMU4	
	StationID	W4-SB03		W4-SB03		W4-SB04		W4-SB05		W4-SB06		W4-SB07	
	SampleID	NDA063		NDA064FD1		NDA066		NDA068		NDA070		NDA073	
	DateCollected	04/18/2000		04/18/2000		04/18/2000		04/18/2000		04/19/2000		04/19/2000	
	Depth	4 to 6		4 to 6		4 to 6		4 to 6		4 to 6		4 to 6	
Parameter	**Units**												
HEXACHLOROBENZENE	UG/KG	382	UJ	351	UJ	344	UJ	360	UJ	404	UJ	383	UJ
PENTACHLOROPHENOL	UG/KG	1150	UJ	1050	UJ	1030	UJ	1080	UJ	1210	UJ	1150	UJ
PHENANTHRENE	UG/KG	382	UJ	351	UJ	344	UJ	360	UJ	404	UJ	383	UJ
ANTHRACENE	UG/KG	382	UJ	351	UJ	344	UJ	360	UJ	404	UJ	383	UJ
DI-n-BUTYL PHTHALATE	UG/KG	382	UJ	351	UJ	344	UJ	360	UJ	404	UJ	383	UJ
FLUORANTHENE	UG/KG	382	UJ	351	UJ	344	UJ	360	UJ	404	UJ	383	UJ
PYRENE	UG/KG	382	UJ	351	UJ	344	UJ	360	UJ	404	UJ	383	UJ
BENZYL BUTYL PHTHALATE	UG/KG	382	UJ	351	UJ	344	UJ	360	UJ	404	UJ	383	UJ
3,3'-DICHLOROBENZIDINE	UG/KG	765	UJ	701	UJ	687	UJ	720	UJ	807	UJ	766	UJ
BENZO(a)ANTHRACENE	UG/KG	382	UJ	351	UJ	344	UJ	360	UJ	404	UJ	383	UJ
CHRYSENE	UG/KG	382	UJ	351	UJ	344	UJ	360	UJ	404	UJ	383	UJ
bis(2-ETHYLHEXYL) PHTHALATE	UG/KG	382	UJ	351	UJ	344	UJ	360	UJ	101	J	383	UJ
DI-n-OCTYLPHTHALATE	UG/KG	382	UJ	351	UJ	344	UJ	360	UJ	404	UJ	383	UJ
BENZO(b)FLUORANTHENE	UG/KG	382	UJ	351	UJ	344	UJ	360	UJ	404	UJ	383	UJ
BENZO(k)FLUORANTHENE	UG/KG	382	UJ	351	UJ	344	UJ	360	UJ	404	UJ	383	UJ
BENZO(a)PYRENE	UG/KG	382	UJ	351	UJ	344	UJ	360	UJ	404	UJ	383	UJ
INDENO(1,2,3-c,d)PYRENE	UG/KG	382	UJ	351	UJ	344	UJ	360	UJ	404	UJ	383	UJ
DIBENZ(a,h)ANTHRACENE	UG/KG	382	UJ	351	UJ	344	UJ	360	UJ	404	UJ	383	UJ
BENZO(g,h,i)PERYLENE	UG/KG	382	UJ	351	UJ	344	UJ	360	UJ	404	UJ	383	UJ
CARBAZOLE	UG/KG	382	UJ	351	UJ	344	UJ	360	UJ	404	UJ	383	UJ
VOLATILES													
CHLOROMETHANE	UG/KG	11	UJ	10	UJ	10	UJ	11	U	10	UJ	10	U
VINYL CHLORIDE	UG/KG	11	UJ	10	UJ	10	UJ	11	U	10	UJ	10	U
BROMOMETHANE	UG/KG	11	UJ	10	UJ	10	UJ	11	U	10	UJ	10	U
1,3-DICHLOROBENZENE	UG/KG	382	UJ	351	UJ	344	UJ	360	UJ	404	UJ	383	UJ
CHLOROETHANE	UG/KG	11	UJ	10	UJ	10	UJ	11	U	10	UJ	10	U
1,1-DICHLOROETHENE	UG/KG	11	UJ	10	UJ	10	UJ	11	U	10	UJ	10	U
1,4-DICHLOROBENZENE	UG/KG	382	UJ	351	UJ	344	UJ	360	UJ	404	UJ	383	UJ
1,2-DICHLOROBENZENE	UG/KG	382	UJ	351	UJ	344	UJ	360	UJ	404	UJ	383	UJ
CARBON DISULFIDE	UG/KG	11	UJ	10	UJ	10	UJ	11	U	10	UJ	10	U
METHYLENE CHLORIDE	UG/KG	11	UJ	10	UJ	10	UJ	11	U	10	UJ	10	U
1,1-DICHLOROETHANE	UG/KG	11	UJ	10	UJ	10	UJ	11	U	10	UJ	10	U
ACETONE	UG/KG	22	R	10	R	551	R	26	R	16	R	12	R
METHYL ETHYL KETONE (2-BUTANONE)	UG/KG	11	R	10	R	10	R	11	R	10	R	10	R
CHLOROFORM	UG/KG	11	UJ	10	UJ	10	UJ	11	U	10	UJ	10	U
1,1,1-TRICHLOROETHANE	UG/KG	11	UJ	10	UJ	10	UJ	11	U	10	UJ	10	U
CARBON TETRACHLORIDE	UG/KG	11	UJ	10	UJ	10	UJ	11	U	10	UJ	10	U
BENZENE	UG/KG	11	UJ	10	UJ	10	UJ	11	U	10	UJ	10	U

	Building	SWMU4		SWMU4		SWMU4		SWMU4		SWMU4	
	StationID	W4-SB08		W4-SB09		W4-SB10		W4-SB11		W4-SB12	
	SampleID	NDA075		NDA077		NDA079		NDA081		NDA083	
	DateCollected	04/19/2000		04/19/2000		04/19/2000		04/19/2000		04/19/2000	
	Depth	4 to 6		4 to 6		4 to 6		4 to 6		4 to 6	
Parameter	**Units**										
HEXACHLOROBENZENE	UG/KG	401	UJ	441	UJ	466	UJ	393	R	424	R
PENTACHLOROPHENOL	UG/KG	1200	UJ	1320	UJ	1400	UJ	1180	R	1270	R
PHENANTHRENE	UG/KG	401	UJ	441	UJ	466	UJ	393	R	424	R
ANTHRACENE	UG/KG	401	UJ	441	UJ	466	UJ	393	R	424	R
DI-n-BUTYL PHTHALATE	UG/KG	401	UJ	441	UJ	466	UJ	393	R	424	R
FLUORANTHENE	UG/KG	401	UJ	441	UJ	466	UJ	393	R	424	R
PYRENE	UG/KG	401	UJ	441	UJ	466	UJ	393	R	424	R
BENZYL BUTYL PHTHALATE	UG/KG	401	UJ	441	UJ	466	UJ	393	R	424	R
3,3'-DICHLOROBENZIDINE	UG/KG	802	UJ	882	UJ	933	UJ	786	R	847	R
BENZO(a)ANTHRACENE	UG/KG	401	UJ	441	UJ	466	UJ	393	R	424	R
CHRYSENE	UG/KG	401	UJ	441	UJ	466	UJ	393	R	424	R
bis(2-ETHYLHEXYL) PHTHALATE	UG/KG	401	UJ	441	UJ	466	UJ	393	R	424	R
DI-n-OCTYLPHTHALATE	UG/KG	401	UJ	441	UJ	466	UJ	393	R	424	R
BENZO(b)FLUORANTHENE	UG/KG	401	UJ	441	UJ	466	UJ	393	R	424	R
BENZO(k)FLUORANTHENE	UG/KG	401	UJ	441	UJ	466	UJ	393	R	424	R
BENZO(a)PYRENE	UG/KG	401	UJ	441	UJ	466	UJ	393	R	424	R
INDENO(1,2,3-c,d)PYRENE	UG/KG	401	UJ	441	UJ	466	UJ	393	R	424	R
DIBENZ(a,h)ANTHRACENE	UG/KG	401	UJ	441	UJ	466	UJ	393	R	424	R
BENZO(g,h,i)PERYLENE	UG/KG	401	UJ	441	UJ	466	UJ	393	R	424	R
CARBAZOLE	UG/KG	401	UJ	441	UJ	466	UJ	393	R	424	R
VOLATILES											
CHLOROMETHANE	UG/KG	10	U	10	U	10	U	10	UJ	10	U
VINYL CHLORIDE	UG/KG	10	U	10	U	10	U	10	UJ	10	U
BROMOMETHANE	UG/KG	10	U	10	U	10	U	10	UJ	10	U
1,3-DICHLOROBENZENE	UG/KG	401	UJ	441	UJ	466	UJ	393	R	424	R
CHLOROETHANE	UG/KG	10	U	10	U	10	U	10	UJ	10	U
1,1-DICHLOROETHENE	UG/KG	10	U	10	U	10	U	10	UJ	10	U
1,4-DICHLOROBENZENE	UG/KG	401	UJ	441	UJ	466	UJ	393	R	424	R
1,2-DICHLOROBENZENE	UG/KG	401	UJ	441	UJ	466	UJ	393	R	424	R
CARBON DISULFIDE	UG/KG	10	U	10	U	10	U	10	UJ	10	U
METHYLENE CHLORIDE	UG/KG	10	U	10	U	10	U	10	UJ	10	U
1,1-DICHLOROETHANE	UG/KG	10	U	10	U	10	U	10	UJ	10	U
ACETONE	UG/KG	13	R	18	R	11	R	10	R	12	R
METHYL ETHYL KETONE (2-BUTANONE)	UG/KG	10	R	10	R	10	R	10	R	10	R
CHLOROFORM	UG/KG	10	U	10	U	10	U	10	UJ	10	U
1,1,1-TRICHLOROETHANE	UG/KG	10	U	10	U	10	U	10	UJ	10	U
CARBON TETRACHLORIDE	UG/KG	10	U	10	U	10	U	10	UJ	10	U
BENZENE	UG/KG	10	U	10	U	10	U	10	UJ	0.1	U

SWMU 04 Subsurface Soil Data

Parameter	Units	Building	SWMU4		SWMU4		SWMU4		SWMU4		SWMU4		SWMU4	
		StationID	SWMU4-MW05		SWMU4-MW06		SWMU4-MW07		SWMU4-MW08		W4-SB01		W4-SB02	
		SampleID	NDB002		NDB005		NDB007		NDB009		NDA058		NDA060	
		DateCollected	06/06/2000		06/06/2000		06/06/2000		06/06/2000		04/18/2000		04/18/2000	
		Depth	4 to 6		4 to 6		4 to 6		4 to 6		4 to 6		4 to 6	
1,2-DICHLOROETHANE	UG/KG		10	U	11	U	11	U	11	U	10	UJ	10	U
TRICHLOROETHYLENE (TCE)	UG/KG		10	U	11	U	11	U	11	U	10	UJ	10	U
1,2-DICHLOROPROPANE	UG/KG		10	U	11	U	11	U	11	U	10	UJ	10	U
1,2,4-TRICHLOROBENZENE	UG/KG		468	U	467	U	407	U	527	U	460	UJ	478	UJ
BROMODICHLOROMETHANE	UG/KG		10	U	11	U	11	U	11	U	10	UJ	10	U
cis-1,3-DICHLOROPROPENE	UG/KG		10	U	11	U	11	U	11	U	10	UJ	10	U
METHYL ISOBUTYL KETONE (4-METHYL-2-PENTANONE)	UG/KG		10	U	2	J	11	U	11	U	10	UJ	10	U
TOLUENE	UG/KG		10	U	11	U	11	U	11	U	10	UJ	10	U
trans-1,3-DICHLOROPROPENE	UG/KG		10	U	11	U	11	U	11	U	10	UJ	10	U
1,1,2-TRICHLOROETHANE	UG/KG		10	U	11	U	11	U	11	U	10	UJ	10	U
TETRACHLOROETHYLENE(PCE)	UG/KG		10	U	11	U	11	U	11	U	10	UJ	10	U
2-HEXANONE	UG/KG		10	U	11	U	11	U	11	U	10	UJ	10	U
DIBROMOCHLOROMETHANE	UG/KG		10	U	11	U	11	U	11	U	10	UJ	10	U
CHLOROBENZENE	UG/KG		10	U	11	U	11	U	11	U	10	UJ	10	U
ETHYLBENZENE	UG/KG		10	U	11	U	11	U	11	U	10	UJ	10	U
M,P-XYLENE (SUM OF ISOMERS)	UG/KG		10	U	0.3	J	11	U	11	U	10	UJ	10	U
O-XYLENE (1,2-DIMETHYLBENZENE)	UG/KG		10	U	11	U	11	U	11	U	10	UJ	10	U
STYRENE	UG/KG		10	U	11	U	11	U	11	U	10	UJ	10	U
BROMOFORM	UG/KG		10	U	11	U	11	U	11	U	10	UJ	10	U
1,1,2,2-TETRACHLOROETHANE	UG/KG		10	U	11	U	11	U	11	U	10	UJ	10	U
XYLENES, TOTAL	UG/KG		10	U	0.3	J	11	U	11	U	10	UJ	10	U

Parameter	Units	Building	SWMU4		SWMU4		SWMU4		SWMU4		SWMU4		SWMU4	
		StationID	W4-SB03		W4-SB03		W4-SB04		W4-SB05		W4-SB06		W4-SB07	
		SampleID	NDA063		NDA064FD1		NDA066		NDA068		NDA070		NDA073	
		DateCollected	04/18/2000		04/18/2000		04/18/2000		04/18/2000		04/19/2000		04/19/2000	
		Depth	4 to 6		4 to 6		4 to 6		4 to 6		4 to 6		4 to 6	
1,2-DICHLOROETHANE	UG/KG		11	UJ	10	UJ	10	UJ	11	U	10	UJ	10	U
TRICHLOROETHYLENE (TCE)	UG/KG		11	UJ	10	UJ	10	UJ	11	U	10	UJ	10	U
1,2-DICHLOROPROPANE	UG/KG		11	UJ	10	UJ	10	UJ	11	U	10	UJ	10	U
1,2,4-TRICHLOROBENZENE	UG/KG		382	UJ	351	UJ	344	UJ	360	UJ	404	UJ	383	UJ
BROMODICHLOROMETHANE	UG/KG		11	UJ	10	UJ	10	UJ	11	U	10	UJ	10	U
cis-1,3-DICHLOROPROPENE	UG/KG		11	UJ	10	UJ	10	UJ	11	U	10	UJ	10	U
METHYL ISOBUTYL KETONE (4-METHYL-2-PENTANONE)	UG/KG		11	UJ	10	UJ	10	UJ	11	U	10	UJ	10	U
TOLUENE	UG/KG		11	UJ	10	UJ	10	UJ	11	U	10	UJ	10	U
trans-1,3-DICHLOROPROPENE	UG/KG		11	UJ	10	UJ	10	UJ	11	U	10	UJ	10	U
1,1,2-TRICHLOROETHANE	UG/KG		11	UJ	10	UJ	10	UJ	11	U	10	UJ	10	U
TETRACHLOROETHYLENE(PCE)	UG/KG		11	UJ	10	UJ	10	UJ	11	U	10	UJ	10	U
2-HEXANONE	UG/KG		11	UJ	10	UJ	10	UJ	11	U	10	UJ	10	U
DIBROMOCHLOROMETHANE	UG/KG		11	UJ	10	UJ	10	UJ	11	U	10	UJ	10	U
CHLOROBENZENE	UG/KG		11	UJ	10	UJ	10	UJ	11	U	10	UJ	10	U
ETHYLBENZENE	UG/KG		11	UJ	10	UJ	10	UJ	11	U	10	UJ	10	U
M,P-XYLENE (SUM OF ISOMERS)	UG/KG		11	UJ	10	UJ	10	UJ	11	U	10	UJ	10	U
O-XYLENE (1,2-DIMETHYLBENZENE)	UG/KG		11	UJ	10	UJ	10	UJ	11	U	10	UJ	10	U
STYRENE	UG/KG		11	UJ	10	UJ	0.6	J	11	U	10	UJ	10	U
BROMOFORM	UG/KG		11	UJ	10	UJ	10	UJ	11	U	10	UJ	10	U
1,1,2,2-TETRACHLOROETHANE	UG/KG		11	UJ	10	UJ	10	UJ	11	U	10	UJ	10	U
XYLENES, TOTAL	UG/KG		11	UJ	10	UJ	10	UJ	11	U	10	UJ	10	U

SWMU 04 Subsurface Soil Data

	Building	SWMU4		SWMU4		SWMU4		SWMU4		SWMU4	
	StationID	W4-SB08		W4-SB09		W4-SB10		W4-SB11		W4-SB12	
	SampleID	NDA075		NDA077		NDA079		NDA081		NDA083	
	DateCollected	04/19/2000		04/19/2000		04/19/2000		04/19/2000		04/19/2000	
	Depth	4 to 6		4 to 6		4 to 6		4 to 6		4 to 6	
Parameter	**Units**										
1,2-DICHLOROETHANE	UG/KG	10	U	10	U	10	U	10	UJ	10	U
TRICHLOROETHYLENE (TCE)	UG/KG	10	U	10	U	10	U	10	UJ	10	U
1,2-DICHLOROPROPANE	UG/KG	10	U	10	U	10	U	10	UJ	10	U
1,2,4-TRICHLOROBENZENE	UG/KG	401	UJ	441	UJ	466	UJ	393	R	424	R
BROMODICHLOROMETHANE	UG/KG	10	U	10	U	10	U	10	UJ	10	U
cis-1,3-DICHLOROPROPENE	UG/KG	10	U	10	U	10	U	10	UJ	10	U
METHYL ISOBUTYL KETONE (4-METHYL-2-PENTANONE)	UG/KG	10	U	10	U	10	U	10	UJ	10	U
TOLUENE	UG/KG	10	U	10	U	10	U	10	UJ	10	U
trans-1,3-DICHLOROPROPENE	UG/KG	10	U	10	U	10	U	10	UJ	10	U
1,1,2-TRICHLOROETHANE	UG/KG	10	U	10	U	10	U	10	UJ	10	U
TETRACHLOROETHYLENE(PCE)	UG/KG	10	U	10	U	10	U	10	UJ	10	U
2-HEXANONE	UG/KG	10	U	10	U	10	U	10	UJ	10	U
DIBROMOCHLOROMETHANE	UG/KG	10	U	10	U	10	U	10	UJ	10	U
CHLOROBENZENE	UG/KG	10	U	10	U	10	U	10	UJ	10	U
ETHYLBENZENE	UG/KG	10	U	10	U	10	U	10	UJ	10	U
M,P-XYLENE (SUM OF ISOMERS)	UG/KG	10	U	10	U	10	U	10	UJ	10	U
O-XYLENE (1,2-DIMETHYLBENZENE)	UG/KG	10	U	10	U	10	U	10	UJ	10	U
STYRENE	UG/KG	10	U	10	U	10	U	10	UJ	10	U
BROMOFORM	UG/KG	10	U	10	U	10	U	10	UJ	10	U
1,1,2,2-TETRACHLOROETHANE	UG/KG	10	U	10	U	10	U	10	UJ	10	U
XYLENES, TOTAL	UG/KG	10	U	10	U	10	U	10	UJ	10	U

SWMU 05 Surface Soil Data

	Building	SWMU5		SWMU5		SWMU5		SWMU5	
	StationID	W5-SB01		W5-SB02		W5-SB03		W5-SB04	
	SampleID	NDA084		NDA086		NDA088		NDA091	
	DateCollected	04/13/2000		04/14/2000		04/14/2000		04/17/2000	
	Depth	0 to 0.5		0 to 0.8		0 to 2		0 to 2	
Parameter	**Units**								
EXPLOSIVES									
2,6-DINITROTOLUENE	UG/KG	344	UJ	364	U	346	U	367	UJ
NITROBENZENE	UG/KG	344	UJ	364	U	346	U	367	UJ
2,4-DINITROTOLUENE	UG/KG	344	UJ	364	U	346	U	367	UJ
SEMI-VOLATILES									
bis(2-CHLOROETHYL) ETHER	UG/KG	344	UJ	364	U	346	U	367	UJ
PHENOL	UG/KG	344	UJ	364	U	346	U	367	UJ
2-CHLOROPHENOL	UG/KG	344	UJ	364	U	346	U	367	UJ
1,3-DICHLOROBENZENE	UG/KG	344	UJ	364	U	346	U	367	UJ
1,4-DICHLOROBENZENE	UG/KG	344	UJ	364	U	346	U	367	UJ
1,2-DICHLOROBENZENE	UG/KG	344	UJ	364	U	346	U	367	UJ
bis(2-CHLOROISOPROPYL) ETHER	UG/KG	344	UJ	364	U	346	U	367	UJ
2-METHYLPHENOL (o-CRESOL)	UG/KG	344	UJ	364	U	346	U	367	UJ
HEXACHLOROETHANE	UG/KG	344	UJ	364	U	346	U	367	UJ
N-NITROSODI-n-PROPYLAMINE	UG/KG	344	UJ	364	U	346	U	367	UJ
CRESOLS, m & p	UG/KG	344	UJ	364	U	346	U	367	UJ
NITROBENZENE	UG/KG	344	UJ	364	U	346	U	367	UJ
ISOPHORONE	UG/KG	344	UJ	364	U	346	U	367	UJ
2-NITROPHENOL	UG/KG	344	UJ	364	U	346	U	367	UJ
2,4-DIMETHYLPHENOL	UG/KG	344	UJ	364	U	346	U	367	UJ
bis(2-CHLOROETHOXY) METHANE	UG/KG	344	UJ	364	U	346	U	367	UJ
2,4-DICHLOROPHENOL	UG/KG	344	UJ	364	U	346	U	367	UJ
1,2,4-TRICHLOROBENZENE	UG/KG	344	UJ	364	U	346	U	367	UJ
NAPHTHALENE	UG/KG	344	UJ	364	U	346	U	367	UJ
4-CHLOROANILINE	UG/KG	344	UJ	364	U	346	U	367	UJ
2-METHYLNAPHTHALENE	UG/KG	344	UJ	364	U	346	U	367	UJ
HEXACHLOROBUTADIENE	UG/KG	344	UJ	364	U	346	U	367	UJ
4-CHLORO-3-METHYLPHENOL	UG/KG	344	UJ	364	U	346	U	367	UJ
HEXACHLOROCYCLOPENTADIENE	UG/KG	344	UJ	364	U	346	U	367	UJ
2,4,6-TRICHLOROPHENOL	UG/KG	344	UJ	364	U	346	U	367	UJ
2,4,5-TRICHLOROPHENOL	UG/KG	1030	UJ	1090	U	1040	U	1100	UJ
2-CHLORONAPHTHALENE	UG/KG	344	UJ	364	U	346	U	367	UJ
2-NITROANILINE	UG/KG	1030	UJ	1090	U	1040	U	1100	UJ
ACENAPHTHYLENE	UG/KG	344	UJ	364	U	346	U	367	UJ
DIMETHYL PHTHALATE	UG/KG	344	UJ	364	U	346	U	367	UJ
2,6-DINITROTOLUENE	UG/KG	344	UJ	364	U	346	U	367	UJ
ACENAPHTHENE	UG/KG	344	UJ	364	U	346	U	367	UJ
3-NITROANILINE	UG/KG	1030	UJ	1090	U	1040	U	1100	UJ
2,4-DINITROPHENOL	UG/KG	1030	UJ	1090	U	1040	U	1100	UJ
DIBENZOFURAN	UG/KG	344	UJ	364	U	346	U	367	UJ
2,4-DINITROTOLUENE	UG/KG	344	UJ	364	U	346	U	367	UJ
4-NITROPHENOL	UG/KG	1030	UJ	1090	U	1040	U	1100	UJ
FLUORENE	UG/KG	344	UJ	364	U	346	U	367	UJ
4-CHLOROPHENYL PHENYL ETHER	UG/KG	344	UJ	364	U	346	U	367	UJ
DIETHYL PHTHALATE	UG/KG	344	UJ	364	U	346	U	367	UJ
4-NITROANILINE	UG/KG	1030	UJ	1090	U	1040	U	1100	UJ
4,6-DINITRO-2-METHYLPHENOL	UG/KG	1030	UJ	1090	U	1040	U	1100	UJ
N-NITROSODIPHENYLAMINE	UG/KG	344	UJ	364	U	346	U	367	UJ
4-BROMOPHENYL PHENYL ETHER	UG/KG	344	UJ	364	U	346	U	367	UJ
HEXACHLOROBENZENE	UG/KG	344	UJ	364	U	346	U	367	UJ
PENTACHLOROPHENOL	UG/KG	1030	UJ	1090	U	1040	U	1100	UJ
PHENANTHRENE	UG/KG	344	UJ	364	U	346	U	367	UJ
ANTHRACENE	UG/KG	344	UJ	364	U	346	U	367	UJ
DI-n-BUTYL PHTHALATE	UG/KG	344	UJ	364	U	346	U	367	UJ
FLUORANTHENE	UG/KG	68	J	364	U	346	U	41	J
PYRENE	UG/KG	65	J	364	U	346	U	67	J
BENZYL BUTYL PHTHALATE	UG/KG	344	UJ	364	U	346	U	367	UJ

SWMU 05 Surface Soil Data

	Building	SWMU5		SWMU5		SWMU5		SWMU5	
	StationID	W5-SB01		W5-SB02		W5-SB03		W5-SB04	
	SampleID	NDA084		NDA086		NDA088		NDA091	
	DateCollected	04/13/2000		04/14/2000		04/14/2000		04/17/2000	
	Depth	0 to 0.5		0 to 0.8		0 to 2		0 to 2	
Parameter	**Units**								
3,3'-DICHLOROBENZIDINE	UG/KG	687	UJ	727	U	692	U	733	UJ
BENZO(a)ANTHRACENE	UG/KG	23	J	364	U	346	U	38	J
CHRYSENE	UG/KG	62	J	364	U	346	U	60	J
bis(2-ETHYLHEXYL) PHTHALATE	UG/KG	344	UJ	364	U	346	U	367	UJ
DI-n-OCTYLPHTHALATE	UG/KG	344	UJ	364	UJ	346	UJ	367	UJ
BENZO(b)FLUORANTHENE	UG/KG	144	J	364	U	346	U	50	J
BENZO(k)FLUORANTHENE	UG/KG	74	J	364	U	346	U	59	J
BENZO(a)PYRENE	UG/KG	88	J	364	U	346	U	75	J
INDENO(1,2,3-c,d)PYRENE	UG/KG	37	J	364	U	346	U	68	J
DIBENZ(a,h)ANTHRACENE	UG/KG	344	UJ	364	U	346	U	367	UJ
BENZO(g,h,i)PERYLENE	UG/KG	41	J	364	U	346	U	93	J
CARBAZOLE	UG/KG	344	UJ	364	U	346	U	367	UJ
VOLATILES									
CHLOROMETHANE	UG/KG	13	UJ	11	U	10	U	11	U
VINYL CHLORIDE	UG/KG	13	UJ	11	U	10	U	11	U
BROMOMETHANE	UG/KG	13	UJ	11	U	10	U	11	U
1,3-DICHLOROBENZENE	UG/KG	344	UJ	364	U	346	U	367	UJ
CHLOROETHANE	UG/KG	13	UJ	11	UJ	10	UJ	11	UJ
1,1-DICHLOROETHENE	UG/KG	13	UJ	11	U	10	U	11	U
1,4-DICHLOROBENZENE	UG/KG	344	UJ	364	U	346	U	367	UJ
1,2-DICHLOROBENZENE	UG/KG	344	UJ	364	U	346	U	367	UJ
CARBON DISULFIDE	UG/KG	13	UJ	0.7	J	0.5	J	0.6	J
METHYLENE CHLORIDE	UG/KG	13	UJ	11	U	10	U	11	U
1,1-DICHLOROETHANE	UG/KG	13	UJ	11	U	10	U	11	U
ACETONE	UG/KG	36	R	20	R	13	R	74	R
METHYL ETHYL KETONE (2-BUTANONE)	UG/KG	2	J	11	R	10	R	11	R
CHLOROFORM	UG/KG	13	UJ	11	U	10	U	11	U
1,1,1-TRICHLOROETHANE	UG/KG	13	UJ	11	U	10	U	11	U
CARBON TETRACHLORIDE	UG/KG	13	UJ	11	U	10	U	11	U
BENZENE	UG/KG	13	UJ	11	U	10	U	11	U
1,2-DICHLOROETHANE	UG/KG	13	UJ	11	U	10	U	11	U
TRICHLOROETHYLENE (TCE)	UG/KG	13	UJ	11	U	10	U	11	U
1,2-DICHLOROPROPANE	UG/KG	13	UJ	11	U	10	U	11	U
1,2,4-TRICHLOROBENZENE	UG/KG	344	UJ	364	U	346	U	367	UJ
BROMODICHLOROMETHANE	UG/KG	13	UJ	11	U	10	U	11	U
cis-1,3-DICHLOROPROPENE	UG/KG	13	UJ	11	U	10	U	11	U
METHYL ISOBUTYL KETONE	UG/KG	13	UJ	11	U	10	U	11	U
TOLUENE	UG/KG	0.4	J	11	U	10	U	11	U
trans-1,3-DICHLOROPROPENE	UG/KG	13	UJ	11	U	10	U	11	U
1,1,2-TRICHLOROETHANE	UG/KG	13	UJ	11	U	10	U	11	U
TETRACHLOROETHYLENE(PCE)	UG/KG	13	UJ	11	U	10	U	11	U
2-HEXANONE	UG/KG	13	UJ	11	U	10	U	11	U
DIBROMOCHLOROMETHANE	UG/KG	13	UJ	11	U	10	U	11	U
CHLOROBENZENE	UG/KG	13	UJ	11	U	10	U	11	U
ETHYLBENZENE	UG/KG	13	UJ	11	U	10	U	11	U
M,P-XYLENE (SUM OF ISOMERS)	UG/KG	13	UJ	11	U	10	U	11	U
O-XYLENE (1,2-DIMETHYLBENZENE)	UG/KG	13	UJ	11	U	10	U	11	U
STYRENE	UG/KG	13	UJ	11	U	10	U	0.6	J
BROMOFORM	UG/KG	13	UJ	11	U	10	U	11	U
1,1,2,2-TETRACHLOROETHANE	UG/KG	13	UJ	11	U	10	U	11	U
XYLENES, TOTAL	UG/KG	13	UJ	11	U	10	U	11	U

	Building	SWMU5		SWMU5		SWMU5		SWMU5		SWMU5		SWMU5		SWMU5	
	StationID	W5-SB01		W5-SB01		W5-SB01		W5-SB01		W5-SB01		W5-SB02		W5-SB02	
	SampleID	NDA085		NDA092		NDA093		NDA094		NDA095FD1		NDA087		NDA096	
	DateCollected	04/13/2000		04/13/2000		04/13/2000		04/13/2000		04/13/2000		04/14/2000		04/14/2000	
	Depth	4 to 6		9 to 11		14 to 16		19 to 21		19 to 21		2 to 4		4 to 5	
Parameter	**Units**														
EXPLOSIVES															
2,6-DINITROTOLUENE	UG/KG	482	UJ	400	UJ	339	UJ	510	UJ	310	UJ	383	U	365	U
NITROBENZENE	UG/KG	482	UJ	400	UJ	339	UJ	510	UJ	310	UJ	383	U	365	U
2,4-DINITROTOLUENE	UG/KG	482	UJ	400	UJ	339	UJ	510	UJ	310	UJ	383	U	365	U
SEMI-VOLATILES															
bis(2-CHLOROETHYL) ETHER	UG/KG	482	UJ	400	UJ	339	UJ	510	UJ	310	UJ	383	U	365	U
PHENOL	UG/KG	482	UJ	400	UJ	339	UJ	510	UJ	310	UJ	383	U	365	U
2-CHLOROPHENOL	UG/KG	482	UJ	400	UJ	339	UJ	510	UJ	310	UJ	383	U	365	U
1,3-DICHLOROBENZENE	UG/KG	482	UJ	400	UJ	339	UJ	510	UJ	310	UJ	383	U	365	U
1,4-DICHLOROBENZENE	UG/KG	482	UJ	400	UJ	339	UJ	510	UJ	310	UJ	383	U	365	U
1,2-DICHLOROBENZENE	UG/KG	482	UJ	400	UJ	339	UJ	510	UJ	310	UJ	383	U	365	U
bis(2-CHLOROISOPROPYL) ETHER	UG/KG	482	UJ	400	UJ	339	UJ	510	UJ	310	UJ	383	U	365	U
2-METHYLPHENOL (o-CRESOL)	UG/KG	482	UJ	400	UJ	339	UJ	510	UJ	310	UJ	383	U	365	U
HEXACHLOROETHANE	UG/KG	482	UJ	400	UJ	339	UJ	510	UJ	310	UJ	383	U	365	U
N-NITROSODI-n-PROPYLAMINE	UG/KG	482	UJ	400	UJ	339	UJ	510	UJ	310	UJ	383	U	365	U
CRESOLS, m & p	UG/KG	482	UJ	400	UJ	339	UJ	510	UJ	310	UJ	383	U	365	U
NITROBENZENE	UG/KG	482	UJ	400	UJ	339	UJ	510	UJ	310	UJ	383	U	365	U
ISOPHORONE	UG/KG	482	UJ	400	UJ	339	UJ	510	UJ	310	UJ	383	U	365	U
2-NITROPHENOL	UG/KG	482	UJ	400	UJ	339	UJ	510	UJ	310	UJ	383	U	365	U
2,4-DIMETHYLPHENOL	UG/KG	482	UJ	400	UJ	339	UJ	510	UJ	310	UJ	383	U	365	U
bis(2-CHLOROETHOXY) METHANE	UG/KG	482	UJ	400	UJ	339	UJ	510	UJ	310	UJ	383	U	365	U
2,4-DICHLOROPHENOL	UG/KG	482	UJ	400	UJ	339	UJ	510	UJ	310	UJ	383	U	365	U
1,2,4-TRICHLOROBENZENE	UG/KG	482	UJ	400	UJ	339	UJ	510	UJ	310	UJ	383	U	365	U
NAPHTHALENE	UG/KG	482	UJ	400	UJ	339	UJ	510	UJ	310	UJ	383	U	365	U
4-CHLOROANILINE	UG/KG	482	UJ	400	UJ	339	UJ	510	UJ	310	UJ	383	U	365	U
2-METHYLNAPHTHALENE	UG/KG	482	UJ	400	UJ	339	UJ	510	UJ	310	UJ	383	U	365	U
HEXACHLOROBUTADIENE	UG/KG	482	UJ	400	UJ	339	UJ	510	UJ	310	UJ	383	U	365	U
4-CHLORO-3-METHYLPHENOL	UG/KG	482	UJ	400	UJ	339	UJ	510	UJ	310	UJ	383	U	365	U
HEXACHLOROCYCLOPENTADIENE	UG/KG	482	UJ	400	UJ	339	UJ	510	UJ	310	UJ	383	U	365	U
2,4,6-TRICHLOROPHENOL	UG/KG	482	UJ	400	UJ	339	UJ	510	UJ	310	UJ	383	U	365	U
2,4,5-TRICHLOROPHENOL	UG/KG	1450	UJ	1200	UJ	1020	UJ	1530	UJ	931	UJ	1150	U	1100	U
2-CHLORONAPHTHALENE	UG/KG	482	UJ	400	UJ	339	UJ	510	UJ	310	UJ	383	U	365	U
2-NITROANILINE	UG/KG	1450	UJ	1200	UJ	1020	UJ	1530	UJ	931	UJ	1150	U	1100	U
ACENAPHTHYLENE	UG/KG	482	UJ	400	UJ	339	UJ	510	UJ	310	UJ	383	U	365	U
DIMETHYL PHTHALATE	UG/KG	482	UJ	400	UJ	339	UJ	510	UJ	310	UJ	383	U	365	U
2,6-DINITROTOLUENE	UG/KG	482	UJ	400	UJ	339	UJ	510	UJ	310	UJ	383	U	365	U
ACENAPHTHENE	UG/KG	482	UJ	400	UJ	339	UJ	510	UJ	310	UJ	383	U	365	U
3-NITROANILINE	UG/KG	1450	UJ	1200	UJ	1020	UJ	1530	UJ	931	UJ	1150	U	1100	U
2,4-DINITROPHENOL	UG/KG	1450	UJ	1200	UJ	1020	UJ	1530	UJ	931	UJ	1150	U	1100	U

SWMU 05 Subsurface Soil Data

Parameter	Units	Building	SWMU5		SWMU5		SWMU5		SWMU5		SWMU5		SWMU5		SWMU5	
		StationID	W5-SB02		W5-SB03		W5-SB03		W5-SB04		W5-SB04		W5-SB04		W5-SB04	
		SampleID	NDA097		NDA089		NDA099		NDA296		NDA297		NDA298		NDA299	
		DateCollected	04/14/2000		04/14/2000		04/14/2000		04/17/2000		04/17/2000		04/17/2000		04/17/2000	
		Depth	5 to 6		2 to 4		4 to 6		8 to 10		2 to 4		4 to 6		6 to 8	
EXPLOSIVES																
2,6-DINITROTOLUENE	UG/KG		382	U	321	U	356	U	369	UJ	358	UJ	341	UJ	370	UJ
NITROBENZENE	UG/KG		382	U	321	U	356	U	369	UJ	358	UJ	341	UJ	370	UJ
2,4-DINITROTOLUENE	UG/KG		382	U	321	U	356	U	369	UJ	358	UJ	341	UJ	370	UJ
SEMI-VOLATILES																
bis(2-CHLOROETHYL) ETHER	UG/KG		382	U	321	U	356	U	369	UJ	358	UJ	341	UJ	370	UJ
PHENOL	UG/KG		382	U	321	U	356	U	369	UJ	358	UJ	341	UJ	370	UJ
2-CHLOROPHENOL	UG/KG		382	U	321	U	356	U	369	UJ	358	UJ	341	UJ	370	UJ
1,3-DICHLOROBENZENE	UG/KG		382	U	321	U	356	U	369	UJ	358	UJ	341	UJ	370	UJ
1,4-DICHLOROBENZENE	UG/KG		382	U	321	U	356	U	369	UJ	358	UJ	341	UJ	370	UJ
1,2-DICHLOROBENZENE	UG/KG		382	U	321	U	356	U	369	UJ	358	UJ	341	UJ	370	UJ
bis(2-CHLOROISOPROPYL) ETHER	UG/KG		382	U	321	U	356	U	369	UJ	358	UJ	341	UJ	370	UJ
2-METHYLPHENOL (o-CRESOL)	UG/KG		382	U	321	U	356	U	369	UJ	358	UJ	341	UJ	370	UJ
HEXACHLOROETHANE	UG/KG		382	U	321	U	356	U	369	UJ	358	UJ	341	UJ	370	UJ
N-NITROSODI-n-PROPYLAMINE	UG/KG		382	U	321	U	356	U	369	UJ	358	UJ	341	UJ	370	UJ
CRESOLS, m & p	UG/KG		382	U	321	U	356	U	369	UJ	358	UJ	341	UJ	370	UJ
NITROBENZENE	UG/KG		382	U	321	U	356	U	369	UJ	358	UJ	341	UJ	370	UJ
ISOPHORONE	UG/KG		382	U	321	U	356	U	369	UJ	358	UJ	341	UJ	370	UJ
2-NITROPHENOL	UG/KG		382	U	321	U	356	U	369	UJ	358	UJ	341	UJ	370	UJ
2,4-DIMETHYLPHENOL	UG/KG		382	U	321	U	356	U	369	UJ	358	UJ	341	UJ	370	UJ
bis(2-CHLOROETHOXY) METHANE	UG/KG		382	U	321	U	356	U	369	UJ	358	UJ	341	UJ	370	UJ
2,4-DICHLOROPHENOL	UG/KG		382	U	321	U	356	U	369	UJ	358	UJ	341	UJ	370	UJ
1,2,4-TRICHLOROBENZENE	UG/KG		382	U	321	U	356	U	369	UJ	358	UJ	341	UJ	370	UJ
NAPHTHALENE	UG/KG		382	U	321	U	356	U	369	UJ	358	UJ	341	UJ	370	UJ
4-CHLOROANILINE	UG/KG		382	U	321	U	356	U	369	UJ	358	UJ	341	UJ	370	UJ
2-METHYLNAPHTHALENE	UG/KG		382	U	321	U	356	U	369	UJ	358	UJ	341	UJ	370	UJ
HEXACHLOROBUTADIENE	UG/KG		382	U	321	U	356	U	369	UJ	358	UJ	341	UJ	370	UJ
4-CHLORO-3-METHYLPHENOL	UG/KG		382	U	321	U	356	U	369	UJ	358	UJ	341	UJ	370	UJ
HEXACHLOROCYCLOPENTADIENE	UG/KG		382	U	321	U	356	U	369	UJ	358	UJ	341	UJ	370	UJ
2,4,6-TRICHLOROPHENOL	UG/KG		382	U	321	U	356	U	369	UJ	358	UJ	341	UJ	370	UJ
2,4,5-TRICHLOROPHENOL	UG/KG		1140	U	962	U	1070	U	1110	UJ	1080	UJ	1020	UJ	1110	UJ
2-CHLORONAPHTHALENE	UG/KG		382	U	321	U	356	U	369	UJ	358	UJ	341	UJ	370	UJ
2-NITROANILINE	UG/KG		1140	U	962	U	1070	U	1110	UJ	1080	UJ	1020	UJ	1110	UJ
ACENAPHTHYLENE	UG/KG		382	U	321	U	356	U	369	UJ	98	J	341	UJ	370	UJ
DIMETHYL PHTHALATE	UG/KG		382	U	321	U	356	U	369	UJ	358	UJ	341	UJ	370	UJ
2,6-DINITROTOLUENE	UG/KG		382	U	321	U	356	U	369	UJ	358	UJ	341	UJ	370	UJ
ACENAPHTHENE	UG/KG		382	U	321	U	356	U	369	UJ	358	UJ	341	UJ	370	UJ
3-NITROANILINE	UG/KG		1140	U	962	U	1070	U	1110	UJ	1080	UJ	1020	UJ	1110	UJ
2,4-DINITROPHENOL	UG/KG		1140	U	962	U	1070	U	1110	UJ	1080	UJ	1020	UJ	1110	UJ

	Building	SWMU5		SWMU5		SWMU5		SWMU5		SWMU5		SWMU5		SWMU5	
	StationID	W5-SB01		W5-SB01		W5-SB01		W5-SB01		W5-SB01		W5-SB02		W5-SB02	
	SampleID	NDA085		NDA092		NDA093		NDA094		NDA095FD1		NDA087		NDA096	
	DateCollected	04/13/2000		04/13/2000		04/13/2000		04/13/2000		04/13/2000		04/14/2000		04/14/2000	
	Depth	4 to 6		9 to 11		14 to 16		19 to 21		19 to 21		2 to 4		4 to 5	
Parameter	**Units**														
DIBENZOFURAN	UG/KG	482	UJ	400	UJ	339	UJ	510	UJ	310	UJ	383	U	365	U
2,4-DINITROTOLUENE	UG/KG	482	UJ	400	UJ	339	UJ	510	UJ	310	UJ	383	U	365	U
4-NITROPHENOL	UG/KG	1450	UJ	1200	UJ	1020	UJ	1530	UJ	931	UJ	1150	U	1100	U
FLUORENE	UG/KG	482	UJ	400	UJ	339	UJ	510	UJ	310	UJ	383	U	365	U
4-CHLOROPHENYL PHENYL ETHER	UG/KG	482	UJ	400	UJ	339	UJ	510	UJ	310	UJ	383	U	365	U
DIETHYL PHTHALATE	UG/KG	482	UJ	400	UJ	339	UJ	68	J	310	UJ	383	U	365	U
4-NITROANILINE	UG/KG	1450	UJ	1200	UJ	1020	UJ	1530	UJ	931	UJ	1150	U	1100	U
4,6-DINITRO-2-METHYLPHENOL	UG/KG	1450	UJ	1200	UJ	1020	UJ	1530	UJ	931	UJ	1150	U	1100	U
N-NITROSODIPHENYLAMINE	UG/KG	482	UJ	400	UJ	339	UJ	510	UJ	310	UJ	383	U	365	U
4-BROMOPHENYL PHENYL ETHER	UG/KG	482	UJ	400	UJ	339	UJ	510	UJ	310	UJ	383	U	365	U
HEXACHLOROBENZENE	UG/KG	482	UJ	400	UJ	339	UJ	510	UJ	310	UJ	383	U	365	U
PENTACHLOROPHENOL	UG/KG	1450	UJ	1200	UJ	1020	UJ	1530	UJ	931	UJ	1150	U	1100	U
PHENANTHRENE	UG/KG	482	UJ	400	UJ	339	UJ	510	UJ	310	UJ	383	U	365	U
ANTHRACENE	UG/KG	482	UJ	400	UJ	339	UJ	510	UJ	310	UJ	383	U	365	U
DI-n-BUTYL PHTHALATE	UG/KG	482	UJ	400	UJ	339	UJ	510	UJ	310	UJ	40	J	42	J
FLUORANTHENE	UG/KG	482	UJ	400	UJ	339	UJ	510	UJ	310	UJ	383	U	365	U
PYRENE	UG/KG	482	UJ	400	UJ	339	UJ	510	UJ	310	UJ	383	U	365	U
BENZYL BUTYL PHTHALATE	UG/KG	482	UJ	400	UJ	339	UJ	510	UJ	310	UJ	383	U	365	U
3,3'-DICHLOROBENZIDINE	UG/KG	964	UJ	799	UJ	679	UJ	1020	UJ	620	UJ	766	U	731	U
BENZO(a)ANTHRACENE	UG/KG	482	UJ	400	UJ	339	UJ	510	UJ	310	UJ	383	U	365	U
CHRYSENE	UG/KG	482	UJ	400	UJ	339	UJ	510	UJ	310	UJ	383	U	365	U
bis(2-ETHYLHEXYL) PHTHALATE	UG/KG	482	UJ	32	J	339	UJ	510	UJ	310	UJ	383	U	365	U
DI-n-OCTYLPHTHALATE	UG/KG	482	UJ	400	UJ	339	UJ	510	UJ	310	UJ	383	UJ	365	UJ
BENZO(b)FLUORANTHENE	UG/KG	482	UJ	400	UJ	339	UJ	510	UJ	310	UJ	383	U	365	U
BENZO(k)FLUORANTHENE	UG/KG	482	UJ	400	UJ	339	UJ	510	UJ	310	UJ	383	U	365	U
BENZO(a)PYRENE	UG/KG	482	UJ	400	UJ	339	UJ	510	UJ	310	UJ	383	U	365	U
INDENO(1,2,3-c,d)PYRENE	UG/KG	482	UJ	400	UJ	339	UJ	510	UJ	310	UJ	383	U	365	U
DIBENZ(a,h)ANTHRACENE	UG/KG	482	UJ	400	UJ	339	UJ	510	UJ	310	UJ	383	U	365	U
BENZO(g,h,i)PERYLENE	UG/KG	482	UJ	400	UJ	339	UJ	510	UJ	310	UJ	383	U	365	U
CARBAZOLE	UG/KG	482	UJ	400	UJ	339	UJ	510	UJ	310	UJ	383	U	365	U
VOLATILES															
CHLOROMETHANE	UG/KG	12	U	11	U	10	U	12	U	10	U	10	U	10	U
VINYL CHLORIDE	UG/KG	12	U	11	U	10	U	12	U	10	U	10	U	10	U
BROMOMETHANE	UG/KG	12	U	11	U	10	U	12	U	10	U	10	U	10	U
1,3-DICHLOROBENZENE	UG/KG	482	UJ	400	UJ	339	UJ	510	UJ	310	UJ	383	U	365	U
CHLOROETHANE	UG/KG	12	U	11	U	10	U	12	U	10	U	10	UJ	10	UJ
1,1-DICHLOROETHENE	UG/KG	12	U	11	U	10	U	12	U	10	U	10	U	10	U
1,4-DICHLOROBENZENE	UG/KG	482	UJ	400	UJ	339	UJ	510	UJ	310	UJ	383	U	365	U
1,2-DICHLOROBENZENE	UG/KG	482	UJ	400	UJ	339	UJ	510	UJ	310	UJ	383	U	365	U

SWMU 05 Subsurface Soil Data

	Building	SWMU5		SWMU5		SWMU5		SWMU5		SWMU5		SWMU5		SWMU5	
	StationID	W5-SB02		W5-SB03		W5-SB03		W5-SB04		W5-SB04		W5-SB04		W5-SB04	
	SampleID	NDA097		NDA089		NDA099		NDA296		NDA297		NDA298		NDA299	
	DateCollected	04/14/2000		04/14/2000		04/14/2000		04/17/2000		04/17/2000		04/17/2000		04/17/2000	
	Depth	5 to 6		2 to 4		4 to 6		8 to 10		2 to 4		4 to 6		6 to 8	
Parameter	**Units**														
DIBENZOFURAN	UG/KG	382	U	321	U	356	U	369	UJ	358	UJ	341	UJ	370	UJ
2,4-DINITROTOLUENE	UG/KG	382	U	321	U	356	U	369	UJ	358	UJ	341	UJ	370	UJ
4-NITROPHENOL	UG/KG	1140	U	962	U	1070	U	1110	UJ	1080	UJ	1020	UJ	1110	UJ
FLUORENE	UG/KG	382	U	321	U	356	U	369	UJ	358	UJ	341	UJ	370	UJ
4-CHLOROPHENYL PHENYL ETHER	UG/KG	382	U	321	U	356	U	369	UJ	358	UJ	341	UJ	370	UJ
DIETHYL PHTHALATE	UG/KG	382	U	321	U	356	U	369	UJ	358	UJ	341	UJ	370	UJ
4-NITROANILINE	UG/KG	1140	U	962	U	1070	U	1110	UJ	1080	UJ	1020	UJ	1110	UJ
4,6-DINITRO-2-METHYLPHENOL	UG/KG	1140	U	962	U	1070	U	1110	UJ	1080	UJ	1020	UJ	1110	UJ
N-NITROSODIPHENYLAMINE	UG/KG	382	U	321	U	356	U	369	UJ	358	UJ	341	UJ	370	UJ
4-BROMOPHENYL PHENYL ETHER	UG/KG	382	U	321	U	356	U	369	UJ	358	UJ	341	UJ	370	UJ
HEXACHLOROBENZENE	UG/KG	382	U	321	U	356	U	369	UJ	358	UJ	341	UJ	370	UJ
PENTACHLOROPHENOL	UG/KG	1140	U	962	U	1070	U	1110	UJ	1080	UJ	1020	UJ	1110	UJ
PHENANTHRENE	UG/KG	382	U	321	U	356	U	369	UJ	42	J	341	UJ	370	UJ
ANTHRACENE	UG/KG	382	U	321	U	356	U	369	UJ	20	J	341	UJ	370	UJ
DI-n-BUTYL PHTHALATE	UG/KG	31	J	321	U	356	U	369	UJ	358	UJ	341	UJ	370	UJ
FLUORANTHENE	UG/KG	382	U	321	U	356	U	369	UJ	104	J	21	J	370	UJ
PYRENE	UG/KG	382	U	321	U	356	U	369	UJ	174	J	23	J	370	UJ
BENZYL BUTYL PHTHALATE	UG/KG	382	U	321	U	356	U	369	UJ	358	UJ	341	UJ	370	UJ
3,3'-DICHLOROBENZIDINE	UG/KG	763	U	642	U	711	U	739	UJ	717	UJ	683	UJ	740	UJ
BENZO(a)ANTHRACENE	UG/KG	382	U	321	U	356	U	369	UJ	75	J	18	J	370	UJ
CHRYSENE	UG/KG	382	U	321	U	356	U	369	UJ	125	J	21	J	370	UJ
bis(2-ETHYLHEXYL) PHTHALATE	UG/KG	382	U	321	U	356	U	369	UJ	358	UJ	341	UJ	370	UJ
DI-n-OCTYLPHTHALATE	UG/KG	382	UJ	321	UJ	356	UJ	369	UJ	358	UJ	341	UJ	370	UJ
BENZO(b)FLUORANTHENE	UG/KG	382	U	321	U	356	U	369	UJ	118	J	25	J	370	UJ
BENZO(k)FLUORANTHENE	UG/KG	382	U	321	U	356	U	369	UJ	103	J	28	J	370	UJ
BENZO(a)PYRENE	UG/KG	382	U	321	U	356	U	369	UJ	163	J	31	J	370	UJ
INDENO(1,2,3-c,d)PYRENE	UG/KG	382	U	321	U	356	U	369	UJ	144	J	28	J	370	UJ
DIBENZ(a,h)ANTHRACENE	UG/KG	382	U	321	U	356	U	369	UJ	35	J	341	UJ	370	UJ
BENZO(g,h,i)PERYLENE	UG/KG	382	U	321	U	356	U	369	UJ	184	J	40	J	370	UJ
CARBAZOLE	UG/KG	382	U	321	U	356	U	369	UJ	358	UJ	341	UJ	370	UJ
VOLATILES															
CHLOROMETHANE	UG/KG	10	U	10	U	10	U	10	U	10	U	11	U	11	U
VINYL CHLORIDE	UG/KG	10	U	10	U	10	U	10	U	10	U	11	U	11	U
BROMOMETHANE	UG/KG	10	U	10	U	10	U	10	U	10	U	11	U	11	U
1,3-DICHLOROBENZENE	UG/KG	382	U	321	U	356	U	369	UJ	358	UJ	341	UJ	370	UJ
CHLOROETHANE	UG/KG	10	UJ	10	UJ	10	UJ	10	UJ	10	UJ	11	UJ	11	UJ
1,1-DICHLOROETHENE	UG/KG	10	U	10	U	10	U	10	U	10	U	11	U	11	U
1,4-DICHLOROBENZENE	UG/KG	382	U	321	U	356	U	369	UJ	358	UJ	341	UJ	370	UJ
1,2-DICHLOROBENZENE	UG/KG	382	U	321	U	356	U	369	UJ	358	UJ	341	UJ	370	UJ

SWMU 05 Subsurface Soil Data

Parameter	Units	Building	SWMU5		SWMU5		SWMU5		SWMU5		SWMU5		SWMU5		SWMU5	
		StationID	W5-SB01		W5-SB01		W5-SB01		W5-SB01		W5-SB01		W5-SB02		W5-SB02	
		SampleID	NDA085		NDA092		NDA093		NDA094		NDA095FD1		NDA087		NDA096	
		DateCollected	04/13/2000		04/13/2000		04/13/2000		04/13/2000		04/13/2000		04/14/2000		04/14/2000	
		Depth	4 to 6		9 to 11		14 to 16		19 to 21		19 to 21		2 to 4		4 to 5	
CARBON DISULFIDE	UG/KG		12	U	11	U	10	U	12	U	10	U	10	J	0.6	J
METHYLENE CHLORIDE	UG/KG		12	U	11	U	10	U	12	U	10	U	10	U	10	U
1,1-DICHLOROETHANE	UG/KG		12	U	11	U	10	U	12	U	10	U	10	U	10	U
ACETONE	UG/KG		29	R	40	R	39	R	50	R	41	R	91	R	1270	R
METHYL ETHYL KETONE (2-BUTANONE)	UG/KG		2	J	3	J	2	J	3	J	2	J	10	R	2	J
CHLOROFORM	UG/KG		12	U	11	U	10	U	12	U	10	U	10	U	10	U
1,1,1-TRICHLOROETHANE	UG/KG		12	U	11	U	10	U	12	U	10	U	10	U	10	U
CARBON TETRACHLORIDE	UG/KG		12	U	11	U	10	U	12	U	10	U	10	U	10	U
BENZENE	UG/KG		0.2	J	0.2	J	0.1	U	12	U	10	U	10	U	10	U
1,2-DICHLOROETHANE	UG/KG		12	U	11	U	10	U	12	U	10	U	10	U	10	U
TRICHLOROETHYLENE (TCE)	UG/KG		12	U	11	U	10	U	12	U	10	U	10	U	10	U
1,2-DICHLOROPROPANE	UG/KG		12	U	11	U	10	U	12	U	10	U	10	U	10	U
1,2,4-TRICHLOROBENZENE	UG/KG		482	UJ	400	UJ	339	UJ	510	UJ	310	UJ	383	U	365	U
BROMODICHLOROMETHANE	UG/KG		12	U	11	U	10	U	12	U	10	U	10	U	10	U
cis-1,3-DICHLOROPROPENE	UG/KG		12	U	11	U	10	U	12	U	10	U	10	U	10	U
METHYL ISOBUTYL KETONE	UG/KG		12	U	11	U	10	U	12	U	10	U	10	U	10	U
TOLUENE	UG/KG		0.6	J	0.5	J	10	U	12	U	10	U	10	U	0.4	J
trans-1,3-DICHLOROPROPENE	UG/KG		12	U	11	U	10	U	12	U	10	U	10	U	10	U
1,1,2-TRICHLOROETHANE	UG/KG		12	U	11	U	10	U	12	U	10	U	10	U	10	U
TETRACHLOROETHYLENE(PCE)	UG/KG		12	U	11	U	10	U	12	U	10	U	10	U	10	U
2-HEXANONE	UG/KG		12	U	11	U	10	U	12	U	10	U	10	U	10	U
DIBROMOCHLOROMETHANE	UG/KG		12	U	11	U	10	U	12	U	10	U	10	U	10	U
CHLOROBENZENE	UG/KG		12	U	11	U	10	U	12	U	10	U	10	U	10	U
ETHYLBENZENE	UG/KG		12	U	11	U	10	U	12	U	10	U	10	U	10	U
M,P-XYLENE (SUM OF ISOMERS)	UG/KG		12	U	11	U	10	U	12	U	10	U	0.4	J	0.5	J
O-XYLENE (1,2-DIMETHYLBENZENE)	UG/KG		12	U	11	U	10	U	12	U	10	U	10	U	10	U
STYRENE	UG/KG		12	U	11	U	10	U	12	U	10	U	10	U	10	U
BROMOFORM	UG/KG		12	U	11	U	10	U	12	U	10	U	10	U	10	U
1,1,2,2-TETRACHLOROETHANE	UG/KG		12	U	11	U	10	U	12	U	10	U	10	U	10	U
XYLENES, TOTAL	UG/KG		12	U	11	U	10	U	12	U	10	U	0.4	J	0.5	J

SWMU 05 Subsurface Soil Data

	Building	SWMU5		SWMU5		SWMU5		SWMU5		SWMU5		SWMU5		SWMU5	
	StationID	W5-SB02		W5-SB03		W5-SB03		W5-SB04		W5-SB04		W5-SB04		W5-SB04	
	SampleID	NDA097		NDA089		NDA099		NDA296		NDA297		NDA298		NDA299	
	DateCollected	04/14/2000		04/14/2000		04/14/2000		04/17/2000		04/17/2000		04/17/2000		04/17/2000	
	Depth	5 to 6		2 to 4		4 to 6		8 to 10		2 to 4		4 to 6		6 to 8	
Parameter	**Units**														
CARBON DISULFIDE	UG/KG	0.4	J	0.3	J	10	U	0.6	J	0.6	J	11	U	0.9	J
METHYLENE CHLORIDE	UG/KG	10	U	10	U	10	U	10	U	10	U	11	U	11	U
1,1-DICHLOROETHANE	UG/KG	10	U	10	U	10	U	10	U	10	U	11	U	11	U
ACETONE	UG/KG	2100	R	10	R	25	R	265	R	184	R	672	R	103	R
METHYL ETHYL KETONE (2-BUTANONE)	UG/KG	3	J	10	R	10	R	10	R	2	J	11	R	11	R
CHLOROFORM	UG/KG	10	U	10	U	10	U	10	U	10	U	11	U	11	U
1,1,1-TRICHLOROETHANE	UG/KG	10	U	10	U	10	U	10	U	10	U	11	U	11	U
CARBON TETRACHLORIDE	UG/KG	10	U	10	U	10	U	10	U	10	U	11	U	11	U
BENZENE	UG/KG	0.1	U	10	U	10	U	0.2	J	10	U	11	U	11	U
1,2-DICHLOROETHANE	UG/KG	10	U	0.3	J	0.3	J	10	U	10	U	11	U	11	U
TRICHLOROETHYLENE (TCE)	UG/KG	10	U	10	U	10	U	10	U	10	U	11	U	11	U
1,2-DICHLOROPROPANE	UG/KG	10	U	10	U	10	U	10	U	10	U	11	U	11	U
1,2,4-TRICHLOROBENZENE	UG/KG	382	U	321	U	356	U	369	UJ	358	UJ	341	UJ	370	UJ
BROMODICHLOROMETHANE	UG/KG	10	U	10	U	10	U	10	U	10	U	11	U	11	U
cis-1,3-DICHLOROPROPENE	UG/KG	10	U	10	U	10	U	10	U	10	U	11	U	11	U
METHYL ISOBUTYL KETONE	UG/KG	10	U	10	U	10	U	10	U	10	U	11	U	11	U
TOLUENE	UG/KG	10	U	10	U	10	U	0.3	J	1	J	0.308	U	11	U
trans-1,3-DICHLOROPROPENE	UG/KG	10	U	10	U	10	U	10	U	10	U	11	U	11	U
1,1,2-TRICHLOROETHANE	UG/KG	10	U	10	U	10	U	10	U	10	U	11	U	11	U
TETRACHLOROETHYLENE(PCE)	UG/KG	10	U	10	U	10	U	10	U	10	U	11	U	11	U
2-HEXANONE	UG/KG	10	U	10	U	10	U	10	U	10	U	11	U	11	U
DIBROMOCHLOROMETHANE	UG/KG	10	U	10	U	10	U	10	U	10	U	11	U	11	U
CHLOROBENZENE	UG/KG	10	U	10	U	10	U	10	U	10	U	11	U	11	U
ETHYLBENZENE	UG/KG	10	U	10	U	10	U	10	U	1	J	11	U	11	U
M,P-XYLENE (SUM OF ISOMERS)	UG/KG	0.2	J	0.3	J	10	U	10	U	9	J	0.9	J	11	U
O-XYLENE (1,2-DIMETHYLBENZENE)	UG/KG	10	U	10	U	10	U	10	U	3	J	0.3	J	11	U
STYRENE	UG/KG	10	U	10	U	10	U	10	U	10	U	0.6	J	11	U
BROMOFORM	UG/KG	10	U	10	U	10	U	10	U	10	U	11	U	11	U
1,1,2,2-TETRACHLOROETHANE	UG/KG	10	U	10	U	10	U	10	U	10	U	11	U	11	U
XYLENES, TOTAL	UG/KG	0.2	J	0.3	J	10	U	10	U	12	=	1	J	11	U

	Building	SWMU6		SWMU6		SWMU6		SWMU6		SWMU6	
	StationID	SWMU6-MW01		SWMU6-MW01		SWMU6-MW02		SWMU6-MW02		SWMU6-MW02	
	SampleID	NDA006		NDA336		NDA008		NDA337		NDA342FD1	
	DateCollected	05/02/2000		06/03/2000		05/02/2000		06/03/2000		06/03/2000	
	Depth	0 to 0		0 to 0		0 to 0		0 to 0		0 to 0	
Parameter	**Units**										
DISSOLVED METALS											
ALUMINUM, DISSOLVED	UG/L	25.8	U			25.8	U				
ANTIMONY, DISSOLVED	UG/L	1.4	U			1.4	U				
ARSENIC, DISSOLVED	UG/L	7.3	J			4.8	J				
BARIUM, DISSOLVED	UG/L	481	=			294	=				
BERYLLIUM, DISSOLVED	UG/L	0.3	U			0.3	U				
CALCIUM, DISSOLVED	UG/L	694000	=			498000	=				
CADMIUM, DISSOLVED	UG/L	2.9	J			1.8	J				
CHROMIUM, DISSOLVED	UG/L	4.7	J			0.5	U				
COBALT, DISSOLVED	UG/L	0.55	J			0.5	U				
COPPER, DISSOLVED	UG/L	1.9	U			1.9	U				
IRON, DISSOLVED	UG/L	12.2	R			12.7	J				
LEAD, DISSOLVED	UG/L	3	J			2.7	J				
MAGNESIUM, DISSOLVED	UG/L	1520000	=			1530000	=				
MANGANESE, DISSOLVED	UG/L	11800	=			2070	=				
MERCURY, DISSOLVED	UG/L	0.18	U			0.18	U				
NICKEL, DISSOLVED	UG/L	1.6	J			2.1	J				
POTASSIUM, DISSOLVED	UG/L	26.6	U			26.6	U				
SELENIUM, DISSOLVED	UG/L	5.7	=			5	J				
SILVER, DISSOLVED	UG/L	0.93	J			0.5	U				
SODIUM, DISSOLVED	UG/L	7360000	=			12200000	=				
THALLIUM, DISSOLVED	UG/L	2.7	U			2.7	U				
VANADIUM, DISSOLVED	UG/L	2.7	J			4.5	J				
EXPLOSIVES											
2,6-DINITROTOLUENE	UG/L	6	U			6	U				
OCTAHYDRO-1,3,5,7-TETRANITRO-1,3,5,7-TETRAZOCINE	UG/L	5	UJ			5	UJ				
HEXAHYDRO-1,3,5-TRINITRO-1,3,5,7-TETRAZOCINE	UG/L	5	UJ			5	UJ				
1,3,5-TRINITROBENZENE	UG/L	5	UJ			5	UJ				
1,3-DINITROBENZENE	UG/L	5	UJ			5	UJ				
METHYL-2,4,6-TRINITROPHENYLNITRAMINE	UG/L	5	UJ			5	UJ				
NITROBENZENE	UG/L	6	U			6	U				
2,4,6-TRINITROTOLUENE	UG/L	5	UJ			5	UJ				
2,4-DINITROTOLUENE	UG/L	6	U			6	U				
2-NITROTOLUENE	UG/L	5	UJ			5	UJ				
4-NITROTOLUENE	UG/L	5	UJ			5	UJ				

SWMU 06 Groundwater Data

Parameter	Units	Building	SWMU6		SWMU6		SWMU6		SWMU6	
		StationID	SWMU6-MW03		SWMU6-MW03		SWMU6-MW04		SWMU6-MW04	
		SampleID	NDA009		NDA338		NDA005		NDA339	
		DateCollected	05/02/2000		06/03/2000		05/02/2000		06/03/2000	
		Depth	0 to 0		0 to 0		0 to 0		0 to 0	
DISSOLVED METALS										
ALUMINUM, DISSOLVED	UG/L		25.8	U			25.8	U		
ANTIMONY, DISSOLVED	UG/L		1.8	J			1.4	U		
ARSENIC, DISSOLVED	UG/L		5.9	J			13.3	=		
BARIUM, DISSOLVED	UG/L		179	J			381	=		
BERYLLIUM, DISSOLVED	UG/L		0.3	U			0.3	U		
CALCIUM, DISSOLVED	UG/L		574000	=			567000	=		
CADMIUM, DISSOLVED	UG/L		2	J			2	J		
CHROMIUM, DISSOLVED	UG/L		0.5	U			4.5	J		
COBALT, DISSOLVED	UG/L		0.5	U			0.92	J		
COPPER, DISSOLVED	UG/L		1.9	U			1.9	U		
IRON, DISSOLVED	UG/L		12.2	R			12.2	R		
LEAD, DISSOLVED	UG/L		3.8	=			2.6	J		
MAGNESIUM, DISSOLVED	UG/L		1530000	=			1510000	=		
MANGANESE, DISSOLVED	UG/L		1170	=			10600	=		
MERCURY, DISSOLVED	UG/L		0.18	U			0.18	U		
NICKEL, DISSOLVED	UG/L		1	J			4	J		
POTASSIUM, DISSOLVED	UG/L		26.6	U			26.6	U		
SELENIUM, DISSOLVED	UG/L		2.1	U			6.4	=		
SILVER, DISSOLVED	UG/L		0.5	U			2.1	J		
SODIUM, DISSOLVED	UG/L		12100000	=			9720000	=		
THALLIUM, DISSOLVED	UG/L		2.7	U			2.7	U		
VANADIUM, DISSOLVED	UG/L		4.8	J			8.1	J		
EXPLOSIVES										
2,6-DINITROTOLUENE	UG/L		6	U			6	U		
OCTAHYDRO-1,3,5,7-TETRANITRO-1,3,5,7-TETRAZOCINE	UG/L		5	UJ			5	UJ		
HEXAHYDRO-1,3,5-TRINITRO-1,3,5,7-TETRAZOCINE	UG/L		5	UJ			5	UJ		
1,3,5-TRINITROBENZENE	UG/L		5	UJ			5	UJ		
1,3-DINITROBENZENE	UG/L		5	UJ			5	UJ		
METHYL-2,4,6-TRINITROPHENYLNITRAMINE	UG/L		5	UJ			5	UJ		
NITROBENZENE	UG/L		6	U			6	U		
2,4,6-TRINITROTOLUENE	UG/L		5	UJ			5	UJ		
2,4-DINITROTOLUENE	UG/L		6	U			6	U		
2-NITROTOLUENE	UG/L		5	UJ			5	UJ		
4-NITROTOLUENE	UG/L		5	UJ			5	UJ		

Parameter	Units	Building	StationID	SampleID	DateCollected	Depth											
		SWMU6	SWMU6-MW01	NDA006	05/02/2000	0 to 0		SWMU6	SWMU6-MW01	NDA336	06/03/2000	0 to 0		SWMU6	SWMU6-MW02	NDA008	05/02/2000	0 to 0	
3-NITROTOLUENE	UG/L	5	UJ					5	UJ										
METALS																			
ALUMINUM	UG/L	306	=					1460	=										
ANTIMONY	UG/L	1.4	U					3.7	J										
ARSENIC	UG/L	6.8	J					3.5	J										
BARIUM	UG/L	519	=					283	=										
BERYLLIUM	UG/L	0.32	J					0.44	J										
CADMIUM	UG/L	3.3	J					2	J										
CALCIUM	UG/L	860000	=					555000	=										
CHROMIUM, TOTAL	UG/L	5.7	J					4.2	J										
COBALT	UG/L	4	J					0.5	U										
COPPER	UG/L	1.9	U					10	J										
IRON	UG/L	324	J					2500	J										
LEAD	UG/L	3.5	=					25.2	=										
MAGNESIUM	UG/L	1580000	=					1570000	=										
MANGANESE	UG/L	14300	=					2070	=										
MERCURY	UG/L	0.18	U					0.18	U										
NICKEL	UG/L	2.7	J					3.7	J										
POTASSIUM	UG/L	26.6	U					26.6	U										
SELENIUM	UG/L	7.2	=					2.9	J										
SILVER	UG/L	0.5	U					0.5	U										
SODIUM	UG/L	9740000	=					11800000	=										
THALLIUM	UG/L	2.7	U					2.7	U										
VANADIUM	UG/L	3.7	J					9.9	J										
MISCELLANEOUS																			
PERCHLORATE	ug/L			40	U					40	U					40	U		
PCB																			
PCB-1016 (AROCHLOR 1016)	UG/L	0.22	U					0.21	U										
PCB-1260 (AROCHLOR 1260)	UG/L	0.22	U					0.21	U										
PCB-1221 (AROCHLOR 1221)	UG/L	0.43	U					0.42	U										
PCB-1232 (AROCHLOR 1232)	UG/L	0.22	U					0.21	U										
PCB-1242 (AROCHLOR 1242)	UG/L	0.22	U					0.21	U										
PCB-1248 (AROCHLOR 1248)	UG/L	0.22	U					0.21	U										
PCB-1254 (AROCHLOR 1254)	UG/L	0.22	U					0.21	U										
PESTICIDES																			

SWMU 06 Groundwater Data

Parameter	Units	Building	SWMU6		SWMU6		SWMU6		SWMU6	
		StationID	SWMU6-MW03		SWMU6-MW03		SWMU6-MW04		SWMU6-MW04	
		SampleID	NDA009		NDA338		NDA005		NDA339	
		DateCollected	05/02/2000		06/03/2000		05/02/2000		06/03/2000	
		Depth	0 to 0		0 to 0		0 to 0		0 to 0	
3-NITROTOLUENE	UG/L		5	UJ			5	UJ		
METALS										
ALUMINUM	UG/L		182	J			164	J		
ANTIMONY	UG/L		1.4	U			1.4	U		
ARSENIC	UG/L		6.5	J			10	=		
BARIUM	UG/L		194	J			425	=		
BERYLLIUM	UG/L		0.42	J			0.33	J		
CADMIUM	UG/L		2.8	J			2.8	J		
CALCIUM	UG/L		712000	=			691000	=		
CHROMIUM, TOTAL	UG/L		2.7	J			8.9	J		
COBALT	UG/L		0.5	U			1.7	J		
COPPER	UG/L		1.9	U			1.9	U		
IRON	UG/L		43	J			55.5	J		
LEAD	UG/L		1.8	J			4.3	=		
MAGNESIUM	UG/L		1590000	=			1570000	=		
MANGANESE	UG/L		1380	=			13800	=		
MERCURY	UG/L		0.18	U			0.18	U		
NICKEL	UG/L		1.5	J			4.4	J		
POTASSIUM	UG/L		26.6	U			26.6	U		
SELENIUM	UG/L		5.9	=			7.1	=		
SILVER	UG/L		0.5	U			0.5	U		
SODIUM	UG/L		11900000	=			11800000	=		
THALLIUM	UG/L		2.7	U			2.7	U		
VANADIUM	UG/L		6	J			7.5	J		
MISCELLANEOUS										
PERCHLORATE	ug/L				40	U			40	U
PCB										
PCB-1016 (AROCHLOR 1016)	UG/L		0.22	U			0.24	U		
PCB-1260 (AROCHLOR 1260)	UG/L		0.22	U			0.24	U		
PCB-1221 (AROCHLOR 1221)	UG/L		0.43	U			0.7	=		
PCB-1232 (AROCHLOR 1232)	UG/L		0.22	U			0.09	J		
PCB-1242 (AROCHLOR 1242)	UG/L		0.22	U			0.24	U		
PCB-1248 (AROCHLOR 1248)	UG/L		0.22	U			0.24	U		
PCB-1254 (AROCHLOR 1254)	UG/L		0.22	U			0.24	U		
PESTICIDES										

SWMU 06 Groundwater Data

	Building	SWMU6		SWMU6		SWMU6		SWMU6		SWMU6	
	StationID	SWMU6-MW01		SWMU6-MW01		SWMU6-MW02		SWMU6-MW02		SWMU6-MW02	
	SampleID	NDA006		NDA336		NDA008		NDA337		NDA342FD1	
	DateCollected	05/02/2000		06/03/2000		05/02/2000		06/03/2000		06/03/2000	
	Depth	0 to 0		0 to 0		0 to 0		0 to 0		0 to 0	
Parameter	**Units**										
ALPHA BHC (ALPHA HEXACHLOROCYCLOHEXANE)	UG/L	0.01	UJ			0.01	UJ				
BETA BHC (BETA HEXACHLOROCYCLOHEXANE)	UG/L	0.01	U			0.01	UJ				
DELTA BHC (DELTA HEXACHLOROCYCLOHEXANE)	UG/L	0.01	U			0.01	UJ				
GAMMA BHC (LINDANE)	UG/L	0.01	UJ			0.01	UJ				
HEPTACHLOR	UG/L	0.01	U			0.01	UJ				
ALDRIN	UG/L	0.01	U			0.01	UJ				
HEPTACHLOR EPOXIDE	UG/L	0.01	U			0.01	UJ				
ALPHA ENDOSULFAN (ENDOSULFAN I)	UG/L	0.01	U			0.01	UJ				
DIELDRIN	UG/L	0.02	U			0.02	UJ				
p,p'-DDE	UG/L	0.02	U			0.02	UJ				
ENDRIN	UG/L	0.02	U			0.02	UJ				
BETA ENDOSULFAN (ENDOSULFAN II)	UG/L	0.02	U			0.02	UJ				
p,p'-DDD	UG/L	0.02	U			0.02	UJ				
ENDOSULFAN SULFATE	UG/L	0.02	U			0.02	UJ				
p,p'-DDT	UG/L	0.02	U			0.02	UJ				
METHOXYCHLOR	UG/L	0.11	U			0.11	UJ				
ENDRIN ALDEHYDE	UG/L	0.02	U			0.02	UJ				
ALPHA-CHLORDANE	UG/L	0.01	U			0.01	UJ				
GAMMA-CHLORDANE	UG/L	0.01	U			0.01	UJ				
ENDRIN KETONE	UG/L	0.02	U			0.02	UJ				
TOXAPHENE	UG/L	1.1	U			1.1	UJ				
SEMI-VOLATILES											
bis(2-CHLOROETHYL) ETHER (2-CHLOROETHYL ETHER)	UG/L	6	U			6	U				
PHENOL	UG/L	6	U			6	U				
2-CHLOROPHENOL	UG/L	6	U			6	U				
1,3,5-TRINITROBENZENE	UG/L	5	UJ			5	UJ				
1,3-DICHLOROBENZENE	UG/L	1	U			1	U				
1,3-DINITROBENZENE	UG/L	5	UJ			5	UJ				
1,4-DICHLOROBENZENE	UG/L	1	U			1	U				
1,2-DICHLOROBENZENE	UG/L	1	U			1	U				
bis(2-CHLOROISOPROPYL) ETHER	UG/L	6	U			6	U				
2-METHYLPHENOL (o-CRESOL)	UG/L	6	U			6	U				
HEXACHLOROETHANE	UG/L	6	U			6	U				
N-NITROSODI-n-PROPYLAMINE	UG/L	6	U			6	U				
CRESOLS, m & p	UG/L	6	U			6	U				

SWMU 06 Groundwater Data

	Building	SWMU6		SWMU6		SWMU6		SWMU6	
	StationID	SWMU6-MW03		SWMU6-MW03		SWMU6-MW04		SWMU6-MW04	
	SampleID	NDA009		NDA338		NDA005		NDA339	
	DateCollected	05/02/2000		06/03/2000		05/02/2000		06/03/2000	
	Depth	0 to 0		0 to 0		0 to 0		0 to 0	
Parameter	**Units**								
ALPHA BHC (ALPHA HEXACHLOROCYCLOHEXANE)	UG/L	0.01	UJ			0.01	UJ		
BETA BHC (BETA HEXACHLOROCYCLOHEXANE)	UG/L	0.01	U			0.01	U		
DELTA BHC (DELTA HEXACHLOROCYCLOHEXANE)	UG/L	0.01	U			0.01	U		
GAMMA BHC (LINDANE)	UG/L	0.01	UJ			0.01	UJ		
HEPTACHLOR	UG/L	0.01	U			0.01	U		
ALDRIN	UG/L	0.01	U			0.01	U		
HEPTACHLOR EPOXIDE	UG/L	0.01	U			0.01	U		
ALPHA ENDOSULFAN (ENDOSULFAN I)	UG/L	0.01	U			0.01	U		
DIELDRIN	UG/L	0.02	U			0.02	U		
p,p'-DDE	UG/L	0.02	U			0.02	U		
ENDRIN	UG/L	0.02	U			0.02	U		
BETA ENDOSULFAN (ENDOSULFAN II)	UG/L	0.02	U			0.02	U		
p,p'-DDD	UG/L	0.02	U			0.02	U		
ENDOSULFAN SULFATE	UG/L	0.02	U			0.02	U		
p,p'-DDT	UG/L	0.02	U			0.02	U		
METHOXYCHLOR	UG/L	0.11	U			0.12	U		
ENDRIN ALDEHYDE	UG/L	0.02	U			0.02	U		
ALPHA-CHLORDANE	UG/L	0.01	U			0.01	U		
GAMMA-CHLORDANE	UG/L	0.01	U			0.01	U		
ENDRIN KETONE	UG/L	0.02	U			0.02	U		
TOXAPHENE	UG/L	1.1	U			1.2	U		
SEMI-VOLATILES									
bis(2-CHLOROETHYL) ETHER (2-CHLOROETHYL ETHER)	UG/L	6	U			6	U		
PHENOL	UG/L	6	U			6	U		
2-CHLOROPHENOL	UG/L	6	U			6	U		
1,3,5-TRINITROBENZENE	UG/L	5	UJ			5	UJ		
1,3-DICHLOROBENZENE	UG/L	1	U			1	U		
1,3-DINITROBENZENE	UG/L	5	UJ			5	UJ		
1,4-DICHLOROBENZENE	UG/L	1	U			1	U		
1,2-DICHLOROBENZENE	UG/L	1	U			1	U		
bis(2-CHLOROISOPROPYL) ETHER	UG/L	6	U			6	U		
2-METHYLPHENOL (o-CRESOL)	UG/L	6	U			6	U		
HEXACHLOROETHANE	UG/L	6	U			6	U		
N-NITROSODI-n-PROPYLAMINE	UG/L	6	U			6	U		
CRESOLS, m & p	UG/L	6	U			6	U		

	Building	SWMU6		SWMU6		SWMU6		SWMU6		SWMU6	
	StationID	SWMU6-MW01		SWMU6-MW01		SWMU6-MW02		SWMU6-MW02		SWMU6-MW02	
	SampleID	NDA006		NDA336		NDA008		NDA337		NDA342FD1	
	DateCollected	05/02/2000		06/03/2000		05/02/2000		06/03/2000		06/03/2000	
	Depth	0 to 0		0 to 0		0 to 0		0 to 0		0 to 0	
Parameter	**Units**										
NITROBENZENE	UG/L	6	U			6	U				
ISOPHORONE	UG/L	6	U			6	U				
2-NITROPHENOL	UG/L	6	U			6	U				
2,4-DIMETHYLPHENOL	UG/L	6	U			6	U				
bis(2-CHLOROETHOXY) METHANE	UG/L	6	U			6	U				
2,4-DICHLOROPHENOL	UG/L	6	U			6	U				
1,2,4-TRICHLOROBENZENE	UG/L	1	U			1	U				
NAPHTHALENE	UG/L	6	U			6	U				
4-CHLOROANILINE	UG/L	6	U			6	U				
2-METHYLNAPHTHALENE	UG/L	6	U			6	U				
HEXACHLOROBUTADIENE	UG/L	6	U			6	U				
4-CHLORO-3-METHYLPHENOL	UG/L	6	U			6	U				
HEXACHLOROCYCLOPENTADIENE	UG/L	6	U			6	U				
2,4,6-TRICHLOROPHENOL	UG/L	6	U			6	U				
2,4,5-TRICHLOROPHENOL	UG/L	22	U			22	U				
2-CHLORONAPHTHALENE	UG/L	6	U			6	U				
2-NITROANILINE	UG/L	22	U			22	U				
ACENAPHTHYLENE	UG/L	6	U			6	U				
DIMETHYL PHTHALATE	UG/L	6	U			6	U				
2,6-DINITROTOLUENE	UG/L	6	U			6	U				
ACENAPHTHENE	UG/L	6	U			6	U				
3-NITROANILINE	UG/L	22	U			22	U				
2,4-DINITROPHENOL	UG/L	22	U			22	U				
DIBENZOFURAN	UG/L	6	U			6	U				
2,4-DINITROTOLUENE	UG/L	6	U			6	U				
4-NITROPHENOL	UG/L	22	U			22	U				
FLUORENE	UG/L	6	U			6	U				
4-CHLOROPHENYL PHENYL ETHER	UG/L	6	U			6	U				
DIETHYL PHTHALATE	UG/L	6	U			6	U				
4-NITROANILINE	UG/L	22	U			22	U				
4,6-DINITRO-2-METHYLPHENOL	UG/L	22	U			22	U				
N-NITROSODIPHENYLAMINE	UG/L	6	U			6	U				
4-BROMOPHENYL PHENYL ETHER	UG/L	6	U			6	U				
HEXACHLOROBENZENE	UG/L	6	U			6	U				
PENTACHLOROPHENOL	UG/L	22	U			22	U				

SWMU 06 Groundwater Data

	Building	SWMU6		SWMU6		SWMU6		SWMU6	
	StationID	SWMU6-MW03		SWMU6-MW03		SWMU6-MW04		SWMU6-MW04	
	SampleID	NDA009		NDA338		NDA005		NDA339	
	DateCollected	05/02/2000		06/03/2000		05/02/2000		06/03/2000	
	Depth	0 to 0		0 to 0		0 to 0		0 to 0	
Parameter	**Units**								
NITROBENZENE	UG/L	6	U			6	U		
ISOPHORONE	UG/L	6	U			6	U		
2-NITROPHENOL	UG/L	6	U			6	U		
2,4-DIMETHYLPHENOL	UG/L	6	U			6	U		
bis(2-CHLOROETHOXY) METHANE	UG/L	6	U			6	U		
2,4-DICHLOROPHENOL	UG/L	6	U			6	U		
1,2,4-TRICHLOROBENZENE	UG/L	1	U			1	U		
NAPHTHALENE	UG/L	6	U			6	U		
4-CHLOROANILINE	UG/L	6	U			6	U		
2-METHYLNAPHTHALENE	UG/L	6	U			6	U		
HEXACHLOROBUTADIENE	UG/L	6	U			6	U		
4-CHLORO-3-METHYLPHENOL	UG/L	6	U			6	U		
HEXACHLOROCYCLOPENTADIENE	UG/L	6	U			6	U		
2,4,6-TRICHLOROPHENOL	UG/L	6	U			6	U		
2,4,5-TRICHLOROPHENOL	UG/L	24	U			24	U		
2-CHLORONAPHTHALENE	UG/L	6	U			6	U		
2-NITROANILINE	UG/L	24	U			24	U		
ACENAPHTHYLENE	UG/L	6	U			6	U		
DIMETHYL PHTHALATE	UG/L	6	U			6	U		
2,6-DINITROTOLUENE	UG/L	6	U			6	U		
ACENAPHTHENE	UG/L	6	U			6	U		
3-NITROANILINE	UG/L	24	U			24	U		
2,4-DINITROPHENOL	UG/L	24	U			24	U		
DIBENZOFURAN	UG/L	6	U			6	U		
2,4-DINITROTOLUENE	UG/L	6	U			6	U		
4-NITROPHENOL	UG/L	24	U			24	U		
FLUORENE	UG/L	6	U			6	U		
4-CHLOROPHENYL PHENYL ETHER	UG/L	6	U			6	U		
DIETHYL PHTHALATE	UG/L	6	U			6	U		
4-NITROANILINE	UG/L	24	U			24	U		
4,6-DINITRO-2-METHYLPHENOL	UG/L	24	U			24	U		
N-NITROSODIPHENYLAMINE	UG/L	6	U			6	U		
4-BROMOPHENYL PHENYL ETHER	UG/L	6	U			6	U		
HEXACHLOROBENZENE	UG/L	6	U			6	U		
PENTACHLOROPHENOL	UG/L	24	U			24	U		

	Building	SWMU6		SWMU6		SWMU6		SWMU6		SWMU6	
	StationID	SWMU6-MW01		SWMU6-MW01		SWMU6-MW02		SWMU6-MW02		SWMU6-MW02	
	SampleID	NDA006		NDA336		NDA008		NDA337		NDA342FD1	
	DateCollected	05/02/2000		06/03/2000		05/02/2000		06/03/2000		06/03/2000	
	Depth	0 to 0		0 to 0		0 to 0		0 to 0		0 to 0	
Parameter	**Units**										
PHENANTHRENE	UG/L	6	U			6	U				
ANTHRACENE	UG/L	6	U			6	U				
DI-n-BUTYL PHTHALATE	UG/L	6	U			6	U				
FLUORANTHENE	UG/L	6	U			6	U				
PYRENE	UG/L	6	U			6	U				
BENZYL BUTYL PHTHALATE	UG/L	6	U			6	U				
3,3'-DICHLOROBENZIDINE	UG/L	6	U			6	U				
BENZO(a)ANTHRACENE	UG/L	6	U			6	U				
CHRYSENE	UG/L	6	U			6	U				
bis(2-ETHYLHEXYL) PHTHALATE	UG/L	6	U			6	U				
DI-n-OCTYLPHTHALATE	UG/L	6	U			6	U				
BENZO(b)FLUORANTHENE	UG/L	6	U			6	U				
BENZO(k)FLUORANTHENE	UG/L	6	U			6	U				
BENZO(a)PYRENE	UG/L	6	U			6	U				
INDENO(1,2,3-c,d)PYRENE	UG/L	6	U			6	U				
DIBENZ(a,h)ANTHRACENE	UG/L	6	U			6	U				
BENZO(g,h,i)PERYLENE	UG/L	6	U			6	U				
CARBAZOLE	UG/L	6	U			6	U				
VOLATILES											
CHLOROMETHANE	UG/L	1	U			1	U				
VINYL CHLORIDE	UG/L	1	U			1	U				
BROMOMETHANE	UG/L	1	U			1	U				
1,3-DICHLOROBENZENE	UG/L	1	U			1	U				
CHLOROETHANE	UG/L	1	U			1	U				
1,1-DICHLOROETHENE	UG/L	1	U			1	U				
1,4-DICHLOROBENZENE	UG/L	1	U			1	U				
1,2-DICHLOROBENZENE	UG/L	1	U			1	U				
CARBON DISULFIDE	UG/L	1	U			1	U				
METHYLENE CHLORIDE	UG/L	2	U			2	U				
1,1-DICHLOROETHANE	UG/L	1	U			1	U				
ACETONE	UG/L	5	U			5	U				
METHYL ETHYL KETONE (2-BUTANONE)	UG/L	5	UJ			5	UJ				
CHLOROFORM	UG/L	1	U			1	U				
1,1,1-TRICHLOROETHANE	UG/L	1	U			1	U				
CARBON TETRACHLORIDE	UG/L	1	U			1	U				

SWMU 06 Groundwater Data

	Building	SWMU6		SWMU6		SWMU6		SWMU6	
	StationID	SWMU6-MW03		SWMU6-MW03		SWMU6-MW04		SWMU6-MW04	
	SampleID	NDA009		NDA338		NDA005		NDA339	
	DateCollected	05/02/2000		06/03/2000		05/02/2000		06/03/2000	
	Depth	0 to 0		0 to 0		0 to 0		0 to 0	
Parameter	**Units**								
PHENANTHRENE	UG/L	6	U			6	U		
ANTHRACENE	UG/L	6	U			6	U		
DI-n-BUTYL PHTHALATE	UG/L	6	U			6	U		
FLUORANTHENE	UG/L	6	U			6	U		
PYRENE	UG/L	6	U			6	U		
BENZYL BUTYL PHTHALATE	UG/L	6	U			6	U		
3,3'-DICHLOROBENZIDINE	UG/L	6	U			6	U		
BENZO(a)ANTHRACENE	UG/L	6	U			6	U		
CHRYSENE	UG/L	6	U			6	U		
bis(2-ETHYLHEXYL) PHTHALATE	UG/L	6	U			6	U		
DI-n-OCTYLPHTHALATE	UG/L	6	U			6	U		
BENZO(b)FLUORANTHENE	UG/L	6	U			6	U		
BENZO(k)FLUORANTHENE	UG/L	6	U			6	U		
BENZO(a)PYRENE	UG/L	6	U			6	U		
INDENO(1,2,3-c,d)PYRENE	UG/L	6	U			6	U		
DIBENZ(a,h)ANTHRACENE	UG/L	6	U			6	U		
BENZO(g,h,i)PERYLENE	UG/L	6	U			6	U		
CARBAZOLE	UG/L	6	U			6	U		
VOLATILES									
CHLOROMETHANE	UG/L	1	U			1	U		
VINYL CHLORIDE	UG/L	1	U			1	U		
BROMOMETHANE	UG/L	1	U			1	U		
1,3-DICHLOROBENZENE	UG/L	1	U			1	U		
CHLOROETHANE	UG/L	1	U			1	U		
1,1-DICHLOROETHENE	UG/L	1	U			1	U		
1,4-DICHLOROBENZENE	UG/L	1	U			1	U		
1,2-DICHLOROBENZENE	UG/L	1	U			1	U		
CARBON DISULFIDE	UG/L	1	U			1	U		
METHYLENE CHLORIDE	UG/L	2	U			2	U		
1,1-DICHLOROETHANE	UG/L	1	U			1	U		
ACETONE	UG/L	5	U			5	U		
METHYL ETHYL KETONE (2-BUTANONE)	UG/L	5	UJ			5	UJ		
CHLOROFORM	UG/L	1	U			1	U		
1,1,1-TRICHLOROETHANE	UG/L	1	U			1	U		
CARBON TETRACHLORIDE	UG/L	1	U			1	U		

	Building	SWMU6		SWMU6		SWMU6		SWMU6		SWMU6	
	StationID	SWMU6-MW01		SWMU6-MW01		SWMU6-MW02		SWMU6-MW02		SWMU6-MW02	
	SampleID	NDA006		NDA336		NDA008		NDA337		NDA342FD1	
	DateCollected	05/02/2000		06/03/2000		05/02/2000		06/03/2000		06/03/2000	
	Depth	0 to 0		0 to 0		0 to 0		0 to 0		0 to 0	
Parameter	**Units**										
BENZENE	UG/L	1	U			1	U				
1,2-DICHLOROETHANE	UG/L	1	U			1	U				
TRICHLOROETHYLENE (TCE)	UG/L	1	U			1	U				
1,2-DICHLOROPROPANE	UG/L	1	U			1	U				
1,2,4-TRICHLOROBENZENE	UG/L	1	U			1	U				
BROMODICHLOROMETHANE	UG/L	1	U			1	U				
cis-1,3-DICHLOROPROPENE	UG/L	1	U			1	U				
METHYL ISOBUTYL KETONE (4-METHYL-2-PENTANONE)	UG/L	5	U			5	U				
TOLUENE	UG/L	1	U			1	U				
trans-1,3-DICHLOROPROPENE	UG/L	1	U			1	U				
1,1,2-TRICHLOROETHANE	UG/L	1	U			1	U				
TETRACHLOROETHYLENE(PCE)	UG/L	1	UJ			1	UJ				
2-HEXANONE	UG/L	5	U			5	U				
DIBROMOCHLOROMETHANE	UG/L	1	U			1	U				
CHLOROBENZENE	UG/L	1	U			1	U				
ETHYLBENZENE	UG/L	1	U			1	U				
M,P-XYLENE (SUM OF ISOMERS)	UG/L	1	U			1	U				
O-XYLENE (1,2-DIMETHYLBENZENE)	UG/L	1	U			1	U				
STYRENE	UG/L	1	U			1	U				
BROMOFORM	UG/L	1	U			1	U				
1,1,2,2-TETRACHLOROETHANE	UG/L	1	U			1	U				
XYLENES, TOTAL	UG/L	1	U			1	U				
BROMOCHLOROMETHANE	UG/L	1	U			1	U				
1,2-DIBROMO-3-CHLOROPROPANE	UG/L	1	U			1	U				
cis-1,2-DICHLOROETHYLENE	UG/L	1	U			1	U				
trans-1,2-DICHLOROETHENE	UG/L	1	U			1	U				
TOTAL 1,2-DICHLOROETHENE	UG/L	1	U			1	U				
ETHYLENE DIBROMIDE (1,2-DIBROMOETHANE)	UG/L	1	U			1	U				

SWMU 06 Groundwater Data

Parameter	Units								
Building		SWMU6		SWMU6		SWMU6		SWMU6	
StationID		SWMU6-MW03		SWMU6-MW03		SWMU6-MW04		SWMU6-MW04	
SampleID		NDA009		NDA338		NDA005		NDA339	
DateCollected		05/02/2000		06/03/2000		05/02/2000		06/03/2000	
Depth		0 to 0		0 to 0		0 to 0		0 to 0	
BENZENE	UG/L	1	U			1	U		
1,2-DICHLOROETHANE	UG/L	1	U			1	U		
TRICHLOROETHYLENE (TCE)	UG/L	1	U			1	U		
1,2-DICHLOROPROPANE	UG/L	1	U			1	U		
1,2,4-TRICHLOROBENZENE	UG/L	1	U			1	U		
BROMODICHLOROMETHANE	UG/L	1	U			1	U		
cis-1,3-DICHLOROPROPENE	UG/L	1	U			1	U		
METHYL ISOBUTYL KETONE (4-METHYL-2-PENTANONE)	UG/L	5	U			5	U		
TOLUENE	UG/L	1	U			1	U		
trans-1,3-DICHLOROPROPENE	UG/L	1	U			1	U		
1,1,2-TRICHLOROETHANE	UG/L	1	U			1	U		
TETRACHLOROETHYLENE(PCE)	UG/L	1	UJ			1	UJ		
2-HEXANONE	UG/L	5	U			5	U		
DIBROMOCHLOROMETHANE	UG/L	1	U			1	U		
CHLOROBENZENE	UG/L	1	U			1	U		
ETHYLBENZENE	UG/L	1	U			1	U		
M,P-XYLENE (SUM OF ISOMERS)	UG/L	1	U			1	U		
O-XYLENE (1,2-DIMETHYLBENZENE)	UG/L	1	U			1	U		
STYRENE	UG/L	1	U			1	U		
BROMOFORM	UG/L	1	U			1	U		
1,1,2,2-TETRACHLOROETHANE	UG/L	1	U			1	U		
XYLENES, TOTAL	UG/L	1	U			1	U		
BROMOCHLOROMETHANE	UG/L	1	U			1	U		
1,2-DIBROMO-3-CHLOROPROPANE	UG/L	1	U			1	U		
cis-1,2-DICHLOROETHYLENE	UG/L	1	U			1	U		
trans-1,2-DICHLOROETHENE	UG/L	1	U			1	U		
TOTAL 1,2-DICHLOROETHENE	UG/L	1	U			1	U		
ETHYLENE DIBROMIDE (1,2-DIBROMOETHANE)	UG/L	1	U			1	U		

Parameter	Units	Building StationID SampleID DateCollected Depth	SWMU6 W6-SW01 NDA035 04/13/2000 0 to 0		SWMU6 W6-SW02 NDA036 04/13/2000 0 to 0		SWMU6 W6-SW03 NDA037 04/13/2000 0 to 0		SWMU6 W6-SW03 NDA038FD1 04/13/2000 0 to 0	
EXPLOSIVES										
2,6-DINITROTOLUENE	UG/L		10	U	10	U	10	U	10	U
OCTAHYDRO-1,3,5,7-TETRANITRO-1,3,5,7-TETRAZOCINE	UG/L		5	UJ	5	UJ	5	UJ	5	UJ
HEXAHYDRO-1,3,5-TRINITRO-1,3,5,7-TETRAZOCINE	UG/L		5	U	5	U	5	UJ	5	U
1,3,5-TRINITROBENZENE	UG/L		5	U	5	U	5	UJ	5	U
1,3-DINITROBENZENE	UG/L		5	U	5	U	5	UJ	5	U
METHYL-2,4,6-TRINITROPHENYLNITRAMINE	UG/L		5	U	5	U	5	UJ	5	U
NITROBENZENE	UG/L		10	U	10	U	10	U	10	U
2,4,6-TRINITROTOLUENE	UG/L		5	U	5	U	5	UJ	5	U
2,4-DINITROTOLUENE	UG/L		10	U	10	U	10	U	10	U
2-NITROTOLUENE	UG/L		5	U	5	U	5	UJ	5	U
4-NITROTOLUENE	UG/L		5	U	5	U	5	UJ	5	U
3-NITROTOLUENE	UG/L		5	U	5	U	5	UJ	5	U
METALS										
ALUMINUM	UG/L		1820	=	1440	=	1680	=	1510	=
ANTIMONY	UG/L		1.4	U	1.4	U	1.4	U	1.4	U
ARSENIC	UG/L		3.4	U	3.8	J	3.4	U	4.9	J
BARIUM	UG/L		12.7	J	11.9	J	12.3	J	11.7	J
BERYLLIUM	UG/L		0.3	U	0.3	U	0.3	U	0.3	U
CADMIUM	UG/L		1.9	J	1.9	J	2	J	2	J
CHROMIUM, TOTAL	UG/L		1.1	J	0.5	U	1.1	J	0.55	J
COBALT	UG/L		0.5	U	0.5	U	1.1	J	1.1	J
COPPER	UG/L		1.9	U	4.6	J	1.9	J	1.9	U
IRON	UG/L		887	J	700	J	761	J	756	J
LEAD	UG/L		1.1	U	1.6	J	1.1	U	1.1	U
MAGNESIUM	UG/L		1540000	=	1540000	=	1560000	=	1520000	=
MANGANESE	UG/L		25.7	J	19.8	J	18.1	J	17.2	J
MERCURY	UG/L		0.18	R	0.18	R	1.6	J	0.18	R
NICKEL	UG/L		0.8	U	1.1	J	0.8	U	1.1	J
POTASSIUM	UG/L		26.6	U	26.6	U	26.6	U	796000	=
SELENIUM	UG/L		5.2	=	5.6	=	6.4	=	4.6	J
SODIUM	UG/L		6500000	J	6370000	J	6520000	J	6210000	J
THALLIUM	UG/L		2.7	U	4.9	J	2.7	U	2.7	U
VANADIUM	UG/L		3.3	J	3.6	J	2.5	J	3.3	J
PCB										
PCB-1016 (AROCHLOR 1016)	UG/L		1.1	U	1	U	1.1	U	1.1	U
PCB-1260 (AROCHLOR 1260)	UG/L		1.1	U	1	U	1.1	U	1.1	U
PCB-1221 (AROCHLOR 1221)	UG/L		2.1	U	2.1	U	2.2	U	2.2	U

SWMU 06 Surface Water Data

Parameter	Units	Building StationID SampleID DateCollected Depth	SWMU6 W6-SW04 NDA039 04/13/2000 0 to 0		SWMU6 W6-SW05 NDA040 04/13/2000 0 to 0		SWMU6 W6-SW06 NDA300 04/13/2000 0 to 0		SWMU6 W6-SW07 NDA301 04/13/2000 0 to 0	
EXPLOSIVES										
2,6-DINITROTOLUENE	UG/L		10	U	11	U	10	U	11	U
OCTAHYDRO-1,3,5,7-TETRANITRO-1,3,5,7-TETRAZOCINE	UG/L		5	UJ	5	UJ	5	UJ	5	UJ
HEXAHYDRO-1,3,5-TRINITRO-1,3,5,7-TETRAZOCINE	UG/L		5	UJ	5	U	5	UJ	5	U
1,3,5-TRINITROBENZENE	UG/L		5	UJ	5	U	5	UJ	5	U
1,3-DINITROBENZENE	UG/L		5	UJ	5	U	5	UJ	5	U
METHYL-2,4,6-TRINITROPHENYLNITRAMINE	UG/L		5	UJ	5	U	5	UJ	5	U
NITROBENZENE	UG/L		10	U	11	U	10	U	11	U
2,4,6-TRINITROTOLUENE	UG/L		5	UJ	5	U	5	UJ	5	U
2,4-DINITROTOLUENE	UG/L		10	U	11	U	10	U	11	U
2-NITROTOLUENE	UG/L		5	UJ	5	U	5	UJ	5	U
4-NITROTOLUENE	UG/L		5	UJ	5	U	5	UJ	5	U
3-NITROTOLUENE	UG/L		5	UJ	5	U	5	UJ	5	U
METALS										
ALUMINUM	UG/L		2020	=	1370	=	2260	=	2970	=
ANTIMONY	UG/L		1.4	U	1.4	U	1.4	U	1.4	U
ARSENIC	UG/L		3.4	U	5	J	5.3	J	3.4	U
BARIUM	UG/L		13.5	J	12.2	J	13.8	J	15.1	J
BERYLLIUM	UG/L		0.3	U	0.3	U	0.3	U	0.3	U
CADMIUM	UG/L		2	J	2	J	1.9	J	1.9	J
CHROMIUM, TOTAL	UG/L		0.63	J	0.58	J	0.5	U	0.51	J
COBALT	UG/L		0.5	U	0.5	U	0.5	U	0.71	J
COPPER	UG/L		2	J	2.2	J	5	J	1.9	U
IRON	UG/L		883	J	614	J	979	J	1410	J
LEAD	UG/L		1.2	J	1.1	U	14.7	=	1.7	J
MAGNESIUM	UG/L		1560000	=	1550000	=	1560000	=	1560000	=
MANGANESE	UG/L		18.9	J	5.3	J	21.3	J	30.8	J
MERCURY	UG/L		0.18	R	0.18	R	0.18	R	0.18	R
NICKEL	UG/L		0.8	U	0.8	U	0.8	U	0.96	J
POTASSIUM	UG/L		26.6	U	412000	=	26.6	U	26.6	U
SELENIUM	UG/L		2.7	J	4.2	J	4	J	3.8	J
SODIUM	UG/L		6270000	J	6200000	J	6240000	J	6330000	J
THALLIUM	UG/L		2.7	U	2.7	U	2.7	U	2.7	U
VANADIUM	UG/L		4	J	3.7	J	4.5	J	5.8	J
PCB										
PCB-1016 (AROCHLOR 1016)	UG/L		1	U	1.1	U	1.1	U	1.1	U
PCB-1260 (AROCHLOR 1260)	UG/L		1	U	1.1	U	1.1	U	1.1	U
PCB-1221 (AROCHLOR 1221)	UG/L		2.1	U	2.2	U	2.2	U	2.3	U

Parameter	Units	Building	SWMU6		SWMU6		SWMU6		SWMU6	
		StationID	W6-SW01		W6-SW02		W6-SW03		W6-SW03	
		SampleID	NDA035		NDA036		NDA037		NDA038FD1	
		DateCollected	04/13/2000		04/13/2000		04/13/2000		04/13/2000	
		Depth	0 to 0		0 to 0		0 to 0		0 to 0	
PCB-1232 (AROCHLOR 1232)	UG/L		1.1	U	1	U	1.1	U	1.1	U
PCB-1242 (AROCHLOR 1242)	UG/L		1.1	U	1	U	1.1	U	1.1	U
PCB-1248 (AROCHLOR 1248)	UG/L		1.1	U	1	U	1.1	U	1.1	U
PCB-1254 (AROCHLOR 1254)	UG/L		1.1	U	1	U	1.1	U	1.1	U
PESTICIDES										
ALPHA BHC (ALPHA HEXACHLOROCYCLOHEXANE)	UG/L		0.05	U	0.05	U	0.05	U	0.05	U
BETA BHC (BETA HEXACHLOROCYCLOHEXANE)	UG/L		0.05	U	0.05	U	0.05	U	0.05	U
DELTA BHC (DELTA HEXACHLOROCYCLOHEXANE)	UG/L		0.05	U	0.05	U	0.05	U	0.05	U
GAMMA BHC (LINDANE)	UG/L		0.05	U	0.05	U	0.05	U	0.05	U
HEPTACHLOR	UG/L		0.05	U	0.05	U	0.05	U	0.05	U
ALDRIN	UG/L		0.05	U	0.05	U	0.05	U	0.05	U
HEPTACHLOR EPOXIDE	UG/L		0.05	U	0.05	U	0.05	U	0.05	U
ALPHA ENDOSULFAN (ENDOSULFAN I)	UG/L		0.05	U	0.05	U	0.05	U	0.05	U
DIELDRIN	UG/L		0.11	U	0.1	U	0.11	U	0.11	U
p,p'-DDE	UG/L		0.11	U	0.1	U	0.11	U	0.11	U
ENDRIN	UG/L		0.11	U	0.1	U	0.11	U	0.11	U
BETA ENDOSULFAN (ENDOSULFAN II)	UG/L		0.11	U	0.1	U	0.11	U	0.11	U
p,p'-DDD	UG/L		0.11	U	0.1	U	0.11	U	0.11	U
ENDOSULFAN SULFATE	UG/L		0.11	U	0.1	U	0.11	U	0.11	U
p,p'-DDT	UG/L		0.11	U	0.1	U	0.11	U	0.11	U
METHOXYCHLOR	UG/L		0.53	U	0.52	U	0.54	U	0.54	U
ENDRIN ALDEHYDE	UG/L		0.11	U	0.1	U	0.11	U	0.11	U
ALPHA-CHLORDANE	UG/L		0.05	U	0.05	U	0.05	U	0.05	U
GAMMA-CHLORDANE	UG/L		0.05	U	0.05	U	0.05	U	0.05	U
ENDRIN KETONE	UG/L		0.11	U	0.1	U	0.11	U	0.11	U
TOXAPHENE	UG/L		5.3	U	5.2	U	5.4	U	5.4	U
SEMI-VOLATILES										
bis(2-CHLOROETHYL) ETHER (2-CHLOROETHYL ETHER)	UG/L		10	U	10	U	10	U	10	U
PHENOL	UG/L		10	U	10	U	10	U	10	U
2-CHLOROPHENOL	UG/L		10	U	10	U	10	U	10	U
1,3,5-TRINITROBENZENE	UG/L		5	U	5	U	5	UJ	5	U
1,3-DICHLOROBENZENE	UG/L		10	U	10	U	10	U	10	U
1,3-DINITROBENZENE	UG/L		5	U	5	U	5	UJ	5	U
1,4-DICHLOROBENZENE	UG/L		10	U	10	U	10	U	10	U
1,2-DICHLOROBENZENE	UG/L		10	U	10	U	10	U	10	U
bis(2-CHLOROISOPROPYL) ETHER	UG/L		10	U	10	U	10	U	10	U
2-METHYLPHENOL (o-CRESOL)	UG/L		10	U	10	U	10	U	10	U
HEXACHLOROETHANE	UG/L		10	U	10	U	10	U	10	U

SWMU 06 Surface Water Data

Parameter	Units	Building	SWMU6		SWMU6		SWMU6		SWMU6	
		StationID	W6-SW04		W6-SW05		W6-SW06		W6-SW07	
		SampleID	NDA039		NDA040		NDA300		NDA301	
		DateCollected	04/13/2000		04/13/2000		04/13/2000		04/13/2000	
		Depth	0 to 0		0 to 0		0 to 0		0 to 0	
PCB-1232 (AROCHLOR 1232)	UG/L		1	U	1.1	U	1.1	U	1.1	U
PCB-1242 (AROCHLOR 1242)	UG/L		1	U	1.1	U	1.1	U	1.1	U
PCB-1248 (AROCHLOR 1248)	UG/L		1	U	1.1	U	1.1	U	1.1	U
PCB-1254 (AROCHLOR 1254)	UG/L		1	U	1.1	U	1.1	U	1.1	U
PESTICIDES										
ALPHA BHC (ALPHA HEXACHLOROCYCLOHEXANE)	UG/L		0.05	U	0.06	U	0.05	U	0.06	U
BETA BHC (BETA HEXACHLOROCYCLOHEXANE)	UG/L		0.05	U	0.06	U	0.05	U	0.06	U
DELTA BHC (DELTA HEXACHLOROCYCLOHEXANE)	UG/L		0.05	U	0.06	U	0.05	U	0.06	U
GAMMA BHC (LINDANE)	UG/L		0.05	U	0.06	U	0.05	U	0.06	U
HEPTACHLOR	UG/L		0.05	U	0.06	U	0.05	U	0.06	U
ALDRIN	UG/L		0.05	U	0.06	U	0.05	U	0.06	U
HEPTACHLOR EPOXIDE	UG/L		0.05	U	0.06	U	0.05	U	0.06	U
ALPHA ENDOSULFAN (ENDOSULFAN I)	UG/L		0.05	U	0.06	U	0.05	U	0.06	U
DIELDRIN	UG/L		0.1	U	0.11	U	0.11	U	0.11	U
p,p'-DDE	UG/L		0.1	U	0.11	U	0.11	U	0.11	U
ENDRIN	UG/L		0.1	U	0.11	U	0.11	U	0.11	U
BETA ENDOSULFAN (ENDOSULFAN II)	UG/L		0.1	U	0.11	U	0.11	U	0.11	U
p,p'-DDD	UG/L		0.1	U	0.11	U	0.11	U	0.11	U
ENDOSULFAN SULFATE	UG/L		0.1	U	0.11	U	0.11	U	0.11	U
p,p'-DDT	UG/L		0.1	U	0.11	U	0.11	U	0.11	U
METHOXYCHLOR	UG/L		0.52	U	0.56	U	0.54	U	0.57	U
ENDRIN ALDEHYDE	UG/L		0.1	U	0.11	U	0.11	U	0.11	U
ALPHA-CHLORDANE	UG/L		0.05	U	0.06	U	0.05	U	0.06	U
GAMMA-CHLORDANE	UG/L		0.05	U	0.06	U	0.05	U	0.06	U
ENDRIN KETONE	UG/L		0.1	U	0.11	U	0.11	U	0.11	U
TOXAPHENE	UG/L		5.2	U	5.6	U	5.4	U	5.7	U
SEMI-VOLATILES										
bis(2-CHLOROETHYL) ETHER (2-CHLOROETHYL ETHER)	UG/L		10	U	11	U	10	U	11	U
PHENOL	UG/L		10	U	11	U	10	U	11	U
2-CHLOROPHENOL	UG/L		10	U	11	U	10	U	11	U
1,3,5-TRINITROBENZENE	UG/L		5	UJ	5	U	5	UJ	5	U
1,3-DICHLOROBENZENE	UG/L		10	U	11	U	10	U	11	U
1,3-DINITROBENZENE	UG/L		5	UJ	5	U	5	UJ	5	U
1,4-DICHLOROBENZENE	UG/L		10	U	11	U	10	U	11	U
1,2-DICHLOROBENZENE	UG/L		10	U	11	U	10	U	11	U
bis(2-CHLOROISOPROPYL) ETHER	UG/L		10	U	11	U	10	U	11	U
2-METHYLPHENOL (o-CRESOL)	UG/L		10	U	11	U	10	U	11	U
HEXACHLOROETHANE	UG/L		10	U	11	U	10	U	11	U

SWMU 06 Surface Water Data

	Building	SWMU6		SWMU6		SWMU6		SWMU6	
	StationID	W6-SW01		W6-SW02		W6-SW03		W6-SW03	
	SampleID	NDA035		NDA036		NDA037		NDA038FD1	
	DateCollected	04/13/2000		04/13/2000		04/13/2000		04/13/2000	
	Depth	0 to 0		0 to 0		0 to 0		0 to 0	
Parameter	**Units**								
N-NITROSODI-n-PROPYLAMINE	UG/L	10	U	10	U	10	U	10	U
CRESOLS, m & p	UG/L	10	U	10	U	10	U	10	U
NITROBENZENE	UG/L	10	U	10	U	10	U	10	U
ISOPHORONE	UG/L	10	U	10	U	10	U	10	U
2-NITROPHENOL	UG/L	10	U	10	U	10	U	10	U
2,4-DIMETHYLPHENOL	UG/L	10	U	10	U	10	U	10	U
bis(2-CHLOROETHOXY) METHANE	UG/L	10	U	10	U	10	U	10	U
2,4-DICHLOROPHENOL	UG/L	10	U	10	U	10	U	10	U
1,2,4-TRICHLOROBENZENE	UG/L	10	U	10	U	10	U	10	U
NAPHTHALENE	UG/L	10	U	10	U	10	U	10	U
4-CHLOROANILINE	UG/L	10	U	10	U	10	U	10	U
2-METHYLNAPHTHALENE	UG/L	10	U	10	U	10	U	10	U
HEXACHLOROBUTADIENE	UG/L	10	U	10	U	10	U	10	U
4-CHLORO-3-METHYLPHENOL	UG/L	10	U	10	U	10	U	10	U
HEXACHLOROCYCLOPENTADIENE	UG/L	10	U	10	U	10	U	10	U
2,4,6-TRICHLOROPHENOL	UG/L	10	U	10	U	10	U	10	U
2,4,5-TRICHLOROPHENOL	UG/L	52	U	51	U	51	U	52	U
2-CHLORONAPHTHALENE	UG/L	10	U	10	U	10	U	10	U
2-NITROANILINE	UG/L	52	U	51	U	51	U	52	U
ACENAPHTHYLENE	UG/L	10	U	10	U	10	U	10	U
DIMETHYL PHTHALATE	UG/L	10	U	10	U	10	U	10	U
2,6-DINITROTOLUENE	UG/L	10	U	10	U	10	U	10	U
ACENAPHTHENE	UG/L	10	U	10	U	10	U	10	U
3-NITROANILINE	UG/L	52	U	51	U	51	U	52	U
2,4-DINITROPHENOL	UG/L	52	U	51	U	51	U	52	U
DIBENZOFURAN	UG/L	10	U	10	U	10	U	10	U
2,4-DINITROTOLUENE	UG/L	10	U	10	U	10	U	10	U
4-NITROPHENOL	UG/L	52	U	51	U	51	U	52	U
FLUORENE	UG/L	10	U	10	U	10	U	10	U
4-CHLOROPHENYL PHENYL ETHER	UG/L	10	U	10	U	10	U	10	U
DIETHYL PHTHALATE	UG/L	0.6	J	0.5	J	0.5	J	0.5	J
4-NITROANILINE	UG/L	52	U	51	U	51	U	52	U
4,6-DINITRO-2-METHYLPHENOL	UG/L	52	U	51	U	51	U	52	U
N-NITROSODIPHENYLAMINE	UG/L	10	U	10	U	10	U	10	U
4-BROMOPHENYL PHENYL ETHER	UG/L	10	U	10	U	10	U	10	U
HEXACHLOROBENZENE	UG/L	10	U	10	U	10	U	10	U
PENTACHLOROPHENOL	UG/L	52	U	51	U	51	U	52	U
PHENANTHRENE	UG/L	10	U	10	U	10	U	10	U

SWMU 06 Surface Water Data

	Building	SWMU6		SWMU6		SWMU6		SWMU6	
	StationID	W6-SW04		W6-SW05		W6-SW06		W6-SW07	
	SampleID	NDA039		NDA040		NDA300		NDA301	
	DateCollected	04/13/2000		04/13/2000		04/13/2000		04/13/2000	
	Depth	0 to 0		0 to 0		0 to 0		0 to 0	
Parameter	Units								
N-NITROSODI-n-PROPYLAMINE	UG/L	10	U	11	U	10	U	11	U
CRESOLS, m & p	UG/L	10	U	11	U	10	U	11	U
NITROBENZENE	UG/L	10	U	11	U	10	U	11	U
ISOPHORONE	UG/L	10	U	11	U	10	U	11	U
2-NITROPHENOL	UG/L	10	U	11	U	10	U	11	U
2,4-DIMETHYLPHENOL	UG/L	10	U	11	U	10	U	11	U
bis(2-CHLOROETHOXY) METHANE	UG/L	10	U	11	U	10	U	11	U
2,4-DICHLOROPHENOL	UG/L	10	U	11	U	10	U	11	U
1,2,4-TRICHLOROBENZENE	UG/L	10	U	11	U	10	U	11	U
NAPHTHALENE	UG/L	10	U	11	U	10	U	11	U
4-CHLOROANILINE	UG/L	10	U	11	U	10	U	11	U
2-METHYLNAPHTHALENE	UG/L	10	U	11	U	10	U	11	U
HEXACHLOROBUTADIENE	UG/L	10	U	11	U	10	U	11	U
4-CHLORO-3-METHYLPHENOL	UG/L	10	U	11	U	10	U	11	U
HEXACHLOROCYCLOPENTADIENE	UG/L	10	U	11	U	10	U	11	U
2,4,6-TRICHLOROPHENOL	UG/L	10	U	11	U	10	U	11	U
2,4,5-TRICHLOROPHENOL	UG/L	52	U	53	U	51	U	54	U
2-CHLORONAPHTHALENE	UG/L	10	U	11	U	10	U	11	U
2-NITROANILINE	UG/L	52	U	53	U	51	U	54	U
ACENAPHTHYLENE	UG/L	10	U	11	U	10	U	11	U
DIMETHYL PHTHALATE	UG/L	10	U	11	U	10	U	11	U
2,6-DINITROTOLUENE	UG/L	10	U	11	U	10	U	11	U
ACENAPHTHENE	UG/L	10	U	11	U	10	U	11	U
3-NITROANILINE	UG/L	52	U	53	U	51	U	54	U
2,4-DINITROPHENOL	UG/L	52	U	53	U	51	U	54	U
DIBENZOFURAN	UG/L	10	U	11	U	10	U	11	U
2,4-DINITROTOLUENE	UG/L	10	U	11	U	10	U	11	U
4-NITROPHENOL	UG/L	52	U	53	U	51	U	54	U
FLUORENE	UG/L	10	U	11	U	10	U	11	U
4-CHLOROPHENYL PHENYL ETHER	UG/L	10	U	11	U	10	U	11	U
DIETHYL PHTHALATE	UG/L	10	U	11	U	10	U	11	U
4-NITROANILINE	UG/L	52	U	53	U	51	U	54	U
4,6-DINITRO-2-METHYLPHENOL	UG/L	52	U	53	U	51	U	54	U
N-NITROSODIPHENYLAMINE	UG/L	10	U	11	U	10	U	11	U
4-BROMOPHENYL PHENYL ETHER	UG/L	10	U	11	U	10	U	11	U
HEXACHLOROBENZENE	UG/L	10	U	11	U	10	U	11	U
PENTACHLOROPHENOL	UG/L	52	U	53	U	51	U	54	U
PHENANTHRENE	UG/L	10	U	11	U	10	U	11	U

Parameter	Units	Building	StationID	SampleID	DateCollected	Depth											
		SWMU6	W6-SW01	NDA035	04/13/2000	0 to 0		SWMU6	W6-SW02	NDA036	04/13/2000	0 to 0		SWMU6	W6-SW03	NDA037	04/13/2000	0 to 0		SWMU6	W6-SW03	NDA038FD1	04/13/2000	0 to 0	
ANTHRACENE	UG/L	10	U					10	U					10	U					10	U				
DI-n-BUTYL PHTHALATE	UG/L	10	U					10	U					10	U					10	U				
FLUORANTHENE	UG/L	10	U					10	U					10	U					10	U				
PYRENE	UG/L	10	U					10	U					10	U					10	U				
BENZYL BUTYL PHTHALATE	UG/L	10	U					10	U					10	U					10	U				
3,3'-DICHLOROBENZIDINE	UG/L	21	U					20	U					20	U					21	U				
BENZO(a)ANTHRACENE	UG/L	10	U					10	U					10	U					10	U				
CHRYSENE	UG/L	10	U					10	U					10	U					10	U				
bis(2-ETHYLHEXYL) PHTHALATE	UG/L	10	U					10	U					10	U					10	U				
DI-n-OCTYLPHTHALATE	UG/L	10	U					10	U					10	U					10	U				
BENZO(b)FLUORANTHENE	UG/L	10	U					10	U					10	U					10	U				
BENZO(k)FLUORANTHENE	UG/L	10	U					10	U					10	U					10	U				
BENZO(a)PYRENE	UG/L	10	U					10	U					10	U					10	U				
INDENO(1,2,3-c,d)PYRENE	UG/L	10	U					10	U					10	U					10	U				
DIBENZ(a,h)ANTHRACENE	UG/L	10	U					10	U					10	U					10	U				
BENZO(g,h,i)PERYLENE	UG/L	10	U					10	U					10	U					10	U				
CARBAZOLE	UG/L	10	U					10	U					10	U					10	U				
VOLATILES																									
CHLOROMETHANE	UG/L	10	U					10	U					10	U					10	U				
VINYL CHLORIDE	UG/L	10	U					10	U					10	U					10	U				
BROMOMETHANE	UG/L	10	U					10	U					10	U					10	U				
1,3-DICHLOROBENZENE	UG/L	10	U					10	U					10	U					10	U				
CHLOROETHANE	UG/L	10	U					10	U					10	U					10	U				
1,1-DICHLOROETHENE	UG/L	10	U					10	U					10	U					10	U				
1,4-DICHLOROBENZENE	UG/L	10	U					10	U					10	U					10	U				
1,2-DICHLOROBENZENE	UG/L	10	U					10	U					10	U					10	U				
CARBON DISULFIDE	UG/L	10	U					10	U					10	U					10	U				
METHYLENE CHLORIDE	UG/L	10	U					10	U					10	U					10	U				
1,1-DICHLOROETHANE	UG/L	10	U					10	U					10	U					10	U				
ACETONE	UG/L	10	R					10	R					10	R					10	R				
METHYL ETHYL KETONE (2-BUTANONE)	UG/L	10	R					10	R					10	R					10	R				
CHLOROFORM	UG/L	10	U					10	U					10	U					10	U				
1,1,1-TRICHLOROETHANE	UG/L	10	U					10	U					10	U					10	U				
CARBON TETRACHLORIDE	UG/L	10	U					10	U					10	U					10	U				
BENZENE	UG/L	10	U					10	U					10	U					10	U				
1,2-DICHLOROETHANE	UG/L	10	U					10	U					10	U					10	U				
TRICHLOROETHYLENE (TCE)	UG/L	10	U					10	U					10	U					10	U				
1,2-DICHLOROPROPANE	UG/L	10	U					10	U					10	U					10	U				

SWMU 06 Surface Water Data

Parameter	Units	Building	SWMU6		SWMU6		SWMU6		SWMU6	
		StationID	W6-SW04		W6-SW05		W6-SW06		W6-SW07	
		SampleID	NDA039		NDA040		NDA300		NDA301	
		DateCollected	04/13/2000		04/13/2000		04/13/2000		04/13/2000	
		Depth	0 to 0		0 to 0		0 to 0		0 to 0	
ANTHRACENE	UG/L		10	U	11	U	10	U	11	U
DI-n-BUTYL PHTHALATE	UG/L		10	U	11	U	10	U	11	U
FLUORANTHENE	UG/L		10	U	11	U	10	U	11	U
PYRENE	UG/L		10	U	11	U	10	U	11	U
BENZYL BUTYL PHTHALATE	UG/L		10	U	11	U	10	U	11	U
3,3'-DICHLOROBENZIDINE	UG/L		21	U	21	U	20	U	22	U
BENZO(a)ANTHRACENE	UG/L		10	U	11	U	10	U	11	U
CHRYSENE	UG/L		10	U	11	U	10	U	11	U
bis(2-ETHYLHEXYL) PHTHALATE	UG/L		10	U	11	U	10	U	11	U
DI-n-OCTYLPHTHALATE	UG/L		10	U	11	U	10	U	11	U
BENZO(b)FLUORANTHENE	UG/L		10	U	11	U	10	U	11	U
BENZO(k)FLUORANTHENE	UG/L		10	U	11	U	10	U	11	U
BENZO(a)PYRENE	UG/L		10	U	11	U	10	U	11	U
INDENO(1,2,3-c,d)PYRENE	UG/L		10	U	11	U	10	U	11	U
DIBENZ(a,h)ANTHRACENE	UG/L		10	U	11	U	10	U	11	U
BENZO(g,h,i)PERYLENE	UG/L		10	U	11	U	10	U	11	U
CARBAZOLE	UG/L		10	U	11	U	10	U	11	U
VOLATILES										
CHLOROMETHANE	UG/L		10	U	10	U	10	U	10	U
VINYL CHLORIDE	UG/L		10	U	10	U	10	U	10	U
BROMOMETHANE	UG/L		10	U	10	U	10	U	10	U
1,3-DICHLOROBENZENE	UG/L		10	U	11	U	10	U	11	U
CHLOROETHANE	UG/L		10	U	10	U	10	U	10	U
1,1-DICHLOROETHENE	UG/L		10	U	10	U	10	U	10	U
1,4-DICHLOROBENZENE	UG/L		10	U	11	U	10	U	11	U
1,2-DICHLOROBENZENE	UG/L		10	U	11	U	10	U	11	U
CARBON DISULFIDE	UG/L		10	U	10	U	10	U	10	U
METHYLENE CHLORIDE	UG/L		10	U	10	U	10	U	10	U
1,1-DICHLOROETHANE	UG/L		10	U	10	U	10	U	10	U
ACETONE	UG/L		10	R	10	R	10	R	10	R
METHYL ETHYL KETONE (2-BUTANONE)	UG/L		10	R	10	R	10	R	10	R
CHLOROFORM	UG/L		10	U	10	U	10	U	10	U
1,1,1-TRICHLOROETHANE	UG/L		10	U	10	U	10	U	10	U
CARBON TETRACHLORIDE	UG/L		10	U	10	U	10	U	10	U
BENZENE	UG/L		10	U	10	U	10	U	10	U
1,2-DICHLOROETHANE	UG/L		10	U	10	U	10	U	10	U
TRICHLOROETHYLENE (TCE)	UG/L		10	U	10	U	10	U	10	U
1,2-DICHLOROPROPANE	UG/L		10	U	10	U	10	U	10	U

	Building	SWMU6		SWMU6		SWMU6		SWMU6	
	StationID	W6-SW01		W6-SW02		W6-SW03		W6-SW03	
	SampleID	NDA035		NDA036		NDA037		NDA038FD1	
	DateCollected	04/13/2000		04/13/2000		04/13/2000		04/13/2000	
	Depth	0 to 0		0 to 0		0 to 0		0 to 0	
Parameter	**Units**								
1,2,4-TRICHLOROBENZENE	UG/L	10	U	10	U	10	U	10	U
BROMODICHLOROMETHANE	UG/L	10	U	10	U	10	U	10	U
cis-1,3-DICHLOROPROPENE	UG/L	10	U	10	U	10	U	10	U
METHYL ISOBUTYL KETONE (4-METHYL-2-PENTANONE)	UC/L	10	U	10	U	10	U	10	U
TOLUENE	UG/L	10	U	10	U	10	U	10	U
trans-1,3-DICHLOROPROPENE	UG/L	10	U	10	U	10	U	10	U
1,1,2-TRICHLOROETHANE	UG/L	10	U	10	U	10	U	10	U
TETRACHLOROETHYLENE(PCE)	UG/L	10	U	10	U	10	U	10	U
2-HEXANONE	UG/L	10	U	10	U	10	U	10	U
DIBROMOCHLOROMETHANE	UG/L	10	U	10	U	10	U	10	U
CHLOROBENZENE	UG/L	10	U	10	U	10	U	10	U
ETHYLBENZENE	UG/L	10	U	10	U	10	U	10	U
M,P-XYLENE (SUM OF ISOMERS)	UG/L	10	U	10	U	10	U	10	U
O-XYLENE (1,2-DIMETHYLBENZENE)	UG/L	10	U	10	U	10	U	10	U
STYRENE	UG/L	10	U	10	U	10	U	10	U
BROMOFORM	UG/L	10	U	10	U	10	U	10	U
1,1,2,2-TETRACHLOROETHANE	UG/L	10	U	10	U	10	U	10	U
XYLENES, TOTAL	UG/L	10	U	10	U	10	U	10	U

SWMU 06 Surface Water Data

	Building	SWMU6		SWMU6		SWMU6		SWMU6	
	StationID	W6-SW04		W6-SW05		W6-SW06		W6-SW07	
	SampleID	NDA039		NDA040		NDA300		NDA301	
	DateCollected	04/13/2000		04/13/2000		04/13/2000		04/13/2000	
	Depth	0 to 0		0 to 0		0 to 0		0 to 0	
Parameter	Units								
1,2,4-TRICHLOROBENZENE	UG/L	10	U	11	U	10	U	11	U
BROMODICHLOROMETHANE	UG/L	10	U	10	U	10	U	10	U
cis-1,3-DICHLOROPROPENE	UG/L	10	U	10	U	10	U	10	U
METHYL ISOBUTYL KETONE (4-METHYL-2-PENTANONE)	UG/L	10	U	10	U	10	U	10	U
TOLUENE	UG/L	10	U	10	U	10	U	10	U
trans-1,3-DICHLOROPROPENE	UG/L	10	U	10	U	10	U	10	U
1,1,2-TRICHLOROETHANE	UG/L	10	U	10	U	10	U	10	U
TETRACHLOROETHYLENE(PCE)	UG/L	10	U	10	U	10	U	10	U
2-HEXANONE	UG/L	10	U	10	U	10	U	10	U
DIBROMOCHLOROMETHANE	UG/L	10	U	10	U	10	U	10	U
CHLOROBENZENE	UG/L	10	U	10	U	10	U	10	U
ETHYLBENZENE	UG/L	10	U	10	U	10	U	10	U
M,P-XYLENE (SUM OF ISOMERS)	UG/L	10	U	10	U	10	U	10	U
O-XYLENE (1,2-DIMETHYLBENZENE)	UG/L	10	U	10	U	10	U	10	U
STYRENE	UG/L	10	U	10	U	10	U	10	U
BROMOFORM	UG/L	10	U	10	U	10	U	10	U
1,1,2,2-TETRACHLOROETHANE	UG/L	10	U	10	U	10	U	10	U
XYLENES, TOTAL	UG/L	10	U	10	U	10	U	10	U

Parameter	Units	Building	StationID	SampleID	DateCollected	Depth									
		SWMU6	W6-SB01	NDA101	04/24/2000	0 to 0.5		SWMU6	W6-SB02	NDA103	04/24/2000	0 to 0.5		SWMU6	W6-SB02	NDA104FD1	04/24/2000	0 to 0.5	
EXPLOSIVES																			
2,6-DINITROTOLUENE	UG/KG	336	U					342	U					355	R				
OCTAHYDRO-1,3,5,7-TETRANITRO-1,3,5,7-TETRAZOCINE	UG/KG	336	U					342	U					355	R				
HEXAHYDRO-1,3,5-TRINITRO-1,3,5,7-TETRAZOCINE	UG/KG	336	U					342	U					355	R				
1,3,5-TRINITROBENZENE	UG/KG	336	U					342	U					355	R				
1,3-DINITROBENZENE	UG/KG	336	U					342	U					355	R				
METHYL-2,4,6-TRINITROPHENYLNITRAMINE	UG/KG	336	U					342	U					355	R				
NITROBENZENE	UG/KG	336	U					342	U					355	R				
2,4,6-TRINITROTOLUENE	UG/KG	336	U					342	U					355	R				
2,4-DINITROTOLUENE	UG/KG	336	U					342	U					355	R				
2-NITROTOLUENE	UG/KG	336	U					342	U					355	R				
4-NITROTOLUENE	UG/KG	336	U					342	U					355	R				
3-NITROTOLUENE	UG/KG	336	U					342	U					355	R				
METALS																			
ALUMINUM	MG/KG	5170	=					4900	=					5640	=				
ANTIMONY	MG/KG	13.3	J					0.19	UJ					0.24	J				
ARSENIC	MG/KG	7.6	=					1.9	J					2.4	J				
BARIUM	MG/KG	19.3	J					12.8	J					12.9	J				
BERYLLIUM	MG/KG	0.041	U					0.042	U					0.043	U				
CADMIUM	MG/KG	0.33	J					0.35	J					0.33	J				
CALCIUM	MG/KG	90500	J					134000	J					135000	J				
CHROMIUM, TOTAL	MG/KG	28	=					6.4	=					8.2	=				
COBALT	MG/KG	6	J					2.4	J					2.9	J				
COPPER	MG/KG	121	=					16.1	=					22.2	=				
IRON	MG/KG	75200	=					8920	=					10800	=				
LEAD	MG/KG	617	=					17.5	=					27.9	=				
MAGNESIUM	MG/KG	5180	=					4180	=					4610	=				
MANGANESE	MG/KG	415	=					128	=					117	=				
MERCURY	MG/KG	0.081	J					0.015	UJ					0.019	UJ				
NICKEL	MG/KG	13	=					2.4	J					3.1	J				
POTASSIUM	MG/KG	1740	J					1900	J					2300	J				
SELENIUM	MG/KG	0.28	U					0.29	U					0.3	U				
SILVER	MG/KG	0.36	J					0.069	U					0.072	U				
SODIUM	MG/KG	12100	=					13700	=					16700	=				
THALLIUM	MG/KG	4.3	=					0.37	U					0.39	U				

Parameter	Units	Building	StationID	SampleID	DateCollected	Depth									
		SWMU6	W6-SB03	NDA107	04/24/2000	0 to 0.5		SWMU6	W6-SB04	NDA109	04/24/2000	0 to 0.5			
EXPLOSIVES															
2,6-DINITROTOLUENE	UG/KG	309	U					326	U						
OCTAHYDRO-1,3,5,7-TETRANITRO-1,3,5,7-TETRAZOCINE	UG/KG	309	U					326	U						
HEXAHYDRO-1,3,5-TRINITRO-1,3,5,7-TETRAZOCINE	UG/KG	309	U					326	U						
1,3,5-TRINITROBENZENE	UG/KG	309	U					326	U						
1,3-DINITROBENZENE	UG/KG	309	U					326	U						
METHYL-2,4,6-TRINITROPHENYLNITRAMINE	UG/KG	309	U					326	U						
NITROBENZENE	UG/KG	309	U					326	U						
2,4,6-TRINITROTOLUENE	UG/KG	309	U					326	U						
2,4-DINITROTOLUENE	UG/KG	309	U					326	U						
2-NITROTOLUENE	UG/KG	309	U					326	U						
4-NITROTOLUENE	UG/KG	309	U					326	U						
3-NITROTOLUENE	UG/KG	309	U					326	U						
METALS															
ALUMINUM	MG/KG	5810	=					10900	=						
ANTIMONY	MG/KG	1	J					0.47	J						
ARSENIC	MG/KG	1.6	J					0.93	J						
BARIUM	MG/KG	26.5	J					36.1	J						
BERYLLIUM	MG/KG	0.054	J					0.12	J						
CADMIUM	MG/KG	0.028	J					1.4	=						
CALCIUM	MG/KG	97200	J					70800	J						
CHROMIUM, TOTAL	MG/KG	12.9	=					14.3	=						
COBALT	MG/KG	4	J					8.9	J						
COPPER	MG/KG	38.7	=					36.8	=						
IRON	MG/KG	16000	=					20600	=						
LEAD	MG/KG	104	=					22.5	=						
MAGNESIUM	MG/KG	3800	=					6870	=						
MANGANESE	MG/KG	276	=					331	=						
MERCURY	MG/KG	0.081	J					0.019	UJ						
NICKEL	MG/KG	4.4	J					9.2	J						
POTASSIUM	MG/KG	1820	J					2700	J						
SELENIUM	MG/KG	0.26	U					0.28	U						
SILVER	MG/KG	0.14	J					0.099	J						
SODIUM	MG/KG	6300	=					5390	=						
THALLIUM	MG/KG	0.34	U					0.77	J						

SWMU 06 Surface Soil Data

Parameter	Units	Building	SWMU6		SWMU6		SWMU6		SWMU6	
		StationID	W6-SB05		W6-SB06		W6-SB07		W6-SB08	
		SampleID	NDA111		NDA113		NDA115		NDA117	
		DateCollected	04/24/2000		04/20/2000		04/20/2000		04/20/2000	
		Depth	0 to 0.5		0 to 0.5		0 to 0.5		0 to 0.5	
EXPLOSIVES										
2,6-DINITROTOLUENE	UG/KG		332	U	303	U	285	U	310	U
OCTAHYDRO-1,3,5,7-TETRANITRO-1,3,5,7-TETRAZOCINE	UG/KG		332	U	303	U	285	U	310	U
HEXAHYDRO-1,3,5-TRINITRO-1,3,5,7-TETRAZOCINE	UG/KG		332	U	303	U	285	U	310	U
1,3,5-TRINITROBENZENE	UG/KG		332	U	303	U	285	U	310	U
1,3-DINITROBENZENE	UG/KG		332	U	303	U	285	U	310	U
METHYL-2,4,6-TRINITROPHENYLNITRAMINE	UG/KG		332	U	303	U	285	U	310	U
NITROBENZENE	UG/KG		332	U	303	U	285	U	310	U
2,4,6-TRINITROTOLUENE	UG/KG		332	U	303	U	285	U	310	U
2,4-DINITROTOLUENE	UG/KG		332	U	303	U	285	U	310	U
2-NITROTOLUENE	UG/KG		332	U	303	U	285	U	310	U
4-NITROTOLUENE	UG/KG		332	U	303	U	285	U	310	U
3-NITROTOLUENE	UG/KG		332	U	303	U	285	U	310	U
METALS										
ALUMINUM	MG/KG		11600	=	14000	=	11100	=	12200	=
ANTIMONY	MG/KG		0.82	J	0.74	J	0.34	J	0.46	J
ARSENIC	MG/KG		1.5	J	1	J	1.1	J	0.99	J
BARIUM	MG/KG		18.2	J	29.5	J	28.8	J	37.6	J
BERYLLIUM	MG/KG		0.069	J	0.12	J	0.11	J	0.11	J
CADMIUM	MG/KG		0.61	J	0.025	U	0.023	U	0.23	J
CALCIUM	MG/KG		108000	J	35400	J	64900	=	65800	=
CHROMIUM, TOTAL	MG/KG		14.9	=	42.9	=	35.7	=	23.3	=
COBALT	MG/KG		3.3	J	12.8	=	11.5	=	9.1	J
COPPER	MG/KG		250	=	114	J	52.3	J	114	J
IRON	MG/KG		16100	=	22900	=	16900	=	18500	=
LEAD	MG/KG		67.5	=	36.1	=	3.9	=	25.8	=
MAGNESIUM	MG/KG		5750	=	9050	=	6600	=	7630	=
MANGANESE	MG/KG		137	=	465	J	390	J	379	J
MERCURY	MG/KG		0.038	J	0.014	U	0.013	U	0.016	U
NICKEL	MG/KG		4	J	20	=	16.5	=	10.7	=
POTASSIUM	MG/KG		2610	J	1460	=	1570	=	2440	=
SELENIUM	MG/KG		0.28	U	0.26	U	0.24	U	0.26	U
SILVER	MG/KG		0.12	J	0.41	J	0.057	U	0.13	J
SODIUM	MG/KG		14200	=	3250	=	4700	=	4040	=
THALLIUM	MG/KG		0.82	J	0.34	U	0.31	U	0.34	U

	Building	SWMU6		SWMU6		SWMU6		SWMU6		SWMU6	
	StationID	W6-SB01		W6-SB02		W6-SB02		W6-SB03		W6-SB04	
	SampleID	NDA101		NDA103		NDA104FD1		NDA107		NDA109	
	DateCollected	04/24/2000		04/24/2000		04/24/2000		04/24/2000		04/24/2000	
	Depth	0 to 0.5		0 to 0.5		0 to 0.5		0 to 0.5		0 to 0.5	
Parameter	**Units**										
VANADIUM	MG/KG	23.2	=	19.9	=	22.9	=	27.7	=	65.8	=
ZINC	MG/KG	438	=	42	=	59.8	=	82.2	=	86.3	=
PCB											
PCB-1016 (AROCHLOR 1016)	UG/KG	44	UJ	45	UJ	46	UJ	41	UJ	43	UJ
PCB-1260 (AROCHLOR 1260)	UG/KG	44	UJ	45	UJ	46	UJ	41	UJ	43	UJ
PCB-1221 (AROCHLOR 1221)	UG/KG	89	UJ	91	UJ	94	UJ	83	UJ	87	UJ
PCB-1232 (AROCHLOR 1232)	UG/KG	44	UJ	45	UJ	46	UJ	41	UJ	43	UJ
PCB-1242 (AROCHLOR 1242)	UG/KG	44	UJ	45	UJ	46	UJ	41	UJ	43	UJ
PCB-1248 (AROCHLOR 1248)	UG/KG	44	UJ	45	UJ	46	UJ	41	UJ	43	UJ
PCB-1254 (AROCHLOR 1254)	UG/KG	44	UJ	45	UJ	46	UJ	41	UJ	43	UJ
PESTICIDES											
ALPHA BHC (ALPHA HEXACHLOROCYCLOHEXANE)	UG/KG	2.3	UJ	2.3	UJ	2.4	UJ	2.1	UJ	2.2	UJ
BETA BHC (BETA HEXACHLOROCYCLOHEXANE)	UG/KG	2.3	UJ	2.3	UJ	2.4	UJ	2.1	UJ	2.2	UJ
DELTA BHC (DELTA HEXACHLOROCYCLOHEXANE)	UG/KG	2.3	UJ	2.3	UJ	2.4	UJ	2.1	UJ	2.2	UJ
GAMMA BHC (LINDANE)	UG/KG	2.3	UJ	2.3	UJ	2.4	UJ	2.1	UJ	2.2	UJ
HEPTACHLOR	UG/KG	2.3	UJ	2.3	UJ	2.4	UJ	2.1	UJ	2.2	UJ
ALDRIN	UG/KG	2.3	UJ	2.3	UJ	2.4	UJ	2.1	UJ	2.2	UJ
HEPTACHLOR EPOXIDE	UG/KG	2.3	UJ	2.3	UJ	2.4	UJ	2.1	UJ	2.2	UJ
ALPHA ENDOSULFAN (ENDOSULFAN I)	UG/KG	2.3	UJ	2.3	UJ	2.4	UJ	2.1	UJ	2.2	UJ
DIELDRIN	UG/KG	4.4	UJ	4.5	UJ	4.7	UJ	4.2	UJ	4.3	UJ
p,p'-DDE	UG/KG	29	J	3.8	J	3	J	6.7	J	1.2	J
ENDRIN	UG/KG	4.4	UJ	4.5	UJ	4.7	UJ	4.2	UJ	4.3	UJ
BETA ENDOSULFAN (ENDOSULFAN II)	UG/KG	4.4	UJ	4.5	UJ	4.7	UJ	4.2	UJ	4.3	UJ
p,p'-DDD	UG/KG	11	J	4.5	UJ	4.7	UJ	4.2	UJ	0.62	J
ENDOSULFAN SULFATE	UG/KG	4.4	UJ	4.5	UJ	4.7	UJ	4.2	UJ	4.3	UJ
p,p'-DDT	UG/KG	7.2	J	4.5	UJ	4.7	UJ	3	J	4.3	UJ
METHOXYCHLOR	UG/KG	23	UJ	23	UJ	24	UJ	21	UJ	22	UJ
ENDRIN ALDEHYDE	UG/KG	4.4	UJ	4.5	UJ	4.7	UJ	4.2	UJ	4.3	UJ
ALPHA-CHLORDANE	UG/KG	2.3	UJ	2.3	UJ	2.4	UJ	2.1	UJ	2.2	UJ
GAMMA-CHLORDANE	UG/KG	2.3	UJ	2.3	UJ	2.4	UJ	2.1	UJ	2.2	UJ
ENDRIN KETONE	UG/KG	4.4	UJ	4.5	UJ	4.7	UJ	4.2	UJ	4.3	UJ
TOXAPHENE	UG/KG	226	UJ	232	UJ	239	UJ	212	UJ	221	UJ
SEMI-VOLATILES											
bis(2-CHLOROETHYL) ETHER (2-CHLOROETHYL ETHER)	UG/KG	549	U	627	U	639	U	506	U	503	U
PHENOL	UG/KG	549	U	627	U	639	U	506	U	503	U

SWMU 06 Surface Soil Data

	Building	SWMU6		SWMU6		SWMU6		SWMU6	
	StationID	W6-SB05		W6-SB06		W6-SB07		W6-SB08	
	SampleID	NDA111		NDA113		NDA115		NDA117	
	DateCollected	04/24/2000		04/20/2000		04/20/2000		04/20/2000	
	Depth	0 to 0.5		0 to 0.5		0 to 0.5		0 to 0.5	
Parameter	**Units**								
VANADIUM	MG/KG	26.5	=	66	=	51.2	=	51	=
ZINC	MG/KG	138	=	96.5	=	29.5	=	83.7	=
PCB									
PCB-1016 (AROCHLOR 1016)	UG/KG	44	UJ	41	UJ	38	UJ	42	UJ
PCB-1260 (AROCHLOR 1260)	UG/KG	44	UJ	41	UJ	38	UJ	42	UJ
PCB-1221 (AROCHLOR 1221)	UG/KG	88	UJ	82	UJ	76	UJ	84	UJ
PCB-1232 (AROCHLOR 1232)	UG/KG	44	UJ	41	UJ	38	UJ	42	UJ
PCB-1242 (AROCHLOR 1242)	UG/KG	44	UJ	41	UJ	38	UJ	42	UJ
PCB-1248 (AROCHLOR 1248)	UG/KG	44	UJ	41	UJ	38	UJ	42	UJ
PCB-1254 (AROCHLOR 1254)	UG/KG	44	UJ	41	UJ	38	UJ	42	UJ
PESTICIDES									
ALPHA BHC (ALPHA HEXACHLOROCYCLOHEXANE)	UG/KG	2.2	UJ	2.1	UJ	1.9	UJ	2.1	UJ
BETA BHC (BETA HEXACHLOROCYCLOHEXANE)	UG/KG	2.2	UJ	2.1	UJ	1.9	UJ	2.1	UJ
DELTA BHC (DELTA HEXACHLOROCYCLOHEXANE)	UG/KG	2.2	UJ	2.1	UJ	1.9	UJ	2.1	UJ
GAMMA BHC (LINDANE)	UG/KG	2.2	UJ	2.1	UJ	1.9	UJ	2.1	UJ
HEPTACHLOR	UG/KG	2.2	UJ	2.1	UJ	1.9	UJ	2.1	UJ
ALDRIN	UG/KG	2.2	UJ	2.1	UJ	1.9	UJ	2.1	UJ
HEPTACHLOR EPOXIDE	UG/KG	2.2	UJ	2.1	UJ	1.9	UJ	2.1	UJ
ALPHA ENDOSULFAN (ENDOSULFAN I)	UG/KG	2.2	UJ	2.1	UJ	1.9	UJ	2.1	UJ
DIELDRIN	UG/KG	4.4	UJ	4.1	UJ	3.8	UJ	4.2	UJ
p,p'-DDE	UG/KG	7.5	J	74	J	1.8	J	46	J
ENDRIN	UG/KG	4.4	UJ	4.1	UJ	3.8	UJ	4.2	UJ
BETA ENDOSULFAN (ENDOSULFAN II)	UG/KG	4.4	UJ	4.1	UJ	3.8	UJ	4.2	UJ
p,p'-DDD	UG/KG	2	J	4.1	UJ	3.8	UJ	13	J
ENDOSULFAN SULFATE	UG/KG	4.4	UJ	4.1	UJ	3.8	UJ	4.2	UJ
p,p'-DDT	UG/KG	4.4	UJ	17	J	3.8	UJ	7	J
METHOXYCHLOR	UG/KG	22	UJ	21	UJ	19	UJ	21	UJ
ENDRIN ALDEHYDE	UG/KG	4.4	UJ	4.1	UJ	3.8	UJ	4.2	UJ
ALPHA-CHLORDANE	UG/KG	2.2	UJ	0.61	J	1.9	UJ	2.1	UJ
GAMMA-CHLORDANE	UG/KG	2.2	UJ	2.1	UJ	1.9	UJ	2.1	UJ
ENDRIN KETONE	UG/KG	4.4	UJ	4.1	UJ	3.8	UJ	4.2	UJ
TOXAPHENE	UG/KG	224	UJ	209	UJ	194	UJ	214	UJ
SEMI-VOLATILES									
bis(2-CHLOROETHYL) ETHER (2-CHLOROETHYL ETHER)	UG/KG	607	U	551	U	558	U	760	U
PHENOL	UG/KG	607	U	551	U	558	U	760	U

Parameter	Units	Building StationID SampleID DateCollected Depth	SWMU6 W6-SB01 NDA101 04/24/2000 0 to 0.5		SWMU6 W6-SB02 NDA103 04/24/2000 0 to 0.5		SWMU6 W6-SB02 NDA104FD1 04/24/2000 0 to 0.5		SWMU6 W6-SB03 NDA107 04/24/2000 0 to 0.5		SWMU6 W6-SB04 NDA109 04/24/2000 0 to 0.5	
2-CHLOROPHENOL	UG/KG		549	U	627	U	639	U	506	U	503	U
1,3,5-TRINITROBENZENE	UG/KG		336	U	342	U	355	R	309	U	326	U
1,3-DICHLOROBENZENE	UG/KG		549	U	627	U	639	U	506	U	503	U
1,3-DINITROBENZENE	UG/KG		336	U	342	U	355	R	309	U	326	U
1,4-DICHLOROBENZENE	UG/KG		549	U	627	U	639	U	506	U	503	U
1,2-DICHLOROBENZENE	UG/KG		549	U	627	U	639	U	506	U	503	U
bis(2-CHLOROISOPROPYL) ETHER	UG/KG		549	U	627	U	639	U	506	U	503	U
2-METHYLPHENOL (o-CRESOL)	UG/KG		549	U	627	U	639	U	506	U	503	U
HEXACHLOROETHANE	UG/KG		549	U	627	U	639	U	506	U	503	U
N-NITROSODI-n-PROPYLAMINE	UG/KG		549	U	627	U	639	U	506	U	503	U
CRESOLS, m & p	UG/KG		549	U	627	U	639	U	506	U	503	U
NITROBENZENE	UG/KG		336	U	342	U	355	R	309	U	326	U
ISOPHORONE	UG/KG		549	U	627	U	639	U	506	U	503	U
2-NITROPHENOL	UG/KG		549	U	627	U	639	U	506	U	503	U
2,4-DIMETHYLPHENOL	UG/KG		549	U	627	U	639	U	506	U	503	U
bis(2-CHLOROETHOXY) METHANE	UG/KG		549	U	627	U	639	U	506	U	503	U
2,4-DICHLOROPHENOL	UG/KG		549	U	627	U	639	U	506	U	503	U
1,2,4-TRICHLOROBENZENE	UG/KG		549	U	627	U	639	U	506	U	503	U
NAPHTHALENE	UG/KG		549	U	627	U	639	U	506	U	503	U
4-CHLOROANILINE	UG/KG		549	U	627	U	639	U	506	U	503	U
2-METHYLNAPHTHALENE	UG/KG		549	U	627	U	639	U	506	U	503	U
HEXACHLOROBUTADIENE	UG/KG		549	U	627	U	639	U	506	U	503	U
4-CHLORO-3-METHYLPHENOL	UG/KG		549	U	627	U	639	U	506	U	503	U
HEXACHLOROCYCLOPENTADIENE	UG/KG		549	U	627	U	639	U	506	U	503	U
2,4,6-TRICHLOROPHENOL	UG/KG		549	U	627	U	639	U	506	U	503	U
2,4,5-TRICHLOROPHENOL	UG/KG		1650	U	1880	U	1920	U	1520	U	1510	U
2-CHLORONAPHTHALENE	UG/KG		549	U	627	U	639	U	506	U	503	U
2-NITROANILINE	UG/KG		1650	U	1880	U	1920	U	1520	U	1510	U
ACENAPHTHYLENE	UG/KG		549	U	627	U	639	U	506	U	503	U
DIMETHYL PHTHALATE	UG/KG		549	U	627	U	639	U	506	U	503	U
2,6-DINITROTOLUENE	UG/KG		336	U	342	U	355	R	309	U	326	U
ACENAPHTHENE	UG/KG		549	U	627	U	639	U	506	U	503	U
3-NITROANILINE	UG/KG		1650	U	1880	U	1920	U	1520	U	1510	U
2,4-DINITROPHENOL	UG/KG		1650	U	1880	U	1920	U	1520	U	1510	U
DIBENZOFURAN	UG/KG		549	U	627	U	639	U	506	U	503	U

SWMU 06 Surface Soil Data

	Building	SWMU6		SWMU6		SWMU6		SWMU6	
	StationID	W6-SB05		W6-SB06		W6-SB07		W6-SB08	
	SampleID	NDA111		NDA113		NDA115		NDA117	
	DateCollected	04/24/2000		04/20/2000		04/20/2000		04/20/2000	
	Depth	0 to 0.5		0 to 0.5		0 to 0.5		0 to 0.5	
Parameter	**Units**								
2-CHLOROPHENOL	UG/KG	607	U	551	U	558	U	760	U
1,3,5-TRINITROBENZENE	UG/KG	332	U	303	U	285	U	310	U
1,3-DICHLOROBENZENE	UG/KG	607	U	551	U	558	U	760	U
1,3-DINITROBENZENE	UG/KG	332	U	303	U	285	U	310	U
1,4-DICHLOROBENZENE	UG/KG	607	U	551	U	558	U	760	U
1,2-DICHLOROBENZENE	UG/KG	607	U	551	U	558	U	760	U
bis(2-CHLOROISOPROPYL) ETHER	UG/KG	607	U	551	U	558	U	760	U
2-METHYLPHENOL (o-CRESOL)	UG/KG	607	U	551	U	558	U	760	U
HEXACHLOROETHANE	UG/KG	607	U	551	U	558	U	760	U
N-NITROSODI-n-PROPYLAMINE	UG/KG	607	U	551	U	558	U	760	U
CRESOLS, m & p	UG/KG	607	U	551	U	558	U	760	U
NITROBENZENE	UG/KG	332	U	303	U	285	U	310	U
ISOPHORONE	UG/KG	607	U	551	U	558	U	760	U
2-NITROPHENOL	UG/KG	607	U	551	U	558	U	760	U
2,4-DIMETHYLPHENOL	UG/KG	607	U	551	U	558	U	760	U
bis(2-CHLOROETHOXY) METHANE	UG/KG	607	U	551	U	558	U	760	U
2,4-DICHLOROPHENOL	UG/KG	607	U	551	U	558	U	760	U
1,2,4-TRICHLOROBENZENE	UG/KG	607	U	551	U	558	U	760	U
NAPHTHALENE	UG/KG	621	=	551	U	558	U	760	U
4-CHLOROANILINE	UG/KG	607	U	551	U	558	U	760	U
2-METHYLNAPHTHALENE	UG/KG	311	J	551	U	558	U	760	U
HEXACHLOROBUTADIENE	UG/KG	607	U	551	U	558	U	760	U
4-CHLORO-3-METHYLPHENOL	UG/KG	607	U	551	U	558	U	760	U
HEXACHLOROCYCLOPENTADIENE	UG/KG	607	U	551	U	558	U	760	U
2,4,6-TRICHLOROPHENOL	UG/KG	607	U	551	U	558	U	760	U
2,4,5-TRICHLOROPHENOL	UG/KG	1820	U	1650	U	1680	U	2280	U
2-CHLORONAPHTHALENE	UG/KG	607	U	551	U	558	U	760	U
2-NITROANILINE	UG/KG	1820	U	1650	U	1680	U	2280	U
ACENAPHTHYLENE	UG/KG	607	U	551	U	558	U	760	U
DIMETHYL PHTHALATE	UG/KG	607	U	551	U	558	U	760	U
2,6-DINITROTOLUENE	UG/KG	332	U	303	U	285	U	310	U
ACENAPHTHENE	UG/KG	684	=	551	U	558	U	760	U
3-NITROANILINE	UG/KG	1820	U	1650	U	1680	U	2280	U
2,4-DINITROPHENOL	UG/KG	1820	U	1650	U	1680	U	2280	U
DIBENZOFURAN	UG/KG	784	=	551	U	558	U	760	U

	Building	SWMU6		SWMU6		SWMU6		SWMU6		SWMU6	
	StationID	W6-SB01		W6-SB02		W6-SB02		W6-SB03		W6-SB04	
	SampleID	NDA101		NDA103		NDA104FD1		NDA107		NDA109	
	DateCollected	04/24/2000		04/24/2000		04/24/2000		04/24/2000		04/24/2000	
	Depth	0 to 0.5		0 to 0.5		0 to 0.5		0 to 0.5		0 to 0.5	
Parameter	**Units**										
2,4-DINITROTOLUENE	UG/KG	336	U	342	U	355	R	309	U	326	U
4-NITROPHENOL	UG/KG	1650	U	1880	U	1920	U	1520	U	1510	U
FLUORENE	UG/KG	549	U	627	U	639	U	506	U	503	U
4-CHLOROPHENYL PHENYL ETHER	UG/KG	549	U	627	U	639	U	506	U	503	U
DIETHYL PHTHALATE	UG/KG	549	U	627	U	639	U	506	U	503	U
4-NITROANILINE	UG/KG	1650	U	1880	U	1920	U	1520	U	1510	U
4,6-DINITRO-2-METHYLPHENOL	UG/KG	1650	U	1880	U	1920	U	1520	U	1510	U
N-NITROSODIPHENYLAMINE	UG/KG	549	U	627	U	639	U	506	U	503	U
4-BROMOPHENYL PHENYL ETHER	UG/KG	549	U	627	U	639	U	506	U	503	U
HEXACHLOROBENZENE	UG/KG	549	U	627	U	639	U	506	U	503	U
PENTACHLOROPHENOL	UG/KG	1650	U	1880	U	1920	U	1520	U	1510	U
PHENANTHRENE	UG/KG	549	U	627	U	639	U	506	U	503	U
ANTHRACENE	UG/KG	549	U	627	U	639	U	506	U	503	U
DI-n-BUTYL PHTHALATE	UG/KG	549	U	627	U	639	U	506	U	503	U
FLUORANTHENE	UG/KG	34	U	627	U	639	U	506	U	503	U
PYRENE	UG/KG	37	J	627	U	639	U	506	U	503	U
BENZYL BUTYL PHTHALATE	UG/KG	549	U	627	U	639	U	506	U	503	U
3,3'-DICHLOROBENZIDINE	UG/KG	1100	U	1250	U	1280	U	1010	U	1010	U
BENZO(a)ANTHRACENE	UG/KG	549	U	627	U	639	U	506	U	503	U
CHRYSENE	UG/KG	549	U	627	U	639	U	506	U	503	U
bis(2-ETHYLHEXYL) PHTHALATE	UG/KG	1400	=	627	U	639	U	506	U	503	U
DI-n-OCTYLPHTHALATE	UG/KG	549	U	627	U	639	U	506	U	503	U
BENZO(b)FLUORANTHENE	UG/KG	549	U	627	U	639	U	506	U	503	U
BENZO(k)FLUORANTHENE	UG/KG	549	U	627	U	639	U	506	U	503	U
BENZO(a)PYRENE	UG/KG	549	U	627	U	639	U	506	U	503	U
INDENO(1,2,3-c,d)PYRENE	UG/KG	549	U	627	U	639	U	506	U	503	U
DIBENZ(a,h)ANTHRACENE	UG/KG	549	U	627	U	639	U	506	U	503	U
BENZO(g,h,i)PERYLENE	UG/KG	549	U	627	U	639	U	506	U	503	U
CARBAZOLE	UG/KG	549	U	627	U	639	U	506	U	503	U
VOLATILES											
CHLOROMETHANE	UG/KG	14	U	13	U	14	U	12	U	11	U
VINYL CHLORIDE	UG/KG	14	U	13	U	14	U	12	U	11	U
BROMOMETHANE	UG/KG	14	U	13	U	14	U	12	U	11	U
1,3-DICHLOROBENZENE	UG/KG	549	U	627	U	639	U	506	U	503	U
CHLOROETHANE	UG/KG	14	U	13	U	14	U	12	U	11	U

SWMU 06 Surface Soil Data

	Building	SWMU6		SWMU6		SWMU6		SWMU6	
	StationID	W6-SB05		W6-SB06		W6-SB07		W6-SB08	
	SampleID	NDA111		NDA113		NDA115		NDA117	
	DateCollected	04/24/2000		04/20/2000		04/20/2000		04/20/2000	
	Depth	0 to 0.5		0 to 0.5		0 to 0.5		0 to 0.5	
Parameter	**Units**								
2,4-DINITROTOLUENE	UG/KG	332	U	303	U	285	U	310	U
4-NITROPHENOL	UG/KG	1820	U	1650	U	1680	U	2280	U
FLUORENE	UG/KG	440	J	551	U	558	U	760	U
4-CHLOROPHENYL PHENYL ETHER	UG/KG	607	U	551	U	558	U	760	U
DIETHYL PHTHALATE	UG/KG	607	U	551	U	558	U	760	U
4-NITROANILINE	UG/KG	1820	U	1650	U	1680	U	2280	U
4,6-DINITRO-2-METHYLPHENOL	UG/KG	1820	U	1650	U	1680	U	2280	U
N-NITROSODIPHENYLAMINE	UG/KG	607	U	551	U	558	U	760	U
4-BROMOPHENYL PHENYL ETHER	UG/KG	607	U	551	U	558	U	760	U
HEXACHLOROBENZENE	UG/KG	607	U	551	U	558	U	760	U
PENTACHLOROPHENOL	UG/KG	1820	U	1650	U	1680	U	2280	U
PHENANTHRENE	UG/KG	4860	=	551	U	558	U	760	U
ANTHRACENE	UG/KG	902	=	551	U	558	U	760	U
DI-n-BUTYL PHTHALATE	UG/KG	607	U	551	U	558	U	760	U
FLUORANTHENE	UG/KG	4060	=	551	U	558	U	50	J
PYRENE	UG/KG	2900	=	33	J	558	U	51	J
BENZYL BUTYL PHTHALATE	UG/KG	607	U	551	U	558	U	760	U
3,3'-DICHLOROBENZIDINE	UG/KG	1210	U	1100	U	1120	U	1520	U
BENZO(a)ANTHRACENE	UG/KG	1870	=	551	U	558	U	41	J
CHRYSENE	UG/KG	2000	=	52	J	558	U	118	J
bis(2-ETHYLHEXYL) PHTHALATE	UG/KG	607	U	135	J	558	U	760	U
DI-n-OCTYLPHTHALATE	UG/KG	607	U	551	U	558	U	760	U
BENZO(b)FLUORANTHENE	UG/KG	1800	=	68	J	558	U	121	J
BENZO(k)FLUORANTHENE	UG/KG	1230	=	59	J	558	U	88	J
BENZO(a)PYRENE	UG/KG	1510	=	52	J	558	U	81	J
INDENO(1,2,3-c,d)PYRENE	UG/KG	653	=	50	J	558	U	74	J
DIBENZ(a,h)ANTHRACENE	UG/KG	254	J	551	U	558	U	760	U
BENZO(g,h,i)PERYLENE	UG/KG	432	J	40	J	558	U	56	J
CARBAZOLE	UG/KG	431	J	551	U	558	U	760	U
VOLATILES									
CHLOROMETHANE	UG/KG	12	U	10	U	10	U	10	UJ
VINYL CHLORIDE	UG/KG	12	U	10	U	10	U	10	UJ
BROMOMETHANE	UG/KG	12	U	10	U	10	U	10	UJ
1,3-DICHLOROBENZENE	UG/KG	607	U	551	U	558	U	760	U
CHLOROETHANE	UG/KG	12	U	10	U	10	U	10	UJ

	Building	SWMU6		SWMU6		SWMU6		SWMU6		SWMU6	
	StationID	W6-SB01		W6-SB02		W6-SB02		W6-SB03		W6-SB04	
	SampleID	NDA101		NDA103		NDA104FD1		NDA107		NDA109	
	DateCollected	04/24/2000		04/24/2000		04/24/2000		04/24/2000		04/24/2000	
	Depth	0 to 0.5		0 to 0.5		0 to 0.5		0 to 0.5		0 to 0.5	
Parameter	**Units**										
1,1-DICHLOROETHENE	UG/KG	14	U	13	U	14	U	12	U	11	U
1,4-DICHLOROBENZENE	UG/KG	549	U	627	U	639	U	506	U	503	U
1,2-DICHLOROBENZENE	UG/KG	549	U	627	U	639	U	506	U	503	U
CARBON DISULFIDE	UG/KG	2	J	2	J	14	U	12	U	11	U
METHYLENE CHLORIDE	UG/KG	14	U	13	U	14	U	12	U	11	U
1,1-DICHLOROETHANE	UG/KG	14	U	13	U	14	U	12	U	11	U
ACETONE	UG/KG	20	R	25	R	14	R	12	R	11	R
METHYL ETHYL KETONE (2-BUTANONE)	UG/KG	3	J	13	R	14	R	12	R	11	R
CHLOROFORM	UG/KG	14	U	13	U	14	U	12	U	11	U
1,1,1-TRICHLOROETHANE	UG/KG	14	U	13	U	14	U	12	U	11	U
CARBON TETRACHLORIDE	UG/KG	14	U	13	U	14	U	12	U	11	U
BENZENE	UG/KG	14	U	13	U	14	U	12	U	11	U
1,2-DICHLOROETHANE	UG/KG	14	U	13	U	14	U	12	U	11	U
TRICHLOROETHYLENE (TCE)	UG/KG	14	U	13	U	14	U	12	U	11	U
1,2-DICHLOROPROPANE	UG/KG	14	U	13	U	14	U	12	U	11	U
1,2,4-TRICHLOROBENZENE	UG/KG	549	U	627	U	639	U	506	U	503	U
BROMODICHLOROMETHANE	UG/KG	14	U	13	U	14	U	12	U	11	U
cis-1,3-DICHLOROPROPENE	UG/KG	14	U	13	U	14	U	12	U	11	U
METHYL ISOBUTYL KETONE (4-METHYL-2-PENTANONE)	UG/KG	14	U	13	U	14	U	12	U	11	U
TOLUENE	UG/KG	14	U	13	U	14	U	12	U	11	U
trans-1,3-DICHLOROPROPENE	UG/KG	14	U	13	U	14	U	12	U	11	U
1,1,2-TRICHLOROETHANE	UG/KG	14	U	13	U	14	U	12	U	11	U
TETRACHLOROETHYLENE(PCE)	UG/KG	14	U	13	U	14	U	12	U	11	U
2-HEXANONE	UG/KG	14	U	13	U	14	U	12	U	11	U
DIBROMOCHLOROMETHANE	UG/KG	14	U	13	U	14	U	12	U	11	U
CHLOROBENZENE	UG/KG	14	U	13	U	14	U	12	U	11	U
ETHYLBENZENE	UG/KG	14	U	13	U	14	U	12	U	11	U
M,P-XYLENE (SUM OF ISOMERS)	UG/KG	0.7	J	13	U	14	U	12	U	11	U
O-XYLENE (1,2-DIMETHYLBENZENE)	UG/KG	14	U	13	U	14	U	12	U	11	U
STYRENE	UG/KG	14	U	13	U	14	U	12	U	11	U
BROMOFORM	UG/KG	14	U	13	U	14	U	12	U	11	U
1,1,2,2-TETRACHLOROETHANE	UG/KG	14	U	13	U	14	U	12	U	11	U
XYLENES, TOTAL	UG/KG	0.7	J	13	U	14	U	12	U	11	U

SWMU 06 Surface Soil Data

Parameter	Units	Building	SWMU6		SWMU6		SWMU6		SWMU6	
		StationID	W6-SB05		W6-SB06		W6-SB07		W6-SB08	
		SampleID	NDA111		NDA113		NDA115		NDA117	
		DateCollected	04/24/2000		04/20/2000		04/20/2000		04/20/2000	
		Depth	0 to 0.5		0 to 0.5		0 to 0.5		0 to 0.5	
1,1-DICHLOROETHENE	UG/KG		12	U	10	U	10	U	10	UJ
1,4-DICHLOROBENZENE	UG/KG		607	U	551	U	558	U	760	U
1,2-DICHLOROBENZENE	UG/KG		607	U	551	U	558	U	760	U
CARBON DISULFIDE	UG/KG		0.7	J	10	U	10	U	10	UJ
METHYLENE CHLORIDE	UG/KG		12	U	10	U	10	U	10	UJ
1,1-DICHLOROETHANE	UG/KG		12	U	10	U	10	U	10	UJ
ACETONE	UG/KG		12	R	10	R	20	R	11	R
METHYL ETHYL KETONE (2-BUTANONE)	UG/KG		12	R	10	R	10	R	10	R
CHLOROFORM	UG/KG		12	U	10	U	10	U	10	UJ
1,1,1-TRICHLOROETHANE	UG/KG		12	U	10	U	10	U	10	UJ
CARBON TETRACHLORIDE	UG/KG		12	U	10	U	10	U	10	UJ
BENZENE	UG/KG		12	U	10	U	10	U	10	UJ
1,2-DICHLOROETHANE	UG/KG		12	U	10	U	10	U	10	UJ
TRICHLOROETHYLENE (TCE)	UG/KG		12	U	10	U	10	U	10	UJ
1,2-DICHLOROPROPANE	UG/KG		12	U	10	U	10	U	10	UJ
1,2,4-TRICHLOROBENZENE	UG/KG		607	U	551	U	558	U	760	U
BROMODICHLOROMETHANE	UG/KG		12	U	10	U	10	U	10	UJ
cis-1,3-DICHLOROPROPENE	UG/KG		12	U	10	U	10	U	10	UJ
METHYL ISOBUTYL KETONE (4-METHYL-2-PENTANONE)	UG/KG		12	U	10	U	10	U	10	UJ
TOLUENE	UG/KG		12	U	10	U	10	U	0.8	J
trans-1,3-DICHLOROPROPENE	UG/KG		12	U	10	U	10	U	10	UJ
1,1,2-TRICHLOROETHANE	UG/KG		12	U	10	U	10	U	10	UJ
TETRACHLOROETHYLENE(PCE)	UG/KG		12	U	10	U	10	U	10	UJ
2-HEXANONE	UG/KG		12	U	10	U	10	U	10	UJ
DIBROMOCHLOROMETHANE	UG/KG		12	U	10	U	10	U	10	UJ
CHLOROBENZENE	UG/KG		12	U	10	U	10	U	10	UJ
ETHYLBENZENE	UG/KG		12	U	10	U	10	U	1	J
M,P-XYLENE (SUM OF ISOMERS)	UG/KG		12	U	10	U	10	U	4	J
O-XYLENE (1,2-DIMETHYLBENZENE)	UG/KG		12	U	10	U	10	U	2	J
STYRENE	UG/KG		12	U	10	U	10	U	10	UJ
BROMOFORM	UG/KG		12	U	10	U	10	U	10	UJ
1,1,2,2-TETRACHLOROETHANE	UG/KG		12	U	10	U	10	U	10	UJ
XYLENES, TOTAL	UG/KG		12	U	10	U	10	U	6	J

Parameter	Units	Building	SWMU6		SWMU6		SWMU6		SWMU6		SWMU6	
		StationID	W6-SB01		W6-SB02		W6-SB02		W6-SB03		W6-SB04	
		SampleID	NDA102		NDA105		NDA106FD1		NDA108		NDA110	
		DateCollected	04/24/2000		04/24/2000		04/24/2000		04/24/2000		04/24/2000	
		Depth	1 to 1.5		0.7 to 1.2		0.7 to 1.2		1 to 1.5		0.5 to 0.7	
EXPLOSIVES												
2,6-DINITROTOLUENE	UG/KG		382	U	405	U	404	U	337	U	188	U
OCTAHYDRO-1,3,5,7-TETRANITRO-1,3,5,7-TETRAZOCINE	UG/KG		382	U	405	U	404	U	337	U	188	U
HEXAHYDRO-1,3,5-TRINITRO-1,3,5,7-TETRAZOCINE	UG/KG		382	U	405	U	404	U	337	U	188	U
1,3,5-TRINITROBENZENE	UG/KG		382	U	405	U	404	U	337	U	188	U
1,3-DINITROBENZENE	UG/KG		382	U	405	U	404	U	337	U	188	U
METHYL-2,4,6-TRINITROPHENYLNITRAMINE	UG/KG		382	U	405	U	404	U	337	U	188	U
NITROBENZENE	UG/KG		382	U	405	U	404	U	337	U	188	U
2,4,6-TRINITROTOLUENE	UG/KG		382	U	405	U	404	U	337	U	188	U
2,4-DINITROTOLUENE	UG/KG		382	U	405	U	404	U	337	U	188	U
2-NITROTOLUENE	UG/KG		382	U	405	U	404	U	337	U	188	U
4-NITROTOLUENE	UG/KG		382	U	405	U	404	U	337	U	188	U
3-NITROTOLUENE	UG/KG		382	U	405	U	404	U	337	U	188	U
METALS												
ALUMINUM	MG/KG		9320	=	5860	=	5960	=	5440	=	10300	=
ANTIMONY	MG/KG		4.1	J	0.61	J	0.5	J	0.93	J	0.53	J
ARSENIC	MG/KG		2.2	J	0.76	J	1.1	J	2	J	1	J
BARIUM	MG/KG		20.4	J	12.9	J	12.9	J	27.9	J	19.3	J
BERYLLIUM	MG/KG		0.048	J	0.049	U	0.049	U	0.055	J	0.14	J
CADMIUM	MG/KG		0.44	J	0.33	J	0.55	J	0.027	U	0.48	J
CALCIUM	MG/KG		86500	J	122000	J	177000	J	88400	J	40100	J
CHROMIUM, TOTAL	MG/KG		11.6	=	5.7	=	5	=	9.7	=	17.8	=
COBALT	MG/KG		3.5	J	2.1	J	2	J	4.2	J	9.4	J
COPPER	MG/KG		51.5	=	15	=	11.4	=	35.7	=	38.2	=
IRON	MG/KG		21900	=	7330	=	6020	=	17900	=	25100	=
LEAD	MG/KG		332	=	25.8	=	21.3	=	97.8	=	16.9	=
MAGNESIUM	MG/KG		5580	=	3810	=	3660	=	3130	=	8130	=
MANGANESE	MG/KG		227	=	117	=	87.6	=	219	=	295	=
MERCURY	MG/KG		0.053	J	0.042	J	0.023	UJ	0.072	J	0.012	UJ
NICKEL	MG/KG		5.1	J	2.3	J	2	J	4.5	J	9.7	J
POTASSIUM	MG/KG		2630	J	2670	J	2740	J	1810	J	2510	J
SELENIUM	MG/KG		0.33	U	0.34	U	0.34	U	0.28	U	0.28	U
SILVER	MG/KG		0.11	J	0.081	U	0.081	U	0.27	J	0.066	U
SODIUM	MG/KG		16500	=	15400	=	15800	=	6120	=	4200	=
THALLIUM	MG/KG		1.5	J	0.44	U	0.44	U	1.3	J	1.5	J

SWMU 06 Subsurface Soil Data

	Building	SWMU6		SWMU6		SWMU6		SWMU6	
	StationID	W6-SB05		W6-SB06		W6-SB07		W6-SB08	
	SampleID	NDA112		NDA114		NDA116		NDA118	
	DateCollected	04/24/2000		04/20/2000		04/20/2000		04/20/2000	
	Depth	3 to 3.5		1.8 to 2.3		2.3 to 3		2.3 to 3	
Parameter	**Units**								
EXPLOSIVES									
2,6-DINITROTOLUENE	UG/KG	334	U	322	U	314	U	321	U
OCTAHYDRO-1,3,5,7-TETRANITRO-1,3,5,7-TETRAZOCINE	UG/KG	334	U	322	U	314	U	321	U
HEXAHYDRO-1,3,5-TRINITRO-1,3,5,7-TETRAZOCINE	UG/KG	334	U	322	U	314	U	321	U
1,3,5-TRINITROBENZENE	UG/KG	334	U	322	U	314	U	321	U
1,3-DINITROBENZENE	UG/KG	334	U	322	U	314	U	321	U
METHYL-2,4,6-TRINITROPHENYLNITRAMINE	UG/KG	334	U	322	U	314	U	321	U
NITROBENZENE	UG/KG	334	U	322	U	314	U	321	U
2,4,6-TRINITROTOLUENE	UG/KG	334	U	322	U	314	U	321	U
2,4-DINITROTOLUENE	UG/KG	334	U	322	U	314	U	321	U
2-NITROTOLUENE	UG/KG	334	U	322	U	314	U	321	U
4-NITROTOLUENE	UG/KG	334	U	322	U	314	U	321	U
3-NITROTOLUENE	UG/KG	334	U	322	U	314	U	321	U
METALS									
ALUMINUM	MG/KG	5190	=	12500	=	6470	=	7190	=
ANTIMONY	MG/KG	0.19	UJ	0.46	J	0.18	UJ	0.18	UJ
ARSENIC	MG/KG	1.2	J	0.88	J	1.1	J	1.1	J
BARIUM	MG/KG	12.6	J	36.9	J	24	J	24.3	J
BERYLLIUM	MG/KG	0.04	U	0.092	J	0.066	J	0.072	J
CADMIUM	MG/KG	0.63	J	0.29	J	0.16	J	0.14	J
CALCIUM	MG/KG	106000	J	91800	=	99400	=	93700	=
CHROMIUM, TOTAL	MG/KG	5.9	=	25.4	=	6.3	=	6.7	=
COBALT	MG/KG	1.9	J	8.2	J	2.2	J	2.2	J
COPPER	MG/KG	34.4	=	137	J	37.1	J	10	J
IRON	MG/KG	5910	=	15400	=	7980	=	8230	=
LEAD	MG/KG	8.8	=	16.1	=	2.3	=	2.8	=
MAGNESIUM	MG/KG	2920	=	5220	=	3130	=	3490	=
MANGANESE	MG/KG	72	=	343	J	213	J	170	J
MERCURY	MG/KG	0.018	UJ	0.018	J	0.016	U	0.016	U
NICKEL	MG/KG	1.8	J	12.4	=	1.4	J	1.8	J
POTASSIUM	MG/KG	1590	J	1840	=	2220	=	2490	=
SELENIUM	MG/KG	0.28	U	0.27	U	0.26	U	0.29	J
SILVER	MG/KG	0.067	U	0.19	J	0.063	U	0.065	U
SODIUM	MG/KG	8370	=	4790	=	5710	=	6230	=
THALLIUM	MG/KG	0.36	U	0.35	U	0.34	U	0.35	U

Parameter	Units	Building	SWMU6		SWMU6		SWMU6		SWMU6		SWMU6	
		StationID	W6-SB01		W6-SB02		W6-SB02		W6-SB03		W6-SB04	
		SampleID	NDA102		NDA105		NDA106FD1		NDA108		NDA110	
		DateCollected	04/24/2000		04/24/2000		04/24/2000		04/24/2000		04/24/2000	
		Depth	1 to 1.5		0.7 to 1.2		0.7 to 1.2		1 to 1.5		0.5 to 0.7	
VANADIUM	MG/KG		27.9	=	20.7	=	18.6	=	27.3	=	80.2	=
ZINC	MG/KG		216	=	37.5	=	22.3	=	68.1	=	58.1	=
PCB												
PCB-1016 (AROCHLOR 1016)	UG/KG		51	UJ	52	UJ	52	UJ	44	UJ	44	UJ
PCB-1260 (AROCHLOR 1260)	UG/KG		51	UJ	52	UJ	52	UJ	44	UJ	44	UJ
PCB-1221 (AROCHLOR 1221)	UG/KG		104	UJ	106	UJ	106	UJ	89	UJ	89	UJ
PCB-1232 (AROCHLOR 1232)	UG/KG		51	UJ	52	UJ	52	UJ	44	UJ	44	UJ
PCB-1242 (AROCHLOR 1242)	UG/KG		51	UJ	52	UJ	52	UJ	44	UJ	44	UJ
PCB-1248 (AROCHLOR 1248)	UG/KG		51	UJ	52	UJ	52	UJ	44	UJ	44	UJ
PCB-1254 (AROCHLOR 1254)	UG/KG		51	UJ	52	UJ	52	UJ	44	UJ	44	UJ
PESTICIDES												
ALPHA BHC (ALPHA HEXACHLOROCYCLOHEXANE)	UG/KG		2.6	UJ	2.7	UJ	2.7	UJ	2.3	UJ	2.3	UJ
BETA BHC (BETA HEXACHLOROCYCLOHEXANE)	UG/KG		2.6	UJ	2.7	UJ	2.7	UJ	2.3	UJ	2.3	UJ
DELTA BHC (DELTA HEXACHLOROCYCLOHEXANE)	UG/KG		2.6	UJ	2.7	UJ	2.7	UJ	2.3	UJ	2.3	UJ
GAMMA BHC (LINDANE)	UG/KG		2.6	UJ	2.7	UJ	2.7	UJ	2.3	UJ	2.3	UJ
HEPTACHLOR	UG/KG		2.6	UJ	2.7	UJ	2.7	UJ	2.3	UJ	2.3	UJ
ALDRIN	UG/KG		2.6	UJ	2.7	UJ	2.7	UJ	2.3	UJ	2.3	UJ
HEPTACHLOR EPOXIDE	UG/KG		2.6	UJ	2.7	UJ	2.7	UJ	2.3	UJ	2.3	UJ
ALPHA ENDOSULFAN (ENDOSULFAN I)	UG/KG		2.6	UJ	2.7	UJ	2.7	UJ	2.3	UJ	2.3	UJ
DIELDRIN	UG/KG		5.2	UJ	5.3	UJ	5.3	UJ	4.4	UJ	4.4	UJ
p,p'-DDE	UG/KG		30	J	11	J	5.3	J	5.8	J	0.88	J
ENDRIN	UG/KG		5.2	UJ	5.3	UJ	5.3	UJ	4.4	UJ	4.4	UJ
BETA ENDOSULFAN (ENDOSULFAN II)	UG/KG		5.2	UJ	5.3	UJ	5.3	UJ	4.4	UJ	4.4	UJ
p,p'-DDD	UG/KG		13	J	0.84	J	0.97	J	1	J	4.4	UJ
ENDOSULFAN SULFATE	UG/KG		5.2	UJ	5.3	UJ	5.3	UJ	4.4	UJ	4.4	UJ
p,p'-DDT	UG/KG		5.2	UJ	5.3	UJ	5.3	UJ	1.8	J	4.4	UJ
METHOXYCHLOR	UG/KG		26	UJ	27	UJ	27	UJ	23	UJ	23	UJ
ENDRIN ALDEHYDE	UG/KG		5.2	UJ	5.3	UJ	5.3	UJ	4.4	UJ	4.4	UJ
ALPHA-CHLORDANE	UG/KG		2.6	UJ	2.7	UJ	2.7	UJ	2.3	UJ	2.3	UJ
GAMMA-CHLORDANE	UG/KG		2.6	UJ	2.7	UJ	2.7	UJ	2.3	UJ	2.3	UJ
ENDRIN KETONE	UG/KG		5.2	UJ	5.3	UJ	5.3	UJ	4.4	UJ	4.4	UJ
TOXAPHENE	UG/KG		263	UJ	269	UJ	269	UJ	226	UJ	226	UJ
SEMI-VOLATILES												
bis(2-CHLOROETHYL) ETHER (2-CHLOROETHYL ETHER)	UG/KG		684	U	748	U	737	U	637	U	567	U
PHENOL	UG/KG		684	U	748	U	737	U	637	U	567	U

SWMU 06 Subsurface Soil Data

	Building	SWMU6		SWMU6		SWMU6		SWMU6	
	StationID	W6-SB05		W6-SB06		W6-SB07		W6-SB08	
	SampleID	NDA112		NDA114		NDA116		NDA118	
	DateCollected	04/24/2000		04/20/2000		04/20/2000		04/20/2000	
	Depth	3 to 3.5		1.8 to 2.3		2.3 to 3		2.3 to 3	
Parameter	**Units**								
VANADIUM	MG/KG	19.4	=	37.1	=	20.1	=	21.1	=
ZINC	MG/KG	23.5	=	200	=	14.5	=	14.9	=
PCB									
PCB-1016 (AROCHLOR 1016)	UG/KG	43	UJ	43	UJ	41	UJ	42	UJ
PCB-1260 (AROCHLOR 1260)	UG/KG	43	UJ	43	UJ	41	UJ	42	UJ
PCB-1221 (AROCHLOR 1221)	UG/KG	87	UJ	87	UJ	83	UJ	86	UJ
PCB-1232 (AROCHLOR 1232)	UG/KG	43	UJ	43	UJ	41	UJ	42	UJ
PCB-1242 (AROCHLOR 1242)	UG/KG	43	UJ	43	UJ	41	UJ	42	UJ
PCB-1248 (AROCHLOR 1248)	UG/KG	43	UJ	43	UJ	41	UJ	42	UJ
PCB-1254 (AROCHLOR 1254)	UG/KG	43	UJ	43	UJ	41	UJ	42	UJ
PESTICIDES									
ALPHA BHC (ALPHA HEXACHLOROCYCLOHEXANE)	UG/KG	2.2	UJ	2.2	UJ	2.1	UJ	2.2	UJ
BETA BHC (BETA HEXACHLOROCYCLOHEXANE)	UG/KG	2.2	UJ	2.2	UJ	2.1	UJ	2.2	UJ
DELTA BHC (DELTA HEXACHLOROCYCLOHEXANE)	UG/KG	2.2	UJ	2.2	UJ	2.1	UJ	2.2	UJ
GAMMA BHC (LINDANE)	UG/KG	2.2	UJ	2.2	UJ	2.1	UJ	2.2	UJ
HEPTACHLOR	UG/KG	2.2	UJ	2.2	UJ	2.1	UJ	2.2	UJ
ALDRIN	UG/KG	2.2	UJ	2.2	UJ	2.1	UJ	2.2	UJ
HEPTACHLOR EPOXIDE	UG/KG	2.2	UJ	2.2	UJ	2.1	UJ	2.2	UJ
ALPHA ENDOSULFAN (ENDOSULFAN I)	UG/KG	2.2	UJ	2.2	UJ	2.1	UJ	2.2	UJ
DIELDRIN	UG/KG	4.3	UJ	4.3	UJ	4.2	UJ	4.3	UJ
p,p'-DDE	UG/KG	2	J	316	J	4.2	UJ	4.3	UJ
ENDRIN	UG/KG	4.3	UJ	4.3	UJ	4.2	UJ	4.3	UJ
BETA ENDOSULFAN (ENDOSULFAN II)	UG/KG	4.3	UJ	4.3	UJ	4.2	UJ	4.3	UJ
p,p'-DDD	UG/KG	0.32	J	12	J	4.2	UJ	4.3	UJ
ENDOSULFAN SULFATE	UG/KG	4.3	UJ	4.3	UJ	4.2	UJ	4.3	UJ
p,p'-DDT	UG/KG	4.3	UJ	19	J	4.2	UJ	4.3	UJ
METHOXYCHLOR	UG/KG	22	UJ	22	UJ	21	UJ	22	UJ
ENDRIN ALDEHYDE	UG/KG	4.3	UJ	4.3	UJ	4.2	UJ	4.3	UJ
ALPHA-CHLORDANE	UG/KG	2.2	UJ	2.2	UJ	2.1	UJ	2.2	UJ
GAMMA-CHLORDANE	UG/KG	2.2	UJ	2.2	UJ	2.1	UJ	2.2	UJ
ENDRIN KETONE	UG/KG	4.3	UJ	4.3	UJ	4.2	UJ	4.3	UJ
TOXAPHENE	UG/KG	222	UJ	220	UJ	212	UJ	218	UJ
SEMI-VOLATILES									
bis(2-CHLOROETHYL) ETHER (2-CHLOROETHYL ETHER)	UG/KG	536	U	629	U	696	U	548	U
PHENOL	UG/KG	536	U	629	U	696	U	548	U

	Building	SWMU6		SWMU6		SWMU6		SWMU6		SWMU6	
	StationID	W6-SB01		W6-SB02		W6-SB02		W6-SB03		W6-SB04	
	SampleID	NDA102		NDA105		NDA106FD1		NDA108		NDA110	
	DateCollected	04/24/2000		04/24/2000		04/24/2000		04/24/2000		04/24/2000	
	Depth	1 to 1.5		0.7 to 1.2		0.7 to 1.2		1 to 1.5		0.5 to 0.7	
Parameter	**Units**										
2-CHLOROPHENOL	UG/KG	684	U	748	U	737	U	637	U	567	U
1,3,5-TRINITROBENZENE	UG/KG	382	U	405	U	404	U	337	U	188	U
1,3-DICHLOROBENZENE	UG/KG	684	U	748	U	737	U	637	U	567	U
1,3-DINITROBENZENE	UG/KG	382	U	405	U	404	U	337	U	188	U
1,4-DICHLOROBENZENE	UG/KG	684	U	748	U	737	U	637	U	567	U
1,2-DICHLOROBENZENE	UG/KG	684	U	748	U	737	U	637	U	567	U
bis(2-CHLOROISOPROPYL) ETHER	UG/KG	684	U	748	U	737	U	637	U	567	U
2-METHYLPHENOL (o-CRESOL)	UG/KG	684	U	748	U	737	U	637	U	567	U
HEXACHLOROETHANE	UG/KG	684	U	748	U	737	U	637	U	567	U
N-NITROSODI-n-PROPYLAMINE	UG/KG	684	U	748	U	737	U	637	U	567	U
CRESOLS, m & p	UG/KG	684	U	748	U	737	U	637	U	567	U
NITROBENZENE	UG/KG	382	U	405	U	404	U	337	U	188	U
ISOPHORONE	UG/KG	684	U	748	U	737	U	637	U	567	U
2-NITROPHENOL	UG/KG	684	U	748	U	737	U	637	U	567	U
2,4-DIMETHYLPHENOL	UG/KG	684	U	748	U	737	U	637	U	567	U
bis(2-CHLOROETHOXY) METHANE	UG/KG	684	U	748	U	737	U	637	U	567	U
2,4-DICHLOROPHENOL	UG/KG	684	U	748	U	737	U	637	U	567	U
1,2,4-TRICHLOROBENZENE	UG/KG	684	U	748	U	737	U	637	U	567	U
NAPHTHALENE	UG/KG	684	U	748	U	737	U	637	U	567	U
4-CHLOROANILINE	UG/KG	684	U	748	U	737	U	637	U	567	U
2-METHYLNAPHTHALENE	UG/KG	684	U	748	U	737	U	637	U	567	U
HEXACHLOROBUTADIENE	UG/KG	684	U	748	U	737	U	637	U	567	U
4-CHLORO-3-METHYLPHENOL	UG/KG	684	U	748	U	737	U	637	U	567	U
HEXACHLOROCYCLOPENTADIENE	UG/KG	684	U	748	U	737	U	637	U	567	U
2,4,6-TRICHLOROPHENOL	UG/KG	684	U	748	U	737	U	637	U	567	U
2,4,5-TRICHLOROPHENOL	UG/KG	2050	U	2240	U	2210	U	1910	U	1700	U
2-CHLORONAPHTHALENE	UG/KG	684	U	748	U	737	U	637	U	567	U
2-NITROANILINE	UG/KG	2050	U	2240	U	2210	U	1910	U	1700	U
ACENAPHTHYLENE	UG/KG	684	U	748	U	737	U	637	U	567	U
DIMETHYL PHTHALATE	UG/KG	684	U	748	U	737	U	637	U	567	U
2,6-DINITROTOLUENE	UG/KG	382	U	405	U	404	U	337	U	188	U
ACENAPHTHENE	UG/KG	684	U	748	U	737	U	637	U	567	U
3-NITROANILINE	UG/KG	2050	U	2240	U	2210	U	1910	U	1700	U
2,4-DINITROPHENOL	UG/KG	2050	U	2240	U	2210	U	1910	U	1700	U
DIBENZOFURAN	UG/KG	684	U	748	U	737	U	637	U	567	U

SWMU 06 Subsurface Soil Data

Parameter	Units	Building	SWMU6		SWMU6		SWMU6		SWMU6	
		StationID	W6-SB05		W6-SB06		W6-SB07		W6-SB08	
		SampleID	NDA112		NDA114		NDA116		NDA118	
		DateCollected	04/24/2000		04/20/2000		04/20/2000		04/20/2000	
		Depth	3 to 3.5		1.8 to 2.3		2.3 to 3		2.3 to 3	
2-CHLOROPHENOL	UG/KG		536	U	629	U	696	U	548	U
1,3,5-TRINITROBENZENE	UG/KG		334	U	322	U	314	U	321	U
1,3-DICHLOROBENZENE	UG/KG		536	U	629	U	696	U	548	U
1,3-DINITROBENZENE	UG/KG		334	U	322	U	314	U	321	U
1,4-DICHLOROBENZENE	UG/KG		536	U	629	U	696	U	548	U
1,2-DICHLOROBENZENE	UG/KG		536	U	629	U	696	U	548	U
bis(2-CHLOROISOPROPYL) ETHER	UG/KG		536	U	629	U	696	U	548	U
2-METHYLPHENOL (o-CRESOL)	UG/KG		536	U	629	U	696	U	548	U
HEXACHLOROETHANE	UG/KG		536	U	629	U	696	U	548	U
N-NITROSODI-n-PROPYLAMINE	UG/KG		536	U	629	U	696	U	548	U
CRESOLS, m & p	UG/KG		536	U	629	U	696	U	548	U
NITROBENZENE	UG/KG		334	U	322	U	314	U	321	U
ISOPHORONE	UG/KG		536	U	629	U	696	U	548	U
2-NITROPHENOL	UG/KG		536	U	629	U	696	U	548	U
2,4-DIMETHYLPHENOL	UG/KG		536	U	629	U	696	U	548	U
bis(2-CHLOROETHOXY) METHANE	UG/KG		536	U	629	U	696	U	548	U
2,4-DICHLOROPHENOL	UG/KG		536	U	629	U	696	U	548	U
1,2,4-TRICHLOROBENZENE	UG/KG		536	U	629	U	696	U	548	U
NAPHTHALENE	UG/KG		536	U	629	U	696	U	548	U
4-CHLOROANILINE	UG/KG		536	U	629	U	696	U	548	U
2-METHYLNAPHTHALENE	UG/KG		536	U	629	U	696	U	548	U
HEXACHLOROBUTADIENE	UG/KG		536	U	629	U	696	U	548	U
4-CHLORO-3-METHYLPHENOL	UG/KG		536	U	629	U	696	U	548	U
HEXACHLOROCYCLOPENTADIENE	UG/KG		536	U	629	U	696	U	548	U
2,4,6-TRICHLOROPHENOL	UG/KG		536	U	629	U	696	U	548	U
2,4,5-TRICHLOROPHENOL	UG/KG		1610	U	1890	U	2090	U	1640	U
2-CHLORONAPHTHALENE	UG/KG		536	U	629	U	696	U	548	U
2-NITROANILINE	UG/KG		1610	U	1890	U	2090	U	1640	U
ACENAPHTHYLENE	UG/KG		536	U	629	U	696	U	548	U
DIMETHYL PHTHALATE	UG/KG		536	U	629	U	696	U	548	U
2,6-DINITROTOLUENE	UG/KG		334	U	322	U	314	U	321	U
ACENAPHTHENE	UG/KG		536	U	629	U	696	U	548	U
3-NITROANILINE	UG/KG		1610	U	1890	U	2090	U	1640	U
2,4-DINITROPHENOL	UG/KG		1610	U	1890	U	2090	U	1640	U
DIBENZOFURAN	UG/KG		536	U	629	U	696	U	548	U

	Building	SWMU6		SWMU6		SWMU6		SWMU6		SWMU6	
	StationID	W6-SB01		W6-SB02		W6-SB02		W6-SB03		W6-SB04	
	SampleID	NDA102		NDA105		NDA106FD1		NDA108		NDA110	
	DateCollected	04/24/2000		04/24/2000		04/24/2000		04/24/2000		04/24/2000	
	Depth	1 to 1.5		0.7 to 1.2		0.7 to 1.2		1 to 1.5		0.5 to 0.7	
Parameter	**Units**										
2,4-DINITROTOLUENE	UG/KG	382	U	405	U	404	U	337	U	188	U
4-NITROPHENOL	UG/KG	2050	U	2240	U	2210	U	1910	U	1700	U
FLUORENE	UG/KG	684	U	748	U	737	U	637	U	567	U
4-CHLOROPHENYL PHENYL ETHER	UG/KG	684	U	748	U	737	U	637	U	567	U
DIETHYL PHTHALATE	UG/KG	684	U	748	U	737	U	637	U	567	U
4-NITROANILINE	UG/KG	2050	U	2240	U	2210	U	1910	U	1700	U
4,6-DINITRO-2-METHYLPHENOL	UG/KG	2050	U	2240	U	2210	U	1910	U	1700	U
N-NITROSODIPHENYLAMINE	UG/KG	684	U	748	U	737	U	637	U	567	U
4-BROMOPHENYL PHENYL ETHER	UG/KG	684	U	748	U	737	U	637	U	567	U
HEXACHLOROBENZENE	UG/KG	684	U	748	U	737	U	637	U	567	U
PENTACHLOROPHENOL	UG/KG	2050	U	2240	U	2210	U	1910	U	1700	U
PHENANTHRENE	UG/KG	85	J	748	U	737	U	637	U	567	U
ANTHRACENE	UG/KG	38	U	748	U	737	U	637	U	567	U
DI-n-BUTYL PHTHALATE	UG/KG	684	U	748	U	737	U	637	U	567	U
FLUORANTHENE	UG/KG	125	J	748	U	737	U	637	U	567	U
PYRENE	UG/KG	195	J	748	U	737	U	637	U	567	U
BENZYL BUTYL PHTHALATE	UG/KG	684	U	748	U	737	U	637	U	567	U
3,3'-DICHLOROBENZIDINE	UG/KG	1370	U	1500	U	1470	U	1270	U	1130	U
BENZO(a)ANTHRACENE	UG/KG	100	J	748	U	737	U	637	U	567	U
CHRYSENE	UG/KG	122	J	748	U	737	U	637	U	567	U
bis(2-ETHYLHEXYL) PHTHALATE	UG/KG	684	U	748	U	737	U	135	J	567	U
DI-n-OCTYLPHTHALATE	UG/KG	684	U	748	U	737	U	637	U	567	U
BENZO(b)FLUORANTHENE	UG/KG	81	J	748	U	737	U	33	U	567	U
BENZO(k)FLUORANTHENE	UG/KG	75	J	748	U	737	U	45	U	567	U
BENZO(a)PYRENE	UG/KG	123	J	748	U	737	U	637	U	567	U
INDENO(1,2,3-c,d)PYRENE	UG/KG	70	J	748	U	737	U	637	U	567	U
DIBENZ(a,h)ANTHRACENE	UG/KG	684	U	748	U	737	U	637	U	567	U
BENZO(g,h,i)PERYLENE	UG/KG	69	J	748	U	737	U	637	U	567	U
CARBAZOLE	UG/KG	684	U	748	U	737	U	637	U	567	U
VOLATILES											
CHLOROMETHANE	UG/KG	14	U	17	U	16	U	13	U	11	U
VINYL CHLORIDE	UG/KG	14	U	17	U	16	U	13	U	11	U
BROMOMETHANE	UG/KG	14	U	17	U	16	U	13	U	11	U
1,3-DICHLOROBENZENE	UG/KG	684	U	748	U	737	U	637	U	567	U
CHLOROETHANE	UG/KG	14	U	17	U	16	U	13	U	11	U

SWMU 06 Subsurface Soil Data

Parameter	Units	Building	StationID	SampleID	DateCollected	Depth
		SWMU6	W6-SB05	NDA112	04/24/2000	3 to 3.5
		SWMU6	W6-SB06	NDA114	04/20/2000	1.8 to 2.3
		SWMU6	W6-SB07	NDA116	04/20/2000	2.3 to 3
		SWMU6	W6-SB08	NDA118	04/20/2000	2.3 to 3
2,4-DINITROTOLUENE	UG/KG	334 U	322 U	314 U	321 U	
4-NITROPHENOL	UG/KG	1610 U	1890 U	2090 U	1640 U	
FLUORENE	UG/KG	536 U	629 U	696 U	548 U	
4-CHLOROPHENYL PHENYL ETHER	UG/KG	536 U	629 U	696 U	548 U	
DIETHYL PHTHALATE	UG/KG	536 U	629 U	696 U	548 U	
4-NITROANILINE	UG/KG	1610 U	1890 U	2090 U	1640 U	
4,6-DINITRO-2-METHYLPHENOL	UG/KG	1610 U	1890 U	2090 U	1640 U	
N-NITROSODIPHENYLAMINE	UG/KG	536 U	629 U	696 U	548 U	
4-BROMOPHENYL PHENYL ETHER	UG/KG	536 U	629 U	696 U	548 U	
HEXACHLOROBENZENE	UG/KG	536 U	629 U	696 U	548 U	
PENTACHLOROPHENOL	UG/KG	1610 U	1890 U	2090 U	1640 U	
PHENANTHRENE	UG/KG	536 U	629 U	696 U	548 U	
ANTHRACENE	UG/KG	536 U	629 U	696 U	548 U	
DI-n-BUTYL PHTHALATE	UG/KG	536 U	629 U	696 U	548 U	
FLUORANTHENE	UG/KG	43 J	629 U	696 U	548 U	
PYRENE	UG/KG	31 J	629 U	696 U	548 U	
BENZYL BUTYL PHTHALATE	UG/KG	536 U	629 U	696 U	548 U	
3,3'-DICHLOROBENZIDINE	UG/KG	1070 U	1260 U	1390 U	1100 U	
BENZO(a)ANTHRACENE	UG/KG	536 U	629 U	696 U	548 U	
CHRYSENE	UG/KG	536 U	45 J	696 U	548 U	
bis(2-ETHYLHEXYL) PHTHALATE	UG/KG	536 U	629 U	696 U	548 U	
DI-n-OCTYLPHTHALATE	UG/KG	536 U	629 U	696 U	548 U	
BENZO(b)FLUORANTHENE	UG/KG	536 U	87 J	696 U	548 U	
BENZO(k)FLUORANTHENE	UG/KG	536 U	52 J	696 U	548 U	
BENZO(a)PYRENE	UG/KG	536 U	59 J	696 U	548 U	
INDENO(1,2,3-c,d)PYRENE	UG/KG	536 U	62 J	696 U	548 U	
DIBENZ(a,h)ANTHRACENE	UG/KG	536 U	629 U	696 U	548 U	
BENZO(g,h,i)PERYLENE	UG/KG	536 U	54 J	696 U	548 U	
CARBAZOLE	UG/KG	536 U	629 U	696 U	548 U	
VOLATILES						
CHLOROMETHANE	UG/KG	11 U	11 U	11 U	12 UJ	
VINYL CHLORIDE	UG/KG	11 U	11 U	11 U	12 UJ	
BROMOMETHANE	UG/KG	11 U	11 U	11 U	12 UJ	
1,3-DICHLOROBENZENE	UG/KG	536 U	629 U	696 U	548 U	
CHLOROETHANE	UG/KG	11 U	11 U	11 U	12 UJ	

SWMU 06 Subsurface Soil Data

Parameter	Units	Building	SWMU6		SWMU6		SWMU6		SWMU6		SWMU6	
		StationID	W6-SB01		W6-SB02		W6-SB02		W6-SB03		W6-SB04	
		SampleID	NDA102		NDA105		NDA106FD1		NDA108		NDA110	
		DateCollected	04/24/2000		04/24/2000		04/24/2000		04/24/2000		04/24/2000	
		Depth	1 to 1.5		0.7 to 1.2		0.7 to 1.2		1 to 1.5		0.5 to 0.7	
1,1-DICHLOROETHENE	UG/KG		14	U	17	U	16	U	13	U	11	U
1,4-DICHLOROBENZENE	UG/KG		684	U	748	U	737	U	637	U	567	U
1,2-DICHLOROBENZENE	UG/KG		684	U	748	U	737	U	637	U	567	U
CARBON DISULFIDE	UG/KG		2	J	4	J	2	J	2	J	11	U
METHYLENE CHLORIDE	UG/KG		14	U	17	U	16	U	13	U	11	U
1,1-DICHLOROETHANE	UG/KG		14	U	17	U	16	U	13	U	11	U
ACETONE	UG/KG		25	R	22	R	21	R	18	R	11	R
METHYL ETHYL KETONE (2-BUTANONE)	UG/KG		3	J	17	R	16	R	13	R	11	R
CHLOROFORM	UG/KG		14	U	17	U	16	U	13	U	11	U
1,1,1-TRICHLOROETHANE	UG/KG		14	U	17	U	16	U	13	U	11	U
CARBON TETRACHLORIDE	UG/KG		14	U	17	U	16	U	13	U	11	U
BENZENE	UG/KG		14	U	0.2	J	16	U	13	U	11	U
1,2-DICHLOROETHANE	UG/KG		14	U	17	U	16	U	13	U	11	U
TRICHLOROETHYLENE (TCE)	UG/KG		14	U	17	U	16	U	13	U	11	U
1,2-DICHLOROPROPANE	UG/KG		14	U	17	U	16	U	13	U	11	U
1,2,4-TRICHLOROBENZENE	UG/KG		684	U	748	U	737	U	637	U	567	U
BROMODICHLOROMETHANE	UG/KG		14	U	17	U	16	U	13	U	11	U
cis-1,3-DICHLOROPROPENE	UG/KG		14	U	17	U	16	U	13	U	11	U
METHYL ISOBUTYL KETONE (4-METHYL-2-PENTANONE)	UG/KG		14	U	17	U	16	U	13	U	11	U
TOLUENE	UG/KG		14	U	0.9	J	16	U	13	U	11	U
trans-1,3-DICHLOROPROPENE	UG/KG		14	U	17	U	16	U	13	U	11	U
1,1,2-TRICHLOROETHANE	UG/KG		14	U	17	U	16	U	13	U	11	U
TETRACHLOROETHYLENE(PCE)	UG/KG		14	U	2	J	16	U	13	U	11	U
2-HEXANONE	UG/KG		14	U	17	U	16	U	13	U	11	U
DIBROMOCHLOROMETHANE	UG/KG		14	U	17	U	16	U	13	U	11	U
CHLOROBENZENE	UG/KG		14	U	17	U	16	U	13	U	11	U
ETHYLBENZENE	UG/KG		14	U	1	J	16	U	13	U	11	U
M,P-XYLENE (SUM OF ISOMERS)	UG/KG		0.6	J	17	U	16	U	13	U	11	U
O-XYLENE (1,2-DIMETHYLBENZENE)	UG/KG		14	U	2	J	16	U	13	U	11	U
STYRENE	UG/KG		14	U	17	U	16	U	13	U	11	U
BROMOFORM	UG/KG		14	U	17	U	16	U	13	U	11	U
1,1,2,2-TETRACHLOROETHANE	UG/KG		14	U	17	U	16	U	13	U	11	U
XYLENES, TOTAL	UG/KG		0.6	J	17	U	16	U	13	U	11	U

SWMU 06 Subsurface Soil Data

Parameter	Units	Building	SWMU6		SWMU6		SWMU6		SWMU6	
		StationID	W6-SB05		W6-SB06		W6-SB07		W6-SB08	
		SampleID	NDA112		NDA114		NDA116		NDA118	
		DateCollected	04/24/2000		04/20/2000		04/20/2000		04/20/2000	
		Depth	3 to 3.5		1.8 to 2.3		2.3 to 3		2.3 to 3	
1,1-DICHLOROETHENE	UG/KG		11	U	11	U	11	U	12	UJ
1,4-DICHLOROBENZENE	UG/KG		536	U	629	U	696	U	548	U
1,2-DICHLOROBENZENE	UG/KG		536	U	629	U	696	U	548	U
CARBON DISULFIDE	UG/KG		1	J	11	U	6	J	6	J
METHYLENE CHLORIDE	UG/KG		11	U	11	U	11	U	12	UJ
1,1-DICHLOROETHANE	UG/KG		11	U	11	U	11	U	12	UJ
ACETONE	UG/KG		12	R	13	R	26	R	67	R
METHYL ETHYL KETONE (2-BUTANONE)	UG/KG		11	R	11	R	11	R	12	R
CHLOROFORM	UG/KG		11	U	11	U	11	U	12	UJ
1,1,1-TRICHLOROETHANE	UG/KG		11	U	11	U	11	U	12	UJ
CARBON TETRACHLORIDE	UG/KG		11	U	11	U	11	U	12	UJ
BENZENE	UG/KG		0.2	J	11	U	11	U	12	UJ
1,2-DICHLOROETHANE	UG/KG		11	U	11	U	11	U	12	UJ
TRICHLOROETHYLENE (TCE)	UG/KG		11	U	11	U	11	U	12	UJ
1,2-DICHLOROPROPANE	UG/KG		11	U	11	U	11	U	12	UJ
1,2,4-TRICHLOROBENZENE	UG/KG		536	U	629	U	696	U	548	U
BROMODICHLOROMETHANE	UG/KG		11	U	11	U	11	U	12	UJ
cis-1,3-DICHLOROPROPENE	UG/KG		11	U	11	U	11	U	12	UJ
METHYL ISOBUTYL KETONE (4-METHYL-2-PENTANONE)	UG/KG		11	U	11	U	11	U	12	UJ
TOLUENE	UG/KG		11	U	11	U	11	U	12	UJ
trans-1,3-DICHLOROPROPENE	UG/KG		11	U	11	U	11	U	12	UJ
1,1,2-TRICHLOROETHANE	UG/KG		11	U	11	U	11	U	12	UJ
TETRACHLOROETHYLENE(PCE)	UG/KG		11	U	11	U	11	U	12	UJ
2-HEXANONE	UG/KG		11	U	11	U	11	U	12	UJ
DIBROMOCHLOROMETHANE	UG/KG		11	U	11	U	11	U	12	UJ
CHLOROBENZENE	UG/KG		11	U	11	U	11	U	12	UJ
ETHYLBENZENE	UG/KG		11	U	11	U	11	U	12	UJ
M,P-XYLENE (SUM OF ISOMERS)	UG/KG		11	U	11	U	11	U	12	UJ
O-XYLENE (1,2-DIMETHYLBENZENE)	UG/KG		11	U	11	U	11	U	12	UJ
STYRENE	UG/KG		11	U	11	U	11	U	12	UJ
BROMOFORM	UG/KG		11	U	11	U	11	U	12	UJ
1,1,2,2-TETRACHLOROETHANE	UG/KG		11	U	11	U	11	U	12	UJ
XYLENES, TOTAL	UG/KG		11	U	11	U	11	U	12	UJ

	Building	SWMU6		SWMU6		SWMU6		SWMU6		SWMU6		SWMU6
	StationID	W6-SD01		W6-SD02		W6-SD03		W6-SD03		W6-SD04		W6-SD05
	SampleID	NDA042		NDA043		NDA044		NDA307FD1		NDA045		NDA046
	DateCollected	04/13/2000		04/13/2000		04/13/2000		04/13/2000		04/13/2000		04/13/200
	Depth	0 to 0.5		0 to 0.5		0 to 0.5		0 to 0.5		0 to 0.5		0 to 0.5
Parameter	**Units**											
EXPLOSIVES												
2,6-DINITROTOLUENE	UG/KG	389	U	368	U	1160	U	1080	U	875	U	1010
OCTAHYDRO-1,3,5,7-TETRANITRO-1,3,5,7-TETRAZOCINE	UG/KG	389	U	368	U	1160	U	1080	U	875	U	1010
HEXAHYDRO-1,3,5-TRINITRO-1,3,5,7-TETRAZOCINE	UG/KG	389	U	368	U	1160	U	1080	U	875	U	1010
1,3,5-TRINITROBENZENE	UG/KG	389	U	368	U	1160	U	1080	U	875	U	1010
1,3-DINITROBENZENE	UG/KG	389	U	368	U	1160	U	1080	U	875	U	1010
METHYL-2,4,6-TRINITROPHENYLNITRAMINE	UG/KG	389	U	368	U	1160	U	1080	U	875	U	1010
NITROBENZENE	UG/KG	389	U	368	U	1160	U	1080	U	875	U	1010
2,4,6-TRINITROTOLUENE	UG/KG	389	U	368	U	1160	U	1080	U	875	U	1010
2,4-DINITROTOLUENE	UG/KG	389	U	368	U	1160	U	1080	U	875	U	1010
2-NITROTOLUENE	UG/KG	389	U	368	U	1160	U	1080	U	875	U	1010
4-NITROTOLUENE	UG/KG	389	U	368	U	1160	U	1080	U	875	U	1010
3-NITROTOLUENE	UG/KG	389	U	368	U	1160	U	1080	U	875	U	1010
METALS												
ALUMINUM	MG/KG	8400	=	6890	=	19300	=	16900	=	12300	=	14800
ANTIMONY	MG/KG	0.72	J	97.8	J	0.85	J	0.66	UJ	0.5	UJ	0.56
ARSENIC	MG/KG	2.3	J	555	=	5.9	J	3.7	J	5.8	J	5.2
BARIUM	MG/KG	5.1	J	571	=	14.7	J	12.9	J	10.7	J	11.9
BERYLLIUM	MG/KG	0.082	J	14.2	=	0.25	J	0.19	J	0.18	J	0.25
CADMIUM	MG/KG	0.033	U	13.7	=	0.094	U	0.095	U	0.072	U	0.081
CALCIUM	MG/KG	30100	=	55800	=	46100	=	25800	=	38600	=	30100
CHROMIUM, TOTAL	MG/KG	32.4	=	67.8	=	16.9	=	15.3	=	13.9	=	15.6
COBALT	MG/KG	6.2	J	142	=	6.9	J	7	J	6.1	J	6.5
COPPER	MG/KG	22.8	=	101	=	37.8	=	39.5	=	29.8	=	34.4
IRON	MG/KG	13100	=	10500	=	25700	=	25200	=	21900	=	23900
LEAD	MG/KG	3.1	=	144	=	21.8	=	31.4	=	13.8	=	14.2
MAGNESIUM	MG/KG	6340	=	5260	=	11600	=	10700	=	8590	=	9710
MANGANESE	MG/KG	133	=	277	=	237	=	240	=	226	=	237
MERCURY	MG/KG	0.18	J	0.21	J	0.05	UJ	0.048	UJ	0.052	UJ	0.047
NICKEL	MG/KG	12.6	J	143	=	6.1	J	5.7	J	4.9	J	5.4
POTASSIUM	MG/KG	1930	=	1290	J	6550	=	6100	=	4530	=	5540
SELENIUM	MG/KG	0.35	U	544	=	2.2	J	1.8	J	0.96	J	1.3
SILVER	MG/KG	0.083	U	14.5	=	0.24	U	0.24	U	0.18	U	0.2
SODIUM	MG/KG	11100	=	7190	=	45700	=	44600	=	32200	=	38600
THALLIUM	MG/KG	0.45	U	572	=	1.4	J	1.3	U	0.97	U	1.1

SWMU 06 Sediment Data

Parameter	Units	Building StationID SampleID DateCollected Depth					
			SWMU6 W6-SD06 NDA302 04/13/2000 0 to 0.5		SWMU6 W6-SD07 NDA303 04/13/2000 0 to 0.5	
EXPLOSIVES						
2,6-DINITROTOLUENE	UG/KG	U	618	U	1090	U
OCTAHYDRO-1,3,5,7-TETRANITRO-1,3,5,7-TETRAZOCINE	UG/KG	U	618	U	1090	U
HEXAHYDRO-1,3,5-TRINITRO-1,3,5,7-TETRAZOCINE	UG/KG	U	618	U	1090	U
1,3,5-TRINITROBENZENE	UG/KG	U	618	U	1090	U
1,3-DINITROBENZENE	UG/KG	U	618	U	1090	U
METHYL-2,4,6-TRINITROPHENYLNITRAMINE	UG/KG	U	618	U	1090	U
NITROBENZENE	UG/KG	U	618	U	1090	U
2,4,6-TRINITROTOLUENE	UG/KG	U	618	U	1090	U
2,4-DINITROTOLUENE	UG/KG	U	618	U	1090	U
2-NITROTOLUENE	UG/KG	U	618	U	1090	U
4-NITROTOLUENE	UG/KG	U	618	U	1090	U
3-NITROTOLUENE	UG/KG	U	618	U	1090	U
METALS						
ALUMINUM	MG/KG	=	5680	=	17800	=
ANTIMONY	MG/KG	UJ	0.14	UJ	0.62	UJ
ARSENIC	MG/KG	J	1.1	J	4	J
BARIUM	MG/KG	J	17.3	J	14.4	J
BERYLLIUM	MG/KG	J	0.16	J	0.29	J
CADMIUM	MG/KG	U	0.02	U	0.088	U
CALCIUM	MG/KG	=	1630	=	14600	=
CHROMIUM, TOTAL	MG/KG	=	4.6	=	12.9	=
COBALT	MG/KG	J	1.7	J	7.3	J
COPPER	MG/KG	=	9.1	=	28.9	=
IRON	MG/KG	=	5110	=	22400	=
LEAD	MG/KG	=	1.5	=	8.3	=
MAGNESIUM	MG/KG	=	2670	=	9840	=
MANGANESE	MG/KG	=	30.2	=	225	=
MERCURY	MG/KG	UJ	0.0087	UJ	0.052	UJ
NICKEL	MG/KG	J	1.8	J	4.8	J
POTASSIUM	MG/KG	=	2070	=	6250	=
SELENIUM	MG/KG	J	0.8	J	1.4	J
SILVER	MG/KG	U	0.05	U	0.22	U
SODIUM	MG/KG	=	8900	=	41000	=
THALLIUM	MG/KG	U	0.27	U	1.2	U

Parameter	Units	Building	SWMU6		SWMU6		SWMU6		SWMU6		SWMU6		SWMU6
		StationID	W6-SD01		W6-SD02		W6-SD03		W6-SD03		W6-SD04		W6-SD05
		SampleID	NDA042		NDA043		NDA044		NDA307FD1		NDA045		NDA046
		DateCollected	04/13/2000		04/13/2000		04/13/2000		04/13/2000		04/13/2000		04/13/200
		Depth	0 to 0.5		0 to 0.5		0 to 0.5		0 to 0.5		0 to 0.5		0 to 0.5
VANADIUM	MG/KG		30.5	=	174	=	50.9	=	45.7	J	35	J	40.1
ZINC	MG/KG		26.1	=	173	=	67.5	=	77.1	=	60.5	=	59.2
PCB													
PCB-1016 (AROCHLOR 1016)	UG/KG		55	U	48	U	156	UJ	156	UJ	117	UJ	132
PCB-1260 (AROCHLOR 1260)	UG/KG		55	U	48	U	156	UJ	156	UJ	117	UJ	132
PCB-1221 (AROCHLOR 1221)	UG/KG		111	U	98	U	315	UJ	316	UJ	238	UJ	268
PCB-1232 (AROCHLOR 1232)	UG/KG		55	U	48	U	156	UJ	156	UJ	117	UJ	132
PCB-1242 (AROCHLOR 1242)	UG/KG		55	U	48	U	156	UJ	156	UJ	117	UJ	132
PCB-1248 (AROCHLOR 1248)	UG/KG		55	U	48	U	156	UJ	156	UJ	117	UJ	132
PCB-1254 (AROCHLOR 1254)	UG/KG		55	U	48	U	156	UJ	156	UJ	117	UJ	132
PESTICIDES													
ALPHA BHC (ALPHA HEXACHLOROCYCLOHEXANE)	UG/KG		2.8	U	2.5	U	8	UJ	8	UJ	6	UJ	6.8
BETA BHC (BETA HEXACHLOROCYCLOHEXANE)	UG/KG		2.8	U	2.5	U	8	UJ	8	UJ	6	UJ	6.8
DELTA BHC (DELTA HEXACHLOROCYCLOHEXANE)	UG/KG		2.8	U	2.5	U	8	UJ	8	UJ	6	UJ	6.8
GAMMA BHC (LINDANE)	UG/KG		2.8	U	2.5	U	8	UJ	8	UJ	6	UJ	6.8
HEPTACHLOR	UG/KG		2.8	U	2.5	U	8	UJ	8	UJ	6	UJ	6.8
ALDRIN	UG/KG		2.8	U	2.5	U	8	UJ	8	UJ	6	UJ	6.8
HEPTACHLOR EPOXIDE	UG/KG		2.8	U	2.5	U	8	UJ	8	UJ	6	UJ	6.8
ALPHA ENDOSULFAN (ENDOSULFAN I)	UG/KG		2.8	U	2.5	U	8	UJ	8	UJ	6	UJ	6.8
DIELDRIN	UG/KG		5.5	U	4.9	U	16	UJ	16	UJ	12	UJ	13
p,p'-DDE	UG/KG		5.5	U	0.81	J	16	UJ	16	UJ	12	UJ	13
ENDRIN	UG/KG		5.5	U	4.9	U	16	UJ	16	UJ	12	UJ	13
BETA ENDOSULFAN (ENDOSULFAN II)	UG/KG		5.5	U	4.9	U	16	UJ	16	UJ	12	UJ	13
p,p'-DDD	UG/KG		5.5	U	4.9	U	16	UJ	16	UJ	12	UJ	13
ENDOSULFAN SULFATE	UG/KG		5.5	U	4.9	U	16	UJ	16	UJ	12	UJ	13
p,p'-DDT	UG/KG		5.5	U	4.9	U	16	UJ	16	UJ	12	UJ	13
METHOXYCHLOR	UG/KG		28	U	25	U	80	UJ	80	UJ	60	UJ	68
ENDRIN ALDEHYDE	UG/KG		5.5	U	4.9	U	16	UJ	16	UJ	12	UJ	13
ALPHA-CHLORDANE	UG/KG		2.8	U	2.5	U	8	UJ	8	UJ	6	UJ	6.8
GAMMA-CHLORDANE	UG/KG		2.8	U	2.5	U	8	UJ	8	UJ	6	UJ	6.8
ENDRIN KETONE	UG/KG		5.5	U	4.9	U	16	UJ	16	UJ	12	UJ	13
TOXAPHENE	UG/KG		283	U	249	U	801	UJ	802	UJ	603	UJ	681
SEMI-VOLATILES													
bis(2-CHLOROETHYL) ETHER (2-CHLOROETHYL ETHER)	UG/KG		686	UJ	735	UJ	1680	UJ	2130	UJ	1500	UJ	1520
PHENOL	UG/KG		686	UJ	735	UJ	1680	UJ	2130	UJ	1500	UJ	1520

SWMU 06 Sediment Data

	Building		SWMU6		SWMU6	
	StationID		W6-SD06		W6-SD07	
	SampleID		NDA302		NDA303	
	DateCollected	0	04/13/2000		04/13/2000	
	Depth		0 to 0.5		0 to 0.5	
Parameter	**Units**					
VANADIUM	MG/KG	J	23.5	=	45.7	=
ZINC	MG/KG	=	12.9	=	53.2	=
PCB						
PCB-1016 (AROCHLOR 1016)	UG/KG	UJ	83	UJ	146	UJ
PCB-1260 (AROCHLOR 1260)	UG/KG	UJ	83	UJ	146	UJ
PCB-1221 (AROCHLOR 1221)	UG/KG	UJ	168	UJ	296	UJ
PCB-1232 (AROCHLOR 1232)	UG/KG	UJ	83	UJ	146	UJ
PCB-1242 (AROCHLOR 1242)	UG/KG	UJ	83	UJ	146	UJ
PCB-1248 (AROCHLOR 1248)	UG/KG	UJ	83	UJ	146	UJ
PCB-1254 (AROCHLOR 1254)	UG/KG	UJ	83	UJ	146	UJ
PESTICIDES						
ALPHA BHC (ALPHA HEXACHLOROCYCLOHEXANE)	UG/KG	UJ	4.3	UJ	7.5	UJ
BETA BHC (BETA HEXACHLOROCYCLOHEXANE)	UG/KG	UJ	4.3	UJ	7.5	UJ
DELTA BHC (DELTA HEXACHLOROCYCLOHEXANE)	UG/KG	UJ	4.3	UJ	7.5	UJ
GAMMA BHC (LINDANE)	UG/KG	UJ	4.3	UJ	7.5	UJ
HEPTACHLOR	UG/KG	UJ	4.3	UJ	7.5	UJ
ALDRIN	UG/KG	UJ	4.3	UJ	7.5	UJ
HEPTACHLOR EPOXIDE	UG/KG	UJ	4.3	UJ	7.5	UJ
ALPHA ENDOSULFAN (ENDOSULFAN I)	UG/KG	UJ	4.3	UJ	7.5	UJ
DIELDRIN	UG/KG	UJ	8.3	UJ	15	UJ
p,p'-DDE	UG/KG	UJ	8.3	UJ	15	UJ
ENDRIN	UG/KG	UJ	8.3	UJ	15	UJ
BETA ENDOSULFAN (ENDOSULFAN II)	UG/KG	UJ	8.3	UJ	15	UJ
p,p'-DDD	UG/KG	UJ	8.3	UJ	15	UJ
ENDOSULFAN SULFATE	UG/KG	UJ	8.3	UJ	15	UJ
p,p'-DDT	UG/KG	UJ	8.3	UJ	15	UJ
METHOXYCHLOR	UG/KG	UJ	43	UJ	75	UJ
ENDRIN ALDEHYDE	UG/KG	UJ	8.3	UJ	15	UJ
ALPHA-CHLORDANE	UG/KG	UJ	4.3	UJ	7.5	UJ
GAMMA-CHLORDANE	UG/KG	UJ	4.3	UJ	7.5	UJ
ENDRIN KETONE	UG/KG	UJ	8.3	UJ	15	UJ
TOXAPHENE	UG/KG	UJ	426	UJ	751	UJ
SEMI-VOLATILES						
bis(2-CHLOROETHYL) ETHER (2-CHLOROETHYL ETHER)	UG/KG	UJ	1200	UJ	2300	UJ
PHENOL	UG/KG	UJ	1200	UJ	2300	UJ

Parameter	Units	Building	SWMU6		SWMU6		SWMU6		SWMU6		SWMU6		SWMU6
		StationID	W6-SD01		W6-SD02		W6-SD03		W6-SD03		W6-SD04		W6-SD05
		SampleID	NDA042		NDA043		NDA044		NDA307FD1		NDA045		NDA046
		DateCollected	04/13/2000		04/13/2000		04/13/2000		04/13/2000		04/13/2000		04/13/200
		Depth	0 to 0.5		0 to 0.5		0 to 0.5		0 to 0.5		0 to 0.5		0 to 0.5
2-CHLOROPHENOL	UG/KG		686	UJ	735	UJ	1680	UJ	2130	UJ	1500	UJ	1520
1,3,5-TRINITROBENZENE	UG/KG		389	U	368	U	1160	U	1080	U	875	U	1010
1,3-DICHLOROBENZENE	UG/KG		686	UJ	735	UJ	1680	UJ	2130	UJ	1500	UJ	1520
1,3-DINITROBENZENE	UG/KG		389	U	368	U	1160	U	1080	U	875	U	1010
1,4-DICHLOROBENZENE	UG/KG		686	UJ	735	UJ	1680	UJ	2130	UJ	1500	UJ	1520
1,2-DICHLOROBENZENE	UG/KG		686	UJ	735	UJ	1680	UJ	2130	UJ	1500	UJ	1520
bis(2-CHLOROISOPROPYL) ETHER	UG/KG		686	UJ	735	UJ	1680	UJ	2130	UJ	1500	UJ	1520
2-METHYLPHENOL (o-CRESOL)	UG/KG		686	UJ	735	UJ	1680	UJ	2130	UJ	1500	UJ	1520
HEXACHLOROETHANE	UG/KG		686	UJ	735	UJ	1680	UJ	2130	UJ	1500	UJ	1520
N-NITROSODI-n-PROPYLAMINE	UG/KG		686	UJ	735	UJ	1680	UJ	2130	UJ	1500	UJ	1520
CRESOLS, m & p	UG/KG		686	UJ	735	UJ	1680	UJ	2130	UJ	1500	UJ	1520
NITROBENZENE	UG/KG		389	U	368	U	1160	U	1080	U	875	U	1010
ISOPHORONE	UG/KG		686	UJ	735	UJ	1680	UJ	2130	UJ	1500	UJ	1520
2-NITROPHENOL	UG/KG		686	UJ	735	UJ	1680	UJ	2130	UJ	1500	UJ	1520
2,4-DIMETHYLPHENOL	UG/KG		686	UJ	735	UJ	1680	UJ	2130	UJ	1500	UJ	1520
bis(2-CHLOROETHOXY) METHANE	UG/KG		686	UJ	735	UJ	1680	UJ	2130	UJ	1500	UJ	1520
2,4-DICHLOROPHENOL	UG/KG		686	UJ	735	UJ	1680	UJ	2130	UJ	1500	UJ	1520
1,2,4-TRICHLOROBENZENE	UG/KG		686	UJ	735	UJ	1680	UJ	2130	UJ	1500	UJ	1520
NAPHTHALENE	UG/KG		686	UJ	735	UJ	1680	UJ	2130	UJ	1500	UJ	1520
4-CHLOROANILINE	UG/KG		686	UJ	735	UJ	1680	UJ	2130	UJ	1500	UJ	1520
2-METHYLNAPHTHALENE	UG/KG		686	UJ	735	UJ	1680	UJ	2130	UJ	1500	UJ	1520
HEXACHLOROBUTADIENE	UG/KG		686	UJ	735	UJ	1680	UJ	2130	UJ	1500	UJ	1520
4-CHLORO-3-METHYLPHENOL	UG/KG		686	UJ	735	UJ	1680	UJ	2130	UJ	1500	UJ	1520
HEXACHLOROCYCLOPENTADIENE	UG/KG		686	UJ	735	UJ	1680	UJ	2130	UJ	1500	UJ	1520
2,4,6-TRICHLOROPHENOL	UG/KG		686	UJ	735	UJ	1680	UJ	2130	UJ	1500	UJ	1520
2,4,5-TRICHLOROPHENOL	UG/KG		2060	UJ	2200	UJ	5050	UJ	6380	UJ	4500	UJ	4560
2-CHLORONAPHTHALENE	UG/KG		686	UJ	735	UJ	1680	UJ	2130	UJ	1500	UJ	1520
2-NITROANILINE	UG/KG		2060	UJ	2200	UJ	5050	UJ	6380	UJ	4500	UJ	4560
ACENAPHTHYLENE	UG/KG		686	UJ	735	UJ	1680	UJ	2130	UJ	1500	UJ	1520
DIMETHYL PHTHALATE	UG/KG		686	UJ	735	UJ	1680	UJ	2130	UJ	1500	UJ	1520
2,6-DINITROTOLUENE	UG/KG		389	U	368	U	1160	U	1080	U	875	U	1010
ACENAPHTHENE	UG/KG		686	UJ	735	UJ	1680	UJ	2130	UJ	1500	UJ	1520
3-NITROANILINE	UG/KG		2060	UJ	2200	UJ	5050	UJ	6380	UJ	4500	UJ	4560
2,4-DINITROPHENOL	UG/KG		2060	UJ	2200	UJ	5050	UJ	6380	UJ	4500	UJ	4560
DIBENZOFURAN	UG/KG		686	UJ	735	UJ	1680	UJ	2130	UJ	1500	UJ	1520

SWMU 06 Sediment Data

	Building		SWMU6		SWMU6	
	StationID		W6-SD06		W6-SD07	
	SampleID		NDA302		NDA303	
	DateCollected	0	04/13/2000		04/13/2000	
	Depth		0 to 0.5		0 to 0.5	
Parameter	**Units**					
2-CHLOROPHENOL	UG/KG	UJ	1200	UJ	2300	UJ
1,3,5-TRINITROBENZENE	UG/KG	U	618	U	1090	U
1,3-DICHLOROBENZENE	UG/KG	UJ	1200	UJ	2300	UJ
1,3-DINITROBENZENE	UG/KG	U	618	U	1090	U
1,4-DICHLOROBENZENE	UG/KG	UJ	1200	UJ	2300	UJ
1,2-DICHLOROBENZENE	UG/KG	UJ	1200	UJ	2300	UJ
bis(2-CHLOROISOPROPYL) ETHER	UG/KG	UJ	1200	UJ	2300	UJ
2-METHYLPHENOL (o-CRESOL)	UG/KG	UJ	1200	UJ	2300	UJ
HEXACHLOROETHANE	UG/KG	UJ	1200	UJ	2300	UJ
N-NITROSODI-n-PROPYLAMINE	UG/KG	UJ	1200	UJ	2300	UJ
CRESOLS, m & p	UG/KG	UJ	1200	UJ	2300	UJ
NITROBENZENE	UG/KG	U	618	U	1090	U
ISOPHORONE	UG/KG	UJ	1200	UJ	2300	UJ
2-NITROPHENOL	UG/KG	UJ	1200	UJ	2300	UJ
2,4-DIMETHYLPHENOL	UG/KG	UJ	1200	UJ	2300	UJ
bis(2-CHLOROETHOXY) METHANE	UG/KG	UJ	1200	UJ	2300	UJ
2,4-DICHLOROPHENOL	UG/KG	UJ	1200	UJ	2300	UJ
1,2,4-TRICHLOROBENZENE	UG/KG	UJ	1200	UJ	2300	UJ
NAPHTHALENE	UG/KG	UJ	1200	UJ	2300	UJ
4-CHLOROANILINE	UG/KG	UJ	1200	UJ	2300	UJ
2-METHYLNAPHTHALENE	UG/KG	UJ	1200	UJ	2300	UJ
HEXACHLOROBUTADIENE	UG/KG	UJ	1200	UJ	2300	UJ
4-CHLORO-3-METHYLPHENOL	UG/KG	UJ	1200	UJ	2300	UJ
HEXACHLOROCYCLOPENTADIENE	UG/KG	UJ	1200	UJ	2300	UJ
2,4,6-TRICHLOROPHENOL	UG/KG	UJ	1200	UJ	2300	UJ
2,4,5-TRICHLOROPHENOL	UG/KG	UJ	3600	UJ	6900	UJ
2-CHLORONAPHTHALENE	UG/KG	UJ	1200	UJ	2300	UJ
2-NITROANILINE	UG/KG	UJ	3600	UJ	6900	UJ
ACENAPHTHYLENE	UG/KG	UJ	1200	UJ	2300	UJ
DIMETHYL PHTHALATE	UG/KG	UJ	1200	UJ	2300	UJ
2,6-DINITROTOLUENE	UG/KG	U	618	U	1090	U
ACENAPHTHENE	UG/KG	UJ	1200	UJ	2300	UJ
3-NITROANILINE	UG/KG	UJ	3600	UJ	6900	UJ
2,4-DINITROPHENOL	UG/KG	UJ	3600	UJ	6900	UJ
DIBENZOFURAN	UG/KG	UJ	1200	UJ	2300	UJ

	Building	SWMU6		SWMU6		SWMU6		SWMU6		SWMU6		SWMU6
	StationID	W6-SD01		W6-SD02		W6-SD03		W6-SD03		W6-SD04		W6-SD05
	SampleID	NDA042		NDA043		NDA044		NDA307FD1		NDA045		NDA046
	DateCollected	04/13/2000		04/13/2000		04/13/2000		04/13/2000		04/13/2000		04/13/200
	Depth	0 to 0.5		0 to 0.5		0 to 0.5		0 to 0.5		0 to 0.5		0 to 0.5
Parameter	**Units**											
2,4-DINITROTOLUENE	UG/KG	389	U	368	U	1160	U	1080	U	875	U	1010
4-NITROPHENOL	UG/KG	2060	UJ	2200	UJ	5050	UJ	6380	UJ	4500	UJ	4560
FLUORENE	UG/KG	686	UJ	735	UJ	1680	UJ	2130	UJ	1500	UJ	1520
4-CHLOROPHENYL PHENYL ETHER	UG/KG	686	UJ	735	UJ	1680	UJ	2130	UJ	1500	UJ	1520
DIETHYL PHTHALATE	UG/KG	686	UJ	735	UJ	1680	UJ	2130	UJ	1500	UJ	1520
4-NITROANILINE	UG/KG	2060	UJ	2200	UJ	5050	UJ	6380	UJ	4500	UJ	4560
4,6-DINITRO-2-METHYLPHENOL	UG/KG	2060	UJ	2200	UJ	5050	UJ	6380	UJ	4500	UJ	4560
N-NITROSODIPHENYLAMINE	UG/KG	686	UJ	735	UJ	1680	UJ	2130	UJ	1500	UJ	1520
4-BROMOPHENYL PHENYL ETHER	UG/KG	686	UJ	735	UJ	1680	UJ	2130	UJ	1500	UJ	1520
HEXACHLOROBENZENE	UG/KG	686	UJ	735	UJ	1680	UJ	2130	UJ	1500	UJ	1520
PENTACHLOROPHENOL	UG/KG	2060	UJ	2200	UJ	5050	UJ	6380	UJ	4500	UJ	4560
PHENANTHRENE	UG/KG	686	UJ	735	UJ	1680	UJ	2130	UJ	1500	UJ	1520
ANTHRACENE	UG/KG	686	UJ	735	UJ	1680	UJ	2130	UJ	1500	UJ	1520
DI-n-BUTYL PHTHALATE	UG/KG	686	UJ	735	UJ	1680	UJ	2130	UJ	1500	UJ	1520
FLUORANTHENE	UG/KG	686	UJ	735	UJ	1680	UJ	2130	UJ	1500	UJ	1520
PYRENE	UG/KG	686	UJ	735	UJ	1680	UJ	2130	UJ	1500	UJ	1520
BENZYL BUTYL PHTHALATE	UG/KG	686	UJ	735	UJ	1680	UJ	2130	UJ	1500	UJ	1520
3,3'-DICHLOROBENZIDINE	UG/KG	1370	UJ	1470	UJ	3370	UJ	4250	UJ	3000	UJ	3040
BENZO(a)ANTHRACENE	UG/KG	686	UJ	735	UJ	1680	UJ	2130	UJ	1500	UJ	1520
CHRYSENE	UG/KG	686	UJ	735	UJ	1680	UJ	2130	UJ	1500	UJ	1520
bis(2-ETHYLHEXYL) PHTHALATE	UG/KG	686	UJ	735	UJ	1680	UJ	2130	UJ	1500	UJ	1520
DI-n-OCTYLPHTHALATE	UG/KG	686	UJ	735	UJ	1680	UJ	2130	UJ	1500	UJ	1520
BENZO(b)FLUORANTHENE	UG/KG	686	UJ	735	UJ	1680	UJ	2130	UJ	1500	UJ	1520
BENZO(k)FLUORANTHENE	UG/KG	686	UJ	735	UJ	1680	UJ	2130	UJ	1500	UJ	1520
BENZO(a)PYRENE	UG/KG	686	UJ	735	UJ	1680	UJ	2130	UJ	1500	UJ	1520
INDENO(1,2,3-c,d)PYRENE	UG/KG	686	UJ	735	UJ	1680	UJ	2130	UJ	1500	UJ	1520
DIBENZ(a,h)ANTHRACENE	UG/KG	686	UJ	735	UJ	1680	UJ	2130	UJ	1500	UJ	1520
BENZO(g,h,i)PERYLENE	UG/KG	686	UJ	735	UJ	1680	UJ	2130	UJ	1500	UJ	1520
CARBAZOLE	UG/KG	686	UJ	735	UJ	1680	UJ	2130	UJ	1500	UJ	1520
VOLATILES												
CHLOROMETHANE	UG/KG	12	U	11	U	59	U	56	U	36	UJ	43
VINYL CHLORIDE	UG/KG	12	U	11	U	59	U	56	U	36	UJ	43
BROMOMETHANE	UG/KG	12	U	11	U	59	U	56	U	36	UJ	43
1,3-DICHLOROBENZENE	UG/KG	686	UJ	735	UJ	1680	UJ	2130	UJ	1500	UJ	1520
CHLOROETHANE	UG/KG	12	U	11	U	59	U	56	U	36	UJ	43

SWMU 06 Sediment Data

	Building		SWMU6		SWMU6	
	StationID		W6-SD06		W6-SD07	
	SampleID		NDA302		NDA303	
	DateCollected	0	04/13/2000		04/13/2000	
	Depth		0 to 0.5		0 to 0.5	
Parameter	**Units**					
2,4-DINITROTOLUENE	UG/KG	U	618	U	1090	U
4-NITROPHENOL	UG/KG	UJ	3600	UJ	6900	UJ
FLUORENE	UG/KG	UJ	1200	UJ	2300	UJ
4-CHLOROPHENYL PHENYL ETHER	UG/KG	UJ	1200	UJ	2300	UJ
DIETHYL PHTHALATE	UG/KG	UJ	1200	UJ	2300	UJ
4-NITROANILINE	UG/KG	UJ	3600	UJ	6900	UJ
4,6-DINITRO-2-METHYLPHENOL	UG/KG	UJ	3600	UJ	6900	UJ
N-NITROSODIPHENYLAMINE	UG/KG	UJ	1200	UJ	2300	UJ
4-BROMOPHENYL PHENYL ETHER	UG/KG	UJ	1200	UJ	2300	UJ
HEXACHLOROBENZENE	UG/KG	UJ	1200	UJ	2300	UJ
PENTACHLOROPHENOL	UG/KG	UJ	3600	UJ	6900	UJ
PHENANTHRENE	UG/KG	UJ	1200	UJ	2300	UJ
ANTHRACENE	UG/KG	UJ	1200	UJ	2300	UJ
DI-n-BUTYL PHTHALATE	UG/KG	UJ	1200	UJ	2300	UJ
FLUORANTHENE	UG/KG	UJ	1200	UJ	2300	UJ
PYRENE	UG/KG	UJ	1200	UJ	2300	UJ
BENZYL BUTYL PHTHALATE	UG/KG	UJ	1200	UJ	2300	UJ
3,3'-DICHLOROBENZIDINE	UG/KG	UJ	2400	UJ	4600	UJ
BENZO(a)ANTHRACENE	UG/KG	UJ	1200	UJ	2300	UJ
CHRYSENE	UG/KG	UJ	1200	UJ	2300	UJ
bis(2-ETHYLHEXYL) PHTHALATE	UG/KG	UJ	1200	UJ	2300	UJ
DI-n-OCTYLPHTHALATE	UG/KG	UJ	1200	UJ	2300	UJ
BENZO(b)FLUORANTHENE	UG/KG	UJ	1200	UJ	2300	UJ
BENZO(k)FLUORANTHENE	UG/KG	UJ	1200	UJ	2300	UJ
BENZO(a)PYRENE	UG/KG	UJ	1200	UJ	2300	UJ
INDENO(1,2,3-c,d)PYRENE	UG/KG	UJ	1200	UJ	2300	UJ
DIBENZ(a,h)ANTHRACENE	UG/KG	UJ	1200	UJ	2300	UJ
BENZO(g,h,i)PERYLENE	UG/KG	UJ	1200	UJ	2300	UJ
CARBAZOLE	UG/KG	UJ	1200	UJ	2300	UJ
VOLATILES						
CHLOROMETHANE	UG/KG	UJ	26	UJ	47	UJ
VINYL CHLORIDE	UG/KG	UJ	26	UJ	47	UJ
BROMOMETHANE	UG/KG	UJ	26	UJ	47	UJ
1,3-DICHLOROBENZENE	UG/KG	UJ	1200	UJ	2300	UJ
CHLOROETHANE	UG/KG	UJ	26	UJ	47	UJ

	Building	SWMU6		SWMU6		SWMU6		SWMU6		SWMU6		SWMU6
	StationID	W6-SD01		W6-SD02		W6-SD03		W6-SD03		W6-SD04		W6-SD05
	SampleID	NDA042		NDA043		NDA044		NDA307FD1		NDA045		NDA046
	DateCollected	04/13/2000		04/13/2000		04/13/2000		04/13/2000		04/13/2000		04/13/200
	Depth	0 to 0.5		0 to 0.5		0 to 0.5		0 to 0.5		0 to 0.5		0 to 0.5
Parameter	**Units**											
1,1-DICHLOROETHENE	UG/KG	12	U	11	U	59	U	56	U	36	UJ	43
1,4-DICHLOROBENZENE	UG/KG	686	UJ	735	UJ	1680	UJ	2130	UJ	1500	UJ	1520
1,2-DICHLOROBENZENE	UG/KG	686	UJ	735	UJ	1680	UJ	2130	UJ	1500	UJ	1520
CARBON DISULFIDE	UG/KG	3	J	3	J	22	J	22	J	13	J	15
METHYLENE CHLORIDE	UG/KG	12	U	11	U	59	U	56	U	36	UJ	43
1,1-DICHLOROETHANE	UG/KG	12	U	11	U	59	U	56	U	36	UJ	43
ACETONE	UG/KG	37	R	36	R	140	R	145	R	70	R	97
METHYL ETHYL KETONE (2-BUTANONE)	UG/KG	4	J	4	J	17	J	20	J	36	R	12
CHLOROFORM	UG/KG	12	U	11	U	59	U	56	U	36	UJ	43
1,1,1-TRICHLOROETHANE	UG/KG	12	U	11	U	59	U	56	U	36	UJ	43
CARBON TETRACHLORIDE	UG/KG	12	U	11	U	59	U	56	U	36	UJ	43
BENZENE	UG/KG	12	U	11	U	59	U	56	U	36	UJ	43
1,2-DICHLOROETHANE	UG/KG	12	U	11	U	59	U	56	U	36	UJ	43
TRICHLOROETHYLENE (TCE)	UG/KG	12	U	11	U	59	U	56	U	36	UJ	43
1,2-DICHLOROPROPANE	UG/KG	12	U	11	U	59	U	56	U	36	UJ	43
1,2,4-TRICHLOROBENZENE	UG/KG	686	UJ	735	UJ	1680	UJ	2130	UJ	1500	UJ	1520
BROMODICHLOROMETHANE	UG/KG	12	U	11	U	59	U	56	U	36	UJ	43
cis-1,3-DICHLOROPROPENE	UG/KG	12	U	11	U	59	U	56	U	36	UJ	43
METHYL ISOBUTYL KETONE (4-METHYL-2-PENTANONE)	UG/KG	12	U	11	U	59	U	56	U	36	UJ	43
TOLUENE	UG/KG	12	U	11	U	3	J	19	J	3	J	3
trans-1,3-DICHLOROPROPENE	UG/KG	12	U	11	U	59	U	56	U	36	UJ	43
1,1,2-TRICHLOROETHANE	UG/KG	12	U	11	U	59	U	56	U	36	UJ	43
TETRACHLOROETHYLENE(PCE)	UG/KG	12	U	11	U	59	U	56	U	36	UJ	43
2-HEXANONE	UG/KG	12	U	11	U	59	U	56	U	36	UJ	43
DIBROMOCHLOROMETHANE	UG/KG	12	U	11	U	59	U	56	U	36	UJ	43
CHLOROBENZENE	UG/KG	12	U	11	U	59	U	56	U	36	UJ	43
ETHYLBENZENE	UG/KG	12	U	11	U	2	U	18	J	1	J	2
M,P-XYLENE (SUM OF ISOMERS)	UG/KG	0.3	J	11	U	13	J	104	=	8	J	10
O-XYLENE (1,2-DIMETHYLBENZENE)	UG/KG	12	U	11	U	3	J	29	J	2	J	3
STYRENE	UG/KG	12	U	11	U	59	U	56	U	36	UJ	43
BROMOFORM	UG/KG	12	U	11	U	59	U	56	U	36	UJ	43
1,1,2,2-TETRACHLOROETHANE	UG/KG	12	U	11	U	59	U	56	U	36	UJ	43
XYLENES, TOTAL	UG/KG	0.3	J	11	U	16	J	133	=	10	J	13

SWMU 06 Sediment Data

	Building		SWMU6		SWMU6	
	StationID		W6-SD06		W6-SD07	
	SampleID		NDA302		NDA303	
	DateCollected	0	04/13/2000		04/13/2000	
	Depth		0 to 0.5		0 to 0.5	
Parameter	**Units**					
1,1-DICHLOROETHENE	UG/KG	UJ	26	UJ	47	UJ
1,4-DICHLOROBENZENE	UG/KG	UJ	1200	UJ	2300	UJ
1,2-DICHLOROBENZENE	UG/KG	UJ	1200	UJ	2300	UJ
CARBON DISULFIDE	UG/KG	J	8	J	20	J
METHYLENE CHLORIDE	UG/KG	UJ	26	UJ	47	UJ
1,1-DICHLOROETHANE	UG/KG	UJ	26	UJ	47	UJ
ACETONE	UG/KG	R	41	R	100	R
METHYL ETHYL KETONE (2-BUTANONE)	UG/KG	J	26	R	12	J
CHLOROFORM	UG/KG	UJ	26	UJ	47	UJ
1,1,1-TRICHLOROETHANE	UG/KG	UJ	26	UJ	47	UJ
CARBON TETRACHLORIDE	UG/KG	UJ	26	UJ	47	UJ
BENZENE	UG/KG	UJ	26	UJ	47	UJ
1,2-DICHLOROETHANE	UG/KG	UJ	26	UJ	47	UJ
TRICHLOROETHYLENE (TCE)	UG/KG	UJ	26	UJ	47	UJ
1,2-DICHLOROPROPANE	UG/KG	UJ	26	UJ	47	UJ
1,2,4-TRICHLOROBENZENE	UG/KG	UJ	1200	UJ	2300	UJ
BROMODICHLOROMETHANE	UG/KG	UJ	26	UJ	47	UJ
cis-1,3-DICHLOROPROPENE	UG/KG	UJ	26	UJ	47	UJ
METHYL ISOBUTYL KETONE (4-METHYL-2-PENTANONE)	UG/KG	UJ	26	UJ	47	UJ
TOLUENE	UG/KG	J	26	UJ	3	J
trans-1,3-DICHLOROPROPENE	UG/KG	UJ	26	UJ	47	UJ
1,1,2-TRICHLOROETHANE	UG/KG	UJ	26	UJ	47	UJ
TETRACHLOROETHYLENE(PCE)	UG/KG	UJ	26	UJ	47	UJ
2-HEXANONE	UG/KG	UJ	26	UJ	47	UJ
DIBROMOCHLOROMETHANE	UG/KG	UJ	26	UJ	47	UJ
CHLOROBENZENE	UG/KG	UJ	26	UJ	47	UJ
ETHYLBENZENE	UG/KG	J	26	UJ	1	J
M,P-XYLENE (SUM OF ISOMERS)	UG/KG	J	26	UJ	5	J
O-XYLENE (1,2-DIMETHYLBENZENE)	UG/KG	J	26	UJ	2	J
STYRENE	UG/KG	UJ	26	UJ	47	UJ
BROMOFORM	UG/KG	UJ	26	UJ	47	UJ
1,1,2,2-TETRACHLOROETHANE	UG/KG	UJ	26	UJ	47	UJ
XYLENES, TOTAL	UG/KG	J	26	UJ	7	J

SWMU 07 Groundwater Data

	Building	SWMU7	SWMU7	SWMU7	SWMU7	SWMU7
	StationID	SWMU7-MW01	SWMU7-MW01	SWMU7-MW02R	SWMU7-MW02R	SWMU7-MW02R
	SampleID	NDA010	NDA340	NDA011	NDA0321FD1	NDA341
	DateCollected	05/02/2000	06/05/2000	05/02/2000	05/02/2000	06/09/2000
	Depth	0 to 0	0 to 0	0 to 0	0 to 0	0 to 0
Parameter	**Units**					
DISSOLVED METALS						
ALUMINUM, DISSOLVED	UG/L	25.8 U		53.1 J	25.8 U	
ANTIMONY, DISSOLVED	UG/L	1.4 U		1.4 U	1.4 U	
ARSENIC, DISSOLVED	UG/L	8.4 J		3.4 U	3.4 U	
BARIUM, DISSOLVED	UG/L	92.5 J		200 J	212 =	
BERYLLIUM, DISSOLVED	UG/L	0.3 U		0.3 U	0.3 U	
CALCIUM, DISSOLVED	UG/L	62800 =		198000 =	178000 =	
CADMIUM, DISSOLVED	UG/L	0.2 U		0.8 J	0.84 J	
CHROMIUM, DISSOLVED	UG/L	0.69 J		1.3 J	1.1 J	
COBALT, DISSOLVED	UG/L	1.5 J		0.5 U	0.5 U	
COPPER, DISSOLVED	UG/L	1.9 U		1.9 U	2.2 J	
IRON, DISSOLVED	UG/L	944 J		70.5 J	12.2 R	
LEAD, DISSOLVED	UG/L	1.1 U		1.7 J	1.1 U	
MAGNESIUM, DISSOLVED	UG/L	62700 =		99000 =	92200 =	
MANGANESE, DISSOLVED	UG/L	1090 =		22 =	19.7 =	
MERCURY, DISSOLVED	UG/L	0.18 U		0.18 U	0.18 U	
NICKEL, DISSOLVED	UG/L	5 J		1.2 J	1.3 J	
POTASSIUM, DISSOLVED	UG/L	2280 J		3520 J	3630 J	
SELENIUM, DISSOLVED	UG/L	2.1 U		2.1 U	3.7 J	
SILVER, DISSOLVED	UG/L	0.5 U		0.5 U	0.66 J	
SODIUM, DISSOLVED	UG/L	316000 =		243000 =	246000 =	
THALLIUM, DISSOLVED	UG/L	2.7 U		2.7 U	2.7 U	
VANADIUM, DISSOLVED	UG/L	3.5 J		17.6 J	15.6 J	
ZINC, DISSOLVED	UG/L	J		6.6 J	12.3 J	
EXPLOSIVES						
2,6-DINITROTOLUENE	UG/L	5 U		5 U	5 U	
OCTAHYDRO-1,3,5,7-TETRANITRO-1,3,5,7-TETRAZOCINE	UG/L	5 U		5 U	5 UJ	
HEXAHYDRO-1,3,5-TRINITRO-1,3,5,7-TETRAZOCINE	UG/L	5 U		5 U	5 UJ	
1,3,5-TRINITROBENZENE	UG/L	5 U		5 U	5 UJ	
1,3-DINITROBENZENE	UG/L	5 U		5 U	5 UJ	
METHYL-2,4,6-TRINITROPHENYLNITRAMINE	UG/L	5 U		5 U	5 UJ	
NITROBENZENE	UG/L	5 U		5 U	5 U	
2,4,6-TRINITROTOLUENE	UG/L	5 U		5 U	5 UJ	
2,4-DINITROTOLUENE	UG/L	5 U		5 U	5 U	
2-NITROTOLUENE	UG/L	5 U		5 U	5 UJ	

SWMU 07 Groundwater Data

Parameter	Units	Building	SWMU7	SWMU7
		StationID	SWMU7-MW03R	SWMU7-MW03R
		SampleID	NDA012	NDA343
		DateCollected	05/02/2000	06/05/2000
		Depth	0 to 0	0 to 0
DISSOLVED METALS				
ALUMINUM, DISSOLVED	UG/L		25.8 U	
ANTIMONY, DISSOLVED	UG/L		1.4 U	
ARSENIC, DISSOLVED	UG/L		3.4 U	
BARIUM, DISSOLVED	UG/L		54.7 J	
BERYLLIUM, DISSOLVED	UG/L		0.3 U	
CALCIUM, DISSOLVED	UG/L		59700 =	
CADMIUM, DISSOLVED	UG/L		0.35 J	
CHROMIUM, DISSOLVED	UG/L		1.7 J	
COBALT, DISSOLVED	UG/L		0.67 J	
COPPER, DISSOLVED	UG/L		1.9 U	
IRON, DISSOLVED	UG/L		12.2 R	
LEAD, DISSOLVED	UG/L		1.1 U	
MAGNESIUM, DISSOLVED	UG/L		42900 =	
MANGANESE, DISSOLVED	UG/L		31.1 =	
MERCURY, DISSOLVED	UG/L		0.18 U	
NICKEL, DISSOLVED	UG/L		1.8 J	
POTASSIUM, DISSOLVED	UG/L		2000 J	
SELENIUM, DISSOLVED	UG/L		2.3 J	
SILVER, DISSOLVED	UG/L		0.79 J	
SODIUM, DISSOLVED	UG/L		257000 =	
THALLIUM, DISSOLVED	UG/L		2.7 U	
VANADIUM, DISSOLVED	UG/L		35.5 J	
ZINC, DISSOLVED	UG/L		4.1 J	
EXPLOSIVES				
2,6-DINITROTOLUENE	UG/L		5 U	
OCTAHYDRO-1,3,5,7-TETRANITRO-1,3,5,7-TETRAZOCINE	UG/L		5 UJ	
HEXAHYDRO-1,3,5-TRINITRO-1,3,5,7-TETRAZOCINE	UG/L		5 UJ	
1,3,5-TRINITROBENZENE	UG/L		5 UJ	
1,3-DINITROBENZENE	UG/L		5 UJ	
METHYL-2,4,6-TRINITROPHENYLNITRAMINE	UG/L		5 UJ	
NITROBENZENE	UG/L		5 U	
2,4,6-TRINITROTOLUENE	UG/L		5 UJ	
2,4-DINITROTOLUENE	UG/L		5 U	
2-NITROTOLUENE	UG/L		5 UJ	

	Building	SWMU7	SWMU7	SWMU7	SWMU7	SWMU7
	StationID	SWMU7-MW01	SWMU7-MW01	SWMU7-MW02R	SWMU7-MW02R	SWMU7-MW02R
	SampleID	NDA010	NDA340	NDA011	NDA0321FD1	NDA341
	DateCollected	05/02/2000	06/05/2000	05/02/2000	05/02/2000	06/09/2000
	Depth	0 to 0	0 to 0	0 to 0	0 to 0	0 to 0
Parameter	**Units**					
4-NITROTOLUENE	UG/L	5 U		5 U	5 UJ	
3-NITROTOLUENE	UG/L	5 U		5 U	5 UJ	
METALS						
ALUMINUM	UG/L	1260 =		672 =	1740 =	
ANTIMONY	UG/L	1.5 J		1.4 U	2 J	
ARSENIC	UG/L	27.2 =		3.4 U	3.4 U	
BARIUM	UG/L	102 J		212 =	220 =	
BERYLLIUM	UG/L	0.3 U		0.3 U	0.3 U	
CADMIUM	UG/L	0.52 J		0.64 J	0.49 J	
CALCIUM	UG/L	74000 =		194000 =	190000 =	
CHROMIUM, TOTAL	UG/L	29.4 =		4 J	5.4 J	
COBALT	UG/L	13.1 J		0.5 U	1.6 J	
COPPER	UG/L	18.3 J		2.6 J	5.5 J	
IRON	UG/L	7320 J		1460 J	2240 J	
LEAD	UG/L	9.5 =		1.4 J	1.7 J	
MAGNESIUM	UG/L	68000 =		95300 =	93800 =	
MANGANESE	UG/L	1270 =		73.1 =	167 =	
MERCURY	UG/L	0.18 U		0.18 U	0.18 U	
NICKEL	UG/L	18.6 J		2.4 J	3.8 J	
POTASSIUM	UG/L	2770 J		3560 J	3600 J	
SELENIUM	UG/L	2.1 U		3.2 J	2.1 U	
SILVER	UG/L	0.5 U		0.5 U	0.5 U	
SODIUM	UG/L	322000 =		239000 =	233000 =	
THALLIUM	UG/L	2.7 U		2.7 U	2.7 U	
VANADIUM	UG/L	16.3 J		19.8 J	20.3 J	
ZINC	UG/L	2950 =		5.9 J	11.7 J	
MISCELLANEOUS						
PERCHLORATE	ug/L		0.8 U			0.8 U
PCB						
PCB-1016 (AROCHLOR 1016)	UG/L	0.2 U		0.22 U	0.21 U	
PCB-1260 (AROCHLOR 1260)	UG/L	0.2 U		0.22 U	0.21 U	
PCB-1221 (AROCHLOR 1221)	UG/L	0.4 U		0.44 U	0.42 U	
PCB-1232 (AROCHLOR 1232)	UG/L	0.2 U		0.22 U	0.21 U	
PCB-1242 (AROCHLOR 1242)	UG/L	0.2 U		0.22 U	0.21 U	
PCB-1248 (AROCHLOR 1248)	UG/L	0.2 U		0.22 U	0.21 U	

SWMU 07 Groundwater Data

Parameter	Units	Building: SWMU7 StationID: SWMU7-MW03R SampleID: NDA012 DateCollected: 05/02/2000 Depth: 0 to 0	Building: SWMU7 StationID: SWMU7-MW03R SampleID: NDA343 DateCollected: 06/05/2000 Depth: 0 to 0
4-NITROTOLUENE	UG/L	5 UJ	
3-NITROTOLUENE	UG/L	5 UJ	
METALS			
ALUMINUM	UG/L	4090 =	
ANTIMONY	UG/L	1.4 U	
ARSENIC	UG/L	3.4 U	
BARIUM	UG/L	64.2 J	
BERYLLIUM	UG/L	0.3 U	
CADMIUM	UG/L	0.21 J	
CALCIUM	UG/L	67800 =	
CHROMIUM, TOTAL	UG/L	9.2 J	
COBALT	UG/L	2.1 J	
COPPER	UG/L	7 J	
IRON	UG/L	4170 J	
LEAD	UG/L	1.1 U	
MAGNESIUM	UG/L	47100 =	
MANGANESE	UG/L	148 =	
MERCURY	UG/L	0.18 U	
NICKEL	UG/L	4.9 J	
POTASSIUM	UG/L	2320 J	
SELENIUM	UG/L	3.6 J	
SILVER	UG/L	0.5 U	
SODIUM	UG/L	252000 =	
THALLIUM	UG/L	2.7 U	
VANADIUM	UG/L	46.2 J	
ZINC	UG/L	11.9 J	
MISCELLANEOUS			
PERCHLORATE	ug/L		2.4 J
PCB			
PCB-1016 (AROCHLOR 1016)	UG/L	0.2 U	
PCB-1260 (AROCHLOR 1260)	UG/L	0.2 U	
PCB-1221 (AROCHLOR 1221)	UG/L	0.41 U	
PCB-1232 (AROCHLOR 1232)	UG/L	0.2 U	
PCB-1242 (AROCHLOR 1242)	UG/L	0.2 U	
PCB-1248 (AROCHLOR 1248)	UG/L	0.2 U	

	Building	SWMU7	SWMU7	SWMU7	SWMU7	SWMU7
	StationID	SWMU7-MW01	SWMU7-MW01	SWMU7-MW02R	SWMU7-MW02R	SWMU7-MW02R
	SampleID	NDA010	NDA340	NDA011	NDA0321FD1	NDA341
	DateCollected	05/02/2000	06/05/2000	05/02/2000	05/02/2000	06/09/2000
	Depth	0 to 0	0 to 0	0 to 0	0 to 0	0 to 0
Parameter	**Units**					
PCB-1254 (AROCHLOR 1254)	UG/L	0.2 U		0.22 U	0.21 U	
PESTICIDES						
ALPHA BHC (ALPHA HEXACHLOROCYCLOHEXANE)	UG/L	0.01 UJ		0.01 UJ	0.01 UJ	
BETA BHC (BETA HEXACHLOROCYCLOHEXANE)	UG/L	0.01 U		0.01 U	0.01 U	
DELTA BHC (DELTA HEXACHLOROCYCLOHEXANE)	UG/L	0.01 U		0.01 U	0.01 U	
GAMMA BHC (LINDANE)	UG/L	0.01 UJ		0.01 UJ	0.01 UJ	
HEPTACHLOR	UG/L	0.01 U		0.01 U	0.01 U	
ALDRIN	UG/L	0.01 U		0.01 U	0.01 U	
HEPTACHLOR EPOXIDE	UG/L	0.01 U		0.01 U	0.01 U	
ALPHA ENDOSULFAN (ENDOSULFAN I)	UG/L	0.01 U		0.01 U	0.01 U	
DIELDRIN	UG/L	0.02 U		0.02 U	0.02 U	
p,p'-DDE	UG/L	0.02 U		0.02 U	0.02 U	
ENDRIN	UG/L	0.02 U		0.02 U	0.02 U	
BETA ENDOSULFAN (ENDOSULFAN II)	UG/L	0.02 U		0.02 U	0.02 U	
p,p'-DDD	UG/L	0.02 U		0.02 U	0.02 U	
ENDOSULFAN SULFATE	UG/L	0.02 U		0.02 U	0.02 U	
p,p'-DDT	UG/L	0.02 U		0.02 U	0.02 U	
METHOXYCHLOR	UG/L	0.1 U		0.11 U	0.11 U	
ENDRIN ALDEHYDE	UG/L	0.02 U		0.02 U	0.02 U	
ALPHA-CHLORDANE	UG/L	0.01 U		0.01 U	0.01 U	
GAMMA-CHLORDANE	UG/L	0.01 U		0.01 U	0.01 U	
ENDRIN KETONE	UG/L	0.02 U		0.02 U	0.02 U	
TOXAPHENE	UG/L	1 U		1.1 U	1.1 U	
SEMI-VOLATILES						
bis(2-CHLOROETHYL) ETHER (2-CHLOROETHYL ETHER)	UG/L	6 U		5 U	5 U	
PHENOL	UG/L	6 U		5 U	5 U	
2-CHLOROPHENOL	UG/L	6 U		5 U	5 U	
1,3,5-TRINITROBENZENE	UG/L	5 U		5 U	5 UJ	
1,3-DICHLOROBENZENE	UG/L	1 U		1 U		
1,3-DINITROBENZENE	UG/L	5 U		5 U	5 UJ	
1,4-DICHLOROBENZENE	UG/L	1 U		1 U		
1,2-DICHLOROBENZENE	UG/L	1 U		1 U		
bis(2-CHLOROISOPROPYL) ETHER	UG/L	6 U		5 U	5 U	
2-METHYLPHENOL (o-CRESOL)	UG/L	6 U		5 U	5 U	
HEXACHLOROETHANE	UG/L	6 U		5 U	5 U	

SWMU 07 Groundwater Data

Parameter	Units	Building	SWMU7	SWMU7
		StationID	SWMU7-MW03R	SWMU7-MW03R
		SampleID	NDA012	NDA343
		DateCollected	05/02/2000	06/05/2000
		Depth	0 to 0	0 to 0
PCB-1254 (AROCHLOR 1254)	UG/L		0.2 U	
PESTICIDES				
ALPHA BHC (ALPHA HEXACHLOROCYCLOHEXANE)	UG/L		0.01 UJ	
BETA BHC (BETA HEXACHLOROCYCLOHEXANE)	UG/L		0.01 U	
DELTA BHC (DELTA HEXACHLOROCYCLOHEXANE)	UG/L		0.01 U	
GAMMA BHC (LINDANE)	UG/L		0.01 UJ	
HEPTACHLOR	UG/L		0.01 U	
ALDRIN	UG/L		0.01 U	
HEPTACHLOR EPOXIDE	UG/L		0.01 U	
ALPHA ENDOSULFAN (ENDOSULFAN I)	UG/L		0.01 U	
DIELDRIN	UG/L		0.02 U	
p,p'-DDE	UG/L		0.02 U	
ENDRIN	UG/L		0.02 U	
BETA ENDOSULFAN (ENDOSULFAN II)	UG/L		0.02 U	
p,p'-DDD	UG/L		0.02 U	
ENDOSULFAN SULFATE	UG/L		0.02 U	
p,p'-DDT	UG/L		0.02 U	
METHOXYCHLOR	UG/L		0.1 U	
ENDRIN ALDEHYDE	UG/L		0.02 U	
ALPHA-CHLORDANE	UG/L		0.01 U	
GAMMA-CHLORDANE	UG/L		0.01 U	
ENDRIN KETONE	UG/L		0.02 U	
TOXAPHENE	UG/L		1 U	
SEMI-VOLATILES				
bis(2-CHLOROETHYL) ETHER (2-CHLOROETHYL ETHER)	UG/L		5 U	
PHENOL	UG/L		5 U	
2-CHLOROPHENOL	UG/L		5 U	
1,3,5-TRINITROBENZENE	UG/L		5 UJ	
1,3-DICHLOROBENZENE	UG/L		1 U	
1,3-DINITROBENZENE	UG/L		5 UJ	
1,4-DICHLOROBENZENE	UG/L		1 U	
1,2-DICHLOROBENZENE	UG/L		1 U	
bis(2-CHLOROISOPROPYL) ETHER	UG/L		5 U	
2-METHYLPHENOL (o-CRESOL)	UG/L		5 U	
HEXACHLOROETHANE	UG/L		5 U	

	Building	SWMU7	SWMU7	SWMU7	SWMU7	SWMU7
	StationID	SWMU7-MW01	SWMU7-MW01	SWMU7-MW02R	SWMU7-MW02R	SWMU7-MW02R
	SampleID	NDA010	NDA340	NDA011	NDA0321FD1	NDA341
	DateCollected	05/02/2000	06/05/2000	05/02/2000	05/02/2000	06/09/2000
	Depth	0 to 0	0 to 0	0 to 0	0 to 0	0 to 0
Parameter	**Units**					
N-NITROSODI-n-PROPYLAMINE	UG/L	6 U		5 U	5 U	
CRESOLS, m & p	UG/L	6 U		5 U	5 U	
NITROBENZENE	UG/L	5 U		5 U	5 U	
ISOPHORONE	UG/L	6 U		5 U	5 U	
2-NITROPHENOL	UG/L	6 U		5 U	5 U	
2,4-DIMETHYLPHENOL	UG/L	6 U		5 U	5 U	
bis(2-CHLOROETHOXY) METHANE	UG/L	6 U		5 U	5 U	
2,4-DICHLOROPHENOL	UG/L	6 U		5 U	5 U	
1,2,4-TRICHLOROBENZENE	UG/L	1 U		1 U		
NAPHTHALENE	UG/L	6 U		5 U	5 U	
4-CHLOROANILINE	UG/L	6 U		5 U	5 U	
2-METHYLNAPHTHALENE	UG/L	6 U		5 U	5 U	
HEXACHLOROBUTADIENE	UG/L	6 U		5 U	5 U	
4-CHLORO-3-METHYLPHENOL	UG/L	6 U		5 U	5 U	
HEXACHLOROCYCLOPENTADIENE	UG/L	6 U		5 U	5 U	
2,4,6-TRICHLOROPHENOL	UG/L	6 U		5 U	5 U	
2,4,5-TRICHLOROPHENOL	UG/L	25 U		22 U	21 U	
2-CHLORONAPHTHALENE	UG/L	6 U		5 U	5 U	
2-NITROANILINE	UG/L	25 U		22 U	21 U	
ACENAPHTHYLENE	UG/L	6 U		5 U	5 U	
DIMETHYL PHTHALATE	UG/L	6 U		5 U	5 U	
2,6-DINITROTOLUENE	UG/L	5 U		5 U	5 U	
ACENAPHTHENE	UG/L	6 U		5 U	5 U	
3-NITROANILINE	UG/L	25 U		22 U	21 U	
2,4-DINITROPHENOL	UG/L	25 U		22 U	21 U	
DIBENZOFURAN	UG/L	6 U		5 U	5 U	
2,4-DINITROTOLUENE	UG/L	5 U		5 U	5 U	
4-NITROPHENOL	UG/L	25 U		22 U	21 U	
FLUORENE	UG/L	6 U		5 U	5 U	
4-CHLOROPHENYL PHENYL ETHER	UG/L	6 U		5 U	5 U	
DIETHYL PHTHALATE	UG/L	6 U		5 U	7 =	
4-NITROANILINE	UG/L	25 U		22 U	21 U	
4,6-DINITRO-2-METHYLPHENOL	UG/L	25 U		22 U	21 U	
N-NITROSODIPHENYLAMINE	UG/L	6 U		5 U	5 U	
4-BROMOPHENYL PHENYL ETHER	UG/L	6 U		5 U	5 U	

SWMU 07 Groundwater Data

	Building	SWMU7	SWMU7
	StationID	SWMU7-MW03R	SWMU7-MW03R
	SampleID	NDA012	NDA343
	DateCollected	05/02/2000	06/05/2000
	Depth	0 to 0	0 to 0
Parameter	Units		
N-NITROSODI-n-PROPYLAMINE	UG/L	5 U	
CRESOLS, m & p	UG/L	5 U	
NITROBENZENE	UG/L	5 U	
ISOPHORONE	UG/L	5 U	
2-NITROPHENOL	UG/L	5 U	
2,4-DIMETHYLPHENOL	UG/L	5 U	
bis(2-CHLOROETHOXY) METHANE	UG/L	5 U	
2,4-DICHLOROPHENOL	UG/L	5 U	
1,2,4-TRICHLOROBENZENE	UG/L	1 U	
NAPHTHALENE	UG/L	5 U	
4-CHLOROANILINE	UG/L	5 U	
2-METHYLNAPHTHALENE	UG/L	5 U	
HEXACHLOROBUTADIENE	UG/L	5 U	
4-CHLORO-3-METHYLPHENOL	UG/L	5 U	
HEXACHLOROCYCLOPENTADIENE	UG/L	5 U	
2,4,6-TRICHLOROPHENOL	UG/L	5 U	
2,4,5-TRICHLOROPHENOL	UG/L	21 U	
2-CHLORONAPHTHALENE	UG/L	5 U	
2-NITROANILINE	UG/L	21 U	
ACENAPHTHYLENE	UG/L	5 U	
DIMETHYL PHTHALATE	UG/L	5 U	
2,6-DINITROTOLUENE	UG/L	5 U	
ACENAPHTHENE	UG/L	5 U	
3-NITROANILINE	UG/L	21 U	
2,4-DINITROPHENOL	UG/L	21 U	
DIBENZOFURAN	UG/L	5 U	
2,4-DINITROTOLUENE	UG/L	5 U	
4-NITROPHENOL	UG/L	21 U	
FLUORENE	UG/L	5 U	
4-CHLOROPHENYL PHENYL ETHER	UG/L	5 U	
DIETHYL PHTHALATE	UG/L	5 U	
4-NITROANILINE	UG/L	21 U	
4,6-DINITRO-2-METHYLPHENOL	UG/L	21 U	
N-NITROSODIPHENYLAMINE	UG/L	5 U	
4-BROMOPHENYL PHENYL ETHER	UG/L	5 U	

	Building	SWMU7	SWMU7	SWMU7	SWMU7	SWMU7
	StationID	SWMU7-MW01	SWMU7-MW01	SWMU7-MW02R	SWMU7-MW02R	SWMU7-MW02R
	SampleID	NDA010	NDA340	NDA011	NDA0321FD1	NDA341
	DateCollected	05/02/2000	06/05/2000	05/02/2000	05/02/2000	06/09/2000
	Depth	0 to 0	0 to 0	0 to 0	0 to 0	0 to 0
Parameter	**Units**					
HEXACHLOROBENZENE	UG/L	6 U		5 U	5 U	
PENTACHLOROPHENOL	UG/L	25 U		22 U	21 U	
PHENANTHRENE	UG/L	6 U		5 U	5 U	
ANTHRACENE	UG/L	6 U		5 U	5 U	
DI-n-BUTYL PHTHALATE	UG/L	6 U		5 U	5 U	
FLUORANTHENE	UG/L	6 U		5 U	5 U	
PYRENE	UG/L	6 U		5 U	5 U	
BENZYL BUTYL PHTHALATE	UG/L	6 U		5 U	5 U	
3,3'-DICHLOROBENZIDINE	UG/L	6 U		5 U	5 U	
BENZO(a)ANTHRACENE	UG/L	6 U		5 U	5 U	
CHRYSENE	UG/L	6 U		5 U	5 U	
bis(2-ETHYLHEXYL) PHTHALATE	UG/L	6 U		5 U	5 U	
DI-n-OCTYLPHTHALATE	UG/L	6 U		5 U	5 U	
BENZO(b)FLUORANTHENE	UG/L	6 U		5 U	5 U	
BENZO(k)FLUORANTHENE	UG/L	6 U		5 U	5 U	
BENZO(a)PYRENE	UG/L	6 U		5 U	5 U	
INDENO(1,2,3-c,d)PYRENE	UG/L	6 U		5 U	5 U	
DIBENZ(a,h)ANTHRACENE	UG/L	6 U		5 U	5 U	
BENZO(g,h,i)PERYLENE	UC/L	6 U		5 U	5 U	
CARBAZOLE	UG/L	6 U		5 U	5 U	
VOLATILES						
CHLOROMETHANE	UG/L	1 U		1 U	10 U	
VINYL CHLORIDE	UG/L	1 U		1 U	10 U	
BROMOMETHANE	UG/L	1 U		1 U	10 U	
1,3-DICHLOROBENZENE	UG/L	1 U		1 U		
CHLOROETHANE	UG/L	1 U		1 U	10 U	
1,1-DICHLOROETHENE	UG/L	1 U		1 U	10 U	
1,4-DICHLOROBENZENE	UG/L	1 U		1 U		
1,2-DICHLOROBENZENE	UG/L	1 U		1 U		
CARBON DISULFIDE	UG/L	1 U		1 U	10 U	
METHYLENE CHLORIDE	UG/L	2 U		2 U	10 U	
1,1-DICHLOROETHANE	UG/L	1 U		1 U	10 U	
ACETONE	UG/L	10 =		5 U	10 R	
METHYL ETHYL KETONE (2-BUTANONE)	UG/L	5 UJ		5 UJ	10 R	
CHLOROFORM	UG/L	1 U		1 U	10 U	

SWMU 07 Groundwater Data

	Building	SWMU7	SWMU7
	StationID	SWMU7-MW03R	SWMU7-MW03R
	SampleID	NDA012	NDA343
	DateCollected	05/02/2000	06/05/2000
	Depth	0 to 0	0 to 0
Parameter	**Units**		
HEXACHLOROBENZENE	UG/L	5 U	
PENTACHLOROPHENOL	UG/L	21 U	
PHENANTHRENE	UG/L	5 U	
ANTHRACENE	UG/L	5 U	
DI-n-BUTYL PHTHALATE	UG/L	5 U	
FLUORANTHENE	UG/L	5 U	
PYRENE	UG/L	5 U	
BENZYL BUTYL PHTHALATE	UG/L	5 U	
3,3'-DICHLOROBENZIDINE	UG/L	5 U	
BENZO(a)ANTHRACENE	UG/L	5 U	
CHRYSENE	UG/L	5 U	
bis(2-ETHYLHEXYL) PHTHALATE	UG/L	5 U	
DI-n-OCTYLPHTHALATE	UG/L	5 U	
BENZO(b)FLUORANTHENE	UG/L	5 U	
BENZO(k)FLUORANTHENE	UG/L	5 U	
BENZO(a)PYRENE	UG/L	5 U	
INDENO(1,2,3-c,d)PYRENE	UG/L	5 U	
DIBENZ(a,h)ANTHRACENE	UG/L	5 U	
BENZO(g,h,i)PERYLENE	UG/L	5 U	
CARBAZOLE	UG/L	5 U	
VOLATILES			
CHLOROMETHANE	UG/L	1 U	
VINYL CHLORIDE	UG/L	1 U	
BROMOMETHANE	UG/L	1 U	
1,3-DICHLOROBENZENE	UG/L	1 U	
CHLOROETHANE	UG/L	1 U	
1,1-DICHLOROETHENE	UG/L	1 U	
1,4-DICHLOROBENZENE	UG/L	1 U	
1,2-DICHLOROBENZENE	UG/L	1 U	
CARBON DISULFIDE	UG/L	1 U	
METHYLENE CHLORIDE	UG/L	2 U	
1,1-DICHLOROETHANE	UG/L	1 U	
ACETONE	UG/L	5 U	
METHYL ETHYL KETONE (2-BUTANONE)	UG/L	5 UJ	
CHLOROFORM	UG/L	1 U	

	Building	SWMU7		SWMU7		SWMU7		SWMU7		SWMU7	
	StationID	SWMU7-MW01		SWMU7-MW01		SWMU7-MW02R		SWMU7-MW02R		SWMU7-MW02R	
	SampleID	NDA010		NDA340		NDA011		NDA0321FD1		NDA341	
	DateCollected	05/02/2000		06/05/2000		05/02/2000		05/02/2000		06/09/2000	
	Depth	0 to 0		0 to 0		0 to 0		0 to 0		0 to 0	
Parameter	**Units**										
1,1,1-TRICHLOROETHANE	UG/L	1	U			1	U	10	U		
CARBON TETRACHLORIDE	UG/L	1	U			1	U	10	U		
BENZENE	UG/L	1	U			1	U	10	U		
1,2-DICHLOROETHANE	UG/L	1	U			1	U	10	U		
TRICHLOROETHYLENE (TCE)	UG/L	1	U			1	U	10	U		
1,2-DICHLOROPROPANE	UG/L	1	U			1	U	10	U		
1,2,4-TRICHLOROBENZENE	UG/L	1	U			1	U				
BROMODICHLOROMETHANE	UG/L	1	U			1	U	10	U		
cis-1,3-DICHLOROPROPENE	UG/L	1	U			1	U	10	U		
METHYL ISOBUTYL KETONE (4-METHYL-2-PENTANONE)	UG/L	5	U			5	U	10	U		
TOLUENE	UG/L	1	U			1	U	10	U		
trans-1,3-DICHLOROPROPENE	UG/L	1	U			1	U	10	U		
1,1,2-TRICHLOROETHANE	UG/L	1	U			1	U	10	U		
TETRACHLOROETHYLENE(PCE)	UG/L	1	UJ			1	UJ	10	U		
2-HEXANONE	UG/L	5	U			5	U	10	U		
DIBROMOCHLOROMETHANE	UG/L	1	U			1	U	10	U		
CHLOROBENZENE	UG/L	1	U			1	U	10	U		
ETHYLBENZENE	UG/L	1	U			1	U	10	U		
M,P-XYLENE (SUM OF ISOMERS)	UG/L	1	U			1	U	10	U		
O-XYLENE (1,2-DIMETHYLBENZENE)	UG/L	1	U			1	U	10	U		
STYRENE	UG/L	1	U			1	U	10	U		
BROMOFORM	UG/L	1	U			1	U	10	U		
1,1,2,2-TETRACHLOROETHANE	UG/L	1	U			1	U	10	U		
XYLENES, TOTAL	UG/L	1	U			1	U	10	U		
BROMOCHLOROMETHANE	UG/L	1	U			1	U				
1,2-DIBROMO-3-CHLOROPROPANE	UG/L	1	U			1	U				
cis-1,2-DICHLOROETHYLENE	UG/L	1	U			1	U				
trans-1,2-DICHLOROETHENE	UG/L	1	U			1	U				
TOTAL 1,2-DICHLOROETHENE	UG/L	1	U			1	U				
ETHYLENE DIBROMIDE (1,2-DIBROMOETHANE)	UG/L	1	U			1	U				

SWMU 07 Groundwater Data

	Building	SWMU7		SWMU7
	StationID	SWMU7-MW03R		SWMU7-MW03R
	SampleID	NDA012		NDA343
	DateCollected	05/02/2000		06/05/2000
	Depth	0 to 0		0 to 0
Parameter	**Units**			
1,1,1-TRICHLOROETHANE	UG/L	1	U	
CARBON TETRACHLORIDE	UG/L	1	U	
BENZENE	UG/L	1	U	
1,2-DICHLOROETHANE	UG/L	1	U	
TRICHLOROETHYLENE (TCE)	UG/L	1	U	
1,2-DICHLOROPROPANE	UG/L	1	U	
1,2,4-TRICHLOROBENZENE	UG/L	1	U	
BROMODICHLOROMETHANE	UG/L	1	U	
cis-1,3-DICHLOROPROPENE	UG/L	1	U	
METHYL ISOBUTYL KETONE (4-METHYL-2-PENTANONE)	UG/L	5	U	
TOLUENE	UG/L	1	U	
trans-1,3-DICHLOROPROPENE	UG/L	1	U	
1,1,2-TRICHLOROETHANE	UG/L	1	U	
TETRACHLOROETHYLENE(PCE)	UG/L	1	UJ	
2-HEXANONE	UG/L	5	U	
DIBROMOCHLOROMETHANE	UG/L	1	U	
CHLOROBENZENE	UG/L	1	U	
ETHYLBENZENE	UG/L	1	U	
M,P-XYLENE (SUM OF ISOMERS)	UG/L	1	U	
O-XYLENE (1,2-DIMETHYLBENZENE)	UG/L	1	U	
STYRENE	UG/L	1	U	
BROMOFORM	UG/L	1	U	
1,1,2,2-TETRACHLOROETHANE	UG/L	1	U	
XYLENES, TOTAL	UG/L	1	U	
BROMOCHLOROMETHANE	UG/L	1	U	
1,2-DIBROMO-3-CHLOROPROPANE	UG/L	1	U	
cis-1,2-DICHLOROETHYLENE	UG/L	1	U	
trans-1,2-DICHLOROETHENE	UG/L	1	U	
TOTAL 1,2-DICHLOROETHENE	UG/L	1	U	
ETHYLENE DIBROMIDE (1,2-DIBROMOETHANE)	UG/L	1	U	

Parameter	Units	Building	SWMU7	SWMU7	SWMU7	SWMU7	SWMU7	SWMU7
		StationID	W7-SB01	W7-SB02	W7-SB03	W7-SB04	W7-SB05	W7-SB06
		SampleID	NDA119	NDA120	NDA121	NDA122	NDA123	NDA124
		DateCollected	04/18/2000	04/18/2000	04/18/2000	04/18/2000	04/18/2000	04/18/2000
		Depth	0 to 0.5	0 to 0.5	0 to 0.5	0 to 0.5	0 to 0.5	0 to 0.5
EXPLOSIVES								
2,6-DINITROTOLUENE	UG/KG		281 UJ	339 UJ	271 UJ	280 UJ	279 UJ	276 UJ
OCTAHYDRO-1,3,5,7-TETRANITRO-1,3,5,7-TETRAZOCINE	UG/KG		281 UJ	339 UJ	271 UJ	280 UJ	279 UJ	276 UJ
HEXAHYDRO-1,3,5-TRINITRO-1,3,5,7-TETRAZOCINE	UG/KG		281 UJ	339 UJ	271 UJ	280 UJ	279 UJ	276 UJ
1,3,5-TRINITROBENZENE	UG/KG		281 UJ	339 UJ	271 UJ	280 UJ	279 UJ	276 UJ
1,3-DINITROBENZENE	UG/KG		281 UJ	339 UJ	271 UJ	280 UJ	279 UJ	276 UJ
METHYL-2,4,6-TRINITROPHENYLNITRAMINE	UG/KG		281 UJ	339 UJ	271 UJ	280 UJ	279 UJ	276 UJ
NITROBENZENE	UG/KG		281 UJ	339 UJ	271 UJ	280 UJ	279 UJ	276 UJ
2,4,6-TRINITROTOLUENE	UG/KG		281 UJ	339 UJ	271 UJ	280 UJ	279 UJ	276 UJ
2,4-DINITROTOLUENE	UG/KG		281 UJ	339 UJ	271 UJ	280 UJ	279 UJ	276 UJ
2-NITROTOLUENE	UG/KG		281 UJ	339 UJ	271 UJ	280 UJ	279 UJ	276 UJ
4-NITROTOLUENE	UG/KG		281 UJ	339 UJ	271 UJ	280 UJ	279 UJ	276 UJ
3-NITROTOLUENE	UG/KG		281 UJ	339 UJ	271 UJ	280 UJ	279 UJ	276 UJ
METALS								
ALUMINUM	MG/KG		18900 =	18400 =	11100 =	11200 =	16900 =	13200 =
ANTIMONY	MG/KG		0.33 J	0.28 J	0.15 UJ	0.35 J	0.24 J	0.19 J
ARSENIC	MG/KG		0.39 U	0.46 U	6.6 =	0.47 J	0.76 J	0.5 J
BARIUM	MG/KG		97.1 J	90.5 J	63.2 J	62.7 J	85.6 J	111 J
BERYLLIUM	MG/KG		0.4 J	0.37 J	0.26 J	0.26 J	0.36 J	0.3 J
CADMIUM	MG/KG		0.023 U	0.027 U	0.022 U	0.022 U	0.022 U	0.023 U
CALCIUM	MG/KG		6700 =	7170 =	5010 =	9330 =	6540 =	6970 =
CHROMIUM, TOTAL	MG/KG		91.9 =	75.7 =	53 =	39.8 =	66 =	43.6 =
COBALT	MG/KG		30.8 =	24.2 =	18.1 =	12 =	20.9 =	19.2 =
COPPER	MG/KG		1250 =	44.6 =	51.3 =	38.8 =	52.7 =	38.6 =
IRON	MG/KG		33000 =	31400 =	50300 =	22600 =	42700 =	28000 =
LEAD	MG/KG		24.4 =	13.7 =	43.6 =	42.9 =	98.7 =	10.6 =
MAGNESIUM	MG/KG		7330 =	7140 =	3910 =	4000 =	5430 =	5250 =
MANGANESE	MG/KG		1110 =	855 =	759 =	599 =	844 =	1060 =
MERCURY	MG/KG		0.037 J	0.028 J	0.024 J	0.03 J	0.042 J	0.025 J
NICKEL	MG/KG		42.7 =	38.1 =	25.1 =	16.2 =	24.8 =	23.1 =
POTASSIUM	MG/KG		681 J	1340 J	1210 =	1270 =	1320 =	1210 =
SELENIUM	MG/KG		0.34 J	0.28 U	0.23 U	0.29 J	0.23 U	0.24 U
SILVER	MG/KG		0.071 J	0.068 U	0.14 J	0.057 J	0.59 J	0.063 J
SODIUM	MG/KG		137 J	193 J	83 J	144 J	186 J	229 J
THALLIUM	MG/KG		1.3 J	0.99 J	2 J	0.5 J	1 J	0.65 J
VANADIUM	MG/KG		130 =	115 =	89.5 =	71.2 =	109 =	98.7 =
ZINC	MG/KG		104 =	419 =	124 =	274 =	200 =	197 =
PCB								

SWMU 07 Surface Soil Data

Parameter	Units	Building	SWMU7	SWMU7	SWMU7	SWMU7	SWMU7	SWMU7
		StationID	W7-SB01	W7-SB02	W7-SB03	W7-SB04	W7-SB05	W7-SB06
		SampleID	NDA119	NDA120	NDA121	NDA122	NDA123	NDA124
		DateCollected	04/18/2000	04/18/2000	04/18/2000	04/18/2000	04/18/2000	04/18/2000
		Depth	0 to 0.5	0 to 0.5	0 to 0.5	0 to 0.5	0 to 0.5	0 to 0.5
PCB-1016 (AROCHLOR 1016)	UG/KG		37 UJ	44 UJ	36 UJ	37 UJ	37 UJ	37 UJ
PCB-1260 (AROCHLOR 1260)	UG/KG		37 UJ	44 UJ	36 UJ	37 UJ	37 UJ	37 UJ
PCB-1221 (AROCHLOR 1221)	UG/KG		75 UJ	88 UJ	73 UJ	75 UJ	75 UJ	75 UJ
PCB-1232 (AROCHLOR 1232)	UG/KG		37 UJ	44 UJ	36 UJ	37 UJ	37 UJ	37 UJ
PCB-1242 (AROCHLOR 1242)	UG/KG		37 UJ	44 UJ	36 UJ	37 UJ	37 UJ	37 UJ
PCB-1248 (AROCHLOR 1248)	UG/KG		37 UJ	44 UJ	36 UJ	37 UJ	37 UJ	37 UJ
PCB-1254 (AROCHLOR 1254)	UG/KG		37 UJ	44 UJ	36 UJ	37 UJ	37 UJ	37 UJ
PESTICIDES								
ALPHA BHC (ALPHA HEXACHLOROCYCLOHEXANE)	UG/KG		1.9 UJ	2.2 UJ	1.9 UJ	1.9 UJ	1.9 UJ	1.9 UJ
BETA BHC (BETA HEXACHLOROCYCLOHEXANE)	UG/KG		1.9 UJ	2.2 UJ	1.9 UJ	1.9 UJ	1.9 UJ	1.9 UJ
DELTA BHC (DELTA HEXACHLOROCYCLOHEXANE)	UG/KG		1.9 UJ	2.2 UJ	1.9 UJ	1.9 UJ	1.9 UJ	1.9 UJ
GAMMA BHC (LINDANE)	UG/KG		1.9 UJ	2.2 UJ	1.9 UJ	1.9 UJ	1.9 UJ	1.9 UJ
HEPTACHLOR	UG/KG		1.9 UJ	2.2 UJ	1.9 UJ	1.9 UJ	1.9 UJ	1.9 UJ
ALDRIN	UG/KG		1.9 UJ	2.2 UJ	1.9 UJ	1.9 UJ	1.9 UJ	1.9 UJ
HEPTACHLOR EPOXIDE	UG/KG		1.9 UJ	2.2 UJ	1.9 UJ	1.9 UJ	1.9 UJ	1.9 UJ
ALPHA ENDOSULFAN (ENDOSULFAN I)	UG/KG		1.9 UJ	2.2 UJ	1.9 UJ	1.9 UJ	1.9 UJ	1.9 UJ
DIELDRIN	UG/KG		3.7 UJ	4.4 UJ	3.6 UJ	3.7 UJ	3.7 UJ	3.7 UJ
p,p'-DDE	UG/KG		3.7 UJ	4.4 UJ	3.6 UJ	9.9 J	2.3 J	0.4 J
ENDRIN	UG/KG		3.7 UJ	4.4 UJ	3.6 UJ	3.7 UJ	3.7 UJ	3.7 UJ
BETA ENDOSULFAN (ENDOSULFAN II)	UG/KG		3.7 UJ	4.4 UJ	3.6 UJ	3.7 UJ	3.7 UJ	3.7 UJ
p,p'-DDD	UG/KG		3.7 UJ	4.4 UJ	3.6 UJ	3.7 UJ	3.7 UJ	3.7 UJ
ENDOSULFAN SULFATE	UG/KG		3.7 UJ	4.4 UJ	3.6 UJ	3.7 UJ	3.7 UJ	3.7 UJ
p,p'-DDT	UG/KG		2 J	0.7 J	3.6 UJ	23 J	16 J	3.6 J
METHOXYCHLOR	UG/KG		19 UJ	22 UJ	19 UJ	19 UJ	19 UJ	19 UJ
ENDRIN ALDEHYDE	UG/KG		3.7 UJ	4.4 UJ	3.6 UJ	3.7 UJ	3.7 UJ	3.7 UJ
ALPHA-CHLORDANE	UG/KG		1.9 UJ	2.2 UJ	1.9 UJ	1.9 UJ	1.9 UJ	1.9 UJ
GAMMA-CHLORDANE	UG/KG		1.9 UJ	2.2 UJ	1.9 UJ	1.9 UJ	1.9 UJ	1.9 UJ
ENDRIN KETONE	UG/KG		3.7 UJ	4.4 UJ	3.6 UJ	3.7 UJ	3.7 UJ	3.7 UJ
TOXAPHENE	UG/KG		190 UJ	224 UJ	185 UJ	191 UJ	190 UJ	189 UJ
SEMI-VOLATILES								
bis(2-CHLOROETHYL) ETHER (2-CHLOROETHYL ETHER)	UG/KG		503 UJ	541 UJ	409 UJ	450 UJ	450 UJ	432 UJ
PHENOL	UG/KG		503 UJ	541 UJ	409 UJ	450 UJ	450 UJ	432 UJ
2-CHLOROPHENOL	UG/KG		503 UJ	541 UJ	409 UJ	450 UJ	450 UJ	432 UJ
1,3,5-TRINITROBENZENE	UG/KG		281 UJ	339 UJ	271 UJ	280 UJ	279 UJ	276 UJ
1,3-DICHLOROBENZENE	UG/KG		503 UJ	541 UJ	409 UJ	450 UJ	450 UJ	432 UJ
1,3-DINITROBENZENE	UG/KG		281 UJ	339 UJ	271 UJ	280 UJ	279 UJ	276 UJ
1,4-DICHLOROBENZENE	UG/KG		503 UJ	541 UJ	409 UJ	450 UJ	450 UJ	432 UJ
1,2-DICHLOROBENZENE	UG/KG		503 UJ	541 UJ	409 UJ	450 UJ	450 UJ	432 UJ

Parameter	Units	Building	SWMU7	SWMU7	SWMU7	SWMU7	SWMU7	SWMU7
		StationID	W7-SB01	W7-SB02	W7-SB03	W7-SB04	W7-SB05	W7-SB06
		SampleID	NDA119	NDA120	NDA121	NDA122	NDA123	NDA124
		DateCollected	04/18/2000	04/18/2000	04/18/2000	04/18/2000	04/18/2000	04/18/2000
		Depth	0 to 0.5	0 to 0.5	0 to 0.5	0 to 0.5	0 to 0.5	0 to 0.5
bis(2-CHLOROISOPROPYL) ETHER	UG/KG		503 UJ	541 UJ	409 UJ	450 UJ	450 UJ	432 UJ
2-METHYLPHENOL (o-CRESOL)	UG/KG		503 UJ	541 UJ	409 UJ	450 UJ	450 UJ	432 UJ
HEXACHLOROETHANE	UG/KG		503 UJ	541 UJ	409 UJ	450 UJ	450 UJ	432 UJ
N-NITROSODI-n-PROPYLAMINE	UG/KG		503 UJ	541 UJ	409 UJ	450 UJ	450 UJ	432 UJ
CRESOLS, m & p	UG/KG		503 UJ	541 UJ	409 UJ	450 UJ	450 UJ	432 UJ
NITROBENZENE	UG/KG		281 UJ	339 UJ	271 UJ	280 UJ	279 UJ	276 UJ
ISOPHORONE	UG/KG		503 UJ	541 UJ	409 UJ	450 UJ	450 UJ	432 UJ
2-NITROPHENOL	UG/KG		503 UJ	541 UJ	409 UJ	450 UJ	450 UJ	432 UJ
2,4-DIMETHYLPHENOL	UG/KG		503 UJ	541 UJ	409 UJ	450 UJ	450 UJ	432 UJ
bis(2-CHLOROETHOXY) METHANE	UG/KG		503 UJ	541 UJ	409 UJ	450 UJ	450 UJ	432 UJ
2,4-DICHLOROPHENOL	UG/KG		503 UJ	541 UJ	409 UJ	450 UJ	450 UJ	432 UJ
1,2,4-TRICHLOROBENZENE	UG/KG		503 UJ	541 UJ	409 UJ	450 UJ	450 UJ	432 UJ
NAPHTHALENE	UG/KG		503 UJ	541 UJ	409 UJ	450 UJ	450 UJ	432 UJ
4-CHLOROANILINE	UG/KG		503 UJ	541 UJ	409 UJ	450 UJ	450 UJ	432 UJ
2-METHYLNAPHTHALENE	UG/KG		503 UJ	541 UJ	409 UJ	450 UJ	450 UJ	432 UJ
HEXACHLOROBUTADIENE	UG/KG		503 UJ	541 UJ	409 UJ	450 UJ	450 UJ	432 UJ
4-CHLORO-3-METHYLPHENOL	UG/KG		503 UJ	541 UJ	409 UJ	450 UJ	450 UJ	432 UJ
HEXACHLOROCYCLOPENTADIENE	UG/KG		503 UJ	541 UJ	409 UJ	450 UJ	450 UJ	432 UJ
2,4,6-TRICHLOROPHENOL	UG/KG		503 UJ	541 UJ	409 UJ	450 UJ	450 UJ	432 UJ
2,4,5-TRICHLOROPHENOL	UG/KG		1510 UJ	1620 UJ	1230 UJ	1350 UJ	1350 UJ	1290 UJ
2-CHLORONAPHTHALENE	UG/KG		503 UJ	541 UJ	409 UJ	450 UJ	450 UJ	432 UJ
2-NITROANILINE	UG/KG		1510 UJ	1620 UJ	1230 UJ	1350 UJ	1350 UJ	1290 UJ
ACENAPHTHYLENE	UG/KG		503 UJ	541 UJ	409 UJ	450 UJ	450 UJ	432 UJ
DIMETHYL PHTHALATE	UG/KG		503 UJ	541 UJ	409 UJ	450 UJ	450 UJ	432 UJ
2,6-DINITROTOLUENE	UG/KG		281 UJ	339 UJ	271 UJ	280 UJ	279 UJ	276 UJ
ACENAPHTHENE	UG/KG		503 UJ	541 UJ	409 UJ	450 UJ	450 UJ	432 UJ
3-NITROANILINE	UG/KG		1510 UJ	1620 UJ	1230 UJ	1350 UJ	1350 UJ	1290 UJ
2,4-DINITROPHENOL	UG/KG		1510 UJ	1620 UJ	1230 UJ	1350 UJ	1350 UJ	1290 UJ
DIBENZOFURAN	UG/KG		503 UJ	541 UJ	409 UJ	450 UJ	450 UJ	432 UJ
2,4-DINITROTOLUENE	UG/KG		281 UJ	339 UJ	271 UJ	280 UJ	279 UJ	276 UJ
4-NITROPHENOL	UG/KG		1510 UJ	1620 UJ	1230 UJ	1350 UJ	1350 UJ	1290 UJ
FLUORENE	UG/KG		503 UJ	541 UJ	409 UJ	450 UJ	450 UJ	432 UJ
4-CHLOROPHENYL PHENYL ETHER	UG/KG		503 UJ	541 UJ	409 UJ	450 UJ	450 UJ	432 UJ
DIETHYL PHTHALATE	UG/KG		503 UJ	541 UJ	409 UJ	450 UJ	450 UJ	432 UJ
4-NITROANILINE	UG/KG		1510 UJ	1620 UJ	1230 UJ	1350 UJ	1350 UJ	1290 UJ
4,6-DINITRO-2-METHYLPHENOL	UG/KG		1510 UJ	1620 UJ	1230 UJ	1350 UJ	1350 UJ	1290 UJ
N-NITROSODIPHENYLAMINE	UG/KG		503 UJ	541 UJ	409 UJ	450 UJ	450 UJ	432 UJ
4-BROMOPHENYL PHENYL ETHER	UG/KG		503 UJ	541 UJ	409 UJ	450 UJ	450 UJ	432 UJ

SWMU 07 Surface Soil Data

Parameter	Units	Building	SWMU7	SWMU7	SWMU7	SWMU7	SWMU7	SWMU7
		StationID	W7-SB01	W7-SB02	W7-SB03	W7-SB04	W7-SB05	W7-SB06
		SampleID	NDA119	NDA120	NDA121	NDA122	NDA123	NDA124
		DateCollected	04/18/2000	04/18/2000	04/18/2000	04/18/2000	04/18/2000	04/18/2000
		Depth	0 to 0.5	0 to 0.5	0 to 0.5	0 to 0.5	0 to 0.5	0 to 0.5
HEXACHLOROBENZENE	UG/KG		503 UJ	541 UJ	409 UJ	450 UJ	450 UJ	432 UJ
PENTACHLOROPHENOL	UG/KG		1510 UJ	1620 UJ	1230 UJ	1350 UJ	1350 UJ	1290 UJ
PHENANTHRENE	UG/KG		503 UJ	541 UJ	409 UJ	450 UJ	34 J	432 UJ
ANTHRACENE	UG/KG		503 UJ	541 UJ	30 J	450 UJ	32 J	432 UJ
DI-n-BUTYL PHTHALATE	UG/KG		503 UJ	541 UJ	409 UJ	450 UJ	450 UJ	432 UJ
FLUORANTHENE	UG/KG		503 UJ	541 UJ	222 J	155 J	558 J	41 J
PYRENE	UG/KG		503 UJ	541 UJ	255 J	128 J	626 J	35 J
BENZYL BUTYL PHTHALATE	UG/KG		503 UJ	541 UJ	409 UJ	450 UJ	450 UJ	432 UJ
3,3'-DICHLOROBENZIDINE	UG/KG		1010 UJ	1080 UJ	817 UJ	901 UJ	900 UJ	863 UJ
BENZO(a)ANTHRACENE	UG/KG		503 UJ	541 UJ	238 J	90 J	327 J	33 J
CHRYSENE	UG/KG		503 UJ	541 UJ	247 J	102 J	430 J	35 J
bis(2-ETHYLHEXYL) PHTHALATE	UG/KG		503 UJ	919 J	409 UJ	450 UJ	450 UJ	432 UJ
DI-n-OCTYLPHTHALATE	UG/KG		503 UJ	541 UJ	409 UJ	450 UJ	450 UJ	432 UJ
BENZO(b)FLUORANTHENE	UG/KG		503 UJ	541 UJ	270 J	63 J	387 J	30 J
BENZO(k)FLUORANTHENE	UG/KG		503 UJ	541 UJ	223 J	64 J	312 J	34 J
BENZO(a)PYRENE	UG/KG		503 UJ	541 UJ	215 J	73 J	337 J	33 J
INDENO(1,2,3-c,d)PYRENE	UG/KG		503 UJ	541 UJ	95 J	52 J	199 J	432 UJ
DIBENZ(a,h)ANTHRACENE	UG/KG		503 UJ	541 UJ	29 J	450 UJ	39 J	432 UJ
BENZO(g,h,i)PERYLENE	UG/KG		503 UJ	541 UJ	68 J	38 J	152 J	432 UJ
CARBAZOLE	UG/KG		503 UJ	541 UJ	409 UJ	450 UJ	36 J	432 UJ
VOLATILES								
CHLOROMETHANE	UG/KG		12 U	16 U	10 U	12 U	13 U	11 U
VINYL CHLORIDE	UG/KG		12 U	16 U	10 U	12 U	13 U	11 U
BROMOMETHANE	UG/KG		12 U	16 U	10 U	12 U	13 U	11 U
1,3-DICHLOROBENZENE	UG/KG		503 UJ	541 UJ	409 UJ	450 UJ	450 UJ	432 UJ
CHLOROETHANE	UG/KG		12 U	16 U	10 U	12 U	13 U	11 U
1,1-DICHLOROETHENE	UG/KG		12 U	16 U	10 U	12 U	13 U	11 U
1,4-DICHLOROBENZENE	UG/KG		503 UJ	541 UJ	409 UJ	450 UJ	450 UJ	432 UJ
1,2-DICHLOROBENZENE	UG/KG		503 UJ	541 UJ	409 UJ	450 UJ	450 UJ	432 UJ
CARBON DISULFIDE	UG/KG		12 U	16 U	10 U	12 U	13 U	11 U
METHYLENE CHLORIDE	UG/KG		12 U	16 U	10 U	12 U	13 U	11 U
1,1-DICHLOROETHANE	UG/KG		12 U	16 U	10 U	12 U	13 U	11 U
ACETONE	UG/KG		149 R	23 R	487 R	12 R	1130 R	4300 R
METHYL ETHYL KETONE (2-BUTANONE)	UG/KG		12 R	16 R	10 R	12 R	13 R	11 R
CHLOROFORM	UG/KG		12 U	16 U	10 U	12 U	13 U	11 U
1,1,1-TRICHLOROETHANE	UG/KG		12 U	16 U	10 U	12 U	13 U	11 U
CARBON TETRACHLORIDE	UG/KG		12 U	16 U	10 U	12 U	13 U	11 U
BENZENE	UG/KG		12 U	16 U	10 U	12 U	13 U	11 U

	Building	SWMU7	SWMU7	SWMU7	SWMU7	SWMU7	SWMU7
	StationID	W7-SB01	W7-SB02	W7-SB03	W7-SB04	W7-SB05	W7-SB06
	SampleID	NDA119	NDA120	NDA121	NDA122	NDA123	NDA124
	DateCollected	04/18/2000	04/18/2000	04/18/2000	04/18/2000	04/18/2000	04/18/2000
	Depth	0 to 0.5	0 to 0.5	0 to 0.5	0 to 0.5	0 to 0.5	0 to 0.5
Parameter	Units						
1,2-DICHLOROETHANE	UG/KG	12 U	16 U	10 U	12 U	13 U	11 U
TRICHLOROETHYLENE (TCE)	UG/KG	12 U	16 U	10 U	12 U	13 U	11 U
1,2-DICHLOROPROPANE	UG/KG	12 U	16 U	10 U	12 U	13 U	11 U
1,2,4-TRICHLOROBENZENE	UG/KG	503 UJ	541 UJ	409 UJ	450 UJ	450 UJ	432 UJ
BROMODICHLOROMETHANE	UG/KG	12 U	16 U	10 U	12 U	13 U	11 U
cis-1,3-DICHLOROPROPENE	UG/KG	12 U	16 U	10 U	12 U	13 U	11 U
METHYL ISOBUTYL KETONE (4-METHYL-2-PENTANONE)	UG/KG	12 U	16 U	10 U	12 U	13 U	11 U
TOLUENE	UG/KG	12 U	16 U	10 U	12 U	13 U	11 U
trans-1,3-DICHLOROPROPENE	UG/KG	12 U	16 U	10 U	12 U	13 U	11 U
1,1,2-TRICHLOROETHANE	UG/KG	12 U	16 U	10 U	12 U	13 U	11 U
TETRACHLOROETHYLENE(PCE)	UG/KG	12 U	16 U	10 U	12 U	13 U	11 U
2-HEXANONE	UC/KG	3 J	16 U	10 U	12 U	2 J	11 U
DIBROMOCHLOROMETHANE	UG/KG	12 U	16 U	10 U	12 U	13 U	11 U
CHLOROBENZENE	UG/KG	12 U	16 U	10 U	12 U	13 U	11 U
ETHYLBENZENE	UG/KG	12 U	16 U	10 U	12 U	13 U	11 U
M,P-XYLENE (SUM OF ISOMERS)	UG/KG	12 U	16 U	10 U	12 U	13 U	11 U
O-XYLENE (1,2-DIMETHYLBENZENE)	UG/KG	12 U	16 U	10 U	12 U	13 U	11 U
STYRENE	UG/KG	12 U	16 U	10 U	12 U	13 U	11 U
BROMOFORM	UG/KG	12 U	16 U	10 U	12 U	13 U	11 U
1,1,2,2-TETRACHLOROETHANE	UG/KG	12 UJ	16 UJ	10 UJ	12 UJ	13 UJ	11 UJ
XYLENES, TOTAL	UG/KG	12 U	16 U	10 U	12 U	13 U	11 U

Parameter	Units	Building	SWMU7	SWMU7	SWMU7
		StationID	W7-SD01	W7-SD02	W7-SD03
		SampleID	NDA047	NDA048	NDA049
		DateCollected	04/18/2000	04/18/2000	04/18/2000
		Depth	0 to 0.5	0 to 0.5	0 to 0.5
EXPLOSIVES					
2,6-DINITROTOLUENE	UG/KG		267 U	287 U	268 U
OCTAHYDRO-1,3,5,7-TETRANITRO-1,3,5,7-TETRAZOCINE	UG/KG		267 U	287 U	268 U
HEXAHYDRO-1,3,5-TRINITRO-1,3,5,7-TETRAZOCINE	UG/KG		267 U	287 U	268 U
1,3,5-TRINITROBENZENE	UG/KG		267 U	287 U	268 U
1,3-DINITROBENZENE	UG/KG		267 U	287 U	268 U
METHYL-2,4,6-TRINITROPHENYLNITRAMINE	UG/KG		267 U	287 U	268 U
NITROBENZENE	UG/KG		267 U	287 U	268 U
2,4,6-TRINITROTOLUENE	UG/KG		267 U	287 U	268 U
2,4-DINITROTOLUENE	UG/KG		267 U	287 U	268 U
2-NITROTOLUENE	UG/KG		267 U	287 U	268 U
4-NITROTOLUENE	UG/KG		267 U	287 U	268 U
3-NITROTOLUENE	UG/KG		267 U	287 U	268 U
METALS					
ALUMINUM	MG/KG		13200 J	13200 J	13200 J
ANTIMONY	MG/KG		0.15 U	0.24 J	0.15 UJ
ARSENIC	MG/KG		0.63 J	0.65 J	0.37 U
BARIUM	MG/KG		109 R	247 R	61.1 R
BERYLLIUM	MG/KG		0.23 J	0.23 J	0.23 J
CADMIUM	MG/KG		0.022 U	0.023 U	0.022 U
CALCIUM	MG/KG		5210 J	6890 J	4700 J
CHROMIUM, TOTAL	MG/KG		67 =	41.5 =	38.2 =
COBALT	MG/KG		30.3 J	42.4 J	15.3 J
COPPER	MG/KG		37.1 =	34.8 =	30.2 =
IRON	MG/KG		26300 J	28000 J	25200 J
LEAD	MG/KG		3.9 J	4.1 J	1.7 J
MAGNESIUM	MG/KG		6020 J	5510 J	4370 J
MANGANESE	MG/KG		1250 R	2170 R	617 R
MERCURY	MG/KG		0.016 J	0.014 U	0.013 U
NICKEL	MG/KG		35.8 =	20 =	14.2 =
POTASSIUM	MG/KG		1390 J	1460 J	1070 J
SELENIUM	MG/KG		0.23 U	0.37 J	0.23 U
SILVER	MG/KG		0.055 U	0.057 U	0.055 U
SODIUM	MG/KG		111 J	145 J	71.7 J
THALLIUM	MG/KG		0.68 J	0.31 U	0.83 J
VANADIUM	MG/KG		106 J	111 J	91.7 J
ZINC	MG/KG		30.4 =	53.7 =	32.7 =
PCB					
PCB-1016 (AROCHLOR 1016)	UG/KG		36 U	38 UJ	36 UJ
PCB-1260 (AROCHLOR 1260)	UG/KG		36 U	38 UJ	36 UJ
PCB-1221 (AROCHLOR 1221)	UG/KG		73 U	76 UJ	73 UJ
PCB-1232 (AROCHLOR 1232)	UG/KG		36 U	38 UJ	36 UJ
PCB-1242 (AROCHLOR 1242)	UG/KG		36 U	38 UJ	36 UJ
PCB-1248 (AROCHLOR 1248)	UG/KG		36 U	38 UJ	36 UJ
PCB-1254 (AROCHLOR 1254)	UG/KG		36 U	38 UJ	36 UJ
PESTICIDES					
ALPHA BHC (ALPHA HEXACHLOROCYCLOHEXANE)	UG/KG		1.9 U	1.9 UJ	1.9 UJ
BETA BHC (BETA HEXACHLOROCYCLOHEXANE)	UG/KG		1.9 U	1.9 UJ	1.9 UJ
DELTA BHC (DELTA HEXACHLOROCYCLOHEXANE)	UG/KG		1.9 U	1.9 UJ	1.9 UJ
GAMMA BHC (LINDANE)	UG/KG		1.9 U	1.9 UJ	1.9 UJ
HEPTACHLOR	UG/KG		1.9 U	1.9 UJ	1.9 UJ
ALDRIN	UG/KG		1.9 U	1.9 UJ	1.9 UJ
HEPTACHLOR EPOXIDE	UG/KG		1.9 U	1.9 UJ	1.9 UJ

SWMU 07 Sediment Data

	Building	SWMU7	SWMU7	SWMU7
	StationID	W7-SD01	W7-SD02	W7-SD03
	SampleID	NDA047	NDA048	NDA049
	DateCollected	04/18/2000	04/18/2000	04/18/2000
	Depth	0 to 0.5	0 to 0.5	0 to 0.5
Parameter	**Units**			
ALPHA ENDOSULFAN (ENDOSULFAN I)	UG/KG	1.9 U	1.9 UJ	1.9 UJ
DIELDRIN	UG/KG	3.6 U	3.8 UJ	3.6 UJ
p,p'-DDE	UG/KG	3.6 U	3.8 UJ	3.6 UJ
ENDRIN	UG/KG	3.6 U	3.8 UJ	3.6 UJ
BETA ENDOSULFAN (ENDOSULFAN II)	UG/KG	3.6 U	3.8 UJ	3.6 UJ
p,p'-DDD	UG/KG	3.6 U	3.8 UJ	3.6 UJ
ENDOSULFAN SULFATE	UG/KG	3.6 U	3.8 UJ	3.6 UJ
p,p'-DDT	UG/KG	3.6 U	3.8 UJ	3.6 UJ
METHOXYCHLOR	UG/KG	19 U	19 UJ	19 UJ
ENDRIN ALDEHYDE	UG/KG	3.6 U	3.8 UJ	3.6 UJ
ALPHA-CHLORDANE	UG/KG	1.9 U	1.9 UJ	1.9 UJ
GAMMA-CHLORDANE	UG/KG	1.9 U	1.9 UJ	1.9 UJ
ENDRIN KETONE	UG/KG	3.6 U	3.8 UJ	3.6 UJ
TOXAPHENE	UG/KG	185 U	194 UJ	185 UJ
SEMI-VOLATILES				
bis(2-CHLOROETHYL) ETHER (2-CHLOROETHYL ETHER)	UG/KG	503 U	558 UJ	463 UJ
PHENOL	UG/KG	503 U	558 UJ	463 UJ
2-CHLOROPHENOL	UG/KG	503 U	558 UJ	463 UJ
1,3,5-TRINITROBENZENE	UG/KG	267 U	287 U	268 U
1,3-DICHLOROBENZENE	UG/KG	503 U	558 UJ	463 UJ
1,3-DINITROBENZENE	UG/KG	267 U	287 U	268 U
1,4-DICHLOROBENZENE	UG/KG	503 U	558 UJ	463 UJ
1,2-DICHLOROBENZENE	UG/KG	503 U	558 UJ	463 UJ
bis(2-CHLOROISOPROPYL) ETHER	UG/KG	503 U	558 UJ	463 UJ
2-METHYLPHENOL (o-CRESOL)	UG/KG	503 U	558 UJ	463 UJ
HEXACHLOROETHANE	UG/KG	503 U	558 UJ	463 UJ
N-NITROSODI-n-PROPYLAMINE	UG/KG	503 U	558 UJ	463 UJ
CRESOLS, m & p	UG/KG	503 U	558 UJ	463 UJ
NITROBENZENE	UG/KG	267 U	287 U	268 U
ISOPHORONE	UG/KG	503 U	558 UJ	463 UJ
2-NITROPHENOL	UG/KG	503 U	558 UJ	463 UJ
2,4-DIMETHYLPHENOL	UG/KG	503 U	558 UJ	463 UJ
bis(2-CHLOROETHOXY) METHANE	UG/KG	503 U	558 UJ	463 UJ
2,4-DICHLOROPHENOL	UG/KG	503 U	558 UJ	463 UJ
1,2,4-TRICHLOROBENZENE	UG/KG	503 U	558 UJ	463 UJ
NAPHTHALENE	UG/KG	503 U	558 UJ	463 UJ
4-CHLOROANILINE	UG/KG	503 U	558 UJ	463 UJ
2-METHYLNAPHTHALENE	UG/KG	503 U	558 UJ	463 UJ
HEXACHLOROBUTADIENE	UG/KG	503 U	558 UJ	463 UJ
4-CHLORO-3-METHYLPHENOL	UG/KG	503 U	558 UJ	463 UJ
HEXACHLOROCYCLOPENTADIENE	UG/KG	503 U	558 UJ	463 UJ
2,4,6-TRICHLOROPHENOL	UG/KG	503 U	558 UJ	463 UJ
2,4,5-TRICHLOROPHENOL	UG/KG	1510 U	1680 UJ	1390 UJ
2-CHLORONAPHTHALENE	UG/KG	503 U	558 UJ	463 UJ
2-NITROANILINE	UG/KG	1510 U	1680 UJ	1390 UJ
ACENAPHTHYLENE	UG/KG	503 U	558 UJ	463 UJ
DIMETHYL PHTHALATE	UG/KG	503 U	558 UJ	463 UJ
2,6-DINITROTOLUENE	UG/KG	267 U	287 U	268 U
ACENAPHTHENE	UG/KG	503 U	558 UJ	463 UJ
3-NITROANILINE	UG/KG	1510 U	1680 UJ	1390 UJ
2,4-DINITROPHENOL	UG/KG	1510 U	1680 UJ	1390 UJ
DIBENZOFURAN	UG/KG	503 U	558 UJ	463 UJ
2,4-DINITROTOLUENE	UG/KG	267 U	287 U	268 U

	Building	SWMU7	SWMU7	SWMU7
	StationID	W7-SD01	W7-SD02	W7-SD03
	SampleID	NDA047	NDA048	NDA049
	DateCollected	04/18/2000	04/18/2000	04/18/2000
	Depth	0 to 0.5	0 to 0.5	0 to 0.5
Parameter	**Units**			
4-NITROPHENOL	UG/KG	1510 U	1680 UJ	1390 UJ
FLUORENE	UG/KG	503 U	558 UJ	463 UJ
4-CHLOROPHENYL PHENYL ETHER	UG/KG	503 U	558 UJ	463 UJ
DIETHYL PHTHALATE	UG/KG	503 U	558 UJ	463 UJ
4-NITROANILINE	UG/KG	1510 U	1680 UJ	1390 UJ
4,6-DINITRO-2-METHYLPHENOL	UG/KG	1510 U	1680 UJ	1390 UJ
N-NITROSODIPHENYLAMINE	UG/KG	503 U	558 UJ	463 UJ
4-BROMOPHENYL PHENYL ETHER	UG/KG	503 U	558 UJ	463 UJ
HEXACHLOROBENZENE	UG/KG	503 U	558 UJ	463 UJ
PENTACHLOROPHENOL	UG/KG	1510 U	1680 UJ	1390 UJ
PHENANTHRENE	UG/KG	503 U	558 UJ	463 UJ
ANTHRACENE	UG/KG	503 U	558 UJ	463 UJ
DI-n-BUTYL PHTHALATE	UG/KG	503 U	558 UJ	463 UJ
FLUORANTHENE	UG/KG	503 U	558 UJ	463 UJ
PYRENE	UG/KG	503 U	558 UJ	463 UJ
BENZYL BUTYL PHTHALATE	UG/KG	503 U	558 UJ	463 UJ
3,3'-DICHLOROBENZIDINE	UG/KG	1010 U	1120 UJ	926 UJ
BENZO(a)ANTHRACENE	UG/KG	503 U	558 UJ	463 UJ
CHRYSENE	UG/KG	503 U	558 UJ	463 UJ
bis(2-ETHYLHEXYL) PHTHALATE	UG/KG	503 U	558 UJ	463 UJ
DI-n-OCTYLPHTHALATE	UG/KG	503 U	558 UJ	463 UJ
BENZO(b)FLUORANTHENE	UG/KG	503 U	558 UJ	463 UJ
BENZO(k)FLUORANTHENE	UG/KG	503 U	558 UJ	463 UJ
BENZO(a)PYRENE	UG/KG	503 U	558 UJ	463 UJ
INDENO(1,2,3-c,d)PYRENE	UG/KG	503 U	558 UJ	463 UJ
DIBENZ(a,h)ANTHRACENE	UG/KG	503 U	558 UJ	463 UJ
BENZO(g,h,i)PERYLENE	UG/KG	503 U	558 UJ	463 UJ
CARBAZOLE	UG/KG	503 U	558 UJ	463 UJ
VOLATILES				
CHLOROMETHANE	UG/KG	10 U	13 U	11 U
VINYL CHLORIDE	UG/KG	10 U	13 U	11 U
BROMOMETHANE	UG/KG	10 U	13 U	11 U
1,3-DICHLOROBENZENE	UG/KG	503 U	558 UJ	463 UJ
CHLOROETHANE	UG/KG	10 U	13 U	11 U
1,1-DICHLOROETHENE	UG/KG	10 U	13 U	11 U
1,4-DICHLOROBENZENE	UG/KG	503 U	558 UJ	463 UJ
1,2-DICHLOROBENZENE	UG/KG	503 U	558 UJ	463 UJ
CARBON DISULFIDE	UG/KG	10 U	13 U	11 U
METHYLENE CHLORIDE	UG/KG	10 U	13 U	11 U
1,1-DICHLOROETHANE	UG/KG	10 U	13 U	11 U
ACETONE	UG/KG	12500 R	21800 R	10000 R
METHYL ETHYL KETONE (2-BUTANONE)	UG/KG	10 R	13 R	11 R
CHLOROFORM	UG/KG	10 U	13 U	11 U
1,1,1-TRICHLOROETHANE	UG/KG	10 U	13 U	11 U
CARBON TETRACHLORIDE	UG/KG	10 U	13 U	11 U
BENZENE	UG/KG	10 U	13 U	11 U
1,2-DICHLOROETHANE	UG/KG	10 U	13 U	11 U
TRICHLOROETHYLENE (TCE)	UG/KG	10 U	13 U	11 U
1,2-DICHLOROPROPANE	UG/KG	10 U	13 U	11 U
1,2,4-TRICHLOROBENZENE	UG/KG	503 U	558 UJ	463 UJ
BROMODICHLOROMETHANE	UG/KG	10 U	13 U	11 U
cis-1,3-DICHLOROPROPENE	UG/KG	10 U	13 U	11 U
METHYL ISOBUTYL KETONE (4-METHYL-2-PENTANONE)	UG/KG	10 U	13 U	11 U

SWMU 07 Sediment Data

	Building	SWMU7	SWMU7	SWMU7
	StationID	W7-SD01	W7-SD02	W7-SD03
	SampleID	NDA047	NDA048	NDA049
	DateCollected	04/18/2000	04/18/2000	04/18/2000
	Depth	0 to 0.5	0 to 0.5	0 to 0.5
Parameter	Units			
TOLUENE	UG/KG	10 U	13 U	11 U
trans-1,3-DICHLOROPROPENE	UG/KG	10 U	13 U	11 U
1,1,2-TRICHLOROETHANE	UG/KG	10 U	13 U	11 U
TETRACHLOROETHYLENE(PCE)	UG/KG	10 U	13 U	11 U
2-HEXANONE	UG/KG	10 U	13 U	11 U
DIBROMOCHLOROMETHANE	UG/KG	10 U	13 U	11 U
CHLOROBENZENE	UG/KG	10 U	13 U	11 U
ETHYLBENZENE	UG/KG	10 U	13 U	11 U
M,P-XYLENE (SUM OF ISOMERS)	UG/KG	10 U	13 U	11 U
O-XYLENE (1,2-DIMETHYLBENZENE)	UG/KG	10 U	13 U	11 U
STYRENE	UG/KG	10 U	13 U	11 U
BROMOFORM	UG/KG	10 U	13 U	11 U
1,1,2,2-TETRACHLOROETHANE	UG/KG	10 U	13 UJ	11 U
XYLENES, TOTAL	UG/KG	10 U	13 U	11 U

SWMU 10 Surface Soil Data

Parameter	Units	Building	SWM10	SWM10	SWM10	SWM10	SWM10	SWM10	SWM10
		StationID	W10-SB01	W10-SB02	W10-SB02	W10-SB03	W10-SB04	W10-SB05	W10-SB06
		SampleID	NDA125	NDA127	NDA128FD1	NDA131	NDA133	NDA135	NDA137
		DateCollected	04/04/2000	04/04/2000	04/04/2000	04/04/2000	04/04/2000	04/04/2000	04/04/2000
		Depth	0 to 0.5	0 to 0.5	0 to 0.5	0 to 0.5	0 to 0.5	0 to 0.5	0 to 0.5
EXPLOSIVES									
2,6-DINITROTOLUENE	UG/KG		591 U	535 U	781 U	603 U	561 U	627 U	467 U
NITROBENZENE	UG/KG		591 U	535 U	781 U	603 U	561 U	627 U	467 U
2,4-DINITROTOLUENE	UG/KG		591 U	535 U	781 U	603 U	561 U	627 U	467 U
METALS									
ALUMINUM	MG/KG		6930 =	10000 =	10700 =	6460 =	7080 =	4610 =	4390 =
ANTIMONY	MG/KG		0.47 J	0.26 J	0.23 J	1.3 J	0.42 J	0.44 J	0.49 J
ARSENIC	MG/KG		1.1 J	1.1 J	1.2 J	1.4 J	1.3 J	1.4 J	6.4 =
BARIUM	MG/KG		65.8 =	94.4 =	113 =	299 =	96.4 =	77.1 =	115 =
BERYLLIUM	MG/KG		0.14 J	0.19 J	0.23 J	0.14 J	0.11 J	0.14 J	0.13 J
CADMIUM	MG/KG		0.023 U	0.022 U	0.025 U	0.023 U	0.023 U	0.024 U	0.021 U
CALCIUM	MG/KG		7330 =	4900 =	5470 =	4110 =	6500 =	3450 =	1840 =
CHROMIUM, TOTAL	MG/KG		12.5 =	32.4 =	32.9 =	35.3 =	32.9 =	8.3 =	8.1 =
COBALT	MG/KG		8.2 J	13.3 =	15 =	4.4 J	8.3 J	7.1 J	7 J
COPPER	MG/KG		35.1 =	35.4 =	41.8 =	66.9 =	49.7 =	52.3 =	86.8 =
IRON	MG/KG		12500 =	18200 =	20400 =	12900 =	13000 =	10100 =	10300 =
LEAD	MG/KG		16.4 =	17.4 =	23.3 =	97.7 =	96.8 =	22.6 =	31.3 =
MAGNESIUM	MG/KG		3860 =	6440 =	6150 =	2860 =	4420 =	1640 =	1350 =
MANGANESE	MG/KG		534 =	703 =	828 =	576 =	566 =	594 =	735 =
MERCURY	MG/KG		0.015 U	0.019 J	0.017 U	0.079 =	0.034 J	0.031 J	0.03 J
NICKEL	MG/KG		7.8 J	20.5 =	20.2 =	9.2 =	13 =	3.9 J	4.2 J
POTASSIUM	MG/KG		1600 =	1410 =	1800 =	1370 =	1020 J	1170 J	750 J
SELENIUM	MG/KG		0.61 J	0.6 J	0.93 J	0.56 J	0.7 J	0.58 J	0.58 J
SILVER	MG/KG		0.059 U	0.065 J	0.063 U	0.057 U	0.058 U	0.061 U	0.053 U
SODIUM	MG/KG		179 J	109 J	127 J	13.2 U	109 J	71.7 J	76 J
THALLIUM	MG/KG		0.35 J	1.2 J	1.1 J	0.31 U	0.62 J	0.35 J	0.54 J
VANADIUM	MG/KG		36.5 J	54.7 J	65.2 J	35.7 J	35.3 J	29.4 J	27.6 J
ZINC	MG/KG		67.7 =	68.4 =	88.2 =	1130 =	132 =	128 =	134 =
PCB									
PCB-1016 (AROCHLOR 1016)	UG/KG		39 U	36 U	41 U	37 U	38 U	40 U	35 U
PCB-1260 (AROCHLOR 1260)	UG/KG		39 U	36 U	41 U	37 U	38 U	40 U	35 U
PCB-1221 (AROCHLOR 1221)	UG/KG		79 U	73 U	83 U	76 U	78 U	82 U	71 U
PCB-1232 (AROCHLOR 1232)	UG/KG		39 U	36 U	41 U	37 U	38 U	40 U	35 U
PCB-1242 (AROCHLOR 1242)	UG/KG		39 U	36 U	41 U	37 U	38 U	40 U	35 U
PCB-1248 (AROCHLOR 1248)	UG/KG		39 U	36 U	41 U	37 U	38 U	40 U	35 U

SWMU 10 Surface Soil Data

Parameter	Units	Building	SWM10	SWM10	SWM10	SWM10
		StationID	W10-SB07	W10-SB08	W10-SB09	W10-SB10
		SampleID	NDA139	NDA141	NDA143	NDA145
		DateCollected	04/04/2000	04/04/2000	04/04/2000	04/04/2000
		Depth	0 to 0.5	0 to 0.5	0 to 0.5	0 to 0.5
EXPLOSIVES						
2,6-DINITROTOLUENE	UG/KG		514 U	677 U	530 U	495 U
NITROBENZENE	UG/KG		514 U	677 U	530 U	495 U
2,4-DINITROTOLUENE	UG/KG		514 U	677 U	530 U	495 U
METALS						
ALUMINUM	MG/KG		4130 =	3740 =	4070 =	4340 =
ANTIMONY	MG/KG		0.61 J	0.77 J	0.91 J	0.24 J
ARSENIC	MG/KG		2.8 =	4.4 =	0.7 J	0.74 J
BARIUM	MG/KG		114 =	110 =	105 =	65.5 =
BERYLLIUM	MG/KG		0.14 J	0.13 J	0.13 J	0.14 J
CADMIUM	MG/KG		0.021 U	0.026 U	0.021 U	0.022 U
CALCIUM	MG/KG		1630 =	1210 J	1150 =	1290 =
CHROMIUM, TOTAL	MG/KG		6.2 =	6.4 =	5.4 =	6 =
COBALT	MG/KG		6.8 J	7.5 J	5.6 J	6.5 J
COPPER	MG/KG		51.2 =	43 =	35.6 =	18.4 =
IRON	MG/KG		9250 =	8830 =	8190 =	8830 =
LEAD	MG/KG		22.2 =	17.7 =	34.2 =	8.3 =
MAGNESIUM	MG/KG		1390 =	1150 J	994 J	1290 =
MANGANESE	MG/KG		652 =	681 =	563 =	643 =
MERCURY	MG/KG		0.043 =	0.018 J	0.056 =	0.019 J
NICKEL	MG/KG		3.3 J	4.7 J	2.9 J	3.5 J
POTASSIUM	MG/KG		900 J	683 J	699 J	621 J
SELENIUM	MG/KG		0.4 J	0.7 J	0.42 J	0.57 J
SILVER	MG/KG		0.06 J	0.064 U	0.054 J	0.055 U
SODIUM	MG/KG		57.6 J	54.6 J	59.2 J	62.9 J
THALLIUM	MG/KG		0.4 J	0.45 J	0.62 J	0.52 J
VANADIUM	MG/KG		24.7 J	22.3 J	23.7 J	25.5 J
ZINC	MG/KG		117 =	110 =	93 =	38.4 =
PCB						
PCB-1016 (AROCHLOR 1016)	UG/KG		35 U	42 U	34 U	36 U
PCB-1260 (AROCHLOR 1260)	UG/KG		35 U	42 U	34 U	36 U
PCB-1221 (AROCHLOR 1221)	UG/KG		70 U	84 U	69 U	74 U
PCB-1232 (AROCHLOR 1232)	UG/KG		35 U	42 U	34 U	36 U
PCB-1242 (AROCHLOR 1242)	UG/KG		35 U	42 U	34 U	36 U
PCB-1248 (AROCHLOR 1248)	UG/KG		35 U	42 U	34 U	36 U

	Building	SWM10	SWM10	SWM10	SWM10	SWM10	SWM10	SWM10
	StationID	W10-SB01	W10-SB02	W10-SB02	W10-SB03	W10-SB04	W10-SB05	W10-SB06
	SampleID	NDA125	NDA127	NDA128FD1	NDA131	NDA133	NDA135	NDA137
	DateCollected	04/04/2000	04/04/2000	04/04/2000	04/04/2000	04/04/2000	04/04/2000	04/04/2000
	Depth	0 to 0.5	0 to 0.5	0 to 0.5	0 to 0.5	0 to 0.5	0 to 0.5	0 to 0.5
Parameter	**Units**							
PCB-1254 (AROCHLOR 1254)	UG/KG	39 U	36 U	41 U	37 U	38 U	40 U	35 U
PESTICIDES								
		UJ	UJ	UJ	UJ	UJ	UJ	UJ
ALPHA BHC	UG/KG	2	1.9	2.1	1.9	2	2.1	1.8
BETA BHC	UG/KG	2 U	1.9 U	2.1 U	1.9 U	2 U	2.1 U	1.8 U
DELTA BHC	UG/KG	2 U	1.9 U	2.1 U	1.9 U	2 U	2.1 U	1.8 U
		UJ	UJ	UJ	UJ	UJ	UJ	UJ
GAMMA BHC (LINDANE)	UG/KG	2	1.9	2.1	1.9	2	2.1	1.8
HEPTACHLOR	UG/KG	2 U	1.9 U	2.1 U	1.9 U	2 U	2.1 U	1.8 U
ALDRIN	UG/KG	2 U	1.9 U	2.1 U	1.9 U	2 U	2.1 U	1.8 U
HEPTACHLOR EPOXIDE	UG/KG	2 U	1.9 U	2.1 U	1.9 U	2 U	2.1 U	1.8 U
ALPHA ENDOSULFAN	UG/KG	2 U	1.9 U	2.1 U	1.9 U	2 U	2.1 U	1.8 U
DIELDRIN	UG/KG	3.9 U	3.6 U	4.2 U	3.8 U	3.9 U	4.1 U	3.5 U
p,p'-DDE	UG/KG	323 R	2.7 J	3.8 J	16 =	13 =	50 =	55 =
ENDRIN	UG/KG	3.9 U	3.6 U	4.2 U	3.8 U	3.9 U	4.1 U	3.5 U
BETA ENDOSULFAN	UG/KG	3.9 U	3.6 U	4.2 U	3.8 U	3.9 U	4.1 U	3.5 U
p,p'-DDD	UG/KG	3.9 U	3.6 U	4.2 U	3.8 U	3.9 U	0.77 J	0.8 J
ENDOSULFAN SULFATE	UG/KG	3.9 U	3.6 U	4.2 U	3.8 U	3.9 U	4.1 U	3.5 U
p,p'-DDT	UG/KG	140 R	4.4 =	4.2 =	10 J	9.4 J	44 =	26 =
		UJ	UJ	UJ	UJ	UJ	UJ	UJ
METHOXYCHLOR	UG/KG	20	19	21	19	20	21	18
ENDRIN ALDEHYDE	UG/KG	3.9 U	3.6 U	4.2 U	3.8 U	3.9 U	4.1 U	3.5 U
ALPHA-CHLORDANE	UG/KG	2 U	1.9 U	2.1 U	1.9 U	2 U	2.1 U	1.8 U
GAMMA-CHLORDANE	UG/KG	2 U	1.9 U	2.1 U	1.9 U	2 U	2.1 U	1.8 U
ENDRIN KETONE	UG/KG	3.9 U	3.6 U	4.2 U	3.8 U	3.9 U	4.1 U	3.5 U
TOXAPHENE	UG/KG	199 U	186 U	212 U	193 U	197 U	208 U	181 U
SEMI-VOLATILES								
bis(2-CHLOROETHYL) ETHER	UG/KG	591 U	535 U	781 U	603 U	561 U	627 U	467 U
PHENOL	UG/KG	591 U	535 U	781 U	603 U	561 U	627 U	467 U
2-CHLOROPHENOL	UG/KG	591 U	535 U	781 U	603 U	561 U	627 U	467 U
1,3-DICHLOROBENZENE	UG/KG	591 U	535 U	781 U	603 U	561 U	627 U	467 U
1,4-DICHLOROBENZENE	UG/KG	591 U	535 U	781 U	603 U	561 U	627 U	467 U
1,2-DICHLOROBENZENE	UG/KG	591 U	535 U	781 U	603 U	561 U	627 U	467 U
bis(2-CHLOROISOPROPYL) ETHER	UG/KG	591 U	535 U	781 U	603 U	561 U	627 U	467 U
2-METHYLPHENOL (o-CRESOL)	UG/KG	591 U	535 U	781 U	603 U	561 U	627 U	467 U

SWMU 10 Surface Soil Data

	Building	SWM10	SWM10	SWM10	SWM10
	StationID	W10-SB07	W10-SB08	W10-SB09	W10-SB10
	SampleID	NDA139	NDA141	NDA143	NDA145
	DateCollected	04/04/2000	04/04/2000	04/04/2000	04/04/2000
	Depth	0 to 0.5	0 to 0.5	0 to 0.5	0 to 0.5
Parameter	**Units**				
PCB-1254 (AROCHLOR 1254)	UG/KG	35 U	42 U	34 U	36 U
PESTICIDES					
		UJ	U	UJ	UJ
ALPHA BHC	UG/KG	1.8	2.1 J	1.7	1.9
BETA BHC	UG/KG	1.8 U	2.1 U	1.7 U	1.9 U
DELTA BHC	UG/KG	1.8 U	2.1 U	1.7 U	1.9 U
		UJ	U	UJ	UJ
GAMMA BHC (LINDANE)	UG/KG	1.8	2.1 J	1.7	1.9
HEPTACHLOR	UG/KG	1.8 U	2.1 U	1.7 U	1.9 U
ALDRIN	UG/KG	1.8 U	2.1 U	1.7 U	1.9 U
HEPTACHLOR EPOXIDE	UG/KG	1.8 U	2.1 U	1.7 U	1.9 U
ALPHA ENDOSULFAN	UG/KG	1.8 U	2.1 U	1.7 U	1.9 U
DIELDRIN	UG/KG	3.5 U	4.2 U	3.4 U	3.7 U
p,p'-DDE	UG/KG	10 =	1.2 J	14 =	4.9 =
ENDRIN	UG/KG	3.5 U	4.2 U	3.4 U	3.7 U
BETA ENDOSULFAN	UG/KG	3.5 U	4.2 U	3.4 U	3.7 U
p,p'-DDD	UG/KG	0.43 J	4.2 U	3.4 U	3.7 U
ENDOSULFAN SULFATE	UG/KG	3.5 U	4.2 U	3.4 U	3.7 U
p,p'-DDT	UG/KG	5.7 J	0.82 J	7.1 J	4.9 =
		UJ	U	UJ	UJ
METHOXYCHLOR	UG/KG	18	21 J	17	19
ENDRIN ALDEHYDE	UG/KG	3.5 U	4.2 U	3.4 U	3.7 U
ALPHA-CHLORDANE	UG/KG	1.8 U	2.1 U	1.7 U	1.9 U
GAMMA-CHLORDANE	UG/KG	1.8 U	2.1 U	1.7 U	1.9 U
ENDRIN KETONE	UG/KG	3.5 U	4.2 U	3.4 U	3.7 U
TOXAPHENE	UG/KG	178 U	214 U	175 U	187 U
SEMI-VOLATILES					
bis(2-CHLOROETHYL) ETHER	UG/KG	514 U	677 U	530 U	495 U
PHENOL	UG/KG	514 U	677 U	530 U	495 U
2-CHLOROPHENOL	UG/KG	514 U	677 U	530 U	495 U
1,3-DICHLOROBENZENE	UG/KG	514 U	677 U	530 U	495 U
1,4-DICHLOROBENZENE	UG/KG	514 U	677 U	530 U	495 U
1,2-DICHLOROBENZENE	UG/KG	514 U	677 U	530 U	495 U
bis(2-CHLOROISOPROPYL) ETHER	UG/KG	514 U	677 U	530 U	495 U
2-METHYLPHENOL (o-CRESOL)	UG/KG	514 U	677 U	530 U	495 U

	Building	SWM10	SWM10	SWM10	SWM10	SWM10	SWM10	SWM10
	StationID	W10-SB01	W10-SB02	W10-SB02	W10-SB03	W10-SB04	W10-SB05	W10-SB06
	SampleID	NDA125	NDA127	NDA128FD1	NDA131	NDA133	NDA135	NDA137
	DateCollected	04/04/2000	04/04/2000	04/04/2000	04/04/2000	04/04/2000	04/04/2000	04/04/2000
	Depth	0 to 0.5	0 to 0.5	0 to 0.5	0 to 0.5	0 to 0.5	0 to 0.5	0 to 0.5
Parameter	**Units**							
HEXACHLOROETHANE	UG/KG	591 U	535 U	781 U	603 U	561 U	627 U	467 U
N-NITROSODI-n-PROPYLAMINE	UG/KG	591 U	535 U	781 U	603 U	561 U	627 U	467 U
CRESOLS, m & p	UG/KG	591 U	535 U	781 U	603 U	561 U	627 U	467 U
NITROBENZENE	UG/KG	591 U	535 U	781 U	603 U	561 U	627 U	467 U
ISOPHORONE	UG/KG	591 U	535 U	781 U	603 U	561 U	627 U	467 U
2-NITROPHENOL	UG/KG	591 U	535 U	781 U	603 U	561 U	627 U	467 U
2,4-DIMETHYLPHENOL	UG/KG	591 U	535 U	781 U	603 U	561 U	627 U	467 U
bis(2-CHLOROETHOXY) METHANE	UG/KG	591 U	535 U	781 U	603 U	561 U	627 U	467 U
2,4-DICHLOROPHENOL	UG/KG	591 U	535 U	781 U	603 U	561 U	627 U	467 U
1,2,4-TRICHLOROBENZENE	UG/KG	591 U	535 U	781 U	603 U	561 U	627 U	467 U
NAPHTHALENE	UG/KG	591 U	535 U	781 U	603 U	561 U	627 U	467 U
4-CHLOROANILINE	UG/KG	591 U	535 U	781 U	603 U	561 U	627 U	467 U
2-METHYLNAPHTHALENE	UG/KG	591 U	535 U	781 U	603 U	561 U	627 U	467 U
HEXACHLOROBUTADIENE	UG/KG	591 U	535 U	781 U	603 U	561 U	627 U	467 U
4-CHLORO-3-METHYLPHENOL	UG/KG	591 U	535 U	781 U	603 U	561 U	627 U	467 U
HEXACHLOROCYCLOPENTADIENE	UG/KG	591 U	535 U	781 U	603 U	561 U	627 U	467 U
2,4,6-TRICHLOROPHENOL	UG/KG	591 U	535 U	781 U	603 U	561 U	627 U	467 U
2,4,5-TRICHLOROPHENOL	UG/KG	1760 U	1590 U	2320 U	1790 U	1670 U	1860 U	1390 U
2-CHLORONAPHTHALENE	UG/KG	591 U	535 U	781 U	603 U	561 U	627 U	467 U
2-NITROANILINE	UG/KG	1760 U	1590 U	2320 U	1790 U	1670 U	1860 U	1390 U
ACENAPHTHYLENE	UG/KG	591 U	535 U	781 U	603 U	561 U	627 U	467 U
DIMETHYL PHTHALATE	UG/KG	591 U	535 U	781 U	603 U	561 U	627 U	467 U
2,6-DINITROTOLUENE	UG/KG	591 U	535 U	781 U	603 U	561 U	627 U	467 U
ACENAPHTHENE	UG/KG	591 U	535 U	781 U	603 U	561 U	627 U	467 U
3-NITROANILINE	UG/KG	1760 U	1590 U	2320 U	1790 U	1670 U	1860 U	1390 U
2,4-DINITROPHENOL	UG/KG	1760 U	1590 U	2320 U	1790 U	1670 U	1860 U	1390 U
DIBENZOFURAN	UG/KG	591 U	535 U	781 U	603 U	561 U	627 U	467 U
2,4-DINITROTOLUENE	UG/KG	591 U	535 U	781 U	603 U	561 U	627 U	467 U
4-NITROPHENOL	UG/KG	1760 U	1590 U	2320 U	1790 U	1670 U	1860 U	1390 U
FLUORENE	UG/KG	591 U	535 U	781 U	603 U	561 U	627 U	467 U
4-CHLOROPHENYL PHENYL ETHER	UG/KG	591 U	535 U	781 U	603 U	561 U	627 U	467 U
DIETHYL PHTHALATE	UG/KG	591 U	535 U	781 U	603 U	561 U	627 U	467 U
4-NITROANILINE	UG/KG	1760 U	1590 U	2320 U	1790 U	1670 U	1860 U	1390 U
4,6-DINITRO-2-METHYLPHENOL	UG/KG	1760 U	1590 U	2320 U	1790 U	1670 U	1860 U	1390 U
N-NITROSODIPHENYLAMINE	UG/KG	591 U	535 U	781 U	603 U	561 U	627 U	467 U

SWMU 10 Surface Soil Data

	Building	SWM10	SWM10	SWM10	SWM10
	StationID	W10-SB07	W10-SB08	W10-SB09	W10-SB10
	SampleID	NDA139	NDA141	NDA143	NDA145
	DateCollected	04/04/2000	04/04/2000	04/04/2000	04/04/2000
	Depth	0 to 0.5	0 to 0.5	0 to 0.5	0 to 0.5
Parameter	**Units**				
HEXACHLOROETHANE	UG/KG	514 U	677 U	530 U	495 U
N-NITROSODI-n-PROPYLAMINE	UG/KG	514 U	677 U	530 U	495 U
CRESOLS, m & p	UG/KG	514 U	677 U	530 U	495 U
NITROBENZENE	UG/KG	514 U	677 U	530 U	495 U
ISOPHORONE	UG/KG	514 U	677 U	530 U	495 U
2-NITROPHENOL	UG/KG	514 U	677 U	530 U	495 U
2,4-DIMETHYLPHENOL	UG/KG	514 U	677 U	530 U	495 U
bis(2-CHLOROETHOXY) METHANE	UG/KG	514 U	677 U	530 U	495 U
2,4-DICHLOROPHENOL	UG/KG	514 U	677 U	530 U	495 U
1,2,4-TRICHLOROBENZENE	UG/KG	514 U	677 U	530 U	495 U
NAPHTHALENE	UG/KG	514 U	677 U	530 U	495 U
4-CHLOROANILINE	UG/KG	514 U	677 U	530 U	495 U
2-METHYLNAPHTHALENE	UG/KG	514 U	677 U	530 U	495 U
HEXACHLOROBUTADIENE	UG/KG	514 U	677 U	530 U	495 U
4-CHLORO-3-METHYLPHENOL	UG/KG	514 U	677 U	530 U	495 U
HEXACHLOROCYCLOPENTADIENE	UG/KG	514 U	677 U	530 U	495 U
2,4,6-TRICHLOROPHENOL	UG/KG	514 U	677 U	530 U	495 U
2,4,5-TRICHLOROPHENOL	UG/KG	1530 U	2010 U	1570 U	1470 U
2-CHLORONAPHTHALENE	UG/KG	514 U	677 U	530 U	495 U
2-NITROANILINE	UG/KG	1530 U	2010 U	1570 U	1470 U
ACENAPHTHYLENE	UG/KG	514 U	677 U	530 U	495 U
DIMETHYL PHTHALATE	UG/KG	514 U	677 U	530 U	495 U
2,6-DINITROTOLUENE	UG/KG	514 U	677 U	530 U	495 U
ACENAPHTHENE	UG/KG	514 U	677 U	530 U	495 U
3-NITROANILINE	UG/KG	1530 U	2010 U	1570 U	1470 U
2,4-DINITROPHENOL	UG/KG	1530 U	2010 U	1570 U	1470 U
DIBENZOFURAN	UG/KG	514 U	677 U	530 U	495 U
2,4-DINITROTOLUENE	UG/KG	514 U	677 U	530 U	495 U
4-NITROPHENOL	UG/KG	1530 U	2010 U	1570 U	1470 U
FLUORENE	UG/KG	514 U	677 U	530 U	495 U
4-CHLOROPHENYL PHENYL ETHER	UG/KG	514 U	677 U	530 U	495 U
DIETHYL PHTHALATE	UG/KG	198 J	85 J	124 J	495 U
4-NITROANILINE	UG/KG	1530 U	2010 U	1570 U	1470 U
4,6-DINITRO-2-METHYLPHENOL	UG/KG	1530 U	2010 U	1570 U	1470 U
N-NITROSODIPHENYLAMINE	UG/KG	514 U	677 U	530 U	495 U

	Building	SWM10	SWM10	SWM10	SWM10	SWM10	SWM10	SWM10
	StationID	W10-SB01	W10-SB02	W10-SB02	W10-SB03	W10-SB04	W10-SB05	W10-SB06
	SampleID	NDA125	NDA127	NDA128FD1	NDA131	NDA133	NDA135	NDA137
	DateCollected	04/04/2000	04/04/2000	04/04/2000	04/04/2000	04/04/2000	04/04/2000	04/04/2000
	Depth	0 to 0.5	0 to 0.5	0 to 0.5	0 to 0.5	0 to 0.5	0 to 0.5	0 to 0.5
Parameter	**Units**							
4-BROMOPHENYL PHENYL ETHER	UG/KG	591 U	535 U	781 U	603 U	561 U	627 U	467 U
HEXACHLOROBENZENE	UG/KG	591 U	535 U	781 U	603 U	561 U	627 U	467 U
PENTACHLOROPHENOL	UG/KG	1760 U	1590 U	2320 U	1790 U	1670 U	1860 U	1390 U
PHENANTHRENE	UG/KG	591 U	535 U	781 U	603 U	561 U	627 U	467 U
ANTHRACENE	UG/KG	591 U	535 U	781 U	603 U	561 U	627 U	467 U
DI-n-BUTYL PHTHALATE	UG/KG	591 U	535 U	781 U	603 U	561 U	627 U	467 U
FLUORANTHENE	UG/KG	591 U	535 U	781 U	603 U	561 U	627 U	467 U
PYRENE	UG/KG	591 U	535 U	781 U	603 U	561 U	627 U	467 U
BENZYL BUTYL PHTHALATE	UG/KG	591 U	63 J	781 U	603 U	561 U	627 U	467 U
3,3'-DICHLOROBENZIDINE	UG/KG	1180 U	1070 U	1560 U	1210 U	1120 U	1250 U	935 U
BENZO(a)ANTHRACENE	UG/KG	591 U	535 U	781 U	603 U	561 U	627 U	467 U
CHRYSENE	UG/KG	591 U	535 U	781 U	603 U	561 U	627 U	467 U
bis(2-ETHYLHEXYL) PHTHALATE	UG/KG	591 U	535 U	781 U	603 U	561 U	627 U	467 U
DI-n-OCTYLPHTHALATE	UG/KG	591 U	535 U	781 U	603 U	561 U	627 U	467 U
BENZO(b)FLUORANTHENE	UG/KG	591 U	535 U	781 U	603 U	43 J	627 U	467 U
BENZO(k)FLUORANTHENE	UG/KG	591 U	535 U	781 U	603 U	40 U	627 U	467 U
BENZO(a)PYRENE	UG/KG	591 U	535 U	781 U	603 U	40 J	627 U	467 U
INDENO(1,2,3-c,d)PYRENE	UG/KG	591 U	535 U	781 U	603 U	561 U	627 U	467 U
DIBENZ(a,h)ANTHRACENE	UG/KG	591 U	535 U	781 U	603 U	561 U	627 U	467 U
BENZO(g,h,i)PERYLENE	UG/KG	591 U	535 U	781 U	603 U	561 U	627 U	467 U
CARBAZOLE	UG/KG	591 U	535 U	781 U	603 U	561 U	627 U	467 U
VOLATILES								
		U	U	U	U	UJ	UJ	UJ
CHLOROMETHANE	UG/KG	18	10	17	12	16	14	11
		U	U	U	U	UJ	UJ	UJ
VINYL CHLORIDE	UG/KG	18	10	17	12	16	14	11
		U	U	U	U	UJ	UJ	UJ
BROMOMETHANE	UG/KG	18	10	17	12	16	14	11
1,3-DICHLOROBENZENE	UG/KG	591 U	535 U	781 U	603 U	561 U	627 U	467 U
		UJ	UJ	UJ	U	UJ	UJ	UJ
CHLOROETHANE	UG/KG	18	10	17	12	16	14	11
		U	U	U	U	UJ	UJ	UJ
1,1-DICHLOROETHENE	UG/KG	18	10	17	12	16	14	11
1,4-DICHLOROBENZENE	UG/KG	591 U	535 U	781 U	603 U	561 U	627 U	467 U
1,2-DICHLOROBENZENE	UG/KG	591 U	535 U	781 U	603 U	561 U	627 U	467 U

SWMU 10 Surface Soil Data

	Building	SWM10	SWM10	SWM10	SWM10
	StationID	W10-SB07	W10-SB08	W10-SB09	W10-SB10
	SampleID	NDA139	NDA141	NDA143	NDA145
	DateCollected	04/04/2000	04/04/2000	04/04/2000	04/04/2000
	Depth	0 to 0.5	0 to 0.5	0 to 0.5	0 to 0.5
Parameter	**Units**				
4-BROMOPHENYL PHENYL ETHER	UG/KG	514 U	677 U	530 U	495 U
HEXACHLOROBENZENE	UG/KG	514 U	677 U	530 U	495 U
PENTACHLOROPHENOL	UG/KG	1530 U	2010 U	1570 U	1470 U
PHENANTHRENE	UG/KG	514 U	677 U	530 U	495 U
ANTHRACENE	UG/KG	514 U	677 U	530 U	495 U
DI-n-BUTYL PHTHALATE	UG/KG	514 U	677 U	530 U	495 U
FLUORANTHENE	UG/KG	514 U	677 U	530 U	495 U
PYRENE	UG/KG	514 U	677 U	530 U	495 U
BENZYL BUTYL PHTHALATE	UG/KG	514 U	677 U	530 U	495 U
3,3'-DICHLOROBENZIDINE	UG/KG	1030 U	1350 U	1060 U	989 U
BENZO(a)ANTHRACENE	UG/KG	514 U	677 U	530 U	495 U
CHRYSENE	UG/KG	514 U	677 U	530 U	495 U
bis(2-ETHYLHEXYL) PHTHALATE	UG/KG	514 U	677 U	530 U	495 U
DI-n-OCTYLPHTHALATE	UG/KG	514 U	677 U	530 U	495 U
BENZO(b)FLUORANTHENE	UG/KG	514 U	677 U	530 U	495 U
BENZO(k)FLUORANTHENE	UG/KG	514 U	677 U	530 U	495 U
BENZO(a)PYRENE	UG/KG	514 U	677 U	530 U	495 U
INDENO(1,2,3-c,d)PYRENE	UG/KG	514 U	677 U	530 U	495 U
DIBENZ(a,h)ANTHRACENE	UG/KG	514 U	677 U	530 U	495 U
BENZO(g,h,i)PERYLENE	UG/KG	514 U	677 U	530 U	495 U
CARBAZOLE	UG/KG	514 U	677 U	530 U	495 U
VOLATILES					
		UJ	U	U	U
CHLOROMETHANE	UG/KG	11	14 J	10	13
		UJ	U	U	U
VINYL CHLORIDE	UG/KG	11	14 J	10	13
		UJ	U	U	U
BROMOMETHANE	UG/KG	11	14 J	10	13
1,3-DICHLOROBENZENE	UG/KG	514 U	677 U	530 U	495 U
		UJ	U	U	U
CHLOROETHANE	UG/KG	11	14 J	10	13
		UJ	U	U	U
1,1-DICHLOROETHENE	UG/KG	11	14 J	10	13
1,4-DICHLOROBENZENE	UG/KG	514 U	677 U	530 U	495 U
1,2-DICHLOROBENZENE	UG/KG	514 U	677 U	530 U	495 U

Parameter	Units	Building	SWM10	SWM10	SWM10	SWM10	SWM10	SWM10	SWM10
		StationID	W10-SB01	W10-SB02	W10-SB02	W10-SB03	W10-SB04	W10-SB05	W10-SB06
		SampleID	NDA125	NDA127	NDA128FD1	NDA131	NDA133	NDA135	NDA137
		DateCollected	04/04/2000	04/04/2000	04/04/2000	04/04/2000	04/04/2000	04/04/2000	04/04/2000
		Depth	0 to 0.5	0 to 0.5	0 to 0.5	0 to 0.5	0 to 0.5	0 to 0.5	0 to 0.5
			U	U	U	U	UJ	UJ	UJ
CARBON DISULFIDE	UG/KG		18	10	17	12	16	14	11
			U	U	U	U	UJ	UJ	UJ
METHYLENE CHLORIDE	UG/KG		18	10	17	12	16	14	11
			U	U	U	U	UJ	UJ	UJ
1,1-DICHLOROETHANE	UG/KG		18	10	17	12	16	14	11
ACETONE	UG/KG		25 R	16 R	19 R	577 R	16 R	14 R	11 R
METHYL ETHYL KETONE (2-BUTANONE)	UG/KG		18 R	10 R	17 R	12 R	16 R	14 R	11 R
			U	U	U	U	UJ	UJ	UJ
CHLOROFORM	UG/KG		18	10	17	12	16	14	11
			U	U	U	U	UJ	UJ	UJ
1,1,1-TRICHLOROETHANE	UG/KG		18	10	17	12	16	14	11
			U	U	U	U	UJ	UJ	UJ
CARBON TETRACHLORIDE	UG/KG		18	10	17	12	16	14	11
			U	U	U	U	UJ	UJ	UJ
BENZENE	UG/KG		18	10	17	12	16	14	11
			U	U	U	U	UJ	UJ	UJ
1,2-DICHLOROETHANE	UG/KG		18	10	17	12	16	14	11
			U	U	J	U	UJ	UJ	UJ
TRICHLOROETHYLENE (TCE)	UG/KG		18	10	0.8	12	16	14	11
			U	U	U	U	UJ	UJ	UJ
1,2-DICHLOROPROPANE	UG/KG		18	10	17	12	16	14	11
1,2,4-TRICHLOROBENZENE	UG/KG		591 U	535 U	781 U	603 U	561 U	627 U	467 U
			U	U	U	U	UJ	UJ	UJ
BROMODICHLOROMETHANE	UG/KG		18	10	17	12	16	14	11
			U	U	U	U	UJ	UJ	UJ
cis-1,3-DICHLOROPROPENE	UG/KG		18	10	17	12	16	14	11
			U	U	U	U	UJ	UJ	UJ
METHYL ISOBUTYL KETONE (4-METHYL-2	UG/KG		18	10	17	12	16	14	11
			U	U	U	J	J	J	UJ
TOLUENE	UG/KG		18	10	17	0.4	0.7	1	11
			U	U	U	U	UJ	UJ	UJ
trans-1,3-DICHLOROPROPENE	UG/KG		18	10	17	12	16	14	11
			U	U	U	U	UJ	UJ	UJ
1,1,2-TRICHLOROETHANE	UG/KG		18	10	17	12	16	14	11

SWMU 10 Surface Soil Data

	Building	SWM10	SWM10	SWM10	SWM10
	StationID	W10-SB07	W10-SB08	W10-SB09	W10-SB10
	SampleID	NDA139	NDA141	NDA143	NDA145
	DateCollected	04/04/2000	04/04/2000	04/04/2000	04/04/2000
	Depth	0 to 0.5	0 to 0.5	0 to 0.5	0 to 0.5
Parameter	Units				
CARBON DISULFIDE	UG/KG	11 UJ	14 J U	10 U	13 U
METHYLENE CHLORIDE	UG/KG	11 UJ	14 J U	10 U	13 U
1,1-DICHLOROETHANE	UG/KG	11 UJ	14 J U	10 U	13 U
ACETONE	UG/KG	11 R	14 R	10 R	51 R
METHYL ETHYL KETONE (2-BUTANONE)	UG/KG	11 R	14 R	10 R	13 R
CHLOROFORM	UG/KG	11 UJ	14 J U	10 U	13 U
1,1,1-TRICHLOROETHANE	UG/KG	11 UJ	14 J U	10 U	13 U
CARBON TETRACHLORIDE	UG/KG	11 UJ	14 J U	10 U	13 U
BENZENE	UG/KG	11 UJ	14 J U	10 U	13 U
1,2-DICHLOROETHANE	UG/KG	11 UJ	14 J U	10 U	13 U
TRICHLOROETHYLENE (TCE)	UG/KG	11 UJ	14 J U	10 U	13 U
1,2-DICHLOROPROPANE	UG/KG	11 UJ	14 J U	10 U	13 U
1,2,4-TRICHLOROBENZENE	UG/KG	514 U	677 U	530 U	495 U
BROMODICHLOROMETHANE	UG/KG	11 UJ	14 J U	10 U	13 U
cis-1,3-DICHLOROPROPENE	UG/KG	11 UJ	14 J U	10 U	13 U
METHYL ISOBUTYL KETONE (4-METHYL-2	UG/KG	11 UJ	14 J U	10 U	13 J
TOLUENE	UG/KG	0.4 UJ	14 J U	10 U	1 U
trans-1,3-DICHLOROPROPENE	UG/KG	11 UJ	14 J U	10 U	13 U
1,1,2-TRICHLOROETHANE	UG/KG	11	14 J	10	13

SWMU 10 Surface Soil Data

Parameter	Units	Building	SWM10	SWM10	SWM10	SWM10	SWM10	SWM10	SWM10
		StationID	W10-SB01	W10-SB02	W10-SB02	W10-SB03	W10-SB04	W10-SB05	W10-SB06
		SampleID	NDA125	NDA127	NDA128FD1	NDA131	NDA133	NDA135	NDA137
		DateCollected	04/04/2000	04/04/2000	04/04/2000	04/04/2000	04/04/2000	04/04/2000	04/04/2000
		Depth	0 to 0.5	0 to 0.5	0 to 0.5	0 to 0.5	0 to 0.5	0 to 0.5	0 to 0.5
TETRACHLOROETHYLENE(PCE)	UG/KG		U 18	U 10	U 17	U 12	UJ 16	UJ 14	UJ 11
2-HEXANONE	UG/KG		U 18	U 10	U 17	U 12	UJ 16	UJ 14	UJ 11
DIBROMOCHLOROMETHANE	UG/KG		U 18	U 10	U 17	U 12	UJ 16	UJ 14	UJ 11
CHLOROBENZENE	UG/KG		U 18	U 10	U 17	U 12	UJ 16	UJ 14	UJ 11
ETHYLBENZENE	UG/KG		U 18	U 10	U 17	U 12	UJ 16	UJ 14	UJ 11
M,P-XYLENE (SUM OF ISOMERS)	UG/KG		U 18	U 10	J 0.5	U 12	UJ 16	J 0.5	UJ 11
O-XYLENE (1,2-DIMETHYLBENZENE)	UG/KG		U 18	U 10	U 17	U 12	UJ 16	UJ 14	UJ 11
STYRENE	UG/KG		U 18	U 10	U 17	U 12	UJ 16	UJ 14	UJ 11
BROMOFORM	UG/KG		U 18	U 10	U 17	U 12	UJ 16	UJ 14	UJ 11
1,1,2,2-TETRACHLOROETHANE	UG/KG		U 18	U 10	U 17	U 12	UJ 16	UJ 14	UJ 11
XYLENES, TOTAL	UG/KG		U 18	U 10	J 0.5	U 12	UJ 16	J 0.5	UJ 11

SWMU 10 Surface Soil Data

Parameter	Units	Building	SWM10	SWM10	SWM10	SWM10
		StationID	W10-SB07	W10-SB08	W10-SB09	W10-SB10
		SampleID	NDA139	NDA141	NDA143	NDA145
		DateCollected	04/04/2000	04/04/2000	04/04/2000	04/04/2000
		Depth	0 to 0.5	0 to 0.5	0 to 0.5	0 to 0.5
TETRACHLOROETHYLENE(PCE)	UG/KG		11 UJ	14 J U	10 U	13 U
2-HEXANONE	UG/KG		11 UJ	14 J U	10 U	13 U
DIBROMOCHLOROMETHANE	UG/KG		11 UJ	14 J U	10 U	13 U
CHLOROBENZENE	UG/KG		11 UJ	14 J U	10 U	13 U
ETHYLBENZENE	UG/KG		11 UJ	14 J U	10 U	13 U
M,P-XYLENE (SUM OF ISOMERS)	UG/KG		11 UJ	14 J U	10 U	13 U
O-XYLENE (1,2-DIMETHYLBENZENE)	UG/KG		11 UJ	14 J U	10 U	13 U
STYRENE	UG/KG		11 UJ	14 J U	10 U	13 U
BROMOFORM	UG/KG		11 UJ	14 J U	10 U	13 U
1,1,2,2-TETRACHLOROETHANE	UG/KG		11 UJ	14 J U	10 U	13 U
XYLENES, TOTAL	UG/KG		11	14 J	10	13

SWMU 14 Groundwater Data

	Building	SWM14	SWM14
	StationID	SWMU14-MW01	SWMU14-MW02
	SampleID	NDA014	NDA013
	DateCollected	04/28/2000	04/28/2000
	Depth	0 to 0	0 to 0
Parameter	**Units**		
DISSOLVED METALS			
ALUMINUM, DISSOLVED	UG/L	25.8 U	28 J
ANTIMONY, DISSOLVED	UG/L	1.4 U	2.1 J
ARSENIC, DISSOLVED	UG/L	3.4 U	3.4 U
BARIUM, DISSOLVED	UG/L	88.8 J	90.2 J
BERYLLIUM, DISSOLVED	UG/L	0.3 U	0.3 U
CALCIUM, DISSOLVED	UG/L	51600 =	58700 =
CADMIUM, DISSOLVED	UG/L	0.2 U	0.2 U
CHROMIUM, DISSOLVED	UG/L	1.6 J	1.8 J
COBALT, DISSOLVED	UG/L	0.5 U	0.94 J
COPPER, DISSOLVED	UG/L	3.5 J	1.9 U
IRON, DISSOLVED	UG/L	12.2 =	12.2 =
LEAD, DISSOLVED	UG/L	1.2 J	1.1 U
MAGNESIUM, DISSOLVED	UG/L	25700 =	23200 =
MANGANESE, DISSOLVED	UG/L	84 =	1160 =
MERCURY, DISSOLVED	UG/L	0.18 U	0.18 U
NICKEL, DISSOLVED	UG/L	0.8 U	12.4 J
POTASSIUM, DISSOLVED	UG/L	3060 J	3250 J
SELENIUM, DISSOLVED	UG/L	2.1 U	2.1 U
SILVER, DISSOLVED	UG/L	0.5 U	0.5 U
SODIUM, DISSOLVED	UG/L	118000 J	96100 J
THALLIUM, DISSOLVED	UG/L	2.7 U	2.7 U
VANADIUM, DISSOLVED	UG/L	20.2 J	15.3 J
ZINC, DISSOLVED	UG/L	3.4 J	3 J
EXPLOSIVES			
2,6-DINITROTOLUENE	UG/L	5 U	5 U
NITROBENZENE	UG/L	5 U	5 U
2,4-DINITROTOLUENE	UG/L	5 U	5 U
METALS			
ALUMINUM	UG/L	152 J	26100 =
ANTIMONY	UG/L	1.4 U	2.3 J
ARSENIC	UG/L	3.4 U	3.4 U
BARIUM	UG/L	91.6 J	250 =
BERYLLIUM	UG/L	0.3 U	0.3 U
CADMIUM	UG/L	0.2 U	0.2 U
CALCIUM	UG/L	49600 =	86300 =
CHROMIUM, TOTAL	UG/L	3.3 J	68 =
COBALT	UG/L	0.5 U	22 J
COPPER	UG/L	1.9 U	70.1 =
IRON	UG/L	147 J	32100 J
LEAD	UG/L	1.1 U	5.1 =
MAGNESIUM	UG/L	24800 =	35700 =
MANGANESE	UG/L	97 =	1820 =
MERCURY	UG/L	0.18 U	0.18 U
NICKEL	UG/L	1.5 J	40 J
POTASSIUM	UG/L	3120 J	5680 J
SELENIUM	UG/L	2.1 U	5.2 =
SILVER	UG/L	0.5 U	0.5 U
SODIUM	UG/L	116000 J	108000 J
THALLIUM	UG/L	2.7 U	2.7 U
VANADIUM	UG/L	20.2 J	108 =

SWMU 14 Groundwater Data

	Building	SWM14	SWM14
	StationID	SWMU14-MW01	SWMU14-MW02
	SampleID	NDA014	NDA013
	DateCollected	04/28/2000	04/28/2000
	Depth	0 to 0	0 to 0
Parameter	**Units**		
ZINC	UG/L	3.8 J	92 =
PCB			
PCB-1016 (AROCHLOR 1016)	UG/L	0.2 U	0.23 U
PCB-1260 (AROCHLOR 1260)	UG/L	0.2 U	0.23 U
PCB-1221 (AROCHLOR 1221)	UG/L	0.41 U	0.46 U
PCB-1232 (AROCHLOR 1232)	UG/L	0.2 U	0.23 U
PCB-1242 (AROCHLOR 1242)	UG/L	0.2 U	0.23 U
PCB-1248 (AROCHLOR 1248)	UG/L	0.2 U	0.23 U
PCB-1254 (AROCHLOR 1254)	UG/L	0.2 U	0.23 U
PESTICIDES			
ALPHA BHC	UG/L	0.01 UJ	0.01 UJ
BETA BHC	UG/L	0.01 U	0.01 U
DELTA BHC	UG/L	0.01 U	0.01 U
GAMMA BHC (LINDANE)	UG/L	0.01 UJ	0.01 UJ
HEPTACHLOR	UG/L	0.01 U	0.01 U
ALDRIN	UG/L	0.01 U	0.01 U
HEPTACHLOR EPOXIDE	UG/L	0.01 U	0.01 U
ALPHA ENDOSULFAN	UG/L	0.01 U	0.01 U
DIELDRIN	UG/L	0.01 J	0.02 U
p,p'-DDE	UG/L	0.02 U	0.02 U
ENDRIN	UG/L	0.02 U	0.02 U
BETA ENDOSULFAN	UG/L	0.02 U	0.02 U
p,p'-DDD	UG/L	0.02 U	0.02 U
ENDOSULFAN SULFATE	UG/L	0.02 U	0.02 U
p,p'-DDT	UG/L	0.02 U	0.02 U
METHOXYCHLOR	UG/L	0.1 U	0.11 U
ENDRIN ALDEHYDE	UG/L	0.02 U	0.02 U
ALPHA-CHLORDANE	UG/L	0.01 U	0.01 U
GAMMA-CHLORDANE	UG/L	0.01 U	0.01 U
ENDRIN KETONE	UG/L	0.02 U	0.02 U
TOXAPHENE	UG/L	1 U	1.1 U
SEMI-VOLATILES			
bis(2-CHLOROETHYL) ETHER	UG/L	5 U	5 U
PHENOL	UG/L	5 U	5 U
2-CHLOROPHENOL	UG/L	5 U	5 U
1,3-DICHLOROBENZENE	UG/L	1 U	1 U
1,4-DICHLOROBENZENE	UG/L	1 U	1 U
1,2-DICHLOROBENZENE	UG/L	1 U	1 U
bis(2-CHLOROISOPROPYL) ETHER	UG/L	5 U	5 U
2-METHYLPHENOL (o-CRESOL)	UG/L	5 U	5 U
HEXACHLOROETHANE	UG/L	5 U	5 U
N-NITROSODI-n-PROPYLAMINE	UG/L	5 U	5 U
CRESOLS, m & p	UG/L	5 U	5 U
NITROBENZENE	UG/L	5 U	5 U
ISOPHORONE	UG/L	5 U	5 U
2-NITROPHENOL	UG/L	5 U	5 U
2,4-DIMETHYLPHENOL	UG/L	5 U	5 U
bis(2-CHLOROETHOXY) METHANE	UG/L	5 U	5 U
2,4-DICHLOROPHENOL	UG/L	5 U	5 U
1,2,4-TRICHLOROBENZENE	UG/L	1 U	1 U
NAPHTHALENE	UG/L	5 U	5 U

SWMU 14 Groundwater Data

	Building	SWM14	SWM14
	StationID	SWMU14-MW01	SWMU14-MW02
	SampleID	NDA014	NDA013
	DateCollected	04/28/2000	04/28/2000
	Depth	0 to 0	0 to 0
Parameter	**Units**		
4-CHLOROANILINE	UG/L	5 U	5 U
2-METHYLNAPHTHALENE	UG/L	5 U	5 U
HEXACHLOROBUTADIENE	UG/L	5 U	5 U
4-CHLORO-3-METHYLPHENOL	UG/L	5 U	5 U
HEXACHLOROCYCLOPENTADIENE	UG/L	5 U	5 U
2,4,6-TRICHLOROPHENOL	UG/L	5 U	5 U
2,4,5-TRICHLOROPHENOL	UG/L	22 U	22 U
2-CHLORONAPHTHALENE	UG/L	5 U	5 U
2-NITROANILINE	UG/L	22 U	22 U
ACENAPHTHYLENE	UG/L	5 U	5 U
DIMETHYL PHTHALATE	UG/L	5 U	5 U
2,6-DINITROTOLUENE	UG/L	5 U	5 U
ACENAPHTHENE	UG/L	5 U	5 U
3-NITROANILINE	UG/L	22 U	22 U
2,4-DINITROPHENOL	UG/L	22 U	22 U
DIBENZOFURAN	UG/L	5 U	5 U
2,4-DINITROTOLUENE	UG/L	5 U	5 U
4-NITROPHENOL	UG/L	22 U	22 U
FLUORENE	UG/L	5 U	5 U
4-CHLOROPHENYL PHENYL ETHER	UG/L	5 U	5 U
DIETHYL PHTHALATE	UG/L	5 U	5 U
4-NITROANILINE	UG/L	22 U	22 U
4,6-DINITRO-2-METHYLPHENOL	UG/L	22 U	22 U
N-NITROSODIPHENYLAMINE	UG/L	5 U	5 U
4-BROMOPHENYL PHENYL ETHER	UG/L	5 U	5 U
HEXACHLOROBENZENE	UG/L	5 U	5 U
PENTACHLOROPHENOL	UG/L	22 U	22 U
PHENANTHRENE	UG/L	5 U	5 U
ANTHRACENE	UG/L	5 U	5 U
DI-n-BUTYL PHTHALATE	UG/L	5 U	5 U
FLUORANTHENE	UG/L	5 U	5 U
PYRENE	UG/L	5 U	5 U
BENZYL BUTYL PHTHALATE	UG/L	5 U	5 U
3,3'-DICHLOROBENZIDINE	UG/L	5 U	5 U
BENZO(a)ANTHRACENE	UG/L	5 U	5 U
CHRYSENE	UG/L	5 U	5 U
bis(2-ETHYLHEXYL) PHTHALATE	UG/L	5 U	5 U
DI-n-OCTYLPHTHALATE	UG/L	5 U	5 U
BENZO(b)FLUORANTHENE	UG/L	5 U	5 U
BENZO(k)FLUORANTHENE	UG/L	5 U	5 U
BENZO(a)PYRENE	UG/L	5 U	5 U
INDENO(1,2,3-c,d)PYRENE	UG/L	5 U	5 U
DIBENZ(a,h)ANTHRACENE	UG/L	5 U	5 U
BENZO(g,h,i)PERYLENE	UG/L	5 U	5 U
CARBAZOLE	UG/L	5 U	5 U
VOLATILES			
CHLOROMETHANE	UG/L	1 U	1 U
VINYL CHLORIDE	UG/L	1 U	1 U
BROMOMETHANE	UG/L	1 U	1 U
1,3-DICHLOROBENZENE	UG/L	1 U	1 U
CHLOROETHANE	UG/L	1 U	1 U

SWMU 14 Groundwater Data

	Building	SWM14		SWM14	
	StationID	SWMU14-MW01		SWMU14-MW02	
	SampleID	NDA014		NDA013	
	DateCollected	04/28/2000		04/28/2000	
	Depth	0 to 0		0 to 0	
Parameter	**Units**				
1,1-DICHLOROETHENE	UG/L	1	U	1	U
1,4-DICHLOROBENZENE	UG/L	1	U	1	U
1,2-DICHLOROBENZENE	UG/L	1	U	1	U
CARBON DISULFIDE	UG/L	1	U	1	U
METHYLENE CHLORIDE	UG/L	2	U	2	U
1,1-DICHLOROETHANE	UG/L	1	U	1	U
ACETONE	UG/L	5	U	5	U
METHYL ETHYL KETONE (2-BUTANONE)	UG/L	5	U	5	U
CHLOROFORM	UG/L	1	U	1	U
1,1,1-TRICHLOROETHANE	UG/L	1	U	1	U
CARBON TETRACHLORIDE	UG/L	1	U	1	U
BENZENE	UG/L	1	U	1	U
1,2-DICHLOROETHANE	UG/L	1	U	1	U
TRICHLOROETHYLENE (TCE)	UG/L	1	U	1	U
1,2-DICHLOROPROPANE	UG/L	1	U	1	U
1,2,4-TRICHLOROBENZENE	UG/L	1	U	1	U
BROMODICHLOROMETHANE	UG/L	1	U	1	U
cis-1,3-DICHLOROPROPENE	UG/L	1	U	1	U
METHYL ISOBUTYL KETONE (4-METHYL-2-	UG/L	5	U	5	U
TOLUENE	UG/L	1	U	1	U
trans-1,3-DICHLOROPROPENE	UG/L	1	U	1	U
1,1,2-TRICHLOROETHANE	UG/L	1	U	1	U
TETRACHLOROETHYLENE(PCE)	UG/L	1	U	1	U
2-HEXANONE	UG/L	5	U	5	U
DIBROMOCHLOROMETHANE	UG/L	1	U	1	U
CHLOROBENZENE	UG/L	1	U	1	U
ETHYLBENZENE	UG/L	1	U	1	U
M,P-XYLENE (SUM OF ISOMERS)	UG/L	1	U	1	U
O-XYLENE (1,2-DIMETHYLBENZENE)	UG/L	1	U	1	U
STYRENE	UG/L	1	U	1	U
BROMOFORM	UG/L	1	U	1	U
1,1,2,2-TETRACHLOROETHANE	UG/L	1	U	1	U
XYLENES, TOTAL	UG/L	1	U	1	U
BROMOCHLOROMETHANE	UG/L	1	U	1	U
1,2-DIBROMO-3-CHLOROPROPANE	UG/L	1	U	1	U
cis-1,2-DICHLOROETHYLENE	UG/L	1	U	1	U
trans-1,2-DICHLOROETHENE	UG/L	1	U	1	U
TOTAL 1,2-DICHLOROETHENE	UG/L	1	U	1	U
ETHYLENE DIBROMIDE (1,2-DIBROMOET	UG/L	1	U	1	U

SWMU 14 Sediment Data

	Building	SWM14	SWM14	SWM14	SWM14
	StationID	W14-SD01	W14-SD01	W14-SD02	W14-SD03
	SampleID	NDA050	NDA051FD1	NDA052	NDA053
	DateCollected	04/06/2000	04/06/2000	04/06/2000	04/06/2000
	Depth	0 to 0.5	0 to 0.5	0 to 0.5	0 to 1
Parameter	**Units**				
EXPLOSIVES					
2,6-DINITROTOLUENE	UG/KG	6260 U	6080 U	6960 U	3680 U
NITROBENZENE	UG/KG	6260 U	6080 U	6960 U	3680 U
2,4-DINITROTOLUENE	UG/KG	6260 U	6080 U	6960 U	3680 U
METALS					
ALUMINUM	MG/KG	22300 =	21300 =	18600 =	13500 =
ANTIMONY	MG/KG	2.1 J	1.5 J	1.6 J	0.49 J
ARSENIC	MG/KG	2.9 J	3.9 J	3.9 J	3.1 =
BARIUM	MG/KG	144 =	145 =	132 =	85.1 =
BERYLLIUM	MG/KG	0.4 J	0.38 J	0.33 J	0.21 J
CADMIUM	MG/KG	5.9 =	5.7 =	6.5 =	2.5 =
CALCIUM	MG/KG	25100 =	22400 =	26000 =	41000 =
CHROMIUM, TOTAL	MG/KG	38.9 =	42.2 =	51.2 =	33.4 =
COBALT	MG/KG	18.9 J	18.5 J	17 J	13.5 J
COPPER	MG/KG	130 =	144 =	158 =	79.5 =
IRON	MG/KG	38100 =	37400 =	34700 =	28400 =
LEAD	MG/KG	54.1 =	67.4 =	111 =	30.6 =
MAGNESIUM	MG/KG	10500 =	10000 =	9020 =	8870 =
MANGANESE	MG/KG	607 J	595 J	555 J	478 J
MERCURY	MG/KG	0.37 =	0.29 =	0.23 =	0.052 J
NICKEL	MG/KG	18.2 J	18.6 J	17.2 J	16.6 =
POTASSIUM	MG/KG	2650 =	2520 =	2120 J	1400 J
SELENIUM	MG/KG	0.92 J	1 J	1.2 J	0.32 U
SILVER	MG/KG	0.12 U	0.12 U	0.12 U	0.14 J
SODIUM	MG/KG	422 J	432 J	390 J	345 J
THALLIUM	MG/KG	0.67 J	1.7 J	0.67 U	0.41 U
VANADIUM	MG/KG	100 =	100 =	96.7 =	79.4 =
ZINC	MG/KG	448 J	490 J	513 J	213 J
PCB					
PCB-1016 (AROCHLOR 1016)	UG/KG	76 UJ	81 UJ	82 UJ	49 UJ
PCB-1260 (AROCHLOR 1260)	UG/KG	76 UJ	81 UJ	82 UJ	49 UJ
PCB-1221 (AROCHLOR 1221)	UG/KG	154 UJ	165 UJ	165 UJ	100 UJ
PCB-1232 (AROCHLOR 1232)	UG/KG	76 UJ	81 UJ	82 UJ	49 UJ
PCB-1242 (AROCHLOR 1242)	UG/KG	76 UJ	81 UJ	82 UJ	49 UJ
PCB-1248 (AROCHLOR 1248)	UG/KG	76 UJ	81 UJ	82 UJ	49 UJ
PCB-1254 (AROCHLOR 1254)	UG/KG	76 UJ	81 UJ	82 UJ	49 UJ
PESTICIDES					
ALPHA BHC	UG/KG	20 UJ	21 UJ	21 UJ	13 UJ
BETA BHC	UG/KG	20 UJ	21 UJ	21 UJ	13 UJ
DELTA BHC	UG/KG	20 UJ	21 UJ	21 UJ	13 UJ
GAMMA BHC (LINDANE)	UG/KG	20 UJ	21 UJ	21 UJ	13 UJ
HEPTACHLOR	UG/KG	20 UJ	21 UJ	21 UJ	13 UJ
ALDRIN	UG/KG	20 UJ	21 UJ	21 UJ	13 UJ
HEPTACHLOR EPOXIDE	UG/KG	20 UJ	21 UJ	21 UJ	13 UJ
ALPHA ENDOSULFAN	UG/KG	20 UJ	21 UJ	21 UJ	13 UJ
DIELDRIN	UG/KG	38 UJ	41 UJ	41 UJ	25 UJ
p,p'-DDE	UG/KG	12 J	4.2 J	41 UJ	6.2 J
ENDRIN	UG/KG	38 UJ	41 UJ	41 UJ	25 UJ
BETA ENDOSULFAN	UG/KG	38 UJ	41 UJ	41 UJ	25 UJ
p,p'-DDD	UG/KG	38 UJ	41 UJ	41 UJ	25 UJ
ENDOSULFAN SULFATE	UG/KG	38 UJ	41 UJ	41 UJ	25 UJ

SWMU 14 Sediment Data

	Building	SWM14	SWM14	SWM14	SWM14
	StationID	W14-SD01	W14-SD01	W14-SD02	W14-SD03
	SampleID	NDA050	NDA051FD1	NDA052	NDA053
	DateCollected	04/06/2000	04/06/2000	04/06/2000	04/06/2000
	Depth	0 to 0.5	0 to 0.5	0 to 0.5	0 to 1
Parameter	**Units**				
p,p'-DDT	UG/KG	13 J	41 UJ	41 UJ	25 UJ
METHOXYCHLOR	UG/KG	196 UJ	209 UJ	210 UJ	127 UJ
ENDRIN ALDEHYDE	UG/KG	38 UJ	41 UJ	41 UJ	25 UJ
ALPHA-CHLORDANE	UG/KG	20 UJ	21 UJ	21 UJ	13 UJ
GAMMA-CHLORDANE	UG/KG	20 UJ	21 UJ	21 UJ	13 UJ
ENDRIN KETONE	UG/KG	38 UJ	41 UJ	41 UJ	25 UJ
TOXAPHENE	UG/KG	1960 UJ	2090 UJ	2100 UJ	1270 UJ
bis(2-CHLOROETHYL) ETHER (2-CHLOR	UG/KG	6260 U	6080 U	6960 U	3680 U
bis(2-CHLOROETHYL) ETHER	UG/KG	6260 U	6080 U	6960 U	3680 U
2-CHLOROPHENOL	UG/KG	6260 U	6080 U	6960 U	3680 U
1,3-DICHLOROBENZENE	UG/KG	6260 U	6080 U	6960 U	3680 U
1,4-DICHLOROBENZENE	UG/KG	6260 U	6080 U	6960 U	3680 U
1,2-DICHLOROBENZENE	UG/KG	6260 U	6080 U	6960 U	3680 U
bis(2-CHLOROISOPROPYL) ETHER	UG/KG	6260 U	6080 U	6960 U	3680 U
2-METHYLPHENOL (o-CRESOL)	UG/KG	6260 U	6080 U	6960 U	3680 U
HEXACHLOROETHANE	UG/KG	6260 U	6080 U	6960 U	3680 U
N-NITROSODI-n-PROPYLAMINE	UG/KG	6260 U	6080 U	6960 U	3680 U
CRESOLS, m & p	UG/KG	6260 U	6080 U	6960 U	3680 U
NITROBENZENE	UG/KG	6260 U	6080 U	6960 U	3680 U
ISOPHORONE	UG/KG	6260 U	6080 U	6960 U	3680 U
2-NITROPHENOL	UG/KG	6260 U	6080 U	6960 U	3680 U
2,4-DIMETHYLPHENOL	UG/KG	6260 U	6080 U	6960 U	3680 U
bis(2-CHLOROETHOXY) METHANE	UG/KG	6260 U	6080 U	6960 U	3680 U
2,4-DICHLOROPHENOL	UG/KG	6260 U	6080 U	6960 U	3680 U
1,2,4-TRICHLOROBENZENE	UG/KG	6260 U	6080 U	6960 U	3680 U
NAPHTHALENE	UG/KG	2980 J	1840 J	1100 J	284 J
4-CHLOROANILINE	UG/KG	6260 U	6080 U	6960 U	3680 U
2-METHYLNAPHTHALENE	UG/KG	4480 J	2410 J	2540 J	517 J
HEXACHLOROBUTADIENE	UG/KG	6260 U	6080 U	6960 U	3680 U
4-CHLORO-3-METHYLPHENOL	UG/KG	6260 U	6080 U	6960 U	3680 U
HEXACHLOROCYCLOPENTADIENE	UG/KG	6260 U	6080 U	6960 U	3680 U
2,4,6-TRICHLOROPHENOL	UG/KG	6260 U	6080 U	6960 U	3680 U
2,4,5-TRICHLOROPHENOL	UG/KG	18600 U	18100 U	20700 U	10900 U
2-CHLORONAPHTHALENE	UG/KG	6260 U	6080 U	6960 U	3680 U
2-NITROANILINE	UG/KG	18600 U	18100 U	20700 U	10900 U
ACENAPHTHYLENE	UG/KG	6260 U	6080 U	6960 U	3680 U
DIMETHYL PHTHALATE	UG/KG	6260 U	6080 U	6960 U	3680 U
2,6-DINITROTOLUENE	UG/KG	6260 U	6080 U	6960 U	3680 U
ACENAPHTHENE	UG/KG	6260 U	6080 U	6960 U	3680 U
3-NITROANILINE	UG/KG	18600 U	18100 U	20700 U	10900 U
2,4-DINITROPHENOL	UG/KG	18600 U	18100 U	20700 U	10900 U
DIBENZOFURAN	UG/KG	6260 U	6080 U	6960 U	3680 U
2,4-DINITROTOLUENE	UG/KG	6260 U	6080 U	6960 U	3680 U
4-NITROPHENOL	UG/KG	18600 U	18100 U	20700 U	10900 U
FLUORENE	UG/KG	6260 U	6080 U	6960 U	3680 U
4-CHLOROPHENYL PHENYL ETHER	UG/KG	6260 U	6080 U	6960 U	3680 U
DIETHYL PHTHALATE	UG/KG	6260 U	6080 U	6960 U	3680 U
4-NITROANILINE	UG/KG	18600 U	18100 U	20700 U	10900 U
4,6-DINITRO-2-METHYLPHENOL	UG/KG	18600 U	18100 U	20700 U	10900 U
N-NITROSODIPHENYLAMINE	UG/KG	6260 U	6080 U	6960 U	3680 U
4-BROMOPHENYL PHENYL ETHER	UG/KG	6260 U	6080 U	6960 U	3680 U

	Building	SWM14	SWM14	SWM14	SWM14
	StationID	W14-SD01	W14-SD01	W14-SD02	W14-SD03
	SampleID	NDA050	NDA051FD1	NDA052	NDA053
	DateCollected	04/06/2000	04/06/2000	04/06/2000	04/06/2000
	Depth	0 to 0.5	0 to 0.5	0 to 0.5	0 to 1
Parameter	**Units**				
HEXACHLOROBENZENE	UG/KG	6260 U	6080 U	6960 U	3680 U
PENTACHLOROPHENOL	UG/KG	18600 U	18100 U	20700 U	10900 U
PHENANTHRENE	UG/KG	1160 J	560 J	908 J	216 J
ANTHRACENE	UG/KG	6260 U	6080 U	6960 U	3680 U
DI-n-BUTYL PHTHALATE	UG/KG	6260 U	6080 U	6960 U	3680 U
FLUORANTHENE	UG/KG	6260 U	6080 U	6960 U	3680 U
PYRENE	UG/KG	507 J	6080 U	398 J	3680 U
BENZYL BUTYL PHTHALATE	UG/KG	6260 U	6080 U	6960 U	3680 U
3,3'-DICHLOROBENZIDINE	UG/KG	12500 U	12200 U	13900 U	7360 U
BENZO(a)ANTHRACENE	UG/KG	6260 U	6080 U	6960 U	3680 U
CHRYSENE	UG/KG	6260 U	6080 U	6960 U	3680 U
bis(2-ETHYLHEXYL) PHTHALATE	UG/KG	8850 J	4030 J	9370 =	3880 =
DI-n-OCTYLPHTHALATE	UG/KG	6260 U	6080 U	6960 U	3680 U
BENZO(b)FLUORANTHENE	UG/KG	6260 U	6080 U	6960 U	3680 U
BENZO(k)FLUORANTHENE	UG/KG	6260 U	6080 U	6960 U	3680 U
BENZO(a)PYRENE	UG/KG	6260 U	6080 U	6960 U	3680 U
INDENO(1,2,3-c,d)PYRENE	UG/KG	6260 U	6080 U	6960 U	3680 U
DIBENZ(a,h)ANTHRACENE	UG/KG	6260 U	6080 U	6960 U	3680 U
BENZO(g,h,i)PERYLENE	UG/KG	6260 U	6080 U	6960 U	3680 U
CARBAZOLE	UG/KG	6260 U	6080 U	6960 U	3680 U
VOLATILES					
CHLOROMETHANE	UG/KG	2160 UJ	23 UJ	20 UJ	14 UJ
VINYL CHLORIDE	UG/KG	2160 UJ	23 UJ	20 UJ	14 UJ
BROMOMETHANE	UG/KG	2160 UJ	23 UJ	20 UJ	14 UJ
1,3-DICHLOROBENZENE	UG/KG	6260 U	6080 U	6960 U	3680 U
CHLOROETHANE	UG/KG	2160 UJ	23 UJ	20 UJ	14 UJ
1,1-DICHLOROETHENE	UG/KG	2160 UJ	23 UJ	20 UJ	14 UJ
1,4-DICHLOROBENZENE	UG/KG	6260 U	6080 U	6960 U	3680 U
1,2-DICHLOROBENZENE	UG/KG	6260 U	6080 U	6960 U	3680 U
CARBON DISULFIDE	UG/KG	2160 UJ	7 J	5 J	3 J
METHYLENE CHLORIDE	UG/KG	2160 UJ	23 UJ	20 UJ	14 UJ
1,1-DICHLOROETHANE	UG/KG	2160 UJ	23 UJ	20 UJ	14 UJ
ACETONE	UG/KG	2160 R	296 R	540 R	139 R
METHYL ETHYL KETONE (2-BUTANONE)	UG/KG	2160 R	23 R	29 J	25 J
CHLOROFORM	UG/KG	2160 UJ	23 UJ	20 UJ	14 UJ
1,1,1-TRICHLOROETHANE	UG/KG	2160 UJ	23 UJ	20 UJ	14 UJ
CARBON TETRACHLORIDE	UG/KG	2160 UJ	23 UJ	20 UJ	14 UJ
BENZENE	UG/KG	2160 UJ	6 J	5 J	3 J
1,2-DICHLOROETHANE	UG/KG	2160 UJ	23 UJ	20 UJ	14 UJ
TRICHLOROETHYLENE (TCE)	UG/KG	2160 UJ	23 UJ	20 UJ	14 UJ
1,2-DICHLOROPROPANE	UG/KG	2160 UJ	23 UJ	20 UJ	14 UJ
1,2,4-TRICHLOROBENZENE	UG/KG	6260 U	6080 U	6960 U	3680 U
BROMODICHLOROMETHANE	UG/KG	2160 UJ	23 UJ	20 UJ	14 UJ
cis-1,3-DICHLOROPROPENE	UG/KG	2160 UJ	23 UJ	20 UJ	14 UJ
METHYL ISOBUTYL KETONE (4-METHYL-2	UG/KG	2160 UJ	63 J	18 J	10 J
TOLUENE	UG/KG	2160 UJ	10 J	5 J	2 J
trans-1,3-DICHLOROPROPENE	UG/KG	2160 UJ	23 UJ	20 UJ	14 UJ
1,1,2-TRICHLOROETHANE	UG/KG	2160 UJ	23 UJ	20 UJ	14 UJ
TETRACHLOROETHYLENE(PCE)	UG/KG	2160 UJ	23 UJ	20 UJ	14 UJ
2-HEXANONE	UG/KG	2160 UJ	23 UJ	20 UJ	14 UJ
DIBROMOCHLOROMETHANE	UG/KG	2160 UJ	23 UJ	20 UJ	14 UJ

SWMU 14 Sediment Data

	Building	SWM14	SWM14	SWM14	SWM14
	StationID	W14-SD01	W14-SD01	W14-SD02	W14-SD03
	SampleID	NDA050	NDA051FD1	NDA052	NDA053
	DateCollected	04/06/2000	04/06/2000	04/06/2000	04/06/2000
	Depth	0 to 0.5	0 to 0.5	0 to 0.5	0 to 1
Parameter	**Units**				
CHLOROBENZENE	UG/KG	2160 UJ	23 UJ	20 UJ	14 UJ
ETHYLBENZENE	UG/KG	451 J	1030 R	32 J	155 R
M,P-XYLENE (SUM OF ISOMERS)	UG/KG	2160 UJ	22 J	18 J	7 J
O-XYLENE (1,2-DIMETHYLBENZENE)	UG/KG	2160 UJ	11 J	7 J	4 J
STYRENE	UG/KG	2160 UJ	23 UJ	20 UJ	14 UJ
BROMOFORM	UG/KG	2160 UJ	23 UJ	20 UJ	14 UJ
1,1,2,2-TETRACHLOROETHANE	UG/KG	2160 UJ	23 UJ	20 UJ	14 UJ
XYLENES, TOTAL	UG/KG	2160 UJ	33 =	24 =	11 J

Parameter	Units	Building	SWM14	SWM14	SWM14	SWM14	SWM14	SWM14	SWM14	SWM14
		StationID	W14-SB01	W14-SB02	W14-SB02	W14-SB03	W14-SB04	W14-SB05	W14-SB06	W14-SB07
		SampleID	NDA147	NDA149	NDA150FD1	NDA153	NDA155	NDA157	NDA159	NDA161
		DateCollected	04/05/2000	04/05/2000	04/05/2000	04/05/2000	04/05/2000	04/05/2000	04/05/2000	04/05/2000
		Depth	0 to 0.5	0 to 0.5	0 to 0.5	0 to 0.5	0 to 0.5	0 to 0.5	0 to 0.5	0 to 0.5
EXPLOSIVES										
2,6-DINITROTOLUENE	UG/KG		471 U	556 U	514 U	4990 U	591 U	552 U	409 U	524 U
NITROBENZENE	UG/KG		471 U	556 U	514 U	4990 U	591 U	552 U	409 U	524 U
2,4-DINITROTOLUENE	UG/KG		471 U	556 U	514 U	4990 U	591 U	552 U	409 U	524 U
METALS										
ALUMINUM	MG/KG		7140 =	6900 =	6680 =	6460 =	4900 =	6320 =	4910 =	5960 =
ANTIMONY	MG/KG		0.2 J	0.36 J	0.26 J	0.17 J	0.2 J	0.21 J	0.33 J	0.61 J
ARSENIC	MG/KG		0.65 J	1.5 J	1.5 J	0.48 J	0.39 U	0.52 J	0.5 J	1.2 J
BARIUM	MG/KG		43.8 =	53.5 =	52.1 =	59.3 =	55.8 =	27.4 J	84.2 =	53.5 =
BERYLLIUM	MG/KG		0.11 J	0.13 J	0.12 J	0.16 J	0.15 J	0.072 J	0.12 J	0.098 J
CADMIUM	MG/KG		0.41 J	0.6 J	0.31 J	0.073 J	0.023 U	0.02 U	0.12 J	2 =
CALCIUM	MG/KG		13400 =	19800 =	20400 =	11100 =	1710 =	10100 =	2970 =	27600 =
CHROMIUM, TOTAL	MG/KG		10 J	16.1 J	74.6 J	9.7 J	5.3 J	18 J	5.8 J	17.1 J
COBALT	MG/KG		7 J	7.9 J	8.1 J	7 J	7.6 J	6.1 J	8.6 J	7.7 J
COPPER	MG/KG		36.4 =	47.2 =	42.3 =	34.8 =	14.3 =	25.7 =	20.1 =	77.8 =
IRON	MG/KG		13800 =	15500 =	22300 =	14900 =	7490 =	10300 =	9130 =	12600 =
LEAD	MG/KG		15.3 =	12.7 =	22.1 =	10 =	2.5 =	20.5 =	11.2 =	43.6 =
MAGNESIUM	MG/KG		4870 =	5080 =	4920 =	3320 =	1380 =	4660 =	1760 =	4660 =
MANGANESE	MG/KG		449 J	374 J	392 J	375 J	607 J	263 J	792 J	369 J
MERCURY	MG/KG		0.11 =	0.011 U	0.011 U	0.025 J	0.012 U	0.013 U	0.03 J	0.14 =
NICKEL	MG/KG		7 J	7.6 J	7.4 J	5.5 J	3.9 J	8.3 =	3.8 J	7.5 J
POTASSIUM	MG/KG		778 J	1000 J	1130 =	1160 =	740 J	460 J	1130 =	747 J
SELENIUM	MG/KG		0.58 J	0.43 J	0.73 J	0.4 J	0.36 J	0.3 J	0.64 J	0.39 J
SILVER	MG/KG		0.052 U	0.054 U	0.051 U	0.054 U	0.057 U	0.056 J	0.052 U	0.052 U
SODIUM	MG/KG		186 J	204 J	263 J	149 J	128 J	241 J	50.6 J	267 J
THALLIUM	MG/KG		1.2 J	0.77 J	1 J	0.57 J	0.52 J	0.27 U	0.7 J	0.4 J
VANADIUM	MG/KG		32.1 =	39.1 =	38.6 =	36 =	19.7 =	26.4 =	25.4 =	33.5 =
ZINC	MG/KG		68.6 =	94 J	333 J	55.7 =	16.5 =	44.7 =	33.5 =	139 =
PCB										
PCB-1016 (AROCHLOR 1016)	UG/KG		34 U	36 U	34 U	35 U	37 U	33 U	34 U	34 U
PCB-1260 (AROCHLOR 1260)	UG/KG		34 U	36 U	34 U	35 U	37 U	33 U	34 U	34 U
PCB-1221 (AROCHLOR 1221)	UG/KG		70 U	73 U	69 U	71 U	76 U	67 U	69 U	70 U
PCB-1232 (AROCHLOR 1232)	UG/KG		34 U	36 U	34 U	35 U	37 U	33 U	34 U	34 U
PCB-1242 (AROCHLOR 1242)	UG/KG		34 U	36 U	34 U	35 U	37 U	33 U	34 U	34 U
PCB-1248 (AROCHLOR 1248)	UG/KG		34 U	36 U	34 U	35 U	37 U	33 U	34 U	34 U
PCB-1254 (AROCHLOR 1254)	UG/KG		34 U	36 U	34 U	35 U	37 U	33 U	34 U	34 U
PESTICIDES										
ALPHA BHC	UG/KG		1.8 UJ	1.9 UJ	1.7 UJ	1.8 UJ	1.9 UJ	1.7 UJ	1.8 UJ	1.8 UJ
BETA BHC	UG/KG		1.8 U	1.9 U	1.7 U	1.8 U	1.9 U	1.7 U	1.8 U	1.8 U

SWMU 14 Subsurface Soil Data

	Building	SWM14	SWM14	SWM14	SWM14	SWM14	SWM14	SWM14
	StationID	W14-SB08	W14-SB09	W14-SB10	W14-SB11	W14-SB12	W14-SB13	W14-SB14
	SampleID	NDA164	NDA166	NDA168	NDA170	NDA172	NDA174	NDA176
	DateCollected	04/06/2000	04/06/2000	04/06/2000	04/06/2000	04/06/2000	04/06/2000	04/06/2000
	Depth	0 to 0.5	0 to 0.5	0 to 0.5	0 to 0.5	0 to 0.5	0 to 0.5	0 to 0.5
Parameter	**Units**							
EXPLOSIVES								
2,6-DINITROTOLUENE	UG/KG	621 U	604 U	579 U	636 U	475 U	535 U	699 U
NITROBENZENE	UG/KG	621 U	604 U	579 U	636 U	475 U	535 U	699 U
2,4-DINITROTOLUENE	UG/KG	621 U	604 U	579 U	636 U	475 U	535 U	699 U
METALS								
ALUMINUM	MG/KG	13400 =	10400 =	13600 =	11000 =	5970 =	5330 =	16300 =
ANTIMONY	MG/KG	0.18 J	0.17 UJ	0.74 J	0.58 J	0.38 J	0.15 UJ	0.57 J
ARSENIC	MG/KG	1.5 J	0.58 J	1.7 J	1.3 J	0.76 J	0.4 J	3 =
BARIUM	MG/KG	73.8 =	63.6 =	97.1 =	78 =	51.3 =	67.7 =	159 =
BERYLLIUM	MG/KG	0.25 J	0.21 J	0.19 J	0.19 J	0.13 J	0.12 J	0.27 J
CADMIUM	MG/KG	1.2 J	0.025 U	3.2 =	1.8 =	0.54 J	0.021 U	0.34 J
CALCIUM	MG/KG	3150 =	16600 =	25100 =	18300 =	5900 =	2720 =	71200 =
CHROMIUM, TOTAL	MG/KG	20.7 =	10 =	31.5 =	29.5 =	12.2 =	7.6 =	20 =
COBALT	MG/KG	12.5 =	8.2 J	11.8 =	11.4 J	6.8 J	7.7 J	10 J
COPPER	MG/KG	44.5 =	25.3 =	96.6 =	72.5 =	38.7 =	20.7 =	66.1 =
IRON	MG/KG	24500 =	18300 =	24600 =	21600 =	14200 =	12300 =	28300 =
LEAD	MG/KG	44.1 =	8.1 =	55.9 =	70.7 =	39.6 =	10 =	12.7 =
MAGNESIUM	MG/KG	3520 =	3280 =	6910 =	5600 =	2340 =	1320 =	4250 =
MANGANESE	MG/KG	710 J	435 J	506 J	587 J	544 J	907 J	419 J
MERCURY	MG/KG	0.054 =	0.04 =	0.074 =	0.086 =	0.015 U	0.03 J	0.018 U
NICKEL	MG/KG	8 J	3.9 J	16.4 =	10 =	4.9 J	4.1 J	9 J
POTASSIUM	MG/KG	1590 =	1140 J	1160 J	1480 =	885 J	782 J	2740 =
SELENIUM	MG/KG	0.57 J	0.4 J	0.45 J	0.47 J	0.23 U	0.56 J	0.29 U
SILVER	MG/KG	0.062 U	0.062 U	0.059 U	0.06 U	0.054 U	0.053 U	0.096 J
SODIUM	MG/KG	102 J	171 J	475 J	243 J	101 J	95.6 J	337 J
THALLIUM	MG/KG	1.7 J	0.45 J	0.32 U	0.43 J	0.4 J	0.58 J	0.38 U
VANADIUM	MG/KG	68 =	53.3 =	69.1 =	61.3 =	36.9 =	37.2 =	74.3 =
ZINC	MG/KG	136 J	48.2 J	229 J	172 J	73.8 J	48.5 J	94.3 J
PCB								
PCB-1016 (AROCHLOR 1016)	UG/KG	41 UJ	41 UJ	38 UJ	40 UJ	35 UJ	34 UJ	92 UJ
PCB-1260 (AROCHLOR 1260)	UG/KG	41 UJ	41 UJ	38 UJ	40 UJ	35 UJ	34 UJ	92 UJ
PCB-1221 (AROCHLOR 1221)	UG/KG	82 UJ	83 UJ	78 UJ	80 UJ	72 UJ	70 UJ	188 UJ
PCB-1232 (AROCHLOR 1232)	UG/KG	41 UJ	41 UJ	38 UJ	40 UJ	35 UJ	34 UJ	92 UJ
PCB-1242 (AROCHLOR 1242)	UG/KG	41 UJ	41 UJ	38 UJ	40 UJ	35 UJ	34 UJ	92 UJ
PCB-1248 (AROCHLOR 1248)	UG/KG	41 UJ	41 UJ	38 UJ	40 UJ	35 UJ	34 UJ	92 UJ
PCB-1254 (AROCHLOR 1254)	UG/KG	41 UJ	41 UJ	38 UJ	40 UJ	35 UJ	34 UJ	92 UJ
PESTICIDES								
ALPHA BHC	UG/KG	2.1 UJ	2.1 UJ	2 UJ	2 UJ	1.8 UJ	1.8 UJ	4.8 UJ
BETA BHC	UG/KG	2.1 UJ	2.1 UJ	2 UJ	2 UJ	1.8 UJ	1.8 UJ	4.8 UJ

	Building	SWM14	SWM14	SWM14	SWM14	SWM14	SWM14	SWM14	SWM14
	StationID	W14-SB01	W14-SB02	W14-SB02	W14-SB03	W14-SB04	W14-SB05	W14-SB06	W14-SB07
	SampleID	NDA147	NDA149	NDA150FD1	NDA153	NDA155	NDA157	NDA159	NDA161
	DateCollected	04/05/2000	04/05/2000	04/05/2000	04/05/2000	04/05/2000	04/05/2000	04/05/2000	04/05/2000
	Depth	0 to 0.5	0 to 0.5	0 to 0.5	0 to 0.5	0 to 0.5	0 to 0.5	0 to 0.5	0 to 0.5
Parameter	**Units**								
DELTA BHC	UG/KG	1.8 UJ	1.9 U	1.7 U	1.8 UJ	1.9 U	1.7 U	1.8 U	1.8 U
GAMMA BHC (LINDANE)	UG/KG	1.8 UJ	1.9 UJ	1.7 UJ	1.8 UJ	1.9 UJ	1.7 UJ	1.8 UJ	1.8 UJ
HEPTACHLOR	UG/KG	1.8 U	1.9 U	1.7 U	1.8 U	1.9 U	1.7 U	1.8 U	1.8 U
ALDRIN	UG/KG	1.8 U	1.9 U	1.7 U	1.8 U	1.9 U	1.7 U	1.8 U	1.8 U
HEPTACHLOR EPOXIDE	UG/KG	1.8 U	1.9 U	1.7 U	1.8 U	1.9 U	1.7 U	1.8 U	1.8 U
ALPHA ENDOSULFAN	UG/KG	1.8 U	1.9 U	1.7 U	1.8 U	1.9 U	1.7 U	1.8 U	1.8 U
DIELDRIN	UG/KG	3.5 U	3.6 U	3.4 U	3.5 U	3.8 U	3.4 U	3.4 U	3.5 U
p,p'-DDE	UG/KG	0.5 J	0.77 J	0.64 J	3.5 U	3.8 U	3 J	3.4 U	0.69 J
ENDRIN	UG/KG	3.5 U	3.6 UJ	3.4 UJ	3.5 U	3.8 UJ	3.4 UJ	3.4 UJ	3.5 UJ
BETA ENDOSULFAN	UG/KG	3.5 U	3.6 U	3.4 U	3.5 U	3.8 U	3.4 U	3.4 U	3.5 U
p,p'-DDD	UG/KG	3.5 U	3.6 U	3.4 U	3.5 U	3.8 U	0.68 J	3.4 U	3.5 U
ENDOSULFAN SULFATE	UG/KG	3.5 U	3.6 U	3.4 U	3.5 U	3.8 U	3.4 U	3.4 U	3.5 U
p,p'-DDT	UG/KG	3.5 UJ	3.6 U	3.4 U	3.5 UJ	3.8 U	3.4 U	3.4 U	3.5 U
METHOXYCHLOR	UG/KG	18 UJ	1.2 J	17 UJ	18 UJ	19 UJ	17 UJ	18 UJ	18 UJ
ENDRIN ALDEHYDE	UG/KG	3.5 U	3.6 U	3.4 U	3.5 U	3.8 U	3.4 U	3.4 U	3.5 U
ALPHA-CHLORDANE	UG/KG	1.8 U	1.9 U	1.7 U	1.8 U	1.9 U	1.7 U	1.8 U	1.8 U
GAMMA-CHLORDANE	UG/KG	1.8 U	1.9 U	1.7 U	1.8 U	1.9 U	1.7 U	1.8 U	1.8 U
ENDRIN KETONE	UG/KG	3.5 U	3.6 U	3.4 U	3.5 U	3.8 U	3.4 U	3.4 U	3.5 U
TOXAPHENE	UG/KG	177 U	185 U	174 U	181 U	192 U	171 U	175 U	177 U
SEMI-VOLATILES									
bis(2-CHLOROETHYL) ETHER	UG/KG	471 U	556 U	514 U	4990 U	591 U	552 U	409 U	524 U
PHENOL	UG/KG	471 U	556 U	514 U	4990 U	591 U	552 U	409 U	524 U
2-CHLOROPHENOL	UG/KG	471 U	556 U	514 U	4990 U	591 U	552 U	409 U	524 U
1,3-DICHLOROBENZENE	UG/KG	471 U	556 U	514 U	4990 U	591 U	552 U	409 U	524 U
1,4-DICHLOROBENZENE	UG/KG	471 U	556 U	514 U	4990 U	591 U	552 U	409 U	524 U
1,2-DICHLOROBENZENE	UG/KG	471 U	556 U	514 U	4990 U	591 U	552 U	409 U	524 U
bis(2-CHLOROISOPROPYL) ETHER	UG/KG	471 U	556 U	514 U	4990 U	591 U	552 U	409 U	524 U
2-METHYLPHENOL (o-CRESOL)	UG/KG	471 U	556 U	514 U	4990 U	591 U	552 U	409 U	524 U
HEXACHLOROETHANE	UG/KG	471 U	556 U	514 U	4990 U	591 U	552 U	409 U	524 U
N-NITROSODI-n-PROPYLAMINE	UG/KG	471 U	556 U	514 U	4990 U	591 U	552 U	409 U	524 U
CRESOLS, m & p	UG/KG	471 U	556 U	514 U	4990 U	591 U	552 U	409 U	524 U
NITROBENZENE	UG/KG	471 U	556 U	514 U	4990 U	591 U	552 U	409 U	524 U
ISOPHORONE	UG/KG	471 U	556 U	514 U	4990 U	591 U	552 U	409 U	524 U
2-NITROPHENOL	UG/KG	471 U	556 U	514 U	4990 U	591 U	552 U	409 U	524 U
2,4-DIMETHYLPHENOL	UG/KG	471 U	556 U	514 U	4990 U	591 U	552 U	409 U	524 U
bis(2-CHLOROETHOXY) METHANE	UG/KG	471 U	556 U	514 U	4990 U	591 U	552 U	409 U	524 U
2,4-DICHLOROPHENOL	UG/KG	471 U	556 U	514 U	4990 U	591 U	552 U	409 U	524 U
1,2,4-TRICHLOROBENZENE	UG/KG	471 U	556 U	514 U	4990 U	591 U	552 U	409 U	524 U
NAPHTHALENE	UG/KG	471 U	556 U	514 U	4990 U	591 U	552 U	409 U	524 U

SWMU 14 Subsurface Soil Data

	Building	SWM14	SWM14	SWM14	SWM14	SWM14	SWM14	SWM14
	StationID	W14-SB08	W14-SB09	W14-SB10	W14-SB11	W14-SB12	W14-SB13	W14-SB14
	SampleID	NDA164	NDA166	NDA168	NDA170	NDA172	NDA174	NDA176
	DateCollected	04/06/2000	04/06/2000	04/06/2000	04/06/2000	04/06/2000	04/06/2000	04/06/2000
	Depth	0 to 0.5	0 to 0.5	0 to 0.5	0 to 0.5	0 to 0.5	0 to 0.5	0 to 0.5
Parameter	**Units**							
DELTA BHC	UG/KG	2.1 UJ	2.1 UJ	2 UJ	2 UJ	1.8 UJ	1.8 UJ	4.8 UJ
GAMMA BHC (LINDANE)	UG/KG	2.1 UJ	2.1 UJ	2 UJ	2 UJ	1.8 UJ	1.8 UJ	4.8 UJ
HEPTACHLOR	UG/KG	2.1 UJ	2.1 UJ	2 UJ	2 UJ	1.8 UJ	1.8 UJ	4.8 UJ
ALDRIN	UG/KG	2.1 UJ	2.1 UJ	2 UJ	2 UJ	1.8 UJ	1.8 UJ	4.8 UJ
HEPTACHLOR EPOXIDE	UG/KG	2.1 UJ	2.1 UJ	2 UJ	2 UJ	1.8 UJ	1.8 UJ	4.8 UJ
ALPHA ENDOSULFAN	UG/KG	2.1 UJ	2.1 UJ	2 UJ	2 UJ	1.8 UJ	1.8 UJ	4.8 UJ
DIELDRIN	UG/KG	4.1 UJ	4.1 UJ	0.45 J	4 UJ	3.6 UJ	3.5 UJ	9.3 UJ
p,p'-DDE	UG/KG	4.1 UJ	4.1 UJ	3.9 UJ	0.77 J	3.6 UJ	1 J	9.3 UJ
ENDRIN	UG/KG	4.1 UJ	4.1 UJ	3.9 UJ	4 UJ	3.6 UJ	3.5 UJ	9.3 UJ
BETA ENDOSULFAN	UG/KG	4.1 UJ	4.1 UJ	3.9 UJ	4 UJ	3.6 UJ	3.5 UJ	9.3 UJ
p,p'-DDD	UG/KG	4.1 UJ	4.1 UJ	3.9 UJ	4 UJ	3.6 UJ	3.5 UJ	9.3 UJ
ENDOSULFAN SULFATE	UG/KG	4.1 UJ	4.1 UJ	3.9 UJ	4 UJ	3.6 UJ	3.5 UJ	9.3 UJ
p,p'-DDT	UG/KG	4.1 UJ	4.1 UJ	3.9 UJ	4 UJ	3.6 UJ	3.5 UJ	9.3 UJ
METHOXYCHLOR	UG/KG	21 UJ	21 UJ	20 UJ	20 UJ	18 UJ	18 UJ	48 UJ
ENDRIN ALDEHYDE	UG/KG	4.1 UJ	4.1 UJ	3.9 UJ	4 UJ	3.6 UJ	3.5 UJ	9.3 UJ
ALPHA-CHLORDANE	UG/KG	2.1 UJ	2.1 UJ	2 UJ	2 UJ	1.8 UJ	1.8 UJ	4.8 UJ
GAMMA-CHLORDANE	UG/KG	2.1 UJ	2.1 UJ	2 UJ	2 UJ	1.8 UJ	1.8 UJ	4.8 UJ
ENDRIN KETONE	UG/KG	4.1 UJ	4.1 UJ	3.9 UJ	4 UJ	3.6 UJ	3.5 UJ	9.3 UJ
TOXAPHENE	UG/KG	209 UJ	211 UJ	197 UJ	204 UJ	182 UJ	177 UJ	476 UJ
SEMI-VOLATILES								
bis(2-CHLOROETHYL) ETHER	UG/KG	621 U	604 U	579 U	636 U	475 U	535 U	699 U
PHENOL	UG/KG	621 U	604 U	579 U	636 U	475 U	535 U	699 U
2-CHLOROPHENOL	UG/KG	621 U	604 U	579 U	636 U	475 U	535 U	699 U
1,3-DICHLOROBENZENE	UG/KG	621 U	604 U	579 U	636 U	475 U	535 U	699 U
1,4-DICHLOROBENZENE	UG/KG	621 U	604 U	579 U	636 U	475 U	535 U	699 U
1,2-DICHLOROBENZENE	UG/KG	621 U	604 U	579 U	636 U	475 U	535 U	699 U
bis(2-CHLOROISOPROPYL) ETHER	UG/KG	621 U	604 U	579 U	636 U	475 U	535 U	699 U
2-METHYLPHENOL (o-CRESOL)	UG/KG	621 U	604 U	579 U	636 U	475 U	535 U	699 U
HEXACHLOROETHANE	UG/KG	621 U	604 U	579 U	636 U	475 U	535 U	699 U
N-NITROSODI-n-PROPYLAMINE	UG/KG	621 U	604 U	579 U	636 U	475 U	535 U	699 U
CRESOLS, m & p	UG/KG	621 U	604 U	579 U	636 U	475 U	535 U	699 U
NITROBENZENE	UG/KG	621 U	604 U	579 U	636 U	475 U	535 U	699 U
ISOPHORONE	UG/KG	621 U	604 U	579 U	636 U	475 U	535 U	699 U
2-NITROPHENOL	UG/KG	621 U	604 U	579 U	636 U	475 U	535 U	699 U
2,4-DIMETHYLPHENOL	UG/KG	621 U	604 U	579 U	636 U	475 U	535 U	699 U
bis(2-CHLOROETHOXY) METHANE	UG/KG	621 U	604 U	579 U	636 U	475 U	535 U	699 U
2,4-DICHLOROPHENOL	UG/KG	621 U	604 U	579 U	636 U	475 U	535 U	699 U
1,2,4-TRICHLOROBENZENE	UG/KG	621 U	604 U	579 U	636 U	475 U	535 U	699 U
NAPHTHALENE	UG/KG	621 U	604 U	579 U	636 U	475 U	535 U	699 U

	Building	SWM14	SWM14	SWM14	SWM14	SWM14	SWM14	SWM14	SWM14
	StationID	W14-SB01	W14-SB02	W14-SB02	W14-SB03	W14-SB04	W14-SB05	W14-SB06	W14-SB07
	SampleID	NDA147	NDA149	NDA150FD1	NDA153	NDA155	NDA157	NDA159	NDA161
	DateCollected	04/05/2000	04/05/2000	04/05/2000	04/05/2000	04/05/2000	04/05/2000	04/05/2000	04/05/2000
	Depth	0 to 0.5	0 to 0.5	0 to 0.5	0 to 0.5	0 to 0.5	0 to 0.5	0 to 0.5	0 to 0.5
Parameter	Units								
4-CHLOROANILINE	UG/KG	471 U	556 U	514 U	4990 U	591 U	552 U	409 U	524 U
2-METHYLNAPHTHALENE	UG/KG	471 U	556 U	514 U	4990 U	591 U	552 U	409 U	524 U
HEXACHLOROBUTADIENE	UG/KG	471 U	556 U	514 U	4990 U	591 U	552 U	409 U	524 U
4-CHLORO-3-METHYLPHENOL	UG/KG	471 U	556 U	514 U	4990 U	591 U	552 U	409 U	524 U
HEXACHLOROCYCLOPENTADIENE	UG/KG	471 U	556 U	514 U	4990 U	591 U	552 U	409 U	524 U
2,4,6-TRICHLOROPHENOL	UG/KG	471 U	556 U	514 U	4990 U	591 U	552 U	409 U	524 U
2,4,5-TRICHLOROPHENOL	UG/KG	1400 U	1650 U	1530 U	14800 U	1750 U	1640 U	1210 U	1560 U
2-CHLORONAPHTHALENE	UG/KG	471 U	556 U	514 U	4990 U	591 U	552 U	409 U	524 U
2-NITROANILINE	UG/KG	1400 U	1650 U	1530 U	14800 U	1750 U	1640 U	1210 U	1560 U
ACENAPHTHYLENE	UG/KG	471 U	556 U	514 U	4990 U	591 U	552 U	409 U	524 U
DIMETHYL PHTHALATE	UG/KG	471 U	5800 J	514 UJ	4990 U	591 U	552 U	409 U	524 U
2,6-DINITROTOLUENE	UG/KG	471 U	556 U	514 U	4990 U	591 U	552 U	409 U	524 U
ACENAPHTHENE	UG/KG	471 U	556 U	514 U	4990 U	591 U	552 U	409 U	524 U
3-NITROANILINE	UG/KG	1400 U	1650 U	1530 U	14800 U	1750 U	1640 U	1210 U	1560 U
2,4-DINITROPHENOL	UG/KG	1400 U	1650 U	1530 U	14800 U	1750 U	1640 U	1210 U	1560 U
DIBENZOFURAN	UG/KG	471 U	556 U	514 U	4990 U	591 U	552 U	409 U	524 U
2,4-DINITROTOLUENE	UG/KG	471 U	556 U	514 U	4990 U	591 U	552 U	409 U	524 U
4-NITROPHENOL	UG/KG	1400 U	1650 U	1530 U	14800 U	1750 U	1640 U	1210 U	1560 U
FLUORENE	UG/KG	471 U	556 U	514 U	4990 U	591 U	552 U	409 U	524 U
4-CHLOROPHENYL PHENYL ETHER	UG/KG	471 U	556 U	514 U	4990 U	591 U	552 U	409 U	524 U
DIETHYL PHTHALATE	UG/KG	471 U	556 U	514 U	4990 U	591 U	552 U	409 U	524 U
4-NITROANILINE	UG/KG	1400 U	1650 U	1530 U	14800 U	1750 U	1640 U	1210 U	1560 U
4,6-DINITRO-2-METHYLPHENOL	UG/KG	1400 U	1650 U	1530 U	14800 U	1750 U	1640 U	1210 U	1560 U
N-NITROSODIPHENYLAMINE	UG/KG	471 U	556 U	514 U	4990 U	591 U	552 U	409 U	524 U
4-BROMOPHENYL PHENYL ETHER	UG/KG	471 U	556 U	514 U	4990 U	591 U	552 U	409 U	524 U
HEXACHLOROBENZENE	UG/KG	471 U	556 U	514 U	4990 U	591 U	552 U	409 U	524 U
PENTACHLOROPHENOL	UG/KG	1400 U	1650 U	1530 U	14800 U	1750 U	1640 U	1210 U	1560 U
PHENANTHRENE	UG/KG	471 U	556 U	514 U	4990 U	591 U	552 U	409 U	524 U
ANTHRACENE	UG/KG	471 U	556 U	514 U	4990 U	591 U	552 U	409 U	524 U
DI-n-BUTYL PHTHALATE	UG/KG	471 U	40 J	514 U	4990 U	591 U	552 U	409 U	524 U
FLUORANTHENE	UG/KG	471 U	556 U	514 U	4990 U	591 U	552 U	409 U	524 U
PYRENE	UG/KG	471 U	556 U	514 U	4990 U	591 U	552 U	409 U	524 U
BENZYL BUTYL PHTHALATE	UG/KG	471 U	556 U	514 U	4990 U	591 U	552 U	409 U	76 J
3,3'-DICHLOROBENZIDINE	UG/KG	943 U	1110 U	1030 U	9980 U	1180 U	1100 U	817 U	1050 U
BENZO(a)ANTHRACENE	UG/KG	471 U	556 U	514 U	4990 U	591 U	552 U	409 U	524 U
CHRYSENE	UG/KG	471 U	556 U	514 U	4990 U	591 U	552 U	409 U	524 U
bis(2-ETHYLHEXYL) PHTHALATE	UG/KG	471 U	58 J	514 U	4990 U	591 U	42 J	409 U	116 J
DI-n-OCTYLPHTHALATE	UG/KG	471 U	556 U	514 U	4990 U	591 U	552 U	409 U	524 U
BENZO(b)FLUORANTHENE	UG/KG	471 U	556 U	514 U	4990 U	591 U	552 U	409 U	524 U

SWMU 14 Subsurface Soil Data

	Building	SWM14	SWM14	SWM14	SWM14	SWM14	SWM14	SWM14
	StationID	W14-SB08	W14-SB09	W14-SB10	W14-SB11	W14-SB12	W14-SB13	W14-SB14
	SampleID	NDA164	NDA166	NDA168	NDA170	NDA172	NDA174	NDA176
	DateCollected	04/06/2000	04/06/2000	04/06/2000	04/06/2000	04/06/2000	04/06/2000	04/06/2000
	Depth	0 to 0.5	0 to 0.5	0 to 0.5	0 to 0.5	0 to 0.5	0 to 0.5	0 to 0.5
Parameter	**Units**							
4-CHLOROANILINE	UG/KG	621 U	604 U	579 U	636 U	475 U	535 U	699 U
2-METHYLNAPHTHALENE	UG/KG	621 U	604 U	579 U	636 U	475 U	535 U	699 U
HEXACHLOROBUTADIENE	UG/KG	621 U	604 U	579 U	636 U	475 U	535 U	699 U
4-CHLORO-3-METHYLPHENOL	UG/KG	621 U	604 U	579 U	636 U	475 U	535 U	699 U
HEXACHLOROCYCLOPENTADIENE	UG/KG	621 U	604 U	579 U	636 U	475 U	535 U	699 U
2,4,6-TRICHLOROPHENOL	UG/KG	621 U	604 U	579 U	636 U	475 U	535 U	699 U
2,4,5-TRICHLOROPHENOL	UG/KG	1840 U	1790 U	1720 U	1890 U	1410 U	1590 U	2070 U
2-CHLORONAPHTHALENE	UG/KG	621 U	604 U	579 U	636 U	475 U	535 U	699 U
2-NITROANILINE	UG/KG	1840 U	1790 U	1720 U	1890 U	1410 U	1590 U	2070 U
ACENAPHTHYLENE	UG/KG	621 U	604 U	579 U	636 U	475 U	535 U	699 U
DIMETHYL PHTHALATE	UG/KG	621 U	604 U	579 U	636 U	475 U	535 U	699 U
2,6-DINITROTOLUENE	UG/KG	621 U	604 U	579 U	636 U	475 U	535 U	699 U
ACENAPHTHENE	UG/KG	621 U	604 U	579 U	636 U	475 U	535 U	699 U
3-NITROANILINE	UG/KG	1840 U	1790 U	1720 U	1890 U	1410 U	1590 U	2070 U
2,4-DINITROPHENOL	UG/KG	1840 U	1790 U	1720 U	1890 U	1410 U	1590 U	2070 U
DIBENZOFURAN	UG/KG	621 U	604 U	579 U	636 U	475 U	535 U	699 U
2,4-DINITROTOLUENE	UG/KG	621 U	604 U	579 U	636 U	475 U	535 U	699 U
4-NITROPHENOL	UG/KG	1840 U	1790 U	1720 U	1890 U	1410 U	1590 U	2070 U
FLUORENE	UG/KG	621 U	604 U	579 U	636 U	475 U	535 U	699 U
4-CHLOROPHENYL PHENYL ETHER	UG/KG	621 U	604 U	579 U	636 U	475 U	535 U	699 U
DIETHYL PHTHALATE	UG/KG	621 U	604 U	579 U	636 U	475 U	535 U	699 U
4-NITROANILINE	UG/KG	1840 U	1790 U	1720 U	1890 U	1410 U	1590 U	2070 U
4,6-DINITRO-2-METHYLPHENOL	UG/KG	1840 U	1790 U	1720 U	1890 U	1410 U	1590 U	2070 U
N-NITROSODIPHENYLAMINE	UG/KG	621 U	604 U	579 U	636 U	475 U	535 U	699 U
4-BROMOPHENYL PHENYL ETHER	UG/KG	621 U	604 U	579 U	636 U	475 U	535 U	699 U
HEXACHLOROBENZENE	UG/KG	621 U	604 U	579 U	636 U	475 U	535 U	699 U
PENTACHLOROPHENOL	UG/KG	1840 U	1790 U	1720 U	1890 U	1410 U	1590 U	2070 U
PHENANTHRENE	UG/KG	621 U	604 U	579 U	636 U	475 U	535 U	699 U
ANTHRACENE	UG/KG	621 U	604 U	579 U	636 U	475 U	535 U	699 U
DI-n-BUTYL PHTHALATE	UG/KG	621 U	604 U	579 U	636 U	475 U	535 U	699 U
FLUORANTHENE	UG/KG	621 U	604 U	579 U	636 U	475 U	535 U	699 U
PYRENE	UG/KG	621 U	604 U	579 U	636 U	475 U	535 U	699 U
BENZYL BUTYL PHTHALATE	UG/KG	621 U	604 U	329 J	636 U	475 U	535 U	699 U
3,3'-DICHLOROBENZIDINE	UG/KG	1240 U	1210 U	1160 U	1270 U	950 U	1070 U	1400 U
BENZO(a)ANTHRACENE	UG/KG	621 U	604 U	579 U	636 U	475 U	535 U	699 U
CHRYSENE	UG/KG	621 U	604 U	579 U	636 U	475 U	535 U	699 U
bis(2-ETHYLHEXYL) PHTHALATE	UG/KG	621 U	604 U	158 J	78 J	73 J	66 J	699 U
DI-n-OCTYLPHTHALATE	UG/KG	621 U	604 U	579 U	636 U	475 U	535 U	699 U
BENZO(b)FLUORANTHENE	UG/KG	621 U	604 U	579 U	636 U	475 U	535 U	699 U

	Building	SWM14	SWM14	SWM14	SWM14	SWM14	SWM14	SWM14	SWM14
	StationID	W14-SB01	W14-SB02	W14-SB02	W14-SB03	W14-SB04	W14-SB05	W14-SB06	W14-SB07
	SampleID	NDA147	NDA149	NDA150FD1	NDA153	NDA155	NDA157	NDA159	NDA161
	DateCollected	04/05/2000	04/05/2000	04/05/2000	04/05/2000	04/05/2000	04/05/2000	04/05/2000	04/05/2000
	Depth	0 to 0.5	0 to 0.5	0 to 0.5	0 to 0.5	0 to 0.5	0 to 0.5	0 to 0.5	0 to 0.5
Parameter	**Units**								
BENZO(k)FLUORANTHENE	UG/KG	471 U	556 U	514 U	4990 U	591 U	552 U	409 U	524 U
BENZO(a)PYRENE	UG/KG	471 U	556 U	514 U	4990 U	591 U	552 U	409 U	524 U
INDENO(1,2,3-c,d)PYRENE	UG/KG	471 U	556 U	514 U	4990 U	591 U	552 U	409 U	524 U
DIBENZ(a,h)ANTHRACENE	UG/KG	471 U	556 U	514 U	4990 U	591 U	552 U	409 U	524 U
BENZO(g,h,i)PERYLENE	UG/KG	471 U	556 U	514 U	4990 U	591 U	552 U	409 U	524 U
CARBAZOLE	UG/KG	471 U	556 U	514 U	4990 U	591 U	552 U	409 U	524 U
VOLATILES									
CHLOROMETHANE	UG/KG	11 U	11 U	12 UJ	12 U	11 U	11 U	14 UJ	11 U
VINYL CHLORIDE	UG/KG	11 U	11 U	12 UJ	12 U	11 U	11 U	14 UJ	11 U
BROMOMETHANE	UG/KG	11 U	11 U	12 UJ	12 U	11 U	11 U	14 UJ	11 U
1,3-DICHLOROBENZENE	UG/KG	471 U	556 U	514 U	4990 U	591 U	552 U	409 U	524 U
CHLOROETHANE	UG/KG	11 U	11 U	12 UJ	12 U	11 U	11 U	14 UJ	11 U
1,1-DICHLOROETHENE	UG/KG	11 U	11 U	12 UJ	12 U	11 U	11 U	14 UJ	11 U
1,4-DICHLOROBENZENE	UG/KG	471 U	556 U	514 U	4990 U	591 U	552 U	409 U	524 U
1,2-DICHLOROBENZENE	UG/KG	471 U	556 U	514 U	4990 U	591 U	552 U	409 U	524 U
CARBON DISULFIDE	UG/KG	11 U	11 U	12 UJ	12 U	11 U	11 U	14 UJ	11 U
METHYLENE CHLORIDE	UG/KG	11 U	11 U	12 UJ	12 U	11 U	11 U	14 UJ	11 U
1,1-DICHLOROETHANE	UG/KG	11 U	11 U	12 UJ	12 U	11 U	11 U	14 UJ	11 U
ACETONE	UG/KG	133 R	175 R	169 R	86 R	70 R	32 R	46 R	39 R
METHYL ETHYL KETONE (2-BUTANONE)	UG/KG	11 R	11 R	12 R	12 R	11 R	11 R	14 R	11 R
CHLOROFORM	UG/KG	11 U	11 U	12 UJ	12 U	11 U	11 U	14 UJ	11 U
1,1,1-TRICHLOROETHANE	UG/KG	11 U	11 U	12 UJ	12 U	11 U	11 U	14 UJ	11 U
CARBON TETRACHLORIDE	UG/KG	11 U	11 U	12 UJ	12 U	11 U	11 U	14 UJ	11 U
BENZENE	UG/KG	11 U	11 U	12 UJ	12 U	11 U	11 U	14 UJ	11 U
1,2-DICHLOROETHANE	UG/KG	11 U	11 U	12 UJ	12 U	11 U	11 U	14 UJ	11 U
TRICHLOROETHYLENE (TCE)	UG/KG	11 U	11 U	12 UJ	12 U	11 U	11 U	14 UJ	11 U
1,2-DICHLOROPROPANE	UG/KG	11 U	11 U	12 UJ	12 U	11 U	11 U	14 UJ	11 U
1,2,4-TRICHLOROBENZENE	UG/KG	471 U	556 U	514 U	4990 U	591 U	552 U	409 U	524 U
BROMODICHLOROMETHANE	UG/KG	11 U	11 U	12 UJ	12 U	11 U	11 U	14 UJ	11 U
cis-1,3-DICHLOROPROPENE	UG/KG	11 U	11 U	12 UJ	12 U	11 U	11 U	14 UJ	11 U
METHYL ISOBUTYL KETONE (4-METHYL-2	UG/KG	11 U	11 U	12 UJ	12 U	11 U	11 U	14 UJ	11 U
TOLUENE	UG/KG	1 J	11 U	12 UJ	0.4 J	0.3 U	11 U	14 UJ	11 U
trans-1,3-DICHLOROPROPENE	UG/KG	11 U	11 U	12 UJ	12 U	11 U	11 U	14 UJ	11 U
1,1,2-TRICHLOROETHANE	UG/KG	11 U	11 U	12 UJ	12 U	11 U	11 U	14 UJ	11 U
TETRACHLOROETHYLENE(PCE)	UG/KG	11 U	11 U	12 UJ	12 U	11 U	11 U	14 UJ	11 U
2-HEXANONE	UG/KG	11 U	11 U	12 UJ	12 U	11 U	11 U	14 UJ	11 U
DIBROMOCHLOROMETHANE	UG/KG	11 U	11 U	12 UJ	12 U	11 U	11 U	14 UJ	11 U
CHLOROBENZENE	UG/KG	11 U	11 U	12 UJ	12 U	11 U	11 U	14 UJ	11 U
ETHYLBENZENE	UG/KG	11 U	11 U	12 UJ	12 U	11 U	11 U	14 UJ	11 U

SWMU 14 Subsurface Soil Data

	Building	SWM14	SWM14	SWM14	SWM14	SWM14	SWM14	SWM14
	StationID	W14-SB08	W14-SB09	W14-SB10	W14-SB11	W14-SB12	W14-SB13	W14-SB14
	SampleID	NDA164	NDA166	NDA168	NDA170	NDA172	NDA174	NDA176
	DateCollected	04/06/2000	04/06/2000	04/06/2000	04/06/2000	04/06/2000	04/06/2000	04/06/2000
	Depth	0 to 0.5	0 to 0.5	0 to 0.5	0 to 0.5	0 to 0.5	0 to 0.5	0 to 0.5
Parameter	**Units**							
BENZO(k)FLUORANTHENE	UG/KG	621 U	604 U	579 U	636 U	475 U	535 U	699 U
BENZO(a)PYRENE	UG/KG	621 U	604 U	579 U	636 U	475 U	535 U	699 U
INDENO(1,2,3-c,d)PYRENE	UG/KG	621 U	604 U	579 U	636 U	475 U	535 U	699 U
DIBENZ(a,h)ANTHRACENE	UG/KG	621 U	604 U	579 U	636 U	475 U	535 U	699 U
BENZO(g,h,i)PERYLENE	UG/KG	621 U	604 U	579 U	636 U	475 U	535 U	699 U
CARBAZOLE	UG/KG	621 U	604 U	579 U	636 U	475 U	535 U	699 U
VOLATILES								
CHLOROMETHANE	UG/KG	13 U	11 U	20 U	16 UJ	10 U	10 U	14 U
VINYL CHLORIDE	UG/KG	13 U	11 U	20 U	16 UJ	10 U	10 U	14 U
BROMOMETHANE	UG/KG	13 U	11 U	20 U	16 UJ	10 U	10 U	14 U
1,3-DICHLOROBENZENE	UG/KG	621 U	604 U	579 U	636 U	475 U	535 U	699 U
CHLOROETHANE	UG/KG	13 U	11 U	20 U	16 UJ	10 U	10 U	14 U
1,1-DICHLOROETHENE	UG/KG	13 U	11 U	20 U	16 UJ	10 U	10 U	14 U
1,4-DICHLOROBENZENE	UG/KG	621 U	604 U	579 U	636 U	475 U	535 U	699 U
1,2-DICHLOROBENZENE	UG/KG	621 U	604 U	579 U	636 U	475 U	535 U	699 U
CARBON DISULFIDE	UG/KG	13 U	11 U	20 U	16 UJ	10 U	10 U	0.9 J
METHYLENE CHLORIDE	UG/KG	13 U	11 U	20 U	16 UJ	10 U	10 U	14 U
1,1-DICHLOROETHANE	UG/KG	13 U	11 U	20 U	16 UJ	10 U	10 U	14 U
ACETONE	UG/KG	40 R	205 R	73 R	57 R	41 R	60 R	277 R
METHYL ETHYL KETONE (2-BUTANONE)	UG/KG	13 R	11 R	20 R	16 R	10 R	10 R	18 J
CHLOROFORM	UG/KG	13 U	11 U	20 U	16 UJ	10 U	10 U	14 U
1,1,1-TRICHLOROETHANE	UG/KG	13 U	11 U	20 U	16 UJ	10 U	10 U	14 U
CARBON TETRACHLORIDE	UG/KG	13 U	11 U	20 U	16 UJ	10 U	10 U	14 U
BENZENE	UG/KG	0.2 J	11 U	20 U	16 UJ	0.1 U	0.1 U	0.2 U
1,2-DICHLOROETHANE	UG/KG	0.4 J	0.3 J	20 U	16 UJ	10 U	10 U	14 U
TRICHLOROETHYLENE (TCE)	UG/KG	13 U	11 U	20 U	16 UJ	10 U	10 U	14 U
1,2-DICHLOROPROPANE	UG/KG	13 U	11 U	20 U	16 UJ	10 U	10 U	14 U
1,2,4-TRICHLOROBENZENE	UG/KG	621 U	604 U	579 U	636 U	475 U	535 U	699 U
BROMODICHLOROMETHANE	UG/KG	13 U	11 U	20 U	16 UJ	10 U	10 U	14 U
cis-1,3-DICHLOROPROPENE	UG/KG	13 U	11 U	20 U	16 UJ	10 U	10 U	14 U
METHYL ISOBUTYL KETONE (4-METHYL-2	UG/KG	13 U	11 U	20 U	16 UJ	10 U	10 U	14 U
TOLUENE	UG/KG	1 J	0.3 U	20 U	16 UJ	0.4 J	0.3 J	0.5 J
trans-1,3-DICHLOROPROPENE	UG/KG	13 U	11 U	20 U	16 UJ	10 U	10 U	14 U
1,1,2-TRICHLOROETHANE	UG/KG	13 U	11 U	20 U	16 UJ	10 U	10 U	14 U
TETRACHLOROETHYLENE(PCE)	UG/KG	13 U	11 U	20 U	16 UJ	10 U	10 U	14 U
2-HEXANONE	UG/KG	13 U	11 U	20 U	16 UJ	10 U	10 U	14 U
DIBROMOCHLOROMETHANE	UG/KG	13 U	11 U	20 U	16 UJ	10 U	10 U	14 U
CHLOROBENZENE	UG/KG	13 U	11 U	20 U	16 UJ	10 U	10 U	14 U
ETHYLBENZENE	UG/KG	1 J	11 U	20 U	16 UJ	10 U	10 U	14 U

	Building	SWM14	SWM14	SWM14	SWM14	SWM14	SWM14	SWM14	SWM14
	StationID	W14-SB01	W14-SB02	W14-SB02	W14-SB03	W14-SB04	W14-SB05	W14-SB06	W14-SB07
	SampleID	NDA147	NDA149	NDA150FD1	NDA153	NDA155	NDA157	NDA159	NDA161
	DateCollected	04/05/2000	04/05/2000	04/05/2000	04/05/2000	04/05/2000	04/05/2000	04/05/2000	04/05/2000
	Depth	0 to 0.5	0 to 0.5	0 to 0.5	0 to 0.5	0 to 0.5	0 to 0.5	0 to 0.5	0 to 0.5
Parameter	Units								
M,P-XYLENE (SUM OF ISOMERS)	UG/KG	1 J	0.3 J	12 UJ	0.4 J	0.3 J	11 U	0.3 J	0.2 U
O-XYLENE (1,2-DIMETHYLBENZENE)	UG/KG	0.4 J	11 U	12 UJ	12 U	0.3 J	11 U	14 UJ	11 U
STYRENE	UG/KG	11 U	11 U	12 UJ	12 U	11 U	11 U	14 UJ	11 U
BROMOFORM	UG/KG	11 U	11 U	12 UJ	12 U	11 U	11 U	14 UJ	11 U
1,1,2,2-TETRACHLOROETHANE	UG/KG	11 U	11 U	12 UJ	12 U	11 U	11 U	14 UJ	11 U
XYLENES, TOTAL	UG/KG	2 J	0.3 J	12 UJ	0.4 J	0.5 J	11 U	0.3 J	0.2 U

SWMU 14 Subsurface Soil Data

	Building	SWM14	SWM14	SWM14	SWM14	SWM14	SWM14	SWM14
	StationID	W14-SB08	W14-SB09	W14-SB10	W14-SB11	W14-SB12	W14-SB13	W14-SB14
	SampleID	NDA164	NDA166	NDA168	NDA170	NDA172	NDA174	NDA176
	DateCollected	04/06/2000	04/06/2000	04/06/2000	04/06/2000	04/06/2000	04/06/2000	04/06/2000
	Depth	0 to 0.5	0 to 0.5	0 to 0.5	0 to 0.5	0 to 0.5	0 to 0.5	0 to 0.5
Parameter	**Units**							
M,P-XYLENE (SUM OF ISOMERS)	UG/KG	5 J	0.3 J	20 U	0.4 J	0.2 U	0.2 U	14 U
O-XYLENE (1,2-DIMETHYLBENZENE)	UG/KG	2 J	11 U	20 U	16 UJ	10 U	10 U	14 U
STYRENE	UG/KG	13 U	11 U	20 U	16 UJ	10 U	10 U	14 U
BROMOFORM	UG/KG	13 U	11 U	20 U	16 UJ	10 U	10 U	14 U
1,1,2,2-TETRACHLOROETHANE	UG/KG	13 U	11 U	20 U	16 UJ	10 U	10 U	14 U
XYLENES, TOTAL	UG/KG	7 J	0.3 J	20 U	0.4 J	0.2 U	0.2 U	14 U

	Building	SWM14	SWM14	SWM14	SWM14	SWM14	SWM14	SWM14	SWM14
	StationID	W14-SB01	W14-SB02	W14-SB02	W14-SB03	W14-SB04	W14-SB05	W14-SB06	W14-SB07
	SampleID	NDA148	NDA151	NDA152FD1	NDA154	NDA156	NDA158	NDA160	NDA162
	DateCollected	04/05/2000	04/05/2000	04/05/2000	04/05/2000	04/05/2000	04/05/2000	04/05/2000	04/05/2000
	Depth	4 to 6	4 to 6	4 to 6	4 to 6	4 to 6	4 to 6	4 to 6	4 to 6
Parameter	**Units**								
EXPLOSIVES									
2,6-DINITROTOLUENE	UG/KG	4980 U	431 U	620 U	488 U	478 U	461 U	559 U	499 U
NITROBENZENE	UG/KG	4980 U	431 U	620 U	488 U	478 U	461 U	559 U	499 U
2,4-DINITROTOLUENE	UG/KG	4980 U	431 U	620 U	488 U	478 U	461 U	559 U	499 U
METALS									
ALUMINUM	MG/KG	8790 =	8220 =	11000 =	7070 =	10100 =	5740 =	8400 =	6790 =
ANTIMONY	MG/KG	0.17 UJ	0.16 UJ	0.2 UJ	0.16 UJ	0.26 J	0.15 UJ	0.24 J	0.16 UJ
ARSENIC	MG/KG	0.56 J	0.39 U	0.49 U	0.38 U	0.37 U	0.37 U	0.49 J	0.39 U
BARIUM	MG/KG	130 =	96.7 =	157 =	80.9 =	131 =	115 =	156 =	57 =
BERYLLIUM	MG/KG	0.28 J	0.23 J	0.38 J	0.19 J	0.31 J	0.13 J	0.31 J	0.21 J
CADMIUM	MG/KG	0.025 U	0.023 U	0.029 U	0.022 U	0.022 U	0.022 U	0.024 U	0.023 U
CALCIUM	MG/KG	3160 =	2840 =	2850 =	4660 =	2940 =	4390 =	2570 =	2030 =
CHROMIUM, TOTAL	MG/KG	14.4 J	10 J	15 J	9.2 J	13.3 J	9.1 J	11.4 J	5.2 J
COBALT	MG/KG	11.4 J	12.8 =	15.8 =	9.5 J	11.5 =	8.2 J	10 J	7.5 J
COPPER	MG/KG	30 =	22.1 =	30.5 =	25.3 =	31.5 =	21.3 =	26.4 =	21.4 =
IRON	MG/KG	17800 =	15400 =	19600 =	12200 =	19100 =	10600 =	16300 =	12700 =
LEAD	MG/KG	3.8 =	3.3 =	3.3 =	6.7 =	2.1 =	13.9 =	1.7 =	1.3 =
MAGNESIUM	MG/KG	3540 =	2930 =	3810 =	2950 =	4020 =	2840 =	3390 =	2440 =
MANGANESE	MG/KG	708 J	520 J	847 J	568 J	657 J	654 J	783 J	394 J
MERCURY	MG/KG	0.014 U	0.015 U	0.013 U	0.017 U	0.016 U	0.015 U	0.011 U	0.014 J
NICKEL	MG/KG	6.7 J	4.6 J	6.6 J	5.5 J	7.8 J	5.4 J	6.3 J	2.5 J
POTASSIUM	MG/KG	1630 =	1650 =	2420 =	866 J	1570 =	785 J	1480 =	1230 =
SELENIUM	MG/KG	0.81 J	0.69 J	0.78 J	0.56 J	0.57 J	0.32 J	0.74 J	0.58 J
SILVER	MG/KG	0.062 U	0.057 U	0.072 U	0.056 U	0.054 U	0.055 U	0.06 U	0.057 U
SODIUM	MG/KG	152 J	165 J	209 J	147 J	146 J	188 J	149 J	49.2 J
THALLIUM	MG/KG	1.4 J	0.87 J	1.4 J	0.54 J	0.83 J	0.47 J	1.3 J	0.88 J
VANADIUM	MG/KG	57.7 =	48.4 =	59.1 =	34.6 =	62.3 =	29.9 =	46.2 =	36.9 =
ZINC	MG/KG	37.8 =	30.4 =	37.9 =	32 =	35.9 =	23.2 =	30.2 =	24.2 =
PCB									
PCB-1016 (AROCHLOR 1016)	UG/KG	40 U	37 U	47 U	37 U	35 U	36 U	40 U	38 U
PCB-1260 (AROCHLOR 1260)	UG/KG	40 U	37 U	47 U	37 U	35 U	36 U	40 U	38 U
PCB-1221 (AROCHLOR 1221)	UG/KG	82 U	76 U	95 U	75 U	72 U	73 U	81 U	76 U
PCB-1232 (AROCHLOR 1232)	UG/KG	40 U	37 U	47 U	37 U	35 U	36 U	40 U	38 U
PCB-1242 (AROCHLOR 1242)	UG/KG	40 U	37 U	47 U	37 U	35 U	36 U	40 U	38 U
PCB-1248 (AROCHLOR 1248)	UG/KG	40 U	37 U	47 U	37 U	35 U	36 U	40 U	38 U
PCB-1254 (AROCHLOR 1254)	UG/KG	40 U	37 U	47 U	37 U	35 U	36 U	40 U	38 U
PESTICIDES									
ALPHA BHC	UG/KG	2.1 UJ	1.9 UJ	2.4 UJ	1.9 UJ	1.8 UJ	1.8 UJ	2 UJ	1.9 UJ
BETA BHC	UG/KG	2.1 U	1.9 U	2.4 U	1.9 U	1.8 U	1.8 U	2 U	1.9 U

SWMU 14 Surface Soil Data

Parameter	Units	Building	SWM14	SWM14	SWM14	SWM14	SWM14	SWM14	SWM14	SWM14
		StationID	W14-SB07	W14-SB08	W14-SB09	W14-SB10	W14-SB11	W14-SB12	W14-SB13	W14-SB14
		SampleID	NDA163FD1	NDA165	NDA167	NDA169	NDA171	NDA173	NDA175	NDA177
		DateCollected	04/05/2000	04/06/2000	04/06/2000	04/06/2000	04/06/2000	04/06/2000	04/06/2000	04/06/2000
		Depth	4 to 6	4 to 6	4 to 6	4 to 6	4 to 6	4 to 6	4 to 6	4 to 6
EXPLOSIVES										
2,6-DINITROTOLUENE	UG/KG		518 U	539 U	594 U	653 U	566 U	608 U	515 U	540 U
NITROBENZENE	UG/KG		518 U	539 U	594 U	653 U	566 U	608 U	515 U	540 U
2,4-DINITROTOLUENE	UG/KG		518 U	539 U	594 U	653 U	566 U	608 U	515 U	540 U
METALS										
ALUMINUM	MG/KG		5860 =	11600 =	8380 =	8810 =	7110 =	9470 =	12400 =	13400 =
ANTIMONY	MG/KG		0.16 UJ	0.16 UJ	0.15 UJ	0.15 UJ	0.15 UJ	0.18 UJ	0.16 UJ	0.16 UJ
ARSENIC	MG/KG		0.4 U	0.39 U	0.37 U	0.37 U	0.37 U	0.44 U	0.39 J	0.66 J
BARIUM	MG/KG		49.6 =	113 =	79.9 =	61.8 =	48.2 =	81.6 =	70.2 =	90.8 =
BERYLLIUM	MG/KG		0.19 J	0.27 J	0.21 J	0.23 J	0.18 J	0.27 J	0.27 J	0.29 J
CADMIUM	MG/KG		0.023 U	0.023 U	0.022 U	0.021 U	0.022 U	0.026 U	0.022 U	0.023 U
CALCIUM	MG/KG		2020 =	2830 =	2410 =	3770 =	2830 =	2530 =	3040 =	6280 =
CHROMIUM, TOTAL	MG/KG		5.7 J	13 =	9.9 =	7.8 =	17.9 =	7.1 =	7.3 =	11 =
COBALT	MG/KG		6.8 J	11.4 =	8.8 J	7.7 J	5.8 J	8.2 J	10 =	10.9 J
COPPER	MG/KG		19.2 =	30.6 =	29.1 =	27.7 =	21.8 =	25.7 =	28.3 =	29.1 =
IRON	MG/KG		11400 =	21600 =	18500 =	17600 =	15100 =	17300 =	20600 =	21600 =
LEAD	MG/KG		1.2 =	3.2 =	1 =	3.4 =	37.2 =	2.8 =	2.6 =	4.7 =
MAGNESIUM	MG/KG		2180 =	3260 =	3010 =	3150 =	2020 =	2490 =	3040 =	2460 =
MANGANESE	MG/KG		339 J	769 J	497 J	436 J	299 J	469 J	421 J	589 J
MERCURY	MG/KG		0.012 U	0.014 U	0.014 U	0.016 J	0.015 U	0.017 U	0.031 J	0.013 U
NICKEL	MG/KG		2.2 J	5.9 J	5.7 J	3.6 J	2.6 J	4.5 J	3.7 J	4.4 J
POTASSIUM	MG/KG		1010 =	1670 =	1330 =	1420 =	1170 =	821 J	1370 =	1310 =
SELENIUM	MG/KG		0.27 J	0.42 J	0.48 J	0.44 J	0.46 J	0.27 U	0.64 J	0.56 J
SILVER	MG/KG		0.059 U	0.057 U	0.055 U	0.054 U	0.055 U	0.064 U	0.056 U	0.058 U
SODIUM	MG/KG		70 J	56.3 J	26.7 J	47.1 J	52 J	14.8 U	53.2 J	101 J
THALLIUM	MG/KG		0.92 J	0.81 J	0.66 J	0.55 J	0.41 J	0.35 U	0.87 J	0.65 J
VANADIUM	MG/KG		33.6 =	61.3 =	56.3 =	49.7 =	42.9 =	50.3 =	58.7 =	63.4 =
ZINC	MG/KG		21.8 =	39.8 J	29.6 J	45 J	30.9 J	28.8 J	37 J	40.2 J
PCB										
PCB-1016 (AROCHLOR 1016)	UG/KG		39 U	37 UJ	40 UJ	39 UJ	36 UJ	42 UJ	37 UJ	38 UJ
PCB-1260 (AROCHLOR 1260)	UG/KG		39 U	37 UJ	40 UJ	39 UJ	36 UJ	42 UJ	37 UJ	38 UJ
PCB-1221 (AROCHLOR 1221)	UG/KG		78 U	76 UJ	82 UJ	80 UJ	73 UJ	85 UJ	74 UJ	78 UJ
PCB-1232 (AROCHLOR 1232)	UG/KG		39 U	37 UJ	40 UJ	39 UJ	36 UJ	42 UJ	37 UJ	38 UJ
PCB-1242 (AROCHLOR 1242)	UG/KG		39 U	37 UJ	40 UJ	39 UJ	36 UJ	42 UJ	37 UJ	38 UJ
PCB-1248 (AROCHLOR 1248)	UG/KG		39 U	37 UJ	40 UJ	39 UJ	36 UJ	42 UJ	37 UJ	38 UJ
PCB-1254 (AROCHLOR 1254)	UG/KG		39 U	37 UJ	40 UJ	39 UJ	36 UJ	42 UJ	37 UJ	38 UJ
PESTICIDES										
ALPHA BHC	UG/KG		2 UJ	1.9 UJ	2.1 UJ	2 UJ	1.8 UJ	2.2 UJ	1.9 UJ	2 UJ
BETA BHC	UG/KG		2 U	1.9 UJ	2.1 UJ	2 UJ	1.8 UJ	2.2 UJ	1.9 UJ	2 UJ

	Building	SWM14	SWM14	SWM14	SWM14	SWM14	SWM14	SWM14	SWM14
	StationID	W14-SB01	W14-SB02	W14-SB02	W14-SB03	W14-SB04	W14-SB05	W14-SB06	W14-SB07
	SampleID	NDA148	NDA151	NDA152FD1	NDA154	NDA156	NDA158	NDA160	NDA162
	DateCollected	04/05/2000	04/05/2000	04/05/2000	04/05/2000	04/05/2000	04/05/2000	04/05/2000	04/05/2000
	Depth	4 to 6	4 to 6	4 to 6	4 to 6	4 to 6	4 to 6	4 to 6	4 to 6
Parameter	**Units**								
DELTA BHC	UG/KG	2.1 U	1.9 U	2.4 U	1.9 U	1.8 U	1.8 U	2 U	1.9 U
GAMMA BHC (LINDANE)	UG/KG	2.1 UJ	1.9 UJ	2.4 UJ	1.9 UJ	1.8 UJ	1.8 UJ	2 UJ	1.9 UJ
HEPTACHLOR	UG/KG	2.1 U	1.9 U	2.4 U	1.9 U	1.8 U	1.8 U	2 U	1.9 U
ALDRIN	UG/KG	2.1 U	1.9 U	2.4 U	1.9 U	1.8 U	1.8 U	2 U	1.9 U
HEPTACHLOR EPOXIDE	UG/KG	2.1 U	1.9 U	2.4 U	1.9 U	1.8 U	1.8 U	2 U	1.9 U
ALPHA ENDOSULFAN	UG/KG	2.1 U	1.9 U	2.4 U	1.9 U	1.8 U	1.8 U	2 U	1.9 U
DIELDRIN	UG/KG	4.1 U	3.8 U	4.7 U	3.7 U	3.6 U	3.6 U	4 U	3.8 U
p,p'-DDE	UG/KG	4.1 U	3.8 U	4.7 U	3.7 U	3.6 U	3.6 U	4 U	3.8 U
ENDRIN	UG/KG	4.1 UJ	3.8 UJ	4.7 UJ	3.7 UJ	3.6 UJ	3.6 UJ	4 UJ	3.8 UJ
BETA ENDOSULFAN	UG/KG	4.1 U	3.8 U	4.7 U	3.7 U	3.6 U	3.6 U	4 U	3.8 U
p,p'-DDD	UG/KG	4.1 U	3.8 U	4.7 U	3.7 U	3.6 U	1.2 J	4 U	3.8 U
ENDOSULFAN SULFATE	UG/KG	4.1 U	3.8 U	4.7 U	3.7 U	3.6 U	3.6 U	4 U	3.8 U
p,p'-DDT	UG/KG	4.1 U	3.8 U	4.7 U	3.7 U	3.6 U	38 =	4 U	3.8 U
METHOXYCHLOR	UG/KG	21 UJ	19 UJ	24 UJ	19 UJ	18 UJ	18 UJ	20 UJ	19 UJ
ENDRIN ALDEHYDE	UG/KG	4.1 U	3.8 U	4.7 U	3.7 U	3.6 U	3.6 U	4 U	3.8 U
ALPHA-CHLORDANE	UG/KG	2.1 U	1.9 U	2.4 U	1.9 U	1.8 U	1.8 U	2 U	1.9 U
GAMMA-CHLORDANE	UG/KG	2.1 U	1.9 U	2.4 U	1.9 U	1.8 U	1.8 U	2 U	1.9 U
ENDRIN KETONE	UG/KG	4.1 U	3.8 U	4.7 U	3.7 U	3.6 U	3.6 U	4 U	3.8 U
TOXAPHENE	UG/KG	208 U	192 U	242 U	190 U	182 U	185 U	205 U	194 U
SEMI-VOLATILES									
bis(2-CHLOROETHYL) ETHER	UG/KG	4980 U	431 U	620 U	488 U	478 U	461 U	559 U	499 U
PHENOL	UG/KG	4980 U	431 U	620 U	488 U	478 U	461 U	559 U	499 U
2-CHLOROPHENOL	UG/KG	4980 U	431 U	620 U	488 U	478 U	461 U	559 U	499 U
1,3-DICHLOROBENZENE	UG/KG	4980 U	431 U	620 U	488 U	478 U	461 U	559 U	499 U
1,4-DICHLOROBENZENE	UG/KG	4980 U	431 U	620 U	488 U	478 U	461 U	559 U	499 U
1,2-DICHLOROBENZENE	UG/KG	4980 U	431 U	620 U	488 U	478 U	461 U	559 U	499 U
bis(2-CHLOROISOPROPYL) ETHER	UG/KG	4980 U	431 U	620 U	488 U	478 U	461 U	559 U	499 U
2-METHYLPHENOL (o-CRESOL)	UG/KG	4980 U	431 U	620 U	488 U	478 U	461 U	559 U	499 U
HEXACHLOROETHANE	UG/KG	4980 U	431 U	620 U	488 U	478 U	461 U	559 U	499 U
N-NITROSODI-n-PROPYLAMINE	UG/KG	4980 U	431 U	620 U	488 U	478 U	461 U	559 U	499 U
CRESOLS, m & p	UG/KG	4980 U	431 U	620 U	488 U	478 U	461 U	559 U	499 U
NITROBENZENE	UG/KG	4980 U	431 U	620 U	488 U	478 U	461 U	559 U	499 U
ISOPHORONE	UG/KG	4980 U	431 U	620 U	488 U	478 U	461 U	559 U	499 U
2-NITROPHENOL	UG/KG	4980 U	431 U	620 U	488 U	478 U	461 U	559 U	499 U
2,4-DIMETHYLPHENOL	UG/KG	4980 U	431 U	620 U	488 U	478 U	461 U	559 U	499 U
bis(2-CHLOROETHOXY) METHANE	UG/KG	4980 U	431 U	620 U	488 U	478 U	461 U	559 U	499 U
2,4-DICHLOROPHENOL	UG/KG	4980 U	431 U	620 U	488 U	478 U	461 U	559 U	499 U
1,2,4-TRICHLOROBENZENE	UG/KG	4980 U	431 U	620 U	488 U	478 U	461 U	559 U	499 U
NAPHTHALENE	UG/KG	4980 U	431 U	620 U	488 U	478 U	461 U	559 U	499 U

SWMU 14 Surface Soil Data

	Building	SWM14	SWM14	SWM14	SWM14	SWM14	SWM14	SWM14	SWM14
	StationID	W14-SB07	W14-SB08	W14-SB09	W14-SB10	W14-SB11	W14-SB12	W14-SB13	W14-SB14
	SampleID	NDA163FD1	NDA165	NDA167	NDA169	NDA171	NDA173	NDA175	NDA177
	DateCollected	04/05/2000	04/06/2000	04/06/2000	04/06/2000	04/06/2000	04/06/2000	04/06/2000	04/06/2000
	Depth	4 to 6	4 to 6	4 to 6	4 to 6	4 to 6	4 to 6	4 to 6	4 to 6
Parameter	**Units**								
DELTA BHC	UG/KG	2 U	1.9 UJ	2.1 UJ	2 UJ	1.8 UJ	2.2 UJ	1.9 UJ	2 UJ
GAMMA BHC (LINDANE)	UG/KG	2 UJ	1.9 UJ	2.1 UJ	2 UJ	1.8 UJ	2.2 UJ	1.9 UJ	2 UJ
HEPTACHLOR	UG/KG	2 U	1.9 UJ	2.1 UJ	2 UJ	1.8 UJ	2.2 UJ	1.9 UJ	2 UJ
ALDRIN	UG/KG	2 U	1.9 UJ	2.1 UJ	2 UJ	1.8 UJ	2.2 UJ	1.9 UJ	2 UJ
HEPTACHLOR EPOXIDE	UG/KG	2 U	1.9 UJ	2.1 UJ	2 UJ	1.8 UJ	2.2 UJ	1.9 UJ	2 UJ
ALPHA ENDOSULFAN	UG/KG	2 U	1.9 UJ	2.1 UJ	2 UJ	1.8 UJ	2.2 UJ	1.9 UJ	2 UJ
DIELDRIN	UG/KG	3.9 U	3.8 UJ	4.1 UJ	4 UJ	3.6 UJ	4.2 UJ	3.7 UJ	3.9 UJ
p,p'-DDE	UG/KG	3.9 U	3.8 UJ	4.1 UJ	4 UJ	3.6 UJ	4.2 UJ	3.7 UJ	3.9 UJ
ENDRIN	UG/KG	3.9 UJ	3.8 UJ	4.1 UJ	4 UJ	3.6 UJ	4.2 UJ	3.7 UJ	3.9 UJ
BETA ENDOSULFAN	UG/KG	3.9 U	3.8 UJ	4.1 UJ	4 UJ	3.6 UJ	4.2 UJ	3.7 UJ	3.9 UJ
p,p'-DDD	UG/KG	3.9 U	3.8 UJ	4.1 UJ	4 UJ	3.6 UJ	4.2 UJ	3.7 UJ	3.9 UJ
ENDOSULFAN SULFATE	UG/KG	3.9 U	3.8 UJ	4.1 UJ	4 UJ	3.6 UJ	4.2 UJ	3.7 UJ	3.9 UJ
p,p'-DDT	UG/KG	3.9 U	3.8 UJ	4.1 UJ	4 UJ	3.6 UJ	4.2 UJ	3.7 UJ	3.9 UJ
METHOXYCHLOR	UG/KG	20 UJ	19 UJ	21 UJ	20 UJ	18 UJ	22 UJ	19 UJ	20 UJ
ENDRIN ALDEHYDE	UG/KG	3.9 U	3.8 UJ	4.1 UJ	4 UJ	3.6 UJ	4.2 UJ	3.7 UJ	3.9 UJ
ALPHA-CHLORDANE	UG/KG	2 U	1.9 UJ	2.1 UJ	2 UJ	1.8 UJ	2.2 UJ	1.9 UJ	2 UJ
GAMMA-CHLORDANE	UG/KG	2 U	1.9 UJ	2.1 UJ	2 UJ	1.8 UJ	2.2 UJ	1.9 UJ	2 UJ
ENDRIN KETONE	UG/KG	3.9 U	3.8 UJ	4.1 UJ	4 UJ	3.6 UJ	4.2 UJ	3.7 UJ	3.9 UJ
TOXAPHENE	UG/KG	199 U	192 UJ	208 UJ	203 UJ	185 UJ	216 UJ	189 UJ	197 UJ
SEMI-VOLATILES									
bis(2-CHLOROETHYL) ETHER	UG/KG	518 U	539 U	594 U	653 U	566 U	608 U	515 U	540 U
PHENOL	UG/KG	518 U	539 U	594 U	653 U	566 U	608 U	515 U	540 U
2-CHLOROPHENOL	UG/KG	518 U	539 U	594 U	653 U	566 U	608 U	515 U	540 U
1,3-DICHLOROBENZENE	UG/KG	518 U	539 U	594 U	653 U	566 U	608 U	515 U	540 U
1,4-DICHLOROBENZENE	UG/KG	518 U	539 U	594 U	653 U	566 U	608 U	515 U	540 U
1,2-DICHLOROBENZENE	UG/KG	518 U	539 U	594 U	653 U	566 U	608 U	515 U	540 U
bis(2-CHLOROISOPROPYL) ETHER	UG/KG	518 U	539 U	594 U	653 U	566 U	608 U	515 U	540 U
2-METHYLPHENOL (o-CRESOL)	UG/KG	518 U	539 U	594 U	653 U	566 U	608 U	515 U	540 U
HEXACHLOROETHANE	UG/KG	518 U	539 U	594 U	653 U	566 U	608 U	515 U	540 U
N-NITROSODI-n-PROPYLAMINE	UG/KG	518 U	539 U	594 U	653 U	566 U	608 U	515 U	540 U
CRESOLS, m & p	UG/KG	518 U	539 U	594 U	653 U	566 U	608 U	515 U	540 U
NITROBENZENE	UG/KG	518 U	539 U	594 U	653 U	566 U	608 U	515 U	540 U
ISOPHORONE	UG/KG	518 U	539 U	594 U	653 U	566 U	608 U	515 U	540 U
2-NITROPHENOL	UG/KG	518 U	539 U	594 U	653 U	566 U	608 U	515 U	540 U
2,4-DIMETHYLPHENOL	UG/KG	518 U	539 U	594 U	653 U	566 U	608 U	515 U	540 U
bis(2-CHLOROETHOXY) METHANE	UG/KG	518 U	539 U	594 U	653 U	566 U	608 U	515 U	540 U
2,4-DICHLOROPHENOL	UG/KG	518 U	539 U	594 U	653 U	566 U	608 U	515 U	540 U
1,2,4-TRICHLOROBENZENE	UG/KG	518 U	539 U	594 U	653 U	566 U	608 U	515 U	540 U
NAPHTHALENE	UG/KG	518 U	539 U	594 U	653 U	566 U	608 U	515 U	540 U

	Building	SWM14	SWM14	SWM14	SWM14	SWM14	SWM14	SWM14	SWM14
	StationID	W14-SB01	W14-SB02	W14-SB02	W14-SB03	W14-SB04	W14-SB05	W14-SB06	W14-SB07
	SampleID	NDA148	NDA151	NDA152FD1	NDA154	NDA156	NDA158	NDA160	NDA162
	DateCollected	04/05/2000	04/05/2000	04/05/2000	04/05/2000	04/05/2000	04/05/2000	04/05/2000	04/05/2000
	Depth	4 to 6	4 to 6	4 to 6	4 to 6	4 to 6	4 to 6	4 to 6	4 to 6
Parameter	**Units**								
4-CHLOROANILINE	UG/KG	4980 U	431 U	620 U	488 U	478 U	461 U	559 U	499 U
2-METHYLNAPHTHALENE	UG/KG	4980 U	431 U	620 U	488 U	478 U	461 U	559 U	499 U
HEXACHLOROBUTADIENE	UG/KG	4980 U	431 U	620 U	488 U	478 U	461 U	559 U	499 U
4-CHLORO-3-METHYLPHENOL	UG/KG	4980 U	431 U	620 U	488 U	478 U	461 U	559 U	499 U
HEXACHLOROCYCLOPENTADIENE	UG/KG	4980 U	431 U	620 U	488 U	478 U	461 U	559 U	499 U
2,4,6-TRICHLOROPHENOL	UG/KG	4980 U	431 U	620 U	488 U	478 U	461 U	559 U	499 U
2,4,5-TRICHLOROPHENOL	UG/KG	14800 U	1280 U	1840 U	1450 U	1420 U	1370 U	1660 U	1480 U
2-CHLORONAPHTHALENE	UG/KG	4980 U	431 U	620 U	488 U	478 U	461 U	559 U	499 U
2-NITROANILINE	UG/KG	14800 U	1280 U	1840 U	1450 U	1420 U	1370 U	1660 U	1480 U
ACENAPHTHYLENE	UG/KG	4980 U	431 U	620 U	488 U	478 U	461 U	559 U	499 U
DIMETHYL PHTHALATE	UG/KG	4980 U	431 U	620 U	488 U	478 U	461 U	559 U	499 U
2,6-DINITROTOLUENE	UG/KG	4980 U	431 U	620 U	488 U	478 U	461 U	559 U	499 U
ACENAPHTHENE	UG/KG	4980 U	431 U	620 U	488 U	478 U	461 U	559 U	499 U
3-NITROANILINE	UG/KG	14800 U	1280 U	1840 U	1450 U	1420 U	1370 U	1660 U	1480 U
2,4-DINITROPHENOL	UG/KG	14800 U	1280 U	1840 U	1450 U	1420 U	1370 U	1660 U	1480 U
DIBENZOFURAN	UG/KG	4980 U	431 U	620 U	488 U	478 U	461 U	559 U	499 U
2,4-DINITROTOLUENE	UG/KG	4980 U	431 U	620 U	488 U	478 U	461 U	559 U	499 U
4-NITROPHENOL	UG/KG	14800 U	1280 U	1840 U	1450 U	1420 U	1370 U	1660 U	1480 U
FLUORENE	UG/KG	4980 U	431 U	620 U	488 U	478 U	461 U	559 U	499 U
4-CHLOROPHENYL PHENYL ETHER	UG/KG	4980 U	431 U	620 U	488 U	478 U	461 U	559 U	499 U
DIETHYL PHTHALATE	UG/KG	4980 U	431 U	620 U	488 U	478 U	461 U	559 U	499 U
4-NITROANILINE	UG/KG	14800 U	1280 U	1840 U	1450 U	1420 U	1370 U	1660 U	1480 U
4,6-DINITRO-2-METHYLPHENOL	UG/KG	14800 U	1280 U	1840 U	1450 U	1420 U	1370 U	1660 U	1480 U
N-NITROSODIPHENYLAMINE	UG/KG	4980 U	431 U	620 U	488 U	478 U	461 U	559 U	499 U
4-BROMOPHENYL PHENYL ETHER	UG/KG	4980 U	431 U	620 U	488 U	478 U	461 U	559 U	499 U
HEXACHLOROBENZENE	UG/KG	4980 U	431 U	620 U	488 U	478 U	461 U	559 U	499 U
PENTACHLOROPHENOL	UG/KG	14800 U	1280 U	1840 U	1450 U	1420 U	1370 U	1660 U	1480 U
PHENANTHRENE	UG/KG	4980 U	431 U	620 U	488 U	478 U	461 U	559 U	499 U
ANTHRACENE	UG/KG	4980 U	431 U	620 U	488 U	478 U	461 U	559 U	499 U
DI-n-BUTYL PHTHALATE	UG/KG	4980 U	431 U	620 U	488 U	478 U	461 U	559 U	499 U
FLUORANTHENE	UG/KG	4980 U	431 U	620 U	488 U	478 U	461 U	559 U	499 U
PYRENE	UG/KG	4980 U	431 U	620 U	488 U	478 U	461 U	559 U	499 U
BENZYL BUTYL PHTHALATE	UG/KG	4980 U	431 U	620 U	488 U	478 U	461 U	559 U	499 U
3,3'-DICHLOROBENZIDINE	UG/KG	9970 U	862 U	1240 U	975 U	957 U	921 U	1120 U	998 U
BENZO(a)ANTHRACENE	UG/KG	4980 U	431 U	620 U	488 U	478 U	461 U	559 U	499 U
CHRYSENE	UG/KG	4980 U	431 U	620 U	488 U	478 U	461 U	559 U	499 U
bis(2-ETHYLHEXYL) PHTHALATE	UG/KG	4980 U	431 U	620 U	488 U	478 U	461 U	559 U	499 U
DI-n-OCTYLPHTHALATE	UG/KG	4980 U	431 U	620 U	488 U	478 U	461 U	559 U	499 U
BENZO(b)FLUORANTHENE	UG/KG	4980 U	431 U	620 U	488 U	478 U	461 U	559 U	499 U

SWMU 14 Surface Soil Data

	Building	SWM14	SWM14	SWM14	SWM14	SWM14	SWM14	SWM14	SWM14
	StationID	W14-SB07	W14-SB08	W14-SB09	W14-SB10	W14-SB11	W14-SB12	W14-SB13	W14-SB14
	SampleID	NDA163FD1	NDA165	NDA167	NDA169	NDA171	NDA173	NDA175	NDA177
	DateCollected	04/05/2000	04/06/2000	04/06/2000	04/06/2000	04/06/2000	04/06/2000	04/06/2000	04/06/2000
	Depth	4 to 6	4 to 6	4 to 6	4 to 6	4 to 6	4 to 6	4 to 6	4 to 6
Parameter	Units								
4-CHLOROANILINE	UG/KG	518 U	539 U	594 U	653 U	566 U	608 U	515 U	540 U
2-METHYLNAPHTHALENE	UG/KG	518 U	539 U	594 U	653 U	566 U	608 U	515 U	540 U
HEXACHLOROBUTADIENE	UG/KG	518 U	539 U	594 U	653 U	566 U	608 U	515 U	540 U
4-CHLORO-3-METHYLPHENOL	UG/KG	518 U	539 U	594 U	653 U	566 U	608 U	515 U	540 U
HEXACHLOROCYCLOPENTADIENE	UG/KG	518 U	539 U	594 U	653 U	566 U	608 U	515 U	540 U
2,4,6-TRICHLOROPHENOL	UG/KG	518 U	539 U	594 U	653 U	566 U	608 U	515 U	540 U
2,4,5-TRICHLOROPHENOL	UG/KG	1540 U	1600 U	1760 U	1940 U	1680 U	1810 U	1530 U	1600 U
2-CHLORONAPHTHALENE	UG/KG	518 U	539 U	594 U	653 U	566 U	608 U	515 U	540 U
2-NITROANILINE	UG/KG	1540 U	1600 U	1760 U	1940 U	1680 U	1810 U	1530 U	1600 U
ACENAPHTHYLENE	UG/KG	518 U	539 U	594 U	653 U	566 U	608 U	515 U	540 U
DIMETHYL PHTHALATE	UG/KG	518 U	539 U	594 U	653 U	566 U	608 U	515 U	540 U
2,6-DINITROTOLUENE	UG/KG	518 U	539 U	594 U	653 U	566 U	608 U	515 U	540 U
ACENAPHTHENE	UG/KG	518 U	539 U	594 U	653 U	566 U	608 U	515 U	540 U
3-NITROANILINE	UG/KG	1540 U	1600 U	1760 U	1940 U	1680 U	1810 U	1530 U	1600 U
2,4-DINITROPHENOL	UG/KG	1540 U	1600 U	1760 U	1940 U	1680 U	1810 U	1530 U	1600 U
DIBENZOFURAN	UG/KG	518 U	539 U	594 U	653 U	566 U	608 U	515 U	540 U
2,4-DINITROTOLUENE	UG/KG	518 U	539 U	594 U	653 U	566 U	608 U	515 U	540 U
4-NITROPHENOL	UG/KG	1540 U	1600 U	1760 U	1940 U	1680 U	1810 U	1530 U	1600 U
FLUORENE	UG/KG	518 U	539 U	594 U	653 U	566 U	608 U	515 U	540 U
4-CHLOROPHENYL PHENYL ETHER	UG/KG	518 U	539 U	594 U	653 U	566 U	608 U	515 U	540 U
DIETHYL PHTHALATE	UG/KG	518 U	539 U	594 U	653 U	566 U	608 U	515 U	540 U
4-NITROANILINE	UG/KG	1540 U	1600 U	1760 U	1940 U	1680 U	1810 U	1530 U	1600 U
4,6-DINITRO-2-METHYLPHENOL	UG/KG	1540 U	1600 U	1760 U	1940 U	1680 U	1810 U	1530 U	1600 U
N-NITROSODIPHENYLAMINE	UG/KG	518 U	539 U	594 U	653 U	566 U	608 U	515 U	540 U
4-BROMOPHENYL PHENYL ETHER	UG/KG	518 U	539 U	594 U	653 U	566 U	608 U	515 U	540 U
HEXACHLOROBENZENE	UG/KG	518 U	539 U	594 U	653 U	566 U	608 U	515 U	540 U
PENTACHLOROPHENOL	UG/KG	1540 U	1600 U	1760 U	1940 U	1680 U	1810 U	1530 U	1600 U
PHENANTHRENE	UG/KG	518 U	539 U	594 U	653 U	566 U	608 U	515 U	540 U
ANTHRACENE	UG/KG	518 U	539 U	594 U	653 U	566 U	608 U	515 U	540 U
DI-n-BUTYL PHTHALATE	UG/KG	518 U	539 U	594 U	653 U	566 U	608 U	515 U	540 U
FLUORANTHENE	UG/KG	518 U	539 U	594 U	653 U	566 U	608 U	515 U	540 U
PYRENE	UG/KG	518 U	539 U	594 U	653 U	566 U	608 U	515 U	540 U
BENZYL BUTYL PHTHALATE	UG/KG	518 U	539 U	594 U	653 U	566 U	608 U	515 U	540 U
3,3'-DICHLOROBENZIDINE	UG/KG	1040 U	1080 U	1190 U	1310 U	1130 U	1220 U	1030 U	1080 U
BENZO(a)ANTHRACENE	UG/KG	518 U	539 U	594 U	653 U	566 U	608 U	515 U	540 U
CHRYSENE	UG/KG	518 U	539 U	594 U	653 U	566 U	608 U	515 U	540 U
bis(2-ETHYLHEXYL) PHTHALATE	UG/KG	518 U	539 U	594 U	653 U	566 U	608 U	515 U	540 U
DI-n-OCTYLPHTHALATE	UG/KG	518 U	539 U	594 U	653 U	566 U	608 U	515 U	540 U
BENZO(b)FLUORANTHENE	UG/KG	518 U	539 U	594 U	653 U	566 U	608 U	515 U	540 U

Parameter	Units	Building	SWM14	SWM14	SWM14	SWM14	SWM14	SWM14	SWM14	SWM14
		StationID	W14-SB01	W14-SB02	W14-SB02	W14-SB03	W14-SB04	W14-SB05	W14-SB06	W14-SB07
		SampleID	NDA148	NDA151	NDA152FD1	NDA154	NDA156	NDA158	NDA160	NDA162
		DateCollected	04/05/2000	04/05/2000	04/05/2000	04/05/2000	04/05/2000	04/05/2000	04/05/2000	04/05/2000
		Depth	4 to 6	4 to 6	4 to 6	4 to 6	4 to 6	4 to 6	4 to 6	4 to 6
BENZO(k)FLUORANTHENE	UG/KG		4980 U	431 U	620 U	488 U	478 U	461 U	559 U	499 U
BENZO(a)PYRENE	UG/KG		4980 U	431 U	620 U	488 U	478 U	461 U	559 U	499 U
INDENO(1,2,3-c,d)PYRENE	UG/KG		4980 U	431 U	620 U	488 U	478 U	461 U	559 U	499 U
DIBENZ(a,h)ANTHRACENE	UG/KG		4980 U	431 U	620 U	488 U	478 U	461 U	559 U	499 U
BENZO(g,h,i)PERYLENE	UG/KG		4980 U	431 U	620 U	488 U	478 U	461 U	559 U	499 U
CARBAZOLE	UG/KG		4980 U	431 U	620 U	488 U	478 U	461 U	559 U	499 U
VOLATILES										
CHLOROMETHANE	UG/KG		10 U	11 U	12 U	11 U	10 U	10 U	10 U	11 U
VINYL CHLORIDE	UG/KG		10 U	11 U	12 U	11 U	10 U	10 U	10 U	11 U
BROMOMETHANE	UG/KG		10 U	11 U	12 U	11 U	10 U	10 U	10 U	11 U
1,3-DICHLOROBENZENE	UG/KG		4980 U	431 U	620 U	488 U	478 U	461 U	559 U	499 U
CHLOROETHANE	UG/KG		10 U	11 U	12 U	11 U	10 U	10 U	10 UJ	11 U
1,1-DICHLOROETHENE	UG/KG		10 U	11 U	12 U	11 U	10 U	10 U	10 U	11 U
1,4-DICHLOROBENZENE	UG/KG		4980 U	431 U	620 U	488 U	478 U	461 U	559 U	499 U
1,2-DICHLOROBENZENE	UG/KG		4980 U	431 U	620 U	488 U	478 U	461 U	559 U	499 U
CARBON DISULFIDE	UG/KG		10 U	11 U	12 U	11 U	10 U	10 U	10 U	11 U
METHYLENE CHLORIDE	UG/KG		10 U	11 U	12 U	11 U	10 U	10 U	10 U	11 U
1,1-DICHLOROETHANE	UG/KG		10 U	11 U	12 U	11 U	10 U	10 U	10 U	11 U
ACETONE	UG/KG		49 R	59 R	42 R	50 R	45 R	55 R	34 R	50 R
METHYL ETHYL KETONE (2-BUTANONE)	UG/KG		10 R	11 R	12 R	11 R	10 R	10 R	10 R	11 R
CHLOROFORM	UG/KG		10 U	11 U	12 U	11 U	10 U	10 U	10 U	11 U
1,1,1-TRICHLOROETHANE	UG/KG		10 U	11 U	12 U	11 U	10 U	10 U	10 U	11 U
CARBON TETRACHLORIDE	UG/KG		10 U	11 U	12 U	11 U	10 U	10 U	10 U	11 U
BENZENE	UG/KG		10 U	11 U	12 U	11 U	10 U	10 U	10 U	11 U
1,2-DICHLOROETHANE	UG/KG		0.3 J	11 U	12 U	11 U	10 U	10 U	10 U	0.3 U
TRICHLOROETHYLENE (TCE)	UG/KG		10 U	11 U	12 U	11 U	10 U	10 U	10 U	11 U
1,2-DICHLOROPROPANE	UG/KG		10 U	11 U	12 U	11 U	10 U	10 U	10 U	11 U
1,2,4-TRICHLOROBENZENE	UG/KG		4980 U	431 U	620 U	488 U	478 U	461 U	559 U	499 U
BROMODICHLOROMETHANE	UG/KG		10 U	11 U	12 U	11 U	10 U	10 U	10 U	11 U
cis-1,3-DICHLOROPROPENE	UG/KG		10 U	11 U	12 U	11 U	10 U	10 U	10 U	11 U
METHYL ISOBUTYL KETONE (4-METHYL-2	UG/KG		10 U	11 U	12 U	11 U	10 U	10 U	10 U	11 U
TOLUENE	UG/KG		10 U	0.4 J	0.4 J	1 J	10 U	0.3 J	10 U	0.8 J
trans-1,3-DICHLOROPROPENE	UG/KG		10 U	11 U	12 U	11 U	10 U	10 U	10 U	11 U
1,1,2-TRICHLOROETHANE	UG/KG		10 U	11 U	12 U	11 U	10 U	10 U	10 U	11 U
TETRACHLOROETHYLENE(PCE)	UG/KG		10 U	11 U	12 U	11 U	10 U	10 U	10 U	11 U
2-HEXANONE	UG/KG		10 U	11 U	12 U	11 U	10 U	10 U	10 U	11 U
DIBROMOCHLOROMETHANE	UG/KG		10 U	11 U	12 U	11 U	10 U	10 U	10 U	11 U
CHLOROBENZENE	UG/KG		10 U	11 U	12 U	11 U	10 U	10 U	10 U	11 U
ETHYLBENZENE	UG/KG		10 U	11 U	12 U	11 U	10 U	10 U	10 U	11 U

SWMU 14 Surface Soil Data

	Building	SWM14	SWM14	SWM14	SWM14	SWM14	SWM14	SWM14	SWM14
	StationID	W14-SB07	W14-SB08	W14-SB09	W14-SB10	W14-SB11	W14-SB12	W14-SB13	W14-SB14
	SampleID	NDA163FD1	NDA165	NDA167	NDA169	NDA171	NDA173	NDA175	NDA177
	DateCollected	04/05/2000	04/06/2000	04/06/2000	04/06/2000	04/06/2000	04/06/2000	04/06/2000	04/06/2000
	Depth	4 to 6	4 to 6	4 to 6	4 to 6	4 to 6	4 to 6	4 to 6	4 to 6
Parameter	**Units**								
BENZO(k)FLUORANTHENE	UG/KG	518 U	539 U	594 U	653 U	566 U	608 U	515 U	540 U
BENZO(a)PYRENE	UG/KG	518 U	539 U	594 U	653 U	566 U	608 U	515 U	540 U
INDENO(1,2,3-c,d)PYRENE	UG/KG	518 U	539 U	594 U	653 U	566 U	608 U	515 U	540 U
DIBENZ(a,h)ANTHRACENE	UG/KG	518 U	539 U	594 U	653 U	566 U	608 U	515 U	540 U
BENZO(g,h,i)PERYLENE	UG/KG	518 U	539 U	594 U	653 U	566 U	608 U	515 U	540 U
CARBAZOLE	UG/KG	518 U	539 U	594 U	653 U	566 U	608 U	515 U	540 U
VOLATILES									
CHLOROMETHANE	UG/KG	12 U	10 U	10 U	10 U	11 U	11 U	10 U	10 U
VINYL CHLORIDE	UG/KG	12 U	10 U	10 U	10 U	11 U	11 U	10 U	10 U
BROMOMETHANE	UG/KG	12 U	10 U	10 U	10 U	11 U	11 U	10 U	10 U
1,3-DICHLOROBENZENE	UG/KG	518 U	539 U	594 U	653 U	566 U	608 U	515 U	540 U
CHLOROETHANE	UG/KG	12 U	10 U	10 U	10 U	11 U	11 U	10 U	10 U
1,1-DICHLOROETHENE	UG/KG	12 U	10 U	10 U	10 U	11 U	11 U	10 U	10 U
1,4-DICHLOROBENZENE	UG/KG	518 U	539 U	594 U	653 U	566 U	608 U	515 U	540 U
1,2-DICHLOROBENZENE	UG/KG	518 U	539 U	594 U	653 U	566 U	608 U	515 U	540 U
CARBON DISULFIDE	UG/KG	12 U	10 U	10 U	10 U	11 U	11 U	10 U	10 U
METHYLENE CHLORIDE	UG/KG	12 U	10 U	10 U	10 U	11 U	11 U	10 U	10 U
1,1-DICHLOROETHANE	UG/KG	12 U	10 U	10 U	10 U	11 U	11 U	10 U	10 U
ACETONE	UG/KG	107 R	268 R	49 R	74 R	42 R	107 R	84 R	72 R
METHYL ETHYL KETONE (2-BUTANONE)	UG/KG	12 R	10 R	10 R	10 R	11 R	11 R	10 R	10 R
CHLOROFORM	UG/KG	12 U	10 U	10 U	10 U	11 U	11 U	10 U	10 U
1,1,1-TRICHLOROETHANE	UG/KG	12 U	10 U	10 U	10 U	11 U	11 U	10 U	10 U
CARBON TETRACHLORIDE	UG/KG	12 U	10 U	10 U	10 U	11 U	11 U	10 U	10 U
BENZENE	UG/KG	12 U	0.2 J	0.1 U	10 U	0.1 U	11 U	0.1 U	10 U
1,2-DICHLOROETHANE	UG/KG	12 U	0.3 J	10 U	10 U	11 U	11 U	10 U	10 U
TRICHLOROETHYLENE (TCE)	UG/KG	12 U	10 U	10 U	10 U	11 U	11 U	10 U	10 U
1,2-DICHLOROPROPANE	UG/KG	12 U	10 U	10 U	10 U	11 U	11 U	10 U	10 U
1,2,4-TRICHLOROBENZENE	UG/KG	518 U	539 U	594 U	653 U	566 U	608 U	515 U	540 U
BROMODICHLOROMETHANE	UG/KG	12 U	10 U	10 U	10 U	11 U	11 U	10 U	10 U
cis-1,3-DICHLOROPROPENE	UG/KG	12 U	10 U	10 U	10 U	11 U	11 U	10 U	10 U
METHYL ISOBUTYL KETONE (4-METHYL-2	UG/KG	12 U	10 U	10 U	10 U	11 U	11 U	10 U	10 U
TOLUENE	UG/KG	12 U	0.3 J	0.3 J	0.3 U	0.4 J	11 U	0.3 J	10 U
trans-1,3-DICHLOROPROPENE	UG/KG	12 U	10 U	10 U	10 U	11 U	11 U	10 U	10 U
1,1,2-TRICHLOROETHANE	UG/KG	12 U	10 U	10 U	10 U	11 U	11 U	10 U	10 U
TETRACHLOROETHYLENE(PCE)	UG/KG	12 U	10 U	10 U	10 U	11 U	11 U	10 U	10 U
2-HEXANONE	UG/KG	12 U	10 U	10 U	10 U	11 U	11 U	10 U	10 U
DIBROMOCHLOROMETHANE	UG/KG	12 U	10 U	10 U	10 U	11 U	11 U	10 U	10 U
CHLOROBENZENE	UG/KG	12 U	10 U	10 U	10 U	11 U	11 U	10 U	10 U
ETHYLBENZENE	UG/KG	12 U	10 U	10 U	10 U	11 U	11 U	10 U	10 U

	Building	SWM14	SWM14	SWM14	SWM14	SWM14	SWM14	SWM14	SWM14
	StationID	W14-SB01	W14-SB02	W14-SB02	W14-SB03	W14-SB04	W14-SB05	W14-SB06	W14-SB07
	SampleID	NDA148	NDA151	NDA152FD1	NDA154	NDA156	NDA158	NDA160	NDA162
	DateCollected	04/05/2000	04/05/2000	04/05/2000	04/05/2000	04/05/2000	04/05/2000	04/05/2000	04/05/2000
	Depth	4 to 6	4 to 6	4 to 6	4 to 6	4 to 6	4 to 6	4 to 6	4 to 6
Parameter	**Units**								
M,P-XYLENE (SUM OF ISOMERS)	UG/KG	10 U	0.4 J	0.3 J	1 J	10 U	0.3 J	10 U	0.7 J
O-XYLENE (1,2-DIMETHYLBENZENE)	UG/KG	10 U	11 U	12 U	0.4 J	10 U	10 U	10 U	0.3 J
STYRENE	UG/KG	10 U	11 U	12 U	11 U	10 U	10 U	10 U	11 U
BROMOFORM	UG/KG	10 U	11 U	12 U	11 U	10 U	10 U	10 U	11 U
1,1,2,2-TETRACHLOROETHANE	UG/KG	10 U	11 U	12 U	11 U	10 U	10 U	10 U	11 U
XYLENES, TOTAL	UG/KG	10 U	0.4 J	0.3 J	1 J	10 U	0.3 J	10 U	1 J

SWMU 14 Surface Soil Data

	Building	SWM14	SWM14	SWM14	SWM14	SWM14	SWM14	SWM14	SWM14
	StationID	W14-SB07	W14-SB08	W14-SB09	W14-SB10	W14-SB11	W14-SB12	W14-SB13	W14-SB14
	SampleID	NDA163FD1	NDA165	NDA167	NDA169	NDA171	NDA173	NDA175	NDA177
	DateCollected	04/05/2000	04/06/2000	04/06/2000	04/06/2000	04/06/2000	04/06/2000	04/06/2000	04/06/2000
	Depth	4 to 6	4 to 6	4 to 6	4 to 6	4 to 6	4 to 6	4 to 6	4 to 6
Parameter	**Units**								
M,P-XYLENE (SUM OF ISOMERS)	UG/KG	12 U	10 U	0.2 U	0.2 U	0.4 J	11 U	10 U	10 U
O-XYLENE (1,2-DIMETHYLBENZENE)	UG/KG	12 U	10 U	10 U	10 U	11 U	11 U	10 U	10 U
STYRENE	UG/KG	12 U	10 U	10 U	10 U	11 U	11 U	10 U	10 U
BROMOFORM	UG/KG	12 U	10 U	10 U	10 U	11 U	11 U	10 U	10 U
1,1,2,2-TETRACHLOROETHANE	UG/KG	12 U	10 U	10 U	10 U	11 U	11 U	10 U	10 U
XYLENES, TOTAL	UG/KG	12 U	10 U	0.2 U	0.2 U	0.4 J	11 U	10 U	10 U

SWMU 15 Groundwater Data

	Building	SWM15		
	StationID	SWMU15-MW01		
	SampleID	NDA015		
	DateCollected	05/01/2000		
	Depth	0 to 0		
Parameter	**Units**			
DISSOLVED METALS				
ALUMINUM, DISSOLVED	UG/L	25.8	U	
ANTIMONY, DISSOLVED	UG/L	1.4	U	
ARSENIC, DISSOLVED	UG/L	3.4	U	
BARIUM, DISSOLVED	UG/L	108	J	
BERYLLIUM, DISSOLVED	UG/L	0.3	U	
CALCIUM, DISSOLVED	UG/L	72300	=	
CADMIUM, DISSOLVED	UG/L	0.23	J	
CHROMIUM, DISSOLVED	UG/L	2	J	
COBALT, DISSOLVED	UG/L	0.5	U	
COPPER, DISSOLVED	UG/L	1.9	U	
IRON, DISSOLVED	UG/L	12.2	U	
LEAD, DISSOLVED	UG/L	1.1	U	
MAGNESIUM, DISSOLVED	UG/L	34700	=	
MANGANESE, DISSOLVED	UG/L	117	=	
MERCURY, DISSOLVED	UG/L	0.18	U	
NICKEL, DISSOLVED	UG/L	2.8	J	
POTASSIUM, DISSOLVED	UG/L	2300	J	
SELENIUM, DISSOLVED	UG/L	2.1	U	
SILVER, DISSOLVED	UG/L	0.5	U	
SODIUM, DISSOLVED	UG/L	89600	=	
THALLIUM, DISSOLVED	UG/L	2.7	U	
VANADIUM, DISSOLVED	UG/L	17.6	J	
ZINC, DISSOLVED	UG/L	8.7	J	
EXPLOSIVES				
2,6-DINITROTOLUENE	UG/L	5	U	
NITROBENZENE	UG/L	5	U	
2,4-DINITROTOLUENE	UG/L	5	U	
METALS				
ALUMINUM	UG/L	8700	=	
ANTIMONY	UG/L	1.5	J	
ARSENIC	UG/L	3.4	U	
BARIUM	UG/L	174	J	
BERYLLIUM	UG/L	0.31	J	
CADMIUM	UG/L	0.2	U	
CALCIUM	UG/L	78200	=	
CHROMIUM, TOTAL	UG/L	30.8	=	
COBALT	UG/L	5.9	J	
COPPER	UG/L	14.8	J	
IRON	UG/L	10100	=	
LEAD	UG/L	1.7	J	
MAGNESIUM	UG/L	37800	=	
MANGANESE	UG/L	458	=	
MERCURY	UG/L	0.18	U	
NICKEL	UG/L	17.2	J	
POTASSIUM	UG/L	3530	J	
SELENIUM	UG/L	2.1	U	
SILVER	UG/L	0.5	U	
SODIUM	UG/L	92500	=	
THALLIUM	UG/L	2.7	U	
VANADIUM	UG/L	43.5	J	

SWMU 15 Groundwater Data

	Building	SWM15	
	StationID	SWMU15-MW01	
	SampleID	NDA015	
	DateCollected	05/01/2000	
	Depth	0 to 0	
Parameter	**Units**		
ZINC	UG/L	30.7	=
PCB			
PCB-1016 (AROCHLOR 1016)	UG/L	0.21	UJ
PCB-1260 (AROCHLOR 1260)	UG/L	0.21	UJ
PCB-1221 (AROCHLOR 1221)	UG/L	0.42	UJ
PCB-1232 (AROCHLOR 1232)	UG/L	0.21	UJ
PCB-1242 (AROCHLOR 1242)	UG/L	0.21	UJ
PCB-1248 (AROCHLOR 1248)	UG/L	0.21	UJ
PCB-1254 (AROCHLOR 1254)	UG/L	0.21	UJ
PESTICIDES			
ALPHA BHC	UG/L	0.01	UJ
BETA BHC	UG/L	0.01	U
DELTA BHC	UG/L	0.01	U
GAMMA BHC (LINDANE)	UG/L	0.01	UJ
HEPTACHLOR	UG/L	0.01	U
ALDRIN	UG/L	0.01	U
HEPTACHLOR EPOXIDE	UG/L	0.01	U
ALPHA ENDOSULFAN	UG/L	0.01	U
DIELDRIN	UG/L	0.02	U
p,p'-DDE	UG/L	0.02	U
ENDRIN	UG/L	0.02	U
BETA ENDOSULFAN	UG/L	0.02	U
p,p'-DDD	UG/L	0.02	U
ENDOSULFAN SULFATE	UG/L	0.02	U
p,p'-DDT	UG/L	0.02	U
METHOXYCHLOR	UG/L	0.11	U
ENDRIN ALDEHYDE	UG/L	0.02	U
ALPHA-CHLORDANE	UG/L	0.01	U
GAMMA-CHLORDANE	UG/L	0.01	U
ENDRIN KETONE	UG/L	0.02	U
TOXAPHENE	UG/L	1.1	U
SEMI-VOLATILES			
bis(2-CHLOROETHYL) ETHER	UG/L	5	U
PHENOL	UG/L	5	U
2-CHLOROPHENOL	UG/L	5	U
1,3-DICHLOROBENZENE	UG/L	1	U
1,4-DICHLOROBENZENE	UG/L	1	U
1,2-DICHLOROBENZENE	UG/L	1	U
bis(2-CHLOROISOPROPYL) ETHER	UG/L	5	U
2-METHYLPHENOL (o-CRESOL)	UG/L	5	U
HEXACHLOROETHANE	UG/L	5	U
N-NITROSODI-n-PROPYLAMINE	UG/L	5	U
CRESOLS, m & p	UG/L	5	U
NITROBENZENE	UG/L	5	U
ISOPHORONE	UG/L	5	U
2-NITROPHENOL	UG/L	5	U
2,4-DIMETHYLPHENOL	UG/L	5	U
bis(2-CHLOROETHOXY) METHANE	UG/L	5	U
2,4-DICHLOROPHENOL	UG/L	5	U
1,2,4-TRICHLOROBENZENE	UG/L	1	U
NAPHTHALENE	UG/L	5	U

SWMU 15 Groundwater Data

	Building	SWM15	
	StationID	SWMU15-MW01	
	SampleID	NDA015	
	DateCollected	05/01/2000	
	Depth	0 to 0	
Parameter	**Units**		
4-CHLOROANILINE	UG/L	5	U
2-METHYLNAPHTHALENE	UG/L	5	U
HEXACHLOROBUTADIENE	UG/L	5	U
4-CHLORO-3-METHYLPHENOL	UG/L	5	U
HEXACHLOROCYCLOPENTADIENE	UG/L	5	U
2,4,6-TRICHLOROPHENOL	UG/L	5	U
2,4,5-TRICHLOROPHENOL	UG/L	21	U
2-CHLORONAPHTHALENE	UG/L	5	U
2-NITROANILINE	UG/L	21	U
ACENAPHTHYLENE	UG/L	5	U
DIMETHYL PHTHALATE	UG/L	5	U
2,6-DINITROTOLUENE	UG/L	5	U
ACENAPHTHENE	UG/L	5	U
3-NITROANILINE	UG/L	21	U
2,4-DINITROPHENOL	UG/L	21	U
DIBENZOFURAN	UG/L	5	U
2,4-DINITROTOLUENE	UG/L	5	U
4-NITROPHENOL	UG/L	21	U
FLUORENE	UG/L	5	U
4-CHLOROPHENYL PHENYL ETHER	UG/L	5	U
DIETHYL PHTHALATE	UG/L	5	U
4-NITROANILINE	UG/L	21	U
4,6-DINITRO-2-METHYLPHENOL	UG/L	21	U
N-NITROSODIPHENYLAMINE	UG/L	5	U
4-BROMOPHENYL PHENYL ETHER	UG/L	5	U
HEXACHLOROBENZENE	UG/L	5	U
PENTACHLOROPHENOL	UG/L	21	U
PHENANTHRENE	UG/L	5	U
ANTHRACENE	UG/L	5	U
DI-n-BUTYL PHTHALATE	UG/L	5	U
FLUORANTHENE	UG/L	5	U
PYRENE	UG/L	5	U
BENZYL BUTYL PHTHALATE	UG/L	5	U
3,3'-DICHLOROBENZIDINE	UG/L	5	U
BENZO(a)ANTHRACENE	UG/L	5	U
CHRYSENE	UG/L	5	U
bis(2-ETHYLHEXYL) PHTHALATE	UG/L	5	U
DI-n-OCTYLPHTHALATE	UG/L	5	U
BENZO(b)FLUORANTHENE	UG/L	5	U
BENZO(k)FLUORANTHENE	UG/L	5	U
BENZO(a)PYRENE	UG/L	5	U
INDENO(1,2,3-c,d)PYRENE	UG/L	5	U
DIBENZ(a,h)ANTHRACENE	UG/L	5	U
BENZO(g,h,i)PERYLENE	UG/L	5	U
CARBAZOLE	UG/L	5	U
VOLATILES			
CHLOROMETHANE	UG/L	1	U
VINYL CHLORIDE	UG/L	1	U
BROMOMETHANE	UG/L	1	U
1,3-DICHLOROBENZENE	UG/L	1	U
CHLOROETHANE	UG/L	1	U

SWMU 15 Groundwater Data

	Building	SWM15	
	StationID	SWMU15-MW01	
	SampleID	NDA015	
	DateCollected	05/01/2000	
	Depth	0 to 0	
Parameter	**Units**		
1,1-DICHLOROETHENE	UG/L	1	U
1,4-DICHLOROBENZENE	UG/L	1	U
1,2-DICHLOROBENZENE	UG/L	1	U
CARBON DISULFIDE	UG/L	1	U
METHYLENE CHLORIDE	UG/L	2	U
1,1-DICHLOROETHANE	UG/L	1	U
ACETONE	UG/L	5	U
METHYL ETHYL KETONE (2-BUTANONE)	UG/L	5	UJ
CHLOROFORM	UG/L	2	U
1,1,1-TRICHLOROETHANE	UG/L	1	U
CARBON TETRACHLORIDE	UG/L	1	U
BENZENE	UG/L	1	U
1,2-DICHLOROETHANE	UG/L	1	U
TRICHLOROETHYLENE (TCE)	UG/L	1	U
1,2-DICHLOROPROPANE	UG/L	1	U
1,2,4-TRICHLOROBENZENE	UG/L	1	U
BROMODICHLOROMETHANE	UG/L	1	U
cis-1,3-DICHLOROPROPENE	UG/L	1	U
METHYL ISOBUTYL KETONE (4-METHYL-2	UG/L	5	U
TOLUENE	UG/L	1	U
trans-1,3-DICHLOROPROPENE	UG/L	1	U
1,1,2-TRICHLOROETHANE	UG/L	1	U
TETRACHLOROETHYLENE(PCE)	UG/L	1	UJ
2-HEXANONE	UG/L	5	U
DIBROMOCHLOROMETHANE	UG/L	1	U
CHLOROBENZENE	UG/L	1	U
ETHYLBENZENE	UG/L	1	U
M,P-XYLENE (SUM OF ISOMERS)	UG/L	1	U
O-XYLENE (1,2-DIMETHYLBENZENE)	UG/L	1	U
STYRENE	UG/L	1	U
BROMOFORM	UG/L	1	U
1,1,2,2-TETRACHLOROETHANE	UG/L	1	U
XYLENES, TOTAL	UG/L	1	U
BROMOCHLOROMETHANE	UG/L	1	U
1,2-DIBROMO-3-CHLOROPROPANE	UG/L	1	U
cis-1,2-DICHLOROETHYLENE	UG/L	1	U
trans-1,2-DICHLOROETHENE	UG/L	1	U
TOTAL 1,2-DICHLOROETHENE	UG/L	1	U
ETHYLENE DIBROMIDE (1,2-DIBROMOE	UG/L	1	U

	Building	SWM15		SWM15		SWM15		SWM15		SWM15		SWM15	
	StationID	W15-SB01		W15-SB02		W15-SB03		W15-SB04		W15-SB05		W15-SB06	
	SampleID	NDA178		NDA179		NDA180		NDA181		NDA182		NDA183	
	DateCollected	04/11/2000		04/11/2000		04/11/2000		04/11/2000		04/11/2000		04/11/2000	
	Depth	0 to 0.5		0 to 0.5		0 to 0.5		0 to 0.5		0 to 0.5		0 to 0.5	
Parameter	**Units**												
EXPLOSIVES													
2,6-DINITROTOLUENE	UG/KG	644	UJ	644	UJ	550	UJ	566	UJ	679	UJ	589	UJ
NITROBENZENE	UG/KG	644	UJ	644	UJ	550	UJ	566	UJ	679	UJ	589	UJ
2,4-DINITROTOLUENE	UG/KG	644	UJ	644	UJ	550	UJ	566	UJ	679	UJ	589	UJ
METALS													
ALUMINUM	MG/KG	7810	=	7180	=	11000	=	5720	=	9030	=	5510	=
ANTIMONY	MG/KG	0.27	J	0.15	UJ	0.55	J	0.62	J	0.6	J	0.44	J
ARSENIC	MG/KG	0.77	J	0.72	J	1.6	J	0.86	J	1.2	J	0.62	J
BARIUM	MG/KG	47.2	=	57.2	=	76.7	=	62.5	=	79	=	61.6	=
BERYLLIUM	MG/KG	0.11	J	0.15	J	0.17	J	0.14	J	0.16	J	0.11	J
CADMIUM	MG/KG	0.02	U	0.15	J	2.5	=	0.1	J	0.56	J	0.023	U
CALCIUM	MG/KG	6090	=	3450	=	15800	=	3930	=	5560	=	2570	=
CHROMIUM, TOTAL	MG/KG	13.9	=	9.2	=	28.4	=	10	=	18.2	=	9	=
COBALT	MG/KG	8.2	J	7.3	J	11.2	=	7.8	J	10.6	J	7.8	J
COPPER	MG/KG	34.9	=	36.1	=	74.7	=	31.8	=	44.6	=	21.7	=
IRON	MG/KG	15300	=	14600	=	22200	=	11900	=	16400	=	12800	=
LEAD	MG/KG	23.2	=	21.2	=	68.4	=	47.6	=	35.2	=	9.4	=
MAGNESIUM	MG/KG	4130	=	2100	=	6660	=	1830	=	3850	=	1930	=
MANGANESE	MG/KG	524	=	520	=	572	=	690	=	704	=	720	=
MERCURY	MG/KG	0.014	U	0.017	J	0.11	=	0.017	U	0.038	J	0.02	J
NICKEL	MG/KG	8.2	=	4.5	J	12.5	=	4.6	J	9.3	J	5.1	J
POTASSIUM	MG/KG	772	J	1070	J	1600	=	1080	J	1350	=	921	J
SELENIUM	MG/KG	0.82	J	0.73	J	0.61	J	0.6	J	0.97	J	0.65	J
SILVER	MG/KG	0.051	U	0.053	U	0.052	U	0.057	U	0.059	U	0.056	U
SODIUM	MG/KG	205	J	93.9	J	217	J	81.9	J	160	J	104	J
THALLIUM	MG/KG	0.28	U	0.45	J	0.28	U	0.31	U	0.32	U	0.33	J
VANADIUM	MG/KG	47.1	=	41.9	=	62.8	=	34.6	=	46.4	=	40.6	=
ZINC	MG/KG	51.8	=	219	=	195	=	53.2	=	84	=	36.4	=
PCB													
PCB-1016 (AROCHLOR 1016)	UG/KG	33	U	35	U	34	U	37	U	39	U	37	U
PCB-1260 (AROCHLOR 1260)	UG/KG	33	U	35	U	21	J	37	U	39	U	37	U
PCB-1221 (AROCHLOR 1221)	UG/KG	68	U	71	U	69	U	74	U	78	U	75	U
PCB-1232 (AROCHLOR 1232)	UG/KG	33	U	35	U	34	U	37	U	39	U	37	U
PCB-1242 (AROCHLOR 1242)	UG/KG	33	U	35	U	34	U	37	U	39	U	37	U
PCB-1248 (AROCHLOR 1248)	UG/KG	33	U	35	U	34	U	37	U	39	U	37	U
PCB-1254 (AROCHLOR 1254)	UG/KG	33	U	35	U	34	U	37	U	39	U	37	U

SWMU 15 Surface Soil Data

Parameter	Units														
Building		SWM15		SWM15		SWM15		SWM15		SWM15		SWM15		SWM15	
StationID		W15-SB06		W15-SB07		W15-SB08		W15-SB09		W15-SB10		W15-SB11		W15-SB12	
SampleID		NDA184FD1		NDA185		NDA186		NDA187		NDA188		NDA189		NDA190	
DateCollected		04/11/2000		04/12/2000		04/12/2000		04/12/2000		04/12/2000		04/12/2000		04/12/2000	
Depth		0 to 0.5		0 to 0.5		0 to 0.5		0 to 0.5		0 to 0.5		0 to 0.5		0 to 0.5	
EXPLOSIVES															
2,6-DINITROTOLUENE	UG/KG	662	UJ	445	UJ	416	UJ	380	UJ	810	UJ	426	UJ	430	UJ
NITROBENZENE	UG/KG	662	UJ	445	UJ	416	UJ	380	UJ	810	UJ	426	UJ	430	UJ
2,4-DINITROTOLUENE	UG/KG	662	UJ	445	UJ	416	UJ	380	UJ	810	UJ	426	UJ	430	UJ
METALS															
ALUMINUM	MG/KG	5160	=	5030	J	5950	J	6550	J	6430	J	6120	J	6480	J
ANTIMONY	MG/KG	0.35	J	0.39	J	0.45	J	0.23	J	0.67	J	0.43	J	0.36	J
ARSENIC	MG/KG	0.74	J	1	J	4.8	=	0.45	J	1	J	3.1	=	0.5	J
BARIUM	MG/KG	56.5	=	64.9	=	56.2	=	58.5	=	68.8	=	79.6	=	61.7	=
BERYLLIUM	MG/KG	0.13	J	0.12	J	0.092	J	0.1	J	0.13	J	0.1	J	0.091	J
CADMIUM	MG/KG	0.023	U	0.026	U	0.31	J	0.022	U	0.027	U	0.022	U	0.023	U
CALCIUM	MG/KG	1920	=	1920	J	4470	J	3110	J	2990	J	3540	J	3200	J
CHROMIUM, TOTAL	MG/KG	8.1	=	6.6	J	13	J	11.3	J	10.6	J	14.7	J	11.5	J
COBALT	MG/KG	7.5	J	7.5	J	7.6	J	8.1	J	8.6	J	9.1	J	7.4	J
COPPER	MG/KG	20.5	=	21.3	J	31.8	J	32.2	J	24.5	J	46.3	J	30.8	J
IRON	MG/KG	12400	=	12200	=	14700	=	15400	=	13700	=	19700	=	12900	=
LEAD	MG/KG	9.5	=	9.7	=	19.5	=	13.5	=	6.7	=	13.3	=	66.7	=
MAGNESIUM	MG/KG	1610	=	1060	J	2110	J	3010	J	2290	J	1710	J	2330	J
MANGANESE	MG/KG	654	=	701	=	627	=	644	=	740	=	786	=	605	=
MERCURY	MG/KG	0.027	J	0.015	U	0.013	U	0.015	U	0.021	J	0.014	J	0.02	J
NICKEL	MG/KG	4.4	J	3.3	J	4.9	J	6.2	J	5.8	J	9.2	J	5	J
POTASSIUM	MG/KG	894	J	828	J	872	J	670	J	838	J	1110	J	778	J
SELENIUM	MG/KG	0.64	J	0.39	J	0.24	J	0.37	J	0.42	J	0.53	J	0.36	J
SILVER	MG/KG	0.056	U	0.066	U	0.056	U	0.054	U	0.069	U	0.056	U	0.057	U
SODIUM	MG/KG	67.8	J	93.5	J	136	J	136	J	117	J	119	J	161	J
THALLIUM	MG/KG	0.3	U	0.85	J	0.76	J	0.45	J	0.62	J	0.81	J	0.34	J
VANADIUM	MG/KG	38.4	=	36.2	J	43.5	J	46.4	J	41	J	41.3	J	39.7	J
ZINC	MG/KG	35.4	=	26.5	J	80.4	J	48.2	J	39.9	J	59.2	J	49.1	J
PCB															
PCB-1016 (AROCHLOR 1016)	UG/KG	37	U	39	UJ	37	UJ	35	UJ	45	UJ	37	UJ	37	UJ
PCB-1260 (AROCHLOR 1260)	UG/KG	37	U	39	UJ	37	UJ	35	UJ	45	UJ	37	UJ	37	UJ
PCB-1221 (AROCHLOR 1221)	UG/KG	74	U	79	UJ	75	UJ	72	UJ	91	UJ	75	UJ	75	UJ
PCB-1232 (AROCHLOR 1232)	UG/KG	37	U	39	UJ	37	UJ	35	UJ	45	UJ	37	UJ	37	UJ
PCB-1242 (AROCHLOR 1242)	UG/KG	37	U	39	UJ	37	UJ	35	UJ	45	UJ	37	UJ	37	UJ
PCB-1248 (AROCHLOR 1248)	UG/KG	37	U	39	UJ	37	UJ	35	UJ	45	UJ	37	UJ	37	UJ
PCB-1254 (AROCHLOR 1254)	UG/KG	37	U	39	UJ	37	UJ	35	UJ	45	UJ	37	UJ	37	UJ

	Building	SWM15		SWM15		SWM15		SWM15		SWM15	
	StationID	W15-SB13		W15-SB13		W15-SB14		W15-SB15		W15-SB16	
	SampleID	NDA191		NDA192FD1		NDA193		NDA194		NDA195	
	DateCollected	04/12/2000		04/12/2000		04/12/2000		04/12/2000		04/12/2000	
	Depth	0 to 0.5		0 to 0.5		0 to 0.5		0 to 0.5		0 to 0.5	
Parameter	**Units**										
EXPLOSIVES											
2,6-DINITROTOLUENE	UG/KG	338	UJ	418	UJ	1720	UJ	480	UJ	323	UJ
NITROBENZENE	UG/KG	338	UJ	418	UJ	1720	UJ	480	UJ	323	UJ
2,4-DINITROTOLUENE	UG/KG	338	UJ	418	UJ	1720	UJ	480	UJ	323	UJ
METALS											
ALUMINUM	MG/KG	6900	J	6160	J	9660	J	9800	J	21400	J
ANTIMONY	MG/KG	0.36	J	0.26	J	0.32	J	0.84	J	0.62	J
ARSENIC	MG/KG	0.99	J	0.89	J	0.58	J	0.42	U	1.1	J
BARIUM	MG/KG	65.5	=	60.3	=	66.3	=	73.4	=	44.4	=
BERYLLIUM	MG/KG	0.1	J	0.089	J	0.1	J	0.18	J	0.13	J
CADMIUM	MG/KG	0.02	U	0.023	U	0.021	U	0.025	U	0.021	U
CALCIUM	MG/KG	3500	J	3910	J	4550	J	3120	J	22700	J
CHROMIUM, TOTAL	MG/KG	9.4	J	8	J	13.3	J	6.7	J	47.5	J
COBALT	MG/KG	7.7	J	7.1	J	10	J	6.5	J	16.6	J
COPPER	MG/KG	22.9	J	21.4	J	49.6	J	27	J	66.7	J
IRON	MG/KG	15000	=	12400	=	18500	=	16700	=	30100	=
LEAD	MG/KG	5	=	4.7	=	8.1	=	2.4	=	5.9	=
MAGNESIUM	MG/KG	2570	J	2240	J	4870	J	2490	J	14200	J
MANGANESE	MG/KG	637	=	568	=	688	=	370	=	579	=
MERCURY	MG/KG	0.014	U	0.015	U	0.014	U	0.015	U	0.012	U
NICKEL	MG/KG	4.9	J	4	J	8.5	J	3.4	J	28.3	J
POTASSIUM	MG/KG	876	J	778	J	874	J	1140	J	845	J
SELENIUM	MG/KG	0.41	J	0.31	J	0.31	J	0.26	U	0.22	U
SILVER	MG/KG	0.051	U	0.058	U	0.052	U	0.062	U	0.052	U
SODIUM	MG/KG	123	J	132	J	224	J	48.6	J	870	J
THALLIUM	MG/KG	0.41	J	0.4	J	0.52	J	0.47	J	0.28	U
VANADIUM	MG/KG	45.9	J	38.5	J	57.3	J	46.3	J	95.9	J
ZINC	MG/KG	35.2	J	31.4	J	50.8	J	29	J	47.5	J
PCB											
PCB-1016 (AROCHLOR 1016)	UG/KG	34	UJ	38	UJ	34	UJ	40	UJ	34	UJ
PCB-1260 (AROCHLOR 1260)	UG/KG	34	UJ	38	UJ	34	UJ	40	UJ	34	UJ
PCB-1221 (AROCHLOR 1221)	UG/KG	69	UJ	78	UJ	69	UJ	82	UJ	69	UJ
PCB-1232 (AROCHLOR 1232)	UG/KG	34	UJ	38	UJ	34	UJ	40	UJ	34	UJ
PCB-1242 (AROCHLOR 1242)	UG/KG	34	UJ	38	UJ	34	UJ	40	UJ	34	UJ
PCB-1248 (AROCHLOR 1248)	UG/KG	34	UJ	38	UJ	34	UJ	40	UJ	34	UJ
PCB-1254 (AROCHLOR 1254)	UG/KG	34	UJ	38	UJ	34	UJ	40	UJ	34	UJ

SWMU 15 Surface Soil Data

	Building	SWM15		SWM15		SWM15		SWM15		SWM15		SWM15	
	StationID	W15-SB01		W15-SB02		W15-SB03		W15-SB04		W15-SB05		W15-SB06	
	SampleID	NDA178		NDA179		NDA180		NDA181		NDA182		NDA183	
	DateCollected	04/11/2000		04/11/2000		04/11/2000		04/11/2000		04/11/2000		04/11/2000	
	Depth	0 to 0.5		0 to 0.5		0 to 0.5		0 to 0.5		0 to 0.5		0 to 0.5	
Parameter	**Units**												
PESTICIDES													
ALPHA BHC	UG/KG	1.7	U	1.8	U	1.7	U	1.9	U	2	U	1.9	U
BETA BHC	UG/KG	1.7	U	1.8	U	1.7	U	1.9	U	2	U	1.9	U
DELTA BHC	UG/KG	1.7	U	1.8	U	1.7	U	1.9	U	2	U	1.9	U
GAMMA BHC (LINDANE)	UG/KG	1.7	U	1.8	U	1.7	U	1.9	U	2	U	1.9	U
HEPTACHLOR	UG/KG	1.7	U	1.8	U	1.7	U	1.9	U	2	U	1.9	U
ALDRIN	UG/KG	1.7	U	1.8	U	1.7	U	1.9	U	2	U	1.9	U
HEPTACHLOR EPOXIDE	UG/KG	1.7	U	1.8	U	1.7	U	1.9	U	2	U	1.9	U
ALPHA ENDOSULFAN	UG/KG	1.7	U	1.8	U	1.7	U	1.9	U	2	U	1.9	U
DIELDRIN	UG/KG	3.4	U	3.5	U	3.4	U	3.7	U	3.9	U	3.8	U
p,p'-DDE	UG/KG	3.4	U	3.5	U	0.62	J	3.7	U	3.9	U	3.8	U
ENDRIN	UG/KG	3.4	U	3.5	U	3.4	U	3.7	U	3.9	U	3.8	U
BETA ENDOSULFAN	UG/KG	3.4	U	3.5	U	3.4	U	3.7	U	3.9	U	3.8	U
p,p'-DDD	UG/KG	3.4	U	3.5	U	3.4	U	3.7	U	3.9	U	3.8	U
ENDOSULFAN SULFATE	UG/KG	3.4	U	3.5	U	3.4	U	3.7	U	3.9	U	3.8	U
p,p'-DDT	UG/KG	3.4	U	3.5	U	3.4	U	3.7	U	3.9	U	3.8	U
METHOXYCHLOR	UG/KG	17	U	18	U	17	U	19	U	20	U	19	U
ENDRIN ALDEHYDE	UG/KG	3.4	U	3.5	U	3.4	U	3.7	U	3.9	U	3.8	U
ALPHA-CHLORDANE	UG/KG	1.7	U	1.8	U	1.7	U	1.9	U	2	U	1.9	U
GAMMA-CHLORDANE	UG/KG	1.7	U	1.8	U	1.7	U	1.9	U	2	U	1.9	U
ENDRIN KETONE	UG/KG	3.4	U	3.5	U	3.4	U	3.7	U	3.9	U	3.8	U
TOXAPHENE	UG/KG	172	U	180	U	174	U	189	U	199	U	192	U
SEMI-VOLATILES													
bis(2-CHLOROETHYL) ETHER	UG/KG	644	UJ	644	UJ	550	UJ	566	UJ	679	UJ	589	UJ
PHENOL	UG/KG	644	UJ	644	UJ	550	UJ	566	UJ	679	UJ	589	UJ
2-CHLOROPHENOL	UG/KG	644	UJ	644	UJ	550	UJ	566	UJ	679	UJ	589	UJ
1,3-DICHLOROBENZENE	UG/KG	644	UJ	644	UJ	550	UJ	566	UJ	679	UJ	589	UJ
1,4-DICHLOROBENZENE	UG/KG	644	UJ	644	UJ	550	UJ	566	UJ	679	UJ	589	UJ
1,2-DICHLOROBENZENE	UG/KG	644	UJ	644	UJ	550	UJ	566	UJ	679	UJ	589	UJ
bis(2-CHLOROISOPROPYL) ETHER	UG/KG	644	UJ	644	UJ	550	UJ	566	UJ	679	UJ	589	UJ
2-METHYLPHENOL (o-CRESOL)	UG/KG	644	UJ	644	UJ	550	UJ	566	UJ	679	UJ	589	UJ
HEXACHLOROETHANE	UG/KG	644	UJ	644	UJ	550	UJ	566	UJ	679	UJ	589	UJ
N-NITROSODI-n-PROPYLAMINE	UG/KG	644	UJ	644	UJ	550	UJ	566	UJ	679	UJ	589	UJ
CRESOLS, m & p	UG/KG	644	UJ	644	UJ	550	UJ	566	UJ	679	UJ	589	UJ
NITROBENZENE	UG/KG	644	UJ	644	UJ	550	UJ	566	UJ	679	UJ	589	UJ
ISOPHORONE	UG/KG	644	UJ	644	UJ	550	UJ	566	UJ	679	UJ	589	UJ
2-NITROPHENOL	UG/KG	644	UJ	644	UJ	550	UJ	566	UJ	679	UJ	589	UJ

Parameter	Units	Building	StationID	SampleID	DateCollected	Depth																									
		SWM15	W15-SB06	NDA184FD1	04/11/2000	0 to 0.5		SWM15	W15-SB07	NDA185	04/12/2000	0 to 0.5		SWM15	W15-SB08	NDA186	04/12/2000	0 to 0.5		SWM15	W15-SB09	NDA187	04/12/2000	0 to 0.5		SWM15	W15-SB10	NDA188	04/12/2000	0 to 0.5	
PESTICIDES																															
ALPHA BHC	UG/KG	1.9	U					2	UJ					1.9	UJ					1.8	UJ					2.3	UJ				
BETA BHC	UG/KG	1.9	U					2	UJ					1.9	UJ					1.8	UJ					2.3	UJ				
DELTA BHC	UG/KG	1.9	U					2	UJ					1.9	UJ					1.8	UJ					2.3	UJ				
GAMMA BHC (LINDANE)	UG/KG	1.9	U					2	UJ					1.9	UJ					1.8	UJ					2.3	UJ				
HEPTACHLOR	UG/KG	1.9	U					2	UJ					1.9	UJ					1.8	UJ					2.3	UJ				
ALDRIN	UG/KG	1.9	U					2	UJ					1.9	UJ					1.8	UJ					2.3	UJ				
HEPTACHLOR EPOXIDE	UG/KG	1.9	U					2	UJ					1.9	UJ					1.8	UJ					2.3	UJ				
ALPHA ENDOSULFAN	UG/KG	1.9	U					2	UJ					1.9	UJ					1.8	UJ					2.3	UJ				
DIELDRIN	UG/KG	3.7	U					3.9	UJ					3.7	UJ					3.6	UJ					4.6	UJ				
p,p'-DDE	UG/KG	3.7	U					3.9	UJ					0.42	J					3.6	UJ					4.6	UJ				
ENDRIN	UG/KG	3.7	U					3.9	UJ					3.7	UJ					3.6	UJ					4.6	UJ				
BETA ENDOSULFAN	UG/KG	3.7	U					3.9	UJ					3.7	UJ					3.6	UJ					4.6	UJ				
p,p'-DDD	UG/KG	3.7	U					3.9	UJ					3.7	UJ					3.6	UJ					4.6	UJ				
ENDOSULFAN SULFATE	UG/KG	3.7	U					3.9	UJ					3.7	UJ					3.6	UJ					4.6	UJ				
p,p'-DDT	UG/KG	3.7	U					3.9	UJ					3.7	UJ					3.6	UJ					4.6	UJ				
METHOXYCHLOR	UG/KG	19	U					20	UJ					19	UJ					18	UJ					23	UJ				
ENDRIN ALDEHYDE	UG/KG	3.7	U					3.9	UJ					3.7	UJ					3.6	UJ					4.6	UJ				
ALPHA-CHLORDANE	UG/KG	1.9	U					2	UJ					1.9	UJ					1.8	UJ					2.3	UJ				
GAMMA-CHLORDANE	UG/KG	1.9	U					2	UJ					1.9	UJ					1.8	UJ					2.3	UJ				
ENDRIN KETONE	UG/KG	3.7	U					3.9	UJ					3.7	UJ					3.6	UJ					4.6	UJ				
TOXAPHENE	UG/KG	191	U					201	UJ					190	UJ					183	UJ					232	UJ				
SEMI-VOLATILES																															
bis(2-CHLOROETHYL) ETHER	UG/KG	662	UJ					445	UJ					416	UJ					380	UJ					810	UJ				
PHENOL	UG/KG	662	UJ					445	UJ					416	UJ					380	UJ					810	UJ				
2-CHLOROPHENOL	UG/KG	662	UJ					445	UJ					416	UJ					380	UJ					810	UJ				
1,3-DICHLOROBENZENE	UG/KG	662	UJ					445	UJ					416	UJ					380	UJ					810	UJ				
1,4-DICHLOROBENZENE	UG/KG	662	UJ					445	UJ					416	UJ					380	UJ					810	UJ				
1,2-DICHLOROBENZENE	UG/KG	662	UJ					445	UJ					416	UJ					380	UJ					810	UJ				
bis(2-CHLOROISOPROPYL) ETHER	UG/KG	662	UJ					445	UJ					416	UJ					380	UJ					810	UJ				
2-METHYLPHENOL (o-CRESOL)	UG/KG	662	UJ					445	UJ					416	UJ					380	UJ					810	UJ				
HEXACHLOROETHANE	UG/KG	662	UJ					445	UJ					416	UJ					380	UJ					810	UJ				
N-NITROSODI-n-PROPYLAMINE	UG/KG	662	UJ					445	UJ					416	UJ					380	UJ					810	UJ				
CRESOLS, m & p	UG/KG	662	UJ					445	UJ					416	UJ					380	UJ					810	UJ				
NITROBENZENE	UG/KG	662	UJ					445	UJ					416	UJ					380	UJ					810	UJ				
ISOPHORONE	UG/KG	662	UJ					445	UJ					416	UJ					380	UJ					810	UJ				
2-NITROPHENOL	UG/KG	662	UJ					445	UJ					416	UJ					380	UJ					810	UJ				

Parameter	Units	Building	StationID	SampleID	DateCollected	Depth																									
		SWM15	W15-SB11	NDA189	04/12/2000	0 to 0.5				SWM15	W15-SB12	NDA190	04/12/2000	0 to 0.5																	
PESTICIDES																															
ALPHA BHC	UG/KG	1.9	UJ							1.9	UJ																				
BETA BHC	UG/KG	1.9	UJ							1.9	UJ																				
DELTA BHC	UG/KG	1.9	UJ							1.9	UJ																				
GAMMA BHC (LINDANE)	UG/KG	1.9	UJ							1.9	UJ																				
HEPTACHLOR	UG/KG	1.9	UJ							1.9	UJ																				
ALDRIN	UG/KG	1.9	UJ							1.9	UJ																				
HEPTACHLOR EPOXIDE	UG/KG	1.9	UJ							1.9	UJ																				
ALPHA ENDOSULFAN	UG/KG	1.9	UJ							1.9	UJ																				
DIELDRIN	UG/KG	3.7	UJ							3.8	UJ																				
p,p'-DDE	UG/KG	3.7	UJ							3.8	UJ																				
ENDRIN	UG/KG	3.7	UJ							3.8	UJ																				
BETA ENDOSULFAN	UG/KG	3.7	UJ							3.8	UJ																				
p,p'-DDD	UG/KG	3.7	UJ							3.8	UJ																				
ENDOSULFAN SULFATE	UG/KG	3.7	UJ							3.8	UJ																				
p,p'-DDT	UG/KG	3.7	UJ							3.8	UJ																				
METHOXYCHLOR	UG/KG	19	UJ							19	UJ																				
ENDRIN ALDEHYDE	UG/KG	3.7	UJ							3.8	UJ																				
ALPHA-CHLORDANE	UG/KG	1.9	UJ							1.9	UJ																				
GAMMA-CHLORDANE	UG/KG	1.9	UJ							1.9	UJ																				
ENDRIN KETONE	UG/KG	3.7	UJ							3.8	UJ																				
TOXAPHENE	UG/KG	190	UJ							191	UJ																				
SEMI-VOLATILES																															
bis(2-CHLOROETHYL) ETHER	UG/KG	426	UJ							430	UJ																				
PHENOL	UG/KG	426	UJ							430	UJ																				
2-CHLOROPHENOL	UG/KG	426	UJ							430	UJ																				
1,3-DICHLOROBENZENE	UG/KG	426	UJ							430	UJ																				
1,4-DICHLOROBENZENE	UG/KG	426	UJ							430	UJ																				
1,2-DICHLOROBENZENE	UG/KG	426	UJ							430	UJ																				
bis(2-CHLOROISOPROPYL) ETHER	UG/KG	426	UJ							430	UJ																				
2-METHYLPHENOL (o-CRESOL)	UG/KG	426	UJ							430	UJ																				
HEXACHLOROETHANE	UG/KG	426	UJ							430	UJ																				
N-NITROSODI-n-PROPYLAMINE	UG/KG	426	UJ							430	UJ																				
CRESOLS, m & p	UG/KG	426	UJ							430	UJ																				
NITROBENZENE	UG/KG	426	UJ							430	UJ																				
ISOPHORONE	UG/KG	426	UJ							430	UJ																				
2-NITROPHENOL	UG/KG	426	UJ							430	UJ																				

SWMU 15 Surface Soil Data

Parameter	Units	Building		SWM15		SWM15		SWM15		SWM15	
		StationID		W15-SB13		W15-SB13		W15-SB14		W15-SB15	
		SampleID		NDA191		NDA192FD1		NDA193		NDA194	
		DateCollected		04/12/2000		04/12/2000		04/12/2000		04/12/2000	
		Depth		0 to 0.5		0 to 0.5		0 to 0.5		0 to 0.5	
PESTICIDES											
ALPHA BHC	UG/KG	1.7	UJ	2	UJ	1.8	UJ	2.1	UJ	1.7	UJ
BETA BHC	UG/KG	1.7	UJ	2	UJ	1.8	UJ	2.1	UJ	1.7	UJ
DELTA BHC	UG/KG	1.7	UJ	2	UJ	1.8	UJ	2.1	UJ	1.7	UJ
GAMMA BHC (LINDANE)	UG/KG	1.7	UJ	2	UJ	1.8	UJ	2.1	UJ	1.7	UJ
HEPTACHLOR	UG/KG	1.7	UJ	2	UJ	1.8	UJ	2.1	UJ	1.7	UJ
ALDRIN	UG/KG	1.7	UJ	2	UJ	1.8	UJ	2.1	UJ	1.7	UJ
HEPTACHLOR EPOXIDE	UG/KG	1.7	UJ	2	UJ	1.8	UJ	2.1	UJ	1.7	UJ
ALPHA ENDOSULFAN	UG/KG	1.7	UJ	2	UJ	1.8	UJ	2.1	UJ	1.7	UJ
DIELDRIN	UG/KG	3.4	UJ	3.9	UJ	0.45	J	4.1	UJ	3.4	UJ
p,p'-DDE	UG/KG	3.4	UJ	0.44	J	1.1	J	4.1	UJ	3.4	UJ
ENDRIN	UG/KG	3.4	UJ	3.9	UJ	3.4	UJ	4.1	UJ	3.4	UJ
BETA ENDOSULFAN	UG/KG	3.4	UJ	3.9	UJ	3.4	UJ	4.1	UJ	3.4	UJ
p,p'-DDD	UG/KG	3.4	UJ	3.9	UJ	3.4	UJ	4.1	UJ	3.4	UJ
ENDOSULFAN SULFATE	UG/KG	3.4	UJ	3.9	UJ	3.4	UJ	4.1	UJ	3.4	UJ
p,p'-DDT	UG/KG	3.4	UJ	3.9	UJ	0.55	J	4.1	UJ	3.4	UJ
METHOXYCHLOR	UG/KG	17	UJ	20	UJ	18	UJ	21	UJ	17	UJ
ENDRIN ALDEHYDE	UG/KG	3.4	UJ	3.9	UJ	3.4	UJ	4.1	UJ	3.4	UJ
ALPHA-CHLORDANE	UG/KG	1.7	UJ	2	UJ	1.8	UJ	2.1	UJ	1.7	UJ
GAMMA-CHLORDANE	UG/KG	1.7	UJ	2	UJ	1.8	UJ	2.1	UJ	1.7	UJ
ENDRIN KETONE	UG/KG	3.4	UJ	3.9	UJ	3.4	UJ	4.1	UJ	3.4	UJ
TOXAPHENE	UG/KG	174	UJ	197	UJ	176	UJ	208	UJ	174	UJ
SEMI-VOLATILES											
bis(2-CHLOROETHYL) ETHER	UG/KG	338	UJ	418	UJ	1720	UJ	480	UJ	323	UJ
PHENOL	UG/KG	338	UJ	418	UJ	1720	UJ	480	UJ	323	UJ
2-CHLOROPHENOL	UG/KG	338	UJ	418	UJ	1720	UJ	480	UJ	323	UJ
1,3-DICHLOROBENZENE	UG/KG	338	UJ	418	UJ	1720	UJ	480	UJ	323	UJ
1,4-DICHLOROBENZENE	UG/KG	338	UJ	418	UJ	1720	UJ	480	UJ	323	UJ
1,2-DICHLOROBENZENE	UG/KG	338	UJ	418	UJ	1720	UJ	480	UJ	323	UJ
bis(2-CHLOROISOPROPYL) ETHER	UG/KG	338	UJ	418	UJ	1720	UJ	480	UJ	323	UJ
2-METHYLPHENOL (o-CRESOL)	UG/KG	338	UJ	418	UJ	1720	UJ	480	UJ	323	UJ
HEXACHLOROETHANE	UG/KG	338	UJ	418	UJ	1720	UJ	480	UJ	323	UJ
N-NITROSODI-n-PROPYLAMINE	UG/KG	338	UJ	418	UJ	1720	UJ	480	UJ	323	UJ
CRESOLS, m & p	UG/KG	338	UJ	418	UJ	1720	UJ	480	UJ	323	UJ
NITROBENZENE	UG/KG	338	UJ	418	UJ	1720	UJ	480	UJ	323	UJ
ISOPHORONE	UG/KG	338	UJ	418	UJ	1720	UJ	480	UJ	323	UJ
2-NITROPHENOL	UG/KG	338	UJ	418	UJ	1720	UJ	480	UJ	323	UJ

	Building	SWM15		SWM15		SWM15		SWM15		SWM15		SWM15	
	StationID	W15-SB01		W15-SB02		W15-SB03		W15-SB04		W15-SB05		W15-SB06	
	SampleID	NDA178		NDA179		NDA180		NDA181		NDA182		NDA183	
	DateCollected	04/11/2000		04/11/2000		04/11/2000		04/11/2000		04/11/2000		04/11/2000	
	Depth	0 to 0.5		0 to 0.5		0 to 0.5		0 to 0.5		0 to 0.5		0 to 0.5	
Parameter	**Units**												
2,4-DIMETHYLPHENOL	UG/KG	644	UJ	644	UJ	550	UJ	566	UJ	679	UJ	589	UJ
bis(2-CHLOROETHOXY) METHANE	UG/KG	644	UJ	644	UJ	550	UJ	566	UJ	679	UJ	589	UJ
2,4-DICHLOROPHENOL	UG/KG	644	UJ	644	UJ	550	UJ	566	UJ	679	UJ	589	UJ
1,2,4-TRICHLOROBENZENE	UG/KG	644	UJ	644	UJ	550	UJ	566	UJ	679	UJ	589	UJ
NAPHTHALENE	UG/KG	644	UJ	644	UJ	550	UJ	566	UJ	679	UJ	589	UJ
4-CHLOROANILINE	UG/KG	644	UJ	644	UJ	550	UJ	566	UJ	679	UJ	589	UJ
2-METHYLNAPHTHALENE	UG/KG	644	UJ	644	UJ	550	UJ	566	UJ	679	UJ	589	UJ
HEXACHLOROBUTADIENE	UG/KG	644	UJ	644	UJ	550	UJ	566	UJ	679	UJ	589	UJ
4-CHLORO-3-METHYLPHENOL	UG/KG	644	UJ	644	UJ	550	UJ	566	UJ	679	UJ	589	UJ
HEXACHLOROCYCLOPENTADIENE	UG/KG	644	UJ	644	UJ	550	UJ	566	UJ	679	UJ	589	UJ
2,4,6-TRICHLOROPHENOL	UG/KG	644	UJ	644	UJ	550	UJ	566	UJ	679	UJ	589	UJ
2,4,5-TRICHLOROPHENOL	UG/KG	1930	UJ	1930	UJ	1650	UJ	1700	UJ	2040	UJ	1770	UJ
2-CHLORONAPHTHALENE	UG/KG	644	UJ	644	UJ	550	UJ	566	UJ	679	UJ	589	UJ
2-NITROANILINE	UG/KG	1930	UJ	1930	UJ	1650	UJ	1700	UJ	2040	UJ	1770	UJ
ACENAPHTHYLENE	UG/KG	644	UJ	644	UJ	550	UJ	566	UJ	679	UJ	589	UJ
DIMETHYL PHTHALATE	UG/KG	644	UJ	644	UJ	550	UJ	566	UJ	679	UJ	589	UJ
2,6-DINITROTOLUENE	UG/KG	644	UJ	644	UJ	550	UJ	566	UJ	679	UJ	589	UJ
ACENAPHTHENE	UG/KG	644	UJ	644	UJ	550	UJ	566	UJ	679	UJ	589	UJ
3-NITROANILINE	UG/KG	1930	UJ	1930	UJ	1650	UJ	1700	UJ	2040	UJ	1770	UJ
2,4-DINITROPHENOL	UG/KG	1930	UJ	1930	UJ	1650	UJ	1700	UJ	2040	UJ	1770	UJ
DIBENZOFURAN	UG/KG	644	UJ	644	UJ	550	UJ	566	UJ	679	UJ	589	UJ
2,4-DINITROTOLUENE	UG/KG	644	UJ	644	UJ	550	UJ	566	UJ	679	UJ	589	UJ
4-NITROPHENOL	UG/KG	1930	UJ	1930	UJ	1650	UJ	1700	UJ	2040	UJ	1770	UJ
FLUORENE	UG/KG	644	UJ	644	UJ	550	UJ	566	UJ	679	UJ	589	UJ
4-CHLOROPHENYL PHENYL ETHER	UG/KG	644	UJ	644	UJ	550	UJ	566	UJ	679	UJ	589	UJ
DIETHYL PHTHALATE	UG/KG	644	UJ	644	UJ	550	UJ	566	UJ	679	UJ	589	UJ
4-NITROANILINE	UG/KG	1930	UJ	1930	UJ	1650	UJ	1700	UJ	2040	UJ	1770	UJ
4,6-DINITRO-2-METHYLPHENOL	UG/KG	1930	UJ	1930	UJ	1650	UJ	1700	UJ	2040	UJ	1770	UJ
N-NITROSODIPHENYLAMINE	UG/KG	644	UJ	644	UJ	550	UJ	566	UJ	679	UJ	589	UJ
4-BROMOPHENYL PHENYL ETHER	UG/KG	644	UJ	644	UJ	550	UJ	566	UJ	679	UJ	589	UJ
HEXACHLOROBENZENE	UG/KG	644	UJ	644	UJ	550	UJ	566	UJ	679	UJ	589	UJ
PENTACHLOROPHENOL	UG/KG	1930	UJ	1930	UJ	1650	UJ	1700	UJ	2040	UJ	1770	UJ
PHENANTHRENE	UG/KG	644	UJ	644	UJ	550	UJ	566	UJ	679	UJ	589	UJ
ANTHRACENE	UG/KG	644	UJ	644	UJ	550	UJ	566	UJ	679	UJ	589	UJ
DI-n-BUTYL PHTHALATE	UG/KG	644	UJ	644	UJ	550	UJ	566	UJ	679	UJ	589	UJ
FLUORANTHENE	UG/KG	644	UJ	644	UJ	85	J	566	UJ	679	UJ	51	J
PYRENE	UG/KG	644	UJ	644	UJ	72	J	566	UJ	679	UJ	38	J

SWMU 15 Surface Soil Data

	Building	SWM15		SWM15		SWM15		SWM15		SWM15		SWM15		SWM15	
	StationID	W15-SB06		W15-SB07		W15-SB08		W15-SB09		W15-SB10		W15-SB11		W15-SB12	
	SampleID	NDA184FD1		NDA185		NDA186		NDA187		NDA188		NDA189		NDA190	
	DateCollected	04/11/2000		04/12/2000		04/12/2000		04/12/2000		04/12/2000		04/12/2000		04/12/2000	
	Depth	0 to 0.5		0 to 0.5		0 to 0.5		0 to 0.5		0 to 0.5		0 to 0.5		0 to 0.5	
Parameter	**Units**														
2,4-DIMETHYLPHENOL	UG/KG	662	UJ	445	UJ	416	UJ	380	UJ	810	UJ	426	UJ	430	UJ
bis(2-CHLOROETHOXY) METHANE	UG/KG	662	UJ	445	UJ	416	UJ	380	UJ	810	UJ	426	UJ	430	UJ
2,4-DICHLOROPHENOL	UG/KG	662	UJ	445	UJ	416	UJ	380	UJ	810	UJ	426	UJ	430	UJ
1,2,4-TRICHLOROBENZENE	UG/KG	662	UJ	445	UJ	416	UJ	380	UJ	810	UJ	426	UJ	430	UJ
NAPHTHALENE	UG/KG	662	UJ	445	UJ	416	UJ	380	UJ	810	UJ	426	UJ	430	UJ
4-CHLOROANILINE	UG/KG	662	UJ	445	UJ	416	UJ	380	UJ	810	UJ	426	UJ	430	UJ
2-METHYLNAPHTHALENE	UG/KG	662	UJ	445	UJ	416	UJ	380	UJ	810	UJ	426	UJ	430	UJ
HEXACHLOROBUTADIENE	UG/KG	662	UJ	445	UJ	416	UJ	380	UJ	810	UJ	426	UJ	430	UJ
4-CHLORO-3-METHYLPHENOL	UG/KG	662	UJ	445	UJ	416	UJ	380	UJ	810	UJ	426	UJ	430	UJ
HEXACHLOROCYCLOPENTADIENE	UG/KG	662	UJ	445	UJ	416	UJ	380	UJ	810	UJ	426	UJ	430	UJ
2,4,6-TRICHLOROPHENOL	UG/KG	662	UJ	445	UJ	416	UJ	380	UJ	810	UJ	426	UJ	430	UJ
2,4,5-TRICHLOROPHENOL	UG/KG	1990	UJ	1340	UJ	1250	UJ	1140	UJ	2430	UJ	1280	UJ	1290	UJ
2-CHLORONAPHTHALENE	UG/KG	662	UJ	445	UJ	416	UJ	380	UJ	810	UJ	426	UJ	430	UJ
2-NITROANILINE	UG/KG	1990	UJ	1340	UJ	1250	UJ	1140	UJ	2430	UJ	1280	UJ	1290	UJ
ACENAPHTHYLENE	UG/KG	662	UJ	445	UJ	416	UJ	380	UJ	810	UJ	426	UJ	430	UJ
DIMETHYL PHTHALATE	UG/KG	662	UJ	445	UJ	416	UJ	380	UJ	810	UJ	426	UJ	430	UJ
2,6-DINITROTOLUENE	UG/KG	662	UJ	445	UJ	416	UJ	380	UJ	810	UJ	426	UJ	430	UJ
ACENAPHTHENE	UG/KG	662	UJ	445	UJ	416	UJ	380	UJ	810	UJ	426	UJ	430	UJ
3-NITROANILINE	UG/KG	1990	UJ	1340	UJ	1250	UJ	1140	UJ	2430	UJ	1280	UJ	1290	UJ
2,4-DINITROPHENOL	UG/KG	1990	UJ	1340	UJ	1250	UJ	1140	UJ	2430	UJ	1280	UJ	1290	UJ
DIBENZOFURAN	UG/KG	662	UJ	445	UJ	416	UJ	380	UJ	810	UJ	426	UJ	430	UJ
2,4-DINITROTOLUENE	UG/KG	662	UJ	445	UJ	416	UJ	380	UJ	810	UJ	426	UJ	430	UJ
4-NITROPHENOL	UG/KG	1990	UJ	1340	UJ	1250	UJ	1140	UJ	2430	UJ	1280	UJ	1290	UJ
FLUORENE	UG/KG	662	UJ	445	UJ	416	UJ	380	UJ	810	UJ	426	UJ	430	UJ
4-CHLOROPHENYL PHENYL ETHER	UG/KG	662	UJ	445	UJ	416	UJ	380	UJ	810	UJ	426	UJ	430	UJ
DIETHYL PHTHALATE	UG/KG	662	UJ	445	UJ	416	UJ	380	UJ	810	UJ	426	UJ	430	UJ
4-NITROANILINE	UG/KG	1990	UJ	1340	UJ	1250	UJ	1140	UJ	2430	UJ	1280	UJ	1290	UJ
4,6-DINITRO-2-METHYLPHENOL	UG/KG	1990	UJ	1340	UJ	1250	UJ	1140	UJ	2430	UJ	1280	UJ	1290	UJ
N-NITROSODIPHENYLAMINE	UG/KG	662	UJ	445	UJ	416	UJ	380	UJ	810	UJ	426	UJ	430	UJ
4-BROMOPHENYL PHENYL ETHER	UG/KG	662	UJ	445	UJ	416	UJ	380	UJ	810	UJ	426	UJ	430	UJ
HEXACHLOROBENZENE	UG/KG	662	UJ	445	UJ	416	UJ	380	UJ	810	UJ	426	UJ	430	UJ
PENTACHLOROPHENOL	UG/KG	1990	UJ	1340	UJ	1250	UJ	1140	UJ	2430	UJ	1280	UJ	1290	UJ
PHENANTHRENE	UG/KG	662	UJ	445	UJ	74	J	380	UJ	810	UJ	426	UJ	430	UJ
ANTHRACENE	UG/KG	662	UJ	445	UJ	17	J	380	UJ	810	UJ	426	UJ	430	UJ
DI-n-BUTYL PHTHALATE	UG/KG	662	UJ	445	UJ	416	UJ	380	UJ	810	UJ	426	UJ	430	UJ
FLUORANTHENE	UG/KG	82	J	445	UJ	307	J	44	J	810	UJ	426	UJ	430	UJ
PYRENE	UG/KG	62	J	445	UJ	231	J	36	J	810	UJ	426	UJ	430	UJ

	Building	SWM15		SWM15		SWM15		SWM15		SWM15	
	StationID	W15-SB13		W15-SB13		W15-SB14		W15-SB15		W15-SB16	
	SampleID	NDA191		NDA192FD1		NDA193		NDA194		NDA195	
	DateCollected	04/12/2000		04/12/2000		04/12/2000		04/12/2000		04/12/2000	
	Depth	0 to 0.5		0 to 0.5		0 to 0.5		0 to 0.5		0 to 0.5	
Parameter	Units										
2,4-DIMETHYLPHENOL	UG/KG	338	UJ	418	UJ	1720	UJ	480	UJ	323	UJ
bis(2-CHLOROETHOXY) METHANE	UG/KG	338	UJ	418	UJ	1720	UJ	480	UJ	323	UJ
2,4-DICHLOROPHENOL	UG/KG	338	UJ	418	UJ	1720	UJ	480	UJ	323	UJ
1,2,4-TRICHLOROBENZENE	UG/KG	338	UJ	418	UJ	1720	UJ	480	UJ	323	UJ
NAPHTHALENE	UG/KG	338	UJ	418	UJ	1720	UJ	480	UJ	323	UJ
4-CHLOROANILINE	UG/KG	338	UJ	418	UJ	1720	UJ	480	UJ	323	UJ
2-METHYLNAPHTHALENE	UG/KG	338	UJ	418	UJ	1720	UJ	480	UJ	323	UJ
HEXACHLOROBUTADIENE	UG/KG	338	UJ	418	UJ	1720	UJ	480	UJ	323	UJ
4-CHLORO-3-METHYLPHENOL	UG/KG	338	UJ	418	UJ	1720	UJ	480	UJ	323	UJ
HEXACHLOROCYCLOPENTADIENE	UG/KG	338	UJ	418	UJ	1720	UJ	480	UJ	323	UJ
2,4,6-TRICHLOROPHENOL	UG/KG	338	UJ	418	UJ	1720	UJ	480	UJ	323	UJ
2,4,5-TRICHLOROPHENOL	UG/KG	1010	UJ	1250	UJ	5160	UJ	1440	UJ	969	UJ
2-CHLORONAPHTHALENE	UG/KG	338	UJ	418	UJ	1720	UJ	480	UJ	323	UJ
2-NITROANILINE	UG/KG	1010	UJ	1250	UJ	5160	UJ	1440	UJ	969	UJ
ACENAPHTHYLENE	UG/KG	338	UJ	418	UJ	1720	UJ	480	UJ	323	UJ
DIMETHYL PHTHALATE	UG/KG	338	UJ	418	UJ	1720	UJ	480	UJ	323	UJ
2,6-DINITROTOLUENE	UG/KG	338	UJ	418	UJ	1720	UJ	480	UJ	323	UJ
ACENAPHTHENE	UG/KG	338	UJ	418	UJ	1720	UJ	480	UJ	323	UJ
3-NITROANILINE	UG/KG	1010	UJ	1250	UJ	5160	UJ	1440	UJ	969	UJ
2,4-DINITROPHENOL	UG/KG	1010	UJ	1250	UJ	5160	UJ	1440	UJ	969	UJ
DIBENZOFURAN	UG/KG	338	UJ	418	UJ	1720	UJ	480	UJ	323	UJ
2,4-DINITROTOLUENE	UG/KG	338	UJ	418	UJ	1720	UJ	480	UJ	323	UJ
4-NITROPHENOL	UG/KG	1010	UJ	1250	UJ	5160	UJ	1440	UJ	969	UJ
FLUORENE	UG/KG	338	UJ	418	UJ	1720	UJ	480	UJ	323	UJ
4-CHLOROPHENYL PHENYL ETHER	UG/KG	338	UJ	418	UJ	1720	UJ	480	UJ	323	UJ
DIETHYL PHTHALATE	UG/KG	39	J	418	UJ	1720	UJ	480	UJ	323	UJ
4-NITROANILINE	UG/KG	1010	UJ	1250	UJ	5160	UJ	1440	UJ	969	UJ
4,6-DINITRO-2-METHYLPHENOL	UG/KG	1010	UJ	1250	UJ	5160	UJ	1440	UJ	969	UJ
N-NITROSODIPHENYLAMINE	UG/KG	338	UJ	418	UJ	1720	UJ	480	UJ	323	UJ
4-BROMOPHENYL PHENYL ETHER	UG/KG	338	UJ	418	UJ	1720	UJ	480	UJ	323	UJ
HEXACHLOROBENZENE	UG/KG	338	UJ	418	UJ	1720	UJ	480	UJ	323	UJ
PENTACHLOROPHENOL	UG/KG	1010	UJ	1250	UJ	5160	UJ	1440	UJ	969	UJ
PHENANTHRENE	UG/KG	338	UJ	418	UJ	1720	UJ	480	UJ	323	UJ
ANTHRACENE	UG/KG	338	UJ	418	UJ	1720	UJ	480	UJ	323	UJ
DI-n-BUTYL PHTHALATE	UG/KG	338	UJ	418	UJ	1720	UJ	480	UJ	323	UJ
FLUORANTHENE	UG/KG	338	UJ	418	UJ	1720	UJ	480	UJ	323	UJ
PYRENE	UG/KG	338	UJ	418	UJ	1720	UJ	480	UJ	323	UJ

SWMU 15 Surface Soil Data

	Building	SWM15		SWM15		SWM15		SWM15		SWM15		SWM15	
	StationID	W15-SB01		W15-SB02		W15-SB03		W15-SB04		W15-SB05		W15-SB06	
	SampleID	NDA178		NDA179		NDA180		NDA181		NDA182		NDA183	
	DateCollected	04/11/2000		04/11/2000		04/11/2000		04/11/2000		04/11/2000		04/11/2000	
	Depth	0 to 0.5		0 to 0.5		0 to 0.5		0 to 0.5		0 to 0.5		0 to 0.5	
Parameter	**Units**												
BENZYL BUTYL PHTHALATE	UG/KG	644	UJ	644	UJ	178	J	566	UJ	679	UJ	589	UJ
3,3'-DICHLOROBENZIDINE	UG/KG	1290	UJ	1290	UJ	1100	UJ	1130	UJ	1360	UJ	1180	UJ
BENZO(a)ANTHRACENE	UG/KG	644	UJ	644	UJ	32	J	566	UJ	679	UJ	589	UJ
CHRYSENE	UG/KG	644	UJ	644	UJ	77	J	566	UJ	679	UJ	589	UJ
bis(2-ETHYLHEXYL) PHTHALATE	UG/KG	644	UJ	644	UJ	308	J	566	UJ	679	UJ	589	UJ
DI-n-OCTYLPHTHALATE	UG/KG	644	UJ	644	UJ	550	UJ	566	UJ	679	UJ	589	UJ
BENZO(b)FLUORANTHENE	UG/KG	644	UJ	644	UJ	59	J	566	UJ	679	UJ	589	UJ
BENZO(k)FLUORANTHENE	UG/KG	644	UJ	644	UJ	42	J	566	UJ	679	UJ	589	UJ
BENZO(a)PYRENE	UG/KG	644	UJ	644	UJ	53	J	566	UJ	679	UJ	589	UJ
INDENO(1,2,3-c,d)PYRENE	UG/KG	644	UJ	644	UJ	550	UJ	566	UJ	679	UJ	589	UJ
DIBENZ(a,h)ANTHRACENE	UG/KG	644	UJ	644	UJ	550	UJ	566	UJ	679	UJ	589	UJ
BENZO(g,h,i)PERYLENE	UG/KG	644	UJ	644	UJ	550	UJ	566	UJ	679	UJ	589	UJ
CARBAZOLE	UG/KG	644	UJ	644	UJ	550	UJ	566	UJ	679	UJ	589	UJ
VOLATILES													
CHLOROMETHANE	UG/KG	10	U	11	U	11	UJ	11	U	14	UJ	12	U
VINYL CHLORIDE	UG/KG	10	U	11	U	11	UJ	11	U	14	UJ	12	U
BROMOMETHANE	UG/KG	10	U	11	U	11	UJ	11	U	14	UJ	12	U
1,3-DICHLOROBENZENE	UG/KG	644	UJ	644	UJ	550	UJ	566	UJ	679	UJ	589	UJ
CHLOROETHANE	UG/KG	10	UJ	11	UJ	11	UJ	11	UJ	14	UJ	12	UJ
1,1-DICHLOROETHENE	UG/KG	10	U	11	U	11	UJ	11	U	14	UJ	12	U
1,4-DICHLOROBENZENE	UG/KG	644	UJ	644	UJ	550	UJ	566	UJ	679	UJ	589	UJ
1,2-DICHLOROBENZENE	UG/KG	644	UJ	644	UJ	550	UJ	566	UJ	679	UJ	589	UJ
CARBON DISULFIDE	UG/KG	10	U	11	U	11	UJ	11	U	14	UJ	12	U
METHYLENE CHLORIDE	UG/KG	10	U	11	U	11	UJ	11	U	14	UJ	12	U
1,1-DICHLOROETHANE	UG/KG	10	U	11	U	11	UJ	11	U	14	UJ	12	U
ACETONE	UG/KG	26	R	29	R	22	R	31	R	17	R	27	R
METHYL ETHYL KETONE (2-BUTANONE)	UG/KG	10	R	11	R	11	R	11	R	14	R	12	R
CHLOROFORM	UG/KG	10	U	11	U	11	UJ	11	U	14	UJ	12	U
1,1,1-TRICHLOROETHANE	UG/KG	10	U	11	U	11	UJ	11	U	14	UJ	12	U
CARBON TETRACHLORIDE	UG/KG	10	U	11	U	11	UJ	11	U	14	UJ	12	U
BENZENE	UG/KG	10	U	11	U	11	UJ	11	U	14	UJ	12	U
1,2-DICHLOROETHANE	UG/KG	10	U	0.3	U	11	UJ	11	U	14	UJ	12	U
TRICHLOROETHYLENE (TCE)	UG/KG	10	U	11	U	11	UJ	11	U	0.5	J	12	U
1,2-DICHLOROPROPANE	UG/KG	10	U	11	U	11	UJ	11	U	14	UJ	12	U
1,2,4-TRICHLOROBENZENE	UG/KG	644	UJ	644	UJ	550	UJ	566	UJ	679	UJ	589	UJ
BROMODICHLOROMETHANE	UG/KG	10	U	11	U	11	UJ	11	U	14	UJ	12	U
cis-1,3-DICHLOROPROPENE	UG/KG	10	U	11	U	11	UJ	11	U	14	UJ	12	U

	Building	SWM15		SWM15		SWM15		SWM15		SWM15		SWM15		SWM15	
	StationID	W15-SB06		W15-SB07		W15-SB08		W15-SB09		W15-SB10		W15-SB11		W15-SB12	
	SampleID	NDA184FD1		NDA185		NDA186		NDA187		NDA188		NDA189		NDA190	
	DateCollected	04/11/2000		04/12/2000		04/12/2000		04/12/2000		04/12/2000		04/12/2000		04/12/2000	
	Depth	0 to 0.5		0 to 0.5		0 to 0.5		0 to 0.5		0 to 0.5		0 to 0.5		0 to 0.5	
Parameter	**Units**														
BENZYL BUTYL PHTHALATE	UG/KG	662	UJ	445	UJ	416	UJ	380	UJ	810	UJ	426	UJ	430	UJ
3,3'-DICHLOROBENZIDINE	UG/KG	1320	UJ	891	UJ	831	UJ	759	UJ	1620	UJ	851	UJ	859	UJ
BENZO(a)ANTHRACENE	UG/KG	662	UJ	445	UJ	61	J	380	UJ	810	UJ	426	UJ	430	UJ
CHRYSENE	UG/KG	44	J	445	UJ	173	J	38	J	810	UJ	426	UJ	430	UJ
bis(2-ETHYLHEXYL) PHTHALATE	UG/KG	662	UJ	445	UJ	416	UJ	380	UJ	810	UJ	426	UJ	430	UJ
DI-n-OCTYLPHTHALATE	UG/KG	662	UJ	445	UJ	416	UJ	380	UJ	810	UJ	426	UJ	430	UJ
BENZO(b)FLUORANTHENE	UG/KG	662	UJ	445	UJ	116	J	27	J	810	UJ	426	UJ	430	UJ
BENZO(k)FLUORANTHENE	UG/KG	662	UJ	445	UJ	98	J	34	J	810	UJ	426	UJ	430	UJ
BENZO(a)PYRENE	UG/KG	662	UJ	445	UJ	71	J	380	UJ	810	UJ	426	UJ	430	UJ
INDENO(1,2,3-c,d)PYRENE	UG/KG	662	UJ	445	UJ	53	J	380	UJ	810	UJ	426	UJ	430	UJ
DIBENZ(a,h)ANTHRACENE	UG/KG	662	UJ	445	UJ	416	UJ	380	UJ	810	UJ	426	UJ	430	UJ
BENZO(g,h,i)PERYLENE	UG/KG	662	UJ	445	UJ	41	J	380	UJ	810	UJ	426	UJ	430	UJ
CARBAZOLE	UG/KG	662	UJ	445	UJ	416	UJ	380	UJ	810	UJ	426	UJ	430	UJ
VOLATILES															
CHLOROMETHANE	UG/KG	11	U	12	U	10	U	10	U	13	U	10	UJ	11	U
VINYL CHLORIDE	UG/KG	11	U	12	U	10	U	10	U	13	U	10	UJ	11	U
BROMOMETHANE	UG/KG	11	U	12	U	10	U	10	U	13	U	10	UJ	11	U
1,3-DICHLOROBENZENE	UG/KG	662	UJ	445	UJ	416	UJ	380	UJ	810	UJ	426	UJ	430	UJ
CHLOROETHANE	UG/KG	11	UJ	12	UJ	10	UJ	10	UJ	13	UJ	10	UJ	11	UJ
1,1-DICHLOROETHENE	UG/KG	11	U	12	U	10	U	10	U	13	U	10	UJ	11	U
1,4-DICHLOROBENZENE	UG/KG	662	UJ	445	UJ	416	UJ	380	UJ	810	UJ	426	UJ	430	UJ
1,2-DICHLOROBENZENE	UG/KG	662	UJ	445	UJ	416	UJ	380	UJ	810	UJ	426	UJ	430	UJ
CARBON DISULFIDE	UG/KG	11	U	12	U	10	U	10	U	13	U	10	UJ	11	U
METHYLENE CHLORIDE	UG/KG	11	U	12	U	10	U	10	U	13	U	10	UJ	11	U
1,1-DICHLOROETHANE	UG/KG	11	U	12	U	10	U	10	U	13	U	10	UJ	11	U
ACETONE	UG/KG	32	R	18	R	10	R	10	R	16	R	11	R	12	R
METHYL ETHYL KETONE (2-BUTANONE)	UG/KG	11	R	12	R	10	R	10	R	13	R	10	R	11	R
CHLOROFORM	UG/KG	11	U	12	U	10	U	10	U	13	U	10	UJ	11	U
1,1,1-TRICHLOROETHANE	UG/KG	11	U	12	U	10	U	10	U	13	U	10	UJ	11	U
CARBON TETRACHLORIDE	UG/KG	11	U	12	U	10	U	10	U	13	U	10	UJ	11	U
BENZENE	UG/KG	11	U	12	U	10	U	10	U	0.2	J	10	UJ	11	U
1,2-DICHLOROETHANE	UG/KG	11	U	12	U	0.3	J	10	U	13	U	10	UJ	11	U
TRICHLOROETHYLENE (TCE)	UG/KG	11	U	12	U	10	U	0.3	J	13	U	10	UJ	11	U
1,2-DICHLOROPROPANE	UG/KG	11	U	12	U	10	U	10	U	13	U	10	UJ	11	U
1,2,4-TRICHLOROBENZENE	UG/KG	662	UJ	445	UJ	416	UJ	380	UJ	810	UJ	426	UJ	430	UJ
BROMODICHLOROMETHANE	UG/KG	11	U	12	U	10	U	10	U	13	U	10	UJ	11	U
cis-1,3-DICHLOROPROPENE	UG/KG	11	U	12	U	10	U	10	U	13	U	10	UJ	11	U

SWMU 15 Surface Soil Data

	Building	SWM15		SWM15		SWM15		SWM15		SWM15	
	StationID	W15-SB13		W15-SB13		W15-SB14		W15-SB15		W15-SB16	
	SampleID	NDA191		NDA192FD1		NDA193		NDA194		NDA195	
	DateCollected	04/12/2000		04/12/2000		04/12/2000		04/12/2000		04/12/2000	
	Depth	0 to 0.5		0 to 0.5		0 to 0.5		0 to 0.5		0 to 0.5	
Parameter	**Units**										
BENZYL BUTYL PHTHALATE	UG/KG	338	UJ	418	UJ	1720	UJ	480	UJ	323	UJ
3,3'-DICHLOROBENZIDINE	UG/KG	677	UJ	835	UJ	3440	UJ	959	UJ	646	UJ
BENZO(a)ANTHRACENE	UG/KG	338	UJ	418	UJ	1720	UJ	480	UJ	323	UJ
CHRYSENE	UG/KG	338	UJ	418	UJ	1720	UJ	480	UJ	323	UJ
bis(2-ETHYLHEXYL) PHTHALATE	UG/KG	338	UJ	418	UJ	1720	UJ	480	UJ	323	UJ
DI-n-OCTYLPHTHALATE	UG/KG	338	UJ	418	UJ	1720	UJ	480	UJ	323	UJ
BENZO(b)FLUORANTHENE	UG/KG	338	UJ	418	UJ	1720	UJ	480	UJ	323	UJ
BENZO(k)FLUORANTHENE	UG/KG	338	UJ	418	UJ	1720	UJ	480	UJ	323	UJ
BENZO(a)PYRENE	UG/KG	338	UJ	418	UJ	1720	UJ	480	UJ	323	UJ
INDENO(1,2,3-c,d)PYRENE	UG/KG	338	UJ	418	UJ	1720	UJ	480	UJ	323	UJ
DIBENZ(a,h)ANTHRACENE	UG/KG	338	UJ	418	UJ	1720	UJ	480	UJ	323	UJ
BENZO(g,h,i)PERYLENE	UG/KG	338	UJ	418	UJ	1720	UJ	480	UJ	323	UJ
CARBAZOLE	UG/KG	338	UJ	418	UJ	1720	UJ	480	UJ	323	UJ
VOLATILES											
CHLOROMETHANE	UG/KG	10	U	11	U	10	U	11	U	10	U
VINYL CHLORIDE	UG/KG	10	U	11	U	10	U	11	U	10	U
BROMOMETHANE	UG/KG	10	U	11	U	10	U	11	U	10	U
1,3-DICHLOROBENZENE	UG/KG	338	UJ	418	UJ	1720	UJ	480	UJ	323	UJ
CHLOROETHANE	UG/KG	10	UJ	11	UJ	10	UJ	11	UJ	10	UJ
1,1-DICHLOROETHENE	UG/KG	10	U	11	U	10	U	11	U	10	U
1,4-DICHLOROBENZENE	UG/KG	338	UJ	418	UJ	1720	UJ	480	UJ	323	UJ
1,2-DICHLOROBENZENE	UG/KG	338	UJ	418	UJ	1720	UJ	480	UJ	323	UJ
CARBON DISULFIDE	UG/KG	10	U	11	U	10	U	11	U	10	U
METHYLENE CHLORIDE	UG/KG	10	U	11	U	10	U	11	U	10	U
1,1-DICHLOROETHANE	UG/KG	10	U	11	U	10	U	11	U	10	U
ACETONE	UG/KG	16	R	15	R	10	R	11	R	11	R
METHYL ETHYL KETONE (2-BUTANONE)	UG/KG	10	R	11	R	10	R	11	R	10	R
CHLOROFORM	UG/KG	10	U	11	U	10	U	11	U	10	U
1,1,1-TRICHLOROETHANE	UG/KG	10	U	11	U	10	U	11	U	10	U
CARBON TETRACHLORIDE	UG/KG	10	U	11	U	10	U	11	U	10	U
BENZENE	UG/KG	10	U	11	U	10	U	11	U	10	U
1,2-DICHLOROETHANE	UG/KG	10	U	11	U	0.3	J	0.3	J	10	U
TRICHLOROETHYLENE (TCE)	UG/KG	0.5	J	0.3	U	10	U	11	U	10	U
1,2-DICHLOROPROPANE	UG/KG	10	U	11	U	10	U	11	U	10	U
1,2,4-TRICHLOROBENZENE	UG/KG	338	UJ	418	UJ	1720	UJ	480	UJ	323	UJ
BROMODICHLOROMETHANE	UG/KG	10	U	11	U	10	U	11	U	10	U
cis-1,3-DICHLOROPROPENE	UG/KG	10	U	11	U	10	U	11	U	10	U

	Building	SWM15		SWM15		SWM15		SWM15		SWM15		SWM15	
	StationID	W15-SB01		W15-SB02		W15-SB03		W15-SB04		W15-SB05		W15-SB06	
	SampleID	NDA178		NDA179		NDA180		NDA181		NDA182		NDA183	
	DateCollected	04/11/2000		04/11/2000		04/11/2000		04/11/2000		04/11/2000		04/11/2000	
	Depth	0 to 0.5		0 to 0.5		0 to 0.5		0 to 0.5		0 to 0.5		0 to 0.5	
Parameter	**Units**												
METHYL ISOBUTYL KETONE (4-METHYL-2	UG/KG	10	U	11	U	11	UJ	11	U	14	UJ	12	U
TOLUENE	UG/KG	10	U	11	U	0.7	J	11	U	0.5	J	12	U
trans-1,3-DICHLOROPROPENE	UG/KG	10	U	11	U	11	UJ	11	U	14	UJ	12	U
1,1,2-TRICHLOROETHANE	UG/KG	10	U	11	U	11	UJ	11	U	14	UJ	12	U
TETRACHLOROETHYLENE(PCE)	UG/KG	10	U	11	U	11	UJ	11	U	14	UJ	12	U
2-HEXANONE	UG/KG	10	U	11	U	11	UJ	11	U	14	UJ	12	U
DIBROMOCHLOROMETHANE	UG/KG	10	U	11	U	11	UJ	11	U	14	UJ	12	U
CHLOROBENZENE	UG/KG	10	U	11	U	11	UJ	11	U	14	UJ	12	U
ETHYLBENZENE	UG/KG	10	U	11	U	0.6	J	11	U	14	UJ	12	U
M,P-XYLENE (SUM OF ISOMERS)	UG/KG	0.8	J	11	U	4	UJ	11	U	1	J	12	U
O-XYLENE (1,2-DIMETHYLBENZENE)	UG/KG	10	U	11	U	0.9	UJ	11	U	14	UJ	12	U
STYRENE	UG/KG	10	U	11	U	11	UJ	11	U	14	UJ	12	U
BROMOFORM	UG/KG	10	U	11	U	11	UJ	11	U	14	UJ	12	U
1,1,2,2-TETRACHLOROETHANE	UG/KG	10	U	11	U	11	UJ	11	U	14	UJ	12	U
XYLENES, TOTAL	UG/KG	0.8	J	11	U	4	J	11	U	1	J	12	U

SWMU 15 Surface Soil Data

	Building	SWM15		SWM15		SWM15		SWM15		SWM15		SWM15		SWM15	
	StationID	W15-SB06		W15-SB07		W15-SB08		W15-SB09		W15-SB10		W15-SB11		W15-SB12	
	SampleID	NDA184FD1		NDA185		NDA186		NDA187		NDA188		NDA189		NDA190	
	DateCollected	04/11/2000		04/12/2000		04/12/2000		04/12/2000		04/12/2000		04/12/2000		04/12/2000	
	Depth	0 to 0.5		0 to 0.5		0 to 0.5		0 to 0.5		0 to 0.5		0 to 0.5		0 to 0.5	
Parameter	**Units**														
METHYL ISOBUTYL KETONE (4-METHYL-2	UG/KG	11	U	12	U	10	U	10	U	13	U	10	UJ	11	U
TOLUENE	UG/KG	11	U	12	U	10	U	10	U	13	U	10	UJ	11	U
trans-1,3-DICHLOROPROPENE	UG/KG	11	U	12	U	10	U	10	U	13	U	10	UJ	11	U
1,1,2-TRICHLOROETHANE	UG/KG	11	U	12	U	10	U	10	U	13	U	10	UJ	11	U
TETRACHLOROETHYLENE(PCE)	UG/KG	11	U	12	U	10	U	10	U	13	U	10	UJ	11	U
2-HEXANONE	UG/KG	11	U	2	J	10	U	10	U	13	U	10	UJ	11	U
DIBROMOCHLOROMETHANE	UG/KG	11	U	12	U	10	U	10	U	13	U	10	UJ	11	U
CHLOROBENZENE	UG/KG	11	U	12	U	10	U	10	U	13	U	10	UJ	11	U
ETHYLBENZENE	UG/KG	11	U	12	U	10	U	10	U	13	U	10	UJ	1	J
M,P-XYLENE (SUM OF ISOMERS)	UG/KG	11	U	0.5	J	0.8	J	1	J	0.7	J	10	UJ	1	J
O-XYLENE (1,2-DIMETHYLBENZENE)	UG/KG	11	U	12	U	0.2	U	0.5	J	13	U	10	UJ	0.6	J
STYRENE	UG/KG	11	U	12	U	10	U	0.2	J	13	U	10	UJ	11	U
BROMOFORM	UG/KG	11	U	12	U	10	U	10	U	13	U	10	UJ	11	U
1,1,2,2-TETRACHLOROETHANE	UG/KG	11	U	12	U	10	U	10	U	13	U	10	UJ	11	U
XYLENES, TOTAL	UG/KG	11	U	0.5	J	1	J	1	J	0.7	J	10	UJ	1.6	J

	Building	SWM15		SWM15		SWM15		SWM15		SWM15	
	StationID	W15-SB13		W15-SB13		W15-SB14		W15-SB15		W15-SB16	
	SampleID	NDA191		NDA192FD1		NDA193		NDA194		NDA195	
	DateCollected	04/12/2000		04/12/2000		04/12/2000		04/12/2000		04/12/2000	
	Depth	0 to 0.5		0 to 0.5		0 to 0.5		0 to 0.5		0 to 0.5	
Parameter	**Units**										
METHYL ISOBUTYL KETONE (4-METHYL-2	UG/KG	1	U	11	U	10	U	11	U	10	U
TOLUENE	UG/KG	10	U	11	U	10	U	11	U	10	U
trans-1,3-DICHLOROPROPENE	UG/KG	10	U	11	U	10	U	11	U	10	U
1,1,2-TRICHLOROETHANE	UG/KG	10	U	11	U	10	U	11	U	10	U
TETRACHLOROETHYLENE(PCE)	UG/KG	10	U	11	U	10	U	11	U	10	U
2-HEXANONE	UG/KG	10	U	11	U	10	U	11	U	10	U
DIBROMOCHLOROMETHANE	UG/KG	10	U	11	U	10	U	11	U	10	U
CHLOROBENZENE	UG/KG	10	U	11	U	10	U	11	U	10	U
ETHYLBENZENE	UG/KG	10	U	0.3	U	10	U	0.4	J	10	U
M,P-XYLENE (SUM OF ISOMERS)	UG/KG	0.7	J	1	J	0.4	J	2	J	10	U
O-XYLENE (1,2-DIMETHYLBENZENE)	UG/KG	0.3	J	0.5	J	10	U	0.7	J	10	U
STYRENE	UG/KG	10	U	11	U	10	U	11	U	10	U
BROMOFORM	UG/KG	10	U	11	U	10	U	11	U	10	U
1,1,2,2-TETRACHLOROETHANE	UG/KG	10	U	11	U	10	U	11	U	10	U
XYLENES, TOTAL	UG/KG	1	J	1.5	J	0.4	J	2.7	J	10	U

AOC C Groundwater Data

Parameter	Units	Building: AOC C StationID: AOC-C-MW01 SampleID: NDA016 DateCollected: 05/01/2000 Depth: 0 to 0	
DISSOLVED METALS			
ALUMINUM, DISSOLVED	UG/L	25.8	U
ANTIMONY, DISSOLVED	UG/L	1.4	U
ARSENIC, DISSOLVED	UG/L	3.4	U
BARIUM, DISSOLVED	UG/L	124	J
BERYLLIUM, DISSOLVED	UG/L	0.3	U
CALCIUM, DISSOLVED	UG/L	66600	=
CADMIUM, DISSOLVED	UG/L	0.2	U
CHROMIUM, DISSOLVED	UG/L	1.2	J
COBALT, DISSOLVED	UG/L	0.5	U
COPPER, DISSOLVED	UG/L	1.9	U
IRON, DISSOLVED	UG/L	12.2	U
LEAD, DISSOLVED	UG/L	1.4	J
MAGNESIUM, DISSOLVED	UG/L	40000	=
MANGANESE, DISSOLVED	UG/L	22.7	=
MERCURY, DISSOLVED	UG/L	0.18	U
NICKEL, DISSOLVED	UG/L	5.7	J
POTASSIUM, DISSOLVED	UG/L	4650	J
SELENIUM, DISSOLVED	UG/L	2.7	J
SILVER, DISSOLVED	UG/L	0.5	U
SODIUM, DISSOLVED	UG/L	155000	=
THALLIUM, DISSOLVED	UG/L	2.7	U
VANADIUM, DISSOLVED	UG/L	12.3	J
ZINC, DISSOLVED	UG/L	2.5	U
EXPLOSIVES			
2,6-DINITROTOLUENE	UG/L	5	U
NITROBENZENE	UG/L	5	U
2,4-DINITROTOLUENE	UG/L	5	U
METALS			
ALUMINUM	UG/L	4390	=
ANTIMONY	UG/L	1.4	U
ARSENIC	UG/L	3.4	U
BARIUM	UG/L	156	J
BERYLLIUM	UG/L	0.3	U
CADMIUM	UG/L	0.2	U
CALCIUM	UG/L	70900	=
CHROMIUM, TOTAL	UG/L	16.7	=
COBALT	UG/L	3.3	J
COPPER	UG/L	11.4	J
IRON	UG/L	5720	=
LEAD	UG/L	1.1	U
MAGNESIUM	UG/L	42100	=
MANGANESE	UG/L	177	=
MERCURY	UG/L	0.18	U
NICKEL	UG/L	9.1	J
POTASSIUM	UG/L	4980	J
SELENIUM	UG/L	2.1	U
SILVER	UG/L	0.5	U
SODIUM	UG/L	157000	=
THALLIUM	UG/L	2.7	U
VANADIUM	UG/L	27.6	J

AOC C Groundwater Data

	Building	AOC C	
	StationID	AOC-C-MW01	
	SampleID	NDA016	
	DateCollected	05/01/2000	
	Depth	0 to 0	
Parameter	**Units**		
ZINC	UG/L	17.6	J
PCB			
PCB-1016 (AROCHLOR 1016)	UG/L	0.2	UJ
PCB-1260 (AROCHLOR 1260)	UG/L	0.2	UJ
PCB-1221 (AROCHLOR 1221)	UG/L	0.41	UJ
PCB-1232 (AROCHLOR 1232)	UG/L	0.2	UJ
PCB-1242 (AROCHLOR 1242)	UG/L	0.2	UJ
PCB-1248 (AROCHLOR 1248)	UG/L	0.2	UJ
PCB-1254 (AROCHLOR 1254)	UG/L	0.2	UJ
PESTICIDES			
ALPHA BHC (ALPHA HEXACHLOROCYCLOHEXANE)	UG/L	0.01	UJ
BETA BHC (BETA HEXACHLOROCYCLOHEXANE)	UG/L	0.01	U
DELTA BHC (DELTA HEXACHLOROCYCLOHEXANE)	UG/L	0.01	U
GAMMA BHC (LINDANE)	UG/L	0.01	UJ
HEPTACHLOR	UG/L	0.01	U
ALDRIN	UG/L	0.01	U
HEPTACHLOR EPOXIDE	UG/L	0.01	U
ALPHA ENDOSULFAN (ENDOSULFAN I)	UG/L	0.01	U
DIELDRIN	UG/L	0.02	U
p,p'-DDE	UG/L	0.02	U
ENDRIN	UG/L	0.02	U
BETA ENDOSULFAN (ENDOSULFAN II)	UG/L	0.02	U
p,p'-DDD	UG/L	0.02	U
ENDOSULFAN SULFATE	UG/L	0.02	U
p,p'-DDT	UG/L	0.02	U
METHOXYCHLOR	UG/L	0.1	U
ENDRIN ALDEHYDE	UG/L	0.02	U
ALPHA-CHLORDANE	UG/L	0.01	U
GAMMA-CHLORDANE	UG/L	0.01	U
ENDRIN KETONE	UG/L	0.02	U
TOXAPHENE	UG/L	1	U
SEMI-VOLATILES			
bis(2-CHLOROETHYL) ETHER (2-CHLOROETHYL ETHER)	UG/L	5	U
PHENOL	UG/L	5	U
2-CHLOROPHENOL	UG/L	5	U
1,3-DICHLOROBENZENE	UG/L	1	U
1,4-DICHLOROBENZENE	UG/L	1	U
1,2-DICHLOROBENZENE	UG/L	1	U
bis(2-CHLOROISOPROPYL) ETHER	UG/L	5	U
2-METHYLPHENOL (o-CRESOL)	UG/L	5	U
HEXACHLOROETHANE	UG/L	5	U
N-NITROSODI-n-PROPYLAMINE	UG/L	5	U
CRESOLS, m & p	UG/L	5	U
NITROBENZENE	UG/L	5	U
ISOPHORONE	UG/L	5	U
2-NITROPHENOL	UG/L	5	U
2,4-DIMETHYLPHENOL	UG/L	5	U
bis(2-CHLOROETHOXY) METHANE	UG/L	5	U
2,4-DICHLOROPHENOL	UG/L	5	U
1,2,4-TRICHLOROBENZENE	UG/L	1	U
NAPHTHALENE	UG/L	5	U

AOC C Groundwater Data

	Building	AOC C	
	StationID	AOC-C-MW01	
	SampleID	NDA016	
	DateCollected	05/01/2000	
	Depth	0 to 0	
Parameter	**Units**		
4-CHLOROANILINE	UG/L	5	U
2-METHYLNAPHTHALENE	UG/L	5	U
HEXACHLOROBUTADIENE	UG/L	5	U
4-CHLORO-3-METHYLPHENOL	UG/L	5	U
HEXACHLOROCYCLOPENTADIENE	UG/L	5	U
2,4,6-TRICHLOROPHENOL	UG/L	5	U
2,4,5-TRICHLOROPHENOL	UG/L	22	U
2-CHLORONAPHTHALENE	UG/L	5	U
2-NITROANILINE	UG/L	22	U
ACENAPHTHYLENE	UG/L	5	U
DIMETHYL PHTHALATE	UG/L	5	U
2,6-DINITROTOLUENE	UG/L	5	U
ACENAPHTHENE	UG/L	5	U
3-NITROANILINE	UG/L	22	U
2,4-DINITROPHENOL	UG/L	22	U
DIBENZOFURAN	UG/L	5	U
2,4-DINITROTOLUENE	UG/L	5	U
4-NITROPHENOL	UG/L	22	U
FLUORENE	UG/L	5	U
4-CHLOROPHENYL PHENYL ETHER	UG/L	5	U
DIETHYL PHTHALATE	UG/L	5	U
4-NITROANILINE	UG/L	22	U
4,6-DINITRO-2-METHYLPHENOL	UG/L	22	U
N-NITROSODIPHENYLAMINE	UG/L	5	U
4-BROMOPHENYL PHENYL ETHER	UG/L	5	U
HEXACHLOROBENZENE	UG/L	5	U
PENTACHLOROPHENOL	UG/L	22	U
PHENANTHRENE	UG/L	5	U
ANTHRACENE	UG/L	5	U
DI-n-BUTYL PHTHALATE	UG/L	5	U
FLUORANTHENE	UG/L	5	U
PYRENE	UG/L	5	U
BENZYL BUTYL PHTHALATE	UG/L	5	U
3,3'-DICHLOROBENZIDINE	UG/L	5	U
BENZO(a)ANTHRACENE	UG/L	5	U
CHRYSENE	UG/L	5	U
bis(2-ETHYLHEXYL) PHTHALATE	UG/L	5	U
DI-n-OCTYLPHTHALATE	UG/L	5	U
BENZO(b)FLUORANTHENE	UG/L	5	U
BENZO(k)FLUORANTHENE	UG/L	5	U
BENZO(a)PYRENE	UG/L	5	U
INDENO(1,2,3-c,d)PYRENE	UG/L	5	U
DIBENZ(a,h)ANTHRACENE	UG/L	5	U
BENZO(g,h,i)PERYLENE	UG/L	5	U
CARBAZOLE	UG/L	5	U
VOLATILES			
CHLOROMETHANE	UG/L	1	U
VINYL CHLORIDE	UG/L	1	U
BROMOMETHANE	UG/L	1	U
1,3-DICHLOROBENZENE	UG/L	1	U
CHLOROETHANE	UG/L	1	U

AOC C Groundwater Data

	Building	AOC C	
	StationID	AOC-C-MW01	
	SampleID	NDA016	
	DateCollected	05/01/2000	
	Depth	0 to 0	
Parameter	Units		
1,1-DICHLOROETHENE	UG/L	1	U
1,4-DICHLOROBENZENE	UG/L	1	U
1,2-DICHLOROBENZENE	UG/L	1	U
CARBON DISULFIDE	UG/L	1	U
METHYLENE CHLORIDE	UG/L	2	U
1,1-DICHLOROETHANE	UG/L	1	U
ACETONE	UG/L	5	U
METHYL ETHYL KETONE (2-BUTANONE)	UG/L	5	UJ
CHLOROFORM	UG/L	1	U
1,1,1-TRICHLOROETHANE	UG/L	1	U
CARBON TETRACHLORIDE	UG/L	1	U
BENZENE	UG/L	1	U
1,2-DICHLOROETHANE	UG/L	1	U
TRICHLOROETHYLENE (TCE)	UG/L	1	U
1,2-DICHLOROPROPANE	UG/L	1	U
1,2,4-TRICHLOROBENZENE	UG/L	1	U
BROMODICHLOROMETHANE	UG/L	1	U
cis-1,3-DICHLOROPROPENE	UG/L	1	U
METHYL ISOBUTYL KETONE (4-METHYL-2-PENTANONE)	UG/L	5	U
TOLUENE	UG/L	1	U
trans-1,3-DICHLOROPROPENE	UG/L	1	U
1,1,2-TRICHLOROETHANE	UG/L	1	U
TETRACHLOROETHYLENE(PCE)	UG/L	1	UJ
2-HEXANONE	UG/L	5	U
DIBROMOCHLOROMETHANE	UG/L	1	U
CHLOROBENZENE	UG/L	1	U
ETHYLBENZENE	UG/L	1	U
M,P-XYLENE (SUM OF ISOMERS)	UG/L	1	U
O-XYLENE (1,2-DIMETHYLBENZENE)	UG/L	1	U
STYRENE	UG/L	1	U
BROMOFORM	UG/L	1	U
1,1,2,2-TETRACHLOROETHANE	UG/L	1	U
XYLENES, TOTAL	UG/L	1	U
BROMOCHLOROMETHANE	UG/L	1	U
1,2-DIBROMO-3-CHLOROPROPANE	UG/L	1	U
cis-1,2-DICHLOROETHYLENE	UG/L	1	U
trans-1,2-DICHLOROETHENE	UG/L	1	U
TOTAL 1,2-DICHLOROETHENE	UG/L	1	U
ETHYLENE DIBROMIDE (1,2-DIBROMOETHANE)	UG/L	1	U

Parameter	Units	Building	AOC C		AOC C		AOC C		AOC C		AOC C		AOC C	
		StationID	AC-SB01		AC-SB01		AC-SB02		AC-SB03		AC-SB04		AC-SB05	
		SampleID	NDA196		NDA197FD1		NDA198		NDA199		NDA200		NDA201	
		DateCollected	04/10/2000		04/10/2000		04/10/2000		04/10/2000		04/10/2000		04/11/2000	
		Depth	0 to 0.5		0 to 0.5		0 to 0.5		0 to 0.5		0 to 0.5		0 to 0.5	
EXPLOSIVES														
2,6-DINITROTOLUENE	UG/KG		583	U	764	U	579	U	605	U	473	U	491	UJ
NITROBENZENE	UG/KG		583	U	764	U	579	U	605	U	473	U	491	UJ
2,4-DINITROTOLUENE	UG/KG		583	U	764	U	579	U	605	U	473	U	491	UJ
METALS														
ALUMINUM	MG/KG		9200	=	8080	=	8130	=	7670	=	8150	=	6250	=
ANTIMONY	MG/KG		0.15	UJ	0.15	UJ	0.18	UJ	0.18	UJ	0.15	UJ	0.14	UJ
ARSENIC	MG/KG		1.2	J	1.1	J	0.44	U	2.1	J	0.76	J	0.35	U
BARIUM	MG/KG		48.4	=	44	=	52.8	=	52.7	=	50.8	=	39.2	J
BERYLLIUM	MG/KG		0.22	J	0.2	J	0.24	J	0.19	J	0.23	J	0.16	J
CADMIUM	MG/KG		0.022	U	0.022	U	0.026	U	0.026	U	0.021	U	0.021	U
CALCIUM	MG/KG		3050	=	2930	=	2230	=	2850	=	2360	=	1410	=
CHROMIUM, TOTAL	MG/KG		13.5	=	10	=	7	=	11.4	=	11.5	=	7.3	=
COBALT	MG/KG		8.2	J	6.9	J	9	J	8.3	J	8.6	J	6.6	J
COPPER	MG/KG		30.2	=	27.8	=	27.8	=	24.9	=	24.9	=	18.2	=
IRON	MG/KG		18500	=	15700	=	17800	=	14800	=	21100	=	11500	=
LEAD	MG/KG		5.4	=	5	=	1.7	=	6.7	=	4.3	=	1.1	=
MAGNESIUM	MG/KG		3770	=	2980	=	2620	=	2730	=	2610	=	1810	=
MANGANESE	MG/KG		377	=	307	=	405	=	458	=	462	=	401	=
MERCURY	MG/KG		0.014	U	0.019	J	0.016	U	0.018	U	0.015	U	0.013	U
NICKEL	MG/KG		6.8	J	5.1	J	3.6	J	5.5	J	5.1	J	3.2	J
POTASSIUM	MG/KG		939	J	917	J	1340	=	1020	J	1120	=	1130	=
SELENIUM	MG/KG		0.9	J	0.77	J	0.68	J	0.58	J	0.78	J	0.55	J
SILVER	MG/KG		0.055	U	0.054	U	0.065	U	0.065	U	0.054	U	0.051	U
SODIUM	MG/KG		114	J	121	J	46.4	J	72.9	J	195	J	205	J
THALLIUM	MG/KG		0.56	J	0.69	J	0.37	J	0.35	U	0.65	J	0.28	U
VANADIUM	MG/KG		55.5	=	46.6	=	51.3	=	44.9	=	68.4	=	34.1	=
ZINC	MG/KG		56.5	=	51.5	=	30.1	=	44.5	=	36.2	=	16.1	=
PCB														
PCB-1016 (AROCHLOR 1016)	UG/KG		36	U	35	U	43	U	33	U	35	U	33	U
PCB-1260 (AROCHLOR 1260)	UG/KG		36	U	35	U	43	U	33	U	35	U	33	U
PCB-1221 (AROCHLOR 1221)	UG/KG		73	U	72	U	87	U	66	U	71	U	67	U
PCB-1232 (AROCHLOR 1232)	UG/KG		36	U	35	U	43	U	33	U	35	U	33	U
PCB-1242 (AROCHLOR 1242)	UG/KG		36	U	35	U	43	U	33	U	35	U	33	U
PCB-1248 (AROCHLOR 1248)	UG/KG		36	U	35	U	43	U	33	U	35	U	33	U
PCB-1254 (AROCHLOR 1254)	UG/KG		36	U	35	U	43	U	33	U	35	U	33	U

AOC C Surface Soil Data

Parameter	Units	Building	AOC C		AOC C		AOC C		AOC C		AOC C		AOC C	
		StationID	AC-SB06		AC-SB07		AC-SB08		AC-SB08		AC-SB09		AC-SB10	
		SampleID	NDA202		NDA203		NDA204		NDA205FD1		NDA206		NDA207	
		DateCollected	04/11/2000		04/11/2000		04/11/2000		04/11/2000		04/11/2000		04/11/2000	
		Depth	0 to 0.5		0 to 0.5		0 to 0.5		0 to 0.5		0 to 0.5		0 to 0.5	
EXPLOSIVES														
2,6-DINITROTOLUENE	UG/KG		605	UJ	617	UJ	753	UJ	668	UJ	529	UJ	669	UJ
NITROBENZENE	UG/KG		605	UJ	617	UJ	753	UJ	668	UJ	529	UJ	669	UJ
2,4-DINITROTOLUENE	UG/KG		605	UJ	617	UJ	753	UJ	668	UJ	529	UJ	669	UJ
METALS														
ALUMINUM	MG/KG		7860	=	8910	=	6600	=	5600	=	9600	=	5240	=
ANTIMONY	MG/KG		0.19	J	0.17	UJ	0.18	UJ	0.16	UJ	0.15	UJ	0.16	UJ
ARSENIC	MG/KG		0.95	J	0.72	J	0.48	J	0.4	J	0.36	U	0.75	J
BARIUM	MG/KG		68.8	=	62.2	=	43.3	J	46.5	=	55.2	=	50.2	=
BERYLLIUM	MG/KG		0.18	J	0.18	J	0.13	J	0.11	J	0.27	J	0.11	J
CADMIUM	MG/KG		0.023	U	0.025	U	0.026	U	0.023	U	0.021	U	0.023	U
CALCIUM	MG/KG		12600	=	4720	=	4690	=	6430	=	2600	=	3190	=
CHROMIUM, TOTAL	MG/KG		8.5	=	11.9	=	9.7	=	8.3	=	7.5	=	8.1	=
COBALT	MG/KG		9.9	J	9.6	J	6.5	J	7.2	J	8.1	J	6.6	J
COPPER	MG/KG		23.9	=	32.8	=	23.5	=	24	=	29.4	=	18.1	=
IRON	MG/KG		14200	=	15800	=	14100	=	12000	=	18300	=	11500	=
LEAD	MG/KG		3.4	=	7.1	=	6.5	=	6	=	1.4	=	3.7	=
MAGNESIUM	MG/KG		2190	=	3160	=	2860	=	2550	=	3190	=	2040	=
MANGANESE	MG/KG		713	=	527	=	288	=	333	=	414	=	436	=
MERCURY	MG/KG		0.021	J	0.025	J	0.017	U	0.015	U	0.011	U	0.011	U
NICKEL	MG/KG		3.8	J	6.7	J	5	J	4.5	J	4	J	4.2	J
POTASSIUM	MG/KG		1290	=	1130	J	878	J	792	J	1150	=	745	J
SELENIUM	MG/KG		0.8	J	0.63	J	0.84	J	0.4	J	0.74	J	0.45	J
SILVER	MG/KG		0.058	U	0.062	U	0.066	U	0.057	U	0.053	U	0.057	U
SODIUM	MG/KG		154	J	120	J	111	J	104	J	96	J	90.4	J
THALLIUM	MG/KG		0.31	U	0.52	J	0.35	U	0.31	U	0.52	J	0.31	U
VANADIUM	MG/KG		46.2	=	50.1	=	40	=	35.8	=	52	=	34.8	=
ZINC	MG/KG		27.9	=	40.4	=	46.6	=	38.6	=	29.1	=	25.3	=
PCB														
PCB-1016 (AROCHLOR 1016)	UG/KG		38	U	41	U	43	U	37	U	34	U	37	U
PCB-1260 (AROCHLOR 1260)	UG/KG		38	U	41	U	43	U	37	U	34	U	37	U
PCB-1221 (AROCHLOR 1221)	UG/KG		77	U	83	U	87	U	75	U	69	U	76	U
PCB-1232 (AROCHLOR 1232)	UG/KG		38	U	41	U	43	U	37	U	34	U	37	U
PCB-1242 (AROCHLOR 1242)	UG/KG		38	U	41	U	43	U	37	U	34	U	37	U
PCB-1248 (AROCHLOR 1248)	UG/KG		38	U	41	U	43	U	37	U	34	U	37	U
PCB-1254 (AROCHLOR 1254)	UG/KG		38	U	41	U	43	U	37	U	34	U	37	U

Parameter	Units	Building		AOC C		AOC C		AOC C		AOC C	
		StationID		AC-SB11		AC-SB12		AC-SB13		AC-SB14		AC-SB15	
		SampleID		NDA208		NDA209		NDA210		NDA211		NDA212	
		DateCollected		04/11/2000		04/11/2000		04/11/2000		04/11/2000		04/11/2000	
		Depth		0 to 0.5		0 to 0.5		0 to 0.5		0 to 0.5		0 to 0.5	
EXPLOSIVES													
2,6-DINITROTOLUENE	UG/KG			520	UJ	570	UJ	545	UJ	742	UJ	651	UJ
NITROBENZENE	UG/KG			520	UJ	570	UJ	545	UJ	742	UJ	651	UJ
2,4-DINITROTOLUENE	UG/KG			520	UJ	570	UJ	545	UJ	742	UJ	651	UJ
METALS													
ALUMINUM	MG/KG			5900	=	8930	=	4130	=	7890	=	8280	=
ANTIMONY	MG/KG			0.14	UJ	0.2	UJ	0.15	UJ	0.14	UJ	0.14	UJ
ARSENIC	MG/KG			0.36	J	0.5	J	0.35	U	0.64	J	0.56	J
BARIUM	MG/KG			40.7	J	62.8	=	30.3	J	264	=	34.3	J
BERYLLIUM	MG/KG			0.15	J	0.2	J	0.11	J	0.22	J	0.095	J
CADMIUM	MG/KG			0.021	U	0.029	U	0.021	U	0.02	U	0.02	U
CALCIUM	MG/KG			3490	=	3280	=	1870	=	3260	=	4320	=
CHROMIUM, TOTAL	MG/KG			7	=	9.2	=	6.3	=	8.3	=	13.9	=
COBALT	MG/KG			6.5	J	9.2	J	5.2	J	20	=	7.5	J
COPPER	MG/KG			19.2	=	24.8	=	13.2	=	33.9	=	27.2	=
IRON	MG/KG			11800	=	16400	=	9770	=	15400	=	14200	=
LEAD	MG/KG			2.1	=	3.4	=	2	=	3.2	=	8.4	=
MAGNESIUM	MG/KG			1840	=	2620	=	1330	=	2790	=	4200	=
MANGANESE	MG/KG			349	=	520	=	249	=	2030	=	397	=
MERCURY	MG/KG			0.013	U	0.016	U	0.012	U	0.014	U	0.011	U
NICKEL	MG/KG			3.2	J	4.3	J	2.5	J	11.2	=	7.8	J
POTASSIUM	MG/KG			988	J	1260	J	672	J	1260	=	768	J
SELENIUM	MG/KG			0.42	J	0.68	J	0.67	J	0.8	J	0.71	J
SILVER	MG/KG			0.052	U	0.072	U	0.052	U	0.051	U	0.051	U
SODIUM	MG/KG			74.8	J	172	J	78.7	J	91.4	J	144	J
THALLIUM	MG/KG			0.31	J	0.47	J	0.38	J	0.27	U	0.43	J
VANADIUM	MG/KG			36.6	=	48.9	=	32.1	=	59	=	42.4	=
ZINC	MG/KG			19.9	=	30.9	=	13.3	=	25.2	=	34.5	=
PCB													
PCB-1016 (AROCHLOR 1016)	UG/KG			33	U	46	U	33	U	33	U	37	U
PCB-1260 (AROCHLOR 1260)	UG/KG			33	U	46	U	33	U	33	U	37	U
PCB-1221 (AROCHLOR 1221)	UG/KG			67	U	94	U	68	U	66	U	75	U
PCB-1232 (AROCHLOR 1232)	UG/KG			33	U	46	U	33	U	33	U	37	U
PCB-1242 (AROCHLOR 1242)	UG/KG			33	U	46	U	33	U	33	U	37	U
PCB-1248 (AROCHLOR 1248)	UG/KG			33	U	46	U	33	U	33	U	37	U
PCB-1254 (AROCHLOR 1254)	UG/KG			33	U	46	U	33	U	33	U	37	U

AOC C Surface Soil Data

Parameter	Units	Building	AOC C		AOC C		AOC C		AOC C		AOC C		AOC C	
		StationID	AC-SB01		AC-SB01		AC-SB02		AC-SB03		AC-SB04		AC-SB05	
		SampleID	NDA196		NDA197FD1		NDA198		NDA199		NDA200		NDA201	
		DateCollected	04/10/2000		04/10/2000		04/10/2000		04/10/2000		04/10/2000		04/11/2000	
		Depth	0 to 0.5		0 to 0.5		0 to 0.5		0 to 0.5		0 to 0.5		0 to 0.5	
PESTICIDES														
ALPHA BHC (ALPHA HEXACHLOROCYCLOHEXANE)	UG/KG		1.8	UJ	1.8	UJ	2.2	UJ	2.2	UJ	1.8	UJ	1.7	U
BETA BHC (BETA HEXACHLOROCYCLOHEXANE)	UG/KG		1.8	U	1.8	U	2.2	U	2.2	U	1.8	U	1.7	U
DELTA BHC (DELTA HEXACHLOROCYCLOHEXANE)	UG/KG		1.8	UJ	1.8	UJ	2.2	UJ	2.2	UJ	1.8	UJ	1.7	U
GAMMA BHC (LINDANE)	UG/KG		1.8	UJ	1.8	UJ	2.2	UJ	2.2	UJ	1.8	UJ	1.7	U
HEPTACHLOR	UG/KG		1.8	U	1.8	U	2.2	U	2.2	U	1.8	U	1.7	U
ALDRIN	UG/KG		1.8	U	1.8	U	2.2	U	2.2	U	1.8	U	1.7	U
HEPTACHLOR EPOXIDE	UG/KG		1.8	U	1.8	U	2.2	U	2.2	U	1.8	U	1.7	U
ALPHA ENDOSULFAN (ENDOSULFAN I)	UG/KG		1.8	U	1.8	U	2.2	U	2.2	U	1.8	U	1.7	U
DIELDRIN	UG/KG		3.6	U	3.6	U	4.3	U	4.3	U	3.5	U	3.3	U
p,p'-DDE	UG/KG		3.6	U	3.6	U	4.3	U	4.3	U	0.53	J	3.3	U
ENDRIN	UG/KG		3.6	U	3.6	U	4.3	U	4.3	U	3.5	U	3.3	U
BETA ENDOSULFAN (ENDOSULFAN II)	UG/KG		3.6	U	3.6	U	4.3	U	4.3	U	3.5	U	3.3	U
p,p'-DDD	UG/KG		3.6	U	3.6	U	4.3	U	4.3	U	3.5	U	3.3	U
ENDOSULFAN SULFATE	UG/KG		3.6	U	3.6	U	4.3	U	4.3	U	3.5	U	3.3	U
p,p'-DDT	UG/KG		3.6	UJ	3.6	UJ	4.3	UJ	4.3	UJ	3.5	UJ	3.3	U
METHOXYCHLOR	UG/KG		18	UJ	18	UJ	22	UJ	22	UJ	18	UJ	17	U
ENDRIN ALDEHYDE	UG/KG		3.6	U	3.6	U	4.3	U	4.3	U	3.5	U	3.3	U
ALPHA-CHLORDANE	UG/KG		1.8	U	1.8	U	2.2	U	2.2	U	1.8	U	1.7	U
GAMMA-CHLORDANE	UG/KG		1.8	U	1.8	U	2.2	U	2.2	U	1.8	U	1.7	U
ENDRIN KETONE	UG/KG		3.6	U	3.6	U	4.3	U	4.3	U	3.5	U	3.3	U
TOXAPHENE	UG/KG		184	U	183	U	220	U	218	U	180	U	171	U
SEMI-VOLATILES														
bis(2-CHLOROETHYL) ETHER (2-CHLOROETHYL ETHER)	UG/KG		583	U	764	U	579	U	605	U	473	U	491	UJ
PHENOL	UG/KG		583	U	764	U	579	U	605	U	473	U	491	UJ
2-CHLOROPHENOL	UG/KG		583	U	764	U	579	U	605	U	473	U	491	UJ
1,3-DICHLOROBENZENE	UG/KG		583	U	764	U	579	U	605	U	473	U	491	UJ
1,4-DICHLOROBENZENE	UG/KG		583	U	764	U	579	U	605	U	473	U	491	UJ
1,2-DICHLOROBENZENE	UG/KG		583	U	764	U	579	U	605	U	473	U	491	UJ
bis(2-CHLOROISOPROPYL) ETHER	UG/KG		583	U	764	U	579	U	605	U	473	U	491	UJ
2-METHYLPHENOL (o-CRESOL)	UG/KG		583	U	764	U	579	U	605	U	473	U	491	UJ
HEXACHLOROETHANE	UG/KG		583	U	764	U	579	U	605	U	473	U	491	UJ
N-NITROSODI-n-PROPYLAMINE	UG/KG		583	U	764	U	579	U	605	U	473	U	491	UJ
CRESOLS, m & p	UG/KG		583	U	764	U	579	U	605	U	473	U	491	UJ
NITROBENZENE	UG/KG		583	U	764	U	579	U	605	U	473	U	491	UJ
ISOPHORONE	UG/KG		583	U	764	U	579	U	605	U	473	U	491	UJ
2-NITROPHENOL	UG/KG		583	U	764	U	579	U	605	U	473	U	491	UJ
2,4-DIMETHYLPHENOL	UG/KG		583	U	764	U	579	U	605	U	473	U	491	UJ

Parameter	Units	Building	AOC C		AOC C		AOC C		AOC C		AOC C		AOC C	
		StationID	AC-SB06		AC-SB07		AC-SB08		AC-SB08		AC-SB09		AC-SB10	
		SampleID	NDA202		NDA203		NDA204		NDA205FD1		NDA206		NDA207	
		DateCollected	04/11/2000		04/11/2000		04/11/2000		04/11/2000		04/11/2000		04/11/2000	
		Depth	0 to 0.5		0 to 0.5		0 to 0.5		0 to 0.5		0 to 0.5		0 to 0.5	
PESTICIDES														
ALPHA BHC (ALPHA HEXACHLOROCYCLOHEXANE)	UG/KG		1.9	U	2.1	U	2.2	U	1.9	U	1.8	U	1.9	U
BETA BHC (BETA HEXACHLOROCYCLOHEXANE)	UG/KG		1.9	U	2.1	U	2.2	U	1.9	U	1.8	U	1.9	U
DELTA BHC (DELTA HEXACHLOROCYCLOHEXANE)	UG/KG		1.9	U	2.1	U	2.2	U	1.9	U	1.8	U	1.9	U
GAMMA BHC (LINDANE)	UG/KG		1.9	U	2.1	U	2.2	U	1.9	U	1.8	U	1.9	U
HEPTACHLOR	UG/KG		1.9	U	2.1	U	2.2	U	1.9	U	1.8	U	1.9	U
ALDRIN	UG/KG		1.9	U	2.1	U	2.2	U	1.9	U	1.8	U	1.9	U
HEPTACHLOR EPOXIDE	UG/KG		1.9	U	2.1	U	2.2	U	1.9	U	1.8	U	1.9	U
ALPHA ENDOSULFAN (ENDOSULFAN I)	UG/KG		1.9	U	2.1	U	2.2	U	1.9	U	1.8	U	1.9	U
DIELDRIN	UG/KG		3.8	U	4.2	U	4.3	U	3.8	U	3.4	U	3.8	U
p,p'-DDE	UG/KG		0.58	J	6.4	=	0.8	J	0.84	J	3.4	U	0.48	J
ENDRIN	UG/KG		3.8	U	4.2	U	4.3	U	3.8	U	3.4	U	3.8	U
BETA ENDOSULFAN (ENDOSULFAN II)	UG/KG		3.8	U	4.2	U	4.3	U	3.8	U	3.4	U	3.8	U
p,p'-DDD	UG/KG		3.8	U	2.1	J	4.3	UJ	3.8	U	3.4	U	3.8	U
ENDOSULFAN SULFATE	UG/KG		3.8	U	4.2	U	4.3	U	3.8	U	3.4	U	3.8	U
p,p'-DDT	UG/KG		3.8	U	16	=	4.3	U	0.53	J	3.4	U	3.8	U
METHOXYCHLOR	UG/KG		19	U	21	U	22	U	19	U	18	U	19	U
ENDRIN ALDEHYDE	UG/KG		3.8	U	4.2	U	4.3	U	3.8	U	3.4	U	3.8	U
ALPHA-CHLORDANE	UG/KG		1.9	U	2.1	U	2.2	U	1.9	U	1.8	U	1.9	U
GAMMA-CHLORDANE	UG/KG		1.9	U	2.1	U	2.2	U	1.9	U	1.8	U	1.9	U
ENDRIN KETONE	UG/KG		3.8	U	4.2	U	4.3	U	3.8	U	3.4	U	3.8	U
TOXAPHENE	UG/KG		195	U	212	U	221	U	192	U	176	U	192	U
SEMI-VOLATILES														
bis(2-CHLOROETHYL) ETHER (2-CHLOROETHYL ETHER)	UG/KG		605	UJ	617	UJ	753	UJ	668	UJ	529	UJ	669	UJ
PHENOL	UG/KG		605	UJ	617	UJ	753	UJ	668	UJ	529	UJ	669	UJ
2-CHLOROPHENOL	UG/KG		605	UJ	617	UJ	753	UJ	668	UJ	529	UJ	669	UJ
1,3-DICHLOROBENZENE	UG/KG		605	UJ	617	UJ	753	UJ	668	UJ	529	UJ	669	UJ
1,4-DICHLOROBENZENE	UG/KG		605	UJ	617	UJ	753	UJ	668	UJ	529	UJ	669	UJ
1,2-DICHLOROBENZENE	UG/KG		605	UJ	617	UJ	753	UJ	668	UJ	529	UJ	669	UJ
bis(2-CHLOROISOPROPYL) ETHER	UG/KG		605	UJ	617	UJ	753	UJ	668	UJ	529	UJ	669	UJ
2-METHYLPHENOL (o-CRESOL)	UG/KG		605	UJ	617	UJ	753	UJ	668	UJ	529	UJ	669	UJ
HEXACHLOROETHANE	UG/KG		605	UJ	617	UJ	753	UJ	668	UJ	529	UJ	669	UJ
N-NITROSODI-n-PROPYLAMINE	UG/KG		605	UJ	617	UJ	753	UJ	668	UJ	529	UJ	669	UJ
CRESOLS, m & p	UG/KG		605	UJ	617	UJ	753	UJ	668	UJ	529	UJ	669	UJ
NITROBENZENE	UG/KG		605	UJ	617	UJ	753	UJ	668	UJ	529	UJ	669	UJ
ISOPHORONE	UG/KG		605	UJ	617	UJ	753	UJ	668	UJ	529	UJ	669	UJ
2-NITROPHENOL	UG/KG		605	UJ	617	UJ	753	UJ	668	UJ	529	UJ	669	UJ
2,4-DIMETHYLPHENOL	UG/KG		605	UJ	617	UJ	753	UJ	668	UJ	529	UJ	669	UJ

AOC C Surface Soil Data

Parameter	Units	Building	AOC C		AOC C		AOC C		AOC C		AOC C	
		StationID	AC-SB11		AC-SB12		AC-SB13		AC-SB14		AC-SB15	
		SampleID	NDA208		NDA209		NDA210		NDA211		NDA212	
		DateCollected	04/11/2000		04/11/2000		04/11/2000		04/11/2000		04/11/2000	
		Depth	0 to 0.5		0 to 0.5		0 to 0.5		0 to 0.5		0 to 0.5	
PESTICIDES												
ALPHA BHC (ALPHA HEXACHLOROCYCLOHEXANE)	UG/KG		1.7	U	2.4	U	1.7	U	1.7	U	1.9	U
BETA BHC (BETA HEXACHLOROCYCLOHEXANE)	UG/KG		1.7	U	2.4	U	1.7	U	1.7	U	1.9	U
DELTA BHC (DELTA HEXACHLOROCYCLOHEXANE)	UG/KG		1.7	U	2.4	U	1.7	U	1.7	U	1.9	U
GAMMA BHC (LINDANE)	UG/KG		1.7	U	2.4	U	1.7	U	1.7	U	1.9	U
HEPTACHLOR	UG/KG		1.7	U	2.4	U	1.7	U	1.7	U	1.9	U
ALDRIN	UG/KG		1.7	U	2.4	U	1.7	U	1.7	U	1.9	U
HEPTACHLOR EPOXIDE	UG/KG		1.7	U	2.4	U	1.7	U	1.7	U	1.9	U
ALPHA ENDOSULFAN (ENDOSULFAN I)	UG/KG		1.7	U	2.4	U	1.7	U	1.7	U	1.9	U
DIELDRIN	UG/KG		3.4	U	4.7	U	3.4	U	3.3	U	3.7	U
p,p'-DDE	UG/KG		3.4	U	1.4	J	0.94	J	0.58	J	0.7	J
ENDRIN	UG/KG		3.4	U	4.7	U	3.4	U	3.3	U	3.7	U
BETA ENDOSULFAN (ENDOSULFAN II)	UG/KG		3.4	U	4.7	U	3.4	U	3.3	U	3.7	U
p,p'-DDD	UG/KG		3.4	U	4.7	U	3.4	U	3.3	U	3.7	U
ENDOSULFAN SULFATE	UG/KG		3.4	U	4.7	U	3.4	U	3.3	U	3.7	U
p,p'-DDT	UG/KG		0.47	J	0.82	J	0.81	J	0.81	J	3.7	U
METHOXYCHLOR	UG/KG		17	U	24	U	17	U	17	U	19	U
ENDRIN ALDEHYDE	UG/KG		3.4	U	4.7	U	3.4	U	3.3	U	3.7	U
ALPHA-CHLORDANE	UG/KG		1.7	U	2.4	U	1.7	U	1.7	U	1.9	U
GAMMA-CHLORDANE	UG/KG		1.7	U	2.4	U	1.7	U	1.7	U	1.9	U
ENDRIN KETONE	UG/KG		3.4	U	4.7	U	3.4	U	3.3	U	3.7	U
TOXAPHENE	UG/KG		171	U	239	U	172	U	168	U	191	U
SEMI-VOLATILES												
bis(2-CHLOROETHYL) ETHER (2-CHLOROETHYL ETHER)	UG/KG		520	UJ	570	UJ	545	UJ	742	UJ	651	UJ
PHENOL	UG/KG		520	UJ	570	UJ	545	UJ	742	UJ	651	UJ
2-CHLOROPHENOL	UG/KG		520	UJ	570	UJ	545	UJ	742	UJ	651	UJ
1,3-DICHLOROBENZENE	UG/KG		520	UJ	570	UJ	545	UJ	742	UJ	651	UJ
1,4-DICHLOROBENZENE	UG/KG		520	UJ	570	UJ	545	UJ	742	UJ	651	UJ
1,2-DICHLOROBENZENE	UG/KG		520	UJ	570	UJ	545	UJ	742	UJ	651	UJ
bis(2-CHLOROISOPROPYL) ETHER	UG/KG		520	UJ	570	UJ	545	UJ	742	UJ	651	UJ
2-METHYLPHENOL (o-CRESOL)	UG/KG		520	UJ	570	UJ	545	UJ	742	UJ	651	UJ
HEXACHLOROETHANE	UG/KG		520	UJ	570	UJ	545	UJ	742	UJ	651	UJ
N-NITROSODI-n-PROPYLAMINE	UG/KG		520	UJ	570	UJ	545	UJ	742	UJ	651	UJ
CRESOLS, m & p	UG/KG		520	UJ	570	UJ	545	UJ	742	UJ	651	UJ
NITROBENZENE	UG/KG		520	UJ	570	UJ	545	UJ	742	UJ	651	UJ
ISOPHORONE	UG/KG		520	UJ	570	UJ	545	UJ	742	UJ	651	UJ
2-NITROPHENOL	UG/KG		520	UJ	570	UJ	545	UJ	742	UJ	651	UJ
2,4-DIMETHYLPHENOL	UG/KG		520	UJ	570	UJ	545	UJ	742	UJ	651	UJ

	Building	AOC C		AOC C		AOC C		AOC C		AOC C		AOC C	
	StationID	AC-SB01		AC-SB01		AC-SB02		AC-SB03		AC-SB04		AC-SB05	
	SampleID	NDA196		NDA197FD1		NDA198		NDA199		NDA200		NDA201	
	DateCollected	04/10/2000		04/10/2000		04/10/2000		04/10/2000		04/10/2000		04/11/2000	
	Depth	0 to 0.5		0 to 0.5		0 to 0.5		0 to 0.5		0 to 0.5		0 to 0.5	
Parameter	**Units**												
bis(2-CHLOROETHOXY) METHANE	UG/KG	583	U	764	U	579	U	605	U	473	U	491	UJ
2,4-DICHLOROPHENOL	UG/KG	583	U	764	U	579	U	605	U	473	U	491	UJ
1,2,4-TRICHLOROBENZENE	UG/KG	583	U	764	U	579	U	605	U	473	U	491	UJ
NAPHTHALENE	UG/KG	583	U	764	U	579	U	605	U	473	U	491	UJ
4-CHLOROANILINE	UG/KG	583	U	764	U	579	U	605	U	473	U	491	UJ
2-METHYLNAPHTHALENE	UG/KG	583	U	764	U	579	U	605	U	473	U	491	UJ
HEXACHLOROBUTADIENE	UG/KG	583	U	764	U	579	U	605	U	473	U	491	UJ
4-CHLORO-3-METHYLPHENOL	UG/KG	583	U	764	U	579	U	605	U	473	U	491	UJ
HEXACHLOROCYCLOPENTADIENE	UG/KG	583	U	764	U	579	U	605	U	473	U	491	UJ
2,4,6-TRICHLOROPHENOL	UG/KG	583	U	764	U	579	U	605	U	473	U	491	UJ
2,4,5-TRICHLOROPHENOL	UG/KG	1750	U	2290	U	1740	U	1810	U	1420	U	1470	UJ
2-CHLORONAPHTHALENE	UG/KG	583	U	764	U	579	U	605	U	473	U	491	UJ
2-NITROANILINE	UG/KG	1750	U	2290	U	1740	U	1810	U	1420	U	1470	UJ
ACENAPHTHYLENE	UG/KG	583	U	764	U	579	U	605	U	473	U	491	UJ
DIMETHYL PHTHALATE	UG/KG	583	U	764	U	579	U	605	U	473	U	491	UJ
2,6-DINITROTOLUENE	UG/KG	583	U	764	U	579	U	605	U	473	U	491	UJ
ACENAPHTHENE	UG/KG	583	U	764	U	579	U	605	U	473	U	491	UJ
3-NITROANILINE	UG/KG	1750	U	2290	U	1740	U	1810	U	1420	U	1470	UJ
2,4-DINITROPHENOL	UG/KG	1750	U	2290	U	1740	U	1810	U	1420	U	1470	UJ
DIBENZOFURAN	UG/KG	583	U	764	U	579	U	605	U	473	U	491	UJ
2,4-DINITROTOLUENE	UG/KG	583	U	764	U	579	U	605	U	473	U	491	UJ
4-NITROPHENOL	UG/KG	1750	U	2290	U	1740	U	1810	U	1420	U	1470	UJ
FLUORENE	UG/KG	583	U	764	U	579	U	605	U	473	U	491	UJ
4-CHLOROPHENYL PHENYL ETHER	UG/KG	583	U	764	U	579	U	605	U	473	U	491	UJ
DIETHYL PHTHALATE	UG/KG	583	U	764	U	579	U	605	U	473	U	491	UJ
4-NITROANILINE	UG/KG	1750	U	2290	U	1740	U	1810	U	1420	U	1470	UJ
4,6-DINITRO-2-METHYLPHENOL	UG/KG	1750	U	2290	U	1740	U	1810	U	1420	U	1470	UJ
N-NITROSODIPHENYLAMINE	UG/KG	583	U	764	U	579	U	605	U	473	U	491	UJ
4-BROMOPHENYL PHENYL ETHER	UG/KG	583	U	764	U	579	U	605	U	473	U	491	UJ
HEXACHLOROBENZENE	UG/KG	583	U	764	U	579	U	605	U	473	U	491	UJ
PENTACHLOROPHENOL	UG/KG	1750	U	2290	U	1740	U	1810	U	1420	U	1470	UJ
PHENANTHRENE	UG/KG	583	U	764	U	579	U	605	U	473	U	491	UJ
ANTHRACENE	UG/KG	583	U	764	U	579	U	605	U	473	U	491	UJ
DI-n-BUTYL PHTHALATE	UG/KG	583	U	764	U	579	U	605	U	473	U	491	UJ
FLUORANTHENE	UG/KG	583	U	764	U	579	U	605	U	473	U	491	UJ
PYRENE	UG/KG	583	U	764	U	579	U	605	U	473	U	491	UJ
BENZYL BUTYL PHTHALATE	UG/KG	583	U	764	U	579	U	605	U	473	U	491	UJ
3,3'-DICHLOROBENZIDINE	UG/KG	1170	U	1530	U	1160	U	1210	U	946	U	981	UJ

AOC C Surface Soil Data

Parameter	Units	Building	StationID	SampleID	DateCollected	Depth											
		AOC C	AC-SB06	NDA202	04/11/2000	0 to 0.5		AOC C	AC-SB07	NDA203	04/11/2000	0 to 0.5		AOC C	AC-SB08	NDA204	04/11/2000	0 to 0.5	
bis(2-CHLOROETHOXY) METHANE	UG/KG	605	UJ	617	UJ	753	UJ	668	UJ	529	UJ	669	UJ						
2,4-DICHLOROPHENOL	UG/KG	605	UJ	617	UJ	753	UJ	668	UJ	529	UJ	669	UJ						
1,2,4-TRICHLOROBENZENE	UG/KG	605	UJ	617	UJ	753	UJ	668	UJ	529	UJ	669	UJ						
NAPHTHALENE	UG/KG	605	UJ	617	UJ	753	UJ	668	UJ	529	UJ	669	UJ						
4-CHLOROANILINE	UG/KG	605	UJ	617	UJ	753	UJ	668	UJ	529	UJ	669	UJ						
2-METHYLNAPHTHALENE	UG/KG	605	UJ	617	UJ	753	UJ	668	UJ	529	UJ	669	UJ						
HEXACHLOROBUTADIENE	UG/KG	605	UJ	617	UJ	753	UJ	668	UJ	529	UJ	669	UJ						
4-CHLORO-3-METHYLPHENOL	UG/KG	605	UJ	617	UJ	753	UJ	668	UJ	529	UJ	669	UJ						
HEXACHLOROCYCLOPENTADIENE	UG/KG	605	UJ	617	UJ	753	UJ	668	UJ	529	UJ	669	UJ						
2,4,6-TRICHLOROPHENOL	UG/KG	605	UJ	617	UJ	753	UJ	668	UJ	529	UJ	669	UJ						
2,4,5-TRICHLOROPHENOL	UG/KG	1820	UJ	1850	UJ	2260	UJ	2000	UJ	1590	UJ	2010	UJ						
2-CHLORONAPHTHALENE	UG/KG	605	UJ	617	UJ	753	UJ	668	UJ	529	UJ	669	UJ						
2-NITROANILINE	UG/KG	1820	UJ	1850	UJ	2260	UJ	2000	UJ	1590	UJ	2010	UJ						
ACENAPHTHYLENE	UG/KG	605	UJ	617	UJ	753	UJ	668	UJ	529	UJ	669	UJ						
DIMETHYL PHTHALATE	UG/KG	605	UJ	617	UJ	753	UJ	668	UJ	529	UJ	669	UJ						
2,6-DINITROTOLUENE	UG/KG	605	UJ	617	UJ	753	UJ	668	UJ	529	UJ	669	UJ						
ACENAPHTHENE	UG/KG	605	UJ	617	UJ	753	UJ	668	UJ	529	UJ	669	UJ						
3-NITROANILINE	UG/KG	1820	UJ	1850	UJ	2260	UJ	2000	UJ	1590	UJ	2010	UJ						
2,4-DINITROPHENOL	UG/KG	1820	UJ	1850	UJ	2260	UJ	2000	UJ	1590	UJ	2010	UJ						
DIBENZOFURAN	UG/KG	605	UJ	617	UJ	753	UJ	668	UJ	529	UJ	669	UJ						
2,4-DINITROTOLUENE	UG/KG	605	UJ	617	UJ	753	UJ	668	UJ	529	UJ	669	UJ						
4-NITROPHENOL	UG/KG	1820	UJ	1850	UJ	2260	UJ	2000	UJ	1590	UJ	2010	UJ						
FLUORENE	UG/KG	605	UJ	617	UJ	753	UJ	668	UJ	529	UJ	669	UJ						
4-CHLOROPHENYL PHENYL ETHER	UG/KG	605	UJ	617	UJ	753	UJ	668	UJ	529	UJ	669	UJ						
DIETHYL PHTHALATE	UG/KG	605	UJ	617	UJ	753	UJ	668	UJ	529	UJ	669	UJ						
4-NITROANILINE	UG/KG	1820	UJ	1850	UJ	2260	UJ	2000	UJ	1590	UJ	2010	UJ						
4,6-DINITRO-2-METHYLPHENOL	UG/KG	1820	UJ	1850	UJ	2260	UJ	2000	UJ	1590	UJ	2010	UJ						
N-NITROSODIPHENYLAMINE	UG/KG	605	UJ	617	UJ	753	UJ	668	UJ	529	UJ	669	UJ						
4-BROMOPHENYL PHENYL ETHER	UG/KG	605	UJ	617	UJ	753	UJ	668	UJ	529	UJ	669	UJ						
HEXACHLOROBENZENE	UG/KG	605	UJ	617	UJ	753	UJ	668	UJ	529	UJ	669	UJ						
PENTACHLOROPHENOL	UG/KG	1820	UJ	1850	UJ	2260	UJ	2000	UJ	1590	UJ	2010	UJ						
PHENANTHRENE	UG/KG	605	UJ	617	UJ	753	UJ	668	UJ	529	UJ	669	UJ						
ANTHRACENE	UG/KG	605	UJ	617	UJ	753	UJ	668	UJ	529	UJ	669	UJ						
DI-n-BUTYL PHTHALATE	UG/KG	605	UJ	617	UJ	109	J	668	UJ	529	UJ	669	UJ						
FLUORANTHENE	UG/KG	605	UJ	617	UJ	753	UJ	668	UJ	529	UJ	669	UJ						
PYRENE	UG/KG	605	UJ	617	UJ	753	UJ	668	UJ	529	UJ	669	UJ						
BENZYL BUTYL PHTHALATE	UG/KG	605	UJ	617	UJ	753	UJ	668	UJ	529	UJ	669	UJ						
3,3'-DICHLOROBENZIDINE	UG/KG	1210	UJ	1230	UJ	1510	UJ	1340	UJ	1060	UJ	1340	UJ						

AOC C Surface Soil Data

Parameter	Units	Building	StationID	SampleID	DateCollected	Depth									
		AOC C	AOC C	AOC C	AOC C	AOC C									
		AC-SB11	AC-SB12	AC-SB13	AC-SB14	AC-SB15									
		NDA208	NDA209	NDA210	NDA211	NDA212									
		04/11/2000	04/11/2000	04/11/2000	04/11/2000	04/11/2000									
		0 to 0.5	0 to 0.5	0 to 0.5	0 to 0.5	0 to 0.5									
bis(2-CHLOROETHOXY) METHANE	UG/KG	520	UJ	570	UJ	545	UJ	742	UJ	651	UJ				
2,4-DICHLOROPHENOL	UG/KG	520	UJ	570	UJ	545	UJ	742	UJ	651	UJ				
1,2,4-TRICHLOROBENZENE	UG/KG	520	UJ	570	UJ	545	UJ	742	UJ	651	UJ				
NAPHTHALENE	UG/KG	520	UJ	570	UJ	545	UJ	742	UJ	651	UJ				
4-CHLOROANILINE	UG/KG	520	UJ	570	UJ	545	UJ	742	UJ	651	UJ				
2-METHYLNAPHTHALENE	UG/KG	520	UJ	570	UJ	545	UJ	742	UJ	651	UJ				
HEXACHLOROBUTADIENE	UG/KG	520	UJ	570	UJ	545	UJ	742	UJ	651	UJ				
4-CHLORO-3-METHYLPHENOL	UG/KG	520	UJ	570	UJ	545	UJ	742	UJ	651	UJ				
HEXACHLOROCYCLOPENTADIENE	UG/KG	520	UJ	570	UJ	545	UJ	742	UJ	651	UJ				
2,4,6-TRICHLOROPHENOL	UG/KG	520	UJ	570	UJ	545	UJ	742	UJ	651	UJ				
2,4,5-TRICHLOROPHENOL	UG/KG	1560	UJ	1710	UJ	1630	UJ	2230	UJ	1950	UJ				
2-CHLORONAPHTHALENE	UG/KG	520	UJ	570	UJ	545	UJ	742	UJ	651	UJ				
2-NITROANILINE	UG/KG	1560	UJ	1710	UJ	1630	UJ	2230	UJ	1950	UJ				
ACENAPHTHYLENE	UG/KG	520	UJ	570	UJ	545	UJ	742	UJ	651	UJ				
DIMETHYL PHTHALATE	UG/KG	520	UJ	570	UJ	545	UJ	742	UJ	651	UJ				
2,6-DINITROTOLUENE	UG/KG	520	UJ	570	UJ	545	UJ	742	UJ	651	UJ				
ACENAPHTHENE	UG/KG	520	UJ	570	UJ	545	UJ	742	UJ	651	UJ				
3-NITROANILINE	UG/KG	1560	UJ	1710	UJ	1630	UJ	2230	UJ	1950	UJ				
2,4-DINITROPHENOL	UG/KG	1560	UJ	1710	UJ	1630	UJ	2230	UJ	1950	UJ				
DIBENZOFURAN	UG/KG	520	UJ	570	UJ	545	UJ	742	UJ	651	UJ				
2,4-DINITROTOLUENE	UG/KG	520	UJ	570	UJ	545	UJ	742	UJ	651	UJ				
4-NITROPHENOL	UG/KG	1560	UJ	1710	UJ	1630	UJ	2230	UJ	1950	UJ				
FLUORENE	UG/KG	520	UJ	570	UJ	545	UJ	742	UJ	651	UJ				
4-CHLOROPHENYL PHENYL ETHER	UG/KG	520	UJ	570	UJ	545	UJ	742	UJ	651	UJ				
DIETHYL PHTHALATE	UG/KG	520	UJ	570	UJ	545	UJ	742	UJ	651	UJ				
4-NITROANILINE	UG/KG	1560	UJ	1710	UJ	1630	UJ	2230	UJ	1950	UJ				
4,6-DINITRO-2-METHYLPHENOL	UG/KG	1560	UJ	1710	UJ	1630	UJ	2230	UJ	1950	UJ				
N-NITROSODIPHENYLAMINE	UG/KG	520	UJ	570	UJ	545	UJ	742	UJ	651	UJ				
4-BROMOPHENYL PHENYL ETHER	UG/KG	520	UJ	570	UJ	545	UJ	742	UJ	651	UJ				
HEXACHLOROBENZENE	UG/KG	520	UJ	570	UJ	545	UJ	742	UJ	651	UJ				
PENTACHLOROPHENOL	UG/KG	1560	UJ	1710	UJ	1630	UJ	2230	UJ	1950	UJ				
PHENANTHRENE	UG/KG	520	UJ	570	UJ	545	UJ	742	UJ	651	UJ				
ANTHRACENE	UG/KG	520	UJ	570	UJ	545	UJ	742	UJ	651	UJ				
DI-n-BUTYL PHTHALATE	UG/KG	520	UJ	570	UJ	545	UJ	742	UJ	651	UJ				
FLUORANTHENE	UG/KG	520	UJ	570	UJ	545	UJ	742	UJ	651	UJ				
PYRENE	UG/KG	520	UJ	570	UJ	545	UJ	742	UJ	651	UJ				
BENZYL BUTYL PHTHALATE	UG/KG	520	UJ	570	UJ	545	UJ	742	UJ	651	UJ				
3,3'-DICHLOROBENZIDINE	UG/KG	1040	UJ	1140	UJ	1090	UJ	1480	UJ	1300	UJ				

AOC C Surface Soil Data

	Building	AOC C		AOC C		AOC C		AOC C		AOC C		AOC C	
	StationID	AC-SB01		AC-SB01		AC-SB02		AC-SB03		AC-SB04		AC-SB05	
	SampleID	NDA196		NDA197FD1		NDA198		NDA199		NDA200		NDA201	
	DateCollected	04/10/2000		04/10/2000		04/10/2000		04/10/2000		04/10/2000		04/11/2000	
	Depth	0 to 0.5		0 to 0.5		0 to 0.5		0 to 0.5		0 to 0.5		0 to 0.5	
Parameter	**Units**												
BENZO(a)ANTHRACENE	UG/KG	583	U	764	U	579	U	605	U	473	U	491	UJ
CHRYSENE	UG/KG	583	U	764	U	579	U	605	U	473	U	491	UJ
bis(2-ETHYLHEXYL) PHTHALATE	UG/KG	583	U	764	U	579	U	605	U	473	U	491	UJ
DI-n-OCTYLPHTHALATE	UG/KG	583	U	764	U	579	U	605	U	473	U	491	UJ
BENZO(b)FLUORANTHENE	UG/KG	583	U	764	U	579	U	605	U	473	U	491	UJ
BENZO(k)FLUORANTHENE	UG/KG	583	U	764	U	579	U	605	U	473	U	491	UJ
BENZO(a)PYRENE	UG/KG	583	U	764	U	579	U	605	U	473	U	491	UJ
INDENO(1,2,3-c,d)PYRENE	UG/KG	583	U	764	U	579	U	605	U	473	U	491	UJ
DIBENZ(a,h)ANTHRACENE	UG/KG	583	U	764	U	579	U	605	U	473	U	491	UJ
BENZO(g,h,i)PERYLENE	UG/KG	583	U	764	U	579	U	605	U	473	U	491	UJ
CARBAZOLE	UG/KG	583	U	764	U	579	U	605	U	473	U	491	UJ
VOLATILES													
CHLOROMETHANE	UG/KG	10	UJ	12	U	11	UJ	14	UJ	12	U	19	U
VINYL CHLORIDE	UG/KG	10	UJ	12	U	11	UJ	14	UJ	12	U	19	U
BROMOMETHANE	UG/KG	10	UJ	12	U	11	UJ	14	UJ	12	U	19	U
1,3-DICHLOROBENZENE	UG/KG	583	U	764	U	579	U	605	U	473	U	491	UJ
CHLOROETHANE	UG/KG	10	UJ	12	UJ	11	UJ	14	UJ	12	U	19	UJ
1,1-DICHLOROETHENE	UG/KG	10	UJ	12	U	11	UJ	14	UJ	12	U	19	U
1,4-DICHLOROBENZENE	UG/KG	583	U	764	U	579	U	605	U	473	U	491	UJ
1,2-DICHLOROBENZENE	UG/KG	583	U	764	U	579	U	605	U	473	U	491	UJ
CARBON DISULFIDE	UG/KG	10	UJ	12	U	11	UJ	14	UJ	12	U	19	U
METHYLENE CHLORIDE	UG/KG	10	UJ	12	U	11	UJ	14	UJ	12	U	19	U
1,1-DICHLOROETHANE	UG/KG	10	UJ	12	U	11	UJ	14	UJ	12	U	19	U
ACETONE	UG/KG	1460	R	1860	R	9590	R	125	R	738	R	62	R
METHYL ETHYL KETONE (2-BUTANONE)	UG/KG	10	R	12	R	11	R	14	R	12	R	19	R
CHLOROFORM	UG/KG	10	UJ	12	U	11	UJ	14	UJ	12	U	19	U
1,1,1-TRICHLOROETHANE	UG/KG	10	UJ	12	U	11	UJ	14	UJ	12	U	19	U
CARBON TETRACHLORIDE	UG/KG	10	UJ	12	U	11	UJ	14	UJ	12	U	19	U
BENZENE	UG/KG	10	UJ	0.2	J	0.1	J	0.3	J	12	U	19	U
1,2-DICHLOROETHANE	UG/KG	10	UJ	12	U	11	UJ	14	UJ	12	U	19	U
TRICHLOROETHYLENE (TCE)	UG/KG	10	UJ	12	U	11	UJ	14	UJ	12	U	19	U
1,2-DICHLOROPROPANE	UG/KG	10	UJ	12	U	11	UJ	14	UJ	12	U	19	U
1,2,4-TRICHLOROBENZENE	UG/KG	583	U	764	U	579	U	605	U	473	U	491	UJ
BROMODICHLOROMETHANE	UG/KG	10	UJ	12	U	11	UJ	14	UJ	12	U	19	U
cis-1,3-DICHLOROPROPENE	UG/KG	10	UJ	12	U	11	UJ	14	UJ	12	U	19	U
METHYL ISOBUTYL KETONE (4-METHYL-2-PENTANONE)	UG/KG	10	UJ	12	U	11	UJ	14	UJ	12	U	19	U
TOLUENE	UG/KG	10	UJ	4	J	1	J	5	J	1	J	19	U
trans-1,3-DICHLOROPROPENE	UG/KG	10	UJ	12	U	11	UJ	14	UJ	12	U	19	U

	Building	AOC C		AOC C		AOC C		AOC C		AOC C		AOC C	
	StationID	AC-SB06		AC-SB07		AC-SB08		AC-SB08		AC-SB09		AC-SB10	
	SampleID	NDA202		NDA203		NDA204		NDA205FD1		NDA206		NDA207	
	DateCollected	04/11/2000		04/11/2000		04/11/2000		04/11/2000		04/11/2000		04/11/2000	
	Depth	0 to 0.5		0 to 0.5		0 to 0.5		0 to 0.5		0 to 0.5		0 to 0.5	
Parameter	***Units***												
BENZO(a)ANTHRACENE	UG/KG	605	UJ	617	UJ	753	UJ	668	UJ	529	UJ	669	UJ
CHRYSENE	UG/KG	605	UJ	617	UJ	753	UJ	668	UJ	529	UJ	669	UJ
bis(2-ETHYLHEXYL) PHTHALATE	UG/KG	605	UJ	617	UJ	753	UJ	668	UJ	529	UJ	669	UJ
DI-n-OCTYLPHTHALATE	UG/KG	605	UJ	617	UJ	753	UJ	668	UJ	529	UJ	669	UJ
BENZO(b)FLUORANTHENE	UG/KG	605	UJ	617	UJ	753	UJ	668	UJ	529	UJ	669	UJ
BENZO(k)FLUORANTHENE	UG/KG	605	UJ	617	UJ	753	UJ	668	UJ	529	UJ	669	UJ
BENZO(a)PYRENE	UG/KG	605	UJ	617	UJ	753	UJ	668	UJ	529	UJ	669	UJ
INDENO(1,2,3-c,d)PYRENE	UG/KG	605	UJ	617	UJ	753	UJ	668	UJ	529	UJ	669	UJ
DIBENZ(a,h)ANTHRACENE	UG/KG	605	UJ	617	UJ	753	UJ	668	UJ	529	UJ	669	UJ
BENZO(g,h,i)PERYLENE	UG/KG	605	UJ	617	UJ	753	UJ	668	UJ	529	UJ	669	UJ
CARBAZOLE	UG/KG	605	UJ	617	UJ	753	UJ	668	UJ	529	UJ	669	UJ
VOLATILES													
CHLOROMETHANE	UG/KG	14	U	11	U	14	U	12	U	11	U	12	U
VINYL CHLORIDE	UG/KG	14	U	11	U	14	U	12	U	11	U	12	U
BROMOMETHANE	UG/KG	14	U	11	U	14	U	12	U	11	U	12	U
1,3-DICHLOROBENZENE	UG/KG	605	UJ	617	UJ	753	UJ	668	UJ	529	UJ	669	UJ
CHLOROETHANE	UG/KG	14	UJ	11	UJ	14	UJ	12	UJ	11	UJ	12	UJ
1,1-DICHLOROETHENE	UG/KG	14	U	11	U	14	U	12	U	11	U	12	U
1,4-DICHLOROBENZENE	UG/KG	605	UJ	617	UJ	753	UJ	668	UJ	529	UJ	669	UJ
1,2-DICHLOROBENZENE	UG/KG	605	UJ	617	UJ	753	UJ	668	UJ	529	UJ	669	UJ
CARBON DISULFIDE	UG/KG	14	U	11	U	14	U	12	U	11	U	12	U
METHYLENE CHLORIDE	UG/KG	14	U	11	U	14	U	12	U	11	U	12	U
1,1-DICHLOROETHANE	UG/KG	14	U	11	U	14	U	12	U	11	U	12	U
ACETONE	UG/KG	146	R	38	R	445	R	419	R	4550	R	1280	R
METHYL ETHYL KETONE (2-BUTANONE)	UG/KG	14	R	11	R	14	R	12	R	11	R	12	R
CHLOROFORM	UG/KG	14	U	11	U	14	U	12	U	11	U	12	U
1,1,1-TRICHLOROETHANE	UG/KG	14	U	11	U	14	U	12	U	11	U	12	U
CARBON TETRACHLORIDE	UG/KG	14	U	11	U	14	U	12	U	11	U	12	U
BENZENE	UG/KG	14	U	11	U	14	U	12	U	11	U	12	U
1,2-DICHLOROETHANE	UG/KG	14	U	11	U	14	U	12	U	11	U	12	U
TRICHLOROETHYLENE (TCE)	UG/KG	14	U	11	U	14	U	12	U	11	U	12	U
1,2-DICHLOROPROPANE	UG/KG	14	U	11	U	14	U	12	U	11	U	12	U
1,2,4-TRICHLOROBENZENE	UG/KG	605	UJ	617	UJ	753	UJ	668	UJ	529	UJ	669	UJ
BROMODICHLOROMETHANE	UG/KG	14	U	11	U	14	U	12	U	11	U	12	U
cis-1,3-DICHLOROPROPENE	UG/KG	14	U	11	U	14	U	12	U	11	U	12	U
METHYL ISOBUTYL KETONE (4-METHYL-2-PENTANONE)	UG/KG	14	U	11	U	14	U	12	U	11	U	12	U
TOLUENE	UG/KG	14	U	11	U	14	U	12	U	11	U	12	U
trans-1,3-DICHLOROPROPENE	UG/KG	14	U	11	U	14	U	12	U	11	U	12	U

AOC C Surface Soil Data

Parameter	Units	Building	AOC C		AOC C		AOC C		AOC C		AOC C	
		StationID	AC-SB11		AC-SB12		AC-SB13		AC-SB14		AC-SB15	
		SampleID	NDA208		NDA209		NDA210		NDA211		NDA212	
		DateCollected	04/11/2000		04/11/2000		04/11/2000		04/11/2000		04/11/2000	
		Depth	0 to 0.5		0 to 0.5		0 to 0.5		0 to 0.5		0 to 0.5	
BENZO(a)ANTHRACENE	UG/KG		520	UJ	570	UJ	545	UJ	742	UJ	651	UJ
CHRYSENE	UG/KG		520	UJ	570	UJ	545	UJ	742	UJ	651	UJ
bis(2-ETHYLHEXYL) PHTHALATE	UG/KG		520	UJ	570	UJ	545	UJ	742	UJ	651	UJ
DI-n-OCTYLPHTHALATE	UG/KG		520	UJ	570	UJ	545	UJ	742	UJ	651	UJ
BENZO(b)FLUORANTHENE	UG/KG		520	UJ	570	UJ	545	UJ	742	UJ	651	UJ
BENZO(k)FLUORANTHENE	UG/KG		520	UJ	570	UJ	545	UJ	742	UJ	651	UJ
BENZO(a)PYRENE	UG/KG		520	UJ	570	UJ	545	UJ	742	UJ	651	UJ
INDENO(1,2,3-c,d)PYRENE	UG/KG		520	UJ	570	UJ	545	UJ	742	UJ	651	UJ
DIBENZ(a,h)ANTHRACENE	UG/KG		520	UJ	570	UJ	545	UJ	742	UJ	651	UJ
BENZO(g,h,i)PERYLENE	UG/KG		520	UJ	570	UJ	545	UJ	742	UJ	651	UJ
CARBAZOLE	UG/KG		520	UJ	570	UJ	545	UJ	742	UJ	651	UJ
VOLATILES												
CHLOROMETHANE	UG/KG		10	U	16	U	11	U	11	U	14	U
VINYL CHLORIDE	UG/KG		10	U	16	U	11	U	11	U	14	U
BROMOMETHANE	UG/KG		10	U	16	U	11	U	11	U	14	U
1,3-DICHLOROBENZENE	UG/KG		520	UJ	570	UJ	545	UJ	742	UJ	651	UJ
CHLOROETHANE	UG/KG		10	UJ	16	UJ	11	UJ	11	UJ	14	UJ
1,1-DICHLOROETHENE	UG/KG		10	U	16	U	11	U	11	U	14	U
1,4-DICHLOROBENZENE	UG/KG		520	UJ	570	UJ	545	UJ	742	UJ	651	UJ
1,2-DICHLOROBENZENE	UG/KG		520	UJ	570	UJ	545	UJ	742	UJ	651	UJ
CARBON DISULFIDE	UG/KG		10	U	16	U	11	U	11	U	14	U
METHYLENE CHLORIDE	UG/KG		10	U	16	U	11	U	11	U	14	U
1,1-DICHLOROETHANE	UG/KG		10	U	16	U	11	U	11	U	14	U
ACETONE	UG/KG		17	R	98	R	43	R	46	R	14	R
METHYL ETHYL KETONE (2-BUTANONE)	UG/KG		10	R	16	R	11	R	11	R	14	R
CHLOROFORM	UG/KG		10	U	16	U	11	U	11	U	14	U
1,1,1-TRICHLOROETHANE	UG/KG		10	U	16	U	11	U	11	U	14	U
CARBON TETRACHLORIDE	UG/KG		10	U	16	U	11	U	11	U	14	U
BENZENE	UG/KG		10	U	16	U	11	U	11	U	14	U
1,2-DICHLOROETHANE	UG/KG		10	U	16	U	11	U	11	U	14	U
TRICHLOROETHYLENE (TCE)	UG/KG		10	U	16	U	11	U	0.3	J	14	U
1,2-DICHLOROPROPANE	UG/KG		10	U	16	U	11	U	11	U	14	U
1,2,4-TRICHLOROBENZENE	UG/KG		520	UJ	570	UJ	545	UJ	742	UJ	651	UJ
BROMODICHLOROMETHANE	UG/KG		10	U	16	U	11	U	11	U	14	U
cis-1,3-DICHLOROPROPENE	UG/KG		10	U	16	U	11	U	11	U	14	U
METHYL ISOBUTYL KETONE (4-METHYL-2-PENTANONE)	UG/KG		10	U	16	U	11	U	11	U	14	U
TOLUENE	UG/KG		10	U	16	U	11	U	11	U	14	U
trans-1,3-DICHLOROPROPENE	UG/KG		10	U	16	U	11	U	11	U	14	U

	Building	AOC C		AOC C		AOC C		AOC C		AOC C		AOC C	
	StationID	AC-SB01		AC-SB01		AC-SB02		AC-SB03		AC-SB04		AC-SB05	
	SampleID	NDA196		NDA197FD1		NDA198		NDA199		NDA200		NDA201	
	DateCollected	04/10/2000		04/10/2000		04/10/2000		04/10/2000		04/10/2000		04/11/2000	
	Depth	0 to 0.5		0 to 0.5		0 to 0.5		0 to 0.5		0 to 0.5		0 to 0.5	
Parameter	**Units**												
1,1,2-TRICHLOROETHANE	UG/KG	10	UJ	12	U	11	UJ	14	UJ	12	U	19	U
TETRACHLOROETHYLENE(PCE)	UG/KG	10	UJ	12	U	11	UJ	14	UJ	12	U	19	U
2-HEXANONE	UG/KG	10	UJ	12	U	11	UJ	14	UJ	12	U	19	U
DIBROMOCHLOROMETHANE	UG/KG	10	UJ	12	U	11	UJ	14	UJ	12	U	19	U
CHLOROBENZENE	UG/KG	10	UJ	12	U	11	UJ	14	UJ	12	U	19	U
ETHYLBENZENE	UG/KG	10	UJ	4	J	1	J	3	J	1	J	19	U
M,P-XYLENE (SUM OF ISOMERS)	UG/KG	10	UJ	22	J	8	UJ	20	UJ	8	J	19	U
O-XYLENE (1,2-DIMETHYLBENZENE)	UG/KG	10	UJ	5	J	2	UJ	6	UJ	2	J	19	U
STYRENE	UG/KG	10	UJ	12	U	11	UJ	14	UJ	12	U	19	U
BROMOFORM	UG/KG	10	UJ	12	U	11	UJ	14	UJ	12	U	19	U
1,1,2,2-TETRACHLOROETHANE	UG/KG	10	UJ	12	U	11	UJ	14	UJ	12	U	19	U
XYLENES, TOTAL	UG/KG	10	UJ	26	J	11	J	26	J	10	J	19	U

AOC C Surface Soil Data

	Building	AOC C		AOC C		AOC C		AOC C		AOC C		AOC C	
	StationID	AC-SB06		AC-SB07		AC-SB08		AC-SB08		AC-SB09		AC-SB10	
	SampleID	NDA202		NDA203		NDA204		NDA205FD1		NDA206		NDA207	
	DateCollected	04/11/2000		04/11/2000		04/11/2000		04/11/2000		04/11/2000		04/11/2000	
	Depth	0 to 0.5		0 to 0.5		0 to 0.5		0 to 0.5		0 to 0.5		0 to 0.5	
Parameter	**Units**												
1,1,2-TRICHLOROETHANE	UG/KG	14	U	11	U	14	U	12	U	11	U	12	U
TETRACHLOROETHYLENE(PCE)	UG/KG	14	U	11	U	14	U	12	U	11	U	12	U
2-HEXANONE	UG/KG	14	U	11	U	14	U	12	U	11	U	12	U
DIBROMOCHLOROMETHANE	UG/KG	14	U	11	U	14	U	12	U	11	U	12	U
CHLOROBENZENE	UG/KG	14	U	11	U	14	U	12	U	11	U	12	U
ETHYLBENZENE	UG/KG	14	U	11	U	14	U	12	U	11	U	12	U
M,P-XYLENE (SUM OF ISOMERS)	UG/KG	14	U	11	U	14	U	12	U	11	U	12	U
O-XYLENE (1,2-DIMETHYLBENZENE)	UG/KG	14	U	11	U	14	U	12	U	11	U	12	U
STYRENE	UG/KG	14	U	11	U	14	U	12	U	11	U	12	U
BROMOFORM	UG/KG	14	U	11	U	14	U	12	U	11	U	12	U
1,1,2,2-TETRACHLOROETHANE	UG/KG	14	U	11	U	14	U	12	U	11	U	12	U
XYLENES, TOTAL	UG/KG	14	U	11	U	14	U	12	U	11	U	12	U

	Building	AOC C		AOC C		AOC C		AOC C		AOC C	
	StationID	AC-SB11		AC-SB12		AC-SB13		AC-SB14		AC-SB15	
	SampleID	NDA208		NDA209		NDA210		NDA211		NDA212	
	DateCollected	04/11/2000		04/11/2000		04/11/2000		04/11/2000		04/11/2000	
	Depth	0 to 0.5		0 to 0.5		0 to 0.5		0 to 0.5		0 to 0.5	
Parameter	**Units**										
1,1,2-TRICHLOROETHANE	UG/KG	10	U	16	U	11	U	11	U	14	U
TETRACHLOROETHYLENE(PCE)	UG/KG	10	U	16	U	11	U	11	U	14	U
2-HEXANONE	UG/KG	10	U	16	U	11	U	11	U	14	U
DIBROMOCHLOROMETHANE	UG/KG	10	U	16	U	11	U	11	U	14	U
CHLOROBENZENE	UG/KG	10	U	16	U	11	U	11	U	14	U
ETHYLBENZENE	UG/KG	10	U	16	U	11	U	11	U	14	U
M,P-XYLENE (SUM OF ISOMERS)	UG/KG	10	U	16	U	0.3	J	0.3	J	14	U
O-XYLENE (1,2-DIMETHYLBENZENE)	UG/KG	10	U	16	U	11	U	11	U	14	U
STYRENE	UG/KG	10	U	16	U	11	U	11	U	14	U
BROMOFORM	UG/KG	10	U	16	U	11	U	11	U	14	U
1,1,2,2-TETRACHLOROETHANE	UG/KG	10	U	16	U	11	U	11	U	14	U
XYLENES, TOTAL	UG/KG	10	U	16	U	0.3	J	0.3	J	14	U

AOC C Subsurface Soil Data

	Building	AOC C		AOC C		AOC C		AOC C		AOC C		AOC C		AOC C	
	StationID	AC-SB16		AC-SB16		AC-SB16		AC-SB16		AC-SB16		AC-SB16		AC-SB17	
	SampleID	NDA213		NDA214FD1		NDA215		NDA216		NDA217		NDA218		NDA219	
	DateCollected	04/07/2000		04/07/2000		04/07/2000		04/07/2000		04/07/2000		04/07/2000		04/07/2000	
	Depth	4 to 6		4 to 6		9 to 11		14 to 16		19 to 21		24 to 26		4 to 6	
Parameter	**Units**														
2,6-DINITROTOLUENE	UG/KG	485	UJ	487	UJ	527	UJ	537	UJ	540	UJ	505	UJ	380	UJ
NITROBENZENE	UG/KG	485	UJ	487	UJ	527	UJ	537	UJ	540	UJ	505	UJ	380	UJ
2,4-DINITROTOLUENE	UG/KG	485	UJ	487	UJ	527	UJ	537	UJ	540	UJ	505	UJ	380	UJ
ALUMINUM	MG/KG	13000	J	9910	J	14300	J	6640	J	6380	J	7140	J	8370	J
ANTIMONY	MG/KG	0.16	UJ	0.16	UJ	0.16	UJ	0.15	UJ	0.16	UJ	0.15	UJ	0.2	J
ARSENIC	MG/KG	0.38	U	0.38	U	0.71	J	0.38	U	0.39	U	0.37	U	0.45	J
BARIUM	MG/KG	115	J	103	J	144	J	79.4	J	54.7	J	72.2	J	73.5	J
BERYLLIUM	MG/KG	0.27	J	0.24	J	0.27	J	0.17	J	0.16	J	0.16	J	0.2	J
CADMIUM	MG/KG	0.022	U	0.022	U	0.023	U	0.022	U	0.023	U	0.022	U	0.022	U
CALCIUM	MG/KG	3070	J	2560	J	3010	J	1740	J	2320	J	2630	J	2400	J
CHROMIUM, TOTAL	MG/KG	33.3	J	14.2	J	13	J	6.1	J	6.7	J	7.8	J	10	J
COBALT	MG/KG	11.4	J	8.2	J	13.9	J	7.3	J	5.1	J	7.8	J	10	J
COPPER	MG/KG	28.9	J	27.5	J	43.3	J	20.8	J	20.3	J	25.8	J	25.1	J
IRON	MG/KG	22600	J	19500	J	25500	J	14600	J	13400	J	16600	J	15300	J
LEAD	MG/KG	2.1	=	1.8	=	1.6	=	1.1	=	0.95	=	1.1	=	6.8	=
MAGNESIUM	MG/KG	3230	J	2850	J	4510	J	2290	J	2080	J	2860	J	2610	J
MANGANESE	MG/KG	698	J	460	J	956	J	424	J	292	J	408	J	708	J
MERCURY	MG/KG	0.016	U	0.015	U	0.016	J	0.015	U	0.015	U	0.015	U	0.015	U
NICKEL	MG/KG	12.2	=	6.1	J	7.5	J	2.7	J	3	J	3.4	J	4.2	J
POTASSIUM	MG/KG	1700	J	1480	J	2340	J	1380	J	1130	J	806	J	940	J
SELENIUM	MG/KG	0.75	J	0.29	J	0.89	J	0.41	J	0.25	J	0.44	J	0.46	J
SILVER	MG/KG	0.056	U	0.056	U	0.058	U	0.055	U	0.058	U	0.055	U	0.056	U
SODIUM	MG/KG	159	J	105	J	174	J	106	J	104	J	77.7	J	98.4	J
THALLIUM	MG/KG	1.3	J	0.93	J	1.7	J	0.3	U	0.48	J	1.1	J	0.55	J
VANADIUM	MG/KG	65.2	J	57.8	J	76.8	J	45	J	39.7	J	52.6	J	44.2	J
ZINC	MG/KG	33.6	=	30.9	=	37.2	=	22.5	=	21	=	22.4	=	36.8	=
PCB-1016 (AROCHLOR 1016)	UG/KG	38	UJ	37	UJ	38	UJ	36	UJ	38	UJ	36	UJ	37	UJ
PCB-1260 (AROCHLOR 1260)	UG/KG	38	UJ	37	UJ	38	UJ	36	UJ	38	UJ	36	UJ	37	UJ
PCB-1221 (AROCHLOR 1221)	UG/KG	77	UJ	75	UJ	77	UJ	73	UJ	77	UJ	74	UJ	74	UJ
PCB-1232 (AROCHLOR 1232)	UG/KG	38	UJ	37	UJ	38	UJ	36	UJ	38	UJ	36	UJ	37	UJ
PCB-1242 (AROCHLOR 1242)	UG/KG	38	UJ	37	UJ	38	UJ	36	UJ	38	UJ	36	UJ	37	UJ
PCB-1248 (AROCHLOR 1248)	UG/KG	38	UJ	37	UJ	38	UJ	36	UJ	38	UJ	36	UJ	37	UJ
PCB-1254 (AROCHLOR 1254)	UG/KG	38	UJ	37	UJ	38	UJ	36	UJ	38	UJ	36	UJ	37	UJ
ALPHA BHC (ALPHA HEXACHLOROCYCLOHEXANE)	UG/KG	2	UJ	1.9	UJ	2	UJ	1.8	UJ	1.9	UJ	1.9	UJ	1.9	UJ
BETA BHC (BETA HEXACHLOROCYCLOHEXANE)	UG/KG	2	UJ	1.9	UJ	2	UJ	1.8	UJ	1.9	UJ	1.9	UJ	1.9	UJ
DELTA BHC (DELTA HEXACHLOROCYCLOHEXANE)	UG/KG	2	UJ	1.9	UJ	2	UJ	1.8	UJ	1.9	UJ	1.9	UJ	1.9	UJ
GAMMA BHC (LINDANE)	UG/KG	2	UJ	1.9	UJ	2	UJ	1.8	UJ	1.9	UJ	1.9	UJ	1.9	UJ
HEPTACHLOR	UG/KG	2	UJ	1.9	UJ	2	UJ	1.8	UJ	1.9	UJ	1.9	UJ	1.9	UJ
ALDRIN	UG/KG	2	UJ	1.9	UJ	2	UJ	1.8	UJ	1.9	UJ	1.9	UJ	1.9	UJ
HEPTACHLOR EPOXIDE	UG/KG	2	UJ	1.9	UJ	2	UJ	1.8	UJ	1.9	UJ	1.9	UJ	1.9	UJ
ALPHA ENDOSULFAN (ENDOSULFAN I)	UG/KG	2	UJ	1.9	UJ	2	UJ	1.8	UJ	1.9	UJ	1.9	UJ	1.9	UJ
DIELDRIN	UG/KG	3.8	UJ	3.7	UJ	3.8	UJ	3.6	UJ	3.8	UJ	3.7	UJ	3.7	UJ
p,p'-DDE	UG/KG	3.8	UJ	3.7	UJ	3.8	UJ	3.6	UJ	3.8	UJ	3.7	UJ	3.7	UJ

Parameter	Units	AOC C		AOC C		AOC C		AOC C		AOC C		AOC C		AOC C		AOC C
Building		AOC C		AOC C		AOC C		AOC C		AOC C		AOC C		AOC C		AOC C
StationID		AC-SB17		AC-SB17		AC-SB17		AC-SB17		AC-SB18		AC-SB18		AC-SB18		AC-SB18
SampleID		NDA220		NDA221		NDA222		NDA223		NDA224		NDA225		NDA226		NDA227FD
DateCollected		04/07/2000		04/07/2000		04/07/2000		04/07/2000		04/10/2000		04/10/2000		04/10/2000		04/10/2000
Depth		9 to 11		14 to 16		19 to 21		24 to 26		4 to 6		9 to 11		14 to 16		14 to 16
2,6-DINITROTOLUENE	UG/KG	542	UJ	501	UJ	459	UJ	527	UJ	510	U	535	U	631	U	523
NITROBENZENE	UG/KG	542	UJ	501	UJ	459	UJ	527	UJ	510	U	535	U	631	U	523
2,4-DINITROTOLUENE	UG/KG	542	UJ	501	UJ	459	UJ	527	UJ	510	U	535	U	631	U	523
ALUMINUM	MG/KG	11200	J	4900	J	3540	J	9580	J	8490	=	13400	=	5500	=	5470
ANTIMONY	MG/KG	0.16	UJ	0.15	UJ	0.14	UJ	0.16	UJ	0.16	UJ	0.24	J	0.17	UJ	0.16
ARSENIC	MG/KG	0.39	U	0.36	U	0.34	U	0.55	J	0.39	U	0.42	U	0.4	U	0.39
BARIUM	MG/KG	105	J	67.2	J	45	J	91.9	J	48.1	=	143	=	59.5	=	69.6
BERYLLIUM	MG/KG	0.25	J	0.094	J	0.088	J	0.21	J	0.18	J	0.28	J	0.15	J	0.15
CADMIUM	MG/KG	0.023	U	0.021	U	0.02	U	0.023	U	0.023	U	0.025	U	0.024	U	0.023
CALCIUM	MG/KG	2860	J	1550	J	2180	J	3140	J	2400	=	5330	=	3230	=	2850
CHROMIUM, TOTAL	MG/KG	10.8	J	4.8	J	5.7	J	8.4	J	12	=	10.6	=	7.4	=	8.2
COBALT	MG/KG	9.5	J	5.6	J	4	J	9	J	4.6	J	13	=	7.2	J	8.1
COPPER	MG/KG	34.4	J	15.8	J	10	J	31.8	J	18.3	=	46.6	=	17.3	=	17.3
IRON	MG/KG	21000	J	11100	J	8670	J	19900	J	14100	=	26500	=	12700	=	12900
LEAD	MG/KG	1.6	=	0.76	=	0.69	=	1.1	=	1.3	=	1.5	=	1.2	=	1.3
MAGNESIUM	MG/KG	3600	J	1720	J	1300	J	3710	J	2330	=	4890	=	1970	=	1950
MANGANESE	MG/KG	472	J	370	J	234	J	472	J	164	=	669	=	482	=	535
MERCURY	MG/KG	0.014	U	0.014	U	0.013	U	0.015	U	0.012	U	0.015	U	0.015	U	0.014
NICKEL	MG/KG	4.6	J	2.2	J	2	J	4.4	J	2.7	J	5.9	J	3.3	J	3.3
POTASSIUM	MG/KG	1240	J	981	J	699	J	934	J	1080	J	1600	=	1240	=	1260
SELENIUM	MG/KG	0.66	J	0.33	J	0.21	U	0.78	J	0.44	J	0.77	J	0.4	J	0.38
SILVER	MG/KG	0.057	U	0.053	U	0.05	U	0.057	U	0.058	U	0.062	U	0.059	U	0.057
SODIUM	MG/KG	108	J	92.6	J	63.4	J	173	J	103	J	438	J	111	J	106
THALLIUM	MG/KG	0.62	J	0.54	J	0.43	J	1.9	J	0.37	J	0.34	U	0.49	J	0.31
VANADIUM	MG/KG	63.3	J	33.9	J	26.1	J	59.7	J	35.3	=	76.2	=	38	=	39.3
ZINC	MG/KG	32.7	=	15.7	=	12.1	=	28.7	=	21.1	=	39.9	=	19.2	=	20.2
PCB-1016 (AROCHLOR 1016)	UG/KG	38	UJ	35	UJ	33	UJ	38	UJ	38	U	41	U	39	U	38
PCB-1260 (AROCHLOR 1260)	UG/KG	38	UJ	35	UJ	33	UJ	38	UJ	38	U	41	U	39	U	38
PCB-1221 (AROCHLOR 1221)	UG/KG	77	UJ	71	UJ	67	UJ	76	UJ	77	U	83	U	78	U	77
PCB-1232 (AROCHLOR 1232)	UG/KG	38	UJ	35	UJ	33	UJ	38	UJ	38	U	41	U	39	U	38
PCB-1242 (AROCHLOR 1242)	UG/KG	38	UJ	35	UJ	33	UJ	38	UJ	38	U	41	U	39	U	38
PCB-1248 (AROCHLOR 1248)	UG/KG	38	UJ	35	UJ	33	UJ	38	UJ	38	U	41	U	39	U	38
PCB-1254 (AROCHLOR 1254)	UG/KG	38	UJ	35	UJ	33	UJ	38	UJ	38	U	41	U	39	U	38
ALPHA BHC (ALPHA HEXACHLOROCYCLOHEXANE)	UG/KG	1.9	UJ	1.8	UJ	1.7	UJ	1.9	UJ	1.9	UJ	2.1	UJ	2	UJ	1.9
BETA BHC (BETA HEXACHLOROCYCLOHEXANE)	UG/KG	1.9	UJ	1.8	UJ	1.7	UJ	1.9	UJ	1.9	U	2.1	U	2	U	1.9
DELTA BHC (DELTA HEXACHLOROCYCLOHEXANE)	UG/KG	1.9	UJ	1.8	UJ	1.7	UJ	1.9	UJ	1.9	UJ	2.1	UJ	2	UJ	1.9
GAMMA BHC (LINDANE)	UG/KG	1.9	UJ	1.8	UJ	1.7	UJ	1.9	UJ	1.9	UJ	2.1	UJ	2	UJ	1.9
HEPTACHLOR	UG/KG	1.9	UJ	1.8	UJ	1.7	UJ	1.9	UJ	1.9	U	2.1	U	2	U	1.9
ALDRIN	UG/KG	1.9	UJ	1.8	UJ	1.7	UJ	1.9	UJ	1.9	U	2.1	U	2	U	1.9
HEPTACHLOR EPOXIDE	UG/KG	1.9	UJ	1.8	UJ	1.7	UJ	1.9	UJ	1.9	U	2.1	U	2	U	1.9
ALPHA ENDOSULFAN (ENDOSULFAN I)	UG/KG	1.9	UJ	1.8	UJ	1.7	UJ	1.9	UJ	1.9	U	2.1	U	2	U	1.9
DIELDRIN	UG/KG	3.8	UJ	3.6	UJ	3.3	UJ	3.8	UJ	3.8	U	4.1	U	3.9	U	3.8
p,p'-DDE	UG/KG	3.8	UJ	3.6	UJ	3.3	UJ	3.8	UJ	3.8	U	4.1	U	3.9	U	3.8

AOC C Subsurface Soil Data

Parameter	Units																						
Building		AOC C		AOC C		AOC C		AOC C		AOC C		AOC C		AOC C		AOC C		AOC C		AOC C		AOC C	
StationID		AC-SB18		AC-SB18		AC-SB19		AC-SB19		AC-SB19		AC-SB19		AC-SB19		AC-SB19		AC-SB19		AC-SB19		AC-SB19	
SampleID	)1	NDA228		NDA229		NDA230		NDA231		NDA232		NDA233		NDA234		NDA235		NDA236		NDA237		NDA238	
DateCollected	)0	04/10/2000		04/10/2000		04/10/2000		04/10/2000		04/10/2000		04/10/2000		04/10/2000		04/10/2000		04/10/2000		04/10/2000		04/10/2000	
Depth		19 to 21		24 to 26		4 to 6		9 to 11		14 to 16		19 to 21		24 to 26		4 to 6		9 to 11		14 to 16		19 to 21	
2,6-DINITROTOLUENE	UG/KG	U	522	U	586	U	480	U	471	U	472	U	459	U	539	U	480	U	471	U	472	U	459	U
NITROBENZENE	UG/KG	U	522	U	586	U	480	U	471	U	472	U	459	U	539	U	480	U	471	U	472	U	459	U
2,4-DINITROTOLUENE	UG/KG	U	522	U	586	U	480	U	471	U	472	U	459	U	539	U	480	U	471	U	472	U	459	U
ALUMINUM	MG/KG	=	7720	=	5990	=	7120	=	6370	=	5450	=	3140	=	9930	=	7120	=	6370	=	5450	=	3140	=
ANTIMONY	MG/KG	UJ	0.17	UJ	0.18	UJ	0.17	J	0.21	J	0.16	UJ	0.15	UJ	0.16	UJ	0.17	J	0.21	J	0.16	UJ	0.15	UJ
ARSENIC	MG/KG	U	0.41	U	0.45	U	0.68	J	0.37	U	0.38	U	0.36	U	0.44	J	0.68	J	0.37	U	0.38	U	0.36	U
BARIUM	MG/KG	=	85.8	=	88.3	=	118	=	95	=	80.7	=	34.6	J	72.4	=	118	=	95	=	80.7	=	34.6	J
BERYLLIUM	MG/KG	J	0.21	J	0.18	J	0.18	J	0.15	J	0.13	J	0.095	J	0.3	J	0.18	J	0.15	J	0.13	J	0.095	J
CADMIUM	MG/KG	U	0.024	U	0.026	U	0.022	U	0.022	U	0.022	U	0.021	U	0.023	U	0.022	U	0.022	U	0.022	U	0.021	U
CALCIUM	MG/KG	=	5770	=	2030	=	2300	=	2140	=	1580	=	1310	=	3400	=	2300	=	2140	=	1580	=	1310	=
CHROMIUM, TOTAL	MG/KG	=	11.9	=	7.1	=	14.3	=	7	=	6	=	6	=	11.1	=	14.3	=	7	=	6	=	6	=
COBALT	MG/KG	J	10.6	J	8.8	J	7.7	J	6.3	J	7	J	3.4	J	8.8	J	7.7	J	6.3	J	7	J	3.4	J
COPPER	MG/KG	=	33.6	=	25.2	=	28.7	=	23.8	=	21.6	=	10	=	30.2	=	28.7	=	23.8	=	21.6	=	10	=
IRON	MG/KG	=	18900	=	15600	=	16400	=	15600	=	14700	=	8880	=	22200	=	16400	=	15600	=	14700	=	8880	=
LEAD	MG/KG	=	1.5	=	1.9	=	7	=	0.78	=	1.1	=	0.58	J	1.9	=	7	=	0.78	=	1.1	=	0.58	J
MAGNESIUM	MG/KG	=	3730	=	2960	=	2450	=	2680	=	2470	=	1210	=	3940	=	2450	=	2680	=	2470	=	1210	=
MANGANESE	MG/KG	=	468	=	587	=	512	=	329	=	409	=	193	=	464	=	512	=	329	=	409	=	193	=
MERCURY	MG/KG	U	0.015	U	0.016	U	0.013	U	0.015	U	0.014	U	0.012	U	0.015	U	0.013	U	0.015	U	0.014	U	0.012	U
NICKEL	MG/KG	J	4.9	J	3.8	J	5.1	J	3.5	J	2.9	J	1.5	J	4.2	J	5.1	J	3.5	J	2.9	J	1.5	J
POTASSIUM	MG/KG	=	889	J	657	J	1060	J	788	J	1110	=	633	J	810	J	1060	J	788	J	1110	=	633	J
SELENIUM	MG/KG	J	0.94	J	0.43	J	0.69	J	0.72	J	0.72	J	0.42	J	0.77	J	0.69	J	0.72	J	0.72	J	0.42	J
SILVER	MG/KG	U	0.06	U	0.065	U	0.055	U	0.054	U	0.055	U	0.053	U	0.058	U	0.055	U	0.054	U	0.055	U	0.053	U
SODIUM	MG/KG	J	174	J	180	J	84.9	J	104	J	105	J	65.4	J	172	J	84.9	J	104	J	105	J	65.4	J
THALLIUM	MG/KG	U	0.5	J	0.35	U	0.36	J	0.45	J	0.75	J	0.29	U	0.73	J	0.36	J	0.45	J	0.75	J	0.29	U
VANADIUM	MG/KG	=	58.8	=	49.6	=	52	=	47.3	=	41.9	=	27.4	=	68.7	=	52	=	47.3	=	41.9	=	27.4	=
ZINC	MG/KG	=	28.9	=	23.3	=	37.5	=	20	=	20.9	=	11.3	=	29	=	37.5	=	20	=	20.9	=	11.3	=
PCB-1016 (AROCHLOR 1016)	UG/KG	U	40	U	43	U	36	U	35	U	36	U	35	U	38	U	36	U	35	U	36	U	35	U
PCB-1260 (AROCHLOR 1260)	UG/KG	U	40	U	43	U	36	U	35	U	36	U	35	U	38	U	36	U	35	U	36	U	35	U
PCB-1221 (AROCHLOR 1221)	UG/KG	U	80	U	87	U	73	U	72	U	74	U	71	U	76	U	73	U	72	U	74	U	71	U
PCB-1232 (AROCHLOR 1232)	UG/KG	U	40	U	43	U	36	U	35	U	36	U	35	U	38	U	36	U	35	U	36	U	35	U
PCB-1242 (AROCHLOR 1242)	UG/KG	U	40	U	43	U	36	U	35	U	36	U	35	U	38	U	36	U	35	U	36	U	35	U
PCB-1248 (AROCHLOR 1248)	UG/KG	U	40	U	43	U	36	U	35	U	36	U	35	U	38	U	36	U	35	U	36	U	35	U
PCB-1254 (AROCHLOR 1254)	UG/KG	U	40	U	43	U	36	U	35	U	36	U	35	U	38	U	36	U	35	U	36	U	35	U
ALPHA BHC (ALPHA HEXACHLOROCYCLOHEXANE)	UG/KG	UJ	2	UJ	2.2	UJ	1.8	UJ	1.8	UJ	1.9	UJ	1.8	UJ	1.9	UJ	1.8	UJ	1.8	UJ	1.9	UJ	1.8	UJ
BETA BHC (BETA HEXACHLOROCYCLOHEXANE)	UG/KG	U	2	U	2.2	U	1.8	U	1.8	U	1.9	U	1.8	U	1.9	U	1.8	U	1.8	U	1.9	U	1.8	U
DELTA BHC (DELTA HEXACHLOROCYCLOHEXANE)	UG/KG	UJ	2	UJ	2.2	UJ	1.8	UJ	1.8	UJ	1.9	UJ	1.8	UJ	1.9	UJ	1.8	UJ	1.8	UJ	1.9	UJ	1.8	UJ
GAMMA BHC (LINDANE)	UG/KG	UJ	2	UJ	2.2	UJ	1.8	UJ	1.8	UJ	1.9	UJ	1.8	UJ	1.9	UJ	1.8	UJ	1.8	UJ	1.9	UJ	1.8	UJ
HEPTACHLOR	UG/KG	U	2	U	2.2	U	1.8	U	1.8	U	1.9	U	1.8	U	1.9	U	1.8	U	1.8	U	1.9	U	1.8	U
ALDRIN	UG/KG	U	2	U	2.2	U	1.8	U	1.8	U	1.9	U	1.8	U	1.9	U	1.8	U	1.8	U	1.9	U	1.8	U
HEPTACHLOR EPOXIDE	UG/KG	U	2	U	2.2	U	1.8	U	1.8	U	1.9	U	1.8	U	1.9	U	1.8	U	1.8	U	1.9	U	1.8	U
ALPHA ENDOSULFAN (ENDOSULFAN I)	UG/KG	U	2	U	2.2	U	1.8	U	1.8	U	1.9	U	1.8	U	1.9	U	1.8	U	1.8	U	1.9	U	1.8	U
DIELDRIN	UG/KG	U	4	U	4.3	U	3.6	U	3.6	U	3.7	U	3.5	U	3.8	U	3.6	U	3.6	U	3.7	U	3.5	U
p,p'-DDE	UG/KG	U	4	U	4.3	U	3.6	U	3.6	U	3.7	U	3.5	U	3.8	U	3.6	U	3.6	U	3.7	U	3.5	U

	Building	AOC C		AOC C		AOC C		AOC C		AOC C		AOC C		AOC C	
	StationID	AC-SB16		AC-SB16		AC-SB16		AC-SB16		AC-SB16		AC-SB16		AC-SB17	
	SampleID	NDA213		NDA214FD1		NDA215		NDA216		NDA217		NDA218		NDA219	
	DateCollected	04/07/2000		04/07/2000		04/07/2000		04/07/2000		04/07/2000		04/07/2000		04/07/2000	
	Depth	4 to 6		4 to 6		9 to 11		14 to 16		19 to 21		24 to 26		4 to 6	
Parameter	**Units**														
ENDRIN	UG/KG	3.8	UJ	3.7	UJ	3.8	UJ	3.6	UJ	3.8	UJ	3.7	UJ	3.7	UJ
BETA ENDOSULFAN (ENDOSULFAN II)	UG/KG	3.8	UJ	3.7	UJ	3.8	UJ	3.6	UJ	3.8	UJ	3.7	UJ	3.7	UJ
p,p'-DDD	UG/KG	3.8	UJ	3.7	UJ	3.8	UJ	3.6	UJ	3.8	UJ	3.7	UJ	3.7	UJ
ENDOSULFAN SULFATE	UG/KG	3.8	UJ	3.7	UJ	3.8	UJ	3.6	UJ	3.8	UJ	3.7	UJ	3.7	UJ
p,p'-DDT	UG/KG	3.8	UJ	3.7	UJ	3.8	UJ	3.6	UJ	3.8	UJ	3.7	UJ	3.7	UJ
METHOXYCHLOR	UG/KG	20	UJ	19	UJ	20	UJ	18	UJ	19	UJ	19	UJ	19	UJ
ENDRIN ALDEHYDE	UG/KG	3.8	UJ	3.7	UJ	3.8	UJ	3.6	UJ	3.8	UJ	3.7	UJ	3.7	UJ
ALPHA-CHLORDANE	UG/KG	2	UJ	1.9	UJ	2	UJ	1.8	UJ	1.9	UJ	1.9	UJ	1.9	UJ
GAMMA-CHLORDANE	UG/KG	2	UJ	1.9	UJ	2	UJ	1.8	UJ	1.9	UJ	1.9	UJ	1.9	UJ
ENDRIN KETONE	UG/KG	3.8	UJ	3.7	UJ	3.8	UJ	3.6	UJ	3.8	UJ	3.7	UJ	3.7	UJ
TOXAPHENE	UG/KG	195	UJ	189	UJ	196	UJ	185	UJ	195	UJ	187	UJ	188	UJ
bis(2-CHLOROETHYL) ETHER (2-CHLOROETHYL ETHER)	UG/KG	485	UJ	487	UJ	527	UJ	537	UJ	540	UJ	505	UJ	380	UJ
PHENOL	UG/KG	485	UJ	487	UJ	527	UJ	537	UJ	540	UJ	505	UJ	380	UJ
2-CHLOROPHENOL	UG/KG	485	UJ	487	UJ	527	UJ	537	UJ	540	UJ	505	UJ	380	UJ
1,3-DICHLOROBENZENE	UG/KG	485	UJ	487	UJ	527	UJ	537	UJ	540	UJ	505	UJ	380	UJ
1,4-DICHLOROBENZENE	UG/KG	485	UJ	487	UJ	527	UJ	537	UJ	540	UJ	505	UJ	380	UJ
1,2-DICHLOROBENZENE	UG/KG	485	UJ	487	UJ	527	UJ	537	UJ	540	UJ	505	UJ	380	UJ
bis(2-CHLOROISOPROPYL) ETHER	UG/KG	485	UJ	487	UJ	527	UJ	537	UJ	540	UJ	505	UJ	380	UJ
2-METHYLPHENOL (o-CRESOL)	UG/KG	485	UJ	487	UJ	527	UJ	537	UJ	540	UJ	505	UJ	380	UJ
HEXACHLOROETHANE	UG/KG	485	UJ	487	UJ	527	UJ	537	UJ	540	UJ	505	UJ	380	UJ
N-NITROSODI-n-PROPYLAMINE	UG/KG	485	UJ	487	UJ	527	UJ	537	UJ	540	UJ	505	UJ	380	UJ
CRESOLS, m & p	UG/KG	485	UJ	487	UJ	527	UJ	537	UJ	540	UJ	505	UJ	380	UJ
NITROBENZENE	UG/KG	485	UJ	487	UJ	527	UJ	537	UJ	540	UJ	505	UJ	380	UJ
ISOPHORONE	UG/KG	485	UJ	487	UJ	527	UJ	537	UJ	540	UJ	505	UJ	380	UJ
2-NITROPHENOL	UG/KG	485	UJ	487	UJ	527	UJ	537	UJ	540	UJ	505	UJ	380	UJ
2,4-DIMETHYLPHENOL	UG/KG	485	UJ	487	UJ	527	UJ	537	UJ	540	UJ	505	UJ	380	UJ
bis(2-CHLOROETHOXY) METHANE	UG/KG	485	UJ	487	UJ	527	UJ	537	UJ	540	UJ	505	UJ	380	UJ
2,4-DICHLOROPHENOL	UG/KG	485	UJ	487	UJ	527	UJ	537	UJ	540	UJ	505	UJ	380	UJ
1,2,4-TRICHLOROBENZENE	UG/KG	485	UJ	487	UJ	527	UJ	537	UJ	540	UJ	505	UJ	380	UJ
NAPHTHALENE	UG/KG	485	UJ	487	UJ	527	UJ	537	UJ	540	UJ	505	UJ	380	UJ
4-CHLOROANILINE	UG/KG	485	UJ	487	UJ	527	UJ	537	UJ	540	UJ	505	UJ	380	UJ
2-METHYLNAPHTHALENE	UG/KG	485	UJ	487	UJ	527	UJ	537	UJ	540	UJ	505	UJ	380	UJ
HEXACHLOROBUTADIENE	UG/KG	485	UJ	487	UJ	527	UJ	537	UJ	540	UJ	505	UJ	380	UJ
4-CHLORO-3-METHYLPHENOL	UG/KG	485	UJ	487	UJ	527	UJ	537	UJ	540	UJ	505	UJ	380	UJ
HEXACHLOROCYCLOPENTADIENE	UG/KG	485	UJ	487	UJ	527	UJ	537	UJ	540	UJ	505	UJ	380	UJ
2,4,6-TRICHLOROPHENOL	UG/KG	485	UJ	487	UJ	527	UJ	537	UJ	540	UJ	505	UJ	380	UJ
2,4,5-TRICHLOROPHENOL	UG/KG	1440	UJ	1450	UJ	1570	UJ	1590	UJ	1600	UJ	1500	UJ	1130	UJ
2-CHLORONAPHTHALENE	UG/KG	485	UJ	487	UJ	527	UJ	537	UJ	540	UJ	505	UJ	380	UJ
2-NITROANILINE	UG/KG	1440	UJ	1450	UJ	1570	UJ	1590	UJ	1600	UJ	1500	UJ	1130	UJ
ACENAPHTHYLENE	UG/KG	485	UJ	487	UJ	527	UJ	537	UJ	540	UJ	505	UJ	380	UJ
DIMETHYL PHTHALATE	UG/KG	485	UJ	487	UJ	527	UJ	537	UJ	540	UJ	505	UJ	380	UJ
2,6-DINITROTOLUENE	UG/KG	485	UJ	487	UJ	527	UJ	537	UJ	540	UJ	505	UJ	380	UJ
ACENAPHTHENE	UG/KG	485	UJ	487	UJ	527	UJ	537	UJ	540	UJ	505	UJ	380	UJ

AOC C Subsurface Soil Data

Parameter	Units																		
Building		AOC C		AOC C		AOC C		AOC C		AOC C		AOC C		AOC C		AOC C		AOC C	
StationID		AC-SB17		AC-SB17		AC-SB17		AC-SB17		AC-SB18		AC-SB18		AC-SB18		AC-SB18		AC-SB18	
SampleID		NDA220		NDA221		NDA222		NDA223		NDA224		NDA225		NDA226		NDA227FD		NDA228	
DateCollected		04/07/2000		04/07/2000		04/07/2000		04/07/2000		04/10/2000		04/10/2000		04/10/2000		04/10/2000		04/10/2000	
Depth		9 to 11		14 to 16		19 to 21		24 to 26		4 to 6		9 to 11		14 to 16		14 to 16		19 to 21	
ENDRIN	UG/KG	3.8	UJ	3.6	UJ	3.3	UJ	3.8	UJ	3.8	U	4.1	U	3.9	U	3.8		3.8	U
BETA ENDOSULFAN (ENDOSULFAN II)	UG/KG	3.8	UJ	3.6	UJ	3.3	UJ	3.8	UJ	3.8	U	4.1	U	3.9	U	3.8		3.8	U
p,p'-DDD	UG/KG	3.8	UJ	3.6	UJ	3.3	UJ	3.8	UJ	3.8	U	4.1	U	3.9	U	3.8		3.8	U
ENDOSULFAN SULFATE	UG/KG	3.8	UJ	3.6	UJ	3.3	UJ	3.8	UJ	3.8	U	4.1	U	3.9	U	3.8		3.8	U
p,p'-DDT	UG/KG	3.8	UJ	3.6	UJ	3.3	UJ	3.8	UJ	3.8	UJ	4.1	UJ	3.9	UJ	3.8		3.8	UJ
METHOXYCHLOR	UG/KG	19	UJ	18	UJ	17	UJ	19	UJ	19	UJ	21	UJ	20	UJ	19		19	UJ
ENDRIN ALDEHYDE	UG/KG	3.8	UJ	3.6	UJ	3.3	UJ	3.8	UJ	3.8	U	4.1	U	3.9	U	3.8		3.8	U
ALPHA-CHLORDANE	UG/KG	1.9	UJ	1.8	UJ	1.7	UJ	1.9	UJ	1.9	U	2.1	U	2	U	1.9		1.9	U
GAMMA-CHLORDANE	UG/KG	1.9	UJ	1.8	UJ	1.7	UJ	1.9	UJ	1.9	U	2.1	U	2	U	1.9		1.9	U
ENDRIN KETONE	UG/KG	3.8	UJ	3.6	UJ	3.3	UJ	3.8	UJ	3.8	U	4.1	U	3.9	U	3.8		3.8	U
TOXAPHENE	UG/KG	195	UJ	181	UJ	169	UJ	193	UJ	195	U	212	U	199	U	195		195	U
bis(2-CHLOROETHYL) ETHER (2-CHLOROETHYL ETHER)	UG/KG	542	UJ	501	UJ	459	UJ	527	UJ	510	U	535	U	631	U	523		523	U
PHENOL	UG/KG	542	UJ	501	UJ	459	UJ	527	UJ	510	U	535	U	631	U	523		523	U
2-CHLOROPHENOL	UG/KG	542	UJ	501	UJ	459	UJ	527	UJ	510	U	535	U	631	U	523		523	U
1,3-DICHLOROBENZENE	UG/KG	542	UJ	501	UJ	459	UJ	527	UJ	510	U	535	U	631	U	523		523	U
1,4-DICHLOROBENZENE	UG/KG	542	UJ	501	UJ	459	UJ	527	UJ	510	U	535	U	631	U	523		523	U
1,2-DICHLOROBENZENE	UG/KG	542	UJ	501	UJ	459	UJ	527	UJ	510	U	535	U	631	U	523		523	U
bis(2-CHLOROISOPROPYL) ETHER	UG/KG	542	UJ	501	UJ	459	UJ	527	UJ	510	U	535	U	631	U	523		523	U
2-METHYLPHENOL (o-CRESOL)	UG/KG	542	UJ	501	UJ	459	UJ	527	UJ	510	U	535	U	631	U	523		523	U
HEXACHLOROETHANE	UG/KG	542	UJ	501	UJ	459	UJ	527	UJ	510	U	535	U	631	U	523		523	U
N-NITROSODI-n-PROPYLAMINE	UG/KG	542	UJ	501	UJ	459	UJ	527	UJ	510	U	535	U	631	U	523		523	U
CRESOLS, m & p	UG/KG	542	UJ	501	UJ	459	UJ	527	UJ	510	U	535	U	631	U	523		523	U
NITROBENZENE	UG/KG	542	UJ	501	UJ	459	UJ	527	UJ	510	U	535	U	631	U	523		523	U
ISOPHORONE	UG/KG	542	UJ	501	UJ	459	UJ	527	UJ	510	U	535	U	631	U	523		523	U
2-NITROPHENOL	UG/KG	542	UJ	501	UJ	459	UJ	527	UJ	510	U	535	U	631	U	523		523	U
2,4-DIMETHYLPHENOL	UG/KG	542	UJ	501	UJ	459	UJ	527	UJ	510	U	535	U	631	U	523		523	U
bis(2-CHLOROETHOXY) METHANE	UG/KG	542	UJ	501	UJ	459	UJ	527	UJ	510	U	535	U	631	U	523		523	U
2,4-DICHLOROPHENOL	UG/KG	542	UJ	501	UJ	459	UJ	527	UJ	510	U	535	U	631	U	523		523	U
1,2,4-TRICHLOROBENZENE	UG/KG	542	UJ	501	UJ	459	UJ	527	UJ	510	U	535	U	631	U	523		523	U
NAPHTHALENE	UG/KG	542	UJ	501	UJ	459	UJ	527	UJ	510	U	535	U	631	U	523		523	U
4-CHLOROANILINE	UG/KG	542	UJ	501	UJ	459	UJ	527	UJ	510	U	535	U	631	U	523		523	U
2-METHYLNAPHTHALENE	UG/KG	542	UJ	501	UJ	459	UJ	527	UJ	510	U	535	U	631	U	523		523	U
HEXACHLOROBUTADIENE	UG/KG	542	UJ	501	UJ	459	UJ	527	UJ	510	U	535	U	631	U	523		523	U
4-CHLORO-3-METHYLPHENOL	UG/KG	542	UJ	501	UJ	459	UJ	527	UJ	510	U	535	U	631	U	523		523	U
HEXACHLOROCYCLOPENTADIENE	UG/KG	542	UJ	501	UJ	459	UJ	527	UJ	510	U	535	U	631	U	523		523	U
2,4,6-TRICHLOROPHENOL	UG/KG	542	UJ	501	UJ	459	UJ	527	UJ	510	U	535	U	631	U	523		523	U
2,4,5-TRICHLOROPHENOL	UG/KG	1610	UJ	1490	UJ	1360	UJ	1570	UJ	1530	U	1610	U	1890	U	1570		1570	U
2-CHLORONAPHTHALENE	UG/KG	542	UJ	501	UJ	459	UJ	527	UJ	510	U	535	U	631	U	523		523	U
2-NITROANILINE	UG/KG	1610	UJ	1490	UJ	1360	UJ	1570	UJ	1530	U	1610	U	1890	U	1570		1570	U
ACENAPHTHYLENE	UG/KG	542	UJ	501	UJ	459	UJ	527	UJ	510	U	535	U	631	U	523		523	U
DIMETHYL PHTHALATE	UG/KG	542	UJ	501	UJ	459	UJ	527	UJ	510	U	535	U	631	U	523		523	U
2,6-DINITROTOLUENE	UG/KG	542	UJ	501	UJ	459	UJ	527	UJ	510	U	535	U	631	U	523		523	U
ACENAPHTHENE	UG/KG	542	UJ	501	UJ	459	UJ	527	UJ	510	U	535	U	631	U	523		523	U

Parameter	Units																
Building		AOC C		AOC C		AOC C		AOC C		AOC C		AOC C		AOC C	
StationID		AC-SB18		AC-SB18		AC-SB19		AC-SB19		AC-SB19		AC-SB19		AC-SB19	
SampleID		NDA228		NDA229		NDA230		NDA231		NDA232		NDA233		NDA234	
DateCollected		04/10/2000		04/10/2000		04/10/2000		04/10/2000		04/10/2000		04/10/2000		04/10/2000	
Depth		19 to 21		24 to 26		4 to 6		9 to 11		14 to 16		19 to 21		24 to 26	
ENDRIN	UG/KG	U	4	U	4.3	U	3.6	U	3.6	U	3.7	U	3.5	U	3.8	U
BETA ENDOSULFAN (ENDOSULFAN II)	UG/KG	U	4	U	4.3	U	3.6	U	3.6	U	3.7	U	3.5	U	3.8	U
p,p'-DDD	UG/KG	U	4	U	4.3	U	3.6	U	3.6	U	3.7	U	3.5	U	3.8	U
ENDOSULFAN SULFATE	UG/KG	U	4	U	4.3	U	3.6	U	3.6	U	3.7	U	3.5	U	3.8	U
p,p'-DDT	UG/KG	UJ	4	UJ	4.3	UJ	3.6	UJ	3.6	UJ	3.7	UJ	3.5	UJ	3.8	UJ
METHOXYCHLOR	UG/KG	UJ	20	UJ	22	UJ	18	UJ	18	UJ	19	UJ	18	UJ	19	UJ
ENDRIN ALDEHYDE	UG/KG	U	4	U	4.3	U	3.6	U	3.6	U	3.7	U	3.5	U	3.8	U
ALPHA-CHLORDANE	UG/KG	U	2	U	2.2	U	1.8	U	1.8	U	1.9	U	1.8	U	1.9	U
GAMMA-CHLORDANE	UG/KG	U	2	U	2.2	U	1.8	U	1.8	U	1.9	U	1.8	U	1.9	U
ENDRIN KETONE	UG/KG	U	4	U	4.3	U	3.6	U	3.6	U	3.7	U	3.5	U	3.8	U
TOXAPHENE	UG/KG	U	203	U	220	U	185	U	182	U	187	U	181	U	194	U
bis(2-CHLOROETHYL) ETHER (2-CHLOROETHYL ETHER)	UG/KG	U	522	U	586	U	480	U	471	U	472	U	459	U	539	U
PHENOL	UG/KG	U	522	U	586	U	480	U	471	U	472	U	459	U	539	U
2-CHLOROPHENOL	UG/KG	U	522	U	586	U	480	U	471	U	472	U	459	U	539	U
1,3-DICHLOROBENZENE	UG/KG	U	522	U	586	U	480	U	471	U	472	U	459	U	539	U
1,4-DICHLOROBENZENE	UG/KG	U	522	U	586	U	480	U	471	U	472	U	459	U	539	U
1,2-DICHLOROBENZENE	UG/KG	U	522	U	586	U	480	U	471	U	472	U	459	U	539	U
bis(2-CHLOROISOPROPYL) ETHER	UG/KG	U	522	U	586	U	480	U	471	U	472	U	459	U	539	U
2-METHYLPHENOL (o-CRESOL)	UG/KG	U	522	U	586	U	480	U	471	U	472	U	459	U	539	U
HEXACHLOROETHANE	UG/KG	U	522	U	586	U	480	U	471	U	472	U	459	U	539	U
N-NITROSODI-n-PROPYLAMINE	UG/KG	U	522	U	586	U	480	U	471	U	472	U	459	U	539	U
CRESOLS, m & p	UG/KG	U	522	U	586	U	480	U	471	U	472	U	459	U	539	U
NITROBENZENE	UG/KG	U	522	U	586	U	480	U	471	U	472	U	459	U	539	U
ISOPHORONE	UG/KG	U	522	U	586	U	480	U	471	U	472	U	459	U	539	U
2-NITROPHENOL	UG/KG	U	522	U	586	U	480	U	471	U	472	U	459	U	539	U
2,4-DIMETHYLPHENOL	UG/KG	U	522	U	586	U	480	U	471	U	472	U	459	U	539	U
bis(2-CHLOROETHOXY) METHANE	UG/KG	U	522	U	586	U	480	U	471	U	472	U	459	U	539	U
2,4-DICHLOROPHENOL	UG/KG	U	522	U	586	U	480	U	471	U	472	U	459	U	539	U
1,2,4-TRICHLOROBENZENE	UG/KG	U	522	U	586	U	480	U	471	U	472	U	459	U	539	U
NAPHTHALENE	UG/KG	U	522	U	586	U	480	U	471	U	472	U	459	U	539	U
4-CHLOROANILINE	UG/KG	U	522	U	586	U	480	U	471	U	472	U	459	U	539	U
2-METHYLNAPHTHALENE	UG/KG	U	522	U	586	U	480	U	471	U	472	U	459	U	539	U
HEXACHLOROBUTADIENE	UG/KG	U	522	U	586	U	480	U	471	U	472	U	459	U	539	U
4-CHLORO-3-METHYLPHENOL	UG/KG	U	522	U	586	U	480	U	471	U	472	U	459	U	539	U
HEXACHLOROCYCLOPENTADIENE	UG/KG	U	522	U	586	U	480	U	471	U	472	U	459	U	539	U
2,4,6-TRICHLOROPHENOL	UG/KG	U	522	U	586	U	480	U	471	U	472	U	459	U	539	U
2,4,5-TRICHLOROPHENOL	UG/KG	U	1570	U	1760	U	1440	U	1410	U	1410	U	1380	U	1620	U
2-CHLORONAPHTHALENE	UG/KG	U	522	U	586	U	480	U	471	U	472	U	459	U	539	U
2-NITROANILINE	UG/KG	U	1570	U	1760	U	1440	U	1410	U	1410	U	1380	U	1620	U
ACENAPHTHYLENE	UG/KG	U	522	U	586	U	480	U	471	U	472	U	459	U	539	U
DIMETHYL PHTHALATE	UG/KG	U	522	U	586	U	480	U	471	U	472	U	459	U	539	U
2,6-DINITROTOLUENE	UG/KG	U	522	U	586	U	480	U	471	U	472	U	459	U	539	U
ACENAPHTHENE	UG/KG	U	522	U	586	U	480	U	471	U	472	U	459	U	539	U

AOC C Subsurface Soil Data

	Building	AOC C		AOC C		AOC C		AOC C		AOC C		AOC C		AOC C	
	StationID	AC-SB16		AC-SB16		AC-SB16		AC-SB16		AC-SB16		AC-SB16		AC-SB17	
	SampleID	NDA213		NDA214FD1		NDA215		NDA216		NDA217		NDA218		NDA219	
	DateCollected	04/07/2000		04/07/2000		04/07/2000		04/07/2000		04/07/2000		04/07/2000		04/07/2000	
	Depth	4 to 6		4 to 6		9 to 11		14 to 16		19 to 21		24 to 26		4 to 6	
Parameter	**Units**														
3-NITROANILINE	UG/KG	1440	UJ	1450	UJ	1570	UJ	1590	UJ	1600	UJ	1500	UJ	1130	UJ
2,4-DINITROPHENOL	UG/KG	1440	UJ	1450	UJ	1570	UJ	1590	UJ	1600	UJ	1500	UJ	1130	UJ
DIBENZOFURAN	UG/KG	485	UJ	487	UJ	527	UJ	537	UJ	540	UJ	505	UJ	380	UJ
2,4-DINITROTOLUENE	UG/KG	485	UJ	487	UJ	527	UJ	537	UJ	540	UJ	505	UJ	380	UJ
4-NITROPHENOL	UG/KG	1440	UJ	1450	UJ	1570	UJ	1590	UJ	1600	UJ	1500	UJ	1130	UJ
FLUORENE	UG/KG	485	UJ	487	UJ	527	UJ	537	UJ	540	UJ	505	UJ	380	UJ
4-CHLOROPHENYL PHENYL ETHER	UG/KG	485	UJ	487	UJ	527	UJ	537	UJ	540	UJ	505	UJ	380	UJ
DIETHYL PHTHALATE	UG/KG	485	UJ	487	UJ	527	UJ	537	UJ	540	UJ	505	UJ	380	UJ
4-NITROANILINE	UG/KG	1440	UJ	1450	UJ	1570	UJ	1590	UJ	1600	UJ	1500	UJ	1130	UJ
4,6-DINITRO-2-METHYLPHENOL	UG/KG	1440	UJ	1450	UJ	1570	UJ	1590	UJ	1600	UJ	1500	UJ	1130	UJ
N-NITROSODIPHENYLAMINE	UG/KG	485	UJ	487	UJ	527	UJ	537	UJ	540	UJ	505	UJ	380	UJ
4-BROMOPHENYL PHENYL ETHER	UG/KG	485	UJ	487	UJ	527	UJ	537	UJ	540	UJ	505	UJ	380	UJ
HEXACHLOROBENZENE	UG/KG	485	UJ	487	UJ	527	UJ	537	UJ	540	UJ	505	UJ	380	UJ
PENTACHLOROPHENOL	UG/KG	1440	UJ	1450	UJ	1570	UJ	1590	UJ	1600	UJ	1500	UJ	1130	UJ
PHENANTHRENE	UG/KG	485	UJ	487	UJ	527	UJ	537	UJ	540	UJ	505	UJ	380	UJ
ANTHRACENE	UG/KG	485	UJ	487	UJ	527	UJ	537	UJ	540	UJ	505	UJ	380	UJ
DI-n-BUTYL PHTHALATE	UG/KG	485	UJ	487	UJ	527	UJ	537	UJ	540	UJ	505	UJ	380	UJ
FLUORANTHENE	UG/KG	485	UJ	487	UJ	527	UJ	537	UJ	540	UJ	505	UJ	380	UJ
PYRENE	UG/KG	485	UJ	487	UJ	527	UJ	537	UJ	540	UJ	505	UJ	380	UJ
BENZYL BUTYL PHTHALATE	UG/KG	485	UJ	487	UJ	527	UJ	537	UJ	540	UJ	505	UJ	380	UJ
3,3'-DICHLOROBENZIDINE	UG/KG	970	UJ	973	UJ	1050	UJ	1070	UJ	1080	UJ	1010	UJ	760	UJ
BENZO(a)ANTHRACENE	UG/KG	485	UJ	487	UJ	527	UJ	537	UJ	540	UJ	505	UJ	380	UJ
CHRYSENE	UG/KG	485	UJ	487	UJ	527	UJ	537	UJ	540	UJ	505	UJ	380	UJ
bis(2-ETHYLHEXYL) PHTHALATE	UG/KG	485	UJ	487	UJ	527	UJ	537	UJ	540	UJ	505	UJ	380	UJ
DI-n-OCTYLPHTHALATE	UG/KG	485	UJ	487	UJ	527	UJ	537	UJ	540	UJ	505	UJ	380	UJ
BENZO(b)FLUORANTHENE	UG/KG	485	UJ	487	UJ	527	UJ	537	UJ	540	UJ	505	UJ	380	UJ
BENZO(k)FLUORANTHENE	UG/KG	485	UJ	487	UJ	527	UJ	537	UJ	540	UJ	505	UJ	380	UJ
BENZO(a)PYRENE	UG/KG	485	UJ	487	UJ	527	UJ	537	UJ	540	UJ	505	UJ	380	UJ
INDENO(1,2,3-c,d)PYRENE	UG/KG	485	UJ	487	UJ	527	UJ	537	UJ	540	UJ	505	UJ	380	UJ
DIBENZ(a,h)ANTHRACENE	UG/KG	485	UJ	487	UJ	527	UJ	537	UJ	540	UJ	505	UJ	380	UJ
BENZO(g,h,i)PERYLENE	UG/KG	485	UJ	487	UJ	527	UJ	537	UJ	540	UJ	505	UJ	380	UJ
CARBAZOLE	UG/KG	485	UJ	487	UJ	527	UJ	537	UJ	540	UJ	505	UJ	380	UJ
CHLOROMETHANE	UG/KG	12	U	10	U	11	U	10	U	12	U	10	U	11	U
VINYL CHLORIDE	UG/KG	12	U	10	U	11	U	10	U	12	U	10	U	11	U
BROMOMETHANE	UG/KG	12	U	10	U	11	U	10	U	12	U	10	U	11	U
1,3-DICHLOROBENZENE	UG/KG	485	UJ	487	UJ	527	UJ	537	UJ	540	UJ	505	UJ	380	UJ
CHLOROETHANE	UG/KG	12	R	10	U	11	U	10	U	12	U	10	U	11	UJ
1,1-DICHLOROETHENE	UG/KG	12	U	10	U	11	U	10	U	12	U	10	U	11	U
1,4-DICHLOROBENZENE	UG/KG	485	UJ	487	UJ	527	UJ	537	UJ	540	UJ	505	UJ	380	UJ
1,2-DICHLOROBENZENE	UG/KG	485	UJ	487	UJ	527	UJ	537	UJ	540	UJ	505	UJ	380	UJ
CARBON DISULFIDE	UG/KG	12	U	10	U	11	U	10	U	12	U	10	U	11	U
METHYLENE CHLORIDE	UG/KG	12	U	10	U	11	U	10	U	12	U	10	U	11	U
1,1-DICHLOROETHANE	UG/KG	12	U	10	U	11	U	10	U	12	U	10	U	11	U

	Building	AOC C		AOC C		AOC C		AOC C		AOC C		AOC C		AOC C		AOC C
	StationID	AC-SB17		AC-SB17		AC-SB17		AC-SB17		AC-SB18		AC-SB18		AC-SB18		AC-SB18
	SampleID	NDA220		NDA221		NDA222		NDA223		NDA224		NDA225		NDA226		NDA227FD
	DateCollected	04/07/2000		04/07/2000		04/07/2000		04/07/2000		04/10/2000		04/10/2000		04/10/2000		04/10/200
	Depth	9 to 11		14 to 16		19 to 21		24 to 26		4 to 6		9 to 11		14 to 16		14 to 16
Parameter	**Units**															
3-NITROANILINE	UG/KG	1610	UJ	1490	UJ	1360	UJ	1570	UJ	1530	U	1610	U	1890	U	1570
2,4-DINITROPHENOL	UG/KG	1610	UJ	1490	UJ	1360	UJ	1570	UJ	1530	U	1610	U	1890	U	1570
DIBENZOFURAN	UG/KG	542	UJ	501	UJ	459	UJ	527	UJ	510	U	535	U	631	U	523
2,4-DINITROTOLUENE	UG/KG	542	UJ	501	UJ	459	UJ	527	UJ	510	U	535	U	631	U	523
4-NITROPHENOL	UG/KG	1610	UJ	1490	UJ	1360	UJ	1570	UJ	1530	U	1610	U	1890	U	1570
FLUORENE	UG/KG	542	UJ	501	UJ	459	UJ	527	UJ	510	U	535	U	631	U	523
4-CHLOROPHENYL PHENYL ETHER	UG/KG	542	UJ	501	UJ	459	UJ	527	UJ	510	U	535	U	631	U	523
DIETHYL PHTHALATE	UG/KG	542	UJ	501	UJ	459	UJ	527	UJ	510	U	535	U	631	U	523
4-NITROANILINE	UG/KG	1610	UJ	1490	UJ	1360	UJ	1570	UJ	1530	U	1610	U	1890	U	1570
4,6-DINITRO-2-METHYLPHENOL	UG/KG	1610	UJ	1490	UJ	1360	UJ	1570	UJ	1530	U	1610	U	1890	U	1570
N-NITROSODIPHENYLAMINE	UG/KG	542	UJ	501	UJ	459	UJ	527	UJ	510	U	535	U	631	U	523
4-BROMOPHENYL PHENYL ETHER	UG/KG	542	UJ	501	UJ	459	UJ	527	UJ	510	U	535	U	631	U	523
HEXACHLOROBENZENE	UG/KG	542	UJ	501	UJ	459	UJ	527	UJ	510	U	535	U	631	U	523
PENTACHLOROPHENOL	UG/KG	1610	UJ	1490	UJ	1360	UJ	1570	UJ	1530	U	1610	U	1890	U	1570
PHENANTHRENE	UG/KG	542	UJ	501	UJ	459	UJ	527	UJ	510	U	535	U	631	U	523
ANTHRACENE	UG/KG	542	UJ	501	UJ	459	UJ	527	UJ	510	U	535	U	631	U	523
DI-n-BUTYL PHTHALATE	UG/KG	542	UJ	501	UJ	459	UJ	527	UJ	510	U	535	U	631	U	523
FLUORANTHENE	UG/KG	542	UJ	501	UJ	459	UJ	527	UJ	510	U	535	U	631	U	523
PYRENE	UG/KG	542	UJ	501	UJ	459	UJ	527	UJ	510	U	535	U	631	U	523
BENZYL BUTYL PHTHALATE	UG/KG	542	UJ	501	UJ	459	UJ	527	UJ	510	U	535	U	631	U	523
3,3'-DICHLOROBENZIDINE	UG/KG	1080	UJ	1000	UJ	918	UJ	1050	UJ	1020	U	1070	U	1260	U	1050
BENZO(a)ANTHRACENE	UG/KG	542	UJ	501	UJ	459	UJ	527	UJ	510	U	535	U	631	U	523
CHRYSENE	UG/KG	542	UJ	501	UJ	459	UJ	527	UJ	510	U	535	U	631	U	523
bis(2-ETHYLHEXYL) PHTHALATE	UG/KG	542	UJ	501	UJ	459	UJ	527	UJ	510	U	535	U	631	U	523
DI-n-OCTYLPHTHALATE	UG/KG	542	UJ	501	UJ	459	UJ	527	UJ	510	U	535	U	631	U	523
BENZO(b)FLUORANTHENE	UG/KG	542	UJ	501	UJ	459	UJ	527	UJ	510	U	535	U	631	U	523
BENZO(k)FLUORANTHENE	UG/KG	542	UJ	501	UJ	459	UJ	527	UJ	510	U	535	U	631	U	523
BENZO(a)PYRENE	UG/KG	542	UJ	501	UJ	459	UJ	527	UJ	510	U	535	U	631	U	523
INDENO(1,2,3-c,d)PYRENE	UG/KG	542	UJ	501	UJ	459	UJ	527	UJ	510	U	535	U	631	U	523
DIBENZ(a,h)ANTHRACENE	UG/KG	542	UJ	501	UJ	459	UJ	527	UJ	510	U	535	U	631	U	523
BENZO(g,h,i)PERYLENE	UG/KG	542	UJ	501	UJ	459	UJ	527	UJ	510	U	535	U	631	U	523
CARBAZOLE	UG/KG	542	UJ	501	UJ	459	UJ	527	UJ	510	U	535	U	631	U	523
CHLOROMETHANE	UG/KG	12	U	10	U	10	U	10	U	10	U	11	U	11	U	10
VINYL CHLORIDE	UG/KG	12	U	10	U	10	U	10	U	10	U	11	U	11	U	10
BROMOMETHANE	UG/KG	12	U	10	U	10	U	10	U	10	U	11	U	11	U	10
1,3-DICHLOROBENZENE	UG/KG	542	UJ	501	UJ	459	UJ	527	UJ	510	U	535	U	631	U	523
CHLOROETHANE	UG/KG	12	UJ	10	UJ	10	UJ	10	UJ	10	UJ	11	U	11	UJ	10
1,1-DICHLOROETHENE	UG/KG	12	U	10	U	10	U	10	U	10	U	11	U	11	U	10
1,4-DICHLOROBENZENE	UG/KG	542	UJ	501	UJ	459	UJ	527	UJ	510	U	535	U	631	U	523
1,2-DICHLOROBENZENE	UG/KG	542	UJ	501	UJ	459	UJ	527	UJ	510	U	535	U	631	U	523
CARBON DISULFIDE	UG/KG	12	U	10	U	10	U	10	U	10	U	11	U	11	U	10
METHYLENE CHLORIDE	UG/KG	12	U	10	U	10	U	10	U	10	U	11	U	11	U	10
1,1-DICHLOROETHANE	UG/KG	12	U	10	U	10	U	10	U	10	U	11	U	11	U	10

AOC C Subsurface Soil Data

	Building		AOC C		AOC C		AOC C		AOC C		AOC C		AOC C		AOC C	
	StationID		AC-SB18		AC-SB18		AC-SB19		AC-SB19		AC-SB19		AC-SB19		AC-SB19	
	SampleID	1	NDA228		NDA229		NDA230		NDA231		NDA232		NDA233		NDA234	
	DateCollected	0	04/10/2000		04/10/2000		04/10/2000		04/10/2000		04/10/2000		04/10/2000		04/10/2000	
	Depth		19 to 21		24 to 26		4 to 6		9 to 11		14 to 16		19 to 21		24 to 26	
Parameter	**Units**															
3-NITROANILINE	UG/KG	U	1570	U	1760	U	1440	U	1410	U	1410	U	1380	U	1620	U
2,4-DINITROPHENOL	UG/KG	U	1570	U	1760	U	1440	U	1410	U	1410	U	1380	U	1620	U
DIBENZOFURAN	UG/KG	U	522	U	586	U	480	U	471	U	472	U	459	U	539	U
2,4-DINITROTOLUENE	UG/KG	U	522	U	586	U	480	U	471	U	472	U	459	U	539	U
4-NITROPHENOL	UG/KG	U	1570	U	1760	U	1440	U	1410	U	1410	U	1380	U	1620	U
FLUORENE	UG/KG	U	522	U	586	U	480	U	471	U	472	U	459	U	539	U
4-CHLOROPHENYL PHENYL ETHER	UG/KG	U	522	U	586	U	480	U	471	U	472	U	459	U	539	U
DIETHYL PHTHALATE	UG/KG	U	522	U	586	U	480	U	471	U	472	U	459	U	539	U
4-NITROANILINE	UG/KG	U	1570	U	1760	U	1440	U	1410	U	1410	U	1380	U	1620	U
4,6-DINITRO-2-METHYLPHENOL	UG/KG	U	1570	U	1760	U	1440	U	1410	U	1410	U	1380	U	1620	U
N-NITROSODIPHENYLAMINE	UG/KG	U	522	U	586	U	480	U	471	U	472	U	459	U	539	U
4-BROMOPHENYL PHENYL ETHER	UG/KG	U	522	U	586	U	480	U	471	U	472	U	459	U	539	U
HEXACHLOROBENZENE	UG/KG	U	522	U	586	U	480	U	471	U	472	U	459	U	539	U
PENTACHLOROPHENOL	UG/KG	U	1570	U	1760	U	1440	U	1410	U	1410	U	1380	U	1620	U
PHENANTHRENE	UG/KG	U	522	U	586	U	480	U	471	U	472	U	459	U	539	U
ANTHRACENE	UG/KG	U	522	U	586	U	480	U	471	U	472	U	459	U	539	U
DI-n-BUTYL PHTHALATE	UG/KG	U	522	U	586	U	36	J	471	U	472	U	459	U	539	U
FLUORANTHENE	UG/KG	U	522	U	586	U	480	U	471	U	472	U	459	U	539	U
PYRENE	UG/KG	U	522	U	586	U	480	U	471	U	472	U	459	U	539	U
BENZYL BUTYL PHTHALATE	UG/KG	U	522	U	586	U	480	U	471	U	472	U	459	U	539	U
3,3'-DICHLOROBENZIDINE	UG/KG	U	1040	U	1170	U	960	U	942	U	943	U	919	U	1080	U
BENZO(a)ANTHRACENE	UG/KG	U	522	U	586	U	480	U	471	U	472	U	459	U	539	U
CHRYSENE	UG/KG	U	522	U	586	U	480	U	471	U	472	U	459	U	539	U
bis(2-ETHYLHEXYL) PHTHALATE	UG/KG	U	522	U	586	U	480	U	471	U	472	U	459	U	539	U
DI-n-OCTYLPHTHALATE	UG/KG	U	522	U	586	U	480	U	471	U	472	U	459	U	539	U
BENZO(b)FLUORANTHENE	UG/KG	U	522	U	586	U	480	U	471	U	472	U	459	U	539	U
BENZO(k)FLUORANTHENE	UG/KG	U	522	U	586	U	480	U	471	U	472	U	459	U	539	U
BENZO(a)PYRENE	UG/KG	U	522	U	586	U	480	U	471	U	472	U	459	U	539	U
INDENO(1,2,3-c,d)PYRENE	UG/KG	U	522	U	586	U	480	U	471	U	472	U	459	U	539	U
DIBENZ(a,h)ANTHRACENE	UG/KG	U	522	U	586	U	480	U	471	U	472	U	459	U	539	U
BENZO(g,h,i)PERYLENE	UG/KG	U	522	U	586	U	480	U	471	U	472	U	459	U	539	U
CARBAZOLE	UG/KG	U	522	U	586	U	480	U	471	U	472	U	459	U	539	U
CHLOROMETHANE	UG/KG	U	11	U	12	U	10	U	10	U	10	U	10	U	10	UJ
VINYL CHLORIDE	UG/KG	U	11	U	12	U	10	U	10	U	10	U	10	U	10	UJ
BROMOMETHANE	UG/KG	U	11	U	12	U	10	U	10	U	10	U	10	U	10	UJ
1,3-DICHLOROBENZENE	UG/KG	U	522	U	586	U	480	U	471	U	472	U	459	U	539	U
CHLOROETHANE	UG/KG	U	11	U	12	U	10	U	10	U	10	U	10	U	10	UJ
1,1-DICHLOROETHENE	UG/KG	U	11	U	12	U	10	U	10	U	10	U	10	U	10	UJ
1,4-DICHLOROBENZENE	UG/KG	U	522	U	586	U	480	U	471	U	472	U	459	U	539	U
1,2-DICHLOROBENZENE	UG/KG	U	522	U	586	U	480	U	471	U	472	U	459	U	539	U
CARBON DISULFIDE	UG/KG	U	11	U	12	U	10	U	10	U	10	U	10	U	10	UJ
METHYLENE CHLORIDE	UG/KG	U	11	U	12	U	10	U	10	U	10	U	10	U	10	UJ
1,1-DICHLOROETHANE	UG/KG	U	11	U	12	U	10	U	10	U	10	U	10	U	10	UJ

	Building	AOC C		AOC C		AOC C		AOC C		AOC C		AOC C		AOC C	
	StationID	AC-SB16		AC-SB16		AC-SB16		AC-SB16		AC-SB16		AC-SB16		AC-SB17	
	SampleID	NDA213		NDA214FD1		NDA215		NDA216		NDA217		NDA218		NDA219	
	DateCollected	04/07/2000		04/07/2000		04/07/2000		04/07/2000		04/07/2000		04/07/2000		04/07/2000	
	Depth	4 to 6		4 to 6		9 to 11		14 to 16		19 to 21		24 to 26		4 to 6	
Parameter	**Units**														
ACETONE	UG/KG	51	R	47	R	11	R	13	R	16	R	11	R	R	U,
METHYL ETHYL KETONE (2-BUTANONE)	UG/KG	12	R	10	R	11	R	10	R	12	R	10	R	11	R
CHLOROFORM	UG/KG	12	U	10	U	11	U	10	U	12	U	10	U	11	U
1,1,1-TRICHLOROETHANE	UG/KG	12	U	10	U	11	U	10	U	12	U	10	U	11	U
CARBON TETRACHLORIDE	UG/KG	12	U	10	U	11	U	10	U	12	U	10	U	11	U
BENZENE	UG/KG	12	U	0.1	U	0.2	J	10	U	12	U	10	U	11	U
1,2-DICHLOROETHANE	UG/KG	0.4	J	10	U	11	U	10	U	12	U	10	U	0.3	U
TRICHLOROETHYLENE (TCE)	UG/KG	12	U	10	U	11	U	10	U	12	U	10	U	11	U
1,2-DICHLOROPROPANE	UG/KG	12	U	10	U	11	U	10	U	12	U	10	U	11	U
1,2,4-TRICHLOROBENZENE	UG/KG	485	UJ	487	UJ	527	UJ	537	UJ	540	UJ	505	UJ	380	UJ
BROMODICHLOROMETHANE	UG/KG	12	U	10	U	11	U	10	U	12	U	10	U	11	U
cis-1,3-DICHLOROPROPENE	UG/KG	12	U	10	U	11	U	10	U	12	U	10	U	11	U
METHYL ISOBUTYL KETONE (4-METHYL-2-PENTANONE)	UG/KG	12	U	10	U	11	U	10	U	12	U	10	U	11	U
TOLUENE	UG/KG	1	J	1	J	3	J	1	J	12	U	10	U	2	J
trans-1,3-DICHLOROPROPENE	UG/KG	12	U	10	U	11	U	10	U	12	U	10	U	11	U
1,1,2-TRICHLOROETHANE	UG/KG	12	U	10	U	11	U	10	U	12	U	10	U	11	U
TETRACHLOROETHYLENE(PCE)	UG/KG	12	U	10	U	11	U	10	U	12	U	10	U	11	U
2-HEXANONE	UG/KG	12	U	10	U	11	U	10	U	12	U	10	U	11	U
DIBROMOCHLOROMETHANE	UG/KG	12	U	10	U	11	U	10	U	12	U	10	U	11	U
CHLOROBENZENE	UG/KG	12	U	10	U	11	U	10	U	12	U	10	U	11	U
ETHYLBENZENE	UG/KG	0.9	J	0.9	J	3	J	0.9	J	12	U	10	U	2	J
M,P-XYLENE (SUM OF ISOMERS)	UG/KG	8	J	7	J	17	=	8	J	0.3	U	10	U	10	J
O-XYLENE (1,2-DIMETHYLBENZENE)	UG/KG	2	J	2	J	5	J	2	J	12	U	10	U	3	J
STYRENE	UG/KG	12	U	10	U	11	U	10	U	12	U	10	U	11	U
BROMOFORM	UG/KG	12	U	10	U	11	U	10	U	12	U	10	U	11	U
1,1,2,2-TETRACHLOROETHANE	UG/KG	12	U	10	U	11	U	10	U	12	U	10	U	11	U
XYLENES, TOTAL	UG/KG	10	J	9	J	22	=	10	J	0.3	U	10	U	13	=

AOC C Subsurface Soil Data

	Building	AOC C		AOC C		AOC C		AOC C		AOC C		AOC C		AOC C		AOC C
	StationID	AC-SB17		AC-SB17		AC-SB17		AC-SB17		AC-SB18		AC-SB18		AC-SB18		AC-SB18
	SampleID	NDA220		NDA221		NDA222		NDA223		NDA224		NDA225		NDA226		NDA227FI
	DateCollected	04/07/2000		04/07/2000		04/07/2000		04/07/2000		04/10/2000		04/10/2000		04/10/2000		04/10/20(
	Depth	9 to 11		14 to 16		19 to 21		24 to 26		4 to 6		9 to 11		14 to 16		14 to 16
Parameter	**Units**															
ACETONE	UG/KG	17	R	15	R	14	R	12	R	34	R	22	R	14	R	23
METHYL ETHYL KETONE (2-BUTANONE)	UG/KG	12	R	10	R	10	R	10	R	10	R	11	R	11	R	10
CHLOROFORM	UG/KG	12	U	10	U	10	U	10	U	10	U	11	U	11	U	10
1,1,1-TRICHLOROETHANE	UG/KG	12	U	10	U	10	U	10	U	10	U	11	U	11	U	10
CARBON TETRACHLORIDE	UG/KG	12	U	10	U	10	U	10	U	10	U	11	U	11	U	10
BENZENE	UG/KG	12	U	10	U	10	U	0.1	U	0.2	J	0.4	J	0.1	U	10
1,2-DICHLOROETHANE	UG/KG	12	U	10	U	10	U	0.3	J	10	U	11	U	0.3	J	0.3
TRICHLOROETHYLENE (TCE)	UG/KG	12	U	10	U	10	U	10	U	10	U	11	U	11	U	10
1,2-DICHLOROPROPANE	UG/KG	12	U	10	U	10	U	10	U	10	U	11	U	11	U	10
1,2,4-TRICHLOROBENZENE	UG/KG	542	UJ	501	UJ	459	UJ	527	UJ	510	U	535	U	631	U	523
BROMODICHLOROMETHANE	UG/KG	12	U	10	U	10	U	10	U	10	U	11	U	11	U	10
cis-1,3-DICHLOROPROPENE	UG/KG	12	U	10	U	10	U	10	U	10	U	11	U	11	U	10
METHYL ISOBUTYL KETONE (4-METHYL-2-PENTANONE)	UG/KG	12	U	10	U	10	U	10	U	10	U	11	U	11	U	10
TOLUENE	UG/KG	12	U	10	U	0.9	J	1	J	4	J	8	J	11	U	10
trans-1,3-DICHLOROPROPENE	UG/KG	12	U	10	U	10	U	10	U	10	U	11	U	11	U	10
1,1,2-TRICHLOROETHANE	UG/KG	12	U	10	U	10	U	10	U	10	U	11	U	11	U	10
TETRACHLOROETHYLENE(PCE)	UG/KG	12	U	10	U	1	J	10	U	10	U	11	U	11	U	10
2-HEXANONE	UG/KG	12	U	10	U	10	U	10	U	10	U	11	U	11	U	10
DIBROMOCHLOROMETHANE	UG/KG	12	U	10	U	10	U	10	U	10	U	11	U	11	U	10
CHLOROBENZENE	UG/KG	12	U	10	U	10	U	10	U	10	U	11	U	11	U	10
ETHYLBENZENE	UG/KG	12	U	10	U	1	J	0.9	J	3	J	5	J	11	U	10
M,P-XYLENE (SUM OF ISOMERS)	UG/KG	12	U	10	U	7	J	6	J	18	=	28	=	11	U	0.2
O-XYLENE (1,2-DIMETHYLBENZENE)	UG/KG	12	U	10	U	2	J	1	J	6	J	7	J	11	U	10
STYRENE	UG/KG	12	U	10	U	10	U	10	U	10	U	11	U	11	U	10
BROMOFORM	UG/KG	12	U	10	U	10	U	10	U	10	U	11	U	11	U	10
1,1,2,2-TETRACHLOROETHANE	UG/KG	12	U	10	U	10	U	10	U	10	U	11	U	11	U	10
XYLENES, TOTAL	UG/KG	12	U	10	U	9	J	7	J	23	=	35	=	11	U	0.2

Parameter	Units	Building	StationID	SampleID	DateCollected	Depth															
		AOC C	AC-SB18	NDA228	04/10/2000	19 to 21		AOC C	AC-SB18	NDA229	04/10/2000	24 to 26		AOC C	AC-SB19	NDA230	04/10/2000	4 to 6		AOC C	AC-SB19	NDA231	04/10/2000	9 to 11	
ACETONE	UG/KG	R	13	R	13	R	25	R	31	R	22	R	21	R	22	R					
METHYL ETHYL KETONE (2-BUTANONE)	UG/KG	R	11	R	12	R	10	R	10	R	10	R	10	R	10	R					
CHLOROFORM	UG/KG	U	11	U	12	U	10	U	10	U	10	U	10	U	10	UJ					
1,1,1-TRICHLOROETHANE	UG/KG	U	11	U	12	U	10	U	10	U	10	U	10	U	10	UJ					
CARBON TETRACHLORIDE	UG/KG	U	11	U	12	U	10	U	10	U	10	U	10	U	10	UJ					
BENZENE	UG/KG	U	11	U	12	U	10	U	10	U	10	U	10	U	10	UJ					
1,2-DICHLOROETHANE	UG/KG	J	11	U	12	U	0.3	J	10	U	0.3	J	0.3	J	10	UJ					
TRICHLOROETHYLENE (TCE)	UG/KG	U	11	U	12	U	10	U	10	U	10	U	10	U	10	UJ					
1,2-DICHLOROPROPANE	UG/KG	U	11	U	12	U	10	U	10	U	10	U	10	U	10	UJ					
1,2,4-TRICHLOROBENZENE	UG/KG	U	522	U	586	U	480	U	471	U	472	U	459	U	539	U					
BROMODICHLOROMETHANE	UG/KG	U	11	U	12	U	10	U	10	U	10	U	10	U	10	UJ					
cis-1,3-DICHLOROPROPENE	UG/KG	U	11	U	12	U	10	U	10	U	10	U	10	U	10	UJ					
METHYL ISOBUTYL KETONE (4-METHYL-2-PENTANONE)	UG/KG	U	11	U	12	U	10	U	10	U	10	U	10	U	10	UJ					
TOLUENE	UG/KG	U	11	U	12	U	10	U	10	U	10	U	10	U	10	UJ					
trans-1,3-DICHLOROPROPENE	UG/KG	U	11	U	12	U	10	U	10	U	10	U	10	U	10	UJ					
1,1,2-TRICHLOROETHANE	UG/KG	U	11	U	12	U	10	U	10	U	10	U	10	U	10	UJ					
TETRACHLOROETHYLENE(PCE)	UG/KG	U	11	U	12	U	10	U	10	U	10	U	10	U	10	UJ					
2-HEXANONE	UG/KG	U	11	U	12	U	10	U	10	U	10	U	10	U	10	UJ					
DIBROMOCHLOROMETHANE	UG/KG	U	11	U	12	U	10	U	10	U	10	U	10	U	10	UJ					
CHLOROBENZENE	UG/KG	U	11	U	12	U	10	U	10	U	10	U	10	U	10	UJ					
ETHYLBENZENE	UG/KG	U	11	U	12	U	10	U	10	U	10	U	10	U	10	UJ					
M,P-XYLENE (SUM OF ISOMERS)	UG/KG	U	11	U	12	U	10	U	0.5	J	10	U	10	U	10	UJ					
O-XYLENE (1,2-DIMETHYLBENZENE)	UG/KG	U	11	U	12	U	10	U	10	U	10	U	10	U	10	UJ					
STYRENE	UG/KG	U	11	U	12	U	10	U	10	U	10	U	10	U	10	UJ					
BROMOFORM	UG/KG	U	11	U	12	U	10	U	10	U	10	U	10	U	10	UJ					
1,1,2,2-TETRACHLOROETHANE	UG/KG	U	11	U	12	U	10	U	10	U	10	U	10	U	10	UJ					
XYLENES, TOTAL	UG/KG	U	11	U	12	U	10	U	0.5	J	10	U	10	U	10	UJ					

	Building	AOC C		AOC C	
	StationID	AC-SD01		AC-SD02	
	SampleID	NDA054		NDA055	
	DateCollected	04/07/2000		04/07/2000	
	Depth	0 to 0.1		0 to 0.1	
Parameter	**Units**				
EXPLOSIVES					
2,6-DINITROTOLUENE	UG/KG	480	UJ	696	UJ
NITROBENZENE	UG/KG	480	UJ	696	UJ
2,4-DINITROTOLUENE	UG/KG	480	UJ	696	UJ
METALS					
ALUMINUM	MG/KG	9050	J	4380	J
ANTIMONY	MG/KG	0.22	J	0.14	UJ
ARSENIC	MG/KG	0.75	J	0.34	U
BARIUM	MG/KG	45.7	J	74.5	J
BERYLLIUM	MG/KG	0.14	J	0.088	J
CADMIUM	MG/KG	0.021	U	0.02	U
CALCIUM	MG/KG	8980	J	4570	J
CHROMIUM, TOTAL	MG/KG	13.4	J	7.7	J
COBALT	MG/KG	7.6	J	9.5	J
COPPER	MG/KG	24.2	J	16.1	J
IRON	MG/KG	15700	J	9310	J
LEAD	MG/KG	8.5	=	10.6	=
MAGNESIUM	MG/KG	4950	J	2900	J
MANGANESE	MG/KG	387	J	546	J
MERCURY	MG/KG	0.011	U	0.013	U
NICKEL	MG/KG	7.7	J	4.3	J
POTASSIUM	MG/KG	1070	J	577	J
SELENIUM	MG/KG	0.51	J	0.25	J
SILVER	MG/KG	0.051	U	0.05	U
SODIUM	MG/KG	224	J	80.9	J
THALLIUM	MG/KG	0.56	J	0.32	J
VANADIUM	MG/KG	44.6	J	28.1	J
ZINC	MG/KG	287	=	74.9	=
PCB					
PCB-1016 (AROCHLOR 1016)	UG/KG	34	UJ	33	UJ
PCB-1260 (AROCHLOR 1260)	UG/KG	34	UJ	33	UJ
PCB-1221 (AROCHLOR 1221)	UG/KG	68	UJ	67	UJ
PCB-1232 (AROCHLOR 1232)	UG/KG	34	UJ	33	UJ
PCB-1242 (AROCHLOR 1242)	UG/KG	34	UJ	33	UJ
PCB-1248 (AROCHLOR 1248)	UG/KG	34	UJ	33	UJ
PCB-1254 (AROCHLOR 1254)	UG/KG	34	UJ	33	UJ
PESTICIDES					
ALPHA BHC (ALPHA HEXACHLOROCYCLOHEXANE)	UG/KG	1.7	UJ	1.7	UJ
BETA BHC (BETA HEXACHLOROCYCLOHEXANE)	UG/KG	1.7	UJ	1.7	UJ
DELTA BHC (DELTA HEXACHLOROCYCLOHEXANE)	UG/KG	1.7	UJ	1.7	UJ
GAMMA BHC (LINDANE)	UG/KG	1.7	UJ	1.7	UJ
HEPTACHLOR	UG/KG	1.7	UJ	1.7	UJ
ALDRIN	UG/KG	1.7	UJ	1.7	UJ
HEPTACHLOR EPOXIDE	UG/KG	1.7	UJ	1.7	UJ
ALPHA ENDOSULFAN (ENDOSULFAN I)	UG/KG	1.7	UJ	1.7	UJ
DIELDRIN	UG/KG	4.4	J	3.3	UJ
p,p'-DDE	UG/KG	0.8	J	3.3	UJ
ENDRIN	UG/KG	3.4	UJ	3.3	UJ
BETA ENDOSULFAN (ENDOSULFAN II)	UG/KG	3.4	UJ	3.3	UJ
p,p'-DDD	UG/KG	3.4	UJ	3.3	UJ
ENDOSULFAN SULFATE	UG/KG	3.4	UJ	3.3	UJ

	Building	AOC C		AOC C	
	StationID	AC-SD01		AC-SD02	
	SampleID	NDA054		NDA055	
	DateCollected	04/07/2000		04/07/2000	
	Depth	0 to 0.1		0 to 0.1	
Parameter	**Units**				
p,p'-DDT	UG/KG	3.4	UJ	3.3	UJ
METHOXYCHLOR	UG/KG	17	UJ	17	UJ
ENDRIN ALDEHYDE	UG/KG	3.4	UJ	3.3	UJ
ALPHA-CHLORDANE	UG/KG	1.7	UJ	1.7	UJ
GAMMA-CHLORDANE	UG/KG	1.7	UJ	1.7	UJ
ENDRIN KETONE	UG/KG	3.4	UJ	3.3	UJ
TOXAPHENE	UG/KG	174	UJ	169	UJ
SEMI-VOLATILES					
bis(2-CHLOROETHYL) ETHER (2-CHLOROETHYL ETHER)	UG/KG	480	UJ	696	UJ
PHENOL	UG/KG	480	UJ	696	UJ
2-CHLOROPHENOL	UG/KG	480	UJ	696	UJ
1,3-DICHLOROBENZENE	UG/KG	480	UJ	696	UJ
1,4-DICHLOROBENZENE	UG/KG	480	UJ	696	UJ
1,2-DICHLOROBENZENE	UG/KG	480	UJ	696	UJ
bis(2-CHLOROISOPROPYL) ETHER	UG/KG	480	UJ	696	UJ
2-METHYLPHENOL (o-CRESOL)	UG/KG	480	UJ	696	UJ
HEXACHLOROETHANE	UG/KG	480	UJ	696	UJ
N-NITROSODI-n-PROPYLAMINE	UG/KG	480	UJ	696	UJ
CRESOLS, m & p	UG/KG	480	UJ	696	UJ
NITROBENZENE	UG/KG	480	UJ	696	UJ
ISOPHORONE	UG/KG	480	UJ	696	UJ
2-NITROPHENOL	UG/KG	480	UJ	696	UJ
2,4-DIMETHYLPHENOL	UG/KG	480	UJ	696	UJ
bis(2-CHLOROETHOXY) METHANE	UG/KG	480	UJ	696	UJ
2,4-DICHLOROPHENOL	UG/KG	480	UJ	696	UJ
1,2,4-TRICHLOROBENZENE	UG/KG	480	UJ	696	UJ
NAPHTHALENE	UG/KG	480	UJ	696	UJ
4-CHLOROANILINE	UG/KG	480	UJ	696	UJ
2-METHYLNAPHTHALENE	UG/KG	480	UJ	696	UJ
HEXACHLOROBUTADIENE	UG/KG	480	UJ	696	UJ
4-CHLORO-3-METHYLPHENOL	UG/KG	480	UJ	696	UJ
HEXACHLOROCYCLOPENTADIENE	UG/KG	480	UJ	696	UJ
2,4,6-TRICHLOROPHENOL	UG/KG	480	UJ	696	UJ
2,4,5-TRICHLOROPHENOL	UG/KG	1430	UJ	2070	UJ
2-CHLORONAPHTHALENE	UG/KG	480	UJ	696	UJ
2-NITROANILINE	UG/KG	1430	UJ	2070	UJ
ACENAPHTHYLENE	UG/KG	480	UJ	696	UJ
DIMETHYL PHTHALATE	UG/KG	480	UJ	696	UJ
2,6-DINITROTOLUENE	UG/KG	480	UJ	696	UJ
ACENAPHTHENE	UG/KG	480	UJ	696	UJ
3-NITROANILINE	UG/KG	1430	UJ	2070	UJ
2,4-DINITROPHENOL	UG/KG	1430	UJ	2070	UJ
DIBENZOFURAN	UG/KG	480	UJ	696	UJ
2,4-DINITROTOLUENE	UG/KG	480	UJ	696	UJ
4-NITROPHENOL	UG/KG	1430	UJ	2070	UJ
FLUORENE	UG/KG	480	UJ	696	UJ
4-CHLOROPHENYL PHENYL ETHER	UG/KG	480	UJ	696	UJ
DIETHYL PHTHALATE	UG/KG	480	UJ	696	UJ
4-NITROANILINE	UG/KG	1430	UJ	2070	UJ
4,6-DINITRO-2-METHYLPHENOL	UG/KG	1430	UJ	2070	UJ
N-NITROSODIPHENYLAMINE	UG/KG	480	UJ	696	UJ

	Building	AOC C		AOC C	
	StationID	AC-SD01		AC-SD02	
	SampleID	NDA054		NDA055	
	DateCollected	04/07/2000		04/07/2000	
	Depth	0 to 0.1		0 to 0.1	
Parameter	**Units**				
4-BROMOPHENYL PHENYL ETHER	UG/KG	480	UJ	696	UJ
HEXACHLOROBENZENE	UG/KG	480	UJ	696	UJ
PENTACHLOROPHENOL	UG/KG	1430	UJ	2070	UJ
PHENANTHRENE	UG/KG	480	UJ	696	UJ
ANTHRACENE	UG/KG	480	UJ	696	UJ
DI-n-BUTYL PHTHALATE	UG/KG	480	UJ	696	UJ
FLUORANTHENE	UG/KG	480	UJ	696	UJ
PYRENE	UG/KG	480	UJ	696	UJ
BENZYL BUTYL PHTHALATE	UG/KG	480	UJ	696	UJ
3,3'-DICHLOROBENZIDINE	UG/KG	961	UJ	1390	UJ
BENZO(a)ANTHRACENE	UG/KG	480	UJ	696	UJ
CHRYSENE	UG/KG	480	UJ	696	UJ
bis(2-ETHYLHEXYL) PHTHALATE	UG/KG	480	UJ	696	UJ
DI-n-OCTYLPHTHALATE	UG/KG	480	UJ	696	UJ
BENZO(b)FLUORANTHENE	UG/KG	480	UJ	696	UJ
BENZO(k)FLUORANTHENE	UG/KG	480	UJ	696	UJ
BENZO(a)PYRENE	UG/KG	480	UJ	696	UJ
INDENO(1,2,3-c,d)PYRENE	UG/KG	480	UJ	696	UJ
DIBENZ(a,h)ANTHRACENE	UG/KG	480	UJ	696	UJ
BENZO(g,h,i)PERYLENE	UG/KG	480	UJ	696	UJ
CARBAZOLE	UG/KG	480	UJ	696	UJ
VOLATILES					
CHLOROMETHANE	UG/KG	15	U	10	UJ
VINYL CHLORIDE	UG/KG	15	U	10	UJ
BROMOMETHANE	UG/KG	15	U	10	UJ
1,3-DICHLOROBENZENE	UG/KG	480	UJ	696	UJ
CHLOROETHANE	UG/KG	15	U	10	UJ
1,1-DICHLOROETHENE	UG/KG	15	U	10	UJ
1,4-DICHLOROBENZENE	UG/KG	480	UJ	696	UJ
1,2-DICHLOROBENZENE	UG/KG	480	UJ	696	UJ
CARBON DISULFIDE	UG/KG	15	U	10	UJ
METHYLENE CHLORIDE	UG/KG	15	U	10	UJ
1,1-DICHLOROETHANE	UG/KG	15	U	10	UJ
ACETONE	UG/KG	25	R	16	R
METHYL ETHYL KETONE (2-BUTANONE)	UG/KG	15	R	10	R
CHLOROFORM	UG/KG	15	U	10	UJ
1,1,1-TRICHLOROETHANE	UG/KG	15	U	10	UJ
CARBON TETRACHLORIDE	UG/KG	15	U	10	UJ
BENZENE	UG/KG	15	U	10	UJ
1,2-DICHLOROETHANE	UG/KG	15	U	10	UJ
TRICHLOROETHYLENE (TCE)	UG/KG	15	U	10	UJ
1,2-DICHLOROPROPANE	UG/KG	15	U	10	UJ
1,2,4-TRICHLOROBENZENE	UG/KG	480	UJ	696	UJ
BROMODICHLOROMETHANE	UG/KG	15	U	10	UJ
cis-1,3-DICHLOROPROPENE	UG/KG	15	U	10	UJ
METHYL ISOBUTYL KETONE (4-METHYL-2-PENTANONE)	UG/KG	15	U	10	UJ
TOLUENE	UG/KG	2	J	0.5	J
trans-1,3-DICHLOROPROPENE	UG/KG	15	U	10	UJ
1,1,2-TRICHLOROETHANE	UG/KG	15	U	10	UJ
TETRACHLOROETHYLENE(PCE)	UG/KG	15	U	10	UJ
2-HEXANONE	UG/KG	15	U	10	UJ

	Building	AOC C		AOC C	
	StationID	AC-SD01		AC-SD02	
	SampleID	NDA054		NDA055	
	DateCollected	04/07/2000		04/07/2000	
	Depth	0 to 0.1		0 to 0.1	
Parameter	**Units**				
DIBROMOCHLOROMETHANE	UG/KG	15	U	10	UJ
CHLOROBENZENE	UG/KG	15	U	10	UJ
ETHYLBENZENE	UG/KG	2	J	0.3	J
M,P-XYLENE (SUM OF ISOMERS)	UG/KG	9	J	2	J
O-XYLENE (1,2-DIMETHYLBENZENE)	UG/KG	2	J	0.5	J
STYRENE	UG/KG	15	U	10	UJ
BROMOFORM	UG/KG	15	U	10	UJ
1,1,2,2-TETRACHLOROETHANE	UG/KG	15	U	10	UJ
XYLENES, TOTAL	UG/KG	12	J	2	J

AOC E Groundwater Data

	Building	AOC E	AOC E	AOC E	AOC E	AOC E	AOC E
	StationID	AOC-E-MW04	AOC-E-MW05	AOC-E-MW06	AOC-E-MWE02	AOC-E-MWE03	AOC-E-MWE03
	SampleID	NDA023	NDA026	NDA028	NDA024	NDA025FD1	NDA029
	DateCollected	04/27/2000	05/01/2000	04/27/2000	04/05/2000	04/05/2000	04/05/2000
	Depth	0 to 0	0 to 0	0 to 0	0 to 0	0 to 0	0 to 0
Parameter	**Units**						
DISSOLVED METALS							
ALUMINUM, DISSOLVED	UG/L	25.8 U	25.8 U	25.8 U	25.8 U	353 =	1150 =
ANTIMONY, DISSOLVED	UG/L	1.4 U	1.4 U	1.4 U	1.4 U	1.4 U	1.4 U
ARSENIC, DISSOLVED	UG/L	3.4 U	3.4 U	3.4 U	3.4 U	3.4 U	3.4 U
BARIUM, DISSOLVED	UG/L	247 =	173 J	116 J	91.4 J	122 J	129 J
BERYLLIUM, DISSOLVED	UG/L	0.3 U	0.3 U	0.3 U	0.3 U	0.3 U	0.3 U
CALCIUM, DISSOLVED	UG/L	99500 J	89400 =	50600 J	53700 =	55500 =	59000 =
CADMIUM, DISSOLVED	UG/L	0.46 J	0.23 J	0.2 U	0.2 U	0.2 U	0.25 J
CHROMIUM, DISSOLVED	UG/L	2.6 J	3.9 J	1.8 J	1.7 J	1.1 J	3.6 J
COBALT, DISSOLVED	UG/L	2.8 J	1 J	1 J	0.5 U	0.5 U	1.3 J
COPPER, DISSOLVED	UG/L	3.8 J	1.9 U	2.5 J	1.9 U	2.7 J	5.5 J
IRON, DISSOLVED	UG/L	12.2 U	12.2 U	12.2 U	17.3 J	553 =	1810 =
LEAD, DISSOLVED	UG/L	1.6 J	1.2 J	1.4 J	1.1 U	1.1 U	1.1 U
MAGNESIUM, DISSOLVED	UG/L	45600 =	44000 =	30000 =	31100 =	30300 =	32400 =
MANGANESE, DISSOLVED	UG/L	3110 =	2510 =	23.1 =	11.6 J	388 =	394 =
MERCURY, DISSOLVED	UG/L	0.18 U	0.18 U	0.18 U	0.18 U	0.18 U	0.18 U
NICKEL, DISSOLVED	UG/L	6.3 J	4.5 J	6.1 J	0.8 U	1.2 J	1.6 J
POTASSIUM, DISSOLVED	UG/L	4860 J	4350 J	3020 J	6440 J	4790 J	5040 J
SELENIUM, DISSOLVED	UG/L	2.4 J	2.1 U	4.6 J	2.1 U	2.1 U	2.1 U
SILVER, DISSOLVED	UG/L	0.5 U	0.5 U	0.5 U	0.5 U	0.5 U	0.5 U
SODIUM, DISSOLVED	UG/L	137000 J	151000 =	118000 J	133000 =	125000 =	132000 =
THALLIUM, DISSOLVED	UG/L	2.7 U	2.7 U	2.7 U	2.7 U	2.7 U	2.7 U
VANADIUM, DISSOLVED	UG/L	12.2 J	2.1 J	15.4 J	10.8 J	11.3 J	15.8 J
ZINC, DISSOLVED	UG/L	6.2 J	3.6 J	2.5 U	3.9 J	11.8 J	12.2 J
EXPLOSIVES							
2,6-DINITROTOLUENE	UG/L	5 U	6 U	6 U	5 U	5 U	5 U
NITROBENZENE	UG/L	5 U	6 U	6 U	5 U	5 U	5 U
2,4-DINITROTOLUENE	UG/L	5 U	6 U	6 U	5 U	5 U	5 U
METALS							
ALUMINUM	UG/L	66000 J	11900 =	2020 J	106000 =	21100 =	24000 =
ANTIMONY	UG/L	2.2 J	1.9 J	1.4 U	5.6 J	1.4 U	1.4 U
ARSENIC	UG/L	3.4 U	3.5 J	3.4 U	3.4 U	3.4 U	3.4 U
BARIUM	UG/L	584 =	269 =	131 J	826 =	234 =	248 =
BERYLLIUM	UG/L	0.3 U	0.3 U	0.3 U	0.55 J	0.3 U	0.3 U
CADMIUM	UG/L	0.2 U	0.2 U	0.2 U	0.2 U	0.2 U	0.2 U

AOC E Groundwater Data

	Building	AOC E	AOC E	AOC E	AOC E	AOC E	AOC E
	StationID	AOC-E-MW04	AOC-E-MW05	AOC-E-MW06	AOC-E-MWE02	AOC-E-MWE03	AOC-E-MWE03
	SampleID	NDA023	NDA026	NDA028	NDA024	NDA025FD1	NDA029
	DateCollected	04/27/2000	05/01/2000	04/27/2000	04/05/2000	04/05/2000	04/05/2000
	Depth	0 to 0	0 to 0	0 to 0	0 to 0	0 to 0	0 to 0
Parameter	**Units**						
CALCIUM	UG/L	115000 J	103000 =	50400 J	121000 =	69200 =	69900 =
CHROMIUM, TOTAL	UG/L	141 =	38.1 =	10 =	110 =	44.3 =	50.7 =
COBALT	UG/L	36.1 J	8.6 J	1.1 J	118 =	20.5 J	23.6 J
COPPER	UG/L	144 =	31.2 =	5.5 J	247 =	70.5 =	85.3 =
IRON	UG/L	66000 =	13800 =	2020 =	180000 =	34000 =	39300 =
LEAD	UG/L	11.7 =	1.8 J	1.5 J	3.6 =	1.1 J	1.1 J
MAGNESIUM	UG/L	61800 =	48900 =	30300 =	101000 =	44100 =	45900 =
MANGANESE	UG/L	3890 =	3340 =	65.2 =	6490 =	1340 =	1500 =
MERCURY	UG/L	0.18 U	0.18 U	0.18 U	0.18 U	0.18 U	0.18 U
NICKEL	UG/L	87.7 =	24.4 J	6 J	65.1 =	18.9 J	21.7 J
POTASSIUM	UG/L	12000 J	5860 J	3300 J	10400 J	5720 J	6000 J
SELENIUM	UG/L	2.1 U	2.1 U	2.1 U	5.6 =	2.1 U	2.7 J
SILVER	UG/L	0.5 U	0.5 U	0.5 U	0.5 U	0.5 U	0.5 U
SODIUM	UG/L	139000 J	152000 =	119000 J	137000 =	130000 =	130000 =
THALLIUM	UG/L	2.7 U	2.7 U	2.7 U	2.7 U	2.7 U	2.7 U
VANADIUM	UG/L	175 =	39.9 J	22 J	489 =	106 =	120 =
ZINC	UG/L	248 =	51.4 =	3.2 J	377 =	75.2 =	95.3 =
PCB							
PCB-1016 (AROCHLOR 1016)	UG/L	0.21 U	0.21 UJ	0.21 U	0.21 UJ	0.21 U	0.25 U
PCB-1260 (AROCHLOR 1260)	UG/L	0.21 U	0.21 UJ	0.21 U	0.21 UJ	0.21 U	0.25 U
PCB-1221 (AROCHLOR 1221)	UG/L	0.42 U	0.41 UJ	0.42 U	0.42 UJ	0.43 U	0.5 U
PCB-1232 (AROCHLOR 1232)	UG/L	0.21 U	0.21 UJ	0.21 U	0.21 UJ	0.21 U	0.25 U
PCB-1242 (AROCHLOR 1242)	UG/L	0.21 U	0.21 UJ	0.21 U	0.21 UJ	0.21 U	0.25 U
PCB-1248 (AROCHLOR 1248)	UG/L	0.21 U	0.21 UJ	0.21 U	0.21 UJ	0.21 U	0.25 U
PCB-1254 (AROCHLOR 1254)	UG/L	0.21 U	0.21 UJ	0.21 U	0.21 UJ	0.21 U	0.25 U
PESTICIDES							
ALPHA BHC	UG/L	0.01 UJ	0.01 UJ	0.01 UJ	0.01 UJ	0.01 UJ	0.01 UJ
BETA BHC	UG/L	0.01 UJ	0.01 U	0.01 U	0.01 UJ	0.01 UJ	0.01 UJ
DELTA BHC	UG/L	0.01 UJ	0.01 U	0.01 U	0.01 UJ	0.01 UJ	0.01 UJ
GAMMA BHC (LINDANE)	UG/L	0.01 UJ	0.01 UJ	0.01 UJ	0.01 UJ	0.01 UJ	0.01 UJ
HEPTACHLOR	UG/L	0.01 UJ	0.01 U	0.01 U	0.01 UJ	0.01 UJ	0.01 UJ
ALDRIN	UG/L	0.01 UJ	0.01 U	0.01 U	0.01 UJ	0.01 UJ	0.01 UJ
HEPTACHLOR EPOXIDE	UG/L	0.01 UJ	0.01 U	0.01 U	0.01 UJ	0.01 UJ	0.01 UJ
ALPHA ENDOSULFAN	UG/L	0.01 UJ	0.01 U	0.01 U	0.01 UJ	0.01 UJ	0.01 UJ
DIELDRIN	UG/L	0.02 UJ	0.02 U	0.11 =	0.02 UJ	0.02 UJ	0.03 UJ

	Building	AOC E	AOC E	AOC E	AOC E	AOC E	AOC E
	StationID	AOC-E-MW04	AOC-E-MW05	AOC-E-MW06	AOC-E-MWE02	AOC-E-MWE03	AOC-E-MWE03
	SampleID	NDA023	NDA026	NDA028	NDA024	NDA025FD1	NDA029
	DateCollected	04/27/2000	05/01/2000	04/27/2000	04/05/2000	04/05/2000	04/05/2000
	Depth	0 to 0	0 to 0	0 to 0	0 to 0	0 to 0	0 to 0
Parameter	**Units**						
p,p'-DDE	UG/L	0.02 UJ	0.02 U	0.02 U	0.02 UJ	0.02 UJ	0.03 UJ
ENDRIN	UG/L	0.02 UJ	0.02 U	0.02 U	0.02 UJ	0.02 UJ	0.03 UJ
BETA ENDOSULFAN	UG/L	0.02 UJ	0.02 U	0.02 U	0.02 UJ	0.02 UJ	0.03 UJ
p,p'-DDD	UG/L	0.02 UJ	0.02 U	0.02 U	0.02 UJ	0.02 UJ	0.03 UJ
ENDOSULFAN SULFATE	UG/L	0.02 UJ	0.02 U	0.02 U	0.02 UJ	0.02 UJ	0.03 UJ
p,p'-DDT	UG/L	0.02 UJ	0.02 U	0.02 U	0.02 UJ	0.02 UJ	0.03 UJ
METHOXYCHLOR	UG/L	0.11 UJ	0.1 U	0.11 U	0.11 UJ	0.11 UJ	0.13 UJ
ENDRIN ALDEHYDE	UG/L	0.02 UJ	0.02 U	0.02 U	0.02 UJ	0.02 UJ	0.03 UJ
ALPHA-CHLORDANE	UG/L	0.01 UJ	0.01 U	0.01 U	0.01 UJ	0.01 UJ	0.01 UJ
GAMMA-CHLORDANE	UG/L	0.01 UJ	0.01 U	0.01 U	0.01 UJ	0.01 UJ	0.01 UJ
ENDRIN KETONE	UG/L	0.02 UJ	0.02 U	0.02 U	0.02 UJ	0.02 UJ	0.03 UJ
TOXAPHENE	UG/L	1.1 UJ	1 U	1.1 U	1.1 UJ	1.1 UJ	1.3 UJ
SEMI-VOLATILES							
bis(2-CHLOROETHYL) ETHER	UG/L	5 U	6 U	6 U	5 U	5 U	5 U
PHENOL	UG/L	5 U	6 U	6 U	5 U	5 U	5 U
2-CHLOROPHENOL	UG/L	5 U	6 U	6 U	5 U	5 U	5 U
1,3-DICHLOROBENZENE	UG/L	1 U	1 U	1 U	1 U	1 U	1 U
1,4-DICHLOROBENZENE	UG/L	1 U	1 U	1 U	1 U	1 U	1 U
1,2-DICHLOROBENZENE	UG/L	3 =	4 =	1 U	1 U	1 U	1 U
bis(2-CHLOROISOPROPYL) ETHER	UG/L	5 U	6 U	6 U	5 U	5 U	5 U
2-METHYLPHENOL (o-CRESOL)	UG/L	5 U	6 U	6 U	5 U	5 U	5 U
HEXACHLOROETHANE	UG/L	5 U	6 U	6 U	5 U	5 U	5 U
N-NITROSODI-n-PROPYLAMINE	UG/L	5 U	6 U	6 U	5 U	5 U	5 U
CRESOLS, m & p	UG/L	5 U	6 U	6 U	5 U	5 U	5 U
NITROBENZENE	UG/L	5 U	6 U	6 U	5 U	5 U	5 U
ISOPHORONE	UG/L	5 U	6 U	6 U	5 U	5 U	5 U
2-NITROPHENOL	UG/L	5 U	6 U	6 U	5 U	5 U	5 U
2,4-DIMETHYLPHENOL	UG/L	5 U	6 U	6 U	5 U	5 U	5 U
bis(2-CHLOROETHOXY) METHANE	UG/L	5 U	6 U	6 U	5 U	5 U	5 U
2,4-DICHLOROPHENOL	UG/L	5 U	6 U	6 U	5 U	5 U	5 U
1,2,4-TRICHLOROBENZENE	UG/L	1 U	1 U	1 U	1 U	1 U	1 U
NAPHTHALENE	UG/L	5 U	15 =	6 U	5 U	5 U	5 U
4-CHLOROANILINE	UG/L	5 U	6 U	6 U	5 U	5 U	5 U
2-METHYLNAPHTHALENE	UG/L	5 U	14 =	6 U	5 U	5 U	5 U
HEXACHLOROBUTADIENE	UG/L	5 U	6 U	6 U	5 U	5 U	5 U

AOC E Groundwater Data

	Building	AOC E	AOC E	AOC E	AOC E	AOC E	AOC E
	StationID	AOC-E-MW04	AOC-E-MW05	AOC-E-MW06	AOC-E-MWE02	AOC-E-MWE03	AOC-E-MWE03
	SampleID	NDA023	NDA026	NDA028	NDA024	NDA025FD1	NDA029
	DateCollected	04/27/2000	05/01/2000	04/27/2000	04/05/2000	04/05/2000	04/05/2000
	Depth	0 to 0	0 to 0	0 to 0	0 to 0	0 to 0	0 to 0
Parameter	**Units**						
4-CHLORO-3-METHYLPHENOL	UG/L	5 U	6 U	6 U	5 U	5 U	5 U
HEXACHLOROCYCLOPENTADIENE	UG/L	5 U	6 U	6 U	5 U	5 U	5 U
2,4,6-TRICHLOROPHENOL	UG/L	5 U	6 U	6 U	5 U	5 U	5 U
2,4,5-TRICHLOROPHENOL	UG/L	21 U	22 U	22 U	21 U	21 U	21 U
2-CHLORONAPHTHALENE	UG/L	5 U	6 U	6 U	5 U	5 U	5 U
2-NITROANILINE	UG/L	21 U	22 U	22 U	21 U	21 U	21 U
ACENAPHTHYLENE	UG/L	5 U	6 U	6 U	5 U	5 U	5 U
DIMETHYL PHTHALATE	UG/L	5 U	6 U	6 U	5 U	5 U	5 U
2,6-DINITROTOLUENE	UG/L	5 U	6 U	6 U	5 U	5 U	5 U
ACENAPHTHENE	UG/L	5 U	6 U	6 U	5 U	5 U	5 U
3-NITROANILINE	UG/L	21 U	22 U	22 U	21 U	21 U	21 U
2,4-DINITROPHENOL	UG/L	21 U	22 U	22 U	21 U	21 U	21 U
DIBENZOFURAN	UG/L	5 U	6 U	6 U	5 U	5 U	5 U
2,4-DINITROTOLUENE	UG/L	5 U	6 U	6 U	5 U	5 U	5 U
4-NITROPHENOL	UG/L	21 U	22 U	22 U	21 U	21 U	21 U
FLUORENE	UG/L	5 U	0.5 J	6 U	5 U	5 U	5 U
4-CHLOROPHENYL PHENYL ETHER	UG/L	5 U	6 U	6 U	5 U	5 U	5 U
DIETHYL PHTHALATE	UG/L	0.6 J	6 U	6 U	5 U	5 U	5 U
4-NITROANILINE	UG/L	21 U	22 U	22 U	21 U	21 U	21 U
4,6-DINITRO-2-METHYLPHENOL	UG/L	21 U	22 U	22 U	21 U	21 U	21 U
N-NITROSODIPHENYLAMINE	UG/L	5 U	6 U	6 U	5 U	5 U	5 U
4-BROMOPHENYL PHENYL ETHER	UG/L	5 U	6 U	6 U	5 U	5 U	5 U
HEXACHLOROBENZENE	UG/L	5 U	6 U	6 U	5 U	5 U	5 U
PENTACHLOROPHENOL	UG/L	21 U	22 U	22 U	21 U	21 U	21 U
PHENANTHRENE	UG/L	5 U	0.6 J	6 U	5 U	5 U	5 U
ANTHRACENE	UG/L	5 U	6 U	6 U	5 U	5 U	5 U
DI-n-BUTYL PHTHALATE	UG/L	5 U	0.6 U	6 U	5 U	2 J	0.7 J
FLUORANTHENE	UG/L	5 U	6 U	6 U	5 U	5 U	5 U
PYRENE	UG/L	5 U	6 U	6 U	5 U	5 U	5 U
BENZYL BUTYL PHTHALATE	UG/L	5 U	0.4 J	6 U	5 U	5 U	5 U
3,3'-DICHLOROBENZIDINE	UG/L	5 U	6 U	6 U	5 U	5 U	5 U
BENZO(a)ANTHRACENE	UG/L	5 U	6 U	6 U	5 U	5 U	5 U
CHRYSENE	UG/L	5 U	6 U	6 U	5 U	5 U	5 U
bis(2-ETHYLHEXYL) PHTHALATE	UG/L	5 U	6 U	6 U	1 J	5 J	2 J
DI-n-OCTYLPHTHALATE	UG/L	5 U	6 U	6 U	5 U	5 U	5 U

	Building	AOC E	AOC E	AOC E	AOC E	AOC E	AOC E
	StationID	AOC-E-MW04	AOC-E-MW05	AOC-E-MW06	AOC-E-MWE02	AOC-E-MWE03	AOC-E-MWE03
	SampleID	NDA023	NDA026	NDA028	NDA024	NDA025FD1	NDA029
	DateCollected	04/27/2000	05/01/2000	04/27/2000	04/05/2000	04/05/2000	04/05/2000
	Depth	0 to 0	0 to 0	0 to 0	0 to 0	0 to 0	0 to 0
Parameter	**Units**						
BENZO(b)FLUORANTHENE	UG/L	5 U	6 U	6 U	5 U	5 U	5 U
BENZO(k)FLUORANTHENE	UG/L	5 U	6 U	6 U	5 U	5 U	5 U
BENZO(a)PYRENE	UG/L	5 U	6 U	6 U	5 U	5 U	5 U
INDENO(1,2,3-c,d)PYRENE	UG/L	5 U	6 U	6 U	5 U	5 U	5 U
DIBENZ(a,h)ANTHRACENE	UG/L	5 U	6 U	6 U	5 U	5 U	5 U
BENZO(g,h,i)PERYLENE	UG/L	5 U	6 U	6 U	5 U	5 U	5 U
CARBAZOLE	UG/L	5 U	6 U	6 U	5 U	5 U	5 U
VOLATILES							
CHLOROMETHANE	UG/L	1 U	1 U	1 U	1 U	1 U	1 U
VINYL CHLORIDE	UG/L	1 U	1 U	1 U	1 U	1 U	1 U
BROMOMETHANE	UG/L	1 U	1 U	1 U	1 U	1 U	1 U
1,3-DICHLOROBENZENE	UG/L	1 U	1 U	1 U	1 U	1 U	1 U
CHLOROETHANE	UG/L	1 U	1 U	1 U	1 U	1 U	1 U
1,1-DICHLOROETHENE	UG/L	1 U	1 U	1 U	1 U	1 U	1 U
1,4-DICHLOROBENZENE	UG/L	1 U	1 U	1 U	1 U	1 U	1 U
1,2-DICHLOROBENZENE	UG/L	3 =	4 =	1 U	1 U	1 U	1 U
CARBON DISULFIDE	UG/L	1 U	1 U	1 U	1 U	1 U	1 U
METHYLENE CHLORIDE	UG/L	2 U	2 U	2 U	2 U	2 U	2 U
1,1-DICHLOROETHANE	UG/L	1 U	1 U	1 U	1 U	1 U	1 U
ACETONE	UG/L	12 =	5 U	10 =	5 R	5 R	5 R
METHYL ETHYL KETONE (2-BUTANONE)	UG/L	5 U	5 UJ	5 U	5 R	5 R	5 R
CHLOROFORM	UG/L	1 U	1 U	1 U	1 U	1 U	1 U
1,1,1-TRICHLOROETHANE	UG/L	1 U	1 U	1 U	1 U	1 U	1 U
CARBON TETRACHLORIDE	UG/L	1 U	1 U	1 U	1 U	1 U	1 U
BENZENE	UG/L	2 =	6 =	1 U	1 U	1 U	1 U
1,2-DICHLOROETHANE	UG/L	1 U	32 =	1 U	1 U	1 U	1 U
TRICHLOROETHYLENE (TCE)	UG/L	1 U	1 U	1 U	1 U	1 U	1 U
1,2-DICHLOROPROPANE	UG/L	1 U	1 U	1 U	1 U	1 U	1 U
1,2,4-TRICHLOROBENZENE	UG/L	1 U	1 U	1 U	1 U	1 U	1 U
BROMODICHLOROMETHANE	UG/L	1 U	1 U	1 U	1 U	1 U	1 U
cis-1,3-DICHLOROPROPENE	UG/L	1 U	1 U	1 U	1 U	1 U	1 U
METHYL ISOBUTYL KETONE (4-METHYL-2-I	UG/L	5 U	5 U	5 U	5 U	5 U	5 U
TOLUENE	UG/L	1 U	0.3 J	1 U	1 U	1 U	1 U
trans-1,3-DICHLOROPROPENE	UG/L	1 U	1 U	1 U	1 U	1 U	1 U
1,1,2-TRICHLOROETHANE	UG/L	1 U	1 U	1 U	1 U	1 U	1 U

AOC E Groundwater Data

	Building	AOC E	AOC E	AOC E	AOC E	AOC E	AOC E
	StationID	AOC-E-MW04	AOC-E-MW05	AOC-E-MW06	AOC-E-MWE02	AOC-E-MWE03	AOC-E-MWE03
	SampleID	NDA023	NDA026	NDA028	NDA024	NDA025FD1	NDA029
	DateCollected	04/27/2000	05/01/2000	04/27/2000	04/05/2000	04/05/2000	04/05/2000
	Depth	0 to 0	0 to 0	0 to 0	0 to 0	0 to 0	0 to 0
Parameter	**Units**						
TETRACHLOROETHYLENE(PCE)	UG/L	1 U	1 UJ	1 U	1 U	1 U	1 U
2-HEXANONE	UG/L	5 U	5 U	5 U	5 U	5 U	5 U
DIBROMOCHLOROMETHANE	UG/L	1 U	1 U	1 U	1 U	1 U	1 U
CHLOROBENZENE	UG/L	1 U	1 U	1 U	1 U	1 U	1 U
ETHYLBENZENE	UG/L	1 U	0.9 J	1 U	1 U	1 U	1 U
M,P-XYLENE (SUM OF ISOMERS)	UG/L	0.9 J	17 =	1 U	1 U	1 U	1 U
O-XYLENE (1,2-DIMETHYLBENZENE)	UG/L	1 U	3 =	1 U	1 U	1 U	1 U
STYRENE	UG/L	1 U	1 U	1 U	1 U	1 U	1 U
BROMOFORM	UG/L	1 U	1 U	1 U	1 U	1 U	1 U
1,1,2,2-TETRACHLOROETHANE	UG/L	1 U	1 U	1 U	1 U	1 U	1 U
XYLENES, TOTAL	UG/L	0.9 J	20 =	1 U	1 U	1 U	1 U
BROMOCHLOROMETHANE	UG/L	1 U	1 U	1 U	1 U	1 U	1 U
1,2-DIBROMO-3-CHLOROPROPANE	UG/L	1 U	1 U	1 U	1 U	1 U	1 U
cis-1,2-DICHLOROETHYLENE	UG/L	1 U	1 U	1 U	1 U	1 U	1 U
trans-1,2-DICHLOROETHENE	UG/L	1 U	1 U	1 U	1 U	1 U	1 U
TOTAL 1,2-DICHLOROETHENE	UG/L	1 U	1 U	1 U	1 U	1 U	1 U
ETHYLENE DIBROMIDE (1,2-DIBROMOETH	UG/L	1 U	1 U	1 U	1 U	1 U	1 U

	Building	AOC F	AOC F	AOC F	AOC F	AOC F	AOC F	AOC F	AOC F	AOC F	AOC F
	StationID	AF-SB01	AF-SB01	AF-SB01	AF-SB01	AF-SB01	AF-SB01	AF-SB02	AF-SB02	AF-SB02	AF-SB02
	SampleID	NDA235	NDA236	NDA237FD1	NDA238	NDA239	NDA240	NDA241	NDA242	NDA243	NDA244
	DateCollected	04/11/2000	04/11/2000	04/11/2000	04/11/2000	04/11/2000	04/11/2000	04/11/2000	04/11/2000	04/11/2000	04/11/2000
	Depth	4 to 6	9 to 11	9 to 11	14 to 16	19 to 21	24 to 26	4 to 6	9 to 11	14 to 16	19 to 21
Parameter	**Units**										
EXPLOSIVES											
2,6-DINITROTOLUENE	UG/KG	504 UJ	423 UJ	395 UJ	424 UJ	555 UJ	397 UJ	471 UJ	375 UJ	893 UJ	388 UJ
NITROBENZENE	UG/KG	504 UJ	423 UJ	395 UJ	424 UJ	555 UJ	397 UJ	471 UJ	375 UJ	893 UJ	388 UJ
2,4-DINITROTOLUENE	UG/KG	504 UJ	423 UJ	395 UJ	424 UJ	555 UJ	397 UJ	471 UJ	375 UJ	893 UJ	388 UJ
METALS											
ALUMINUM	MG/KG	9280 =	8080 =	7060 =	15200 =	23000 =	20100 =	6900 =	24600 =	17600 =	17000 =
ANTIMONY	MG/KG	0.18 UJ	0.16 UJ	0.16 UJ	0.16 UJ	0.16 UJ	0.4 J	0.16 J	0.17 UJ	0.21 J	0.15 UJ
ARSENIC	MG/KG	0.45 U	0.46 J	0.38 U	0.51 J	0.51 J	0.41 U	0.38 U	0.57 J	0.55 J	0.38 U
BARIUM	MG/KG	71.2 =	230 =	132 =	478 =	199 =	145 =	72.2 =	102 =	168 =	75 =
BERYLLIUM	MG/KG	0.28 J	0.45 J	0.31 J	0.37 J	0.28 J	0.11 J	0.18 J	0.21 J	0.28 J	0.18 J
CADMIUM	MG/KG	0.026 U	0.023 U	0.023 U	0.023 U	0.023 U	0.024 U	0.022 U	0.025 U	0.024 U	0.022 U
CALCIUM	MG/KG	2290 =	2850 =	1590 =	5010 =	5600 =	5670 =	3030 =	6160 =	4890 =	5120 =
CHROMIUM, TOTAL	MG/KG	8.8 =	14.7 =	11.6 =	59.3 =	118 =	129 =	8.2 =	75.4 =	27.7 =	19.2 =
COBALT	MG/KG	9.1 J	17.6 =	8.9 J	63.2 =	42.1 =	31.3 =	7.4 J	38.3 =	21.5 =	18.7 =
COPPER	MG/KG	32.3 J	28.2 J	22 J	60.4 J	120 J	91 J	25.9 J	60.4 J	66.9 J	52.6 J
IRON	MG/KG	19700 =	19500 =	18300 =	33100 =	45300 =	34000 =	16200 =	37200 =	43300 =	33700 =
LEAD	MG/KG	1.5 =	2.6 =	1.6 =	2.3 =	0.67 J	0.13 U	1.8 =	1.1 =	0.8 =	0.12 U
MAGNESIUM	MG/KG	3690 =	2830 =	2690 =	13100 =	22700 =	17400 =	2650 =	17700 =	12100 =	14100 =
MANGANESE	MG/KG	372 =	1550 =	806 =	3090 =	1300 =	1090 =	424 =	723 =	965 =	516 =
MERCURY	MG/KG	0.012 U	0.011 U	0.013 U	0.01 U	0.011 U	0.012 U	0.014 U	0.016 U	0.012 U	0.012 U
NICKEL	MG/KG	J	9.7 =	6.1 J	37 =	37.1 =	43.7 =	4.1 J	43.2 J	15.2 =	13.2 =
POTASSIUM	MG/KG	1320 =	853 J	813 J	598 J	180 J	213 J	902 J	543 J	811 J	345 J
SELENIUM	MG/KG	0.28 U	0.54 J	0.3 J	0.24 U	0.24 U	0.25 U	0.24 U	0.26 J	0.25 U	0.23 U
SILVER	MG/KG	0.066 U	0.057 U	0.056 U	0.057 U	0.057 U	0.097 J	0.056 U	0.062 U	0.059 U	0.055 U
SODIUM	MG/KG	128 J	303 J	266 J	349 J	2120 =	1800 =	82.6 J	2470 J	1130 J	932 J
THALLIUM	MG/KG	0.92 J	1.2 J	1.5 J	1.4 J	1.4 J	0.94 J	0.77 J	1 J	1.7 J	1.4 J
VANADIUM	MG/KG	57.1 =	75.2 =	65 =	135 =	163 =	81.8 =	48.5 =	129 =	148 =	97.8 =
ZINC	MG/KG	31.9 J	24.4 J	20.1 J	40.6 J	56.2 J	48.6 J	27.7 J	60.4 J	55.7 J	47.1 J
PCB											
PCB-1016 (AROCHLOR 1016)	UG/KG	43 UJ	37 UJ	37 UJ	37 UJ	37 UJ	40 UJ	37 UJ	41 UJ	39 UJ	36 UJ
PCB-1260 (AROCHLOR 1260)	UG/KG	43 UJ	37 UJ	37 UJ	37 UJ	37 UJ	40 UJ	37 UJ	41 UJ	39 UJ	36 UJ
PCB-1221 (AROCHLOR 1221)	UG/KG	88 UJ	76 UJ	75 UJ	75 UJ	75 UJ	80 UJ	75 UJ	82 UJ	79 UJ	73 UJ
PCB-1232 (AROCHLOR 1232)	UG/KG	43 UJ	37 UJ	37 UJ	37 UJ	37 UJ	40 UJ	37 UJ	41 UJ	39 UJ	36 UJ
PCB-1242 (AROCHLOR 1242)	UG/KG	43 UJ	37 UJ	37 UJ	37 UJ	37 UJ	40 UJ	37 UJ	41 UJ	39 UJ	36 UJ
PCB-1248 (AROCHLOR 1248)	UG/KG	43 UJ	37 UJ	37 UJ	37 UJ	37 UJ	40 UJ	37 UJ	41 UJ	39 UJ	36 UJ
PCB-1254 (AROCHLOR 1254)	UG/KG	43 UJ	37 UJ	37 UJ	37 UJ	37 UJ	40 UJ	37 UJ	41 UJ	39 UJ	36 UJ
PESTICIDES											
ALPHA BHC	UG/KG	2.2 UJ	1.9 UJ	1.9 UJ	1.9 UJ	1.9 UJ	2 UJ	1.9 UJ	2.1 UJ	2 UJ	1.9 UJ
BETA BHC	UG/KG	2.2 UJ	1.9 UJ	1.9 UJ	1.9 UJ	1.9 UJ	2 UJ	1.9 UJ	2.1 UJ	2 UJ	1.9 UJ
DELTA BHC	UG/KG	2.2 UJ	1.9 UJ	1.9 UJ	1.9 UJ	1.9 UJ	2 UJ	1.9 UJ	2.1 UJ	2 UJ	1.9 UJ
GAMMA BHC (LINDANE)	UG/KG	2.2 UJ	1.9 UJ	1.9 UJ	1.9 UJ	1.9 UJ	2 UJ	1.9 UJ	2.1 UJ	2 UJ	1.9 UJ
HEPTACHLOR	UG/KG	2.2 UJ	1.9 UJ	1.9 UJ	1.9 UJ	1.9 UJ	2 UJ	1.9 UJ	2.1 UJ	2 UJ	1.9 UJ
ALDRIN	UG/KG	2.2 UJ	1.9 UJ	1.9 UJ	1.9 UJ	1.9 UJ	2 UJ	1.9 UJ	2.1 UJ	2 UJ	1.9 UJ
HEPTACHLOR EPOXIDE	UG/KG	2.2 UJ	1.9 UJ	1.9 UJ	1.9 UJ	1.9 UJ	2 UJ	1.9 UJ	2.1 UJ	2 UJ	1.9 UJ
ALPHA ENDOSULFAN	UG/KG	2.2 UJ	1.9 UJ	1.9 UJ	1.9 UJ	1.9 UJ	2 UJ	1.9 UJ	2.1 UJ	2 UJ	1.9 UJ
DIELDRIN	UG/KG	4.4 UJ	3.8 UJ	3.7 UJ	3.7 UJ	3.7 UJ	4 UJ	3.7 UJ	4.1 UJ	3.9 UJ	3.7 UJ
p,p'-DDE	UG/KG	4.4 UJ	3.8 UJ	3.7 UJ	3.7 UJ	3.7 UJ	4 UJ	3.7 UJ	4.1 UJ	3.9 UJ	3.7 UJ
ENDRIN	UG/KG	4.4 UJ	3.8 UJ	3.7 UJ	3.7 UJ	3.7 UJ	4 UJ	3.7 UJ	4.1 UJ	3.9 UJ	3.7 UJ
BETA ENDOSULFAN	UG/KG	4.4 UJ	3.8 UJ	3.7 UJ	3.7 UJ	3.7 UJ	4 UJ	3.7 UJ	4.1 UJ	3.9 UJ	3.7 UJ

AOC F Surface Soil Data

Parameter	Units	Building	AOC F	AOC F	AOC F	AOC F	AOC F	AOC F	AOC F	AOC F	AOC F
		StationID	AF-SB02	AF-SB03	AF-SB03	AF-SB03	AF-SB03	AF-SB04	AF-SB04	AF-SB04	AF-SB04
		SampleID	NDA245	NDA246	NDA247FD1	NDA248	NDA249	NDA252	NDA253	NDA254	NDA255
		DateCollected	04/12/2000	04/12/2000	04/12/2000	04/12/2000	04/12/2000	04/12/2000	04/12/2000	04/12/2000	04/12/2000
		Depth	24 to 26	4 to 6	4 to 6	9 to 11	14 to 16	4 to 6	9 to 11	14 to 16	19 to 21
EXPLOSIVES											
2,6-DINITROTOLUENE	UG/KG		393 UJ	511 UJ	390 UJ	453 UJ	374 UJ	420 UJ	439 UJ	391 UJ	375 UJ
NITROBENZENE	UG/KG		393 UJ	511 UJ	390 UJ	453 UJ	374 UJ	420 UJ	439 UJ	391 UJ	375 UJ
2,4-DINITROTOLUENE	UG/KG		393 UJ	511 UJ	390 UJ	453 UJ	374 UJ	420 UJ	439 UJ	391 UJ	375 UJ
METALS											
ALUMINUM	MG/KG		23500 J	9570 J	9200 J	8940 J	25900 J	6790 J	10600 J	10700 J	24600 J
ANTIMONY	MG/KG		0.73 J	0.17 UJ	0.16 UJ	0.17 UJ	0.87 J	0.16 UJ	0.18 UJ	0.18 UJ	0.17 UJ
ARSENIC	MG/KG		0.4 U	0.42 U	0.41 J	0.49 J	0.38 U	0.4 U	0.55 J	0.43 U	0.57 J
BARIUM	MG/KG		106 =	94.1 =	96.8 =	137 =	692 =	63.5 =	156 =	88.3 =	102 =
BERYLLIUM	MG/KG		0.18 J	0.19 J	0.17 J	0.42 J	0.2 J	0.12 J	0.47 J	0.27 J	0.21 J
CADMIUM	MG/KG		0.023 U	0.025 U	0.023 U	0.024 U	0.022 U	0.023 U	0.025 U	0.025 U	0.025 U
CALCIUM	MG/KG		5710 J	3280 J	2920 J	1790 J	11200 J	2120 J	2320 J	7940 J	6160 J
CHROMIUM, TOTAL	MG/KG		28.4 J	9.9 J	11.2 J	7.3 J	24.7 J	7.7 J	12.7 J	23.2 J	75.4 J
COBALT	MG/KG		23.4 J	10.1 J	9.1 J	8.4 J	27.3 J	6.6 J	13.5 J	11 J	38.3 J
COPPER	MG/KG		55.2 J	27.8 J	30.3 J	27.6 J	54.9 J	19.9 J	29.3 J	29.7 J	60.4 J
IRON	MG/KG		42700 =	18700 =	17800 =	17300 =	48300 =	12500 =	23700 =	23000 =	37200 =
LEAD	MG/KG		0.54 J	2.1 =	2.3 =	1.4 =	0.12 U	2.3 =	1.8 =	1.5 =	1.1 =
MAGNESIUM	MG/KG		17300 J	2960 J	2780 J	3030 J	20400 J	1740 J	3360 J	3930 J	17700 J
MANGANESE	MG/KG		809 =	510 =	745 =	923 =	921 J	483 =	1230 =	544 =	723 =
MERCURY	MG/KG		0.015 U	0.015 J	0.014 U	0.015 U	0.014 U	0.014 U	0.014 U	0.017 U	0.016 U
NICKEL	MG/KG		17.8 J	4.9 J	5 J	6.7 J	26.3 J	3.7 J	7.1 J	7 J	43.2 J
POTASSIUM	MG/KG		755 J	1290 J	1230 J	1160 J	512 J	890 J	1710 J	1380 J	543 J
SELENIUM	MG/KG		0.24 U	0.46 J	0.25 U	0.42 J	0.23 U	0.41 J	0.27 U	0.27 U	0.26 U
SILVER	MG/KG		0.31 J	0.062 U	0.058 U	0.061 U	0.056 U	0.059 U	0.063 U	0.063 U	0.062 U
SODIUM	MG/KG		1140 J	63 J	75.3 J	105 J	12.9 U	63.9 J	132 J	164 J	2470 =
THALLIUM	MG/KG		0.31 U	0.99 J	0.83 J	0.85 J	0.3 U	0.32 U	0.83 J	0.76 J	1 J
VANADIUM	MG/KG		129 J	54.2 J	51.8 J	55.2 J	160 J	36.6 J	84 J	80.9 J	129 J
ZINC	MG/KG		63.7 J	29.6 J	30.7 J	29.5 J	71.6 J	28.2 J	28.9 J	30.2 J	60.4 J
PCB											
PCB-1016 (AROCHLOR 1016)	UG/KG		38 UJ	40 UJ	38 UJ	40 UJ	37 UJ	39 UJ	33 UJ	41 UJ	41 UJ
PCB-1260 (AROCHLOR 1260)	UG/KG		38 UJ	40 UJ	38 UJ	40 UJ	37 UJ	39 UJ	33 UJ	41 UJ	41 UJ
PCB-1221 (AROCHLOR 1221)	UG/KG		77 UJ	82 UJ	77 UJ	81 UJ	75 UJ	78 UJ	66 UJ	84 UJ	82 UJ
PCB-1232 (AROCHLOR 1232)	UG/KG		38 UJ	40 UJ	38 UJ	40 UJ	37 UJ	39 UJ	33 UJ	41 UJ	41 UJ
PCB-1242 (AROCHLOR 1242)	UG/KG		38 UJ	40 UJ	38 UJ	40 UJ	37 UJ	39 UJ	33 UJ	41 UJ	41 UJ
PCB-1248 (AROCHLOR 1248)	UG/KG		38 UJ	40 UJ	38 UJ	40 UJ	37 UJ	39 UJ	33 UJ	41 UJ	41 UJ
PCB-1254 (AROCHLOR 1254)	UG/KG		38 UJ	40 UJ	38 UJ	40 UJ	37 UJ	39 UJ	33 UJ	41 UJ	41 UJ
PESTICIDES											
ALPHA BHC	UG/KG		2 UJ	2.1 UJ	2 UJ	2.1 UJ	1.9 UJ	2 UJ	2.1 UJ	2.1 UJ	2.1 UJ
BETA BHC	UG/KG		2 UJ	2.1 UJ	2 UJ	2.1 UJ	1.9 UJ	2 UJ	2.1 UJ	2.1 UJ	2.1 UJ
DELTA BHC	UG/KG		2 UJ	2.1 UJ	2 UJ	2.1 UJ	1.9 UJ	2 UJ	2.1 UJ	2.1 UJ	2.1 UJ
GAMMA BHC (LINDANE)	UG/KG		2 UJ	2.1 UJ	2 UJ	2.1 UJ	1.9 UJ	2 UJ	2.1 UJ	2.1 UJ	2.1 UJ
HEPTACHLOR	UG/KG		2 UJ	2.1 UJ	2 UJ	2.1 UJ	1.9 UJ	2 UJ	2.1 UJ	2.1 UJ	2.1 UJ
ALDRIN	UG/KG		2 UJ	2.1 UJ	2 UJ	2.1 UJ	1.9 UJ	2 UJ	2.1 UJ	2.1 UJ	2.1 UJ
HEPTACHLOR EPOXIDE	UG/KG		2 UJ	2.1 UJ	2 UJ	2.1 UJ	1.9 UJ	2 UJ	2.1 UJ	2.1 UJ	2.1 UJ
ALPHA ENDOSULFAN	UG/KG		2 UJ	2.1 UJ	2 UJ	2.1 UJ	1.9 UJ	2 UJ	2.1 UJ	2.1 UJ	2.1 UJ
DIELDRIN	UG/KG		3.8 UJ	4.1 UJ	3.8 UJ	4 UJ	3.7 UJ	3.9 UJ	4.2 UJ	4.2 UJ	4.1 UJ
p,p'-DDE	UG/KG		3.8 UJ	0.47 J	3.8 UJ	4 UJ	3.7 UJ	3.9 UJ	4.2 UJ	4.2 UJ	4.1 UJ
ENDRIN	UG/KG		3.8 UJ	4.1 UJ	3.8 UJ	4 UJ	3.7 UJ	3.9 UJ	4.2 UJ	4.2 UJ	4.1 UJ
BETA ENDOSULFAN	UG/KG		3.8 UJ	4.1 UJ	3.8 UJ	4 UJ	3.7 UJ	3.9 UJ	4.2 UJ	4.2 UJ	4.1 UJ

	Building	AOC F	AOC F	AOC F	AOC F	AOC F	AOC F	AOC F	AOC F	AOC F	AOC F
	StationID	AF-SB01	AF-SB01	AF-SB01	AF-SB01	AF-SB01	AF-SB01	AF-SB02	AF-SB02	AF-SB02	AF-SB02
	SampleID	NDA235	NDA236	NDA237FD1	NDA238	NDA239	NDA240	NDA241	NDA242	NDA243	NDA244
	DateCollected	04/11/2000	04/11/2000	04/11/2000	04/11/2000	04/11/2000	04/11/2000	04/11/2000	04/11/2000	04/11/2000	04/11/2000
	Depth	4 to 6	9 to 11	9 to 11	14 to 16	19 to 21	24 to 26	4 to 6	9 to 11	14 to 16	19 to 21
Parameter	**Units**										
p,p'-DDD	UG/KG	4.4 UJ	3.8 UJ	3.7 UJ	3.7 UJ	3.7 UJ	4 UJ	3.7 UJ	4.1 UJ	3.9 UJ	3.7 UJ
ENDOSULFAN SULFATE	UG/KG	4.4 UJ	3.8 UJ	3.7 UJ	3.7 UJ	3.7 UJ	4 UJ	3.7 UJ	4.1 UJ	3.9 UJ	3.7 UJ
p,p'-DDT	UG/KG	4.4 UJ	3.8 UJ	3.7 UJ	3.7 UJ	3.7 UJ	4 UJ	3.7 UJ	4.1 UJ	3.9 UJ	3.7 UJ
METHOXYCHLOR	UG/KG	22 UJ	19 UJ	19 UJ	19 UJ	19 UJ	20 UJ	19 UJ	21 UJ	20 UJ	19 UJ
ENDRIN ALDEHYDE	UG/KG	4.4 UJ	3.8 UJ	3.7 UJ	3.7 UJ	3.7 UJ	4 UJ	3.7 UJ	4.1 UJ	3.9 UJ	3.7 UJ
ALPHA-CHLORDANE	UG/KG	2.2 UJ	1.9 UJ	1.9 UJ	1.9 UJ	1.9 UJ	2 UJ	1.9 UJ	2.1 UJ	2 UJ	1.9 UJ
GAMMA-CHLORDANE	UG/KG	2.2 UJ	1.9 UJ	1.9 UJ	1.9 UJ	1.9 UJ	2 UJ	1.9 UJ	2.1 UJ	2 UJ	1.9 UJ
ENDRIN KETONE	UG/KG	4.4 UJ	3.8 UJ	3.7 UJ	3.7 UJ	3.7 UJ	4 UJ	3.7 UJ	4.1 UJ	3.9 UJ	3.7 UJ
TOXAPHENE	UG/KG	223 UJ	192 UJ	190 UJ	191 UJ	190 UJ	204 UJ	190 UJ	209 UJ	200 UJ	186 UJ
SEMI-VOLATILES											
bis(2-CHLOROETHYL) ETHER	UG/KG	504 UJ	423 UJ	395 UJ	424 UJ	555 UJ	397 UJ	471 UJ	375 UJ	893 UJ	388 UJ
PHENOL	UG/KG	504 UJ	423 UJ	395 UJ	424 UJ	555 UJ	397 UJ	471 UJ	375 UJ	893 UJ	388 UJ
2-CHLOROPHENOL	UG/KG	504 UJ	423 UJ	395 UJ	424 UJ	555 UJ	397 UJ	471 UJ	375 UJ	893 UJ	388 UJ
1,3-DICHLOROBENZENE	UG/KG	504 UJ	423 UJ	395 UJ	424 UJ	555 UJ	397 UJ	471 UJ	375 UJ	893 UJ	388 UJ
1,4-DICHLOROBENZENE	UG/KG	504 UJ	423 UJ	395 UJ	424 UJ	555 UJ	397 UJ	471 UJ	375 UJ	893 UJ	388 UJ
1,2-DICHLOROBENZENE	UG/KG	504 UJ	423 UJ	395 UJ	424 UJ	555 UJ	397 UJ	471 UJ	375 UJ	893 UJ	388 UJ
bis(2-CHLOROISOPROPYL) ETHER	UG/KG	504 UJ	423 UJ	395 UJ	424 UJ	555 UJ	397 UJ	471 UJ	375 UJ	893 UJ	388 UJ
2-METHYLPHENOL (o-CRESOL)	UG/KG	504 UJ	423 UJ	395 UJ	424 UJ	555 UJ	397 UJ	471 UJ	375 UJ	893 UJ	388 UJ
HEXACHLOROETHANE	UG/KG	504 UJ	423 UJ	395 UJ	424 UJ	555 UJ	397 UJ	471 UJ	375 UJ	893 UJ	388 UJ
N-NITROSODI-n-PROPYLAMINE	UG/KG	504 UJ	423 UJ	395 UJ	424 UJ	555 UJ	397 UJ	471 UJ	375 UJ	893 UJ	388 UJ
CRESOLS, m & p	UG/KG	504 UJ	423 UJ	395 UJ	424 UJ	555 UJ	397 UJ	471 UJ	375 UJ	893 UJ	388 UJ
NITROBENZENE	UG/KG	504 UJ	423 UJ	395 UJ	424 UJ	555 UJ	397 UJ	471 UJ	375 UJ	893 UJ	388 UJ
ISOPHORONE	UG/KG	504 UJ	423 UJ	395 UJ	424 UJ	555 UJ	397 UJ	471 UJ	375 UJ	893 UJ	388 UJ
2-NITROPHENOL	UG/KG	504 UJ	423 UJ	395 UJ	424 UJ	555 UJ	397 UJ	471 UJ	375 UJ	893 UJ	388 UJ
2,4-DIMETHYLPHENOL	UG/KG	504 UJ	423 UJ	395 UJ	424 UJ	555 UJ	397 UJ	471 UJ	375 UJ	893 UJ	388 UJ
bis(2-CHLOROETHOXY) METHANE	UG/KG	504 UJ	423 UJ	395 UJ	424 UJ	555 UJ	397 UJ	471 UJ	375 UJ	893 UJ	388 UJ
2,4-DICHLOROPHENOL	UG/KG	504 UJ	423 UJ	395 UJ	424 UJ	555 UJ	397 UJ	471 UJ	375 UJ	893 UJ	388 UJ
1,2,4-TRICHLOROBENZENE	UG/KG	504 UJ	423 UJ	395 UJ	424 UJ	555 UJ	397 UJ	471 UJ	375 UJ	893 UJ	388 UJ
NAPHTHALENE	UG/KG	504 UJ	423 UJ	395 UJ	424 UJ	555 UJ	397 UJ	471 UJ	375 UJ	893 UJ	388 UJ
4-CHLOROANILINE	UG/KG	504 UJ	423 UJ	395 UJ	424 UJ	555 UJ	397 UJ	471 UJ	375 UJ	893 UJ	388 UJ
2-METHYLNAPHTHALENE	UG/KG	504 UJ	423 UJ	395 UJ	424 UJ	555 UJ	397 UJ	471 UJ	375 UJ	893 UJ	388 UJ
HEXACHLOROBUTADIENE	UG/KG	504 UJ	423 UJ	395 UJ	424 UJ	555 UJ	397 UJ	471 UJ	375 UJ	893 UJ	388 UJ
4-CHLORO-3-METHYLPHENOL	UG/KG	504 UJ	423 UJ	395 UJ	424 UJ	555 UJ	397 UJ	471 UJ	375 UJ	893 UJ	388 UJ
HEXACHLOROCYCLOPENTADIENE	UG/KG	504 UJ	423 UJ	395 UJ	424 UJ	555 UJ	397 UJ	471 UJ	375 UJ	893 UJ	388 UJ
2,4,6-TRICHLOROPHENOL	UG/KG	504 UJ	423 UJ	395 UJ	424 UJ	555 UJ	397 UJ	471 UJ	375 UJ	893 UJ	388 UJ
2,4,5-TRICHLOROPHENOL	UG/KG	1510 UJ	1270 UJ	1180 UJ	1270 UJ	1660 UJ	1190 UJ	1410 UJ	1130 UJ	2680 UJ	1160 UJ
2-CHLORONAPHTHALENE	UG/KG	504 UJ	423 UJ	395 UJ	424 UJ	555 UJ	397 UJ	471 UJ	375 UJ	893 UJ	388 UJ
2-NITROANILINE	UG/KG	1510 UJ	1270 UJ	1180 UJ	1270 UJ	1660 UJ	1190 UJ	1410 UJ	1130 UJ	2680 UJ	1160 UJ
ACENAPHTHYLENE	UG/KG	504 UJ	423 UJ	395 UJ	424 UJ	555 UJ	397 UJ	471 UJ	375 UJ	893 UJ	388 UJ
DIMETHYL PHTHALATE	UG/KG	504 UJ	423 UJ	395 UJ	424 UJ	555 UJ	397 UJ	471 UJ	375 UJ	893 UJ	388 UJ
2,6-DINITROTOLUENE	UG/KG	504 UJ	423 UJ	395 UJ	424 UJ	555 UJ	397 UJ	471 UJ	375 UJ	893 UJ	388 UJ
ACENAPHTHENE	UG/KG	504 UJ	423 UJ	395 UJ	424 UJ	555 UJ	397 UJ	471 UJ	375 UJ	893 UJ	388 UJ
3-NITROANILINE	UG/KG	1510 UJ	1270 UJ	1180 UJ	1270 UJ	1660 UJ	1190 UJ	1410 UJ	1130 UJ	2680 UJ	1160 UJ
2,4-DINITROPHENOL	UG/KG	1510 UJ	1270 UJ	1180 UJ	1270 UJ	1660 UJ	1190 UJ	1410 UJ	1130 UJ	2680 UJ	1160 UJ
DIBENZOFURAN	UG/KG	504 UJ	423 UJ	395 UJ	424 UJ	555 UJ	397 UJ	471 UJ	375 UJ	893 UJ	388 UJ
2,4-DINITROTOLUENE	UG/KG	504 UJ	423 UJ	395 UJ	424 UJ	555 UJ	397 UJ	471 UJ	375 UJ	893 UJ	388 UJ
4-NITROPHENOL	UG/KG	1510 UJ	1270 UJ	1180 UJ	1270 UJ	1660 UJ	1190 UJ	1410 UJ	1130 UJ	2680 UJ	1160 UJ
FLUORENE	UG/KG	504 UJ	423 UJ	395 UJ	424 UJ	555 UJ	397 UJ	471 UJ	375 UJ	893 UJ	388 UJ
4-CHLOROPHENYL PHENYL ETHER	UG/KG	504 UJ	423 UJ	395 UJ	424 UJ	555 UJ	397 UJ	471 UJ	375 UJ	893 UJ	388 UJ

AOC F Surface Soil Data

	Building	AOC F	AOC F	AOC F	AOC F	AOC F	AOC F	AOC F	AOC F	AOC F
	StationID	AF-SB02	AF-SB03	AF-SB03	AF-SB03	AF-SB03	AF-SB04	AF-SB04	AF-SB04	AF-SB04
	SampleID	NDA245	NDA246	NDA247FD1	NDA248	NDA249	NDA252	NDA253	NDA254	NDA255
	DateCollected	04/12/2000	04/12/2000	04/12/2000	04/12/2000	04/12/2000	04/12/2000	04/12/2000	04/12/2000	04/12/2000
	Depth	24 to 26	4 to 6	4 to 6	9 to 11	14 to 16	4 to 6	9 to 11	14 to 16	19 to 21
Parameter	**Units**									
p,p'-DDD	UG/KG	3.8 UJ	4.1 UJ	3.8 UJ	4 UJ	3.7 UJ	3.9 UJ	4.2 UJ	4.2 UJ	4.1 UJ
ENDOSULFAN SULFATE	UG/KG	3.8 UJ	4.1 UJ	3.8 UJ	4 UJ	3.7 UJ	3.9 UJ	4.2 UJ	4.2 UJ	4.1 UJ
p,p'-DDT	UG/KG	3.8 UJ	4.1 UJ	3.8 UJ	4 UJ	3.7 UJ	3.9 UJ	4.2 UJ	4.2 UJ	4.1 UJ
METHOXYCHLOR	UG/KG	20 UJ	21 UJ	20 UJ	21 UJ	19 UJ	20 UJ	21 UJ	21 UJ	21 UJ
ENDRIN ALDEHYDE	UG/KG	3.8 UJ	4.1 UJ	3.8 UJ	4 UJ	3.7 UJ	3.9 UJ	4.2 UJ	4.2 UJ	4.1 UJ
ALPHA-CHLORDANE	UG/KG	2 UJ	2.1 UJ	2 UJ	2.1 UJ	1.9 UJ	2 UJ	2.1 UJ	2.1 UJ	2.1 UJ
GAMMA-CHLORDANE	UG/KG	2 UJ	2.1 UJ	2 UJ	2.1 UJ	1.9 UJ	2 UJ	2.1 UJ	2.1 UJ	2.1 UJ
ENDRIN KETONE	UG/KG	3.8 UJ	4.1 UJ	3.8 UJ	4 UJ	3.7 UJ	3.9 UJ	4.2 UJ	4.2 UJ	4.1 UJ
TOXAPHENE	UG/KG	196 UJ	208 UJ	196 UJ	205 UJ	190 UJ	198 UJ	213 UJ	212 UJ	209 UJ
SEMI-VOLATILES										
bis(2-CHLOROETHYL) ETHER	UG/KG	393 UJ	511 UJ	390 UJ	453 UJ	374 UJ	420 UJ	439 UJ	391 UJ	375 UJ
PHENOL	UG/KG	393 UJ	511 UJ	390 UJ	453 UJ	374 UJ	420 UJ	439 UJ	391 UJ	375 UJ
2-CHLOROPHENOL	UG/KG	393 UJ	511 UJ	390 UJ	453 UJ	374 UJ	420 UJ	439 UJ	391 UJ	375 UJ
1,3-DICHLOROBENZENE	UG/KG	393 UJ	511 UJ	390 UJ	453 UJ	374 UJ	420 UJ	439 UJ	391 UJ	375 UJ
1,4-DICHLOROBENZENE	UG/KG	393 UJ	511 UJ	390 UJ	453 UJ	374 UJ	420 UJ	439 UJ	391 UJ	375 UJ
1,2-DICHLOROBENZENE	UG/KG	393 UJ	511 UJ	390 UJ	453 UJ	374 UJ	420 UJ	439 UJ	391 UJ	375 UJ
bis(2-CHLOROISOPROPYL) ETHER	UG/KG	393 UJ	511 UJ	390 UJ	453 UJ	374 UJ	420 UJ	439 UJ	391 UJ	375 UJ
2-METHYLPHENOL (o-CRESOL)	UG/KG	393 UJ	511 UJ	390 UJ	453 UJ	374 UJ	420 UJ	439 UJ	391 UJ	375 UJ
HEXACHLOROETHANE	UG/KG	393 UJ	511 UJ	390 UJ	453 UJ	374 UJ	420 UJ	439 UJ	391 UJ	375 UJ
N-NITROSODI-n-PROPYLAMINE	UG/KG	393 UJ	511 UJ	390 UJ	453 UJ	374 UJ	420 UJ	439 UJ	391 UJ	375 UJ
CRESOLS, m & p	UG/KG	393 UJ	511 UJ	390 UJ	453 UJ	374 UJ	420 UJ	439 UJ	391 UJ	375 UJ
NITROBENZENE	UG/KG	393 UJ	511 UJ	390 UJ	453 UJ	374 UJ	420 UJ	439 UJ	391 UJ	375 UJ
ISOPHORONE	UG/KG	393 UJ	511 UJ	390 UJ	453 UJ	374 UJ	420 UJ	439 UJ	391 UJ	375 UJ
2-NITROPHENOL	UG/KG	393 UJ	511 UJ	390 UJ	453 UJ	374 UJ	420 UJ	439 UJ	391 UJ	375 UJ
2,4-DIMETHYLPHENOL	UG/KG	393 UJ	511 UJ	390 UJ	453 UJ	374 UJ	420 UJ	439 UJ	391 UJ	375 UJ
bis(2-CHLOROETHOXY) METHANE	UG/KG	393 UJ	511 UJ	390 UJ	453 UJ	374 UJ	420 UJ	439 UJ	391 UJ	375 UJ
2,4-DICHLOROPHENOL	UG/KG	393 UJ	511 UJ	390 UJ	453 UJ	374 UJ	420 UJ	439 UJ	391 UJ	375 UJ
1,2,4-TRICHLOROBENZENE	UG/KG	393 UJ	511 UJ	390 UJ	453 UJ	374 UJ	420 UJ	439 UJ	391 UJ	375 UJ
NAPHTHALENE	UG/KG	393 UJ	511 UJ	390 UJ	453 UJ	374 UJ	420 UJ	439 UJ	391 UJ	375 UJ
4-CHLOROANILINE	UG/KG	393 UJ	511 UJ	390 UJ	453 UJ	374 UJ	420 UJ	439 UJ	391 UJ	375 UJ
2-METHYLNAPHTHALENE	UG/KG	393 UJ	511 UJ	390 UJ	453 UJ	374 UJ	420 UJ	439 UJ	391 UJ	375 UJ
HEXACHLOROBUTADIENE	UG/KG	393 UJ	511 UJ	390 UJ	453 UJ	374 UJ	420 UJ	439 UJ	391 UJ	375 UJ
4-CHLORO-3-METHYLPHENOL	UG/KG	393 UJ	511 UJ	390 UJ	453 UJ	374 UJ	420 UJ	439 UJ	391 UJ	375 UJ
HEXACHLOROCYCLOPENTADIENE	UG/KG	393 UJ	511 UJ	390 UJ	453 UJ	374 UJ	420 UJ	439 UJ	391 UJ	375 UJ
2,4,6-TRICHLOROPHENOL	UG/KG	393 UJ	511 UJ	390 UJ	453 UJ	374 UJ	420 UJ	439 UJ	391 UJ	375 UJ
2,4,5-TRICHLOROPHENOL	UG/KG	1180 UJ	1530 UJ	1170 UJ	1360 UJ	1120 UJ	1260 UJ	1320 UJ	1170 UJ	1130 UJ
2-CHLORONAPHTHALENE	UG/KG	393 UJ	511 UJ	390 UJ	453 UJ	374 UJ	420 UJ	439 UJ	391 UJ	375 UJ
2-NITROANILINE	UG/KG	1180 UJ	1530 UJ	1170 UJ	1360 UJ	1120 UJ	1260 UJ	1320 UJ	1170 UJ	1130 UJ
ACENAPHTHYLENE	UG/KG	393 UJ	511 UJ	390 UJ	453 UJ	374 UJ	420 UJ	439 UJ	391 UJ	375 UJ
DIMETHYL PHTHALATE	UG/KG	393 UJ	511 UJ	390 UJ	453 UJ	374 UJ	420 UJ	439 UJ	391 UJ	375 UJ
2,6-DINITROTOLUENE	UG/KG	393 UJ	511 UJ	390 UJ	453 UJ	374 UJ	420 UJ	439 UJ	391 UJ	375 UJ
ACENAPHTHENE	UG/KG	393 UJ	511 UJ	390 UJ	453 UJ	374 UJ	420 UJ	439 UJ	391 UJ	375 UJ
3-NITROANILINE	UG/KG	1180 UJ	1530 UJ	1170 UJ	1360 UJ	1120 UJ	1260 UJ	1320 UJ	1170 UJ	1130 UJ
2,4-DINITROPHENOL	UG/KG	1180 UJ	1530 UJ	1170 UJ	1360 UJ	1120 UJ	1260 UJ	1320 UJ	1170 UJ	1130 UJ
DIBENZOFURAN	UG/KG	393 UJ	511 UJ	390 UJ	453 UJ	374 UJ	420 UJ	439 UJ	391 UJ	375 UJ
2,4-DINITROTOLUENE	UG/KG	393 UJ	511 UJ	390 UJ	453 UJ	374 UJ	420 UJ	439 UJ	391 UJ	375 UJ
4-NITROPHENOL	UG/KG	1180 UJ	1530 UJ	1170 UJ	1360 UJ	1120 UJ	1260 UJ	1320 UJ	1170 UJ	1130 UJ
FLUORENE	UG/KG	393 UJ	511 UJ	390 UJ	453 UJ	374 UJ	420 UJ	439 UJ	391 UJ	375 UJ
4-CHLOROPHENYL PHENYL ETHER	UG/KG	393 UJ	511 UJ	390 UJ	453 UJ	374 UJ	420 UJ	439 UJ	391 UJ	375 UJ

	Building	AOC F	AOC F	AOC F	AOC F	AOC F	AOC F	AOC F	AOC F	AOC F	AOC F
	StationID	AF-SB01	AF-SB01	AF-SB01	AF-SB01	AF-SB01	AF-SB01	AF-SB02	AF-SB02	AF-SB02	AF-SB02
	SampleID	NDA235	NDA236	NDA237FD1	NDA238	NDA239	NDA240	NDA241	NDA242	NDA243	NDA244
	DateCollected	04/11/2000	04/11/2000	04/11/2000	04/11/2000	04/11/2000	04/11/2000	04/11/2000	04/11/2000	04/11/2000	04/11/2000
	Depth	4 to 6	9 to 11	9 to 11	14 to 16	19 to 21	24 to 26	4 to 6	9 to 11	14 to 16	19 to 21
Parameter	**Units**										
DIETHYL PHTHALATE	UG/KG	504 UJ	423 UJ	395 UJ	424 UJ	555 UJ	397 UJ	471 UJ	375 UJ	893 UJ	388 UJ
4-NITROANILINE	UG/KG	1510 UJ	1270 UJ	1180 UJ	1270 UJ	1660 UJ	1190 UJ	1410 UJ	1130 UJ	2680 UJ	1160 UJ
4,6-DINITRO-2-METHYLPHENOL	UG/KG	1510 UJ	1270 UJ	1180 UJ	1270 UJ	1660 UJ	1190 UJ	1410 UJ	1130 UJ	2680 UJ	1160 UJ
N-NITROSODIPHENYLAMINE	UG/KG	504 UJ	423 UJ	395 UJ	424 UJ	555 UJ	397 UJ	471 UJ	375 UJ	893 UJ	388 UJ
4-BROMOPHENYL PHENYL ETHER	UG/KG	504 UJ	423 UJ	395 UJ	424 UJ	555 UJ	397 UJ	471 UJ	375 UJ	893 UJ	388 UJ
HEXACHLOROBENZENE	UG/KG	504 UJ	423 UJ	395 UJ	424 UJ	555 UJ	397 UJ	471 UJ	375 UJ	893 UJ	388 UJ
PENTACHLOROPHENOL	UG/KG	1510 UJ	1270 UJ	1180 UJ	1270 UJ	1660 UJ	1190 UJ	1410 UJ	1130 UJ	2680 UJ	1160 UJ
PHENANTHRENE	UG/KG	504 UJ	423 UJ	395 UJ	424 UJ	555 UJ	397 UJ	471 UJ	375 UJ	893 UJ	388 UJ
ANTHRACENE	UG/KG	504 UJ	423 UJ	395 UJ	424 UJ	555 UJ	397 UJ	471 UJ	375 UJ	893 UJ	388 UJ
DI-n-BUTYL PHTHALATE	UG/KG	504 UJ	423 UJ	395 UJ	424 UJ	555 UJ	397 UJ	471 UJ	375 UJ	893 UJ	388 UJ
FLUORANTHENE	UG/KG	504 UJ	423 UJ	395 UJ	424 UJ	555 UJ	397 UJ	471 UJ	375 UJ	893 UJ	388 UJ
PYRENE	UG/KG	504 UJ	423 UJ	395 UJ	424 UJ	555 UJ	397 UJ	471 UJ	375 UJ	893 UJ	388 UJ
BENZYL BUTYL PHTHALATE	UG/KG	504 UJ	423 UJ	395 UJ	424 UJ	555 UJ	397 UJ	471 UJ	375 UJ	893 UJ	388 UJ
3,3'-DICHLOROBENZIDINE	UG/KG	1010 UJ	846 UJ	789 UJ	849 UJ	1110 UJ	795 UJ	941 UJ	751 UJ	1790 UJ	775 UJ
BENZO(a)ANTHRACENE	UG/KG	504 UJ	423 UJ	395 UJ	424 UJ	555 UJ	397 UJ	471 UJ	375 UJ	893 UJ	388 UJ
CHRYSENE	UG/KG	504 UJ	423 UJ	395 UJ	424 UJ	555 UJ	397 UJ	471 UJ	375 UJ	893 UJ	388 UJ
bis(2-ETHYLHEXYL) PHTHALATE	UG/KG	504 UJ	423 UJ	395 UJ	424 UJ	555 UJ	397 UJ	471 UJ	375 UJ	893 UJ	388 UJ
DI-n-OCTYLPHTHALATE	UG/KG	504 UJ	423 UJ	395 UJ	424 UJ	555 UJ	397 UJ	471 UJ	375 UJ	893 UJ	388 UJ
BENZO(b)FLUORANTHENE	UG/KG	504 UJ	423 UJ	395 UJ	424 UJ	555 UJ	397 UJ	471 UJ	375 UJ	893 UJ	388 UJ
BENZO(k)FLUORANTHENE	UG/KG	504 UJ	423 UJ	395 UJ	424 UJ	555 UJ	397 UJ	471 UJ	375 UJ	893 UJ	388 UJ
BENZO(a)PYRENE	UG/KG	504 UJ	423 UJ	395 UJ	424 UJ	555 UJ	397 UJ	471 UJ	375 UJ	893 UJ	388 UJ
INDENO(1,2,3-c,d)PYRENE	UG/KG	504 UJ	423 UJ	395 UJ	424 UJ	555 UJ	397 UJ	471 UJ	375 UJ	893 UJ	388 UJ
DIBENZ(a,h)ANTHRACENE	UG/KG	504 UJ	423 UJ	395 UJ	424 UJ	555 UJ	397 UJ	471 UJ	375 UJ	893 UJ	388 UJ
BENZO(g,h,I)PERYLENE	UG/KG	504 UJ	423 UJ	395 UJ	424 UJ	555 UJ	397 UJ	471 UJ	375 UJ	893 UJ	388 UJ
CARBAZOLE	UG/KG	504 UJ	423 UJ	395 UJ	424 UJ	555 UJ	397 UJ	471 UJ	375 UJ	893 UJ	388 UJ
VOLATILES											
CHLOROMETHANE	UG/KG	12 U	10 U	11 U	10 U	11 U	12 U	10 U	10 U	10 U	11 U
VINYL CHLORIDE	UG/KG	12 U	10 U	11 U	10 U	11 U	12 U	10 U	10 U	10 U	11 U
BROMOMETHANE	UG/KG	12 U	10 U	11 U	10 U	11 U	12 U	10 U	10 U	10 U	11 U
1,3-DICHLOROBENZENE	UG/KG	504 UJ	423 UJ	395 UJ	424 UJ	555 UJ	397 UJ	471 UJ	375 UJ	893 UJ	388 UJ
CHLOROETHANE	UG/KG	12 UJ	10 UJ	11 UJ	10 UJ	11 UJ	12 UJ	10 UJ	10 UJ	10 UJ	11 UJ
1,1-DICHLOROETHENE	UG/KG	12 U	10 U	11 U	10 U	11 U	12 U	10 U	10 U	10 U	11 U
1,4-DICHLOROBENZENE	UG/KG	504 UJ	423 UJ	395 UJ	424 UJ	555 UJ	397 UJ	471 UJ	375 UJ	893 UJ	388 UJ
1,2-DICHLOROBENZENE	UG/KG	504 UJ	423 UJ	395 UJ	424 UJ	555 UJ	397 UJ	471 UJ	375 UJ	893 UJ	388 UJ
CARBON DISULFIDE	UG/KG	12 U	10 U	11 U	10 U	11 U	12 U	10 U	10 U	10 U	11 U
METHYLENE CHLORIDE	UG/KG	12 U	10 U	11 U	10 U	11 U	12 U	10 U	10 U	10 U	11 U
1,1-DICHLOROETHANE	UG/KG	12 U	10 U	11 U	10 U	11 U	12 U	10 U	10 U	10 U	11 U
ACETONE	UG/KG	21 R	20 R	22 R	16 R	23 R	21 R	12 R	20 R	17 R	21 R
METHYL ETHYL KETONE (2-BUTANONE)	UG/KG	12 R	10 R	11 R	10 R	11 R	12 R	10 R	10 R	10 R	11 R
CHLOROFORM	UG/KG	12 U	10 U	11 U	10 U	11 U	12 U	10 U	10 U	10 U	11 U
1,1,1-TRICHLOROETHANE	UG/KG	12 U	10 U	11 U	10 U	11 U	12 U	10 U	10 U	10 U	11 U
CARBON TETRACHLORIDE	UG/KG	12 U	10 U	11 U	10 U	11 U	12 U	10 U	10 U	10 U	11 U
BENZENE	UG/KG	12 U	10 U	11 U	10 U	11 U	12 U	10 U	10 U	10 U	11 U
1,2-DICHLOROETHANE	UG/KG	12 U	10 U	11 U	10 U	11 U	12 U	10 U	10 U	10 U	11 U
TRICHLOROETHYLENE (TCE)	UG/KG	12 U	10 U	11 U	10 U	11 U	12 U	10 U	10 U	10 U	11 U
1,2-DICHLOROPROPANE	UG/KG	12 U	10 U	11 U	10 U	11 U	12 U	10 U	10 U	10 U	11 U
1,2,4-TRICHLOROBENZENE	UG/KG	504 UJ	423 UJ	395 UJ	424 UJ	555 UJ	397 UJ	471 UJ	375 UJ	893 UJ	388 UJ
BROMODICHLOROMETHANE	UG/KG	12 U	10 U	11 U	10 U	11 U	12 U	10 U	10 U	10 U	11 U
cis-1,3-DICHLOROPROPENE	UG/KG	12 U	10 U	11 U	10 U	11 U	12 U	10 U	10 U	10 U	11 U

AOC F Surface Soil Data

	Building	AOC F	AOC F	AOC F	AOC F	AOC F	AOC F	AOC F	AOC F	AOC F
	StationID	AF-SB02	AF-SB03	AF-SB03	AF-SB03	AF-SB03	AF-SB04	AF-SB04	AF-SB04	AF-SB04
	SampleID	NDA245	NDA246	NDA247FD1	NDA248	NDA249	NDA252	NDA253	NDA254	NDA255
	DateCollected	04/12/2000	04/12/2000	04/12/2000	04/12/2000	04/12/2000	04/12/2000	04/12/2000	04/12/2000	04/12/2000
	Depth	24 to 26	4 to 6	4 to 6	9 to 11	14 to 16	4 to 6	9 to 11	14 to 16	19 to 21
Parameter	**Units**									
DIETHYL PHTHALATE	UG/KG	393 UJ	511 UJ	37 J	453 UJ	374 UJ	420 UJ	439 UJ	391 UJ	375 UJ
4-NITROANILINE	UG/KG	1180 UJ	1530 UJ	1170 UJ	1360 UJ	1120 UJ	1260 UJ	1320 UJ	1170 UJ	1130 UJ
4,6-DINITRO-2-METHYLPHENOL	UG/KG	1180 UJ	1530 UJ	1170 UJ	1360 UJ	1120 UJ	1260 UJ	1320 UJ	1170 UJ	1130 UJ
N-NITROSODIPHENYLAMINE	UG/KG	393 UJ	511 UJ	390 UJ	453 UJ	374 UJ	420 UJ	439 UJ	391 UJ	375 UJ
4-BROMOPHENYL PHENYL ETHER	UG/KG	393 UJ	511 UJ	390 UJ	453 UJ	374 UJ	420 UJ	439 UJ	391 UJ	375 UJ
HEXACHLOROBENZENE	UG/KG	393 UJ	511 UJ	390 UJ	453 UJ	374 UJ	420 UJ	439 UJ	391 UJ	375 UJ
PENTACHLOROPHENOL	UG/KG	1180 UJ	1530 UJ	1170 UJ	1360 UJ	1120 UJ	1260 UJ	1320 UJ	1170 UJ	1130 UJ
PHENANTHRENE	UG/KG	393 UJ	511 UJ	390 UJ	453 UJ	374 UJ	420 UJ	439 UJ	391 UJ	375 UJ
ANTHRACENE	UG/KG	393 UJ	511 UJ	390 UJ	453 UJ	374 UJ	420 UJ	439 UJ	391 UJ	375 UJ
DI-n-BUTYL PHTHALATE	UG/KG	393 UJ	511 UJ	390 UJ	453 UJ	374 UJ	420 UJ	439 UJ	391 UJ	375 UJ
FLUORANTHENE	UG/KG	393 UJ	511 UJ	390 UJ	453 UJ	374 UJ	420 UJ	439 UJ	391 UJ	375 UJ
PYRENE	UG/KG	393 UJ	511 UJ	390 UJ	453 UJ	374 UJ	420 UJ	439 UJ	391 UJ	375 UJ
BENZYL BUTYL PHTHALATE	UG/KG	393 UJ	511 UJ	390 UJ	453 UJ	374 UJ	420 UJ	439 UJ	391 UJ	375 UJ
3,3'-DICHLOROBENZIDINE	UG/KG	785 UJ	1020 UJ	781 UJ	906 UJ	749 UJ	840 UJ	878 UJ	781 UJ	751 UJ
BENZO(a)ANTHRACENE	UG/KG	393 UJ	511 UJ	390 UJ	453 UJ	374 UJ	420 UJ	439 UJ	391 UJ	375 UJ
CHRYSENE	UG/KG	393 UJ	511 UJ	390 UJ	453 UJ	374 UJ	420 UJ	439 UJ	391 UJ	375 UJ
bis(2-ETHYLHEXYL) PHTHALATE	UG/KG	393 UJ	511 UJ	390 UJ	453 UJ	374 UJ	420 UJ	439 UJ	391 UJ	375 UJ
DI-n-OCTYLPHTHALATE	UG/KG	393 UJ	511 UJ	390 UJ	453 UJ	374 UJ	420 UJ	439 UJ	391 UJ	375 UJ
BENZO(b)FLUORANTHENE	UG/KG	393 UJ	511 UJ	390 UJ	453 UJ	374 UJ	420 UJ	439 UJ	391 UJ	375 UJ
BENZO(k)FLUORANTHENE	UG/KG	393 UJ	511 UJ	390 UJ	453 UJ	374 UJ	420 UJ	439 UJ	391 UJ	375 UJ
BENZO(a)PYRENE	UG/KG	393 UJ	511 UJ	390 UJ	453 UJ	374 UJ	420 UJ	439 UJ	391 UJ	375 UJ
INDENO(1,2,3-c,d)PYRENE	UG/KG	393 UJ	511 UJ	390 UJ	453 UJ	374 UJ	420 UJ	439 UJ	391 UJ	375 UJ
DIBENZ(a,h)ANTHRACENE	UG/KG	393 UJ	511 UJ	390 UJ	453 UJ	374 UJ	420 UJ	439 UJ	391 UJ	375 UJ
BENZO(g,h,i)PERYLENE	UG/KG	393 UJ	511 UJ	390 UJ	453 UJ	374 UJ	420 UJ	439 UJ	391 UJ	375 UJ
CARBAZOLE	UG/KG	393 UJ	511 UJ	390 UJ	453 UJ	374 UJ	420 UJ	439 UJ	391 UJ	375 UJ
VOLATILES										
CHLOROMETHANE	UG/KG	10 U	10 U	10 U	11 U	10 U	12 U	11 U	11 U	10 U
VINYL CHLORIDE	UG/KG	10 U	10 U	10 U	11 U	10 U	12 U	11 U	11 U	10 U
BROMOMETHANE	UG/KG	10 U	10 U	10 U	11 U	10 U	12 U	11 U	11 U	10 U
1,3-DICHLOROBENZENE	UG/KG	393 UJ	511 UJ	390 UJ	453 UJ	374 UJ	420 UJ	439 UJ	391 UJ	375 UJ
CHLOROETHANE	UG/KG	10 UJ	10 UJ	10 UJ	11 UJ	10 UJ	12 UJ	11 UJ	11 UJ	10 UJ
1,1-DICHLOROETHENE	UG/KG	10 U	10 U	10 U	11 U	10 U	12 U	11 U	11 U	10 U
1,4-DICHLOROBENZENE	UG/KG	393 UJ	511 UJ	390 UJ	453 UJ	374 UJ	420 UJ	439 UJ	391 UJ	375 UJ
1,2-DICHLOROBENZENE	UG/KG	393 UJ	511 UJ	390 UJ	453 UJ	374 UJ	420 UJ	439 UJ	391 UJ	375 UJ
CARBON DISULFIDE	UG/KG	10 U	0.4 J	10 U	11 U	0.3 J	12 U	11 U	11 U	10 U
METHYLENE CHLORIDE	UG/KG	10 U	10 U	10 U	11 U	10 U	12 U	11 U	11 U	10 U
1,1-DICHLOROETHANE	UG/KG	10 U	10 U	10 U	11 U	10 U	12 U	11 U	11 U	10 U
ACETONE	UG/KG	27 R	44 R	30 R	18 R	36 R	106 R	24 R	15 R	20 R
METHYL ETHYL KETONE (2-BUTANONE)	UG/KG	4 J	7 J	4 J	11 R	2 J	2 J	11 R	11 R	10 R
CHLOROFORM	UG/KG	10 U	10 U	10 U	11 U	10 U	12 U	11 U	11 U	10 U
1,1,1-TRICHLOROETHANE	UG/KG	10 U	10 U	10 U	11 U	10 U	12 U	11 U	11 U	10 U
CARBON TETRACHLORIDE	UG/KG	10 U	10 U	10 U	11 U	10 U	12 U	11 U	11 U	10 U
BENZENE	UG/KG	0.2 J	0.1 U	10 U	11 U	10 U	12 U	11 U	11 U	10 U
1,2-DICHLOROETHANE	UG/KG	0.3 J	10 U	0.3 J	11 U	0.3 J	12 U	11 U	11 U	10 U
TRICHLOROETHYLENE (TCE)	UG/KG	10 U	10 U	10 U	11 U	10 U	12 U	11 U	11 U	10 U
1,2-DICHLOROPROPANE	UG/KG	10 U	10 U	10 U	11 U	10 U	12 U	11 U	11 U	10 U
1,2,4-TRICHLOROBENZENE	UG/KG	393 UJ	511 UJ	390 UJ	453 UJ	374 UJ	420 UJ	439 UJ	391 UJ	375 UJ
BROMODICHLOROMETHANE	UG/KG	10 U	10 U	10 U	11 U	10 U	12 U	11 U	11 U	10 U
cis-1,3-DICHLOROPROPENE	UG/KG	10 U	10 U	10 U	11 U	10 U	12 U	11 U	11 U	10 U

	Building	AOC F	AOC F	AOC F	AOC F	AOC F	AOC F	AOC F	AOC F	AOC F	AOC F
	StationID	AF-SB01	AF-SB01	AF-SB01	AF-SB01	AF-SB01	AF-SB01	AF-SB02	AF-SB02	AF-SB02	AF-SB02
	SampleID	NDA235	NDA236	NDA237FD1	NDA238	NDA239	NDA240	NDA241	NDA242	NDA243	NDA244
	DateCollected	04/11/2000	04/11/2000	04/11/2000	04/11/2000	04/11/2000	04/11/2000	04/11/2000	04/11/2000	04/11/2000	04/11/2000
	Depth	4 to 6	9 to 11	9 to 11	14 to 16	19 to 21	24 to 26	4 to 6	9 to 11	14 to 16	19 to 21
Parameter	**Units**										
METHYL ISOBUTYL KETONE (4-METHYL-2-P	UG/KG	12 U	10 U	11 U	10 U	11 U	12 U	10 U	10 U	10 U	11 U
TOLUENE	UG/KG	12 U	10 U	11 U	10 U	11 U	12 U	10 U	10 U	10 U	11 U
trans-1,3-DICHLOROPROPENE	UG/KG	12 U	10 U	11 U	10 U	11 U	12 U	10 U	10 U	10 U	11 U
1,1,2-TRICHLOROETHANE	UG/KG	12 U	10 U	11 U	10 U	11 U	12 U	10 U	10 U	10 U	11 U
TETRACHLOROETHYLENE(PCE)	UG/KG	12 U	10 U	11 U	10 U	11 U	12 U	10 U	10 U	10 U	11 U
2-HEXANONE	UG/KG	12 U	10 U	11 U	10 U	11 U	12 U	10 U	10 U	10 U	11 U
DIBROMOCHLOROMETHANE	UG/KG	12 U	10 U	11 U	10 U	11 U	12 U	10 U	10 U	10 U	11 U
CHLOROBENZENE	UG/KG	12 U	10 U	11 U	10 U	11 U	12 U	10 U	10 U	10 U	11 U
ETHYLBENZENE	UG/KG	12 U	10 U	11 U	10 U	11 U	12 U	10 U	10 U	10 U	11 U
M,P-XYLENE (SUM OF ISOMERS)	UG/KG	12 U	10 U	11 U	10 U	11 U	12 U	10 U	10 U	10 U	11 U
O-XYLENE (1,2-DIMETHYLBENZENE)	UG/KG	12 U	10 U	11 U	10 U	11 U	12 U	10 U	10 U	10 U	11 U
STYRENE	UG/KG	12 U	10 U	11 U	10 U	11 U	12 U	10 U	10 U	10 U	11 U
BROMOFORM	UG/KG	12 U	10 U	11 U	10 U	11 U	12 U	10 U	10 U	10 U	11 U
1,1,2,2-TETRACHLOROETHANE	UG/KG	12 U	10 U	11 U	10 U	11 U	12 U	10 U	10 U	10 U	11 U
XYLENES, TOTAL	UG/KG	12 U	10 U	11 U	10 U	11 U	12 U	10 U	10 U	10 U	11 U

AOC F Surface Soil Data

	Building	AOC F	AOC F	AOC F	AOC F	AOC F	AOC F	AOC F	AOC F	AOC F
	StationID	AF-SB02	AF-SB03	AF-SB03	AF-SB03	AF-SB03	AF-SB04	AF-SB04	AF-SB04	AF-SB04
	SampleID	NDA245	NDA246	NDA247FD1	NDA248	NDA249	NDA252	NDA253	NDA254	NDA255
	DateCollected	04/12/2000	04/12/2000	04/12/2000	04/12/2000	04/12/2000	04/12/2000	04/12/2000	04/12/2000	04/12/2000
	Depth	24 to 26	4 to 6	4 to 6	9 to 11	14 to 16	4 to 6	9 to 11	14 to 16	19 to 21
Parameter	**Units**									
METHYL ISOBUTYL KETONE (4-METHYL-2-P	UG/KG	10 U	10 U	10 U	11 U	10 U	12 U	11 U	11 U	10 U
TOLUENE	UG/KG	10 U	10 U	10 U	11 U	0.4 J	12 U	11 U	11 U	10 U
trans-1,3-DICHLOROPROPENE	UG/KG	10 U	10 U	10 U	11 U	10 U	12 U	11 U	11 U	10 U
1,1,2-TRICHLOROETHANE	UG/KG	10 U	10 U	10 U	11 U	10 U	12 U	11 U	11 U	10 U
TETRACHLOROETHYLENE(PCE)	UG/KG	10 U	10 U	10 U	11 U	10 U	12 U	11 U	11 U	10 U
2-HEXANONE	UG/KG	10 U	10 U	10 U	11 U	10 U	12 U	11 U	11 U	10 U
DIBROMOCHLOROMETHANE	UG/KG	10 U	10 U	10 U	11 U	10 U	12 U	11 U	11 U	10 U
CHLOROBENZENE	UG/KG	10 U	0.7 J	10 U	11 U	10 U	12 U	11 U	11 U	10 U
ETHYLBENZENE	UG/KG	10 U	10 U	10 U	11 U	10 U	12 U	11 U	11 U	10 U
M,P-XYLENE (SUM OF ISOMERS)	UG/KG	0.2 U	10 U	10 U	0.3 J	0.9 J	12 U	0.4 J	0.7 J	10 U
O-XYLENE (1,2-DIMETHYLBENZENE)	UG/KG	10 U	10 U	10 U	11 U	0.4 J	12 U	11 U	11 U	10 U
STYRENE	UG/KG	10 U	10 U	10 U	11 U	10 U	12 U	11 U	11 U	10 U
BROMOFORM	UG/KG	10 U	10 U	10 U	11 U	10 U	12 U	11 U	11 U	10 U
1,1,2,2-TETRACHLOROETHANE	UG/KG	10 U	10 U	10 U	11 U	10 U	12 U	11 U	11 U	10 U
XYLENES, TOTAL	UG/KG	0.2 U	10 U	10 U	0.3 J	1.3 J	12 U	0.4 J	0.7 J	10 U

APPENDIX K

Data Quality Evaluation

Vieques NASD Quality Evaluation (DQE)

TO: Marty Clasen/TPA
Astrid Clarke/DFB

FROM: Kevin A. Sanders/GNV

DATE: August 28, 2000

The purpose of the data quality evaluation process is to assess the effect of the overall analytical process on the usability of the data. The two major categories of data evaluation are laboratory performance and matrix interferences. Evaluation of laboratory performance is a check for compliance with the method requirements; either the laboratory did, or did not, analyze the samples within the limits of the analytical method. Evaluation of matrix interferences is more subtle and involves the analysis of several areas of results including surrogate spike recoveries, matrix spike recoveries, and duplicate sample results.

Introduction

Samples were collected from April 4, 2000 through June 12, 2000. Field QC samples collected included field duplicates, field blanks, trip blanks (analyzed for VOCs only), and equipment rinsate blanks. The number of each type of sample is listed by analytical method in Table 1. The samples were analyzed for the following analytical fractions:

- Volatile organic compounds (VOCs) by CLP SOW OLMO4.2
- Semivolatile organic compounds (SVOCs) by CLP SOW OLMO4.2
- Metals by ILMO4.0
- Organochlorine Pesticides and PCB's by CLP SOW OLMO4.2
- Explosives by SW846 method 8330
- Low Level Organics by OLCO2.1

Before the analytical results were released by the laboratory, both the sample and QC data were carefully reviewed to verify sample identity, instrument calibration, detection limits, dilution factors, numerical computations, accuracy of transcriptions, and chemical interpretations. Additionally, the QC data were reduced and the resulting data were reviewed to ascertain whether they were within the laboratory-defined limits for accuracy and precision. Any non-conforming data were discussed in the data package cover letter and case narrative.

The hardcopy data packages were reviewed by the project data validation subcontractor (Heartland Environmental Services, Inc) using the process outlined in the *EPA Region II's Functional Guidelines for Data Review* (Organic and Inorganic) SOP's. Data validation checklists used were those specified by EPA Region II. Areas of review included (when applicable to the SOW) holding time compliance, calibration verification, blank results, matrix spike precision and accuracy, method accuracy as demonstrated by LCSs, field duplicate results, surrogate recoveries, internal standard performance, and interference checks. The Region II data review worksheet was completed for each of these data packages and any non-conformance documented. This data review and validation process is independent of the laboratory's checks and focuses on the usability of the data to support the project data interpretation and decision-making processes.

Data that were not within the acceptance limits were appended with a qualifying flag, which consists of a single or double-letter abbreviation that reflects a problem with the data. Although the qualifying flags originate during the database query process, they are included in the final data summary tables deliverable so that the data will not be used indiscriminately. The following flags were used in this text:

- **U** - Undetected. Analyte was analyzed for but not detected above the method detection limit.
- **UJ** - Detection limit estimated. Analyte was analyzed for, and qualified as not detected. The result is estimated.
- **J** - Estimated. The analyte was present, but the reported value may not be accurate or precise.
- **R** - Rejected. The data are unusable. (NOTE: Analyte/compound may or may not be present.)

Numerical sample results that are greater than the method detection limit or inorganic instrument detection limit (MDL or IDL) but less than the contract required reporting limit (CRDL) are qualified with a "J" for estimated as required by the EPA Functional Guidelines for Evaluating Data Quality.

The entire database was queried for frequency of detection in blanks and samples, detailed listing of blank detects, matrix spike/matrix spike duplicate (MS/MSD) results, field duplicate precision, surrogate recoveries, preparation and analysis dates pertaining to holding times. The queries were then manipulated to calculate necessary statistics for evaluation of the data.

Once the data review and validation process was completed, the entire data set were reviewed for chemical compound frequencies of detection, dilution factors that might affect data usability, and patterns of target compound distribution. The data set was also evaluated to identify potential data limitations, uncertainties, or both in the analytical results. Attachment A lists the changes in data qualifiers due to the validation processes. Attachment H presents all data which were rejected.

Holding Times

Table 3 reflects the data which were qualified as estimated (J or UJ) for being prepared outside of holding time criteria. None of the data were rejected for failure to meet holding times.

Calibration

Attachment A indicates that several organic compounds were qualified as estimated due to initial or continuing calibration deficiencies. Table 4 presents these data. Of the 1037 results qualified for calibration criteria outside control limits, 420 were rejected. The rejected data applied to acetone and 2-butanone only. These compounds are identified as poor performers in the CLP SOW. All other 617 qualifications were estimated (J or UJ).

Method Accuracy

The laboratory control sample (LCS) reflects method accuracy. The LCS consists of deionized water spiked with target compounds or elements and processed through the entire method of preparation and analysis. All LCS recoveries met control limit criteria for these data.

Potential Field Sampling and Laboratory Contamination

Four types of blank samples were used to monitor potential contamination introduced during field sampling, sample handling, shipping activities, as well as sample preparation and analysis in the laboratory.

- **Trip Blank (TB)**: A sample of ASTM Type II water that is prepared in the laboratory prior to the sampling event. The water is stored in VOC sample containers and is not opened in the field, and travels back to the laboratory with the other samples for VOC analysis. This blank is used to monitor the potential for sample contamination during the sample container trip. One trip blank should be included in each sample cooler that contained samples for VOC analysis. Twenty-three trip blanks were submitted to the laboratory with these samples.

- **Equipment Rinsate Blank (ERB)**: A sample of the target-free water used for the final rinse during the equipment decontamination process. This blank sample is collected by rinsing the sampling equipment after decontamination and is analyzed for the same analytical parameters as the corresponding samples. This blank is used to monitor potential contamination caused by incomplete equipment decontamination. One equipment rinsate blank should be collected per day of sampling, per type of sampling equipment. Depending on the method, up to twenty-six equipment rinsate blanks were submitted to the laboratory for this field effort.

- **Field Blank or Ambient Blank (FB or AB)**: The field blank is an aliquot of the source water used for equipment decontamination. This blank monitors contamination that may be introduced from the water used for decontamination. One field blank should be collected from each source of decontamination water and analyzed for the same parameters as the associated samples. Depending on the method, up to five field blanks were collected during this sampling event.

- **Laboratory Method Blank or Method Blank (MB)**: A laboratory method blank is ASTM Type II water that is treated as a sample in that it undergoes the same analytical process as the corresponding field samples. Method blanks are used to monitor laboratory performance and contamination introduced during the analytical procedure. One method blank was prepared and analyzed for every twenty samples or per analytical batch, whichever was more frequent.

According to the EPA Functional Guidelines, concentrations of common organic contaminants detected in samples at less than ten times the concentration of the associated blanks can be attributed to field sampling and laboratory contamination rather than environmental contamination from site activities. Common organic contaminants include acetone, methylene chloride, 2-butanone, and the phthalates. For other inorganic and organic contaminants, five times the concentration detected in the associated blanks (rather than ten times) is used to qualify results as potential field and/or laboratory contamination rather than environmental contamination. The ten times rule was applied on an SDG by SDG basis and not globally. EPA Region II direction does not provide for the validation contractor to use any blank value determined below the CRDL. Additionally, use of field blank data is left to the validation contractors discretion and is generally not applied, as was the case with this data set.

Field blank or global blank application would account for anomalous data which should also be attributed to laboratory or field blank contamination and, or instrument noise for many organic compounds and metals.

Attachment A (Change in Qualifiers) lists all changes in qualifier due to data validation and blank contamination. A comprehensive list of all detects in each blank is provided in Attachment B. Table 2 compiles the blank detections into a "frequency of detection" by target parameter. Additionally, Attachment G compiles frequency of detection by target analyte for all field samples after validation.

Eleven volatile compounds were reported in laboratory and/or field blanks. Two common disinfection byproducts (DPBP) were detected in ambient and rinsate blanks. Chloroform, a trihalomethane (THM) was reported in all ambient and rinsate blanks. Bromodichloromethane, also a THM, was detected in ambient and rinsate blanks. Chloromethane was detected in a single ambient and rinsate blank. No field samples reported detections for these THM compounds. As Table 2 indicates, 1,1-dichloroethene, 1,2-dichloroethane, ethylbenzene, sum of m.p-xylene, o-xylene, styrene, toluene, and total xylenes were reported in a minimal number of blanks at concentration levels well below the reporting limit. No field samples were qualified by the subcontractor for these compounds.

Phthalates are used as plasticizers. The most common phthalates are bis(2-ethylhexyl) phthalate (BEHP), Di-n-butylphthalate, and Diethyl phthalate. Phthalates are often introduced into samples during handling. Gloves are often used when handling sampling equipment such as pumps, hoses, split spoons, dredges and bailers. Additionally, laboratory chemists use gloves when handling samples and extracts. Gloves are coated with plasticizers such as BEHP to facilitate release of the gloves from the skin. Table 2 indicates that BEHP was detected in ambient and rinsate blanks; Diethylphthalate in equipment and laboratory blanks, and Di-n-octylphthalate in a laboratory blank. Attachment A indicates that 10 and 31 samples were qualified as non-detect for BEHP and di-ethylphthalate, respectively. If global application of the flags were applied, the majority of all phthalate detections would be qualified as not detected due to contamination. Thus, caution should be utilized when making decisions based upon phthalate data.

Phenol, benzo(g,h,I)perylene, and indeno(1,2,3-c,d)pyrene were detected in a single rinsate blank at concentrations below the reporting limit. No field samples were flagged for these compounds due to blank contamination.

A single soil laboratory method blank and a single water laboratory method blank were reported to contain low levels of p,p'-DDT and PCB-1016, respectively. No field samples were qualified for blank contamination for these compounds.

As listed in Table2, several metals were reported in either the laboratory method, equipment rinsate, and/or ambient field blanks. However, no samples were qualified due to metallic blank contamination.

Matrix Effects

Surrogate Spike Recovery

Surrogate spike compounds were added to every sample analyzed for the organic parameters including field and laboratory blanks as well as field environmental samples. Surrogate spikes consist of organic compounds which are similar to the method targets in chemical composition and behavior in the analytical process, but which are not normally found in environmental samples.

Surrogate spike recoveries were used to monitor both laboratory performance and matrix interferences. Surrogate spike recoveries from field and laboratory blanks were used to evaluate laboratory performance because the blanks should represent an "ideal" sample matrix. Surrogate spike recoveries for field samples were used to evaluate the potential for matrix interferences. According to *Functional Guidelines*, data are not qualified with respect to surrogate recoveries unless one or more volatile surrogates are out of specifications. Semivolatiles are not qualified unless two or more surrogates, within the same fraction (base/neutral or acid fraction), are out of specification.

All reported surrogate spike recoveries for field and QC samples are presented by each analytical fraction in Attachment C.

As Attachment C indicates, the majority of surrogate recoveries were well within method acceptance ranges. A single sample (NDA104FD1) was rejected for the 12 method 8330 compounds due to poor surrogate recovery. All other samples affected by surrogates outside control limits were estimated. The recoveries indicate that the matrix did not significantly influence the analytical method or the final analytical result.

Matrix Spike/Matrix Spike Duplicate Precision and Accuracy

A matrix spike is an aliquot of sample spiked with a known concentration of target analyte(s). The spiking occurs prior to sample preparation and analysis. The matrix spike duplicate is an intralaboratory-split sample spiked with identical concentrations of target analyte(s) as the MS. This spiking also occurs prior to sample preparation and analysis. They (the MS/MSD pair) are used to document the accuracy and precision of a method as influenced by a given sample matrix. For the MS/MSD measurement, three aliquots of a single sample are analyzed; one native sample and two spiked with target analytes or compounds. Matrix accuracy is evaluated from the spike recoveries, while precision is evaluated from comparison of the percent recoveries of the MS and MSD. All MS/MSD precision and accuracy results are listed in Attachment D. Another measurement of precision is the native duplicate. This is an intralaboratory-split sample which is not spiked, but reflects the actual concentrations in the sample and its duplicate. The results are compared and precision calculated. Results which are non-detect or near the reporting limit cannot be calculated for the precision statistic. Attachment E presents laboratory native duplicate precision statistics.

Organic results are not qualified upon the results of MS/MSD results alone. Evaluation is in conjunction with surrogate and internal standard (if applicable) results. Additionally, many MS/MSD samples require dilution and thus the spike compounds added are diluted out and unable to be evaluated. The majority of the accuracy and precision results were well within established criteria, indicating that the specific sample matrix did not influence the overall analytical process or the final numerical sample result. No organic methods required qualification due to the MS/MSD precision and accuracy measurements indicating that the matrix did not influence the method or the final analytical result.

Inorganic results may be qualified solely upon the results of the matrix spike/matrix spike duplicate precision and accuracy. Instances where the native sample concentration for a given element exceeds the spike added concentration by a factor of four or more are disregarded as the spike added would be masked by the native concentration. According to *Functional Guidelines*, metals results obtained through analysis by traditional methods with recoveries of greater than 30% and outside the 75-125% recovery control limits are required to be flagged as estimated. Precision requirements for soils and waters are at 35 and 20 relative percent difference (RPD), respectively.

As Attachments D and E indicate, the majority of the accuracy and precision results were well within established criteria. Only 10 barium, 9 manganese, 5 dissolved iron, and 5 mercury results were rejected due matrix spike recoveries. These data indicate that the specific sample matrix did not greatly influence the overall analytical process or the final numerical sample result.

Field Duplicate Sample Results

Field duplicate analyses measure both field and laboratory precision and can also be affected by the homogeneity of the samples. Therefore the results may have more variability than lab duplicates, which measure only lab performance. According to the EPA *Functional Guidelines*, there are no qualification criteria for field duplicate precision.

Dependent upon the method, there were up to ten sets of field duplicates collected during this field effort. Both the native and duplicate samples were analyzed for the same parameters.

An aqueous control limit of ± 20% for the RPD was used for original and duplicate sample values greater than or equal to five times the RL. Solid samples utilized a control limit of 35 RPD. A control limit of ± the RL was used if either the sample for the duplicate value was less than five times the RL for waters and 2 times the RL for soils. In the cases where only one result is above the five times the RL level and the other is below, the ± RL criteria were applied. Attachment F includes a summary of the field duplicate measurements and their associated precision statistic.

As the attachment reflects, the vast majority of the calculated precision data were within the defined control limits. Thus, the precision data indicate that matrix heterogeneity and sampling technique did not greatly influence the final numerical result.

Sample Results for Metals Near the Method Detection Limit (MDL)

The MDL is defined as the minimum concentration of an analyte that can be identified, measured, and reported with 99% confidence that the analyte concentration is greater than zero. Sample results at, or near the MDL may be false positives caused by instrument noise or low-level background shifts enhanced by a matrix, rather than a true analyte signal. Additionally, concentrations reported at up to 5 times the MDL should be recognized as lacking accuracy or precision.

PARCCs

Precision--is defined as the agreement between duplicate results, and was estimated by comparing duplicate matrix spike recoveries, native laboratory duplicates, and field duplicate sample results. MS/MSD and laboratory duplicate precision was documented as well within control limit criteria for most samples and targets. Other than the documented exceptions, the precision between native and field duplicate sample results were within acceptable criteria for the majority of the measurements indicating that sample matrix did not significantly interfere with the overall analytical process.

Accuracy--is a measure of the agreement between an experimental determination and the true value of the parameter being measured. For the organic analyses, each of the samples was spiked with a surrogate compound; and for organic and inorganic analyses a MS/ MSD, and LCS were spiked with a known reference material before preparation. Each of these approaches provides a measure of the matrix effects on the analytical accuracy. The LCS results demonstrate accuracy of the method. MS/MSD results establish precision and accuracy of the matrix. Spike recoveries were within the method acceptance limits for the majority of the measurements; therefore, other than the documented exceptions, there was no evidence of significant matrix interferences that would affect the usability of the data.

Representativeness--this criteria is a qualitative measure of the degree to which sample data accurately and precisely represent a characteristic environmental condition. Representativeness is a subjective parameter and is used to evaluate the efficacy of the sampling plan design. Representativeness was demonstrated by providing full descriptions in the project scoping documents of the sampling techniques and the rationale used for selecting sampling locations.

Completeness--is defined as the percentage of measurements that are judged to be valid compared to the to total number of measurements made. Other than the 34 non-detected acrolein results rejected for poor continuing calibration statistics as previously mentioned, no other data were rejected. A goal of 90 percent usable data was established in the project scoping document and **98 %** percent (60437/61685) of the data was determined to be valid.

Comparability--is another qualitative measure designed to express the confidence with which one data set may be compared to another. Factors that affect comparability are sample collection and handling techniques, sample matrix type, and analytical method. Comparability is limited by the other PARCC parameters because data sets can be compared with confidence only when precision

and accuracy are known. Data from this investigation are comparable with other data collected at the site because only EPA methods were used to analyze the sample and EPA Level III QC data are available to support the quality of the data.

Summary and Conclusions

Conclusions of the data quality evaluation process include:

- The laboratory analyzed the samples according to the EPA methods stated in the work plan as demonstrated by the deliverable summaries and analytical run sequences
- Sample results for metals above the IDL but less than the CRDL may be attributed to instrument noise and/or low level contamination and not site-related activities and as such may be false positives.
- Sample results for target organic compounds above the MDL but less than the RL should be considered as uncertain but indicative of the presence of that compound at an estimated concentration
- Spike recoveries, surrogates, and duplicate sample results (other than the exceptions documented in the text and attachments) indicate that the specific sample matrix did not significantly interfere with the analytical process or the final numerical result.

The project objectives or PARCCs were met, and the data can be used in the project decision-making process as qualified by the data quality evaluation process.

Table 1 - Number of Samples Collected by Matrix, Type, and Method

Matrix	Analytical Method	Preparation Method	N	FD	AB	EB	TB
WG	E200.7	FLDFLT	26	2			
SB	E200.7	SW3050	81	9			
SD	E200.7	SW3050	15	2			
SS	E200.7	SW3050	81	9			
SW	E200.7	SW3050	7	1			
WG	E200.7	SW3050	26	2	5	23	
WG	E314.0	NONE	15	2	2	5	
WG	SW7470	FLDFLT	26	2			
SW	SW7470	METHOD	7	1			
WG	SW7470	METHOD	26	2	4	19	
SB	SW7471	METHOD	81	9	1	4	
SD	SW7471	METHOD	15	2			
SS	SW7471	METHOD	81	9			
SW	SW8081	SW3510	7	1			
WG	SW8081	SW3510	26	2	5	23	
SB	SW8081	SW3550	81	9			
SD	SW8081	SW3550	15	2			
SS	SW8081	SW3550	81	9			
SW	SW8082	SW3510	7	1			
WG	SW8082	SW3510	26	2	5	23	
SB	SW8082	SW3550	81	9			
SD	SW8082	SW3550	15	2			
SS	SW8082	SW3550	81	9			
SB	SW8260	SW5030	94	10			
SD	SW8260	SW5030	15	2			
SS	SW8260	SW5030	85	9			
SW	SW8260	SW5030	7	1			
WG	SW8260	SW5030	26	2	5	26	23
SW	SW8270	SW3510	7	1			
WG	SW8270	SW3510	26	2	5	26	
SB	SW8270	SW3550	94	10			
SD	SW8270	SW3550	15	2			
SS	SW8270	SW3550	85	9			
SW	SW8330	SW3510	7	1			
WG	SW8330	SW3510	12	1	3	10	
SB	SW8330	SW3550	20	2			
SD	SW8330	SW3550	10	1			
SS	SW8330	SW3550	26	3			

Table 2 - Frequency of De' on in Blank Samples

Matrix	Type	Analytical Method	Prep Method	Parameter	Number Analyzed	Number Detected	Min Detected	Max Detected	Min RL	Max RL	Min DL	Max DL	Units
WQ	EB	E200.7	SW3050	ALUMINUM	23	3	31.6	100	200	200	25.8	25.8	ug/L
WATER	LB	E200.7	SW3050	ALUMINUM	17	11	-40.984	96.088	200	200	25.8	25.8	ug/L
SOIL	LB	E200.7	SW3050	ALUMINUM	23	10	-6.37	6.467	40	40	2.58	2.58	mg/kg
WQ	EB	E200.7	SW3050	BARIUM	23	22	0.11	1.9	200	200	0.1	0.1	ug/L
WATER	LB	E200.7	SW3050	BARIUM	17	7	0.108	0.42	200	200	0.1	0.1	ug/L
WQ	AB	E200.7	SW3050	BARIUM	5	3	0.11	0.26	200	200	0.1	0.1	ug/L
SOIL	LB	E200.7	SW3050	BARIUM	23	10	0.011	0.025	40	40	0.01	0.01	mg/kg
WATER	LB	E200.7	FLDFLT	BARIUM, DISSOLVED	1	1	0.176	0.176	200	200	0.1	0.1	ug/L
WQ	EB	E200.7	SW3050	BERYLLIUM	23	4	0.32	0.56	5	5	0.3	0.3	ug/L
WQ	AB	E200.7	SW3050	BERYLLIUM	5	1	0.49	0.49	5	5	0.3	0.3	ug/L
WATER	LB	E200.7	SW3050	BERYLLIUM	17	10	-0.55	0.472	5	5	0.3	0.3	ug/L
WATER	LB	E200.7	FLDFLT	BERYLLIUM, DISSOLVED	1	1	0.352	0.352	5	5	0.3	0.3	ug/L
WQ	EB	E200.7	SW3050	CALCIUM	23	23	37.6	180	5000	5000	11.7	11.7	ug/L
WATER	LB	E200.7	SW3050	CALCIUM	17	14	20.966	151.523	5000	5000	11.6	11.7	ug/L
WQ	AB	E200.7	SW3050	CALCIUM	5	4	26.8	72.7	5000	5000	11.7	11.7	ug/L
SOIL	LB	E200.7	SW3050	CALCIUM	23	20	1.421	20.094	1000	1000	1.17	1.2	mg/kg
WATER	LB	E200.7	FLDFLT	CALCIUM, DISSOLVED	1	1	52.259	52.259	5000	5000	11.7	11.7	ug/L
WQ	EB	E200.7	SW3050	CHROMIUM, TOTAL	23	12	0.67	5.8	10	10	0.5	0.5	ug/L
SOIL	LB	E200.7	SW3050	CHROMIUM, TOTAL	23	7	0.054	0.135	2	2	0.05	0.05	mg/kg
WQ	EB	E200.7	SW3050	COBALT	23	1	1.7	1.7	50	50	0.5	0.5	ug/L
WQ	EB	E200.7	SW3050	COPPER	23	8	2	3.9	25	25	1.9	1.9	ug/L
WQ	AB	E200.7	SW3050	COPPER	5	1	2.6	2.6	25	25	1.9	1.9	ug/L
WATER	LB	E200.7	SW3050	COPPER	17	3	2.204	2.204	25	25	1.9	1.9	ug/L
SOIL	LB	E200.7	SW3050	COPPER	23	1	0.298	0.298	5	5	0.19	0.19	mg/kg
WQ	EB	E200.7	SW3050	IRON	23	19	14.7	160	100	100	12.2	12.2	ug/L
WATER	LB	E200.7	SW3050	IRON	17	13	12.349	74.796	100	100	12.2	12.2	ug/L
WQ	AB	E200.7	SW3050	IRON	5	2	19.3	21.2	100	100	12.2	12.2	ug/L
SOIL	LB	E200.7	SW3050	IRON	23	20	1.387	5.078	20	20	1.22	1.22	mg/kg
WATER	LB	E200.7	FLDFLT	IRON, DISSOLVED	1	1	13.56	13.56	100	100	12.2	12.2	ug/L
WATER	LB	E200.7	SW3050	LEAD	17	3	1.412	2.099	3	3	1.1	1.1	ug/L
WQ	EB	E200.7	SW3050	LEAD	23	3	1.2	1.7	3	3	1.1	1.1	ug/L
SOIL	LB	E200.7	SW3050	LEAD	23	4	0.111	0.167	0.6	0.6	0.11	0.11	mg/kg
WATER	LB	E200.7	FLDFLT	LEAD, DISSOLVED	1	1	1.336	1.336	3	3	1.1	1.1	ug/L
WATER	LB	E200.7	SW3050	MAGNESIUM	17	6	11.92	114.14	5000	5000	9	9	ug/L
WQ	EB	E200.7	SW3050	MAGNESIUM	23	14	9.3	57.4	5000	5000	9	9	ug/L
WQ	AB	E200.7	SW3050	MAGNESIUM	5	1	11.4	11.4	5000	5000	9	9	ug/L
SOIL	LB	E200.7	SW3050	MAGNESIUM	23	13	-0.961	6.72	1000	1000	0.9	0.9	mg/kg
WQ	EB	E200.7	SW3050	MANGANESE	23	23	0.15	7.1	15	15	0.1	0.1	ug/L
WATER	LB	E200.7	SW3050	MANGANESE	17	14	0.101	0.43	15	15	0.1	0.1	ug/L
WQ	AB	E200.7	SW3050	MANGANESE	5	3	0.12	0.22	15	15	0.1	0.1	ug/L
SOIL	LB	E200.7	SW3050	MANGANESE	23	21	0.012	0.104	3	3	0.01	0.01	mg/kg
WATER	LB	E200.7	FLDFLT	MANGANESE, DISSOLVED	1	1	0.136	0.136	15	15	0.1	0.1	ug/L

Table 2 - Frequency of Detection in Blank Samples

Matrix	Type	Analytical Method	Prep Method	Parameter	Number Analyzed	Number Detected	Min Detected	Max Detected	Min RL	Max RL	Min DL	Max DL	Units
WQ	EB	E200.7	SW3050	NICKEL	23	3	0.91	2.8	40	40	0.8	0.8	ug/L
WQ	EB	E200.7	SW3050	POTASSIUM	23	14	29.1	261	5000	5000	26.6	26.6	ug/L
WATER	LB	E200.7	SW3050	POTASSIUM	17	12	-112.457	131.739	5000	5000	26.6	26.6	ug/L
WQ	AB	E200.7	SW3050	POTASSIUM	5	2	45.3	127	5000	5000	26.6	26.6	ug/L
SOIL	LB	E200.7	SW3050	POTASSIUM	23	20	2.704	12.084	1000	1000	2.66	2.7	mg/kg
WQ	EB	E200.7	SW3050	SELENIUM	23	2	2.3	2.4	5	5	2.1	2.1	ug/L
SOIL	LB	E200.7	SW3050	SELENIUM	23	3	-0.322	0.252	1	1	0.21	0.21	mg/kg
WQ	EB	E200.7	SW3050	SODIUM	23	10	119	654	5000	5000	115	115	ug/L
WATER	LB	E200.7	SW3050	SODIUM	17	6	121.202	239.485	5000	5000	115	115	ug/L
WQ	AB	E200.7	SW3050	SODIUM	5	1	144	144	5000	5000	115	115	ug/L
SOIL	LB	E200.7	SW3050	SODIUM	23	1	11.765	11.765	1000	1000	11.5	11.5	mg/kg
WQ	EB	E200.7	SW3050	THALLIUM	23	1	2.8	2.8	10	10	2.7	2.7	ug/L
WQ	EB	E200.7	SW3050	VANADIUM	23	2	1.1	1.3	50	50	0.8	0.8	ug/L
WATER	LB	E200.7	SW3050	VANADIUM	17	3	0.899	0.899	50	50	0.8	0.8	ug/L
WQ	EB	E200.7	SW3050	ZINC	23	15	2.6	11.6	20	20	2.5	2.5	ug/L
WATER	LB	E200.7	SW3050	ZINC	17	4	10.105	10.105	20	20	2.5	2.5	ug/L
WQ	AB	E200.7	SW3050	ZINC	5	1	2.9	2.9	20	20	2.5	2.5	ug/L
SOIL	LB	E200.7	SW3050	ZINC	23	10	0.302	1.12	4	4	0.25	0.25	mg/kg
SOIL	LB	SW8081	SW3550	p,p'-DDT	61	1	1.7	1.7	0.33	3.3	0.04	0.39	ug/kg
WATER	LB	SW8082	SW3510	PCB-1016 (AROCHLOR 1016)	32	1	0.1	0.1	0.2	1	0.08	0.08	ug/L
WQ	TB	SW8260	SW5030	1,1-DICHLOROETHENE	23	3	0.9	2	10	10	0.4	0.4	ug/L
WQ	AB	SW8260	SW5030	1,2-DICHLOROETHANE	5	1	2	2	10	10	0.2	0.2	ug/L
SOIL	LB	SW8260	SW5030	1,2-DICHLOROETHANE	68	4	0.3	0.3	10	500	0.2	12	ug/kg
SOIL	LB	SW8260	SW5030	ACETONE	68	54	11	1650	10	500	10	500	ug/kg
WATER	LB	SW8260	SW5030	ACETONE	25	5	11	36	5	10	5	10	ug/L
WQ	EB	SW8260	SW5030	ACETONE	26	1	10	10	10	10	10	10	ug/L
WQ	AB	SW8260	SW5030	BROMODICHLOROMETHANE	5	3	0.5	1	10	10	0.2	0.2	ug/L
WQ	EB	SW8260	SW5030	BROMODICHLOROMETHANE	26	7	0.6	0.8	10	10	0.2	0.2	ug/L
WQ	AB	SW8260	SW5030	CHLOROFORM	5	5	6	18	10	10	1	1	ug/L
WQ	EB	SW8260	SW5030	CHLOROFORM	26	25	5	14	10	10	1	1	ug/L
SOIL	LB	SW8260	SW5030	ETHYLBENZENE	68	2	0.4	22	10	500	0.3	14	ug/kg
SOIL	LB	SW8260	SW5030	M,P-XYLENE (SUM)	68	10	0.4	70	10	500	0.2	11	ug/kg
SOIL	LB	SW8260	SW5030	O-XYLENE	68	1	13	13	10	500	0.2	11	ug/kg
WQ	EB	SW8260	SW5030	STYRENE	26	1	0.4	0.4	10	10	0.2	0.2	ug/L
SOIL	LB	SW8260	SW5030	TOLUENE	68	5	0.4	0.5	10	500	0.3	14	ug/kg
SOIL	LB	SW8260	SW5030	XYLENES, TOTAL	68	10	0.4	83	10	500	0.2	11	ug/kg
WQ	EB	SW8270	SW3510	BEHP	26	8	1	7	5	12	0.88	1	ug/L
WQ	AB	SW8270	SW3510	BEHP	5	2	1	3	5	5	0.88	0.9	ug/L
WQ	EB	SW8270	SW3510	BENZO(g,h,i)PERYLENE	26	1	1	1	11	11	0.4	0.4	ug/L
SOIL	LB	SW8270	SW3550	DIETHYL PHTHALATE	18	2	159	162	303	333	25	27	ug/kg
WATER	LB	SW8270	SW3510	DIETHYL PHTHALATE	12	1	1	1	5	10	0.4	0.4	ug/L
WQ	EB	SW8270	SW3510	DIETHYL PHTHALATE	26	3	0.6	0.6	5	12	0.4	0.51	ug/L

Table 2 - Frequency of De[illegible]on in Blank Samples

Matrix	Type	Analytical Method	Prep Method	Parameter	Number Analyzed	Number Detected	Min Detected	Max Detected	Min RL	Max RL	Min DL	Max DL	Units
WATER	LB	SW8270	SW3510	DI-n-OCTYLPHTHALATE	12	1	2	2	5	10	1	1	ug/L
WQ	EB	SW8270	SW3510	INDENO(1,2,3-c,d)PYRENE	26	1	0.5	0.5	11	11	0.4	0.4	ug/L
WQ	EB	SW8270	SW3510	PHENOL	26	1	0.3	0.3	5	12	0.2	0.3	ug/L

Table 3 - Samples Analyzed OUts Holding Time Per Method

Matrix	Analysis Method	Sample ID	Sample Type	LR Type	Date Collected (DC)	Date Prepared (DP)	Date Analyzed (DA)	Days Awaiting Preparation (DP-DC)	Days Awaiting Analysis (DA-DP)	Total Elapsed Days (DA-DC)
SS	SW8081	NDA072FD1	FD1		4/19/00 9:00 AM	5/2/00 12:00 AM	5/15/00 1:14 PM	**12.63**	13.55	26.18
SS	SW8081	NDA071SD	SD		4/19/00 9:00 AM	5/2/00 12:00 AM	5/15/00 12:15 PM	**12.63**	13.51	26.14
SS	SW8081	NDA071MS	MS		4/19/00 9:00 AM	5/2/00 12:00 AM	5/15/00 11:45 AM	**12.63**	13.49	26.11
SS	SW8081	NDA071	N1		4/19/00 9:00 AM	5/2/00 12:00 AM	5/15/00 11:15 AM	**12.63**	13.47	26.09
SS	SW8081	NDA119	N1		4/18/00 9:15 AM	5/1/00 12:00 AM	5/13/00 2:26 AM	**12.61**	12.10	24.72
SS	SW8081	NDA074	N1		4/19/00 9:20 AM	5/2/00 12:00 AM	5/15/00 1:39 AM	**12.61**	13.07	25.68
SS	SW8081	NDA120	N1		4/18/00 9:40 AM	5/1/00 12:00 AM	5/13/00 2:56 AM	**12.60**	12.12	24.72
SS	SW8081	NDA076	N1		4/19/00 9:50 AM	5/2/00 12:00 AM	5/15/00 2:39 AM	**12.59**	13.11	25.70
SS	SW8081	NDA078	N1		4/19/00 10:20 AM	5/2/00 12:00 AM	5/15/00 3:38 AM	**12.57**	13.15	25.72
SB	SW8081	NDA070	N1		4/19/00 10:30 AM	5/2/00 12:00 AM	5/15/00 12:44 PM	**12.56**	13.53	26.09
SS	SW8081	NDA121	N1		4/18/00 10:30 AM	5/1/00 12:00 AM	5/13/00 3:25 AM	**12.56**	12.14	24.70
SS	SW8081	NDA122	N1		4/18/00 10:50 AM	5/1/00 12:00 AM	5/13/00 3:55 AM	**12.55**	12.16	24.71
SS	SW8081	NDA080	N1		4/19/00 11:10 AM	5/2/00 12:00 AM	5/15/00 4:37 AM	**12.53**	13.19	25.73
SB	SW8081	NDA073	N1		4/19/00 1:00 PM	5/2/00 12:00 AM	5/15/00 1:48 PM	**12.46**	13.57	26.03
SS	SW8081	NDA082	N1		4/19/00 1:10 PM	5/2/00 12:00 AM	5/15/00 5:36 AM	**12.45**	13.23	25.68
SB	SW8081	NDA075	N1		4/19/00 1:30 PM	5/2/00 12:00 AM	5/15/00 2:09 AM	**12.44**	13.09	25.53
SS	SW8081	NDA123	N1		4/18/00 1:30 PM	5/1/00 12:00 AM	5/13/00 4:25 AM	**12.44**	12.18	24.62
SS	SW8081	NDA124	N1		4/18/00 1:55 PM	5/1/00 12:00 AM	5/13/00 4:54 AM	**12.42**	12.20	24.62
SS	SW8081	NDA065	N1		4/18/00 2:00 PM	5/1/00 12:00 AM	5/12/00 11:58 PM	**12.42**	12.00	24.42
SB	SW8081	NDA077	N1		4/19/00 2:15 PM	5/2/00 12:00 AM	5/15/00 3:08 AM	**12.41**	13.13	25.54
SB	SW8081	NDA064FD1	FD1		4/18/00 2:15 PM	5/1/00 12:00 AM	5/12/00 11:29 PM	**12.41**	11.98	24.38
SB	SW8081	NDA063SD	SD		4/18/00 2:15 PM	5/1/00 12:00 AM	5/12/00 10:59 PM	**12.41**	11.96	24.36
SB	SW8081	NDA063MS	MS		4/18/00 2:15 PM	5/1/00 12:00 AM	5/12/00 10:30 PM	**12.41**	11.94	24.34
SB	SW8081	NDA063	N1		4/18/00 2:15 PM	5/1/00 12:00 AM	5/12/00 10:00 PM	**12.41**	11.92	24.32
SB	SW8081	NDA079	N1		4/19/00 2:30 PM	5/2/00 12:00 AM	5/15/00 4:07 AM	**12.40**	13.17	25.57
SS	SW8081	NDA067	N1		4/18/00 2:55 PM	5/1/00 12:00 AM	5/13/00 12:58 AM	**12.38**	12.04	24.42
SB	SW8081	NDA081	N1		4/19/00 3:20 PM	5/2/00 12:00 AM	5/15/00 5:07 AM	**12.36**	13.21	25.57
SS	SW8081	NDA069	N1		4/18/00 3:30 PM	5/1/00 12:00 AM	5/13/00 1:57 AM	**12.35**	12.08	24.44
SB	SW8081	NDA066	N1		4/18/00 3:30 PM	5/1/00 12:00 AM	5/13/00 12:28 AM	**12.35**	12.02	24.37
SB	SW8081	NDA083	N1		4/19/00 3:45 PM	5/2/00 12:00 AM	5/15/00 6:06 AM	**12.34**	13.25	25.60
SB	SW8081	NDA068	N1		4/18/00 3:50 PM	5/1/00 12:00 AM	5/13/00 1:27 AM	**12.34**	12.06	24.40
SB	SW8081	NDA245	N1		4/12/00 9:00 AM	4/24/00 12:00 AM	5/11/00 3:03 AM	**11.63**	17.13	28.75
SS	SW8081	NDA185	N1		4/12/00 10:20 AM	4/24/00 12:00 AM	5/10/00 5:15 PM	**11.57**	16.72	28.29
SS	SW8081	NDA186	N1		4/12/00 10:30 AM	4/24/00 12:00 AM	5/10/00 5:45 PM	**11.56**	16.74	28.30
SS	SW8081	NDA187	N1		4/12/00 10:45 AM	4/24/00 12:00 AM	5/10/00 6:15 PM	**11.55**	16.76	28.31
SS	SW8081	NDA188	N1		4/12/00 11:15 AM	4/24/00 12:00 AM	5/10/00 6:44 PM	**11.53**	16.78	28.31
SB	SW8081	NDA247FD1	FD1		4/12/00 11:30 AM	4/24/00 12:00 AM	5/11/00 5:01 AM	**11.52**	17.21	28.73
SB	SW8081	NDA246SD	SD		4/12/00 11:30 AM	4/24/00 12:00 AM	5/11/00 4:32 AM	**11.52**	17.19	28.71
SB	SW8081	NDA246MS	MS		4/12/00 11:30 AM	4/24/00 12:00 AM	5/11/00 4:02 AM	**11.52**	17.17	28.69

Table 3 - Samples Analyzed OUtside of Holding Time Per Method

Matrix	Analysis Method	Sample ID	Sample Type	LR Type	Date Collected (DC)	Date Prepared (DP)	Date Analyzed (DA)	Days Awaiting Preparation (DP-DC)	Days Awaiting Analysis (DA-DP)	Total Elapsed Days (DA-DC)
SB	SW8081	NDA246	N1		4/12/00 11:30 AM	4/24/00 12:00 AM	5/11/00 3:33 AM	**11.52**	17.15	28.67
SS	SW8081	NDA189	N1		4/12/00 11:45 AM	4/24/00 12:00 AM	5/10/00 9:38 PM	**11.51**	16.90	28.41
SS	SW8081	NDA190	N1		4/12/00 12:30 PM	4/24/00 12:00 AM	5/10/00 10:07 PM	**11.48**	16.92	28.40
SS	SW8081	NDA191	N1		4/12/00 12:50 PM	4/24/00 12:00 AM	5/10/00 10:37 PM	**11.47**	16.94	28.41
SS	SW8081	NDA192FD1	FD1		4/12/00 1:00 PM	4/24/00 12:00 AM	5/10/00 11:06 PM	**11.46**	16.96	28.42
SB	SW8081	NDA248	N1		4/12/00 1:05 PM	4/24/00 12:00 AM	5/11/00 5:31 AM	**11.45**	17.23	28.68
SS	SW8081	NDA193	N1		4/12/00 1:20 PM	4/24/00 12:00 AM	5/11/00 1:34 AM	**11.44**	17.07	28.51
SB	SW8081	NDA249	N1		4/12/00 1:30 PM	4/24/00 12:00 AM	5/11/00 6:01 AM	**11.44**	17.25	28.69
SS	SW8081	NDA194	N1		4/12/00 1:55 PM	4/24/00 12:00 AM	5/11/00 2:04 AM	**11.42**	17.09	28.51
SB	SW8081	NDA252	N1		4/12/00 2:12 PM	4/24/00 12:00 AM	5/11/00 6:30 AM	**11.41**	17.27	28.68
SS	SW8081	NDA195	N1		4/12/00 2:15 PM	4/24/00 12:00 AM	5/11/00 2:34 AM	**11.41**	17.11	28.51
SB	SW8081	NDA253	N1		4/12/00 2:34 PM	4/24/00 12:00 AM	5/11/00 7:00 AM	**11.39**	17.29	28.68
SB	SW8081	NDA254	N1		4/12/00 3:00 PM	4/24/00 12:00 AM	5/11/00 7:29 AM	**11.38**	17.31	28.69
SB	SW8081	NDA255	N1		4/12/00 3:20 PM	4/24/00 12:00 AM	5/11/00 7:59 AM	**11.36**	17.33	28.69
SS	SW8081	NDA057	N1		4/18/00 9:45 AM	4/28/00 12:00 AM	5/11/00 11:34 PM	**9.59**	13.98	23.58
SD	SW8081	NDA047	N1		4/18/00 9:55 AM	4/28/00 12:00 AM	5/11/00 10:05 PM	**9.59**	13.92	23.51
SS	SW8081	NDA059	N1		4/18/00 10:10 AM	4/28/00 12:00 AM	5/12/00 12:33 AM	**9.58**	14.02	23.60
SB	SW8081	NDA058	N1		4/18/00 10:40 AM	4/28/00 12:00 AM	5/12/00 12:04 AM	**9.56**	14.00	23.56
SS	SW8081	NDA062FD1	FD1		4/18/00 10:45 AM	4/28/00 12:00 AM	5/12/00 3:01 AM	**9.55**	14.13	23.68
SS	SW8081	NDA061SD	SD		4/18/00 10:45 AM	4/28/00 12:00 AM	5/12/00 2:32 AM	**9.55**	14.11	23.66
SS	SW8081	NDA061MS	MS		4/18/00 10:45 AM	4/28/00 12:00 AM	5/12/00 2:02 AM	**9.55**	14.08	23.64
SS	SW8081	NDA061	N1		4/18/00 10:45 AM	4/28/00 12:00 AM	5/12/00 1:33 AM	**9.55**	14.06	23.62
SB	SW8081	NDA060	N1		4/18/00 1:30 PM	4/28/00 12:00 AM	5/12/00 1:03 AM	**9.44**	14.04	23.48
SD	SW8081	NDA048	N1		4/18/00 2:15 PM	4/28/00 12:00 AM	5/11/00 10:35 PM	**9.41**	13.94	23.35
SD	SW8081	NDA049	N1		4/18/00 2:30 PM	4/28/00 12:00 AM	5/11/00 11:05 PM	**9.40**	13.96	23.36
SB	SW8081	NDA214FD1	FD1		4/7/00 8:00 AM	4/16/00 12:00 AM	4/25/00 1:33 AM	**8.67**	9.06	17.73
SB	SW8081	NDA213SD	SD		4/7/00 8:00 AM	4/16/00 12:00 AM	4/25/00 1:04 AM	**8.67**	9.04	17.71
SB	SW8081	NDA213MS	MS		4/7/00 8:00 AM	4/16/00 12:00 AM	4/25/00 12:34 AM	**8.67**	9.02	17.69
SB	SW8081	NDA213	N1		4/7/00 8:00 AM	4/16/00 12:00 AM	4/25/00 12:04 AM	**8.67**	9.00	17.67
SB	SW8081	NDA215	N1		4/7/00 8:30 AM	4/16/00 12:00 AM	4/25/00 2:03 AM	**8.65**	9.09	17.73
SB	SW8081	NDA216	N1		4/7/00 8:40 AM	4/16/00 12:00 AM	4/25/00 2:32 AM	**8.64**	9.11	17.74
SB	SW8081	NDA217	N1		4/7/00 9:10 AM	4/16/00 12:00 AM	4/25/00 3:02 AM	**8.62**	9.13	17.74
SS	SW8081	NDA107	N1		4/24/00 9:45 AM	5/3/00 12:00 AM	5/17/00 10:21 PM	**8.59**	14.93	23.53
SB	SW8081	NDA218	N1		4/7/00 9:45 AM	4/16/00 12:00 AM	4/25/00 3:32 AM	**8.59**	9.15	17.74
SB	SW8081	NDA108SD	SD		4/24/00 10:00 AM	5/3/00 12:00 AM	5/17/00 11:50 PM	**8.58**	14.99	23.58
SB	SW8081	NDA108MS	MS		4/24/00 10:00 AM	5/3/00 12:00 AM	5/17/00 11:20 PM	**8.58**	14.97	23.56
SB	SW8081	NDA108	N1		4/24/00 10:00 AM	5/3/00 12:00 AM	5/17/00 10:51 PM	**8.58**	14.95	23.54
SS	SW8081	NDA109	N1		4/24/00 10:10 AM	5/3/00 12:00 AM	5/18/00 12:19 AM	**8.58**	15.01	23.59
SB	SW8081	NDA110	N1		4/24/00 10:15 AM	5/3/00 12:00 AM	5/18/00 12:49 AM	**8.57**	15.03	23.61

Table 3 - Samples Analyzed OUTs[illegible] Holding Time Per Method

Matrix	Analysis Method	Sample ID	Sample Type	LR Type	Date Collected (DC)	Date Prepared (DP)	Date Analyzed (DA)	Days Awaiting Preparation (DP-DC)	Days Awaiting Analysis (DA-DP)	Total Elapsed Days (DA-DC)
SB	SW8081	NDA235	N1		4/11/00 10:25 AM	4/20/00 12:00 AM	5/3/00 11:43 AM	**8.57**	13.49	22.05
SB	SW8081	NDA219	N1		4/7/00 10:25 AM	4/16/00 12:00 AM	4/25/00 4:01 AM	**8.57**	9.17	17.73
SS	SW8081	NDA111	N1		4/24/00 10:30 AM	5/3/00 12:00 AM	5/18/00 1:19 AM	**8.56**	15.05	23.62
SB	SW8081	NDA112	N1		4/24/00 10:40 AM	5/3/00 12:00 AM	5/18/00 1:48 AM	**8.56**	15.07	23.63
SB	SW8081	NDA237FD1	FD1		4/11/00 10:45 AM	4/20/00 12:00 AM	5/3/00 1:41 PM	**8.55**	13.57	22.12
SB	SW8081	NDA236	N1		4/11/00 10:45 AM	4/20/00 12:00 AM	5/3/00 1:11 PM	**8.55**	13.55	22.10
SB	SW8081	NDA220	N1		4/7/00 10:49 AM	4/16/00 12:00 AM	4/25/00 4:31 AM	**8.55**	9.19	17.74
SB	SW8081	NDA221	N1		4/7/00 11:10 AM	4/16/00 12:00 AM	4/25/00 5:01 AM	**8.53**	9.21	17.74
SB	SW8081	NDA238	N1		4/11/00 11:20 AM	4/20/00 12:00 AM	5/3/00 2:10 PM	**8.53**	13.59	22.12
SD	SW8081	NDA054	N1		4/7/00 11:30 AM	4/16/00 12:00 AM	4/24/00 11:05 PM	**8.52**	8.96	17.48
SB	SW8081	NDA222	N1		4/7/00 11:35 AM	4/16/00 12:00 AM	4/25/00 5:30 AM	**8.52**	9.23	17.75
SD	SW8081	NDA055	N1		4/7/00 11:45 AM	4/16/00 12:00 AM	4/24/00 11:35 PM	**8.51**	8.98	17.49
SB	SW8081	NDA239	N1		4/11/00 11:49 AM	4/20/00 12:00 AM	5/3/00 2:40 PM	**8.51**	13.61	22.12
SB	SW8081	NDA223	N1		4/7/00 12:10 PM	4/16/00 12:00 AM	4/25/00 6:00 AM	**8.49**	9.25	17.74
SS	SW8081	NDA101	N1		4/24/00 1:00 PM	5/3/00 12:00 AM	5/17/00 5:25 PM	**8.46**	14.73	23.18
SB	SW8081	NDA102	N1		4/24/00 1:15 PM	5/3/00 12:00 AM	5/17/00 5:55 PM	**8.45**	14.75	23.19
SB	SW8081	NDA240	N1		4/11/00 1:37 PM	4/20/00 12:00 AM	5/3/00 3:10 PM	**8.43**	13.63	22.06
SS	SW8081	NDA104FD1	FD1		4/24/00 1:40 PM	5/3/00 12:00 AM	5/17/00 8:52 PM	**8.43**	14.87	23.30
SS	SW8081	NDA103	N1		4/24/00 1:40 PM	5/3/00 12:00 AM	5/17/00 6:24 PM	**8.43**	14.77	23.20
SB	SW8081	NDA106FD1	FD1		4/24/00 2:00 PM	5/3/00 12:00 AM	5/17/00 9:51 PM	**8.42**	14.91	23.33
SB	SW8081	NDA105	N1		4/24/00 2:00 PM	5/3/00 12:00 AM	5/17/00 9:22 PM	**8.42**	14.89	23.31
SB	SW8081	NDA241	N1		4/11/00 2:25 PM	4/20/00 12:00 AM	5/3/00 3:39 PM	**8.40**	13.65	22.05
SB	SW8081	NDA242	N1		4/11/00 2:43 PM	4/20/00 12:00 AM	5/3/00 4:09 PM	**8.39**	13.67	22.06
SB	SW8081	NDA243	N1		4/11/00 2:53 PM	4/20/00 12:00 AM	5/3/00 4:39 PM	**8.38**	13.69	22.07
SB	SW8081	NDA244	N1		4/11/00 3:25 PM	4/20/00 12:00 AM	5/3/00 5:08 PM	**8.36**	13.71	22.07
SB	SW8081	NDA114DL1	LR	DL	4/20/00 12:00 AM	4/28/00 12:00 AM	5/15/00 2:47 PM	**8.00**	17.62	25.62
SS	SW8081	NDA113DL1	LR	DL	4/20/00 12:00 AM	4/28/00 12:00 AM	5/15/00 2:17 PM	**8.00**	17.60	25.60
SS	SW8081	NDA164	N1		4/6/00 9:38 AM	4/14/00 12:00 AM	4/25/00 6:27 PM	**7.60**	11.77	19.37
SS	SW8081	NDA166	N1		4/6/00 9:50 AM	4/14/00 12:00 AM	4/25/00 7:26 PM	**7.59**	11.81	19.40
SB	SW8081	NDA165	N1		4/6/00 9:50 AM	4/14/00 12:00 AM	4/25/00 6:57 PM	**7.59**	11.79	19.38
SD	SW8081	NDA051FD1	FD1		4/6/00 10:00 AM	4/14/00 12:00 AM	4/26/00 4:48 AM	**7.58**	12.20	19.78
SD	SW8081	NDA050SD	SD		4/6/00 10:00 AM	4/14/00 12:00 AM	4/26/00 4:19 AM	**7.58**	12.18	19.76
SD	SW8081	NDA050MS	MS		4/6/00 10:00 AM	4/14/00 12:00 AM	4/26/00 3:49 AM	**7.58**	12.16	19.74
SD	SW8081	NDA050	N1		4/6/00 10:00 AM	4/14/00 12:00 AM	4/26/00 3:20 AM	**7.58**	12.14	19.72
SB	SW8081	NDA167	N1		4/6/00 10:20 AM	4/14/00 12:00 AM	4/25/00 7:56 PM	**7.57**	11.83	19.40
SS	SW8081	NDA168	N1		4/6/00 10:25 AM	4/14/00 12:00 AM	4/25/00 8:55 PM	**7.57**	11.87	19.44
SB	SW8081	NDA169	N1		4/6/00 10:35 AM	4/14/00 12:00 AM	4/25/00 9:24 PM	**7.56**	11.89	19.45
SS	SW8081	NDA170	N1		4/6/00 10:55 AM	4/14/00 12:00 AM	4/25/00 9:54 PM	**7.55**	11.91	19.46
SB	SW8081	NDA171	N1		4/6/00 11:00 AM	4/14/00 12:00 AM	4/25/00 10:23 PM	**7.54**	11.93	19.47

Table 3 - Samples Analyzed OUtside of Holding Time Per Method

Matrix	Analysis Method	Sample ID	Sample Type	LR Type	Date Collected (DC)	Date Prepared (DP)	Date Analyzed (DA)	Days Awaiting Preparation (DP-DC)	Days Awaiting Analysis (DA-DP)	Total Elapsed Days (DA-DC)
SS	SW8081	NDA172	N1		4/6/00 11:20 AM	4/14/00 12:00 AM	4/25/00 10:53 PM	**7.53**	11.95	19.48
SB	SW8081	NDA173	N1		4/6/00 11:30 AM	4/14/00 12:00 AM	4/25/00 11:23 PM	**7.52**	11.97	19.50
SS	SW8081	NDA174	N1		4/6/00 12:55 PM	4/14/00 12:00 AM	4/25/00 11:52 PM	**7.46**	11.99	19.46
SD	SW8081	NDA052	N1		4/6/00 1:00 PM	4/14/00 12:00 AM	4/26/00 5:18 AM	**7.46**	12.22	19.68
SB	SW8081	NDA175	N1		4/6/00 1:25 PM	4/14/00 12:00 AM	4/26/00 12:22 AM	**7.44**	12.02	19.46
SD	SW8081	NDA053	N1		4/6/00 1:30 PM	4/14/00 12:00 AM	4/26/00 5:48 AM	**7.44**	12.24	19.68
SS	SW8081	NDA176	N1		4/6/00 1:45 PM	4/14/00 12:00 AM	4/25/00 8:25 PM	**7.43**	11.85	19.28
SB	SW8081	NDA177	N1		4/6/00 1:55 PM	4/14/00 12:00 AM	4/26/00 12:51 AM	**7.42**	12.04	19.46
SS	SW8081	NDA113	N1		4/20/00 2:10 PM	4/28/00 12:00 AM	5/12/00 5:29 AM	**7.41**	14.23	21.64
SB	SW8081	NDA114	N1		4/20/00 2:20 PM	4/28/00 12:00 AM	5/12/00 5:59 AM	**7.40**	14.25	21.65
SS	SW8081	NDA115	N1		4/20/00 2:50 PM	4/28/00 12:00 AM	5/12/00 6:28 AM	**7.38**	14.27	21.65
SB	SW8081	NDA116	N1		4/20/00 3:10 PM	4/28/00 12:00 AM	5/12/00 6:58 AM	**7.37**	14.29	21.66
SS	SW8081	NDA117	N1		4/20/00 3:25 PM	4/28/00 12:00 AM	5/12/00 7:28 AM	**7.36**	14.31	21.67
SB	SW8081	NDA118	N1		4/20/00 4:00 PM	4/28/00 12:00 AM	5/12/00 7:57 AM	**7.33**	14.33	21.66
SS	SW8082	NDA072FD1	FD1		4/19/00 9:00 AM	5/2/00 12:00 AM	5/7/00 6:29 PM	**12.63**	5.77	18.40
SS	SW8082	NDA071SD	SD		4/19/00 9:00 AM	5/2/00 12:00 AM	5/7/00 5:54 PM	**12.63**	5.75	18.37
SS	SW8082	NDA071MS	MS		4/19/00 9:00 AM	5/2/00 12:00 AM	5/7/00 5:18 PM	**12.63**	5.72	18.35
SS	SW8082	NDA071	N1		4/19/00 9:00 AM	5/2/00 12:00 AM	5/7/00 4:43 PM	**12.63**	5.70	18.32
SS	SW8082	NDA119	N1		4/18/00 9:15 AM	5/1/00 12:00 AM	5/7/00 1:46 AM	**12.61**	6.07	18.69
SS	SW8082	NDA074	N1		4/19/00 9:20 AM	5/2/00 12:00 AM	5/7/00 7:40 PM	**12.61**	5.82	18.43
SS	SW8082	NDA120	N1		4/18/00 9:40 AM	5/1/00 12:00 AM	5/7/00 2:22 AM	**12.60**	6.10	18.70
SS	SW8082	NDA076	N1		4/19/00 9:50 AM	5/2/00 12:00 AM	5/7/00 8:51 PM	**12.59**	5.87	18.46
SS	SW8082	NDA078	N1		4/19/00 10:20 AM	5/2/00 12:00 AM	5/7/00 11:48 PM	**12.57**	5.99	18.56
SS	SW8082	NDA121	N1		4/18/00 10:30 AM	5/1/00 12:00 AM	5/7/00 2:57 AM	**12.56**	6.12	18.69
SB	SW8082	NDA070	N1		4/19/00 10:30 AM	5/2/00 12:00 AM	5/7/00 4:07 PM	**12.56**	5.67	18.23
SS	SW8082	NDA122	N1		4/18/00 10:50 AM	5/1/00 12:00 AM	5/7/00 3:33 AM	**12.55**	6.15	18.70
SS	SW8082	NDA080	N1		4/19/00 11:10 AM	5/2/00 12:00 AM	5/8/00 12:59 AM	**12.53**	6.04	18.58
SB	SW8082	NDA073	N1		4/19/00 1:00 PM	5/2/00 12:00 AM	5/7/00 7:05 PM	**12.46**	5.80	18.25
SS	SW8082	NDA082	N1		4/19/00 1:10 PM	5/2/00 12:00 AM	5/8/00 2:10 AM	**12.45**	6.09	18.54
SS	SW8082	NDA123	N1		4/18/00 1:30 PM	5/1/00 12:00 AM	5/7/00 4:08 AM	**12.44**	6.17	18.61
SB	SW8082	NDA075	N1		4/19/00 1:30 PM	5/2/00 12:00 AM	5/7/00 8:16 PM	**12.44**	5.84	18.28
SS	SW8082	NDA124	N1		4/18/00 1:55 PM	5/1/00 12:00 AM	5/7/00 4:44 AM	**12.42**	6.20	18.62
SS	SW8082	NDA065	N1		4/18/00 2:00 PM	5/1/00 12:00 AM	5/6/00 9:02 PM	**12.42**	5.88	18.29
SB	SW8082	NDA077	N1		4/19/00 2:15 PM	5/2/00 12:00 AM	5/7/00 11:13 PM	**12.41**	5.97	18.37
SB	SW8082	NDA064FD1	FD1		4/18/00 2:15 PM	5/1/00 12:00 AM	5/6/00 8:27 PM	**12.41**	5.85	18.26
SB	SW8082	NDA063SD	SD		4/18/00 2:15 PM	5/1/00 12:00 AM	5/6/00 7:51 PM	**12.41**	5.83	18.23
SB	SW8082	NDA063MS	MS		4/18/00 2:15 PM	5/1/00 12:00 AM	5/6/00 7:16 PM	**12.41**	5.80	18.21
SB	SW8082	NDA063	N1		4/18/00 2:15 PM	5/1/00 12:00 AM	5/6/00 6:40 PM	**12.41**	5.78	18.18
SB	SW8082	NDA079	N1		4/19/00 2:30 PM	5/2/00 12:00 AM	5/8/00 12:24 AM	**12.40**	6.02	18.41

Table 3 - Samples Analyzed OUTs[illegible]f Holding Time Per Method

Matrix	Analysis Method	Sample ID	Sample Type	LR Type	Date Collected (DC)	Date Prepared (DP)	Date Analyzed (DA)	Days Awaiting Preparation (DP-DC)	Days Awaiting Analysis (DA-DP)	Total Elapsed Days (DA-DC)
SS	SW8082	NDA067	N1		4/18/00 2:55 PM	5/1/00 12:00 AM	5/7/00 12:00 AM	**12.38**	6.00	18.38
SB	SW8082	NDA081	N1		4/19/00 3:20 PM	5/2/00 12:00 AM	5/8/00 1:35 AM	**12.36**	6.07	18.43
SS	SW8082	NDA069	N1		4/18/00 3:30 PM	5/1/00 12:00 AM	5/7/00 1:11 AM	**12.35**	6.05	18.40
SB	SW8082	NDA066	N1		4/18/00 3:30 PM	5/1/00 12:00 AM	5/6/00 11:24 PM	**12.35**	5.97	18.33
SB	SW8082	NDA083	N1		4/19/00 3:45 PM	5/2/00 12:00 AM	5/8/00 2:45 AM	**12.34**	6.11	18.46
SB	SW8082	NDA068	N1		4/18/00 3:50 PM	5/1/00 12:00 AM	5/7/00 12:35 AM	**12.34**	6.02	18.36
WQ	SW8082	NDA268EB6	EB6		4/6/00 2:30 PM	4/18/00 7:17 AM	4/18/00 7:17 AM	**11.70**	0.00	11.70
WQ	SW8082	NDA267EB5	EB5		4/6/00 2:25 PM	4/18/00 6:42 AM	4/18/00 6:42 AM	**11.68**	0.00	11.68
SB	SW8082	NDA245	N1		4/12/00 9:00 AM	4/24/00 12:00 AM	5/5/00 4:03 PM	**11.63**	11.67	23.29
SS	SW8082	NDA185	N1		4/12/00 10:20 AM	4/24/00 12:00 AM	5/5/00 7:46 AM	**11.57**	11.32	22.89
SS	SW8082	NDA186	N1		4/12/00 10:30 AM	4/24/00 12:00 AM	5/5/00 8:22 AM	**11.56**	11.35	22.91
SS	SW8082	NDA187	N1		4/12/00 10:45 AM	4/24/00 12:00 AM	5/5/00 8:57 AM	**11.55**	11.37	22.93
SS	SW8082	NDA188	N1		4/12/00 11:15 AM	4/24/00 12:00 AM	5/5/00 9:33 AM	**11.53**	11.40	22.93
SB	SW8082	NDA247FD1	FD1		4/12/00 11:30 AM	4/24/00 12:00 AM	5/5/00 6:25 PM	**11.52**	11.77	23.29
SB	SW8082	NDA246SD	SD		4/12/00 11:30 AM	4/24/00 12:00 AM	5/5/00 5:49 PM	**11.52**	11.74	23.26
SB	SW8082	NDA246MS	MS		4/12/00 11:30 AM	4/24/00 12:00 AM	5/5/00 5:14 PM	**11.52**	11.72	23.24
SB	SW8082	NDA246	N1		4/12/00 11:30 AM	4/24/00 12:00 AM	5/5/00 4:38 PM	**11.52**	11.69	23.21
SS	SW8082	NDA189	N1		4/12/00 11:45 AM	4/24/00 12:00 AM	5/5/00 10:08 AM	**11.51**	11.42	22.93
SS	SW8082	NDA190	N1		4/12/00 12:30 PM	4/24/00 12:00 AM	5/5/00 10:44 AM	**11.48**	11.45	22.93
SS	SW8082	NDA191	N1		4/12/00 12:50 PM	4/24/00 12:00 AM	5/5/00 11:19 AM	**11.47**	11.47	22.94
SS	SW8082	NDA192FD1	FD1		4/12/00 1:00 PM	4/24/00 12:00 AM	5/5/00 11:54 AM	**11.46**	11.50	22.95
SB	SW8082	NDA248	N1		4/12/00 1:05 PM	4/24/00 12:00 AM	5/5/00 7:00 PM	**11.45**	11.79	23.25
SS	SW8082	NDA193	N1		4/12/00 1:20 PM	4/24/00 12:00 AM	5/5/00 12:30 PM	**11.44**	11.52	22.97
SB	SW8082	NDA249	N1		4/12/00 1:30 PM	4/24/00 12:00 AM	5/5/00 7:36 PM	**11.44**	11.82	23.25
SS	SW8082	NDA194	N1		4/12/00 1:55 PM	4/24/00 12:00 AM	5/5/00 1:05 PM	**11.42**	11.55	22.97
SB	SW8082	NDA252	N1		4/12/00 2:12 PM	4/24/00 12:00 AM	5/5/00 8:11 PM	**11.41**	11.84	23.25
SS	SW8082	NDA195	N1		4/12/00 2:15 PM	4/24/00 12:00 AM	5/12/00 10:32 AM	**11.41**	18.44	29.85
SB	SW8082	NDA253	N1		4/12/00 2:34 PM	4/24/00 12:00 AM	5/5/00 8:46 PM	**11.39**	11.87	23.26
SB	SW8082	NDA254	N1		4/12/00 3:00 PM	4/24/00 12:00 AM	5/5/00 9:22 PM	**11.38**	11.89	23.27
SB	SW8082	NDA255	N1		4/12/00 3:20 PM	4/24/00 12:00 AM	5/5/00 9:57 PM	**11.36**	11.91	23.28
SS	SW8082	NDA057	N1		4/18/00 9:45 AM	4/28/00 12:00 AM	5/6/00 4:28 AM	**9.59**	8.19	17.78
SD	SW8082	NDA047	N1		4/18/00 9:55 AM	4/28/00 12:00 AM	5/6/00 2:42 AM	**9.59**	8.11	17.70
SS	SW8082	NDA059	N1		4/18/00 10:10 AM	4/28/00 12:00 AM	5/6/00 5:39 AM	**9.58**	8.24	17.81
SB	SW8082	NDA058	N1		4/18/00 10:40 AM	4/28/00 12:00 AM	5/6/00 5:04 AM	**9.56**	8.21	17.77
SS	SW8082	NDA062FD1	FD1		4/18/00 10:45 AM	4/28/00 12:00 AM	5/6/00 10:23 AM	**9.55**	8.43	17.98
SS	SW8082	NDA061SD	SD		4/18/00 10:45 AM	4/28/00 12:00 AM	5/6/00 8:01 AM	**9.55**	8.33	17.89
SS	SW8082	NDA061MS	MS		4/18/00 10:45 AM	4/28/00 12:00 AM	5/6/00 7:26 AM	**9.55**	8.31	17.86
SS	SW8082	NDA061	N1		4/18/00 10:45 AM	4/28/00 12:00 AM	5/6/00 6:50 AM	**9.55**	8.28	17.84
SB	SW8082	NDA060	N1		4/18/00 1:30 PM	4/28/00 12:00 AM	5/6/00 6:15 AM	**9.44**	8.26	17.70

Table 3 - Samples Analyzed OUtside of Holding Time Per Method

Matrix	Analysis Method	Sample ID	Sample Type	LR Type	Date Collected (DC)	Date Prepared (DP)	Date Analyzed (DA)	Days Awaiting Preparation (DP-DC)	Days Awaiting Analysis (DA-DP)	Total Elapsed Days (DA-DC)
SD	SW8082	NDA048	N1		4/18/00 2:15 PM	4/28/00 12:00 AM	5/6/00 3:17 AM	**9.41**	8.14	17.54
SD	SW8082	NDA049	N1		4/18/00 2:30 PM	4/28/00 12:00 AM	5/6/00 3:53 AM	**9.40**	8.16	17.56
SB	SW8082	NDA214FD1	FD1		4/7/00 8:00 AM	4/16/00 12:00 AM	4/25/00 8:09 PM	**8.67**	9.84	18.51
SB	SW8082	NDA213SD	SD		4/7/00 8:00 AM	4/16/00 12:00 AM	4/25/00 7:33 PM	**8.67**	9.81	18.48
SB	SW8082	NDA213MS	MS		4/7/00 8:00 AM	4/16/00 12:00 AM	4/25/00 6:58 PM	**8.67**	9.79	18.46
SB	SW8082	NDA213	N1		4/7/00 8:00 AM	4/16/00 12:00 AM	4/25/00 6:23 PM	**8.67**	9.77	18.43
SB	SW8082	NDA215	N1		4/7/00 8:30 AM	4/16/00 12:00 AM	4/25/00 8:45 PM	**8.65**	9.86	18.51
SB	SW8082	NDA216	N1		4/7/00 8:40 AM	4/16/00 12:00 AM	4/25/00 9:20 PM	**8.64**	9.89	18.53
SB	SW8082	NDA217	N1		4/7/00 9:10 AM	4/16/00 12:00 AM	4/25/00 9:56 PM	**8.62**	9.91	18.53
SB	SW8082	NDA218	N1		4/7/00 9:45 AM	4/16/00 12:00 AM	4/25/00 10:31 PM	**8.59**	9.94	18.53
SS	SW8082	NDA107	N1		4/24/00 9:45 AM	5/3/00 12:00 AM	5/10/00 11:25 PM	**8.59**	7.98	16.57
SB	SW8082	NDA108SD	SD		4/24/00 10:00 AM	5/3/00 12:00 AM	5/11/00 1:12 AM	**8.58**	8.05	16.63
SB	SW8082	NDA108MS	MS		4/24/00 10:00 AM	5/3/00 12:00 AM	5/11/00 12:36 AM	**8.58**	8.03	16.61
SB	SW8082	NDA108	N1		4/24/00 10:00 AM	5/3/00 12:00 AM	5/11/00 12:01 AM	**8.58**	8.00	16.58
SS	SW8082	NDA109	N1		4/24/00 10:10 AM	5/3/00 12:00 AM	5/11/00 1:47 AM	**8.58**	8.07	16.65
SB	SW8082	NDA110	N1		4/24/00 10:15 AM	5/3/00 12:00 AM	5/11/00 2:23 AM	**8.57**	8.10	16.67
SB	SW8082	NDA235SD	SD		4/11/00 10:25 AM	4/20/00 12:00 AM	5/4/00 12:36 AM	**8.57**	14.03	22.59
SB	SW8082	NDA235MS	MS		4/11/00 10:25 AM	4/20/00 12:00 AM	5/4/00 12:01 AM	**8.57**	14.00	22.57
SB	SW8082	NDA235	N1		4/11/00 10:25 AM	4/20/00 12:00 AM	5/3/00 11:25 PM	**8.57**	13.98	22.54
SB	SW8082	NDA219	N1		4/7/00 10:25 AM	4/16/00 12:00 AM	4/25/00 11:07 PM	**8.57**	9.96	18.53
SS	SW8082	NDA111	N1		4/24/00 10:30 AM	5/3/00 12:00 AM	5/11/00 2:58 AM	**8.56**	8.12	16.69
SB	SW8082	NDA112	N1		4/24/00 10:40 AM	5/3/00 12:00 AM	5/11/00 3:34 AM	**8.56**	8.15	16.70
SB	SW8082	NDA237FD1	FD1		4/11/00 10:45 AM	4/20/00 12:00 AM	5/4/00 1:47 AM	**8.55**	14.07	22.63
SB	SW8082	NDA236	N1		4/11/00 10:45 AM	4/20/00 12:00 AM	5/4/00 1:12 AM	**8.55**	14.05	22.60
SB	SW8082	NDA220	N1		4/7/00 10:49 AM	4/16/00 12:00 AM	4/25/00 11:42 PM	**8.55**	9.99	18.54
SB	SW8082	NDA221	N1		4/7/00 11:10 AM	4/16/00 12:00 AM	4/26/00 12:18 AM	**8.53**	10.01	18.55
SB	SW8082	NDA238	N1		4/11/00 11:20 AM	4/20/00 12:00 AM	5/4/00 2:22 AM	**8.53**	14.10	22.63
SD	SW8082	NDA054	N1		4/7/00 11:30 AM	4/16/00 12:00 AM	4/25/00 5:11 PM	**8.52**	9.72	18.24
SB	SW8082	NDA222	N1		4/7/00 11:35 AM	4/16/00 12:00 AM	4/26/00 12:53 AM	**8.52**	10.04	18.55
SD	SW8082	NDA055	N1		4/7/00 11:45 AM	4/16/00 12:00 AM	4/25/00 5:47 PM	**8.51**	9.74	18.25
SB	SW8082	NDA239	N1		4/11/00 11:49 AM	4/20/00 12:00 AM	5/4/00 2:58 AM	**8.51**	14.12	22.63
SB	SW8082	NDA223	N1		4/7/00 12:10 PM	4/16/00 12:00 AM	4/26/00 1:29 AM	**8.49**	10.06	18.55
SS	SW8082	NDA101	N1		4/24/00 1:00 PM	5/3/00 12:00 AM	5/10/00 7:53 PM	**8.46**	7.83	16.29
SB	SW8082	NDA102	N1		4/24/00 1:15 PM	5/3/00 12:00 AM	5/10/00 8:28 PM	**8.45**	7.85	16.30
SB	SW8082	NDA240	N1		4/11/00 1:37 PM	4/20/00 12:00 AM	5/4/00 3:34 AM	**8.43**	14.15	22.58
SS	SW8082	NDA104FD1	FD1		4/24/00 1:40 PM	5/3/00 12:00 AM	5/10/00 9:39 PM	**8.43**	7.90	16.33
SS	SW8082	NDA103	N1		4/24/00 1:40 PM	5/3/00 12:00 AM	5/10/00 9:04 PM	**8.43**	7.88	16.31
SB	SW8082	NDA106FD1	FD1		4/24/00 2:00 PM	5/3/00 12:00 AM	5/10/00 10:50 PM	**8.42**	7.95	16.37
SB	SW8082	NDA105	N1		4/24/00 2:00 PM	5/3/00 12:00 AM	5/10/00 10:14 PM	**8.42**	7.93	16.34

Table 3 - Samples Analyzed OUt[illegible]f Holding Time Per Method

Matrix	Analysis Method	Sample ID	Sample Type	LR Type	Date Collected (DC)	Date Prepared (DP)	Date Analyzed (DA)	Days Awaiting Preparation (DP-DC)	Days Awaiting Analysis (DA-DP)	Total Elapsed Days (DA-DC)
SB	SW8082	NDA241	N1		4/11/00 2:25 PM	4/20/00 12:00 AM	5/4/00 4:09 AM	**8.40**	14.17	22.57
SB	SW8082	NDA242	N1		4/11/00 2:43 PM	4/20/00 12:00 AM	5/4/00 4:44 AM	**8.39**	14.20	22.58
SB	SW8082	NDA243	N1		4/11/00 2:53 PM	4/20/00 12:00 AM	5/4/00 5:20 AM	**8.38**	14.22	22.60
SB	SW8082	NDA244	N1		4/11/00 3:25 PM	4/20/00 12:00 AM	5/4/00 5:55 AM	**8.36**	14.25	22.60
SS	SW8082	NDA164	N1		4/6/00 9:38 AM	4/14/00 12:00 AM	4/19/00 10:28 PM	**7.60**	5.94	13.53
SS	SW8082	NDA166	N1		4/6/00 9:50 AM	4/14/00 12:00 AM	4/19/00 11:39 PM	**7.59**	5.99	13.58
SB	SW8082	NDA165	N1		4/6/00 9:50 AM	4/14/00 12:00 AM	4/19/00 11:03 PM	**7.59**	5.96	13.55
SD	SW8082	NDA051FD1	FD1		4/6/00 10:00 AM	4/14/00 12:00 AM	4/19/00 8:41 PM	**7.58**	5.86	13.45
SD	SW8082	NDA050SD	SD		4/6/00 10:00 AM	4/14/00 12:00 AM	4/19/00 8:06 PM	**7.58**	5.84	13.42
SD	SW8082	NDA050MS	MS		4/6/00 10:00 AM	4/14/00 12:00 AM	4/19/00 7:30 PM	**7.58**	5.81	13.40
SD	SW8082	NDA050	N1		4/6/00 10:00 AM	4/14/00 12:00 AM	4/19/00 6:55 PM	**7.58**	5.79	13.37
SB	SW8082	NDA167	N1		4/6/00 10:20 AM	4/14/00 12:00 AM	4/20/00 12:14 AM	**7.57**	6.01	13.58
SS	SW8082	NDA168	N1		4/6/00 10:25 AM	4/14/00 12:00 AM	4/20/00 12:50 AM	**7.57**	6.03	13.60
SB	SW8082	NDA169	N1		4/6/00 10:35 AM	4/14/00 12:00 AM	4/20/00 1:26 AM	**7.56**	6.06	13.62
SS	SW8082	NDA170	N1		4/6/00 10:55 AM	4/14/00 12:00 AM	4/20/00 2:01 AM	**7.55**	6.08	13.63
SB	SW8082	NDA171	N1		4/6/00 11:00 AM	4/14/00 12:00 AM	4/20/00 4:23 AM	**7.54**	6.18	13.72
SS	SW8082	NDA172	N1		4/6/00 11:20 AM	4/14/00 12:00 AM	4/20/00 4:59 AM	**7.53**	6.21	13.74
SB	SW8082	NDA173	N1		4/6/00 11:30 AM	4/14/00 12:00 AM	4/20/00 5:34 AM	**7.52**	6.23	13.75
WG	SW8082	NDA016	N1		5/1/00 12:50 PM	5/9/00 12:00 AM	5/10/00 6:28 AM	**7.47**	1.27	8.73
SS	SW8082	NDA174	N1		4/6/00 12:55 PM	4/14/00 12:00 AM	4/20/00 6:10 AM	**7.46**	6.26	13.72
SD	SW8082	NDA052	N1		4/6/00 1:00 PM	4/14/00 12:00 AM	4/19/00 9:17 PM	**7.46**	5.89	13.35
SB	SW8082	NDA175	N1		4/6/00 1:25 PM	4/14/00 12:00 AM	4/20/00 6:45 AM	**7.44**	6.28	13.72
SD	SW8082	NDA053	N1		4/6/00 1:30 PM	4/14/00 12:00 AM	4/19/00 9:52 PM	**7.44**	5.91	13.35
SS	SW8082	NDA176	N1		4/6/00 1:45 PM	4/14/00 12:00 AM	4/20/00 7:21 AM	**7.43**	6.31	13.73
SB	SW8082	NDA177	N1		4/6/00 1:55 PM	4/14/00 12:00 AM	4/20/00 9:07 AM	**7.42**	6.38	13.80
SS	SW8082	NDA113	N1		4/20/00 2:10 PM	4/28/00 12:00 AM	5/6/00 10:59 AM	**7.41**	8.46	15.87
SB	SW8082	NDA114	N1		4/20/00 2:20 PM	4/28/00 12:00 AM	5/6/00 11:34 AM	**7.40**	8.48	15.88
WG	SW8082	NDA015	N1		5/1/00 2:30 PM	5/9/00 12:00 AM	5/10/00 5:52 AM	**7.40**	1.24	8.64
SS	SW8082	NDA115	N1		4/20/00 2:50 PM	4/28/00 12:00 AM	5/6/00 12:10 PM	**7.38**	8.51	15.89
SB	SW8082	NDA116	N1		4/20/00 3:10 PM	4/28/00 12:00 AM	5/6/00 12:45 PM	**7.37**	8.53	15.90
WQ	SW8082	NDA320EB1	EB1		5/1/00 3:20 PM	5/9/00 12:00 AM	5/10/00 7:39 AM	**7.36**	1.32	8.68
SS	SW8082	NDA117	N1		4/20/00 3:25 PM	4/28/00 12:00 AM	5/6/00 1:20 PM	**7.36**	8.56	15.91
SB	SW8082	NDA118	N1		4/20/00 4:00 PM	4/28/00 12:00 AM	5/6/00 1:56 PM	**7.33**	8.58	15.91
WG	SW8082	NDA026	N1		5/1/00 4:30 PM	5/9/00 12:00 AM	5/10/00 7:03 AM	**7.31**	1.29	8.61
SB	SW8270	NDA083RE1	LR	RE	4/19/00 12:00 AM	5/11/00 12:00 AM	5/19/00 12:53 AM	**22.00**	8.04	30.04
SS	SW8270	NDA082RE1	LR	RE	4/19/00 12:00 AM	5/11/00 12:00 AM	5/19/00 12:15 AM	**22.00**	8.01	30.01
SB	SW8270	NDA081RE1	LR	RE	4/19/00 12:00 AM	5/11/00 12:00 AM	5/17/00 9:49 PM	**22.00**	6.91	28.91
SB	SW8270	NDA077	N1		4/19/00 2:15 PM	5/8/00 12:00 AM	5/9/00 7:48 PM	**18.41**	1.82	20.23
SB	SW8270	NDA245	N1		4/12/00 9:00 AM	4/24/00 12:00 AM	5/2/00 7:28 PM	**11.63**	8.81	20.44

Table 3 - Samples Analyzed OUtside of Holding Time Per Method

Matrix	Analysis Method	Sample ID	Sample Type	LR Type	Date Collected (DC)	Date Prepared (DP)	Date Analyzed (DA)	Days Awaiting Preparation (DP-DC)	Days Awaiting Analysis (DA-DP)	Total Elapsed Days (DA-DC)
SS	SW8270	NDA185	N1		4/12/00 10:20 AM	4/24/00 12:00 AM	5/2/00 12:19 PM	**11.57**	8.51	20.08
SS	SW8270	NDA186	N1		4/12/00 10:30 AM	4/24/00 12:00 AM	5/2/00 12:58 PM	**11.56**	8.54	20.10
SS	SW8270	NDA187	N1		4/12/00 10:45 AM	4/24/00 12:00 AM	5/2/00 1:37 PM	**11.55**	8.57	20.12
SS	SW8270	NDA188	N1		4/12/00 11:15 AM	4/24/00 12:00 AM	5/2/00 2:16 PM	**11.53**	8.59	20.13
SB	SW8270	NDA246SD	SD		4/12/00 11:30 AM	4/24/00 12:00 AM	5/3/00 11:00 AM	**11.52**	9.46	20.98
SB	SW8270	NDA246MS	MS		4/12/00 11:30 AM	4/24/00 12:00 AM	5/3/00 10:22 AM	**11.52**	9.43	20.95
SB	SW8270	NDA246	N1		4/12/00 11:30 AM	4/24/00 12:00 AM	5/3/00 9:43 AM	**11.52**	9.40	20.93
SB	SW8270	NDA247FD1	FD1		4/12/00 11:30 AM	4/24/00 12:00 AM	5/2/00 11:40 AM	**11.52**	8.49	20.01
SS	SW8270	NDA189	N1		4/12/00 11:45 AM	4/24/00 12:00 AM	5/2/00 2:55 PM	**11.51**	8.62	20.13
SS	SW8270	NDA190	N1		4/12/00 12:30 PM	4/24/00 12:00 AM	5/2/00 3:35 PM	**11.48**	8.65	20.13
SS	SW8270	NDA191	N1		4/12/00 12:50 PM	4/24/00 12:00 AM	5/2/00 4:14 PM	**11.47**	8.68	20.14
SS	SW8270	NDA192FD1	FD1		4/12/00 1:00 PM	4/24/00 12:00 AM	5/2/00 4:53 PM	**11.46**	8.70	20.16
SB	SW8270	NDA248	N1		4/12/00 1:05 PM	4/24/00 12:00 AM	5/2/00 10:23 AM	**11.45**	8.43	19.89
SS	SW8270	NDA193	N1		4/12/00 1:20 PM	4/24/00 12:00 AM	5/3/00 3:30 PM	**11.44**	9.65	21.09
SB	SW8270	NDA249	N1		4/12/00 1:30 PM	4/24/00 12:00 AM	5/3/00 2:12 PM	**11.44**	9.59	21.03
SS	SW8270	NDA194	N1		4/12/00 1:55 PM	4/24/00 12:00 AM	5/2/00 6:11 PM	**11.42**	8.76	20.18
SB	SW8270	NDA252	N1		4/12/00 2:12 PM	4/24/00 12:00 AM	5/3/00 11:39 AM	**11.41**	9.49	20.89
SS	SW8270	NDA195	N1		4/12/00 2:15 PM	4/24/00 12:00 AM	5/2/00 6:50 PM	**11.41**	8.78	20.19
SB	SW8270	NDA092	N1		4/13/00 2:20 PM	4/25/00 12:00 AM	5/2/00 3:43 PM	**11.40**	7.65	19.06
SB	SW8270	NDA253	N1		4/12/00 2:34 PM	4/24/00 12:00 AM	5/3/00 12:17 PM	**11.39**	9.51	20.90
SB	SW8270	NDA254	N1		4/12/00 3:00 PM	4/24/00 12:00 AM	5/3/00 12:55 PM	**11.38**	9.54	20.91
SB	SW8270	NDA255	N1		4/12/00 3:20 PM	4/24/00 12:00 AM	5/3/00 1:34 PM	**11.36**	9.57	20.93
SD	SW8270	NDA043	N1		4/13/00 9:30 AM	4/24/00 12:00 AM	5/2/00 11:45 AM	**10.60**	8.49	19.09
SD	SW8270	NDA042	N1		4/13/00 10:00 AM	4/24/00 12:00 AM	5/2/00 11:06 AM	**10.58**	8.46	19.05
SD	SW8270	NDA307FD1	FD1		4/13/00 10:45 AM	4/24/00 12:00 AM	5/2/00 7:39 PM	**10.55**	8.82	19.37
SD	SW8270	NDA044	N1		4/13/00 10:45 AM	4/24/00 12:00 AM	5/2/00 12:24 PM	**10.55**	8.52	19.07
SS	SW8270	NDA084	N1		4/13/00 12:50 PM	4/24/00 12:00 AM	5/2/00 2:23 PM	**10.47**	8.60	19.06
SD	SW8270	NDA046	N1		4/13/00 1:15 PM	4/24/00 12:00 AM	5/2/00 1:43 PM	**10.45**	8.57	19.02
SD	SW8270	NDA045	N1		4/13/00 1:30 PM	4/24/00 12:00 AM	5/2/00 1:04 PM	**10.44**	8.54	18.98
SB	SW8270	NDA085	N1		4/13/00 1:55 PM	4/24/00 12:00 AM	5/2/00 3:03 PM	**10.42**	8.63	19.05
SD	SW8270	NDA303	N1		4/13/00 2:10 PM	4/24/00 12:00 AM	5/2/00 7:00 PM	**10.41**	8.79	19.20
SD	SW8270	NDA302	N1		4/13/00 2:30 PM	4/24/00 12:00 AM	5/2/00 6:21 PM	**10.40**	8.76	19.16
SB	SW8270	NDA093	N1		4/13/00 2:45 PM	4/24/00 12:00 AM	5/2/00 4:22 PM	**10.39**	8.68	19.07
SB	SW8270	NDA094	N1		4/13/00 3:15 PM	4/24/00 12:00 AM	5/2/00 5:02 PM	**10.36**	8.71	19.07
SB	SW8270	NDA095FD1	FD1		4/13/00 3:20 PM	4/24/00 12:00 AM	5/2/00 5:41 PM	**10.36**	8.74	19.10
SB	SW8270	NDA235	N1		4/11/00 10:25 AM	4/21/00 12:00 AM	4/28/00 10:40 AM	**9.57**	7.44	17.01
SB	SW8270	NDA237FD1	FD1		4/11/00 10:45 AM	4/21/00 12:00 AM	5/1/00 12:27 PM	**9.55**	10.52	20.07
SB	SW8270	NDA236	N1		4/11/00 10:45 AM	4/21/00 12:00 AM	4/28/00 11:20 AM	**9.55**	7.47	17.02
SB	SW8270	NDA238	N1		4/11/00 11:20 AM	4/21/00 12:00 AM	4/28/00 12:39 PM	**9.53**	7.53	17.05

Table 3 - Samples Analyzed OUTside of Holding Time Per Method

Matrix	Analysis Method	Sample ID	Sample Type	LR Type	Date Collected (DC)	Date Prepared (DP)	Date Analyzed (DA)	Days Awaiting Preparation (DP-DC)	Days Awaiting Analysis (DA-DP)	Total Elapsed Days (DA-DC)
SB	SW8270	NDA239	N1		4/11/00 11:49 AM	4/21/00 12:00 AM	4/28/00 1:18 PM	**9.51**	7.55	17.06
SB	SW8270	NDA240	N1		4/11/00 1:37 PM	4/21/00 12:00 AM	4/28/00 1:58 PM	**9.43**	7.58	17.01
SB	SW8270	NDA241	N1		4/11/00 2:25 PM	4/21/00 12:00 AM	4/28/00 2:37 PM	**9.40**	7.61	17.01
SB	SW8270	NDA242	N1		4/11/00 2:43 PM	4/21/00 12:00 AM	4/28/00 3:17 PM	**9.39**	7.64	17.02
SB	SW8270	NDA243	N1		4/11/00 2:53 PM	4/21/00 12:00 AM	4/28/00 3:57 PM	**9.38**	7.66	17.04
SB	SW8270	NDA244	N1		4/11/00 3:25 PM	4/21/00 12:00 AM	4/28/00 4:36 PM	**9.36**	7.69	17.05
SS	SW8270	NDA080RE1	LR	RE	4/19/00 12:00 AM	4/28/00 12:00 AM	5/17/00 9:11 PM	**9.00**	19.88	28.88
SS	SW8270	NDA072FD1	FD1		4/19/00 9:00 AM	4/28/00 12:00 AM	5/9/00 4:27 PM	**8.63**	11.69	20.31
SS	SW8270	NDA071SD	SD		4/19/00 9:00 AM	4/28/00 12:00 AM	5/9/00 3:47 PM	**8.63**	11.66	20.28
SS	SW8270	NDA071MS	MS		4/19/00 9:00 AM	4/28/00 12:00 AM	5/9/00 3:06 PM	**8.63**	11.63	20.25
SS	SW8270	NDA071	N1		4/19/00 9:00 AM	4/28/00 12:00 AM	5/9/00 2:26 PM	**8.63**	11.60	20.23
SS	SW8270	NDA119	N1		4/18/00 9:15 AM	4/27/00 12:00 AM	5/8/00 8:28 PM	**8.61**	11.85	20.47
SS	SW8270	NDA074	N1		4/19/00 9:20 AM	4/28/00 12:00 AM	5/9/00 5:47 PM	**8.61**	11.74	20.35
SS	SW8270	NDA120	N1		4/18/00 9:40 AM	4/27/00 12:00 AM	5/8/00 9:06 PM	**8.60**	11.88	20.48
SS	SW8270	NDA076	N1		4/19/00 9:50 AM	4/28/00 12:00 AM	5/9/00 7:08 PM	**8.59**	11.80	20.39
SS	SW8270	NDA091MS	MS		4/17/00 9:50 AM	4/26/00 12:00 AM	5/3/00 1:52 PM	**8.59**	7.58	16.17
SS	SW8270	NDA091	N1		4/17/00 9:50 AM	4/26/00 12:00 AM	5/3/00 10:37 AM	**8.59**	7.44	16.03
SB	SW8270	NDA297	N1		4/17/00 10:00 AM	4/26/00 12:00 AM	5/3/00 11:55 AM	**8.58**	7.50	16.08
SS	SW8270	NDA078	N1		4/19/00 10:20 AM	4/28/00 12:00 AM	5/9/00 8:27 PM	**8.57**	11.85	20.42
SB	SW8270	NDA299	N1		4/17/00 10:25 AM	4/26/00 12:00 AM	5/3/00 1:13 PM	**8.57**	7.55	16.12
SS	SW8270	NDA121	N1		4/18/00 10:30 AM	4/27/00 12:00 AM	5/8/00 9:46 PM	**8.56**	11.91	20.47
SB	SW8270	NDA070	N1		4/19/00 10:30 AM	4/28/00 12:00 AM	5/9/00 1:46 PM	**8.56**	11.57	20.14
SB	SW8270	NDA296	N1		4/17/00 10:35 AM	4/26/00 12:00 AM	5/3/00 11:16 AM	**8.56**	7.47	16.03
SS	SW8270	NDA122	N1		4/18/00 10:50 AM	4/27/00 12:00 AM	5/9/00 10:44 AM	**8.55**	12.45	21.00
SS	SW8270	NDA080	N1		4/19/00 11:10 AM	4/28/00 12:00 AM	5/10/00 4:33 PM	**8.53**	12.69	21.22
SB	SW8270	NDA073	N1		4/19/00 1:00 PM	4/28/00 12:00 AM	5/9/00 5:07 PM	**8.46**	11.71	20.17
SS	SW8270	NDA082	N1		4/19/00 1:10 PM	4/28/00 12:00 AM	5/10/00 5:54 PM	**8.45**	12.75	21.20
SS	SW8270	NDA123	N1		4/18/00 1:30 PM	4/27/00 12:00 AM	5/9/00 11:22 AM	**8.44**	12.47	20.91
SB	SW8270	NDA075	N1		4/19/00 1:30 PM	4/28/00 12:00 AM	5/9/00 6:27 PM	**8.44**	11.77	20.21
SS	SW8270	NDA124	N1		4/18/00 1:55 PM	4/27/00 12:00 AM	5/9/00 12:01 PM	**8.42**	12.50	20.92
SS	SW8270	NDA065	N1		4/18/00 2:00 PM	4/27/00 12:00 AM	5/8/00 5:15 PM	**8.42**	11.72	20.14
SB	SW8270	NDA064FD1	FD1		4/18/00 2:15 PM	4/27/00 12:00 AM	5/8/00 4:35 PM	**8.41**	11.69	20.10
SB	SW8270	NDA063SD	SD		4/18/00 2:15 PM	4/27/00 12:00 AM	5/8/00 3:56 PM	**8.41**	11.66	20.07
SB	SW8270	NDA063MS	MS		4/18/00 2:15 PM	4/27/00 12:00 AM	5/8/00 3:17 PM	**8.41**	11.64	20.04
SB	SW8270	NDA079	N1		4/19/00 2:30 PM	4/28/00 12:00 AM	5/9/00 9:07 PM	**8.40**	11.88	20.28
SS	SW8270	NDA067	N1		4/18/00 2:55 PM	4/27/00 12:00 AM	5/8/00 6:32 PM	**8.38**	11.77	20.15
SB	SW8270	NDA081	N1		4/19/00 3:20 PM	4/28/00 12:00 AM	5/10/00 5:13 PM	**8.36**	12.72	21.08
SS	SW8270	NDA069	N1		4/18/00 3:30 PM	4/27/00 12:00 AM	5/8/00 7:49 PM	**8.35**	11.83	20.18
SB	SW8270	NDA066	N1		4/18/00 3:30 PM	4/27/00 12:00 AM	5/8/00 5:53 PM	**8.35**	11.75	20.10

Table 3 - Samples Analyzed OUtside of Holding Time Per Method

Matrix	Analysis Method	Sample ID	Sample Type	LR Type	Date Collected (DC)	Date Prepared (DP)	Date Analyzed (DA)	Days Awaiting Preparation (DP-DC)	Days Awaiting Analysis (DA-DP)	Total Elapsed Days (DA-DC)
SB	SW8270	NDA083	N1		4/19/00 3:45 PM	4/28/00 12:00 AM	5/10/00 6:34 PM	**8.34**	12.77	21.12
SB	SW8270	NDA068	N1		4/18/00 3:50 PM	4/27/00 12:00 AM	5/9/00 12:40 PM	**8.34**	12.53	20.87
SB	SW8270	NDA214FD1	FD1		4/7/00 8:00 AM	4/15/00 12:00 AM	4/21/00 6:08 PM	**7.67**	6.76	14.42
SB	SW8270	NDA213SD	SD		4/7/00 8:00 AM	4/15/00 12:00 AM	4/21/00 5:29 PM	**7.67**	6.73	14.40
SB	SW8270	NDA213MS	MS		4/7/00 8:00 AM	4/15/00 12:00 AM	4/21/00 4:51 PM	**7.67**	6.70	14.37
SB	SW8270	NDA213	N1		4/7/00 8:00 AM	4/15/00 12:00 AM	4/21/00 4:13 PM	**7.67**	6.68	14.34
SB	SW8270	NDA215	N1		4/7/00 8:30 AM	4/15/00 12:00 AM	4/21/00 6:46 PM	**7.65**	6.78	14.43
SB	SW8270	NDA216	N1		4/7/00 8:40 AM	4/15/00 12:00 AM	4/21/00 7:25 PM	**7.64**	6.81	14.45
SS	SW8270	NDA201	N1		4/11/00 8:45 AM	4/19/00 12:00 AM	4/28/00 5:05 PM	**7.64**	9.71	17.35
SB	SW8270	NDA217	N1		4/7/00 9:10 AM	4/15/00 12:00 AM	4/21/00 8:03 PM	**7.62**	6.84	14.45
SS	SW8270	NDA202	N1		4/11/00 9:15 AM	4/19/00 12:00 AM	4/28/00 5:44 PM	**7.61**	9.74	17.35
SS	SW8270	NDA057	N1		4/18/00 9:45 AM	4/26/00 12:00 AM	5/5/00 2:17 PM	**7.59**	9.60	17.19
SB	SW8270	NDA218	N1		4/7/00 9:45 AM	4/15/00 12:00 AM	4/21/00 8:41 PM	**7.59**	6.86	14.46
SS	SW8270	NDA203	N1		4/11/00 9:50 AM	4/19/00 12:00 AM	4/28/00 6:22 PM	**7.59**	9.77	17.36
SD	SW8270	NDA047	N1		4/18/00 9:55 AM	4/26/00 12:00 AM	5/5/00 12:19 PM	**7.59**	9.51	17.10
SS	SW8270	NDA059	N1		4/18/00 10:10 AM	4/26/00 12:00 AM	5/5/00 3:36 PM	**7.58**	9.65	17.23
SB	SW8270	NDA219	N1		4/7/00 10:25 AM	4/15/00 12:00 AM	4/21/00 9:19 PM	**7.57**	6.89	14.45
SB	SW8270	NDA058	N1		4/18/00 10:40 AM	4/26/00 12:00 AM	5/5/00 2:56 PM	**7.56**	9.62	17.18
SS	SW8270	NDA204	N1		4/11/00 10:45 AM	4/19/00 12:00 AM	5/1/00 7:33 PM	**7.55**	12.81	20.37
SS	SW8270	NDA205FD1	FD1		4/11/00 10:45 AM	4/19/00 12:00 AM	4/28/00 7:40 PM	**7.55**	9.82	17.37
SS	SW8270	NDA062FD1	FD1		4/18/00 10:45 AM	4/26/00 12:00 AM	5/5/00 6:54 PM	**7.55**	9.79	17.34
SS	SW8270	NDA061SD	SD		4/18/00 10:45 AM	4/26/00 12:00 AM	5/5/00 6:14 PM	**7.55**	9.76	17.31
SS	SW8270	NDA061MS	MS		4/18/00 10:45 AM	4/26/00 12:00 AM	5/5/00 5:34 PM	**7.55**	9.73	17.28
SS	SW8270	NDA061	N1		4/18/00 10:45 AM	4/26/00 12:00 AM	5/5/00 4:55 PM	**7.55**	9.70	17.26
SB	SW8270	NDA220	N1		4/7/00 10:49 AM	4/15/00 12:00 AM	4/21/00 9:58 PM	**7.55**	6.92	14.46
SB	SW8270	NDA221	N1		4/7/00 11:10 AM	4/15/00 12:00 AM	4/21/00 10:36 PM	**7.53**	6.94	14.48
SS	SW8270	NDA206	N1		4/11/00 11:20 AM	4/19/00 12:00 AM	5/1/00 12:50 PM	**7.53**	12.53	20.06
SS	SW8270	NDA207	N1		4/11/00 11:30 AM	4/19/00 12:00 AM	5/1/00 4:44 PM	**7.52**	12.70	20.22
SD	SW8270	NDA054	N1		4/7/00 11:30 AM	4/15/00 12:00 AM	4/24/00 1:30 PM	**7.52**	9.56	17.08
SB	SW8270	NDA222	N1		4/7/00 11:35 AM	4/15/00 12:00 AM	4/24/00 3:26 PM	**7.52**	9.64	17.16
SS	SW8270	NDA208	N1		4/11/00 11:45 AM	4/19/00 12:00 AM	5/1/00 12:11 PM	**7.51**	12.51	20.02
SD	SW8270	NDA055	N1		4/7/00 11:45 AM	4/15/00 12:00 AM	4/21/00 3:34 PM	**7.51**	6.65	14.16
SB	SW8270	NDA223	N1		4/7/00 12:10 PM	4/15/00 12:00 AM	4/24/00 4:05 PM	**7.49**	9.67	17.16
SS	SW8270	NDA209	N1		4/11/00 1:30 PM	4/19/00 12:00 AM	5/1/00 2:09 PM	**7.44**	12.59	20.03
SB	SW8270	NDA060	N1		4/18/00 1:30 PM	4/26/00 12:00 AM	5/5/00 4:16 PM	**7.44**	9.68	17.12
SS	SW8270	NDA178	N1		4/11/00 1:30 PM	4/19/00 12:00 AM	4/28/00 11:14 AM	**7.44**	9.47	16.91
SS	SW8270	NDA179	N1		4/11/00 1:45 PM	4/19/00 12:00 AM	4/28/00 11:53 AM	**7.43**	9.50	16.92
SS	SW8270	NDA210	N1		4/11/00 1:50 PM	4/19/00 12:00 AM	5/1/00 2:48 PM	**7.42**	12.62	20.04
SS	SW8270	NDA180	N1		4/11/00 2:00 PM	4/19/00 12:00 AM	4/28/00 12:32 PM	**7.42**	9.52	16.94

Table 3 - Samples Analyzed OUts[illegible] Holding Time Per Method

Matrix	Analysis Method	Sample ID	Sample Type	LR Type	Date Collected (DC)	Date Prepared (DP)	Date Analyzed (DA)	Days Awaiting Preparation (DP-DC)	Days Awaiting Analysis (DA-DP)	Total Elapsed Days (DA-DC)
SS	SW8270	NDA211	N1		4/11/00 2:10 PM	4/19/00 12:00 AM	5/1/00 3:27 PM	**7.41**	12.64	20.05
SB	SW8270	NDA063	N1		4/18/00 2:15 PM	4/26/00 12:00 AM	5/8/00 2:37 PM	**7.41**	12.61	20.02
SS	SW8270	NDA181	N1		4/11/00 2:15 PM	4/19/00 12:00 AM	4/28/00 1:11 PM	**7.41**	9.55	16.96
SD	SW8270	NDA048	N1		4/18/00 2:15 PM	4/26/00 12:00 AM	5/5/00 12:58 PM	**7.41**	9.54	16.95
SS	SW8270	NDA212	N1		4/11/00 2:30 PM	4/19/00 12:00 AM	5/1/00 4:05 PM	**7.40**	12.67	20.07
SS	SW8270	NDA182	N1		4/11/00 2:30 PM	4/19/00 12:00 AM	4/28/00 1:50 PM	**7.40**	9.58	16.97
SD	SW8270	NDA049	N1		4/18/00 2:30 PM	4/26/00 12:00 AM	5/5/00 1:37 PM	**7.40**	9.57	16.96
SS	SW8270	NDA183SD	SD		4/11/00 2:50 PM	4/19/00 12:00 AM	5/1/00 6:53 PM	**7.38**	12.79	20.17
SS	SW8270	NDA183MS	MS		4/11/00 2:50 PM	4/19/00 12:00 AM	5/1/00 6:02 PM	**7.38**	12.75	20.13
SS	SW8270	NDA183	N1		4/11/00 2:50 PM	4/19/00 12:00 AM	5/1/00 5:23 PM	**7.38**	12.72	20.11
SS	SW8270	NDA184FD1	FD1		4/11/00 3:00 PM	4/19/00 12:00 AM	4/28/00 4:26 PM	**7.38**	9.68	17.06
WQ	SW8330	NDA030EB1	EB1		4/24/00 3:30 PM	5/23/00 12:00 AM	5/26/00 8:38 PM	**28.35**	3.86	32.21
SS	SW8330	NDA117	N1		4/20/00 3:25 PM	5/4/00 12:26 PM	5/4/00 12:26 PM	**13.88**	0.00	13.88
SB	SW8330	NDA114	N1		4/20/00 2:20 PM	5/4/00 11:19 AM	5/4/00 11:19 AM	**13.87**	0.00	13.87
SB	SW8330	NDA116	N1		4/20/00 3:10 PM	5/4/00 12:04 PM	5/4/00 12:04 PM	**13.87**	0.00	13.87
SS	SW8330	NDA115	N1		4/20/00 2:50 PM	5/4/00 11:41 AM	5/4/00 11:41 AM	**13.87**	0.00	13.87
SB	SW8330	NDA118	N1		4/20/00 4:00 PM	5/4/00 12:49 PM	5/4/00 12:49 PM	**13.87**	0.00	13.87
SS	SW8330	NDA113	N1		4/20/00 2:10 PM	5/4/00 10:56 AM	5/4/00 10:56 AM	**13.87**	0.00	13.87
SS	SW8330	NDA119	N1		4/18/00 9:15 AM	5/2/00 12:00 AM	5/23/00 8:24 PM	**13.61**	21.85	35.46
SS	SW8330	NDA120	N1		4/18/00 9:40 AM	5/2/00 12:00 AM	5/23/00 9:32 PM	**13.60**	21.90	35.49
SS	SW8330	NDA121	N1		4/18/00 10:30 AM	5/2/00 12:00 AM	5/23/00 9:54 PM	**13.56**	21.91	35.47
SS	SW8330	NDA122	N1		4/18/00 10:50 AM	5/2/00 12:00 AM	5/23/00 10:17 PM	**13.55**	21.93	35.48
SS	SW8330	NDA123	N1		4/18/00 1:30 PM	5/2/00 12:00 AM	5/23/00 10:39 PM	**13.44**	21.94	35.38
SS	SW8330	NDA124	N1		4/18/00 1:55 PM	5/2/00 12:00 AM	5/23/00 11:24 PM	**13.42**	21.97	35.40
SD	SW8330	NDA047	N1		4/18/00 9:55 AM	4/30/00 12:00 AM	5/4/00 9:14 PM	**11.59**	4.88	16.47
SD	SW8330	NDA048	N1		4/18/00 2:15 PM	4/30/00 12:00 AM	5/4/00 9:36 PM	**11.41**	4.90	16.31
SD	SW8330	NDA049	N1		4/18/00 2:30 PM	4/30/00 12:00 AM	5/4/00 9:59 PM	**11.40**	4.92	16.31
SS	SW8330	NDA078RE1	LR	RE	4/19/00 12:00 AM	4/30/00 12:00 AM	5/24/00 8:52 PM	**11.00**	24.87	35.87
SS	SW8330	NDA072FD1	FD1		4/19/00 9:00 AM	4/30/00 12:00 AM	5/4/00 11:06 PM	**10.63**	4.96	15.59
SS	SW8330	NDA071	N1		4/19/00 9:00 AM	4/30/00 12:00 AM	5/4/00 10:44 PM	**10.63**	4.95	15.57
SS	SW8330	NDA071SD	SD		4/19/00 9:00 AM	4/30/00 12:00 AM	5/4/00 8:29 PM	**10.63**	4.85	15.48
SS	SW8330	NDA071MS	MS		4/19/00 9:00 AM	4/30/00 12:00 AM	5/4/00 8:07 PM	**10.63**	4.84	15.46
SS	SW8330	NDA074	N1		4/19/00 9:20 AM	4/30/00 12:00 AM	5/5/00 12:14 AM	**10.61**	5.01	15.62
SD	SW8330	NDA043	N1		4/13/00 9:30 AM	4/24/00 12:00 AM	4/27/00 1:38 AM	**10.60**	3.07	13.67
SS	SW8330	NDA076	N1		4/19/00 9:50 AM	4/30/00 12:00 AM	5/5/00 12:59 AM	**10.59**	5.04	15.63
SD	SW8330	NDA042	N1		4/13/00 10:00 AM	4/24/00 12:00 AM	4/27/00 1:15 AM	**10.58**	3.05	13.64
SS	SW8330	NDA078	N1		4/19/00 10:20 AM	4/30/00 12:00 AM	5/5/00 1:44 AM	**10.57**	5.07	15.64
SB	SW8330	NDA070	N1		4/19/00 10:30 AM	4/30/00 12:00 AM	5/4/00 10:21 PM	**10.56**	4.93	15.49
SD	SW8330	NDA307FD1	FD1		4/13/00 10:45 AM	4/24/00 12:00 AM	4/27/00 4:15 AM	**10.55**	3.18	13.73

Table 3 - Samples Analyzed OUtside of Holding Time Per Method

Matrix	Analysis Method	Sample ID	Sample Type	LR Type	Date Collected (DC)	Date Prepared (DP)	Date Analyzed (DA)	Days Awaiting Preparation (DP-DC)	Days Awaiting Analysis (DA-DP)	Total Elapsed Days (DA-DC)
SD	SW8330	NDA044	N1		4/13/00 10:45 AM	4/24/00 12:00 AM	4/27/00 2:00 AM	**10.55**	3.08	13.64
SS	SW8330	NDA080	N1		4/19/00 11:10 AM	4/30/00 12:00 AM	5/5/00 2:29 AM	**10.53**	5.10	15.64
SB	SW8330	NDA073	N1		4/19/00 1:00 PM	4/30/00 12:00 AM	5/4/00 11:51 PM	**10.46**	4.99	15.45
SS	SW8330	NDA082	N1		4/19/00 1:10 PM	4/30/00 12:00 AM	5/5/00 3:13 AM	**10.45**	5.13	15.59
SD	SW8330	NDA046	N1		4/13/00 1:15 PM	4/24/00 12:00 AM	4/27/00 2:45 AM	**10.45**	3.11	13.56
SB	SW8330	NDA075	N1		4/19/00 1:30 PM	4/30/00 12:00 AM	5/5/00 12:36 AM	**10.44**	5.03	15.46
SD	SW8330	NDA045	N1		4/13/00 1:30 PM	4/24/00 12:00 AM	4/27/00 2:22 AM	**10.44**	3.10	13.54
SD	SW8330	NDA303	N1		4/13/00 2:10 PM	4/24/00 12:00 AM	4/27/00 3:52 AM	**10.41**	3.16	13.57
SB	SW8330	NDA077	N1		4/19/00 2:15 PM	4/30/00 12:00 AM	5/5/00 1:21 AM	**10.41**	5.06	15.46
SB	SW8330	NDA079	N1		4/19/00 2:30 PM	4/30/00 12:00 AM	5/5/00 2:06 AM	**10.40**	5.09	15.48
SD	SW8330	NDA302	N1		4/13/00 2:30 PM	4/24/00 12:00 AM	4/27/00 3:07 AM	**10.40**	3.13	13.53
SB	SW8330	NDA081	N1		4/19/00 3:20 PM	4/30/00 12:00 AM	5/5/00 2:51 AM	**10.36**	5.12	15.48
SB	SW8330	NDA083	N1		4/19/00 3:45 PM	4/30/00 12:00 AM	5/5/00 5:23 PM	**10.34**	5.72	16.07
SS	SW8330	NDA107	N1		4/24/00 9:45 AM	5/3/00 12:00 AM	5/6/00 6:02 PM	**8.59**	3.75	12.35
SB	SW8330	NDA108	N1		4/24/00 10:00 AM	5/3/00 12:00 AM	5/6/00 6:25 PM	**8.58**	3.77	12.35
SS	SW8330	NDA109	N1		4/24/00 10:10 AM	5/3/00 12:00 AM	5/6/00 6:47 PM	**8.58**	3.78	12.36
SB	SW8330	NDA110	N1		4/24/00 10:15 AM	5/3/00 12:00 AM	5/6/00 7:09 PM	**8.57**	3.80	12.37
SS	SW8330	NDA111	N1		4/24/00 10:30 AM	5/3/00 12:00 AM	5/6/00 7:32 PM	**8.56**	3.81	12.38
SB	SW8330	NDA112	N1		4/24/00 10:40 AM	5/3/00 12:00 AM	5/6/00 8:17 PM	**8.56**	3.85	12.40
SS	SW8330	NDA101	N1		4/24/00 1:00 PM	5/3/00 12:00 AM	5/6/00 12:08 AM	**8.46**	3.01	11.46
SB	SW8330	NDA102	N1		4/24/00 1:15 PM	5/3/00 12:00 AM	5/6/00 4:10 PM	**8.45**	3.67	12.12
SS	SW8330	NDA104FD1	FD1		4/24/00 1:40 PM	5/3/00 12:00 AM	5/6/00 4:55 PM	**8.43**	3.70	12.14
SS	SW8330	NDA103	N1		4/24/00 1:40 PM	5/3/00 12:00 AM	5/6/00 4:32 PM	**8.43**	3.69	12.12
SB	SW8330	NDA106FD1	FD1		4/24/00 2:00 PM	5/3/00 12:00 AM	5/6/00 5:40 PM	**8.42**	3.74	12.15
SB	SW8330	NDA105	N1		4/24/00 2:00 PM	5/3/00 12:00 AM	5/6/00 5:17 PM	**8.42**	3.72	12.14
SS	SW8330	NDA065	N1		4/18/00 2:00 PM	4/26/00 12:00 AM	5/4/00 2:11 AM	**7.42**	8.09	15.51
SB	SW8330	NDA064FD1	FD1		4/18/00 2:15 PM	4/26/00 12:00 AM	5/4/00 1:49 AM	**7.41**	8.08	15.48
SB	SW8330	NDA063SD	SD		4/18/00 2:15 PM	4/26/00 12:00 AM	5/4/00 1:26 AM	**7.41**	8.06	15.47
SB	SW8330	NDA063MS	MS		4/18/00 2:15 PM	4/26/00 12:00 AM	5/4/00 1:04 AM	**7.41**	8.04	15.45
SB	SW8330	NDA063	N1		4/18/00 2:15 PM	4/26/00 12:00 AM	5/4/00 12:41 AM	**7.41**	8.03	15.43
SS	SW8330	NDA067	N1		4/18/00 2:55 PM	4/26/00 12:00 AM	5/4/00 3:19 AM	**7.38**	8.14	15.52
SS	SW8330	NDA069	N1		4/18/00 3:30 PM	4/26/00 12:00 AM	5/4/00 4:04 AM	**7.35**	8.17	15.52
SB	SW8330	NDA066	N1		4/18/00 3:30 PM	4/26/00 12:00 AM	5/4/00 2:34 AM	**7.35**	8.11	15.46
SB	SW8330	NDA068	N1		4/18/00 3:50 PM	4/26/00 12:00 AM	5/4/00 3:41 AM	**7.34**	8.15	15.49

Table 4 - Data Qualified During the Validation Process for Calibration Exceedences

Matrix	Sample ID	Analytical Method	Parameter	Lab Result	Lab Qual	Final Result	Final Qual	DL	RL	Units	Comment
[illegible]	NDA015	SW8260	2-BUTANONE (MEK)	5	U	5	UJ	2	5	ug/L	CC
WG	NDA016	SW8260	2-BUTANONE (MEK)	5	U	5	UJ	2	5	ug/L	CC
WG	NDA026	SW8260	2-BUTANONE (MEK)	5	U	5	UJ	2	5	ug/L	CC
WG	NDA005	SW8260	2-BUTANONE (MEK)	5	U	5	UJ	2	5	ug/L	CC
WG	NDA006	SW8260	2-BUTANONE (MEK)	5	U	5	UJ	2	5	ug/L	CC
WG	NDA008	SW8260	2-BUTANONE (MEK)	5	U	5	UJ	2	5	ug/L	CC
WG	NDA009	SW8260	2-BUTANONE (MEK)	5	U	5	UJ	2	5	ug/L	CC
WG	NDA010	SW8260	2-BUTANONE (MEK)	5	U	5	UJ	2	5	ug/L	CC
WG	NDA011	SW8260	2-BUTANONE (MEK)	5	U	5	UJ	2	5	ug/L	CC
WG	NDA012	SW8260	2-BUTANONE (MEK)	5	U	5	UJ	2	5	ug/L	CC
SB	NDA165DL1	SW8260	ACETONE	1260	=	1260	UJ	1180	1180	ug/kg	BL, CC
SB	NDA126	SW8081	ALPHA BHC	1.9	U	1.9	UJ	0.54	1.9	ug/kg	IC
SB	NDA129	SW8081	ALPHA BHC	1.9	U	1.9	UJ	0.55	1.9	ug/kg	IC
SB	NDA130FD1	SW8081	ALPHA BHC	1.8	U	1.8	UJ	0.53	1.8	ug/kg	IC
SB	NDA132	SW8081	ALPHA BHC	2.1	U	2.1	UJ	0.61	2.1	ug/kg	IC
SB	NDA134	SW8081	ALPHA BHC	2.1	U	2.1	UJ	0.6	2.1	ug/kg	IC
SB	NDA136	SW8081	ALPHA BHC	2	U	2	UJ	0.58	2	ug/kg	IC
SB	NDA138	SW8081	ALPHA BHC	1.9	U	1.9	UJ	0.53	1.9	ug/kg	IC
SB	NDA140	SW8081	ALPHA BHC	1.9	U	1.9	UJ	0.54	1.9	ug/kg	IC
SB	NDA142	SW8081	ALPHA BHC	2	U	2	UJ	0.57	2	ug/kg	IC
SB	NDA144	SW8081	ALPHA BHC	1.9	U	1.9	UJ	0.54	1.9	ug/kg	IC
SB	NDA146	SW8081	ALPHA BHC	1.8	U	1.8	UJ	0.52	1.8	ug/kg	IC
SB	NDA148	SW8081	ALPHA BHC	2.1	U	2.1	UJ	0.6	2.1	ug/kg	IC
SB	NDA151	SW8081	ALPHA BHC	1.9	U	1.9	UJ	0.56	1.9	ug/kg	IC
SB	NDA152FD1	SW8081	ALPHA BHC	2.4	U	2.4	UJ	0.7	2.4	ug/kg	IC
[illegible]	NDA154	SW8081	ALPHA BHC	1.9	U	1.9	UJ	0.55	1.9	ug/kg	IC
[illegible]	NDA156	SW8081	ALPHA BHC	1.8	U	1.8	UJ	0.53	1.8	ug/kg	IC
SB	NDA158	SW8081	ALPHA BHC	1.8	U	1.8	UJ	0.53	1.8	ug/kg	IC
SB	NDA160	SW8081	ALPHA BHC	2	U	2	UJ	0.59	2	ug/kg	IC
SB	NDA162	SW8081	ALPHA BHC	1.9	U	1.9	UJ	0.56	1.9	ug/kg	IC
SB	NDA163FD1	SW8081	ALPHA BHC	2	U	2	UJ	0.57	2	ug/kg	IC
SB	NDA224	SW8081	ALPHA BHC	1.9	U	1.9	UJ	0.56	1.9	ug/kg	IC
SB	NDA225	SW8081	ALPHA BHC	2.1	U	2.1	UJ	0.61	2.1	ug/kg	IC
SB	NDA226	SW8081	ALPHA BHC	2	U	2	UJ	0.57	2	ug/kg	IC
SB	NDA227FD1	SW8081	ALPHA BHC	1.9	U	1.9	UJ	0.56	1.9	ug/kg	IC
SB	NDA228	SW8081	ALPHA BHC	2	U	2	UJ	0.59	2	ug/kg	IC
SB	NDA229	SW8081	ALPHA BHC	2.2	U	2.2	UJ	0.64	2.2	ug/kg	IC
SB	NDA230	SW8081	ALPHA BHC	1.8	U	1.8	UJ	0.53	1.8	ug/kg	IC
SB	NDA231	SW8081	ALPHA BHC	1.8	U	1.8	UJ	0.52	1.8	ug/kg	IC
SB	NDA232	SW8081	ALPHA BHC	1.9	U	1.9	UJ	0.54	1.9	ug/kg	IC
SB	NDA233	SW8081	ALPHA BHC	1.8	U	1.8	UJ	0.52	1.8	ug/kg	IC
SB	NDA234	SW8081	ALPHA BHC	1.9	U	1.9	UJ	0.56	1.9	ug/kg	IC
SS	NDA125	SW8081	ALPHA BHC	2	U	2	UJ	0.58	2	ug/kg	IC
SS	NDA127	SW8081	ALPHA BHC	1.9	U	1.9	UJ	0.54	1.9	ug/kg	IC
SS	NDA128FD1	SW8081	ALPHA BHC	2.1	U	2.1	UJ	0.61	2.1	ug/kg	IC
SS	NDA131	SW8081	ALPHA BHC	1.9	U	1.9	UJ	0.56	1.9	ug/kg	IC
SS	NDA133	SW8081	ALPHA BHC	2	U	2	UJ	0.57	2	ug/kg	IC
SS	NDA135	SW8081	ALPHA BHC	2.1	U	2.1	UJ	0.6	2.1	ug/kg	IC
SS	NDA137	SW8081	ALPHA BHC	1.8	U	1.8	UJ	0.52	1.8	ug/kg	IC
SS	NDA139	SW8081	ALPHA BHC	1.8	U	1.8	UJ	0.51	1.8	ug/kg	IC
SS	NDA141	SW8081	ALPHA BHC	2.1	U	2.1	UJ	0.62	2.1	ug/kg	IC
[illegible]	NDA143	SW8081	ALPHA BHC	1.7	U	1.7	UJ	0.5	1.7	ug/kg	IC
SS	NDA145	SW8081	ALPHA BHC	1.9	U	1.9	UJ	0.54	1.9	ug/kg	IC
SS	NDA147	SW8081	ALPHA BHC	1.8	U	1.8	UJ	0.51	1.8	ug/kg	IC
SS	NDA149	SW8081	ALPHA BHC	1.9	U	1.9	UJ	0.53	1.9	ug/kg	IC
SS	NDA150FD1	SW8081	ALPHA BHC	1.7	U	1.7	UJ	0.5	1.7	ug/kg	IC
SS	NDA153	SW8081	ALPHA BHC	1.8	U	1.8	UJ	0.52	1.8	ug/kg	IC

Table 4 - Data Qualified During the Validation Process for Calibration Exceedences

Matrix	Sample ID	Analytical Method	Parameter	Lab Result	Lab Qual	Final Result	Final Qual	DL	RL	Units	Comment
SS	NDA155	SW8081	ALPHA BHC	1.9	U	1.9	UJ	0.55	1.9	ug/kg	
SS	NDA157	SW8081	ALPHA BHC	1.7	U	1.7	UJ	0.49	1.7	ug/kg	IC
SS	NDA159	SW8081	ALPHA BHC	1.8	U	1.8	UJ	0.51	1.8	ug/kg	IC
SS	NDA161	SW8081	ALPHA BHC	1.8	U	1.8	UJ	0.51	1.8	ug/kg	IC
SS	NDA196	SW8081	ALPHA BHC	1.8	U	1.8	UJ	0.53	1.8	ug/kg	IC
SS	NDA197FD1	SW8081	ALPHA BHC	1.8	U	1.8	UJ	0.53	1.8	ug/kg	IC
SS	NDA198	SW8081	ALPHA BHC	2.2	U	2.2	UJ	0.64	2.2	ug/kg	IC
SS	NDA199	SW8081	ALPHA BHC	2.2	U	2.2	UJ	0.63	2.2	ug/kg	IC
SS	NDA200	SW8081	ALPHA BHC	1.8	U	1.8	UJ	0.52	1.8	ug/kg	IC
WG	NDA017	SW8081	ALPHA BHC	0.01	U	0.01	UJ	0.01	0.01	ug/L	IC
WG	NDA022	SW8081	ALPHA BHC	0.01	U	0.01	UJ	0.01	0.01	ug/L	IC
WG	NDA019	SW8081	ALPHA BHC	0.01	U	0.01	UJ	0.01	0.01	ug/L	IC
WG	NDA020	SW8081	ALPHA BHC	0.01	U	0.01	UJ	0.01	0.01	ug/L	IC
WG	NDA021	SW8081	ALPHA BHC	0.01	U	0.01	UJ	0.01	0.01	ug/L	IC
WG	NDA003	SW8081	ALPHA BHC	0.01	U	0.01	UJ	0.01	0.01	ug/L	IC
WG	NDA003FD1	SW8081	ALPHA BHC	0.01	U	0.01	UJ	0.01	0.01	ug/L	IC
WG	NDA004	SW8081	ALPHA BHC	0.01	U	0.01	UJ	0.01	0.01	ug/L	IC
WG	NDA028	SW8081	ALPHA BHC	0.01	U	0.01	UJ	0.01	0.01	ug/L	IC
WG	NDA001	SW8081	ALPHA BHC	0.01	U	0.01	UJ	0.01	0.01	ug/L	IC
WG	NDA013	SW8081	ALPHA BHC	0.01	U	0.01	UJ	0.01	0.01	ug/L	IC
WG	NDA014	SW8081	ALPHA BHC	0.01	U	0.01	UJ	0.01	0.01	ug/L	IC
WG	NDA015	SW8081	ALPHA BHC	0.01	U	0.01	UJ	0.01	0.01	ug/L	IC
WG	NDA016	SW8081	ALPHA BHC	0.01	U	0.01	UJ	0.01	0.01	ug/L	IC
WG	NDA026	SW8081	ALPHA BHC	0.01	U	0.01	UJ	0.01	0.01	ug/L	IC
WG	NDA005	SW8081	ALPHA BHC	0.01	U	0.01	UJ	0.01	0.01	ug/L	IC
WG	NDA006	SW8081	ALPHA BHC	0.01	U	0.01	UJ	0.01	0.01	ug/L	IC
WG	NDA009	SW8081	ALPHA BHC	0.01	U	0.01	UJ	0.01	0.01	ug/L	
WG	NDA010	SW8081	ALPHA BHC	0.01	U	0.01	UJ	0.01	0.01	ug/L	IC
WG	NDA011	SW8081	ALPHA BHC	0.01	U	0.01	UJ	0.01	0.01	ug/L	IC
WG	NDA012	SW8081	ALPHA BHC	0.01	U	0.01	UJ	0.01	0.01	ug/L	IC
WG	NDA0321FD1	SW8081	ALPHA BHC	0.01	U	0.01	UJ	0.01	0.01	ug/L	IC
SD	NDA050	SW8081	ALPHA BHC	20	U	20	UJ	5.7	20	ug/kg	HT, IC, OT
SB	NDA165	SW8081	ALPHA BHC	1.9	U	1.9	UJ	0.55	1.9	ug/kg	HT, IC
SB	NDA167	SW8081	ALPHA BHC	2.1	U	2.1	UJ	0.6	2.1	ug/kg	HT, IC
SB	NDA169	SW8081	ALPHA BHC	2	U	2	UJ	0.59	2	ug/kg	HT, IC
SB	NDA171	SW8081	ALPHA BHC	1.8	U	1.8	UJ	0.53	1.8	ug/kg	HT, IC
SB	NDA173	SW8081	ALPHA BHC	2.2	U	2.2	UJ	0.62	2.2	ug/kg	HT, IC
SB	NDA175	SW8081	ALPHA BHC	1.9	U	1.9	UJ	0.54	1.9	ug/kg	HT, IC
SB	NDA177	SW8081	ALPHA BHC	2	U	2	UJ	0.57	2	ug/kg	HT, IC
SB	NDA213	SW8081	ALPHA BHC	2	U	2	UJ	0.56	2	ug/kg	HT, IC
SB	NDA214FD1	SW8081	ALPHA BHC	1.9	U	1.9	UJ	0.55	1.9	ug/kg	HT, IC
SB	NDA215	SW8081	ALPHA BHC	2	U	2	UJ	0.57	2	ug/kg	HT, IC
SB	NDA216	SW8081	ALPHA BHC	1.8	U	1.8	UJ	0.53	1.8	ug/kg	HT, IC
SB	NDA217	SW8081	ALPHA BHC	1.9	U	1.9	UJ	0.56	1.9	ug/kg	HT, IC
SB	NDA218	SW8081	ALPHA BHC	1.9	U	1.9	UJ	0.54	1.9	ug/kg	HT, IC
SB	NDA219	SW8081	ALPHA BHC	1.9	U	1.9	UJ	0.54	1.9	ug/kg	HT, IC
SB	NDA220	SW8081	ALPHA BHC	1.9	U	1.9	UJ	0.56	1.9	ug/kg	HT, IC
SB	NDA221	SW8081	ALPHA BHC	1.8	U	1.8	UJ	0.52	1.8	ug/kg	HT, IC
SB	NDA222	SW8081	ALPHA BHC	1.7	U	1.7	UJ	0.49	1.7	ug/kg	HT, IC
SB	NDA223	SW8081	ALPHA BHC	1.9	U	1.9	UJ	0.56	1.9	ug/kg	HT, IC
SB	NDA235	SW8081	ALPHA BHC	2.2	U	2.2	UJ	0.64	2.2	ug/kg	HT, IC
SB	NDA236	SW8081	ALPHA BHC	1.9	U	1.9	UJ	0.56	1.9	ug/kg	HT
SB	NDA237FD1	SW8081	ALPHA BHC	1.9	U	1.9	UJ	0.55	1.9	ug/kg	HT,
SB	NDA238	SW8081	ALPHA BHC	1.9	U	1.9	UJ	0.55	1.9	ug/kg	HT, IC
SB	NDA239	SW8081	ALPHA BHC	1.9	U	1.9	UJ	0.55	1.9	ug/kg	HT, IC
SB	NDA240	SW8081	ALPHA BHC	2	U	2	UJ	0.59	2	ug/kg	HT, IC
SB	NDA241	SW8081	ALPHA BHC	1.9	U	1.9	UJ	0.55	1.9	ug/kg	HT, IC

Table 4 - Data Qualified During the Validation Process for Calibration Exceedences

Matrix	Sample ID	Analytical Method	Parameter	Lab Result	Lab Qual	Final Result	Final Qual	DL	RL	Units	Comment
[illegible]	NDA242	SW8081	ALPHA BHC	2.1	U	2.1	UJ	0.61	2.1	ug/kg	HT, IC
SB	NDA243	SW8081	ALPHA BHC	2	U	2	UJ	0.58	2	ug/kg	HT, IC
SB	NDA244	SW8081	ALPHA BHC	1.9	U	1.9	UJ	0.54	1.9	ug/kg	HT, IC
SD	NDA053	SW8081	ALPHA BHC	13	U	13	UJ	3.7	13	ug/kg	HT, IC
SD	NDA054	SW8081	ALPHA BHC	1.7	U	1.7	UJ	0.5	1.7	ug/kg	HT, IC
SD	NDA055	SW8081	ALPHA BHC	1.7	U	1.7	UJ	0.49	1.7	ug/kg	HT, IC
SS	NDA164	SW8081	ALPHA BHC	2.1	U	2.1	UJ	0.6	2.1	ug/kg	HT, IC
SS	NDA166	SW8081	ALPHA BHC	2.1	U	2.1	UJ	0.61	2.1	ug/kg	HT, IC
SS	NDA168	SW8081	ALPHA BHC	2	U	2	UJ	0.57	2	ug/kg	HT, IC
SS	NDA170	SW8081	ALPHA BHC	2	U	2	UJ	0.59	2	ug/kg	HT, IC
SS	NDA172	SW8081	ALPHA BHC	1.8	U	1.8	UJ	0.53	1.8	ug/kg	HT, IC
SS	NDA174	SW8081	ALPHA BHC	1.8	U	1.8	UJ	0.51	1.8	ug/kg	HT, IC
SS	NDA176	SW8081	ALPHA BHC	4.8	U	4.8	UJ	1.4	4.8	ug/kg	HT, IC
SD	NDA051FD1	SW8081	ALPHA BHC	21	U	21	UJ	6	21	ug/kg	HT, IC, OT
SD	NDA052	SW8081	ALPHA BHC	21	U	21	UJ	6.1	21	ug/kg	HT, IC, OT
WG	NDA022	SW8081	BETA ENDOSULFAN (II)	0.02	U	0.02	UJ	0.01	0.02	ug/L	IC
SB	NDA102	SW8081	BETA ENDOSULFAN (II)	5.2	U	5.2	UJ	0.46	5.2	ug/kg	HT, IC
SB	NDA105	SW8081	BETA ENDOSULFAN (II)	5.3	U	5.3	UJ	0.48	5.3	ug/kg	HT, IC
SB	NDA106FD1	SW8081	BETA ENDOSULFAN (II)	5.3	U	5.3	UJ	0.48	5.3	ug/kg	HT, IC
SB	NDA108	SW8081	BETA ENDOSULFAN (II)	4.4	U	4.4	UJ	0.4	4.4	ug/kg	HT, IC
SB	NDA110	SW8081	BETA ENDOSULFAN (II)	4.4	U	4.4	UJ	0.4	4.4	ug/kg	HT, IC
SB	NDA112	SW8081	BETA ENDOSULFAN (II)	4.3	U	4.3	UJ	0.39	4.3	ug/kg	HT, IC
SS	NDA101	SW8081	BETA ENDOSULFAN (II)	4.4	U	4.4	UJ	0.4	4.4	ug/kg	HT, IC
SS	NDA103	SW8081	BETA ENDOSULFAN (II)	4.5	U	4.5	UJ	0.41	4.5	ug/kg	HT, IC
SS	NDA104FD1	SW8081	BETA ENDOSULFAN (II)	4.7	U	4.7	UJ	0.42	4.7	ug/kg	HT, IC
[illegible]	NDA107	SW8081	BETA ENDOSULFAN (II)	4.2	U	4.2	UJ	0.37	4.2	ug/kg	HT, IC
[illegible]	NDA109	SW8081	BETA ENDOSULFAN (II)	4.3	U	4.3	UJ	0.39	4.3	ug/kg	HT, IC
SS	NDA111	SW8081	BETA ENDOSULFAN (II)	4.4	U	4.4	UJ	0.4	4.4	ug/kg	HT, IC
SS	NDA133	SW8260	CHLOROETHANE	16	U	16	UJ	0.87	16	ug/kg	CC, SS
SS	NDA139	SW8260	CHLOROETHANE	11	U	11	UJ	0.58	11	ug/kg	CC, SS
SS	NDA196	SW8260	CHLOROETHANE	10	U	10	UJ	0.5	10	ug/kg	CC, SS
SS	NDA198	SW8260	CHLOROETHANE	11	U	11	UJ	0.62	11	ug/kg	CC, SS
SS	NDA189	SW8260	CHLOROETHANE	10	U	10	UJ	0.56	10	ug/kg	CC, SS
SB	NDA126	SW8260	CHLOROETHANE	13	U	13	UJ	0.7	13	ug/kg	CC
SB	NDA129	SW8260	CHLOROETHANE	12	U	12	UJ	0.66	12	ug/kg	CC
SB	NDA130FD1	SW8260	CHLOROETHANE	12	U	12	UJ	0.66	12	ug/kg	CC
SB	NDA132	SW8260	CHLOROETHANE	10	U	10	UJ	0.56	10	ug/kg	CC
SB	NDA134	SW8260	CHLOROETHANE	10	U	10	UJ	0.53	10	ug/kg	CC
SB	NDA136	SW8260	CHLOROETHANE	11	U	11	UJ	0.59	11	ug/kg	CC
SB	NDA138	SW8260	CHLOROETHANE	10	U	10	UJ	0.54	10	ug/kg	CC
SB	NDA140	SW8260	CHLOROETHANE	10	U	10	UJ	0.5	10	ug/kg	CC
SB	NDA142	SW8260	CHLOROETHANE	10	U	10	UJ	0.54	10	ug/kg	CC
SB	NDA146	SW8260	CHLOROETHANE	11	U	11	UJ	0.58	11	ug/kg	CC
SB	NDA160	SW8260	CHLOROETHANE	10	U	10	UJ	0.52	10	ug/kg	CC
SB	NDA219	SW8260	CHLOROETHANE	11	U	11	UJ	0.61	11	ug/kg	CC
SB	NDA220	SW8260	CHLOROETHANE	12	U	12	UJ	0.64	12	ug/kg	CC
SB	NDA221	SW8260	CHLOROETHANE	10	U	10	UJ	0.51	10	ug/kg	CC
SB	NDA222	SW8260	CHLOROETHANE	10	U	10	UJ	0.54	10	ug/kg	CC
SB	NDA223	SW8260	CHLOROETHANE	10	U	10	UJ	0.56	10	ug/kg	CC
SB	NDA224	SW8260	CHLOROETHANE	10	U	10	UJ	0.53	10	ug/kg	CC
SB	NDA226	SW8260	CHLOROETHANE	11	U	11	UJ	0.59	11	ug/kg	CC
[illegible]	NDA235	SW8260	CHLOROETHANE	12	U	12	UJ	0.67	12	ug/kg	CC
SB	NDA236	SW8260	CHLOROETHANE	10	U	10	UJ	0.57	10	ug/kg	CC
SB	NDA237FD1	SW8260	CHLOROETHANE	11	U	11	UJ	0.6	11	ug/kg	CC
SB	NDA238	SW8260	CHLOROETHANE	10	U	10	UJ	0.53	10	ug/kg	CC
SB	NDA239	SW8260	CHLOROETHANE	11	U	11	UJ	0.62	11	ug/kg	CC
SB	NDA240	SW8260	CHLOROETHANE	12	U	12	UJ	0.63	12	ug/kg	CC

Table 4 - Data Qualified During the Validation Process for Calibration Exceedences

Matrix	Sample ID	Analytical Method	Parameter	Lab Result	Lab Qual	Final Result	Final Qual	DL	RL	Units	Comment
SB	NDA241	SW8260	CHLOROETHANE	10	U	10	UJ	0.54	10	ug/kg	C
SB	NDA242	SW8260	CHLOROETHANE	10	U	10	UJ	0.6	10	ug/kg	CC
SB	NDA243	SW8260	CHLOROETHANE	10	U	10	UJ	0.5	10	ug/kg	CC
SB	NDA244	SW8260	CHLOROETHANE	11	U	11	UJ	0.6	11	ug/kg	CC
SB	NDA245	SW8260	CHLOROETHANE	10	U	10	UJ	0.5	10	ug/kg	CC
SB	NDA246	SW8260	CHLOROETHANE	10	U	10	UJ	0.56	10	ug/kg	CC
SB	NDA247FD1	SW8260	CHLOROETHANE	10	U	10	UJ	0.5	10	ug/kg	CC
SB	NDA248	SW8260	CHLOROETHANE	11	U	11	UJ	0.6	11	ug/kg	CC
SB	NDA249	SW8260	CHLOROETHANE	10	U	10	UJ	0.5	10	ug/kg	CC
SB	NDA252	SW8260	CHLOROETHANE	12	U	12	UJ	0.64	12	ug/kg	CC
SB	NDA253	SW8260	CHLOROETHANE	11	U	11	UJ	0.6	11	ug/kg	CC
SB	NDA254	SW8260	CHLOROETHANE	11	U	11	UJ	0.6	11	ug/kg	CC
SB	NDA255	SW8260	CHLOROETHANE	10	U	10	UJ	0.55	10	ug/kg	CC
SB	NDA087	SW8260	CHLOROETHANE	10	U	10	UJ	0.55	10	ug/kg	CC
SB	NDA089	SW8260	CHLOROETHANE	10	U	10	UJ	0.53	10	ug/kg	CC
SB	NDA096	SW8260	CHLOROETHANE	10	U	10	UJ	0.56	10	ug/kg	CC
SB	NDA097	SW8260	CHLOROETHANE	10	U	10	UJ	0.48	10	ug/kg	CC
SB	NDA099	SW8260	CHLOROETHANE	10	U	10	UJ	0.57	10	ug/kg	CC
SB	NDA296	SW8260	CHLOROETHANE	10	U	10	UJ	0.6	10	ug/kg	CC
SB	NDA297	SW8260	CHLOROETHANE	10	U	10	UJ	0.6	10	ug/kg	CC
SB	NDA298	SW8260	CHLOROETHANE	11	U	11	UJ	0.6	11	ug/kg	CC
SB	NDA299	SW8260	CHLOROETHANE	11	U	11	UJ	0.61	11	ug/kg	CC
SS	NDA125	SW8260	CHLOROETHANE	18	U	18	UJ	0.99	18	ug/kg	CC
SS	NDA127	SW8260	CHLOROETHANE	10	U	10	UJ	0.57	10	ug/kg	CC
SS	NDA128FD1	SW8260	CHLOROETHANE	17	U	17	UJ	0.9	17	ug/kg	CC
SS	NDA197FD1	SW8260	CHLOROETHANE	12	U	12	UJ	0.6	12	ug/kg	C
SS	NDA178	SW8260	CHLOROETHANE	10	U	10	UJ	0.5	10	ug/kg	C
SS	NDA179	SW8260	CHLOROETHANE	11	U	11	UJ	0.63	11	ug/kg	CC
SS	NDA181	SW8260	CHLOROETHANE	11	U	11	UJ	0.62	11	ug/kg	CC
SS	NDA183	SW8260	CHLOROETHANE	12	U	12	UJ	0.63	12	ug/kg	CC
SS	NDA184FD1	SW8260	CHLOROETHANE	11	U	11	UJ	0.6	11	ug/kg	CC
SS	NDA201	SW8260	CHLOROETHANE	19	U	19	UJ	1	19	ug/kg	CC
SS	NDA202	SW8260	CHLOROETHANE	14	U	14	UJ	0.8	14	ug/kg	CC
SS	NDA203	SW8260	CHLOROETHANE	11	U	11	UJ	0.59	11	ug/kg	CC
SS	NDA204	SW8260	CHLOROETHANE	14	U	14	UJ	0.76	14	ug/kg	CC
SS	NDA205FD1	SW8260	CHLOROETHANE	12	U	12	UJ	0.68	12	ug/kg	CC
SS	NDA206	SW8260	CHLOROETHANE	11	U	11	UJ	0.58	11	ug/kg	CC
SS	NDA207	SW8260	CHLOROETHANE	12	U	12	UJ	0.7	12	ug/kg	CC
SS	NDA208	SW8260	CHLOROETHANE	10	U	10	UJ	0.6	10	ug/kg	CC
SS	NDA209	SW8260	CHLOROETHANE	16	U	16	UJ	0.87	16	ug/kg	CC
SS	NDA210	SW8260	CHLOROETHANE	11	U	11	UJ	0.62	11	ug/kg	CC
SS	NDA212	SW8260	CHLOROETHANE	14	U	14	UJ	0.8	14	ug/kg	CC
SS	NDA185	SW8260	CHLOROETHANE	12	U	12	UJ	0.6	12	ug/kg	CC
SS	NDA186	SW8260	CHLOROETHANE	10	U	10	UJ	0.56	10	ug/kg	CC
SS	NDA187	SW8260	CHLOROETHANE	10	U	10	UJ	0.52	10	ug/kg	CC
SS	NDA188	SW8260	CHLOROETHANE	13	U	13	UJ	0.72	13	ug/kg	CC
SS	NDA190	SW8260	CHLOROETHANE	11	U	11	UJ	0.62	11	ug/kg	CC
SS	NDA191	SW8260	CHLOROETHANE	10	U	10	UJ	0.6	10	ug/kg	CC
SS	NDA192FD1	SW8260	CHLOROETHANE	11	U	11	UJ	0.62	11	ug/kg	CC
SS	NDA193	SW8260	CHLOROETHANE	10	U	10	UJ	0.55	10	ug/kg	CC
SS	NDA194	SW8260	CHLOROETHANE	11	U	11	UJ	0.6	11	ug/kg	CC
SS	NDA195	SW8260	CHLOROETHANE	10	U	10	UJ	0.5	10	ug/kg	C
SS	NDA086	SW8260	CHLOROETHANE	11	U	11	UJ	0.59	11	ug/kg	CC
SS	NDA088	SW8260	CHLOROETHANE	10	U	10	UJ	0.53	10	ug/kg	CC
SS	NDA091	SW8260	CHLOROETHANE	11	U	11	UJ	0.58	11	ug/kg	CC
SB	NDA224	SW8081	DELTA BHC	1.9	U	1.9	UJ	0.5	1.9	ug/kg	IC
SB	NDA225	SW8081	DELTA BHC	2.1	U	2.1	UJ	0.55	2.1	ug/kg	IC

Table 4 - Data Qualified During the Validation Process for Calibration Exceedences

Matrix	Sample ID	Analytical Method	Parameter	Lab Result	Lab Qual	Final Result	Final Qual	DL	RL	Units	Comment
[illegible]	NDA226	SW8081	DELTA BHC	2	U	2	UJ	0.51	2	ug/kg	IC
SB	NDA227FD1	SW8081	DELTA BHC	1.9	U	1.9	UJ	0.5	1.9	ug/kg	IC
SB	NDA228	SW8081	DELTA BHC	2	U	2	UJ	0.53	2	ug/kg	IC
SB	NDA229	SW8081	DELTA BHC	2.2	U	2.2	UJ	0.57	2.2	ug/kg	IC
SB	NDA230	SW8081	DELTA BHC	1.8	U	1.8	UJ	0.48	1.8	ug/kg	IC
SB	NDA231	SW8081	DELTA BHC	1.8	U	1.8	UJ	0.47	1.8	ug/kg	IC
SB	NDA232	SW8081	DELTA BHC	1.9	U	1.9	UJ	0.48	1.9	ug/kg	IC
SB	NDA233	SW8081	DELTA BHC	1.8	U	1.8	UJ	0.47	1.8	ug/kg	IC
SB	NDA234	SW8081	DELTA BHC	1.9	U	1.9	UJ	0.5	1.9	ug/kg	IC
SS	NDA147	SW8081	DELTA BHC	1.8	U	1.8	UJ	0.46	1.8	ug/kg	IC
SS	NDA153	SW8081	DELTA BHC	1.8	U	1.8	UJ	0.47	1.8	ug/kg	IC
SS	NDA196	SW8081	DELTA BHC	1.8	U	1.8	UJ	0.48	1.8	ug/kg	IC
SS	NDA197FD1	SW8081	DELTA BHC	1.8	U	1.8	UJ	0.47	1.8	ug/kg	IC
SS	NDA198	SW8081	DELTA BHC	2.2	U	2.2	UJ	0.57	2.2	ug/kg	IC
SS	NDA199	SW8081	DELTA BHC	2.2	U	2.2	UJ	0.56	2.2	ug/kg	IC
SS	NDA200	SW8081	DELTA BHC	1.8	U	1.8	UJ	0.47	1.8	ug/kg	IC
SD	NDA050	SW8081	DELTA BHC	20	U	20	UJ	5.1	20	ug/kg	HT, IC, OT
SB	NDA165	SW8081	DELTA BHC	1.9	U	1.9	UJ	0.5	1.9	ug/kg	HT, IC
SB	NDA167	SW8081	DELTA BHC	2.1	U	2.1	UJ	0.54	2.1	ug/kg	HT, IC
SB	NDA169	SW8081	DELTA BHC	2	U	2	UJ	0.52	2	ug/kg	HT, IC
SB	NDA171	SW8081	DELTA BHC	1.8	U	1.8	UJ	0.48	1.8	ug/kg	HT, IC
SB	NDA173	SW8081	DELTA BHC	2.2	U	2.2	UJ	0.56	2.2	ug/kg	HT, IC
SB	NDA175	SW8081	DELTA BHC	1.9	U	1.9	UJ	0.49	1.9	ug/kg	HT, IC
SB	NDA177	SW8081	DELTA BHC	2	U	2	UJ	0.51	2	ug/kg	HT, IC
SD	NDA053	SW8081	DELTA BHC	13	U	13	UJ	3.3	13	ug/kg	HT, IC
[illegible]S	NDA164	SW8081	DELTA BHC	2.1	U	2.1	UJ	0.54	2.1	ug/kg	HT, IC
[illegible]	NDA166	SW8081	DELTA BHC	2.1	U	2.1	UJ	0.55	2.1	ug/kg	HT, IC
SS	NDA168	SW8081	DELTA BHC	2	U	2	UJ	0.51	2	ug/kg	HT, IC
SS	NDA170	SW8081	DELTA BHC	2	U	2	UJ	0.53	2	ug/kg	HT, IC
SS	NDA172	SW8081	DELTA BHC	1.8	U	1.8	UJ	0.47	1.8	ug/kg	HT, IC
SS	NDA174	SW8081	DELTA BHC	1.8	U	1.8	UJ	0.46	1.8	ug/kg	HT, IC
SS	NDA176	SW8081	DELTA BHC	4.8	U	4.8	UJ	1.2	4.8	ug/kg	HT, IC
SD	NDA051FD1	SW8081	DELTA BHC	21	U	21	UJ	5.4	21	ug/kg	HT, IC, OT
SD	NDA052	SW8081	DELTA BHC	21	U	21	UJ	5.4	21	ug/kg	HT, IC, OT
SB	NDA237FD1	SW8270	DI-n-OCTYLPHTHALATE	395	U	395	UJ	30	395	ug/kg	HT, CC
SB	NDA245	SW8270	DI-n-OCTYLPHTHALATE	393	U	393	UJ	29	393	ug/kg	HT, CC
SB	NDA246	SW8270	DI-n-OCTYLPHTHALATE	511	U	511	UJ	38	511	ug/kg	HT, CC
SB	NDA247FD1	SW8270	DI-n-OCTYLPHTHALATE	390	U	390	UJ	29	390	ug/kg	HT, CC
SB	NDA248	SW8270	DI-n-OCTYLPHTHALATE	453	U	453	UJ	34	453	ug/kg	HT, CC
SB	NDA249	SW8270	DI-n-OCTYLPHTHALATE	374	U	374	UJ	28	374	ug/kg	HT, CC
SB	NDA252	SW8270	DI-n-OCTYLPHTHALATE	420	U	420	UJ	31	420	ug/kg	HT, CC
SB	NDA253	SW8270	DI-n-OCTYLPHTHALATE	439	U	439	UJ	33	439	ug/kg	HT, CC
SB	NDA254	SW8270	DI-n-OCTYLPHTHALATE	391	U	391	UJ	29	391	ug/kg	HT, CC
SB	NDA255	SW8270	DI-n-OCTYLPHTHALATE	375	U	375	UJ	28	375	ug/kg	HT, CC
SB	NDA296	SW8270	DI-n-OCTYLPHTHALATE	369	U	369	UJ	28	369	ug/kg	HT, CC
SB	NDA297	SW8270	DI-n-OCTYLPHTHALATE	358	U	358	UJ	27	358	ug/kg	HT, CC
SB	NDA298	SW8270	DI-n-OCTYLPHTHALATE	341	U	341	UJ	26	341	ug/kg	HT, CC
SB	NDA299	SW8270	DI-n-OCTYLPHTHALATE	370	U	370	UJ	28	370	ug/kg	HT, CC
SS	NDA183	SW8270	DI-n-OCTYLPHTHALATE	589	U	589	UJ	44	589	ug/kg	HT, CC
SS	NDA184FD1	SW8270	DI-n-OCTYLPHTHALATE	662	U	662	UJ	50	662	ug/kg	HT, CC
SS	NDA204	SW8270	DI-n-OCTYLPHTHALATE	753	U	753	UJ	57	753	ug/kg	HT, CC
[illegible]	NDA206	SW8270	DI-n-OCTYLPHTHALATE	529	U	529	UJ	40	529	ug/kg	HT, CC
S	NDA207	SW8270	DI-n-OCTYLPHTHALATE	669	U	669	UJ	50	669	ug/kg	HT, CC
SS	NDA208	SW8270	DI-n-OCTYLPHTHALATE	520	U	520	UJ	39	520	ug/kg	HT, CC
SS	NDA209	SW8270	DI-n-OCTYLPHTHALATE	570	U	570	UJ	43	570	ug/kg	HT, CC
SS	NDA210	SW8270	DI-n-OCTYLPHTHALATE	545	U	545	UJ	41	545	ug/kg	HT, CC
SS	NDA211	SW8270	DI-n-OCTYLPHTHALATE	742	U	742	UJ	56	742	ug/kg	HT, CC

Table 4 - Data Qualified During the Validation Process for Calibration Exceedences

Matrix	Sample ID	Analytical Method	Parameter	Lab Result	Lab Qual	Final Result	Final Qual	DL	RL	Units	Comment
SS	NDA212	SW8270	DI-n-OCTYLPHTHALATE	651	U	651	UJ	49	651	ug/kg	HT
SS	NDA186	SW8270	DI-n-OCTYLPHTHALATE	416	U	416	UJ	31	416	ug/kg	HT, CC
SS	NDA187	SW8270	DI-n-OCTYLPHTHALATE	380	U	380	UJ	28	380	ug/kg	HT, CC
SS	NDA188	SW8270	DI-n-OCTYLPHTHALATE	810	U	810	UJ	61	810	ug/kg	HT, CC
SS	NDA189	SW8270	DI-n-OCTYLPHTHALATE	426	U	426	UJ	32	426	ug/kg	HT, CC
SS	NDA190	SW8270	DI-n-OCTYLPHTHALATE	430	U	430	UJ	32	430	ug/kg	HT, CC
SS	NDA191	SW8270	DI-n-OCTYLPHTHALATE	338	U	338	UJ	25	338	ug/kg	HT, CC
SS	NDA192FD1	SW8270	DI-n-OCTYLPHTHALATE	418	U	418	UJ	31	418	ug/kg	HT, CC
SS	NDA193	SW8270	DI-n-OCTYLPHTHALATE	1720	U	1720	UJ	129	1720	ug/kg	HT, CC
SS	NDA194	SW8270	DI-n-OCTYLPHTHALATE	480	U	480	UJ	36	480	ug/kg	HT, CC
SS	NDA195	SW8270	DI-n-OCTYLPHTHALATE	323	U	323	UJ	24	323	ug/kg	HT, CC
SS	NDA091	SW8270	DI-n-OCTYLPHTHALATE	367	U	367	UJ	27	367	ug/kg	HT, CC
SS	NDA185	SW8270	DI-n-OCTYLPHTHALATE	445	U	445	UJ	33	445	ug/kg	CC, HT
SB	NDA087	SW8270	DI-n-OCTYLPHTHALATE	383	U	383	UJ	29	383	ug/kg	CC
SB	NDA089	SW8270	DI-n-OCTYLPHTHALATE	321	U	321	UJ	24	321	ug/kg	CC
SB	NDA096	SW8270	DI-n-OCTYLPHTHALATE	365	U	365	UJ	27	365	ug/kg	CC
SB	NDA097	SW8270	DI-n-OCTYLPHTHALATE	382	U	382	UJ	29	382	ug/kg	CC
SB	NDA099	SW8270	DI-n-OCTYLPHTHALATE	356	U	356	UJ	27	356	ug/kg	CC
SS	NDA086	SW8270	DI-n-OCTYLPHTHALATE	364	U	364	UJ	27	364	ug/kg	CC
SS	NDA088	SW8270	DI-n-OCTYLPHTHALATE	346	U	346	UJ	26	346	ug/kg	CC
SB	NDA102	SW8081	ENDRIN	5.2	U	5.2	UJ	0.62	5.2	ug/kg	HT, IC
SB	NDA105	SW8081	ENDRIN	5.3	U	5.3	UJ	0.63	5.3	ug/kg	HT, IC
SB	NDA106FD1	SW8081	ENDRIN	5.3	U	5.3	UJ	0.63	5.3	ug/kg	HT, IC
SB	NDA108	SW8081	ENDRIN	4.4	U	4.4	UJ	0.53	4.4	ug/kg	HT, IC
SB	NDA110	SW8081	ENDRIN	4.4	U	4.4	UJ	0.53	4.4	ug/kg	HT, IC
SB	NDA112	SW8081	ENDRIN	4.3	U	4.3	UJ	0.52	4.3	ug/kg	HT
SS	NDA101	SW8081	ENDRIN	4.4	U	4.4	UJ	0.53	4.4	ug/kg	HT
SS	NDA103	SW8081	ENDRIN	4.5	U	4.5	UJ	0.55	4.5	ug/kg	HT, IC
SS	NDA104FD1	SW8081	ENDRIN	4.7	U	4.7	UJ	0.56	4.7	ug/kg	HT, IC
SS	NDA107	SW8081	ENDRIN	4.2	U	4.2	UJ	0.5	4.2	ug/kg	HT, IC
SS	NDA109	SW8081	ENDRIN	4.3	U	4.3	UJ	0.52	4.3	ug/kg	HT, IC
SS	NDA111	SW8081	ENDRIN	4.4	U	4.4	UJ	0.53	4.4	ug/kg	HT, IC
SB	NDA213	SW8081	ENDRIN	3.8	U	3.8	UJ	0.46	3.8	ug/kg	HT, CC
SB	NDA214FD1	SW8081	ENDRIN	3.7	U	3.7	UJ	0.45	3.7	ug/kg	HT, CC
SB	NDA215	SW8081	ENDRIN	3.8	U	3.8	UJ	0.46	3.8	ug/kg	HT, CC
SB	NDA216	SW8081	ENDRIN	3.6	U	3.6	UJ	0.44	3.6	ug/kg	HT, CC
SB	NDA217	SW8081	ENDRIN	3.8	U	3.8	UJ	0.46	3.8	ug/kg	HT, CC
SB	NDA218	SW8081	ENDRIN	3.7	U	3.7	UJ	0.44	3.7	ug/kg	HT, CC
SB	NDA219	SW8081	ENDRIN	3.7	U	3.7	UJ	0.44	3.7	ug/kg	HT, CC
SB	NDA220	SW8081	ENDRIN	3.8	U	3.8	UJ	0.46	3.8	ug/kg	HT, CC
SB	NDA221	SW8081	ENDRIN	3.6	U	3.6	UJ	0.43	3.6	ug/kg	HT, CC
SB	NDA222	SW8081	ENDRIN	3.3	U	3.3	UJ	0.4	3.3	ug/kg	HT, CC
SB	NDA223	SW8081	ENDRIN	3.8	U	3.8	UJ	0.46	3.8	ug/kg	HT, CC
SD	NDA054	SW8081	ENDRIN	3.4	U	3.4	UJ	0.41	3.4	ug/kg	HT, CC
SD	NDA055	SW8081	ENDRIN	3.3	U	3.3	UJ	0.4	3.3	ug/kg	HT, CC
SB	NDA148	SW8081	ENDRIN	4.1	U	4.1	UJ	0.49	4.1	ug/kg	CC
SB	NDA151	SW8081	ENDRIN	3.8	U	3.8	UJ	0.45	3.8	ug/kg	CC
SB	NDA152FD1	SW8081	ENDRIN	4.7	U	4.7	UJ	0.57	4.7	ug/kg	CC
SB	NDA154	SW8081	ENDRIN	3.7	U	3.7	UJ	0.45	3.7	ug/kg	CC
SB	NDA156	SW8081	ENDRIN	3.6	U	3.6	UJ	0.43	3.6	ug/kg	CC
SB	NDA158	SW8081	ENDRIN	3.6	U	3.6	UJ	0.43	3.6	ug/kg	CC
SB	NDA160	SW8081	ENDRIN	4	U	4	UJ	0.48	4	ug/kg	CC
SB	NDA162	SW8081	ENDRIN	3.8	U	3.8	UJ	0.46	3.8	ug/kg	CC
SB	NDA163FD1	SW8081	ENDRIN	3.9	U	3.9	UJ	0.47	3.9	ug/kg	CC
SS	NDA149	SW8081	ENDRIN	3.6	U	3.6	UJ	0.44	3.6	ug/kg	CC
SS	NDA150FD1	SW8081	ENDRIN	3.4	U	3.4	UJ	0.41	3.4	ug/kg	CC
SS	NDA155	SW8081	ENDRIN	3.8	U	3.8	UJ	0.45	3.8	ug/kg	CC

Table 4 - Data Qualified During the Validation Process for Calibration Exceedences

Matrix	Sample ID	Analytical Method	Parameter	Lab Result	Lab Qual	Final Result	Final Qual	DL	RL	Units	Comment
[illegible]	NDA157	SW8081	ENDRIN	3.4	U	3.4	UJ	0.4	3.4	ug/kg	CC
SS	NDA159	SW8081	ENDRIN	3.4	U	3.4	UJ	0.41	3.4	ug/kg	CC
SS	NDA161	SW8081	ENDRIN	3.5	U	3.5	UJ	0.42	3.5	ug/kg	CC
SB	NDA126	SW8081	GAMMA BHC (LINDANE)	1.9	U	1.9	UJ	0.51	1.9	ug/kg	IC
SB	NDA129	SW8081	GAMMA BHC (LINDANE)	1.9	U	1.9	UJ	0.52	1.9	ug/kg	IC
SB	NDA130FD1	SW8081	GAMMA BHC (LINDANE)	1.8	U	1.8	UJ	0.51	1.8	ug/kg	IC
SB	NDA132	SW8081	GAMMA BHC (LINDANE)	2.1	U	2.1	UJ	0.58	2.1	ug/kg	IC
SB	NDA134	SW8081	GAMMA BHC (LINDANE)	2.1	U	2.1	UJ	0.57	2.1	ug/kg	IC
SB	NDA136	SW8081	GAMMA BHC (LINDANE)	2	U	2	UJ	0.55	2	ug/kg	IC
SB	NDA138	SW8081	GAMMA BHC (LINDANE)	1.9	U	1.9	UJ	0.51	1.9	ug/kg	IC
SB	NDA140	SW8081	GAMMA BHC (LINDANE)	1.9	U	1.9	UJ	0.52	1.9	ug/kg	IC
SB	NDA142	SW8081	GAMMA BHC (LINDANE)	2	U	2	UJ	0.54	2	ug/kg	IC
SB	NDA144	SW8081	GAMMA BHC (LINDANE)	1.9	U	1.9	UJ	0.52	1.9	ug/kg	IC
SB	NDA146	SW8081	GAMMA BHC (LINDANE)	1.8	U	1.8	UJ	0.5	1.8	ug/kg	IC
SB	NDA148	SW8081	GAMMA BHC (LINDANE)	2.1	U	2.1	UJ	0.57	2.1	ug/kg	IC
SB	NDA151	SW8081	GAMMA BHC (LINDANE)	1.9	U	1.9	UJ	0.53	1.9	ug/kg	IC
SB	NDA152FD1	SW8081	GAMMA BHC (LINDANE)	2.4	U	2.4	UJ	0.67	2.4	ug/kg	IC
SB	NDA154	SW8081	GAMMA BHC (LINDANE)	1.9	U	1.9	UJ	0.53	1.9	ug/kg	IC
SB	NDA156	SW8081	GAMMA BHC (LINDANE)	1.8	U	1.8	UJ	0.5	1.8	ug/kg	IC
SB	NDA158	SW8081	GAMMA BHC (LINDANE)	1.8	U	1.8	UJ	0.51	1.8	ug/kg	IC
SB	NDA160	SW8081	GAMMA BHC (LINDANE)	2	U	2	UJ	0.57	2	ug/kg	IC
SB	NDA162	SW8081	GAMMA BHC (LINDANE)	1.9	U	1.9	UJ	0.54	1.9	ug/kg	IC
SB	NDA163FD1	SW8081	GAMMA BHC (LINDANE)	2	U	2	UJ	0.55	2	ug/kg	IC
SB	NDA224	SW8081	GAMMA BHC (LINDANE)	1.9	U	1.9	UJ	0.54	1.9	ug/kg	IC
SB	NDA225	SW8081	GAMMA BHC (LINDANE)	2.1	U	2.1	UJ	0.58	2.1	ug/kg	IC
[illegible]	NDA226	SW8081	GAMMA BHC (LINDANE)	2	U	2	UJ	0.55	2	ug/kg	IC
[illegible]	NDA227FD1	SW8081	GAMMA BHC (LINDANE)	1.9	U	1.9	UJ	0.54	1.9	ug/kg	IC
SB	NDA228	SW8081	GAMMA BHC (LINDANE)	2	U	2	UJ	0.56	2	ug/kg	IC
SB	NDA229	SW8081	GAMMA BHC (LINDANE)	2.2	U	2.2	UJ	0.61	2.2	ug/kg	IC
SB	NDA230	SW8081	GAMMA BHC (LINDANE)	1.8	U	1.8	UJ	0.51	1.8	ug/kg	IC
SB	NDA231	SW8081	GAMMA BHC (LINDANE)	1.8	U	1.8	UJ	0.5	1.8	ug/kg	IC
SB	NDA232	SW8081	GAMMA BHC (LINDANE)	1.9	U	1.9	UJ	0.52	1.9	ug/kg	IC
SB	NDA233	SW8081	GAMMA BHC (LINDANE)	1.8	U	1.8	UJ	0.5	1.8	ug/kg	IC
SB	NDA234	SW8081	GAMMA BHC (LINDANE)	1.9	U	1.9	UJ	0.54	1.9	ug/kg	IC
SS	NDA125	SW8081	GAMMA BHC (LINDANE)	2	U	2	UJ	0.55	2	ug/kg	IC
SS	NDA127	SW8081	GAMMA BHC (LINDANE)	1.9	U	1.9	UJ	0.51	1.9	ug/kg	IC
SS	NDA128FD1	SW8081	GAMMA BHC (LINDANE)	2.1	U	2.1	UJ	0.59	2.1	ug/kg	IC
SS	NDA131	SW8081	GAMMA BHC (LINDANE)	1.9	U	1.9	UJ	0.53	1.9	ug/kg	IC
SS	NDA133	SW8081	GAMMA BHC (LINDANE)	2	U	2	UJ	0.55	2	ug/kg	IC
SS	NDA135	SW8081	GAMMA BHC (LINDANE)	2.1	U	2.1	UJ	0.57	2.1	ug/kg	IC
SS	NDA137	SW8081	GAMMA BHC (LINDANE)	1.8	U	1.8	UJ	0.5	1.8	ug/kg	IC
SS	NDA139	SW8081	GAMMA BHC (LINDANE)	1.8	U	1.8	UJ	0.49	1.8	ug/kg	IC
SS	NDA141	SW8081	GAMMA BHC (LINDANE)	2.1	U	2.1	UJ	0.59	2.1	ug/kg	IC
SS	NDA143	SW8081	GAMMA BHC (LINDANE)	1.7	U	1.7	UJ	0.48	1.7	ug/kg	IC
SS	NDA145	SW8081	GAMMA BHC (LINDANE)	1.9	U	1.9	UJ	0.52	1.9	ug/kg	IC
SS	NDA147	SW8081	GAMMA BHC (LINDANE)	1.8	U	1.8	UJ	0.49	1.8	ug/kg	IC
SS	NDA149	SW8081	GAMMA BHC (LINDANE)	1.9	U	1.9	UJ	0.51	1.9	ug/kg	IC
SS	NDA150FD1	SW8081	GAMMA BHC (LINDANE)	1.7	U	1.7	UJ	0.48	1.7	ug/kg	IC
SS	NDA153	SW8081	GAMMA BHC (LINDANE)	1.8	U	1.8	UJ	0.5	1.8	ug/kg	IC
SS	NDA155	SW8081	GAMMA BHC (LINDANE)	1.9	U	1.9	UJ	0.53	1.9	ug/kg	IC
SS	NDA157	SW8081	GAMMA BHC (LINDANE)	1.7	U	1.7	UJ	0.47	1.7	ug/kg	IC
[illegible]	NDA159	SW8081	GAMMA BHC (LINDANE)	1.8	U	1.8	UJ	0.48	1.8	ug/kg	IC
SS	NDA161	SW8081	GAMMA BHC (LINDANE)	1.8	U	1.8	UJ	0.49	1.8	ug/kg	IC
SS	NDA196	SW8081	GAMMA BHC (LINDANE)	1.8	U	1.8	UJ	0.51	1.8	ug/kg	IC
SS	NDA197FD1	SW8081	GAMMA BHC (LINDANE)	1.8	U	1.8	UJ	0.5	1.8	ug/kg	IC
SS	NDA198	SW8081	GAMMA BHC (LINDANE)	2.2	U	2.2	UJ	0.61	2.2	ug/kg	IC
SS	NDA199	SW8081	GAMMA BHC (LINDANE)	2.2	U	2.2	UJ	0.6	2.2	ug/kg	IC

Table 4 - Data Qualified During the Validation Process for Calibration Exceedences

Matrix	Sample ID	Analytical Method	Parameter	Lab Result	Lab Qual	Final Result	Final Qual	DL	RL	Units	Comment
SS	NDA200	SW8081	GAMMA BHC (LINDANE)	1.8	U	1.8	UJ	0.5	1.8	ug/kg	
WG	NDA017	SW8081	GAMMA BHC (LINDANE)	0.01	U	0.01	UJ	0.01	0.01	ug/L	IC
WG	NDA019	SW8081	GAMMA BHC (LINDANE)	0.01	U	0.01	UJ	0.01	0.01	ug/L	IC
WG	NDA020	SW8081	GAMMA BHC (LINDANE)	0.01	U	0.01	UJ	0.01	0.01	ug/L	IC
WG	NDA021	SW8081	GAMMA BHC (LINDANE)	0.01	U	0.01	UJ	0.01	0.01	ug/L	IC
WG	NDA003	SW8081	GAMMA BHC (LINDANE)	0.01	U	0.01	UJ	0.01	0.01	ug/L	IC
WG	NDA003FD1	SW8081	GAMMA BHC (LINDANE)	0.01	U	0.01	UJ	0.01	0.01	ug/L	IC
WG	NDA004	SW8081	GAMMA BHC (LINDANE)	0.01	U	0.01	UJ	0.01	0.01	ug/L	IC
WG	NDA028	SW8081	GAMMA BHC (LINDANE)	0.01	U	0.01	UJ	0.01	0.01	ug/L	IC
WG	NDA001	SW8081	GAMMA BHC (LINDANE)	0.01	U	0.01	UJ	0.01	0.01	ug/L	IC
WG	NDA013	SW8081	GAMMA BHC (LINDANE)	0.01	U	0.01	UJ	0.01	0.01	ug/L	IC
WG	NDA014	SW8081	GAMMA BHC (LINDANE)	0.01	U	0.01	UJ	0.01	0.01	ug/L	IC
WG	NDA015	SW8081	GAMMA BHC (LINDANE)	0.01	U	0.01	UJ	0.01	0.01	ug/L	IC
WG	NDA016	SW8081	GAMMA BHC (LINDANE)	0.01	U	0.01	UJ	0.01	0.01	ug/L	IC
WG	NDA026	SW8081	GAMMA BHC (LINDANE)	0.01	U	0.01	UJ	0.01	0.01	ug/L	IC
WG	NDA005	SW8081	GAMMA BHC (LINDANE)	0.01	U	0.01	UJ	0.01	0.01	ug/L	IC
WG	NDA006	SW8081	GAMMA BHC (LINDANE)	0.01	U	0.01	UJ	0.01	0.01	ug/L	IC
WG	NDA009	SW8081	GAMMA BHC (LINDANE)	0.01	U	0.01	UJ	0.01	0.01	ug/L	IC
WG	NDA010	SW8081	GAMMA BHC (LINDANE)	0.01	U	0.01	UJ	0.01	0.01	ug/L	IC
WG	NDA011	SW8081	GAMMA BHC (LINDANE)	0.01	U	0.01	UJ	0.01	0.01	ug/L	IC
WG	NDA012	SW8081	GAMMA BHC (LINDANE)	0.01	U	0.01	UJ	0.01	0.01	ug/L	IC
WG	NDA0321FD1	SW8081	GAMMA BHC (LINDANE)	0.01	U	0.01	UJ	0.01	0.01	ug/L	IC
SD	NDA050	SW8081	GAMMA BHC (LINDANE)	20	U	20	UJ	5.4	20	ug/kg	HT, IC, OT
SB	NDA165	SW8081	GAMMA BHC (LINDANE)	1.9	U	1.9	UJ	0.53	1.9	ug/kg	HT, IC
SB	NDA167	SW8081	GAMMA BHC (LINDANE)	2.1	U	2.1	UJ	0.57	2.1	ug/kg	HT, IC
SB	NDA169	SW8081	GAMMA BHC (LINDANE)	2	U	2	UJ	0.56	2	ug/kg	HT, IC
SB	NDA171	SW8081	GAMMA BHC (LINDANE)	1.8	U	1.8	UJ	0.51	1.8	ug/kg	HT
SB	NDA173	SW8081	GAMMA BHC (LINDANE)	2.2	U	2.2	UJ	0.6	2.2	ug/kg	HT, IC
SB	NDA175	SW8081	GAMMA BHC (LINDANE)	1.9	U	1.9	UJ	0.52	1.9	ug/kg	HT, IC
SB	NDA177	SW8081	GAMMA BHC (LINDANE)	2	U	2	UJ	0.54	2	ug/kg	HT, IC
SB	NDA213	SW8081	GAMMA BHC (LINDANE)	2	U	2	UJ	0.54	2	ug/kg	HT, IC
SB	NDA214FD1	SW8081	GAMMA BHC (LINDANE)	1.9	U	1.9	UJ	0.52	1.9	ug/kg	HT, IC
SB	NDA215	SW8081	GAMMA BHC (LINDANE)	2	U	2	UJ	0.54	2	ug/kg	HT, IC
SB	NDA216	SW8081	GAMMA BHC (LINDANE)	1.8	U	1.8	UJ	0.51	1.8	ug/kg	HT, IC
SB	NDA217	SW8081	GAMMA BHC (LINDANE)	1.9	U	1.9	UJ	0.54	1.9	ug/kg	HT, IC
SB	NDA218	SW8081	GAMMA BHC (LINDANE)	1.9	U	1.9	UJ	0.52	1.9	ug/kg	HT, IC
SB	NDA219	SW8081	GAMMA BHC (LINDANE)	1.9	U	1.9	UJ	0.52	1.9	ug/kg	HT, IC
SB	NDA220	SW8081	GAMMA BHC (LINDANE)	1.9	U	1.9	UJ	0.54	1.9	ug/kg	HT, IC
SB	NDA221	SW8081	GAMMA BHC (LINDANE)	1.8	U	1.8	UJ	0.5	1.8	ug/kg	HT, IC
SB	NDA222	SW8081	GAMMA BHC (LINDANE)	1.7	U	1.7	UJ	0.47	1.7	ug/kg	HT, IC
SB	NDA223	SW8081	GAMMA BHC (LINDANE)	1.9	U	1.9	UJ	0.53	1.9	ug/kg	HT, IC
SB	NDA235	SW8081	GAMMA BHC (LINDANE)	2.2	U	2.2	UJ	0.62	2.2	ug/kg	HT, IC
SB	NDA236	SW8081	GAMMA BHC (LINDANE)	1.9	U	1.9	UJ	0.53	1.9	ug/kg	HT, IC
SB	NDA237FD1	SW8081	GAMMA BHC (LINDANE)	1.9	U	1.9	UJ	0.53	1.9	ug/kg	HT, IC
SB	NDA238	SW8081	GAMMA BHC (LINDANE)	1.9	U	1.9	UJ	0.53	1.9	ug/kg	HT, IC
SB	NDA239	SW8081	GAMMA BHC (LINDANE)	1.9	U	1.9	UJ	0.53	1.9	ug/kg	HT, IC
SB	NDA240	SW8081	GAMMA BHC (LINDANE)	2	U	2	UJ	0.56	2	ug/kg	HT, IC
SB	NDA241	SW8081	GAMMA BHC (LINDANE)	1.9	U	1.9	UJ	0.52	1.9	ug/kg	HT, IC
SB	NDA242	SW8081	GAMMA BHC (LINDANE)	2.1	U	2.1	UJ	0.59	2.1	ug/kg	HT, IC
SB	NDA243	SW8081	GAMMA BHC (LINDANE)	2	U	2	UJ	0.55	2	ug/kg	HT, IC
SB	NDA244	SW8081	GAMMA BHC (LINDANE)	1.9	U	1.9	UJ	0.51	1.9	ug/kg	HT, IC
SD	NDA053	SW8081	GAMMA BHC (LINDANE)	13	U	13	UJ	3.5	13	ug/kg	HT
SD	NDA054	SW8081	GAMMA BHC (LINDANE)	1.7	U	1.7	UJ	0.48	1.7	ug/kg	HT,
SD	NDA055	SW8081	GAMMA BHC (LINDANE)	1.7	U	1.7	UJ	0.47	1.7	ug/kg	HT, IC
SS	NDA164	SW8081	GAMMA BHC (LINDANE)	2.1	U	2.1	UJ	0.58	2.1	ug/kg	HT, IC
SS	NDA166	SW8081	GAMMA BHC (LINDANE)	2.1	U	2.1	UJ	0.58	2.1	ug/kg	HT, IC
SS	NDA168	SW8081	GAMMA BHC (LINDANE)	2	U	2	UJ	0.55	2	ug/kg	HT, IC

Table 4 - Data Qualified During the Validation Process for Calibration Exceedences

Matrix	Sample ID	Analytical Method	Parameter	Lab Result	Lab Qual	Final Result	Final Qual	DL	RL	Units	Comment
[illegible]	NDA170	SW8081	GAMMA BHC (LINDANE)	2	U	2	UJ	0.56	2	ug/kg	HT, IC
SS	NDA172	SW8081	GAMMA BHC (LINDANE)	1.8	U	1.8	UJ	0.5	1.8	ug/kg	HT, IC
SS	NDA174	SW8081	GAMMA BHC (LINDANE)	1.8	U	1.8	UJ	0.49	1.8	ug/kg	HT, IC
SS	NDA176	SW8081	GAMMA BHC (LINDANE)	4.8	U	4.8	UJ	1.3	4.8	ug/kg	HT, IC
SD	NDA051FD1	SW8081	GAMMA BHC (LINDANE)	21	U	21	UJ	5.8	21	ug/kg	HT, IC, OT
SD	NDA052	SW8081	GAMMA BHC (LINDANE)	21	U	21	UJ	5.8	21	ug/kg	HT, IC, OT
SS	NDA150FD1	SW8081	METHOXYCHLOR	17	U	17	UJ	0.3	17	ug/kg	IC, CC, FD
SB	NDA148	SW8081	METHOXYCHLOR	21	U	21	UJ	0.36	21	ug/kg	IC, CC
SB	NDA151	SW8081	METHOXYCHLOR	19	U	19	UJ	0.33	19	ug/kg	IC, CC
SB	NDA152FD1	SW8081	METHOXYCHLOR	24	U	24	UJ	0.41	24	ug/kg	IC, CC
SS	NDA153	SW8081	METHOXYCHLOR	18	U	18	UJ	0.31	18	ug/kg	IC, CC
SB	NDA126	SW8081	METHOXYCHLOR	19	U	19	UJ	0.32	19	ug/kg	IC
SB	NDA129	SW8081	METHOXYCHLOR	19	U	19	UJ	0.32	19	ug/kg	IC
SB	NDA130FD1	SW8081	METHOXYCHLOR	18	U	18	UJ	0.32	18	ug/kg	IC
SB	NDA132	SW8081	METHOXYCHLOR	21	U	21	UJ	0.36	21	ug/kg	IC
SB	NDA134	SW8081	METHOXYCHLOR	21	U	21	UJ	0.36	21	ug/kg	IC
SB	NDA136	SW8081	METHOXYCHLOR	20	U	20	UJ	0.34	20	ug/kg	IC
SB	NDA138	SW8081	METHOXYCHLOR	19	U	19	UJ	0.32	19	ug/kg	IC
SB	NDA140	SW8081	METHOXYCHLOR	19	U	19	UJ	0.32	19	ug/kg	IC
SB	NDA142	SW8081	METHOXYCHLOR	20	U	20	UJ	0.34	20	ug/kg	IC
SB	NDA144	SW8081	METHOXYCHLOR	19	U	19	UJ	0.32	19	ug/kg	IC
SB	NDA146	SW8081	METHOXYCHLOR	18	U	18	UJ	0.31	18	ug/kg	IC
SB	NDA154	SW8081	METHOXYCHLOR	19	U	19	UJ	0.33	19	ug/kg	IC
SB	NDA156	SW8081	METHOXYCHLOR	18	U	18	UJ	0.31	18	ug/kg	IC
SB	NDA158	SW8081	METHOXYCHLOR	18	U	18	UJ	0.32	18	ug/kg	IC
[illegible]	NDA160	SW8081	METHOXYCHLOR	20	U	20	UJ	0.35	20	ug/kg	IC
[illegible]	NDA162	SW8081	METHOXYCHLOR	19	U	19	UJ	0.33	19	ug/kg	IC
SB	NDA163FD1	SW8081	METHOXYCHLOR	20	U	20	UJ	0.34	20	ug/kg	IC
SB	NDA224	SW8081	METHOXYCHLOR	19	U	19	UJ	0.33	19	ug/kg	IC
SB	NDA225	SW8081	METHOXYCHLOR	21	U	21	UJ	0.36	21	ug/kg	IC
SB	NDA226	SW8081	METHOXYCHLOR	20	U	20	UJ	0.34	20	ug/kg	IC
SB	NDA227FD1	SW8081	METHOXYCHLOR	19	U	19	UJ	0.33	19	ug/kg	IC
SB	NDA228	SW8081	METHOXYCHLOR	20	U	20	UJ	0.35	20	ug/kg	IC
SB	NDA229	SW8081	METHOXYCHLOR	22	U	22	UJ	0.38	22	ug/kg	IC
SB	NDA230	SW8081	METHOXYCHLOR	18	U	18	UJ	0.32	18	ug/kg	IC
SB	NDA231	SW8081	METHOXYCHLOR	18	U	18	UJ	0.31	18	ug/kg	IC
SB	NDA232	SW8081	METHOXYCHLOR	19	U	19	UJ	0.32	19	ug/kg	IC
SB	NDA233	SW8081	METHOXYCHLOR	18	U	18	UJ	0.31	18	ug/kg	IC
SB	NDA234	SW8081	METHOXYCHLOR	19	U	19	UJ	0.33	19	ug/kg	IC
SS	NDA125	SW8081	METHOXYCHLOR	20	U	20	UJ	0.34	20	ug/kg	IC
SS	NDA127	SW8081	METHOXYCHLOR	19	U	19	UJ	0.32	19	ug/kg	IC
SS	NDA128FD1	SW8081	METHOXYCHLOR	21	U	21	UJ	0.36	21	ug/kg	IC
SS	NDA131	SW8081	METHOXYCHLOR	19	U	19	UJ	0.33	19	ug/kg	IC
SS	NDA133	SW8081	METHOXYCHLOR	20	U	20	UJ	0.34	20	ug/kg	IC
SS	NDA135	SW8081	METHOXYCHLOR	21	U	21	UJ	0.36	21	ug/kg	IC
SS	NDA137	SW8081	METHOXYCHLOR	18	U	18	UJ	0.31	18	ug/kg	IC
SS	NDA139	SW8081	METHOXYCHLOR	18	U	18	UJ	0.3	18	ug/kg	IC
SS	NDA141	SW8081	METHOXYCHLOR	21	U	21	UJ	0.37	21	ug/kg	IC
SS	NDA143	SW8081	METHOXYCHLOR	17	U	17	UJ	0.3	17	ug/kg	IC
SS	NDA145	SW8081	METHOXYCHLOR	19	U	19	UJ	0.32	19	ug/kg	IC
SS	NDA155	SW8081	METHOXYCHLOR	19	U	19	UJ	0.33	19	ug/kg	IC
[illegible]	NDA157	SW8081	METHOXYCHLOR	17	U	17	UJ	0.29	17	ug/kg	IC
[illegible]	NDA159	SW8081	METHOXYCHLOR	18	U	18	UJ	0.3	18	ug/kg	IC
SS	NDA161	SW8081	METHOXYCHLOR	18	U	18	UJ	0.3	18	ug/kg	IC
SS	NDA196	SW8081	METHOXYCHLOR	18	U	18	UJ	0.32	18	ug/kg	IC
SS	NDA197FD1	SW8081	METHOXYCHLOR	18	U	18	UJ	0.31	18	ug/kg	IC
SS	NDA198	SW8081	METHOXYCHLOR	22	U	22	UJ	0.38	22	ug/kg	IC

Table 4 - Data Qualified During the Validation Process for Calibration Exceedences

Matrix	Sample ID	Analytical Method	Parameter	Lab Result	Lab Qual	Final Result	Final Qual	DL	RL	Units	Comment
SS	NDA199	SW8081	METHOXYCHLOR	22	U	22	UJ	0.37	22	ug/kg	
SS	NDA200	SW8081	METHOXYCHLOR	18	U	18	UJ	0.31	18	ug/kg	IC
SB	NDA165	SW8081	METHOXYCHLOR	19	U	19	UJ	0.33	19	ug/kg	HT, IC, CC
SB	NDA167	SW8081	METHOXYCHLOR	21	U	21	UJ	0.36	21	ug/kg	HT, IC, CC
SB	NDA169	SW8081	METHOXYCHLOR	20	U	20	UJ	0.35	20	ug/kg	HT, IC, CC
SB	NDA171	SW8081	METHOXYCHLOR	18	U	18	UJ	0.32	18	ug/kg	HT, IC, CC
SB	NDA173	SW8081	METHOXYCHLOR	22	U	22	UJ	0.37	22	ug/kg	HT, IC, CC
SB	NDA175	SW8081	METHOXYCHLOR	19	U	19	UJ	0.32	19	ug/kg	HT, IC, CC
SB	NDA177	SW8081	METHOXYCHLOR	20	U	20	UJ	0.34	20	ug/kg	HT, IC, CC
SD	NDA053	SW8081	METHOXYCHLOR	127	U	127	UJ	2.2	127	ug/kg	HT, IC, CC
SS	NDA166	SW8081	METHOXYCHLOR	21	U	21	UJ	0.36	21	ug/kg	HT, IC, CC
SS	NDA168	SW8081	METHOXYCHLOR	20	U	20	UJ	0.34	20	ug/kg	HT, IC, CC
SS	NDA170	SW8081	METHOXYCHLOR	20	U	20	UJ	0.35	20	ug/kg	HT, IC, CC
SS	NDA172	SW8081	METHOXYCHLOR	18	U	18	UJ	0.31	18	ug/kg	HT, IC, CC
SS	NDA174	SW8081	METHOXYCHLOR	18	U	18	UJ	0.3	18	ug/kg	HT, IC, CC
SS	NDA176	SW8081	METHOXYCHLOR	48	U	48	UJ	0.81	48	ug/kg	HT, IC, CC
SS	NDA164	SW8081	METHOXYCHLOR	21	U	21	UJ	0.36	21	ug/kg	HT, IC , CC
SB	NDA213	SW8081	METHOXYCHLOR	20	U	20	UJ	0.33	20	ug/kg	HT, IC
SB	NDA214FD1	SW8081	METHOXYCHLOR	19	U	19	UJ	0.32	19	ug/kg	HT, IC
SB	NDA215	SW8081	METHOXYCHLOR	20	U	20	UJ	0.34	20	ug/kg	HT, IC
SB	NDA216	SW8081	METHOXYCHLOR	18	U	18	UJ	0.32	18	ug/kg	HT, IC
SB	NDA217	SW8081	METHOXYCHLOR	19	U	19	UJ	0.33	19	ug/kg	HT, IC
SB	NDA218	SW8081	METHOXYCHLOR	19	U	19	UJ	0.32	19	ug/kg	HT, IC
SB	NDA219	SW8081	METHOXYCHLOR	19	U	19	UJ	0.32	19	ug/kg	HT, IC
SB	NDA220	SW8081	METHOXYCHLOR	19	U	19	UJ	0.33	19	ug/kg	HT, IC
SB	NDA221	SW8081	METHOXYCHLOR	18	U	18	UJ	0.31	18	ug/kg	HT
SB	NDA222	SW8081	METHOXYCHLOR	17	U	17	UJ	0.29	17	ug/kg	HT
SB	NDA223	SW8081	METHOXYCHLOR	19	U	19	UJ	0.33	19	ug/kg	HT, IC
SD	NDA054	SW8081	METHOXYCHLOR	17	U	17	UJ	0.3	17	ug/kg	HT, IC
SD	NDA055	SW8081	METHOXYCHLOR	17	U	17	UJ	0.29	17	ug/kg	HT, IC
SS	NDA147	SW8081	METHOXYCHLOR	18	U	18	UJ	0.3	18	ug/kg	CC, IC
SW	NDA035	SW8330	TETRANITRO-1,3,5,7-	5	U	5	UJ	0.3	5	ug/L	CC
SW	NDA036	SW8330	TETRANITRO-1,3,5,7-	5	U	5	UJ	0.3	5	ug/L	CC
SW	NDA038FD1	SW8330	TETRANITRO-1,3,5,7-	5	U	5	UJ	0.3	5	ug/L	CC
SW	NDA040	SW8330	TETRANITRO-1,3,5,7-	5	U	5	UJ	0.3	5	ug/L	CC
SW	NDA301	SW8330	TETRANITRO-1,3,5,7-	5	U	5	UJ	0.3	5	ug/L	CC
SB	NDA247FD1	SW8081	p,p'-DDE	3.8	U	3.8	UJ	0.39	3.8	ug/kg	HT, FD
SB	NDA224	SW8081	p,p'-DDT	3.8	U	3.8	UJ	0.45	3.8	ug/kg	IC
SB	NDA225	SW8081	p,p'-DDT	4.1	U	4.1	UJ	0.49	4.1	ug/kg	IC
SB	NDA226	SW8081	p,p'-DDT	3.9	U	3.9	UJ	0.46	3.9	ug/kg	IC
SB	NDA227FD1	SW8081	p,p'-DDT	3.8	U	3.8	UJ	0.45	3.8	ug/kg	IC
SB	NDA228	SW8081	p,p'-DDT	4	U	4	UJ	0.47	4	ug/kg	IC
SB	NDA229	SW8081	p,p'-DDT	4.3	U	4.3	UJ	0.51	4.3	ug/kg	IC
SB	NDA230	SW8081	p,p'-DDT	3.6	U	3.6	UJ	0.42	3.6	ug/kg	IC
SB	NDA231	SW8081	p,p'-DDT	3.6	U	3.6	UJ	0.42	3.6	ug/kg	IC
SB	NDA232	SW8081	p,p'-DDT	3.7	U	3.7	UJ	0.43	3.7	ug/kg	IC
SB	NDA233	SW8081	p,p'-DDT	3.5	U	3.5	UJ	0.42	3.5	ug/kg	IC
SB	NDA234	SW8081	p,p'-DDT	3.8	U	3.8	UJ	0.45	3.8	ug/kg	IC
SS	NDA147	SW8081	p,p'-DDT	3.5	U	3.5	UJ	0.41	3.5	ug/kg	IC
SS	NDA153	SW8081	p,p'-DDT	3.5	U	3.5	UJ	0.42	3.5	ug/kg	IC
SS	NDA196	SW8081	p,p'-DDT	3.6	U	3.6	UJ	0.42	3.6	ug/kg	IC
SS	NDA197FD1	SW8081	p,p'-DDT	3.6	U	3.6	UJ	0.42	3.6	ug/kg	I
SS	NDA198	SW8081	p,p'-DDT	4.3	U	4.3	UJ	0.51	4.3	ug/kg	IC
SS	NDA199	SW8081	p,p'-DDT	4.3	U	4.3	UJ	0.5	4.3	ug/kg	IC
SS	NDA200	SW8081	p,p'-DDT	3.5	U	3.5	UJ	0.41	3.5	ug/kg	IC
WG	NDA022	SW8081	p,p'-DDT	0.02	U	0.02	UJ	0.01	0.02	ug/L	IC
SB	NDA165	SW8081	p,p'-DDT	3.8	U	3.8	UJ	0.44	3.8	ug/kg	HT, IC

Table 4 - Data Qualified During the Validation Process for Calibration Exceedences

Matrix	Sample ID	Analytical Method	Parameter	Lab Result	Lab Qual	Final Result	Final Qual	DL	RL	Units	Comment
[illegible]	NDA167	SW8081	p,p'-DDT	4.1	U	4.1	UJ	0.48	4.1	ug/kg	HT, IC
SB	NDA169	SW8081	p,p'-DDT	4	U	4	UJ	0.47	4	ug/kg	HT, IC
SB	NDA171	SW8081	p,p'-DDT	3.6	U	3.6	UJ	0.42	3.6	ug/kg	HT, IC
SB	NDA173	SW8081	p,p'-DDT	4.2	U	4.2	UJ	0.5	4.2	ug/kg	HT, IC
SB	NDA175	SW8081	p,p'-DDT	3.7	U	3.7	UJ	0.43	3.7	ug/kg	HT, IC
SB	NDA177	SW8081	p,p'-DDT	3.9	U	3.9	UJ	0.45	3.9	ug/kg	HT, IC
SD	NDA053	SW8081	p,p'-DDT	25	U	25	UJ	2.9	25	ug/kg	HT, IC
SS	NDA164	SW8081	p,p'-DDT	4.1	U	4.1	UJ	0.48	4.1	ug/kg	HT, IC
SS	NDA166	SW8081	p,p'-DDT	4.1	U	4.1	UJ	0.49	4.1	ug/kg	HT, IC
SS	NDA168	SW8081	p,p'-DDT	3.9	U	3.9	UJ	0.45	3.9	ug/kg	HT, IC
SS	NDA170	SW8081	p,p'-DDT	4	U	4	UJ	0.47	4	ug/kg	HT, IC
SS	NDA172	SW8081	p,p'-DDT	3.6	U	3.6	UJ	0.42	3.6	ug/kg	HT, IC
SS	NDA174	SW8081	p,p'-DDT	3.5	U	3.5	UJ	0.41	3.5	ug/kg	HT, IC
SS	NDA176	SW8081	p,p'-DDT	9.3	U	9.3	UJ	1.1	9.3	ug/kg	HT, IC
SS	NDA104FD1	SW8081	p,p'-DDT	4.7	U	4.7	UJ	0.55	4.7	ug/kg	HT, FD
SD	NDA052	SW8081	p,p'-DDT	41	U	41	UJ	4.8	41	ug/kg	HT, IC, OT
WG	NDA015	SW8260	TETRACHLOROETHYLENE(PCE)	1	U	1	UJ	0.5	1	ug/L	CC
WG	NDA016	SW8260	TETRACHLOROETHYLENE(PCE)	1	U	1	UJ	0.5	1	ug/L	CC
WG	NDA026	SW8260	TETRACHLOROETHYLENE(PCE)	1	U	1	UJ	0.5	1	ug/L	CC
WG	NDA005	SW8260	TETRACHLOROETHYLENE(PCE)	1	U	1	UJ	0.5	1	ug/L	CC
WG	NDA006	SW8260	TETRACHLOROETHYLENE(PCE)	1	U	1	UJ	0.5	1	ug/L	CC
WG	NDA008	SW8260	TETRACHLOROETHYLENE(PCE)	1	U	1	UJ	0.5	1	ug/L	CC
WG	NDA009	SW8260	TETRACHLOROETHYLENE(PCE)	1	U	1	UJ	0.5	1	ug/L	CC
WG	NDA010	SW8260	TETRACHLOROETHYLENE(PCE)	1	U	1	UJ	0.5	1	ug/L	CC
WG	NDA011	SW8260	TETRACHLOROETHYLENE(PCE)	1	U	1	UJ	0.5	1	ug/L	CC
[illegible]G	NDA012	SW8260	TETRACHLOROETHYLENE(PCE)	1	U	1	UJ	0.5	1	ug/L	CC
[illegible]	NDA219	SW8260	ACETONE	45	=	45	U, R	11	11	ug/kg	BL, IC
WG	NDA0321FD1	SW8260	2-BUTANONE (MEK)	10	U	10	R	2	10	ug/L	IC, CC
SB	NDA126	SW8260	2-BUTANONE (MEK)	13	U	13	R	2	13	ug/kg	IC
SB	NDA129	SW8260	2-BUTANONE (MEK)	12	U	12	R	2	12	ug/kg	IC
SB	NDA130FD1	SW8260	2-BUTANONE (MEK)	12	U	12	R	2	12	ug/kg	IC
SB	NDA132	SW8260	2-BUTANONE (MEK)	10	U	10	R	2	10	ug/kg	IC
SB	NDA134	SW8260	2-BUTANONE (MEK)	10	U	10	R	2	10	ug/kg	IC
SB	NDA136	SW8260	2-BUTANONE (MEK)	11	U	11	R	2	11	ug/kg	IC
SB	NDA138	SW8260	2-BUTANONE (MEK)	10	U	10	R	2	10	ug/kg	IC
SB	NDA140	SW8260	2-BUTANONE (MEK)	10	U	10	R	2	10	ug/kg	IC
SB	NDA142	SW8260	2-BUTANONE (MEK)	10	U	10	R	2	10	ug/kg	IC
SB	NDA144	SW8260	2-BUTANONE (MEK)	12	U	12	R	2	12	ug/kg	IC
SB	NDA146	SW8260	2-BUTANONE (MEK)	11	U	11	R	2	11	ug/kg	IC
SB	NDA148	SW8260	2-BUTANONE (MEK)	10	U	10	R	2	10	ug/kg	IC
SB	NDA151	SW8260	2-BUTANONE (MEK)	11	U	11	R	2	11	ug/kg	IC
SB	NDA152FD1	SW8260	2-BUTANONE (MEK)	12	U	12	R	2	12	ug/kg	IC
SB	NDA154	SW8260	2-BUTANONE (MEK)	11	U	11	R	2	11	ug/kg	IC
SB	NDA156	SW8260	2-BUTANONE (MEK)	10	U	10	R	2	10	ug/kg	IC
SB	NDA158	SW8260	2-BUTANONE (MEK)	10	U	10	R	2	10	ug/kg	IC
SB	NDA160	SW8260	2-BUTANONE (MEK)	10	U	10	R	2	10	ug/kg	IC
SB	NDA162	SW8260	2-BUTANONE (MEK)	11	U	11	R	2	11	ug/kg	IC
SB	NDA163FD1	SW8260	2-BUTANONE (MEK)	12	U	12	R	2	12	ug/kg	IC
SB	NDA214FD1	SW8260	2-BUTANONE (MEK)	10	U	10	R	2	10	ug/kg	IC
SB	NDA215	SW8260	2-BUTANONE (MEK)	11	U	11	R	2	11	ug/kg	IC
SB	NDA216	SW8260	2-BUTANONE (MEK)	10	U	10	R	2	10	ug/kg	IC
[illegible]	NDA217	SW8260	2-BUTANONE (MEK)	12	U	12	R	2	12	ug/kg	IC
SB	NDA218	SW8260	2-BUTANONE (MEK)	10	U	10	R	2	10	ug/kg	IC
SB	NDA219	SW8260	2-BUTANONE (MEK)	11	U	11	R	2	11	ug/kg	IC
SB	NDA220	SW8260	2-BUTANONE (MEK)	12	U	12	R	2	12	ug/kg	IC
SB	NDA221	SW8260	2-BUTANONE (MEK)	10	U	10	R	2	10	ug/kg	IC
SB	NDA222	SW8260	2-BUTANONE (MEK)	10	U	10	R	2	10	ug/kg	IC

Table 4 - Data Qualified During the Validation Process for Calibration Exceedences

Matrix	Sample ID	Analytical Method	Parameter	Lab Result	Lab Qual	Final Result	Final Qual	DL	RL	Units	Comment
SB	NDA223	SW8260	2-BUTANONE (MEK)	10	U	10	R	2	10	ug/kg	
SD	NDA054	SW8260	2-BUTANONE (MEK)	15	U	15	R	3	15	ug/kg	IC
SD	NDA055	SW8260	2-BUTANONE (MEK)	10	U	10	R	2	10	ug/kg	IC
SS	NDA125	SW8260	2-BUTANONE (MEK)	18	U	18	R	3	18	ug/kg	IC
SS	NDA127	SW8260	2-BUTANONE (MEK)	10	U	10	R	2	10	ug/kg	IC
SS	NDA128FD1	SW8260	2-BUTANONE (MEK)	17	U	17	R	3	17	ug/kg	IC
SS	NDA131	SW8260	2-BUTANONE (MEK)	12	U	12	R	2	12	ug/kg	IC
SS	NDA133	SW8260	2-BUTANONE (MEK)	16	U	16	R	3	16	ug/kg	IC
SS	NDA135	SW8260	2-BUTANONE (MEK)	14	U	14	R	2	14	ug/kg	IC
SS	NDA137	SW8260	2-BUTANONE (MEK)	11	U	11	R	2	11	ug/kg	IC
SS	NDA139	SW8260	2-BUTANONE (MEK)	11	U	11	R	2	11	ug/kg	IC
SS	NDA141	SW8260	2-BUTANONE (MEK)	14	U	14	R	2	14	ug/kg	IC
SS	NDA143	SW8260	2-BUTANONE (MEK)	10	U	10	R	2	10	ug/kg	IC
SS	NDA145	SW8260	2-BUTANONE (MEK)	13	U	13	R	2	13	ug/kg	IC
SS	NDA147	SW8260	2-BUTANONE (MEK)	11	U	11	R	2	11	ug/kg	IC
SS	NDA149	SW8260	2-BUTANONE (MEK)	11	U	11	R	2	11	ug/kg	IC
SS	NDA150FD1	SW8260	2-BUTANONE (MEK)	12	U	12	R	2	12	ug/kg	IC
SS	NDA153	SW8260	2-BUTANONE (MEK)	12	U	12	R	2	12	ug/kg	IC
SS	NDA155	SW8260	2-BUTANONE (MEK)	11	U	11	R	2	11	ug/kg	IC
SS	NDA157	SW8260	2-BUTANONE (MEK)	11	U	11	R	2	11	ug/kg	IC
SS	NDA159	SW8260	2-BUTANONE (MEK)	14	U	14	R	2	14	ug/kg	IC
SS	NDA161	SW8260	2-BUTANONE (MEK)	11	U	11	R	2	11	ug/kg	IC
WG	NDA024	SW8260	2-BUTANONE (MEK)	5	U	5	R	2	5	ug/L	IC
WG	NDA025FD1	SW8260	2-BUTANONE (MEK)	5	U	5	R	2	5	ug/L	IC
WG	NDA029	SW8260	2-BUTANONE (MEK)	5	U	5	R	2	5	ug/L	IC
SB	NDA165	SW8260	2-BUTANONE (MEK)	10	U	10	R	2	10	ug/kg	C
SB	NDA167	SW8260	2-BUTANONE (MEK)	10	U	10	R	2	10	ug/kg	C
SB	NDA169	SW8260	2-BUTANONE (MEK)	10	U	10	R	2	10	ug/kg	CC
SB	NDA171	SW8260	2-BUTANONE (MEK)	11	U	11	R	2	11	ug/kg	CC
SB	NDA173	SW8260	2-BUTANONE (MEK)	11	U	11	R	2	11	ug/kg	CC
SB	NDA175	SW8260	2-BUTANONE (MEK)	10	U	10	R	2	10	ug/kg	CC
SB	NDA177	SW8260	2-BUTANONE (MEK)	10	U	10	R	2	10	ug/kg	CC
SB	NDA213	SW8260	2-BUTANONE (MEK)	12	U	12	R	2	12	ug/kg	CC
SB	NDA224	SW8260	2-BUTANONE (MEK)	10	U	10	R	2	10	ug/kg	CC
SB	NDA225	SW8260	2-BUTANONE (MEK)	11	U	11	R	2	11	ug/kg	CC
SB	NDA226	SW8260	2-BUTANONE (MEK)	11	U	11	R	2	11	ug/kg	CC
SB	NDA227FD1	SW8260	2-BUTANONE (MEK)	10	U	10	R	2	10	ug/kg	CC
SB	NDA228	SW8260	2-BUTANONE (MEK)	11	U	11	R	2	11	ug/kg	CC
SB	NDA229	SW8260	2-BUTANONE (MEK)	12	U	12	R	2	12	ug/kg	CC
SB	NDA230	SW8260	2-BUTANONE (MEK)	10	U	10	R	2	10	ug/kg	CC
SB	NDA231	SW8260	2-BUTANONE (MEK)	10	U	10	R	2	10	ug/kg	CC
SB	NDA232	SW8260	2-BUTANONE (MEK)	10	U	10	R	1	10	ug/kg	CC
SB	NDA233	SW8260	2-BUTANONE (MEK)	10	U	10	R	2	10	ug/kg	CC
SB	NDA234	SW8260	2-BUTANONE (MEK)	10	U	10	R	2	10	ug/kg	CC
SB	NDA235	SW8260	2-BUTANONE (MEK)	12	U	12	R	2	12	ug/kg	CC
SB	NDA236	SW8260	2-BUTANONE (MEK)	10	U	10	R	2	10	ug/kg	CC
SB	NDA237FD1	SW8260	2-BUTANONE (MEK)	11	U	11	R	2	11	ug/kg	CC
SB	NDA238	SW8260	2-BUTANONE (MEK)	10	U	10	R	2	10	ug/kg	CC
SB	NDA239	SW8260	2-BUTANONE (MEK)	11	U	11	R	2	11	ug/kg	CC
SB	NDA240	SW8260	2-BUTANONE (MEK)	12	U	12	R	2	12	ug/kg	CC
SB	NDA241	SW8260	2-BUTANONE (MEK)	10	U	10	R	2	10	ug/kg	CC
SB	NDA242	SW8260	2-BUTANONE (MEK)	10	U	10	R	2	10	ug/kg	C
SB	NDA243	SW8260	2-BUTANONE (MEK)	10	U	10	R	2	10	ug/kg	CC
SB	NDA244	SW8260	2-BUTANONE (MEK)	11	U	11	R	2	11	ug/kg	CC
SB	NDA248	SW8260	2-BUTANONE (MEK)	11	U	11	R	2	11	ug/kg	CC
SB	NDA253	SW8260	2-BUTANONE (MEK)	11	U	11	R	2	11	ug/kg	CC
SB	NDA254	SW8260	2-BUTANONE (MEK)	11	U	11	R	2	11	ug/kg	CC

Table 4 - Data Qualified During the Validation Process for Calibration Exceedences

Matrix	Sample ID	Analytical Method	Parameter	Lab Result	Lab Qual	Final Result	Final Qual	DL	RL	Units	Comment
[illegible]	NDA255	SW8260	2-BUTANONE (MEK)	10	U	10	R	2	10	ug/kg	CC
[illegible]	NDA087	SW8260	2-BUTANONE (MEK)	10	U	10	R	2	10	ug/kg	CC
SB	NDA089	SW8260	2-BUTANONE (MEK)	10	U	10	R	2	10	ug/kg	CC
SB	NDA099	SW8260	2-BUTANONE (MEK)	10	U	10	R	2	10	ug/kg	CC
SB	NDA296	SW8260	2-BUTANONE (MEK)	10	U	10	R	2	10	ug/kg	CC
SB	NDA298	SW8260	2-BUTANONE (MEK)	11	U	11	R	2	11	ug/kg	CC
SB	NDA299	SW8260	2-BUTANONE (MEK)	11	U	11	R	2	11	ug/kg	CC
SB	NDA058	SW8260	2-BUTANONE (MEK)	10	U	10	R	1	10	ug/kg	CC
SB	NDA063	SW8260	2-BUTANONE (MEK)	11	U	11	R	2	11	ug/kg	CC
SB	NDA064FD1	SW8260	2-BUTANONE (MEK)	10	U	10	R	2	10	ug/kg	CC
SB	NDA066	SW8260	2-BUTANONE (MEK)	10	U	10	R	2	10	ug/kg	CC
SB	NDA068	SW8260	2-BUTANONE (MEK)	11	U	11	R	2	11	ug/kg	CC
SB	NDA070	SW8260	2-BUTANONE (MEK)	10	U	10	R	1	10	ug/kg	CC
SB	NDA073	SW8260	2-BUTANONE (MEK)	10	U	10	R	2	10	ug/kg	CC
SB	NDA075	SW8260	2-BUTANONE (MEK)	10	U	10	R	2	10	ug/kg	CC
SB	NDA077	SW8260	2-BUTANONE (MEK)	10	U	10	R	2	10	ug/kg	CC
SB	NDA079	SW8260	2-BUTANONE (MEK)	10	U	10	R	2	10	ug/kg	CC
SB	NDA081	SW8260	2-BUTANONE (MEK)	10	U	10	R	2	10	ug/kg	CC
SB	NDA083	SW8260	2-BUTANONE (MEK)	10	U	10	R	2	10	ug/kg	CC
SB	NDA114	SW8260	2-BUTANONE (MEK)	11	U	11	R	2	11	ug/kg	CC
SB	NDA116	SW8260	2-BUTANONE (MEK)	11	U	11	R	2	11	ug/kg	CC
SB	NDA118	SW8260	2-BUTANONE (MEK)	12	U	12	R	2	12	ug/kg	CC
SB	NDA105	SW8260	2-BUTANONE (MEK)	17	U	17	R	3	17	ug/kg	CC
SB	NDA106FD1	SW8260	2-BUTANONE (MEK)	16	U	16	R	3	16	ug/kg	CC
SB	NDA108	SW8260	2-BUTANONE (MEK)	13	U	13	R	2	13	ug/kg	CC
[illegible]	NDA110	SW8260	2-BUTANONE (MEK)	11	U	11	R	2	11	ug/kg	CC
[illegible]	NDA112	SW8260	2-BUTANONE (MEK)	11	U	11	R	2	11	ug/kg	CC
SD	NDA050	SW8260	2-BUTANONE (MEK)	2160	U	2160	R	369	2160	ug/kg	CC
SD	NDA051FD1	SW8260	2-BUTANONE (MEK)	23	U	23	R	4	23	ug/kg	CC
SD	NDA045	SW8260	2-BUTANONE (MEK)	36	U	36	R	6	36	ug/kg	CC
SD	NDA302	SW8260	2-BUTANONE (MEK)	26	U	26	R	4	26	ug/kg	CC
SD	NDA047	SW8260	2-BUTANONE (MEK)	10	U	10	R	2	10	ug/kg	CC
SD	NDA048	SW8260	2-BUTANONE (MEK)	13	U	13	R	2	13	ug/kg	CC
SD	NDA049	SW8260	2-BUTANONE (MEK)	11	U	11	R	2	11	ug/kg	CC
SS	NDA164	SW8260	2-BUTANONE (MEK)	13	U	13	R	2	13	ug/kg	CC
SS	NDA166	SW8260	2-BUTANONE (MEK)	11	U	11	R	2	11	ug/kg	CC
SS	NDA168	SW8260	2-BUTANONE (MEK)	20	U	20	R	3	20	ug/kg	CC
SS	NDA170	SW8260	2-BUTANONE (MEK)	16	U	16	R	3	16	ug/kg	CC
SS	NDA172	SW8260	2-BUTANONE (MEK)	10	U	10	R	2	10	ug/kg	CC
SS	NDA174	SW8260	2-BUTANONE (MEK)	10	U	10	R	2	10	ug/kg	CC
SS	NDA196	SW8260	2-BUTANONE (MEK)	10	U	10	R	2	10	ug/kg	CC
SS	NDA197FD1	SW8260	2-BUTANONE (MEK)	12	U	12	R	2	12	ug/kg	CC
SS	NDA198	SW8260	2-BUTANONE (MEK)	11	U	11	R	2	11	ug/kg	CC
SS	NDA199	SW8260	2-BUTANONE (MEK)	14	U	14	R	2	14	ug/kg	CC
SS	NDA200	SW8260	2-BUTANONE (MEK)	12	U	12	R	2	12	ug/kg	CC
SS	NDA178	SW8260	2-BUTANONE (MEK)	10	U	10	R	2	10	ug/kg	CC
SS	NDA179	SW8260	2-BUTANONE (MEK)	11	U	11	R	2	11	ug/kg	CC
SS	NDA180	SW8260	2-BUTANONE (MEK)	11	U	11	R	2	11	ug/kg	CC
SS	NDA181	SW8260	2-BUTANONE (MEK)	11	U	11	R	2	11	ug/kg	CC
SS	NDA182	SW8260	2-BUTANONE (MEK)	14	U	14	R	2	14	ug/kg	CC
SS	NDA183	SW8260	2-BUTANONE (MEK)	12	U	12	R	2	12	ug/kg	CC
[illegible]	NDA184FD1	SW8260	2-BUTANONE (MEK)	11	U	11	R	2	11	ug/kg	CC
[illegible]	NDA201	SW8260	2-BUTANONE (MEK)	19	U	19	R	3	19	ug/kg	CC
SS	NDA202	SW8260	2-BUTANONE (MEK)	14	U	14	R	2	14	ug/kg	CC
SS	NDA203	SW8260	2-BUTANONE (MEK)	11	U	11	R	2	11	ug/kg	CC
SS	NDA204	SW8260	2-BUTANONE (MEK)	14	U	14	R	2	14	ug/kg	CC
SS	NDA205FD1	SW8260	2-BUTANONE (MEK)	12	U	12	R	2	12	ug/kg	CC

Table 4 - Data Qualified During the Validation Process for Calibration Exceedences

Matrix	Sample ID	Analytical Method	Parameter	Lab Result	Lab Qual	Final Result	Final Qual	DL	RL	Units	Comment
SS	NDA206	SW8260	2-BUTANONE (MEK)	11	U	11	R	2	11	ug/kg	C
SS	NDA207	SW8260	2-BUTANONE (MEK)	12	U	12	R	2	12	ug/kg	CC
SS	NDA208	SW8260	2-BUTANONE (MEK)	10	U	10	R	2	10	ug/kg	CC
SS	NDA209	SW8260	2-BUTANONE (MEK)	16	U	16	R	3	16	ug/kg	CC
SS	NDA210	SW8260	2-BUTANONE (MEK)	11	U	11	R	2	11	ug/kg	CC
SS	NDA211	SW8260	2-BUTANONE (MEK)	11	U	11	R	2	11	ug/kg	CC
SS	NDA212	SW8260	2-BUTANONE (MEK)	14	U	14	R	2	14	ug/kg	CC
SS	NDA185	SW8260	2-BUTANONE (MEK)	12	U	12	R	2	12	ug/kg	CC
SS	NDA186	SW8260	2-BUTANONE (MEK)	10	U	10	R	2	10	ug/kg	CC
SS	NDA187	SW8260	2-BUTANONE (MEK)	10	U	10	R	2	10	ug/kg	CC
SS	NDA188	SW8260	2-BUTANONE (MEK)	13	U	13	R	2	13	ug/kg	CC
SS	NDA189	SW8260	2-BUTANONE (MEK)	10	U	10	R	2	10	ug/kg	CC
SS	NDA190	SW8260	2-BUTANONE (MEK)	11	U	11	R	2	11	ug/kg	CC
SS	NDA191	SW8260	2-BUTANONE (MEK)	10	U	10	R	2	10	ug/kg	CC
SS	NDA192FD1	SW8260	2-BUTANONE (MEK)	11	U	11	R	2	11	ug/kg	CC
SS	NDA193	SW8260	2-BUTANONE (MEK)	10	U	10	R	2	10	ug/kg	CC
SS	NDA194	SW8260	2-BUTANONE (MEK)	11	U	11	R	2	11	ug/kg	CC
SS	NDA195	SW8260	2-BUTANONE (MEK)	10	U	10	R	1	10	ug/kg	CC
SS	NDA086	SW8260	2-BUTANONE (MEK)	11	U	11	R	2	11	ug/kg	CC
SS	NDA088	SW8260	2-BUTANONE (MEK)	10	U	10	R	2	10	ug/kg	CC
SS	NDA091	SW8260	2-BUTANONE (MEK)	11	U	11	R	2	11	ug/kg	CC
SS	NDA057	SW8260	2-BUTANONE (MEK)	10	U	10	R	2	10	ug/kg	CC
SS	NDA059	SW8260	2-BUTANONE (MEK)	11	U	11	R	2	11	ug/kg	CC
SS	NDA061	SW8260	2-BUTANONE (MEK)	12	U	12	R	2	12	ug/kg	CC
SS	NDA062FD1	SW8260	2-BUTANONE (MEK)	12	U	12	R	2	12	ug/kg	CC
SS	NDA065	SW8260	2-BUTANONE (MEK)	12	U	12	R	2	12	ug/kg	CC
SS	NDA067	SW8260	2-BUTANONE (MEK)	12	U	12	R	2	12	ug/kg	C
SS	NDA069	SW8260	2-BUTANONE (MEK)	11	U	11	R	2	11	ug/kg	CC
SS	NDA119	SW8260	2-BUTANONE (MEK)	12	U	12	R	2	12	ug/kg	CC
SS	NDA120	SW8260	2-BUTANONE (MEK)	16	U	16	R	3	16	ug/kg	CC
SS	NDA121	SW8260	2-BUTANONE (MEK)	10	U	10	R	2	10	ug/kg	CC
SS	NDA122	SW8260	2-BUTANONE (MEK)	12	U	12	R	2	12	ug/kg	CC
SS	NDA123	SW8260	2-BUTANONE (MEK)	13	U	13	R	2	13	ug/kg	CC
SS	NDA124	SW8260	2-BUTANONE (MEK)	11	U	11	R	2	11	ug/kg	CC
SS	NDA072FD1	SW8260	2-BUTANONE (MEK)	11	U	11	R	2	11	ug/kg	CC
SS	NDA074	SW8260	2-BUTANONE (MEK)	10	U	10	R	2	10	ug/kg	CC
SS	NDA076	SW8260	2-BUTANONE (MEK)	10	U	10	R	2	10	ug/kg	CC
SS	NDA078	SW8260	2-BUTANONE (MEK)	11	U	11	R	2	11	ug/kg	CC
SS	NDA080	SW8260	2-BUTANONE (MEK)	10	U	10	R	2	10	ug/kg	CC
SS	NDA082	SW8260	2-BUTANONE (MEK)	13	U	13	R	2	13	ug/kg	CC
SS	NDA113	SW8260	2-BUTANONE (MEK)	10	U	10	R	2	10	ug/kg	CC
SS	NDA115	SW8260	2-BUTANONE (MEK)	10	U	10	R	2	10	ug/kg	CC
SS	NDA117	SW8260	2-BUTANONE (MEK)	10	U	10	R	2	10	ug/kg	CC
SS	NDA103	SW8260	2-BUTANONE (MEK)	13	U	13	R	2	13	ug/kg	CC
SS	NDA104FD1	SW8260	2-BUTANONE (MEK)	14	U	14	R	2	14	ug/kg	CC
SS	NDA107	SW8260	2-BUTANONE (MEK)	12	U	12	R	2	12	ug/kg	CC
SS	NDA109	SW8260	2-BUTANONE (MEK)	11	U	11	R	2	11	ug/kg	CC
SS	NDA111	SW8260	2-BUTANONE (MEK)	12	U	12	R	2	12	ug/kg	CC
SW	NDA035	SW8260	2-BUTANONE (MEK)	10	U	10	R	2	10	ug/L	CC
SW	NDA036	SW8260	2-BUTANONE (MEK)	10	U	10	R	2	10	ug/L	CC
SW	NDA037	SW8260	2-BUTANONE (MEK)	10	U	10	R	2	10	ug/L	CC
SW	NDA038FD1	SW8260	2-BUTANONE (MEK)	10	U	10	R	2	10	ug/L	C
SW	NDA039	SW8260	2-BUTANONE (MEK)	10	U	10	R	2	10	ug/L	CC
SW	NDA040	SW8260	2-BUTANONE (MEK)	10	U	10	R	2	10	ug/L	CC
SW	NDA300	SW8260	2-BUTANONE (MEK)	10	U	10	R	2	10	ug/L	CC
SW	NDA301	SW8260	2-BUTANONE (MEK)	10	U	10	R	2	10	ug/L	CC
WG	NDA0321FD1	SW8260	ACETONE	10	U	10	R	10	10	ug/L	IC, CC

Table 4 - Data Qualified During the Validation Process for Calibration Exceedences

Matrix	Sample ID	Analytical Method	Parameter	Lab Result	Lab Qual	Final Result	Final Qual	DL	RL	Units	Comment
[illegible]	NDA144	SW8260	ACETONE	12	U	12	R	12	12	ug/kg	IC
SB	NDA146	SW8260	ACETONE	11	U	11	R	11	11	ug/kg	IC
SB	NDA215	SW8260	ACETONE	11	U	11	R	11	11	ug/kg	IC
SS	NDA131DL1	SW8260	ACETONE	1200	U	1200	R	1200	1200	ug/kg	IC
SS	NDA133	SW8260	ACETONE	16	U	16	R	16	16	ug/kg	IC
SS	NDA135	SW8260	ACETONE	14	U	14	R	14	14	ug/kg	IC
SS	NDA137	SW8260	ACETONE	11	U	11	R	11	11	ug/kg	IC
SS	NDA139	SW8260	ACETONE	11	U	11	R	11	11	ug/kg	IC
SS	NDA141	SW8260	ACETONE	14	U	14	R	14	14	ug/kg	IC
SS	NDA149DL1	SW8260	ACETONE	1130	U	1130	R	1130	1130	ug/kg	IC
SS	NDA150FD1DL1	SW8260	ACETONE	964	U	964	R	964	964	ug/kg	IC
WG	NDA024	SW8260	ACETONE	5	U	5	R	5	5	ug/L	IC
WG	NDA025FD1	SW8260	ACETONE	5	U	5	R	5	5	ug/L	IC
WG	NDA029	SW8260	ACETONE	5	U	5	R	5	5	ug/L	IC
SB	NDA097	SW8260	ACETONE	505	E	2100	R	9	10	ug/kg	CC, DL
SB	NDA095FD1	SW8260	ACETONE	41	=	41	R	10	10	ug/kg	CC, BL
SB	NDA070	SW8260	ACETONE	16	=	16	R	9	10	ug/kg	CC, BL
SB	NDA073	SW8260	ACETONE	12	=	12	R	10	10	ug/kg	CC, BL
SB	NDA075	SW8260	ACETONE	13	=	13	R	10	10	ug/kg	CC, BL
SB	NDA077	SW8260	ACETONE	18	=	18	R	10	10	ug/kg	CC, BL
SB	NDA079	SW8260	ACETONE	11	=	11	R	10	10	ug/kg	CC, BL
SB	NDA083	SW8260	ACETONE	12	=	12	R	9	10	ug/kg	CC, BL
SB	NDA114	SW8260	ACETONE	13	=	13	R	11	11	ug/kg	CC, BL
SB	NDA116	SW8260	ACETONE	26	=	26	R	11	11	ug/kg	CC, BL
SB	NDA118	SW8260	ACETONE	67	=	67	R	12	12	ug/kg	CC, BL
[illegible]	NDA102	SW8260	ACETONE	25	=	25	R	14	14	ug/kg	CC, BL
[illegible]	NDA302	SW8260	ACETONE	41	=	41	R	26	26	ug/kg	CC, BL
SD	NDA307FD1	SW8260	ACETONE	145	=	145	R	56	56	ug/kg	CC, BL
SS	NDA119	SW8260	ACETONE	149	=	149	R	12	12	ug/kg	CC, BL
SS	NDA122	SW8260	ACETONE	12	=	12	R	12	12	ug/kg	CC, BL
SS	NDA072FD1	SW8260	ACETONE	41	=	41	R	11	11	ug/kg	CC, BL
SS	NDA074	SW8260	ACETONE	60	=	60	R	9	10	ug/kg	CC, BL
SS	NDA078	SW8260	ACETONE	14	=	14	R	11	11	ug/kg	CC, BL
SS	NDA115	SW8260	ACETONE	20	=	20	R	10	10	ug/kg	CC, BL
SS	NDA117	SW8260	ACETONE	11	=	11	R	10	10	ug/kg	CC, BL
SS	NDA101	SW8260	ACETONE	20	=	20	R	14	14	ug/kg	CC, BL
SB	NDA167	SW8260	ACETONE	49	=	49	R	10	10	ug/kg	CC
SB	NDA169	SW8260	ACETONE	74	=	74	R	10	10	ug/kg	CC
SB	NDA171	SW8260	ACETONE	42	=	42	R	11	11	ug/kg	CC
SB	NDA173	SW8260	ACETONE	107	=	107	R	11	11	ug/kg	CC
SB	NDA175	SW8260	ACETONE	84	=	84	R	10	10	ug/kg	CC
SB	NDA177	SW8260	ACETONE	72	=	72	R	9	10	ug/kg	CC
SB	NDA213	SW8260	ACETONE	51	=	51	R	12	12	ug/kg	CC
SB	NDA224	SW8260	ACETONE	34	=	34	R	10	10	ug/kg	CC
SB	NDA225	SW8260	ACETONE	22	=	22	R	11	11	ug/kg	CC
SB	NDA226	SW8260	ACETONE	14	=	14	R	11	11	ug/kg	CC
SB	NDA227FD1	SW8260	ACETONE	23	=	23	R	10	10	ug/kg	CC
SB	NDA228	SW8260	ACETONE	13	=	13	R	11	11	ug/kg	CC
SB	NDA229	SW8260	ACETONE	13	=	13	R	12	12	ug/kg	CC
SB	NDA230	SW8260	ACETONE	25	=	25	R	10	10	ug/kg	CC
SB	NDA231	SW8260	ACETONE	31	=	31	R	10	10	ug/kg	CC
[illegible]	NDA232	SW8260	ACETONE	22	=	22	R	9	10	ug/kg	CC
SB	NDA233	SW8260	ACETONE	21	=	21	R	10	10	ug/kg	CC
SB	NDA234	SW8260	ACETONE	22	=	22	R	9	10	ug/kg	CC
SB	NDA235	SW8260	ACETONE	21	=	21	R	12	12	ug/kg	CC
SB	NDA236	SW8260	ACETONE	20	=	20	R	10	10	ug/kg	CC
SB	NDA237FD1	SW8260	ACETONE	22	=	22	R	11	11	ug/kg	CC

Table 4 - Data Qualified During the Validation Process for Calibration Exceedences

Matrix	Sample ID	Analytical Method	Parameter	Lab Result	Lab Qual	Final Result	Final Qual	DL	RL	Units	Comment
SB	NDA238	SW8260	ACETONE	16	=	16	R	10	10	ug/kg	C
SB	NDA239	SW8260	ACETONE	23	=	23	R	11	11	ug/kg	CC
SB	NDA240	SW8260	ACETONE	21	=	21	R	12	12	ug/kg	CC
SB	NDA241	SW8260	ACETONE	12	=	12	R	10	10	ug/kg	CC
SB	NDA242	SW8260	ACETONE	20	=	20	R	10	10	ug/kg	CC
SB	NDA243	SW8260	ACETONE	17	=	17	R	10	10	ug/kg	CC
SB	NDA244	SW8260	ACETONE	21	=	21	R	11	11	ug/kg	CC
SB	NDA245	SW8260	ACETONE	27	=	27	R	9	10	ug/kg	CC
SB	NDA246	SW8260	ACETONE	44	=	44	R	10	10	ug/kg	CC
SB	NDA247FD1	SW8260	ACETONE	30	=	30	R	10	10	ug/kg	CC
SB	NDA248	SW8260	ACETONE	18	=	18	R	11	11	ug/kg	CC
SB	NDA249	SW8260	ACETONE	36	=	36	R	9	10	ug/kg	CC
SB	NDA252	SW8260	ACETONE	106	=	106	R	12	12	ug/kg	CC
SB	NDA253	SW8260	ACETONE	24	=	24	R	11	11	ug/kg	CC
SB	NDA254	SW8260	ACETONE	15	=	15	R	11	11	ug/kg	CC
SB	NDA255	SW8260	ACETONE	20	=	20	R	10	10	ug/kg	CC
SB	NDA085	SW8260	ACETONE	29	=	29	R	12	12	ug/kg	CC
SB	NDA092	SW8260	ACETONE	40	=	40	R	11	11	ug/kg	CC
SB	NDA093	SW8260	ACETONE	39	=	39	R	9	10	ug/kg	CC
SB	NDA094	SW8260	ACETONE	50	=	50	R	12	12	ug/kg	CC
SB	NDA087	SW8260	ACETONE	91	=	91	R	10	10	ug/kg	CC
SB	NDA089	SW8260	ACETONE	10	U	10	R	10	10	ug/kg	CC
SB	NDA099	SW8260	ACETONE	25	=	25	R	10	10	ug/kg	CC
SB	NDA296DL1	SW8260	ACETONE	1240	=	1240	R	1040	1040	ug/kg	CC
SB	NDA297DL1	SW8260	ACETONE	1120	=	1120	R	1020	1030	ug/kg	CC
SB	NDA298DL1	SW8260	ACETONE	1600	=	1600	R	1090	1090	ug/kg	C
SB	NDA299	SW8260	ACETONE	103	=	103	R	11	11	ug/kg	C
SB	NDA064FD1	SW8260	ACETONE	10	U	10	R	10	10	ug/kg	CC
SB	NDA066DL1	SW8260	ACETONE	2020	=	2020	R	1190	1190	ug/kg	CC
SB	NDA081	SW8260	ACETONE	10	U	10	R	10	10	ug/kg	CC
SB	NDA110	SW8260	ACETONE	11	U	11	R	11	11	ug/kg	CC
SD	NDA050	SW8260	ACETONE	2160	U	2160	R	2160	2160	ug/kg	CC
SD	NDA051FD1	SW8260	ACETONE	296	=	296	R	23	23	ug/kg	CC
SD	NDA052	SW8260	ACETONE	540	E	540	R	20	20	ug/kg	CC
SD	NDA053	SW8260	ACETONE	139	=	139	R	14	14	ug/kg	CC
SD	NDA042	SW8260	ACETONE	37	=	37	R	12	12	ug/kg	CC
SD	NDA043	SW8260	ACETONE	36	=	36	R	11	11	ug/kg	CC
SD	NDA044	SW8260	ACETONE	140	=	140	R	59	59	ug/kg	CC
SD	NDA045	SW8260	ACETONE	70	=	70	R	36	36	ug/kg	CC
SD	NDA046	SW8260	ACETONE	97	=	97	R	43	43	ug/kg	CC
SD	NDA047DL1	SW8260	ACETONE	2190	=	2190	R	862	862	ug/kg	CC
SD	NDA048DL1	SW8260	ACETONE	15000	=	15000	R	1200	1200	ug/kg	CC
SD	NDA049DL1	SW8260	ACETONE	1790	=	1790	R	1120	1120	ug/kg	CC
SS	NDA164	SW8260	ACETONE	40	=	40	R	13	13	ug/kg	CC
SS	NDA166	SW8260	ACETONE	205	E	205	R	11	11	ug/kg	CC
SS	NDA168	SW8260	ACETONE	73	=	73	R	20	20	ug/kg	CC
SS	NDA170	SW8260	ACETONE	57	=	57	R	16	16	ug/kg	CC
SS	NDA172	SW8260	ACETONE	41	=	41	R	10	10	ug/kg	CC
SS	NDA174	SW8260	ACETONE	60	=	60	R	10	10	ug/kg	CC
SS	NDA176	SW8260	ACETONE	277	E	277	R	14	14	ug/kg	CC
SS	NDA196DL1	SW8260	ACETONE	1480	=	1480	R	937	937	ug/kg	CC
SS	NDA197FD1DL1	SW8260	ACETONE	2140	=	2140	R	1820	1820	ug/kg	C
SS	NDA198DL1	SW8260	ACETONE	5620	=	5620	R	1160	1160	ug/kg	CC
SS	NDA199	SW8260	ACETONE	125	=	125	R	14	14	ug/kg	CC
SS	NDA200DL1	SW8260	ACETONE	2220	=	2220	R	1220	1220	ug/kg	CC
SS	NDA178	SW8260	ACETONE	26	=	26	R	10	10	ug/kg	CC
SS	NDA179	SW8260	ACETONE	29	=	29	R	11	11	ug/kg	CC

Table 4 - Data Qualified During the Validation Process for Calibration Exceedences

Matrix	Sample ID	Analytical Method	Parameter	Lab Result	Lab Qual	Final Result	Final Qual	DL	RL	Units	Comment
[illegible]	NDA180	SW8260	ACETONE	22	=	22	R	11	11	ug/kg	CC
SS	NDA181	SW8260	ACETONE	31	=	31	R	11	11	ug/kg	CC
SS	NDA182	SW8260	ACETONE	17	=	17	R	14	14	ug/kg	CC
SS	NDA183	SW8260	ACETONE	27	=	27	R	11	12	ug/kg	CC
SS	NDA184FD1	SW8260	ACETONE	32	=	32	R	11	11	ug/kg	CC
SS	NDA201	SW8260	ACETONE	62	=	62	R	19	19	ug/kg	CC
SS	NDA202	SW8260	ACETONE	146	=	146	R	14	14	ug/kg	CC
SS	NDA203	SW8260	ACETONE	38	=	38	R	11	11	ug/kg	CC
SS	NDA204DL1	SW8260	ACETONE	2340	=	2340	R	1350	1350	ug/kg	CC
SS	NDA205FD1DL1	SW8260	ACETONE	1880	=	1880	R	1380	1380	ug/kg	CC
SS	NDA206DL1	SW8260	ACETONE	1680	=	1680	R	1430	1430	ug/kg	CC
SS	NDA207DL1	SW8260	ACETONE	1800	=	1800	R	1290	1290	ug/kg	CC
SS	NDA208	SW8260	ACETONE	17	=	17	R	10	10	ug/kg	CC
SS	NDA209	SW8260	ACETONE	98	=	98	R	16	16	ug/kg	CC
SS	NDA210	SW8260	ACETONE	43	=	43	R	11	11	ug/kg	CC
SS	NDA211	SW8260	ACETONE	46	=	46	R	11	11	ug/kg	CC
SS	NDA212	SW8260	ACETONE	14	U	14	R	14	14	ug/kg	CC
SS	NDA185	SW8260	ACETONE	18	=	18	R	12	12	ug/kg	CC
SS	NDA186	SW8260	ACETONE	10	U	10	R	10	10	ug/kg	CC
SS	NDA187	SW8260	ACETONE	10	U	10	R	10	10	ug/kg	CC
SS	NDA188	SW8260	ACETONE	16	=	16	R	13	13	ug/kg	CC
SS	NDA189	SW8260	ACETONE	11	=	11	R	10	10	ug/kg	CC
SS	NDA190	SW8260	ACETONE	12	=	12	R	11	11	ug/kg	CC
SS	NDA191	SW8260	ACETONE	16	=	16	R	10	10	ug/kg	CC
SS	NDA192FD1	SW8260	ACETONE	15	=	15	R	11	11	ug/kg	CC
[illegible]	NDA193	SW8260	ACETONE	10	U	10	R	10	10	ug/kg	CC
[illegible]	NDA194	SW8260	ACETONE	11	=	11	R	11	11	ug/kg	CC
SS	NDA195	SW8260	ACETONE	11	=	11	R	9	10	ug/kg	CC
SS	NDA084	SW8260	ACETONE	36	=	36	R	13	13	ug/kg	CC
SS	NDA086	SW8260	ACETONE	20	=	20	R	11	11	ug/kg	CC
SS	NDA088	SW8260	ACETONE	13	=	13	R	10	10	ug/kg	CC
SS	NDA091	SW8260	ACETONE	74	=	74	R	11	11	ug/kg	CC
SS	NDA059DL1	SW8260	ACETONE	1840	=	1840	R	1170	1170	ug/kg	CC
SS	NDA065DL1	SW8260	ACETONE	1630	=	1630	R	1220	1220	ug/kg	CC
SS	NDA069DL1	SW8260	ACETONE	1600	=	1600	R	1080	1080	ug/kg	CC
SS	NDA121DL1	SW8260	ACETONE	1350	=	1350	R	1130	1130	ug/kg	CC
SS	NDA076	SW8260	ACETONE	10	U	10	R	10	10	ug/kg	CC
SS	NDA080	SW8260	ACETONE	10	U	10	R	10	10	ug/kg	CC
SS	NDA082	SW8260	ACETONE	13	U	13	R	13	13	ug/kg	CC
SS	NDA113	SW8260	ACETONE	10	U	10	R	10	10	ug/kg	CC
SS	NDA104FD1	SW8260	ACETONE	14	U	14	R	14	14	ug/kg	CC
SS	NDA107	SW8260	ACETONE	12	U	12	R	12	12	ug/kg	CC
SS	NDA109	SW8260	ACETONE	11	U	11	R	11	11	ug/kg	CC
SS	NDA111	SW8260	ACETONE	12	U	12	R	12	12	ug/kg	CC
SW	NDA035	SW8260	ACETONE	10	U	10	R	10	10	ug/L	CC
SW	NDA036	SW8260	ACETONE	10	U	10	R	10	10	ug/L	CC
SW	NDA037	SW8260	ACETONE	10	U	10	R	10	10	ug/L	CC
SW	NDA038FD1	SW8260	ACETONE	10	U	10	R	10	10	ug/L	CC
SW	NDA039	SW8260	ACETONE	10	U	10	R	10	10	ug/L	CC
SW	NDA040	SW8260	ACETONE	10	U	10	R	10	10	ug/L	CC
SW	NDA300	SW8260	ACETONE	10	U	10	R	10	10	ug/L	CC
[illegible]	NDA301	SW8260	ACETONE	10	U	10	R	10	10	ug/L	CC
[illegible]	NDA058	SW8260	ACETONE	11	=	11	R	9	10	ug/kg	BL, SS, CC
SS	NDA121	SW8260	ACETONE	487	E	487	R	10	10	ug/kg	BL, LR
SB	NDA126	SW8260	ACETONE	96	=	96	R	13	13	ug/kg	BL, IC
SB	NDA129	SW8260	ACETONE	19	=	19	R	12	12	ug/kg	BL, IC
SB	NDA130FD1	SW8260	ACETONE	23	=	23	R	12	12	ug/kg	BL, IC

Table 4 - Data Qualified During the Validation Process for Calibration Exceedences

Matrix	Sample ID	Analytical Method	Parameter	Lab Result	Lab Qual	Final Result	Final Qual	DL	RL	Units	Comment
SB	NDA132	SW8260	ACETONE	27	=	27	R	10	10	ug/kg	BL
SB	NDA134	SW8260	ACETONE	14	=	14	R	10	10	ug/kg	BL, IC
SB	NDA136	SW8260	ACETONE	19	=	19	R	11	11	ug/kg	BL, IC
SB	NDA138	SW8260	ACETONE	23	=	23	R	10	10	ug/kg	BL, IC
SB	NDA140	SW8260	ACETONE	15	=	15	R	9	10	ug/kg	BL, IC
SB	NDA142	SW8260	ACETONE	13	=	13	R	10	10	ug/kg	BL, IC
SB	NDA148	SW8260	ACETONE	49	=	49	R	10	10	ug/kg	BL, IC
SB	NDA151	SW8260	ACETONE	59	=	59	R	11	11	ug/kg	BL, IC
SB	NDA152FD1	SW8260	ACETONE	42	=	42	R	12	12	ug/kg	BL, IC
SB	NDA154	SW8260	ACETONE	50	=	50	R	11	11	ug/kg	BL, IC
SB	NDA156	SW8260	ACETONE	45	=	45	R	10	10	ug/kg	BL, IC
SB	NDA158	SW8260	ACETONE	55	=	55	R	10	10	ug/kg	BL, IC
SB	NDA160	SW8260	ACETONE	34	=	34	R	9	10	ug/kg	BL, IC
SB	NDA162	SW8260	ACETONE	50	=	50	R	11	11	ug/kg	BL, IC
SB	NDA163FD1	SW8260	ACETONE	107	=	107	R	12	12	ug/kg	BL, IC
SB	NDA214FD1	SW8260	ACETONE	47	=	47	R	10	10	ug/kg	BL, IC
SB	NDA216	SW8260	ACETONE	13	=	13	R	10	10	ug/kg	BL, IC
SB	NDA217	SW8260	ACETONE	16	=	16	R	12	12	ug/kg	BL, IC
SB	NDA218	SW8260	ACETONE	11	=	11	R	9	10	ug/kg	BL, IC
SB	NDA220	SW8260	ACETONE	17	=	17	R	12	12	ug/kg	BL, IC
SB	NDA221	SW8260	ACETONE	15	=	15	R	9	10	ug/kg	BL, IC
SB	NDA222	SW8260	ACETONE	14	=	14	R	10	10	ug/kg	BL, IC
SB	NDA223	SW8260	ACETONE	12	=	12	R	10	10	ug/kg	BL, IC
SD	NDA054	SW8260	ACETONE	25	=	25	R	15	15	ug/kg	BL, IC
SD	NDA055	SW8260	ACETONE	16	=	16	R	10	10	ug/kg	BL, IC
SS	NDA125	SW8260	ACETONE	25	=	25	R	18	18	ug/kg	BL,
SS	NDA127	SW8260	ACETONE	16	=	16	R	10	10	ug/kg	BL,
SS	NDA128FD1	SW8260	ACETONE	19	=	19	R	17	17	ug/kg	BL, IC
SS	NDA143	SW8260	ACETONE	10	J	10	R	9	10	ug/kg	BL, IC
SS	NDA145	SW8260	ACETONE	51	=	51	R	13	13	ug/kg	BL, IC
SS	NDA147	SW8260	ACETONE	133	=	133	R	11	11	ug/kg	BL, IC
SS	NDA153	SW8260	ACETONE	86	=	86	R	12	12	ug/kg	BL, IC
SS	NDA157	SW8260	ACETONE	32	=	32	R	11	11	ug/kg	BL, IC
SS	NDA159	SW8260	ACETONE	46	=	46	R	14	14	ug/kg	BL, IC
SS	NDA161	SW8260	ACETONE	39	=	39	R	11	11	ug/kg	BL, IC
SB	NDA060	SW8260	ACETONE	30	=	30	R	10	10	ug/kg	BL, CC
SB	NDA063	SW8260	ACETONE	22	=	22	R	11	11	ug/kg	BL, CC
SB	NDA068	SW8260	ACETONE	26	=	26	R	11	11	ug/kg	BL, CC
SB	NDA105	SW8260	ACETONE	22	=	22	R	17	17	ug/kg	BL, CC
SB	NDA106FD1	SW8260	ACETONE	21	=	21	R	16	16	ug/kg	BL, CC
SB	NDA108	SW8260	ACETONE	18	=	18	R	13	13	ug/kg	BL, CC
SB	NDA112	SW8260	ACETONE	12	=	12	R	11	11	ug/kg	BL, CC
SD	NDA303	SW8260	ACETONE	100	=	100	R	47	47	ug/kg	BL, CC
SS	NDA067	SW8260	ACETONE	15	=	15	R	12	12	ug/kg	BL, CC
SS	NDA120	SW8260	ACETONE	23	=	23	R	16	16	ug/kg	BL, CC
SS	NDA103	SW8260	ACETONE	25	=	25	R	13	13	ug/kg	BL, CC
SS	NDA155	SW8260	ACETONE	70	=	70	R	11	11	ug/kg	BL ,IC
SB	NDA249	SW8260	2-BUTANONE (MEK)	2	U	2	J	2	10	ug/kg	CC
SB	NDA252	SW8260	2-BUTANONE (MEK)	2	U	2	J	2	12	ug/kg	CC
SB	NDA085	SW8260	2-BUTANONE (MEK)	2	U	2	J	2	12	ug/kg	CC
SB	NDA093	SW8260	2-BUTANONE (MEK)	2	U	2	J	2	10	ug/kg	CC
SB	NDA095FD1	SW8260	2-BUTANONE (MEK)	2	U	2	J	2	10	ug/kg	C
SB	NDA096	SW8260	2-BUTANONE (MEK)	2	U	2	J	2	10	ug/kg	CC
SB	NDA297	SW8260	2-BUTANONE (MEK)	2	U	2	J	2	10	ug/kg	CC
SD	NDA052	SW8260	2-BUTANONE (MEK)	29	=	29	J	3	20	ug/kg	CC
SD	NDA053	SW8260	2-BUTANONE (MEK)	25	=	25	J	2	14	ug/kg	CC
SS	NDA176	SW8260	2-BUTANONE (MEK)	18	=	18	J	2	14	ug/kg	CC

Table 4 - Data Qualified During the Validation Process for Calibration Exceedences

Matrix	Sample ID	Analytical Method	Parameter	Lab Result	Lab Qual	Final Result	Final Qual	DL	RL	Units	Comment
[illegible]	NDA084	SW8260	2-BUTANONE (MEK)	2	U	2	J	2	13	ug/kg	CC
SS	NDA061	SW8260	ACETONE	33	=	33	J	12	12	ug/kg	CC, FD
SS	NDA062FD1	SW8260	ACETONE	14	=	14	J	12	12	ug/kg	CC, FD
SS	NDA057	SW8260	ACETONE	62	=	62	J	10	10	ug/kg	CC
SS	NDA123DL1	SW8260	ACETONE	2510	=	2510	J	1200	1200	ug/kg	CC
SS	NDA124DL1	SW8260	ACETONE	5070	=	5070	J	1000	1000	ug/kg	CC
SB	NDA105	SW8081	p,p'-DDE	11	=	11	J	0.54	5.3	ug/kg	HT, FD
SB	NDA106FD1	SW8081	p,p'-DDE	5.3	=	5.3	J	0.54	5.3	ug/kg	HT, FD
SS	NDA123	SW8081	p,p'-DDT	16	=	16	J	0.44	3.7	ug/kg	HT, CC
SS	NDA125DL1	SW8081	p,p'-DDT	125	=	125	DJ	4.6	39	ug/kg	IC
SS	NDA125DL1	SW8081	p,p'-DDE	190	=	190	D	4	39	ug/kg	IC

Matrix	Sample ID	Analytical Method	Parameter	Lab Result	Lab Qual	Final Result	Final Qual	DL	RL	Units	Comments
SS	NDA187	SW8270	2,4,5-TRICHLOROPHENOL	1140	U	1140	UJ	22	1140	ug/kg	HT
SS	NDA150FD1	SW8260	XYLENES, TOTAL	12	U	12	UJ	0.3	12	ug/kg	SS, IS
SD	NDA055	SW8260	VINYL CHLORIDE	10	U	10	UJ	0.46	10	ug/kg	SS, IS
SS	NDA150FD1	SW8260	VINYL CHLORIDE	12	U	12	UJ	0.56	12	ug/kg	SS, IS
SD	NDA055	SW8260	TRICHLOROETHYLENE (TCE)	10	U	10	UJ	0.25	10	ug/kg	SS, IS
SS	NDA150FD1	SW8260	TRICHLOROETHYLENE (TCE)	12	U	12	UJ	0.3	12	ug/kg	SS, IS
SD	NDA055	SW8260	trans-1,3-DICHLOROPROPENE	10	U	10	UJ	0.26	10	ug/kg	SS, IS
SS	NDA150FD1	SW8260	trans-1,3-DICHLOROPROPENE	12	U	12	UJ	0.3	12	ug/kg	SS, IS
SS	NDA150FD1	SW8260	TOLUENE	12	U	12	UJ	0.3	12	ug/kg	SS, IS
SD	NDA055	SW8260	TETRACHLOROETHYLENE(PCE)	10	U	10	UJ	0.5	10	ug/kg	SS, IS
SS	NDA150FD1	SW8260	TETRACHLOROETHYLENE(PCE)	12	U	12	UJ	0.62	12	ug/kg	SS, IS
SD	NDA055	SW8260	STYRENE	10	U	10	UJ	0.19	10	ug/kg	SS, IS
SS	NDA150FD1	SW8260	STYRENE	12	U	12	UJ	0.23	12	ug/kg	SS, IS
SS	NDA150FD1	SW8260	O-XYLENE (1,2-DIMETHYLBENZENE)	12	U	12	UJ	0.3	12	ug/kg	SS, IS
SD	NDA055	SW8260	METHYLENE CHLORIDE	10	U	10	UJ	2	10	ug/kg	SS, IS
SS	NDA150FD1	SW8260	METHYLENE CHLORIDE	12	U	12	UJ	2	12	ug/kg	SS, IS
SD	NDA055	SW8260	4-METHYL-2-PENTANONE (MIBK)	10	U	10	UJ	1	10	ug/kg	SS, IS
SS	NDA150FD1	SW8260	4-METHYL-2-PENTANONE (MIBK)	12	U	12	UJ	2	12	ug/kg	SS, IS
SS	NDA150FD1	SW8260	M,P-XYLENE (SUM OF ISOMERS)	12	U	12	UJ	0.3	12	ug/kg	SS, IS
SS	NDA150FD1	SW8260	ETHYLBENZENE	12	U	12	UJ	0.3	12	ug/kg	SS, IS
SD	NDA055	SW8260	DIBROMOCHLOROMETHANE	10	U	10	UJ	0.21	10	ug/kg	SS, IS
SS	NDA150FD1	SW8260	DIBROMOCHLOROMETHANE	12	U	12	UJ	0.3	12	ug/kg	SS, IS
SD	NDA055	SW8260	cis-1,3-DICHLOROPROPENE	10	U	10	UJ	0.26	10	ug/kg	SS, IS
SS	NDA150FD1	SW8260	cis-1,3-DICHLOROPROPENE	12	U	12	UJ	0.3	12	ug/kg	SS, IS
SD	NDA055	SW8260	CHLOROMETHANE	10	U	10	UJ	0.76	10	ug/kg	SS, IS
SS	NDA150FD1	SW8260	CHLOROMETHANE	12	U	12	UJ	0.92	12	ug/kg	SS, IS
SD	NDA055	SW8260	CHLOROFORM	10	U	10	UJ	0.96	10	ug/kg	SS, IS
SS	NDA150FD1	SW8260	CHLOROFORM	12	U	12	UJ	1	12	ug/kg	SS, IS
SD	NDA055	SW8260	CHLOROETHANE	10	U	10	UJ	0.52	10	ug/kg	SS, IS
SS	NDA150FD1	SW8260	CHLOROETHANE	12	U	12	UJ	0.6	12	ug/kg	SS, IS
SD	NDA055	SW8260	CHLOROBENZENE	10	U	10	UJ	0.19	10	ug/kg	SS, IS
SS	NDA150FD1	SW8260	CHLOROBENZENE	12	U	12	UJ	0.23	12	ug/kg	SS, IS
SD	NDA055	SW8260	CARBON TETRACHLORIDE	10	U	10	UJ	0.36	10	ug/kg	SS, IS
SS	NDA150FD1	SW8260	CARBON TETRACHLORIDE	12	U	12	UJ	0.4	12	ug/kg	SS, IS
SD	NDA055	SW8260	CARBON DISULFIDE	10	U	10	UJ	0.29	10	ug/kg	SS, IS
SS	NDA150FD1	SW8260	CARBON DISULFIDE	12	U	12	UJ	0.36	12	ug/kg	SS, IS
SD	NDA055	SW8260	BROMOMETHANE	10	U	10	UJ	0.43	10	ug/kg	SS, IS
SS	NDA150FD1	SW8260	BROMOMETHANE	12	U	12	UJ	0.52	12	ug/kg	SS, IS
SD	NDA055	SW8260	BROMOFORM	10	U	10	UJ	0.24	10	ug/kg	SS, IS
SS	NDA150FD1	SW8260	BROMOFORM	12	U	12	UJ	0.29	12	ug/kg	SS, IS
SD	NDA055	SW8260	BROMODICHLOROMETHANE	10	U	10	UJ	0.19	10	ug/kg	SS, IS
SS	NDA150FD1	SW8260	BROMODICHLOROMETHANE	12	U	12	UJ	0.23	12	ug/kg	SS, IS
SD	NDA055	SW8260	BENZENE	10	U	10	UJ	0.1	10	ug/kg	SS, IS
SS	NDA150FD1	SW8260	BENZENE	12	U	12	UJ	0.1	12	ug/kg	SS, IS
SD	NDA055	SW8260	2-HEXANONE	10	U	10	UJ	1	10	ug/kg	SS, IS
SS	NDA150FD1	SW8260	2-HEXANONE	12	U	12	UJ	1	12	ug/kg	SS, IS
SD	NDA055	SW8260	1,2-DICHLOROPROPANE	10	U	10	UJ	0.13	10	ug/kg	SS, IS
SS	NDA150FD1	SW8260	1,2-DICHLOROPROPANE	12	U	12	UJ	0.2	12	ug/kg	SS, IS
SD	NDA055	SW8260	1,2-DICHLOROETHANE	10	U	10	UJ	0.23	10	ug/kg	SS, IS
SS	NDA150FD1	SW8260	1,2-DICHLOROETHANE	12	U	12	UJ	0.28	12	ug/kg	SS, IS
SD	NDA055	SW8260	1,1-DICHLOROETHENE	10	U	10	UJ	0.4	10	ug/kg	SS, IS
SS	NDA150FD1	SW8260	1,1-DICHLOROETHENE	12	U	12	UJ	0.5	12	ug/kg	SS, IS
SD	NDA055	SW8260	1,1-DICHLOROETHANE	10	U	10	UJ	0.4	10	ug/kg	SS, IS
SS	NDA150FD1	SW8260	1,1-DICHLOROETHANE	12	U	12	UJ	0.5	12	ug/kg	SS, IS
SD	NDA055	SW8260	1,1,2-TRICHLOROETHANE	10	U	10	UJ	0.32	10	ug/kg	SS, IS
SS	NDA150FD1	SW8260	1,1,2-TRICHLOROETHANE	12	U	12	UJ	0.39	12	ug/kg	SS, IS
SD	NDA055	SW8260	1,1,2,2-TETRACHLOROETHANE	10	U	10	UJ	0.1	10	ug/kg	SS, IS
SS	NDA150FD1	SW8260	1,1,2,2-TETRACHLOROETHANE	12	U	12	UJ	0.17	12	ug/kg	SS, IS
SS	NDA084	SW8260	1,1,2,2-TETRACHLOROETHANE	13	U	13	UJ	0.2	13	ug/kg	SS, IS
SD	NDA055	SW8260	1,1,1-TRICHLOROETHANE	10	U	10	UJ	0.29	10	ug/kg	SS, IS
SS	NDA150FD1	SW8260	1,1,1-TRICHLOROETHANE	12	U	12	UJ	0.36	12	ug/kg	SS, IS
WG	NDA024	SW8081	METHOXYCHLOR	0.11	U	0.11	UJ	0.01	0.11	ug/L	SS, IC
WG	NDA025FD1	SW8081	METHOXYCHLOR	0.11	U	0.11	UJ	0.01	0.11	ug/L	SS, IC
WG	NDA029	SW8081	METHOXYCHLOR	0.13	U	0.13	UJ	0.01	0.13	ug/L	SS, IC
WG	NDA024	SW8081	GAMMA BHC (LINDANE)	0.01	U	0.01	UJ	0.01	0.01	ug/L	SS, IC
WG	NDA025FD1	SW8081	GAMMA BHC (LINDANE)	0.01	U	0.01	UJ	0.01	0.01	ug/L	SS, IC
WG	NDA029	SW8081	GAMMA BHC (LINDANE)	0.01	U	0.01	UJ	0.01	0.01	ug/L	SS, IC
WG	NDA002	SW8081	GAMMA BHC (LINDANE)	0.01	U	0.01	UJ	0.01	0.01	ug/L	SS, IC
WG	NDA023	SW8081	GAMMA BHC (LINDANE)	0.01	U	0.01	UJ	0.01	0.01	ug/L	SS, IC
WG	NDA008	SW8081	GAMMA BHC (LINDANE)	0.01	U	0.01	UJ	0.01	0.01	ug/L	SS, IC

Matrix	Sample ID	Analytical Method	Parameter	Lab Result	Lab Qual	Final Result	Final Qual	DL	RL	Units	Comments
WG	NDA024	SW8081	ALPHA BHC	0.01	U	0.01	UJ	0.01	0.01	ug/L	SS, IC
WG	NDA025FD1	SW8081	ALPHA BHC	0.01	U	0.01	UJ	0.01	0.01	ug/L	SS, IC
WG	NDA029	SW8081	ALPHA BHC	0.01	U	0.01	UJ	0.01	0.01	ug/L	SS, IC
WG	NDA002	SW8081	ALPHA BHC	0.01	U	0.01	UJ	0.01	0.01	ug/L	SS, IC
WG	NDA023	SW8081	ALPHA BHC	0.01	U	0.01	UJ	0.01	0.01	ug/L	SS, IC
WG	NDA008	SW8081	ALPHA BHC	0.01	U	0.01	UJ	0.01	0.01	ug/L	SS, IC
SW	NDA039	SW8330	TETRAZOCINE	5	U	5	UJ	0.3	5	ug/L	SS, CC
SW	NDA300	SW8330	TETRAZOCINE	5	U	5	UJ	0.3	5	ug/L	SS, CC
WG	NDA024	SW8081	ENDRIN	0.02	U	0.02	UJ	0.01	0.02	ug/L	SS, CC
WG	NDA025FD1	SW8081	ENDRIN	0.02	U	0.02	UJ	0.01	0.02	ug/L	SS, CC
WG	NDA029	SW8081	ENDRIN	0.03	U	0.03	UJ	0.01	0.03	ug/L	SS, CC
SS	NDA135	SW8260	CHLOROETHANE	14	U	14	UJ	0.74	14	ug/kg	SS, CC
SS	NDA137	SW8260	CHLOROETHANE	11	U	11	UJ	0.59	11	ug/kg	SS, CC
SS	NDA141	SW8260	CHLOROETHANE	14	U	14	UJ	0.76	14	ug/kg	SS, CC
SS	NDA159	SW8260	CHLOROETHANE	14	U	14	UJ	0.8	14	ug/kg	SS, CC
SS	NDA180	SW8260	CHLOROETHANE	11	U	11	UJ	0.61	11	ug/kg	SS, CC
SS	NDA182	SW8260	CHLOROETHANE	14	U	14	UJ	0.77	14	ug/kg	SS, CC
WG	NDA002	SW8081	DELTA BHC	0.01	=	0.01	J	0.01	0.01	ug/L	SS, 2C
SW	NDA037	SW8330	TETRAZOCINE	5	U	5	UJ	0.3	5	ug/L	SS , CC
WG	NDA024	SW8081	TOXAPHENE	1.1	U	1.1	UJ	0.21	1.1	ug/L	SS
WG	NDA025FD1	SW8081	TOXAPHENE	1.1	U	1.1	UJ	0.21	1.1	ug/L	SS
WG	NDA029	SW8081	TOXAPHENE	1.3	U	1.3	UJ	0.24	1.3	ug/L	SS
WG	NDA002	SW8081	TOXAPHENE	1.2	U	1.2	UJ	0.23	1.2	ug/L	SS
WG	NDA023	SW8081	TOXAPHENE	1.1	U	1.1	UJ	0.21	1.1	ug/L	SS
WG	NDA008	SW8081	TOXAPHENE	1.1	U	1.1	UJ	0.21	1.1	ug/L	SS
WG	NDA024	SW8082	PCB-1260 (AROCHLOR 1260)	0.21	U	0.21	UJ	0.1	0.21	ug/L	SS
WG	NDA024	SW8082	PCB-1254 (AROCHLOR 1254)	0.21	U	0.21	UJ	0.15	0.21	ug/L	SS
WG	NDA024	SW8082	PCB-1248 (AROCHLOR 1248)	0.21	U	0.21	UJ	0.13	0.21	ug/L	SS
WG	NDA024	SW8082	PCB-1242 (AROCHLOR 1242)	0.21	U	0.21	UJ	0.06	0.21	ug/L	SS
WG	NDA024	SW8082	PCB-1232 (AROCHLOR 1232)	0.21	U	0.21	UJ	0.08	0.21	ug/L	SS
WG	NDA024	SW8082	PCB-1221 (AROCHLOR 1221)	0.42	U	0.42	UJ	0.12	0.42	ug/L	SS
WG	NDA024	SW8082	PCB-1016 (AROCHLOR 1016)	0.21	U	0.21	UJ	0.08	0.21	ug/L	SS
WG	NDA024	SW8081	p,p'-DDT	0.02	U	0.02	UJ	0.01	0.02	ug/L	SS
WG	NDA025FD1	SW8081	p,p'-DDT	0.02	U	0.02	UJ	0.01	0.02	ug/L	SS
WG	NDA029	SW8081	p,p'-DDT	0.03	U	0.03	UJ	0.01	0.03	ug/L	SS
WG	NDA002	SW8081	p,p'-DDT	0.02	U	0.02	UJ	0.01	0.02	ug/L	SS
WG	NDA023	SW8081	p,p'-DDT	0.02	U	0.02	UJ	0.01	0.02	ug/L	SS
WG	NDA008	SW8081	p,p'-DDT	0.02	U	0.02	UJ	0.01	0.02	ug/L	SS
WG	NDA024	SW8081	p,p'-DDE	0.02	U	0.02	UJ	0.01	0.02	ug/L	SS
WG	NDA025FD1	SW8081	p,p'-DDE	0.02	U	0.02	UJ	0.01	0.02	ug/L	SS
WG	NDA029	SW8081	p,p'-DDE	0.03	U	0.03	UJ	0.01	0.03	ug/L	SS
WG	NDA002	SW8081	p,p'-DDE	0.02	U	0.02	UJ	0.01	0.02	ug/L	SS
WG	NDA023	SW8081	p,p'-DDE	0.02	U	0.02	UJ	0.01	0.02	ug/L	SS
WG	NDA008	SW8081	p,p'-DDE	0.02	U	0.02	UJ	0.01	0.02	ug/L	SS
WG	NDA024	SW8081	p,p'-DDD	0.02	U	0.02	UJ	0.01	0.02	ug/L	SS
WG	NDA025FD1	SW8081	p,p'-DDD	0.02	U	0.02	UJ	0.01	0.02	ug/L	SS
WG	NDA029	SW8081	p,p'-DDD	0.03	U	0.03	UJ	0.01	0.03	ug/L	SS
WG	NDA002	SW8081	p,p'-DDD	0.02	U	0.02	UJ	0.01	0.02	ug/L	SS
WG	NDA023	SW8081	p,p'-DDD	0.02	U	0.02	UJ	0.01	0.02	ug/L	SS
WG	NDA008	SW8081	p,p'-DDD	0.02	U	0.02	UJ	0.01	0.02	ug/L	SS
WG	NDA001	SW8330	TETRAZOCINE	5	U	5	UJ	0.3	5	ug/L	SS
WG	NDA005	SW8330	TETRAZOCINE	5	U	5	UJ	0.3	5	ug/L	SS
WG	NDA006	SW8330	TETRAZOCINE	5	U	5	UJ	0.3	5	ug/L	SS
WG	NDA008	SW8330	TETRAZOCINE	5	U	5	UJ	0.3	5	ug/L	SS
WG	NDA009	SW8330	TETRAZOCINE	5	U	5	UJ	0.3	5	ug/L	SS
WG	NDA012	SW8330	TETRAZOCINE	5	U	5	UJ	0.3	5	ug/L	SS
WG	NDA0321FD1	SW8330	TETRAZOCINE	5	U	5	UJ	0.3	5	ug/L	SS
SW	NDA037	SW8330	NITROBENZENE	5	U	5	UJ	0.74	5	ug/L	SS
SW	NDA039	SW8330	NITROBENZENE	5	U	5	UJ	0.74	5	ug/L	SS
SW	NDA300	SW8330	NITROBENZENE	5	U	5	UJ	0.74	5	ug/L	SS
WG	NDA001	SW8330	NITROBENZENE	5	U	5	UJ	0.74	5	ug/L	SS
WG	NDA005	SW8330	NITROBENZENE	5	U	5	UJ	0.74	5	ug/L	SS
WG	NDA006	SW8330	NITROBENZENE	5	U	5	UJ	0.74	5	ug/L	SS
WG	NDA008	SW8330	NITROBENZENE	5	U	5	UJ	0.74	5	ug/L	SS
WG	NDA009	SW8330	NITROBENZENE	5	U	5	UJ	0.74	5	ug/L	SS
WG	NDA012	SW8330	NITROBENZENE	5	U	5	UJ	0.74	5	ug/L	SS
WG	NDA0321FD1	SW8330	NITROBENZENE	5	U	5	UJ	0.74	5	ug/L	SS
SW	NDA037	SW8330	TRINITROPHENYLNITRAMINE	5	U	5	UJ	1.1	5	ug/L	SS
SW	NDA039	SW8330	TRINITROPHENYLNITRAMINE	5	U	5	UJ	1.1	5	ug/L	SS
SW	NDA300	SW8330	TRINITROPHENYLNITRAMINE	5	U	5	UJ	1.1	5	ug/L	SS

Matrix	Sample ID	Analytical Method	Parameter	Lab Result	Lab Qual	Final Result	Final Qual	DL	RL	Units	Comments
WG	NDA001	SW8330	TRINITROPHENYLNITRAMINE	5	U	5	UJ	1.1	5	ug/L	SS
WG	NDA005	SW8330	TRINITROPHENYLNITRAMINE	5	U	5	UJ	1.1	5	ug/L	SS
WG	NDA006	SW8330	TRINITROPHENYLNITRAMINE	5	U	5	UJ	1.1	5	ug/L	SS
WG	NDA008	SW8330	TRINITROPHENYLNITRAMINE	5	U	5	UJ	1.1	5	ug/L	SS
WG	NDA009	SW8330	TRINITROPHENYLNITRAMINE	5	U	5	UJ	1.1	5	ug/L	SS
WG	NDA012	SW8330	TRINITROPHENYLNITRAMINE	5	U	5	UJ	1.1	5	ug/L	SS
WG	NDA0321FD1	SW8330	TRINITROPHENYLNITRAMINE	5	U	5	UJ	1.1	5	ug/L	SS
WG	NDA002	SW8081	METHOXYCHLOR	0.12	U	0.12	UJ	0.01	0.12	ug/L	SS
WG	NDA023	SW8081	METHOXYCHLOR	0.11	U	0.11	UJ	0.01	0.11	ug/L	SS
WG	NDA008	SW8081	METHOXYCHLOR	0.11	U	0.11	UJ	0.01	0.11	ug/L	SS
SW	NDA037	SW8330	TETRAZOCINE	5	U	5	UJ	0.42	5	ug/L	SS
SW	NDA039	SW8330	TETRAZOCINE	5	U	5	UJ	0.42	5	ug/L	SS
SW	NDA300	SW8330	TETRAZOCINE	5	U	5	UJ	0.42	5	ug/L	SS
WG	NDA001	SW8330	TETRAZOCINE	5	U	5	UJ	0.42	5	ug/L	SS
WG	NDA005	SW8330	TETRAZOCINE	5	U	5	UJ	0.42	5	ug/L	SS
WG	NDA006	SW8330	TETRAZOCINE	5	U	5	UJ	0.42	5	ug/L	SS
WG	NDA008	SW8330	TETRAZOCINE	5	U	5	UJ	0.42	5	ug/L	SS
WG	NDA009	SW8330	TETRAZOCINE	5	U	5	UJ	0.42	5	ug/L	SS
WG	NDA012	SW8330	TETRAZOCINE	5	U	5	UJ	0.42	5	ug/L	SS
WG	NDA0321FD1	SW8330	TETRAZOCINE	5	U	5	UJ	0.42	5	ug/L	SS
WG	NDA024	SW8081	HEPTACHLOR EPOXIDE	0.01	U	0.01	UJ	0.01	0.01	ug/L	SS
WG	NDA025FD1	SW8081	HEPTACHLOR EPOXIDE	0.01	U	0.01	UJ	0.01	0.01	ug/L	SS
WG	NDA029	SW8081	HEPTACHLOR EPOXIDE	0.01	U	0.01	UJ	0.01	0.01	ug/L	SS
WG	NDA002	SW8081	HEPTACHLOR EPOXIDE	0.01	U	0.01	UJ	0.01	0.01	ug/L	SS
WG	NDA023	SW8081	HEPTACHLOR EPOXIDE	0.01	U	0.01	UJ	0.01	0.01	ug/L	SS
WG	NDA008	SW8081	HEPTACHLOR EPOXIDE	0.01	U	0.01	UJ	0.01	0.01	ug/L	SS
WG	NDA024	SW8081	HEPTACHLOR	0.01	U	0.01	UJ	0.0005	0.01	ug/L	SS
WG	NDA025FD1	SW8081	HEPTACHLOR	0.01	U	0.01	UJ	0.0005	0.01	ug/L	SS
WG	NDA029	SW8081	HEPTACHLOR	0.01	U	0.01	UJ	0.0005	0.01	ug/L	SS
WG	NDA002	SW8081	HEPTACHLOR	0.01	U	0.01	UJ	0.01	0.01	ug/L	SS
WG	NDA023	SW8081	HEPTACHLOR	0.01	U	0.01	UJ	0.01	0.01	ug/L	SS
WG	NDA008	SW8081	HEPTACHLOR	0.01	U	0.01	UJ	0.01	0.01	ug/L	SS
WG	NDA024	SW8081	GAMMA-CHLORDANE	0.01	U	0.01	UJ	0.01	0.01	ug/L	SS
WG	NDA025FD1	SW8081	GAMMA-CHLORDANE	0.01	U	0.01	UJ	0.01	0.01	ug/L	SS
WG	NDA029	SW8081	GAMMA-CHLORDANE	0.01	U	0.01	UJ	0.01	0.01	ug/L	SS
WG	NDA002	SW8081	GAMMA-CHLORDANE	0.01	U	0.01	UJ	0.01	0.01	ug/L	SS
WG	NDA023	SW8081	GAMMA-CHLORDANE	0.01	U	0.01	UJ	0.01	0.01	ug/L	SS
WG	NDA008	SW8081	GAMMA-CHLORDANE	0.01	U	0.01	UJ	0.01	0.01	ug/L	SS
WG	NDA024	SW8081	ENDRIN KETONE	0.02	U	0.02	UJ	0.01	0.02	ug/L	SS
WG	NDA025FD1	SW8081	ENDRIN KETONE	0.02	U	0.02	UJ	0.01	0.02	ug/L	SS
WG	NDA029	SW8081	ENDRIN KETONE	0.03	U	0.03	UJ	0.01	0.03	ug/L	SS
WG	NDA002	SW8081	ENDRIN KETONE	0.02	U	0.02	UJ	0.01	0.02	ug/L	SS
WG	NDA023	SW8081	ENDRIN KETONE	0.02	U	0.02	UJ	0.01	0.02	ug/L	SS
WG	NDA008	SW8081	ENDRIN KETONE	0.02	U	0.02	UJ	0.01	0.02	ug/L	SS
WG	NDA024	SW8081	ENDRIN ALDEHYDE	0.02	U	0.02	UJ	0.01	0.02	ug/L	SS
WG	NDA025FD1	SW8081	ENDRIN ALDEHYDE	0.02	U	0.02	UJ	0.01	0.02	ug/L	SS
WG	NDA029	SW8081	ENDRIN ALDEHYDE	0.03	U	0.03	UJ	0.01	0.03	ug/L	SS
WG	NDA002	SW8081	ENDRIN ALDEHYDE	0.02	U	0.02	UJ	0.01	0.02	ug/L	SS
WG	NDA023	SW8081	ENDRIN ALDEHYDE	0.02	U	0.02	UJ	0.01	0.02	ug/L	SS
WG	NDA008	SW8081	ENDRIN ALDEHYDE	0.02	U	0.02	UJ	0.01	0.02	ug/L	SS
WG	NDA002	SW8081	ENDRIN	0.02	U	0.02	UJ	0.01	0.02	ug/L	SS
WG	NDA023	SW8081	ENDRIN	0.02	U	0.02	UJ	0.01	0.02	ug/L	SS
WG	NDA008	SW8081	ENDRIN	0.02	U	0.02	UJ	0.01	0.02	ug/L	SS
WG	NDA024	SW8081	ENDOSULFAN SULFATE	0.02	U	0.02	UJ	0.01	0.02	ug/L	SS
WG	NDA025FD1	SW8081	ENDOSULFAN SULFATE	0.02	U	0.02	UJ	0.01	0.02	ug/L	SS
WG	NDA029	SW8081	ENDOSULFAN SULFATE	0.03	U	0.03	UJ	0.01	0.03	ug/L	SS
WG	NDA002	SW8081	ENDOSULFAN SULFATE	0.02	U	0.02	UJ	0.01	0.02	ug/L	SS
WG	NDA023	SW8081	ENDOSULFAN SULFATE	0.02	U	0.02	UJ	0.01	0.02	ug/L	SS
WG	NDA008	SW8081	ENDOSULFAN SULFATE	0.02	U	0.02	UJ	0.01	0.02	ug/L	SS
WG	NDA024	SW8081	DIELDRIN	0.02	U	0.02	UJ	0.0005	0.02	ug/L	SS
WG	NDA025FD1	SW8081	DIELDRIN	0.02	U	0.02	UJ	0.0005	0.02	ug/L	SS
WG	NDA029	SW8081	DIELDRIN	0.03	U	0.03	UJ	0.0005	0.03	ug/L	SS
WG	NDA002	SW8081	DIELDRIN	0.02	U	0.02	UJ	0.02	0.02	ug/L	SS
WG	NDA023	SW8081	DIELDRIN	0.02	U	0.02	UJ	0.02	0.02	ug/L	SS
WG	NDA008	SW8081	DIELDRIN	0.02	U	0.02	UJ	0.02	0.02	ug/L	SS
WG	NDA024	SW8081	DELTA BHC	0.01	U	0.01	UJ	0.0007	0.01	ug/L	SS
WG	NDA025FD1	SW8081	DELTA BHC	0.01	U	0.01	UJ	0.0007	0.01	ug/L	SS
WG	NDA029	SW8081	DELTA BHC	0.01	U	0.01	UJ	0.0007	0.01	ug/L	SS
WG	NDA023	SW8081	DELTA BHC	0.01	U	0.01	UJ	0.01	0.01	ug/L	SS
WG	NDA008	SW8081	DELTA BHC	0.01	U	0.01	UJ	0.01	0.01	ug/L	SS

Matrix	Sample ID	Analytical Method	Parameter	Lab Result	Lab Qual	Final Result	Final Qual	DL	RL	Units	Comments
WG	NDA024	SW8081	BETA ENDOSULFAN (ENDOSULFAN II)	0.02	U	0.02	UJ	0.01	0.02	ug/L	SS
WG	NDA025FD1	SW8081	BETA ENDOSULFAN (ENDOSULFAN II)	0.02	U	0.02	UJ	0.01	0.02	ug/L	SS
WG	NDA029	SW8081	BETA ENDOSULFAN (ENDOSULFAN II)	0.03	U	0.03	UJ	0.01	0.03	ug/L	SS
WG	NDA002	SW8081	BETA ENDOSULFAN (ENDOSULFAN II)	0.02	U	0.02	UJ	0.01	0.02	ug/L	SS
WG	NDA023	SW8081	BETA ENDOSULFAN (ENDOSULFAN II)	0.02	U	0.02	UJ	0.01	0.02	ug/L	SS
WG	NDA008	SW8081	BETA ENDOSULFAN (ENDOSULFAN II)	0.02	U	0.02	UJ	0.01	0.02	ug/L	SS
WG	NDA024	SW8081	BETA BHC	0.01	U	0.01	UJ	0.0005	0.01	ug/L	SS
WG	NDA025FD1	SW8081	BETA BHC	0.01	U	0.01	UJ	0.0005	0.01	ug/L	SS
WG	NDA029	SW8081	BETA BHC	0.01	U	0.01	UJ	0.0005	0.01	ug/L	SS
WG	NDA002	SW8081	BETA BHC	0.01	U	0.01	UJ	0.01	0.01	ug/L	SS
WG	NDA023	SW8081	BETA BHC	0.01	U	0.01	UJ	0.01	0.01	ug/L	SS
WG	NDA008	SW8081	BETA BHC	0.01	U	0.01	UJ	0.01	0.01	ug/L	SS
WG	NDA024	SW8081	ALPHA-CHLORDANE	0.01	U	0.01	UJ	0.01	0.01	ug/L	SS
WG	NDA025FD1	SW8081	ALPHA-CHLORDANE	0.01	U	0.01	UJ	0.01	0.01	ug/L	SS
WG	NDA029	SW8081	ALPHA-CHLORDANE	0.01	U	0.01	UJ	0.01	0.01	ug/L	SS
WG	NDA002	SW8081	ALPHA-CHLORDANE	0.01	U	0.01	UJ	0.01	0.01	ug/L	SS
WG	NDA023	SW8081	ALPHA-CHLORDANE	0.01	U	0.01	UJ	0.01	0.01	ug/L	SS
WG	NDA008	SW8081	ALPHA-CHLORDANE	0.01	U	0.01	UJ	0.01	0.01	ug/L	SS
WG	NDA024	SW8081	ALPHA ENDOSULFAN (ENDOSULFAN I)	0.01	U	0.01	UJ	0.01	0.01	ug/L	SS
WG	NDA025FD1	SW8081	ALPHA ENDOSULFAN (ENDOSULFAN I)	0.01	U	0.01	UJ	0.01	0.01	ug/L	SS
WG	NDA029	SW8081	ALPHA ENDOSULFAN (ENDOSULFAN I)	0.01	U	0.01	UJ	0.01	0.01	ug/L	SS
WG	NDA002	SW8081	ALPHA ENDOSULFAN (ENDOSULFAN I)	0.01	U	0.01	UJ	0.01	0.01	ug/L	SS
WG	NDA023	SW8081	ALPHA ENDOSULFAN (ENDOSULFAN I)	0.01	U	0.01	UJ	0.01	0.01	ug/L	SS
WG	NDA008	SW8081	ALPHA ENDOSULFAN (ENDOSULFAN I)	0.01	U	0.01	UJ	0.01	0.01	ug/L	SS
WG	NDA024	SW8081	ALDRIN	0.01	U	0.01	UJ	0.01	0.01	ug/L	SS
WG	NDA025FD1	SW8081	ALDRIN	0.01	U	0.01	UJ	0.01	0.01	ug/L	SS
WG	NDA029	SW8081	ALDRIN	0.01	U	0.01	UJ	0.01	0.01	ug/L	SS
WG	NDA002	SW8081	ALDRIN	0.01	U	0.01	UJ	0.01	0.01	ug/L	SS
WG	NDA023	SW8081	ALDRIN	0.01	U	0.01	UJ	0.01	0.01	ug/L	SS
WG	NDA008	SW8081	ALDRIN	0.01	U	0.01	UJ	0.01	0.01	ug/L	SS
SW	NDA037	SW8330	4-NITROTOLUENE	5	U	5	UJ	0.8	5	ug/L	SS
SW	NDA039	SW8330	4-NITROTOLUENE	5	U	5	UJ	0.8	5	ug/L	SS
SW	NDA300	SW8330	4-NITROTOLUENE	5	U	5	UJ	0.8	5	ug/L	SS
WG	NDA001	SW8330	4-NITROTOLUENE	5	U	5	UJ	0.8	5	ug/L	SS
WG	NDA005	SW8330	4-NITROTOLUENE	5	U	5	UJ	0.8	5	ug/L	SS
WG	NDA006	SW8330	4-NITROTOLUENE	5	U	5	UJ	0.8	5	ug/L	SS
WG	NDA008	SW8330	4-NITROTOLUENE	5	U	5	UJ	0.8	5	ug/L	SS
WG	NDA009	SW8330	4-NITROTOLUENE	5	U	5	UJ	0.8	5	ug/L	SS
WG	NDA012	SW8330	4-NITROTOLUENE	5	U	5	UJ	0.8	5	ug/L	SS
WG	NDA0321FD1	SW8330	4-NITROTOLUENE	5	U	5	UJ	0.8	5	ug/L	SS
SW	NDA037	SW8330	3-NITROTOLUENE	5	U	5	UJ	0.64	5	ug/L	SS
SW	NDA039	SW8330	3-NITROTOLUENE	5	U	5	UJ	0.64	5	ug/L	SS
SW	NDA300	SW8330	3-NITROTOLUENE	5	U	5	UJ	0.64	5	ug/L	SS
WG	NDA001	SW8330	3-NITROTOLUENE	5	U	5	UJ	0.64	5	ug/L	SS
WG	NDA005	SW8330	3-NITROTOLUENE	5	U	5	UJ	0.64	5	ug/L	SS
WG	NDA006	SW8330	3-NITROTOLUENE	5	U	5	UJ	0.64	5	ug/L	SS
WG	NDA008	SW8330	3-NITROTOLUENE	5	U	5	UJ	0.64	5	ug/L	SS
WG	NDA009	SW8330	3-NITROTOLUENE	5	U	5	UJ	0.64	5	ug/L	SS
WG	NDA012	SW8330	3-NITROTOLUENE	5	U	5	UJ	0.64	5	ug/L	SS
WG	NDA0321FD1	SW8330	3-NITROTOLUENE	5	U	5	UJ	0.64	5	ug/L	SS
SW	NDA037	SW8330	2-NITROTOLUENE	5	U	5	UJ	0.64	5	ug/L	SS
SW	NDA039	SW8330	2-NITROTOLUENE	5	U	5	UJ	0.64	5	ug/L	SS
SW	NDA300	SW8330	2-NITROTOLUENE	5	U	5	UJ	0.64	5	ug/L	SS
WG	NDA001	SW8330	2-NITROTOLUENE	5	U	5	UJ	0.64	5	ug/L	SS
WG	NDA005	SW8330	2-NITROTOLUENE	5	U	5	UJ	0.64	5	ug/L	SS
WG	NDA006	SW8330	2-NITROTOLUENE	5	U	5	UJ	0.64	5	ug/L	SS
WG	NDA008	SW8330	2-NITROTOLUENE	5	U	5	UJ	0.64	5	ug/L	SS
WG	NDA009	SW8330	2-NITROTOLUENE	5	U	5	UJ	0.64	5	ug/L	SS
WG	NDA012	SW8330	2-NITROTOLUENE	5	U	5	UJ	0.64	5	ug/L	SS
WG	NDA0321FD1	SW8330	2-NITROTOLUENE	5	U	5	UJ	0.64	5	ug/L	SS
SW	NDA037	SW8330	2,6-DINITROTOLUENE	5	U	5	UJ	0.5	5	ug/L	SS
SW	NDA039	SW8330	2,6-DINITROTOLUENE	5	U	5	UJ	0.5	5	ug/L	SS
SW	NDA300	SW8330	2,6-DINITROTOLUENE	5	U	5	UJ	0.5	5	ug/L	SS
WG	NDA001	SW8330	2,6-DINITROTOLUENE	5	U	5	UJ	0.5	5	ug/L	SS
WG	NDA005	SW8330	2,6-DINITROTOLUENE	5	U	5	UJ	0.5	5	ug/L	SS
WG	NDA006	SW8330	2,6-DINITROTOLUENE	5	U	5	UJ	0.5	5	ug/L	SS
WG	NDA008	SW8330	2,6-DINITROTOLUENE	5	U	5	UJ	0.5	5	ug/L	SS
WG	NDA009	SW8330	2,6-DINITROTOLUENE	5	U	5	UJ	0.5	5	ug/L	SS
WG	NDA012	SW8330	2,6-DINITROTOLUENE	5	U	5	UJ	0.5	5	ug/L	SS
WG	NDA0321FD1	SW8330	2,6-DINITROTOLUENE	5	U	5	UJ	0.5	5	ug/L	SS

Matrix	Sample ID	Analytical Method	Parameter	Lab Result	Lab Qual	Final Result	Final Qual	DL	RL	Units	Comments
SW	NDA037	SW8330	2,4-DINITROTOLUENE	5	U	5	UJ	0.6	5	ug/L	SS
SW	NDA039	SW8330	2,4-DINITROTOLUENE	5	U	5	UJ	0.6	5	ug/L	SS
SW	NDA300	SW8330	2,4-DINITROTOLUENE	5	U	5	UJ	0.6	5	ug/L	SS
WG	NDA001	SW8330	2,4-DINITROTOLUENE	5	U	5	UJ	0.6	5	ug/L	SS
WG	NDA005	SW8330	2,4-DINITROTOLUENE	5	U	5	UJ	0.6	5	ug/L	SS
WG	NDA006	SW8330	2,4-DINITROTOLUENE	5	U	5	UJ	0.6	5	ug/L	SS
WG	NDA008	SW8330	2,4-DINITROTOLUENE	5	U	5	UJ	0.6	5	ug/L	SS
WG	NDA009	SW8330	2,4-DINITROTOLUENE	5	U	5	UJ	0.6	5	ug/L	SS
WG	NDA012	SW8330	2,4-DINITROTOLUENE	5	U	5	UJ	0.6	5	ug/L	SS
WG	NDA0321FD1	SW8330	2,4-DINITROTOLUENE	5	U	5	UJ	0.6	5	ug/L	SS
SW	NDA037	SW8330	2,4,6-TRINITROTOLUENE	5	U	5	UJ	0.4	5	ug/L	SS
SW	NDA039	SW8330	2,4,6-TRINITROTOLUENE	5	U	5	UJ	0.4	5	ug/L	SS
SW	NDA300	SW8330	2,4,6-TRINITROTOLUENE	5	U	5	UJ	0.4	5	ug/L	SS
WG	NDA001	SW8330	2,4,6-TRINITROTOLUENE	5	U	5	UJ	0.4	5	ug/L	SS
WG	NDA005	SW8330	2,4,6-TRINITROTOLUENE	5	U	5	UJ	0.4	5	ug/L	SS
WG	NDA006	SW8330	2,4,6-TRINITROTOLUENE	5	U	5	UJ	0.4	5	ug/L	SS
WG	NDA008	SW8330	2,4,6-TRINITROTOLUENE	5	U	5	UJ	0.4	5	ug/L	SS
WG	NDA009	SW8330	2,4,6-TRINITROTOLUENE	5	U	5	UJ	0.4	5	ug/L	SS
WG	NDA012	SW8330	2,4,6-TRINITROTOLUENE	5	U	5	UJ	0.4	5	ug/L	SS
WG	NDA0321FD1	SW8330	2,4,6-TRINITROTOLUENE	5	U	5	UJ	0.4	5	ug/L	SS
SW	NDA037	SW8330	1,3-DINITROBENZENE	5	U	5	UJ	0.64	5	ug/L	SS
SW	NDA039	SW8330	1,3-DINITROBENZENE	5	U	5	UJ	0.64	5	ug/L	SS
SW	NDA300	SW8330	1,3-DINITROBENZENE	5	U	5	UJ	0.64	5	ug/L	SS
WG	NDA001	SW8330	1,3-DINITROBENZENE	5	U	5	UJ	0.64	5	ug/L	SS
WG	NDA005	SW8330	1,3-DINITROBENZENE	5	U	5	UJ	0.64	5	ug/L	SS
WG	NDA006	SW8330	1,3-DINITROBENZENE	5	U	5	UJ	0.64	5	ug/L	SS
WG	NDA008	SW8330	1,3-DINITROBENZENE	5	U	5	UJ	0.64	5	ug/L	SS
WG	NDA009	SW8330	1,3-DINITROBENZENE	5	U	5	UJ	0.64	5	ug/L	SS
WG	NDA012	SW8330	1,3-DINITROBENZENE	5	U	5	UJ	0.64	5	ug/L	SS
WG	NDA0321FD1	SW8330	1,3-DINITROBENZENE	5	U	5	UJ	0.64	5	ug/L	SS
SW	NDA037	SW8330	1,3,5-TRINITROBENZENE	5	U	5	UJ	0.74	5	ug/L	SS
SW	NDA039	SW8330	1,3,5-TRINITROBENZENE	5	U	5	UJ	0.74	5	ug/L	SS
SW	NDA300	SW8330	1,3,5-TRINITROBENZENE	5	U	5	UJ	0.74	5	ug/L	SS
WG	NDA001	SW8330	1,3,5-TRINITROBENZENE	5	U	5	UJ	0.74	5	ug/L	SS
WG	NDA005	SW8330	1,3,5-TRINITROBENZENE	5	U	5	UJ	0.74	5	ug/L	SS
WG	NDA006	SW8330	1,3,5-TRINITROBENZENE	5	U	5	UJ	0.74	5	ug/L	SS
WG	NDA008	SW8330	1,3,5-TRINITROBENZENE	5	U	5	UJ	0.74	5	ug/L	SS
WG	NDA009	SW8330	1,3,5-TRINITROBENZENE	5	U	5	UJ	0.74	5	ug/L	SS
WG	NDA012	SW8330	1,3,5-TRINITROBENZENE	5	U	5	UJ	0.74	5	ug/L	SS
WG	NDA0321FD1	SW8330	1,3,5-TRINITROBENZENE	5	U	5	UJ	0.74	5	ug/L	SS
SB	NDA234	SW8260	XYLENES, TOTAL	10	U	10	UJ	0.2	10	ug/kg	SS
SB	NDA058	SW8260	XYLENES, TOTAL	10	U	10	UJ	0.18	10	ug/kg	SS
SB	NDA063	SW8260	XYLENES, TOTAL	11	U	11	UJ	0.2	11	ug/kg	SS
SB	NDA064FD1	SW8260	XYLENES, TOTAL	10	U	10	UJ	0.2	10	ug/kg	SS
SB	NDA066	SW8260	XYLENES, TOTAL	10	U	10	UJ	0.21	10	ug/kg	SS
SB	NDA070	SW8260	XYLENES, TOTAL	10	U	10	UJ	0.19	10	ug/kg	SS
SB	NDA081	SW8260	XYLENES, TOTAL	10	U	10	UJ	0.2	10	ug/kg	SS
SB	NDA118	SW8260	XYLENES, TOTAL	12	U	12	UJ	0.26	12	ug/kg	SS
SD	NDA050	SW8260	XYLENES, TOTAL	2160	U	2160	UJ	48	2160	ug/kg	SS
SD	NDA302	SW8260	XYLENES, TOTAL	26	U	26	UJ	0.56	26	ug/kg	SS
SS	NDA133	SW8260	XYLENES, TOTAL	16	U	16	UJ	0.3	16	ug/kg	SS
SS	NDA137	SW8260	XYLENES, TOTAL	11	U	11	UJ	0.23	11	ug/kg	SS
SS	NDA139	SW8260	XYLENES, TOTAL	11	U	11	UJ	0.23	11	ug/kg	SS
SS	NDA141	SW8260	XYLENES, TOTAL	14	U	14	UJ	0.3	14	ug/kg	SS
SS	NDA159	SW8260	XYLENES, TOTAL	0.3	U	0.3	J	0.3	14	ug/kg	SS
SS	NDA196	SW8260	XYLENES, TOTAL	10	U	10	UJ	0.2	10	ug/kg	SS
SS	NDA199	SW8260	XYLENES, TOTAL	26	=	26	J	0.3	14	ug/kg	SS
SS	NDA189	SW8260	XYLENES, TOTAL	10	U	10	UJ	0.22	10	ug/kg	SS
SS	NDA084	SW8260	XYLENES, TOTAL	13	U	13	UJ	0.3	13	ug/kg	SS
SS	NDA072FD1	SW8260	XYLENES, TOTAL	11	U	11	UJ	0.23	11	ug/kg	SS
SB	NDA234	SW8260	VINYL CHLORIDE	10	U	10	UJ	0.45	10	ug/kg	SS
SB	NDA058	SW8260	VINYL CHLORIDE	10	U	10	UJ	0.41	10	ug/kg	SS
SB	NDA063	SW8260	VINYL CHLORIDE	11	U	11	UJ	0.53	11	ug/kg	SS
SB	NDA064FD1	SW8260	VINYL CHLORIDE	10	U	10	UJ	0.5	10	ug/kg	SS
SB	NDA066	SW8260	VINYL CHLORIDE	10	U	10	UJ	0.5	10	ug/kg	SS
SB	NDA070	SW8260	VINYL CHLORIDE	10	U	10	UJ	0.4	10	ug/kg	SS
SB	NDA081	SW8260	VINYL CHLORIDE	10	U	10	UJ	0.5	10	ug/kg	SS
SB	NDA118	SW8260	VINYL CHLORIDE	12	U	12	UJ	0.58	12	ug/kg	SS
SD	NDA050	SW8260	VINYL CHLORIDE	2160	U	2160	UJ	104	2160	ug/kg	SS
SD	NDA051FD1	SW8260	VINYL CHLORIDE	23	U	23	UJ	1	23	ug/kg	SS

Matrix	Sample ID	Analytical Method	Parameter	Lab Result	Lab Qual	Final Result	Final Qual	DL	RL	Units	Comments
SD	NDA052	SW8260	VINYL CHLORIDE	20	U	20	UJ	0.95	20	ug/kg	SS
SD	NDA053	SW8260	VINYL CHLORIDE	14	U	14	UJ	0.7	14	ug/kg	SS
SD	NDA045	SW8260	VINYL CHLORIDE	36	U	36	UJ	2	36	ug/kg	SS
SD	NDA046	SW8260	VINYL CHLORIDE	43	U	43	UJ	2	43	ug/kg	SS
SD	NDA302	SW8260	VINYL CHLORIDE	26	U	26	UJ	1	26	ug/kg	SS
SD	NDA303	SW8260	VINYL CHLORIDE	47	U	47	UJ	2	47	ug/kg	SS
SS	NDA133	SW8260	VINYL CHLORIDE	16	U	16	UJ	0.8	16	ug/kg	SS
SS	NDA135	SW8260	VINYL CHLORIDE	14	U	14	UJ	0.65	14	ug/kg	SS
SS	NDA137	SW8260	VINYL CHLORIDE	11	U	11	UJ	0.51	11	ug/kg	SS
SS	NDA139	SW8260	VINYL CHLORIDE	11	U	11	UJ	0.5	11	ug/kg	SS
SS	NDA141	SW8260	VINYL CHLORIDE	14	U	14	UJ	0.7	14	ug/kg	SS
SS	NDA159	SW8260	VINYL CHLORIDE	14	U	14	UJ	0.66	14	ug/kg	SS
SS	NDA170	SW8260	VINYL CHLORIDE	16	U	16	UJ	0.76	16	ug/kg	SS
SS	NDA196	SW8260	VINYL CHLORIDE	10	U	10	UJ	0.44	10	ug/kg	SS
SS	NDA198	SW8260	VINYL CHLORIDE	11	U	11	UJ	0.54	11	ug/kg	SS
SS	NDA199	SW8260	VINYL CHLORIDE	14	U	14	UJ	0.65	14	ug/kg	SS
SS	NDA180	SW8260	VINYL CHLORIDE	11	U	11	UJ	0.53	11	ug/kg	SS
SS	NDA182	SW8260	VINYL CHLORIDE	14	U	14	UJ	0.68	14	ug/kg	SS
SS	NDA189	SW8260	VINYL CHLORIDE	10	U	10	UJ	0.5	10	ug/kg	SS
SS	NDA084	SW8260	VINYL CHLORIDE	13	U	13	UJ	0.62	13	ug/kg	SS
SS	NDA072FD1	SW8260	VINYL CHLORIDE	11	U	11	UJ	0.5	11	ug/kg	SS
SS	NDA117	SW8260	VINYL CHLORIDE	10	U	10	UJ	0.5	10	ug/kg	SS
SB	NDA234	SW8260	TRICHLOROETHYLENE (TCE)	10	U	10	UJ	0.2	10	ug/kg	SS
SB	NDA058	SW8260	TRICHLOROETHYLENE (TCE)	10	U	10	UJ	0.2	10	ug/kg	SS
SB	NDA063	SW8260	TRICHLOROETHYLENE (TCE)	11	U	11	UJ	0.29	11	ug/kg	SS
SB	NDA064FD1	SW8260	TRICHLOROETHYLENE (TCE)	10	U	10	UJ	0.27	10	ug/kg	SS
SB	NDA066	SW8260	TRICHLOROETHYLENE (TCE)	10	U	10	UJ	0.25	10	ug/kg	SS
SB	NDA070	SW8260	TRICHLOROETHYLENE (TCE)	10	U	10	UJ	0.22	10	ug/kg	SS
SB	NDA081	SW8260	TRICHLOROETHYLENE (TCE)	10	U	10	UJ	0.25	10	ug/kg	SS
SB	NDA118	SW8260	TRICHLOROETHYLENE (TCE)	12	U	12	UJ	0.31	12	ug/kg	SS
SD	NDA050	SW8260	TRICHLOROETHYLENE (TCE)	2160	U	2160	UJ	56	2160	ug/kg	SS
SD	NDA051FD1	SW8260	TRICHLOROETHYLENE (TCE)	23	U	23	UJ	0.59	23	ug/kg	SS
SD	NDA052	SW8260	TRICHLOROETHYLENE (TCE)	20	U	20	UJ	0.5	20	ug/kg	SS
SD	NDA053	SW8260	TRICHLOROETHYLENE (TCE)	14	U	14	UJ	0.35	14	ug/kg	SS
SD	NDA045	SW8260	TRICHLOROETHYLENE (TCE)	36	U	36	UJ	0.9	36	ug/kg	SS
SD	NDA046	SW8260	TRICHLOROETHYLENE (TCE)	43	U	43	UJ	1	43	ug/kg	SS
SD	NDA302	SW8260	TRICHLOROETHYLENE (TCE)	26	U	26	UJ	0.7	26	ug/kg	SS
SD	NDA303	SW8260	TRICHLOROETHYLENE (TCE)	47	U	47	UJ	1	47	ug/kg	SS
SS	NDA133	SW8260	TRICHLOROETHYLENE (TCE)	16	U	16	UJ	0.4	16	ug/kg	SS
SS	NDA135	SW8260	TRICHLOROETHYLENE (TCE)	14	U	14	UJ	0.35	14	ug/kg	SS
SS	NDA137	SW8260	TRICHLOROETHYLENE (TCE)	11	U	11	UJ	0.28	11	ug/kg	SS
SS	NDA139	SW8260	TRICHLOROETHYLENE (TCE)	11	U	11	UJ	0.27	11	ug/kg	SS
SS	NDA141	SW8260	TRICHLOROETHYLENE (TCE)	14	U	14	UJ	0.36	14	ug/kg	SS
SS	NDA159	SW8260	TRICHLOROETHYLENE (TCE)	14	U	14	UJ	0.4	14	ug/kg	SS
SS	NDA170	SW8260	TRICHLOROETHYLENE (TCE)	16	U	16	UJ	0.41	16	ug/kg	SS
SS	NDA196	SW8260	TRICHLOROETHYLENE (TCE)	10	U	10	UJ	0.24	10	ug/kg	SS
SS	NDA198	SW8260	TRICHLOROETHYLENE (TCE)	11	U	11	UJ	0.29	11	ug/kg	SS
SS	NDA199	SW8260	TRICHLOROETHYLENE (TCE)	14	U	14	UJ	0.4	14	ug/kg	SS
SS	NDA180	SW8260	TRICHLOROETHYLENE (TCE)	11	U	11	UJ	0.3	11	ug/kg	SS
SS	NDA189	SW8260	TRICHLOROETHYLENE (TCE)	10	U	10	UJ	0.26	10	ug/kg	SS
SS	NDA084	SW8260	TRICHLOROETHYLENE (TCE)	13	U	13	UJ	0.3	13	ug/kg	SS
SS	NDA072FD1	SW8260	TRICHLOROETHYLENE (TCE)	11	U	11	UJ	0.3	11	ug/kg	SS
SS	NDA117	SW8260	TRICHLOROETHYLENE (TCE)	10	U	10	UJ	0.3	10	ug/kg	SS
SB	NDA234	SW8260	trans-1,3-DICHLOROPROPENE	10	U	10	UJ	0.25	10	ug/kg	SS
SB	NDA058	SW8260	trans-1,3-DICHLOROPROPENE	10	U	10	UJ	0.23	10	ug/kg	SS
SB	NDA063	SW8260	trans-1,3-DICHLOROPROPENE	11	U	11	UJ	0.3	11	ug/kg	SS
SB	NDA064FD1	SW8260	trans-1,3-DICHLOROPROPENE	10	U	10	UJ	0.28	10	ug/kg	SS
SB	NDA066	SW8260	trans-1,3-DICHLOROPROPENE	10	U	10	UJ	0.26	10	ug/kg	SS
SB	NDA070	SW8260	trans-1,3-DICHLOROPROPENE	10	U	10	UJ	0.23	10	ug/kg	SS
SB	NDA081	SW8260	trans-1,3-DICHLOROPROPENE	10	U	10	UJ	0.26	10	ug/kg	SS
SB	NDA118	SW8260	trans-1,3-DICHLOROPROPENE	12	U	12	UJ	0.32	12	ug/kg	SS
SD	NDA050	SW8260	trans-1,3-DICHLOROPROPENE	2160	U	2160	UJ	59	2160	ug/kg	SS
SD	NDA051FD1	SW8260	trans-1,3-DICHLOROPROPENE	23	U	23	UJ	0.6	23	ug/kg	SS
SD	NDA052	SW8260	trans-1,3-DICHLOROPROPENE	20	U	20	UJ	0.5	20	ug/kg	SS
SD	NDA053	SW8260	trans-1,3-DICHLOROPROPENE	14	U	14	UJ	0.36	14	ug/kg	SS
SD	NDA045	SW8260	trans-1,3-DICHLOROPROPENE	36	U	36	UJ	0.97	36	ug/kg	SS
SD	NDA046	SW8260	trans-1,3-DICHLOROPROPENE	43	U	43	UJ	1	43	ug/kg	SS
SD	NDA302	SW8260	trans-1,3-DICHLOROPROPENE	26	U	26	UJ	0.7	26	ug/kg	SS
SD	NDA303	SW8260	trans-1,3-DICHLOROPROPENE	47	U	47	UJ	1	47	ug/kg	SS
SS	NDA133	SW8260	trans-1,3-DICHLOROPROPENE	16	U	16	UJ	0.42	16	ug/kg	SS

Matrix	Sample ID	Analytical Method	Parameter	Lab Result	Lab Qual	Final Result	Final Qual	DL	RL	Units	Comments
SS	NDA135	SW8260	trans-1,3-DICHLOROPROPENE	14	U	14	UJ	0.36	14	ug/kg	SS
SS	NDA137	SW8260	trans-1,3-DICHLOROPROPENE	11	U	11	UJ	0.29	11	ug/kg	SS
SS	NDA139	SW8260	trans-1,3-DICHLOROPROPENE	11	U	11	UJ	0.28	11	ug/kg	SS
SS	NDA141	SW8260	trans-1,3-DICHLOROPROPENE	14	U	14	UJ	0.37	14	ug/kg	SS
SS	NDA159	SW8260	trans-1,3-DICHLOROPROPENE	14	U	14	UJ	0.37	14	ug/kg	SS
SS	NDA170	SW8260	trans-1,3-DICHLOROPROPENE	16	U	16	UJ	0.43	16	ug/kg	SS
SS	NDA196	SW8260	trans-1,3-DICHLOROPROPENE	10	U	10	UJ	0.25	10	ug/kg	SS
SS	NDA198	SW8260	trans-1,3-DICHLOROPROPENE	11	U	11	UJ	0.3	11	ug/kg	SS
SS	NDA199	SW8260	trans-1,3-DICHLOROPROPENE	14	U	14	UJ	0.37	14	ug/kg	SS
SS	NDA180	SW8260	trans-1,3-DICHLOROPROPENE	11	U	11	UJ	0.3	11	ug/kg	SS
SS	NDA182	SW8260	trans-1,3-DICHLOROPROPENE	14	U	14	UJ	0.38	14	ug/kg	SS
SS	NDA189	SW8260	trans-1,3-DICHLOROPROPENE	10	U	10	UJ	0.3	10	ug/kg	SS
SS	NDA084	SW8260	trans-1,3-DICHLOROPROPENE	13	U	13	UJ	0.35	13	ug/kg	SS
SS	NDA072FD1	SW8260	trans-1,3-DICHLOROPROPENE	11	U	11	UJ	0.28	11	ug/kg	SS
SS	NDA117	SW8260	trans-1,3-DICHLOROPROPENE	10	U	10	UJ	0.27	10	ug/kg	SS
SB	NDA234	SW8260	TOLUENE	10	U	10	UJ	0.3	10	ug/kg	SS
SB	NDA058	SW8260	TOLUENE	10	U	10	UJ	0.23	10	ug/kg	SS
SB	NDA063	SW8260	TOLUENE	11	U	11	UJ	0.31	11	ug/kg	SS
SB	NDA064FD1	SW8260	TOLUENE	10	U	10	UJ	0.3	10	ug/kg	SS
SB	NDA066	SW8260	TOLUENE	10	U	10	UJ	0.3	10	ug/kg	SS
SB	NDA070	SW8260	TOLUENE	10	U	10	UJ	0.2	10	ug/kg	SS
SB	NDA081	SW8260	TOLUENE	10	U	10	UJ	0.27	10	ug/kg	SS
SB	NDA118	SW8260	TOLUENE	12	U	12	UJ	0.33	12	ug/kg	SS
SD	NDA050	SW8260	TOLUENE	2160	U	2160	UJ	61	2160	ug/kg	SS
SD	NDA302	SW8260	TOLUENE	26	U	26	UJ	0.71	26	ug/kg	SS
SS	NDA137	SW8260	TOLUENE	11	U	11	UJ	0.3	11	ug/kg	SS
SS	NDA139	SW8260	TOLUENE	0.4	J	0.4	UJ	0.3	11	ug/kg	SS
SS	NDA141	SW8260	TOLUENE	14	U	14	UJ	0.38	14	ug/kg	SS
SS	NDA159	SW8260	TOLUENE	14	U	14	UJ	0.38	14	ug/kg	SS
SS	NDA170	SW8260	TOLUENE	16	U	16	UJ	0.44	16	ug/kg	SS
SS	NDA196	SW8260	TOLUENE	10	U	10	UJ	0.26	10	ug/kg	SS
SS	NDA189	SW8260	TOLUENE	10	U	10	UJ	0.3	10	ug/kg	SS
SS	NDA072FD1	SW8260	TOLUENE	11	U	11	UJ	0.3	11	ug/kg	SS
SB	NDA234	SW8260	TETRACHLOROETHYLENE(PCE)	10	U	10	UJ	0.49	10	ug/kg	SS
SB	NDA058	SW8260	TETRACHLOROETHYLENE(PCE)	10	U	10	UJ	0.45	10	ug/kg	SS
SB	NDA063	SW8260	TETRACHLOROETHYLENE(PCE)	11	U	11	UJ	0.59	11	ug/kg	SS
SB	NDA064FD1	SW8260	TETRACHLOROETHYLENE(PCE)	10	U	10	UJ	0.55	10	ug/kg	SS
SB	NDA066	SW8260	TETRACHLOROETHYLENE(PCE)	10	U	10	UJ	0.5	10	ug/kg	SS
SB	NDA070	SW8260	TETRACHLOROETHYLENE(PCE)	10	U	10	UJ	0.5	10	ug/kg	SS
SB	NDA081	SW8260	TETRACHLOROETHYLENE(PCE)	10	U	10	UJ	0.5	10	ug/kg	SS
SB	NDA118	SW8260	TETRACHLOROETHYLENE(PCE)	12	U	12	UJ	0.64	12	ug/kg	SS
SD	NDA050	SW8260	TETRACHLOROETHYLENE(PCE)	2160	U	2160	UJ	115	2160	ug/kg	SS
SD	NDA051FD1	SW8260	TETRACHLOROETHYLENE(PCE)	23	U	23	UJ	1	23	ug/kg	SS
SD	NDA052	SW8260	TETRACHLOROETHYLENE(PCE)	20	U	20	UJ	1	20	ug/kg	SS
SD	NDA053	SW8260	TETRACHLOROETHYLENE(PCE)	14	U	14	UJ	0.72	14	ug/kg	SS
SD	NDA045	SW8260	TETRACHLOROETHYLENE(PCE)	36	U	36	UJ	2	36	ug/kg	SS
SD	NDA046	SW8260	TETRACHLOROETHYLENE(PCE)	43	U	43	UJ	2	43	ug/kg	SS
SD	NDA302	SW8260	TETRACHLOROETHYLENE(PCE)	26	U	26	UJ	1	26	ug/kg	SS
SD	NDA303	SW8260	TETRACHLOROETHYLENE(PCE)	47	U	47	UJ	2	47	ug/kg	SS
SS	NDA133	SW8260	TETRACHLOROETHYLENE(PCE)	16	U	16	UJ	0.8	16	ug/kg	SS
SS	NDA135	SW8260	TETRACHLOROETHYLENE(PCE)	14	U	14	UJ	0.71	14	ug/kg	SS
SS	NDA137	SW8260	TETRACHLOROETHYLENE(PCE)	11	U	11	UJ	0.57	11	ug/kg	SS
SS	NDA139	SW8260	TETRACHLOROETHYLENE(PCE)	11	U	11	UJ	0.6	11	ug/kg	SS
SS	NDA141	SW8260	TETRACHLOROETHYLENE(PCE)	14	U	14	UJ	0.73	14	ug/kg	SS
SS	NDA159	SW8260	TETRACHLOROETHYLENE(PCE)	14	U	14	UJ	0.73	14	ug/kg	SS
SS	NDA170	SW8260	TETRACHLOROETHYLENE(PCE)	16	U	16	UJ	0.84	16	ug/kg	SS
SS	NDA196	SW8260	TETRACHLOROETHYLENE(PCE)	10	U	10	UJ	0.49	10	ug/kg	SS
SS	NDA198	SW8260	TETRACHLOROETHYLENE(PCE)	11	U	11	UJ	0.6	11	ug/kg	SS
SS	NDA199	SW8260	TETRACHLOROETHYLENE(PCE)	14	U	14	UJ	0.7	14	ug/kg	SS
SS	NDA180	SW8260	TETRACHLOROETHYLENE(PCE)	11	U	11	UJ	0.6	11	ug/kg	SS
SS	NDA182	SW8260	TETRACHLOROETHYLENE(PCE)	14	U	14	UJ	0.75	14	ug/kg	SS
SS	NDA189	SW8260	TETRACHLOROETHYLENE(PCE)	10	U	10	UJ	0.54	10	ug/kg	SS
SS	NDA084	SW8260	TETRACHLOROETHYLENE(PCE)	13	U	13	UJ	0.68	13	ug/kg	SS
SS	NDA072FD1	SW8260	TETRACHLOROETHYLENE(PCE)	11	U	11	UJ	0.56	11	ug/kg	SS
SS	NDA117	SW8260	TETRACHLOROETHYLENE(PCE)	10	U	10	UJ	0.54	10	ug/kg	SS
SB	NDA234	SW8260	STYRENE	10	U	10	UJ	0.18	10	ug/kg	SS
SB	NDA058	SW8260	STYRENE	10	U	10	UJ	0.17	10	ug/kg	SS
SB	NDA063	SW8260	STYRENE	11	U	11	UJ	0.2	11	ug/kg	SS
SB	NDA064FD1	SW8260	STYRENE	10	U	10	UJ	0.2	10	ug/kg	SS
SB	NDA070	SW8260	STYRENE	10	U	10	UJ	0.2	10	ug/kg	SS

Matrix	Sample ID	Analytical Method	Parameter	Lab Result	Lab Qual	Final Result	Final Qual	DL	RL	Units	Comments
SB	NDA081	SW8260	STYRENE	10	U	10	UJ	0.2	10	ug/kg	SS
SB	NDA118	SW8260	STYRENE	12	U	12	UJ	0.24	12	ug/kg	SS
SD	NDA050	SW8260	STYRENE	2160	U	2160	UJ	43	2160	ug/kg	SS
SD	NDA051FD1	SW8260	STYRENE	23	U	23	UJ	0.45	23	ug/kg	SS
SD	NDA052	SW8260	STYRENE	20	U	20	UJ	0.4	20	ug/kg	SS
SD	NDA053	SW8260	STYRENE	14	U	14	UJ	0.27	14	ug/kg	SS
SD	NDA045	SW8260	STYRENE	36	U	36	UJ	0.72	36	ug/kg	SS
SD	NDA046	SW8260	STYRENE	43	U	43	UJ	0.9	43	ug/kg	SS
SD	NDA302	SW8260	STYRENE	26	U	26	UJ	0.51	26	ug/kg	SS
SD	NDA303	SW8260	STYRENE	47	U	47	UJ	0.94	47	ug/kg	SS
SS	NDA133	SW8260	STYRENE	16	U	16	UJ	0.3	16	ug/kg	SS
SS	NDA135	SW8260	STYRENE	14	U	14	UJ	0.27	14	ug/kg	SS
SS	NDA137	SW8260	STYRENE	11	U	11	UJ	0.21	11	ug/kg	SS
SS	NDA139	SW8260	STYRENE	11	U	11	UJ	0.21	11	ug/kg	SS
SS	NDA141	SW8260	STYRENE	14	U	14	UJ	0.27	14	ug/kg	SS
SS	NDA159	SW8260	STYRENE	14	U	14	UJ	0.27	14	ug/kg	SS
SS	NDA170	SW8260	STYRENE	16	U	16	UJ	0.31	16	ug/kg	SS
SS	NDA196	SW8260	STYRENE	10	U	10	UJ	0.18	10	ug/kg	SS
SS	NDA198	SW8260	STYRENE	11	U	11	UJ	0.2	11	ug/kg	SS
SS	NDA199	SW8260	STYRENE	14	U	14	UJ	0.27	14	ug/kg	SS
SS	NDA180	SW8260	STYRENE	11	U	11	UJ	0.22	11	ug/kg	SS
SS	NDA182	SW8260	STYRENE	14	U	14	UJ	0.3	14	ug/kg	SS
SS	NDA189	SW8260	STYRENE	10	U	10	UJ	0.2	10	ug/kg	SS
SS	NDA084	SW8260	STYRENE	13	U	13	UJ	0.25	13	ug/kg	SS
SS	NDA072FD1	SW8260	STYRENE	11	U	11	UJ	0.21	11	ug/kg	SS
SS	NDA117	SW8260	STYRENE	10	U	10	UJ	0.2	10	ug/kg	SS
SB	NDA234	SW8260	O-XYLENE (1,2-DIMETHYLBENZENE)	10	U	10	UJ	0.2	10	ug/kg	SS
SB	NDA058	SW8260	O-XYLENE (1,2-DIMETHYLBENZENE)	10	U	10	UJ	0.18	10	ug/kg	SS
SB	NDA063	SW8260	O-XYLENE (1,2-DIMETHYLBENZENE)	11	U	11	UJ	0.2	11	ug/kg	SS
SB	NDA064FD1	SW8260	O-XYLENE (1,2-DIMETHYLBENZENE)	10	U	10	UJ	0.2	10	ug/kg	SS
SB	NDA066	SW8260	O-XYLENE (1,2-DIMETHYLBENZENE)	10	U	10	UJ	0.21	10	ug/kg	SS
SB	NDA070	SW8260	O-XYLENE (1,2-DIMETHYLBENZENE)	10	U	10	UJ	0.19	10	ug/kg	SS
SB	NDA081	SW8260	O-XYLENE (1,2-DIMETHYLBENZENE)	10	U	10	UJ	0.2	10	ug/kg	SS
SB	NDA118	SW8260	O-XYLENE (1,2-DIMETHYLBENZENE)	12	U	12	UJ	0.26	12	ug/kg	SS
SD	NDA050	SW8260	O-XYLENE (1,2-DIMETHYLBENZENE)	2160	U	2160	UJ	48	2160	ug/kg	SS
SD	NDA302	SW8260	O-XYLENE (1,2-DIMETHYLBENZENE)	26	U	26	UJ	0.56	26	ug/kg	SS
SS	NDA133	SW8260	O-XYLENE (1,2-DIMETHYLBENZENE)	16	U	16	UJ	0.3	16	ug/kg	SS
SS	NDA135	SW8260	O-XYLENE (1,2-DIMETHYLBENZENE)	14	U	14	UJ	0.29	14	ug/kg	SS
SS	NDA137	SW8260	O-XYLENE (1,2-DIMETHYLBENZENE)	11	U	11	UJ	0.23	11	ug/kg	SS
SS	NDA139	SW8260	O-XYLENE (1,2-DIMETHYLBENZENE)	11	U	11	UJ	0.23	11	ug/kg	SS
SS	NDA141	SW8260	O-XYLENE (1,2-DIMETHYLBENZENE)	14	U	14	UJ	0.3	14	ug/kg	SS
SS	NDA159	SW8260	O-XYLENE (1,2-DIMETHYLBENZENE)	14	U	14	UJ	0.3	14	ug/kg	SS
SS	NDA170	SW8260	O-XYLENE (1,2-DIMETHYLBENZENE)	16	U	16	UJ	0.35	16	ug/kg	SS
SS	NDA196	SW8260	O-XYLENE (1,2-DIMETHYLBENZENE)	10	U	10	UJ	0.2	10	ug/kg	SS
SS	NDA198	SW8260	O-XYLENE (1,2-DIMETHYLBENZENE)	2	J	2	UJ	0.25	11	ug/kg	SS
SS	NDA199	SW8260	O-XYLENE (1,2-DIMETHYLBENZENE)	6	J	6	UJ	0.3	14	ug/kg	SS
SS	NDA180	SW8260	O-XYLENE (1,2-DIMETHYLBENZENE)	0.9	J	0.9	UJ	0.2	11	ug/kg	SS
SS	NDA182	SW8260	O-XYLENE (1,2-DIMETHYLBENZENE)	14	U	14	UJ	0.31	14	ug/kg	SS
SS	NDA189	SW8260	O-XYLENE (1,2-DIMETHYLBENZENE)	10	U	10	UJ	0.22	10	ug/kg	SS
SS	NDA084	SW8260	O-XYLENE (1,2-DIMETHYLBENZENE)	13	U	13	UJ	0.3	13	ug/kg	SS
SS	NDA072FD1	SW8260	O-XYLENE (1,2-DIMETHYLBENZENE)	11	U	11	UJ	0.23	11	ug/kg	SS
SB	NDA063	SW8330	TETRAZOCINE	269	U	269	UJ	133	269	ug/kg	SS
SB	NDA079	SW8330	TETRAZOCINE	143	U	143	UJ	71	143	ug/kg	SS
SS	NDA067	SW8330	TETRAZOCINE	268	U	268	UJ	133	268	ug/kg	SS
SS	NDA069	SW8330	TETRAZOCINE	255	U	255	UJ	126	255	ug/kg	SS
SS	NDA119	SW8330	TETRAZOCINE	281	U	281	UJ	139	281	ug/kg	SS
SS	NDA120	SW8330	TETRAZOCINE	339	U	339	UJ	168	339	ug/kg	SS
SS	NDA121	SW8330	TETRAZOCINE	271	U	271	UJ	135	271	ug/kg	SS
SS	NDA122	SW8330	TETRAZOCINE	280	U	280	UJ	139	280	ug/kg	SS
SS	NDA123	SW8330	TETRAZOCINE	279	U	279	UJ	139	279	ug/kg	SS
SS	NDA124	SW8330	TETRAZOCINE	276	U	276	UJ	137	276	ug/kg	SS
SS	NDA072FD1	SW8330	TETRAZOCINE	128	U	128	UJ	64	128	ug/kg	SS
SS	NDA082	SW8330	TETRAZOCINE	125	U	125	UJ	62	125	ug/kg	SS
SS	NDA104FD1	SW8330	TETRAZOCINE	355	U	355	R	176	355	ug/kg	SS
SB	NDA063	SW8330	NITROBENZENE	269	U	269	UJ	69	269	ug/kg	SS
SB	NDA079	SW8330	NITROBENZENE	143	U	143	UJ	37	143	ug/kg	SS
SS	NDA067	SW8330	NITROBENZENE	268	U	268	UJ	69	268	ug/kg	SS
SS	NDA069	SW8330	NITROBENZENE	255	U	255	UJ	65	255	ug/kg	SS
SS	NDA119	SW8330	NITROBENZENE	281	U	281	UJ	72	281	ug/kg	SS
SS	NDA120	SW8330	NITROBENZENE	339	U	339	UJ	87	339	ug/kg	SS

Matrix	Sample ID	Analytical Method	Parameter	Lab Result	Lab Qual	Final Result	Final Qual	DL	RL	Units	Comments
SS	NDA121	SW8330	NITROBENZENE	271	U	271	UJ	69	271	ug/kg	SS
SS	NDA122	SW8330	NITROBENZENE	280	U	280	UJ	72	280	ug/kg	SS
SS	NDA123	SW8330	NITROBENZENE	279	U	279	UJ	72	279	ug/kg	SS
SS	NDA124	SW8330	NITROBENZENE	276	U	276	UJ	71	276	ug/kg	SS
SS	NDA072FD1	SW8330	NITROBENZENE	128	U	128	UJ	33	128	ug/kg	SS
SS	NDA082	SW8330	NITROBENZENE	125	U	125	UJ	32	125	ug/kg	SS
SS	NDA104FD1	SW8330	NITROBENZENE	355	U	355	R	91	355	ug/kg	SS
SB	NDA234	SW8260	METHYLENE CHLORIDE	10	U	10	UJ	2	10	ug/kg	SS
SB	NDA058	SW8260	METHYLENE CHLORIDE	10	U	10	UJ	2	10	ug/kg	SS
SB	NDA063	SW8260	METHYLENE CHLORIDE	11	U	11	UJ	2	11	ug/kg	SS
SB	NDA064FD1	SW8260	METHYLENE CHLORIDE	10	U	10	UJ	2	10	ug/kg	SS
SB	NDA066	SW8260	METHYLENE CHLORIDE	10	U	10	UJ	2	10	ug/kg	SS
SB	NDA070	SW8260	METHYLENE CHLORIDE	10	U	10	UJ	2	10	ug/kg	SS
SB	NDA081	SW8260	METHYLENE CHLORIDE	10	U	10	UJ	2	10	ug/kg	SS
SB	NDA118	SW8260	METHYLENE CHLORIDE	12	U	12	UJ	2	12	ug/kg	SS
SD	NDA050	SW8260	METHYLENE CHLORIDE	2160	U	2160	UJ	434	2160	ug/kg	SS
SD	NDA051FD1	SW8260	METHYLENE CHLORIDE	23	U	23	UJ	5	23	ug/kg	SS
SD	NDA052	SW8260	METHYLENE CHLORIDE	20	U	20	UJ	4	20	ug/kg	SS
SD	NDA053	SW8260	METHYLENE CHLORIDE	14	U	14	UJ	3	14	ug/kg	SS
SD	NDA045	SW8260	METHYLENE CHLORIDE	36	U	36	UJ	7	36	ug/kg	SS
SD	NDA046	SW8260	METHYLENE CHLORIDE	43	U	43	UJ	9	43	ug/kg	SS
SD	NDA302	SW8260	METHYLENE CHLORIDE	26	U	26	UJ	5	26	ug/kg	SS
SD	NDA303	SW8260	METHYLENE CHLORIDE	47	U	47	UJ	9	47	ug/kg	SS
SS	NDA133	SW8260	METHYLENE CHLORIDE	16	U	16	UJ	3	16	ug/kg	SS
SS	NDA135	SW8260	METHYLENE CHLORIDE	14	U	14	UJ	3	14	ug/kg	SS
SS	NDA137	SW8260	METHYLENE CHLORIDE	11	U	11	UJ	2	11	ug/kg	SS
SS	NDA139	SW8260	METHYLENE CHLORIDE	11	U	11	UJ	2	11	ug/kg	SS
SS	NDA141	SW8260	METHYLENE CHLORIDE	14	U	14	UJ	3	14	ug/kg	SS
SS	NDA159	SW8260	METHYLENE CHLORIDE	14	U	14	UJ	3	14	ug/kg	SS
SS	NDA170	SW8260	METHYLENE CHLORIDE	16	U	16	UJ	3	16	ug/kg	SS
SS	NDA196	SW8260	METHYLENE CHLORIDE	10	U	10	UJ	2	10	ug/kg	SS
SS	NDA198	SW8260	METHYLENE CHLORIDE	11	U	11	UJ	2	11	ug/kg	SS
SS	NDA199	SW8260	METHYLENE CHLORIDE	14	U	14	UJ	3	14	ug/kg	SS
SS	NDA180	SW8260	METHYLENE CHLORIDE	11	U	11	UJ	2	11	ug/kg	SS
SS	NDA182	SW8260	METHYLENE CHLORIDE	14	U	14	UJ	3	14	ug/kg	SS
SS	NDA189	SW8260	METHYLENE CHLORIDE	10	U	10	UJ	2	10	ug/kg	SS
SS	NDA084	SW8260	METHYLENE CHLORIDE	13	U	13	UJ	3	13	ug/kg	SS
SS	NDA072FD1	SW8260	METHYLENE CHLORIDE	11	U	11	UJ	2	11	ug/kg	SS
SS	NDA117	SW8260	METHYLENE CHLORIDE	10	U	10	UJ	2	10	ug/kg	SS
SB	NDA063	SW8330	TRINITROPHENYLNITRAMINE	269	U	269	UJ	70	269	ug/kg	SS
SB	NDA079	SW8330	TRINITROPHENYLNITRAMINE	143	U	143	UJ	37	143	ug/kg	SS
SS	NDA067	SW8330	TRINITROPHENYLNITRAMINE	268	U	268	UJ	70	268	ug/kg	SS
SS	NDA069	SW8330	TRINITROPHENYLNITRAMINE	255	U	255	UJ	66	255	ug/kg	SS
SS	NDA119	SW8330	TRINITROPHENYLNITRAMINE	281	U	281	UJ	73	281	ug/kg	SS
SS	NDA120	SW8330	TRINITROPHENYLNITRAMINE	339	U	339	UJ	88	339	ug/kg	SS
SS	NDA121	SW8330	TRINITROPHENYLNITRAMINE	271	U	271	UJ	71	271	ug/kg	SS
SS	NDA122	SW8330	TRINITROPHENYLNITRAMINE	280	U	280	UJ	73	280	ug/kg	SS
SS	NDA123	SW8330	TRINITROPHENYLNITRAMINE	279	U	279	UJ	73	279	ug/kg	SS
SS	NDA124	SW8330	TRINITROPHENYLNITRAMINE	276	U	276	UJ	72	276	ug/kg	SS
SS	NDA072FD1	SW8330	TRINITROPHENYLNITRAMINE	128	U	128	UJ	33	128	ug/kg	SS
SS	NDA082	SW8330	TRINITROPHENYLNITRAMINE	125	U	125	UJ	32	125	ug/kg	SS
SS	NDA104FD1	SW8330	TRINITROPHENYLNITRAMINE	355	U	355	R	92	355	ug/kg	SS
SB	NDA234	SW8260	4-METHYL-2-PENTANONE (MIBK)	10	U	10	UJ	1	10	ug/kg	SS
SB	NDA058	SW8260	4-METHYL-2-PENTANONE (MIBK)	10	U	10	UJ	1	10	ug/kg	SS
SB	NDA063	SW8260	4-METHYL-2-PENTANONE (MIBK)	11	U	11	UJ	1	11	ug/kg	SS
SB	NDA064FD1	SW8260	4-METHYL-2-PENTANONE (MIBK)	10	U	10	UJ	1	10	ug/kg	SS
SB	NDA066	SW8260	4-METHYL-2-PENTANONE (MIBK)	10	U	10	UJ	1	10	ug/kg	SS
SB	NDA070	SW8260	4-METHYL-2-PENTANONE (MIBK)	10	U	10	UJ	1	10	ug/kg	SS
SB	NDA081	SW8260	4-METHYL-2-PENTANONE (MIBK)	10	U	10	UJ	1	10	ug/kg	SS
SB	NDA118	SW8260	4-METHYL-2-PENTANONE (MIBK)	12	U	12	UJ	2	12	ug/kg	SS
SD	NDA050	SW8260	4-METHYL-2-PENTANONE (MIBK)	2160	U	2160	UJ	282	2160	ug/kg	SS
SD	NDA051FD1	SW8260	4-METHYL-2-PENTANONE (MIBK)	63	=	63	J	3	23	ug/kg	SS
SD	NDA045	SW8260	4-METHYL-2-PENTANONE (MIBK)	36	U	36	UJ	5	36	ug/kg	SS
SD	NDA046	SW8260	4-METHYL-2-PENTANONE (MIBK)	43	U	43	UJ	6	43	ug/kg	SS
SD	NDA302	SW8260	4-METHYL-2-PENTANONE (MIBK)	26	U	26	UJ	3	26	ug/kg	SS
SD	NDA303	SW8260	4-METHYL-2-PENTANONE (MIBK)	47	U	47	UJ	6	47	ug/kg	SS
SS	NDA133	SW8260	4-METHYL-2-PENTANONE (MIBK)	16	U	16	UJ	2	16	ug/kg	SS
SS	NDA135	SW8260	4-METHYL-2-PENTANONE (MIBK)	14	U	14	UJ	2	14	ug/kg	SS
SS	NDA137	SW8260	4-METHYL-2-PENTANONE (MIBK)	11	U	11	UJ	1	11	ug/kg	SS
SS	NDA139	SW8260	4-METHYL-2-PENTANONE (MIBK)	11	U	11	UJ	1	11	ug/kg	SS

Matrix	Sample ID	Analytical Method	Parameter	Lab Result	Lab Qual	Final Result	Final Qual	DL	RL	Units	Comments
SS	NDA141	SW8260	4-METHYL-2-PENTANONE (MIBK)	14	U	14	UJ	2	14	ug/kg	SS
SS	NDA159	SW8260	4-METHYL-2-PENTANONE (MIBK)	14	U	14	UJ	2	14	ug/kg	SS
SS	NDA170	SW8260	4-METHYL-2-PENTANONE (MIBK)	16	U	16	UJ	2	16	ug/kg	SS
SS	NDA196	SW8260	4-METHYL-2-PENTANONE (MIBK)	10	U	10	UJ	1	10	ug/kg	SS
SS	NDA198	SW8260	4-METHYL-2-PENTANONE (MIBK)	11	U	11	UJ	1	11	ug/kg	SS
SS	NDA199	SW8260	4-METHYL-2-PENTANONE (MIBK)	14	U	14	UJ	2	14	ug/kg	SS
SS	NDA180	SW8260	4-METHYL-2-PENTANONE (MIBK)	11	U	11	UJ	1	11	ug/kg	SS
SS	NDA182	SW8260	4-METHYL-2-PENTANONE (MIBK)	14	U	14	UJ	2	14	ug/kg	SS
SS	NDA189	SW8260	4-METHYL-2-PENTANONE (MIBK)	10	U	10	UJ	1	10	ug/kg	SS
SS	NDA084	SW8260	4-METHYL-2-PENTANONE (MIBK)	13	U	13	UJ	2	13	ug/kg	SS
SS	NDA072FD1	SW8260	4-METHYL-2-PENTANONE (MIBK)	11	U	11	UJ	1	11	ug/kg	SS
SS	NDA117	SW8260	4-METHYL-2-PENTANONE (MIBK)	10	U	10	UJ	1	10	ug/kg	SS
SB	NDA234	SW8260	M,P-XYLENE (SUM OF ISOMERS)	10	U	10	UJ	0.2	10	ug/kg	SS
SB	NDA058	SW8260	M,P-XYLENE (SUM OF ISOMERS)	10	U	10	UJ	0.18	10	ug/kg	SS
SB	NDA063	SW8260	M,P-XYLENE (SUM OF ISOMERS)	11	U	11	UJ	0.2	11	ug/kg	SS
SB	NDA064FD1	SW8260	M,P-XYLENE (SUM OF ISOMERS)	10	U	10	UJ	0.2	10	ug/kg	SS
SB	NDA066	SW8260	M,P-XYLENE (SUM OF ISOMERS)	10	U	10	UJ	0.21	10	ug/kg	SS
SB	NDA070	SW8260	M,P-XYLENE (SUM OF ISOMERS)	10	U	10	UJ	0.19	10	ug/kg	SS
SB	NDA081	SW8260	M,P-XYLENE (SUM OF ISOMERS)	10	U	10	UJ	0.2	10	ug/kg	SS
SB	NDA118	SW8260	M,P-XYLENE (SUM OF ISOMERS)	12	U	12	UJ	0.26	12	ug/kg	SS
SD	NDA050	SW8260	M,P-XYLENE (SUM OF ISOMERS)	2160	U	2160	UJ	48	2160	ug/kg	SS
SD	NDA302	SW8260	M,P-XYLENE (SUM OF ISOMERS)	26	U	26	UJ	0.56	26	ug/kg	SS
SS	NDA133	SW8260	M,P-XYLENE (SUM OF ISOMERS)	16	U	16	UJ	0.3	16	ug/kg	SS
SS	NDA137	SW8260	M,P-XYLENE (SUM OF ISOMERS)	11	U	11	UJ	0.23	11	ug/kg	SS
SS	NDA139	SW8260	M,P-XYLENE (SUM OF ISOMERS)	11	U	11	UJ	0.23	11	ug/kg	SS
SS	NDA141	SW8260	M,P-XYLENE (SUM OF ISOMERS)	14	U	14	UJ	0.3	14	ug/kg	SS
SS	NDA159	SW8260	M,P-XYLENE (SUM OF ISOMERS)	0.3	U	0.3	J	0.3	14	ug/kg	SS
SS	NDA196	SW8260	M,P-XYLENE (SUM OF ISOMERS)	10	U	10	UJ	0.2	10	ug/kg	SS
SS	NDA198	SW8260	M,P-XYLENE (SUM OF ISOMERS)	8	J	8	UJ	0.25	11	ug/kg	SS
SS	NDA199	SW8260	M,P-XYLENE (SUM OF ISOMERS)	20	=	20	UJ	0.3	14	ug/kg	SS
SS	NDA180	SW8260	M,P-XYLENE (SUM OF ISOMERS)	4	J	4	UJ	0.2	11	ug/kg	SS
SS	NDA189	SW8260	M,P-XYLENE (SUM OF ISOMERS)	10	U	10	UJ	0.22	10	ug/kg	SS
SS	NDA084	SW8260	M,P-XYLENE (SUM OF ISOMERS)	13	U	13	UJ	0.3	13	ug/kg	SS
SS	NDA072FD1	SW8260	M,P-XYLENE (SUM OF ISOMERS)	11	U	11	UJ	0.23	11	ug/kg	SS
SB	NDA063	SW8330	TETRAZOCINE	269	U	269	UJ	28	269	ug/kg	SS
SB	NDA079	SW8330	TETRAZOCINE	143	U	143	UJ	15	143	ug/kg	SS
SS	NDA067	SW8330	TETRAZOCINE	268	U	268	UJ	28	268	ug/kg	SS
SS	NDA069	SW8330	TETRAZOCINE	255	U	255	UJ	27	255	ug/kg	SS
SS	NDA119	SW8330	TETRAZOCINE	281	U	281	UJ	29	281	ug/kg	SS
SS	NDA120	SW8330	TETRAZOCINE	339	U	339	UJ	35	339	ug/kg	SS
SS	NDA121	SW8330	TETRAZOCINE	271	U	271	UJ	28	271	ug/kg	SS
SS	NDA122	SW8330	TETRAZOCINE	280	U	280	UJ	29	280	ug/kg	SS
SS	NDA123	SW8330	TETRAZOCINE	279	U	279	UJ	29	279	ug/kg	SS
SS	NDA124	SW8330	TETRAZOCINE	276	U	276	UJ	29	276	ug/kg	SS
SS	NDA072FD1	SW8330	TETRAZOCINE	128	U	128	UJ	13	128	ug/kg	SS
SS	NDA082	SW8330	TETRAZOCINE	125	U	125	UJ	13	125	ug/kg	SS
SS	NDA104FD1	SW8330	TETRAZOCINE	355	U	355	R	37	355	ug/kg	SS
SB	NDA234	SW8260	ETHYLBENZENE	10	U	10	UJ	0.3	10	ug/kg	SS
SB	NDA058	SW8260	ETHYLBENZENE	10	U	10	UJ	0.23	10	ug/kg	SS
SB	NDA063	SW8260	ETHYLBENZENE	11	U	11	UJ	0.31	11	ug/kg	SS
SB	NDA064FD1	SW8260	ETHYLBENZENE	10	U	10	UJ	0.3	10	ug/kg	SS
SB	NDA066	SW8260	ETHYLBENZENE	10	U	10	UJ	0.3	10	ug/kg	SS
SB	NDA070	SW8260	ETHYLBENZENE	10	U	10	UJ	0.2	10	ug/kg	SS
SB	NDA081	SW8260	ETHYLBENZENE	10	U	10	UJ	0.27	10	ug/kg	SS
SB	NDA118	SW8260	ETHYLBENZENE	12	U	12	UJ	0.33	12	ug/kg	SS
SD	NDA052	SW8260	ETHYLBENZENE	32	=	32	J	0.6	20	ug/kg	SS
SD	NDA045	SW8260	ETHYLBENZENE	1	U	1	J	1	36	ug/kg	SS
SD	NDA302	SW8260	ETHYLBENZENE	26	U	26	UJ	0.71	26	ug/kg	SS
SD	NDA303	SW8260	ETHYLBENZENE	1	U	1	J	1	47	ug/kg	SS
SS	NDA133	SW8260	ETHYLBENZENE	16	U	16	UJ	0.44	16	ug/kg	SS
SS	NDA135	SW8260	ETHYLBENZENE	14	U	14	UJ	0.4	14	ug/kg	SS
SS	NDA137	SW8260	ETHYLBENZENE	11	U	11	UJ	0.3	11	ug/kg	SS
SS	NDA139	SW8260	ETHYLBENZENE	11	U	11	UJ	0.3	11	ug/kg	SS
SS	NDA141	SW8260	ETHYLBENZENE	14	U	14	UJ	0.38	14	ug/kg	SS
SS	NDA159	SW8260	ETHYLBENZENE	14	U	14	UJ	0.38	14	ug/kg	SS
SS	NDA170	SW8260	ETHYLBENZENE	16	U	16	UJ	0.44	16	ug/kg	SS
SS	NDA196	SW8260	ETHYLBENZENE	10	U	10	UJ	0.26	10	ug/kg	SS
SS	NDA182	SW8260	ETHYLBENZENE	14	U	14	UJ	0.39	14	ug/kg	SS
SS	NDA189	SW8260	ETHYLBENZENE	10	U	10	UJ	0.3	10	ug/kg	SS
SS	NDA084	SW8260	ETHYLBENZENE	13	U	13	UJ	0.36	13	ug/kg	SS

Matrix	Sample ID	Analytical Method	Parameter	Lab Result	Lab Qual	Final Result	Final Qual	DL	RL	Units	Comments
SS	NDA072FD1	SW8260	ETHYLBENZENE	11	U	11	UJ	0.3	11	ug/kg	SS
SB	NDA234	SW8260	DIBROMOCHLOROMETHANE	10	U	10	UJ	0.2	10	ug/kg	SS
SB	NDA058	SW8260	DIBROMOCHLOROMETHANE	10	U	10	UJ	0.18	10	ug/kg	SS
SB	NDA063	SW8260	DIBROMOCHLOROMETHANE	11	U	11	UJ	0.2	11	ug/kg	SS
SB	NDA064FD1	SW8260	DIBROMOCHLOROMETHANE	10	U	10	UJ	0.2	10	ug/kg	SS
SB	NDA066	SW8260	DIBROMOCHLOROMETHANE	10	U	10	UJ	0.21	10	ug/kg	SS
SB	NDA070	SW8260	DIBROMOCHLOROMETHANE	10	U	10	UJ	0.19	10	ug/kg	SS
SB	NDA081	SW8260	DIBROMOCHLOROMETHANE	10	U	10	UJ	0.2	10	ug/kg	SS
SB	NDA118	SW8260	DIBROMOCHLOROMETHANE	12	U	12	UJ	0.26	12	ug/kg	SS
SD	NDA050	SW8260	DIBROMOCHLOROMETHANE	2160	U	2160	UJ	48	2160	ug/kg	SS
SD	NDA051FD1	SW8260	DIBROMOCHLOROMETHANE	23	U	23	UJ	0.5	23	ug/kg	SS
SD	NDA052	SW8260	DIBROMOCHLOROMETHANE	20	U	20	UJ	0.4	20	ug/kg	SS
SD	NDA053	SW8260	DIBROMOCHLOROMETHANE	14	U	14	UJ	0.3	14	ug/kg	SS
SD	NDA045	SW8260	DIBROMOCHLOROMETHANE	36	U	36	UJ	0.79	36	ug/kg	SS
SD	NDA046	SW8260	DIBROMOCHLOROMETHANE	43	U	43	UJ	0.95	43	ug/kg	SS
SD	NDA302	SW8260	DIBROMOCHLOROMETHANE	26	U	26	UJ	0.56	26	ug/kg	SS
SD	NDA303	SW8260	DIBROMOCHLOROMETHANE	47	U	47	UJ	1	47	ug/kg	SS
SS	NDA133	SW8260	DIBROMOCHLOROMETHANE	16	U	16	UJ	0.3	16	ug/kg	SS
SS	NDA135	SW8260	DIBROMOCHLOROMETHANE	14	U	14	UJ	0.29	14	ug/kg	SS
SS	NDA137	SW8260	DIBROMOCHLOROMETHANE	11	U	11	UJ	0.23	11	ug/kg	SS
SS	NDA139	SW8260	DIBROMOCHLOROMETHANE	11	U	11	UJ	0.23	11	ug/kg	SS
SS	NDA141	SW8260	DIBROMOCHLOROMETHANE	14	U	14	UJ	0.3	14	ug/kg	SS
SS	NDA159	SW8260	DIBROMOCHLOROMETHANE	14	U	14	UJ	0.3	14	ug/kg	SS
SS	NDA170	SW8260	DIBROMOCHLOROMETHANE	16	U	16	UJ	0.35	16	ug/kg	SS
SS	NDA196	SW8260	DIBROMOCHLOROMETHANE	10	U	10	UJ	0.2	10	ug/kg	SS
SS	NDA198	SW8260	DIBROMOCHLOROMETHANE	11	U	11	UJ	0.25	11	ug/kg	SS
SS	NDA199	SW8260	DIBROMOCHLOROMETHANE	14	U	14	UJ	0.3	14	ug/kg	SS
SS	NDA180	SW8260	DIBROMOCHLOROMETHANE	11	U	11	UJ	0.2	11	ug/kg	SS
SS	NDA182	SW8260	DIBROMOCHLOROMETHANE	14	U	14	UJ	0.31	14	ug/kg	SS
SS	NDA189	SW8260	DIBROMOCHLOROMETHANE	10	U	10	UJ	0.22	10	ug/kg	SS
SS	NDA084	SW8260	DIBROMOCHLOROMETHANE	13	U	13	UJ	0.3	13	ug/kg	SS
SS	NDA072FD1	SW8260	DIBROMOCHLOROMETHANE	11	U	11	UJ	0.23	11	ug/kg	SS
SS	NDA117	SW8260	DIBROMOCHLOROMETHANE	10	U	10	UJ	0.2	10	ug/kg	SS
SB	NDA234	SW8260	cis-1,3-DICHLOROPROPENE	10	U	10	UJ	0.3	10	ug/kg	SS
SB	NDA058	SW8260	cis-1,3-DICHLOROPROPENE	10	U	10	UJ	0.23	10	ug/kg	SS
SB	NDA063	SW8260	cis-1,3-DICHLOROPROPENE	11	U	11	UJ	0.31	11	ug/kg	SS
SB	NDA064FD1	SW8260	cis-1,3-DICHLOROPROPENE	10	U	10	UJ	0.3	10	ug/kg	SS
SB	NDA066	SW8260	cis-1,3-DICHLOROPROPENE	10	U	10	UJ	0.3	10	ug/kg	SS
SB	NDA070	SW8260	cis-1,3-DICHLOROPROPENE	10	U	10	UJ	0.2	10	ug/kg	SS
SB	NDA081	SW8260	cis-1,3-DICHLOROPROPENE	10	U	10	UJ	0.27	10	ug/kg	SS
SB	NDA118	SW8260	cis-1,3-DICHLOROPROPENE	12	U	12	UJ	0.33	12	ug/kg	SS
SD	NDA050	SW8260	cis-1,3-DICHLOROPROPENE	2160	U	2160	UJ	61	2160	ug/kg	SS
SD	NDA051FD1	SW8260	cis-1,3-DICHLOROPROPENE	23	U	23	UJ	0.6	23	ug/kg	SS
SD	NDA052	SW8260	cis-1,3-DICHLOROPROPENE	20	U	20	UJ	0.6	20	ug/kg	SS
SD	NDA053	SW8260	cis-1,3-DICHLOROPROPENE	14	U	14	UJ	0.38	14	ug/kg	SS
SD	NDA045	SW8260	cis-1,3-DICHLOROPROPENE	36	U	36	UJ	1	36	ug/kg	SS
SD	NDA046	SW8260	cis-1,3-DICHLOROPROPENE	43	U	43	UJ	1	43	ug/kg	SS
SD	NDA302	SW8260	cis-1,3-DICHLOROPROPENE	26	U	26	UJ	0.71	26	ug/kg	SS
SD	NDA303	SW8260	cis-1,3-DICHLOROPROPENE	47	U	47	UJ	1	47	ug/kg	SS
SS	NDA133	SW8260	cis-1,3-DICHLOROPROPENE	16	U	16	UJ	0.44	16	ug/kg	SS
SS	NDA135	SW8260	cis-1,3-DICHLOROPROPENE	14	U	14	UJ	0.4	14	ug/kg	SS
SS	NDA137	SW8260	cis-1,3-DICHLOROPROPENE	11	U	11	UJ	0.3	11	ug/kg	SS
SS	NDA139	SW8260	cis-1,3-DICHLOROPROPENE	11	U	11	UJ	0.3	11	ug/kg	SS
SS	NDA141	SW8260	cis-1,3-DICHLOROPROPENE	14	U	14	UJ	0.38	14	ug/kg	SS
SS	NDA159	SW8260	cis-1,3-DICHLOROPROPENE	14	U	14	UJ	0.38	14	ug/kg	SS
SS	NDA170	SW8260	cis-1,3-DICHLOROPROPENE	16	U	16	UJ	0.44	16	ug/kg	SS
SS	NDA196	SW8260	cis-1,3-DICHLOROPROPENE	10	U	10	UJ	0.26	10	ug/kg	SS
SS	NDA198	SW8260	cis-1,3-DICHLOROPROPENE	11	U	11	UJ	0.31	11	ug/kg	SS
SS	NDA199	SW8260	cis-1,3-DICHLOROPROPENE	14	U	14	UJ	0.38	14	ug/kg	SS
SS	NDA180	SW8260	cis-1,3-DICHLOROPROPENE	11	U	11	UJ	0.31	11	ug/kg	SS
SS	NDA182	SW8260	cis-1,3-DICHLOROPROPENE	14	U	14	UJ	0.39	14	ug/kg	SS
SS	NDA189	SW8260	cis-1,3-DICHLOROPROPENE	10	U	10	UJ	0.3	10	ug/kg	SS
SS	NDA084	SW8260	cis-1,3-DICHLOROPROPENE	13	U	13	UJ	0.36	13	ug/kg	SS
SS	NDA072FD1	SW8260	cis-1,3-DICHLOROPROPENE	11	U	11	UJ	0.3	11	ug/kg	SS
SS	NDA117	SW8260	cis-1,3-DICHLOROPROPENE	10	U	10	UJ	0.28	10	ug/kg	SS
SB	NDA234	SW8260	CHLOROMETHANE	10	U	10	UJ	0.74	10	ug/kg	SS
SB	NDA058	SW8260	CHLOROMETHANE	10	U	10	UJ	0.7	10	ug/kg	SS
SB	NDA063	SW8260	CHLOROMETHANE	11	U	11	UJ	0.88	11	ug/kg	SS
SB	NDA064FD1	SW8260	CHLOROMETHANE	10	U	10	UJ	0.8	10	ug/kg	SS
SB	NDA066	SW8260	CHLOROMETHANE	10	U	10	UJ	0.8	10	ug/kg	SS

Matrix	Sample ID	Analytical Method	Parameter	Lab Result	Lab Qual	Final Result	Final Qual	DL	RL	Units	Comments
SB	NDA070	SW8260	CHLOROMETHANE	10	U	10	UJ	0.69	10	ug/kg	SS
SB	NDA081	SW8260	CHLOROMETHANE	10	U	10	UJ	0.77	10	ug/kg	SS
SB	NDA118	SW8260	CHLOROMETHANE	12	U	12	UJ	1	12	ug/kg	SS
SD	NDA050	SW8260	CHLOROMETHANE	2160	U	2160	UJ	172	2160	ug/kg	SS
SD	NDA051FD1	SW8260	CHLOROMETHANE	23	U	23	UJ	2	23	ug/kg	SS
SD	NDA052	SW8260	CHLOROMETHANE	20	U	20	UJ	2	20	ug/kg	SS
SD	NDA053	SW8260	CHLOROMETHANE	14	U	14	UJ	1	14	ug/kg	SS
SD	NDA045	SW8260	CHLOROMETHANE	36	U	36	UJ	3	36	ug/kg	SS
SD	NDA046	SW8260	CHLOROMETHANE	43	U	43	UJ	3	43	ug/kg	SS
SD	NDA302	SW8260	CHLOROMETHANE	26	U	26	UJ	2	26	ug/kg	SS
SD	NDA303	SW8260	CHLOROMETHANE	47	U	47	UJ	4	47	ug/kg	SS
SS	NDA133	SW8260	CHLOROMETHANE	16	U	16	UJ	1	16	ug/kg	SS
SS	NDA135	SW8260	CHLOROMETHANE	14	U	14	UJ	1	14	ug/kg	SS
SS	NDA137	SW8260	CHLOROMETHANE	11	U	11	UJ	0.85	11	ug/kg	SS
SS	NDA139	SW8260	CHLOROMETHANE	11	U	11	UJ	0.8	11	ug/kg	SS
SS	NDA141	SW8260	CHLOROMETHANE	14	U	14	UJ	1	14	ug/kg	SS
SS	NDA159	SW8260	CHLOROMETHANE	14	U	14	UJ	1	14	ug/kg	SS
SS	NDA170	SW8260	CHLOROMETHANE	16	U	16	UJ	1	16	ug/kg	SS
SS	NDA196	SW8260	CHLOROMETHANE	10	U	10	UJ	0.73	10	ug/kg	SS
SS	NDA198	SW8260	CHLOROMETHANE	11	U	11	UJ	0.9	11	ug/kg	SS
SS	NDA199	SW8260	CHLOROMETHANE	14	U	14	UJ	1	14	ug/kg	SS
SS	NDA180	SW8260	CHLOROMETHANE	11	U	11	UJ	0.88	11	ug/kg	SS
SS	NDA182	SW8260	CHLOROMETHANE	14	U	14	UJ	1	14	ug/kg	SS
SS	NDA189	SW8260	CHLOROMETHANE	10	U	10	UJ	0.81	10	ug/kg	SS
SS	NDA084	SW8260	CHLOROMETHANE	13	U	13	UJ	1	13	ug/kg	SS
SS	NDA072FD1	SW8260	CHLOROMETHANE	11	U	11	UJ	0.84	11	ug/kg	SS
SS	NDA117	SW8260	CHLOROMETHANE	10	U	10	UJ	0.81	10	ug/kg	SS
SB	NDA234	SW8260	CHLOROFORM	10	U	10	UJ	0.94	10	ug/kg	SS
SB	NDA058	SW8260	CHLOROFORM	10	U	10	UJ	0.85	10	ug/kg	SS
SB	NDA063	SW8260	CHLOROFORM	11	U	11	UJ	1	11	ug/kg	SS
SB	NDA064FD1	SW8260	CHLOROFORM	10	U	10	UJ	1	10	ug/kg	SS
SB	NDA066	SW8260	CHLOROFORM	10	U	10	UJ	0.98	10	ug/kg	SS
SB	NDA070	SW8260	CHLOROFORM	10	U	10	UJ	0.87	10	ug/kg	SS
SB	NDA081	SW8260	CHLOROFORM	10	U	10	UJ	0.98	10	ug/kg	SS
SB	NDA118	SW8260	CHLOROFORM	12	U	12	UJ	1	12	ug/kg	SS
SD	NDA050	SW8260	CHLOROFORM	2160	U	2160	UJ	217	2160	ug/kg	SS
SD	NDA051FD1	SW8260	CHLOROFORM	23	U	23	UJ	2	23	ug/kg	SS
SD	NDA052	SW8260	CHLOROFORM	20	U	20	UJ	2	20	ug/kg	SS
SD	NDA053	SW8260	CHLOROFORM	14	U	14	UJ	1	14	ug/kg	SS
SD	NDA045	SW8260	CHLOROFORM	36	U	36	UJ	4	36	ug/kg	SS
SD	NDA046	SW8260	CHLOROFORM	43	U	43	UJ	4	43	ug/kg	SS
SD	NDA302	SW8260	CHLOROFORM	26	U	26	UJ	3	26	ug/kg	SS
SD	NDA303	SW8260	CHLOROFORM	47	U	47	UJ	5	47	ug/kg	SS
SS	NDA133	SW8260	CHLOROFORM	16	U	16	UJ	2	16	ug/kg	SS
SS	NDA135	SW8260	CHLOROFORM	14	U	14	UJ	1	14	ug/kg	SS
SS	NDA137	SW8260	CHLOROFORM	11	U	11	UJ	1	11	ug/kg	SS
SS	NDA139	SW8260	CHLOROFORM	11	U	11	UJ	1	11	ug/kg	SS
SS	NDA141	SW8260	CHLOROFORM	14	U	14	UJ	1	14	ug/kg	SS
SS	NDA159	SW8260	CHLOROFORM	14	U	14	UJ	1	14	ug/kg	SS
SS	NDA170	SW8260	CHLOROFORM	16	U	16	UJ	2	16	ug/kg	SS
SS	NDA196	SW8260	CHLOROFORM	10	U	10	UJ	0.92	10	ug/kg	SS
SS	NDA198	SW8260	CHLOROFORM	11	U	11	UJ	1	11	ug/kg	SS
SS	NDA199	SW8260	CHLOROFORM	14	U	14	UJ	1	14	ug/kg	SS
SS	NDA180	SW8260	CHLOROFORM	11	U	11	UJ	1	11	ug/kg	SS
SS	NDA182	SW8260	CHLOROFORM	14	U	14	UJ	1	14	ug/kg	SS
SS	NDA189	SW8260	CHLOROFORM	10	U	10	UJ	1	10	ug/kg	SS
SS	NDA084	SW8260	CHLOROFORM	13	U	13	UJ	1	13	ug/kg	SS
SS	NDA072FD1	SW8260	CHLOROFORM	11	U	11	UJ	1	11	ug/kg	SS
SS	NDA117	SW8260	CHLOROFORM	10	U	10	UJ	1	10	ug/kg	SS
SB	NDA234	SW8260	CHLOROETHANE	10	U	10	UJ	0.51	10	ug/kg	SS
SB	NDA058	SW8260	CHLOROETHANE	10	U	10	UJ	0.47	10	ug/kg	SS
SB	NDA063	SW8260	CHLOROETHANE	11	U	11	UJ	0.6	11	ug/kg	SS
SB	NDA064FD1	SW8260	CHLOROETHANE	10	U	10	UJ	0.57	10	ug/kg	SS
SB	NDA066	SW8260	CHLOROETHANE	10	U	10	UJ	0.54	10	ug/kg	SS
SB	NDA070	SW8260	CHLOROETHANE	10	U	10	UJ	0.48	10	ug/kg	SS
SB	NDA081	SW8260	CHLOROETHANE	10	U	10	UJ	0.5	10	ug/kg	SS
SB	NDA118	SW8260	CHLOROETHANE	12	U	12	UJ	0.7	12	ug/kg	SS
SD	NDA050	SW8260	CHLOROETHANE	2160	U	2160	UJ	119	2160	ug/kg	SS
SD	NDA051FD1	SW8260	CHLOROETHANE	23	U	23	UJ	1	23	ug/kg	SS
SD	NDA052	SW8260	CHLOROETHANE	20	U	20	UJ	1	20	ug/kg	SS

Matrix	Sample ID	Analytical Method	Parameter	Lab Result	Lab Qual	Final Result	Final Qual	DL	RL	Units	Comments
SD	NDA053	SW8260	CHLOROETHANE	14	U	14	UJ	0.74	14	ug/kg	SS
SD	NDA045	SW8260	CHLOROETHANE	36	U	36	UJ	2	36	ug/kg	SS
SD	NDA046	SW8260	CHLOROETHANE	43	U	43	UJ	2	43	ug/kg	SS
SD	NDA302	SW8260	CHLOROETHANE	26	U	26	UJ	1	26	ug/kg	SS
SD	NDA303	SW8260	CHLOROETHANE	47	U	47	UJ	3	47	ug/kg	SS
SS	NDA170	SW8260	CHLOROETHANE	16	U	16	UJ	0.87	16	ug/kg	SS
SS	NDA199	SW8260	CHLOROETHANE	14	U	14	UJ	0.75	14	ug/kg	SS
SS	NDA084	SW8260	CHLOROETHANE	13	U	13	UJ	0.7	13	ug/kg	SS
SS	NDA072FD1	SW8260	CHLOROETHANE	11	U	11	UJ	0.6	11	ug/kg	SS
SS	NDA117	SW8260	CHLOROETHANE	10	U	10	UJ	0.6	10	ug/kg	SS
SB	NDA234	SW8260	CHLOROBENZENE	10	U	10	UJ	0.18	10	ug/kg	SS
SB	NDA058	SW8260	CHLOROBENZENE	10	U	10	UJ	0.17	10	ug/kg	SS
SB	NDA063	SW8260	CHLOROBENZENE	11	U	11	UJ	0.2	11	ug/kg	SS
SB	NDA064FD1	SW8260	CHLOROBENZENE	10	U	10	UJ	0.2	10	ug/kg	SS
SB	NDA066	SW8260	CHLOROBENZENE	10	U	10	UJ	0.19	10	ug/kg	SS
SB	NDA070	SW8260	CHLOROBENZENE	10	U	10	UJ	0.2	10	ug/kg	SS
SB	NDA081	SW8260	CHLOROBENZENE	10	U	10	UJ	0.2	10	ug/kg	SS
SB	NDA118	SW8260	CHLOROBENZENE	12	U	12	UJ	0.24	12	ug/kg	SS
SD	NDA050	SW8260	CHLOROBENZENE	2160	U	2160	UJ	43	2160	ug/kg	SS
SD	NDA051FD1	SW8260	CHLOROBENZENE	23	U	23	UJ	0.45	23	ug/kg	SS
SD	NDA052	SW8260	CHLOROBENZENE	20	U	20	UJ	0.4	20	ug/kg	SS
SD	NDA053	SW8260	CHLOROBENZENE	14	U	14	UJ	0.27	14	ug/kg	SS
SD	NDA045	SW8260	CHLOROBENZENE	36	U	36	UJ	0.72	36	ug/kg	SS
SD	NDA046	SW8260	CHLOROBENZENE	43	U	43	UJ	0.9	43	ug/kg	SS
SD	NDA302	SW8260	CHLOROBENZENE	26	U	26	UJ	0.51	26	ug/kg	SS
SD	NDA303	SW8260	CHLOROBENZENE	47	U	47	UJ	0.94	47	ug/kg	SS
SS	NDA133	SW8260	CHLOROBENZENE	16	U	16	UJ	0.3	16	ug/kg	SS
SS	NDA135	SW8260	CHLOROBENZENE	14	U	14	UJ	0.27	14	ug/kg	SS
SS	NDA137	SW8260	CHLOROBENZENE	11	U	11	UJ	0.21	11	ug/kg	SS
SS	NDA139	SW8260	CHLOROBENZENE	11	U	11	UJ	0.21	11	ug/kg	SS
SS	NDA141	SW8260	CHLOROBENZENE	14	U	14	UJ	0.27	14	ug/kg	SS
SS	NDA159	SW8260	CHLOROBENZENE	14	U	14	UJ	0.27	14	ug/kg	SS
SS	NDA170	SW8260	CHLOROBENZENE	16	U	16	UJ	0.31	16	ug/kg	SS
SS	NDA196	SW8260	CHLOROBENZENE	10	U	10	UJ	0.18	10	ug/kg	SS
SS	NDA198	SW8260	CHLOROBENZENE	11	U	11	UJ	0.2	11	ug/kg	SS
SS	NDA199	SW8260	CHLOROBENZENE	14	U	14	UJ	0.27	14	ug/kg	SS
SS	NDA180	SW8260	CHLOROBENZENE	11	U	11	UJ	0.22	11	ug/kg	SS
SS	NDA182	SW8260	CHLOROBENZENE	14	U	14	UJ	0.3	14	ug/kg	SS
SS	NDA189	SW8260	CHLOROBENZENE	10	U	10	UJ	0.2	10	ug/kg	SS
SS	NDA084	SW8260	CHLOROBENZENE	13	U	13	UJ	0.25	13	ug/kg	SS
SS	NDA072FD1	SW8260	CHLOROBENZENE	11	U	11	UJ	0.21	11	ug/kg	SS
SS	NDA117	SW8260	CHLOROBENZENE	10	U	10	UJ	0.2	10	ug/kg	SS
SB	NDA234	SW8260	CARBON TETRACHLORIDE	10	U	10	UJ	0.35	10	ug/kg	SS
SB	NDA058	SW8260	CARBON TETRACHLORIDE	10	U	10	UJ	0.32	10	ug/kg	SS
SB	NDA063	SW8260	CARBON TETRACHLORIDE	11	U	11	UJ	0.42	11	ug/kg	SS
SB	NDA064FD1	SW8260	CARBON TETRACHLORIDE	10	U	10	UJ	0.39	10	ug/kg	SS
SB	NDA066	SW8260	CARBON TETRACHLORIDE	10	U	10	UJ	0.37	10	ug/kg	SS
SB	NDA070	SW8260	CARBON TETRACHLORIDE	10	U	10	UJ	0.33	10	ug/kg	SS
SB	NDA081	SW8260	CARBON TETRACHLORIDE	10	U	10	UJ	0.4	10	ug/kg	SS
SB	NDA118	SW8260	CARBON TETRACHLORIDE	12	U	12	UJ	0.5	12	ug/kg	SS
SD	NDA050	SW8260	CARBON TETRACHLORIDE	2160	U	2160	UJ	82	2160	ug/kg	SS
SD	NDA051FD1	SW8260	CARBON TETRACHLORIDE	23	U	23	UJ	0.86	23	ug/kg	SS
SD	NDA052	SW8260	CARBON TETRACHLORIDE	20	U	20	UJ	0.75	20	ug/kg	SS
SD	NDA053	SW8260	CARBON TETRACHLORIDE	14	U	14	UJ	0.51	14	ug/kg	SS
SD	NDA045	SW8260	CARBON TETRACHLORIDE	36	U	36	UJ	1	36	ug/kg	SS
SD	NDA046	SW8260	CARBON TETRACHLORIDE	43	U	43	UJ	2	43	ug/kg	SS
SD	NDA302	SW8260	CARBON TETRACHLORIDE	26	U	26	UJ	0.97	26	ug/kg	SS
SD	NDA303	SW8260	CARBON TETRACHLORIDE	47	U	47	UJ	2	47	ug/kg	SS
SS	NDA133	SW8260	CARBON TETRACHLORIDE	16	U	16	UJ	0.6	16	ug/kg	SS
SS	NDA135	SW8260	CARBON TETRACHLORIDE	14	U	14	UJ	0.5	14	ug/kg	SS
SS	NDA137	SW8260	CARBON TETRACHLORIDE	11	U	11	UJ	0.41	11	ug/kg	SS
SS	NDA139	SW8260	CARBON TETRACHLORIDE	11	U	11	UJ	0.4	11	ug/kg	SS
SS	NDA141	SW8260	CARBON TETRACHLORIDE	14	U	14	UJ	0.52	14	ug/kg	SS
SS	NDA159	SW8260	CARBON TETRACHLORIDE	14	U	14	UJ	0.5	14	ug/kg	SS
SS	NDA170	SW8260	CARBON TETRACHLORIDE	16	U	16	UJ	0.6	16	ug/kg	SS
SS	NDA196	SW8260	CARBON TETRACHLORIDE	10	U	10	UJ	0.35	10	ug/kg	SS
SS	NDA198	SW8260	CARBON TETRACHLORIDE	11	U	11	UJ	0.43	11	ug/kg	SS
SS	NDA199	SW8260	CARBON TETRACHLORIDE	14	U	14	UJ	0.52	14	ug/kg	SS
SS	NDA180	SW8260	CARBON TETRACHLORIDE	11	U	11	UJ	0.42	11	ug/kg	SS
SS	NDA182	SW8260	CARBON TETRACHLORIDE	14	U	14	UJ	0.5	14	ug/kg	SS

Matrix	Sample ID	Analytical Method	Parameter	Lab Result	Lab Qual	Final Result	Final Qual	DL	RL	Units	Comments
SS	NDA189	SW8260	CARBON TETRACHLORIDE	10	U	10	UJ	0.4	10	ug/kg	SS
SS	NDA084	SW8260	CARBON TETRACHLORIDE	13	U	13	UJ	0.5	13	ug/kg	SS
SS	NDA072FD1	SW8260	CARBON TETRACHLORIDE	11	U	11	UJ	0.4	11	ug/kg	SS
SS	NDA117	SW8260	CARBON TETRACHLORIDE	10	U	10	UJ	0.4	10	ug/kg	SS
SB	NDA234	SW8260	CARBON DISULFIDE	10	U	10	UJ	0.3	10	ug/kg	SS
SB	NDA058	SW8260	CARBON DISULFIDE	10	U	10	UJ	0.26	10	ug/kg	SS
SB	NDA063	SW8260	CARBON DISULFIDE	11	U	11	UJ	0.3	11	ug/kg	SS
SB	NDA064FD1	SW8260	CARBON DISULFIDE	10	U	10	UJ	0.32	10	ug/kg	SS
SB	NDA066	SW8260	CARBON DISULFIDE	10	U	10	UJ	0.3	10	ug/kg	SS
SB	NDA070	SW8260	CARBON DISULFIDE	10	U	10	UJ	0.27	10	ug/kg	SS
SB	NDA081	SW8260	CARBON DISULFIDE	10	U	10	UJ	0.3	10	ug/kg	SS
SD	NDA050	SW8260	CARBON DISULFIDE	2160	U	2160	UJ	67	2160	ug/kg	SS
SS	NDA133	SW8260	CARBON DISULFIDE	16	U	16	UJ	0.49	16	ug/kg	SS
SS	NDA135	SW8260	CARBON DISULFIDE	14	U	14	UJ	0.42	14	ug/kg	SS
SS	NDA137	SW8260	CARBON DISULFIDE	11	U	11	UJ	0.33	11	ug/kg	SS
SS	NDA139	SW8260	CARBON DISULFIDE	11	U	11	UJ	0.33	11	ug/kg	SS
SS	NDA141	SW8260	CARBON DISULFIDE	14	U	14	UJ	0.43	14	ug/kg	SS
SS	NDA159	SW8260	CARBON DISULFIDE	14	U	14	UJ	0.4	14	ug/kg	SS
SS	NDA170	SW8260	CARBON DISULFIDE	16	U	16	UJ	0.49	16	ug/kg	SS
SS	NDA196	SW8260	CARBON DISULFIDE	10	U	10	UJ	0.28	10	ug/kg	SS
SS	NDA198	SW8260	CARBON DISULFIDE	11	U	11	UJ	0.35	11	ug/kg	SS
SS	NDA199	SW8260	CARBON DISULFIDE	14	U	14	UJ	0.4	14	ug/kg	SS
SS	NDA180	SW8260	CARBON DISULFIDE	11	U	11	UJ	0.34	11	ug/kg	SS
SS	NDA182	SW8260	CARBON DISULFIDE	14	U	14	UJ	0.4	14	ug/kg	SS
SS	NDA189	SW8260	CARBON DISULFIDE	10	U	10	UJ	0.3	10	ug/kg	SS
SS	NDA084	SW8260	CARBON DISULFIDE	13	U	13	UJ	0.4	13	ug/kg	SS
SS	NDA072FD1	SW8260	CARBON DISULFIDE	11	U	11	UJ	0.33	11	ug/kg	SS
SS	NDA117	SW8260	CARBON DISULFIDE	10	U	10	UJ	0.3	10	ug/kg	SS
SB	NDA234	SW8260	BROMOMETHANE	10	U	10	UJ	0.42	10	ug/kg	SS
SB	NDA058	SW8260	BROMOMETHANE	10	U	10	UJ	0.4	10	ug/kg	SS
SB	NDA063	SW8260	BROMOMETHANE	11	U	11	UJ	0.5	11	ug/kg	SS
SB	NDA064FD1	SW8260	BROMOMETHANE	10	U	10	UJ	0.47	10	ug/kg	SS
SB	NDA066	SW8260	BROMOMETHANE	10	U	10	UJ	0.44	10	ug/kg	SS
SB	NDA070	SW8260	BROMOMETHANE	10	U	10	UJ	0.39	10	ug/kg	SS
SB	NDA081	SW8260	BROMOMETHANE	10	U	10	UJ	0.44	10	ug/kg	SS
SB	NDA118	SW8260	BROMOMETHANE	12	U	12	UJ	0.54	12	ug/kg	SS
SD	NDA050	SW8260	BROMOMETHANE	2160	U	2160	UJ	98	2160	ug/kg	SS
SD	NDA051FD1	SW8260	BROMOMETHANE	23	U	23	UJ	1	23	ug/kg	SS
SD	NDA052	SW8260	BROMOMETHANE	20	U	20	UJ	0.89	20	ug/kg	SS
SD	NDA053	SW8260	BROMOMETHANE	14	U	14	UJ	0.61	14	ug/kg	SS
SD	NDA045	SW8260	BROMOMETHANE	36	U	36	UJ	2	36	ug/kg	SS
SD	NDA046	SW8260	BROMOMETHANE	43	U	43	UJ	2	43	ug/kg	SS
SD	NDA302	SW8260	BROMOMETHANE	26	U	26	UJ	1	26	ug/kg	SS
SD	NDA303	SW8260	BROMOMETHANE	47	U	47	UJ	2	47	ug/kg	SS
SS	NDA133	SW8260	BROMOMETHANE	16	U	16	UJ	0.7	16	ug/kg	SS
SS	NDA135	SW8260	BROMOMETHANE	14	U	14	UJ	0.6	14	ug/kg	SS
SS	NDA137	SW8260	BROMOMETHANE	11	U	11	UJ	0.5	11	ug/kg	SS
SS	NDA139	SW8260	BROMOMETHANE	11	U	11	UJ	0.48	11	ug/kg	SS
SS	NDA141	SW8260	BROMOMETHANE	14	U	14	UJ	0.62	14	ug/kg	SS
SS	NDA159	SW8260	BROMOMETHANE	14	U	14	UJ	0.62	14	ug/kg	SS
SS	NDA170	SW8260	BROMOMETHANE	16	U	16	UJ	0.7	16	ug/kg	SS
SS	NDA196	SW8260	BROMOMETHANE	10	U	10	UJ	0.41	10	ug/kg	SS
SS	NDA198	SW8260	BROMOMETHANE	11	U	11	UJ	0.5	11	ug/kg	SS
SS	NDA199	SW8260	BROMOMETHANE	14	U	14	UJ	0.61	14	ug/kg	SS
SS	NDA180	SW8260	BROMOMETHANE	11	U	11	UJ	0.5	11	ug/kg	SS
SS	NDA182	SW8260	BROMOMETHANE	14	U	14	UJ	0.63	14	ug/kg	SS
SS	NDA189	SW8260	BROMOMETHANE	10	U	10	UJ	0.46	10	ug/kg	SS
SS	NDA084	SW8260	BROMOMETHANE	13	U	13	UJ	0.58	13	ug/kg	SS
SS	NDA072FD1	SW8260	BROMOMETHANE	11	U	11	UJ	0.5	11	ug/kg	SS
SS	NDA117	SW8260	BROMOMETHANE	10	U	10	UJ	0.46	10	ug/kg	SS
SB	NDA234	SW8260	BROMOFORM	10	U	10	UJ	0.23	10	ug/kg	SS
SB	NDA058	SW8260	BROMOFORM	10	U	10	UJ	0.2	10	ug/kg	SS
SB	NDA063	SW8260	BROMOFORM	11	U	11	UJ	0.3	11	ug/kg	SS
SB	NDA064FD1	SW8260	BROMOFORM	10	U	10	UJ	0.26	10	ug/kg	SS
SB	NDA066	SW8260	BROMOFORM	10	U	10	UJ	0.24	10	ug/kg	SS
SB	NDA070	SW8260	BROMOFORM	10	U	10	UJ	0.21	10	ug/kg	SS
SB	NDA081	SW8260	BROMOFORM	10	U	10	UJ	0.2	10	ug/kg	SS
SB	NDA118	SW8260	BROMOFORM	12	U	12	UJ	0.3	12	ug/kg	SS
SD	NDA050	SW8260	BROMOFORM	2160	U	2160	UJ	54	2160	ug/kg	SS
SD	NDA051FD1	SW8260	BROMOFORM	23	U	23	UJ	0.57	23	ug/kg	SS

Matrix	Sample ID	Analytical Method	Parameter	Lab Result	Lab Qual	Final Result	Final Qual	DL	RL	Units	Comments
SD	NDA052	SW8260	BROMOFORM	20	U	20	UJ	0.49	20	ug/kg	SS
SD	NDA053	SW8260	BROMOFORM	14	U	14	UJ	0.34	14	ug/kg	SS
SD	NDA045	SW8260	BROMOFORM	36	U	36	UJ	0.9	36	ug/kg	SS
SD	NDA046	SW8260	BROMOFORM	43	U	43	UJ	1	43	ug/kg	SS
SD	NDA302	SW8260	BROMOFORM	26	U	26	UJ	0.6	26	ug/kg	SS
SD	NDA303	SW8260	BROMOFORM	47	U	47	UJ	1	47	ug/kg	SS
SS	NDA133	SW8260	BROMOFORM	16	U	16	UJ	0.39	16	ug/kg	SS
SS	NDA135	SW8260	BROMOFORM	14	U	14	UJ	0.33	14	ug/kg	SS
SS	NDA137	SW8260	BROMOFORM	11	U	11	UJ	0.3	11	ug/kg	SS
SS	NDA139	SW8260	BROMOFORM	11	U	11	UJ	0.26	11	ug/kg	SS
SS	NDA141	SW8260	BROMOFORM	14	U	14	UJ	0.34	14	ug/kg	SS
SS	NDA159	SW8260	BROMOFORM	14	U	14	UJ	0.34	14	ug/kg	SS
SS	NDA170	SW8260	BROMOFORM	16	U	16	UJ	0.39	16	ug/kg	SS
SS	NDA196	SW8260	BROMOFORM	10	U	10	UJ	0.23	10	ug/kg	SS
SS	NDA198	SW8260	BROMOFORM	11	U	11	UJ	0.3	11	ug/kg	SS
SS	NDA199	SW8260	BROMOFORM	14	U	14	UJ	0.34	14	ug/kg	SS
SS	NDA180	SW8260	BROMOFORM	11	U	11	UJ	0.28	11	ug/kg	SS
SS	NDA182	SW8260	BROMOFORM	14	U	14	UJ	0.4	14	ug/kg	SS
SS	NDA189	SW8260	BROMOFORM	10	U	10	UJ	0.25	10	ug/kg	SS
SS	NDA084	SW8260	BROMOFORM	13	U	13	UJ	0.32	13	ug/kg	SS
SS	NDA072FD1	SW8260	BROMOFORM	11	U	11	UJ	0.26	11	ug/kg	SS
SS	NDA117	SW8260	BROMOFORM	10	U	10	UJ	0.3	10	ug/kg	SS
SB	NDA234	SW8260	BROMODICHLOROMETHANE	10	U	10	UJ	0.18	10	ug/kg	SS
SB	NDA058	SW8260	BROMODICHLOROMETHANE	10	U	10	UJ	0.17	10	ug/kg	SS
SB	NDA063	SW8260	BROMODICHLOROMETHANE	11	U	11	UJ	0.2	11	ug/kg	SS
SB	NDA064FD1	SW8260	BROMODICHLOROMETHANE	10	U	10	UJ	0.2	10	ug/kg	SS
SB	NDA066	SW8260	BROMODICHLOROMETHANE	10	U	10	UJ	0.19	10	ug/kg	SS
SB	NDA070	SW8260	BROMODICHLOROMETHANE	10	U	10	UJ	0.2	10	ug/kg	SS
SB	NDA081	SW8260	BROMODICHLOROMETHANE	10	U	10	UJ	0.2	10	ug/kg	SS
SB	NDA118	SW8260	BROMODICHLOROMETHANE	12	U	12	UJ	0.24	12	ug/kg	SS
SD	NDA050	SW8260	BROMODICHLOROMETHANE	2160	U	2160	UJ	43	2160	ug/kg	SS
SD	NDA051FD1	SW8260	BROMODICHLOROMETHANE	23	U	23	UJ	0.45	23	ug/kg	SS
SD	NDA052	SW8260	BROMODICHLOROMETHANE	20	U	20	UJ	0.4	20	ug/kg	SS
SD	NDA053	SW8260	BROMODICHLOROMETHANE	14	U	14	UJ	0.27	14	ug/kg	SS
SD	NDA045	SW8260	BROMODICHLOROMETHANE	36	U	36	UJ	0.72	36	ug/kg	SS
SD	NDA046	SW8260	BROMODICHLOROMETHANE	43	U	43	UJ	0.9	43	ug/kg	SS
SD	NDA302	SW8260	BROMODICHLOROMETHANE	26	U	26	UJ	0.51	26	ug/kg	SS
SD	NDA303	SW8260	BROMODICHLOROMETHANE	47	U	47	UJ	0.94	47	ug/kg	SS
SS	NDA133	SW8260	BROMODICHLOROMETHANE	16	U	16	UJ	0.3	16	ug/kg	SS
SS	NDA135	SW8260	BROMODICHLOROMETHANE	14	U	14	UJ	0.27	14	ug/kg	SS
SS	NDA137	SW8260	BROMODICHLOROMETHANE	11	U	11	UJ	0.21	11	ug/kg	SS
SS	NDA139	SW8260	BROMODICHLOROMETHANE	11	U	11	UJ	0.21	11	ug/kg	SS
SS	NDA141	SW8260	BROMODICHLOROMETHANE	14	U	14	UJ	0.27	14	ug/kg	SS
SS	NDA159	SW8260	BROMODICHLOROMETHANE	14	U	14	UJ	0.27	14	ug/kg	SS
SS	NDA170	SW8260	BROMODICHLOROMETHANE	16	U	16	UJ	0.31	16	ug/kg	SS
SS	NDA196	SW8260	BROMODICHLOROMETHANE	10	U	10	UJ	0.18	10	ug/kg	SS
SS	NDA198	SW8260	BROMODICHLOROMETHANE	11	U	11	UJ	0.2	11	ug/kg	SS
SS	NDA199	SW8260	BROMODICHLOROMETHANE	14	U	14	UJ	0.27	14	ug/kg	SS
SS	NDA180	SW8260	BROMODICHLOROMETHANE	11	U	11	UJ	0.22	11	ug/kg	SS
SS	NDA182	SW8260	BROMODICHLOROMETHANE	14	U	14	UJ	0.3	14	ug/kg	SS
SS	NDA189	SW8260	BROMODICHLOROMETHANE	10	U	10	UJ	0.2	10	ug/kg	SS
SS	NDA084	SW8260	BROMODICHLOROMETHANE	13	U	13	UJ	0.25	13	ug/kg	SS
SS	NDA072FD1	SW8260	BROMODICHLOROMETHANE	11	U	11	UJ	0.21	11	ug/kg	SS
SS	NDA117	SW8260	BROMODICHLOROMETHANE	10	U	10	UJ	0.2	10	ug/kg	SS
SB	NDA234	SW8260	BENZENE	10	U	10	UJ	0.1	10	ug/kg	SS
SB	NDA058	SW8260	BENZENE	10	U	10	UJ	0.09	10	ug/kg	SS
SB	NDA063	SW8260	BENZENE	11	U	11	UJ	0.1	11	ug/kg	SS
SB	NDA064FD1	SW8260	BENZENE	10	U	10	UJ	0.1	10	ug/kg	SS
SB	NDA066	SW8260	BENZENE	10	U	10	UJ	0.1	10	ug/kg	SS
SB	NDA070	SW8260	BENZENE	10	U	10	UJ	0.1	10	ug/kg	SS
SB	NDA081	SW8260	BENZENE	10	U	10	UJ	0.1	10	ug/kg	SS
SB	NDA118	SW8260	BENZENE	12	U	12	UJ	0.13	12	ug/kg	SS
SD	NDA050	SW8260	BENZENE	2160	U	2160	UJ	24	2160	ug/kg	SS
SD	NDA045	SW8260	BENZENE	36	U	36	UJ	0.39	36	ug/kg	SS
SD	NDA046	SW8260	BENZENE	43	U	43	UJ	0.5	43	ug/kg	SS
SD	NDA302	SW8260	BENZENE	26	U	26	UJ	0.28	26	ug/kg	SS
SD	NDA303	SW8260	BENZENE	47	U	47	UJ	0.5	47	ug/kg	SS
SS	NDA133	SW8260	BENZENE	16	U	16	UJ	0.2	16	ug/kg	SS
SS	NDA135	SW8260	BENZENE	14	U	14	UJ	0.14	14	ug/kg	SS
SS	NDA137	SW8260	BENZENE	11	U	11	UJ	0.1	11	ug/kg	SS

Matrix	Sample ID	Analytical Method	Parameter	Lab Result	Lab Qual	Final Result	Final Qual	DL	RL	Units	Comments
SS	NDA139	SW8260	BENZENE	11	U	11	UJ	0.11	11	ug/kg	SS
SS	NDA141	SW8260	BENZENE	14	U	14	UJ	0.15	14	ug/kg	SS
SS	NDA159	SW8260	BENZENE	14	U	14	UJ	0.2	14	ug/kg	SS
SS	NDA170	SW8260	BENZENE	16	U	16	UJ	0.2	16	ug/kg	SS
SS	NDA196	SW8260	BENZENE	10	U	10	UJ	0.1	10	ug/kg	SS
SS	NDA198	SW8260	BENZENE	0.1	U	0.1	J	0.1	11	ug/kg	SS
SS	NDA180	SW8260	BENZENE	11	U	11	UJ	0.12	11	ug/kg	SS
SS	NDA182	SW8260	BENZENE	14	U	14	UJ	0.15	14	ug/kg	SS
SS	NDA189	SW8260	BENZENE	10	U	10	UJ	0.11	10	ug/kg	SS
SS	NDA084	SW8260	BENZENE	13	U	13	UJ	0.14	13	ug/kg	SS
SS	NDA072FD1	SW8260	BENZENE	11	U	11	UJ	0.1	11	ug/kg	SS
SS	NDA117	SW8260	BENZENE	10	U	10	UJ	0.11	10	ug/kg	SS
SB	NDA063	SW8330	4-NITROTOLUENE	269	U	269	UJ	69	269	ug/kg	SS
SB	NDA079	SW8330	4-NITROTOLUENE	143	U	143	UJ	37	143	ug/kg	SS
SS	NDA067	SW8330	4-NITROTOLUENE	268	U	268	UJ	69	268	ug/kg	SS
SS	NDA069	SW8330	4-NITROTOLUENE	255	U	255	UJ	65	255	ug/kg	SS
SS	NDA119	SW8330	4-NITROTOLUENE	281	U	281	UJ	72	281	ug/kg	SS
SS	NDA120	SW8330	4-NITROTOLUENE	339	U	339	UJ	87	339	ug/kg	SS
SS	NDA121	SW8330	4-NITROTOLUENE	271	U	271	UJ	69	271	ug/kg	SS
SS	NDA122	SW8330	4-NITROTOLUENE	280	U	280	UJ	72	280	ug/kg	SS
SS	NDA123	SW8330	4-NITROTOLUENE	279	U	279	UJ	72	279	ug/kg	SS
SS	NDA124	SW8330	4-NITROTOLUENE	276	U	276	UJ	71	276	ug/kg	SS
SS	NDA072FD1	SW8330	4-NITROTOLUENE	128	U	128	UJ	33	128	ug/kg	SS
SS	NDA082	SW8330	4-NITROTOLUENE	125	U	125	UJ	32	125	ug/kg	SS
SS	NDA104FD1	SW8330	4-NITROTOLUENE	355	U	355	R	91	355	ug/kg	SS
SB	NDA063	SW8330	3-NITROTOLUENE	269	U	269	UJ	103	269	ug/kg	SS
SB	NDA079	SW8330	3-NITROTOLUENE	143	U	143	UJ	55	143	ug/kg	SS
SS	NDA067	SW8330	3-NITROTOLUENE	268	U	268	UJ	103	268	ug/kg	SS
SS	NDA069	SW8330	3-NITROTOLUENE	255	U	255	UJ	98	255	ug/kg	SS
SS	NDA119	SW8330	3-NITROTOLUENE	281	U	281	UJ	108	281	ug/kg	SS
SS	NDA120	SW8330	3-NITROTOLUENE	339	U	339	UJ	130	339	ug/kg	SS
SS	NDA121	SW8330	3-NITROTOLUENE	271	U	271	UJ	104	271	ug/kg	SS
SS	NDA122	SW8330	3-NITROTOLUENE	280	U	280	UJ	107	280	ug/kg	SS
SS	NDA123	SW8330	3-NITROTOLUENE	279	U	279	UJ	107	279	ug/kg	SS
SS	NDA124	SW8330	3-NITROTOLUENE	276	U	276	UJ	106	276	ug/kg	SS
SS	NDA072FD1	SW8330	3-NITROTOLUENE	128	U	128	UJ	49	128	ug/kg	SS
SS	NDA082	SW8330	3-NITROTOLUENE	125	U	125	UJ	48	125	ug/kg	SS
SS	NDA104FD1	SW8330	3-NITROTOLUENE	355	U	355	R	136	355	ug/kg	SS
SB	NDA063	SW8330	2-NITROTOLUENE	269	U	269	UJ	69	269	ug/kg	SS
SB	NDA079	SW8330	2-NITROTOLUENE	143	U	143	UJ	37	143	ug/kg	SS
SS	NDA067	SW8330	2-NITROTOLUENE	268	U	268	UJ	69	268	ug/kg	SS
SS	NDA069	SW8330	2-NITROTOLUENE	255	U	255	UJ	65	255	ug/kg	SS
SS	NDA119	SW8330	2-NITROTOLUENE	281	U	281	UJ	72	281	ug/kg	SS
SS	NDA120	SW8330	2-NITROTOLUENE	339	U	339	UJ	87	339	ug/kg	SS
SS	NDA121	SW8330	2-NITROTOLUENE	271	U	271	UJ	69	271	ug/kg	SS
SS	NDA122	SW8330	2-NITROTOLUENE	280	U	280	UJ	72	280	ug/kg	SS
SS	NDA123	SW8330	2-NITROTOLUENE	279	U	279	UJ	72	279	ug/kg	SS
SS	NDA124	SW8330	2-NITROTOLUENE	276	U	276	UJ	71	276	ug/kg	SS
SS	NDA072FD1	SW8330	2-NITROTOLUENE	128	U	128	UJ	33	128	ug/kg	SS
SS	NDA082	SW8330	2-NITROTOLUENE	125	U	125	UJ	32	125	ug/kg	SS
SS	NDA104FD1	SW8330	2-NITROTOLUENE	355	U	355	R	91	355	ug/kg	SS
SB	NDA234	SW8260	2-HEXANONE	10	U	10	UJ	1	10	ug/kg	SS
SB	NDA058	SW8260	2-HEXANONE	10	U	10	UJ	0.94	10	ug/kg	SS
SB	NDA063	SW8260	2-HEXANONE	11	U	11	UJ	1	11	ug/kg	SS
SB	NDA064FD1	SW8260	2-HEXANONE	10	U	10	UJ	1	10	ug/kg	SS
SB	NDA066	SW8260	2-HEXANONE	10	U	10	UJ	1	10	ug/kg	SS
SB	NDA070	SW8260	2-HEXANONE	10	U	10	UJ	0.96	10	ug/kg	SS
SB	NDA081	SW8260	2-HEXANONE	10	U	10	UJ	1	10	ug/kg	SS
SB	NDA118	SW8260	2-HEXANONE	12	U	12	UJ	1	12	ug/kg	SS
SD	NDA050	SW8260	2-HEXANONE	2160	U	2160	UJ	239	2160	ug/kg	SS
SD	NDA051FD1	SW8260	2-HEXANONE	23	U	23	UJ	3	23	ug/kg	SS
SD	NDA052	SW8260	2-HEXANONE	20	U	20	UJ	2	20	ug/kg	SS
SD	NDA053	SW8260	2-HEXANONE	14	U	14	UJ	1	14	ug/kg	SS
SD	NDA045	SW8260	2-HEXANONE	36	U	36	UJ	4	36	ug/kg	SS
SD	NDA046	SW8260	2-HEXANONE	43	U	43	UJ	5	43	ug/kg	SS
SD	NDA302	SW8260	2-HEXANONE	26	U	26	UJ	3	26	ug/kg	SS
SD	NDA303	SW8260	2-HEXANONE	47	U	47	UJ	5	47	ug/kg	SS
SS	NDA133	SW8260	2-HEXANONE	16	U	16	UJ	2	16	ug/kg	SS
SS	NDA135	SW8260	2-HEXANONE	14	U	14	UJ	1	14	ug/kg	SS
SS	NDA137	SW8260	2-HEXANONE	11	U	11	UJ	1	11	ug/kg	SS

Matrix	Sample ID	Analytical Method	Parameter	Lab Result	Lab Qual	Final Result	Final Qual	DL	RL	Units	Comments
SS	NDA139	SW8260	2-HEXANONE	11	U	11	UJ	1	11	ug/kg	SS
SS	NDA141	SW8260	2-HEXANONE	14	U	14	UJ	2	14	ug/kg	SS
SS	NDA159	SW8260	2-HEXANONE	14	U	14	UJ	2	14	ug/kg	SS
SS	NDA170	SW8260	2-HEXANONE	16	U	16	UJ	2	16	ug/kg	SS
SS	NDA196	SW8260	2-HEXANONE	10	U	10	UJ	1	10	ug/kg	SS
SS	NDA198	SW8260	2-HEXANONE	11	U	11	UJ	1	11	ug/kg	SS
SS	NDA199	SW8260	2-HEXANONE	14	U	14	UJ	2	14	ug/kg	SS
SS	NDA180	SW8260	2-HEXANONE	11	U	11	UJ	1	11	ug/kg	SS
SS	NDA182	SW8260	2-HEXANONE	14	U	14	UJ	2	14	ug/kg	SS
SS	NDA189	SW8260	2-HEXANONE	10	U	10	UJ	1	10	ug/kg	SS
SS	NDA084	SW8260	2-HEXANONE	13	U	13	UJ	1	13	ug/kg	SS
SS	NDA072FD1	SW8260	2-HEXANONE	11	U	11	UJ	1	11	ug/kg	SS
SS	NDA117	SW8260	2-HEXANONE	10	U	10	UJ	1	10	ug/kg	SS
SB	NDA063	SW8330	2,6-DINITROTOLUENE	269	U	269	UJ	48	269	ug/kg	SS
SB	NDA079	SW8330	2,6-DINITROTOLUENE	143	U	143	UJ	26	143	ug/kg	SS
SS	NDA067	SW8330	2,6-DINITROTOLUENE	268	U	268	UJ	48	268	ug/kg	SS
SS	NDA069	SW8330	2,6-DINITROTOLUENE	255	U	255	UJ	46	255	ug/kg	SS
SS	NDA119	SW8330	2,6-DINITROTOLUENE	281	U	281	UJ	51	281	ug/kg	SS
SS	NDA120	SW8330	2,6-DINITROTOLUENE	339	U	339	UJ	61	339	ug/kg	SS
SS	NDA121	SW8330	2,6-DINITROTOLUENE	271	U	271	UJ	49	271	ug/kg	SS
SS	NDA122	SW8330	2,6-DINITROTOLUENE	280	U	280	UJ	50	280	ug/kg	SS
SS	NDA123	SW8330	2,6-DINITROTOLUENE	279	U	279	UJ	50	279	ug/kg	SS
SS	NDA124	SW8330	2,6-DINITROTOLUENE	276	U	276	UJ	50	276	ug/kg	SS
SS	NDA072FD1	SW8330	2,6-DINITROTOLUENE	128	U	128	UJ	23	128	ug/kg	SS
SS	NDA082	SW8330	2,6-DINITROTOLUENE	125	U	125	UJ	22	125	ug/kg	SS
SS	NDA104FD1	SW8330	2,6-DINITROTOLUENE	355	U	355	R	64	355	ug/kg	SS
SB	NDA063	SW8330	2,4-DINITROTOLUENE	269	U	269	UJ	32	269	ug/kg	SS
SB	NDA079	SW8330	2,4-DINITROTOLUENE	143	U	143	UJ	17	143	ug/kg	SS
SS	NDA067	SW8330	2,4-DINITROTOLUENE	268	U	268	UJ	32	268	ug/kg	SS
SS	NDA069	SW8330	2,4-DINITROTOLUENE	255	U	255	UJ	31	255	ug/kg	SS
SS	NDA119	SW8330	2,4-DINITROTOLUENE	281	U	281	UJ	34	281	ug/kg	SS
SS	NDA120	SW8330	2,4-DINITROTOLUENE	339	U	339	UJ	41	339	ug/kg	SS
SS	NDA121	SW8330	2,4-DINITROTOLUENE	271	U	271	UJ	33	271	ug/kg	SS
SS	NDA122	SW8330	2,4-DINITROTOLUENE	280	U	280	UJ	34	280	ug/kg	SS
SS	NDA123	SW8330	2,4-DINITROTOLUENE	279	U	279	UJ	34	279	ug/kg	SS
SS	NDA124	SW8330	2,4-DINITROTOLUENE	276	U	276	UJ	33	276	ug/kg	SS
SS	NDA072FD1	SW8330	2,4-DINITROTOLUENE	128	U	128	UJ	15	128	ug/kg	SS
SS	NDA082	SW8330	2,4-DINITROTOLUENE	125	U	125	UJ	15	125	ug/kg	SS
SS	NDA104FD1	SW8330	2,4-DINITROTOLUENE	355	U	355	R	43	355	ug/kg	SS
SB	NDA063	SW8330	2,4,6-TRINITROTOLUENE	269	U	269	UJ	35	269	ug/kg	SS
SB	NDA079	SW8330	2,4,6-TRINITROTOLUENE	143	U	143	UJ	19	143	ug/kg	SS
SS	NDA067	SW8330	2,4,6-TRINITROTOLUENE	268	U	268	UJ	35	268	ug/kg	SS
SS	NDA069	SW8330	2,4,6-TRINITROTOLUENE	255	U	255	UJ	34	255	ug/kg	SS
SS	NDA119	SW8330	2,4,6-TRINITROTOLUENE	281	U	281	UJ	37	281	ug/kg	SS
SS	NDA120	SW8330	2,4,6-TRINITROTOLUENE	339	U	339	UJ	45	339	ug/kg	SS
SS	NDA121	SW8330	2,4,6-TRINITROTOLUENE	271	U	271	UJ	36	271	ug/kg	SS
SS	NDA122	SW8330	2,4,6-TRINITROTOLUENE	280	U	280	UJ	37	280	ug/kg	SS
SS	NDA123	SW8330	2,4,6-TRINITROTOLUENE	279	U	279	UJ	37	279	ug/kg	SS
SS	NDA124	SW8330	2,4,6-TRINITROTOLUENE	276	U	276	UJ	36	276	ug/kg	SS
SS	NDA072FD1	SW8330	2,4,6-TRINITROTOLUENE	128	U	128	UJ	17	128	ug/kg	SS
SS	NDA082	SW8330	2,4,6-TRINITROTOLUENE	125	U	125	UJ	16	125	ug/kg	SS
SS	NDA104FD1	SW8330	2,4,6-TRINITROTOLUENE	355	U	355	R	47	355	ug/kg	SS
SB	NDA063	SW8330	1,3-DINITROBENZENE	269	U	269	UJ	47	269	ug/kg	SS
SB	NDA079	SW8330	1,3-DINITROBENZENE	143	U	143	UJ	25	143	ug/kg	SS
SS	NDA067	SW8330	1,3-DINITROBENZENE	268	U	268	UJ	47	268	ug/kg	SS
SS	NDA069	SW8330	1,3-DINITROBENZENE	255	U	255	UJ	45	255	ug/kg	SS
SS	NDA119	SW8330	1,3-DINITROBENZENE	281	U	281	UJ	49	281	ug/kg	SS
SS	NDA120	SW8330	1,3-DINITROBENZENE	339	U	339	UJ	60	339	ug/kg	SS
SS	NDA121	SW8330	1,3-DINITROBENZENE	271	U	271	UJ	48	271	ug/kg	SS
SS	NDA122	SW8330	1,3-DINITROBENZENE	280	U	280	UJ	49	280	ug/kg	SS
SS	NDA123	SW8330	1,3-DINITROBENZENE	279	U	279	UJ	49	279	ug/kg	SS
SS	NDA124	SW8330	1,3-DINITROBENZENE	276	U	276	UJ	48	276	ug/kg	SS
SS	NDA072FD1	SW8330	1,3-DINITROBENZENE	128	U	128	UJ	23	128	ug/kg	SS
SS	NDA082	SW8330	1,3-DINITROBENZENE	125	U	125	UJ	22	125	ug/kg	SS
SS	NDA104FD1	SW8330	1,3-DINITROBENZENE	355	U	355	R	62	355	ug/kg	SS
SB	NDA063	SW8330	1,3,5-TRINITROBENZENE	269	U	269	UJ	22	269	ug/kg	SS
SB	NDA079	SW8330	1,3,5-TRINITROBENZENE	143	U	143	UJ	11	143	ug/kg	SS
SS	NDA067	SW8330	1,3,5-TRINITROBENZENE	268	U	268	UJ	21	268	ug/kg	SS
SS	NDA069	SW8330	1,3,5-TRINITROBENZENE	255	U	255	UJ	20	255	ug/kg	SS
SS	NDA119	SW8330	1,3,5-TRINITROBENZENE	281	U	281	UJ	22	281	ug/kg	SS

Matrix	Sample ID	Analytical Method	Parameter	Lab Result	Lab Qual	Final Result	Final Qual	DL	RL	Units	Comments
SS	NDA120	SW8330	1,3,5-TRINITROBENZENE	339	U	339	UJ	27	339	ug/kg	SS
SS	NDA121	SW8330	1,3,5-TRINITROBENZENE	271	U	271	UJ	22	271	ug/kg	SS
SS	NDA122	SW8330	1,3,5-TRINITROBENZENE	280	U	280	UJ	22	280	ug/kg	SS
SS	NDA123	SW8330	1,3,5-TRINITROBENZENE	279	U	279	UJ	22	279	ug/kg	SS
SS	NDA124	SW8330	1,3,5-TRINITROBENZENE	276	U	276	UJ	22	276	ug/kg	SS
SS	NDA072FD1	SW8330	1,3,5-TRINITROBENZENE	128	U	128	UJ	10	128	ug/kg	SS
SS	NDA082	SW8330	1,3,5-TRINITROBENZENE	125	U	125	UJ	10	125	ug/kg	SS
SS	NDA104FD1	SW8330	1,3,5-TRINITROBENZENE	355	U	355	R	28	355	ug/kg	SS
SB	NDA234	SW8260	1,2-DICHLOROPROPANE	10	U	10	UJ	0.1	10	ug/kg	SS
SB	NDA058	SW8260	1,2-DICHLOROPROPANE	10	U	10	UJ	0.12	10	ug/kg	SS
SB	NDA063	SW8260	1,2-DICHLOROPROPANE	11	U	11	UJ	0.15	11	ug/kg	SS
SB	NDA064FD1	SW8260	1,2-DICHLOROPROPANE	10	U	10	UJ	0.14	10	ug/kg	SS
SB	NDA066	SW8260	1,2-DICHLOROPROPANE	10	U	10	UJ	0.13	10	ug/kg	SS
SB	NDA070	SW8260	1,2-DICHLOROPROPANE	10	U	10	UJ	0.12	10	ug/kg	SS
SB	NDA081	SW8260	1,2-DICHLOROPROPANE	10	U	10	UJ	0.13	10	ug/kg	SS
SB	NDA118	SW8260	1,2-DICHLOROPROPANE	12	U	12	UJ	0.16	12	ug/kg	SS
SD	NDA050	SW8260	1,2-DICHLOROPROPANE	2160	U	2160	UJ	30	2160	ug/kg	SS
SD	NDA051FD1	SW8260	1,2-DICHLOROPROPANE	23	U	23	UJ	0.3	23	ug/kg	SS
SD	NDA052	SW8260	1,2-DICHLOROPROPANE	20	U	20	UJ	0.3	20	ug/kg	SS
SD	NDA053	SW8260	1,2-DICHLOROPROPANE	14	U	14	UJ	0.19	14	ug/kg	SS
SD	NDA045	SW8260	1,2-DICHLOROPROPANE	36	U	36	UJ	0.5	36	ug/kg	SS
SD	NDA046	SW8260	1,2-DICHLOROPROPANE	43	U	43	UJ	0.6	43	ug/kg	SS
SD	NDA302	SW8260	1,2-DICHLOROPROPANE	26	U	26	UJ	0.4	26	ug/kg	SS
SD	NDA303	SW8260	1,2-DICHLOROPROPANE	47	U	47	UJ	0.65	47	ug/kg	SS
SS	NDA133	SW8260	1,2-DICHLOROPROPANE	16	U	16	UJ	0.22	16	ug/kg	SS
SS	NDA135	SW8260	1,2-DICHLOROPROPANE	14	U	14	UJ	0.19	14	ug/kg	SS
SS	NDA137	SW8260	1,2-DICHLOROPROPANE	11	U	11	UJ	0.2	11	ug/kg	SS
SS	NDA139	SW8260	1,2-DICHLOROPROPANE	11	U	11	UJ	0.15	11	ug/kg	SS
SS	NDA141	SW8260	1,2-DICHLOROPROPANE	14	U	14	UJ	0.19	14	ug/kg	SS
SS	NDA159	SW8260	1,2-DICHLOROPROPANE	14	U	14	UJ	0.2	14	ug/kg	SS
SS	NDA170	SW8260	1,2-DICHLOROPROPANE	16	U	16	UJ	0.2	16	ug/kg	SS
SS	NDA196	SW8260	1,2-DICHLOROPROPANE	10	U	10	UJ	0.13	10	ug/kg	SS
SS	NDA198	SW8260	1,2-DICHLOROPROPANE	11	U	11	UJ	0.2	11	ug/kg	SS
SS	NDA199	SW8260	1,2-DICHLOROPROPANE	14	U	14	UJ	0.19	14	ug/kg	SS
SS	NDA180	SW8260	1,2-DICHLOROPROPANE	11	U	11	UJ	0.15	11	ug/kg	SS
SS	NDA182	SW8260	1,2-DICHLOROPROPANE	14	U	14	UJ	0.19	14	ug/kg	SS
SS	NDA189	SW8260	1,2-DICHLOROPROPANE	10	U	10	UJ	0.1	10	ug/kg	SS
SS	NDA084	SW8260	1,2-DICHLOROPROPANE	13	U	13	UJ	0.18	13	ug/kg	SS
SS	NDA072FD1	SW8260	1,2-DICHLOROPROPANE	11	U	11	UJ	0.15	11	ug/kg	SS
SS	NDA117	SW8260	1,2-DICHLOROPROPANE	10	U	10	UJ	0.14	10	ug/kg	SS
SB	NDA234	SW8260	1,2-DICHLOROETHANE	10	U	10	UJ	0.22	10	ug/kg	SS
SB	NDA058	SW8260	1,2-DICHLOROETHANE	10	U	10	UJ	0.2	10	ug/kg	SS
SB	NDA063	SW8260	1,2-DICHLOROETHANE	11	U	11	UJ	0.26	11	ug/kg	SS
SB	NDA064FD1	SW8260	1,2-DICHLOROETHANE	10	U	10	UJ	0.25	10	ug/kg	SS
SB	NDA066	SW8260	1,2-DICHLOROETHANE	10	U	10	UJ	0.2	10	ug/kg	SS
SB	NDA070	SW8260	1,2-DICHLOROETHANE	10	U	10	UJ	0.21	10	ug/kg	SS
SB	NDA081	SW8260	1,2-DICHLOROETHANE	10	U	10	UJ	0.23	10	ug/kg	SS
SB	NDA118	SW8260	1,2-DICHLOROETHANE	12	U	12	UJ	0.29	12	ug/kg	SS
SD	NDA050	SW8260	1,2-DICHLOROETHANE	2160	U	2160	UJ	52	2160	ug/kg	SS
SD	NDA051FD1	SW8260	1,2-DICHLOROETHANE	23	U	23	UJ	0.54	23	ug/kg	SS
SD	NDA052	SW8260	1,2-DICHLOROETHANE	20	U	20	UJ	0.47	20	ug/kg	SS
SD	NDA053	SW8260	1,2-DICHLOROETHANE	14	U	14	UJ	0.3	14	ug/kg	SS
SD	NDA045	SW8260	1,2-DICHLOROETHANE	36	U	36	UJ	0.86	36	ug/kg	SS
SD	NDA046	SW8260	1,2-DICHLOROETHANE	43	U	43	UJ	1	43	ug/kg	SS
SD	NDA302	SW8260	1,2-DICHLOROETHANE	26	U	26	UJ	0.61	26	ug/kg	SS
SD	NDA303	SW8260	1,2-DICHLOROETHANE	47	U	47	UJ	1	47	ug/kg	SS
SS	NDA133	SW8260	1,2-DICHLOROETHANE	16	U	16	UJ	0.38	16	ug/kg	SS
SS	NDA135	SW8260	1,2-DICHLOROETHANE	14	U	14	UJ	0.32	14	ug/kg	SS
SS	NDA137	SW8260	1,2-DICHLOROETHANE	11	U	11	UJ	0.25	11	ug/kg	SS
SS	NDA139	SW8260	1,2-DICHLOROETHANE	11	U	11	UJ	0.25	11	ug/kg	SS
SS	NDA141	SW8260	1,2-DICHLOROETHANE	14	U	14	UJ	0.33	14	ug/kg	SS
SS	NDA159	SW8260	1,2-DICHLOROETHANE	14	U	14	UJ	0.33	14	ug/kg	SS
SS	NDA170	SW8260	1,2-DICHLOROETHANE	16	U	16	UJ	0.38	16	ug/kg	SS
SS	NDA196	SW8260	1,2-DICHLOROETHANE	10	U	10	UJ	0.22	10	ug/kg	SS
SS	NDA198	SW8260	1,2-DICHLOROETHANE	11	U	11	UJ	0.27	11	ug/kg	SS
SS	NDA199	SW8260	1,2-DICHLOROETHANE	14	U	14	UJ	0.32	14	ug/kg	SS
SS	NDA180	SW8260	1,2-DICHLOROETHANE	11	U	11	UJ	0.26	11	ug/kg	SS
SS	NDA182	SW8260	1,2-DICHLOROETHANE	14	U	14	UJ	0.34	14	ug/kg	SS
SS	NDA189	SW8260	1,2-DICHLOROETHANE	10	U	10	UJ	0.2	10	ug/kg	SS
SS	NDA084	SW8260	1,2-DICHLOROETHANE	13	U	13	UJ	0.31	13	ug/kg	SS

Matrix	Sample ID	Analytical Method	Parameter	Lab Result	Lab Qual	Final Result	Final Qual	DL	RL	Units	Comments
SS	NDA072FD1	SW8260	1,2-DICHLOROETHANE	11	U	11	UJ	0.3	11	ug/kg	SS
SS	NDA117	SW8260	1,2-DICHLOROETHANE	10	U	10	UJ	0.24	10	ug/kg	SS
SB	NDA234	SW8260	1,1-DICHLOROETHENE	10	U	10	UJ	0.4	10	ug/kg	SS
SB	NDA058	SW8260	1,1-DICHLOROETHENE	10	U	10	UJ	0.3	10	ug/kg	SS
SB	NDA063	SW8260	1,1-DICHLOROETHENE	11	U	11	UJ	0.4	11	ug/kg	SS
SB	NDA064FD1	SW8260	1,1-DICHLOROETHENE	10	U	10	UJ	0.4	10	ug/kg	SS
SB	NDA066	SW8260	1,1-DICHLOROETHENE	10	U	10	UJ	0.38	10	ug/kg	SS
SB	NDA070	SW8260	1,1-DICHLOROETHENE	10	U	10	UJ	0.34	10	ug/kg	SS
SB	NDA081	SW8260	1,1-DICHLOROETHENE	10	U	10	UJ	0.38	10	ug/kg	SS
SB	NDA118	SW8260	1,1-DICHLOROETHENE	12	U	12	UJ	0.47	12	ug/kg	SS
SD	NDA050	SW8260	1,1-DICHLOROETHENE	2160	U	2160	UJ	85	2160	ug/kg	SS
SD	NDA051FD1	SW8260	1,1-DICHLOROETHENE	23	U	23	UJ	0.89	23	ug/kg	SS
SD	NDA052	SW8260	1,1-DICHLOROETHENE	20	U	20	UJ	0.77	20	ug/kg	SS
SD	NDA053	SW8260	1,1-DICHLOROETHENE	14	U	14	UJ	0.53	14	ug/kg	SS
SD	NDA045	SW8260	1,1-DICHLOROETHENE	36	U	36	UJ	1	36	ug/kg	SS
SD	NDA046	SW8260	1,1-DICHLOROETHENE	43	U	43	UJ	2	43	ug/kg	SS
SD	NDA302	SW8260	1,1-DICHLOROETHENE	26	U	26	UJ	1	26	ug/kg	SS
SD	NDA303	SW8260	1,1-DICHLOROETHENE	47	U	47	UJ	2	47	ug/kg	SS
SS	NDA133	SW8260	1,1-DICHLOROETHENE	16	U	16	UJ	0.6	16	ug/kg	SS
SS	NDA135	SW8260	1,1-DICHLOROETHENE	14	U	14	UJ	0.52	14	ug/kg	SS
SS	NDA137	SW8260	1,1-DICHLOROETHENE	11	U	11	UJ	0.42	11	ug/kg	SS
SS	NDA139	SW8260	1,1-DICHLOROETHENE	11	U	11	UJ	0.41	11	ug/kg	SS
SS	NDA141	SW8260	1,1-DICHLOROETHENE	14	U	14	UJ	0.54	14	ug/kg	SS
SS	NDA159	SW8260	1,1-DICHLOROETHENE	14	U	14	UJ	0.5	14	ug/kg	SS
SS	NDA170	SW8260	1,1-DICHLOROETHENE	16	U	16	UJ	0.62	16	ug/kg	SS
SS	NDA196	SW8260	1,1-DICHLOROETHENE	10	U	10	UJ	0.36	10	ug/kg	SS
SS	NDA198	SW8260	1,1-DICHLOROETHENE	11	U	11	UJ	0.44	11	ug/kg	SS
SS	NDA199	SW8260	1,1-DICHLOROETHENE	14	U	14	UJ	0.53	14	ug/kg	SS
SS	NDA180	SW8260	1,1-DICHLOROETHENE	11	U	11	UJ	0.43	11	ug/kg	SS
SS	NDA182	SW8260	1,1-DICHLOROETHENE	14	U	14	UJ	0.55	14	ug/kg	SS
SS	NDA189	SW8260	1,1-DICHLOROETHENE	10	U	10	UJ	0.4	10	ug/kg	SS
SS	NDA084	SW8260	1,1-DICHLOROETHENE	13	U	13	UJ	0.5	13	ug/kg	SS
SS	NDA072FD1	SW8260	1,1-DICHLOROETHENE	11	U	11	UJ	0.4	11	ug/kg	SS
SS	NDA117	SW8260	1,1-DICHLOROETHENE	10	U	10	UJ	0.4	10	ug/kg	SS
SB	NDA234	SW8260	1,1-DICHLOROETHANE	10	U	10	UJ	0.4	10	ug/kg	SS
SB	NDA058	SW8260	1,1-DICHLOROETHANE	10	U	10	UJ	0.3	10	ug/kg	SS
SB	NDA063	SW8260	1,1-DICHLOROETHANE	11	U	11	UJ	0.4	11	ug/kg	SS
SB	NDA064FD1	SW8260	1,1-DICHLOROETHANE	10	U	10	UJ	0.4	10	ug/kg	SS
SB	NDA066	SW8260	1,1-DICHLOROETHANE	10	U	10	UJ	0.38	10	ug/kg	SS
SB	NDA070	SW8260	1,1-DICHLOROETHANE	10	U	10	UJ	0.34	10	ug/kg	SS
SB	NDA081	SW8260	1,1-DICHLOROETHANE	10	U	10	UJ	0.38	10	ug/kg	SS
SB	NDA118	SW8260	1,1-DICHLOROETHANE	12	U	12	UJ	0.47	12	ug/kg	SS
SD	NDA050	SW8260	1,1-DICHLOROETHANE	2160	U	2160	UJ	85	2160	ug/kg	SS
SD	NDA051FD1	SW8260	1,1-DICHLOROETHANE	23	U	23	UJ	0.89	23	ug/kg	SS
SD	NDA052	SW8260	1,1-DICHLOROETHANE	20	U	20	UJ	0.77	20	ug/kg	SS
SD	NDA053	SW8260	1,1-DICHLOROETHANE	14	U	14	UJ	0.53	14	ug/kg	SS
SD	NDA045	SW8260	1,1-DICHLOROETHANE	36	U	36	UJ	1	36	ug/kg	SS
SD	NDA046	SW8260	1,1-DICHLOROETHANE	43	U	43	UJ	2	43	ug/kg	SS
SD	NDA302	SW8260	1,1-DICHLOROETHANE	26	U	26	UJ	1	26	ug/kg	SS
SD	NDA303	SW8260	1,1-DICHLOROETHANE	47	U	47	UJ	2	47	ug/kg	SS
SS	NDA133	SW8260	1,1-DICHLOROETHANE	16	U	16	UJ	0.6	16	ug/kg	SS
SS	NDA135	SW8260	1,1-DICHLOROETHANE	14	U	14	UJ	0.52	14	ug/kg	SS
SS	NDA137	SW8260	1,1-DICHLOROETHANE	11	U	11	UJ	0.42	11	ug/kg	SS
SS	NDA139	SW8260	1,1-DICHLOROETHANE	11	U	11	UJ	0.41	11	ug/kg	SS
SS	NDA141	SW8260	1,1-DICHLOROETHANE	14	U	14	UJ	0.54	14	ug/kg	SS
SS	NDA159	SW8260	1,1-DICHLOROETHANE	14	U	14	UJ	0.5	14	ug/kg	SS
SS	NDA170	SW8260	1,1-DICHLOROETHANE	16	U	16	UJ	0.62	16	ug/kg	SS
SS	NDA196	SW8260	1,1-DICHLOROETHANE	10	U	10	UJ	0.36	10	ug/kg	SS
SS	NDA198	SW8260	1,1-DICHLOROETHANE	11	U	11	UJ	0.44	11	ug/kg	SS
SS	NDA199	SW8260	1,1-DICHLOROETHANE	14	U	14	UJ	0.53	14	ug/kg	SS
SS	NDA180	SW8260	1,1-DICHLOROETHANE	11	U	11	UJ	0.43	11	ug/kg	SS
SS	NDA182	SW8260	1,1-DICHLOROETHANE	14	U	14	UJ	0.55	14	ug/kg	SS
SS	NDA189	SW8260	1,1-DICHLOROETHANE	10	U	10	UJ	0.4	10	ug/kg	SS
SS	NDA084	SW8260	1,1-DICHLOROETHANE	13	U	13	UJ	0.5	13	ug/kg	SS
SS	NDA072FD1	SW8260	1,1-DICHLOROETHANE	11	U	11	UJ	0.4	11	ug/kg	SS
SS	NDA117	SW8260	1,1-DICHLOROETHANE	10	U	10	UJ	0.4	10	ug/kg	SS
SB	NDA234	SW8260	1,1,2-TRICHLOROETHANE	10	U	10	UJ	0.3	10	ug/kg	SS
SB	NDA058	SW8260	1,1,2-TRICHLOROETHANE	10	U	10	UJ	0.29	10	ug/kg	SS
SB	NDA063	SW8260	1,1,2-TRICHLOROETHANE	11	U	11	UJ	0.38	11	ug/kg	SS
SB	NDA064FD1	SW8260	1,1,2-TRICHLOROETHANE	10	U	10	UJ	0.35	10	ug/kg	SS

Matrix	Sample ID	Analytical Method	Parameter	Lab Result	Lab Qual	Final Result	Final Qual	DL	RL	Units	Comments
SB	NDA066	SW8260	1,1,2-TRICHLOROETHANE	10	U	10	UJ	0.33	10	ug/kg	SS
SB	NDA070	SW8260	1,1,2-TRICHLOROETHANE	10	U	10	UJ	0.29	10	ug/kg	SS
SB	NDA081	SW8260	1,1,2-TRICHLOROETHANE	10	U	10	UJ	0.33	10	ug/kg	SS
SB	NDA118	SW8260	1,1,2-TRICHLOROETHANE	12	U	12	UJ	0.41	12	ug/kg	SS
SD	NDA050	SW8260	1,1,2-TRICHLOROETHANE	2160	U	2160	UJ	74	2160	ug/kg	SS
SD	NDA051FD1	SW8260	1,1,2-TRICHLOROETHANE	23	U	23	UJ	0.77	23	ug/kg	SS
SD	NDA052	SW8260	1,1,2-TRICHLOROETHANE	20	U	20	UJ	0.67	20	ug/kg	SS
SD	NDA053	SW8260	1,1,2-TRICHLOROETHANE	14	U	14	UJ	0.46	14	ug/kg	SS
SD	NDA045	SW8260	1,1,2-TRICHLOROETHANE	36	U	36	UJ	1	36	ug/kg	SS
SD	NDA046	SW8260	1,1,2-TRICHLOROETHANE	43	U	43	UJ	1	43	ug/kg	SS
SD	NDA302	SW8260	1,1,2-TRICHLOROETHANE	26	U	26	UJ	0.87	26	ug/kg	SS
SD	NDA303	SW8260	1,1,2-TRICHLOROETHANE	47	U	47	UJ	2	47	ug/kg	SS
SS	NDA133	SW8260	1,1,2-TRICHLOROETHANE	16	U	16	UJ	0.54	16	ug/kg	SS
SS	NDA135	SW8260	1,1,2-TRICHLOROETHANE	14	U	14	UJ	0.46	14	ug/kg	SS
SS	NDA137	SW8260	1,1,2-TRICHLOROETHANE	11	U	11	UJ	0.4	11	ug/kg	SS
SS	NDA139	SW8260	1,1,2-TRICHLOROETHANE	11	U	11	UJ	0.36	11	ug/kg	SS
SS	NDA141	SW8260	1,1,2-TRICHLOROETHANE	14	U	14	UJ	0.5	14	ug/kg	SS
SS	NDA159	SW8260	1,1,2-TRICHLOROETHANE	14	U	14	UJ	0.46	14	ug/kg	SS
SS	NDA170	SW8260	1,1,2-TRICHLOROETHANE	16	U	16	UJ	0.54	16	ug/kg	SS
SS	NDA196	SW8260	1,1,2-TRICHLOROETHANE	10	U	10	UJ	0.3	10	ug/kg	SS
SS	NDA198	SW8260	1,1,2-TRICHLOROETHANE	11	U	11	UJ	0.4	11	ug/kg	SS
SS	NDA199	SW8260	1,1,2-TRICHLOROETHANE	14	U	14	UJ	0.5	14	ug/kg	SS
SS	NDA180	SW8260	1,1,2-TRICHLOROETHANE	11	U	11	UJ	0.38	11	ug/kg	SS
SS	NDA182	SW8260	1,1,2-TRICHLOROETHANE	14	U	14	UJ	0.48	14	ug/kg	SS
SS	NDA189	SW8260	1,1,2-TRICHLOROETHANE	10	U	10	UJ	0.34	10	ug/kg	SS
SS	NDA084	SW8260	1,1,2-TRICHLOROETHANE	13	U	13	UJ	0.44	13	ug/kg	SS
SS	NDA072FD1	SW8260	1,1,2-TRICHLOROETHANE	11	U	11	UJ	0.36	11	ug/kg	SS
SS	NDA117	SW8260	1,1,2-TRICHLOROETHANE	10	U	10	UJ	0.35	10	ug/kg	SS
SB	NDA234	SW8260	1,1,2,2-TETRACHLOROETHANE	10	U	10	UJ	0.14	10	ug/kg	SS
SB	NDA058	SW8260	1,1,2,2-TETRACHLOROETHANE	10	U	10	UJ	0.12	10	ug/kg	SS
SB	NDA063	SW8260	1,1,2,2-TETRACHLOROETHANE	11	U	11	UJ	0.16	11	ug/kg	SS
SB	NDA064FD1	SW8260	1,1,2,2-TETRACHLOROETHANE	10	U	10	UJ	0.15	10	ug/kg	SS
SB	NDA066	SW8260	1,1,2,2-TETRACHLOROETHANE	10	U	10	UJ	0.14	10	ug/kg	SS
SB	NDA070	SW8260	1,1,2,2-TETRACHLOROETHANE	10	U	10	UJ	0.13	10	ug/kg	SS
SB	NDA081	SW8260	1,1,2,2-TETRACHLOROETHANE	10	U	10	UJ	0.14	10	ug/kg	SS
SB	NDA118	SW8260	1,1,2,2-TETRACHLOROETHANE	12	U	12	UJ	0.18	12	ug/kg	SS
SD	NDA050	SW8260	1,1,2,2-TETRACHLOROETHANE	2160	U	2160	UJ	33	2160	ug/kg	SS
SD	NDA051FD1	SW8260	1,1,2,2-TETRACHLOROETHANE	23	U	23	UJ	0.34	23	ug/kg	SS
SD	NDA052	SW8260	1,1,2,2-TETRACHLOROETHANE	20	U	20	UJ	0.3	20	ug/kg	SS
SD	NDA053	SW8260	1,1,2,2-TETRACHLOROETHANE	14	U	14	UJ	0.2	14	ug/kg	SS
SD	NDA045	SW8260	1,1,2,2-TETRACHLOROETHANE	36	U	36	UJ	0.54	36	ug/kg	SS
SD	NDA046	SW8260	1,1,2,2-TETRACHLOROETHANE	43	U	43	UJ	0.65	43	ug/kg	SS
SD	NDA302	SW8260	1,1,2,2-TETRACHLOROETHANE	26	U	26	UJ	0.38	26	ug/kg	SS
SD	NDA303	SW8260	1,1,2,2-TETRACHLOROETHANE	47	U	47	UJ	0.7	47	ug/kg	SS
SS	NDA133	SW8260	1,1,2,2-TETRACHLOROETHANE	16	U	16	UJ	0.23	16	ug/kg	SS
SS	NDA135	SW8260	1,1,2,2-TETRACHLOROETHANE	14	U	14	UJ	0.2	14	ug/kg	SS
SS	NDA137	SW8260	1,1,2,2-TETRACHLOROETHANE	11	U	11	UJ	0.2	11	ug/kg	SS
SS	NDA139	SW8260	1,1,2,2-TETRACHLOROETHANE	11	U	11	UJ	0.16	11	ug/kg	SS
SS	NDA141	SW8260	1,1,2,2-TETRACHLOROETHANE	14	U	14	UJ	0.2	14	ug/kg	SS
SS	NDA159	SW8260	1,1,2,2-TETRACHLOROETHANE	14	U	14	UJ	0.2	14	ug/kg	SS
SS	NDA170	SW8260	1,1,2,2-TETRACHLOROETHANE	16	U	16	UJ	0.2	16	ug/kg	SS
SS	NDA196	SW8260	1,1,2,2-TETRACHLOROETHANE	10	U	10	UJ	0.13	10	ug/kg	SS
SS	NDA198	SW8260	1,1,2,2-TETRACHLOROETHANE	11	U	11	UJ	0.17	11	ug/kg	SS
SS	NDA199	SW8260	1,1,2,2-TETRACHLOROETHANE	14	U	14	UJ	0.2	14	ug/kg	SS
SS	NDA180	SW8260	1,1,2,2-TETRACHLOROETHANE	11	U	11	UJ	0.16	11	ug/kg	SS
SS	NDA189	SW8260	1,1,2,2-TETRACHLOROETHANE	10	U	10	UJ	0.2	10	ug/kg	SS
SS	NDA072FD1	SW8260	1,1,2,2-TETRACHLOROETHANE	11	U	11	UJ	0.16	11	ug/kg	SS
SS	NDA117	SW8260	1,1,2,2-TETRACHLOROETHANE	10	U	10	UJ	0.15	10	ug/kg	SS
SB	NDA234	SW8260	1,1,1-TRICHLOROETHANE	10	U	10	UJ	0.3	10	ug/kg	SS
SB	NDA058	SW8260	1,1,1-TRICHLOROETHANE	10	U	10	UJ	0.26	10	ug/kg	SS
SB	NDA063	SW8260	1,1,1-TRICHLOROETHANE	11	U	11	UJ	0.3	11	ug/kg	SS
SB	NDA064FD1	SW8260	1,1,1-TRICHLOROETHANE	10	U	10	UJ	0.32	10	ug/kg	SS
SB	NDA066	SW8260	1,1,1-TRICHLOROETHANE	10	U	10	UJ	0.3	10	ug/kg	SS
SB	NDA070	SW8260	1,1,1-TRICHLOROETHANE	10	U	10	UJ	0.27	10	ug/kg	SS
SB	NDA081	SW8260	1,1,1-TRICHLOROETHANE	10	U	10	UJ	0.3	10	ug/kg	SS
SB	NDA118	SW8260	1,1,1-TRICHLOROETHANE	12	U	12	UJ	0.37	12	ug/kg	SS
SD	NDA050	SW8260	1,1,1-TRICHLOROETHANE	2160	U	2160	UJ	67	2160	ug/kg	SS
SD	NDA051FD1	SW8260	1,1,1-TRICHLOROETHANE	23	U	23	UJ	0.7	23	ug/kg	SS
SD	NDA052	SW8260	1,1,1-TRICHLOROETHANE	20	U	20	UJ	0.61	20	ug/kg	SS
SD	NDA053	SW8260	1,1,1-TRICHLOROETHANE	14	U	14	UJ	0.4	14	ug/kg	SS

Matrix	Sample ID	Analytical Method	Parameter	Lab Result	Lab Qual	Final Result	Final Qual	DL	RL	Units	Comments
SD	NDA045	SW8260	1,1,1-TRICHLOROETHANE	36	U	36	UJ	1	36	ug/kg	SS
SD	NDA046	SW8260	1,1,1-TRICHLOROETHANE	43	U	43	UJ	1	43	ug/kg	SS
SD	NDA302	SW8260	1,1,1-TRICHLOROETHANE	26	U	26	UJ	0.79	26	ug/kg	SS
SD	NDA303	SW8260	1,1,1-TRICHLOROETHANE	47	U	47	UJ	1	47	ug/kg	SS
SS	NDA133	SW8260	1,1,1-TRICHLOROETHANE	16	U	16	UJ	0.49	16	ug/kg	SS
SS	NDA135	SW8260	1,1,1-TRICHLOROETHANE	14	U	14	UJ	0.42	14	ug/kg	SS
SS	NDA137	SW8260	1,1,1-TRICHLOROETHANE	11	U	11	UJ	0.33	11	ug/kg	SS
SS	NDA139	SW8260	1,1,1-TRICHLOROETHANE	11	U	11	UJ	0.33	11	ug/kg	SS
SS	NDA141	SW8260	1,1,1-TRICHLOROETHANE	14	U	14	UJ	0.43	14	ug/kg	SS
SS	NDA159	SW8260	1,1,1-TRICHLOROETHANE	14	U	14	UJ	0.4	14	ug/kg	SS
SS	NDA170	SW8260	1,1,1-TRICHLOROETHANE	16	U	16	UJ	0.49	16	ug/kg	SS
SS	NDA196	SW8260	1,1,1-TRICHLOROETHANE	10	U	10	UJ	0.28	10	ug/kg	SS
SS	NDA198	SW8260	1,1,1-TRICHLOROETHANE	11	U	11	UJ	0.35	11	ug/kg	SS
SS	NDA199	SW8260	1,1,1-TRICHLOROETHANE	14	U	14	UJ	0.4	14	ug/kg	SS
SS	NDA180	SW8260	1,1,1-TRICHLOROETHANE	11	U	11	UJ	0.34	11	ug/kg	SS
SS	NDA182	SW8260	1,1,1-TRICHLOROETHANE	14	U	14	UJ	0.4	14	ug/kg	SS
SS	NDA189	SW8260	1,1,1-TRICHLOROETHANE	10	U	10	UJ	0.3	10	ug/kg	SS
SS	NDA084	SW8260	1,1,1-TRICHLOROETHANE	13	U	13	UJ	0.4	13	ug/kg	SS
SS	NDA072FD1	SW8260	1,1,1-TRICHLOROETHANE	11	U	11	UJ	0.33	11	ug/kg	SS
SS	NDA117	SW8260	1,1,1-TRICHLOROETHANE	10	U	10	UJ	0.3	10	ug/kg	SS
SB	NDA058	E200.7	VANADIUM	35.5	=	35.5	J	0.08	11.2	mg/kg	SD, MS
SB	NDA060	E200.7	VANADIUM	23.2	=	23.2	J	0.08	11	mg/kg	SD, MS
SD	NDA047	E200.7	VANADIUM	106	=	106	J	0.08	10.9	mg/kg	SD, MS
SD	NDA048	E200.7	VANADIUM	111	=	111	J	0.09	11.5	mg/kg	SD, MS
SD	NDA049	E200.7	VANADIUM	91.7	=	91.7	J	0.08	11	mg/kg	SD, MS
SS	NDA057	E200.7	VANADIUM	29	=	29	J	0.1	12.5	mg/kg	SD, MS
SS	NDA061	E200.7	VANADIUM	21.3	=	21.3	J	0.08	10.5	mg/kg	SD, MS
SS	NDA062FD1	E200.7	VANADIUM	26.6	=	26.6	J	0.08	10.7	mg/kg	SD, MS
SB	NDA058	E200.7	LEAD	7.8	=	7.8	J	0.12	0.67	mg/kg	SD, MS
SB	NDA060	E200.7	LEAD	10	=	10	J	0.12	0.66	mg/kg	SD, MS
SD	NDA047	E200.7	LEAD	3.9	=	3.9	J	0.12	0.66	mg/kg	SD, MS
SD	NDA048	E200.7	LEAD	4.1	=	4.1	J	0.13	0.69	mg/kg	SD, MS
SD	NDA049	E200.7	LEAD	1.7	=	1.7	J	0.12	0.66	mg/kg	SD, MS
SS	NDA057	E200.7	LEAD	12	=	12	J	0.14	0.75	mg/kg	SD, MS
SS	NDA059	E200.7	LEAD	20.1	=	20.1	J	0.12	0.65	mg/kg	SD, MS
SS	NDA061	E200.7	LEAD	11	=	11	J	0.12	0.63	mg/kg	SD, MS
SS	NDA062FD1	E200.7	LEAD	16.4	=	16.4	J	0.12	0.64	mg/kg	SD, MS
SD	NDA048	E200.7	COBALT	42.4	=	42.4	J	0.05	11.5	mg/kg	SD, MS
SD	NDA049	E200.7	COBALT	15.3	=	15.3	J	0.05	11	mg/kg	SD, MS
SB	NDA213	E200.7	CHROMIUM, TOTAL	33.3	=	33.3	J	0.05	2.2	mg/kg	SD, MS
SB	NDA216	E200.7	CHROMIUM, TOTAL	6.1	=	6.1	J	0.05	2.2	mg/kg	SD, MS
SB	NDA218	E200.7	CHROMIUM, TOTAL	7.8	=	7.8	J	0.05	2.2	mg/kg	SD, MS
SB	NDA219	E200.7	CHROMIUM, TOTAL	10	=	10	J	0.05	2.2	mg/kg	SD, MS
SB	NDA220	E200.7	CHROMIUM, TOTAL	10.8	=	10.8	J	0.05	2.3	mg/kg	SD, MS
SB	NDA221	E200.7	CHROMIUM, TOTAL	4.8	=	4.8	J	0.05	2.1	mg/kg	SD, MS
SB	NDA222	E200.7	CHROMIUM, TOTAL	5.7	=	5.7	J	0.05	2	mg/kg	SD, MS
SB	NDA223	E200.7	CHROMIUM, TOTAL	8.4	=	8.4	J	0.05	2.3	mg/kg	SD, MS
SD	NDA054	E200.7	CHROMIUM, TOTAL	13.4	=	13.4	J	0.05	2.1	mg/kg	SD, MS
SD	NDA055	E200.7	CHROMIUM, TOTAL	7.7	=	7.7	J	0.05	2	mg/kg	SD, MS
WG	NDA002	E200.7	SODIUM, DISSOLVED	1830000	E	1830000	J	115	5000	ug/L	SD
WG	NDA002DL1	E200.7	SODIUM, DISSOLVED	2200000	=	2200000	R	575	25000	ug/L	SD
WG	NDA003	E200.7	SODIUM, DISSOLVED	1040000	E	1040000	J	115	5000	ug/L	SD
WG	NDA003DL1	E200.7	SODIUM, DISSOLVED	1190000	=	1190000	R	575	25000	ug/L	SD
WG	NDA003FD1	E200.7	SODIUM, DISSOLVED	1060000	E	1060000	J	115	5000	ug/L	SD
WG	1	E200.7	SODIUM, DISSOLVED	1200000	=	1200000	R	575	25000	ug/L	SD
WG	NDA004	E200.7	SODIUM, DISSOLVED	2660000	E	2660000	R	115	5000	ug/L	SD
WG	NDA004DL1	E200.7	SODIUM, DISSOLVED	3460000	=	3460000	J	575	25000	ug/L	SD
WG	NDA023	E200.7	SODIUM, DISSOLVED	137000	=	137000	J	115	5000	ug/L	SD
WG	NDA028	E200.7	SODIUM, DISSOLVED	118000	=	118000	J	115	5000	ug/L	SD
WG	NDA001DL1	E200.7	SODIUM, DISSOLVED	3970000	=	3970000	J	575	25000	ug/L	SD
WG	NDA013	E200.7	SODIUM, DISSOLVED	96100	=	96100	J	115	5000	ug/L	SD
WG	NDA014	E200.7	SODIUM, DISSOLVED	118000	=	118000	J	115	5000	ug/L	SD
SW	NDA035DL2	E200.7	SODIUM	1.2E+07	=	11900000	J	11500	500000	ug/L	SD
SW	NDA036DL2	E200.7	SODIUM	1.2E+07	=	11500000	J	11500	500000	ug/L	SD
SW	NDA037DL2	E200.7	SODIUM	1.2E+07	=	11600000	J	11500	500000	ug/L	SD
SW	2	E200.7	SODIUM	1.1E+07	=	11300000	J	11500	500000	ug/L	SD
SW	NDA039DL2	E200.7	SODIUM	1.2E+07	=	11700000	J	11500	500000	ug/L	SD
SW	NDA040DL2	E200.7	SODIUM	1.2E+07	=	11500000	J	11500	500000	ug/L	SD
SW	NDA300DL2	E200.7	SODIUM	1.2E+07	=	11600000	J	11500	500000	ug/L	SD
SW	NDA301DL2	E200.7	SODIUM	1.2E+07	=	12100000	J	11500	500000	ug/L	SD

Matrix	Sample ID	Analytical Method	Parameter	Lab Result	Lab Qual	Final Result	Final Qual	DL	RL	Units	Comments
WG	NDA002	E200.7	SODIUM	1810000	E	1810000	J	115	5000	ug/L	SD
WG	NDA002DL1	E200.7	SODIUM	2180000	=	2180000	R	575	25000	ug/L	SD
WG	NDA003	E200.7	SODIUM	1040000	E	1040000	J	115	5000	ug/L	SD
WG	NDA003DL1	E200.7	SODIUM	1200000	=	1200000	R	575	25000	ug/L	SD
WG	NDA003FD1	E200.7	SODIUM	1040000	E	1040000	J	115	5000	ug/L	SD
WG	1	E200.7	SODIUM	1210000	=	1210000	R	575	25000	ug/L	SD
WG	NDA004	E200.7	SODIUM	2720000	E	2720000	R	115	5000	ug/L	SD
WG	NDA004DL1	E200.7	SODIUM	3550000	=	3550000	J	575	25000	ug/L	SD
WG	NDA023	E200.7	SODIUM	139000	=	139000	J	115	5000	ug/L	SD
WG	NDA028	E200.7	SODIUM	119000	=	119000	J	115	5000	ug/L	SD
WG	NDA001DL1	E200.7	SODIUM	4340000	=	4340000	J	575	25000	ug/L	SD
WG	NDA013	E200.7	SODIUM	108000	=	108000	J	115	5000	ug/L	SD
WG	NDA014	E200.7	SODIUM	116000	=	116000	J	115	5000	ug/L	SD
WG	NDA024	E200.7	POTASSIUM, DISSOLVED	6440	=	6440	J	26.6	5000	ug/L	SD
WG	NDA029	E200.7	POTASSIUM, DISSOLVED	5040	=	5040	J	26.6	5000	ug/L	SD
WG	NDA002	E200.7	POTASSIUM, DISSOLVED	29800	=	29800	J	26.6	5000	ug/L	SD
WG	NDA003	E200.7	POTASSIUM, DISSOLVED	6560	=	6560	J	26.6	5000	ug/L	SD
WG	NDA003FD1	E200.7	POTASSIUM, DISSOLVED	6880	=	6880	J	26.6	5000	ug/L	SD
WG	NDA004	E200.7	POTASSIUM, DISSOLVED	18800	=	18800	J	26.6	5000	ug/L	SD
WG	NDA001	E200.7	POTASSIUM, DISSOLVED	12500	=	12500	J	26.6	5000	ug/L	SD
WG	NDA024	E200.7	POTASSIUM	10400	=	10400	J	26.6	5000	ug/L	SD
WG	NDA025FD1	E200.7	POTASSIUM	5720	=	5720	J	26.6	5000	ug/L	SD
WG	NDA029	E200.7	POTASSIUM	6000	=	6000	J	26.6	5000	ug/L	SD
WG	NDA022	E200.7	POTASSIUM	5650	=	5650	J	26.6	5000	ug/L	SD
WG	NDA002	E200.7	POTASSIUM	30000	=	30000	J	26.6	5000	ug/L	SD
WG	NDA003	E200.7	POTASSIUM	6990	=	6990	J	26.6	5000	ug/L	SD
WG	NDA003FD1	E200.7	POTASSIUM	6930	=	6930	J	26.6	5000	ug/L	SD
WG	NDA004	E200.7	POTASSIUM	20100	=	20100	J	26.6	5000	ug/L	SD
WG	NDA023	E200.7	POTASSIUM	12000	=	12000	J	26.6	5000	ug/L	SD
WG	NDA001	E200.7	POTASSIUM	14400	=	14400	J	26.6	5000	ug/L	SD
WG	NDA013	E200.7	POTASSIUM	5680	=	5680	J	26.6	5000	ug/L	SD
WG	NDA026	E200.7	POTASSIUM	5860	=	5860	J	26.6	5000	ug/L	SD
SW	NDA035	E200.7	MANGANESE	25.7	=	25.7	J	0.1	15	ug/L	SD
SW	NDA036	E200.7	MANGANESE	19.8	=	19.8	J	0.1	15	ug/L	SD
SW	NDA037	E200.7	MANGANESE	18.1	=	18.1	J	0.1	15	ug/L	SD
SW	NDA038FD1	E200.7	MANGANESE	17.2	=	17.2	J	0.1	15	ug/L	SD
SW	NDA039	E200.7	MANGANESE	18.9	=	18.9	J	0.1	15	ug/L	SD
SW	NDA300	E200.7	MANGANESE	21.3	=	21.3	J	0.1	15	ug/L	SD
SW	NDA301	E200.7	MANGANESE	30.8	=	30.8	J	0.1	15	ug/L	SD
WG	NDA001	E200.7	IRON, DISSOLVED	12.2	U	12.2	J	12.2	100	ug/L	SD
SW	NDA035	E200.7	IRON	887	=	887	J	12.2	100	ug/L	SD
SW	NDA036	E200.7	IRON	700	=	700	J	12.2	100	ug/L	SD
SW	NDA037	E200.7	IRON	761	=	761	J	12.2	100	ug/L	SD
SW	NDA038FD1	E200.7	IRON	756	=	756	J	12.2	100	ug/L	SD
SW	NDA039	E200.7	IRON	883	=	883	J	12.2	100	ug/L	SD
SW	NDA040	E200.7	IRON	614	=	614	J	12.2	100	ug/L	SD
SW	NDA300	E200.7	IRON	979	=	979	J	12.2	100	ug/L	SD
SW	NDA301	E200.7	IRON	1410	=	1410	J	12.2	100	ug/L	SD
WG	NDA001	E200.7	IRON	1830	=	1830	J	12.2	100	ug/L	SD
WG	NDA013	E200.7	IRON	32100	=	32100	J	12.2	100	ug/L	SD
WG	NDA014	E200.7	IRON	147	=	147	J	12.2	100	ug/L	SD
WG	NDA002	E200.7	CALCIUM, DISSOLVED	1020000	E	1020000	J	11.7	5000	ug/L	SD
WG	NDA002DL1	E200.7	CALCIUM, DISSOLVED	1320000	=	1320000	R	58.5	25000	ug/L	SD
WG	NDA003	E200.7	CALCIUM, DISSOLVED	96800	=	96800	J	11.7	5000	ug/L	SD
WG	NDA003FD1	E200.7	CALCIUM, DISSOLVED	102000	=	102000	J	11.7	5000	ug/L	SD
WG	NDA004	E200.7	CALCIUM, DISSOLVED	826000	E	826000	R	11.7	5000	ug/L	SD
WG	NDA004DL1	E200.7	CALCIUM, DISSOLVED	1050000	=	1050000	J	58.5	25000	ug/L	SD
WG	NDA023	E200.7	CALCIUM, DISSOLVED	99500	=	99500	J	11.7	5000	ug/L	SD
WG	NDA028	E200.7	CALCIUM, DISSOLVED	50600	=	50600	J	11.7	5000	ug/L	SD
SW	NDA035DL1	E200.7	CALCIUM	476000	=	476000	J	58.5	25000	ug/L	SD
SW	NDA036DL1	E200.7	CALCIUM	463000	=	463000	J	58.5	25000	ug/L	SD
SW	NDA037DL1	E200.7	CALCIUM	464000	=	464000	J	58.5	25000	ug/L	SD
SW	1	E200.7	CALCIUM	455000	=	455000	J	58.5	25000	ug/L	SD
SW	NDA039DL1	E200.7	CALCIUM	465000	=	465000	J	58.5	25000	ug/L	SD
SW	NDA040DL1	E200.7	CALCIUM	470000	=	470000	J	58.5	25000	ug/L	SD
SW	NDA300DL1	E200.7	CALCIUM	469000	=	469000	J	58.5	25000	ug/L	SD
SW	NDA301DL1	E200.7	CALCIUM	487000	=	487000	J	58.5	25000	ug/L	SD
WG	NDA002	E200.7	CALCIUM	1020000	E	1020000	J	11.7	5000	ug/L	SD
WG	NDA002DL1	E200.7	CALCIUM	1340000	=	1340000	R	58.5	25000	ug/L	SD
WG	NDA003	E200.7	CALCIUM	103000	=	103000	J	11.7	5000	ug/L	SD

Matrix	Sample ID	Analytical Method	Parameter	Lab Result	Lab Qual	Final Result	Final Qual	DL	RL	Units	Comments
WG	NDA003FD1	E200.7	CALCIUM	103000	=	103000	J	11.7	5000	ug/L	SD
WG	NDA004	E200.7	CALCIUM	853000	E	853000	R	11.7	5000	ug/L	SD
WG	NDA004DL1	E200.7	CALCIUM	1090000	=	1090000	J	58.5	25000	ug/L	SD
WG	NDA023	E200.7	CALCIUM	115000	=	115000	J	11.7	5000	ug/L	SD
WG	NDA028	E200.7	CALCIUM	50400	=	50400	J	11.7	5000	ug/L	SD
SB	NDA245	E200.7	ZINC	63.7	=	63.7	J	0.29	4.7	mg/kg	SD
SB	NDA246	E200.7	ZINC	29.6	=	29.6	J	0.31	4.9	mg/kg	SD
SB	NDA247FD1	E200.7	ZINC	30.7	=	30.7	J	0.29	4.7	mg/kg	SD
SB	NDA248	E200.7	ZINC	29.5	=	29.5	J	0.31	4.9	mg/kg	SD
SB	NDA249	E200.7	ZINC	71.6	=	71.6	J	0.28	4.5	mg/kg	SD
SB	NDA252	E200.7	ZINC	28.2	=	28.2	J	0.29	4.7	mg/kg	SD
SB	NDA253	E200.7	ZINC	28.9	=	28.9	J	0.32	5.1	mg/kg	SD
SB	NDA254	E200.7	ZINC	30.2	=	30.2	J	0.32	5.1	mg/kg	SD
SB	NDA255	E200.7	ZINC	60.4	=	60.4	J	0.31	5	mg/kg	SD
SS	NDA185	E200.7	ZINC	26.5	=	26.5	J	0.33	5.3	mg/kg	SD
SS	NDA186	E200.7	ZINC	80.4	=	80.4	J	0.28	4.5	mg/kg	SD
SS	NDA187	E200.7	ZINC	48.2	=	48.2	J	0.27	4.3	mg/kg	SD
SS	NDA188	E200.7	ZINC	39.9	=	39.9	J	0.34	5.5	mg/kg	SD
SS	NDA189	E200.7	ZINC	59.2	=	59.2	J	0.28	4.5	mg/kg	SD
SS	NDA190	E200.7	ZINC	49.1	=	49.1	J	0.28	4.5	mg/kg	SD
SS	NDA191	E200.7	ZINC	35.2	=	35.2	J	0.26	4.1	mg/kg	SD
SS	NDA192FD1	E200.7	ZINC	31.4	=	31.4	J	0.29	4.7	mg/kg	SD
SS	NDA193	E200.7	ZINC	50.8	=	50.8	J	0.26	4.1	mg/kg	SD
SS	NDA194	E200.7	ZINC	29	=	29	J	0.31	4.9	mg/kg	SD
SS	NDA195	E200.7	ZINC	47.5	=	47.5	J	0.26	4.1	mg/kg	SD
SB	NDA213	E200.7	VANADIUM	65.2	=	65.2	J	0.08	11.2	mg/kg	SD
SB	NDA214FD1	E200.7	VANADIUM	57.8	=	57.8	J	0.08	11.1	mg/kg	SD
SB	NDA215	E200.7	VANADIUM	76.8	=	76.8	J	0.09	11.6	mg/kg	SD
SB	NDA216	E200.7	VANADIUM	45	=	45	J	0.08	11	mg/kg	SD
SB	NDA217	E200.7	VANADIUM	39.7	=	39.7	J	0.09	11.5	mg/kg	SD
SB	NDA218	E200.7	VANADIUM	52.6	=	52.6	J	0.08	11	mg/kg	SD
SB	NDA219	E200.7	VANADIUM	44.2	=	44.2	J	0.08	11.1	mg/kg	SD
SB	NDA220	E200.7	VANADIUM	63.3	=	63.3	J	0.09	11.5	mg/kg	SD
SB	NDA221	E200.7	VANADIUM	33.9	=	33.9	J	0.08	10.7	mg/kg	SD
SB	NDA222	E200.7	VANADIUM	26.1	=	26.1	J	0.08	10.1	mg/kg	SD
SB	NDA223	E200.7	VANADIUM	59.7	=	59.7	J	0.09	11.4	mg/kg	SD
SB	NDA245	E200.7	VANADIUM	129	=	129	J	0.09	11.7	mg/kg	SD
SB	NDA246	E200.7	VANADIUM	54.2	=	54.2	J	0.09	12.3	mg/kg	SD
SB	NDA247FD1	E200.7	VANADIUM	51.8	=	51.8	J	0.09	11.7	mg/kg	SD
SB	NDA248	E200.7	VANADIUM	55.2	=	55.2	J	0.09	12.2	mg/kg	SD
SB	NDA249	E200.7	VANADIUM	160	=	160	J	0.08	11.2	mg/kg	SD
SB	NDA252	E200.7	VANADIUM	36.6	=	36.6	J	0.09	11.7	mg/kg	SD
SB	NDA253	E200.7	VANADIUM	84	=	84	J	0.1	12.6	mg/kg	SD
SB	NDA254	E200.7	VANADIUM	80.9	=	80.9	J	0.1	12.6	mg/kg	SD
SB	NDA255	E200.7	VANADIUM	129	=	129	J	0.09	12.4	mg/kg	SD
SD	NDA054	E200.7	VANADIUM	44.6	=	44.6	J	0.08	10.3	mg/kg	SD
SS	NDA185	E200.7	VANADIUM	36.2	=	36.2	J	0.11	13.2	mg/kg	SD
SS	NDA186	E200.7	VANADIUM	43.5	=	43.5	J	0.08	11.1	mg/kg	SD
SS	NDA187	E200.7	VANADIUM	46.4	=	46.4	J	0.08	10.8	mg/kg	SD
SS	NDA188	E200.7	VANADIUM	41	=	41	J	0.11	13.7	mg/kg	SD
SS	NDA189	E200.7	VANADIUM	41.3	=	41.3	J	0.09	11.2	mg/kg	SD
SS	NDA190	E200.7	VANADIUM	39.7	=	39.7	J	0.09	11.3	mg/kg	SD
SS	NDA191	E200.7	VANADIUM	45.9	=	45.9	J	0.08	10.2	mg/kg	SD
SS	NDA192FD1	E200.7	VANADIUM	38.5	=	38.5	J	0.09	11.6	mg/kg	SD
SS	NDA193	E200.7	VANADIUM	57.3	=	57.3	J	0.08	10.4	mg/kg	SD
SS	NDA194	E200.7	VANADIUM	46.3	=	46.3	J	0.09	12.3	mg/kg	SD
SS	NDA195	E200.7	VANADIUM	95.9	=	95.9	J	0.08	10.3	mg/kg	SD
SB	NDA063	E200.7	SODIUM	1510	=	1510	J	12.5	1090	mg/kg	SD
SB	NDA064FD1	E200.7	SODIUM	1470	=	1470	J	12.5	1080	mg/kg	SD
SB	NDA068	E200.7	SODIUM	3730	=	3730	J	12.7	1100	mg/kg	SD
SB	NDA070	E200.7	SODIUM	1370	=	1370	J	12.2	1060	mg/kg	SD
SB	NDA075	E200.7	SODIUM	1420	=	1420	J	12.1	1050	mg/kg	SD
SB	NDA079	E200.7	SODIUM	1960	=	1960	J	13.2	1150	mg/kg	SD
SS	NDA076	E200.7	SODIUM	1220	=	1220	J	12.2	1060	mg/kg	SD
SS	NDA078	E200.7	SODIUM	1170	=	1170	J	12.2	1060	mg/kg	SD
SB	NDA213	E200.7	POTASSIUM	1700	=	1700	J	3	1120	mg/kg	SD
SB	NDA214FD1	E200.7	POTASSIUM	1480	=	1480	J	3	1110	mg/kg	SD
SB	NDA215	E200.7	POTASSIUM	2340	=	2340	J	3.1	1160	mg/kg	SD
SB	NDA216	E200.7	POTASSIUM	1380	=	1380	J	2.9	1100	mg/kg	SD
SB	NDA220	E200.7	POTASSIUM	1240	=	1240	J	3.1	1150	mg/kg	SD

Matrix	Sample ID	Analytical Method	Parameter	Lab Result	Lab Qual	Final Result	Final Qual	DL	RL	Units	Comments
SB	NDA246	E200.7	POTASSIUM	1290	=	1290	J	3.3	1230	mg/kg	SD
SB	NDA247FD1	E200.7	POTASSIUM	1230	=	1230	J	3.1	1170	mg/kg	SD
SB	NDA253	E200.7	POTASSIUM	1710	=	1710	J	3.4	1260	mg/kg	SD
SB	NDA254	E200.7	POTASSIUM	1380	=	1380	J	3.4	1260	mg/kg	SD
SB	NDA102	E200.7	POTASSIUM	2630	=	2630	J	4.2	1570	mg/kg	SD
SB	NDA105	E200.7	POTASSIUM	2670	=	2670	J	4.3	1630	mg/kg	SD
SB	NDA106FD1	E200.7	POTASSIUM	2740	=	2740	J	4.3	1620	mg/kg	SD
SB	NDA108	E200.7	POTASSIUM	1810	=	1810	J	3.6	1350	mg/kg	SD
SB	NDA110	E200.7	POTASSIUM	2510	=	2510	J	3.5	1330	mg/kg	SD
SB	NDA112	E200.7	POTASSIUM	1590	=	1590	J	3.6	1340	mg/kg	SD
SD	NDA054	E200.7	POTASSIUM	1070	=	1070	J	2.7	1030	mg/kg	SD
SD	NDA047	E200.7	POTASSIUM	1390	=	1390	J	2.9	1090	mg/kg	SD
SD	NDA048	E200.7	POTASSIUM	1460	=	1460	J	3.1	1150	mg/kg	SD
SS	NDA101	E200.7	POTASSIUM	1740	=	1740	J	3.6	1350	mg/kg	SD
SS	NDA103	E200.7	POTASSIUM	1900	=	1900	J	3.7	1390	mg/kg	SD
SS	NDA104FD1	E200.7	POTASSIUM	2300	=	2300	J	3.8	1430	mg/kg	SD
SS	NDA109	E200.7	POTASSIUM	2700	=	2700	J	3.5	1310	mg/kg	SD
SS	NDA111	E200.7	POTASSIUM	2610	=	2610	J	3.6	1360	mg/kg	SD
SB	NDA245	E200.7	NICKEL	17.8	=	17.8	J	0.09	9.3	mg/kg	SD
SB	NDA249	E200.7	NICKEL	26.3	=	26.3	J	0.08	8.9	mg/kg	SD
SB	NDA255	E200.7	NICKEL	43.2	=	43.2	J	0.09	9.9	mg/kg	SD
SS	NDA189	E200.7	NICKEL	9.2	=	9.2	J	0.09	9	mg/kg	SD
SS	NDA193	E200.7	NICKEL	8.5	=	8.5	J	0.08	8.3	mg/kg	SD
SS	NDA195	E200.7	NICKEL	28.3	=	28.3	J	0.08	8.3	mg/kg	SD
SB	NDA213	E200.7	MANGANESE	698	=	698	J	0.01	3.3	mg/kg	SD
SB	NDA214FD1	E200.7	MANGANESE	460	=	460	J	0.01	3.3	mg/kg	SD
SB	NDA215	E200.7	MANGANESE	956	=	956	J	0.01	3.5	mg/kg	SD
SB	NDA216	E200.7	MANGANESE	424	=	424	J	0.01	3.3	mg/kg	SD
SB	NDA217	E200.7	MANGANESE	292	=	292	J	0.01	3.5	mg/kg	SD
SB	NDA218	E200.7	MANGANESE	408	=	408	J	0.01	3.3	mg/kg	SD
SB	NDA219	E200.7	MANGANESE	708	=	708	J	0.01	3.3	mg/kg	SD
SB	NDA220	E200.7	MANGANESE	472	=	472	J	0.01	3.4	mg/kg	SD
SB	NDA221	E200.7	MANGANESE	370	=	370	J	0.01	3.2	mg/kg	SD
SB	NDA222	E200.7	MANGANESE	234	=	234	J	0.01	3	mg/kg	SD
SB	NDA223	E200.7	MANGANESE	472	=	472	J	0.01	3.4	mg/kg	SD
SB	NDA249	E200.7	MANGANESE	921	=	921	J	0.01	3.4	mg/kg	SD
SD	NDA054	E200.7	MANGANESE	387	=	387	J	0.01	3.1	mg/kg	SD
SD	NDA055	E200.7	MANGANESE	546	=	546	J	0.01	3	mg/kg	SD
SB	NDA213	E200.7	MAGNESIUM	3230	=	3230	J	1	1120	mg/kg	SD
SB	NDA214FD1	E200.7	MAGNESIUM	2850	=	2850	J	1	1110	mg/kg	SD
SB	NDA215	E200.7	MAGNESIUM	4510	=	4510	J	1	1160	mg/kg	SD
SB	NDA216	E200.7	MAGNESIUM	2290	=	2290	J	0.99	1100	mg/kg	SD
SB	NDA217	E200.7	MAGNESIUM	2080	=	2080	J	1	1150	mg/kg	SD
SB	NDA218	E200.7	MAGNESIUM	2860	=	2860	J	0.99	1100	mg/kg	SD
SB	NDA219	E200.7	MAGNESIUM	2610	=	2610	J	1	1110	mg/kg	SD
SB	NDA220	E200.7	MAGNESIUM	3600	=	3600	J	1	1150	mg/kg	SD
SB	NDA221	E200.7	MAGNESIUM	1720	=	1720	J	0.96	1070	mg/kg	SD
SB	NDA222	E200.7	MAGNESIUM	1300	=	1300	J	0.91	1010	mg/kg	SD
SB	NDA223	E200.7	MAGNESIUM	3710	=	3710	J	1	1140	mg/kg	SD
SB	NDA245	E200.7	MAGNESIUM	17300	=	17300	J	1	1170	mg/kg	SD
SB	NDA246	E200.7	MAGNESIUM	2960	=	2960	J	1.1	1230	mg/kg	SD
SB	NDA247FD1	E200.7	MAGNESIUM	2780	=	2780	J	1.1	1170	mg/kg	SD
SB	NDA248	E200.7	MAGNESIUM	3030	=	3030	J	1.1	1220	mg/kg	SD
SB	NDA249	E200.7	MAGNESIUM	20400	=	20400	J	1	1120	mg/kg	SD
SB	NDA252	E200.7	MAGNESIUM	1740	=	1740	J	1.1	1170	mg/kg	SD
SB	NDA253	E200.7	MAGNESIUM	3360	=	3360	J	1.1	1260	mg/kg	SD
SB	NDA254	E200.7	MAGNESIUM	3930	=	3930	J	1.1	1260	mg/kg	SD
SB	NDA255	E200.7	MAGNESIUM	17700	=	17700	J	1.1	1240	mg/kg	SD
SD	NDA054	E200.7	MAGNESIUM	4950	=	4950	J	0.92	1030	mg/kg	SD
SD	NDA055	E200.7	MAGNESIUM	2900	=	2900	J	0.9	1010	mg/kg	SD
SD	NDA047	E200.7	MAGNESIUM	6020	=	6020	J	0.98	1090	mg/kg	SD
SD	NDA048	E200.7	MAGNESIUM	5510	=	5510	J	1	1150	mg/kg	SD
SD	NDA049	E200.7	MAGNESIUM	4370	=	4370	J	0.99	1100	mg/kg	SD
SS	NDA186	E200.7	MAGNESIUM	2110	=	2110	J	1	1110	mg/kg	SD
SS	NDA187	E200.7	MAGNESIUM	3010	=	3010	J	0.97	1080	mg/kg	SD
SS	NDA188	E200.7	MAGNESIUM	2290	=	2290	J	1.2	1370	mg/kg	SD
SS	NDA189	E200.7	MAGNESIUM	1710	=	1710	J	1	1120	mg/kg	SD
SS	NDA190	E200.7	MAGNESIUM	2330	=	2330	J	1	1130	mg/kg	SD
SS	NDA191	E200.7	MAGNESIUM	2570	=	2570	J	0.92	1020	mg/kg	SD
SS	NDA192FD1	E200.7	MAGNESIUM	2240	=	2240	J	1	1160	mg/kg	SD

Matrix	Sample ID	Analytical Method	Parameter	Lab Result	Lab Qual	Final Result	Final Qual	DL	RL	Units	Comments
SS	NDA193	E200.7	MAGNESIUM	4870	=	4870	J	0.93	1040	mg/kg	SD
SS	NDA194	E200.7	MAGNESIUM	2490	=	2490	J	1.1	1230	mg/kg	SD
SS	NDA195	E200.7	MAGNESIUM	14200	=	14200	J	0.93	1030	mg/kg	SD
SB	NDA213	E200.7	IRON	22600	=	22600	J	1.4	22.3	mg/kg	SD
SB	NDA214FD1	E200.7	IRON	19500	=	19500	J	1.4	22.3	mg/kg	SD
SB	NDA215	E200.7	IRON	25500	=	25500	J	1.4	23.3	mg/kg	SD
SB	NDA216	E200.7	IRON	14600	=	14600	J	1.3	22.1	mg/kg	SD
SB	NDA217	E200.7	IRON	13400	=	13400	J	1.4	23.1	mg/kg	SD
SB	NDA218	E200.7	IRON	16600	=	16600	J	1.3	22	mg/kg	SD
SB	NDA219	E200.7	IRON	15300	=	15300	J	1.4	22.3	mg/kg	SD
SB	NDA220	E200.7	IRON	21000	=	21000	J	1.4	23	mg/kg	SD
SB	NDA221	E200.7	IRON	11100	=	11100	J	1.3	21.3	mg/kg	SD
SB	NDA222	E200.7	IRON	8670	=	8670	J	1.2	20.1	mg/kg	SD
SB	NDA223	E200.7	IRON	19900	=	19900	J	1.4	22.9	mg/kg	SD
SB	NDA058	E200.7	IRON	8390	=	8390	J	1.4	22.3	mg/kg	SD
SB	NDA060	E200.7	IRON	5530	=	5530	J	1.3	22	mg/kg	SD
SD	NDA054	E200.7	IRON	15700	=	15700	J	1.3	20.5	mg/kg	SD
SD	NDA055	E200.7	IRON	9310	=	9310	J	1.2	20.1	mg/kg	SD
SD	NDA047	E200.7	IRON	26300	=	26300	J	1.3	21.8	mg/kg	SD
SD	NDA048	E200.7	IRON	28000	=	28000	J	1.4	22.9	mg/kg	SD
SD	NDA049	E200.7	IRON	25200	=	25200	J	1.3	22	mg/kg	SD
SS	NDA057	E200.7	IRON	6670	=	6670	J	1.5	25	mg/kg	SD
SS	NDA059	E200.7	IRON	7120	=	7120	J	1.3	21.5	mg/kg	SD
SS	NDA061	E200.7	IRON	6170	=	6170	J	1.3	21	mg/kg	SD
SS	NDA062FD1	E200.7	IRON	7250	=	7250	J	1.3	21.4	mg/kg	SD
SB	NDA213	E200.7	COPPER	28.9	=	28.9	J	0.21	5.6	mg/kg	SD
SB	NDA214FD1	E200.7	COPPER	27.5	=	27.5	J	0.21	5.6	mg/kg	SD
SB	NDA215	E200.7	COPPER	43.3	=	43.3	J	0.22	5.8	mg/kg	SD
SB	NDA216	E200.7	COPPER	20.8	=	20.8	J	0.21	5.5	mg/kg	SD
SB	NDA217	E200.7	COPPER	20.3	=	20.3	J	0.22	5.8	mg/kg	SD
SB	NDA218	E200.7	COPPER	25.8	=	25.8	J	0.21	5.5	mg/kg	SD
SB	NDA219	E200.7	COPPER	25.1	=	25.1	J	0.21	5.6	mg/kg	SD
SB	NDA220	E200.7	COPPER	34.4	=	34.4	J	0.22	5.7	mg/kg	SD
SB	NDA221	E200.7	COPPER	15.8	=	15.8	J	0.2	5.3	mg/kg	SD
SB	NDA222	E200.7	COPPER	10	=	10	J	0.19	5	mg/kg	SD
SB	NDA223	E200.7	COPPER	31.8	=	31.8	J	0.22	5.7	mg/kg	SD
SB	NDA245	E200.7	COPPER	55.2	=	55.2	J	0.22	5.8	mg/kg	SD
SB	NDA246	E200.7	COPPER	27.8	=	27.8	J	0.23	6.2	mg/kg	SD
SB	NDA247FD1	E200.7	COPPER	30.3	=	30.3	J	0.22	5.8	mg/kg	SD
SB	NDA248	E200.7	COPPER	27.6	=	27.6	J	0.23	6.1	mg/kg	SD
SB	NDA249	E200.7	COPPER	54.9	=	54.9	J	0.21	5.6	mg/kg	SD
SB	NDA252	E200.7	COPPER	19.9	=	19.9	J	0.22	5.9	mg/kg	SD
SB	NDA253	E200.7	COPPER	29.3	=	29.3	J	0.24	6.3	mg/kg	SD
SB	NDA254	E200.7	COPPER	29.7	=	29.7	J	0.24	6.3	mg/kg	SD
SB	NDA255	E200.7	COPPER	60.4	=	60.4	J	0.24	6.2	mg/kg	SD
SD	NDA054	E200.7	COPPER	24.2	=	24.2	J	0.2	5.1	mg/kg	SD
SD	NDA055	E200.7	COPPER	16.1	=	16.1	J	0.19	5	mg/kg	SD
SS	NDA185	E200.7	COPPER	21.3	=	21.3	J	0.25	6.6	mg/kg	SD
SS	NDA186	E200.7	COPPER	31.8	=	31.8	J	0.21	5.6	mg/kg	SD
SS	NDA187	E200.7	COPPER	32.2	=	32.2	J	0.2	5.4	mg/kg	SD
SS	NDA188	E200.7	COPPER	24.5	=	24.5	J	0.26	6.9	mg/kg	SD
SS	NDA189	E200.7	COPPER	46.3	=	46.3	J	0.21	5.6	mg/kg	SD
SS	NDA190	E200.7	COPPER	30.8	=	30.8	J	0.22	5.7	mg/kg	SD
SS	NDA191	E200.7	COPPER	22.9	=	22.9	J	0.19	5.1	mg/kg	SD
SS	NDA192FD1	E200.7	COPPER	21.4	=	21.4	J	0.22	5.8	mg/kg	SD
SS	NDA193	E200.7	COPPER	49.6	=	49.6	J	0.2	5.2	mg/kg	SD
SS	NDA194	E200.7	COPPER	27	=	27	J	0.23	6.2	mg/kg	SD
SS	NDA195	E200.7	COPPER	66.7	=	66.7	J	0.2	5.2	mg/kg	SD
SB	NDA213	E200.7	COBALT	11.4	=	11.4	J	0.05	11.2	mg/kg	SD
SB	NDA215	E200.7	COBALT	13.9	=	13.9	J	0.05	11.6	mg/kg	SD
SB	NDA245	E200.7	COBALT	23.4	=	23.4	J	0.05	11.7	mg/kg	SD
SB	NDA249	E200.7	COBALT	27.3	=	27.3	J	0.05	11.2	mg/kg	SD
SB	NDA253	E200.7	COBALT	13.5	=	13.5	J	0.06	12.6	mg/kg	SD
SB	NDA255	E200.7	COBALT	38.3	=	38.3	J	0.06	12.4	mg/kg	SD
SS	NDA195	E200.7	COBALT	16.6	=	16.6	J	0.05	10.3	mg/kg	SD
SB	NDA215	E200.7	CHROMIUM, TOTAL	13	=	13	J	0.05	2.3	mg/kg	SD
SB	NDA245	E200.7	CHROMIUM, TOTAL	28.4	=	28.4	J	0.05	2.3	mg/kg	SD
SB	NDA246	E200.7	CHROMIUM, TOTAL	9.9	=	9.9	J	0.06	2.5	mg/kg	SD
SB	NDA247FD1	E200.7	CHROMIUM, TOTAL	11.2	=	11.2	J	0.05	2.3	mg/kg	SD
SB	NDA248	E200.7	CHROMIUM, TOTAL	7.3	=	7.3	J	0.06	2.4	mg/kg	SD

Matrix	Sample ID	Analytical Method	Parameter	Lab Result	Lab Qual	Final Result	Final Qual	DL	RL	Units	Comments
SB	NDA249	E200.7	CHROMIUM, TOTAL	24.7	=	24.7	J	0.05	2.2	mg/kg	SD
SB	NDA252	E200.7	CHROMIUM, TOTAL	7.7	=	7.7	J	0.05	2.3	mg/kg	SD
SB	NDA253	E200.7	CHROMIUM, TOTAL	12.7	=	12.7	J	0.06	2.5	mg/kg	SD
SB	NDA254	E200.7	CHROMIUM, TOTAL	23.2	=	23.2	J	0.06	2.5	mg/kg	SD
SB	NDA255	E200.7	CHROMIUM, TOTAL	75.4	=	75.4	J	0.06	2.5	mg/kg	SD
SS	NDA185	E200.7	CHROMIUM, TOTAL	6.6	=	6.6	J	0.06	2.6	mg/kg	SD
SS	NDA186	E200.7	CHROMIUM, TOTAL	13	=	13	J	0.05	2.2	mg/kg	SD
SS	NDA187	E200.7	CHROMIUM, TOTAL	11.3	=	11.3	J	0.05	2.2	mg/kg	SD
SS	NDA188	E200.7	CHROMIUM, TOTAL	10.6	=	10.6	J	0.06	2.7	mg/kg	SD
SS	NDA189	E200.7	CHROMIUM, TOTAL	14.7	=	14.7	J	0.05	2.2	mg/kg	SD
SS	NDA190	E200.7	CHROMIUM, TOTAL	11.5	=	11.5	J	0.05	2.3	mg/kg	SD
SS	NDA191	E200.7	CHROMIUM, TOTAL	9.4	=	9.4	J	0.05	2	mg/kg	SD
SS	NDA192FD1	E200.7	CHROMIUM, TOTAL	8	=	8	J	0.05	2.3	mg/kg	SD
SS	NDA193	E200.7	CHROMIUM, TOTAL	13.3	=	13.3	J	0.05	2.1	mg/kg	SD
SS	NDA194	E200.7	CHROMIUM, TOTAL	6.7	=	6.7	J	0.06	2.5	mg/kg	SD
SS	NDA195	E200.7	CHROMIUM, TOTAL	47.5	=	47.5	J	0.05	2.1	mg/kg	SD
SB	NDA213	E200.7	CALCIUM	3070	=	3070	J	1.3	1120	mg/kg	SD
SB	NDA214FD1	E200.7	CALCIUM	2560	=	2560	J	1.3	1110	mg/kg	SD
SB	NDA215	E200.7	CALCIUM	3010	=	3010	J	1.4	1160	mg/kg	SD
SB	NDA216	E200.7	CALCIUM	1740	=	1740	J	1.3	1100	mg/kg	SD
SB	NDA217	E200.7	CALCIUM	2320	=	2320	J	1.4	1150	mg/kg	SD
SB	NDA218	E200.7	CALCIUM	2630	=	2630	J	1.3	1100	mg/kg	SD
SB	NDA219	E200.7	CALCIUM	2400	=	2400	J	1.3	1110	mg/kg	SD
SB	NDA220	E200.7	CALCIUM	2860	=	2860	J	1.3	1150	mg/kg	SD
SB	NDA221	E200.7	CALCIUM	1550	=	1550	J	1.2	1070	mg/kg	SD
SB	NDA222	E200.7	CALCIUM	2180	=	2180	J	1.2	1010	mg/kg	SD
SB	NDA223	E200.7	CALCIUM	3140	=	3140	J	1.3	1140	mg/kg	SD
SB	NDA245	E200.7	CALCIUM	5710	=	5710	J	1.4	1170	mg/kg	SD
SB	NDA246	E200.7	CALCIUM	3280	=	3280	J	1.4	1230	mg/kg	SD
SB	NDA247FD1	E200.7	CALCIUM	2920	=	2920	J	1.4	1170	mg/kg	SD
SB	NDA248	E200.7	CALCIUM	1790	=	1790	J	1.4	1220	mg/kg	SD
SB	NDA249	E200.7	CALCIUM	11200	=	11200	J	1.3	1120	mg/kg	SD
SB	NDA252	E200.7	CALCIUM	2120	=	2120	J	1.4	1170	mg/kg	SD
SB	NDA253	E200.7	CALCIUM	2320	=	2320	J	1.5	1260	mg/kg	SD
SB	NDA254	E200.7	CALCIUM	7940	=	7940	J	1.5	1260	mg/kg	SD
SB	NDA255	E200.7	CALCIUM	6160	=	6160	J	1.4	1240	mg/kg	SD
SB	NDA102DL1	E200.7	CALCIUM	96500	=	96500	J	9.2	7840	mg/kg	SD
SB	NDA105DL1	E200.7	CALCIUM	138000	=	138000	J	9.5	8140	mg/kg	SD
SB	1	E200.7	CALCIUM	212000	=	212000	J	9.5	8090	mg/kg	SD
SB	NDA108DL1	E200.7	CALCIUM	97600	=	97600	J	7.9	6770	mg/kg	SD
SB	NDA110DL1	E200.7	CALCIUM	42600	=	42600	J	7.8	6650	mg/kg	SD
SB	NDA112DL1	E200.7	CALCIUM	122000	=	122000	J	7.8	6700	mg/kg	SD
SD	NDA054	E200.7	CALCIUM	8980	=	8980	J	1.2	1030	mg/kg	SD
SD	NDA055	E200.7	CALCIUM	4570	=	4570	J	1.2	1010	mg/kg	SD
SD	NDA047	E200.7	CALCIUM	5210	=	5210	J	1.3	1090	mg/kg	SD
SD	NDA048	E200.7	CALCIUM	6890	=	6890	J	1.3	1150	mg/kg	SD
SD	NDA049	E200.7	CALCIUM	4700	=	4700	J	1.3	1100	mg/kg	SD
SS	NDA185	E200.7	CALCIUM	1920	=	1920	J	1.5	1320	mg/kg	SD
SS	NDA186	E200.7	CALCIUM	4470	=	4470	J	1.3	1110	mg/kg	SD
SS	NDA187	E200.7	CALCIUM	3110	=	3110	J	1.3	1080	mg/kg	SD
SS	NDA188	E200.7	CALCIUM	2990	=	2990	J	1.6	1370	mg/kg	SD
SS	NDA189	E200.7	CALCIUM	3540	=	3540	J	1.3	1120	mg/kg	SD
SS	NDA190	E200.7	CALCIUM	3200	=	3200	J	1.3	1130	mg/kg	SD
SS	NDA191	E200.7	CALCIUM	3500	=	3500	J	1.2	1020	mg/kg	SD
SS	NDA192FD1	E200.7	CALCIUM	3910	=	3910	J	1.4	1160	mg/kg	SD
SS	NDA193	E200.7	CALCIUM	4550	=	4550	J	1.2	1040	mg/kg	SD
SS	NDA194	E200.7	CALCIUM	3120	=	3120	J	1.4	1230	mg/kg	SD
SS	NDA195	E200.7	CALCIUM	22700	=	22700	J	1.2	1030	mg/kg	SD
SS	NDA062FD1	E200.7	CALCIUM	1430	=	1430	J	1.3	1070	mg/kg	SD
SS	NDA113	E200.7	CALCIUM	35400	=	35400	J	1.5	1240	mg/kg	SD
SS	NDA101DL1	E200.7	CALCIUM	105000	=	105000	J	7.9	6760	mg/kg	SD
SS	NDA103DL1	E200.7	CALCIUM	162000	=	162000	J	8.1	6930	mg/kg	SD
SS	1	E200.7	CALCIUM	163000	=	163000	J	8.4	7160	mg/kg	SD
SS	NDA107DL1	E200.7	CALCIUM	111000	=	111000	J	7.3	6240	mg/kg	SD
SS	NDA109DL1	E200.7	CALCIUM	77800	=	77800	J	7.7	6560	mg/kg	SD
SS	NDA111DL1	E200.7	CALCIUM	119000	=	119000	J	7.9	6780	mg/kg	SD
SB	NDA213	E200.7	BARIUM	115	=	115	J	0.01	44.6	mg/kg	SD
SB	NDA214FD1	E200.7	BARIUM	103	=	103	J	0.01	44.6	mg/kg	SD
SB	NDA215	E200.7	BARIUM	144	=	144	J	0.01	46.5	mg/kg	SD
SB	NDA216	E200.7	BARIUM	79.4	=	79.4	J	0.01	44.2	mg/kg	SD

Matrix	Sample ID	Analytical Method	Parameter	Lab Result	Lab Qual	Final Result	Final Qual	DL	RL	Units	Comments
SB	NDA217	E200.7	BARIUM	54.7	=	54.7	J	0.01	46.2	mg/kg	SD
SB	NDA218	E200.7	BARIUM	72.2	=	72.2	J	0.01	44	mg/kg	SD
SB	NDA219	E200.7	BARIUM	73.5	=	73.5	J	0.01	44.5	mg/kg	SD
SB	NDA220	E200.7	BARIUM	105	=	105	J	0.01	45.9	mg/kg	SD
SB	NDA221	E200.7	BARIUM	67.2	=	67.2	J	0.01	42.7	mg/kg	SD
SB	NDA222	E200.7	BARIUM	45	=	45	J	0.01	40.3	mg/kg	SD
SB	NDA223	E200.7	BARIUM	91.9	=	91.9	J	0.01	45.8	mg/kg	SD
SB	NDA070	E200.7	BARIUM	892	E	892	R	0.01	42.6	mg/kg	SD
SB	NDA070DL1	E200.7	BARIUM	893	=	893	J	0.05	213	mg/kg	SD
SD	NDA054	E200.7	BARIUM	45.7	=	45.7	J	0.01	41	mg/kg	SD
SD	NDA055	E200.7	BARIUM	74.5	=	74.5	J	0.01	40.2	mg/kg	SD
SB	NDA213	E200.7	ALUMINUM	13000	=	13000	J	2.9	44.6	mg/kg	SD
SB	NDA214FD1	E200.7	ALUMINUM	9910	=	9910	J	2.9	44.6	mg/kg	SD
SB	NDA215	E200.7	ALUMINUM	14300	=	14300	J	3	46.5	mg/kg	SD
SB	NDA216	E200.7	ALUMINUM	6640	=	6640	J	2.9	44.2	mg/kg	SD
SB	NDA217	E200.7	ALUMINUM	6380	=	6380	J	3	46.2	mg/kg	SD
SB	NDA218	E200.7	ALUMINUM	7140	=	7140	J	2.8	44	mg/kg	SD
SB	NDA219	E200.7	ALUMINUM	8370	=	8370	J	2.9	44.5	mg/kg	SD
SB	NDA220	E200.7	ALUMINUM	11200	=	11200	J	3	45.9	mg/kg	SD
SB	NDA221	E200.7	ALUMINUM	4900	=	4900	J	2.8	42.7	mg/kg	SD
SB	NDA222	E200.7	ALUMINUM	3540	=	3540	J	2.6	40.3	mg/kg	SD
SB	NDA223	E200.7	ALUMINUM	9580	=	9580	J	3	45.8	mg/kg	SD
SB	NDA245	E200.7	ALUMINUM	23500	=	23500	J	3	46.6	mg/kg	SD
SB	NDA246	E200.7	ALUMINUM	9570	=	9570	J	3.2	49.2	mg/kg	SD
SB	NDA247FD1	E200.7	ALUMINUM	9200	=	9200	J	3	46.8	mg/kg	SD
SB	NDA248	E200.7	ALUMINUM	8940	=	8940	J	3.2	48.8	mg/kg	SD
SB	NDA249	E200.7	ALUMINUM	25900	=	25900	J	2.9	44.7	mg/kg	SD
SB	NDA252	E200.7	ALUMINUM	6790	=	6790	J	3	46.9	mg/kg	SD
SB	NDA253	E200.7	ALUMINUM	10600	=	10600	J	3.3	50.6	mg/kg	SD
SB	NDA254	E200.7	ALUMINUM	10700	=	10700	J	3.3	50.5	mg/kg	SD
SB	NDA255	E200.7	ALUMINUM	24600	=	24600	J	3.2	49.6	mg/kg	SD
SB	NDA058	E200.7	ALUMINUM	7470	=	7470	J	2.9	44.6	mg/kg	SD
SB	NDA060	E200.7	ALUMINUM	4610	=	4610	J	2.8	44	mg/kg	SD
SD	NDA054	E200.7	ALUMINUM	9050	=	9050	J	2.6	41	mg/kg	SD
SD	NDA055	E200.7	ALUMINUM	4380	=	4380	J	2.6	40.2	mg/kg	SD
SD	NDA047	E200.7	ALUMINUM	13200	=	13200	J	2.8	43.7	mg/kg	SD
SD	NDA048	E200.7	ALUMINUM	13200	=	13200	J	3	45.9	mg/kg	SD
SD	NDA049	E200.7	ALUMINUM	13200	=	13200	J	2.8	43.9	mg/kg	SD
SS	NDA185	E200.7	ALUMINUM	5030	=	5030	J	3.4	52.6	mg/kg	SD
SS	NDA186	E200.7	ALUMINUM	5950	=	5950	J	2.9	44.6	mg/kg	SD
SS	NDA187	E200.7	ALUMINUM	6550	=	6550	J	2.8	43	mg/kg	SD
SS	NDA188	E200.7	ALUMINUM	6430	=	6430	J	3.5	54.9	mg/kg	SD
SS	NDA189	E200.7	ALUMINUM	6120	=	6120	J	2.9	44.8	mg/kg	SD
SS	NDA190	E200.7	ALUMINUM	6480	=	6480	J	2.9	45.3	mg/kg	SD
SS	NDA191	E200.7	ALUMINUM	6900	=	6900	J	2.6	41	mg/kg	SD
SS	NDA192FD1	E200.7	ALUMINUM	6160	=	6160	J	3	46.5	mg/kg	SD
SS	NDA193	E200.7	ALUMINUM	9660	=	9660	J	2.7	41.5	mg/kg	SD
SS	NDA194	E200.7	ALUMINUM	9800	=	9800	J	3.2	49.2	mg/kg	SD
SS	NDA195	E200.7	ALUMINUM	21400	=	21400	J	2.7	41.3	mg/kg	SD
SS	NDA057	E200.7	ALUMINUM	4580	=	4580	J	3.2	49.9	mg/kg	SD
SS	NDA059	E200.7	ALUMINUM	4040	=	4040	J	2.8	43	mg/kg	SD
SS	NDA061	E200.7	ALUMINUM	4920	=	4920	J	2.7	42.1	mg/kg	SD
SS	NDA062FD1	E200.7	ALUMINUM	5600	=	5600	J	2.8	42.7	mg/kg	SD
SS	E1	SW8260	XYLENES, TOTAL	11	U	11	R	0.2	11	ug/kg	RE
SS	E1	SW8260	VINYL CHLORIDE	11	U	11	R	0.53	11	ug/kg	RE
SS	E1	SW8260	TRICHLOROETHYLENE (TCE)	0.3	J	0.3	R	0.28	11	ug/kg	RE
SS	E1	SW8260	trans-1,3-DICHLOROPROPENE	11	U	11	R	0.3	11	ug/kg	RE
SS	E1	SW8260	TOLUENE	11	U	11	R	0.31	11	ug/kg	RE
SS	E1	SW8260	TETRACHLOROETHYLENE(PCE)	11	U	11	R	0.58	11	ug/kg	RE
SS	E1	SW8260	STYRENE	11	U	11	R	0.2	11	ug/kg	RE
SB	NDA081	SW8270	PYRENE	393	U	393	R	22	393	ug/kg	RE
SB	NDA083	SW8270	PYRENE	424	U	424	R	24	424	ug/kg	RE
SS	NDA080	SW8270	PYRENE	407	U	407	R	23	407	ug/kg	RE
SS	NDA082	SW8270	PYRENE	466	U	466	R	26	466	ug/kg	RE
SB	NDA081	SW8270	PHENOL	393	U	393	R	25	393	ug/kg	RE
SB	NDA083	SW8270	PHENOL	424	U	424	R	27	424	ug/kg	RE
SS	NDA080	SW8270	PHENOL	407	U	407	R	26	407	ug/kg	RE
SS	NDA082	SW8270	PHENOL	466	U	466	R	30	466	ug/kg	RE
SB	NDA081	SW8270	PHENANTHRENE	393	U	393	R	23	393	ug/kg	RE
SB	NDA083	SW8270	PHENANTHRENE	424	U	424	R	25	424	ug/kg	RE

Matrix	Sample ID	Analytical Method	Parameter	Lab Result	Lab Qual	Final Result	Final Qual	DL	RL	Units	Comments
SS	NDA080	SW8270	PHENANTHRENE	407	U	407	R	24	407	ug/kg	RE
SS	NDA082	SW8270	PHENANTHRENE	466	U	466	R	27	466	ug/kg	RE
SB	NDA081	SW8270	PENTACHLOROPHENOL	1180	U	1180	R	22	1180	ug/kg	RE
SB	NDA083	SW8270	PENTACHLOROPHENOL	1270	U	1270	R	23	1270	ug/kg	RE
SS	NDA080	SW8270	PENTACHLOROPHENOL	1220	U	1220	R	22	1220	ug/kg	RE
SS	NDA082	SW8270	PENTACHLOROPHENOL	1400	U	1400	R	26	1400	ug/kg	RE
SS	E1	SW8260	O-XYLENE (1,2-DIMETHYLBENZENE)	11	U	11	R	0.2	11	ug/kg	RE
SS	NDA078RE1	SW8330	TETRAZOCINE	1870	=	1870	R	66	133	ug/kg	RE
SB	NDA081	SW8270	N-NITROSODIPHENYLAMINE	393	U	393	R	43	393	ug/kg	RE
SB	NDA083	SW8270	N-NITROSODIPHENYLAMINE	424	U	424	R	47	424	ug/kg	RE
SS	NDA080	SW8270	N-NITROSODIPHENYLAMINE	407	U	407	R	45	407	ug/kg	RE
SS	NDA082	SW8270	N-NITROSODIPHENYLAMINE	466	U	466	R	51	466	ug/kg	RE
SB	NDA081	SW8270	N-NITROSODI-n-PROPYLAMINE	393	U	393	R	28	393	ug/kg	RE
SB	NDA083	SW8270	N-NITROSODI-n-PROPYLAMINE	424	U	424	R	30	424	ug/kg	RE
SS	NDA080	SW8270	N-NITROSODI-n-PROPYLAMINE	407	U	407	R	29	407	ug/kg	RE
SS	NDA082	SW8270	N-NITROSODI-n-PROPYLAMINE	466	U	466	R	33	466	ug/kg	RE
SB	NDA081	SW8270	NITROBENZENE	393	U	393	R	30	393	ug/kg	RE
SB	NDA083	SW8270	NITROBENZENE	424	U	424	R	33	424	ug/kg	RE
SS	NDA078RE1	SW8330	NITROBENZENE	133	U	133	R	34	133	ug/kg	RE
SS	NDA080	SW8270	NITROBENZENE	407	U	407	R	31	407	ug/kg	RE
SS	NDA082	SW8270	NITROBENZENE	466	U	466	R	36	466	ug/kg	RE
SB	NDA081	SW8270	NAPHTHALENE	393	U	393	R	29	393	ug/kg	RE
SB	NDA083	SW8270	NAPHTHALENE	424	U	424	R	31	424	ug/kg	RE
SS	NDA080	SW8270	NAPHTHALENE	407	U	407	R	30	407	ug/kg	RE
SS	NDA082	SW8270	NAPHTHALENE	466	U	466	R	34	466	ug/kg	RE
SS	E1	SW8260	METHYLENE CHLORIDE	11	U	11	R	2	11	ug/kg	RE
SS	NDA078RE1	SW8330	TRINITROPHENYLNITRAMINE	133	U	133	R	35	133	ug/kg	RE
SS	E1	SW8260	4-METHYL-2-PENTANONE (MIBK)	11	U	11	R	1	11	ug/kg	RE
SS	E1	SW8260	METHYL ETHYL KETONE (2-BUTANONE)	11	U	11	R	2	11	ug/kg	RE
SS	E1	SW8260	M,P-XYLENE (SUM OF ISOMERS)	11	U	11	R	0.2	11	ug/kg	RE
SB	NDA081	SW8270	ISOPHORONE	393	U	393	R	14	393	ug/kg	RE
SB	NDA083	SW8270	ISOPHORONE	424	U	424	R	15	424	ug/kg	RE
SS	NDA080	SW8270	ISOPHORONE	407	U	407	R	15	407	ug/kg	RE
SS	NDA082	SW8270	ISOPHORONE	466	U	466	R	17	466	ug/kg	RE
SB	NDA081	SW8270	INDENO(1,2,3-c,d)PYRENE	393	U	393	R	20	393	ug/kg	RE
SB	NDA083	SW8270	INDENO(1,2,3-c,d)PYRENE	424	U	424	R	22	424	ug/kg	RE
SS	NDA080	SW8270	INDENO(1,2,3-c,d)PYRENE	407	U	407	R	21	407	ug/kg	RE
SS	NDA082	SW8270	INDENO(1,2,3-c,d)PYRENE	466	U	466	R	24	466	ug/kg	RE
SS	NDA078RE1	SW8330	TETRAZOCINE	12000	=	12000	R	14	133	ug/kg	RE
SB	NDA081	SW8270	HEXACHLOROETHANE	393	U	393	R	36	393	ug/kg	RE
SB	NDA083	SW8270	HEXACHLOROETHANE	424	U	424	R	39	424	ug/kg	RE
SS	NDA080	SW8270	HEXACHLOROETHANE	407	U	407	R	37	407	ug/kg	RE
SS	NDA082	SW8270	HEXACHLOROETHANE	466	U	466	R	42	466	ug/kg	RE
SB	NDA081	SW8270	HEXACHLOROCYCLOPENTADIENE	393	U	393	R	29	393	ug/kg	RE
SB	NDA083	SW8270	HEXACHLOROCYCLOPENTADIENE	424	U	424	R	31	424	ug/kg	RE
SS	NDA080	SW8270	HEXACHLOROCYCLOPENTADIENE	407	U	407	R	30	407	ug/kg	RE
SS	NDA082	SW8270	HEXACHLOROCYCLOPENTADIENE	466	U	466	R	34	466	ug/kg	RE
SB	NDA081	SW8270	HEXACHLOROBUTADIENE	393	U	393	R	33	393	ug/kg	RE
SB	NDA083	SW8270	HEXACHLOROBUTADIENE	424	U	424	R	35	424	ug/kg	RE
SS	NDA080	SW8270	HEXACHLOROBUTADIENE	407	U	407	R	34	407	ug/kg	RE
SS	NDA082	SW8270	HEXACHLOROBUTADIENE	466	U	466	R	39	466	ug/kg	RE
SB	NDA081	SW8270	HEXACHLOROBENZENE	393	U	393	R	26	393	ug/kg	RE
SB	NDA083	SW8270	HEXACHLOROBENZENE	424	U	424	R	28	424	ug/kg	RE
SS	NDA080	SW8270	HEXACHLOROBENZENE	407	U	407	R	26	407	ug/kg	RE
SS	NDA082	SW8270	HEXACHLOROBENZENE	466	U	466	R	30	466	ug/kg	RE
SB	NDA081	SW8270	FLUORENE	393	U	393	R	22	393	ug/kg	RE
SB	NDA083	SW8270	FLUORENE	424	U	424	R	24	424	ug/kg	RE
SS	NDA080	SW8270	FLUORENE	407	U	407	R	23	407	ug/kg	RE
SS	NDA082	SW8270	FLUORENE	466	U	466	R	26	466	ug/kg	RE
SB	NDA081	SW8270	FLUORANTHENE	393	U	393	R	24	393	ug/kg	RE
SB	NDA083	SW8270	FLUORANTHENE	424	U	424	R	26	424	ug/kg	RE
SS	NDA080	SW8270	FLUORANTHENE	407	U	407	R	25	407	ug/kg	RE
SS	NDA082	SW8270	FLUORANTHENE	466	U	466	R	29	466	ug/kg	RE
SS	E1	SW8260	ETHYLBENZENE	11	U	11	R	0.31	11	ug/kg	RE
SB	NDA081	SW8270	DI-n-OCTYLPHTHALATE	393	U	393	R	29	393	ug/kg	RE
SB	NDA083	SW8270	DI-n-OCTYLPHTHALATE	424	U	424	R	32	424	ug/kg	RE
SS	NDA080	SW8270	DI-n-OCTYLPHTHALATE	407	U	407	R	31	407	ug/kg	RE
SS	NDA082	SW8270	DI-n-OCTYLPHTHALATE	466	U	466	R	35	466	ug/kg	RE
SB	NDA081	SW8270	DI-n-BUTYL PHTHALATE	393	U	393	R	21	393	ug/kg	RE
SB	NDA083	SW8270	DI-n-BUTYL PHTHALATE	424	U	424	R	22	424	ug/kg	RE

Matrix	Sample ID	Analytical Method	Parameter	Lab Result	Lab Qual	Final Result	Final Qual	DL	RL	Units	Comments
SS	NDA080	SW8270	DI-n-BUTYL PHTHALATE	407	U	407	R	22	407	ug/kg	RE
SS	NDA082	SW8270	DI-n-BUTYL PHTHALATE	466	U	466	R	25	466	ug/kg	RE
SB	NDA081	SW8270	DIMETHYL PHTHALATE	393	U	393	R	26	393	ug/kg	RE
SB	NDA083	SW8270	DIMETHYL PHTHALATE	424	U	424	R	28	424	ug/kg	RE
SS	NDA080	SW8270	DIMETHYL PHTHALATE	407	U	407	R	26	407	ug/kg	RE
SS	NDA082	SW8270	DIMETHYL PHTHALATE	466	U	466	R	30	466	ug/kg	RE
SB	NDA081	SW8270	DIETHYL PHTHALATE	393	U	393	R	32	393	ug/kg	RE
SB	NDA083	SW8270	DIETHYL PHTHALATE	424	U	424	R	35	424	ug/kg	RE
SS	NDA080	SW8270	DIETHYL PHTHALATE	407	U	407	R	33	407	ug/kg	RE
SS	NDA082	SW8270	DIETHYL PHTHALATE	466	U	466	R	38	466	ug/kg	RE
SS	E1	SW8260	DIBROMOCHLOROMETHANE	11	U	11	R	0.2	11	ug/kg	RE
SB	NDA081	SW8270	DIBENZOFURAN	393	U	393	R	20	393	ug/kg	RE
SB	NDA083	SW8270	DIBENZOFURAN	424	U	424	R	22	424	ug/kg	RE
SS	NDA080	SW8270	DIBENZOFURAN	407	U	407	R	21	407	ug/kg	RE
SS	NDA082	SW8270	DIBENZOFURAN	466	U	466	R	24	466	ug/kg	RE
SB	NDA081	SW8270	DIBENZ(a,h)ANTHRACENE	393	U	393	R	26	393	ug/kg	RE
SB	NDA083	SW8270	DIBENZ(a,h)ANTHRACENE	424	U	424	R	28	424	ug/kg	RE
SS	NDA080	SW8270	DIBENZ(a,h)ANTHRACENE	407	U	407	R	27	407	ug/kg	RE
SS	NDA082	SW8270	DIBENZ(a,h)ANTHRACENE	466	U	466	R	31	466	ug/kg	RE
SB	NDA081	SW8270	CRESOLS, m & p	393	U	393	R	26	393	ug/kg	RE
SB	NDA083	SW8270	CRESOLS, m & p	424	U	424	R	28	424	ug/kg	RE
SS	NDA080	SW8270	CRESOLS, m & p	407	U	407	R	26	407	ug/kg	RE
SS	NDA082	SW8270	CRESOLS, m & p	466	U	466	R	30	466	ug/kg	RE
SS	E1	SW8260	cis-1,3-DICHLOROPROPENE	11	U	11	R	0.31	11	ug/kg	RE
SB	NDA081	SW8270	CHRYSENE	393	U	393	R	22	393	ug/kg	RE
SB	NDA083	SW8270	CHRYSENE	424	U	424	R	24	424	ug/kg	RE
SS	NDA080	SW8270	CHRYSENE	407	U	407	R	23	407	ug/kg	RE
SS	NDA082	SW8270	CHRYSENE	466	U	466	R	27	466	ug/kg	RE
SS	E1	SW8260	CHLOROMETHANE	11	U	11	R	0.9	11	ug/kg	RE
SS	E1	SW8260	CHLOROFORM	11	U	11	R	1	11	ug/kg	RE
SS	E1	SW8260	CHLOROETHANE	11	U	11	R	0.6	11	ug/kg	RE
SS	E1	SW8260	CHLOROBENZENE	11	U	11	R	0.2	11	ug/kg	RE
SS	E1	SW8260	CARBON TETRACHLORIDE	11	U	11	R	0.4	11	ug/kg	RE
SS	E1	SW8260	CARBON DISULFIDE	11	U	11	R	0.3	11	ug/kg	RE
SB	NDA081	SW8270	CARBAZOLE	393	U	393	R	25	393	ug/kg	RE
SB	NDA083	SW8270	CARBAZOLE	424	U	424	R	27	424	ug/kg	RE
SS	NDA080	SW8270	CARBAZOLE	407	U	407	R	26	407	ug/kg	RE
SS	NDA082	SW8270	CARBAZOLE	466	U	466	R	29	466	ug/kg	RE
SS	E1	SW8260	BROMOMETHANE	11	U	11	R	0.5	11	ug/kg	RE
SS	E1	SW8260	BROMOFORM	11	U	11	R	0.27	11	ug/kg	RE
SS	E1	SW8260	BROMODICHLOROMETHANE	11	U	11	R	0.2	11	ug/kg	RE
SB	NDA081	SW8270	bis(2-ETHYLHEXYL) PHTHALATE	393	U	393	R	29	393	ug/kg	RE
SB	NDA083	SW8270	bis(2-ETHYLHEXYL) PHTHALATE	424	U	424	R	32	424	ug/kg	RE
SS	NDA080	SW8270	bis(2-ETHYLHEXYL) PHTHALATE	407	U	407	R	31	407	ug/kg	RE
SS	NDA082	SW8270	bis(2-ETHYLHEXYL) PHTHALATE	466	U	466	R	35	466	ug/kg	RE
SB	NDA081	SW8270	bis(2-CHLOROISOPROPYL) ETHER	393	U	393	R	29	393	ug/kg	RE
SB	NDA083	SW8270	bis(2-CHLOROISOPROPYL) ETHER	424	U	424	R	31	424	ug/kg	RE
SS	NDA080	SW8270	bis(2-CHLOROISOPROPYL) ETHER	407	U	407	R	30	407	ug/kg	RE
SS	NDA082	SW8270	bis(2-CHLOROISOPROPYL) ETHER	466	U	466	R	34	466	ug/kg	RE
SB	NDA081	SW8270	CHLOROETHYL ETHER)	393	U	393	R	27	393	ug/kg	RE
SB	NDA083	SW8270	CHLOROETHYL ETHER)	424	U	424	R	29	424	ug/kg	RE
SS	NDA080	SW8270	CHLOROETHYL ETHER)	407	U	407	R	28	407	ug/kg	RE
SS	NDA082	SW8270	CHLOROETHYL ETHER)	466	U	466	R	32	466	ug/kg	RE
SB	NDA081	SW8270	bis(2-CHLOROETHOXY) METHANE	393	U	393	R	29	393	ug/kg	RE
SB	NDA083	SW8270	bis(2-CHLOROETHOXY) METHANE	424	U	424	R	31	424	ug/kg	RE
SS	NDA080	SW8270	bis(2-CHLOROETHOXY) METHANE	407	U	407	R	30	407	ug/kg	RE
SS	NDA082	SW8270	bis(2-CHLOROETHOXY) METHANE	466	U	466	R	34	466	ug/kg	RE
SB	NDA081	SW8270	BENZYL BUTYL PHTHALATE	393	U	393	R	21	393	ug/kg	RE
SB	NDA083	SW8270	BENZYL BUTYL PHTHALATE	424	U	424	R	22	424	ug/kg	RE
SS	NDA080	SW8270	BENZYL BUTYL PHTHALATE	407	U	407	R	22	407	ug/kg	RE
SS	NDA082	SW8270	BENZYL BUTYL PHTHALATE	466	U	466	R	25	466	ug/kg	RE
SB	NDA081	SW8270	BENZO(k)FLUORANTHENE	393	U	393	R	28	393	ug/kg	RE
SB	NDA083	SW8270	BENZO(k)FLUORANTHENE	424	U	424	R	30	424	ug/kg	RE
SS	NDA080	SW8270	BENZO(k)FLUORANTHENE	407	U	407	R	29	407	ug/kg	RE
SS	NDA082	SW8270	BENZO(k)FLUORANTHENE	466	U	466	R	33	466	ug/kg	RE
SB	NDA081	SW8270	BENZO(g,h,i)PERYLENE	393	U	393	R	24	393	ug/kg	RE
SB	NDA083	SW8270	BENZO(g,h,i)PERYLENE	424	U	424	R	25	424	ug/kg	RE
SS	NDA080	SW8270	BENZO(g,h,i)PERYLENE	407	U	407	R	24	407	ug/kg	RE
SS	NDA082	SW8270	BENZO(g,h,i)PERYLENE	466	U	466	R	28	466	ug/kg	RE
SB	NDA081	SW8270	BENZO(b)FLUORANTHENE	393	U	393	R	23	393	ug/kg	RE

Matrix	Sample ID	Analytical Method	Parameter	Lab Result	Lab Qual	Final Result	Final Qual	DL	RL	Units	Comments
SB	NDA083	SW8270	BENZO(b)FLUORANTHENE	424	U	424	R	25	424	ug/kg	RE
SS	NDA080	SW8270	BENZO(b)FLUORANTHENE	407	U	407	R	24	407	ug/kg	RE
SS	NDA082	SW8270	BENZO(b)FLUORANTHENE	466	U	466	R	27	466	ug/kg	RE
SB	NDA081	SW8270	BENZO(a)PYRENE	393	U	393	R	26	393	ug/kg	RE
SB	NDA083	SW8270	BENZO(a)PYRENE	424	U	424	R	28	424	ug/kg	RE
SS	NDA080	SW8270	BENZO(a)PYRENE	407	U	407	R	27	407	ug/kg	RE
SS	NDA082	SW8270	BENZO(a)PYRENE	466	U	466	R	31	466	ug/kg	RE
SB	NDA081	SW8270	BENZO(a)ANTHRACENE	393	U	393	R	20	393	ug/kg	RE
SB	NDA083	SW8270	BENZO(a)ANTHRACENE	424	U	424	R	22	424	ug/kg	RE
SS	NDA080	SW8270	BENZO(a)ANTHRACENE	407	U	407	R	21	407	ug/kg	RE
SS	NDA082	SW8270	BENZO(a)ANTHRACENE	466	U	466	R	24	466	ug/kg	RE
SS	E1	SW8260	BENZENE	11	U	11	R	0.12	11	ug/kg	RE
SB	NDA081	SW8270	ANTHRACENE	393	U	393	R	22	393	ug/kg	RE
SB	NDA083	SW8270	ANTHRACENE	424	U	424	R	24	424	ug/kg	RE
SS	NDA080	SW8270	ANTHRACENE	407	U	407	R	23	407	ug/kg	RE
SS	NDA082	SW8270	ANTHRACENE	466	U	466	R	26	466	ug/kg	RE
SS	E1	SW8260	ACETONE	110	=	110	R	11	11	ug/kg	RE
SB	NDA081	SW8270	ACENAPHTHYLENE	393	U	393	R	39	393	ug/kg	RE
SB	NDA083	SW8270	ACENAPHTHYLENE	424	U	424	R	42	424	ug/kg	RE
SS	NDA080	SW8270	ACENAPHTHYLENE	407	U	407	R	41	407	ug/kg	RE
SS	NDA082	SW8270	ACENAPHTHYLENE	466	U	466	R	47	466	ug/kg	RE
SB	NDA081	SW8270	ACENAPHTHENE	393	U	393	R	20	393	ug/kg	RE
SB	NDA083	SW8270	ACENAPHTHENE	424	U	424	R	21	424	ug/kg	RE
SS	NDA080	SW8270	ACENAPHTHENE	407	U	407	R	20	407	ug/kg	RE
SS	NDA082	SW8270	ACENAPHTHENE	466	U	466	R	23	466	ug/kg	RE
SS	NDA078RE1	SW8330	4-NITROTOLUENE	133	U	133	R	34	133	ug/kg	RE
SB	NDA081	SW8270	4-NITROPHENOL	1180	U	1180	R	20	1180	ug/kg	RE
SB	NDA083	SW8270	4-NITROPHENOL	1270	U	1270	R	21	1270	ug/kg	RE
SS	NDA080	SW8270	4-NITROPHENOL	1220	U	1220	R	20	1220	ug/kg	RE
SS	NDA082	SW8270	4-NITROPHENOL	1400	U	1400	R	23	1400	ug/kg	RE
SB	NDA081	SW8270	4-NITROANILINE	1180	U	1180	R	14	1180	ug/kg	RE
SB	NDA083	SW8270	4-NITROANILINE	1270	U	1270	R	15	1270	ug/kg	RE
SS	NDA080	SW8270	4-NITROANILINE	1220	U	1220	R	15	1220	ug/kg	RE
SS	NDA082	SW8270	4-NITROANILINE	1400	U	1400	R	17	1400	ug/kg	RE
SB	NDA081	SW8270	4-CHLOROPHENYL PHENYL ETHER	393	U	393	R	23	393	ug/kg	RE
SB	NDA083	SW8270	4-CHLOROPHENYL PHENYL ETHER	424	U	424	R	25	424	ug/kg	RE
SS	NDA080	SW8270	4-CHLOROPHENYL PHENYL ETHER	407	U	407	R	24	407	ug/kg	RE
SS	NDA082	SW8270	4-CHLOROPHENYL PHENYL ETHER	466	U	466	R	27	466	ug/kg	RE
SB	NDA081	SW8270	4-CHLOROANILINE	393	U	393	R	24	393	ug/kg	RE
SB	NDA083	SW8270	4-CHLOROANILINE	424	U	424	R	26	424	ug/kg	RE
SS	NDA080	SW8270	4-CHLOROANILINE	407	U	407	R	25	407	ug/kg	RE
SS	NDA082	SW8270	4-CHLOROANILINE	466	U	466	R	29	466	ug/kg	RE
SB	NDA081	SW8270	4-CHLORO-3-METHYLPHENOL	393	U	393	R	23	393	ug/kg	RE
SB	NDA083	SW8270	4-CHLORO-3-METHYLPHENOL	424	U	424	R	25	424	ug/kg	RE
SS	NDA080	SW8270	4-CHLORO-3-METHYLPHENOL	407	U	407	R	24	407	ug/kg	RE
SS	NDA082	SW8270	4-CHLORO-3-METHYLPHENOL	466	U	466	R	27	466	ug/kg	RE
SB	NDA081	SW8270	4-BROMOPHENYL PHENYL ETHER	393	U	393	R	24	393	ug/kg	RE
SB	NDA083	SW8270	4-BROMOPHENYL PHENYL ETHER	424	U	424	R	25	424	ug/kg	RE
SS	NDA080	SW8270	4-BROMOPHENYL PHENYL ETHER	407	U	407	R	24	407	ug/kg	RE
SS	NDA082	SW8270	4-BROMOPHENYL PHENYL ETHER	466	U	466	R	28	466	ug/kg	RE
SB	NDA081	SW8270	4,6-DINITRO-2-METHYLPHENOL	1180	U	1180	R	22	1180	ug/kg	RE
SB	NDA083	SW8270	4,6-DINITRO-2-METHYLPHENOL	1270	U	1270	R	23	1270	ug/kg	RE
SS	NDA080	SW8270	4,6-DINITRO-2-METHYLPHENOL	1220	U	1220	R	22	1220	ug/kg	RE
SS	NDA082	SW8270	4,6-DINITRO-2-METHYLPHENOL	1400	U	1400	R	26	1400	ug/kg	RE
SS	NDA078RE1	SW8330	3-NITROTOLUENE	133	U	133	R	51	133	ug/kg	RE
SB	NDA081	SW8270	3-NITROANILINE	1180	U	1180	R	18	1180	ug/kg	RE
SB	NDA083	SW8270	3-NITROANILINE	1270	U	1270	R	20	1270	ug/kg	RE
SS	NDA080	SW8270	3-NITROANILINE	1220	U	1220	R	19	1220	ug/kg	RE
SS	NDA082	SW8270	3-NITROANILINE	1400	U	1400	R	22	1400	ug/kg	RE
SB	NDA081	SW8270	3,3'-DICHLOROBENZIDINE	786	U	786	R	18	786	ug/kg	RE
SB	NDA083	SW8270	3,3'-DICHLOROBENZIDINE	847	U	847	R	20	847	ug/kg	RE
SS	NDA080	SW8270	3,3'-DICHLOROBENZIDINE	814	U	814	R	19	814	ug/kg	RE
SS	NDA082	SW8270	3,3'-DICHLOROBENZIDINE	932	U	932	R	22	932	ug/kg	RE
SS	NDA078RE1	SW8330	2-NITROTOLUENE	133	U	133	R	34	133	ug/kg	RE
SB	NDA081	SW8270	2-NITROPHENOL	393	U	393	R	24	393	ug/kg	RE
SB	NDA083	SW8270	2-NITROPHENOL	424	U	424	R	25	424	ug/kg	RE
SS	NDA080	SW8270	2-NITROPHENOL	407	U	407	R	24	407	ug/kg	RE
SS	NDA082	SW8270	2-NITROPHENOL	466	U	466	R	28	466	ug/kg	RE
SB	NDA081	SW8270	2-NITROANILINE	1180	U	1180	R	20	1180	ug/kg	RE
SB	NDA083	SW8270	2-NITROANILINE	1270	U	1270	R	21	1270	ug/kg	RE

Matrix	Sample ID	Analytical Method	Parameter	Lab Result	Lab Qual	Final Result	Final Qual	DL	RL	Units	Comments
SS	NDA080	SW8270	2-NITROANILINE	1220	U	1220	R	20	1220	ug/kg	RE
SS	NDA082	SW8270	2-NITROANILINE	1400	U	1400	R	23	1400	ug/kg	RE
SB	NDA081	SW8270	2-METHYLPHENOL (o-CRESOL)	393	U	393	R	29	393	ug/kg	RE
SB	NDA083	SW8270	2-METHYLPHENOL (o-CRESOL)	424	U	424	R	31	424	ug/kg	RE
SS	NDA080	SW8270	2-METHYLPHENOL (o-CRESOL)	407	U	407	R	30	407	ug/kg	RE
SS	NDA082	SW8270	2-METHYLPHENOL (o-CRESOL)	466	U	466	R	34	466	ug/kg	RE
SB	NDA081	SW8270	2-METHYLNAPHTHALENE	393	U	393	R	23	393	ug/kg	RE
SB	NDA083	SW8270	2-METHYLNAPHTHALENE	424	U	424	R	25	424	ug/kg	RE
SS	NDA080	SW8270	2-METHYLNAPHTHALENE	407	U	407	R	24	407	ug/kg	RE
SS	NDA082	SW8270	2-METHYLNAPHTHALENE	466	U	466	R	27	466	ug/kg	RE
SS	E1	SW8260	2-HEXANONE	11	U	11	R	1	11	ug/kg	RE
SB	NDA081	SW8270	2-CHLOROPHENOL	393	U	393	R	26	393	ug/kg	RE
SB	NDA083	SW8270	2-CHLOROPHENOL	424	U	424	R	28	424	ug/kg	RE
SS	NDA080	SW8270	2-CHLOROPHENOL	407	U	407	R	26	407	ug/kg	RE
SS	NDA082	SW8270	2-CHLOROPHENOL	466	U	466	R	30	466	ug/kg	RE
SB	NDA081	SW8270	2-CHLORONAPHTHALENE	393	U	393	R	24	393	ug/kg	RE
SB	NDA083	SW8270	2-CHLORONAPHTHALENE	424	U	424	R	26	424	ug/kg	RE
SS	NDA080	SW8270	2-CHLORONAPHTHALENE	407	U	407	R	25	407	ug/kg	RE
SS	NDA082	SW8270	2-CHLORONAPHTHALENE	466	U	466	R	28	466	ug/kg	RE
SB	NDA081	SW8270	2,6-DINITROTOLUENE	393	U	393	R	23	393	ug/kg	RE
SB	NDA083	SW8270	2,6-DINITROTOLUENE	424	U	424	R	25	424	ug/kg	RE
SS	NDA078RE1	SW8330	2,6-DINITROTOLUENE	133	U	133	R	24	133	ug/kg	RE
SS	NDA080	SW8270	2,6-DINITROTOLUENE	407	U	407	R	24	407	ug/kg	RE
SS	NDA082	SW8270	2,6-DINITROTOLUENE	466	U	466	R	27	466	ug/kg	RE
SB	NDA081	SW8270	2,4-DINITROTOLUENE	393	U	393	R	28	393	ug/kg	RE
SB	NDA083	SW8270	2,4-DINITROTOLUENE	424	U	424	R	30	424	ug/kg	RE
SS	NDA078RE1	SW8330	2,4-DINITROTOLUENE	133	U	133	R	16	133	ug/kg	RE
SS	NDA080	SW8270	2,4-DINITROTOLUENE	407	U	407	R	28	407	ug/kg	RE
SS	NDA082	SW8270	2,4-DINITROTOLUENE	466	U	466	R	33	466	ug/kg	RE
SB	NDA081	SW8270	2,4-DINITROPHENOL	1180	U	1180	R	27	1180	ug/kg	RE
SB	NDA083	SW8270	2,4-DINITROPHENOL	1270	U	1270	R	29	1270	ug/kg	RE
SS	NDA080	SW8270	2,4-DINITROPHENOL	1220	U	1220	R	28	1220	ug/kg	RE
SS	NDA082	SW8270	2,4-DINITROPHENOL	1400	U	1400	R	32	1400	ug/kg	RE
SB	NDA081	SW8270	2,4-DIMETHYLPHENOL	393	U	393	R	31	393	ug/kg	RE
SB	NDA083	SW8270	2,4-DIMETHYLPHENOL	424	U	424	R	33	424	ug/kg	RE
SS	NDA080	SW8270	2,4-DIMETHYLPHENOL	407	U	407	R	32	407	ug/kg	RE
SS	NDA082	SW8270	2,4-DIMETHYLPHENOL	466	U	466	R	36	466	ug/kg	RE
SB	NDA081	SW8270	2,4-DICHLOROPHENOL	393	U	393	R	22	393	ug/kg	RE
SB	NDA083	SW8270	2,4-DICHLOROPHENOL	424	U	424	R	24	424	ug/kg	RE
SS	NDA080	SW8270	2,4-DICHLOROPHENOL	407	U	407	R	23	407	ug/kg	RE
SS	NDA082	SW8270	2,4-DICHLOROPHENOL	466	U	466	R	27	466	ug/kg	RE
SS	NDA078RE1	SW8330	2,4,6-TRINITROTOLUENE	5930	=	5930	R	18	133	ug/kg	RE
SB	NDA081	SW8270	2,4,6-TRICHLOROPHENOL	393	U	393	R	23	393	ug/kg	RE
SB	NDA083	SW8270	2,4,6-TRICHLOROPHENOL	424	U	424	R	25	424	ug/kg	RE
SS	NDA080	SW8270	2,4,6-TRICHLOROPHENOL	407	U	407	R	24	407	ug/kg	RE
SS	NDA082	SW8270	2,4,6-TRICHLOROPHENOL	466	U	466	R	27	466	ug/kg	RE
SB	NDA081	SW8270	2,4,5-TRICHLOROPHENOL	1180	U	1180	R	22	1180	ug/kg	RE
SB	NDA083	SW8270	2,4,5-TRICHLOROPHENOL	1270	U	1270	R	24	1270	ug/kg	RE
SS	NDA080	SW8270	2,4,5-TRICHLOROPHENOL	1220	U	1220	R	23	1220	ug/kg	RE
SS	NDA082	SW8270	2,4,5-TRICHLOROPHENOL	1400	U	1400	R	27	1400	ug/kg	RE
SB	NDA081	SW8270	1,4-DICHLOROBENZENE	393	U	393	R	36	393	ug/kg	RE
SB	NDA083	SW8270	1,4-DICHLOROBENZENE	424	U	424	R	39	424	ug/kg	RE
SS	NDA080	SW8270	1,4-DICHLOROBENZENE	407	U	407	R	37	407	ug/kg	RE
SS	NDA082	SW8270	1,4-DICHLOROBENZENE	466	U	466	R	43	466	ug/kg	RE
SS	NDA078RE1	SW8330	1,3-DINITROBENZENE	133	U	133	R	23	133	ug/kg	RE
SB	NDA081	SW8270	1,3-DICHLOROBENZENE	393	U	393	R	31	393	ug/kg	RE
SB	NDA083	SW8270	1,3-DICHLOROBENZENE	424	U	424	R	34	424	ug/kg	RE
SS	NDA080	SW8270	1,3-DICHLOROBENZENE	407	U	407	R	33	407	ug/kg	RE
SS	NDA082	SW8270	1,3-DICHLOROBENZENE	466	U	466	R	37	466	ug/kg	RE
SS	NDA078RE1	SW8330	1,3,5-TRINITROBENZENE	133	U	133	R	11	133	ug/kg	RE
SS	E1	SW8260	1,2-DICHLOROPROPANE	11	U	11	R	0.15	11	ug/kg	RE
SS	E1	SW8260	1,2-DICHLOROETHANE	11	U	11	R	0.26	11	ug/kg	RE
SB	NDA081	SW8270	1,2-DICHLOROBENZENE	393	U	393	R	37	393	ug/kg	RE
SB	NDA083	SW8270	1,2-DICHLOROBENZENE	424	U	424	R	40	424	ug/kg	RE
SS	NDA080	SW8270	1,2-DICHLOROBENZENE	407	U	407	R	38	407	ug/kg	RE
SS	NDA082	SW8270	1,2-DICHLOROBENZENE	466	U	466	R	44	466	ug/kg	RE
SB	NDA081	SW8270	1,2,4-TRICHLOROBENZENE	393	U	393	R	31	393	ug/kg	RE
SB	NDA083	SW8270	1,2,4-TRICHLOROBENZENE	424	U	424	R	33	424	ug/kg	RE
SS	NDA080	SW8270	1,2,4-TRICHLOROBENZENE	407	U	407	R	32	407	ug/kg	RE
SS	NDA082	SW8270	1,2,4-TRICHLOROBENZENE	466	U	466	R	36	466	ug/kg	RE

Matrix	Sample ID	Analytical Method	Parameter	Lab Result	Lab Qual	Final Result	Final Qual	DL	RL	Units	Comments
SS	E1	SW8260	1,1-DICHLOROETHENE	11	U	11	R	0.43	11	ug/kg	RE
SS	E1	SW8260	1,1-DICHLOROETHANE	11	U	11	R	0.43	11	ug/kg	RE
SS	E1	SW8260	1,1,2-TRICHLOROETHANE	11	U	11	R	0.37	11	ug/kg	RE
SS	E1	SW8260	1,1,2,2-TETRACHLOROETHANE	11	U	11	R	0.16	11	ug/kg	RE
SS	E1	SW8260	1,1,1-TRICHLOROETHANE	11	U	11	R	0.3	11	ug/kg	RE
SD	NDA044	SW8081	TOXAPHENE	801	U	801	UJ	74	801	ug/kg	OT
SD	NDA045	SW8081	TOXAPHENE	603	U	603	UJ	56	603	ug/kg	OT
SD	NDA046	SW8081	TOXAPHENE	681	U	681	UJ	63	681	ug/kg	OT
SD	NDA302	SW8081	TOXAPHENE	426	U	426	UJ	39	426	ug/kg	OT
SD	NDA303	SW8081	TOXAPHENE	751	U	751	UJ	70	751	ug/kg	OT
SD	NDA307FD1	SW8081	TOXAPHENE	802	U	802	UJ	74	802	ug/kg	OT
SD	NDA044	SW8082	PCB-1260 (AROCHLOR 1260)	156	U	156	UJ	61	156	ug/kg	OT
SD	NDA045	SW8082	PCB-1260 (AROCHLOR 1260)	117	U	117	UJ	46	117	ug/kg	OT
SD	NDA046	SW8082	PCB-1260 (AROCHLOR 1260)	132	U	132	UJ	52	132	ug/kg	OT
SD	NDA302	SW8082	PCB-1260 (AROCHLOR 1260)	83	U	83	UJ	33	83	ug/kg	OT
SD	NDA303	SW8082	PCB-1260 (AROCHLOR 1260)	146	U	146	UJ	57	146	ug/kg	OT
SD	NDA307FD1	SW8082	PCB-1260 (AROCHLOR 1260)	156	U	156	UJ	61	156	ug/kg	OT
SD	NDA044	SW8082	PCB-1254 (AROCHLOR 1254)	156	U	156	UJ	94	156	ug/kg	OT
SD	NDA045	SW8082	PCB-1254 (AROCHLOR 1254)	117	U	117	UJ	71	117	ug/kg	OT
SD	NDA046	SW8082	PCB-1254 (AROCHLOR 1254)	132	U	132	UJ	80	132	ug/kg	OT
SD	NDA302	SW8082	PCB-1254 (AROCHLOR 1254)	83	U	83	UJ	50	83	ug/kg	OT
SD	NDA303	SW8082	PCB-1254 (AROCHLOR 1254)	146	U	146	UJ	88	146	ug/kg	OT
SD	NDA307FD1	SW8082	PCB-1254 (AROCHLOR 1254)	156	U	156	UJ	94	156	ug/kg	OT
SD	NDA044	SW8082	PCB-1248 (AROCHLOR 1248)	156	U	156	UJ	89	156	ug/kg	OT
SD	NDA045	SW8082	PCB-1248 (AROCHLOR 1248)	117	U	117	UJ	67	117	ug/kg	OT
SD	NDA046	SW8082	PCB-1248 (AROCHLOR 1248)	132	U	132	UJ	76	132	ug/kg	OT
SD	NDA302	SW8082	PCB-1248 (AROCHLOR 1248)	83	U	83	UJ	48	83	ug/kg	OT
SD	NDA303	SW8082	PCB-1248 (AROCHLOR 1248)	146	U	146	UJ	84	146	ug/kg	OT
SD	NDA307FD1	SW8082	PCB-1248 (AROCHLOR 1248)	156	U	156	UJ	90	156	ug/kg	OT
SD	NDA044	SW8082	PCB-1242 (AROCHLOR 1242)	156	U	156	UJ	104	156	ug/kg	OT
SD	NDA045	SW8082	PCB-1242 (AROCHLOR 1242)	117	U	117	UJ	78	117	ug/kg	OT
SD	NDA046	SW8082	PCB-1242 (AROCHLOR 1242)	132	U	132	UJ	88	132	ug/kg	OT
SD	NDA302	SW8082	PCB-1242 (AROCHLOR 1242)	83	U	83	UJ	55	83	ug/kg	OT
SD	NDA303	SW8082	PCB-1242 (AROCHLOR 1242)	146	U	146	UJ	97	146	ug/kg	OT
SD	NDA307FD1	SW8082	PCB-1242 (AROCHLOR 1242)	156	U	156	UJ	104	156	ug/kg	OT
SD	NDA044	SW8082	PCB-1232 (AROCHLOR 1232)	156	U	156	UJ	137	156	ug/kg	OT
SD	NDA045	SW8082	PCB-1232 (AROCHLOR 1232)	117	U	117	UJ	103	117	ug/kg	OT
SD	NDA046	SW8082	PCB-1232 (AROCHLOR 1232)	132	U	132	UJ	116	132	ug/kg	OT
SD	NDA302	SW8082	PCB-1232 (AROCHLOR 1232)	83	U	83	UJ	73	83	ug/kg	OT
SD	NDA303	SW8082	PCB-1232 (AROCHLOR 1232)	146	U	146	UJ	128	146	ug/kg	OT
SD	NDA307FD1	SW8082	PCB-1232 (AROCHLOR 1232)	156	U	156	UJ	137	156	ug/kg	OT
SD	NDA044	SW8082	PCB-1221 (AROCHLOR 1221)	315	U	315	UJ	104	315	ug/kg	OT
SD	NDA045	SW8082	PCB-1221 (AROCHLOR 1221)	238	U	238	UJ	78	238	ug/kg	OT
SD	NDA046	SW8082	PCB-1221 (AROCHLOR 1221)	268	U	268	UJ	88	268	ug/kg	OT
SD	NDA302	SW8082	PCB-1221 (AROCHLOR 1221)	168	U	168	UJ	55	168	ug/kg	OT
SD	NDA303	SW8082	PCB-1221 (AROCHLOR 1221)	296	U	296	UJ	97	296	ug/kg	OT
SD	NDA307FD1	SW8082	PCB-1221 (AROCHLOR 1221)	316	U	316	UJ	104	316	ug/kg	OT
SD	NDA044	SW8082	PCB-1016 (AROCHLOR 1016)	156	U	156	UJ	47	156	ug/kg	OT
SD	NDA045	SW8082	PCB-1016 (AROCHLOR 1016)	117	U	117	UJ	35	117	ug/kg	OT
SD	NDA046	SW8082	PCB-1016 (AROCHLOR 1016)	132	U	132	UJ	40	132	ug/kg	OT
SD	NDA302	SW8082	PCB-1016 (AROCHLOR 1016)	83	U	83	UJ	25	83	ug/kg	OT
SD	NDA303	SW8082	PCB-1016 (AROCHLOR 1016)	146	U	146	UJ	44	146	ug/kg	OT
SD	NDA307FD1	SW8082	PCB-1016 (AROCHLOR 1016)	156	U	156	UJ	47	156	ug/kg	OT
SD	NDA044	SW8081	p,p'-DDT	16	U	16	UJ	1.8	16	ug/kg	OT
SD	NDA045	SW8081	p,p'-DDT	12	U	12	UJ	1.4	12	ug/kg	OT
SD	NDA046	SW8081	p,p'-DDT	13	U	13	UJ	1.6	13	ug/kg	OT
SD	NDA302	SW8081	p,p'-DDT	8.3	U	8.3	UJ	0.98	8.3	ug/kg	OT
SD	NDA303	SW8081	p,p'-DDT	15	U	15	UJ	1.7	15	ug/kg	OT
SD	NDA307FD1	SW8081	p,p'-DDT	16	U	16	UJ	1.8	16	ug/kg	OT
SD	NDA044	SW8081	p,p'-DDE	16	U	16	UJ	1.6	16	ug/kg	OT
SD	NDA045	SW8081	p,p'-DDE	12	U	12	UJ	1.2	12	ug/kg	OT
SD	NDA046	SW8081	p,p'-DDE	13	U	13	UJ	1.4	13	ug/kg	OT
SD	NDA302	SW8081	p,p'-DDE	8.3	U	8.3	UJ	0.85	8.3	ug/kg	OT
SD	NDA303	SW8081	p,p'-DDE	15	U	15	UJ	1.5	15	ug/kg	OT
SD	NDA307FD1	SW8081	p,p'-DDE	16	U	16	UJ	1.6	16	ug/kg	OT
SD	NDA044	SW8081	p,p'-DDD	16	U	16	UJ	1.1	16	ug/kg	OT
SD	NDA045	SW8081	p,p'-DDD	12	U	12	UJ	0.82	12	ug/kg	OT
SD	NDA046	SW8081	p,p'-DDD	13	U	13	UJ	0.92	13	ug/kg	OT
SD	NDA302	SW8081	p,p'-DDD	8.3	U	8.3	UJ	0.58	8.3	ug/kg	OT
SD	NDA303	SW8081	p,p'-DDD	15	U	15	UJ	1	15	ug/kg	OT

Matrix	Sample ID	Analytical Method	Parameter	Lab Result	Lab Qual	Final Result	Final Qual	DL	RL	Units	Comments
SD	NDA307FD1	SW8081	p,p'-DDD	16	U	16	UJ	1.1	16	ug/kg	OT
SD	NDA044	SW8081	METHOXYCHLOR	80	U	80	UJ	1.4	80	ug/kg	OT
SD	NDA045	SW8081	METHOXYCHLOR	60	U	60	UJ	1	60	ug/kg	OT
SD	NDA046	SW8081	METHOXYCHLOR	68	U	68	UJ	1.2	68	ug/kg	OT
SD	NDA302	SW8081	METHOXYCHLOR	43	U	43	UJ	0.73	43	ug/kg	OT
SD	NDA303	SW8081	METHOXYCHLOR	75	U	75	UJ	1.3	75	ug/kg	OT
SD	NDA307FD1	SW8081	METHOXYCHLOR	80	U	80	UJ	1.4	80	ug/kg	OT
SD	NDA044	SW8081	HEPTACHLOR EPOXIDE	8	U	8	UJ	2.8	8	ug/kg	OT
SD	NDA045	SW8081	HEPTACHLOR EPOXIDE	6	U	6	UJ	2.1	6	ug/kg	OT
SD	NDA046	SW8081	HEPTACHLOR EPOXIDE	6.8	U	6.8	UJ	2.4	6.8	ug/kg	OT
SD	NDA302	SW8081	HEPTACHLOR EPOXIDE	4.3	U	4.3	UJ	1.5	4.3	ug/kg	OT
SD	NDA303	SW8081	HEPTACHLOR EPOXIDE	7.5	U	7.5	UJ	2.6	7.5	ug/kg	OT
SD	NDA307FD1	SW8081	HEPTACHLOR EPOXIDE	8	U	8	UJ	2.8	8	ug/kg	OT
SD	NDA044	SW8081	HEPTACHLOR	8	U	8	UJ	2.9	8	ug/kg	OT
SD	NDA045	SW8081	HEPTACHLOR	6	U	6	UJ	2.2	6	ug/kg	OT
SD	NDA046	SW8081	HEPTACHLOR	6.8	U	6.8	UJ	2.5	6.8	ug/kg	OT
SD	NDA302	SW8081	HEPTACHLOR	4.3	U	4.3	UJ	1.6	4.3	ug/kg	OT
SD	NDA303	SW8081	HEPTACHLOR	7.5	U	7.5	UJ	2.7	7.5	ug/kg	OT
SD	NDA307FD1	SW8081	HEPTACHLOR	8	U	8	UJ	2.9	8	ug/kg	OT
SD	NDA044	SW8081	GAMMA-CHLORDANE	8	U	8	UJ	2.4	8	ug/kg	OT
SD	NDA045	SW8081	GAMMA-CHLORDANE	6	U	6	UJ	1.8	6	ug/kg	OT
SD	NDA046	SW8081	GAMMA-CHLORDANE	6.8	U	6.8	UJ	2	6.8	ug/kg	OT
SD	NDA302	SW8081	GAMMA-CHLORDANE	4.3	U	4.3	UJ	1.3	4.3	ug/kg	OT
SD	NDA303	SW8081	GAMMA-CHLORDANE	7.5	U	7.5	UJ	2.2	7.5	ug/kg	OT
SD	NDA307FD1	SW8081	GAMMA-CHLORDANE	8	U	8	UJ	2.4	8	ug/kg	OT
SD	NDA044	SW8081	GAMMA BHC (LINDANE)	8	U	8	UJ	2.2	8	ug/kg	OT
SD	NDA045	SW8081	GAMMA BHC (LINDANE)	6	U	6	UJ	1.7	6	ug/kg	OT
SD	NDA046	SW8081	GAMMA BHC (LINDANE)	6.8	U	6.8	UJ	1.9	6.8	ug/kg	OT
SD	NDA302	SW8081	GAMMA BHC (LINDANE)	4.3	U	4.3	UJ	1.2	4.3	ug/kg	OT
SD	NDA303	SW8081	GAMMA BHC (LINDANE)	7.5	U	7.5	UJ	2.1	7.5	ug/kg	OT
SD	NDA307FD1	SW8081	GAMMA BHC (LINDANE)	8	U	8	UJ	2.2	8	ug/kg	OT
SD	NDA044	SW8081	ENDRIN KETONE	16	U	16	UJ	1	16	ug/kg	OT
SD	NDA045	SW8081	ENDRIN KETONE	12	U	12	UJ	0.78	12	ug/kg	OT
SD	NDA046	SW8081	ENDRIN KETONE	13	U	13	UJ	0.89	13	ug/kg	OT
SD	NDA302	SW8081	ENDRIN KETONE	8.3	U	8.3	UJ	0.55	8.3	ug/kg	OT
SD	NDA303	SW8081	ENDRIN KETONE	15	U	15	UJ	0.98	15	ug/kg	OT
SD	NDA307FD1	SW8081	ENDRIN KETONE	16	U	16	UJ	1	16	ug/kg	OT
SD	NDA044	SW8081	ENDRIN ALDEHYDE	16	U	16	UJ	1.1	16	ug/kg	OT
SD	NDA045	SW8081	ENDRIN ALDEHYDE	12	U	12	UJ	0.82	12	ug/kg	OT
SD	NDA046	SW8081	ENDRIN ALDEHYDE	13	U	13	UJ	0.92	13	ug/kg	OT
SD	NDA302	SW8081	ENDRIN ALDEHYDE	8.3	U	8.3	UJ	0.58	8.3	ug/kg	OT
SD	NDA303	SW8081	ENDRIN ALDEHYDE	15	U	15	UJ	1	15	ug/kg	OT
SD	NDA307FD1	SW8081	ENDRIN ALDEHYDE	16	U	16	UJ	1.1	16	ug/kg	OT
SD	NDA044	SW8081	ENDRIN	16	U	16	UJ	1.9	16	ug/kg	OT
SD	NDA045	SW8081	ENDRIN	12	U	12	UJ	1.4	12	ug/kg	OT
SD	NDA046	SW8081	ENDRIN	13	U	13	UJ	1.6	13	ug/kg	OT
SD	NDA302	SW8081	ENDRIN	8.3	U	8.3	UJ	1	8.3	ug/kg	OT
SD	NDA303	SW8081	ENDRIN	15	U	15	UJ	1.8	15	ug/kg	OT
SD	NDA307FD1	SW8081	ENDRIN	16	U	16	UJ	1.9	16	ug/kg	OT
SD	NDA044	SW8081	ENDOSULFAN SULFATE	16	U	16	UJ	1.8	16	ug/kg	OT
SD	NDA045	SW8081	ENDOSULFAN SULFATE	12	U	12	UJ	1.4	12	ug/kg	OT
SD	NDA046	SW8081	ENDOSULFAN SULFATE	13	U	13	UJ	1.6	13	ug/kg	OT
SD	NDA302	SW8081	ENDOSULFAN SULFATE	8.3	U	8.3	UJ	0.98	8.3	ug/kg	OT
SD	NDA303	SW8081	ENDOSULFAN SULFATE	15	U	15	UJ	1.7	15	ug/kg	OT
SD	NDA307FD1	SW8081	ENDOSULFAN SULFATE	16	U	16	UJ	1.8	16	ug/kg	OT
SD	NDA044	SW8081	DIELDRIN	16	U	16	UJ	1.9	16	ug/kg	OT
SD	NDA045	SW8081	DIELDRIN	12	U	12	UJ	1.5	12	ug/kg	OT
SD	NDA046	SW8081	DIELDRIN	13	U	13	UJ	1.6	13	ug/kg	OT
SD	NDA302	SW8081	DIELDRIN	8.3	U	8.3	UJ	1	8.3	ug/kg	OT
SD	NDA303	SW8081	DIELDRIN	15	U	15	UJ	1.8	15	ug/kg	OT
SD	NDA307FD1	SW8081	DIELDRIN	16	U	16	UJ	1.9	16	ug/kg	OT
SD	NDA044	SW8081	DELTA BHC	8	U	8	UJ	2.1	8	ug/kg	OT
SD	NDA045	SW8081	DELTA BHC	6	U	6	UJ	1.6	6	ug/kg	OT
SD	NDA046	SW8081	DELTA BHC	6.8	U	6.8	UJ	1.8	6.8	ug/kg	OT
SD	NDA302	SW8081	DELTA BHC	4.3	U	4.3	UJ	1.1	4.3	ug/kg	OT
SD	NDA303	SW8081	DELTA BHC	7.5	U	7.5	UJ	1.9	7.5	ug/kg	OT
SD	NDA307FD1	SW8081	DELTA BHC	8	U	8	UJ	2.1	8	ug/kg	OT
SD	NDA044	SW8081	BETA ENDOSULFAN (ENDOSULFAN II)	16	U	16	UJ	1.4	16	ug/kg	OT
SD	NDA045	SW8081	BETA ENDOSULFAN (ENDOSULFAN II)	12	U	12	UJ	1.1	12	ug/kg	OT
SD	NDA046	SW8081	BETA ENDOSULFAN (ENDOSULFAN II)	13	U	13	UJ	1.2	13	ug/kg	OT

Matrix	Sample ID	Analytical Method	Parameter	Lab Result	Lab Qual	Final Result	Final Qual	DL	RL	Units	Comments
SD	NDA302	SW8081	BETA ENDOSULFAN (ENDOSULFAN II)	8.3	U	8.3	UJ	0.75	8.3	ug/kg	OT
SD	NDA303	SW8081	BETA ENDOSULFAN (ENDOSULFAN II)	15	U	15	UJ	1.3	15	ug/kg	OT
SD	NDA307FD1	SW8081	BETA ENDOSULFAN (ENDOSULFAN II)	16	U	16	UJ	1.4	16	ug/kg	OT
SD	NDA044	SW8081	BETA BHC	8	U	8	UJ	2.1	8	ug/kg	OT
SD	NDA045	SW8081	BETA BHC	6	U	6	UJ	1.6	6	ug/kg	OT
SD	NDA046	SW8081	BETA BHC	6.8	U	6.8	UJ	1.8	6.8	ug/kg	OT
SD	NDA302	SW8081	BETA BHC	4.3	U	4.3	UJ	1.1	4.3	ug/kg	OT
SD	NDA303	SW8081	BETA BHC	7.5	U	7.5	UJ	2	7.5	ug/kg	OT
SD	NDA307FD1	SW8081	BETA BHC	8	U	8	UJ	2.1	8	ug/kg	OT
SD	NDA044	SW8081	ALPHA-CHLORDANE	8	U	8	UJ	2.3	8	ug/kg	OT
SD	NDA045	SW8081	ALPHA-CHLORDANE	6	U	6	UJ	1.7	6	ug/kg	OT
SD	NDA046	SW8081	ALPHA-CHLORDANE	6.8	U	6.8	UJ	1.9	6.8	ug/kg	OT
SD	NDA302	SW8081	ALPHA-CHLORDANE	4.3	U	4.3	UJ	1.2	4.3	ug/kg	OT
SD	NDA303	SW8081	ALPHA-CHLORDANE	7.5	U	7.5	UJ	2.1	7.5	ug/kg	OT
SD	NDA307FD1	SW8081	ALPHA-CHLORDANE	8	U	8	UJ	2.3	8	ug/kg	OT
SD	NDA044	SW8081	ALPHA ENDOSULFAN (ENDOSULFAN I)	8	U	8	UJ	2.2	8	ug/kg	OT
SD	NDA045	SW8081	ALPHA ENDOSULFAN (ENDOSULFAN I)	6	U	6	UJ	1.7	6	ug/kg	OT
SD	NDA046	SW8081	ALPHA ENDOSULFAN (ENDOSULFAN I)	6.8	U	6.8	UJ	1.9	6.8	ug/kg	OT
SD	NDA302	SW8081	ALPHA ENDOSULFAN (ENDOSULFAN I)	4.3	U	4.3	UJ	1.2	4.3	ug/kg	OT
SD	NDA303	SW8081	ALPHA ENDOSULFAN (ENDOSULFAN I)	7.5	U	7.5	UJ	2.1	7.5	ug/kg	OT
SD	NDA307FD1	SW8081	ALPHA ENDOSULFAN (ENDOSULFAN I)	8	U	8	UJ	2.2	8	ug/kg	OT
SD	NDA044	SW8081	ALPHA BHC	8	U	8	UJ	2.3	8	ug/kg	OT
SD	NDA045	SW8081	ALPHA BHC	6	U	6	UJ	1.7	6	ug/kg	OT
SD	NDA046	SW8081	ALPHA BHC	6.8	U	6.8	UJ	2	6.8	ug/kg	OT
SD	NDA302	SW8081	ALPHA BHC	4.3	U	4.3	UJ	1.2	4.3	ug/kg	OT
SD	NDA303	SW8081	ALPHA BHC	7.5	U	7.5	UJ	2.2	7.5	ug/kg	OT
SD	NDA307FD1	SW8081	ALPHA BHC	8	U	8	UJ	2.3	8	ug/kg	OT
SD	NDA044	SW8081	ALDRIN	8	U	8	UJ	2.2	8	ug/kg	OT
SD	NDA045	SW8081	ALDRIN	6	U	6	UJ	1.7	6	ug/kg	OT
SD	NDA046	SW8081	ALDRIN	6.8	U	6.8	UJ	1.9	6.8	ug/kg	OT
SD	NDA302	SW8081	ALDRIN	4.3	U	4.3	UJ	1.2	4.3	ug/kg	OT
SD	NDA303	SW8081	ALDRIN	7.5	U	7.5	UJ	2.1	7.5	ug/kg	OT
SD	NDA307FD1	SW8081	ALDRIN	8	U	8	UJ	2.2	8	ug/kg	OT
SS	NDA059	E200.7	VANADIUM	29.9	=	29.9	J	0.08	10.8	mg/kg	MS, SD
SB	NDA214FD1	E200.7	CHROMIUM, TOTAL	14.2	=	14.2	J	0.05	2.2	mg/kg	MS, SD
SB	NDA217	E200.7	CHROMIUM, TOTAL	6.7	=	6.7	J	0.05	2.3	mg/kg	MS, SD
SB	NDA148	E200.7	CHROMIUM, TOTAL	14.4	=	14.4	J	0.06	2.5	mg/kg	MS, MD
SB	NDA151	E200.7	CHROMIUM, TOTAL	10	=	10	J	0.05	2.3	mg/kg	MS, MD
SB	NDA152FD1	E200.7	CHROMIUM, TOTAL	15	=	15	J	0.07	2.9	mg/kg	MS, MD
SB	NDA154	E200.7	CHROMIUM, TOTAL	9.2	=	9.2	J	0.05	2.2	mg/kg	MS, MD
SB	NDA156	E200.7	CHROMIUM, TOTAL	13.3	=	13.3	J	0.05	2.2	mg/kg	MS, MD
SB	NDA158	E200.7	CHROMIUM, TOTAL	9.1	=	9.1	J	0.05	2.2	mg/kg	MS, MD
SB	NDA160	E200.7	CHROMIUM, TOTAL	11.4	=	11.4	J	0.06	2.4	mg/kg	MS, MD
SB	NDA162	E200.7	CHROMIUM, TOTAL	5.2	=	5.2	J	0.05	2.3	mg/kg	MS, MD
SB	NDA163FD1	E200.7	CHROMIUM, TOTAL	5.7	=	5.7	J	0.05	2.3	mg/kg	MS, MD
SS	NDA147	E200.7	CHROMIUM, TOTAL	10	=	10	J	0.05	2.1	mg/kg	MS, MD
SS	NDA149	E200.7	CHROMIUM, TOTAL	16.1	=	16.1	J	0.05	2.2	mg/kg	MS, MD
SS	NDA150FD1	E200.7	CHROMIUM, TOTAL	74.6	=	74.6	J	0.05	2.1	mg/kg	MS, MD
SS	NDA153	E200.7	CHROMIUM, TOTAL	9.7	=	9.7	J	0.05	2.2	mg/kg	MS, MD
SS	NDA155	E200.7	CHROMIUM, TOTAL	5.3	=	5.3	J	0.05	2.3	mg/kg	MS, MD
SS	NDA157	E200.7	CHROMIUM, TOTAL	18	=	18	J	0.05	2	mg/kg	MS, MD
SS	NDA159	E200.7	CHROMIUM, TOTAL	5.8	=	5.8	J	0.05	2.1	mg/kg	MS, MD
SS	NDA161	E200.7	CHROMIUM, TOTAL	17.1	=	17.1	J	0.05	2.1	mg/kg	MS, MD
SW	NDA035	SW7470	MERCURY	0.18	U	0.18	R	0.18	0.2	ug/L	MS
SW	NDA036	SW7470	MERCURY	0.18	U	0.18	R	0.18	0.2	ug/L	MS
SW	NDA037	SW7470	MERCURY	1.6	=	1.6	J	0.18	0.2	ug/L	MS
SW	NDA038FD1	SW7470	MERCURY	0.18	U	0.18	R	0.18	0.2	ug/L	MS
SW	NDA039	SW7470	MERCURY	0.18	U	0.18	R	0.18	0.2	ug/L	MS
SW	NDA040	SW7470	MERCURY	0.18	U	0.18	R	0.18	0.2	ug/L	MS
SW	NDA300	SW7470	MERCURY	0.18	U	0.18	R	0.18	0.2	ug/L	MS
SW	NDA301	SW7470	MERCURY	0.18	U	0.18	R	0.18	0.2	ug/L	MS
WG	NDA005	E200.7	IRON, DISSOLVED	12.2	U	12.2	R	12.2	100	ug/L	MS
WG	NDA006	E200.7	IRON, DISSOLVED	12.2	U	12.2	R	12.2	100	ug/L	MS
WG	NDA009	E200.7	IRON, DISSOLVED	12.2	U	12.2	R	12.2	100	ug/L	MS
WG	NDA010	E200.7	IRON, DISSOLVED	944	=	944	J	12.2	100	ug/L	MS
WG	NDA012	E200.7	IRON, DISSOLVED	12.2	U	12.2	R	12.2	100	ug/L	MS
WG	NDA0321FD1	E200.7	IRON, DISSOLVED	12.2	U	12.2	R	12.2	100	ug/L	MS
WG	NDA006	E200.7	IRON	324	=	324	J	12.2	100	ug/L	MS
WG	NDA008	E200.7	IRON	2500	=	2500	J	12.2	100	ug/L	MS
WG	NDA010	E200.7	IRON	7320	=	7320	J	12.2	100	ug/L	MS

Matrix	Sample ID	Analytical Method	Parameter	Lab Result	Lab Qual	Final Result	Final Qual	DL	RL	Units	Comments
WG	NDA011	E200.7	IRON	1460	=	1460	J	12.2	100	ug/L	MS
WG	NDA012	E200.7	IRON	4170	=	4170	J	12.2	100	ug/L	MS
WG	NDA0321FD1	E200.7	IRON	2240	=	2240	J	12.2	100	ug/L	MS
WG	NDA002	E200.7	ALUMINUM	5420	=	5420	J	25.8	200	ug/L	MS
WG	NDA003	E200.7	ALUMINUM	635	=	635	J	25.8	200	ug/L	MS
WG	NDA003FD1	E200.7	ALUMINUM	513	=	513	J	25.8	200	ug/L	MS
WG	NDA004	E200.7	ALUMINUM	1650	=	1650	J	25.8	200	ug/L	MS
WG	NDA023	E200.7	ALUMINUM	66000	=	66000	J	25.8	200	ug/L	MS
WG	NDA028	E200.7	ALUMINUM	2020	=	2020	J	25.8	200	ug/L	MS
SB	NDA165	E200.7	ZINC	39.8	=	39.8	J	0.29	4.6	mg/kg	MS
SB	NDA167	E200.7	ZINC	29.6	=	29.6	J	0.28	4.4	mg/kg	MS
SB	NDA169	E200.7	ZINC	45	=	45	J	0.27	4.3	mg/kg	MS
SB	NDA171	E200.7	ZINC	30.9	=	30.9	J	0.27	4.4	mg/kg	MS
SB	NDA173	E200.7	ZINC	28.8	=	28.8	J	0.32	5.1	mg/kg	MS
SB	NDA175	E200.7	ZINC	37	=	37	J	0.28	4.5	mg/kg	MS
SB	NDA177	E200.7	ZINC	40.2	=	40.2	J	0.29	4.7	mg/kg	MS
SD	NDA050	E200.7	ZINC	448	=	448	J	0.58	9.2	mg/kg	MS
SD	NDA051FD1	E200.7	ZINC	490	=	490	J	0.62	9.9	mg/kg	MS
SD	NDA052	E200.7	ZINC	513	=	513	J	0.62	10	mg/kg	MS
SD	NDA053	E200.7	ZINC	213	=	213	J	0.38	6	mg/kg	MS
SS	NDA164	E200.7	ZINC	136	=	136	J	0.31	5	mg/kg	MS
SS	NDA166	E200.7	ZINC	48.2	=	48.2	J	0.31	5	mg/kg	MS
SS	NDA168	E200.7	ZINC	229	=	229	J	0.29	4.7	mg/kg	MS
SS	NDA170	E200.7	ZINC	172	=	172	J	0.3	4.8	mg/kg	MS
SS	NDA172	E200.7	ZINC	73.8	=	73.8	J	0.27	4.3	mg/kg	MS
SS	NDA174	E200.7	ZINC	48.5	=	48.5	J	0.26	4.2	mg/kg	MS
SS	NDA176	E200.7	ZINC	94.3	=	94.3	J	0.35	5.6	mg/kg	MS
SS	NDA107	E200.7	POTASSIUM	1820	=	1820	J	3.3	1250	mg/kg	MS
SB	NDA106FD1	SW7471	MERCURY	0.023	U	0.023	UJ	0.02	0.07	mg/kg	MS
SB	NDA108	SW7471	MERCURY	0.072	=	0.072	J	0.01	0.05	mg/kg	MS
SB	NDA110	SW7471	MERCURY	0.012	U	0.012	UJ	0.01	0.03	mg/kg	MS
SB	NDA112	SW7471	MERCURY	0.018	U	0.018	UJ	0.01	0.05	mg/kg	MS
SD	NDA042	SW7471	MERCURY	0.18	=	0.18	J	0.01	0.06	mg/kg	MS
SD	NDA043	SW7471	MERCURY	0.21	=	0.21	J	0.01	0.05	mg/kg	MS
SD	NDA044	SW7471	MERCURY	0.05	U	0.05	UJ	0.05	0.17	mg/kg	MS
SD	NDA045	SW7471	MERCURY	0.052	U	0.052	UJ	0.05	0.17	mg/kg	MS
SD	NDA046	SW7471	MERCURY	0.047	U	0.047	UJ	0.04	0.16	mg/kg	MS
SD	NDA302	SW7471	MERCURY	0.0087	U	0.0087	UJ	0.0087	0.02	mg/kg	MS
SD	NDA303	SW7471	MERCURY	0.052	U	0.052	UJ	0.05	0.17	mg/kg	MS
SD	NDA307FD1	SW7471	MERCURY	0.048	U	0.048	UJ	0.04	0.16	mg/kg	MS
SS	NDA101	SW7471	MERCURY	0.081	=	0.081	J	0.01	0.06	mg/kg	MS
SS	NDA103	SW7471	MERCURY	0.015	U	0.015	UJ	0.01	0.05	mg/kg	MS
SS	NDA104FD1	SW7471	MERCURY	0.019	U	0.019	UJ	0.01	0.06	mg/kg	MS
SS	NDA107	SW7471	MERCURY	0.081	=	0.081	J	0.01	0.05	mg/kg	MS
SS	NDA109	SW7471	MERCURY	0.019	U	0.019	UJ	0.01	0.06	mg/kg	MS
SB	NDA148	E200.7	MANGANESE	708	=	708	J	0.01	3.7	mg/kg	MS
SB	NDA151	E200.7	MANGANESE	520	=	520	J	0.01	3.4	mg/kg	MS
SB	NDA152FD1	E200.7	MANGANESE	847	=	847	J	0.01	4.3	mg/kg	MS
SB	NDA154	E200.7	MANGANESE	568	=	568	J	0.01	3.4	mg/kg	MS
SB	NDA156	E200.7	MANGANESE	657	=	657	J	0.01	3.3	mg/kg	MS
SB	NDA158	E200.7	MANGANESE	654	=	654	J	0.01	3.3	mg/kg	MS
SB	NDA160	E200.7	MANGANESE	783	=	783	J	0.01	3.6	mg/kg	MS
SB	NDA162	E200.7	MANGANESE	394	=	394	J	0.01	3.4	mg/kg	MS
SB	NDA163FD1	E200.7	MANGANESE	339	=	339	J	0.01	3.5	mg/kg	MS
SB	NDA165	E200.7	MANGANESE	769	=	769	J	0.01	3.4	mg/kg	MS
SB	NDA167	E200.7	MANGANESE	497	=	497	J	0.01	3.3	mg/kg	MS
SB	NDA169	E200.7	MANGANESE	436	=	436	J	0.01	3.2	mg/kg	MS
SB	NDA171	E200.7	MANGANESE	299	=	299	J	0.01	3.3	mg/kg	MS
SB	NDA173	E200.7	MANGANESE	469	=	469	J	0.01	3.9	mg/kg	MS
SB	NDA175	E200.7	MANGANESE	421	=	421	J	0.01	3.4	mg/kg	MS
SB	NDA177	E200.7	MANGANESE	589	=	589	J	0.01	3.5	mg/kg	MS
SB	NDA058	E200.7	MANGANESE	956	=	956	R	0.01	3.3	mg/kg	MS
SB	NDA060	E200.7	MANGANESE	703	=	703	R	0.01	3.3	mg/kg	MS
SB	NDA114	E200.7	MANGANESE	343	=	343	J	0.01	3.9	mg/kg	MS
SB	NDA116	E200.7	MANGANESE	213	=	213	J	0.01	3.8	mg/kg	MS
SB	NDA118	E200.7	MANGANESE	170	=	170	J	0.01	3.9	mg/kg	MS
SD	NDA050	E200.7	MANGANESE	607	=	607	J	0.02	6.9	mg/kg	MS
SD	NDA051FD1	E200.7	MANGANESE	595	=	595	J	0.02	7.4	mg/kg	MS
SD	NDA052	E200.7	MANGANESE	555	=	555	J	0.02	7.5	mg/kg	MS
SD	NDA053	E200.7	MANGANESE	478	=	478	J	0.01	4.5	mg/kg	MS

Matrix	Sample ID	Analytical Method	Parameter	Lab Result	Lab Qual	Final Result	Final Qual	DL	RL	Units	Comments
SD	NDA047	E200.7	MANGANESE	1250	=	1250	R	0.01	3.3	mg/kg	MS
SD	NDA048	E200.7	MANGANESE	2170	=	2170	R	0.01	3.4	mg/kg	MS
SD	NDA049	E200.7	MANGANESE	617	=	617	R	0.01	3.3	mg/kg	MS
SS	NDA147	E200.7	MANGANESE	449	=	449	J	0.01	3.1	mg/kg	MS
SS	NDA149	E200.7	MANGANESE	374	=	374	J	0.01	3.3	mg/kg	MS
SS	NDA150FD1	E200.7	MANGANESE	392	=	392	J	0.01	3.1	mg/kg	MS
SS	NDA153	E200.7	MANGANESE	375	=	375	J	0.01	3.2	mg/kg	MS
SS	NDA155	E200.7	MANGANESE	607	=	607	J	0.01	3.4	mg/kg	MS
SS	NDA157	E200.7	MANGANESE	263	=	263	J	0.01	3	mg/kg	MS
SS	NDA159	E200.7	MANGANESE	792	=	792	J	0.01	3.1	mg/kg	MS
SS	NDA161	E200.7	MANGANESE	369	=	369	J	0.01	3.1	mg/kg	MS
SS	NDA164	E200.7	MANGANESE	710	=	710	J	0.01	3.7	mg/kg	MS
SS	NDA166	E200.7	MANGANESE	435	=	435	J	0.01	3.7	mg/kg	MS
SS	NDA168	E200.7	MANGANESE	506	=	506	J	0.01	3.5	mg/kg	MS
SS	NDA170	E200.7	MANGANESE	587	=	587	J	0.01	3.6	mg/kg	MS
SS	NDA172	E200.7	MANGANESE	544	=	544	J	0.01	3.2	mg/kg	MS
SS	NDA174	E200.7	MANGANESE	907	=	907	J	0.01	3.2	mg/kg	MS
SS	NDA176	E200.7	MANGANESE	419	=	419	J	0.01	4.2	mg/kg	MS
SS	NDA057	E200.7	MANGANESE	337	=	337	R	0.01	3.7	mg/kg	MS
SS	NDA059	E200.7	MANGANESE	345	=	345	R	0.01	3.2	mg/kg	MS
SS	NDA061	E200.7	MANGANESE	382	=	382	R	0.01	3.2	mg/kg	MS
SS	NDA062FD1	E200.7	MANGANESE	585	=	585	R	0.01	3.2	mg/kg	MS
SS	NDA113	E200.7	MANGANESE	465	=	465	J	0.01	3.7	mg/kg	MS
SS	NDA115	E200.7	MANGANESE	390	=	390	J	0.01	3.4	mg/kg	MS
SS	NDA117	E200.7	MANGANESE	379	=	379	J	0.01	3.8	mg/kg	MS
SB	NDA114	E200.7	COPPER	137	=	137	J	0.25	6.5	mg/kg	MS
SB	NDA116	E200.7	COPPER	37.1	=	37.1	J	0.24	6.3	mg/kg	MS
SB	NDA118	E200.7	COPPER	10	=	10	J	0.25	6.5	mg/kg	MS
SS	NDA113	E200.7	COPPER	114	=	114	J	0.24	6.2	mg/kg	MS
SS	NDA115	E200.7	COPPER	52.3	=	52.3	J	0.22	5.7	mg/kg	MS
SS	NDA117	E200.7	COPPER	114	=	114	J	0.24	6.3	mg/kg	MS
SD	NDA047	E200.7	COBALT	30.3	=	30.3	J	0.05	10.9	mg/kg	MS
SB	NDA058	E200.7	BARIUM	702	E	702	R	0.01	44.6	mg/kg	MS
SB	NDA058DL1	E200.7	BARIUM	710	=	710	R	0.05	223	mg/kg	MS
SB	NDA060	E200.7	BARIUM	177	=	177	R	0.01	44	mg/kg	MS
SB	NDA063	E200.7	BARIUM	504	=	504	J	0.01	43.4	mg/kg	MS
SB	1	E200.7	BARIUM	1980	=	1980	J	0.05	217	mg/kg	MS
SB	NDA066	E200.7	BARIUM	103	=	103	J	0.01	42.2	mg/kg	MS
SB	NDA068DL1	E200.7	BARIUM	3170	=	3170	J	0.11	434	mg/kg	MS
SD	NDA047	E200.7	BARIUM	109	=	109	R	0.01	43.7	mg/kg	MS
SD	NDA048	E200.7	BARIUM	247	=	247	R	0.01	45.9	mg/kg	MS
SD	NDA049	E200.7	BARIUM	61.1	=	61.1	R	0.01	43.9	mg/kg	MS
SS	NDA057	E200.7	BARIUM	219	=	219	R	0.01	49.9	mg/kg	MS
SS	NDA059	E200.7	BARIUM	315	=	315	R	0.01	43	mg/kg	MS
SS	NDA061	E200.7	BARIUM	150	=	150	R	0.01	42.1	mg/kg	MS
SS	NDA062FD1	E200.7	BARIUM	200	=	200	R	0.01	42.7	mg/kg	MS
SS	NDA065	E200.7	BARIUM	274	=	274	J	0.01	50.3	mg/kg	MS
SS	NDA067	E200.7	BARIUM	66.2	=	66.2	J	0.01	43.1	mg/kg	MS
SS	NDA069	E200.7	BARIUM	168	=	168	J	0.01	41.2	mg/kg	MS
SS	NDA119	E200.7	BARIUM	97.1	=	97.1	J	0.01	45.9	mg/kg	MS
SS	NDA120	E200.7	BARIUM	90.5	=	90.5	J	0.01	54.2	mg/kg	MS
SS	NDA121	E200.7	BARIUM	63.2	=	63.2	J	0.01	43.9	mg/kg	MS
SS	NDA122	E200.7	BARIUM	62.7	=	62.7	J	0.01	45	mg/kg	MS
SS	NDA123	E200.7	BARIUM	85.6	=	85.6	J	0.01	44.7	mg/kg	MS
SS	NDA124	E200.7	BARIUM	111	=	111	J	0.01	45.2	mg/kg	MS
SB	NDA129	E200.7	ANTIMONY	0.16	U	0.16	UJ	0.16	13.6	mg/kg	MS
SB	NDA132	E200.7	ANTIMONY	0.18	U	0.18	UJ	0.18	15	mg/kg	MS
SB	NDA134	E200.7	ANTIMONY	0.17	U	0.17	UJ	0.17	14.8	mg/kg	MS
SB	NDA136	E200.7	ANTIMONY	0.17	U	0.17	UJ	0.17	14.2	mg/kg	MS
SB	NDA140	E200.7	ANTIMONY	0.15	U	0.15	UJ	0.15	13.2	mg/kg	MS
SB	NDA146	E200.7	ANTIMONY	0.15	U	0.15	UJ	0.15	12.9	mg/kg	MS
SB	NDA148	E200.7	ANTIMONY	0.17	U	0.17	UJ	0.17	14.8	mg/kg	MS
SB	NDA151	E200.7	ANTIMONY	0.16	U	0.16	UJ	0.16	13.8	mg/kg	MS
SB	NDA152FD1	E200.7	ANTIMONY	0.2	U	0.2	UJ	0.2	17.3	mg/kg	MS
SB	NDA154	E200.7	ANTIMONY	0.16	U	0.16	UJ	0.16	13.5	mg/kg	MS
SB	NDA158	E200.7	ANTIMONY	0.15	U	0.15	UJ	0.15	13.1	mg/kg	MS
SB	NDA162	E200.7	ANTIMONY	0.16	U	0.16	UJ	0.16	13.7	mg/kg	MS
SB	NDA163FD1	E200.7	ANTIMONY	0.16	U	0.16	UJ	0.16	14.1	mg/kg	MS
SB	NDA165	E200.7	ANTIMONY	0.16	U	0.16	UJ	0.16	13.7	mg/kg	MS
SB	NDA167	E200.7	ANTIMONY	0.15	U	0.15	UJ	0.15	13.2	mg/kg	MS

Matrix	Sample ID	Analytical Method	Parameter	Lab Result	Lab Qual	Final Result	Final Qual	DL	RL	Units	Comments
SB	NDA169	E200.7	ANTIMONY	0.15	U	0.15	UJ	0.15	12.9	mg/kg	MS
SB	NDA171	E200.7	ANTIMONY	0.15	U	0.15	UJ	0.15	13.1	mg/kg	MS
SB	NDA173	E200.7	ANTIMONY	0.18	U	0.18	UJ	0.18	15.4	mg/kg	MS
SB	NDA175	E200.7	ANTIMONY	0.16	U	0.16	UJ	0.16	13.5	mg/kg	MS
SB	NDA177	E200.7	ANTIMONY	0.16	U	0.16	UJ	0.16	14	mg/kg	MS
SB	NDA213	E200.7	ANTIMONY	0.16	U	0.16	UJ	0.16	13.4	mg/kg	MS
SB	NDA214FD1	E200.7	ANTIMONY	0.16	U	0.16	UJ	0.16	13.4	mg/kg	MS
SB	NDA215	E200.7	ANTIMONY	0.16	U	0.16	UJ	0.16	14	mg/kg	MS
SB	NDA216	E200.7	ANTIMONY	0.15	U	0.15	UJ	0.15	13.3	mg/kg	MS
SB	NDA217	E200.7	ANTIMONY	0.16	U	0.16	UJ	0.16	13.9	mg/kg	MS
SB	NDA218	E200.7	ANTIMONY	0.15	U	0.15	UJ	0.15	13.2	mg/kg	MS
SB	NDA220	E200.7	ANTIMONY	0.16	U	0.16	UJ	0.16	13.8	mg/kg	MS
SB	NDA221	E200.7	ANTIMONY	0.15	U	0.15	UJ	0.15	12.8	mg/kg	MS
SB	NDA222	E200.7	ANTIMONY	0.14	U	0.14	UJ	0.14	12.1	mg/kg	MS
SB	NDA223	E200.7	ANTIMONY	0.16	U	0.16	UJ	0.16	13.7	mg/kg	MS
SB	NDA224	E200.7	ANTIMONY	0.16	U	0.16	UJ	0.16	13.9	mg/kg	MS
SB	NDA226	E200.7	ANTIMONY	0.17	U	0.17	UJ	0.17	14.2	mg/kg	MS
SB	NDA227FD1	E200.7	ANTIMONY	0.16	U	0.16	UJ	0.16	13.8	mg/kg	MS
SB	NDA228	E200.7	ANTIMONY	0.17	U	0.17	UJ	0.17	14.5	mg/kg	MS
SB	NDA229	E200.7	ANTIMONY	0.18	U	0.18	UJ	0.18	15.7	mg/kg	MS
SB	NDA232	E200.7	ANTIMONY	0.16	U	0.16	UJ	0.16	13.3	mg/kg	MS
SB	NDA233	E200.7	ANTIMONY	0.15	U	0.15	UJ	0.15	12.8	mg/kg	MS
SB	NDA234	E200.7	ANTIMONY	0.16	U	0.16	UJ	0.16	13.8	mg/kg	MS
SB	NDA235	E200.7	ANTIMONY	0.18	U	0.18	UJ	0.18	15.8	mg/kg	MS
SB	NDA236	E200.7	ANTIMONY	0.16	U	0.16	UJ	0.16	13.7	mg/kg	MS
SB	NDA237FD1	E200.7	ANTIMONY	0.16	U	0.16	UJ	0.16	13.5	mg/kg	MS
SB	NDA238	E200.7	ANTIMONY	0.16	U	0.16	UJ	0.16	13.6	mg/kg	MS
SB	NDA239	E200.7	ANTIMONY	0.16	U	0.16	UJ	0.16	13.6	mg/kg	MS
SB	NDA241	E200.7	ANTIMONY	0.16	U	0.16	J	0.16	13.4	mg/kg	MS
SB	NDA242	E200.7	ANTIMONY	0.18	U	0.18	UJ	0.18	15.1	mg/kg	MS
SB	NDA244	E200.7	ANTIMONY	0.15	U	0.15	UJ	0.15	13.2	mg/kg	MS
SB	NDA246	E200.7	ANTIMONY	0.17	U	0.17	UJ	0.17	14.8	mg/kg	MS
SB	NDA247FD1	E200.7	ANTIMONY	0.16	U	0.16	UJ	0.16	14	mg/kg	MS
SB	NDA248	E200.7	ANTIMONY	0.17	U	0.17	UJ	0.17	14.7	mg/kg	MS
SB	NDA252	E200.7	ANTIMONY	0.16	U	0.16	UJ	0.16	14.1	mg/kg	MS
SB	NDA253	E200.7	ANTIMONY	0.18	U	0.18	UJ	0.18	15.2	mg/kg	MS
SB	NDA254	E200.7	ANTIMONY	0.18	U	0.18	UJ	0.18	15.2	mg/kg	MS
SB	NDA255	E200.7	ANTIMONY	0.17	U	0.17	UJ	0.17	14.9	mg/kg	MS
SB	NDA058	E200.7	ANTIMONY	0.16	U	0.16	UJ	0.16	13.4	mg/kg	MS
SB	NDA060	E200.7	ANTIMONY	0.15	U	0.15	UJ	0.15	13.2	mg/kg	MS
SB	NDA063	E200.7	ANTIMONY	0.15	U	0.15	UJ	0.15	13	mg/kg	MS
SB	NDA064FD1	E200.7	ANTIMONY	0.15	U	0.15	UJ	0.15	13	mg/kg	MS
SB	NDA066	E200.7	ANTIMONY	0.15	U	0.15	UJ	0.15	12.7	mg/kg	MS
SB	NDA068	E200.7	ANTIMONY	0.15	U	0.15	UJ	0.15	13.2	mg/kg	MS
SB	NDA070	E200.7	ANTIMONY	0.15	U	0.15	UJ	0.15	12.8	mg/kg	MS
SB	NDA073	E200.7	ANTIMONY	0.14	U	0.14	UJ	0.14	12.4	mg/kg	MS
SB	NDA075	E200.7	ANTIMONY	0.15	U	0.15	UJ	0.15	12.6	mg/kg	MS
SB	NDA077	E200.7	ANTIMONY	0.17	U	0.17	UJ	0.17	14.3	mg/kg	MS
SB	NDA079	E200.7	ANTIMONY	0.16	U	0.16	UJ	0.16	13.8	mg/kg	MS
SB	NDA081	E200.7	ANTIMONY	0.15	U	0.15	UJ	0.15	12.8	mg/kg	MS
SB	NDA083	E200.7	ANTIMONY	0.15	U	0.15	UJ	0.15	12.5	mg/kg	MS
SB	NDA116	E200.7	ANTIMONY	0.18	U	0.18	UJ	0.18	15.1	mg/kg	MS
SB	NDA118	E200.7	ANTIMONY	0.18	U	0.18	UJ	0.18	15.5	mg/kg	MS
SB	NDA112	E200.7	ANTIMONY	0.19	U	0.19	UJ	0.19	16.1	mg/kg	MS
SD	NDA055	E200.7	ANTIMONY	0.14	U	0.14	UJ	0.14	12.1	mg/kg	MS
SD	NDA043	E200.7	ANTIMONY	97.8	=	97.8	J	0.21	17.8	mg/kg	MS
SD	NDA045	E200.7	ANTIMONY	0.5	U	0.5	UJ	0.5	43	mg/kg	MS
SD	NDA046	E200.7	ANTIMONY	0.56	U	0.56	UJ	0.56	48.4	mg/kg	MS
SD	NDA302	E200.7	ANTIMONY	0.14	U	0.14	UJ	0.14	12	mg/kg	MS
SD	NDA303	E200.7	ANTIMONY	0.62	U	0.62	UJ	0.62	53.1	mg/kg	MS
SD	NDA307FD1	E200.7	ANTIMONY	0.66	U	0.66	UJ	0.66	56.9	mg/kg	MS
SD	NDA047	E200.7	ANTIMONY	0.15	U	0.15	UJ	0.15	13.1	mg/kg	MS
SD	NDA049	E200.7	ANTIMONY	0.15	U	0.15	UJ	0.15	13.2	mg/kg	MS
SS	NDA164	E200.7	ANTIMONY	0.18	U	0.18	J	0.18	15	mg/kg	MS
SS	NDA166	E200.7	ANTIMONY	0.17	U	0.17	UJ	0.17	14.9	mg/kg	MS
SS	NDA174	E200.7	ANTIMONY	0.15	U	0.15	UJ	0.15	12.6	mg/kg	MS
SS	NDA196	E200.7	ANTIMONY	0.15	U	0.15	UJ	0.15	13.1	mg/kg	MS
SS	NDA197FD1	E200.7	ANTIMONY	0.15	U	0.15	UJ	0.15	13	mg/kg	MS
SS	NDA198	E200.7	ANTIMONY	0.18	U	0.18	UJ	0.18	15.6	mg/kg	MS
SS	NDA199	E200.7	ANTIMONY	0.18	U	0.18	UJ	0.18	15.6	mg/kg	MS

Matrix	Sample ID	Analytical Method	Parameter	Lab Result	Lab Qual	Final Result	Final Qual	DL	RL	Units	Comments
SS	NDA200	E200.7	ANTIMONY	0.15	U	0.15	UJ	0.15	12.9	mg/kg	MS
SS	NDA179	E200.7	ANTIMONY	0.15	U	0.15	UJ	0.15	12.8	mg/kg	MS
SS	NDA201	E200.7	ANTIMONY	0.14	U	0.14	UJ	0.14	12.3	mg/kg	MS
SS	NDA203	E200.7	ANTIMONY	0.17	U	0.17	UJ	0.17	15	mg/kg	MS
SS	NDA204	E200.7	ANTIMONY	0.18	U	0.18	UJ	0.18	15.7	mg/kg	MS
SS	NDA205FD1	E200.7	ANTIMONY	0.16	U	0.16	UJ	0.16	13.8	mg/kg	MS
SS	NDA206	E200.7	ANTIMONY	0.15	U	0.15	UJ	0.15	12.6	mg/kg	MS
SS	NDA207	E200.7	ANTIMONY	0.16	U	0.16	UJ	0.16	13.7	mg/kg	MS
SS	NDA208	E200.7	ANTIMONY	0.14	U	0.14	UJ	0.14	12.4	mg/kg	MS
SS	NDA209	E200.7	ANTIMONY	0.2	U	0.2	UJ	0.2	17.3	mg/kg	MS
SS	NDA210	E200.7	ANTIMONY	0.15	U	0.15	UJ	0.15	12.5	mg/kg	MS
SS	NDA211	E200.7	ANTIMONY	0.14	U	0.14	UJ	0.14	12.2	mg/kg	MS
SS	NDA212	E200.7	ANTIMONY	0.14	U	0.14	UJ	0.14	12.1	mg/kg	MS
SS	NDA057	E200.7	ANTIMONY	0.17	U	0.17	UJ	0.17	15	mg/kg	MS
SS	NDA059	E200.7	ANTIMONY	0.15	U	0.15	J	0.15	12.9	mg/kg	MS
SS	NDA061	E200.7	ANTIMONY	0.15	U	0.15	UJ	0.15	12.6	mg/kg	MS
SS	NDA062FD1	E200.7	ANTIMONY	0.15	U	0.15	UJ	0.15	12.8	mg/kg	MS
SS	NDA065	E200.7	ANTIMONY	0.18	U	0.18	UJ	0.18	15.1	mg/kg	MS
SS	NDA069	E200.7	ANTIMONY	0.14	U	0.14	UJ	0.14	12.4	mg/kg	MS
SS	NDA121	E200.7	ANTIMONY	0.15	U	0.15	UJ	0.15	13.2	mg/kg	MS
SS	NDA071	E200.7	ANTIMONY	0.17	U	0.17	UJ	0.17	14.5	mg/kg	MS
SS	NDA072FD1	E200.7	ANTIMONY	0.15	U	0.15	UJ	0.15	12.6	mg/kg	MS
SS	NDA074	E200.7	ANTIMONY	0.15	U	0.15	UJ	0.15	12.8	mg/kg	MS
SS	NDA076	E200.7	ANTIMONY	0.15	U	0.15	UJ	0.15	12.7	mg/kg	MS
SS	NDA078	E200.7	ANTIMONY	0.15	U	0.15	UJ	0.15	12.8	mg/kg	MS
SS	NDA080	E200.7	ANTIMONY	0.15	U	0.15	UJ	0.15	12.7	mg/kg	MS
SS	NDA082	E200.7	ANTIMONY	0.14	U	0.14	UJ	0.14	12.3	mg/kg	MS
SS	NDA103	E200.7	ANTIMONY	0.19	U	0.19	UJ	0.19	16.6	mg/kg	MS
SB	NDA235	E200.7	ZINC	31.9	=	31.9	J	0.33	5.3	mg/kg	MD
SB	NDA236	E200.7	ZINC	24.4	=	24.4	J	0.28	4.6	mg/kg	MD
SB	NDA237FD1	E200.7	ZINC	20.1	=	20.1	J	0.28	4.5	mg/kg	MD
SB	NDA238	E200.7	ZINC	40.6	=	40.6	J	0.28	4.5	mg/kg	MD
SB	NDA239	E200.7	ZINC	56.2	=	56.2	J	0.28	4.5	mg/kg	MD
SB	NDA240	E200.7	ZINC	48.6	=	48.6	J	0.3	4.9	mg/kg	MD
SB	NDA241	E200.7	ZINC	27.7	=	27.7	J	0.28	4.5	mg/kg	MD
SB	NDA242	E200.7	ZINC	25.8	=	25.8	J	0.31	5	mg/kg	MD
SB	NDA243	E200.7	ZINC	55.7	=	55.7	J	0.3	4.7	mg/kg	MD
SB	NDA244	E200.7	ZINC	47.1	=	47.1	J	0.28	4.4	mg/kg	MD
SB	NDA126	E200.7	VANADIUM	36.2	=	36.2	J	0.08	11	mg/kg	MD
SB	NDA129	E200.7	VANADIUM	38.1	=	38.1	J	0.09	11.3	mg/kg	MD
SB	NDA130FD1	E200.7	VANADIUM	37.3	=	37.3	J	0.08	10.9	mg/kg	MD
SB	NDA132	E200.7	VANADIUM	56.9	=	56.9	J	0.1	12.5	mg/kg	MD
SB	NDA134	E200.7	VANADIUM	30.8	=	30.8	J	0.09	12.3	mg/kg	MD
SB	NDA136	E200.7	VANADIUM	45.6	=	45.6	J	0.09	11.8	mg/kg	MD
SB	NDA138	E200.7	VANADIUM	37.3	=	37.3	J	0.08	11	mg/kg	MD
SB	NDA140	E200.7	VANADIUM	35	=	35	J	0.08	11	mg/kg	MD
SB	NDA142	E200.7	VANADIUM	32.9	=	32.9	J	0.09	11.7	mg/kg	MD
SB	NDA144	E200.7	VANADIUM	37	=	37	J	0.08	11	mg/kg	MD
SB	NDA146	E200.7	VANADIUM	29.3	=	29.3	J	0.08	10.7	mg/kg	MD
SS	NDA125	E200.7	VANADIUM	36.5	=	36.5	J	0.09	11.7	mg/kg	MD
SS	NDA127	E200.7	VANADIUM	54.7	=	54.7	J	0.08	11	mg/kg	MD
SS	NDA128FD1	E200.7	VANADIUM	65.2	=	65.2	J	0.1	12.7	mg/kg	MD
SS	NDA131	E200.7	VANADIUM	35.7	=	35.7	J	0.09	11.4	mg/kg	MD
SS	NDA133	E200.7	VANADIUM	35.3	=	35.3	J	0.09	11.7	mg/kg	MD
SS	NDA135	E200.7	VANADIUM	29.4	=	29.4	J	0.09	12.2	mg/kg	MD
SS	NDA137	E200.7	VANADIUM	27.6	=	27.6	J	0.08	10.7	mg/kg	MD
SS	NDA139	E200.7	VANADIUM	24.7	=	24.7	J	0.08	10.5	mg/kg	MD
SS	NDA141	E200.7	VANADIUM	22.3	=	22.3	J	0.1	12.8	mg/kg	MD
SS	NDA143	E200.7	VANADIUM	23.7	=	23.7	J	0.08	10.3	mg/kg	MD
SS	NDA145	E200.7	VANADIUM	25.5	=	25.5	J	0.08	11.1	mg/kg	MD
SB	NDA235	E200.7	COPPER	32.3	=	32.3	J	0.25	6.6	mg/kg	MD
SB	NDA236	E200.7	COPPER	28.2	=	28.2	J	0.22	5.7	mg/kg	MD
SB	NDA237FD1	E200.7	COPPER	22	=	22	J	0.21	5.6	mg/kg	MD
SB	NDA238	E200.7	COPPER	60.4	=	60.4	J	0.21	5.7	mg/kg	MD
SB	NDA239	E200.7	COPPER	120	=	120	J	0.22	5.7	mg/kg	MD
SB	NDA240	E200.7	COPPER	91	=	91	J	0.23	6.1	mg/kg	MD
SB	NDA241	E200.7	COPPER	25.9	=	25.9	J	0.21	5.6	mg/kg	MD
SB	NDA242	E200.7	COPPER	28.9	=	28.9	J	0.24	6.3	mg/kg	MD
SB	NDA243	E200.7	COPPER	66.9	=	66.9	J	0.22	5.9	mg/kg	MD
SB	NDA244	E200.7	COPPER	52.6	=	52.6	J	0.21	5.5	mg/kg	MD

Matrix	Sample ID	Analytical Method	Parameter	Lab Result	Lab Qual	Final Result	Final Qual	DL	RL	Units	Comments
SB	NDA114DL1	E200.7	CALCIUM	102000	=	102000	J	7.6	6510	mg/kg	MD
WG	NDA001	E200.7	SODIUM, DISSOLVED	3070000	E	3070000	R	115	5000	ug/L	LR
WG	NDA005	E200.7	SODIUM, DISSOLVED	9720000	E	9720000	R	115	5000	ug/L	LR
WG	NDA006	E200.7	SODIUM, DISSOLVED	7360000	E	7360000	R	115	5000	ug/L	LR
WG	NDA008	E200.7	SODIUM, DISSOLVED	1.2E+07	E	12200000	R	115	5000	ug/L	LR
WG	NDA009	E200.7	SODIUM, DISSOLVED	1.2E+07	E	12100000	R	115	5000	ug/L	LR
SW	NDA035	E200.7	SODIUM	6500000	E	6500000	R	115	5000	ug/L	LR
SW	NDA036	E200.7	SODIUM	6370000	E	6370000	R	115	5000	ug/L	LR
SW	NDA037	E200.7	SODIUM	6520000	E	6520000	R	115	5000	ug/L	LR
SW	NDA038FD1	E200.7	SODIUM	6210000	E	6210000	R	115	5000	ug/L	LR
SW	NDA039	E200.7	SODIUM	6270000	E	6270000	R	115	5000	ug/L	LR
SW	NDA040	E200.7	SODIUM	6200000	E	6200000	R	115	5000	ug/L	LR
SW	NDA300	E200.7	SODIUM	6240000	E	6240000	R	115	5000	ug/L	LR
SW	NDA301	E200.7	SODIUM	6330000	E	6330000	R	115	5000	ug/L	LR
WG	NDA001	E200.7	SODIUM	3090000	E	3090000	R	115	5000	ug/L	LR
WG	NDA005	E200.7	SODIUM	1.2E+07	E	11800000	R	115	5000	ug/L	LR
WG	NDA006	E200.7	SODIUM	9740000	E	9740000	R	115	5000	ug/L	LR
WG	NDA008	E200.7	SODIUM	1.2E+07	E	11800000	R	115	5000	ug/L	LR
WG	NDA009	E200.7	SODIUM	1.2E+07	E	11900000	R	115	5000	ug/L	LR
WG	NDA002	E200.7	MAGNESIUM, DISSOLVED	712000	E	712000	R	9	5000	ug/L	LR
WG	NDA004	E200.7	MAGNESIUM, DISSOLVED	727000	E	727000	R	9	5000	ug/L	LR
WG	NDA001	E200.7	MAGNESIUM, DISSOLVED	527000	E	527000	R	9	5000	ug/L	LR
WG	NDA005	E200.7	MAGNESIUM, DISSOLVED	1510000	E	1510000	R	9	5000	ug/L	LR
WG	NDA006	E200.7	MAGNESIUM, DISSOLVED	1520000	E	1520000	R	9	5000	ug/L	LR
WG	NDA008	E200.7	MAGNESIUM, DISSOLVED	1530000	E	1530000	R	9	5000	ug/L	LR
WG	NDA009	E200.7	MAGNESIUM, DISSOLVED	1530000	E	1530000	R	9	5000	ug/L	LR
SW	NDA035	E200.7	MAGNESIUM	1540000	E	1540000	R	9	5000	ug/L	LR
SW	NDA036	E200.7	MAGNESIUM	1540000	E	1540000	R	9	5000	ug/L	LR
SW	NDA037	E200.7	MAGNESIUM	1560000	E	1560000	R	9	5000	ug/L	LR
SW	NDA038FD1	E200.7	MAGNESIUM	1520000	E	1520000	R	9	5000	ug/L	LR
SW	NDA039	E200.7	MAGNESIUM	1560000	E	1560000	R	9	5000	ug/L	LR
SW	NDA040	E200.7	MAGNESIUM	1550000	E	1550000	R	9	5000	ug/L	LR
SW	NDA300	E200.7	MAGNESIUM	1560000	E	1560000	R	9	5000	ug/L	LR
SW	NDA301	E200.7	MAGNESIUM	1560000	E	1560000	R	9	5000	ug/L	LR
WG	NDA002	E200.7	MAGNESIUM	697000	E	697000	R	9	5000	ug/L	LR
WG	NDA004	E200.7	MAGNESIUM	751000	E	751000	R	9	5000	ug/L	LR
WG	NDA001	E200.7	MAGNESIUM	510000	E	510000	R	9	5000	ug/L	LR
WG	NDA005	E200.7	MAGNESIUM	1570000	E	1570000	R	9	5000	ug/L	LR
WG	NDA006	E200.7	MAGNESIUM	1580000	E	1580000	R	9	5000	ug/L	LR
WG	NDA008	E200.7	MAGNESIUM	1570000	E	1570000	R	9	5000	ug/L	LR
WG	NDA009	E200.7	MAGNESIUM	1590000	E	1590000	R	9	5000	ug/L	LR
WG	NDA005	E200.7	CALCIUM, DISSOLVED	567000	E	567000	R	11.7	5000	ug/L	LR
WG	NDA006	E200.7	CALCIUM, DISSOLVED	694000	E	694000	R	11.7	5000	ug/L	LR
WG	NDA008	E200.7	CALCIUM, DISSOLVED	498000	E	498000	R	11.7	5000	ug/L	LR
WG	NDA009	E200.7	CALCIUM, DISSOLVED	574000	E	574000	R	11.7	5000	ug/L	LR
WG	NDA005	E200.7	CALCIUM	691000	E	691000	R	11.7	5000	ug/L	LR
WG	NDA006	E200.7	CALCIUM	860000	E	860000	R	11.7	5000	ug/L	LR
WG	NDA008	E200.7	CALCIUM	555000	E	555000	R	11.7	5000	ug/L	LR
WG	NDA009	E200.7	CALCIUM	712000	E	712000	R	11.7	5000	ug/L	LR
SS	NDA125	SW8081	p,p'-DDT	140	E	140	R	0.46	3.9	ug/kg	LR
SS	NDA125	SW8081	p,p'-DDE	232	E	323	R	0.4	3.9	ug/kg	LR
SB	NDA165	SW8260	ACETONE	268	E	268	R	9	10	ug/kg	LR
SB	NDA296	SW8260	ACETONE	265	E	265	R	10	10	ug/kg	LR
SB	NDA297	SW8260	ACETONE	184	E	184	R	10	10	ug/kg	LR
SB	NDA298	SW8260	ACETONE	672	E	672	R	11	11	ug/kg	LR
SB	NDA066	SW8260	ACETONE	551	E	551	R	10	10	ug/kg	LR
SD	NDA047	SW8260	ACETONE	12500	E	12500	R	10	10	ug/kg	LR
SD	NDA048	SW8260	ACETONE	21800	E	21800	R	13	13	ug/kg	LR
SD	NDA049	SW8260	ACETONE	10000	E	10000	R	11	11	ug/kg	LR
SS	NDA131	SW8260	ACETONE	577	E	577	R	12	12	ug/kg	LR
SS	NDA149	SW8260	ACETONE	175	E	175	R	11	11	ug/kg	LR
SS	NDA150FD1	SW8260	ACETONE	169	E	169	R	12	12	ug/kg	LR
SS	NDA196	SW8260	ACETONE	1460	E	1460	R	9	10	ug/kg	LR
SS	NDA197FD1	SW8260	ACETONE	1860	E	1860	R	12	12	ug/kg	LR
SS	NDA198	SW8260	ACETONE	9590	E	9590	R	11	11	ug/kg	LR
SS	NDA200	SW8260	ACETONE	738	E	738	R	12	12	ug/kg	LR
SS	NDA204	SW8260	ACETONE	445	E	445	R	14	14	ug/kg	LR
SS	NDA205FD1	SW8260	ACETONE	419	E	419	R	12	12	ug/kg	LR
SS	NDA206	SW8260	ACETONE	4550	E	4550	R	11	11	ug/kg	LR
SS	NDA207	SW8260	ACETONE	1280	E	1280	R	12	12	ug/kg	LR

Matrix	Sample ID	Analytical Method	Parameter	Lab Result	Lab Qual	Final Result	Final Qual	DL	RL	Units	Comments
SS	NDA059	SW8260	ACETONE	663	E	663	R	11	11	ug/kg	LR
SS	NDA065	SW8260	ACETONE	718	E	718	R	12	12	ug/kg	LR
SS	NDA069	SW8260	ACETONE	382	E	382	R	11	11	ug/kg	LR
SS	NDA123	SW8260	ACETONE	1130	E	1130	R	13	13	ug/kg	LR
SS	NDA124	SW8260	ACETONE	4300	E	4300	R	11	11	ug/kg	LR
SS	NDA176	SW7471	MERCURY	0.018	U	0.018	R	0.01	0.06	mg/kg	LR
SB	NDA238	E200.7	MANGANESE	3090	E	3090	R	0.01	3.4	mg/kg	LR
SS	NDA211	E200.7	MANGANESE	2030	E	2030	R	0.01	3	mg/kg	LR
SB	NDA249	E200.7	IRON	48300	E	48300	R	1.4	22.4	mg/kg	LR
SS	NDA121	E200.7	IRON	50300	E	50300	R	1.3	21.9	mg/kg	LR
SS	NDA101	E200.7	IRON	75200	E	75200	R	1.6	27	mg/kg	LR
SB	NDA114	E200.7	CALCIUM	91800	E	91800	R	1.5	1300	mg/kg	LR
SB	NDA116	E200.7	CALCIUM	99400	E	99400	R	1.5	1260	mg/kg	LR
SB	NDA118	E200.7	CALCIUM	93700	E	93700	R	1.5	1290	mg/kg	LR
SB	NDA102	E200.7	CALCIUM	86500	E	86500	R	1.8	1570	mg/kg	LR
SB	NDA105	E200.7	CALCIUM	122000	E	122000	R	1.9	1630	mg/kg	LR
SB	NDA106FD1	E200.7	CALCIUM	177000	E	177000	R	1.9	1620	mg/kg	LR
SB	NDA108	E200.7	CALCIUM	88400	E	88400	R	1.6	1350	mg/kg	LR
SB	NDA110	E200.7	CALCIUM	40100	E	40100	R	1.6	1330	mg/kg	LR
SB	NDA112	E200.7	CALCIUM	106000	E	106000	R	1.6	1340	mg/kg	LR
SS	NDA115	E200.7	CALCIUM	64900	E	64900	R	1.3	1140	mg/kg	LR
SS	NDA117	E200.7	CALCIUM	65800	E	65800	R	1.5	1260	mg/kg	LR
SS	NDA101	E200.7	CALCIUM	90500	E	90500	R	1.6	1350	mg/kg	LR
SS	NDA103	E200.7	CALCIUM	134000	E	134000	R	1.6	1390	mg/kg	LR
SS	NDA104FD1	E200.7	CALCIUM	135000	E	135000	R	1.7	1430	mg/kg	LR
SS	NDA107	E200.7	CALCIUM	97200	E	97200	R	1.5	1250	mg/kg	LR
SS	NDA109	E200.7	CALCIUM	70800	E	70800	R	1.5	1310	mg/kg	LR
SS	NDA111	E200.7	CALCIUM	108000	E	108000	R	1.6	1360	mg/kg	LR
SB	NDA249	E200.7	BARIUM	692	E	692	R	0.01	44.7	mg/kg	LR
SB	NDA116DL1	E200.7	CALCIUM	114000	=	114000	J	7.4	6310	mg/kg	LD
SB	NDA118DL1	E200.7	CALCIUM	104000	=	104000	J	7.5	6450	mg/kg	LD
SS	NDA115DL1	E200.7	CALCIUM	68800	=	68800	J	2.7	2280	mg/kg	LD
SS	NDA117DL1	E200.7	CALCIUM	69700	=	69700	J	2.9	2520	mg/kg	LD
SD	NDA047	SW8260	1,1,2,2-TETRACHLOROETHANE	10	U	10	UJ	0.15	10	ug/kg	IS
SD	NDA048	SW8260	1,1,2,2-TETRACHLOROETHANE	13	U	13	UJ	0.2	13	ug/kg	IS
SS	NDA182	SW8260	1,1,2,2-TETRACHLOROETHANE	14	U	14	UJ	0.21	14	ug/kg	IS
SS	NDA059	SW8260	1,1,2,2-TETRACHLOROETHANE	11	U	11	UJ	0.16	11	ug/kg	IS
SS	NDA061	SW8260	1,1,2,2-TETRACHLOROETHANE	12	U	12	UJ	0.18	12	ug/kg	IS
SS	NDA062FD1	SW8260	1,1,2,2-TETRACHLOROETHANE	12	U	12	UJ	0.2	12	ug/kg	IS
SS	NDA065	SW8260	1,1,2,2-TETRACHLOROETHANE	12	U	12	UJ	0.17	12	ug/kg	IS
SS	NDA067	SW8260	1,1,2,2-TETRACHLOROETHANE	12	U	12	UJ	0.17	12	ug/kg	IS
SS	NDA069	SW8260	1,1,2,2-TETRACHLOROETHANE	11	U	11	UJ	0.17	11	ug/kg	IS
SS	NDA119	SW8260	1,1,2,2-TETRACHLOROETHANE	12	U	12	UJ	0.17	12	ug/kg	IS
SS	NDA120	SW8260	1,1,2,2-TETRACHLOROETHANE	16	U	16	UJ	0.24	16	ug/kg	IS
SS	NDA121	SW8260	1,1,2,2-TETRACHLOROETHANE	10	U	10	UJ	0.2	10	ug/kg	IS
SS	NDA122	SW8260	1,1,2,2-TETRACHLOROETHANE	12	U	12	UJ	0.17	12	ug/kg	IS
SS	NDA123	SW8260	1,1,2,2-TETRACHLOROETHANE	13	U	13	UJ	0.2	13	ug/kg	IS
SS	NDA124	SW8260	1,1,2,2-TETRACHLOROETHANE	11	U	11	UJ	0.16	11	ug/kg	IS
SS	NDA150FD1	SW8081	METHOXYCHLOR	17	U	17	UJ	0.3	17	ug/kg	IC, CC, FD
WG	NDA0321FD1	SW8260	METHYL ETHYL KETONE (2-BUTANONE)	10	U	10	R	2	10	ug/L	IC, CC
WG	NDA0321FD1	SW8260	ACETONE	10	U	10	R	10	10	ug/L	IC, CC
SB	NDA148	SW8081	METHOXYCHLOR	21	U	21	UJ	0.36	21	ug/kg	IC, CC
SB	NDA151	SW8081	METHOXYCHLOR	19	U	19	UJ	0.33	19	ug/kg	IC, CC
SB	NDA152FD1	SW8081	METHOXYCHLOR	24	U	24	UJ	0.41	24	ug/kg	IC, CC
SS	NDA153	SW8081	METHOXYCHLOR	18	U	18	UJ	0.31	18	ug/kg	IC, CC
WG	NDA022	SW8081	p,p'-DDT	0.02	U	0.02	UJ	0.01	0.02	ug/L	IC
WG	NDA024	SW8260	METHYL ETHYL KETONE (2-BUTANONE)	5	U	5	R	2	5	ug/L	IC
WG	NDA025FD1	SW8260	METHYL ETHYL KETONE (2-BUTANONE)	5	U	5	R	2	5	ug/L	IC
WG	NDA029	SW8260	METHYL ETHYL KETONE (2-BUTANONE)	5	U	5	R	2	5	ug/L	IC
WG	NDA017	SW8081	GAMMA BHC (LINDANE)	0.01	U	0.01	UJ	0.01	0.01	ug/L	IC
WG	NDA019	SW8081	GAMMA BHC (LINDANE)	0.01	U	0.01	UJ	0.01	0.01	ug/L	IC
WG	NDA020	SW8081	GAMMA BHC (LINDANE)	0.01	U	0.01	UJ	0.01	0.01	ug/L	IC
WG	NDA021	SW8081	GAMMA BHC (LINDANE)	0.01	U	0.01	UJ	0.01	0.01	ug/L	IC
WG	NDA003	SW8081	GAMMA BHC (LINDANE)	0.01	U	0.01	UJ	0.01	0.01	ug/L	IC
WG	NDA003FD1	SW8081	GAMMA BHC (LINDANE)	0.01	U	0.01	UJ	0.01	0.01	ug/L	IC
WG	NDA004	SW8081	GAMMA BHC (LINDANE)	0.01	U	0.01	UJ	0.01	0.01	ug/L	IC
WG	NDA028	SW8081	GAMMA BHC (LINDANE)	0.01	U	0.01	UJ	0.01	0.01	ug/L	IC
WG	NDA001	SW8081	GAMMA BHC (LINDANE)	0.01	U	0.01	UJ	0.01	0.01	ug/L	IC
WG	NDA013	SW8081	GAMMA BHC (LINDANE)	0.01	U	0.01	UJ	0.01	0.01	ug/L	IC
WG	NDA014	SW8081	GAMMA BHC (LINDANE)	0.01	U	0.01	UJ	0.01	0.01	ug/L	IC

Matrix	Sample ID	Analytical Method	Parameter	Lab Result	Lab Qual	Final Result	Final Qual	DL	RL	Units	Comments
WG	NDA015	SW8081	GAMMA BHC (LINDANE)	0.01	U	0.01	UJ	0.01	0.01	ug/L	IC
WG	NDA016	SW8081	GAMMA BHC (LINDANE)	0.01	U	0.01	UJ	0.01	0.01	ug/L	IC
WG	NDA026	SW8081	GAMMA BHC (LINDANE)	0.01	U	0.01	UJ	0.01	0.01	ug/L	IC
WG	NDA005	SW8081	GAMMA BHC (LINDANE)	0.01	U	0.01	UJ	0.01	0.01	ug/L	IC
WG	NDA006	SW8081	GAMMA BHC (LINDANE)	0.01	U	0.01	UJ	0.01	0.01	ug/L	IC
WG	NDA009	SW8081	GAMMA BHC (LINDANE)	0.01	U	0.01	UJ	0.01	0.01	ug/L	IC
WG	NDA010	SW8081	GAMMA BHC (LINDANE)	0.01	U	0.01	UJ	0.01	0.01	ug/L	IC
WG	NDA011	SW8081	GAMMA BHC (LINDANE)	0.01	U	0.01	UJ	0.01	0.01	ug/L	IC
WG	NDA012	SW8081	GAMMA BHC (LINDANE)	0.01	U	0.01	UJ	0.01	0.01	ug/L	IC
WG	NDA0321FD1	SW8081	GAMMA BHC (LINDANE)	0.01	U	0.01	UJ	0.01	0.01	ug/L	IC
WG	NDA022	SW8081	BETA ENDOSULFAN (ENDOSULFAN II)	0.02	U	0.02	UJ	0.01	0.02	ug/L	IC
WG	NDA017	SW8081	ALPHA BHC	0.01	U	0.01	UJ	0.01	0.01	ug/L	IC
WG	NDA022	SW8081	ALPHA BHC	0.01	U	0.01	UJ	0.01	0.01	ug/L	IC
WG	NDA019	SW8081	ALPHA BHC	0.01	U	0.01	UJ	0.01	0.01	ug/L	IC
WG	NDA020	SW8081	ALPHA BHC	0.01	U	0.01	UJ	0.01	0.01	ug/L	IC
WG	NDA021	SW8081	ALPHA BHC	0.01	U	0.01	UJ	0.01	0.01	ug/L	IC
WG	NDA003	SW8081	ALPHA BHC	0.01	U	0.01	UJ	0.01	0.01	ug/L	IC
WG	NDA003FD1	SW8081	ALPHA BHC	0.01	U	0.01	UJ	0.01	0.01	ug/L	IC
WG	NDA004	SW8081	ALPHA BHC	0.01	U	0.01	UJ	0.01	0.01	ug/L	IC
WG	NDA028	SW8081	ALPHA BHC	0.01	U	0.01	UJ	0.01	0.01	ug/L	IC
WG	NDA001	SW8081	ALPHA BHC	0.01	U	0.01	UJ	0.01	0.01	ug/L	IC
WG	NDA013	SW8081	ALPHA BHC	0.01	U	0.01	UJ	0.01	0.01	ug/L	IC
WG	NDA014	SW8081	ALPHA BHC	0.01	U	0.01	UJ	0.01	0.01	ug/L	IC
WG	NDA015	SW8081	ALPHA BHC	0.01	U	0.01	UJ	0.01	0.01	ug/L	IC
WG	NDA016	SW8081	ALPHA BHC	0.01	U	0.01	UJ	0.01	0.01	ug/L	IC
WG	NDA026	SW8081	ALPHA BHC	0.01	U	0.01	UJ	0.01	0.01	ug/L	IC
WG	NDA005	SW8081	ALPHA BHC	0.01	U	0.01	UJ	0.01	0.01	ug/L	IC
WG	NDA006	SW8081	ALPHA BHC	0.01	U	0.01	UJ	0.01	0.01	ug/L	IC
WG	NDA009	SW8081	ALPHA BHC	0.01	U	0.01	UJ	0.01	0.01	ug/L	IC
WG	NDA010	SW8081	ALPHA BHC	0.01	U	0.01	UJ	0.01	0.01	ug/L	IC
WG	NDA011	SW8081	ALPHA BHC	0.01	U	0.01	UJ	0.01	0.01	ug/L	IC
WG	NDA012	SW8081	ALPHA BHC	0.01	U	0.01	UJ	0.01	0.01	ug/L	IC
WG	NDA0321FD1	SW8081	ALPHA BHC	0.01	U	0.01	UJ	0.01	0.01	ug/L	IC
WG	NDA024	SW8260	ACETONE	5	U	5	R	5	5	ug/L	IC
WG	NDA025FD1	SW8260	ACETONE	5	U	5	R	5	5	ug/L	IC
WG	NDA029	SW8260	ACETONE	5	U	5	R	5	5	ug/L	IC
SB	NDA224	SW8081	p,p'-DDT	3.8	U	3.8	UJ	0.45	3.8	ug/kg	IC
SB	NDA225	SW8081	p,p'-DDT	4.1	U	4.1	UJ	0.49	4.1	ug/kg	IC
SB	NDA226	SW8081	p,p'-DDT	3.9	U	3.9	UJ	0.46	3.9	ug/kg	IC
SB	NDA227FD1	SW8081	p,p'-DDT	3.8	U	3.8	UJ	0.45	3.8	ug/kg	IC
SB	NDA228	SW8081	p,p'-DDT	4	U	4	UJ	0.47	4	ug/kg	IC
SB	NDA229	SW8081	p,p'-DDT	4.3	U	4.3	UJ	0.51	4.3	ug/kg	IC
SB	NDA230	SW8081	p,p'-DDT	3.6	U	3.6	UJ	0.42	3.6	ug/kg	IC
SB	NDA231	SW8081	p,p'-DDT	3.6	U	3.6	UJ	0.42	3.6	ug/kg	IC
SB	NDA232	SW8081	p,p'-DDT	3.7	U	3.7	UJ	0.43	3.7	ug/kg	IC
SB	NDA233	SW8081	p,p'-DDT	3.5	U	3.5	UJ	0.42	3.5	ug/kg	IC
SB	NDA234	SW8081	p,p'-DDT	3.8	U	3.8	UJ	0.45	3.8	ug/kg	IC
SS	NDA125DL1	SW8081	p,p'-DDT	125	=	125	DJ	4.6	39	ug/kg	IC
SS	NDA147	SW8081	p,p'-DDT	3.5	U	3.5	UJ	0.41	3.5	ug/kg	IC
SS	NDA153	SW8081	p,p'-DDT	3.5	U	3.5	UJ	0.42	3.5	ug/kg	IC
SS	NDA196	SW8081	p,p'-DDT	3.6	U	3.6	UJ	0.42	3.6	ug/kg	IC
SS	NDA197FD1	SW8081	p,p'-DDT	3.6	U	3.6	UJ	0.42	3.6	ug/kg	IC
SS	NDA198	SW8081	p,p'-DDT	4.3	U	4.3	UJ	0.51	4.3	ug/kg	IC
SS	NDA199	SW8081	p,p'-DDT	4.3	U	4.3	UJ	0.5	4.3	ug/kg	IC
SS	NDA200	SW8081	p,p'-DDT	3.5	U	3.5	UJ	0.41	3.5	ug/kg	IC
SS	NDA125DL1	SW8081	p,p'-DDE	190	=	190	D	4	39	ug/kg	IC
SB	NDA126	SW8260	METHYL ETHYL KETONE (2-BUTANONE)	13	U	13	R	2	13	ug/kg	IC
SB	NDA129	SW8260	METHYL ETHYL KETONE (2-BUTANONE)	12	U	12	R	2	12	ug/kg	IC
SB	NDA130FD1	SW8260	METHYL ETHYL KETONE (2-BUTANONE)	12	U	12	R	2	12	ug/kg	IC
SB	NDA132	SW8260	METHYL ETHYL KETONE (2-BUTANONE)	10	U	10	R	2	10	ug/kg	IC
SB	NDA134	SW8260	METHYL ETHYL KETONE (2-BUTANONE)	10	U	10	R	2	10	ug/kg	IC
SB	NDA136	SW8260	METHYL ETHYL KETONE (2-BUTANONE)	11	U	11	R	2	11	ug/kg	IC
SB	NDA138	SW8260	METHYL ETHYL KETONE (2-BUTANONE)	10	U	10	R	2	10	ug/kg	IC
SB	NDA140	SW8260	METHYL ETHYL KETONE (2-BUTANONE)	10	U	10	R	2	10	ug/kg	IC
SB	NDA142	SW8260	METHYL ETHYL KETONE (2-BUTANONE)	10	U	10	R	2	10	ug/kg	IC
SB	NDA144	SW8260	METHYL ETHYL KETONE (2-BUTANONE)	12	U	12	R	2	12	ug/kg	IC
SB	NDA146	SW8260	METHYL ETHYL KETONE (2-BUTANONE)	11	U	11	R	2	11	ug/kg	IC
SB	NDA148	SW8260	METHYL ETHYL KETONE (2-BUTANONE)	10	U	10	R	2	10	ug/kg	IC
SB	NDA151	SW8260	METHYL ETHYL KETONE (2-BUTANONE)	11	U	11	R	2	11	ug/kg	IC
SB	NDA152FD1	SW8260	METHYL ETHYL KETONE (2-BUTANONE)	12	U	12	R	2	12	ug/kg	IC

Matrix	Sample ID	Analytical Method	Parameter	Lab Result	Lab Qual	Final Result	Final Qual	DL	RL	Units	Comments
SB	NDA154	SW8260	METHYL ETHYL KETONE (2-BUTANONE)	11	U	11	R	2	11	ug/kg	IC
SB	NDA156	SW8260	METHYL ETHYL KETONE (2-BUTANONE)	10	U	10	R	2	10	ug/kg	IC
SB	NDA158	SW8260	METHYL ETHYL KETONE (2-BUTANONE)	10	U	10	R	2	10	ug/kg	IC
SB	NDA160	SW8260	METHYL ETHYL KETONE (2-BUTANONE)	10	U	10	R	2	10	ug/kg	IC
SB	NDA162	SW8260	METHYL ETHYL KETONE (2-BUTANONE)	11	U	11	R	2	11	ug/kg	IC
SB	NDA163FD1	SW8260	METHYL ETHYL KETONE (2-BUTANONE)	12	U	12	R	2	12	ug/kg	IC
SB	NDA214FD1	SW8260	METHYL ETHYL KETONE (2-BUTANONE)	10	U	10	R	2	10	ug/kg	IC
SB	NDA215	SW8260	METHYL ETHYL KETONE (2-BUTANONE)	11	U	11	R	2	11	ug/kg	IC
SB	NDA216	SW8260	METHYL ETHYL KETONE (2-BUTANONE)	10	U	10	R	2	10	ug/kg	IC
SB	NDA217	SW8260	METHYL ETHYL KETONE (2-BUTANONE)	12	U	12	R	2	12	ug/kg	IC
SB	NDA218	SW8260	METHYL ETHYL KETONE (2-BUTANONE)	10	U	10	R	2	10	ug/kg	IC
SB	NDA219	SW8260	METHYL ETHYL KETONE (2-BUTANONE)	11	U	11	R	2	11	ug/kg	IC
SB	NDA220	SW8260	METHYL ETHYL KETONE (2-BUTANONE)	12	U	12	R	2	12	ug/kg	IC
SB	NDA221	SW8260	METHYL ETHYL KETONE (2-BUTANONE)	10	U	10	R	2	10	ug/kg	IC
SB	NDA222	SW8260	METHYL ETHYL KETONE (2-BUTANONE)	10	U	10	R	2	10	ug/kg	IC
SB	NDA223	SW8260	METHYL ETHYL KETONE (2-BUTANONE)	10	U	10	R	2	10	ug/kg	IC
SD	NDA054	SW8260	METHYL ETHYL KETONE (2-BUTANONE)	15	U	15	R	3	15	ug/kg	IC
SD	NDA055	SW8260	METHYL ETHYL KETONE (2-BUTANONE)	10	U	10	R	2	10	ug/kg	IC
SS	NDA125	SW8260	METHYL ETHYL KETONE (2-BUTANONE)	18	U	18	R	3	18	ug/kg	IC
SS	NDA127	SW8260	METHYL ETHYL KETONE (2-BUTANONE)	10	U	10	R	2	10	ug/kg	IC
SS	NDA128FD1	SW8260	METHYL ETHYL KETONE (2-BUTANONE)	17	U	17	R	3	17	ug/kg	IC
SS	NDA131	SW8260	METHYL ETHYL KETONE (2-BUTANONE)	12	U	12	R	2	12	ug/kg	IC
SS	NDA133	SW8260	METHYL ETHYL KETONE (2-BUTANONE)	16	U	16	R	3	16	ug/kg	IC
SS	NDA135	SW8260	METHYL ETHYL KETONE (2-BUTANONE)	14	U	14	R	2	14	ug/kg	IC
SS	NDA137	SW8260	METHYL ETHYL KETONE (2-BUTANONE)	11	U	11	R	2	11	ug/kg	IC
SS	NDA139	SW8260	METHYL ETHYL KETONE (2-BUTANONE)	11	U	11	R	2	11	ug/kg	IC
SS	NDA141	SW8260	METHYL ETHYL KETONE (2-BUTANONE)	14	U	14	R	2	14	ug/kg	IC
SS	NDA143	SW8260	METHYL ETHYL KETONE (2-BUTANONE)	10	U	10	R	2	10	ug/kg	IC
SS	NDA145	SW8260	METHYL ETHYL KETONE (2-BUTANONE)	13	U	13	R	2	13	ug/kg	IC
SS	NDA147	SW8260	METHYL ETHYL KETONE (2-BUTANONE)	11	U	11	R	2	11	ug/kg	IC
SS	NDA149	SW8260	METHYL ETHYL KETONE (2-BUTANONE)	11	U	11	R	2	11	ug/kg	IC
SS	NDA150FD1	SW8260	METHYL ETHYL KETONE (2-BUTANONE)	12	U	12	R	2	12	ug/kg	IC
SS	NDA153	SW8260	METHYL ETHYL KETONE (2-BUTANONE)	12	U	12	R	2	12	ug/kg	IC
SS	NDA155	SW8260	METHYL ETHYL KETONE (2-BUTANONE)	11	U	11	R	2	11	ug/kg	IC
SS	NDA157	SW8260	METHYL ETHYL KETONE (2-BUTANONE)	11	U	11	R	2	11	ug/kg	IC
SS	NDA159	SW8260	METHYL ETHYL KETONE (2-BUTANONE)	14	U	14	R	2	14	ug/kg	IC
SS	NDA161	SW8260	METHYL ETHYL KETONE (2-BUTANONE)	11	U	11	R	2	11	ug/kg	IC
SB	NDA126	SW8081	METHOXYCHLOR	19	U	19	UJ	0.32	19	ug/kg	IC
SB	NDA129	SW8081	METHOXYCHLOR	19	U	19	UJ	0.32	19	ug/kg	IC
SB	NDA130FD1	SW8081	METHOXYCHLOR	18	U	18	UJ	0.32	18	ug/kg	IC
SB	NDA132	SW8081	METHOXYCHLOR	21	U	21	UJ	0.36	21	ug/kg	IC
SB	NDA134	SW8081	METHOXYCHLOR	21	U	21	UJ	0.36	21	ug/kg	IC
SB	NDA136	SW8081	METHOXYCHLOR	20	U	20	UJ	0.34	20	ug/kg	IC
SB	NDA138	SW8081	METHOXYCHLOR	19	U	19	UJ	0.32	19	ug/kg	IC
SB	NDA140	SW8081	METHOXYCHLOR	19	U	19	UJ	0.32	19	ug/kg	IC
SB	NDA142	SW8081	METHOXYCHLOR	20	U	20	UJ	0.34	20	ug/kg	IC
SB	NDA144	SW8081	METHOXYCHLOR	19	U	19	UJ	0.32	19	ug/kg	IC
SB	NDA146	SW8081	METHOXYCHLOR	18	U	18	UJ	0.31	18	ug/kg	IC
SB	NDA154	SW8081	METHOXYCHLOR	19	U	19	UJ	0.33	19	ug/kg	IC
SB	NDA156	SW8081	METHOXYCHLOR	18	U	18	UJ	0.31	18	ug/kg	IC
SB	NDA158	SW8081	METHOXYCHLOR	18	U	18	UJ	0.32	18	ug/kg	IC
SB	NDA160	SW8081	METHOXYCHLOR	20	U	20	UJ	0.35	20	ug/kg	IC
SB	NDA162	SW8081	METHOXYCHLOR	19	U	19	UJ	0.33	19	ug/kg	IC
SB	NDA163FD1	SW8081	METHOXYCHLOR	20	U	20	UJ	0.34	20	ug/kg	IC
SB	NDA224	SW8081	METHOXYCHLOR	19	U	19	UJ	0.33	19	ug/kg	IC
SB	NDA225	SW8081	METHOXYCHLOR	21	U	21	UJ	0.36	21	ug/kg	IC
SB	NDA226	SW8081	METHOXYCHLOR	20	U	20	UJ	0.34	20	ug/kg	IC
SB	NDA227FD1	SW8081	METHOXYCHLOR	19	U	19	UJ	0.33	19	ug/kg	IC
SB	NDA228	SW8081	METHOXYCHLOR	20	U	20	UJ	0.35	20	ug/kg	IC
SB	NDA229	SW8081	METHOXYCHLOR	22	U	22	UJ	0.38	22	ug/kg	IC
SB	NDA230	SW8081	METHOXYCHLOR	18	U	18	UJ	0.32	18	ug/kg	IC
SB	NDA231	SW8081	METHOXYCHLOR	18	U	18	UJ	0.31	18	ug/kg	IC
SB	NDA232	SW8081	METHOXYCHLOR	19	U	19	UJ	0.32	19	ug/kg	IC
SB	NDA233	SW8081	METHOXYCHLOR	18	U	18	UJ	0.31	18	ug/kg	IC
SB	NDA234	SW8081	METHOXYCHLOR	19	U	19	UJ	0.33	19	ug/kg	IC
SS	NDA125	SW8081	METHOXYCHLOR	20	U	20	UJ	0.34	20	ug/kg	IC
SS	NDA127	SW8081	METHOXYCHLOR	19	U	19	UJ	0.32	19	ug/kg	IC
SS	NDA128FD1	SW8081	METHOXYCHLOR	21	U	21	UJ	0.36	21	ug/kg	IC
SS	NDA131	SW8081	METHOXYCHLOR	19	U	19	UJ	0.33	19	ug/kg	IC
SS	NDA133	SW8081	METHOXYCHLOR	20	U	20	UJ	0.34	20	ug/kg	IC

Matrix	Sample ID	Analytical Method	Parameter	Lab Result	Lab Qual	Final Result	Final Qual	DL	RL	Units	Comments
SS	NDA135	SW8081	METHOXYCHLOR	21	U	21	UJ	0.36	21	ug/kg	IC
SS	NDA137	SW8081	METHOXYCHLOR	18	U	18	UJ	0.31	18	ug/kg	IC
SS	NDA139	SW8081	METHOXYCHLOR	18	U	18	UJ	0.3	18	ug/kg	IC
SS	NDA141	SW8081	METHOXYCHLOR	21	U	21	UJ	0.37	21	ug/kg	IC
SS	NDA143	SW8081	METHOXYCHLOR	17	U	17	UJ	0.3	17	ug/kg	IC
SS	NDA145	SW8081	METHOXYCHLOR	19	U	19	UJ	0.32	19	ug/kg	IC
SS	NDA155	SW8081	METHOXYCHLOR	19	U	19	UJ	0.33	19	ug/kg	IC
SS	NDA157	SW8081	METHOXYCHLOR	17	U	17	UJ	0.29	17	ug/kg	IC
SS	NDA159	SW8081	METHOXYCHLOR	18	U	18	UJ	0.3	18	ug/kg	IC
SS	NDA161	SW8081	METHOXYCHLOR	18	U	18	UJ	0.3	18	ug/kg	IC
SS	NDA196	SW8081	METHOXYCHLOR	18	U	18	UJ	0.32	18	ug/kg	IC
SS	NDA197FD1	SW8081	METHOXYCHLOR	18	U	18	UJ	0.31	18	ug/kg	IC
SS	NDA198	SW8081	METHOXYCHLOR	22	U	22	UJ	0.38	22	ug/kg	IC
SS	NDA199	SW8081	METHOXYCHLOR	22	U	22	UJ	0.37	22	ug/kg	IC
SS	NDA200	SW8081	METHOXYCHLOR	18	U	18	UJ	0.31	18	ug/kg	IC
SB	NDA126	SW8081	GAMMA BHC (LINDANE)	1.9	U	1.9	UJ	0.51	1.9	ug/kg	IC
SB	NDA129	SW8081	GAMMA BHC (LINDANE)	1.9	U	1.9	UJ	0.52	1.9	ug/kg	IC
SB	NDA130FD1	SW8081	GAMMA BHC (LINDANE)	1.8	U	1.8	UJ	0.51	1.8	ug/kg	IC
SB	NDA132	SW8081	GAMMA BHC (LINDANE)	2.1	U	2.1	UJ	0.58	2.1	ug/kg	IC
SB	NDA134	SW8081	GAMMA BHC (LINDANE)	2.1	U	2.1	UJ	0.57	2.1	ug/kg	IC
SB	NDA136	SW8081	GAMMA BHC (LINDANE)	2	U	2	UJ	0.55	2	ug/kg	IC
SB	NDA138	SW8081	GAMMA BHC (LINDANE)	1.9	U	1.9	UJ	0.51	1.9	ug/kg	IC
SB	NDA140	SW8081	GAMMA BHC (LINDANE)	1.9	U	1.9	UJ	0.52	1.9	ug/kg	IC
SB	NDA142	SW8081	GAMMA BHC (LINDANE)	2	U	2	UJ	0.54	2	ug/kg	IC
SB	NDA144	SW8081	GAMMA BHC (LINDANE)	1.9	U	1.9	UJ	0.52	1.9	ug/kg	IC
SB	NDA146	SW8081	GAMMA BHC (LINDANE)	1.8	U	1.8	UJ	0.5	1.8	ug/kg	IC
SB	NDA148	SW8081	GAMMA BHC (LINDANE)	2.1	U	2.1	UJ	0.57	2.1	ug/kg	IC
SB	NDA151	SW8081	GAMMA BHC (LINDANE)	1.9	U	1.9	UJ	0.53	1.9	ug/kg	IC
SB	NDA152FD1	SW8081	GAMMA BHC (LINDANE)	2.4	U	2.4	UJ	0.67	2.4	ug/kg	IC
SB	NDA154	SW8081	GAMMA BHC (LINDANE)	1.9	U	1.9	UJ	0.53	1.9	ug/kg	IC
SB	NDA156	SW8081	GAMMA BHC (LINDANE)	1.8	U	1.8	UJ	0.5	1.8	ug/kg	IC
SB	NDA158	SW8081	GAMMA BHC (LINDANE)	1.8	U	1.8	UJ	0.51	1.8	ug/kg	IC
SB	NDA160	SW8081	GAMMA BHC (LINDANE)	2	U	2	UJ	0.57	2	ug/kg	IC
SB	NDA162	SW8081	GAMMA BHC (LINDANE)	1.9	U	1.9	UJ	0.54	1.9	ug/kg	IC
SB	NDA163FD1	SW8081	GAMMA BHC (LINDANE)	2	U	2	UJ	0.55	2	ug/kg	IC
SB	NDA224	SW8081	GAMMA BHC (LINDANE)	1.9	U	1.9	UJ	0.54	1.9	ug/kg	IC
SB	NDA225	SW8081	GAMMA BHC (LINDANE)	2.1	U	2.1	UJ	0.58	2.1	ug/kg	IC
SB	NDA226	SW8081	GAMMA BHC (LINDANE)	2	U	2	UJ	0.55	2	ug/kg	IC
SB	NDA227FD1	SW8081	GAMMA BHC (LINDANE)	1.9	U	1.9	UJ	0.54	1.9	ug/kg	IC
SB	NDA228	SW8081	GAMMA BHC (LINDANE)	2	U	2	UJ	0.56	2	ug/kg	IC
SB	NDA229	SW8081	GAMMA BHC (LINDANE)	2.2	U	2.2	UJ	0.61	2.2	ug/kg	IC
SB	NDA230	SW8081	GAMMA BHC (LINDANE)	1.8	U	1.8	UJ	0.51	1.8	ug/kg	IC
SB	NDA231	SW8081	GAMMA BHC (LINDANE)	1.8	U	1.8	UJ	0.5	1.8	ug/kg	IC
SB	NDA232	SW8081	GAMMA BHC (LINDANE)	1.9	U	1.9	UJ	0.52	1.9	ug/kg	IC
SB	NDA233	SW8081	GAMMA BHC (LINDANE)	1.8	U	1.8	UJ	0.5	1.8	ug/kg	IC
SB	NDA234	SW8081	GAMMA BHC (LINDANE)	1.9	U	1.9	UJ	0.54	1.9	ug/kg	IC
SS	NDA125	SW8081	GAMMA BHC (LINDANE)	2	U	2	UJ	0.55	2	ug/kg	IC
SS	NDA127	SW8081	GAMMA BHC (LINDANE)	1.9	U	1.9	UJ	0.51	1.9	ug/kg	IC
SS	NDA128FD1	SW8081	GAMMA BHC (LINDANE)	2.1	U	2.1	UJ	0.59	2.1	ug/kg	IC
SS	NDA131	SW8081	GAMMA BHC (LINDANE)	1.9	U	1.9	UJ	0.53	1.9	ug/kg	IC
SS	NDA133	SW8081	GAMMA BHC (LINDANE)	2	U	2	UJ	0.55	2	ug/kg	IC
SS	NDA135	SW8081	GAMMA BHC (LINDANE)	2.1	U	2.1	UJ	0.57	2.1	ug/kg	IC
SS	NDA137	SW8081	GAMMA BHC (LINDANE)	1.8	U	1.8	UJ	0.5	1.8	ug/kg	IC
SS	NDA139	SW8081	GAMMA BHC (LINDANE)	1.8	U	1.8	UJ	0.49	1.8	ug/kg	IC
SS	NDA141	SW8081	GAMMA BHC (LINDANE)	2.1	U	2.1	UJ	0.59	2.1	ug/kg	IC
SS	NDA143	SW8081	GAMMA BHC (LINDANE)	1.7	U	1.7	UJ	0.48	1.7	ug/kg	IC
SS	NDA145	SW8081	GAMMA BHC (LINDANE)	1.9	U	1.9	UJ	0.52	1.9	ug/kg	IC
SS	NDA147	SW8081	GAMMA BHC (LINDANE)	1.8	U	1.8	UJ	0.49	1.8	ug/kg	IC
SS	NDA149	SW8081	GAMMA BHC (LINDANE)	1.9	U	1.9	UJ	0.51	1.9	ug/kg	IC
SS	NDA150FD1	SW8081	GAMMA BHC (LINDANE)	1.7	U	1.7	UJ	0.48	1.7	ug/kg	IC
SS	NDA153	SW8081	GAMMA BHC (LINDANE)	1.8	U	1.8	UJ	0.5	1.8	ug/kg	IC
SS	NDA155	SW8081	GAMMA BHC (LINDANE)	1.9	U	1.9	UJ	0.53	1.9	ug/kg	IC
SS	NDA157	SW8081	GAMMA BHC (LINDANE)	1.7	U	1.7	UJ	0.47	1.7	ug/kg	IC
SS	NDA159	SW8081	GAMMA BHC (LINDANE)	1.8	U	1.8	UJ	0.48	1.8	ug/kg	IC
SS	NDA161	SW8081	GAMMA BHC (LINDANE)	1.8	U	1.8	UJ	0.49	1.8	ug/kg	IC
SS	NDA196	SW8081	GAMMA BHC (LINDANE)	1.8	U	1.8	UJ	0.51	1.8	ug/kg	IC
SS	NDA197FD1	SW8081	GAMMA BHC (LINDANE)	1.8	U	1.8	UJ	0.5	1.8	ug/kg	IC
SS	NDA198	SW8081	GAMMA BHC (LINDANE)	2.2	U	2.2	UJ	0.61	2.2	ug/kg	IC
SS	NDA199	SW8081	GAMMA BHC (LINDANE)	2.2	U	2.2	UJ	0.6	2.2	ug/kg	IC
SS	NDA200	SW8081	GAMMA BHC (LINDANE)	1.8	U	1.8	UJ	0.5	1.8	ug/kg	IC

Matrix	Sample ID	Analytical Method	Parameter	Lab Result	Lab Qual	Final Result	Final Qual	DL	RL	Units	Comments
SB	NDA224	SW8081	DELTA BHC	1.9	U	1.9	UJ	0.5	1.9	ug/kg	IC
SB	NDA225	SW8081	DELTA BHC	2.1	U	2.1	UJ	0.55	2.1	ug/kg	IC
SB	NDA226	SW8081	DELTA BHC	2	U	2	UJ	0.51	2	ug/kg	IC
SB	NDA227FD1	SW8081	DELTA BHC	1.9	U	1.9	UJ	0.5	1.9	ug/kg	IC
SB	NDA228	SW8081	DELTA BHC	2	U	2	UJ	0.53	2	ug/kg	IC
SB	NDA229	SW8081	DELTA BHC	2.2	U	2.2	UJ	0.57	2.2	ug/kg	IC
SB	NDA230	SW8081	DELTA BHC	1.8	U	1.8	UJ	0.48	1.8	ug/kg	IC
SB	NDA231	SW8081	DELTA BHC	1.8	U	1.8	UJ	0.47	1.8	ug/kg	IC
SB	NDA232	SW8081	DELTA BHC	1.9	U	1.9	UJ	0.48	1.9	ug/kg	IC
SB	NDA233	SW8081	DELTA BHC	1.8	U	1.8	UJ	0.47	1.8	ug/kg	IC
SB	NDA234	SW8081	DELTA BHC	1.9	U	1.9	UJ	0.5	1.9	ug/kg	IC
SS	NDA147	SW8081	DELTA BHC	1.8	U	1.8	UJ	0.46	1.8	ug/kg	IC
SS	NDA153	SW8081	DELTA BHC	1.8	U	1.8	UJ	0.47	1.8	ug/kg	IC
SS	NDA196	SW8081	DELTA BHC	1.8	U	1.8	UJ	0.48	1.8	ug/kg	IC
SS	NDA197FD1	SW8081	DELTA BHC	1.8	U	1.8	UJ	0.47	1.8	ug/kg	IC
SS	NDA198	SW8081	DELTA BHC	2.2	U	2.2	UJ	0.57	2.2	ug/kg	IC
SS	NDA199	SW8081	DELTA BHC	2.2	U	2.2	UJ	0.56	2.2	ug/kg	IC
SS	NDA200	SW8081	DELTA BHC	1.8	U	1.8	UJ	0.47	1.8	ug/kg	IC
SB	NDA126	SW8081	ALPHA BHC	1.9	U	1.9	UJ	0.54	1.9	ug/kg	IC
SB	NDA129	SW8081	ALPHA BHC	1.9	U	1.9	UJ	0.55	1.9	ug/kg	IC
SB	NDA130FD1	SW8081	ALPHA BHC	1.8	U	1.8	UJ	0.53	1.8	ug/kg	IC
SB	NDA132	SW8081	ALPHA BHC	2.1	U	2.1	UJ	0.61	2.1	ug/kg	IC
SB	NDA134	SW8081	ALPHA BHC	2.1	U	2.1	UJ	0.6	2.1	ug/kg	IC
SB	NDA136	SW8081	ALPHA BHC	2	U	2	UJ	0.58	2	ug/kg	IC
SB	NDA138	SW8081	ALPHA BHC	1.9	U	1.9	UJ	0.53	1.9	ug/kg	IC
SB	NDA140	SW8081	ALPHA BHC	1.9	U	1.9	UJ	0.54	1.9	ug/kg	IC
SB	NDA142	SW8081	ALPHA BHC	2	U	2	UJ	0.57	2	ug/kg	IC
SB	NDA144	SW8081	ALPHA BHC	1.9	U	1.9	UJ	0.54	1.9	ug/kg	IC
SB	NDA146	SW8081	ALPHA BHC	1.8	U	1.8	UJ	0.52	1.8	ug/kg	IC
SB	NDA148	SW8081	ALPHA BHC	2.1	U	2.1	UJ	0.6	2.1	ug/kg	IC
SB	NDA151	SW8081	ALPHA BHC	1.9	U	1.9	UJ	0.56	1.9	ug/kg	IC
SB	NDA152FD1	SW8081	ALPHA BHC	2.4	U	2.4	UJ	0.7	2.4	ug/kg	IC
SB	NDA154	SW8081	ALPHA BHC	1.9	U	1.9	UJ	0.55	1.9	ug/kg	IC
SB	NDA156	SW8081	ALPHA BHC	1.8	U	1.8	UJ	0.53	1.8	ug/kg	IC
SB	NDA158	SW8081	ALPHA BHC	1.8	U	1.8	UJ	0.53	1.8	ug/kg	IC
SB	NDA160	SW8081	ALPHA BHC	2	U	2	UJ	0.59	2	ug/kg	IC
SB	NDA162	SW8081	ALPHA BHC	1.9	U	1.9	UJ	0.56	1.9	ug/kg	IC
SB	NDA163FD1	SW8081	ALPHA BHC	2	U	2	UJ	0.57	2	ug/kg	IC
SB	NDA224	SW8081	ALPHA BHC	1.9	U	1.9	UJ	0.56	1.9	ug/kg	IC
SB	NDA225	SW8081	ALPHA BHC	2.1	U	2.1	UJ	0.61	2.1	ug/kg	IC
SB	NDA226	SW8081	ALPHA BHC	2	U	2	UJ	0.57	2	ug/kg	IC
SB	NDA227FD1	SW8081	ALPHA BHC	1.9	U	1.9	UJ	0.56	1.9	ug/kg	IC
SB	NDA228	SW8081	ALPHA BHC	2	U	2	UJ	0.59	2	ug/kg	IC
SB	NDA229	SW8081	ALPHA BHC	2.2	U	2.2	UJ	0.64	2.2	ug/kg	IC
SB	NDA230	SW8081	ALPHA BHC	1.8	U	1.8	UJ	0.53	1.8	ug/kg	IC
SB	NDA231	SW8081	ALPHA BHC	1.8	U	1.8	UJ	0.52	1.8	ug/kg	IC
SB	NDA232	SW8081	ALPHA BHC	1.9	U	1.9	UJ	0.54	1.9	ug/kg	IC
SB	NDA233	SW8081	ALPHA BHC	1.8	U	1.8	UJ	0.52	1.8	ug/kg	IC
SB	NDA234	SW8081	ALPHA BHC	1.9	U	1.9	UJ	0.56	1.9	ug/kg	IC
SS	NDA125	SW8081	ALPHA BHC	2	U	2	UJ	0.58	2	ug/kg	IC
SS	NDA127	SW8081	ALPHA BHC	1.9	U	1.9	UJ	0.54	1.9	ug/kg	IC
SS	NDA128FD1	SW8081	ALPHA BHC	2.1	U	2.1	UJ	0.61	2.1	ug/kg	IC
SS	NDA131	SW8081	ALPHA BHC	1.9	U	1.9	UJ	0.56	1.9	ug/kg	IC
SS	NDA133	SW8081	ALPHA BHC	2	U	2	UJ	0.57	2	ug/kg	IC
SS	NDA135	SW8081	ALPHA BHC	2.1	U	2.1	UJ	0.6	2.1	ug/kg	IC
SS	NDA137	SW8081	ALPHA BHC	1.8	U	1.8	UJ	0.52	1.8	ug/kg	IC
SS	NDA139	SW8081	ALPHA BHC	1.8	U	1.8	UJ	0.51	1.8	ug/kg	IC
SS	NDA141	SW8081	ALPHA BHC	2.1	U	2.1	UJ	0.62	2.1	ug/kg	IC
SS	NDA143	SW8081	ALPHA BHC	1.7	U	1.7	UJ	0.5	1.7	ug/kg	IC
SS	NDA145	SW8081	ALPHA BHC	1.9	U	1.9	UJ	0.54	1.9	ug/kg	IC
SS	NDA147	SW8081	ALPHA BHC	1.8	U	1.8	UJ	0.51	1.8	ug/kg	IC
SS	NDA149	SW8081	ALPHA BHC	1.9	U	1.9	UJ	0.53	1.9	ug/kg	IC
SS	NDA150FD1	SW8081	ALPHA BHC	1.7	U	1.7	UJ	0.5	1.7	ug/kg	IC
SS	NDA153	SW8081	ALPHA BHC	1.8	U	1.8	UJ	0.52	1.8	ug/kg	IC
SS	NDA155	SW8081	ALPHA BHC	1.9	U	1.9	UJ	0.55	1.9	ug/kg	IC
SS	NDA157	SW8081	ALPHA BHC	1.7	U	1.7	UJ	0.49	1.7	ug/kg	IC
SS	NDA159	SW8081	ALPHA BHC	1.8	U	1.8	UJ	0.51	1.8	ug/kg	IC
SS	NDA161	SW8081	ALPHA BHC	1.8	U	1.8	UJ	0.51	1.8	ug/kg	IC
SS	NDA196	SW8081	ALPHA BHC	1.8	U	1.8	UJ	0.53	1.8	ug/kg	IC
SS	NDA197FD1	SW8081	ALPHA BHC	1.8	U	1.8	UJ	0.53	1.8	ug/kg	IC

Matrix	Sample ID	Analytical Method	Parameter	Lab Result	Lab Qual	Final Result	Final Qual	DL	RL	Units	Comments
SS	NDA198	SW8081	ALPHA BHC	2.2	U	2.2	UJ	0.64	2.2	ug/kg	IC
SS	NDA199	SW8081	ALPHA BHC	2.2	U	2.2	UJ	0.63	2.2	ug/kg	IC
SS	NDA200	SW8081	ALPHA BHC	1.8	U	1.8	UJ	0.52	1.8	ug/kg	IC
SB	NDA144	SW8260	ACETONE	12	U	12	R	12	12	ug/kg	IC
SB	NDA146	SW8260	ACETONE	11	U	11	R	11	11	ug/kg	IC
SB	NDA215	SW8260	ACETONE	11	U	11	R	11	11	ug/kg	IC
SS	NDA131DL1	SW8260	ACETONE	1200	U	1200	R	1200	1200	ug/kg	IC
SS	NDA133	SW8260	ACETONE	16	U	16	R	16	16	ug/kg	IC
SS	NDA135	SW8260	ACETONE	14	U	14	R	14	14	ug/kg	IC
SS	NDA137	SW8260	ACETONE	11	U	11	R	11	11	ug/kg	IC
SS	NDA139	SW8260	ACETONE	11	U	11	R	11	11	ug/kg	IC
SS	NDA141	SW8260	ACETONE	14	U	14	R	14	14	ug/kg	IC
SS	NDA149DL1	SW8260	ACETONE	1130	U	1130	R	1130	1130	ug/kg	IC
SS	1	SW8260	ACETONE	964	U	964	R	964	964	ug/kg	IC
WG	NDA010	E200.7	ZINC, DISSOLVED	10	J	10	J	2.5	20	ug/L	IB
WG	NDA008	E200.7	SELENIUM, DISSOLVED	5	=	5	J	2.1	5	ug/L	IB
WG	NDA013	E200.7	NICKEL	40	=	40	J	0.8	40	ug/L	IB
WG	NDA003FD1	SW7470	MERCURY	0.18	U	0.18	J	0.18	0.2	ug/L	IB
WG	NDA019	E200.7	LEAD, DISSOLVED	1.1	U	1.1	J	1.1	3	ug/L	IB
WG	NDA006	E200.7	LEAD, DISSOLVED	3	=	3	J	1.1	3	ug/L	IB
WG	NDA025FD1	E200.7	LEAD	1.1	U	1.1	J	1.1	3	ug/L	IB
WG	NDA029	E200.7	LEAD	1.1	U	1.1	J	1.1	3	ug/L	IB
SW	NDA037	E200.7	COPPER	1.9	U	1.9	J	1.9	25	ug/L	IB
WG	NDA019	E200.7	CADMIUM, DISSOLVED	0.2	U	0.2	J	0.2	5	ug/L	IB
WG	NDA020	E200.7	CADMIUM, DISSOLVED	0.2	U	0.2	J	0.2	5	ug/L	IB
WG	NDA011	E200.7	BARIUM, DISSOLVED	200	=	200	J	0.1	200	ug/L	IB
SD	NDA055	E200.7	VANADIUM	28.1	=	28.1	J	0.08	10.1	mg/kg	IB
SS	NDA179	E200.7	POTASSIUM	1070	=	1070	J	2.8	1070	mg/kg	IB
SS	NDA071	E200.7	CHROMIUM, TOTAL	2.4	=	2.4	J	0.06	2.4	mg/kg	IB
SS	NDA072FD1	E200.7	CHROMIUM, TOTAL	2.1	=	2.1	J	0.05	2.1	mg/kg	IB
SS	NDA082	E200.7	CHROMIUM, TOTAL	2	=	2	J	0.05	2	mg/kg	IB
SS	NDA164	E200.7	CADMIUM	1.2	=	1.2	J	0.02	1.2	mg/kg	IB
SB	NDA079	SW8081	TOXAPHENE	19	U	19	UJ	1.8	19	ug/kg	HT, SS
SS	NDA076	SW8081	TOXAPHENE	18	U	18	UJ	1.6	18	ug/kg	HT, SS
SB	NDA079	SW8082	PCB-1260 (AROCHLOR 1260)	38	U	38	UJ	38	38	ug/kg	HT, SS
SB	NDA079	SW8082	PCB-1254 (AROCHLOR 1254)	38	U	38	UJ	21	38	ug/kg	HT, SS
SB	NDA079	SW8082	PCB-1248 (AROCHLOR 1248)	38	U	38	UJ	20	38	ug/kg	HT, SS
SB	NDA079	SW8082	PCB-1242 (AROCHLOR 1242)	38	U	38	UJ	23	38	ug/kg	HT, SS
SB	NDA079	SW8082	PCB-1232 (AROCHLOR 1232)	38	U	38	UJ	29	38	ug/kg	HT, SS
SB	NDA079	SW8082	PCB-1221 (AROCHLOR 1221)	77	U	77	UJ	24	77	ug/kg	HT, SS
SB	NDA079	SW8082	PCB-1016 (AROCHLOR 1016)	38	U	38	UJ	38	38	ug/kg	HT, SS
SB	NDA079	SW8081	p,p'-DDT	0.38	U	0.38	UJ	0.04	0.38	ug/kg	HT, SS
SS	NDA076	SW8081	p,p'-DDT	0.35	U	0.35	UJ	0.04	0.35	ug/kg	HT, SS
SB	NDA079	SW8081	p,p'-DDE	0.38	U	0.38	UJ	0.04	0.38	ug/kg	HT, SS
SS	NDA076	SW8081	p,p'-DDE	0.35	U	0.35	UJ	0.04	0.35	ug/kg	HT, SS
SB	NDA079	SW8081	p,p'-DDD	0.38	U	0.38	UJ	0.03	0.38	ug/kg	HT, SS
SS	NDA076	SW8081	p,p'-DDD	0.35	U	0.35	UJ	0.02	0.35	ug/kg	HT, SS
SB	NDA079	SW8081	METHOXYCHLOR	1.9	U	1.9	UJ	0.03	1.9	ug/kg	HT, SS
SS	NDA076	SW8081	METHOXYCHLOR	1.8	U	1.8	UJ	0.03	1.8	ug/kg	HT, SS
SB	NDA079	SW8081	HEPTACHLOR EPOXIDE	0.19	U	0.19	UJ	0.07	0.19	ug/kg	HT, SS
SS	NDA076	SW8081	HEPTACHLOR EPOXIDE	0.18	U	0.18	UJ	0.06	0.18	ug/kg	HT, SS
SB	NDA079	SW8081	HEPTACHLOR	0.19	U	0.19	UJ	0.07	0.19	ug/kg	HT, SS
SS	NDA076	SW8081	HEPTACHLOR	0.18	U	0.18	UJ	0.06	0.18	ug/kg	HT, SS
SB	NDA079	SW8081	GAMMA-CHLORDANE	0.19	U	0.19	UJ	0.06	0.19	ug/kg	HT, SS
SS	NDA076	SW8081	GAMMA-CHLORDANE	0.18	U	0.18	UJ	0.05	0.18	ug/kg	HT, SS
SB	NDA079	SW8081	GAMMA BHC (LINDANE)	0.19	U	0.19	UJ	0.05	0.19	ug/kg	HT, SS
SS	NDA076	SW8081	GAMMA BHC (LINDANE)	0.18	U	0.18	UJ	0.05	0.18	ug/kg	HT, SS
SB	NDA079	SW8081	ENDRIN KETONE	0.38	U	0.38	UJ	0.03	0.38	ug/kg	HT, SS
SS	NDA076	SW8081	ENDRIN KETONE	0.35	U	0.35	UJ	0.02	0.35	ug/kg	HT, SS
SB	NDA079	SW8081	ENDRIN ALDEHYDE	0.38	U	0.38	UJ	0.03	0.38	ug/kg	HT, SS
SS	NDA076	SW8081	ENDRIN ALDEHYDE	0.35	U	0.35	UJ	0.02	0.35	ug/kg	HT, SS
SB	NDA079	SW8081	ENDRIN	0.38	U	0.38	UJ	0.05	0.38	ug/kg	HT, SS
SS	NDA076	SW8081	ENDRIN	0.35	U	0.35	UJ	0.04	0.35	ug/kg	HT, SS
SB	NDA079	SW8081	ENDOSULFAN SULFATE	0.38	U	0.38	UJ	0.04	0.38	ug/kg	HT, SS
SS	NDA076	SW8081	ENDOSULFAN SULFATE	0.35	U	0.35	UJ	0.04	0.35	ug/kg	HT, SS
SB	NDA079	SW8081	DIELDRIN	0.38	U	0.38	UJ	0.05	0.38	ug/kg	HT, SS
SS	NDA076	SW8081	DIELDRIN	0.35	U	0.35	UJ	0.04	0.35	ug/kg	HT, SS
SB	NDA079	SW8081	DELTA BHC	0.19	U	0.19	UJ	0.05	0.19	ug/kg	HT, SS
SS	NDA076	SW8081	DELTA BHC	0.18	U	0.18	UJ	0.05	0.18	ug/kg	HT, SS
SB	NDA079	SW8081	BETA ENDOSULFAN (ENDOSULFAN II)	0.38	U	0.38	UJ	0.03	0.38	ug/kg	HT, SS

Matrix	Sample ID	Analytical Method	Parameter	Lab Result	Lab Qual	Final Result	Final Qual	DL	RL	Units	Comments
SS	NDA076	SW8081	BETA ENDOSULFAN (ENDOSULFAN II)	0.35	U	0.35	UJ	0.03	0.35	ug/kg	HT, SS
SB	NDA079	SW8081	BETA BHC	0.19	U	0.19	UJ	0.05	0.19	ug/kg	HT, SS
SS	NDA076	SW8081	BETA BHC	0.18	U	0.18	UJ	0.05	0.18	ug/kg	HT, SS
SB	NDA079	SW8081	ALPHA-CHLORDANE	0.19	U	0.19	UJ	0.06	0.19	ug/kg	HT, SS
SS	NDA076	SW8081	ALPHA-CHLORDANE	0.18	U	0.18	UJ	0.05	0.18	ug/kg	HT, SS
SB	NDA079	SW8081	ALPHA ENDOSULFAN (ENDOSULFAN I)	0.19	U	0.19	UJ	0.05	0.19	ug/kg	HT, SS
SS	NDA076	SW8081	ALPHA ENDOSULFAN (ENDOSULFAN I)	0.18	U	0.18	UJ	0.05	0.18	ug/kg	HT, SS
SB	NDA079	SW8081	ALPHA BHC	0.19	U	0.19	UJ	0.06	0.19	ug/kg	HT, SS
SS	NDA076	SW8081	ALPHA BHC	0.18	U	0.18	UJ	0.05	0.18	ug/kg	HT, SS
SB	NDA079	SW8081	ALDRIN	0.19	U	0.19	UJ	0.05	0.19	ug/kg	HT, SS
SS	NDA076	SW8081	ALDRIN	0.18	U	0.18	UJ	0.05	0.18	ug/kg	HT, SS
SD	NDA050	SW8081	DELTA BHC	20	U	20	UJ	5.1	20	ug/kg	HT, IC, OT
SD	NDA050	SW8081	ALPHA BHC	20	U	20	UJ	5.7	20	ug/kg	HT, IC, OT
SD	NDA050	SW8081	METHOXYCHLOR	196	U	196	UJ	3.4	196	ug/kg	OT
SD	NDA051FD1	SW8081	METHOXYCHLOR	209	U	209	UJ	3.6	209	ug/kg	OT
SB	NDA165	SW8081	METHOXYCHLOR	19	U	19	UJ	0.33	19	ug/kg	HT, IC, CC
SB	NDA167	SW8081	METHOXYCHLOR	21	U	21	UJ	0.36	21	ug/kg	HT, IC, CC
SB	NDA169	SW8081	METHOXYCHLOR	20	U	20	UJ	0.35	20	ug/kg	HT, IC, CC
SB	NDA171	SW8081	METHOXYCHLOR	18	U	18	UJ	0.32	18	ug/kg	HT, IC, CC
SB	NDA173	SW8081	METHOXYCHLOR	22	U	22	UJ	0.37	22	ug/kg	HT, IC, CC
SB	NDA175	SW8081	METHOXYCHLOR	19	U	19	UJ	0.32	19	ug/kg	HT, IC, CC
SB	NDA177	SW8081	METHOXYCHLOR	20	U	20	UJ	0.34	20	ug/kg	HT, IC, CC
SD	NDA053	SW8081	METHOXYCHLOR	127	U	127	UJ	2.2	127	ug/kg	HT, IC, CC
SS	NDA166	SW8081	METHOXYCHLOR	21	U	21	UJ	0.36	21	ug/kg	HT, IC, CC
SS	NDA168	SW8081	METHOXYCHLOR	20	U	20	UJ	0.34	20	ug/kg	HT, IC, CC
SS	NDA170	SW8081	METHOXYCHLOR	20	U	20	UJ	0.35	20	ug/kg	HT, IC, CC
SS	NDA172	SW8081	METHOXYCHLOR	18	U	18	UJ	0.31	18	ug/kg	HT, IC, CC
SS	NDA174	SW8081	METHOXYCHLOR	18	U	18	UJ	0.3	18	ug/kg	HT, IC, CC
SS	NDA176	SW8081	METHOXYCHLOR	48	U	48	UJ	0.81	48	ug/kg	HT, IC, CC
SD	NDA050	SW8081	GAMMA BHC (LINDANE)	20	U	20	UJ	5.4	20	ug/kg	HT, IC, OT
SS	NDA164	SW8081	METHOXYCHLOR	21	U	21	UJ	0.36	21	ug/kg	HT, IC , CC
SB	NDA165	SW8081	p,p'-DDT	3.8	U	3.8	UJ	0.44	3.8	ug/kg	HT, IC
SB	NDA167	SW8081	p,p'-DDT	4.1	U	4.1	UJ	0.48	4.1	ug/kg	HT, IC
SB	NDA169	SW8081	p,p'-DDT	4	U	4	UJ	0.47	4	ug/kg	HT, IC
SB	NDA171	SW8081	p,p'-DDT	3.6	U	3.6	UJ	0.42	3.6	ug/kg	HT, IC
SB	NDA173	SW8081	p,p'-DDT	4.2	U	4.2	UJ	0.5	4.2	ug/kg	HT, IC
SB	NDA175	SW8081	p,p'-DDT	3.7	U	3.7	UJ	0.43	3.7	ug/kg	HT, IC
SB	NDA177	SW8081	p,p'-DDT	3.9	U	3.9	UJ	0.45	3.9	ug/kg	HT, IC
SD	NDA053	SW8081	p,p'-DDT	25	U	25	UJ	2.9	25	ug/kg	HT, IC
SS	NDA164	SW8081	p,p'-DDT	4.1	U	4.1	UJ	0.48	4.1	ug/kg	HT, IC
SS	NDA166	SW8081	p,p'-DDT	4.1	U	4.1	UJ	0.49	4.1	ug/kg	HT, IC
SS	NDA168	SW8081	p,p'-DDT	3.9	U	3.9	UJ	0.45	3.9	ug/kg	HT, IC
SS	NDA170	SW8081	p,p'-DDT	4	U	4	UJ	0.47	4	ug/kg	HT, IC
SS	NDA172	SW8081	p,p'-DDT	3.6	U	3.6	UJ	0.42	3.6	ug/kg	HT, IC
SS	NDA174	SW8081	p,p'-DDT	3.5	U	3.5	UJ	0.41	3.5	ug/kg	HT, IC
SS	NDA176	SW8081	p,p'-DDT	9.3	U	9.3	UJ	1.1	9.3	ug/kg	HT, IC
SB	NDA213	SW8081	METHOXYCHLOR	20	U	20	UJ	0.33	20	ug/kg	HT, IC
SB	NDA214FD1	SW8081	METHOXYCHLOR	19	U	19	UJ	0.32	19	ug/kg	HT, IC
SB	NDA215	SW8081	METHOXYCHLOR	20	U	20	UJ	0.34	20	ug/kg	HT, IC
SB	NDA216	SW8081	METHOXYCHLOR	18	U	18	UJ	0.32	18	ug/kg	HT, IC
SB	NDA217	SW8081	METHOXYCHLOR	19	U	19	UJ	0.33	19	ug/kg	HT, IC
SB	NDA218	SW8081	METHOXYCHLOR	19	U	19	UJ	0.32	19	ug/kg	HT, IC
SB	NDA219	SW8081	METHOXYCHLOR	19	U	19	UJ	0.32	19	ug/kg	HT, IC
SB	NDA220	SW8081	METHOXYCHLOR	19	U	19	UJ	0.33	19	ug/kg	HT, IC
SB	NDA221	SW8081	METHOXYCHLOR	18	U	18	UJ	0.31	18	ug/kg	HT, IC
SB	NDA222	SW8081	METHOXYCHLOR	17	U	17	UJ	0.29	17	ug/kg	HT, IC
SB	NDA223	SW8081	METHOXYCHLOR	19	U	19	UJ	0.33	19	ug/kg	HT, IC
SD	NDA054	SW8081	METHOXYCHLOR	17	U	17	UJ	0.3	17	ug/kg	HT, IC
SD	NDA055	SW8081	METHOXYCHLOR	17	U	17	UJ	0.29	17	ug/kg	HT, IC
SB	NDA165	SW8081	GAMMA BHC (LINDANE)	1.9	U	1.9	UJ	0.53	1.9	ug/kg	HT, IC
SB	NDA167	SW8081	GAMMA BHC (LINDANE)	2.1	U	2.1	UJ	0.57	2.1	ug/kg	HT, IC
SB	NDA169	SW8081	GAMMA BHC (LINDANE)	2	U	2	UJ	0.56	2	ug/kg	HT, IC
SB	NDA171	SW8081	GAMMA BHC (LINDANE)	1.8	U	1.8	UJ	0.51	1.8	ug/kg	HT, IC
SB	NDA173	SW8081	GAMMA BHC (LINDANE)	2.2	U	2.2	UJ	0.6	2.2	ug/kg	HT, IC
SB	NDA175	SW8081	GAMMA BHC (LINDANE)	1.9	U	1.9	UJ	0.52	1.9	ug/kg	HT, IC
SB	NDA177	SW8081	GAMMA BHC (LINDANE)	2	U	2	UJ	0.54	2	ug/kg	HT, IC
SB	NDA213	SW8081	GAMMA BHC (LINDANE)	2	U	2	UJ	0.54	2	ug/kg	HT, IC
SB	NDA214FD1	SW8081	GAMMA BHC (LINDANE)	1.9	U	1.9	UJ	0.52	1.9	ug/kg	HT, IC
SB	NDA215	SW8081	GAMMA BHC (LINDANE)	2	U	2	UJ	0.54	2	ug/kg	HT, IC
SB	NDA216	SW8081	GAMMA BHC (LINDANE)	1.8	U	1.8	UJ	0.51	1.8	ug/kg	HT, IC

Matrix	Sample ID	Analytical Method	Parameter	Lab Result	Lab Qual	Final Result	Final Qual	DL	RL	Units	Comments
SB	NDA217	SW8081	GAMMA BHC (LINDANE)	1.9	U	1.9	UJ	0.54	1.9	ug/kg	HT, IC
SB	NDA218	SW8081	GAMMA BHC (LINDANE)	1.9	U	1.9	UJ	0.52	1.9	ug/kg	HT, IC
SB	NDA219	SW8081	GAMMA BHC (LINDANE)	1.9	U	1.9	UJ	0.52	1.9	ug/kg	HT, IC
SB	NDA220	SW8081	GAMMA BHC (LINDANE)	1.9	U	1.9	UJ	0.54	1.9	ug/kg	HT, IC
SB	NDA221	SW8081	GAMMA BHC (LINDANE)	1.8	U	1.8	UJ	0.5	1.8	ug/kg	HT, IC
SB	NDA222	SW8081	GAMMA BHC (LINDANE)	1.7	U	1.7	UJ	0.47	1.7	ug/kg	HT, IC
SB	NDA223	SW8081	GAMMA BHC (LINDANE)	1.9	U	1.9	UJ	0.53	1.9	ug/kg	HT, IC
SB	NDA235	SW8081	GAMMA BHC (LINDANE)	2.2	U	2.2	UJ	0.62	2.2	ug/kg	HT, IC
SB	NDA236	SW8081	GAMMA BHC (LINDANE)	1.9	U	1.9	UJ	0.53	1.9	ug/kg	HT, IC
SB	NDA237FD1	SW8081	GAMMA BHC (LINDANE)	1.9	U	1.9	UJ	0.53	1.9	ug/kg	HT, IC
SB	NDA238	SW8081	GAMMA BHC (LINDANE)	1.9	U	1.9	UJ	0.53	1.9	ug/kg	HT, IC
SB	NDA239	SW8081	GAMMA BHC (LINDANE)	1.9	U	1.9	UJ	0.53	1.9	ug/kg	HT, IC
SB	NDA240	SW8081	GAMMA BHC (LINDANE)	2	U	2	UJ	0.56	2	ug/kg	HT, IC
SB	NDA241	SW8081	GAMMA BHC (LINDANE)	1.9	U	1.9	UJ	0.52	1.9	ug/kg	HT, IC
SB	NDA242	SW8081	GAMMA BHC (LINDANE)	2.1	U	2.1	UJ	0.59	2.1	ug/kg	HT, IC
SB	NDA243	SW8081	GAMMA BHC (LINDANE)	2	U	2	UJ	0.55	2	ug/kg	HT, IC
SB	NDA244	SW8081	GAMMA BHC (LINDANE)	1.9	U	1.9	UJ	0.51	1.9	ug/kg	HT, IC
SD	NDA053	SW8081	GAMMA BHC (LINDANE)	13	U	13	UJ	3.5	13	ug/kg	HT, IC
SD	NDA054	SW8081	GAMMA BHC (LINDANE)	1.7	U	1.7	UJ	0.48	1.7	ug/kg	HT, IC
SD	NDA055	SW8081	GAMMA BHC (LINDANE)	1.7	U	1.7	UJ	0.47	1.7	ug/kg	HT, IC
SS	NDA164	SW8081	GAMMA BHC (LINDANE)	2.1	U	2.1	UJ	0.58	2.1	ug/kg	HT, IC
SS	NDA166	SW8081	GAMMA BHC (LINDANE)	2.1	U	2.1	UJ	0.58	2.1	ug/kg	HT, IC
SS	NDA168	SW8081	GAMMA BHC (LINDANE)	2	U	2	UJ	0.55	2	ug/kg	HT, IC
SS	NDA170	SW8081	GAMMA BHC (LINDANE)	2	U	2	UJ	0.56	2	ug/kg	HT, IC
SS	NDA172	SW8081	GAMMA BHC (LINDANE)	1.8	U	1.8	UJ	0.5	1.8	ug/kg	HT, IC
SS	NDA174	SW8081	GAMMA BHC (LINDANE)	1.8	U	1.8	UJ	0.49	1.8	ug/kg	HT, IC
SS	NDA176	SW8081	GAMMA BHC (LINDANE)	4.8	U	4.8	UJ	1.3	4.8	ug/kg	HT, IC
SB	NDA102	SW8081	ENDRIN	5.2	U	5.2	UJ	0.62	5.2	ug/kg	HT, IC
SB	NDA105	SW8081	ENDRIN	5.3	U	5.3	UJ	0.63	5.3	ug/kg	HT, IC
SB	NDA106FD1	SW8081	ENDRIN	5.3	U	5.3	UJ	0.63	5.3	ug/kg	HT, IC
SB	NDA108	SW8081	ENDRIN	4.4	U	4.4	UJ	0.53	4.4	ug/kg	HT, IC
SB	NDA110	SW8081	ENDRIN	4.4	U	4.4	UJ	0.53	4.4	ug/kg	HT, IC
SB	NDA112	SW8081	ENDRIN	4.3	U	4.3	UJ	0.52	4.3	ug/kg	HT, IC
SS	NDA101	SW8081	ENDRIN	4.4	U	4.4	UJ	0.53	4.4	ug/kg	HT, IC
SS	NDA103	SW8081	ENDRIN	4.5	U	4.5	UJ	0.55	4.5	ug/kg	HT, IC
SS	NDA104FD1	SW8081	ENDRIN	4.7	U	4.7	UJ	0.56	4.7	ug/kg	HT, IC
SS	NDA107	SW8081	ENDRIN	4.2	U	4.2	UJ	0.5	4.2	ug/kg	HT, IC
SS	NDA109	SW8081	ENDRIN	4.3	U	4.3	UJ	0.52	4.3	ug/kg	HT, IC
SS	NDA111	SW8081	ENDRIN	4.4	U	4.4	UJ	0.53	4.4	ug/kg	HT, IC
SB	NDA165	SW8081	DELTA BHC	1.9	U	1.9	UJ	0.5	1.9	ug/kg	HT, IC
SB	NDA167	SW8081	DELTA BHC	2.1	U	2.1	UJ	0.54	2.1	ug/kg	HT, IC
SB	NDA169	SW8081	DELTA BHC	2	U	2	UJ	0.52	2	ug/kg	HT, IC
SB	NDA171	SW8081	DELTA BHC	1.8	U	1.8	UJ	0.48	1.8	ug/kg	HT, IC
SB	NDA173	SW8081	DELTA BHC	2.2	U	2.2	UJ	0.56	2.2	ug/kg	HT, IC
SB	NDA175	SW8081	DELTA BHC	1.9	U	1.9	UJ	0.49	1.9	ug/kg	HT, IC
SB	NDA177	SW8081	DELTA BHC	2	U	2	UJ	0.51	2	ug/kg	HT, IC
SD	NDA053	SW8081	DELTA BHC	13	U	13	UJ	3.3	13	ug/kg	HT, IC
SS	NDA164	SW8081	DELTA BHC	2.1	U	2.1	UJ	0.54	2.1	ug/kg	HT, IC
SS	NDA166	SW8081	DELTA BHC	2.1	U	2.1	UJ	0.55	2.1	ug/kg	HT, IC
SS	NDA168	SW8081	DELTA BHC	2	U	2	UJ	0.51	2	ug/kg	HT, IC
SS	NDA170	SW8081	DELTA BHC	2	U	2	UJ	0.53	2	ug/kg	HT, IC
SS	NDA172	SW8081	DELTA BHC	1.8	U	1.8	UJ	0.47	1.8	ug/kg	HT, IC
SS	NDA174	SW8081	DELTA BHC	1.8	U	1.8	UJ	0.46	1.8	ug/kg	HT, IC
SS	NDA176	SW8081	DELTA BHC	4.8	U	4.8	UJ	1.2	4.8	ug/kg	HT, IC
SB	NDA102	SW8081	BETA ENDOSULFAN (ENDOSULFAN II)	5.2	U	5.2	UJ	0.46	5.2	ug/kg	HT, IC
SB	NDA105	SW8081	BETA ENDOSULFAN (ENDOSULFAN II)	5.3	U	5.3	UJ	0.48	5.3	ug/kg	HT, IC
SB	NDA106FD1	SW8081	BETA ENDOSULFAN (ENDOSULFAN II)	5.3	U	5.3	UJ	0.48	5.3	ug/kg	HT, IC
SB	NDA108	SW8081	BETA ENDOSULFAN (ENDOSULFAN II)	4.4	U	4.4	UJ	0.4	4.4	ug/kg	HT, IC
SB	NDA110	SW8081	BETA ENDOSULFAN (ENDOSULFAN II)	4.4	U	4.4	UJ	0.4	4.4	ug/kg	HT, IC
SB	NDA112	SW8081	BETA ENDOSULFAN (ENDOSULFAN II)	4.3	U	4.3	UJ	0.39	4.3	ug/kg	HT, IC
SS	NDA101	SW8081	BETA ENDOSULFAN (ENDOSULFAN II)	4.4	U	4.4	UJ	0.4	4.4	ug/kg	HT, IC
SS	NDA103	SW8081	BETA ENDOSULFAN (ENDOSULFAN II)	4.5	U	4.5	UJ	0.41	4.5	ug/kg	HT, IC
SS	NDA104FD1	SW8081	BETA ENDOSULFAN (ENDOSULFAN II)	4.7	U	4.7	UJ	0.42	4.7	ug/kg	HT, IC
SS	NDA107	SW8081	BETA ENDOSULFAN (ENDOSULFAN II)	4.2	U	4.2	UJ	0.37	4.2	ug/kg	HT, IC
SS	NDA109	SW8081	BETA ENDOSULFAN (ENDOSULFAN II)	4.3	U	4.3	UJ	0.39	4.3	ug/kg	HT, IC
SS	NDA111	SW8081	BETA ENDOSULFAN (ENDOSULFAN II)	4.4	U	4.4	UJ	0.4	4.4	ug/kg	HT, IC
SB	NDA165	SW8081	ALPHA BHC	1.9	U	1.9	UJ	0.55	1.9	ug/kg	HT, IC
SB	NDA167	SW8081	ALPHA BHC	2.1	U	2.1	UJ	0.6	2.1	ug/kg	HT, IC
SB	NDA169	SW8081	ALPHA BHC	2	U	2	UJ	0.59	2	ug/kg	HT, IC
SB	NDA171	SW8081	ALPHA BHC	1.8	U	1.8	UJ	0.53	1.8	ug/kg	HT, IC

Matrix	Sample ID	Analytical Method	Parameter	Lab Result	Lab Qual	Final Result	Final Qual	DL	RL	Units	Comments
SB	NDA173	SW8081	ALPHA BHC	2.2	U	2.2	UJ	0.62	2.2	ug/kg	HT, IC
SB	NDA175	SW8081	ALPHA BHC	1.9	U	1.9	UJ	0.54	1.9	ug/kg	HT, IC
SB	NDA177	SW8081	ALPHA BHC	2	U	2	UJ	0.57	2	ug/kg	HT, IC
SB	NDA213	SW8081	ALPHA BHC	2	U	2	UJ	0.56	2	ug/kg	HT, IC
SB	NDA214FD1	SW8081	ALPHA BHC	1.9	U	1.9	UJ	0.55	1.9	ug/kg	HT, IC
SB	NDA215	SW8081	ALPHA BHC	2	U	2	UJ	0.57	2	ug/kg	HT, IC
SB	NDA216	SW8081	ALPHA BHC	1.8	U	1.8	UJ	0.53	1.8	ug/kg	HT, IC
SB	NDA217	SW8081	ALPHA BHC	1.9	U	1.9	UJ	0.56	1.9	ug/kg	HT, IC
SB	NDA218	SW8081	ALPHA BHC	1.9	U	1.9	UJ	0.54	1.9	ug/kg	HT, IC
SB	NDA219	SW8081	ALPHA BHC	1.9	U	1.9	UJ	0.54	1.9	ug/kg	HT, IC
SB	NDA220	SW8081	ALPHA BHC	1.9	U	1.9	UJ	0.56	1.9	ug/kg	HT, IC
SB	NDA221	SW8081	ALPHA BHC	1.8	U	1.8	UJ	0.52	1.8	ug/kg	HT, IC
SB	NDA222	SW8081	ALPHA BHC	1.7	U	1.7	UJ	0.49	1.7	ug/kg	HT, IC
SB	NDA223	SW8081	ALPHA BHC	1.9	U	1.9	UJ	0.56	1.9	ug/kg	HT, IC
SB	NDA235	SW8081	ALPHA BHC	2.2	U	2.2	UJ	0.64	2.2	ug/kg	HT, IC
SB	NDA236	SW8081	ALPHA BHC	1.9	U	1.9	UJ	0.56	1.9	ug/kg	HT, IC
SB	NDA237FD1	SW8081	ALPHA BHC	1.9	U	1.9	UJ	0.55	1.9	ug/kg	HT, IC
SB	NDA238	SW8081	ALPHA BHC	1.9	U	1.9	UJ	0.55	1.9	ug/kg	HT, IC
SB	NDA239	SW8081	ALPHA BHC	1.9	U	1.9	UJ	0.55	1.9	ug/kg	HT, IC
SB	NDA240	SW8081	ALPHA BHC	2	U	2	UJ	0.59	2	ug/kg	HT, IC
SB	NDA241	SW8081	ALPHA BHC	1.9	U	1.9	UJ	0.55	1.9	ug/kg	HT, IC
SB	NDA242	SW8081	ALPHA BHC	2.1	U	2.1	UJ	0.61	2.1	ug/kg	HT, IC
SB	NDA243	SW8081	ALPHA BHC	2	U	2	UJ	0.58	2	ug/kg	HT, IC
SB	NDA244	SW8081	ALPHA BHC	1.9	U	1.9	UJ	0.54	1.9	ug/kg	HT, IC
SD	NDA053	SW8081	ALPHA BHC	13	U	13	UJ	3.7	13	ug/kg	HT, IC
SD	NDA054	SW8081	ALPHA BHC	1.7	U	1.7	UJ	0.5	1.7	ug/kg	HT, IC
SD	NDA055	SW8081	ALPHA BHC	1.7	U	1.7	UJ	0.49	1.7	ug/kg	HT, IC
SS	NDA164	SW8081	ALPHA BHC	2.1	U	2.1	UJ	0.6	2.1	ug/kg	HT, IC
SS	NDA166	SW8081	ALPHA BHC	2.1	U	2.1	UJ	0.61	2.1	ug/kg	HT, IC
SS	NDA168	SW8081	ALPHA BHC	2	U	2	UJ	0.57	2	ug/kg	HT, IC
SS	NDA170	SW8081	ALPHA BHC	2	U	2	UJ	0.59	2	ug/kg	HT, IC
SS	NDA172	SW8081	ALPHA BHC	1.8	U	1.8	UJ	0.53	1.8	ug/kg	HT, IC
SS	NDA174	SW8081	ALPHA BHC	1.8	U	1.8	UJ	0.51	1.8	ug/kg	HT, IC
SS	NDA176	SW8081	ALPHA BHC	4.8	U	4.8	UJ	1.4	4.8	ug/kg	HT, IC
SS	NDA104FD1	SW8081	p,p'-DDT	4.7	U	4.7	UJ	0.55	4.7	ug/kg	HT, FD
SB	NDA247FD1	SW8081	p,p'-DDE	3.8	U	3.8	UJ	0.39	3.8	ug/kg	HT, FD
SB	NDA105	SW8081	p,p'-DDE	11	=	11	J	0.54	5.3	ug/kg	HT, FD
SB	NDA106FD1	SW8081	p,p'-DDE	5.3	=	5.3	J	0.54	5.3	ug/kg	HT, FD
SS	NDA123	SW8081	p,p'-DDT	16	=	16	J	0.44	3.7	ug/kg	HT, CC
SB	NDA213	SW8081	ENDRIN	3.8	U	3.8	UJ	0.46	3.8	ug/kg	HT, CC
SB	NDA214FD1	SW8081	ENDRIN	3.7	U	3.7	UJ	0.45	3.7	ug/kg	HT, CC
SB	NDA215	SW8081	ENDRIN	3.8	U	3.8	UJ	0.46	3.8	ug/kg	HT, CC
SB	NDA216	SW8081	ENDRIN	3.6	U	3.6	UJ	0.44	3.6	ug/kg	HT, CC
SB	NDA217	SW8081	ENDRIN	3.8	U	3.8	UJ	0.46	3.8	ug/kg	HT, CC
SB	NDA218	SW8081	ENDRIN	3.7	U	3.7	UJ	0.44	3.7	ug/kg	HT, CC
SB	NDA219	SW8081	ENDRIN	3.7	U	3.7	UJ	0.44	3.7	ug/kg	HT, CC
SB	NDA220	SW8081	ENDRIN	3.8	U	3.8	UJ	0.46	3.8	ug/kg	HT, CC
SB	NDA221	SW8081	ENDRIN	3.6	U	3.6	UJ	0.43	3.6	ug/kg	HT, CC
SB	NDA222	SW8081	ENDRIN	3.3	U	3.3	UJ	0.4	3.3	ug/kg	HT, CC
SB	NDA223	SW8081	ENDRIN	3.8	U	3.8	UJ	0.46	3.8	ug/kg	HT, CC
SD	NDA054	SW8081	ENDRIN	3.4	U	3.4	UJ	0.41	3.4	ug/kg	HT, CC
SD	NDA055	SW8081	ENDRIN	3.3	U	3.3	UJ	0.4	3.3	ug/kg	HT, CC
SB	NDA237FD1	SW8270	DI-n-OCTYLPHTHALATE	395	U	395	UJ	30	395	ug/kg	HT, CC
SB	NDA245	SW8270	DI-n-OCTYLPHTHALATE	393	U	393	UJ	29	393	ug/kg	HT, CC
SB	NDA246	SW8270	DI-n-OCTYLPHTHALATE	511	U	511	UJ	38	511	ug/kg	HT, CC
SB	NDA247FD1	SW8270	DI-n-OCTYLPHTHALATE	390	U	390	UJ	29	390	ug/kg	HT, CC
SB	NDA248	SW8270	DI-n-OCTYLPHTHALATE	453	U	453	UJ	34	453	ug/kg	HT, CC
SB	NDA249	SW8270	DI-n-OCTYLPHTHALATE	374	U	374	UJ	28	374	ug/kg	HT, CC
SB	NDA252	SW8270	DI-n-OCTYLPHTHALATE	420	U	420	UJ	31	420	ug/kg	HT, CC
SB	NDA253	SW8270	DI-n-OCTYLPHTHALATE	439	U	439	UJ	33	439	ug/kg	HT, CC
SB	NDA254	SW8270	DI-n-OCTYLPHTHALATE	391	U	391	UJ	29	391	ug/kg	HT, CC
SB	NDA255	SW8270	DI-n-OCTYLPHTHALATE	375	U	375	UJ	28	375	ug/kg	HT, CC
SB	NDA296	SW8270	DI-n-OCTYLPHTHALATE	369	U	369	UJ	28	369	ug/kg	HT, CC
SB	NDA297	SW8270	DI-n-OCTYLPHTHALATE	358	U	358	UJ	27	358	ug/kg	HT, CC
SB	NDA298	SW8270	DI-n-OCTYLPHTHALATE	341	U	341	UJ	26	341	ug/kg	HT, CC
SB	NDA299	SW8270	DI-n-OCTYLPHTHALATE	370	U	370	UJ	28	370	ug/kg	HT, CC
SS	NDA183	SW8270	DI-n-OCTYLPHTHALATE	589	U	589	UJ	44	589	ug/kg	HT, CC
SS	NDA184FD1	SW8270	DI-n-OCTYLPHTHALATE	662	U	662	UJ	50	662	ug/kg	HT, CC
SS	NDA204	SW8270	DI-n-OCTYLPHTHALATE	753	U	753	UJ	57	753	ug/kg	HT, CC
SS	NDA206	SW8270	DI-n-OCTYLPHTHALATE	529	U	529	UJ	40	529	ug/kg	HT, CC

Matrix	Sample ID	Analytical Method	Parameter	Lab Result	Lab Qual	Final Result	Final Qual	DL	RL	Units	Comments
SS	NDA207	SW8270	DI-n-OCTYLPHTHALATE	669	U	669	UJ	50	669	ug/kg	HT, CC
SS	NDA208	SW8270	DI-n-OCTYLPHTHALATE	520	U	520	UJ	39	520	ug/kg	HT, CC
SS	NDA209	SW8270	DI-n-OCTYLPHTHALATE	570	U	570	UJ	43	570	ug/kg	HT, CC
SS	NDA210	SW8270	DI-n-OCTYLPHTHALATE	545	U	545	UJ	41	545	ug/kg	HT, CC
SS	NDA211	SW8270	DI-n-OCTYLPHTHALATE	742	U	742	UJ	56	742	ug/kg	HT, CC
SS	NDA212	SW8270	DI-n-OCTYLPHTHALATE	651	U	651	UJ	49	651	ug/kg	HT, CC
SS	NDA186	SW8270	DI-n-OCTYLPHTHALATE	416	U	416	UJ	31	416	ug/kg	HT, CC
SS	NDA187	SW8270	DI-n-OCTYLPHTHALATE	380	U	380	UJ	28	380	ug/kg	HT, CC
SS	NDA188	SW8270	DI-n-OCTYLPHTHALATE	810	U	810	UJ	61	810	ug/kg	HT, CC
SS	NDA189	SW8270	DI-n-OCTYLPHTHALATE	426	U	426	UJ	32	426	ug/kg	HT, CC
SS	NDA190	SW8270	DI-n-OCTYLPHTHALATE	430	U	430	UJ	32	430	ug/kg	HT, CC
SS	NDA191	SW8270	DI-n-OCTYLPHTHALATE	338	U	338	UJ	25	338	ug/kg	HT, CC
SS	NDA192FD1	SW8270	DI-n-OCTYLPHTHALATE	418	U	418	UJ	31	418	ug/kg	HT, CC
SS	NDA193	SW8270	DI-n-OCTYLPHTHALATE	1720	U	1720	UJ	129	1720	ug/kg	HT, CC
SS	NDA194	SW8270	DI-n-OCTYLPHTHALATE	480	U	480	UJ	36	480	ug/kg	HT, CC
SS	NDA195	SW8270	DI-n-OCTYLPHTHALATE	323	U	323	UJ	24	323	ug/kg	HT, CC
SS	NDA091	SW8270	DI-n-OCTYLPHTHALATE	367	U	367	UJ	27	367	ug/kg	HT, CC
SS	NDA121	SW8270	bis(2-ETHYLHEXYL) PHTHALATE	250	J	409	UJ	31	409	ug/kg	HT, BL
SS	NDA123	SW8270	bis(2-ETHYLHEXYL) PHTHALATE	341	J	450	UJ	34	450	ug/kg	HT, BL
SS	NDA103	SW8081	p,p'-DDT	1.5	J	4.5	UJ	0.53	4.5	ug/kg	HT, 2C, FD
SB	NDA058	SW8081	TOXAPHENE	117	J	117	UJ	17	188	ug/kg	HT, 2C
SB	NDA102	SW8081	p,p'-DDT	2.2	J	5.2	UJ	0.61	5.2	ug/kg	HT, 2C
SD	NDA054	SW8081	p,p'-DDT	1.4	J	3.4	UJ	0.4	3.4	ug/kg	HT, 2C
SS	NDA191	SW8081	p,p'-DDE	0.36	J	3.4	UJ	0.35	3.4	ug/kg	HT, 2C
SB	NDA102	SW8081	p,p'-DDD	13	=	13	J	0.36	5.2	ug/kg	HT, 2C
SS	NDA113	SW8081	p,p'-DDD	1.2	J	4.1	UJ	0.28	4.1	ug/kg	HT, 2C
SS	NDA168	SW8081	DIELDRIN	0.45	U	0.45	J	0.45	3.9	ug/kg	HT, 2C
SD	NDA050	SW8081	TOXAPHENE	1960	U	1960	UJ	182	1960	ug/kg	HT, OT
SD	NDA051FD1	SW8081	TOXAPHENE	2090	U	2090	UJ	194	2090	ug/kg	HT, OT
SD	NDA052	SW8081	TOXAPHENE	2100	U	2100	UJ	195	2100	ug/kg	HT, OT
SD	NDA052	SW8081	p,p'-DDE	41	U	41	UJ	4.2	41	ug/kg	HT, OT
SD	NDA050	SW8081	p,p'-DDD	38	U	38	UJ	2.7	38	ug/kg	HT, OT
SD	NDA051FD1	SW8081	p,p'-DDD	41	U	41	UJ	2.8	41	ug/kg	HT, OT
SD	NDA052	SW8081	p,p'-DDD	41	U	41	UJ	2.8	41	ug/kg	HT, OT
SD	NDA050	SW8081	HEPTACHLOR EPOXIDE	20	U	20	UJ	6.9	20	ug/kg	HT, OT
SD	NDA051FD1	SW8081	HEPTACHLOR EPOXIDE	21	U	21	UJ	7.4	21	ug/kg	HT, OT
SD	NDA052	SW8081	HEPTACHLOR EPOXIDE	21	U	21	UJ	7.4	21	ug/kg	HT, OT
SD	NDA050	SW8081	HEPTACHLOR	20	U	20	UJ	7.2	20	ug/kg	HT, OT
SD	NDA051FD1	SW8081	HEPTACHLOR	21	U	21	UJ	7.6	21	ug/kg	HT, OT
SD	NDA052	SW8081	HEPTACHLOR	21	U	21	UJ	7.7	21	ug/kg	HT, OT
SD	NDA050	SW8081	GAMMA-CHLORDANE	20	U	20	UJ	5.8	20	ug/kg	HT, OT
SD	NDA051FD1	SW8081	GAMMA-CHLORDANE	21	U	21	UJ	6.1	21	ug/kg	HT, OT
SD	NDA052	SW8081	GAMMA-CHLORDANE	21	U	21	UJ	6.2	21	ug/kg	HT, OT
SD	NDA050	SW8081	ENDRIN KETONE	38	U	38	UJ	2.5	38	ug/kg	HT, OT
SD	NDA051FD1	SW8081	ENDRIN KETONE	41	U	41	UJ	2.7	41	ug/kg	HT, OT
SD	NDA052	SW8081	ENDRIN KETONE	41	U	41	UJ	2.7	41	ug/kg	HT, OT
SD	NDA050	SW8081	ENDRIN ALDEHYDE	38	U	38	UJ	2.7	38	ug/kg	HT, OT
SD	NDA051FD1	SW8081	ENDRIN ALDEHYDE	41	U	41	UJ	2.8	41	ug/kg	HT, OT
SD	NDA052	SW8081	ENDRIN ALDEHYDE	41	U	41	UJ	2.8	41	ug/kg	HT, OT
SD	NDA050	SW8081	ENDRIN	38	U	38	UJ	4.6	38	ug/kg	HT, OT
SD	NDA051FD1	SW8081	ENDRIN	41	U	41	UJ	4.9	41	ug/kg	HT, OT
SD	NDA052	SW8081	ENDRIN	41	U	41	UJ	4.9	41	ug/kg	HT, OT
SD	NDA050	SW8081	ENDOSULFAN SULFATE	38	U	38	UJ	4.5	38	ug/kg	HT, OT
SD	NDA051FD1	SW8081	ENDOSULFAN SULFATE	41	U	41	UJ	4.8	41	ug/kg	HT, OT
SD	NDA052	SW8081	ENDOSULFAN SULFATE	41	U	41	UJ	4.8	41	ug/kg	HT, OT
SD	NDA050	SW8081	DIELDRIN	38	U	38	UJ	4.7	38	ug/kg	HT, OT
SD	NDA051FD1	SW8081	DIELDRIN	41	U	41	UJ	5	41	ug/kg	HT, OT
SD	NDA052	SW8081	DIELDRIN	41	U	41	UJ	5.1	41	ug/kg	HT, OT
SD	NDA050	SW8081	BETA ENDOSULFAN (ENDOSULFAN II)	38	U	38	UJ	3.5	38	ug/kg	HT, OT
SD	NDA051FD1	SW8081	BETA ENDOSULFAN (ENDOSULFAN II)	41	U	41	UJ	3.7	41	ug/kg	HT, OT
SD	NDA052	SW8081	BETA ENDOSULFAN (ENDOSULFAN II)	41	U	41	UJ	3.7	41	ug/kg	HT, OT
SD	NDA050	SW8081	BETA BHC	20	U	20	UJ	5.2	20	ug/kg	HT, OT
SD	NDA051FD1	SW8081	BETA BHC	21	U	21	UJ	5.6	21	ug/kg	HT, OT
SD	NDA052	SW8081	BETA BHC	21	U	21	UJ	5.6	21	ug/kg	HT, OT
SD	NDA050	SW8081	ALPHA-CHLORDANE	20	U	20	UJ	5.6	20	ug/kg	HT, OT
SD	NDA051FD1	SW8081	ALPHA-CHLORDANE	21	U	21	UJ	5.9	21	ug/kg	HT, OT
SD	NDA052	SW8081	ALPHA-CHLORDANE	21	U	21	UJ	6	21	ug/kg	HT, OT
SD	NDA050	SW8081	ALPHA ENDOSULFAN (ENDOSULFAN I)	20	U	20	UJ	5.4	20	ug/kg	HT, OT
SD	NDA051FD1	SW8081	ALPHA ENDOSULFAN (ENDOSULFAN I)	21	U	21	UJ	5.8	21	ug/kg	HT, OT
SD	NDA052	SW8081	ALPHA ENDOSULFAN (ENDOSULFAN I)	21	U	21	UJ	5.8	21	ug/kg	HT, OT

Matrix	Sample ID	Analytical Method	Parameter	Lab Result	Lab Qual	Final Result	Final Qual	DL	RL	Units	Comments
SD	NDA050	SW8081	ALDRIN	20	U	20	UJ	5.4	20	ug/kg	HT, OT
SD	NDA051FD1	SW8081	ALDRIN	21	U	21	UJ	5.8	21	ug/kg	HT, OT
SD	NDA052	SW8081	ALDRIN	21	U	21	UJ	5.8	21	ug/kg	HT, OT
SD	NDA052	SW8081	p,p'-DDT	41	U	41	UJ	4.8	41	ug/kg	HT, IC, OT
SD	NDA051FD1	SW8081	GAMMA BHC (LINDANE)	21	U	21	UJ	5.8	21	ug/kg	HT, IC, OT
SD	NDA052	SW8081	GAMMA BHC (LINDANE)	21	U	21	UJ	5.8	21	ug/kg	HT, IC, OT
SD	NDA051FD1	SW8081	DELTA BHC	21	U	21	UJ	5.4	21	ug/kg	HT, IC, OT
SD	NDA052	SW8081	DELTA BHC	21	U	21	UJ	5.4	21	ug/kg	HT, IC, OT
SD	NDA051FD1	SW8081	ALPHA BHC	21	U	21	UJ	6	21	ug/kg	HT, IC, OT
SD	NDA052	SW8081	ALPHA BHC	21	U	21	UJ	6.1	21	ug/kg	HT, IC, OT
SD	NDA051FD1	SW8081	p,p'-DDT	41	U	41	UJ	4.8	41	ug/kg	OT
SD	NDA052	SW8081	METHOXYCHLOR	210	U	210	UJ	3.6	210	ug/kg	OT
SD	NDA051FD1	SW8081	p,p'-DDE	4.2	U	4.2	J	4.2	41	ug/kg	HT, FD, OT
WG	NDA015	SW8082	PCB-1260 (AROCHLOR 1260)	0.21	U	0.21	UJ	0.1	0.21	ug/L	HT
WG	NDA016	SW8082	PCB-1260 (AROCHLOR 1260)	0.2	U	0.2	UJ	0.1	0.2	ug/L	HT
WG	NDA026	SW8082	PCB-1260 (AROCHLOR 1260)	0.21	U	0.21	UJ	0.1	0.21	ug/L	HT
WG	NDA015	SW8082	PCB-1254 (AROCHLOR 1254)	0.21	U	0.21	UJ	0.15	0.21	ug/L	HT
WG	NDA016	SW8082	PCB-1254 (AROCHLOR 1254)	0.2	U	0.2	UJ	0.14	0.2	ug/L	HT
WG	NDA026	SW8082	PCB-1254 (AROCHLOR 1254)	0.21	U	0.21	UJ	0.14	0.21	ug/L	HT
WG	NDA015	SW8082	PCB-1248 (AROCHLOR 1248)	0.21	U	0.21	UJ	0.13	0.21	ug/L	HT
WG	NDA016	SW8082	PCB-1248 (AROCHLOR 1248)	0.2	U	0.2	UJ	0.12	0.2	ug/L	HT
WG	NDA026	SW8082	PCB-1248 (AROCHLOR 1248)	0.21	U	0.21	UJ	0.12	0.21	ug/L	HT
WG	NDA015	SW8082	PCB-1242 (AROCHLOR 1242)	0.21	U	0.21	UJ	0.06	0.21	ug/L	HT
WG	NDA016	SW8082	PCB-1242 (AROCHLOR 1242)	0.2	U	0.2	UJ	0.06	0.2	ug/L	HT
WG	NDA026	SW8082	PCB-1242 (AROCHLOR 1242)	0.21	U	0.21	UJ	0.06	0.21	ug/L	HT
WG	NDA015	SW8082	PCB-1232 (AROCHLOR 1232)	0.21	U	0.21	UJ	0.08	0.21	ug/L	HT
WG	NDA016	SW8082	PCB-1232 (AROCHLOR 1232)	0.2	U	0.2	UJ	0.08	0.2	ug/L	HT
WG	NDA026	SW8082	PCB-1232 (AROCHLOR 1232)	0.21	U	0.21	UJ	0.08	0.21	ug/L	HT
WG	NDA015	SW8082	PCB-1221 (AROCHLOR 1221)	0.42	U	0.42	UJ	0.12	0.42	ug/L	HT
WG	NDA016	SW8082	PCB-1221 (AROCHLOR 1221)	0.41	U	0.41	UJ	0.11	0.41	ug/L	HT
WG	NDA026	SW8082	PCB-1221 (AROCHLOR 1221)	0.41	U	0.41	UJ	0.11	0.41	ug/L	HT
WG	NDA015	SW8082	PCB-1016 (AROCHLOR 1016)	0.21	U	0.21	UJ	0.08	0.21	ug/L	HT
WG	NDA016	SW8082	PCB-1016 (AROCHLOR 1016)	0.2	U	0.2	UJ	0.08	0.2	ug/L	HT
WG	NDA026	SW8082	PCB-1016 (AROCHLOR 1016)	0.21	U	0.21	UJ	0.08	0.21	ug/L	HT
SB	NDA165	SW8081	TOXAPHENE	192	U	192	UJ	18	192	ug/kg	HT
SB	NDA167	SW8081	TOXAPHENE	208	U	208	UJ	19	208	ug/kg	HT
SB	NDA169	SW8081	TOXAPHENE	203	U	203	UJ	19	203	ug/kg	HT
SB	NDA171	SW8081	TOXAPHENE	185	U	185	UJ	17	185	ug/kg	HT
SB	NDA173	SW8081	TOXAPHENE	216	U	216	UJ	20	216	ug/kg	HT
SB	NDA175	SW8081	TOXAPHENE	189	U	189	UJ	17	189	ug/kg	HT
SB	NDA177	SW8081	TOXAPHENE	197	U	197	UJ	18	197	ug/kg	HT
SB	NDA213	SW8081	TOXAPHENE	195	U	195	UJ	18	195	ug/kg	HT
SB	NDA214FD1	SW8081	TOXAPHENE	189	U	189	UJ	18	189	ug/kg	HT
SB	NDA215	SW8081	TOXAPHENE	196	U	196	UJ	18	196	ug/kg	HT
SB	NDA216	SW8081	TOXAPHENE	185	U	185	UJ	17	185	ug/kg	HT
SB	NDA217	SW8081	TOXAPHENE	195	U	195	UJ	18	195	ug/kg	HT
SB	NDA218	SW8081	TOXAPHENE	187	U	187	UJ	17	187	ug/kg	HT
SB	NDA219	SW8081	TOXAPHENE	188	U	188	UJ	17	188	ug/kg	HT
SB	NDA220	SW8081	TOXAPHENE	195	U	195	UJ	18	195	ug/kg	HT
SB	NDA221	SW8081	TOXAPHENE	181	U	181	UJ	17	181	ug/kg	HT
SB	NDA222	SW8081	TOXAPHENE	169	U	169	UJ	16	169	ug/kg	HT
SB	NDA223	SW8081	TOXAPHENE	193	U	193	UJ	18	193	ug/kg	HT
SB	NDA235	SW8081	TOXAPHENE	223	U	223	UJ	21	223	ug/kg	HT
SB	NDA236	SW8081	TOXAPHENE	192	U	192	UJ	18	192	ug/kg	HT
SB	NDA237FD1	SW8081	TOXAPHENE	190	U	190	UJ	18	190	ug/kg	HT
SB	NDA238	SW8081	TOXAPHENE	191	U	191	UJ	18	191	ug/kg	HT
SB	NDA239	SW8081	TOXAPHENE	190	U	190	UJ	18	190	ug/kg	HT
SB	NDA240	SW8081	TOXAPHENE	204	U	204	UJ	19	204	ug/kg	HT
SB	NDA241	SW8081	TOXAPHENE	190	U	190	UJ	18	190	ug/kg	HT
SB	NDA242	SW8081	TOXAPHENE	212	U	212	UJ	20	212	ug/kg	HT
SB	NDA243	SW8081	TOXAPHENE	200	U	200	UJ	18	200	ug/kg	HT
SB	NDA244	SW8081	TOXAPHENE	186	U	186	UJ	17	186	ug/kg	HT
SB	NDA245	SW8081	TOXAPHENE	196	U	196	UJ	18	196	ug/kg	HT
SB	NDA246	SW8081	TOXAPHENE	208	U	208	UJ	19	208	ug/kg	HT
SB	NDA247FD1	SW8081	TOXAPHENE	196	U	196	UJ	18	196	ug/kg	HT
SB	NDA248	SW8081	TOXAPHENE	205	U	205	UJ	19	205	ug/kg	HT
SB	NDA249	SW8081	TOXAPHENE	190	U	190	UJ	18	190	ug/kg	HT
SB	NDA252	SW8081	TOXAPHENE	198	U	198	UJ	18	198	ug/kg	HT
SB	NDA253	SW8081	TOXAPHENE	213	U	213	UJ	20	213	ug/kg	HT
SB	NDA254	SW8081	TOXAPHENE	212	U	212	UJ	20	212	ug/kg	HT

Matrix	Sample ID	Analytical Method	Parameter	Lab Result	Lab Qual	Final Result	Final Qual	DL	RL	Units	Comments
SB	NDA255	SW8081	TOXAPHENE	209	U	209	UJ	19	209	ug/kg	HT
SB	NDA060	SW8081	TOXAPHENE	186	U	186	UJ	17	186	ug/kg	HT
SB	NDA063	SW8081	TOXAPHENE	182	U	182	UJ	17	182	ug/kg	HT
SB	NDA064FD1	SW8081	TOXAPHENE	182	U	182	UJ	17	182	ug/kg	HT
SB	NDA066	SW8081	TOXAPHENE	178	U	178	UJ	16	178	ug/kg	HT
SB	NDA068	SW8081	TOXAPHENE	184	U	184	UJ	17	184	ug/kg	HT
SB	NDA070	SW8081	TOXAPHENE	180	U	180	UJ	17	180	ug/kg	HT
SB	NDA073	SW8081	TOXAPHENE	180	U	180	UJ	17	180	ug/kg	HT
SB	NDA075	SW8081	TOXAPHENE	18	U	18	UJ	1.6	18	ug/kg	HT
SB	NDA077	SW8081	TOXAPHENE	20	U	20	UJ	1.9	20	ug/kg	HT
SB	NDA081	SW8081	TOXAPHENE	18	U	18	UJ	1.6	18	ug/kg	HT
SB	NDA083	SW8081	TOXAPHENE	17	U	17	UJ	1.6	17	ug/kg	HT
SB	NDA114	SW8081	TOXAPHENE	220	U	220	UJ	20	220	ug/kg	HT
SB	NDA116	SW8081	TOXAPHENE	212	U	212	UJ	20	212	ug/kg	HT
SB	NDA118	SW8081	TOXAPHENE	218	U	218	UJ	20	218	ug/kg	HT
SB	NDA102	SW8081	TOXAPHENE	263	U	263	UJ	24	263	ug/kg	HT
SB	NDA105	SW8081	TOXAPHENE	269	U	269	UJ	25	269	ug/kg	HT
SB	NDA106FD1	SW8081	TOXAPHENE	269	U	269	UJ	25	269	ug/kg	HT
SB	NDA108	SW8081	TOXAPHENE	226	U	226	UJ	21	226	ug/kg	HT
SB	NDA110	SW8081	TOXAPHENE	226	U	226	UJ	21	226	ug/kg	HT
SB	NDA112	SW8081	TOXAPHENE	222	U	222	UJ	21	222	ug/kg	HT
SD	NDA053	SW8081	TOXAPHENE	1270	U	1270	UJ	118	1270	ug/kg	HT
SD	NDA054	SW8081	TOXAPHENE	174	U	174	UJ	16	174	ug/kg	HT
SD	NDA055	SW8081	TOXAPHENE	169	U	169	UJ	16	169	ug/kg	HT
SD	NDA047	SW8081	TOXAPHENE	185	U	185	UJ	17	185	ug/kg	HT
SD	NDA048	SW8081	TOXAPHENE	194	U	194	UJ	18	194	ug/kg	HT
SD	NDA049	SW8081	TOXAPHENE	185	U	185	UJ	17	185	ug/kg	HT
SS	NDA164	SW8081	TOXAPHENE	209	U	209	UJ	19	209	ug/kg	HT
SS	NDA166	SW8081	TOXAPHENE	211	U	211	UJ	20	211	ug/kg	HT
SS	NDA168	SW8081	TOXAPHENE	197	U	197	UJ	18	197	ug/kg	HT
SS	NDA170	SW8081	TOXAPHENE	204	U	204	UJ	19	204	ug/kg	HT
SS	NDA172	SW8081	TOXAPHENE	182	U	182	UJ	17	182	ug/kg	HT
SS	NDA174	SW8081	TOXAPHENE	177	U	177	UJ	16	177	ug/kg	HT
SS	NDA176	SW8081	TOXAPHENE	476	U	476	UJ	44	476	ug/kg	HT
SS	NDA185	SW8081	TOXAPHENE	201	U	201	UJ	19	201	ug/kg	HT
SS	NDA186	SW8081	TOXAPHENE	190	U	190	UJ	18	190	ug/kg	HT
SS	NDA187	SW8081	TOXAPHENE	183	U	183	UJ	17	183	ug/kg	HT
SS	NDA188	SW8081	TOXAPHENE	232	U	232	UJ	22	232	ug/kg	HT
SS	NDA189	SW8081	TOXAPHENE	190	U	190	UJ	18	190	ug/kg	HT
SS	NDA190	SW8081	TOXAPHENE	191	U	191	UJ	18	191	ug/kg	HT
SS	NDA191	SW8081	TOXAPHENE	174	U	174	UJ	16	174	ug/kg	HT
SS	NDA192FD1	SW8081	TOXAPHENE	197	U	197	UJ	18	197	ug/kg	HT
SS	NDA193	SW8081	TOXAPHENE	176	U	176	UJ	16	176	ug/kg	HT
SS	NDA194	SW8081	TOXAPHENE	208	U	208	UJ	19	208	ug/kg	HT
SS	NDA195	SW8081	TOXAPHENE	174	U	174	UJ	16	174	ug/kg	HT
SS	NDA057	SW8081	TOXAPHENE	211	U	211	UJ	20	211	ug/kg	HT
SS	NDA059	SW8081	TOXAPHENE	182	U	182	UJ	17	182	ug/kg	HT
SS	NDA061	SW8081	TOXAPHENE	177	U	177	UJ	16	177	ug/kg	HT
SS	NDA062FD1	SW8081	TOXAPHENE	180	U	180	UJ	17	180	ug/kg	HT
SS	NDA065	SW8081	TOXAPHENE	213	U	213	UJ	20	213	ug/kg	HT
SS	NDA067	SW8081	TOXAPHENE	183	U	183	UJ	17	183	ug/kg	HT
SS	NDA069	SW8081	TOXAPHENE	171	U	171	UJ	16	171	ug/kg	HT
SS	NDA119	SW8081	TOXAPHENE	190	U	190	UJ	18	190	ug/kg	HT
SS	NDA120	SW8081	TOXAPHENE	224	U	224	UJ	21	224	ug/kg	HT
SS	NDA121	SW8081	TOXAPHENE	185	U	185	UJ	17	185	ug/kg	HT
SS	NDA122	SW8081	TOXAPHENE	191	U	191	UJ	18	191	ug/kg	HT
SS	NDA123	SW8081	TOXAPHENE	190	U	190	UJ	18	190	ug/kg	HT
SS	NDA124	SW8081	TOXAPHENE	189	U	189	UJ	18	189	ug/kg	HT
SS	NDA071	SW8081	TOXAPHENE	203	U	203	UJ	19	203	ug/kg	HT
SS	NDA072FD1	SW8081	TOXAPHENE	178	U	178	UJ	16	178	ug/kg	HT
SS	NDA074	SW8081	TOXAPHENE	18	U	18	UJ	1.7	18	ug/kg	HT
SS	NDA078	SW8081	TOXAPHENE	18	U	18	UJ	1.6	18	ug/kg	HT
SS	NDA080	SW8081	TOXAPHENE	17	U	17	UJ	1.6	17	ug/kg	HT
SS	NDA082	SW8081	TOXAPHENE	17	U	17	UJ	1.6	17	ug/kg	HT
SS	NDA113	SW8081	TOXAPHENE	209	U	209	UJ	19	209	ug/kg	HT
SS	NDA115	SW8081	TOXAPHENE	194	U	194	UJ	18	194	ug/kg	HT
SS	NDA117	SW8081	TOXAPHENE	214	U	214	UJ	20	214	ug/kg	HT
SS	NDA101	SW8081	TOXAPHENE	226	U	226	UJ	21	226	ug/kg	HT
SS	NDA103	SW8081	TOXAPHENE	232	U	232	UJ	21	232	ug/kg	HT
SS	NDA104FD1	SW8081	TOXAPHENE	239	U	239	UJ	22	239	ug/kg	HT

Matrix	Sample ID	Analytical Method	Parameter	Lab Result	Lab Qual	Final Result	Final Qual	DL	RL	Units	Comments
SS	NDA107	SW8081	TOXAPHENE	212	U	212	UJ	20	212	ug/kg	HT
SS	NDA109	SW8081	TOXAPHENE	221	U	221	UJ	21	221	ug/kg	HT
SS	NDA111	SW8081	TOXAPHENE	224	U	224	UJ	21	224	ug/kg	HT
SB	NDA213	SW8270	PYRENE	485	U	485	UJ	27	485	ug/kg	HT
SB	NDA214FD1	SW8270	PYRENE	487	U	487	UJ	27	487	ug/kg	HT
SB	NDA215	SW8270	PYRENE	527	U	527	UJ	30	527	ug/kg	HT
SB	NDA216	SW8270	PYRENE	537	U	537	UJ	30	537	ug/kg	HT
SB	NDA217	SW8270	PYRENE	540	U	540	UJ	30	540	ug/kg	HT
SB	NDA218	SW8270	PYRENE	505	U	505	UJ	28	505	ug/kg	HT
SB	NDA219	SW8270	PYRENE	380	U	380	UJ	21	380	ug/kg	HT
SB	NDA220	SW8270	PYRENE	542	U	542	UJ	30	542	ug/kg	HT
SB	NDA221	SW8270	PYRENE	501	U	501	UJ	28	501	ug/kg	HT
SB	NDA222	SW8270	PYRENE	459	U	459	UJ	26	459	ug/kg	HT
SB	NDA223	SW8270	PYRENE	527	U	527	UJ	30	527	ug/kg	HT
SB	NDA235	SW8270	PYRENE	504	U	504	UJ	28	504	ug/kg	HT
SB	NDA236	SW8270	PYRENE	423	U	423	UJ	24	423	ug/kg	HT
SB	NDA237FD1	SW8270	PYRENE	395	U	395	UJ	22	395	ug/kg	HT
SB	NDA238	SW8270	PYRENE	424	U	424	UJ	24	424	ug/kg	HT
SB	NDA239	SW8270	PYRENE	555	U	555	UJ	31	555	ug/kg	HT
SB	NDA240	SW8270	PYRENE	397	U	397	UJ	22	397	ug/kg	HT
SB	NDA241	SW8270	PYRENE	471	U	471	UJ	26	471	ug/kg	HT
SB	NDA242	SW8270	PYRENE	436	U	436	UJ	24	436	ug/kg	HT
SB	NDA243	SW8270	PYRENE	893	U	893	UJ	50	893	ug/kg	HT
SB	NDA244	SW8270	PYRENE	388	U	388	UJ	22	388	ug/kg	HT
SB	NDA245	SW8270	PYRENE	393	U	393	UJ	22	393	ug/kg	HT
SB	NDA246	SW8270	PYRENE	511	U	511	UJ	29	511	ug/kg	HT
SB	NDA247FD1	SW8270	PYRENE	390	U	390	UJ	22	390	ug/kg	HT
SB	NDA248	SW8270	PYRENE	453	U	453	UJ	25	453	ug/kg	HT
SB	NDA249	SW8270	PYRENE	374	U	374	UJ	21	374	ug/kg	HT
SB	NDA252	SW8270	PYRENE	420	U	420	UJ	24	420	ug/kg	HT
SB	NDA253	SW8270	PYRENE	439	U	439	UJ	25	439	ug/kg	HT
SB	NDA254	SW8270	PYRENE	391	U	391	UJ	22	391	ug/kg	HT
SB	NDA255	SW8270	PYRENE	375	U	375	UJ	21	375	ug/kg	HT
SB	NDA085	SW8270	PYRENE	482	U	482	UJ	27	482	ug/kg	HT
SB	NDA092	SW8270	PYRENE	400	U	400	UJ	22	400	ug/kg	HT
SB	NDA093	SW8270	PYRENE	339	U	339	UJ	19	339	ug/kg	HT
SB	NDA094	SW8270	PYRENE	510	U	510	UJ	29	510	ug/kg	HT
SB	NDA095FD1	SW8270	PYRENE	310	U	310	UJ	17	310	ug/kg	HT
SB	NDA296	SW8270	PYRENE	369	U	369	UJ	21	369	ug/kg	HT
SB	NDA299	SW8270	PYRENE	370	U	370	UJ	21	370	ug/kg	HT
SB	NDA058	SW8270	PYRENE	460	U	460	UJ	26	460	ug/kg	HT
SB	NDA060	SW8270	PYRENE	478	U	478	UJ	27	478	ug/kg	HT
SB	NDA063	SW8270	PYRENE	382	U	382	UJ	21	382	ug/kg	HT
SB	NDA064FD1	SW8270	PYRENE	351	U	351	UJ	20	351	ug/kg	HT
SB	NDA066	SW8270	PYRENE	344	U	344	UJ	19	344	ug/kg	HT
SB	NDA068	SW8270	PYRENE	360	U	360	UJ	20	360	ug/kg	HT
SB	NDA070	SW8270	PYRENE	404	U	404	UJ	23	404	ug/kg	HT
SB	NDA073	SW8270	PYRENE	383	U	383	UJ	21	383	ug/kg	HT
SB	NDA075	SW8270	PYRENE	401	U	401	UJ	22	401	ug/kg	HT
SB	NDA077	SW8270	PYRENE	441	U	441	UJ	25	441	ug/kg	HT
SB	NDA079	SW8270	PYRENE	466	U	466	UJ	26	466	ug/kg	HT
SB	NDA081RE1	SW8270	PYRENE	393	U	393	UJ	22	393	ug/kg	HT
SB	NDA083RE1	SW8270	PYRENE	4240	U	4240	UJ	237	4240	ug/kg	HT
SD	NDA054	SW8270	PYRENE	480	U	480	UJ	27	480	ug/kg	HT
SD	NDA055	SW8270	PYRENE	696	U	696	UJ	39	696	ug/kg	HT
SD	NDA042	SW8270	PYRENE	686	U	686	UJ	38	686	ug/kg	HT
SD	NDA043	SW8270	PYRENE	735	U	735	UJ	41	735	ug/kg	HT
SD	NDA044	SW8270	PYRENE	1680	U	1680	UJ	94	1680	ug/kg	HT
SD	NDA045	SW8270	PYRENE	1500	U	1500	UJ	84	1500	ug/kg	HT
SD	NDA046	SW8270	PYRENE	1520	U	1520	UJ	85	1520	ug/kg	HT
SD	NDA302	SW8270	PYRENE	1200	U	1200	UJ	67	1200	ug/kg	HT
SD	NDA303	SW8270	PYRENE	2300	U	2300	UJ	129	2300	ug/kg	HT
SD	NDA307FD1	SW8270	PYRENE	2130	U	2130	UJ	119	2130	ug/kg	HT
SD	NDA047	SW8270	PYRENE	503	U	503	UJ	28	503	ug/kg	HT
SD	NDA048	SW8270	PYRENE	558	U	558	UJ	31	558	ug/kg	HT
SD	NDA049	SW8270	PYRENE	463	U	463	UJ	26	463	ug/kg	HT
SS	NDA178	SW8270	PYRENE	644	U	644	UJ	36	644	ug/kg	HT
SS	NDA179	SW8270	PYRENE	644	U	644	UJ	36	644	ug/kg	HT
SS	NDA181	SW8270	PYRENE	566	U	566	UJ	32	566	ug/kg	HT
SS	NDA182	SW8270	PYRENE	679	U	679	UJ	38	679	ug/kg	HT

Matrix	Sample ID	Analytical Method	Parameter	Lab Result	Lab Qual	Final Result	Final Qual	DL	RL	Units	Comments
SS	NDA201	SW8270	PYRENE	491	U	491	UJ	27	491	ug/kg	HT
SS	NDA202	SW8270	PYRENE	605	U	605	UJ	34	605	ug/kg	HT
SS	NDA203	SW8270	PYRENE	617	U	617	UJ	35	617	ug/kg	HT
SS	NDA204	SW8270	PYRENE	753	U	753	UJ	42	753	ug/kg	HT
SS	NDA205FD1	SW8270	PYRENE	668	U	668	UJ	37	668	ug/kg	HT
SS	NDA206	SW8270	PYRENE	529	U	529	UJ	30	529	ug/kg	HT
SS	NDA207	SW8270	PYRENE	669	U	669	UJ	37	669	ug/kg	HT
SS	NDA208	SW8270	PYRENE	520	U	520	UJ	29	520	ug/kg	HT
SS	NDA209	SW8270	PYRENE	570	U	570	UJ	32	570	ug/kg	HT
SS	NDA210	SW8270	PYRENE	545	U	545	UJ	30	545	ug/kg	HT
SS	NDA211	SW8270	PYRENE	742	U	742	UJ	42	742	ug/kg	HT
SS	NDA212	SW8270	PYRENE	651	U	651	UJ	36	651	ug/kg	HT
SS	NDA185	SW8270	PYRENE	445	U	445	UJ	25	445	ug/kg	HT
SS	NDA188	SW8270	PYRENE	810	U	810	UJ	45	810	ug/kg	HT
SS	NDA189	SW8270	PYRENE	426	U	426	UJ	24	426	ug/kg	HT
SS	NDA190	SW8270	PYRENE	430	U	430	UJ	24	430	ug/kg	HT
SS	NDA191	SW8270	PYRENE	338	U	338	UJ	19	338	ug/kg	HT
SS	NDA192FD1	SW8270	PYRENE	418	U	418	UJ	23	418	ug/kg	HT
SS	NDA193	SW8270	PYRENE	1720	U	1720	UJ	96	1720	ug/kg	HT
SS	NDA194	SW8270	PYRENE	480	U	480	UJ	27	480	ug/kg	HT
SS	NDA195	SW8270	PYRENE	323	U	323	UJ	18	323	ug/kg	HT
SS	NDA057	SW8270	PYRENE	563	U	563	UJ	32	563	ug/kg	HT
SS	NDA059	SW8270	PYRENE	465	U	465	UJ	26	465	ug/kg	HT
SS	NDA061	SW8270	PYRENE	469	U	469	UJ	26	469	ug/kg	HT
SS	NDA062FD1	SW8270	PYRENE	523	U	523	UJ	29	523	ug/kg	HT
SS	NDA065	SW8270	PYRENE	421	U	421	UJ	24	421	ug/kg	HT
SS	NDA067	SW8270	PYRENE	378	U	378	UJ	21	378	ug/kg	HT
SS	NDA069	SW8270	PYRENE	320	U	320	UJ	18	320	ug/kg	HT
SS	NDA119	SW8270	PYRENE	503	U	503	UJ	28	503	ug/kg	HT
SS	NDA120	SW8270	PYRENE	541	U	541	UJ	30	541	ug/kg	HT
SS	NDA123	SW8270	PYRENE	626	=	626	J	25	450	ug/kg	HT
SS	NDA071	SW8270	PYRENE	554	U	554	UJ	31	554	ug/kg	HT
SS	NDA072FD1	SW8270	PYRENE	413	U	413	UJ	23	413	ug/kg	HT
SS	NDA074	SW8270	PYRENE	448	U	448	UJ	25	448	ug/kg	HT
SS	NDA076	SW8270	PYRENE	419	U	419	UJ	23	419	ug/kg	HT
SS	NDA078	SW8270	PYRENE	440	U	440	UJ	25	440	ug/kg	HT
SS	NDA080RE1	SW8270	PYRENE	407	U	407	UJ	23	407	ug/kg	HT
SS	NDA082RE1	SW8270	PYRENE	4660	U	4660	UJ	261	4660	ug/kg	HT
SB	NDA213	SW8270	PHENOL	485	U	485	UJ	31	485	ug/kg	HT
SB	NDA214FD1	SW8270	PHENOL	487	U	487	UJ	31	487	ug/kg	HT
SB	NDA215	SW8270	PHENOL	527	U	527	UJ	34	527	ug/kg	HT
SB	NDA216	SW8270	PHENOL	537	U	537	UJ	34	537	ug/kg	HT
SB	NDA217	SW8270	PHENOL	540	U	540	UJ	35	540	ug/kg	HT
SB	NDA218	SW8270	PHENOL	505	U	505	UJ	32	505	ug/kg	HT
SB	NDA219	SW8270	PHENOL	380	U	380	UJ	24	380	ug/kg	HT
SB	NDA220	SW8270	PHENOL	542	U	542	UJ	35	542	ug/kg	HT
SB	NDA221	SW8270	PHENOL	501	U	501	UJ	32	501	ug/kg	HT
SB	NDA222	SW8270	PHENOL	459	U	459	UJ	29	459	ug/kg	HT
SB	NDA223	SW8270	PHENOL	527	U	527	UJ	34	527	ug/kg	HT
SB	NDA235	SW8270	PHENOL	504	U	504	UJ	32	504	ug/kg	HT
SB	NDA236	SW8270	PHENOL	423	U	423	UJ	27	423	ug/kg	HT
SB	NDA237FD1	SW8270	PHENOL	395	U	395	UJ	25	395	ug/kg	HT
SB	NDA238	SW8270	PHENOL	424	U	424	UJ	27	424	ug/kg	HT
SB	NDA239	SW8270	PHENOL	555	U	555	UJ	36	555	ug/kg	HT
SB	NDA240	SW8270	PHENOL	397	U	397	UJ	25	397	ug/kg	HT
SB	NDA241	SW8270	PHENOL	471	U	471	UJ	30	471	ug/kg	HT
SB	NDA242	SW8270	PHENOL	436	U	436	UJ	28	436	ug/kg	HT
SB	NDA243	SW8270	PHENOL	893	U	893	UJ	57	893	ug/kg	HT
SB	NDA244	SW8270	PHENOL	388	U	388	UJ	25	388	ug/kg	HT
SB	NDA245	SW8270	PHENOL	393	U	393	UJ	25	393	ug/kg	HT
SB	NDA246	SW8270	PHENOL	511	U	511	UJ	33	511	ug/kg	HT
SB	NDA247FD1	SW8270	PHENOL	390	U	390	UJ	25	390	ug/kg	HT
SB	NDA248	SW8270	PHENOL	453	U	453	UJ	29	453	ug/kg	HT
SB	NDA249	SW8270	PHENOL	374	U	374	UJ	24	374	ug/kg	HT
SB	NDA252	SW8270	PHENOL	420	U	420	UJ	27	420	ug/kg	HT
SB	NDA253	SW8270	PHENOL	439	U	439	UJ	28	439	ug/kg	HT
SB	NDA254	SW8270	PHENOL	391	U	391	UJ	25	391	ug/kg	HT
SB	NDA255	SW8270	PHENOL	375	U	375	UJ	24	375	ug/kg	HT
SB	NDA085	SW8270	PHENOL	482	U	482	UJ	31	482	ug/kg	HT
SB	NDA092	SW8270	PHENOL	400	U	400	UJ	26	400	ug/kg	HT

Matrix	Sample ID	Analytical Method	Parameter	Lab Result	Lab Qual	Final Result	Final Qual	DL	RL	Units	Comments
SB	NDA093	SW8270	PHENOL	339	U	339	UJ	22	339	ug/kg	HT
SB	NDA094	SW8270	PHENOL	510	U	510	UJ	33	510	ug/kg	HT
SB	NDA095FD1	SW8270	PHENOL	310	U	310	UJ	20	310	ug/kg	HT
SB	NDA296	SW8270	PHENOL	369	U	369	UJ	24	369	ug/kg	HT
SB	NDA297	SW8270	PHENOL	358	U	358	UJ	23	358	ug/kg	HT
SB	NDA298	SW8270	PHENOL	341	U	341	UJ	22	341	ug/kg	HT
SB	NDA299	SW8270	PHENOL	370	U	370	UJ	24	370	ug/kg	HT
SB	NDA058	SW8270	PHENOL	460	U	460	UJ	29	460	ug/kg	HT
SB	NDA060	SW8270	PHENOL	478	U	478	UJ	31	478	ug/kg	HT
SB	NDA063	SW8270	PHENOL	382	U	382	UJ	24	382	ug/kg	HT
SB	NDA064FD1	SW8270	PHENOL	351	U	351	UJ	22	351	ug/kg	HT
SB	NDA066	SW8270	PHENOL	344	U	344	UJ	22	344	ug/kg	HT
SB	NDA068	SW8270	PHENOL	360	U	360	UJ	23	360	ug/kg	HT
SB	NDA070	SW8270	PHENOL	404	U	404	UJ	26	404	ug/kg	HT
SB	NDA073	SW8270	PHENOL	383	U	383	UJ	25	383	ug/kg	HT
SB	NDA075	SW8270	PHENOL	401	U	401	UJ	26	401	ug/kg	HT
SB	NDA077	SW8270	PHENOL	441	U	441	UJ	28	441	ug/kg	HT
SB	NDA079	SW8270	PHENOL	466	U	466	UJ	30	466	ug/kg	HT
SB	NDA081RE1	SW8270	PHENOL	393	U	393	UJ	25	393	ug/kg	HT
SB	NDA083RE1	SW8270	PHENOL	4240	U	4240	UJ	271	4240	ug/kg	HT
SD	NDA054	SW8270	PHENOL	480	U	480	UJ	31	480	ug/kg	HT
SD	NDA055	SW8270	PHENOL	696	U	696	UJ	45	696	ug/kg	HT
SD	NDA042	SW8270	PHENOL	686	U	686	UJ	44	686	ug/kg	HT
SD	NDA043	SW8270	PHENOL	735	U	735	UJ	47	735	ug/kg	HT
SD	NDA044	SW8270	PHENOL	1680	U	1680	UJ	108	1680	ug/kg	HT
SD	NDA045	SW8270	PHENOL	1500	U	1500	UJ	96	1500	ug/kg	HT
SD	NDA046	SW8270	PHENOL	1520	U	1520	UJ	97	1520	ug/kg	HT
SD	NDA302	SW8270	PHENOL	1200	U	1200	UJ	77	1200	ug/kg	HT
SD	NDA303	SW8270	PHENOL	2300	U	2300	UJ	147	2300	ug/kg	HT
SD	NDA307FD1	SW8270	PHENOL	2130	U	2130	UJ	136	2130	ug/kg	HT
SD	NDA047	SW8270	PHENOL	503	U	503	UJ	32	503	ug/kg	HT
SD	NDA048	SW8270	PHENOL	558	U	558	UJ	36	558	ug/kg	HT
SD	NDA049	SW8270	PHENOL	463	U	463	UJ	30	463	ug/kg	HT
SS	NDA178	SW8270	PHENOL	644	U	644	UJ	41	644	ug/kg	HT
SS	NDA179	SW8270	PHENOL	644	U	644	UJ	41	644	ug/kg	HT
SS	NDA180	SW8270	PHENOL	550	U	550	UJ	35	550	ug/kg	HT
SS	NDA181	SW8270	PHENOL	566	U	566	UJ	36	566	ug/kg	HT
SS	NDA182	SW8270	PHENOL	679	U	679	UJ	43	679	ug/kg	HT
SS	NDA183	SW8270	PHENOL	589	U	589	UJ	38	589	ug/kg	HT
SS	NDA184FD1	SW8270	PHENOL	662	U	662	UJ	42	662	ug/kg	HT
SS	NDA201	SW8270	PHENOL	491	U	491	UJ	31	491	ug/kg	HT
SS	NDA202	SW8270	PHENOL	605	U	605	UJ	39	605	ug/kg	HT
SS	NDA203	SW8270	PHENOL	617	U	617	UJ	40	617	ug/kg	HT
SS	NDA204	SW8270	PHENOL	753	U	753	UJ	48	753	ug/kg	HT
SS	NDA205FD1	SW8270	PHENOL	668	U	668	UJ	43	668	ug/kg	HT
SS	NDA206	SW8270	PHENOL	529	U	529	UJ	34	529	ug/kg	HT
SS	NDA207	SW8270	PHENOL	669	U	669	UJ	43	669	ug/kg	HT
SS	NDA208	SW8270	PHENOL	520	U	520	UJ	33	520	ug/kg	HT
SS	NDA209	SW8270	PHENOL	570	U	570	UJ	36	570	ug/kg	HT
SS	NDA210	SW8270	PHENOL	545	U	545	UJ	35	545	ug/kg	HT
SS	NDA211	SW8270	PHENOL	742	U	742	UJ	47	742	ug/kg	HT
SS	NDA212	SW8270	PHENOL	651	U	651	UJ	42	651	ug/kg	HT
SS	NDA185	SW8270	PHENOL	445	U	445	UJ	28	445	ug/kg	HT
SS	NDA186	SW8270	PHENOL	416	U	416	UJ	27	416	ug/kg	HT
SS	NDA187	SW8270	PHENOL	380	U	380	UJ	24	380	ug/kg	HT
SS	NDA188	SW8270	PHENOL	810	U	810	UJ	52	810	ug/kg	HT
SS	NDA189	SW8270	PHENOL	426	U	426	UJ	27	426	ug/kg	HT
SS	NDA190	SW8270	PHENOL	430	U	430	UJ	27	430	ug/kg	HT
SS	NDA191	SW8270	PHENOL	338	U	338	UJ	22	338	ug/kg	HT
SS	NDA192FD1	SW8270	PHENOL	418	U	418	UJ	27	418	ug/kg	HT
SS	NDA193	SW8270	PHENOL	1720	U	1720	UJ	110	1720	ug/kg	HT
SS	NDA194	SW8270	PHENOL	480	U	480	UJ	31	480	ug/kg	HT
SS	NDA195	SW8270	PHENOL	323	U	323	UJ	21	323	ug/kg	HT
SS	NDA084	SW8270	PHENOL	344	U	344	UJ	22	344	ug/kg	HT
SS	NDA091	SW8270	PHENOL	367	U	367	UJ	23	367	ug/kg	HT
SS	NDA057	SW8270	PHENOL	563	U	563	UJ	36	563	ug/kg	HT
SS	NDA059	SW8270	PHENOL	465	U	465	UJ	30	465	ug/kg	HT
SS	NDA061	SW8270	PHENOL	469	U	469	UJ	30	469	ug/kg	HT
SS	NDA062FD1	SW8270	PHENOL	523	U	523	UJ	33	523	ug/kg	HT
SS	NDA065	SW8270	PHENOL	421	U	421	UJ	27	421	ug/kg	HT

Matrix	Sample ID	Analytical Method	Parameter	Lab Result	Lab Qual	Final Result	Final Qual	DL	RL	Units	Comments
SS	NDA067	SW8270	PHENOL	378	U	378	UJ	24	378	ug/kg	HT
SS	NDA069	SW8270	PHENOL	320	U	320	UJ	20	320	ug/kg	HT
SS	NDA119	SW8270	PHENOL	503	U	503	UJ	32	503	ug/kg	HT
SS	NDA120	SW8270	PHENOL	541	U	541	UJ	35	541	ug/kg	HT
SS	NDA121	SW8270	PHENOL	409	U	409	UJ	26	409	ug/kg	HT
SS	NDA122	SW8270	PHENOL	450	U	450	UJ	29	450	ug/kg	HT
SS	NDA123	SW8270	PHENOL	450	U	450	UJ	29	450	ug/kg	HT
SS	NDA124	SW8270	PHENOL	432	U	432	UJ	28	432	ug/kg	HT
SS	NDA071	SW8270	PHENOL	554	U	554	UJ	35	554	ug/kg	HT
SS	NDA072FD1	SW8270	PHENOL	413	U	413	UJ	26	413	ug/kg	HT
SS	NDA074	SW8270	PHENOL	448	U	448	UJ	29	448	ug/kg	HT
SS	NDA076	SW8270	PHENOL	419	U	419	UJ	27	419	ug/kg	HT
SS	NDA078	SW8270	PHENOL	440	U	440	UJ	28	440	ug/kg	HT
SS	NDA080RE1	SW8270	PHENOL	407	U	407	UJ	26	407	ug/kg	HT
SS	NDA082RE1	SW8270	PHENOL	4660	U	4660	UJ	298	4660	ug/kg	HT
SB	NDA213	SW8270	PHENANTHRENE	485	U	485	UJ	28	485	ug/kg	HT
SB	NDA214FD1	SW8270	PHENANTHRENE	487	U	487	UJ	28	487	ug/kg	HT
SB	NDA215	SW8270	PHENANTHRENE	527	U	527	UJ	31	527	ug/kg	HT
SB	NDA216	SW8270	PHENANTHRENE	537	U	537	UJ	31	537	ug/kg	HT
SB	NDA217	SW8270	PHENANTHRENE	540	U	540	UJ	31	540	ug/kg	HT
SB	NDA218	SW8270	PHENANTHRENE	505	U	505	UJ	29	505	ug/kg	HT
SB	NDA219	SW8270	PHENANTHRENE	380	U	380	UJ	22	380	ug/kg	HT
SB	NDA220	SW8270	PHENANTHRENE	542	U	542	UJ	31	542	ug/kg	HT
SB	NDA221	SW8270	PHENANTHRENE	501	U	501	UJ	29	501	ug/kg	HT
SB	NDA222	SW8270	PHENANTHRENE	459	U	459	UJ	27	459	ug/kg	HT
SB	NDA223	SW8270	PHENANTHRENE	527	U	527	UJ	31	527	ug/kg	HT
SB	NDA235	SW8270	PHENANTHRENE	504	U	504	UJ	29	504	ug/kg	HT
SB	NDA236	SW8270	PHENANTHRENE	423	U	423	UJ	25	423	ug/kg	HT
SB	NDA237FD1	SW8270	PHENANTHRENE	395	U	395	UJ	23	395	ug/kg	HT
SB	NDA238	SW8270	PHENANTHRENE	424	U	424	UJ	25	424	ug/kg	HT
SB	NDA239	SW8270	PHENANTHRENE	555	U	555	UJ	32	555	ug/kg	HT
SB	NDA240	SW8270	PHENANTHRENE	397	U	397	UJ	23	397	ug/kg	HT
SB	NDA241	SW8270	PHENANTHRENE	471	U	471	UJ	27	471	ug/kg	HT
SB	NDA242	SW8270	PHENANTHRENE	436	U	436	UJ	25	436	ug/kg	HT
SB	NDA243	SW8270	PHENANTHRENE	893	U	893	UJ	52	893	ug/kg	HT
SB	NDA244	SW8270	PHENANTHRENE	388	U	388	UJ	22	388	ug/kg	HT
SB	NDA245	SW8270	PHENANTHRENE	393	U	393	UJ	23	393	ug/kg	HT
SB	NDA246	SW8270	PHENANTHRENE	511	U	511	UJ	30	511	ug/kg	HT
SB	NDA247FD1	SW8270	PHENANTHRENE	390	U	390	UJ	23	390	ug/kg	HT
SB	NDA248	SW8270	PHENANTHRENE	453	U	453	UJ	26	453	ug/kg	HT
SB	NDA249	SW8270	PHENANTHRENE	374	U	374	UJ	22	374	ug/kg	HT
SB	NDA252	SW8270	PHENANTHRENE	420	U	420	UJ	24	420	ug/kg	HT
SB	NDA253	SW8270	PHENANTHRENE	439	U	439	UJ	25	439	ug/kg	HT
SB	NDA254	SW8270	PHENANTHRENE	391	U	391	UJ	23	391	ug/kg	HT
SB	NDA255	SW8270	PHENANTHRENE	375	U	375	UJ	22	375	ug/kg	HT
SB	NDA085	SW8270	PHENANTHRENE	482	U	482	UJ	28	482	ug/kg	HT
SB	NDA092	SW8270	PHENANTHRENE	400	U	400	UJ	23	400	ug/kg	HT
SB	NDA093	SW8270	PHENANTHRENE	339	U	339	UJ	20	339	ug/kg	HT
SB	NDA094	SW8270	PHENANTHRENE	510	U	510	UJ	30	510	ug/kg	HT
SB	NDA095FD1	SW8270	PHENANTHRENE	310	U	310	UJ	18	310	ug/kg	HT
SB	NDA296	SW8270	PHENANTHRENE	369	U	369	UJ	21	369	ug/kg	HT
SB	NDA298	SW8270	PHENANTHRENE	341	U	341	UJ	20	341	ug/kg	HT
SB	NDA299	SW8270	PHENANTHRENE	370	U	370	UJ	21	370	ug/kg	HT
SB	NDA058	SW8270	PHENANTHRENE	460	U	460	UJ	27	460	ug/kg	HT
SB	NDA060	SW8270	PHENANTHRENE	478	U	478	UJ	28	478	ug/kg	HT
SB	NDA063	SW8270	PHENANTHRENE	382	U	382	UJ	22	382	ug/kg	HT
SB	NDA064FD1	SW8270	PHENANTHRENE	351	U	351	UJ	20	351	ug/kg	HT
SB	NDA066	SW8270	PHENANTHRENE	344	U	344	UJ	20	344	ug/kg	HT
SB	NDA068	SW8270	PHENANTHRENE	360	U	360	UJ	21	360	ug/kg	HT
SB	NDA070	SW8270	PHENANTHRENE	404	U	404	UJ	23	404	ug/kg	HT
SB	NDA073	SW8270	PHENANTHRENE	383	U	383	UJ	22	383	ug/kg	HT
SB	NDA075	SW8270	PHENANTHRENE	401	U	401	UJ	23	401	ug/kg	HT
SB	NDA077	SW8270	PHENANTHRENE	441	U	441	UJ	26	441	ug/kg	HT
SB	NDA079	SW8270	PHENANTHRENE	466	U	466	UJ	27	466	ug/kg	HT
SB	NDA081RE1	SW8270	PHENANTHRENE	393	U	393	UJ	23	393	ug/kg	HT
SB	NDA083RE1	SW8270	PHENANTHRENE	4240	U	4240	UJ	246	4240	ug/kg	HT
SD	NDA054	SW8270	PHENANTHRENE	480	U	480	UJ	28	480	ug/kg	HT
SD	NDA055	SW8270	PHENANTHRENE	696	U	696	UJ	40	696	ug/kg	HT
SD	NDA042	SW8270	PHENANTHRENE	686	U	686	UJ	40	686	ug/kg	HT
SD	NDA043	SW8270	PHENANTHRENE	735	U	735	UJ	43	735	ug/kg	HT

Matrix	Sample ID	Analytical Method	Parameter	Lab Result	Lab Qual	Final Result	Final Qual	DL	RL	Units	Comments
SD	NDA044	SW8270	PHENANTHRENE	1680	U	1680	UJ	98	1680	ug/kg	HT
SD	NDA045	SW8270	PHENANTHRENE	1500	U	1500	UJ	87	1500	ug/kg	HT
SD	NDA046	SW8270	PHENANTHRENE	1520	U	1520	UJ	88	1520	ug/kg	HT
SD	NDA302	SW8270	PHENANTHRENE	1200	U	1200	UJ	70	1200	ug/kg	HT
SD	NDA303	SW8270	PHENANTHRENE	2300	U	2300	UJ	133	2300	ug/kg	HT
SD	NDA307FD1	SW8270	PHENANTHRENE	2130	U	2130	UJ	123	2130	ug/kg	HT
SD	NDA047	SW8270	PHENANTHRENE	503	U	503	UJ	29	503	ug/kg	HT
SD	NDA048	SW8270	PHENANTHRENE	558	U	558	UJ	32	558	ug/kg	HT
SD	NDA049	SW8270	PHENANTHRENE	463	U	463	UJ	27	463	ug/kg	HT
SS	NDA178	SW8270	PHENANTHRENE	644	U	644	UJ	37	644	ug/kg	HT
SS	NDA179	SW8270	PHENANTHRENE	644	U	644	UJ	37	644	ug/kg	HT
SS	NDA180	SW8270	PHENANTHRENE	550	U	550	UJ	32	550	ug/kg	HT
SS	NDA181	SW8270	PHENANTHRENE	566	U	566	UJ	33	566	ug/kg	HT
SS	NDA182	SW8270	PHENANTHRENE	679	U	679	UJ	39	679	ug/kg	HT
SS	NDA183	SW8270	PHENANTHRENE	589	U	589	UJ	34	589	ug/kg	HT
SS	NDA184FD1	SW8270	PHENANTHRENE	662	U	662	UJ	38	662	ug/kg	HT
SS	NDA201	SW8270	PHENANTHRENE	491	U	491	UJ	28	491	ug/kg	HT
SS	NDA202	SW8270	PHENANTHRENE	605	U	605	UJ	35	605	ug/kg	HT
SS	NDA203	SW8270	PHENANTHRENE	617	U	617	UJ	36	617	ug/kg	HT
SS	NDA204	SW8270	PHENANTHRENE	753	U	753	UJ	44	753	ug/kg	HT
SS	NDA205FD1	SW8270	PHENANTHRENE	668	U	668	UJ	39	668	ug/kg	HT
SS	NDA206	SW8270	PHENANTHRENE	529	U	529	UJ	31	529	ug/kg	HT
SS	NDA207	SW8270	PHENANTHRENE	669	U	669	UJ	39	669	ug/kg	HT
SS	NDA208	SW8270	PHENANTHRENE	520	U	520	UJ	30	520	ug/kg	HT
SS	NDA209	SW8270	PHENANTHRENE	570	U	570	UJ	33	570	ug/kg	HT
SS	NDA210	SW8270	PHENANTHRENE	545	U	545	UJ	32	545	ug/kg	HT
SS	NDA211	SW8270	PHENANTHRENE	742	U	742	UJ	43	742	ug/kg	HT
SS	NDA212	SW8270	PHENANTHRENE	651	U	651	UJ	38	651	ug/kg	HT
SS	NDA185	SW8270	PHENANTHRENE	445	U	445	UJ	26	445	ug/kg	HT
SS	NDA187	SW8270	PHENANTHRENE	380	U	380	UJ	22	380	ug/kg	HT
SS	NDA188	SW8270	PHENANTHRENE	810	U	810	UJ	47	810	ug/kg	HT
SS	NDA189	SW8270	PHENANTHRENE	426	U	426	UJ	25	426	ug/kg	HT
SS	NDA190	SW8270	PHENANTHRENE	430	U	430	UJ	25	430	ug/kg	HT
SS	NDA191	SW8270	PHENANTHRENE	338	U	338	UJ	20	338	ug/kg	HT
SS	NDA192FD1	SW8270	PHENANTHRENE	418	U	418	UJ	24	418	ug/kg	HT
SS	NDA193	SW8270	PHENANTHRENE	1720	U	1720	UJ	100	1720	ug/kg	HT
SS	NDA194	SW8270	PHENANTHRENE	480	U	480	UJ	28	480	ug/kg	HT
SS	NDA195	SW8270	PHENANTHRENE	323	U	323	UJ	19	323	ug/kg	HT
SS	NDA084	SW8270	PHENANTHRENE	344	U	344	UJ	20	344	ug/kg	HT
SS	NDA091	SW8270	PHENANTHRENE	367	U	367	UJ	21	367	ug/kg	HT
SS	NDA057	SW8270	PHENANTHRENE	563	U	563	UJ	33	563	ug/kg	HT
SS	NDA059	SW8270	PHENANTHRENE	465	U	465	UJ	27	465	ug/kg	HT
SS	NDA061	SW8270	PHENANTHRENE	469	U	469	UJ	27	469	ug/kg	HT
SS	NDA062FD1	SW8270	PHENANTHRENE	523	U	523	UJ	30	523	ug/kg	HT
SS	NDA065	SW8270	PHENANTHRENE	421	U	421	UJ	24	421	ug/kg	HT
SS	NDA067	SW8270	PHENANTHRENE	378	U	378	UJ	22	378	ug/kg	HT
SS	NDA069	SW8270	PHENANTHRENE	320	U	320	UJ	19	320	ug/kg	HT
SS	NDA119	SW8270	PHENANTHRENE	503	U	503	UJ	29	503	ug/kg	HT
SS	NDA120	SW8270	PHENANTHRENE	541	U	541	UJ	31	541	ug/kg	HT
SS	NDA121	SW8270	PHENANTHRENE	409	U	409	UJ	24	409	ug/kg	HT
SS	NDA122	SW8270	PHENANTHRENE	450	U	450	UJ	26	450	ug/kg	HT
SS	NDA124	SW8270	PHENANTHRENE	432	U	432	UJ	25	432	ug/kg	HT
SS	NDA071	SW8270	PHENANTHRENE	554	U	554	UJ	32	554	ug/kg	HT
SS	NDA072FD1	SW8270	PHENANTHRENE	413	U	413	UJ	24	413	ug/kg	HT
SS	NDA074	SW8270	PHENANTHRENE	448	U	448	UJ	26	448	ug/kg	HT
SS	NDA076	SW8270	PHENANTHRENE	419	U	419	UJ	24	419	ug/kg	HT
SS	NDA078	SW8270	PHENANTHRENE	440	U	440	UJ	26	440	ug/kg	HT
SS	NDA080RE1	SW8270	PHENANTHRENE	407	U	407	UJ	24	407	ug/kg	HT
SS	NDA082RE1	SW8270	PHENANTHRENE	4660	U	4660	UJ	270	4660	ug/kg	HT
SB	NDA213	SW8270	PENTACHLOROPHENOL	1440	U	1440	UJ	27	1440	ug/kg	HT
SB	NDA214FD1	SW8270	PENTACHLOROPHENOL	1450	U	1450	UJ	27	1450	ug/kg	HT
SB	NDA215	SW8270	PENTACHLOROPHENOL	1570	U	1570	UJ	29	1570	ug/kg	HT
SB	NDA216	SW8270	PENTACHLOROPHENOL	1590	U	1590	UJ	30	1590	ug/kg	HT
SB	NDA217	SW8270	PENTACHLOROPHENOL	1600	U	1600	UJ	30	1600	ug/kg	HT
SB	NDA218	SW8270	PENTACHLOROPHENOL	1500	U	1500	UJ	28	1500	ug/kg	HT
SB	NDA219	SW8270	PENTACHLOROPHENOL	1130	U	1130	UJ	21	1130	ug/kg	HT
SB	NDA220	SW8270	PENTACHLOROPHENOL	1610	U	1610	UJ	30	1610	ug/kg	HT
SB	NDA221	SW8270	PENTACHLOROPHENOL	1490	U	1490	UJ	28	1490	ug/kg	HT
SB	NDA222	SW8270	PENTACHLOROPHENOL	1360	U	1360	UJ	25	1360	ug/kg	HT
SB	NDA223	SW8270	PENTACHLOROPHENOL	1570	U	1570	UJ	29	1570	ug/kg	HT

Matrix	Sample ID	Analytical Method	Parameter	Lab Result	Lab Qual	Final Result	Final Qual	DL	RL	Units	Comments
SB	NDA235	SW8270	PENTACHLOROPHENOL	1510	U	1510	UJ	28	1510	ug/kg	HT
SB	NDA236	SW8270	PENTACHLOROPHENOL	1270	U	1270	UJ	23	1270	ug/kg	HT
SB	NDA237FD1	SW8270	PENTACHLOROPHENOL	1180	U	1180	UJ	22	1180	ug/kg	HT
SB	NDA238	SW8270	PENTACHLOROPHENOL	1270	U	1270	UJ	23	1270	ug/kg	HT
SB	NDA239	SW8270	PENTACHLOROPHENOL	1660	U	1660	UJ	31	1660	ug/kg	HT
SB	NDA240	SW8270	PENTACHLOROPHENOL	1190	U	1190	UJ	22	1190	ug/kg	HT
SB	NDA241	SW8270	PENTACHLOROPHENOL	1410	U	1410	UJ	26	1410	ug/kg	HT
SB	NDA242	SW8270	PENTACHLOROPHENOL	1310	U	1310	UJ	24	1310	ug/kg	HT
SB	NDA243	SW8270	PENTACHLOROPHENOL	2680	U	2680	UJ	49	2680	ug/kg	HT
SB	NDA244	SW8270	PENTACHLOROPHENOL	1160	U	1160	UJ	21	1160	ug/kg	HT
SB	NDA245	SW8270	PENTACHLOROPHENOL	1180	U	1180	UJ	22	1180	ug/kg	HT
SB	NDA246	SW8270	PENTACHLOROPHENOL	1530	U	1530	UJ	28	1530	ug/kg	HT
SB	NDA247FD1	SW8270	PENTACHLOROPHENOL	1170	U	1170	UJ	21	1170	ug/kg	HT
SB	NDA248	SW8270	PENTACHLOROPHENOL	1360	U	1360	UJ	25	1360	ug/kg	HT
SB	NDA249	SW8270	PENTACHLOROPHENOL	1120	U	1120	UJ	21	1120	ug/kg	HT
SB	NDA252	SW8270	PENTACHLOROPHENOL	1260	U	1260	UJ	23	1260	ug/kg	HT
SB	NDA253	SW8270	PENTACHLOROPHENOL	1320	U	1320	UJ	24	1320	ug/kg	HT
SB	NDA254	SW8270	PENTACHLOROPHENOL	1170	U	1170	UJ	21	1170	ug/kg	HT
SB	NDA255	SW8270	PENTACHLOROPHENOL	1130	U	1130	UJ	21	1130	ug/kg	HT
SB	NDA085	SW8270	PENTACHLOROPHENOL	1450	U	1450	UJ	27	1450	ug/kg	HT
SB	NDA092	SW8270	PENTACHLOROPHENOL	1200	U	1200	UJ	22	1200	ug/kg	HT
SB	NDA093	SW8270	PENTACHLOROPHENOL	1020	U	1020	UJ	19	1020	ug/kg	HT
SB	NDA094	SW8270	PENTACHLOROPHENOL	1530	U	1530	UJ	28	1530	ug/kg	HT
SB	NDA095FD1	SW8270	PENTACHLOROPHENOL	931	U	931	UJ	17	931	ug/kg	HT
SB	NDA296	SW8270	PENTACHLOROPHENOL	1110	U	1110	UJ	20	1110	ug/kg	HT
SB	NDA297	SW8270	PENTACHLOROPHENOL	1080	U	1080	UJ	20	1080	ug/kg	HT
SB	NDA298	SW8270	PENTACHLOROPHENOL	1020	U	1020	UJ	19	1020	ug/kg	HT
SB	NDA299	SW8270	PENTACHLOROPHENOL	1110	U	1110	UJ	20	1110	ug/kg	HT
SB	NDA058	SW8270	PENTACHLOROPHENOL	1380	U	1380	UJ	25	1380	ug/kg	HT
SB	NDA060	SW8270	PENTACHLOROPHENOL	1430	U	1430	UJ	26	1430	ug/kg	HT
SB	NDA063	SW8270	PENTACHLOROPHENOL	1150	U	1150	UJ	21	1150	ug/kg	HT
SB	NDA064FD1	SW8270	PENTACHLOROPHENOL	1050	U	1050	UJ	19	1050	ug/kg	HT
SB	NDA066	SW8270	PENTACHLOROPHENOL	1030	U	1030	UJ	19	1030	ug/kg	HT
SB	NDA068	SW8270	PENTACHLOROPHENOL	1080	U	1080	UJ	20	1080	ug/kg	HT
SB	NDA070	SW8270	PENTACHLOROPHENOL	1210	U	1210	UJ	22	1210	ug/kg	HT
SB	NDA073	SW8270	PENTACHLOROPHENOL	1150	U	1150	UJ	21	1150	ug/kg	HT
SB	NDA075	SW8270	PENTACHLOROPHENOL	1200	U	1200	UJ	22	1200	ug/kg	HT
SB	NDA077	SW8270	PENTACHLOROPHENOL	1320	U	1320	UJ	24	1320	ug/kg	HT
SB	NDA079	SW8270	PENTACHLOROPHENOL	1400	U	1400	UJ	26	1400	ug/kg	HT
SB	NDA081RE1	SW8270	PENTACHLOROPHENOL	1180	U	1180	UJ	22	1180	ug/kg	HT
SB	NDA083RE1	SW8270	PENTACHLOROPHENOL	12700	U	12700	UJ	233	12700	ug/kg	HT
SD	NDA054	SW8270	PENTACHLOROPHENOL	1430	U	1430	UJ	26	1430	ug/kg	HT
SD	NDA055	SW8270	PENTACHLOROPHENOL	2070	U	2070	UJ	38	2070	ug/kg	HT
SD	NDA042	SW8270	PENTACHLOROPHENOL	2060	U	2060	UJ	38	2060	ug/kg	HT
SD	NDA043	SW8270	PENTACHLOROPHENOL	2200	U	2200	UJ	40	2200	ug/kg	HT
SD	NDA044	SW8270	PENTACHLOROPHENOL	5050	U	5050	UJ	93	5050	ug/kg	HT
SD	NDA045	SW8270	PENTACHLOROPHENOL	4500	U	4500	UJ	83	4500	ug/kg	HT
SD	NDA046	SW8270	PENTACHLOROPHENOL	4560	U	4560	UJ	84	4560	ug/kg	HT
SD	NDA302	SW8270	PENTACHLOROPHENOL	3600	U	3600	UJ	66	3600	ug/kg	HT
SD	NDA303	SW8270	PENTACHLOROPHENOL	6900	U	6900	UJ	127	6900	ug/kg	HT
SD	NDA307FD1	SW8270	PENTACHLOROPHENOL	6380	U	6380	UJ	117	6380	ug/kg	HT
SD	NDA047	SW8270	PENTACHLOROPHENOL	1510	U	1510	UJ	28	1510	ug/kg	HT
SD	NDA048	SW8270	PENTACHLOROPHENOL	1680	U	1680	UJ	31	1680	ug/kg	HT
SD	NDA049	SW8270	PENTACHLOROPHENOL	1390	U	1390	UJ	25	1390	ug/kg	HT
SS	NDA178	SW8270	PENTACHLOROPHENOL	1930	U	1930	UJ	35	1930	ug/kg	HT
SS	NDA179	SW8270	PENTACHLOROPHENOL	1930	U	1930	UJ	35	1930	ug/kg	HT
SS	NDA180	SW8270	PENTACHLOROPHENOL	1650	U	1650	UJ	30	1650	ug/kg	HT
SS	NDA181	SW8270	PENTACHLOROPHENOL	1700	U	1700	UJ	31	1700	ug/kg	HT
SS	NDA182	SW8270	PENTACHLOROPHENOL	2040	U	2040	UJ	37	2040	ug/kg	HT
SS	NDA183	SW8270	PENTACHLOROPHENOL	1770	U	1770	UJ	32	1770	ug/kg	HT
SS	NDA184FD1	SW8270	PENTACHLOROPHENOL	1990	U	1990	UJ	36	1990	ug/kg	HT
SS	NDA201	SW8270	PENTACHLOROPHENOL	1470	U	1470	UJ	27	1470	ug/kg	HT
SS	NDA202	SW8270	PENTACHLOROPHENOL	1820	U	1820	UJ	33	1820	ug/kg	HT
SS	NDA203	SW8270	PENTACHLOROPHENOL	1850	U	1850	UJ	34	1850	ug/kg	HT
SS	NDA204	SW8270	PENTACHLOROPHENOL	2260	U	2260	UJ	41	2260	ug/kg	HT
SS	NDA205FD1	SW8270	PENTACHLOROPHENOL	2000	U	2000	UJ	37	2000	ug/kg	HT
SS	NDA206	SW8270	PENTACHLOROPHENOL	1590	U	1590	UJ	29	1590	ug/kg	HT
SS	NDA207	SW8270	PENTACHLOROPHENOL	2010	U	2010	UJ	37	2010	ug/kg	HT
SS	NDA208	SW8270	PENTACHLOROPHENOL	1560	U	1560	UJ	29	1560	ug/kg	HT
SS	NDA209	SW8270	PENTACHLOROPHENOL	1710	U	1710	UJ	31	1710	ug/kg	HT

Matrix	Sample ID	Analytical Method	Parameter	Lab Result	Lab Qual	Final Result	Final Qual	DL	RL	Units	Comments
SS	NDA210	SW8270	PENTACHLOROPHENOL	1630	U	1630	UJ	30	1630	ug/kg	HT
SS	NDA211	SW8270	PENTACHLOROPHENOL	2230	U	2230	UJ	41	2230	ug/kg	HT
SS	NDA212	SW8270	PENTACHLOROPHENOL	1950	U	1950	UJ	36	1950	ug/kg	HT
SS	NDA185	SW8270	PENTACHLOROPHENOL	1340	U	1340	UJ	24	1340	ug/kg	HT
SS	NDA186	SW8270	PENTACHLOROPHENOL	1250	U	1250	UJ	23	1250	ug/kg	HT
SS	NDA187	SW8270	PENTACHLOROPHENOL	1140	U	1140	UJ	21	1140	ug/kg	HT
SS	NDA188	SW8270	PENTACHLOROPHENOL	2430	U	2430	UJ	45	2430	ug/kg	HT
SS	NDA189	SW8270	PENTACHLOROPHENOL	1280	U	1280	UJ	23	1280	ug/kg	HT
SS	NDA190	SW8270	PENTACHLOROPHENOL	1290	U	1290	UJ	24	1290	ug/kg	HT
SS	NDA191	SW8270	PENTACHLOROPHENOL	1010	U	1010	UJ	19	1010	ug/kg	HT
SS	NDA192FD1	SW8270	PENTACHLOROPHENOL	1250	U	1250	UJ	23	1250	ug/kg	HT
SS	NDA193	SW8270	PENTACHLOROPHENOL	5160	U	5160	UJ	95	5160	ug/kg	HT
SS	NDA194	SW8270	PENTACHLOROPHENOL	1440	U	1440	UJ	26	1440	ug/kg	HT
SS	NDA195	SW8270	PENTACHLOROPHENOL	969	U	969	UJ	18	969	ug/kg	HT
SS	NDA084	SW8270	PENTACHLOROPHENOL	1030	U	1030	UJ	19	1030	ug/kg	HT
SS	NDA091	SW8270	PENTACHLOROPHENOL	1100	U	1100	UJ	20	1100	ug/kg	HT
SS	NDA057	SW8270	PENTACHLOROPHENOL	1690	U	1690	UJ	31	1690	ug/kg	HT
SS	NDA059	SW8270	PENTACHLOROPHENOL	1390	U	1390	UJ	26	1390	ug/kg	HT
SS	NDA061	SW8270	PENTACHLOROPHENOL	1410	U	1410	UJ	26	1410	ug/kg	HT
SS	NDA062FD1	SW8270	PENTACHLOROPHENOL	1570	U	1570	UJ	29	1570	ug/kg	HT
SS	NDA065	SW8270	PENTACHLOROPHENOL	1260	U	1260	UJ	23	1260	ug/kg	HT
SS	NDA067	SW8270	PENTACHLOROPHENOL	1130	U	1130	UJ	21	1130	ug/kg	HT
SS	NDA069	SW8270	PENTACHLOROPHENOL	959	U	959	UJ	18	959	ug/kg	HT
SS	NDA119	SW8270	PENTACHLOROPHENOL	1510	U	1510	UJ	28	1510	ug/kg	HT
SS	NDA120	SW8270	PENTACHLOROPHENOL	1620	U	1620	UJ	30	1620	ug/kg	HT
SS	NDA121	SW8270	PENTACHLOROPHENOL	1230	U	1230	UJ	22	1230	ug/kg	HT
SS	NDA122	SW8270	PENTACHLOROPHENOL	1350	U	1350	UJ	25	1350	ug/kg	HT
SS	NDA123	SW8270	PENTACHLOROPHENOL	1350	U	1350	UJ	25	1350	ug/kg	HT
SS	NDA124	SW8270	PENTACHLOROPHENOL	1290	U	1290	UJ	24	1290	ug/kg	HT
SS	NDA071	SW8270	PENTACHLOROPHENOL	1660	U	1660	UJ	30	1660	ug/kg	HT
SS	NDA072FD1	SW8270	PENTACHLOROPHENOL	1240	U	1240	UJ	23	1240	ug/kg	HT
SS	NDA074	SW8270	PENTACHLOROPHENOL	1340	U	1340	UJ	25	1340	ug/kg	HT
SS	NDA076	SW8270	PENTACHLOROPHENOL	1260	U	1260	UJ	23	1260	ug/kg	HT
SS	NDA078	SW8270	PENTACHLOROPHENOL	1320	U	1320	UJ	24	1320	ug/kg	HT
SS	NDA080RE1	SW8270	PENTACHLOROPHENOL	1220	U	1220	UJ	22	1220	ug/kg	HT
SS	NDA082RE1	SW8270	PENTACHLOROPHENOL	14000	U	14000	UJ	256	14000	ug/kg	HT
SB	NDA165	SW8082	PCB-1260 (AROCHLOR 1260)	37	U	37	UJ	15	37	ug/kg	HT
SB	NDA167	SW8082	PCB-1260 (AROCHLOR 1260)	40	U	40	UJ	16	40	ug/kg	HT
SB	NDA169	SW8082	PCB-1260 (AROCHLOR 1260)	39	U	39	UJ	15	39	ug/kg	HT
SB	NDA171	SW8082	PCB-1260 (AROCHLOR 1260)	36	U	36	UJ	14	36	ug/kg	HT
SB	NDA173	SW8082	PCB-1260 (AROCHLOR 1260)	42	U	42	UJ	17	42	ug/kg	HT
SB	NDA175	SW8082	PCB-1260 (AROCHLOR 1260)	37	U	37	UJ	14	37	ug/kg	HT
SB	NDA177	SW8082	PCB-1260 (AROCHLOR 1260)	38	U	38	UJ	15	38	ug/kg	HT
SB	NDA213	SW8082	PCB-1260 (AROCHLOR 1260)	38	U	38	UJ	15	38	ug/kg	HT
SB	NDA214FD1	SW8082	PCB-1260 (AROCHLOR 1260)	37	U	37	UJ	14	37	ug/kg	HT
SB	NDA215	SW8082	PCB-1260 (AROCHLOR 1260)	38	U	38	UJ	15	38	ug/kg	HT
SB	NDA216	SW8082	PCB-1260 (AROCHLOR 1260)	36	U	36	UJ	14	36	ug/kg	HT
SB	NDA217	SW8082	PCB-1260 (AROCHLOR 1260)	38	U	38	UJ	15	38	ug/kg	HT
SB	NDA218	SW8082	PCB-1260 (AROCHLOR 1260)	36	U	36	UJ	14	36	ug/kg	HT
SB	NDA219	SW8082	PCB-1260 (AROCHLOR 1260)	37	U	37	UJ	14	37	ug/kg	HT
SB	NDA220	SW8082	PCB-1260 (AROCHLOR 1260)	38	U	38	UJ	15	38	ug/kg	HT
SB	NDA221	SW8082	PCB-1260 (AROCHLOR 1260)	35	U	35	UJ	14	35	ug/kg	HT
SB	NDA222	SW8082	PCB-1260 (AROCHLOR 1260)	33	U	33	UJ	13	33	ug/kg	HT
SB	NDA223	SW8082	PCB-1260 (AROCHLOR 1260)	38	U	38	UJ	15	38	ug/kg	HT
SB	NDA235	SW8082	PCB-1260 (AROCHLOR 1260)	43	U	43	UJ	17	43	ug/kg	HT
SB	NDA236	SW8082	PCB-1260 (AROCHLOR 1260)	37	U	37	UJ	15	37	ug/kg	HT
SB	NDA237FD1	SW8082	PCB-1260 (AROCHLOR 1260)	37	U	37	UJ	15	37	ug/kg	HT
SB	NDA238	SW8082	PCB-1260 (AROCHLOR 1260)	37	U	37	UJ	15	37	ug/kg	HT
SB	NDA239	SW8082	PCB-1260 (AROCHLOR 1260)	37	U	37	UJ	15	37	ug/kg	HT
SB	NDA240	SW8082	PCB-1260 (AROCHLOR 1260)	40	U	40	UJ	16	40	ug/kg	HT
SB	NDA241	SW8082	PCB-1260 (AROCHLOR 1260)	37	U	37	UJ	14	37	ug/kg	HT
SB	NDA242	SW8082	PCB-1260 (AROCHLOR 1260)	41	U	41	UJ	16	41	ug/kg	HT
SB	NDA243	SW8082	PCB-1260 (AROCHLOR 1260)	39	U	39	UJ	15	39	ug/kg	HT
SB	NDA244	SW8082	PCB-1260 (AROCHLOR 1260)	36	U	36	UJ	14	36	ug/kg	HT
SB	NDA245	SW8082	PCB-1260 (AROCHLOR 1260)	38	U	38	UJ	15	38	ug/kg	HT
SB	NDA246	SW8082	PCB-1260 (AROCHLOR 1260)	40	U	40	UJ	16	40	ug/kg	HT
SB	NDA247FD1	SW8082	PCB-1260 (AROCHLOR 1260)	38	U	38	UJ	15	38	ug/kg	HT
SB	NDA248	SW8082	PCB-1260 (AROCHLOR 1260)	40	U	40	UJ	16	40	ug/kg	HT
SB	NDA249	SW8082	PCB-1260 (AROCHLOR 1260)	37	U	37	UJ	15	37	ug/kg	HT
SB	NDA252	SW8082	PCB-1260 (AROCHLOR 1260)	39	U	39	UJ	15	39	ug/kg	HT

Matrix	Sample ID	Analytical Method	Parameter	Lab Result	Lab Qual	Final Result	Final Qual	DL	RL	Units	Comments
SB	NDA253	SW8082	PCB-1260 (AROCHLOR 1260)	33	U	33	UJ	13	33	ug/kg	HT
SB	NDA254	SW8082	PCB-1260 (AROCHLOR 1260)	41	U	41	UJ	16	41	ug/kg	HT
SB	NDA255	SW8082	PCB-1260 (AROCHLOR 1260)	41	U	41	UJ	16	41	ug/kg	HT
SB	NDA058	SW8082	PCB-1260 (AROCHLOR 1260)	37	U	37	UJ	14	37	ug/kg	HT
SB	NDA060	SW8082	PCB-1260 (AROCHLOR 1260)	36	U	36	UJ	14	36	ug/kg	HT
SB	NDA063	SW8082	PCB-1260 (AROCHLOR 1260)	35	U	35	UJ	35	35	ug/kg	HT
SB	NDA064FD1	SW8082	PCB-1260 (AROCHLOR 1260)	35	U	35	UJ	35	35	ug/kg	HT
SB	NDA066	SW8082	PCB-1260 (AROCHLOR 1260)	35	U	35	UJ	35	35	ug/kg	HT
SB	NDA068	SW8082	PCB-1260 (AROCHLOR 1260)	36	U	36	UJ	36	36	ug/kg	HT
SB	NDA070	SW8082	PCB-1260 (AROCHLOR 1260)	35	U	35	UJ	35	35	ug/kg	HT
SB	NDA073	SW8082	PCB-1260 (AROCHLOR 1260)	35	U	35	UJ	35	35	ug/kg	HT
SB	NDA075	SW8082	PCB-1260 (AROCHLOR 1260)	34	U	34	UJ	34	34	ug/kg	HT
SB	NDA077	SW8082	PCB-1260 (AROCHLOR 1260)	39	U	39	UJ	39	39	ug/kg	HT
SB	NDA081	SW8082	PCB-1260 (AROCHLOR 1260)	34	U	34	UJ	34	34	ug/kg	HT
SB	NDA083	SW8082	PCB-1260 (AROCHLOR 1260)	34	U	34	UJ	34	34	ug/kg	HT
SB	NDA114	SW8082	PCB-1260 (AROCHLOR 1260)	43	U	43	UJ	17	43	ug/kg	HT
SB	NDA116	SW8082	PCB-1260 (AROCHLOR 1260)	41	U	41	UJ	16	41	ug/kg	HT
SB	NDA118	SW8082	PCB-1260 (AROCHLOR 1260)	42	U	42	UJ	17	42	ug/kg	HT
SB	NDA102	SW8082	PCB-1260 (AROCHLOR 1260)	51	U	51	UJ	20	51	ug/kg	HT
SB	NDA105	SW8082	PCB-1260 (AROCHLOR 1260)	52	U	52	UJ	21	52	ug/kg	HT
SB	NDA106FD1	SW8082	PCB-1260 (AROCHLOR 1260)	52	U	52	UJ	21	52	ug/kg	HT
SB	NDA108	SW8082	PCB-1260 (AROCHLOR 1260)	44	U	44	UJ	17	44	ug/kg	HT
SB	NDA110	SW8082	PCB-1260 (AROCHLOR 1260)	44	U	44	UJ	17	44	ug/kg	HT
SB	NDA112	SW8082	PCB-1260 (AROCHLOR 1260)	43	U	43	UJ	17	43	ug/kg	HT
SD	NDA050	SW8082	PCB-1260 (AROCHLOR 1260)	76	U	76	UJ	30	76	ug/kg	HT
SD	NDA051FD1	SW8082	PCB-1260 (AROCHLOR 1260)	81	U	81	UJ	32	81	ug/kg	HT
SD	NDA052	SW8082	PCB-1260 (AROCHLOR 1260)	82	U	82	UJ	32	82	ug/kg	HT
SD	NDA053	SW8082	PCB-1260 (AROCHLOR 1260)	49	U	49	UJ	19	49	ug/kg	HT
SD	NDA054	SW8082	PCB-1260 (AROCHLOR 1260)	34	U	34	UJ	13	34	ug/kg	HT
SD	NDA055	SW8082	PCB-1260 (AROCHLOR 1260)	33	U	33	UJ	13	33	ug/kg	HT
SD	NDA047	SW8082	PCB-1260 (AROCHLOR 1260)	36	U	36	UJ	14	36	ug/kg	HT
SD	NDA048	SW8082	PCB-1260 (AROCHLOR 1260)	38	U	38	UJ	15	38	ug/kg	HT
SD	NDA049	SW8082	PCB-1260 (AROCHLOR 1260)	36	U	36	UJ	14	36	ug/kg	HT
SS	NDA164	SW8082	PCB-1260 (AROCHLOR 1260)	41	U	41	UJ	16	41	ug/kg	HT
SS	NDA166	SW8082	PCB-1260 (AROCHLOR 1260)	41	U	41	UJ	16	41	ug/kg	HT
SS	NDA168	SW8082	PCB-1260 (AROCHLOR 1260)	38	U	38	UJ	15	38	ug/kg	HT
SS	NDA170	SW8082	PCB-1260 (AROCHLOR 1260)	40	U	40	UJ	16	40	ug/kg	HT
SS	NDA172	SW8082	PCB-1260 (AROCHLOR 1260)	35	U	35	UJ	14	35	ug/kg	HT
SS	NDA174	SW8082	PCB-1260 (AROCHLOR 1260)	34	U	34	UJ	14	34	ug/kg	HT
SS	NDA176	SW8082	PCB-1260 (AROCHLOR 1260)	92	U	92	UJ	36	92	ug/kg	HT
SS	NDA185	SW8082	PCB-1260 (AROCHLOR 1260)	39	U	39	UJ	15	39	ug/kg	HT
SS	NDA186	SW8082	PCB-1260 (AROCHLOR 1260)	37	U	37	UJ	14	37	ug/kg	HT
SS	NDA187	SW8082	PCB-1260 (AROCHLOR 1260)	35	U	35	UJ	14	35	ug/kg	HT
SS	NDA188	SW8082	PCB-1260 (AROCHLOR 1260)	45	U	45	UJ	18	45	ug/kg	HT
SS	NDA189	SW8082	PCB-1260 (AROCHLOR 1260)	37	U	37	UJ	15	37	ug/kg	HT
SS	NDA190	SW8082	PCB-1260 (AROCHLOR 1260)	37	U	37	UJ	15	37	ug/kg	HT
SS	NDA191	SW8082	PCB-1260 (AROCHLOR 1260)	34	U	34	UJ	13	34	ug/kg	HT
SS	NDA192FD1	SW8082	PCB-1260 (AROCHLOR 1260)	38	U	38	UJ	15	38	ug/kg	HT
SS	NDA193	SW8082	PCB-1260 (AROCHLOR 1260)	34	U	34	UJ	13	34	ug/kg	HT
SS	NDA194	SW8082	PCB-1260 (AROCHLOR 1260)	40	U	40	UJ	16	40	ug/kg	HT
SS	NDA195	SW8082	PCB-1260 (AROCHLOR 1260)	34	U	34	UJ	13	34	ug/kg	HT
SS	NDA057	SW8082	PCB-1260 (AROCHLOR 1260)	41	U	41	UJ	16	41	ug/kg	HT
SS	NDA059	SW8082	PCB-1260 (AROCHLOR 1260)	35	U	35	UJ	14	35	ug/kg	HT
SS	NDA061	SW8082	PCB-1260 (AROCHLOR 1260)	34	U	34	UJ	14	34	ug/kg	HT
SS	NDA062FD1	SW8082	PCB-1260 (AROCHLOR 1260)	35	U	35	UJ	14	35	ug/kg	HT
SS	NDA065	SW8082	PCB-1260 (AROCHLOR 1260)	41	U	41	UJ	41	41	ug/kg	HT
SS	NDA067	SW8082	PCB-1260 (AROCHLOR 1260)	36	U	36	UJ	36	36	ug/kg	HT
SS	NDA069	SW8082	PCB-1260 (AROCHLOR 1260)	33	U	33	UJ	33	33	ug/kg	HT
SS	NDA119	SW8082	PCB-1260 (AROCHLOR 1260)	37	U	37	UJ	37	37	ug/kg	HT
SS	NDA120	SW8082	PCB-1260 (AROCHLOR 1260)	44	U	44	UJ	44	44	ug/kg	HT
SS	NDA121	SW8082	PCB-1260 (AROCHLOR 1260)	36	U	36	UJ	36	36	ug/kg	HT
SS	NDA122	SW8082	PCB-1260 (AROCHLOR 1260)	37	U	37	UJ	37	37	ug/kg	HT
SS	NDA123	SW8082	PCB-1260 (AROCHLOR 1260)	37	U	37	UJ	37	37	ug/kg	HT
SS	NDA124	SW8082	PCB-1260 (AROCHLOR 1260)	37	U	37	UJ	37	37	ug/kg	HT
SS	NDA071	SW8082	PCB-1260 (AROCHLOR 1260)	39	U	39	UJ	39	39	ug/kg	HT
SS	NDA072FD1	SW8082	PCB-1260 (AROCHLOR 1260)	35	U	35	UJ	35	35	ug/kg	HT
SS	NDA074	SW8082	PCB-1260 (AROCHLOR 1260)	35	U	35	UJ	35	35	ug/kg	HT
SS	NDA076	SW8082	PCB-1260 (AROCHLOR 1260)	35	U	35	UJ	35	35	ug/kg	HT
SS	NDA078	SW8082	PCB-1260 (AROCHLOR 1260)	35	U	35	UJ	35	35	ug/kg	HT
SS	NDA080	SW8082	PCB-1260 (AROCHLOR 1260)	34	U	34	UJ	34	34	ug/kg	HT

Matrix	Sample ID	Analytical Method	Parameter	Lab Result	Lab Qual	Final Result	Final Qual	DL	RL	Units	Comments
SS	NDA082	SW8082	PCB-1260 (AROCHLOR 1260)	33	U	33	UJ	33	33	ug/kg	HT
SS	NDA113	SW8082	PCB-1260 (AROCHLOR 1260)	41	U	41	UJ	16	41	ug/kg	HT
SS	NDA115	SW8082	PCB-1260 (AROCHLOR 1260)	38	U	38	UJ	15	38	ug/kg	HT
SS	NDA117	SW8082	PCB-1260 (AROCHLOR 1260)	42	U	42	UJ	16	42	ug/kg	HT
SS	NDA101	SW8082	PCB-1260 (AROCHLOR 1260)	44	U	44	UJ	17	44	ug/kg	HT
SS	NDA103	SW8082	PCB-1260 (AROCHLOR 1260)	45	U	45	UJ	18	45	ug/kg	HT
SS	NDA104FD1	SW8082	PCB-1260 (AROCHLOR 1260)	46	U	46	UJ	18	46	ug/kg	HT
SS	NDA107	SW8082	PCB-1260 (AROCHLOR 1260)	41	U	41	UJ	16	41	ug/kg	HT
SS	NDA109	SW8082	PCB-1260 (AROCHLOR 1260)	43	U	43	UJ	17	43	ug/kg	HT
SS	NDA111	SW8082	PCB-1260 (AROCHLOR 1260)	44	U	44	UJ	17	44	ug/kg	HT
SB	NDA165	SW8082	PCB-1254 (AROCHLOR 1254)	37	U	37	UJ	23	37	ug/kg	HT
SB	NDA167	SW8082	PCB-1254 (AROCHLOR 1254)	40	U	40	UJ	24	40	ug/kg	HT
SB	NDA169	SW8082	PCB-1254 (AROCHLOR 1254)	39	U	39	UJ	24	39	ug/kg	HT
SB	NDA171	SW8082	PCB-1254 (AROCHLOR 1254)	36	U	36	UJ	22	36	ug/kg	HT
SB	NDA173	SW8082	PCB-1254 (AROCHLOR 1254)	42	U	42	UJ	25	42	ug/kg	HT
SB	NDA175	SW8082	PCB-1254 (AROCHLOR 1254)	37	U	37	UJ	22	37	ug/kg	HT
SB	NDA177	SW8082	PCB-1254 (AROCHLOR 1254)	38	U	38	UJ	23	38	ug/kg	HT
SB	NDA213	SW8082	PCB-1254 (AROCHLOR 1254)	38	U	38	UJ	23	38	ug/kg	HT
SB	NDA214FD1	SW8082	PCB-1254 (AROCHLOR 1254)	37	U	37	UJ	22	37	ug/kg	HT
SB	NDA215	SW8082	PCB-1254 (AROCHLOR 1254)	38	U	38	UJ	23	38	ug/kg	HT
SB	NDA216	SW8082	PCB-1254 (AROCHLOR 1254)	36	U	36	UJ	22	36	ug/kg	HT
SB	NDA217	SW8082	PCB-1254 (AROCHLOR 1254)	38	U	38	UJ	23	38	ug/kg	HT
SB	NDA218	SW8082	PCB-1254 (AROCHLOR 1254)	36	U	36	UJ	22	36	ug/kg	HT
SB	NDA219	SW8082	PCB-1254 (AROCHLOR 1254)	37	U	37	UJ	22	37	ug/kg	HT
SB	NDA220	SW8082	PCB-1254 (AROCHLOR 1254)	38	U	38	UJ	23	38	ug/kg	HT
SB	NDA221	SW8082	PCB-1254 (AROCHLOR 1254)	35	U	35	UJ	21	35	ug/kg	HT
SB	NDA222	SW8082	PCB-1254 (AROCHLOR 1254)	33	U	33	UJ	20	33	ug/kg	HT
SB	NDA223	SW8082	PCB-1254 (AROCHLOR 1254)	38	U	38	UJ	23	38	ug/kg	HT
SB	NDA235	SW8082	PCB-1254 (AROCHLOR 1254)	43	U	43	UJ	26	43	ug/kg	HT
SB	NDA236	SW8082	PCB-1254 (AROCHLOR 1254)	37	U	37	UJ	23	37	ug/kg	HT
SB	NDA237FD1	SW8082	PCB-1254 (AROCHLOR 1254)	37	U	37	UJ	22	37	ug/kg	HT
SB	NDA238	SW8082	PCB-1254 (AROCHLOR 1254)	37	U	37	UJ	22	37	ug/kg	HT
SB	NDA239	SW8082	PCB-1254 (AROCHLOR 1254)	37	U	37	UJ	22	37	ug/kg	HT
SB	NDA240	SW8082	PCB-1254 (AROCHLOR 1254)	40	U	40	UJ	24	40	ug/kg	HT
SB	NDA241	SW8082	PCB-1254 (AROCHLOR 1254)	37	U	37	UJ	22	37	ug/kg	HT
SB	NDA242	SW8082	PCB-1254 (AROCHLOR 1254)	41	U	41	UJ	25	41	ug/kg	HT
SB	NDA243	SW8082	PCB-1254 (AROCHLOR 1254)	39	U	39	UJ	23	39	ug/kg	HT
SB	NDA244	SW8082	PCB-1254 (AROCHLOR 1254)	36	U	36	UJ	22	36	ug/kg	HT
SB	NDA245	SW8082	PCB-1254 (AROCHLOR 1254)	38	U	38	UJ	23	38	ug/kg	HT
SB	NDA246	SW8082	PCB-1254 (AROCHLOR 1254)	40	U	40	UJ	24	40	ug/kg	HT
SB	NDA247FD1	SW8082	PCB-1254 (AROCHLOR 1254)	38	U	38	UJ	23	38	ug/kg	HT
SB	NDA248	SW8082	PCB-1254 (AROCHLOR 1254)	40	U	40	UJ	24	40	ug/kg	HT
SB	NDA249	SW8082	PCB-1254 (AROCHLOR 1254)	37	U	37	UJ	22	37	ug/kg	HT
SB	NDA252	SW8082	PCB-1254 (AROCHLOR 1254)	39	U	39	UJ	23	39	ug/kg	HT
SB	NDA253	SW8082	PCB-1254 (AROCHLOR 1254)	33	U	33	UJ	20	33	ug/kg	HT
SB	NDA254	SW8082	PCB-1254 (AROCHLOR 1254)	41	U	41	UJ	25	41	ug/kg	HT
SB	NDA255	SW8082	PCB-1254 (AROCHLOR 1254)	41	U	41	UJ	25	41	ug/kg	HT
SB	NDA058	SW8082	PCB-1254 (AROCHLOR 1254)	37	U	37	UJ	22	37	ug/kg	HT
SB	NDA060	SW8082	PCB-1254 (AROCHLOR 1254)	36	U	36	UJ	22	36	ug/kg	HT
SB	NDA063	SW8082	PCB-1254 (AROCHLOR 1254)	35	U	35	UJ	20	35	ug/kg	HT
SB	NDA064FD1	SW8082	PCB-1254 (AROCHLOR 1254)	35	U	35	UJ	19	35	ug/kg	HT
SB	NDA066	SW8082	PCB-1254 (AROCHLOR 1254)	35	U	35	UJ	19	35	ug/kg	HT
SB	NDA068	SW8082	PCB-1254 (AROCHLOR 1254)	36	U	36	UJ	20	36	ug/kg	HT
SB	NDA070	SW8082	PCB-1254 (AROCHLOR 1254)	35	U	35	UJ	19	35	ug/kg	HT
SB	NDA073	SW8082	PCB-1254 (AROCHLOR 1254)	35	U	35	UJ	19	35	ug/kg	HT
SB	NDA075	SW8082	PCB-1254 (AROCHLOR 1254)	34	U	34	UJ	19	34	ug/kg	HT
SB	NDA077	SW8082	PCB-1254 (AROCHLOR 1254)	39	U	39	UJ	22	39	ug/kg	HT
SB	NDA081	SW8082	PCB-1254 (AROCHLOR 1254)	34	U	34	UJ	19	34	ug/kg	HT
SB	NDA083	SW8082	PCB-1254 (AROCHLOR 1254)	34	U	34	UJ	19	34	ug/kg	HT
SB	NDA114	SW8082	PCB-1254 (AROCHLOR 1254)	43	U	43	UJ	26	43	ug/kg	HT
SB	NDA116	SW8082	PCB-1254 (AROCHLOR 1254)	41	U	41	UJ	25	41	ug/kg	HT
SB	NDA118	SW8082	PCB-1254 (AROCHLOR 1254)	42	U	42	UJ	26	42	ug/kg	HT
SB	NDA102	SW8082	PCB-1254 (AROCHLOR 1254)	51	U	51	UJ	31	51	ug/kg	HT
SB	NDA105	SW8082	PCB-1254 (AROCHLOR 1254)	52	U	52	UJ	32	52	ug/kg	HT
SB	NDA106FD1	SW8082	PCB-1254 (AROCHLOR 1254)	52	U	52	UJ	32	52	ug/kg	HT
SB	NDA108	SW8082	PCB-1254 (AROCHLOR 1254)	44	U	44	UJ	27	44	ug/kg	HT
SB	NDA110	SW8082	PCB-1254 (AROCHLOR 1254)	44	U	44	UJ	27	44	ug/kg	HT
SB	NDA112	SW8082	PCB-1254 (AROCHLOR 1254)	43	U	43	UJ	26	43	ug/kg	HT
SD	NDA050	SW8082	PCB-1254 (AROCHLOR 1254)	76	U	76	UJ	46	76	ug/kg	HT
SD	NDA051FD1	SW8082	PCB-1254 (AROCHLOR 1254)	81	U	81	UJ	49	81	ug/kg	HT

Matrix	Sample ID	Analytical Method	Parameter	Lab Result	Lab Qual	Final Result	Final Qual	DL	RL	Units	Comments
SD	NDA052	SW8082	PCB-1254 (AROCHLOR 1254)	82	U	82	UJ	49	82	ug/kg	HT
SD	NDA053	SW8082	PCB-1254 (AROCHLOR 1254)	49	U	49	UJ	30	49	ug/kg	HT
SD	NDA054	SW8082	PCB-1254 (AROCHLOR 1254)	34	U	34	UJ	20	34	ug/kg	HT
SD	NDA055	SW8082	PCB-1254 (AROCHLOR 1254)	33	U	33	UJ	20	33	ug/kg	HT
SD	NDA047	SW8082	PCB-1254 (AROCHLOR 1254)	36	U	36	UJ	22	36	ug/kg	HT
SD	NDA048	SW8082	PCB-1254 (AROCHLOR 1254)	38	U	38	UJ	23	38	ug/kg	HT
SD	NDA049	SW8082	PCB-1254 (AROCHLOR 1254)	36	U	36	UJ	22	36	ug/kg	HT
SS	NDA164	SW8082	PCB-1254 (AROCHLOR 1254)	41	U	41	UJ	25	41	ug/kg	HT
SS	NDA166	SW8082	PCB-1254 (AROCHLOR 1254)	41	U	41	UJ	25	41	ug/kg	HT
SS	NDA168	SW8082	PCB-1254 (AROCHLOR 1254)	38	U	38	UJ	23	38	ug/kg	HT
SS	NDA170	SW8082	PCB-1254 (AROCHLOR 1254)	40	U	40	UJ	24	40	ug/kg	HT
SS	NDA172	SW8082	PCB-1254 (AROCHLOR 1254)	35	U	35	UJ	21	35	ug/kg	HT
SS	NDA174	SW8082	PCB-1254 (AROCHLOR 1254)	34	U	34	UJ	21	34	ug/kg	HT
SS	NDA176	SW8082	PCB-1254 (AROCHLOR 1254)	92	U	92	UJ	56	92	ug/kg	HT
SS	NDA185	SW8082	PCB-1254 (AROCHLOR 1254)	39	U	39	UJ	24	39	ug/kg	HT
SS	NDA186	SW8082	PCB-1254 (AROCHLOR 1254)	37	U	37	UJ	22	37	ug/kg	HT
SS	NDA187	SW8082	PCB-1254 (AROCHLOR 1254)	35	U	35	UJ	21	35	ug/kg	HT
SS	NDA188	SW8082	PCB-1254 (AROCHLOR 1254)	45	U	45	UJ	27	45	ug/kg	HT
SS	NDA189	SW8082	PCB-1254 (AROCHLOR 1254)	37	U	37	UJ	22	37	ug/kg	HT
SS	NDA190	SW8082	PCB-1254 (AROCHLOR 1254)	37	U	37	UJ	23	37	ug/kg	HT
SS	NDA191	SW8082	PCB-1254 (AROCHLOR 1254)	34	U	34	UJ	20	34	ug/kg	HT
SS	NDA192FD1	SW8082	PCB-1254 (AROCHLOR 1254)	38	U	38	UJ	23	38	ug/kg	HT
SS	NDA193	SW8082	PCB-1254 (AROCHLOR 1254)	34	U	34	UJ	21	34	ug/kg	HT
SS	NDA194	SW8082	PCB-1254 (AROCHLOR 1254)	40	U	40	UJ	25	40	ug/kg	HT
SS	NDA195	SW8082	PCB-1254 (AROCHLOR 1254)	34	U	34	UJ	20	34	ug/kg	HT
SS	NDA057	SW8082	PCB-1254 (AROCHLOR 1254)	41	U	41	UJ	25	41	ug/kg	HT
SS	NDA059	SW8082	PCB-1254 (AROCHLOR 1254)	35	U	35	UJ	21	35	ug/kg	HT
SS	NDA061	SW8082	PCB-1254 (AROCHLOR 1254)	34	U	34	UJ	21	34	ug/kg	HT
SS	NDA062FD1	SW8082	PCB-1254 (AROCHLOR 1254)	35	U	35	UJ	21	35	ug/kg	HT
SS	NDA065	SW8082	PCB-1254 (AROCHLOR 1254)	41	U	41	UJ	23	41	ug/kg	HT
SS	NDA067	SW8082	PCB-1254 (AROCHLOR 1254)	36	U	36	UJ	20	36	ug/kg	HT
SS	NDA069	SW8082	PCB-1254 (AROCHLOR 1254)	33	U	33	UJ	18	33	ug/kg	HT
SS	NDA119	SW8082	PCB-1254 (AROCHLOR 1254)	37	U	37	UJ	20	37	ug/kg	HT
SS	NDA120	SW8082	PCB-1254 (AROCHLOR 1254)	44	U	44	UJ	24	44	ug/kg	HT
SS	NDA121	SW8082	PCB-1254 (AROCHLOR 1254)	36	U	36	UJ	20	36	ug/kg	HT
SS	NDA122	SW8082	PCB-1254 (AROCHLOR 1254)	37	U	37	UJ	20	37	ug/kg	HT
SS	NDA123	SW8082	PCB-1254 (AROCHLOR 1254)	37	U	37	UJ	20	37	ug/kg	HT
SS	NDA124	SW8082	PCB-1254 (AROCHLOR 1254)	37	U	37	UJ	20	37	ug/kg	HT
SS	NDA071	SW8082	PCB-1254 (AROCHLOR 1254)	39	U	39	UJ	22	39	ug/kg	HT
SS	NDA072FD1	SW8082	PCB-1254 (AROCHLOR 1254)	35	U	35	UJ	19	35	ug/kg	HT
SS	NDA074	SW8082	PCB-1254 (AROCHLOR 1254)	35	U	35	UJ	19	35	ug/kg	HT
SS	NDA076	SW8082	PCB-1254 (AROCHLOR 1254)	35	U	35	UJ	19	35	ug/kg	HT
SS	NDA078	SW8082	PCB-1254 (AROCHLOR 1254)	35	U	35	UJ	19	35	ug/kg	HT
SS	NDA080	SW8082	PCB-1254 (AROCHLOR 1254)	34	U	34	UJ	19	34	ug/kg	HT
SS	NDA082	SW8082	PCB-1254 (AROCHLOR 1254)	33	U	33	UJ	18	33	ug/kg	HT
SS	NDA113	SW8082	PCB-1254 (AROCHLOR 1254)	41	U	41	UJ	25	41	ug/kg	HT
SS	NDA115	SW8082	PCB-1254 (AROCHLOR 1254)	38	U	38	UJ	23	38	ug/kg	HT
SS	NDA117	SW8082	PCB-1254 (AROCHLOR 1254)	42	U	42	UJ	25	42	ug/kg	HT
SS	NDA101	SW8082	PCB-1254 (AROCHLOR 1254)	44	U	44	UJ	27	44	ug/kg	HT
SS	NDA103	SW8082	PCB-1254 (AROCHLOR 1254)	45	U	45	UJ	27	45	ug/kg	HT
SS	NDA104FD1	SW8082	PCB-1254 (AROCHLOR 1254)	46	U	46	UJ	28	46	ug/kg	HT
SS	NDA107	SW8082	PCB-1254 (AROCHLOR 1254)	41	U	41	UJ	25	41	ug/kg	HT
SS	NDA109	SW8082	PCB-1254 (AROCHLOR 1254)	43	U	43	UJ	26	43	ug/kg	HT
SS	NDA111	SW8082	PCB-1254 (AROCHLOR 1254)	44	U	44	UJ	26	44	ug/kg	HT
SB	NDA165	SW8082	PCB-1248 (AROCHLOR 1248)	37	U	37	UJ	21	37	ug/kg	HT
SB	NDA167	SW8082	PCB-1248 (AROCHLOR 1248)	40	U	40	UJ	23	40	ug/kg	HT
SB	NDA169	SW8082	PCB-1248 (AROCHLOR 1248)	39	U	39	UJ	23	39	ug/kg	HT
SB	NDA171	SW8082	PCB-1248 (AROCHLOR 1248)	36	U	36	UJ	21	36	ug/kg	HT
SB	NDA173	SW8082	PCB-1248 (AROCHLOR 1248)	42	U	42	UJ	24	42	ug/kg	HT
SB	NDA175	SW8082	PCB-1248 (AROCHLOR 1248)	37	U	37	UJ	21	37	ug/kg	HT
SB	NDA177	SW8082	PCB-1248 (AROCHLOR 1248)	38	U	38	UJ	22	38	ug/kg	HT
SB	NDA213	SW8082	PCB-1248 (AROCHLOR 1248)	38	U	38	UJ	22	38	ug/kg	HT
SB	NDA214FD1	SW8082	PCB-1248 (AROCHLOR 1248)	37	U	37	UJ	21	37	ug/kg	HT
SB	NDA215	SW8082	PCB-1248 (AROCHLOR 1248)	38	U	38	UJ	22	38	ug/kg	HT
SB	NDA216	SW8082	PCB-1248 (AROCHLOR 1248)	36	U	36	UJ	21	36	ug/kg	HT
SB	NDA217	SW8082	PCB-1248 (AROCHLOR 1248)	38	U	38	UJ	22	38	ug/kg	HT
SB	NDA218	SW8082	PCB-1248 (AROCHLOR 1248)	36	U	36	UJ	21	36	ug/kg	HT
SB	NDA219	SW8082	PCB-1248 (AROCHLOR 1248)	37	U	37	UJ	21	37	ug/kg	HT
SB	NDA220	SW8082	PCB-1248 (AROCHLOR 1248)	38	U	38	UJ	22	38	ug/kg	HT
SB	NDA221	SW8082	PCB-1248 (AROCHLOR 1248)	35	U	35	UJ	20	35	ug/kg	HT

Matrix	Sample ID	Analytical Method	Parameter	Lab Result	Lab Qual	Final Result	Final Qual	DL	RL	Units	Comments
SB	NDA222	SW8082	PCB-1248 (AROCHLOR 1248)	33	U	33	UJ	19	33	ug/kg	HT
SB	NDA223	SW8082	PCB-1248 (AROCHLOR 1248)	38	U	38	UJ	22	38	ug/kg	HT
SB	NDA235	SW8082	PCB-1248 (AROCHLOR 1248)	43	U	43	UJ	25	43	ug/kg	HT
SB	NDA236	SW8082	PCB-1248 (AROCHLOR 1248)	37	U	37	UJ	21	37	ug/kg	HT
SB	NDA237FD1	SW8082	PCB-1248 (AROCHLOR 1248)	37	U	37	UJ	21	37	ug/kg	HT
SB	NDA238	SW8082	PCB-1248 (AROCHLOR 1248)	37	U	37	UJ	21	37	ug/kg	HT
SB	NDA239	SW8082	PCB-1248 (AROCHLOR 1248)	37	U	37	UJ	21	37	ug/kg	HT
SB	NDA240	SW8082	PCB-1248 (AROCHLOR 1248)	40	U	40	UJ	23	40	ug/kg	HT
SB	NDA241	SW8082	PCB-1248 (AROCHLOR 1248)	37	U	37	UJ	21	37	ug/kg	HT
SB	NDA242	SW8082	PCB-1248 (AROCHLOR 1248)	41	U	41	UJ	24	41	ug/kg	HT
SB	NDA243	SW8082	PCB-1248 (AROCHLOR 1248)	39	U	39	UJ	22	39	ug/kg	HT
SB	NDA244	SW8082	PCB-1248 (AROCHLOR 1248)	36	U	36	UJ	21	36	ug/kg	HT
SB	NDA245	SW8082	PCB-1248 (AROCHLOR 1248)	38	U	38	UJ	22	38	ug/kg	HT
SB	NDA246	SW8082	PCB-1248 (AROCHLOR 1248)	40	U	40	UJ	23	40	ug/kg	HT
SB	NDA247FD1	SW8082	PCB-1248 (AROCHLOR 1248)	38	U	38	UJ	22	38	ug/kg	HT
SB	NDA248	SW8082	PCB-1248 (AROCHLOR 1248)	40	U	40	UJ	23	40	ug/kg	HT
SB	NDA249	SW8082	PCB-1248 (AROCHLOR 1248)	37	U	37	UJ	21	37	ug/kg	HT
SB	NDA252	SW8082	PCB-1248 (AROCHLOR 1248)	39	U	39	UJ	22	39	ug/kg	HT
SB	NDA253	SW8082	PCB-1248 (AROCHLOR 1248)	33	U	33	UJ	19	33	ug/kg	HT
SB	NDA254	SW8082	PCB-1248 (AROCHLOR 1248)	41	U	41	UJ	24	41	ug/kg	HT
SB	NDA255	SW8082	PCB-1248 (AROCHLOR 1248)	41	U	41	UJ	23	41	ug/kg	HT
SB	NDA058	SW8082	PCB-1248 (AROCHLOR 1248)	37	U	37	UJ	21	37	ug/kg	HT
SB	NDA060	SW8082	PCB-1248 (AROCHLOR 1248)	36	U	36	UJ	21	36	ug/kg	HT
SB	NDA063	SW8082	PCB-1248 (AROCHLOR 1248)	35	U	35	UJ	19	35	ug/kg	HT
SB	NDA064FD1	SW8082	PCB-1248 (AROCHLOR 1248)	35	U	35	UJ	19	35	ug/kg	HT
SB	NDA066	SW8082	PCB-1248 (AROCHLOR 1248)	35	U	35	UJ	19	35	ug/kg	HT
SB	NDA068	SW8082	PCB-1248 (AROCHLOR 1248)	36	U	36	UJ	19	36	ug/kg	HT
SB	NDA070	SW8082	PCB-1248 (AROCHLOR 1248)	35	U	35	UJ	19	35	ug/kg	HT
SB	NDA073	SW8082	PCB-1248 (AROCHLOR 1248)	35	U	35	UJ	19	35	ug/kg	HT
SB	NDA075	SW8082	PCB-1248 (AROCHLOR 1248)	34	U	34	UJ	19	34	ug/kg	HT
SB	NDA077	SW8082	PCB-1248 (AROCHLOR 1248)	39	U	39	UJ	21	39	ug/kg	HT
SB	NDA081	SW8082	PCB-1248 (AROCHLOR 1248)	34	U	34	UJ	19	34	ug/kg	HT
SB	NDA083	SW8082	PCB-1248 (AROCHLOR 1248)	34	U	34	UJ	19	34	ug/kg	HT
SB	NDA114	SW8082	PCB-1248 (AROCHLOR 1248)	43	U	43	UJ	25	43	ug/kg	HT
SB	NDA116	SW8082	PCB-1248 (AROCHLOR 1248)	41	U	41	UJ	24	41	ug/kg	HT
SB	NDA118	SW8082	PCB-1248 (AROCHLOR 1248)	42	U	42	UJ	24	42	ug/kg	HT
SB	NDA102	SW8082	PCB-1248 (AROCHLOR 1248)	51	U	51	UJ	29	51	ug/kg	HT
SB	NDA105	SW8082	PCB-1248 (AROCHLOR 1248)	52	U	52	UJ	30	52	ug/kg	HT
SB	NDA106FD1	SW8082	PCB-1248 (AROCHLOR 1248)	52	U	52	UJ	30	52	ug/kg	HT
SB	NDA108	SW8082	PCB-1248 (AROCHLOR 1248)	44	U	44	UJ	25	44	ug/kg	HT
SB	NDA110	SW8082	PCB-1248 (AROCHLOR 1248)	44	U	44	UJ	25	44	ug/kg	HT
SB	NDA112	SW8082	PCB-1248 (AROCHLOR 1248)	43	U	43	UJ	25	43	ug/kg	HT
SD	NDA050	SW8082	PCB-1248 (AROCHLOR 1248)	76	U	76	UJ	44	76	ug/kg	HT
SD	NDA051FD1	SW8082	PCB-1248 (AROCHLOR 1248)	81	U	81	UJ	47	81	ug/kg	HT
SD	NDA052	SW8082	PCB-1248 (AROCHLOR 1248)	82	U	82	UJ	47	82	ug/kg	HT
SD	NDA053	SW8082	PCB-1248 (AROCHLOR 1248)	49	U	49	UJ	28	49	ug/kg	HT
SD	NDA054	SW8082	PCB-1248 (AROCHLOR 1248)	34	U	34	UJ	19	34	ug/kg	HT
SD	NDA055	SW8082	PCB-1248 (AROCHLOR 1248)	33	U	33	UJ	19	33	ug/kg	HT
SD	NDA047	SW8082	PCB-1248 (AROCHLOR 1248)	36	U	36	UJ	21	36	ug/kg	HT
SD	NDA048	SW8082	PCB-1248 (AROCHLOR 1248)	38	U	38	UJ	22	38	ug/kg	HT
SD	NDA049	SW8082	PCB-1248 (AROCHLOR 1248)	36	U	36	UJ	21	36	ug/kg	HT
SS	NDA164	SW8082	PCB-1248 (AROCHLOR 1248)	41	U	41	UJ	23	41	ug/kg	HT
SS	NDA166	SW8082	PCB-1248 (AROCHLOR 1248)	41	U	41	UJ	24	41	ug/kg	HT
SS	NDA168	SW8082	PCB-1248 (AROCHLOR 1248)	38	U	38	UJ	22	38	ug/kg	HT
SS	NDA170	SW8082	PCB-1248 (AROCHLOR 1248)	40	U	40	UJ	23	40	ug/kg	HT
SS	NDA172	SW8082	PCB-1248 (AROCHLOR 1248)	35	U	35	UJ	20	35	ug/kg	HT
SS	NDA174	SW8082	PCB-1248 (AROCHLOR 1248)	34	U	34	UJ	20	34	ug/kg	HT
SS	NDA176	SW8082	PCB-1248 (AROCHLOR 1248)	92	U	92	UJ	53	92	ug/kg	HT
SS	NDA185	SW8082	PCB-1248 (AROCHLOR 1248)	39	U	39	UJ	23	39	ug/kg	HT
SS	NDA186	SW8082	PCB-1248 (AROCHLOR 1248)	37	U	37	UJ	21	37	ug/kg	HT
SS	NDA187	SW8082	PCB-1248 (AROCHLOR 1248)	35	U	35	UJ	20	35	ug/kg	HT
SS	NDA188	SW8082	PCB-1248 (AROCHLOR 1248)	45	U	45	UJ	26	45	ug/kg	HT
SS	NDA189	SW8082	PCB-1248 (AROCHLOR 1248)	37	U	37	UJ	21	37	ug/kg	HT
SS	NDA190	SW8082	PCB-1248 (AROCHLOR 1248)	37	U	37	UJ	21	37	ug/kg	HT
SS	NDA191	SW8082	PCB-1248 (AROCHLOR 1248)	34	U	34	UJ	19	34	ug/kg	HT
SS	NDA192FD1	SW8082	PCB-1248 (AROCHLOR 1248)	38	U	38	UJ	22	38	ug/kg	HT
SS	NDA193	SW8082	PCB-1248 (AROCHLOR 1248)	34	U	34	UJ	20	34	ug/kg	HT
SS	NDA194	SW8082	PCB-1248 (AROCHLOR 1248)	40	U	40	UJ	23	40	ug/kg	HT
SS	NDA195	SW8082	PCB-1248 (AROCHLOR 1248)	34	U	34	UJ	19	34	ug/kg	HT
SS	NDA057	SW8082	PCB-1248 (AROCHLOR 1248)	41	U	41	UJ	24	41	ug/kg	HT

Matrix	Sample ID	Analytical Method	Parameter	Lab Result	Lab Qual	Final Result	Final Qual	DL	RL	Units	Comments
SS	NDA059	SW8082	PCB-1248 (AROCHLOR 1248)	35	U	35	UJ	20	35	ug/kg	HT
SS	NDA061	SW8082	PCB-1248 (AROCHLOR 1248)	34	U	34	UJ	20	34	ug/kg	HT
SS	NDA062FD1	SW8082	PCB-1248 (AROCHLOR 1248)	35	U	35	UJ	20	35	ug/kg	HT
SS	NDA065	SW8082	PCB-1248 (AROCHLOR 1248)	41	U	41	UJ	22	41	ug/kg	HT
SS	NDA067	SW8082	PCB-1248 (AROCHLOR 1248)	36	U	36	UJ	19	36	ug/kg	HT
SS	NDA069	SW8082	PCB-1248 (AROCHLOR 1248)	33	U	33	UJ	18	33	ug/kg	HT
SS	NDA119	SW8082	PCB-1248 (AROCHLOR 1248)	37	U	37	UJ	20	37	ug/kg	HT
SS	NDA120	SW8082	PCB-1248 (AROCHLOR 1248)	44	U	44	UJ	24	44	ug/kg	HT
SS	NDA121	SW8082	PCB-1248 (AROCHLOR 1248)	36	U	36	UJ	19	36	ug/kg	HT
SS	NDA122	SW8082	PCB-1248 (AROCHLOR 1248)	37	U	37	UJ	20	37	ug/kg	HT
SS	NDA123	SW8082	PCB-1248 (AROCHLOR 1248)	37	U	37	UJ	20	37	ug/kg	HT
SS	NDA124	SW8082	PCB-1248 (AROCHLOR 1248)	37	U	37	UJ	20	37	ug/kg	HT
SS	NDA071	SW8082	PCB-1248 (AROCHLOR 1248)	39	U	39	UJ	21	39	ug/kg	HT
SS	NDA072FD1	SW8082	PCB-1248 (AROCHLOR 1248)	35	U	35	UJ	19	35	ug/kg	HT
SS	NDA074	SW8082	PCB-1248 (AROCHLOR 1248)	35	U	35	UJ	19	35	ug/kg	HT
SS	NDA076	SW8082	PCB-1248 (AROCHLOR 1248)	35	U	35	UJ	19	35	ug/kg	HT
SS	NDA078	SW8082	PCB-1248 (AROCHLOR 1248)	35	U	35	UJ	19	35	ug/kg	HT
SS	NDA080	SW8082	PCB-1248 (AROCHLOR 1248)	34	U	34	UJ	18	34	ug/kg	HT
SS	NDA082	SW8082	PCB-1248 (AROCHLOR 1248)	33	U	33	UJ	18	33	ug/kg	HT
SS	NDA113	SW8082	PCB-1248 (AROCHLOR 1248)	41	U	41	UJ	23	41	ug/kg	HT
SS	NDA115	SW8082	PCB-1248 (AROCHLOR 1248)	38	U	38	UJ	22	38	ug/kg	HT
SS	NDA117	SW8082	PCB-1248 (AROCHLOR 1248)	42	U	42	UJ	24	42	ug/kg	HT
SS	NDA101	SW8082	PCB-1248 (AROCHLOR 1248)	44	U	44	UJ	25	44	ug/kg	HT
SS	NDA103	SW8082	PCB-1248 (AROCHLOR 1248)	45	U	45	UJ	26	45	ug/kg	HT
SS	NDA104FD1	SW8082	PCB-1248 (AROCHLOR 1248)	46	U	46	UJ	27	46	ug/kg	HT
SS	NDA107	SW8082	PCB-1248 (AROCHLOR 1248)	41	U	41	UJ	24	41	ug/kg	HT
SS	NDA109	SW8082	PCB-1248 (AROCHLOR 1248)	43	U	43	UJ	25	43	ug/kg	HT
SS	NDA111	SW8082	PCB-1248 (AROCHLOR 1248)	44	U	44	UJ	25	44	ug/kg	HT
SB	NDA165	SW8082	PCB-1242 (AROCHLOR 1242)	37	U	37	UJ	25	37	ug/kg	HT
SB	NDA167	SW8082	PCB-1242 (AROCHLOR 1242)	40	U	40	UJ	27	40	ug/kg	HT
SB	NDA169	SW8082	PCB-1242 (AROCHLOR 1242)	39	U	39	UJ	26	39	ug/kg	HT
SB	NDA171	SW8082	PCB-1242 (AROCHLOR 1242)	36	U	36	UJ	24	36	ug/kg	HT
SB	NDA173	SW8082	PCB-1242 (AROCHLOR 1242)	42	U	42	UJ	28	42	ug/kg	HT
SB	NDA175	SW8082	PCB-1242 (AROCHLOR 1242)	37	U	37	UJ	24	37	ug/kg	HT
SB	NDA177	SW8082	PCB-1242 (AROCHLOR 1242)	38	U	38	UJ	26	38	ug/kg	HT
SB	NDA213	SW8082	PCB-1242 (AROCHLOR 1242)	38	U	38	UJ	25	38	ug/kg	HT
SB	NDA214FD1	SW8082	PCB-1242 (AROCHLOR 1242)	37	U	37	UJ	24	37	ug/kg	HT
SB	NDA215	SW8082	PCB-1242 (AROCHLOR 1242)	38	U	38	UJ	25	38	ug/kg	HT
SB	NDA216	SW8082	PCB-1242 (AROCHLOR 1242)	36	U	36	UJ	24	36	ug/kg	HT
SB	NDA217	SW8082	PCB-1242 (AROCHLOR 1242)	38	U	38	UJ	25	38	ug/kg	HT
SB	NDA218	SW8082	PCB-1242 (AROCHLOR 1242)	36	U	36	UJ	24	36	ug/kg	HT
SB	NDA219	SW8082	PCB-1242 (AROCHLOR 1242)	37	U	37	UJ	24	37	ug/kg	HT
SB	NDA220	SW8082	PCB-1242 (AROCHLOR 1242)	38	U	38	UJ	25	38	ug/kg	HT
SB	NDA221	SW8082	PCB-1242 (AROCHLOR 1242)	35	U	35	UJ	23	35	ug/kg	HT
SB	NDA222	SW8082	PCB-1242 (AROCHLOR 1242)	33	U	33	UJ	22	33	ug/kg	HT
SB	NDA223	SW8082	PCB-1242 (AROCHLOR 1242)	38	U	38	UJ	25	38	ug/kg	HT
SB	NDA235	SW8082	PCB-1242 (AROCHLOR 1242)	43	U	43	UJ	29	43	ug/kg	HT
SB	NDA236	SW8082	PCB-1242 (AROCHLOR 1242)	37	U	37	UJ	25	37	ug/kg	HT
SB	NDA237FD1	SW8082	PCB-1242 (AROCHLOR 1242)	37	U	37	UJ	25	37	ug/kg	HT
SB	NDA238	SW8082	PCB-1242 (AROCHLOR 1242)	37	U	37	UJ	25	37	ug/kg	HT
SB	NDA239	SW8082	PCB-1242 (AROCHLOR 1242)	37	U	37	UJ	25	37	ug/kg	HT
SB	NDA240	SW8082	PCB-1242 (AROCHLOR 1242)	40	U	40	UJ	26	40	ug/kg	HT
SB	NDA241	SW8082	PCB-1242 (AROCHLOR 1242)	37	U	37	UJ	25	37	ug/kg	HT
SB	NDA242	SW8082	PCB-1242 (AROCHLOR 1242)	41	U	41	UJ	27	41	ug/kg	HT
SB	NDA243	SW8082	PCB-1242 (AROCHLOR 1242)	39	U	39	UJ	26	39	ug/kg	HT
SB	NDA244	SW8082	PCB-1242 (AROCHLOR 1242)	36	U	36	UJ	24	36	ug/kg	HT
SB	NDA245	SW8082	PCB-1242 (AROCHLOR 1242)	38	U	38	UJ	25	38	ug/kg	HT
SB	NDA246	SW8082	PCB-1242 (AROCHLOR 1242)	40	U	40	UJ	27	40	ug/kg	HT
SB	NDA247FD1	SW8082	PCB-1242 (AROCHLOR 1242)	38	U	38	UJ	25	38	ug/kg	HT
SB	NDA248	SW8082	PCB-1242 (AROCHLOR 1242)	40	U	40	UJ	27	40	ug/kg	HT
SB	NDA249	SW8082	PCB-1242 (AROCHLOR 1242)	37	U	37	UJ	25	37	ug/kg	HT
SB	NDA252	SW8082	PCB-1242 (AROCHLOR 1242)	39	U	39	UJ	26	39	ug/kg	HT
SB	NDA253	SW8082	PCB-1242 (AROCHLOR 1242)	33	U	33	UJ	22	33	ug/kg	HT
SB	NDA254	SW8082	PCB-1242 (AROCHLOR 1242)	41	U	41	UJ	27	41	ug/kg	HT
SB	NDA255	SW8082	PCB-1242 (AROCHLOR 1242)	41	U	41	UJ	27	41	ug/kg	HT
SB	NDA058	SW8082	PCB-1242 (AROCHLOR 1242)	37	U	37	UJ	24	37	ug/kg	HT
SB	NDA060	SW8082	PCB-1242 (AROCHLOR 1242)	36	U	36	UJ	24	36	ug/kg	HT
SB	NDA063	SW8082	PCB-1242 (AROCHLOR 1242)	35	U	35	UJ	21	35	ug/kg	HT
SB	NDA064FD1	SW8082	PCB-1242 (AROCHLOR 1242)	35	U	35	UJ	21	35	ug/kg	HT
SB	NDA066	SW8082	PCB-1242 (AROCHLOR 1242)	35	U	35	UJ	21	35	ug/kg	HT

Matrix	Sample ID	Analytical Method	Parameter	Lab Result	Lab Qual	Final Result	Final Qual	DL	RL	Units	Comments
SB	NDA068	SW8082	PCB-1242 (AROCHLOR 1242)	36	U	36	UJ	21	36	ug/kg	HT
SB	NDA070	SW8082	PCB-1242 (AROCHLOR 1242)	35	U	35	UJ	21	35	ug/kg	HT
SB	NDA073	SW8082	PCB-1242 (AROCHLOR 1242)	35	U	35	UJ	21	35	ug/kg	HT
SB	NDA075	SW8082	PCB-1242 (AROCHLOR 1242)	34	U	34	UJ	21	34	ug/kg	HT
SB	NDA077	SW8082	PCB-1242 (AROCHLOR 1242)	39	U	39	UJ	23	39	ug/kg	HT
SB	NDA081	SW8082	PCB-1242 (AROCHLOR 1242)	34	U	34	UJ	20	34	ug/kg	HT
SB	NDA083	SW8082	PCB-1242 (AROCHLOR 1242)	34	U	34	UJ	20	34	ug/kg	HT
SB	NDA114	SW8082	PCB-1242 (AROCHLOR 1242)	43	U	43	UJ	28	43	ug/kg	HT
SB	NDA116	SW8082	PCB-1242 (AROCHLOR 1242)	41	U	41	UJ	27	41	ug/kg	HT
SB	NDA118	SW8082	PCB-1242 (AROCHLOR 1242)	42	U	42	UJ	28	42	ug/kg	HT
SB	NDA102	SW8082	PCB-1242 (AROCHLOR 1242)	51	U	51	UJ	34	51	ug/kg	HT
SB	NDA105	SW8082	PCB-1242 (AROCHLOR 1242)	52	U	52	UJ	35	52	ug/kg	HT
SB	NDA106FD1	SW8082	PCB-1242 (AROCHLOR 1242)	52	U	52	UJ	35	52	ug/kg	HT
SB	NDA108	SW8082	PCB-1242 (AROCHLOR 1242)	44	U	44	UJ	29	44	ug/kg	HT
SB	NDA110	SW8082	PCB-1242 (AROCHLOR 1242)	44	U	44	UJ	29	44	ug/kg	HT
SB	NDA112	SW8082	PCB-1242 (AROCHLOR 1242)	43	U	43	UJ	29	43	ug/kg	HT
SD	NDA050	SW8082	PCB-1242 (AROCHLOR 1242)	76	U	76	UJ	51	76	ug/kg	HT
SD	NDA051FD1	SW8082	PCB-1242 (AROCHLOR 1242)	81	U	81	UJ	54	81	ug/kg	HT
SD	NDA052	SW8082	PCB-1242 (AROCHLOR 1242)	82	U	82	UJ	54	82	ug/kg	HT
SD	NDA053	SW8082	PCB-1242 (AROCHLOR 1242)	49	U	49	UJ	33	49	ug/kg	HT
SD	NDA054	SW8082	PCB-1242 (AROCHLOR 1242)	34	U	34	UJ	22	34	ug/kg	HT
SD	NDA055	SW8082	PCB-1242 (AROCHLOR 1242)	33	U	33	UJ	22	33	ug/kg	HT
SD	NDA047	SW8082	PCB-1242 (AROCHLOR 1242)	36	U	36	UJ	24	36	ug/kg	HT
SD	NDA048	SW8082	PCB-1242 (AROCHLOR 1242)	38	U	38	UJ	25	38	ug/kg	HT
SD	NDA049	SW8082	PCB-1242 (AROCHLOR 1242)	36	U	36	UJ	24	36	ug/kg	HT
SS	NDA164	SW8082	PCB-1242 (AROCHLOR 1242)	41	U	41	UJ	27	41	ug/kg	HT
SS	NDA166	SW8082	PCB-1242 (AROCHLOR 1242)	41	U	41	UJ	27	41	ug/kg	HT
SS	NDA168	SW8082	PCB-1242 (AROCHLOR 1242)	38	U	38	UJ	26	38	ug/kg	HT
SS	NDA170	SW8082	PCB-1242 (AROCHLOR 1242)	40	U	40	UJ	26	40	ug/kg	HT
SS	NDA172	SW8082	PCB-1242 (AROCHLOR 1242)	35	U	35	UJ	24	35	ug/kg	HT
SS	NDA174	SW8082	PCB-1242 (AROCHLOR 1242)	34	U	34	UJ	23	34	ug/kg	HT
SS	NDA176	SW8082	PCB-1242 (AROCHLOR 1242)	92	U	92	UJ	62	92	ug/kg	HT
SS	NDA185	SW8082	PCB-1242 (AROCHLOR 1242)	39	U	39	UJ	26	39	ug/kg	HT
SS	NDA186	SW8082	PCB-1242 (AROCHLOR 1242)	37	U	37	UJ	25	37	ug/kg	HT
SS	NDA187	SW8082	PCB-1242 (AROCHLOR 1242)	35	U	35	UJ	24	35	ug/kg	HT
SS	NDA188	SW8082	PCB-1242 (AROCHLOR 1242)	45	U	45	UJ	30	45	ug/kg	HT
SS	NDA189	SW8082	PCB-1242 (AROCHLOR 1242)	37	U	37	UJ	25	37	ug/kg	HT
SS	NDA190	SW8082	PCB-1242 (AROCHLOR 1242)	37	U	37	UJ	25	37	ug/kg	HT
SS	NDA191	SW8082	PCB-1242 (AROCHLOR 1242)	34	U	34	UJ	23	34	ug/kg	HT
SS	NDA192FD1	SW8082	PCB-1242 (AROCHLOR 1242)	38	U	38	UJ	26	38	ug/kg	HT
SS	NDA193	SW8082	PCB-1242 (AROCHLOR 1242)	34	U	34	UJ	23	34	ug/kg	HT
SS	NDA194	SW8082	PCB-1242 (AROCHLOR 1242)	40	U	40	UJ	27	40	ug/kg	HT
SS	NDA195	SW8082	PCB-1242 (AROCHLOR 1242)	34	U	34	UJ	23	34	ug/kg	HT
SS	NDA057	SW8082	PCB-1242 (AROCHLOR 1242)	41	U	41	UJ	27	41	ug/kg	HT
SS	NDA059	SW8082	PCB-1242 (AROCHLOR 1242)	35	U	35	UJ	24	35	ug/kg	HT
SS	NDA061	SW8082	PCB-1242 (AROCHLOR 1242)	34	U	34	UJ	23	34	ug/kg	HT
SS	NDA062FD1	SW8082	PCB-1242 (AROCHLOR 1242)	35	U	35	UJ	23	35	ug/kg	HT
SS	NDA065	SW8082	PCB-1242 (AROCHLOR 1242)	41	U	41	UJ	25	41	ug/kg	HT
SS	NDA067	SW8082	PCB-1242 (AROCHLOR 1242)	36	U	36	UJ	21	36	ug/kg	HT
SS	NDA069	SW8082	PCB-1242 (AROCHLOR 1242)	33	U	33	UJ	20	33	ug/kg	HT
SS	NDA119	SW8082	PCB-1242 (AROCHLOR 1242)	37	U	37	UJ	22	37	ug/kg	HT
SS	NDA120	SW8082	PCB-1242 (AROCHLOR 1242)	44	U	44	UJ	26	44	ug/kg	HT
SS	NDA121	SW8082	PCB-1242 (AROCHLOR 1242)	36	U	36	UJ	21	36	ug/kg	HT
SS	NDA122	SW8082	PCB-1242 (AROCHLOR 1242)	37	U	37	UJ	22	37	ug/kg	HT
SS	NDA123	SW8082	PCB-1242 (AROCHLOR 1242)	37	U	37	UJ	22	37	ug/kg	HT
SS	NDA124	SW8082	PCB-1242 (AROCHLOR 1242)	37	U	37	UJ	22	37	ug/kg	HT
SS	NDA071	SW8082	PCB-1242 (AROCHLOR 1242)	39	U	39	UJ	23	39	ug/kg	HT
SS	NDA072FD1	SW8082	PCB-1242 (AROCHLOR 1242)	35	U	35	UJ	21	35	ug/kg	HT
SS	NDA074	SW8082	PCB-1242 (AROCHLOR 1242)	35	U	35	UJ	21	35	ug/kg	HT
SS	NDA076	SW8082	PCB-1242 (AROCHLOR 1242)	35	U	35	UJ	21	35	ug/kg	HT
SS	NDA078	SW8082	PCB-1242 (AROCHLOR 1242)	35	U	35	UJ	21	35	ug/kg	HT
SS	NDA080	SW8082	PCB-1242 (AROCHLOR 1242)	34	U	34	UJ	20	34	ug/kg	HT
SS	NDA082	SW8082	PCB-1242 (AROCHLOR 1242)	33	U	33	UJ	20	33	ug/kg	HT
SS	NDA113	SW8082	PCB-1242 (AROCHLOR 1242)	41	U	41	UJ	27	41	ug/kg	HT
SS	NDA115	SW8082	PCB-1242 (AROCHLOR 1242)	38	U	38	UJ	25	38	ug/kg	HT
SS	NDA117	SW8082	PCB-1242 (AROCHLOR 1242)	42	U	42	UJ	28	42	ug/kg	HT
SS	NDA101	SW8082	PCB-1242 (AROCHLOR 1242)	44	U	44	UJ	29	44	ug/kg	HT
SS	NDA103	SW8082	PCB-1242 (AROCHLOR 1242)	45	U	45	UJ	30	45	ug/kg	HT
SS	NDA104FD1	SW8082	PCB-1242 (AROCHLOR 1242)	46	U	46	UJ	31	46	ug/kg	HT
SS	NDA107	SW8082	PCB-1242 (AROCHLOR 1242)	41	U	41	UJ	27	41	ug/kg	HT

Matrix	Sample ID	Analytical Method	Parameter	Lab Result	Lab Qual	Final Result	Final Qual	DL	RL	Units	Comments
SS	NDA109	SW8082	PCB-1242 (AROCHLOR 1242)	43	U	43	UJ	29	43	ug/kg	HT
SS	NDA111	SW8082	PCB-1242 (AROCHLOR 1242)	44	U	44	UJ	29	44	ug/kg	HT
SB	NDA165	SW8082	PCB-1232 (AROCHLOR 1232)	37	U	37	UJ	33	37	ug/kg	HT
SB	NDA167	SW8082	PCB-1232 (AROCHLOR 1232)	40	U	40	UJ	35	40	ug/kg	HT
SB	NDA169	SW8082	PCB-1232 (AROCHLOR 1232)	39	U	39	UJ	35	39	ug/kg	HT
SB	NDA171	SW8082	PCB-1232 (AROCHLOR 1232)	36	U	36	UJ	31	36	ug/kg	HT
SB	NDA173	SW8082	PCB-1232 (AROCHLOR 1232)	42	U	42	UJ	37	42	ug/kg	HT
SB	NDA175	SW8082	PCB-1232 (AROCHLOR 1232)	37	U	37	UJ	32	37	ug/kg	HT
SB	NDA177	SW8082	PCB-1232 (AROCHLOR 1232)	38	U	38	UJ	34	38	ug/kg	HT
SB	NDA213	SW8082	PCB-1232 (AROCHLOR 1232)	38	U	38	UJ	33	38	ug/kg	HT
SB	NDA214FD1	SW8082	PCB-1232 (AROCHLOR 1232)	37	U	37	UJ	32	37	ug/kg	HT
SB	NDA215	SW8082	PCB-1232 (AROCHLOR 1232)	38	U	38	UJ	33	38	ug/kg	HT
SB	NDA216	SW8082	PCB-1232 (AROCHLOR 1232)	36	U	36	UJ	32	36	ug/kg	HT
SB	NDA217	SW8082	PCB-1232 (AROCHLOR 1232)	38	U	38	UJ	33	38	ug/kg	HT
SB	NDA218	SW8082	PCB-1232 (AROCHLOR 1232)	36	U	36	UJ	32	36	ug/kg	HT
SB	NDA219	SW8082	PCB-1232 (AROCHLOR 1232)	37	U	37	UJ	32	37	ug/kg	HT
SB	NDA220	SW8082	PCB-1232 (AROCHLOR 1232)	38	U	38	UJ	33	38	ug/kg	HT
SB	NDA221	SW8082	PCB-1232 (AROCHLOR 1232)	35	U	35	UJ	31	35	ug/kg	HT
SB	NDA222	SW8082	PCB-1232 (AROCHLOR 1232)	33	U	33	UJ	29	33	ug/kg	HT
SB	NDA223	SW8082	PCB-1232 (AROCHLOR 1232)	38	U	38	UJ	33	38	ug/kg	HT
SB	NDA235	SW8082	PCB-1232 (AROCHLOR 1232)	43	U	43	UJ	38	43	ug/kg	HT
SB	NDA236	SW8082	PCB-1232 (AROCHLOR 1232)	37	U	37	UJ	33	37	ug/kg	HT
SB	NDA237FD1	SW8082	PCB-1232 (AROCHLOR 1232)	37	U	37	UJ	33	37	ug/kg	HT
SB	NDA238	SW8082	PCB-1232 (AROCHLOR 1232)	37	U	37	UJ	33	37	ug/kg	HT
SB	NDA239	SW8082	PCB-1232 (AROCHLOR 1232)	37	U	37	UJ	32	37	ug/kg	HT
SB	NDA240	SW8082	PCB-1232 (AROCHLOR 1232)	40	U	40	UJ	35	40	ug/kg	HT
SB	NDA241	SW8082	PCB-1232 (AROCHLOR 1232)	37	U	37	UJ	32	37	ug/kg	HT
SB	NDA242	SW8082	PCB-1232 (AROCHLOR 1232)	41	U	41	UJ	36	41	ug/kg	HT
SB	NDA243	SW8082	PCB-1232 (AROCHLOR 1232)	39	U	39	UJ	34	39	ug/kg	HT
SB	NDA244	SW8082	PCB-1232 (AROCHLOR 1232)	36	U	36	UJ	32	36	ug/kg	HT
SB	NDA245	SW8082	PCB-1232 (AROCHLOR 1232)	38	U	38	UJ	33	38	ug/kg	HT
SB	NDA246	SW8082	PCB-1232 (AROCHLOR 1232)	40	U	40	UJ	36	40	ug/kg	HT
SB	NDA247FD1	SW8082	PCB-1232 (AROCHLOR 1232)	38	U	38	UJ	33	38	ug/kg	HT
SB	NDA248	SW8082	PCB-1232 (AROCHLOR 1232)	40	U	40	UJ	35	40	ug/kg	HT
SB	NDA249	SW8082	PCB-1232 (AROCHLOR 1232)	37	U	37	UJ	32	37	ug/kg	HT
SB	NDA252	SW8082	PCB-1232 (AROCHLOR 1232)	39	U	39	UJ	34	39	ug/kg	HT
SB	NDA253	SW8082	PCB-1232 (AROCHLOR 1232)	33	U	33	UJ	29	33	ug/kg	HT
SB	NDA254	SW8082	PCB-1232 (AROCHLOR 1232)	41	U	41	UJ	36	41	ug/kg	HT
SB	NDA255	SW8082	PCB-1232 (AROCHLOR 1232)	41	U	41	UJ	36	41	ug/kg	HT
SB	NDA058	SW8082	PCB-1232 (AROCHLOR 1232)	37	U	37	UJ	32	37	ug/kg	HT
SB	NDA060	SW8082	PCB-1232 (AROCHLOR 1232)	36	U	36	UJ	32	36	ug/kg	HT
SB	NDA063	SW8082	PCB-1232 (AROCHLOR 1232)	35	U	35	UJ	27	35	ug/kg	HT
SB	NDA064FD1	SW8082	PCB-1232 (AROCHLOR 1232)	35	U	35	UJ	27	35	ug/kg	HT
SB	NDA066	SW8082	PCB-1232 (AROCHLOR 1232)	35	U	35	UJ	27	35	ug/kg	HT
SB	NDA068	SW8082	PCB-1232 (AROCHLOR 1232)	36	U	36	UJ	28	36	ug/kg	HT
SB	NDA070	SW8082	PCB-1232 (AROCHLOR 1232)	35	U	35	UJ	27	35	ug/kg	HT
SB	NDA073	SW8082	PCB-1232 (AROCHLOR 1232)	35	U	35	UJ	27	35	ug/kg	HT
SB	NDA075	SW8082	PCB-1232 (AROCHLOR 1232)	34	U	34	UJ	27	34	ug/kg	HT
SB	NDA077	SW8082	PCB-1232 (AROCHLOR 1232)	39	U	39	UJ	30	39	ug/kg	HT
SB	NDA081	SW8082	PCB-1232 (AROCHLOR 1232)	34	U	34	UJ	26	34	ug/kg	HT
SB	NDA083	SW8082	PCB-1232 (AROCHLOR 1232)	34	U	34	UJ	26	34	ug/kg	HT
SB	NDA114	SW8082	PCB-1232 (AROCHLOR 1232)	43	U	43	UJ	38	43	ug/kg	HT
SB	NDA116	SW8082	PCB-1232 (AROCHLOR 1232)	41	U	41	UJ	36	41	ug/kg	HT
SB	NDA118	SW8082	PCB-1232 (AROCHLOR 1232)	42	U	42	UJ	37	42	ug/kg	HT
SB	NDA102	SW8082	PCB-1232 (AROCHLOR 1232)	51	U	51	UJ	45	51	ug/kg	HT
SB	NDA105	SW8082	PCB-1232 (AROCHLOR 1232)	52	U	52	UJ	46	52	ug/kg	HT
SB	NDA106FD1	SW8082	PCB-1232 (AROCHLOR 1232)	52	U	52	UJ	46	52	ug/kg	HT
SB	NDA108	SW8082	PCB-1232 (AROCHLOR 1232)	44	U	44	UJ	39	44	ug/kg	HT
SB	NDA110	SW8082	PCB-1232 (AROCHLOR 1232)	44	U	44	UJ	39	44	ug/kg	HT
SB	NDA112	SW8082	PCB-1232 (AROCHLOR 1232)	43	U	43	UJ	38	43	ug/kg	HT
SD	NDA050	SW8082	PCB-1232 (AROCHLOR 1232)	76	U	76	UJ	67	76	ug/kg	HT
SD	NDA051FD1	SW8082	PCB-1232 (AROCHLOR 1232)	81	U	81	UJ	71	81	ug/kg	HT
SD	NDA052	SW8082	PCB-1232 (AROCHLOR 1232)	82	U	82	UJ	72	82	ug/kg	HT
SD	NDA053	SW8082	PCB-1232 (AROCHLOR 1232)	49	U	49	UJ	43	49	ug/kg	HT
SD	NDA054	SW8082	PCB-1232 (AROCHLOR 1232)	34	U	34	UJ	30	34	ug/kg	HT
SD	NDA055	SW8082	PCB-1232 (AROCHLOR 1232)	33	U	33	UJ	29	33	ug/kg	HT
SD	NDA047	SW8082	PCB-1232 (AROCHLOR 1232)	36	U	36	UJ	32	36	ug/kg	HT
SD	NDA048	SW8082	PCB-1232 (AROCHLOR 1232)	38	U	38	UJ	33	38	ug/kg	HT
SD	NDA049	SW8082	PCB-1232 (AROCHLOR 1232)	36	U	36	UJ	32	36	ug/kg	HT
SS	NDA164	SW8082	PCB-1232 (AROCHLOR 1232)	41	U	41	UJ	36	41	ug/kg	HT

Matrix	Sample ID	Analytical Method	Parameter	Lab Result	Lab Qual	Final Result	Final Qual	DL	RL	Units	Comments
SS	NDA166	SW8082	PCB-1232 (AROCHLOR 1232)	41	U	41	UJ	36	41	ug/kg	HT
SS	NDA168	SW8082	PCB-1232 (AROCHLOR 1232)	38	U	38	UJ	34	38	ug/kg	HT
SS	NDA170	SW8082	PCB-1232 (AROCHLOR 1232)	40	U	40	UJ	35	40	ug/kg	HT
SS	NDA172	SW8082	PCB-1232 (AROCHLOR 1232)	35	U	35	UJ	31	35	ug/kg	HT
SS	NDA174	SW8082	PCB-1232 (AROCHLOR 1232)	34	U	34	UJ	30	34	ug/kg	HT
SS	NDA176	SW8082	PCB-1232 (AROCHLOR 1232)	92	U	92	UJ	81	92	ug/kg	HT
SS	NDA185	SW8082	PCB-1232 (AROCHLOR 1232)	39	U	39	UJ	34	39	ug/kg	HT
SS	NDA186	SW8082	PCB-1232 (AROCHLOR 1232)	37	U	37	UJ	32	37	ug/kg	HT
SS	NDA187	SW8082	PCB-1232 (AROCHLOR 1232)	35	U	35	UJ	31	35	ug/kg	HT
SS	NDA188	SW8082	PCB-1232 (AROCHLOR 1232)	45	U	45	UJ	40	45	ug/kg	HT
SS	NDA189	SW8082	PCB-1232 (AROCHLOR 1232)	37	U	37	UJ	32	37	ug/kg	HT
SS	NDA190	SW8082	PCB-1232 (AROCHLOR 1232)	37	U	37	UJ	33	37	ug/kg	HT
SS	NDA191	SW8082	PCB-1232 (AROCHLOR 1232)	34	U	34	UJ	30	34	ug/kg	HT
SS	NDA192FD1	SW8082	PCB-1232 (AROCHLOR 1232)	38	U	38	UJ	34	38	ug/kg	HT
SS	NDA193	SW8082	PCB-1232 (AROCHLOR 1232)	34	U	34	UJ	30	34	ug/kg	HT
SS	NDA194	SW8082	PCB-1232 (AROCHLOR 1232)	40	U	40	UJ	36	40	ug/kg	HT
SS	NDA195	SW8082	PCB-1232 (AROCHLOR 1232)	34	U	34	UJ	30	34	ug/kg	HT
SS	NDA057	SW8082	PCB-1232 (AROCHLOR 1232)	41	U	41	UJ	36	41	ug/kg	HT
SS	NDA059	SW8082	PCB-1232 (AROCHLOR 1232)	35	U	35	UJ	31	35	ug/kg	HT
SS	NDA061	SW8082	PCB-1232 (AROCHLOR 1232)	34	U	34	UJ	30	34	ug/kg	HT
SS	NDA062FD1	SW8082	PCB-1232 (AROCHLOR 1232)	35	U	35	UJ	31	35	ug/kg	HT
SS	NDA065	SW8082	PCB-1232 (AROCHLOR 1232)	41	U	41	UJ	32	41	ug/kg	HT
SS	NDA067	SW8082	PCB-1232 (AROCHLOR 1232)	36	U	36	UJ	27	36	ug/kg	HT
SS	NDA069	SW8082	PCB-1232 (AROCHLOR 1232)	33	U	33	UJ	26	33	ug/kg	HT
SS	NDA119	SW8082	PCB-1232 (AROCHLOR 1232)	37	U	37	UJ	28	37	ug/kg	HT
SS	NDA120	SW8082	PCB-1232 (AROCHLOR 1232)	44	U	44	UJ	34	44	ug/kg	HT
SS	NDA121	SW8082	PCB-1232 (AROCHLOR 1232)	36	U	36	UJ	28	36	ug/kg	HT
SS	NDA122	SW8082	PCB-1232 (AROCHLOR 1232)	37	U	37	UJ	29	37	ug/kg	HT
SS	NDA123	SW8082	PCB-1232 (AROCHLOR 1232)	37	U	37	UJ	28	37	ug/kg	HT
SS	NDA124	SW8082	PCB-1232 (AROCHLOR 1232)	37	U	37	UJ	28	37	ug/kg	HT
SS	NDA071	SW8082	PCB-1232 (AROCHLOR 1232)	39	U	39	UJ	30	39	ug/kg	HT
SS	NDA072FD1	SW8082	PCB-1232 (AROCHLOR 1232)	35	U	35	UJ	27	35	ug/kg	HT
SS	NDA074	SW8082	PCB-1232 (AROCHLOR 1232)	35	U	35	UJ	27	35	ug/kg	HT
SS	NDA076	SW8082	PCB-1232 (AROCHLOR 1232)	35	U	35	UJ	27	35	ug/kg	HT
SS	NDA078	SW8082	PCB-1232 (AROCHLOR 1232)	35	U	35	UJ	27	35	ug/kg	HT
SS	NDA080	SW8082	PCB-1232 (AROCHLOR 1232)	34	U	34	UJ	26	34	ug/kg	HT
SS	NDA082	SW8082	PCB-1232 (AROCHLOR 1232)	33	U	33	UJ	26	33	ug/kg	HT
SS	NDA113	SW8082	PCB-1232 (AROCHLOR 1232)	41	U	41	UJ	36	41	ug/kg	HT
SS	NDA115	SW8082	PCB-1232 (AROCHLOR 1232)	38	U	38	UJ	33	38	ug/kg	HT
SS	NDA117	SW8082	PCB-1232 (AROCHLOR 1232)	42	U	42	UJ	36	42	ug/kg	HT
SS	NDA101	SW8082	PCB-1232 (AROCHLOR 1232)	44	U	44	UJ	39	44	ug/kg	HT
SS	NDA103	SW8082	PCB-1232 (AROCHLOR 1232)	45	U	45	UJ	40	45	ug/kg	HT
SS	NDA104FD1	SW8082	PCB-1232 (AROCHLOR 1232)	46	U	46	UJ	41	46	ug/kg	HT
SS	NDA107	SW8082	PCB-1232 (AROCHLOR 1232)	41	U	41	UJ	36	41	ug/kg	HT
SS	NDA109	SW8082	PCB-1232 (AROCHLOR 1232)	43	U	43	UJ	38	43	ug/kg	HT
SS	NDA111	SW8082	PCB-1232 (AROCHLOR 1232)	44	U	44	UJ	38	44	ug/kg	HT
SB	NDA165	SW8082	PCB-1221 (AROCHLOR 1221)	76	U	76	UJ	25	76	ug/kg	HT
SB	NDA167	SW8082	PCB-1221 (AROCHLOR 1221)	82	U	82	UJ	27	82	ug/kg	HT
SB	NDA169	SW8082	PCB-1221 (AROCHLOR 1221)	80	U	80	UJ	26	80	ug/kg	HT
SB	NDA171	SW8082	PCB-1221 (AROCHLOR 1221)	73	U	73	UJ	24	73	ug/kg	HT
SB	NDA173	SW8082	PCB-1221 (AROCHLOR 1221)	85	U	85	UJ	28	85	ug/kg	HT
SB	NDA175	SW8082	PCB-1221 (AROCHLOR 1221)	74	U	74	UJ	24	74	ug/kg	HT
SB	NDA177	SW8082	PCB-1221 (AROCHLOR 1221)	78	U	78	UJ	26	78	ug/kg	HT
SB	NDA213	SW8082	PCB-1221 (AROCHLOR 1221)	77	U	77	UJ	25	77	ug/kg	HT
SB	NDA214FD1	SW8082	PCB-1221 (AROCHLOR 1221)	75	U	75	UJ	24	75	ug/kg	HT
SB	NDA215	SW8082	PCB-1221 (AROCHLOR 1221)	77	U	77	UJ	25	77	ug/kg	HT
SB	NDA216	SW8082	PCB-1221 (AROCHLOR 1221)	73	U	73	UJ	24	73	ug/kg	HT
SB	NDA217	SW8082	PCB-1221 (AROCHLOR 1221)	77	U	77	UJ	25	77	ug/kg	HT
SB	NDA218	SW8082	PCB-1221 (AROCHLOR 1221)	74	U	74	UJ	24	74	ug/kg	HT
SB	NDA219	SW8082	PCB-1221 (AROCHLOR 1221)	74	U	74	UJ	24	74	ug/kg	HT
SB	NDA220	SW8082	PCB-1221 (AROCHLOR 1221)	77	U	77	UJ	25	77	ug/kg	HT
SB	NDA221	SW8082	PCB-1221 (AROCHLOR 1221)	71	U	71	UJ	23	71	ug/kg	HT
SB	NDA222	SW8082	PCB-1221 (AROCHLOR 1221)	67	U	67	UJ	22	67	ug/kg	HT
SB	NDA223	SW8082	PCB-1221 (AROCHLOR 1221)	76	U	76	UJ	25	76	ug/kg	HT
SB	NDA235	SW8082	PCB-1221 (AROCHLOR 1221)	88	U	88	UJ	29	88	ug/kg	HT
SB	NDA236	SW8082	PCB-1221 (AROCHLOR 1221)	76	U	76	UJ	25	76	ug/kg	HT
SB	NDA237FD1	SW8082	PCB-1221 (AROCHLOR 1221)	75	U	75	UJ	25	75	ug/kg	HT
SB	NDA238	SW8082	PCB-1221 (AROCHLOR 1221)	75	U	75	UJ	25	75	ug/kg	HT
SB	NDA239	SW8082	PCB-1221 (AROCHLOR 1221)	75	U	75	UJ	25	75	ug/kg	HT
SB	NDA240	SW8082	PCB-1221 (AROCHLOR 1221)	80	U	80	UJ	26	80	ug/kg	HT

Matrix	Sample ID	Analytical Method	Parameter	Lab Result	Lab Qual	Final Result	Final Qual	DL	RL	Units	Comments
SB	NDA241	SW8082	PCB-1221 (AROCHLOR 1221)	75	U	75	UJ	25	75	ug/kg	HT
SB	NDA242	SW8082	PCB-1221 (AROCHLOR 1221)	83	U	83	UJ	27	83	ug/kg	HT
SB	NDA243	SW8082	PCB-1221 (AROCHLOR 1221)	79	U	79	UJ	26	79	ug/kg	HT
SB	NDA244	SW8082	PCB-1221 (AROCHLOR 1221)	73	U	73	UJ	24	73	ug/kg	HT
SB	NDA245	SW8082	PCB-1221 (AROCHLOR 1221)	77	U	77	UJ	25	77	ug/kg	HT
SB	NDA246	SW8082	PCB-1221 (AROCHLOR 1221)	82	U	82	UJ	27	82	ug/kg	HT
SB	NDA247FD1	SW8082	PCB-1221 (AROCHLOR 1221)	77	U	77	UJ	25	77	ug/kg	HT
SB	NDA248	SW8082	PCB-1221 (AROCHLOR 1221)	81	U	81	UJ	27	81	ug/kg	HT
SB	NDA249	SW8082	PCB-1221 (AROCHLOR 1221)	75	U	75	UJ	25	75	ug/kg	HT
SB	NDA252	SW8082	PCB-1221 (AROCHLOR 1221)	78	U	78	UJ	26	78	ug/kg	HT
SB	NDA253	SW8082	PCB-1221 (AROCHLOR 1221)	66	U	66	UJ	22	66	ug/kg	HT
SB	NDA254	SW8082	PCB-1221 (AROCHLOR 1221)	84	U	84	UJ	27	84	ug/kg	HT
SB	NDA255	SW8082	PCB-1221 (AROCHLOR 1221)	82	U	82	UJ	27	82	ug/kg	HT
SB	NDA058	SW8082	PCB-1221 (AROCHLOR 1221)	74	U	74	UJ	24	74	ug/kg	HT
SB	NDA060	SW8082	PCB-1221 (AROCHLOR 1221)	73	U	73	UJ	24	73	ug/kg	HT
SB	NDA063	SW8082	PCB-1221 (AROCHLOR 1221)	72	U	72	UJ	23	72	ug/kg	HT
SB	NDA064FD1	SW8082	PCB-1221 (AROCHLOR 1221)	72	U	72	UJ	23	72	ug/kg	HT
SB	NDA066	SW8082	PCB-1221 (AROCHLOR 1221)	70	U	70	UJ	22	70	ug/kg	HT
SB	NDA068	SW8082	PCB-1221 (AROCHLOR 1221)	72	U	72	UJ	23	72	ug/kg	HT
SB	NDA070	SW8082	PCB-1221 (AROCHLOR 1221)	71	U	71	UJ	22	71	ug/kg	HT
SB	NDA073	SW8082	PCB-1221 (AROCHLOR 1221)	71	U	71	UJ	23	71	ug/kg	HT
SB	NDA075	SW8082	PCB-1221 (AROCHLOR 1221)	70	U	70	UJ	22	70	ug/kg	HT
SB	NDA077	SW8082	PCB-1221 (AROCHLOR 1221)	80	U	80	UJ	25	80	ug/kg	HT
SB	NDA081	SW8082	PCB-1221 (AROCHLOR 1221)	70	U	70	UJ	22	70	ug/kg	HT
SB	NDA083	SW8082	PCB-1221 (AROCHLOR 1221)	70	U	70	UJ	22	70	ug/kg	HT
SB	NDA114	SW8082	PCB-1221 (AROCHLOR 1221)	87	U	87	UJ	28	87	ug/kg	HT
SB	NDA116	SW8082	PCB-1221 (AROCHLOR 1221)	83	U	83	UJ	27	83	ug/kg	HT
SB	NDA118	SW8082	PCB-1221 (AROCHLOR 1221)	86	U	86	UJ	28	86	ug/kg	HT
SB	NDA102	SW8082	PCB-1221 (AROCHLOR 1221)	104	U	104	UJ	34	104	ug/kg	HT
SB	NDA105	SW8082	PCB-1221 (AROCHLOR 1221)	106	U	106	UJ	35	106	ug/kg	HT
SB	NDA106FD1	SW8082	PCB-1221 (AROCHLOR 1221)	106	U	106	UJ	35	106	ug/kg	HT
SB	NDA108	SW8082	PCB-1221 (AROCHLOR 1221)	89	U	89	UJ	29	89	ug/kg	HT
SB	NDA110	SW8082	PCB-1221 (AROCHLOR 1221)	89	U	89	UJ	29	89	ug/kg	HT
SB	NDA112	SW8082	PCB-1221 (AROCHLOR 1221)	87	U	87	UJ	29	87	ug/kg	HT
SD	NDA050	SW8082	PCB-1221 (AROCHLOR 1221)	154	U	154	UJ	51	154	ug/kg	HT
SD	NDA051FD1	SW8082	PCB-1221 (AROCHLOR 1221)	165	U	165	UJ	54	165	ug/kg	HT
SD	NDA052	SW8082	PCB-1221 (AROCHLOR 1221)	165	U	165	UJ	54	165	ug/kg	HT
SD	NDA053	SW8082	PCB-1221 (AROCHLOR 1221)	100	U	100	UJ	33	100	ug/kg	HT
SD	NDA054	SW8082	PCB-1221 (AROCHLOR 1221)	68	U	68	UJ	22	68	ug/kg	HT
SD	NDA055	SW8082	PCB-1221 (AROCHLOR 1221)	67	U	67	UJ	22	67	ug/kg	HT
SD	NDA047	SW8082	PCB-1221 (AROCHLOR 1221)	73	U	73	UJ	24	73	ug/kg	HT
SD	NDA048	SW8082	PCB-1221 (AROCHLOR 1221)	76	U	76	UJ	25	76	ug/kg	HT
SD	NDA049	SW8082	PCB-1221 (AROCHLOR 1221)	73	U	73	UJ	24	73	ug/kg	HT
SS	NDA164	SW8082	PCB-1221 (AROCHLOR 1221)	82	U	82	UJ	27	82	ug/kg	HT
SS	NDA166	SW8082	PCB-1221 (AROCHLOR 1221)	83	U	83	UJ	27	83	ug/kg	HT
SS	NDA168	SW8082	PCB-1221 (AROCHLOR 1221)	78	U	78	UJ	26	78	ug/kg	HT
SS	NDA170	SW8082	PCB-1221 (AROCHLOR 1221)	80	U	80	UJ	26	80	ug/kg	HT
SS	NDA172	SW8082	PCB-1221 (AROCHLOR 1221)	72	U	72	UJ	24	72	ug/kg	HT
SS	NDA174	SW8082	PCB-1221 (AROCHLOR 1221)	70	U	70	UJ	23	70	ug/kg	HT
SS	NDA176	SW8082	PCB-1221 (AROCHLOR 1221)	188	U	188	UJ	62	188	ug/kg	HT
SS	NDA185	SW8082	PCB-1221 (AROCHLOR 1221)	79	U	79	UJ	26	79	ug/kg	HT
SS	NDA186	SW8082	PCB-1221 (AROCHLOR 1221)	75	U	75	UJ	25	75	ug/kg	HT
SS	NDA187	SW8082	PCB-1221 (AROCHLOR 1221)	72	U	72	UJ	24	72	ug/kg	HT
SS	NDA188	SW8082	PCB-1221 (AROCHLOR 1221)	91	U	91	UJ	30	91	ug/kg	HT
SS	NDA189	SW8082	PCB-1221 (AROCHLOR 1221)	75	U	75	UJ	25	75	ug/kg	HT
SS	NDA190	SW8082	PCB-1221 (AROCHLOR 1221)	75	U	75	UJ	25	75	ug/kg	HT
SS	NDA191	SW8082	PCB-1221 (AROCHLOR 1221)	69	U	69	UJ	23	69	ug/kg	HT
SS	NDA192FD1	SW8082	PCB-1221 (AROCHLOR 1221)	78	U	78	UJ	26	78	ug/kg	HT
SS	NDA193	SW8082	PCB-1221 (AROCHLOR 1221)	69	U	69	UJ	23	69	ug/kg	HT
SS	NDA194	SW8082	PCB-1221 (AROCHLOR 1221)	82	U	82	UJ	27	82	ug/kg	HT
SS	NDA195	SW8082	PCB-1221 (AROCHLOR 1221)	69	U	69	UJ	23	69	ug/kg	HT
SS	NDA057	SW8082	PCB-1221 (AROCHLOR 1221)	83	U	83	UJ	27	83	ug/kg	HT
SS	NDA059	SW8082	PCB-1221 (AROCHLOR 1221)	72	U	72	UJ	24	72	ug/kg	HT
SS	NDA061	SW8082	PCB-1221 (AROCHLOR 1221)	70	U	70	UJ	23	70	ug/kg	HT
SS	NDA062FD1	SW8082	PCB-1221 (AROCHLOR 1221)	71	U	71	UJ	23	71	ug/kg	HT
SS	NDA065	SW8082	PCB-1221 (AROCHLOR 1221)	84	U	84	UJ	27	84	ug/kg	HT
SS	NDA067	SW8082	PCB-1221 (AROCHLOR 1221)	72	U	72	UJ	23	72	ug/kg	HT
SS	NDA069	SW8082	PCB-1221 (AROCHLOR 1221)	68	U	68	UJ	21	68	ug/kg	HT
SS	NDA119	SW8082	PCB-1221 (AROCHLOR 1221)	75	U	75	UJ	24	75	ug/kg	HT
SS	NDA120	SW8082	PCB-1221 (AROCHLOR 1221)	88	U	88	UJ	28	88	ug/kg	HT

Matrix	Sample ID	Analytical Method	Parameter	Lab Result	Lab Qual	Final Result	Final Qual	DL	RL	Units	Comments
SS	NDA121	SW8082	PCB-1221 (AROCHLOR 1221)	73	U	73	UJ	23	73	ug/kg	HT
SS	NDA122	SW8082	PCB-1221 (AROCHLOR 1221)	75	U	75	UJ	24	75	ug/kg	HT
SS	NDA123	SW8082	PCB-1221 (AROCHLOR 1221)	75	U	75	UJ	24	75	ug/kg	HT
SS	NDA124	SW8082	PCB-1221 (AROCHLOR 1221)	75	U	75	UJ	24	75	ug/kg	HT
SS	NDA071	SW8082	PCB-1221 (AROCHLOR 1221)	80	U	80	UJ	25	80	ug/kg	HT
SS	NDA072FD1	SW8082	PCB-1221 (AROCHLOR 1221)	70	U	70	UJ	22	70	ug/kg	HT
SS	NDA074	SW8082	PCB-1221 (AROCHLOR 1221)	71	U	71	UJ	23	71	ug/kg	HT
SS	NDA076	SW8082	PCB-1221 (AROCHLOR 1221)	70	U	70	UJ	22	70	ug/kg	HT
SS	NDA078	SW8082	PCB-1221 (AROCHLOR 1221)	70	U	70	UJ	22	70	ug/kg	HT
SS	NDA080	SW8082	PCB-1221 (AROCHLOR 1221)	69	U	69	UJ	22	69	ug/kg	HT
SS	NDA082	SW8082	PCB-1221 (AROCHLOR 1221)	68	U	68	UJ	21	68	ug/kg	HT
SS	NDA113	SW8082	PCB-1221 (AROCHLOR 1221)	82	U	82	UJ	27	82	ug/kg	HT
SS	NDA115	SW8082	PCB-1221 (AROCHLOR 1221)	76	U	76	UJ	25	76	ug/kg	HT
SS	NDA117	SW8082	PCB-1221 (AROCHLOR 1221)	84	U	84	UJ	28	84	ug/kg	HT
SS	NDA101	SW8082	PCB-1221 (AROCHLOR 1221)	89	U	89	UJ	29	89	ug/kg	HT
SS	NDA103	SW8082	PCB-1221 (AROCHLOR 1221)	91	U	91	UJ	30	91	ug/kg	HT
SS	NDA104FD1	SW8082	PCB-1221 (AROCHLOR 1221)	94	U	94	UJ	31	94	ug/kg	HT
SS	NDA107	SW8082	PCB-1221 (AROCHLOR 1221)	83	U	83	UJ	27	83	ug/kg	HT
SS	NDA109	SW8082	PCB-1221 (AROCHLOR 1221)	87	U	87	UJ	29	87	ug/kg	HT
SS	NDA111	SW8082	PCB-1221 (AROCHLOR 1221)	88	U	88	UJ	29	88	ug/kg	HT
SB	NDA165	SW8082	PCB-1016 (AROCHLOR 1016)	37	U	37	UJ	11	37	ug/kg	HT
SB	NDA167	SW8082	PCB-1016 (AROCHLOR 1016)	40	U	40	UJ	12	40	ug/kg	HT
SB	NDA169	SW8082	PCB-1016 (AROCHLOR 1016)	39	U	39	UJ	12	39	ug/kg	HT
SB	NDA171	SW8082	PCB-1016 (AROCHLOR 1016)	36	U	36	UJ	11	36	ug/kg	HT
SB	NDA173	SW8082	PCB-1016 (AROCHLOR 1016)	42	U	42	UJ	13	42	ug/kg	HT
SB	NDA175	SW8082	PCB-1016 (AROCHLOR 1016)	37	U	37	UJ	11	37	ug/kg	HT
SB	NDA177	SW8082	PCB-1016 (AROCHLOR 1016)	38	U	38	UJ	12	38	ug/kg	HT
SB	NDA213	SW8082	PCB-1016 (AROCHLOR 1016)	38	U	38	UJ	11	38	ug/kg	HT
SB	NDA214FD1	SW8082	PCB-1016 (AROCHLOR 1016)	37	U	37	UJ	11	37	ug/kg	HT
SB	NDA215	SW8082	PCB-1016 (AROCHLOR 1016)	38	U	38	UJ	12	38	ug/kg	HT
SB	NDA216	SW8082	PCB-1016 (AROCHLOR 1016)	36	U	36	UJ	11	36	ug/kg	HT
SB	NDA217	SW8082	PCB-1016 (AROCHLOR 1016)	38	U	38	UJ	11	38	ug/kg	HT
SB	NDA218	SW8082	PCB-1016 (AROCHLOR 1016)	36	U	36	UJ	11	36	ug/kg	HT
SB	NDA219	SW8082	PCB-1016 (AROCHLOR 1016)	37	U	37	UJ	11	37	ug/kg	HT
SB	NDA220	SW8082	PCB-1016 (AROCHLOR 1016)	38	U	38	UJ	11	38	ug/kg	HT
SB	NDA221	SW8082	PCB-1016 (AROCHLOR 1016)	35	U	35	UJ	11	35	ug/kg	HT
SB	NDA222	SW8082	PCB-1016 (AROCHLOR 1016)	33	U	33	UJ	10	33	ug/kg	HT
SB	NDA223	SW8082	PCB-1016 (AROCHLOR 1016)	38	U	38	UJ	11	38	ug/kg	HT
SB	NDA235	SW8082	PCB-1016 (AROCHLOR 1016)	43	U	43	UJ	13	43	ug/kg	HT
SB	NDA236	SW8082	PCB-1016 (AROCHLOR 1016)	37	U	37	UJ	11	37	ug/kg	HT
SB	NDA237FD1	SW8082	PCB-1016 (AROCHLOR 1016)	37	U	37	UJ	11	37	ug/kg	HT
SB	NDA238	SW8082	PCB-1016 (AROCHLOR 1016)	37	U	37	UJ	11	37	ug/kg	HT
SB	NDA239	SW8082	PCB-1016 (AROCHLOR 1016)	37	U	37	UJ	11	37	ug/kg	HT
SB	NDA240	SW8082	PCB-1016 (AROCHLOR 1016)	40	U	40	UJ	12	40	ug/kg	HT
SB	NDA241	SW8082	PCB-1016 (AROCHLOR 1016)	37	U	37	UJ	11	37	ug/kg	HT
SB	NDA242	SW8082	PCB-1016 (AROCHLOR 1016)	41	U	41	UJ	12	41	ug/kg	HT
SB	NDA243	SW8082	PCB-1016 (AROCHLOR 1016)	39	U	39	UJ	12	39	ug/kg	HT
SB	NDA244	SW8082	PCB-1016 (AROCHLOR 1016)	36	U	36	UJ	11	36	ug/kg	HT
SB	NDA245	SW8082	PCB-1016 (AROCHLOR 1016)	38	U	38	UJ	12	38	ug/kg	HT
SB	NDA246	SW8082	PCB-1016 (AROCHLOR 1016)	40	U	40	UJ	12	40	ug/kg	HT
SB	NDA247FD1	SW8082	PCB-1016 (AROCHLOR 1016)	38	U	38	UJ	12	38	ug/kg	HT
SB	NDA248	SW8082	PCB-1016 (AROCHLOR 1016)	40	U	40	UJ	12	40	ug/kg	HT
SB	NDA249	SW8082	PCB-1016 (AROCHLOR 1016)	37	U	37	UJ	11	37	ug/kg	HT
SB	NDA252	SW8082	PCB-1016 (AROCHLOR 1016)	39	U	39	UJ	12	39	ug/kg	HT
SB	NDA253	SW8082	PCB-1016 (AROCHLOR 1016)	33	U	33	UJ	9.9	33	ug/kg	HT
SB	NDA254	SW8082	PCB-1016 (AROCHLOR 1016)	41	U	41	UJ	12	41	ug/kg	HT
SB	NDA255	SW8082	PCB-1016 (AROCHLOR 1016)	41	U	41	UJ	12	41	ug/kg	HT
SB	NDA058	SW8082	PCB-1016 (AROCHLOR 1016)	37	U	37	UJ	11	37	ug/kg	HT
SB	NDA060	SW8082	PCB-1016 (AROCHLOR 1016)	36	U	36	UJ	11	36	ug/kg	HT
SB	NDA063	SW8082	PCB-1016 (AROCHLOR 1016)	35	U	35	UJ	35	35	ug/kg	HT
SB	NDA064FD1	SW8082	PCB-1016 (AROCHLOR 1016)	35	U	35	UJ	35	35	ug/kg	HT
SB	NDA066	SW8082	PCB-1016 (AROCHLOR 1016)	35	U	35	UJ	35	35	ug/kg	HT
SB	NDA068	SW8082	PCB-1016 (AROCHLOR 1016)	36	U	36	UJ	36	36	ug/kg	HT
SB	NDA070	SW8082	PCB-1016 (AROCHLOR 1016)	35	U	35	UJ	35	35	ug/kg	HT
SB	NDA073	SW8082	PCB-1016 (AROCHLOR 1016)	35	U	35	UJ	35	35	ug/kg	HT
SB	NDA075	SW8082	PCB-1016 (AROCHLOR 1016)	34	U	34	UJ	34	34	ug/kg	HT
SB	NDA077	SW8082	PCB-1016 (AROCHLOR 1016)	39	U	39	UJ	39	39	ug/kg	HT
SB	NDA081	SW8082	PCB-1016 (AROCHLOR 1016)	34	U	34	UJ	34	34	ug/kg	HT
SB	NDA083	SW8082	PCB-1016 (AROCHLOR 1016)	34	U	34	UJ	34	34	ug/kg	HT
SB	NDA114	SW8082	PCB-1016 (AROCHLOR 1016)	43	U	43	UJ	13	43	ug/kg	HT

Matrix	Sample ID	Analytical Method	Parameter	Lab Result	Lab Qual	Final Result	Final Qual	DL	RL	Units	Comments
SB	NDA116	SW8082	PCB-1016 (AROCHLOR 1016)	41	U	41	UJ	12	41	ug/kg	HT
SB	NDA118	SW8082	PCB-1016 (AROCHLOR 1016)	42	U	42	UJ	13	42	ug/kg	HT
SB	NDA102	SW8082	PCB-1016 (AROCHLOR 1016)	51	U	51	UJ	15	51	ug/kg	HT
SB	NDA105	SW8082	PCB-1016 (AROCHLOR 1016)	52	U	52	UJ	16	52	ug/kg	HT
SB	NDA106FD1	SW8082	PCB-1016 (AROCHLOR 1016)	52	U	52	UJ	16	52	ug/kg	HT
SB	NDA108	SW8082	PCB-1016 (AROCHLOR 1016)	44	U	44	UJ	13	44	ug/kg	HT
SB	NDA110	SW8082	PCB-1016 (AROCHLOR 1016)	44	U	44	UJ	13	44	ug/kg	HT
SB	NDA112	SW8082	PCB-1016 (AROCHLOR 1016)	43	U	43	UJ	13	43	ug/kg	HT
SD	NDA050	SW8082	PCB-1016 (AROCHLOR 1016)	76	U	76	UJ	23	76	ug/kg	HT
SD	NDA051FD1	SW8082	PCB-1016 (AROCHLOR 1016)	81	U	81	UJ	25	81	ug/kg	HT
SD	NDA052	SW8082	PCB-1016 (AROCHLOR 1016)	82	U	82	UJ	25	82	ug/kg	HT
SD	NDA053	SW8082	PCB-1016 (AROCHLOR 1016)	49	U	49	UJ	15	49	ug/kg	HT
SD	NDA054	SW8082	PCB-1016 (AROCHLOR 1016)	34	U	34	UJ	10	34	ug/kg	HT
SD	NDA055	SW8082	PCB-1016 (AROCHLOR 1016)	33	U	33	UJ	10	33	ug/kg	HT
SD	NDA047	SW8082	PCB-1016 (AROCHLOR 1016)	36	U	36	UJ	11	36	ug/kg	HT
SD	NDA048	SW8082	PCB-1016 (AROCHLOR 1016)	38	U	38	UJ	11	38	ug/kg	HT
SD	NDA049	SW8082	PCB-1016 (AROCHLOR 1016)	36	U	36	UJ	11	36	ug/kg	HT
SS	NDA164	SW8082	PCB-1016 (AROCHLOR 1016)	41	U	41	UJ	12	41	ug/kg	HT
SS	NDA166	SW8082	PCB-1016 (AROCHLOR 1016)	41	U	41	UJ	12	41	ug/kg	HT
SS	NDA168	SW8082	PCB-1016 (AROCHLOR 1016)	38	U	38	UJ	12	38	ug/kg	HT
SS	NDA170	SW8082	PCB-1016 (AROCHLOR 1016)	40	U	40	UJ	12	40	ug/kg	HT
SS	NDA172	SW8082	PCB-1016 (AROCHLOR 1016)	35	U	35	UJ	11	35	ug/kg	HT
SS	NDA174	SW8082	PCB-1016 (AROCHLOR 1016)	34	U	34	UJ	10	34	ug/kg	HT
SS	NDA176	SW8082	PCB-1016 (AROCHLOR 1016)	92	U	92	UJ	28	92	ug/kg	HT
SS	NDA185	SW8082	PCB-1016 (AROCHLOR 1016)	39	U	39	UJ	12	39	ug/kg	HT
SS	NDA186	SW8082	PCB-1016 (AROCHLOR 1016)	37	U	37	UJ	11	37	ug/kg	HT
SS	NDA187	SW8082	PCB-1016 (AROCHLOR 1016)	35	U	35	UJ	11	35	ug/kg	HT
SS	NDA188	SW8082	PCB-1016 (AROCHLOR 1016)	45	U	45	UJ	14	45	ug/kg	HT
SS	NDA189	SW8082	PCB-1016 (AROCHLOR 1016)	37	U	37	UJ	11	37	ug/kg	HT
SS	NDA190	SW8082	PCB-1016 (AROCHLOR 1016)	37	U	37	UJ	11	37	ug/kg	HT
SS	NDA191	SW8082	PCB-1016 (AROCHLOR 1016)	34	U	34	UJ	10	34	ug/kg	HT
SS	NDA192FD1	SW8082	PCB-1016 (AROCHLOR 1016)	38	U	38	UJ	12	38	ug/kg	HT
SS	NDA193	SW8082	PCB-1016 (AROCHLOR 1016)	34	U	34	UJ	10	34	ug/kg	HT
SS	NDA194	SW8082	PCB-1016 (AROCHLOR 1016)	40	U	40	UJ	12	40	ug/kg	HT
SS	NDA195	SW8082	PCB-1016 (AROCHLOR 1016)	34	U	34	UJ	10	34	ug/kg	HT
SS	NDA057	SW8082	PCB-1016 (AROCHLOR 1016)	41	U	41	UJ	12	41	ug/kg	HT
SS	NDA059	SW8082	PCB-1016 (AROCHLOR 1016)	35	U	35	UJ	11	35	ug/kg	HT
SS	NDA061	SW8082	PCB-1016 (AROCHLOR 1016)	34	U	34	UJ	10	34	ug/kg	HT
SS	NDA062FD1	SW8082	PCB-1016 (AROCHLOR 1016)	35	U	35	UJ	11	35	ug/kg	HT
SS	NDA065	SW8082	PCB-1016 (AROCHLOR 1016)	41	U	41	UJ	41	41	ug/kg	HT
SS	NDA067	SW8082	PCB-1016 (AROCHLOR 1016)	36	U	36	UJ	36	36	ug/kg	HT
SS	NDA069	SW8082	PCB-1016 (AROCHLOR 1016)	33	U	33	UJ	33	33	ug/kg	HT
SS	NDA119	SW8082	PCB-1016 (AROCHLOR 1016)	37	U	37	UJ	37	37	ug/kg	HT
SS	NDA120	SW8082	PCB-1016 (AROCHLOR 1016)	44	U	44	UJ	44	44	ug/kg	HT
SS	NDA121	SW8082	PCB-1016 (AROCHLOR 1016)	36	U	36	UJ	36	36	ug/kg	HT
SS	NDA122	SW8082	PCB-1016 (AROCHLOR 1016)	37	U	37	UJ	37	37	ug/kg	HT
SS	NDA123	SW8082	PCB-1016 (AROCHLOR 1016)	37	U	37	UJ	37	37	ug/kg	HT
SS	NDA124	SW8082	PCB-1016 (AROCHLOR 1016)	37	U	37	UJ	37	37	ug/kg	HT
SS	NDA071	SW8082	PCB-1016 (AROCHLOR 1016)	39	U	39	UJ	39	39	ug/kg	HT
SS	NDA072FD1	SW8082	PCB-1016 (AROCHLOR 1016)	35	U	35	UJ	35	35	ug/kg	HT
SS	NDA074	SW8082	PCB-1016 (AROCHLOR 1016)	35	U	35	UJ	35	35	ug/kg	HT
SS	NDA076	SW8082	PCB-1016 (AROCHLOR 1016)	35	U	35	UJ	35	35	ug/kg	HT
SS	NDA078	SW8082	PCB-1016 (AROCHLOR 1016)	35	U	35	UJ	35	35	ug/kg	HT
SS	NDA080	SW8082	PCB-1016 (AROCHLOR 1016)	34	U	34	UJ	34	34	ug/kg	HT
SS	NDA082	SW8082	PCB-1016 (AROCHLOR 1016)	33	U	33	UJ	33	33	ug/kg	HT
SS	NDA113	SW8082	PCB-1016 (AROCHLOR 1016)	41	U	41	UJ	12	41	ug/kg	HT
SS	NDA115	SW8082	PCB-1016 (AROCHLOR 1016)	38	U	38	UJ	11	38	ug/kg	HT
SS	NDA117	SW8082	PCB-1016 (AROCHLOR 1016)	42	U	42	UJ	13	42	ug/kg	HT
SS	NDA101	SW8082	PCB-1016 (AROCHLOR 1016)	44	U	44	UJ	13	44	ug/kg	HT
SS	NDA103	SW8082	PCB-1016 (AROCHLOR 1016)	45	U	45	UJ	14	45	ug/kg	HT
SS	NDA104FD1	SW8082	PCB-1016 (AROCHLOR 1016)	46	U	46	UJ	14	46	ug/kg	HT
SS	NDA107	SW8082	PCB-1016 (AROCHLOR 1016)	41	U	41	UJ	12	41	ug/kg	HT
SS	NDA109	SW8082	PCB-1016 (AROCHLOR 1016)	43	U	43	UJ	13	43	ug/kg	HT
SS	NDA111	SW8082	PCB-1016 (AROCHLOR 1016)	44	U	44	UJ	13	44	ug/kg	HT
SB	NDA213	SW8081	p,p'-DDT	3.8	U	3.8	UJ	0.45	3.8	ug/kg	HT
SB	NDA214FD1	SW8081	p,p'-DDT	3.7	U	3.7	UJ	0.43	3.7	ug/kg	HT
SB	NDA215	SW8081	p,p'-DDT	3.8	U	3.8	UJ	0.45	3.8	ug/kg	HT
SB	NDA216	SW8081	p,p'-DDT	3.6	U	3.6	UJ	0.43	3.6	ug/kg	HT
SB	NDA217	SW8081	p,p'-DDT	3.8	U	3.8	UJ	0.45	3.8	ug/kg	HT
SB	NDA218	SW8081	p,p'-DDT	3.7	U	3.7	UJ	0.43	3.7	ug/kg	HT

Matrix	Sample ID	Analytical Method	Parameter	Lab Result	Lab Qual	Final Result	Final Qual	DL	RL	Units	Comments
SB	NDA219	SW8081	p,p'-DDT	3.7	U	3.7	UJ	0.43	3.7	ug/kg	HT
SB	NDA220	SW8081	p,p'-DDT	3.8	U	3.8	UJ	0.45	3.8	ug/kg	HT
SB	NDA221	SW8081	p,p'-DDT	3.6	U	3.6	UJ	0.42	3.6	ug/kg	HT
SB	NDA222	SW8081	p,p'-DDT	3.3	U	3.3	UJ	0.39	3.3	ug/kg	HT
SB	NDA223	SW8081	p,p'-DDT	3.8	U	3.8	UJ	0.44	3.8	ug/kg	HT
SB	NDA235	SW8081	p,p'-DDT	4.4	U	4.4	UJ	0.51	4.4	ug/kg	HT
SB	NDA236	SW8081	p,p'-DDT	3.8	U	3.8	UJ	0.44	3.8	ug/kg	HT
SB	NDA237FD1	SW8081	p,p'-DDT	3.7	U	3.7	UJ	0.44	3.7	ug/kg	HT
SB	NDA238	SW8081	p,p'-DDT	3.7	U	3.7	UJ	0.44	3.7	ug/kg	HT
SB	NDA239	SW8081	p,p'-DDT	3.7	U	3.7	UJ	0.44	3.7	ug/kg	HT
SB	NDA240	SW8081	p,p'-DDT	4	U	4	UJ	0.47	4	ug/kg	HT
SB	NDA241	SW8081	p,p'-DDT	3.7	U	3.7	UJ	0.44	3.7	ug/kg	HT
SB	NDA242	SW8081	p,p'-DDT	4.2	U	4.2	UJ	0.49	4.2	ug/kg	HT
SB	NDA243	SW8081	p,p'-DDT	3.9	U	3.9	UJ	0.46	3.9	ug/kg	HT
SB	NDA244	SW8081	p,p'-DDT	3.7	U	3.7	UJ	0.43	3.7	ug/kg	HT
SB	NDA245	SW8081	p,p'-DDT	3.8	U	3.8	UJ	0.45	3.8	ug/kg	HT
SB	NDA246	SW8081	p,p'-DDT	4.1	U	4.1	UJ	0.48	4.1	ug/kg	HT
SB	NDA247FD1	SW8081	p,p'-DDT	3.8	U	3.8	UJ	0.45	3.8	ug/kg	HT
SB	NDA248	SW8081	p,p'-DDT	4	U	4	UJ	0.47	4	ug/kg	HT
SB	NDA249	SW8081	p,p'-DDT	3.7	U	3.7	UJ	0.44	3.7	ug/kg	HT
SB	NDA252	SW8081	p,p'-DDT	3.9	U	3.9	UJ	0.46	3.9	ug/kg	HT
SB	NDA253	SW8081	p,p'-DDT	4.2	U	4.2	UJ	0.49	4.2	ug/kg	HT
SB	NDA254	SW8081	p,p'-DDT	4.2	U	4.2	UJ	0.49	4.2	ug/kg	HT
SB	NDA255	SW8081	p,p'-DDT	4.1	U	4.1	UJ	0.48	4.1	ug/kg	HT
SB	NDA058	SW8081	p,p'-DDT	3.7	U	3.7	UJ	0.43	3.7	ug/kg	HT
SB	NDA060	SW8081	p,p'-DDT	3.7	U	3.7	UJ	0.43	3.7	ug/kg	HT
SB	NDA063	SW8081	p,p'-DDT	3.6	U	3.6	UJ	0.42	3.6	ug/kg	HT
SB	NDA064FD1	SW8081	p,p'-DDT	3.6	U	3.6	UJ	0.42	3.6	ug/kg	HT
SB	NDA066	SW8081	p,p'-DDT	3.5	U	3.5	UJ	0.41	3.5	ug/kg	HT
SB	NDA068	SW8081	p,p'-DDT	3.6	U	3.6	UJ	0.42	3.6	ug/kg	HT
SB	NDA070	SW8081	p,p'-DDT	3.5	U	3.5	UJ	0.41	3.5	ug/kg	HT
SB	NDA073	SW8081	p,p'-DDT	3.5	U	3.5	UJ	0.41	3.5	ug/kg	HT
SB	NDA075	SW8081	p,p'-DDT	0.35	U	0.35	UJ	0.04	0.35	ug/kg	HT
SB	NDA077	SW8081	p,p'-DDT	0.4	U	0.4	UJ	0.05	0.4	ug/kg	HT
SB	NDA081	SW8081	p,p'-DDT	0.35	U	0.35	UJ	0.04	0.35	ug/kg	HT
SB	NDA083	SW8081	p,p'-DDT	0.34	U	0.34	UJ	0.04	0.34	ug/kg	HT
SB	NDA114	SW8081	p,p'-DDT	19	=	19	J	0.51	4.3	ug/kg	HT
SB	NDA116	SW8081	p,p'-DDT	4.2	U	4.2	UJ	0.49	4.2	ug/kg	HT
SB	NDA118	SW8081	p,p'-DDT	4.3	U	4.3	UJ	0.5	4.3	ug/kg	HT
SB	NDA105	SW8081	p,p'-DDT	5.3	U	5.3	UJ	0.62	5.3	ug/kg	HT
SB	NDA106FD1	SW8081	p,p'-DDT	5.3	U	5.3	UJ	0.62	5.3	ug/kg	HT
SB	NDA110	SW8081	p,p'-DDT	4.4	U	4.4	UJ	0.52	4.4	ug/kg	HT
SB	NDA112	SW8081	p,p'-DDT	4.3	U	4.3	UJ	0.51	4.3	ug/kg	HT
SD	NDA055	SW8081	p,p'-DDT	3.3	U	3.3	UJ	0.39	3.3	ug/kg	HT
SD	NDA047	SW8081	p,p'-DDT	3.6	U	3.6	UJ	0.43	3.6	ug/kg	HT
SD	NDA048	SW8081	p,p'-DDT	3.8	U	3.8	UJ	0.45	3.8	ug/kg	HT
SD	NDA049	SW8081	p,p'-DDT	3.6	U	3.6	UJ	0.43	3.6	ug/kg	HT
SS	NDA185	SW8081	p,p'-DDT	3.9	U	3.9	UJ	0.46	3.9	ug/kg	HT
SS	NDA186	SW8081	p,p'-DDT	3.7	U	3.7	UJ	0.44	3.7	ug/kg	HT
SS	NDA187	SW8081	p,p'-DDT	3.6	U	3.6	UJ	0.42	3.6	ug/kg	HT
SS	NDA188	SW8081	p,p'-DDT	4.6	U	4.6	UJ	0.53	4.6	ug/kg	HT
SS	NDA189	SW8081	p,p'-DDT	3.7	U	3.7	UJ	0.44	3.7	ug/kg	HT
SS	NDA190	SW8081	p,p'-DDT	3.8	U	3.8	UJ	0.44	3.8	ug/kg	HT
SS	NDA191	SW8081	p,p'-DDT	3.4	U	3.4	UJ	0.4	3.4	ug/kg	HT
SS	NDA192FD1	SW8081	p,p'-DDT	3.9	U	3.9	UJ	0.45	3.9	ug/kg	HT
SS	NDA194	SW8081	p,p'-DDT	4.1	U	4.1	UJ	0.48	4.1	ug/kg	HT
SS	NDA195	SW8081	p,p'-DDT	3.4	U	3.4	UJ	0.4	3.4	ug/kg	HT
SS	NDA057	SW8081	p,p'-DDT	4.1	U	4.1	UJ	0.49	4.1	ug/kg	HT
SS	NDA059	SW8081	p,p'-DDT	3.6	U	3.6	UJ	0.42	3.6	ug/kg	HT
SS	NDA061	SW8081	p,p'-DDT	3.5	U	3.5	UJ	0.41	3.5	ug/kg	HT
SS	NDA062FD1	SW8081	p,p'-DDT	3.5	U	3.5	UJ	0.41	3.5	ug/kg	HT
SS	NDA065	SW8081	p,p'-DDT	4.2	U	4.2	UJ	0.49	4.2	ug/kg	HT
SS	NDA067	SW8081	p,p'-DDT	3.6	U	3.6	UJ	0.42	3.6	ug/kg	HT
SS	NDA069	SW8081	p,p'-DDT	3.4	U	3.4	UJ	0.39	3.4	ug/kg	HT
SS	NDA121	SW8081	p,p'-DDT	3.6	U	3.6	UJ	0.43	3.6	ug/kg	HT
SS	NDA122	SW8081	p,p'-DDT	23	=	23	J	0.44	3.7	ug/kg	HT
SS	NDA071	SW8081	p,p'-DDT	4	U	4	UJ	0.47	4	ug/kg	HT
SS	NDA072FD1	SW8081	p,p'-DDT	3.5	U	3.5	UJ	0.41	3.5	ug/kg	HT
SS	NDA074	SW8081	p,p'-DDT	0.35	U	0.35	UJ	0.04	0.35	ug/kg	HT
SS	NDA078	SW8081	p,p'-DDT	0.35	U	0.35	UJ	0.04	0.35	ug/kg	HT

Matrix	Sample ID	Analytical Method	Parameter	Lab Result	Lab Qual	Final Result	Final Qual	DL	RL	Units	Comments
SS	NDA080	SW8081	p,p'-DDT	0.34	U	0.34	UJ	0.04	0.34	ug/kg	HT
SS	NDA082	SW8081	p,p'-DDT	0.34	U	0.34	UJ	0.04	0.34	ug/kg	HT
SS	NDA113	SW8081	p,p'-DDT	17	=	17	J	0.48	4.1	ug/kg	HT
SS	NDA115	SW8081	p,p'-DDT	3.8	U	3.8	UJ	0.45	3.8	ug/kg	HT
SS	NDA117	SW8081	p,p'-DDT	7	=	7	J	0.49	4.2	ug/kg	HT
SS	NDA101	SW8081	p,p'-DDT	7.2	=	7.2	J	0.52	4.4	ug/kg	HT
SS	NDA109	SW8081	p,p'-DDT	4.3	U	4.3	UJ	0.51	4.3	ug/kg	HT
SS	NDA111	SW8081	p,p'-DDT	4.4	U	4.4	UJ	0.52	4.4	ug/kg	HT
SB	NDA165	SW8081	p,p'-DDE	3.8	U	3.8	UJ	0.38	3.8	ug/kg	HT
SB	NDA167	SW8081	p,p'-DDE	4.1	U	4.1	UJ	0.41	4.1	ug/kg	HT
SB	NDA169	SW8081	p,p'-DDE	4	U	4	UJ	0.4	4	ug/kg	HT
SB	NDA171	SW8081	p,p'-DDE	3.6	U	3.6	UJ	0.37	3.6	ug/kg	HT
SB	NDA173	SW8081	p,p'-DDE	4.2	U	4.2	UJ	0.43	4.2	ug/kg	HT
SB	NDA175	SW8081	p,p'-DDE	3.7	U	3.7	UJ	0.38	3.7	ug/kg	HT
SB	NDA177	SW8081	p,p'-DDE	3.9	U	3.9	UJ	0.39	3.9	ug/kg	HT
SB	NDA213	SW8081	p,p'-DDE	3.8	U	3.8	UJ	0.39	3.8	ug/kg	HT
SB	NDA214FD1	SW8081	p,p'-DDE	3.7	U	3.7	UJ	0.38	3.7	ug/kg	HT
SB	NDA215	SW8081	p,p'-DDE	3.8	U	3.8	UJ	0.39	3.8	ug/kg	HT
SB	NDA216	SW8081	p,p'-DDE	3.6	U	3.6	UJ	0.37	3.6	ug/kg	HT
SB	NDA217	SW8081	p,p'-DDE	3.8	U	3.8	UJ	0.39	3.8	ug/kg	HT
SB	NDA218	SW8081	p,p'-DDE	3.7	U	3.7	UJ	0.37	3.7	ug/kg	HT
SB	NDA219	SW8081	p,p'-DDE	3.7	U	3.7	UJ	0.38	3.7	ug/kg	HT
SB	NDA220	SW8081	p,p'-DDE	3.8	U	3.8	UJ	0.39	3.8	ug/kg	HT
SB	NDA221	SW8081	p,p'-DDE	3.6	U	3.6	UJ	0.36	3.6	ug/kg	HT
SB	NDA222	SW8081	p,p'-DDE	3.3	U	3.3	UJ	0.34	3.3	ug/kg	HT
SB	NDA223	SW8081	p,p'-DDE	3.8	U	3.8	UJ	0.39	3.8	ug/kg	HT
SB	NDA235	SW8081	p,p'-DDE	4.4	U	4.4	UJ	0.45	4.4	ug/kg	HT
SB	NDA236	SW8081	p,p'-DDE	3.8	U	3.8	UJ	0.38	3.8	ug/kg	HT
SB	NDA237FD1	SW8081	p,p'-DDE	3.7	U	3.7	UJ	0.38	3.7	ug/kg	HT
SB	NDA238	SW8081	p,p'-DDE	3.7	U	3.7	UJ	0.38	3.7	ug/kg	HT
SB	NDA239	SW8081	p,p'-DDE	3.7	U	3.7	UJ	0.38	3.7	ug/kg	HT
SB	NDA240	SW8081	p,p'-DDE	4	U	4	UJ	0.41	4	ug/kg	HT
SB	NDA241	SW8081	p,p'-DDE	3.7	U	3.7	UJ	0.38	3.7	ug/kg	HT
SB	NDA242	SW8081	p,p'-DDE	4.2	U	4.2	UJ	0.42	4.2	ug/kg	HT
SB	NDA243	SW8081	p,p'-DDE	3.9	U	3.9	UJ	0.4	3.9	ug/kg	HT
SB	NDA244	SW8081	p,p'-DDE	3.7	U	3.7	UJ	0.37	3.7	ug/kg	HT
SB	NDA245	SW8081	p,p'-DDE	3.8	U	3.8	UJ	0.39	3.8	ug/kg	HT
SB	NDA248	SW8081	p,p'-DDE	4	U	4	UJ	0.41	4	ug/kg	HT
SB	NDA249	SW8081	p,p'-DDE	3.7	U	3.7	UJ	0.38	3.7	ug/kg	HT
SB	NDA252	SW8081	p,p'-DDE	3.9	U	3.9	UJ	0.4	3.9	ug/kg	HT
SB	NDA253	SW8081	p,p'-DDE	4.2	U	4.2	UJ	0.43	4.2	ug/kg	HT
SB	NDA254	SW8081	p,p'-DDE	4.2	U	4.2	UJ	0.42	4.2	ug/kg	HT
SB	NDA255	SW8081	p,p'-DDE	4.1	U	4.1	UJ	0.42	4.1	ug/kg	HT
SB	NDA058	SW8081	p,p'-DDE	3.7	U	3.7	UJ	0.38	3.7	ug/kg	HT
SB	NDA060	SW8081	p,p'-DDE	3.7	U	3.7	UJ	0.37	3.7	ug/kg	HT
SB	NDA063	SW8081	p,p'-DDE	3.6	U	3.6	UJ	0.36	3.6	ug/kg	HT
SB	NDA064FD1	SW8081	p,p'-DDE	3.6	U	3.6	UJ	0.36	3.6	ug/kg	HT
SB	NDA066	SW8081	p,p'-DDE	3.5	U	3.5	UJ	0.35	3.5	ug/kg	HT
SB	NDA068	SW8081	p,p'-DDE	3.6	U	3.6	UJ	0.37	3.6	ug/kg	HT
SB	NDA070	SW8081	p,p'-DDE	3.5	U	3.5	UJ	0.36	3.5	ug/kg	HT
SB	NDA073	SW8081	p,p'-DDE	3.5	U	3.5	UJ	0.36	3.5	ug/kg	HT
SB	NDA075	SW8081	p,p'-DDE	0.35	U	0.35	UJ	0.04	0.35	ug/kg	HT
SB	NDA077	SW8081	p,p'-DDE	0.4	U	0.4	UJ	0.04	0.4	ug/kg	HT
SB	NDA081	SW8081	p,p'-DDE	0.35	U	0.35	UJ	0.04	0.35	ug/kg	HT
SB	NDA083	SW8081	p,p'-DDE	0.34	U	0.34	UJ	0.03	0.34	ug/kg	HT
SB	NDA116	SW8081	p,p'-DDE	4.2	U	4.2	UJ	0.42	4.2	ug/kg	HT
SB	NDA118	SW8081	p,p'-DDE	4.3	U	4.3	UJ	0.44	4.3	ug/kg	HT
SB	NDA102	SW8081	p,p'-DDE	30	=	30	J	0.53	5.2	ug/kg	HT
SB	NDA108	SW8081	p,p'-DDE	5.8	=	5.8	J	0.45	4.4	ug/kg	HT
SD	NDA055	SW8081	p,p'-DDE	3.3	U	3.3	UJ	0.34	3.3	ug/kg	HT
SD	NDA047	SW8081	p,p'-DDE	3.6	U	3.6	UJ	0.37	3.6	ug/kg	HT
SD	NDA048	SW8081	p,p'-DDE	3.8	U	3.8	UJ	0.39	3.8	ug/kg	HT
SD	NDA049	SW8081	p,p'-DDE	3.6	U	3.6	UJ	0.37	3.6	ug/kg	HT
SS	NDA164	SW8081	p,p'-DDE	4.1	U	4.1	UJ	0.42	4.1	ug/kg	HT
SS	NDA166	SW8081	p,p'-DDE	4.1	U	4.1	UJ	0.42	4.1	ug/kg	HT
SS	NDA168	SW8081	p,p'-DDE	3.9	U	3.9	UJ	0.39	3.9	ug/kg	HT
SS	NDA172	SW8081	p,p'-DDE	3.6	U	3.6	UJ	0.36	3.6	ug/kg	HT
SS	NDA176	SW8081	p,p'-DDE	9.3	U	9.3	UJ	0.95	9.3	ug/kg	HT
SS	NDA185	SW8081	p,p'-DDE	3.9	U	3.9	UJ	0.4	3.9	ug/kg	HT
SS	NDA187	SW8081	p,p'-DDE	3.6	U	3.6	UJ	0.36	3.6	ug/kg	HT

Matrix	Sample ID	Analytical Method	Parameter	Lab Result	Lab Qual	Final Result	Final Qual	DL	RL	Units	Comments
SS	NDA188	SW8081	p,p'-DDE	4.6	U	4.6	UJ	0.46	4.6	ug/kg	HT
SS	NDA189	SW8081	p,p'-DDE	3.7	U	3.7	UJ	0.38	3.7	ug/kg	HT
SS	NDA190	SW8081	p,p'-DDE	3.8	U	3.8	UJ	0.38	3.8	ug/kg	HT
SS	NDA194	SW8081	p,p'-DDE	4.1	U	4.1	UJ	0.42	4.1	ug/kg	HT
SS	NDA195	SW8081	p,p'-DDE	3.4	U	3.4	UJ	0.35	3.4	ug/kg	HT
SS	NDA057	SW8081	p,p'-DDE	4.1	U	4.1	UJ	0.42	4.1	ug/kg	HT
SS	NDA059	SW8081	p,p'-DDE	3.6	U	3.6	UJ	0.36	3.6	ug/kg	HT
SS	NDA061	SW8081	p,p'-DDE	3.5	U	3.5	UJ	0.35	3.5	ug/kg	HT
SS	NDA062FD1	SW8081	p,p'-DDE	3.5	U	3.5	UJ	0.36	3.5	ug/kg	HT
SS	NDA065	SW8081	p,p'-DDE	4.2	U	4.2	UJ	0.42	4.2	ug/kg	HT
SS	NDA067	SW8081	p,p'-DDE	3.6	U	3.6	UJ	0.36	3.6	ug/kg	HT
SS	NDA069	SW8081	p,p'-DDE	3.4	U	3.4	UJ	0.34	3.4	ug/kg	HT
SS	NDA119	SW8081	p,p'-DDE	3.7	U	3.7	UJ	0.38	3.7	ug/kg	HT
SS	NDA120	SW8081	p,p'-DDE	4.4	U	4.4	UJ	0.45	4.4	ug/kg	HT
SS	NDA121	SW8081	p,p'-DDE	3.6	U	3.6	UJ	0.37	3.6	ug/kg	HT
SS	NDA122	SW8081	p,p'-DDE	9.9	=	9.9	J	0.38	3.7	ug/kg	HT
SS	NDA071	SW8081	p,p'-DDE	4	U	4	UJ	0.4	4	ug/kg	HT
SS	NDA072FD1	SW8081	p,p'-DDE	3.5	U	3.5	UJ	0.36	3.5	ug/kg	HT
SS	NDA074	SW8081	p,p'-DDE	0.35	U	0.35	UJ	0.04	0.35	ug/kg	HT
SS	NDA078	SW8081	p,p'-DDE	0.35	U	0.35	UJ	0.04	0.35	ug/kg	HT
SS	NDA080	SW8081	p,p'-DDE	0.34	U	0.34	UJ	0.03	0.34	ug/kg	HT
SS	NDA082	SW8081	p,p'-DDE	0.34	U	0.34	UJ	0.03	0.34	ug/kg	HT
SS	NDA113	SW8081	p,p'-DDE	74	=	74	J	0.42	4.1	ug/kg	HT
SS	NDA117	SW8081	p,p'-DDE	46	=	46	J	0.43	4.2	ug/kg	HT
SS	NDA101	SW8081	p,p'-DDE	29	=	29	J	0.45	4.4	ug/kg	HT
SS	NDA107	SW8081	p,p'-DDE	6.7	=	6.7	J	0.42	4.2	ug/kg	HT
SS	NDA111	SW8081	p,p'-DDE	7.5	=	7.5	J	0.45	4.4	ug/kg	HT
SB	NDA165	SW8081	p,p'-DDD	3.8	U	3.8	UJ	0.26	3.8	ug/kg	HT
SB	NDA167	SW8081	p,p'-DDD	4.1	U	4.1	UJ	0.28	4.1	ug/kg	HT
SB	NDA169	SW8081	p,p'-DDD	4	U	4	UJ	0.27	4	ug/kg	HT
SB	NDA171	SW8081	p,p'-DDD	3.6	U	3.6	UJ	0.25	3.6	ug/kg	HT
SB	NDA173	SW8081	p,p'-DDD	4.2	U	4.2	UJ	0.29	4.2	ug/kg	HT
SB	NDA175	SW8081	p,p'-DDD	3.7	U	3.7	UJ	0.26	3.7	ug/kg	HT
SB	NDA177	SW8081	p,p'-DDD	3.9	U	3.9	UJ	0.27	3.9	ug/kg	HT
SB	NDA213	SW8081	p,p'-DDD	3.8	U	3.8	UJ	0.26	3.8	ug/kg	HT
SB	NDA214FD1	SW8081	p,p'-DDD	3.7	U	3.7	UJ	0.26	3.7	ug/kg	HT
SB	NDA215	SW8081	p,p'-DDD	3.8	U	3.8	UJ	0.27	3.8	ug/kg	HT
SB	NDA216	SW8081	p,p'-DDD	3.6	U	3.6	UJ	0.25	3.6	ug/kg	HT
SB	NDA217	SW8081	p,p'-DDD	3.8	U	3.8	UJ	0.26	3.8	ug/kg	HT
SB	NDA218	SW8081	p,p'-DDD	3.7	U	3.7	UJ	0.25	3.7	ug/kg	HT
SB	NDA219	SW8081	p,p'-DDD	3.7	U	3.7	UJ	0.25	3.7	ug/kg	HT
SB	NDA220	SW8081	p,p'-DDD	3.8	U	3.8	UJ	0.26	3.8	ug/kg	HT
SB	NDA221	SW8081	p,p'-DDD	3.6	U	3.6	UJ	0.25	3.6	ug/kg	HT
SB	NDA222	SW8081	p,p'-DDD	3.3	U	3.3	UJ	0.23	3.3	ug/kg	HT
SB	NDA223	SW8081	p,p'-DDD	3.8	U	3.8	UJ	0.26	3.8	ug/kg	HT
SB	NDA235	SW8081	p,p'-DDD	4.4	U	4.4	UJ	0.3	4.4	ug/kg	HT
SB	NDA236	SW8081	p,p'-DDD	3.8	U	3.8	UJ	0.26	3.8	ug/kg	HT
SB	NDA237FD1	SW8081	p,p'-DDD	3.7	U	3.7	UJ	0.26	3.7	ug/kg	HT
SB	NDA238	SW8081	p,p'-DDD	3.7	U	3.7	UJ	0.26	3.7	ug/kg	HT
SB	NDA239	SW8081	p,p'-DDD	3.7	U	3.7	UJ	0.26	3.7	ug/kg	HT
SB	NDA240	SW8081	p,p'-DDD	4	U	4	UJ	0.28	4	ug/kg	HT
SB	NDA241	SW8081	p,p'-DDD	3.7	U	3.7	UJ	0.26	3.7	ug/kg	HT
SB	NDA242	SW8081	p,p'-DDD	4.2	U	4.2	UJ	0.29	4.2	ug/kg	HT
SB	NDA243	SW8081	p,p'-DDD	3.9	U	3.9	UJ	0.27	3.9	ug/kg	HT
SB	NDA244	SW8081	p,p'-DDD	3.7	U	3.7	UJ	0.25	3.7	ug/kg	HT
SB	NDA245	SW8081	p,p'-DDD	3.8	U	3.8	UJ	0.26	3.8	ug/kg	HT
SB	NDA246	SW8081	p,p'-DDD	4.1	U	4.1	UJ	0.28	4.1	ug/kg	HT
SB	NDA247FD1	SW8081	p,p'-DDD	3.8	U	3.8	UJ	0.27	3.8	ug/kg	HT
SB	NDA248	SW8081	p,p'-DDD	4	U	4	UJ	0.28	4	ug/kg	HT
SB	NDA249	SW8081	p,p'-DDD	3.7	U	3.7	UJ	0.26	3.7	ug/kg	HT
SB	NDA252	SW8081	p,p'-DDD	3.9	U	3.9	UJ	0.27	3.9	ug/kg	HT
SB	NDA253	SW8081	p,p'-DDD	4.2	U	4.2	UJ	0.29	4.2	ug/kg	HT
SB	NDA254	SW8081	p,p'-DDD	4.2	U	4.2	UJ	0.29	4.2	ug/kg	HT
SB	NDA255	SW8081	p,p'-DDD	4.1	U	4.1	UJ	0.28	4.1	ug/kg	HT
SB	NDA058	SW8081	p,p'-DDD	3.7	U	3.7	UJ	0.26	3.7	ug/kg	HT
SB	NDA060	SW8081	p,p'-DDD	3.7	U	3.7	UJ	0.25	3.7	ug/kg	HT
SB	NDA063	SW8081	p,p'-DDD	3.6	U	3.6	UJ	0.25	3.6	ug/kg	HT
SB	NDA064FD1	SW8081	p,p'-DDD	3.6	U	3.6	UJ	0.25	3.6	ug/kg	HT
SB	NDA066	SW8081	p,p'-DDD	3.5	U	3.5	UJ	0.24	3.5	ug/kg	HT
SB	NDA068	SW8081	p,p'-DDD	3.6	U	3.6	UJ	0.25	3.6	ug/kg	HT

Matrix	Sample ID	Analytical Method	Parameter	Lab Result	Lab Qual	Final Result	Final Qual	DL	RL	Units	Comments
SB	NDA070	SW8081	p,p'-DDD	3.5	U	3.5	UJ	0.24	3.5	ug/kg	HT
SB	NDA073	SW8081	p,p'-DDD	3.5	U	3.5	UJ	0.24	3.5	ug/kg	HT
SB	NDA075	SW8081	p,p'-DDD	0.35	U	0.35	UJ	0.02	0.35	ug/kg	HT
SB	NDA077	SW8081	p,p'-DDD	0.4	U	0.4	UJ	0.03	0.4	ug/kg	HT
SB	NDA081	SW8081	p,p'-DDD	0.35	U	0.35	UJ	0.02	0.35	ug/kg	HT
SB	NDA083	SW8081	p,p'-DDD	0.34	U	0.34	UJ	0.02	0.34	ug/kg	HT
SB	NDA116	SW8081	p,p'-DDD	4.2	U	4.2	UJ	0.29	4.2	ug/kg	HT
SB	NDA118	SW8081	p,p'-DDD	4.3	U	4.3	UJ	0.3	4.3	ug/kg	HT
SB	NDA110	SW8081	p,p'-DDD	4.4	U	4.4	UJ	0.31	4.4	ug/kg	HT
SD	NDA053	SW8081	p,p'-DDD	25	U	25	UJ	1.7	25	ug/kg	HT
SD	NDA054	SW8081	p,p'-DDD	3.4	U	3.4	UJ	0.24	3.4	ug/kg	HT
SD	NDA055	SW8081	p,p'-DDD	3.3	U	3.3	UJ	0.23	3.3	ug/kg	HT
SD	NDA047	SW8081	p,p'-DDD	3.6	U	3.6	UJ	0.25	3.6	ug/kg	HT
SD	NDA048	SW8081	p,p'-DDD	3.8	U	3.8	UJ	0.26	3.8	ug/kg	HT
SD	NDA049	SW8081	p,p'-DDD	3.6	U	3.6	UJ	0.25	3.6	ug/kg	HT
SS	NDA164	SW8081	p,p'-DDD	4.1	U	4.1	UJ	0.28	4.1	ug/kg	HT
SS	NDA166	SW8081	p,p'-DDD	4.1	U	4.1	UJ	0.29	4.1	ug/kg	HT
SS	NDA168	SW8081	p,p'-DDD	3.9	U	3.9	UJ	0.27	3.9	ug/kg	HT
SS	NDA170	SW8081	p,p'-DDD	4	U	4	UJ	0.28	4	ug/kg	HT
SS	NDA172	SW8081	p,p'-DDD	3.6	U	3.6	UJ	0.25	3.6	ug/kg	HT
SS	NDA174	SW8081	p,p'-DDD	3.5	U	3.5	UJ	0.24	3.5	ug/kg	HT
SS	NDA176	SW8081	p,p'-DDD	9.3	U	9.3	UJ	0.64	9.3	ug/kg	HT
SS	NDA185	SW8081	p,p'-DDD	3.9	U	3.9	UJ	0.27	3.9	ug/kg	HT
SS	NDA186	SW8081	p,p'-DDD	3.7	U	3.7	UJ	0.26	3.7	ug/kg	HT
SS	NDA187	SW8081	p,p'-DDD	3.6	U	3.6	UJ	0.25	3.6	ug/kg	HT
SS	NDA188	SW8081	p,p'-DDD	4.6	U	4.6	UJ	0.31	4.6	ug/kg	HT
SS	NDA189	SW8081	p,p'-DDD	3.7	U	3.7	UJ	0.26	3.7	ug/kg	HT
SS	NDA190	SW8081	p,p'-DDD	3.8	U	3.8	UJ	0.26	3.8	ug/kg	HT
SS	NDA191	SW8081	p,p'-DDD	3.4	U	3.4	UJ	0.24	3.4	ug/kg	HT
SS	NDA192FD1	SW8081	p,p'-DDD	3.9	U	3.9	UJ	0.27	3.9	ug/kg	HT
SS	NDA193	SW8081	p,p'-DDD	3.4	U	3.4	UJ	0.24	3.4	ug/kg	HT
SS	NDA194	SW8081	p,p'-DDD	4.1	U	4.1	UJ	0.28	4.1	ug/kg	HT
SS	NDA195	SW8081	p,p'-DDD	3.4	U	3.4	UJ	0.24	3.4	ug/kg	HT
SS	NDA057	SW8081	p,p'-DDD	4.1	U	4.1	UJ	0.29	4.1	ug/kg	HT
SS	NDA059	SW8081	p,p'-DDD	3.6	U	3.6	UJ	0.25	3.6	ug/kg	HT
SS	NDA061	SW8081	p,p'-DDD	3.5	U	3.5	UJ	0.24	3.5	ug/kg	HT
SS	NDA062FD1	SW8081	p,p'-DDD	3.5	U	3.5	UJ	0.24	3.5	ug/kg	HT
SS	NDA065	SW8081	p,p'-DDD	4.2	U	4.2	UJ	0.29	4.2	ug/kg	HT
SS	NDA067	SW8081	p,p'-DDD	3.6	U	3.6	UJ	0.25	3.6	ug/kg	HT
SS	NDA069	SW8081	p,p'-DDD	3.4	U	3.4	UJ	0.23	3.4	ug/kg	HT
SS	NDA119	SW8081	p,p'-DDD	3.7	U	3.7	UJ	0.26	3.7	ug/kg	HT
SS	NDA120	SW8081	p,p'-DDD	4.4	U	4.4	UJ	0.3	4.4	ug/kg	HT
SS	NDA121	SW8081	p,p'-DDD	3.6	U	3.6	UJ	0.25	3.6	ug/kg	HT
SS	NDA122	SW8081	p,p'-DDD	3.7	U	3.7	UJ	0.26	3.7	ug/kg	HT
SS	NDA123	SW8081	p,p'-DDD	3.7	U	3.7	UJ	0.26	3.7	ug/kg	HT
SS	NDA124	SW8081	p,p'-DDD	3.7	U	3.7	UJ	0.26	3.7	ug/kg	HT
SS	NDA071	SW8081	p,p'-DDD	4	U	4	UJ	0.27	4	ug/kg	HT
SS	NDA072FD1	SW8081	p,p'-DDD	3.5	U	3.5	UJ	0.24	3.5	ug/kg	HT
SS	NDA074	SW8081	p,p'-DDD	0.35	U	0.35	UJ	0.02	0.35	ug/kg	HT
SS	NDA078	SW8081	p,p'-DDD	0.35	U	0.35	UJ	0.02	0.35	ug/kg	HT
SS	NDA080	SW8081	p,p'-DDD	0.34	U	0.34	UJ	0.02	0.34	ug/kg	HT
SS	NDA082	SW8081	p,p'-DDD	0.34	U	0.34	UJ	0.02	0.34	ug/kg	HT
SS	NDA115	SW8081	p,p'-DDD	3.8	U	3.8	UJ	0.26	3.8	ug/kg	HT
SS	NDA117	SW8081	p,p'-DDD	13	=	13	J	0.29	4.2	ug/kg	HT
SS	NDA101	SW8081	p,p'-DDD	11	=	11	J	0.31	4.4	ug/kg	HT
SS	NDA103	SW8081	p,p'-DDD	4.5	U	4.5	UJ	0.31	4.5	ug/kg	HT
SS	NDA104FD1	SW8081	p,p'-DDD	4.7	U	4.7	UJ	0.32	4.7	ug/kg	HT
SS	NDA107	SW8081	p,p'-DDD	4.2	U	4.2	UJ	0.29	4.2	ug/kg	HT
SB	NDA213	SW8270	N-NITROSODIPHENYLAMINE	485	U	485	UJ	53	485	ug/kg	HT
SB	NDA214FD1	SW8270	N-NITROSODIPHENYLAMINE	487	U	487	UJ	54	487	ug/kg	HT
SB	NDA215	SW8270	N-NITROSODIPHENYLAMINE	527	U	527	UJ	58	527	ug/kg	HT
SB	NDA216	SW8270	N-NITROSODIPHENYLAMINE	537	U	537	UJ	59	537	ug/kg	HT
SB	NDA217	SW8270	N-NITROSODIPHENYLAMINE	540	U	540	UJ	59	540	ug/kg	HT
SB	NDA218	SW8270	N-NITROSODIPHENYLAMINE	505	U	505	UJ	56	505	ug/kg	HT
SB	NDA219	SW8270	N-NITROSODIPHENYLAMINE	380	U	380	UJ	42	380	ug/kg	HT
SB	NDA220	SW8270	N-NITROSODIPHENYLAMINE	542	U	542	UJ	60	542	ug/kg	HT
SB	NDA221	SW8270	N-NITROSODIPHENYLAMINE	501	U	501	UJ	55	501	ug/kg	HT
SB	NDA222	SW8270	N-NITROSODIPHENYLAMINE	459	U	459	UJ	51	459	ug/kg	HT
SB	NDA223	SW8270	N-NITROSODIPHENYLAMINE	527	U	527	UJ	58	527	ug/kg	HT
SB	NDA235	SW8270	N-NITROSODIPHENYLAMINE	504	U	504	UJ	55	504	ug/kg	HT

Matrix	Sample ID	Analytical Method	Parameter	Lab Result	Lab Qual	Final Result	Final Qual	DL	RL	Units	Comments
SB	NDA236	SW8270	N-NITROSODIPHENYLAMINE	423	U	423	UJ	47	423	ug/kg	HT
SB	NDA237FD1	SW8270	N-NITROSODIPHENYLAMINE	395	U	395	UJ	43	395	ug/kg	HT
SB	NDA238	SW8270	N-NITROSODIPHENYLAMINE	424	U	424	UJ	47	424	ug/kg	HT
SB	NDA239	SW8270	N-NITROSODIPHENYLAMINE	555	U	555	UJ	61	555	ug/kg	HT
SB	NDA240	SW8270	N-NITROSODIPHENYLAMINE	397	U	397	UJ	44	397	ug/kg	HT
SB	NDA241	SW8270	N-NITROSODIPHENYLAMINE	471	U	471	UJ	52	471	ug/kg	HT
SB	NDA242	SW8270	N-NITROSODIPHENYLAMINE	436	U	436	UJ	48	436	ug/kg	HT
SB	NDA243	SW8270	N-NITROSODIPHENYLAMINE	893	U	893	UJ	98	893	ug/kg	HT
SB	NDA244	SW8270	N-NITROSODIPHENYLAMINE	388	U	388	UJ	43	388	ug/kg	HT
SB	NDA245	SW8270	N-NITROSODIPHENYLAMINE	393	U	393	UJ	43	393	ug/kg	HT
SB	NDA246	SW8270	N-NITROSODIPHENYLAMINE	511	U	511	UJ	56	511	ug/kg	HT
SB	NDA247FD1	SW8270	N-NITROSODIPHENYLAMINE	390	U	390	UJ	43	390	ug/kg	HT
SB	NDA248	SW8270	N-NITROSODIPHENYLAMINE	453	U	453	UJ	50	453	ug/kg	HT
SB	NDA249	SW8270	N-NITROSODIPHENYLAMINE	374	U	374	UJ	41	374	ug/kg	HT
SB	NDA252	SW8270	N-NITROSODIPHENYLAMINE	420	U	420	UJ	46	420	ug/kg	HT
SB	NDA253	SW8270	N-NITROSODIPHENYLAMINE	439	U	439	UJ	48	439	ug/kg	HT
SB	NDA254	SW8270	N-NITROSODIPHENYLAMINE	391	U	391	UJ	43	391	ug/kg	HT
SB	NDA255	SW8270	N-NITROSODIPHENYLAMINE	375	U	375	UJ	41	375	ug/kg	HT
SB	NDA085	SW8270	N-NITROSODIPHENYLAMINE	482	U	482	UJ	53	482	ug/kg	HT
SB	NDA092	SW8270	N-NITROSODIPHENYLAMINE	400	U	400	UJ	44	400	ug/kg	HT
SB	NDA093	SW8270	N-NITROSODIPHENYLAMINE	339	U	339	UJ	37	339	ug/kg	HT
SB	NDA094	SW8270	N-NITROSODIPHENYLAMINE	510	U	510	UJ	56	510	ug/kg	HT
SB	NDA095FD1	SW8270	N-NITROSODIPHENYLAMINE	310	U	310	UJ	34	310	ug/kg	HT
SB	NDA296	SW8270	N-NITROSODIPHENYLAMINE	369	U	369	UJ	41	369	ug/kg	HT
SB	NDA297	SW8270	N-NITROSODIPHENYLAMINE	358	U	358	UJ	39	358	ug/kg	HT
SB	NDA298	SW8270	N-NITROSODIPHENYLAMINE	341	U	341	UJ	38	341	ug/kg	HT
SB	NDA299	SW8270	N-NITROSODIPHENYLAMINE	370	U	370	UJ	41	370	ug/kg	HT
SB	NDA058	SW8270	N-NITROSODIPHENYLAMINE	460	U	460	UJ	51	460	ug/kg	HT
SB	NDA060	SW8270	N-NITROSODIPHENYLAMINE	478	U	478	UJ	53	478	ug/kg	HT
SB	NDA063	SW8270	N-NITROSODIPHENYLAMINE	382	U	382	UJ	42	382	ug/kg	HT
SB	NDA064FD1	SW8270	N-NITROSODIPHENYLAMINE	351	U	351	UJ	39	351	ug/kg	HT
SB	NDA066	SW8270	N-NITROSODIPHENYLAMINE	344	U	344	UJ	38	344	ug/kg	HT
SB	NDA068	SW8270	N-NITROSODIPHENYLAMINE	360	U	360	UJ	40	360	ug/kg	HT
SB	NDA070	SW8270	N-NITROSODIPHENYLAMINE	404	U	404	UJ	44	404	ug/kg	HT
SB	NDA073	SW8270	N-NITROSODIPHENYLAMINE	383	U	383	UJ	42	383	ug/kg	HT
SB	NDA075	SW8270	N-NITROSODIPHENYLAMINE	401	U	401	UJ	44	401	ug/kg	HT
SB	NDA077	SW8270	N-NITROSODIPHENYLAMINE	441	U	441	UJ	49	441	ug/kg	HT
SB	NDA079	SW8270	N-NITROSODIPHENYLAMINE	466	U	466	UJ	51	466	ug/kg	HT
SB	NDA081RE1	SW8270	N-NITROSODIPHENYLAMINE	393	U	393	UJ	43	393	ug/kg	HT
SB	NDA083RE1	SW8270	N-NITROSODIPHENYLAMINE	4240	U	4240	UJ	466	4240	ug/kg	HT
SD	NDA054	SW8270	N-NITROSODIPHENYLAMINE	480	U	480	UJ	53	480	ug/kg	HT
SD	NDA055	SW8270	N-NITROSODIPHENYLAMINE	696	U	696	UJ	77	696	ug/kg	HT
SD	NDA042	SW8270	N-NITROSODIPHENYLAMINE	686	U	686	UJ	76	686	ug/kg	HT
SD	NDA043	SW8270	N-NITROSODIPHENYLAMINE	735	U	735	UJ	81	735	ug/kg	HT
SD	NDA044	SW8270	N-NITROSODIPHENYLAMINE	1680	U	1680	UJ	185	1680	ug/kg	HT
SD	NDA045	SW8270	N-NITROSODIPHENYLAMINE	1500	U	1500	UJ	165	1500	ug/kg	HT
SD	NDA046	SW8270	N-NITROSODIPHENYLAMINE	1520	U	1520	UJ	167	1520	ug/kg	HT
SD	NDA302	SW8270	N-NITROSODIPHENYLAMINE	1200	U	1200	UJ	132	1200	ug/kg	HT
SD	NDA303	SW8270	N-NITROSODIPHENYLAMINE	2300	U	2300	UJ	253	2300	ug/kg	HT
SD	NDA307FD1	SW8270	N-NITROSODIPHENYLAMINE	2130	U	2130	UJ	234	2130	ug/kg	HT
SD	NDA047	SW8270	N-NITROSODIPHENYLAMINE	503	U	503	UJ	55	503	ug/kg	HT
SD	NDA048	SW8270	N-NITROSODIPHENYLAMINE	558	U	558	UJ	61	558	ug/kg	HT
SD	NDA049	SW8270	N-NITROSODIPHENYLAMINE	463	U	463	UJ	51	463	ug/kg	HT
SS	NDA178	SW8270	N-NITROSODIPHENYLAMINE	644	U	644	UJ	71	644	ug/kg	HT
SS	NDA179	SW8270	N-NITROSODIPHENYLAMINE	644	U	644	UJ	71	644	ug/kg	HT
SS	NDA180	SW8270	N-NITROSODIPHENYLAMINE	550	U	550	UJ	60	550	ug/kg	HT
SS	NDA181	SW8270	N-NITROSODIPHENYLAMINE	566	U	566	UJ	62	566	ug/kg	HT
SS	NDA182	SW8270	N-NITROSODIPHENYLAMINE	679	U	679	UJ	75	679	ug/kg	HT
SS	NDA183	SW8270	N-NITROSODIPHENYLAMINE	589	U	589	UJ	65	589	ug/kg	HT
SS	NDA184FD1	SW8270	N-NITROSODIPHENYLAMINE	662	U	662	UJ	73	662	ug/kg	HT
SS	NDA201	SW8270	N-NITROSODIPHENYLAMINE	491	U	491	UJ	54	491	ug/kg	HT
SS	NDA202	SW8270	N-NITROSODIPHENYLAMINE	605	U	605	UJ	67	605	ug/kg	HT
SS	NDA203	SW8270	N-NITROSODIPHENYLAMINE	617	U	617	UJ	68	617	ug/kg	HT
SS	NDA204	SW8270	N-NITROSODIPHENYLAMINE	753	U	753	UJ	83	753	ug/kg	HT
SS	NDA205FD1	SW8270	N-NITROSODIPHENYLAMINE	668	U	668	UJ	73	668	ug/kg	HT
SS	NDA206	SW8270	N-NITROSODIPHENYLAMINE	529	U	529	UJ	58	529	ug/kg	HT
SS	NDA207	SW8270	N-NITROSODIPHENYLAMINE	669	U	669	UJ	74	669	ug/kg	HT
SS	NDA208	SW8270	N-NITROSODIPHENYLAMINE	520	U	520	UJ	57	520	ug/kg	HT
SS	NDA209	SW8270	N-NITROSODIPHENYLAMINE	570	U	570	UJ	63	570	ug/kg	HT
SS	NDA210	SW8270	N-NITROSODIPHENYLAMINE	545	U	545	UJ	60	545	ug/kg	HT

Matrix	Sample ID	Analytical Method	Parameter	Lab Result	Lab Qual	Final Result	Final Qual	DL	RL	Units	Comments
SS	NDA211	SW8270	N-NITROSODIPHENYLAMINE	742	U	742	UJ	82	742	ug/kg	HT
SS	NDA212	SW8270	N-NITROSODIPHENYLAMINE	651	U	651	UJ	72	651	ug/kg	HT
SS	NDA185	SW8270	N-NITROSODIPHENYLAMINE	445	U	445	UJ	49	445	ug/kg	HT
SS	NDA186	SW8270	N-NITROSODIPHENYLAMINE	416	U	416	UJ	46	416	ug/kg	HT
SS	NDA187	SW8270	N-NITROSODIPHENYLAMINE	380	U	380	UJ	42	380	ug/kg	HT
SS	NDA188	SW8270	N-NITROSODIPHENYLAMINE	810	U	810	UJ	89	810	ug/kg	HT
SS	NDA189	SW8270	N-NITROSODIPHENYLAMINE	426	U	426	UJ	47	426	ug/kg	HT
SS	NDA190	SW8270	N-NITROSODIPHENYLAMINE	430	U	430	UJ	47	430	ug/kg	HT
SS	NDA191	SW8270	N-NITROSODIPHENYLAMINE	338	U	338	UJ	37	338	ug/kg	HT
SS	NDA192FD1	SW8270	N-NITROSODIPHENYLAMINE	418	U	418	UJ	46	418	ug/kg	HT
SS	NDA193	SW8270	N-NITROSODIPHENYLAMINE	1720	U	1720	UJ	189	1720	ug/kg	HT
SS	NDA194	SW8270	N-NITROSODIPHENYLAMINE	480	U	480	UJ	53	480	ug/kg	HT
SS	NDA195	SW8270	N-NITROSODIPHENYLAMINE	323	U	323	UJ	36	323	ug/kg	HT
SS	NDA084	SW8270	N-NITROSODIPHENYLAMINE	344	U	344	UJ	38	344	ug/kg	HT
SS	NDA091	SW8270	N-NITROSODIPHENYLAMINE	367	U	367	UJ	40	367	ug/kg	HT
SS	NDA057	SW8270	N-NITROSODIPHENYLAMINE	563	U	563	UJ	62	563	ug/kg	HT
SS	NDA061	SW8270	N-NITROSODIPHENYLAMINE	469	U	469	UJ	52	469	ug/kg	HT
SS	NDA062FD1	SW8270	N-NITROSODIPHENYLAMINE	523	U	523	UJ	58	523	ug/kg	HT
SS	NDA065	SW8270	N-NITROSODIPHENYLAMINE	421	U	421	UJ	46	421	ug/kg	HT
SS	NDA067	SW8270	N-NITROSODIPHENYLAMINE	378	U	378	UJ	42	378	ug/kg	HT
SS	NDA069	SW8270	N-NITROSODIPHENYLAMINE	320	U	320	UJ	35	320	ug/kg	HT
SS	NDA119	SW8270	N-NITROSODIPHENYLAMINE	503	U	503	UJ	55	503	ug/kg	HT
SS	NDA120	SW8270	N-NITROSODIPHENYLAMINE	541	U	541	UJ	60	541	ug/kg	HT
SS	NDA121	SW8270	N-NITROSODIPHENYLAMINE	409	U	409	UJ	45	409	ug/kg	HT
SS	NDA122	SW8270	N-NITROSODIPHENYLAMINE	450	U	450	UJ	50	450	ug/kg	HT
SS	NDA123	SW8270	N-NITROSODIPHENYLAMINE	450	U	450	UJ	50	450	ug/kg	HT
SS	NDA124	SW8270	N-NITROSODIPHENYLAMINE	432	U	432	UJ	47	432	ug/kg	HT
SS	NDA071	SW8270	N-NITROSODIPHENYLAMINE	554	U	554	UJ	61	554	ug/kg	HT
SS	NDA072FD1	SW8270	N-NITROSODIPHENYLAMINE	413	U	413	UJ	45	413	ug/kg	HT
SS	NDA074	SW8270	N-NITROSODIPHENYLAMINE	448	U	448	UJ	49	448	ug/kg	HT
SS	NDA076	SW8270	N-NITROSODIPHENYLAMINE	419	U	419	UJ	46	419	ug/kg	HT
SS	NDA078	SW8270	N-NITROSODIPHENYLAMINE	440	U	440	UJ	48	440	ug/kg	HT
SS	NDA080RE1	SW8270	N-NITROSODIPHENYLAMINE	407	U	407	UJ	45	407	ug/kg	HT
SS	NDA082RE1	SW8270	N-NITROSODIPHENYLAMINE	4660	U	4660	UJ	512	4660	ug/kg	HT
SB	NDA213	SW8270	N-NITROSODI-n-PROPYLAMINE	485	U	485	UJ	34	485	ug/kg	HT
SB	NDA214FD1	SW8270	N-NITROSODI-n-PROPYLAMINE	487	U	487	UJ	35	487	ug/kg	HT
SB	NDA215	SW8270	N-NITROSODI-n-PROPYLAMINE	527	U	527	UJ	37	527	ug/kg	HT
SB	NDA216	SW8270	N-NITROSODI-n-PROPYLAMINE	537	U	537	UJ	38	537	ug/kg	HT
SB	NDA217	SW8270	N-NITROSODI-n-PROPYLAMINE	540	U	540	UJ	38	540	ug/kg	HT
SB	NDA218	SW8270	N-NITROSODI-n-PROPYLAMINE	505	U	505	UJ	36	505	ug/kg	HT
SB	NDA219	SW8270	N-NITROSODI-n-PROPYLAMINE	380	U	380	UJ	27	380	ug/kg	HT
SB	NDA220	SW8270	N-NITROSODI-n-PROPYLAMINE	542	U	542	UJ	38	542	ug/kg	HT
SB	NDA221	SW8270	N-NITROSODI-n-PROPYLAMINE	501	U	501	UJ	36	501	ug/kg	HT
SB	NDA222	SW8270	N-NITROSODI-n-PROPYLAMINE	459	U	459	UJ	33	459	ug/kg	HT
SB	NDA223	SW8270	N-NITROSODI-n-PROPYLAMINE	527	U	527	UJ	37	527	ug/kg	HT
SB	NDA235	SW8270	N-NITROSODI-n-PROPYLAMINE	504	U	504	UJ	36	504	ug/kg	HT
SB	NDA236	SW8270	N-NITROSODI-n-PROPYLAMINE	423	U	423	UJ	30	423	ug/kg	HT
SB	NDA237FD1	SW8270	N-NITROSODI-n-PROPYLAMINE	395	U	395	UJ	28	395	ug/kg	HT
SB	NDA238	SW8270	N-NITROSODI-n-PROPYLAMINE	424	U	424	UJ	30	424	ug/kg	HT
SB	NDA239	SW8270	N-NITROSODI-n-PROPYLAMINE	555	U	555	UJ	39	555	ug/kg	HT
SB	NDA240	SW8270	N-NITROSODI-n-PROPYLAMINE	397	U	397	UJ	28	397	ug/kg	HT
SB	NDA241	SW8270	N-NITROSODI-n-PROPYLAMINE	471	U	471	UJ	33	471	ug/kg	HT
SB	NDA242	SW8270	N-NITROSODI-n-PROPYLAMINE	436	U	436	UJ	31	436	ug/kg	HT
SB	NDA243	SW8270	N-NITROSODI-n-PROPYLAMINE	893	U	893	UJ	63	893	ug/kg	HT
SB	NDA244	SW8270	N-NITROSODI-n-PROPYLAMINE	388	U	388	UJ	28	388	ug/kg	HT
SB	NDA245	SW8270	N-NITROSODI-n-PROPYLAMINE	393	U	393	UJ	28	393	ug/kg	HT
SB	NDA246	SW8270	N-NITROSODI-n-PROPYLAMINE	511	U	511	UJ	36	511	ug/kg	HT
SB	NDA247FD1	SW8270	N-NITROSODI-n-PROPYLAMINE	390	U	390	UJ	28	390	ug/kg	HT
SB	NDA248	SW8270	N-NITROSODI-n-PROPYLAMINE	453	U	453	UJ	32	453	ug/kg	HT
SB	NDA249	SW8270	N-NITROSODI-n-PROPYLAMINE	374	U	374	UJ	27	374	ug/kg	HT
SB	NDA252	SW8270	N-NITROSODI-n-PROPYLAMINE	420	U	420	UJ	30	420	ug/kg	HT
SB	NDA253	SW8270	N-NITROSODI-n-PROPYLAMINE	439	U	439	UJ	31	439	ug/kg	HT
SB	NDA254	SW8270	N-NITROSODI-n-PROPYLAMINE	391	U	391	UJ	28	391	ug/kg	HT
SB	NDA255	SW8270	N-NITROSODI-n-PROPYLAMINE	375	U	375	UJ	27	375	ug/kg	HT
SB	NDA085	SW8270	N-NITROSODI-n-PROPYLAMINE	482	U	482	UJ	34	482	ug/kg	HT
SB	NDA092	SW8270	N-NITROSODI-n-PROPYLAMINE	400	U	400	UJ	28	400	ug/kg	HT
SB	NDA093	SW8270	N-NITROSODI-n-PROPYLAMINE	339	U	339	UJ	24	339	ug/kg	HT
SB	NDA094	SW8270	N-NITROSODI-n-PROPYLAMINE	510	U	510	UJ	36	510	ug/kg	HT
SB	NDA095FD1	SW8270	N-NITROSODI-n-PROPYLAMINE	310	U	310	UJ	22	310	ug/kg	HT
SB	NDA296	SW8270	N-NITROSODI-n-PROPYLAMINE	369	U	369	UJ	26	369	ug/kg	HT

Matrix	Sample ID	Analytical Method	Parameter	Lab Result	Lab Qual	Final Result	Final Qual	DL	RL	Units	Comments
SB	NDA297	SW8270	N-NITROSODI-n-PROPYLAMINE	358	U	358	UJ	25	358	ug/kg	HT
SB	NDA298	SW8270	N-NITROSODI-n-PROPYLAMINE	341	U	341	UJ	24	341	ug/kg	HT
SB	NDA299	SW8270	N-NITROSODI-n-PROPYLAMINE	370	U	370	UJ	26	370	ug/kg	HT
SB	NDA058	SW8270	N-NITROSODI-n-PROPYLAMINE	460	U	460	UJ	33	460	ug/kg	HT
SB	NDA060	SW8270	N-NITROSODI-n-PROPYLAMINE	478	U	478	UJ	34	478	ug/kg	HT
SB	NDA063	SW8270	N-NITROSODI-n-PROPYLAMINE	382	U	382	UJ	27	382	ug/kg	HT
SB	NDA064FD1	SW8270	N-NITROSODI-n-PROPYLAMINE	351	U	351	UJ	25	351	ug/kg	HT
SB	NDA066	SW8270	N-NITROSODI-n-PROPYLAMINE	344	U	344	UJ	24	344	ug/kg	HT
SB	NDA068	SW8270	N-NITROSODI-n-PROPYLAMINE	360	U	360	UJ	26	360	ug/kg	HT
SB	NDA070	SW8270	N-NITROSODI-n-PROPYLAMINE	404	U	404	UJ	29	404	ug/kg	HT
SB	NDA073	SW8270	N-NITROSODI-n-PROPYLAMINE	383	U	383	UJ	27	383	ug/kg	HT
SB	NDA075	SW8270	N-NITROSODI-n-PROPYLAMINE	401	U	401	UJ	28	401	ug/kg	HT
SB	NDA077	SW8270	N-NITROSODI-n-PROPYLAMINE	441	U	441	UJ	31	441	ug/kg	HT
SB	NDA079	SW8270	N-NITROSODI-n-PROPYLAMINE	466	U	466	UJ	33	466	ug/kg	HT
SB	NDA081RE1	SW8270	N-NITROSODI-n-PROPYLAMINE	393	U	393	UJ	28	393	ug/kg	HT
SB	NDA083RE1	SW8270	N-NITROSODI-n-PROPYLAMINE	4240	U	4240	UJ	301	4240	ug/kg	HT
SD	NDA054	SW8270	N-NITROSODI-n-PROPYLAMINE	480	U	480	UJ	34	480	ug/kg	HT
SD	NDA055	SW8270	N-NITROSODI-n-PROPYLAMINE	696	U	696	UJ	49	696	ug/kg	HT
SD	NDA042	SW8270	N-NITROSODI-n-PROPYLAMINE	686	U	686	UJ	49	686	ug/kg	HT
SD	NDA043	SW8270	N-NITROSODI-n-PROPYLAMINE	735	U	735	UJ	52	735	ug/kg	HT
SD	NDA044	SW8270	N-NITROSODI-n-PROPYLAMINE	1680	U	1680	UJ	120	1680	ug/kg	HT
SD	NDA045	SW8270	N-NITROSODI-n-PROPYLAMINE	1500	U	1500	UJ	107	1500	ug/kg	HT
SD	NDA046	SW8270	N-NITROSODI-n-PROPYLAMINE	1520	U	1520	UJ	108	1520	ug/kg	HT
SD	NDA302	SW8270	N-NITROSODI-n-PROPYLAMINE	1200	U	1200	UJ	85	1200	ug/kg	HT
SD	NDA303	SW8270	N-NITROSODI-n-PROPYLAMINE	2300	U	2300	UJ	163	2300	ug/kg	HT
SD	NDA307FD1	SW8270	N-NITROSODI-n-PROPYLAMINE	2130	U	2130	UJ	151	2130	ug/kg	HT
SD	NDA047	SW8270	N-NITROSODI-n-PROPYLAMINE	503	U	503	UJ	36	503	ug/kg	HT
SD	NDA048	SW8270	N-NITROSODI-n-PROPYLAMINE	558	U	558	UJ	40	558	ug/kg	HT
SD	NDA049	SW8270	N-NITROSODI-n-PROPYLAMINE	463	U	463	UJ	33	463	ug/kg	HT
SS	NDA178	SW8270	N-NITROSODI-n-PROPYLAMINE	644	U	644	UJ	46	644	ug/kg	HT
SS	NDA179	SW8270	N-NITROSODI-n-PROPYLAMINE	644	U	644	UJ	46	644	ug/kg	HT
SS	NDA180	SW8270	N-NITROSODI-n-PROPYLAMINE	550	U	550	UJ	39	550	ug/kg	HT
SS	NDA181	SW8270	N-NITROSODI-n-PROPYLAMINE	566	U	566	UJ	40	566	ug/kg	HT
SS	NDA182	SW8270	N-NITROSODI-n-PROPYLAMINE	679	U	679	UJ	48	679	ug/kg	HT
SS	NDA183	SW8270	N-NITROSODI-n-PROPYLAMINE	589	U	589	UJ	42	589	ug/kg	HT
SS	NDA184FD1	SW8270	N-NITROSODI-n-PROPYLAMINE	662	U	662	UJ	47	662	ug/kg	HT
SS	NDA201	SW8270	N-NITROSODI-n-PROPYLAMINE	491	U	491	UJ	35	491	ug/kg	HT
SS	NDA202	SW8270	N-NITROSODI-n-PROPYLAMINE	605	U	605	UJ	43	605	ug/kg	HT
SS	NDA203	SW8270	N-NITROSODI-n-PROPYLAMINE	617	U	617	UJ	44	617	ug/kg	HT
SS	NDA204	SW8270	N-NITROSODI-n-PROPYLAMINE	753	U	753	UJ	53	753	ug/kg	HT
SS	NDA205FD1	SW8270	N-NITROSODI-n-PROPYLAMINE	668	U	668	UJ	47	668	ug/kg	HT
SS	NDA206	SW8270	N-NITROSODI-n-PROPYLAMINE	529	U	529	UJ	38	529	ug/kg	HT
SS	NDA207	SW8270	N-NITROSODI-n-PROPYLAMINE	669	U	669	UJ	48	669	ug/kg	HT
SS	NDA208	SW8270	N-NITROSODI-n-PROPYLAMINE	520	U	520	UJ	37	520	ug/kg	HT
SS	NDA209	SW8270	N-NITROSODI-n-PROPYLAMINE	570	U	570	UJ	40	570	ug/kg	HT
SS	NDA210	SW8270	N-NITROSODI-n-PROPYLAMINE	545	U	545	UJ	39	545	ug/kg	HT
SS	NDA211	SW8270	N-NITROSODI-n-PROPYLAMINE	742	U	742	UJ	53	742	ug/kg	HT
SS	NDA212	SW8270	N-NITROSODI-n-PROPYLAMINE	651	U	651	UJ	46	651	ug/kg	HT
SS	NDA185	SW8270	N-NITROSODI-n-PROPYLAMINE	445	U	445	UJ	32	445	ug/kg	HT
SS	NDA186	SW8270	N-NITROSODI-n-PROPYLAMINE	416	U	416	UJ	30	416	ug/kg	HT
SS	NDA187	SW8270	N-NITROSODI-n-PROPYLAMINE	380	U	380	UJ	27	380	ug/kg	HT
SS	NDA188	SW8270	N-NITROSODI-n-PROPYLAMINE	810	U	810	UJ	57	810	ug/kg	HT
SS	NDA189	SW8270	N-NITROSODI-n-PROPYLAMINE	426	U	426	UJ	30	426	ug/kg	HT
SS	NDA190	SW8270	N-NITROSODI-n-PROPYLAMINE	430	U	430	UJ	31	430	ug/kg	HT
SS	NDA191	SW8270	N-NITROSODI-n-PROPYLAMINE	338	U	338	UJ	24	338	ug/kg	HT
SS	NDA192FD1	SW8270	N-NITROSODI-n-PROPYLAMINE	418	U	418	UJ	30	418	ug/kg	HT
SS	NDA193	SW8270	N-NITROSODI-n-PROPYLAMINE	1720	U	1720	UJ	122	1720	ug/kg	HT
SS	NDA194	SW8270	N-NITROSODI-n-PROPYLAMINE	480	U	480	UJ	34	480	ug/kg	HT
SS	NDA195	SW8270	N-NITROSODI-n-PROPYLAMINE	323	U	323	UJ	23	323	ug/kg	HT
SS	NDA084	SW8270	N-NITROSODI-n-PROPYLAMINE	344	U	344	UJ	24	344	ug/kg	HT
SS	NDA091	SW8270	N-NITROSODI-n-PROPYLAMINE	367	U	367	UJ	26	367	ug/kg	HT
SS	NDA057	SW8270	N-NITROSODI-n-PROPYLAMINE	563	U	563	UJ	40	563	ug/kg	HT
SS	NDA059	SW8270	N-NITROSODI-n-PROPYLAMINE	465	U	465	UJ	33	465	ug/kg	HT
SS	NDA061	SW8270	N-NITROSODI-n-PROPYLAMINE	469	U	469	UJ	33	469	ug/kg	HT
SS	NDA062FD1	SW8270	N-NITROSODI-n-PROPYLAMINE	523	U	523	UJ	37	523	ug/kg	HT
SS	NDA065	SW8270	N-NITROSODI-n-PROPYLAMINE	421	U	421	UJ	30	421	ug/kg	HT
SS	NDA067	SW8270	N-NITROSODI-n-PROPYLAMINE	378	U	378	UJ	27	378	ug/kg	HT
SS	NDA069	SW8270	N-NITROSODI-n-PROPYLAMINE	320	U	320	UJ	23	320	ug/kg	HT
SS	NDA119	SW8270	N-NITROSODI-n-PROPYLAMINE	503	U	503	UJ	36	503	ug/kg	HT
SS	NDA120	SW8270	N-NITROSODI-n-PROPYLAMINE	541	U	541	UJ	38	541	ug/kg	HT

Matrix	Sample ID	Analytical Method	Parameter	Lab Result	Lab Qual	Final Result	Final Qual	DL	RL	Units	Comments
SS	NDA121	SW8270	N-NITROSODI-n-PROPYLAMINE	409	U	409	UJ	29	409	ug/kg	HT
SS	NDA122	SW8270	N-NITROSODI-n-PROPYLAMINE	450	U	450	UJ	32	450	ug/kg	HT
SS	NDA123	SW8270	N-NITROSODI-n-PROPYLAMINE	450	U	450	UJ	32	450	ug/kg	HT
SS	NDA124	SW8270	N-NITROSODI-n-PROPYLAMINE	432	U	432	UJ	31	432	ug/kg	HT
SS	NDA071	SW8270	N-NITROSODI-n-PROPYLAMINE	554	U	554	UJ	39	554	ug/kg	HT
SS	NDA072FD1	SW8270	N-NITROSODI-n-PROPYLAMINE	413	U	413	UJ	29	413	ug/kg	HT
SS	NDA074	SW8270	N-NITROSODI-n-PROPYLAMINE	448	U	448	UJ	32	448	ug/kg	HT
SS	NDA076	SW8270	N-NITROSODI-n-PROPYLAMINE	419	U	419	UJ	30	419	ug/kg	HT
SS	NDA078	SW8270	N-NITROSODI-n-PROPYLAMINE	440	U	440	UJ	31	440	ug/kg	HT
SS	NDA080RE1	SW8270	N-NITROSODI-n-PROPYLAMINE	407	U	407	UJ	29	407	ug/kg	HT
SS	NDA082RE1	SW8270	N-NITROSODI-n-PROPYLAMINE	4660	U	4660	UJ	331	4660	ug/kg	HT
SB	NDA213	SW8270	NITROBENZENE	485	U	485	UJ	37	485	ug/kg	HT
SB	NDA214FD1	SW8270	NITROBENZENE	487	U	487	UJ	37	487	ug/kg	HT
SB	NDA215	SW8270	NITROBENZENE	527	U	527	UJ	41	527	ug/kg	HT
SB	NDA216	SW8270	NITROBENZENE	537	U	537	UJ	41	537	ug/kg	HT
SB	NDA217	SW8270	NITROBENZENE	540	U	540	UJ	42	540	ug/kg	HT
SB	NDA218	SW8270	NITROBENZENE	505	U	505	UJ	39	505	ug/kg	HT
SB	NDA219	SW8270	NITROBENZENE	380	U	380	UJ	29	380	ug/kg	HT
SB	NDA220	SW8270	NITROBENZENE	542	U	542	UJ	42	542	ug/kg	HT
SB	NDA221	SW8270	NITROBENZENE	501	U	501	UJ	39	501	ug/kg	HT
SB	NDA222	SW8270	NITROBENZENE	459	U	459	UJ	35	459	ug/kg	HT
SB	NDA223	SW8270	NITROBENZENE	527	U	527	UJ	41	527	ug/kg	HT
SB	NDA235	SW8270	NITROBENZENE	504	U	504	UJ	39	504	ug/kg	HT
SB	NDA236	SW8270	NITROBENZENE	423	U	423	UJ	33	423	ug/kg	HT
SB	NDA237FD1	SW8270	NITROBENZENE	395	U	395	UJ	30	395	ug/kg	HT
SB	NDA238	SW8270	NITROBENZENE	424	U	424	UJ	33	424	ug/kg	HT
SB	NDA239	SW8270	NITROBENZENE	555	U	555	UJ	43	555	ug/kg	HT
SB	NDA240	SW8270	NITROBENZENE	397	U	397	UJ	31	397	ug/kg	HT
SB	NDA241	SW8270	NITROBENZENE	471	U	471	UJ	36	471	ug/kg	HT
SB	NDA242	SW8270	NITROBENZENE	436	U	436	UJ	34	436	ug/kg	HT
SB	NDA243	SW8270	NITROBENZENE	893	U	893	UJ	69	893	ug/kg	HT
SB	NDA244	SW8270	NITROBENZENE	388	U	388	UJ	30	388	ug/kg	HT
SB	NDA245	SW8270	NITROBENZENE	393	U	393	UJ	30	393	ug/kg	HT
SB	NDA246	SW8270	NITROBENZENE	511	U	511	UJ	39	511	ug/kg	HT
SB	NDA247FD1	SW8270	NITROBENZENE	390	U	390	UJ	30	390	ug/kg	HT
SB	NDA248	SW8270	NITROBENZENE	453	U	453	UJ	35	453	ug/kg	HT
SB	NDA249	SW8270	NITROBENZENE	374	U	374	UJ	29	374	ug/kg	HT
SB	NDA252	SW8270	NITROBENZENE	420	U	420	UJ	32	420	ug/kg	HT
SB	NDA253	SW8270	NITROBENZENE	439	U	439	UJ	34	439	ug/kg	HT
SB	NDA254	SW8270	NITROBENZENE	391	U	391	UJ	30	391	ug/kg	HT
SB	NDA255	SW8270	NITROBENZENE	375	U	375	UJ	29	375	ug/kg	HT
SB	NDA085	SW8270	NITROBENZENE	482	U	482	UJ	37	482	ug/kg	HT
SB	NDA092	SW8270	NITROBENZENE	400	U	400	UJ	31	400	ug/kg	HT
SB	NDA093	SW8270	NITROBENZENE	339	U	339	UJ	26	339	ug/kg	HT
SB	NDA094	SW8270	NITROBENZENE	510	U	510	UJ	39	510	ug/kg	HT
SB	NDA095FD1	SW8270	NITROBENZENE	310	U	310	UJ	24	310	ug/kg	HT
SB	NDA296	SW8270	NITROBENZENE	369	U	369	UJ	28	369	ug/kg	HT
SB	NDA297	SW8270	NITROBENZENE	358	U	358	UJ	28	358	ug/kg	HT
SB	NDA298	SW8270	NITROBENZENE	341	U	341	UJ	26	341	ug/kg	HT
SB	NDA299	SW8270	NITROBENZENE	370	U	370	UJ	28	370	ug/kg	HT
SB	NDA058	SW8270	NITROBENZENE	460	U	460	UJ	35	460	ug/kg	HT
SB	NDA060	SW8270	NITROBENZENE	478	U	478	UJ	37	478	ug/kg	HT
SB	NDA063	SW8270	NITROBENZENE	382	U	382	UJ	29	382	ug/kg	HT
SB	NDA064FD1	SW8270	NITROBENZENE	351	U	351	UJ	27	351	ug/kg	HT
SB	NDA066	SW8270	NITROBENZENE	344	U	344	UJ	26	344	ug/kg	HT
SB	NDA068	SW8270	NITROBENZENE	360	U	360	UJ	28	360	ug/kg	HT
SB	NDA070	SW8270	NITROBENZENE	404	U	404	UJ	31	404	ug/kg	HT
SB	NDA073	SW8270	NITROBENZENE	383	U	383	UJ	30	383	ug/kg	HT
SB	NDA075	SW8270	NITROBENZENE	401	U	401	UJ	31	401	ug/kg	HT
SB	NDA077	SW8270	NITROBENZENE	441	U	441	UJ	34	441	ug/kg	HT
SB	NDA079	SW8270	NITROBENZENE	466	U	466	UJ	36	466	ug/kg	HT
SB	NDA081RE1	SW8270	NITROBENZENE	393	U	393	UJ	30	393	ug/kg	HT
SB	NDA083RE1	SW8270	NITROBENZENE	4240	U	4240	UJ	326	4240	ug/kg	HT
SD	NDA054	SW8270	NITROBENZENE	480	U	480	UJ	37	480	ug/kg	HT
SD	NDA055	SW8270	NITROBENZENE	696	U	696	UJ	54	696	ug/kg	HT
SD	NDA042	SW8270	NITROBENZENE	686	U	686	UJ	53	686	ug/kg	HT
SD	NDA043	SW8270	NITROBENZENE	735	U	735	UJ	57	735	ug/kg	HT
SD	NDA044	SW8270	NITROBENZENE	1680	U	1680	UJ	130	1680	ug/kg	HT
SD	NDA045	SW8270	NITROBENZENE	1500	U	1500	UJ	116	1500	ug/kg	HT
SD	NDA046	SW8270	NITROBENZENE	1520	U	1520	UJ	117	1520	ug/kg	HT

Matrix	Sample ID	Analytical Method	Parameter	Lab Result	Lab Qual	Final Result	Final Qual	DL	RL	Units	Comments
SD	NDA302	SW8270	NITROBENZENE	1200	U	1200	UJ	92	1200	ug/kg	HT
SD	NDA303	SW8270	NITROBENZENE	2300	U	2300	UJ	177	2300	ug/kg	HT
SD	NDA307FD1	SW8270	NITROBENZENE	2130	U	2130	UJ	164	2130	ug/kg	HT
SD	NDA047	SW8270	NITROBENZENE	503	U	503	UJ	39	503	ug/kg	HT
SD	NDA048	SW8270	NITROBENZENE	558	U	558	UJ	43	558	ug/kg	HT
SD	NDA049	SW8270	NITROBENZENE	463	U	463	UJ	36	463	ug/kg	HT
SS	NDA178	SW8270	NITROBENZENE	644	U	644	UJ	50	644	ug/kg	HT
SS	NDA179	SW8270	NITROBENZENE	644	U	644	UJ	50	644	ug/kg	HT
SS	NDA180	SW8270	NITROBENZENE	550	U	550	UJ	42	550	ug/kg	HT
SS	NDA181	SW8270	NITROBENZENE	566	U	566	UJ	44	566	ug/kg	HT
SS	NDA182	SW8270	NITROBENZENE	679	U	679	UJ	52	679	ug/kg	HT
SS	NDA183	SW8270	NITROBENZENE	589	U	589	UJ	45	589	ug/kg	HT
SS	NDA184FD1	SW8270	NITROBENZENE	662	U	662	UJ	51	662	ug/kg	HT
SS	NDA201	SW8270	NITROBENZENE	491	U	491	UJ	38	491	ug/kg	HT
SS	NDA202	SW8270	NITROBENZENE	605	U	605	UJ	47	605	ug/kg	HT
SS	NDA203	SW8270	NITROBENZENE	617	U	617	UJ	48	617	ug/kg	HT
SS	NDA204	SW8270	NITROBENZENE	753	U	753	UJ	58	753	ug/kg	HT
SS	NDA205FD1	SW8270	NITROBENZENE	668	U	668	UJ	51	668	ug/kg	HT
SS	NDA206	SW8270	NITROBENZENE	529	U	529	UJ	41	529	ug/kg	HT
SS	NDA207	SW8270	NITROBENZENE	669	U	669	UJ	52	669	ug/kg	HT
SS	NDA208	SW8270	NITROBENZENE	520	U	520	UJ	40	520	ug/kg	HT
SS	NDA209	SW8270	NITROBENZENE	570	U	570	UJ	44	570	ug/kg	HT
SS	NDA210	SW8270	NITROBENZENE	545	U	545	UJ	42	545	ug/kg	HT
SS	NDA211	SW8270	NITROBENZENE	742	U	742	UJ	57	742	ug/kg	HT
SS	NDA212	SW8270	NITROBENZENE	651	U	651	UJ	50	651	ug/kg	HT
SS	NDA185	SW8270	NITROBENZENE	445	U	445	UJ	34	445	ug/kg	HT
SS	NDA186	SW8270	NITROBENZENE	416	U	416	UJ	32	416	ug/kg	HT
SS	NDA187	SW8270	NITROBENZENE	380	U	380	UJ	29	380	ug/kg	HT
SS	NDA188	SW8270	NITROBENZENE	810	U	810	UJ	62	810	ug/kg	HT
SS	NDA189	SW8270	NITROBENZENE	426	U	426	UJ	33	426	ug/kg	HT
SS	NDA190	SW8270	NITROBENZENE	430	U	430	UJ	33	430	ug/kg	HT
SS	NDA191	SW8270	NITROBENZENE	338	U	338	UJ	26	338	ug/kg	HT
SS	NDA192FD1	SW8270	NITROBENZENE	418	U	418	UJ	32	418	ug/kg	HT
SS	NDA193	SW8270	NITROBENZENE	1720	U	1720	UJ	133	1720	ug/kg	HT
SS	NDA194	SW8270	NITROBENZENE	480	U	480	UJ	37	480	ug/kg	HT
SS	NDA195	SW8270	NITROBENZENE	323	U	323	UJ	25	323	ug/kg	HT
SS	NDA084	SW8270	NITROBENZENE	344	U	344	UJ	26	344	ug/kg	HT
SS	NDA091	SW8270	NITROBENZENE	367	U	367	UJ	28	367	ug/kg	HT
SS	NDA057	SW8270	NITROBENZENE	563	U	563	UJ	43	563	ug/kg	HT
SS	NDA059	SW8270	NITROBENZENE	465	U	465	UJ	36	465	ug/kg	HT
SS	NDA061	SW8270	NITROBENZENE	469	U	469	UJ	36	469	ug/kg	HT
SS	NDA062FD1	SW8270	NITROBENZENE	523	U	523	UJ	40	523	ug/kg	HT
SS	NDA065	SW8270	NITROBENZENE	421	U	421	UJ	32	421	ug/kg	HT
SS	NDA067	SW8270	NITROBENZENE	378	U	378	UJ	29	378	ug/kg	HT
SS	NDA069	SW8270	NITROBENZENE	320	U	320	UJ	25	320	ug/kg	HT
SS	NDA119	SW8270	NITROBENZENE	503	U	503	UJ	39	503	ug/kg	HT
SS	NDA120	SW8270	NITROBENZENE	541	U	541	UJ	42	541	ug/kg	HT
SS	NDA121	SW8270	NITROBENZENE	409	U	409	UJ	31	409	ug/kg	HT
SS	NDA122	SW8270	NITROBENZENE	450	U	450	UJ	35	450	ug/kg	HT
SS	NDA123	SW8270	NITROBENZENE	450	U	450	UJ	35	450	ug/kg	HT
SS	NDA124	SW8270	NITROBENZENE	432	U	432	UJ	33	432	ug/kg	HT
SS	NDA071	SW8270	NITROBENZENE	554	U	554	UJ	43	554	ug/kg	HT
SS	NDA072FD1	SW8270	NITROBENZENE	413	U	413	UJ	32	413	ug/kg	HT
SS	NDA074	SW8270	NITROBENZENE	448	U	448	UJ	34	448	ug/kg	HT
SS	NDA076	SW8270	NITROBENZENE	419	U	419	UJ	32	419	ug/kg	HT
SS	NDA078	SW8270	NITROBENZENE	440	U	440	UJ	34	440	ug/kg	HT
SS	NDA080RE1	SW8270	NITROBENZENE	407	U	407	UJ	31	407	ug/kg	HT
SS	NDA082RE1	SW8270	NITROBENZENE	4660	U	4660	UJ	359	4660	ug/kg	HT
SB	NDA213	SW8270	NAPHTHALENE	485	U	485	UJ	36	485	ug/kg	HT
SB	NDA214FD1	SW8270	NAPHTHALENE	487	U	487	UJ	36	487	ug/kg	HT
SB	NDA215	SW8270	NAPHTHALENE	527	U	527	UJ	39	527	ug/kg	HT
SB	NDA216	SW8270	NAPHTHALENE	537	U	537	UJ	40	537	ug/kg	HT
SB	NDA217	SW8270	NAPHTHALENE	540	U	540	UJ	40	540	ug/kg	HT
SB	NDA218	SW8270	NAPHTHALENE	505	U	505	UJ	37	505	ug/kg	HT
SB	NDA219	SW8270	NAPHTHALENE	380	U	380	UJ	28	380	ug/kg	HT
SB	NDA220	SW8270	NAPHTHALENE	542	U	542	UJ	40	542	ug/kg	HT
SB	NDA221	SW8270	NAPHTHALENE	501	U	501	UJ	37	501	ug/kg	HT
SB	NDA222	SW8270	NAPHTHALENE	459	U	459	UJ	34	459	ug/kg	HT
SB	NDA223	SW8270	NAPHTHALENE	527	U	527	UJ	39	527	ug/kg	HT
SB	NDA235	SW8270	NAPHTHALENE	504	U	504	UJ	37	504	ug/kg	HT

Matrix	Sample ID	Analytical Method	Parameter	Lab Result	Lab Qual	Final Result	Final Qual	DL	RL	Units	Comments
SB	NDA236	SW8270	NAPHTHALENE	423	U	423	UJ	31	423	ug/kg	HT
SB	NDA237FD1	SW8270	NAPHTHALENE	395	U	395	UJ	29	395	ug/kg	HT
SB	NDA238	SW8270	NAPHTHALENE	424	U	424	UJ	31	424	ug/kg	HT
SB	NDA239	SW8270	NAPHTHALENE	555	U	555	UJ	41	555	ug/kg	HT
SB	NDA240	SW8270	NAPHTHALENE	397	U	397	UJ	29	397	ug/kg	HT
SB	NDA241	SW8270	NAPHTHALENE	471	U	471	UJ	35	471	ug/kg	HT
SB	NDA242	SW8270	NAPHTHALENE	436	U	436	UJ	32	436	ug/kg	HT
SB	NDA243	SW8270	NAPHTHALENE	893	U	893	UJ	66	893	ug/kg	HT
SB	NDA244	SW8270	NAPHTHALENE	388	U	388	UJ	29	388	ug/kg	HT
SB	NDA245	SW8270	NAPHTHALENE	393	U	393	UJ	29	393	ug/kg	HT
SB	NDA246	SW8270	NAPHTHALENE	511	U	511	UJ	38	511	ug/kg	HT
SB	NDA247FD1	SW8270	NAPHTHALENE	390	U	390	UJ	29	390	ug/kg	HT
SB	NDA248	SW8270	NAPHTHALENE	453	U	453	UJ	34	453	ug/kg	HT
SB	NDA249	SW8270	NAPHTHALENE	374	U	374	UJ	28	374	ug/kg	HT
SB	NDA252	SW8270	NAPHTHALENE	420	U	420	UJ	31	420	ug/kg	HT
SB	NDA253	SW8270	NAPHTHALENE	439	U	439	UJ	32	439	ug/kg	HT
SB	NDA254	SW8270	NAPHTHALENE	391	U	391	UJ	29	391	ug/kg	HT
SB	NDA255	SW8270	NAPHTHALENE	375	U	375	UJ	28	375	ug/kg	HT
SB	NDA085	SW8270	NAPHTHALENE	482	U	482	UJ	36	482	ug/kg	HT
SB	NDA092	SW8270	NAPHTHALENE	400	U	400	UJ	30	400	ug/kg	HT
SB	NDA093	SW8270	NAPHTHALENE	339	U	339	UJ	25	339	ug/kg	HT
SB	NDA094	SW8270	NAPHTHALENE	510	U	510	UJ	38	510	ug/kg	HT
SB	NDA095FD1	SW8270	NAPHTHALENE	310	U	310	UJ	23	310	ug/kg	HT
SB	NDA296	SW8270	NAPHTHALENE	369	U	369	UJ	27	369	ug/kg	HT
SB	NDA297	SW8270	NAPHTHALENE	358	U	358	UJ	27	358	ug/kg	HT
SB	NDA298	SW8270	NAPHTHALENE	341	U	341	UJ	25	341	ug/kg	HT
SB	NDA299	SW8270	NAPHTHALENE	370	U	370	UJ	27	370	ug/kg	HT
SB	NDA058	SW8270	NAPHTHALENE	460	U	460	UJ	34	460	ug/kg	HT
SB	NDA060	SW8270	NAPHTHALENE	478	U	478	UJ	35	478	ug/kg	HT
SB	NDA063	SW8270	NAPHTHALENE	382	U	382	UJ	28	382	ug/kg	HT
SB	NDA064FD1	SW8270	NAPHTHALENE	351	U	351	UJ	26	351	ug/kg	HT
SB	NDA066	SW8270	NAPHTHALENE	344	U	344	UJ	25	344	ug/kg	HT
SB	NDA068	SW8270	NAPHTHALENE	360	U	360	UJ	27	360	ug/kg	HT
SB	NDA070	SW8270	NAPHTHALENE	404	U	404	UJ	30	404	ug/kg	HT
SB	NDA073	SW8270	NAPHTHALENE	383	U	383	UJ	28	383	ug/kg	HT
SB	NDA075	SW8270	NAPHTHALENE	401	U	401	UJ	30	401	ug/kg	HT
SB	NDA077	SW8270	NAPHTHALENE	441	U	441	UJ	33	441	ug/kg	HT
SB	NDA079	SW8270	NAPHTHALENE	466	U	466	UJ	35	466	ug/kg	HT
SB	NDA081RE1	SW8270	NAPHTHALENE	393	U	393	UJ	29	393	ug/kg	HT
SB	NDA083RE1	SW8270	NAPHTHALENE	4240	U	4240	UJ	313	4240	ug/kg	HT
SD	NDA054	SW8270	NAPHTHALENE	480	U	480	UJ	36	480	ug/kg	HT
SD	NDA055	SW8270	NAPHTHALENE	696	U	696	UJ	51	696	ug/kg	HT
SD	NDA042	SW8270	NAPHTHALENE	686	U	686	UJ	51	686	ug/kg	HT
SD	NDA043	SW8270	NAPHTHALENE	735	U	735	UJ	54	735	ug/kg	HT
SD	NDA044	SW8270	NAPHTHALENE	1680	U	1680	UJ	125	1680	ug/kg	HT
SD	NDA045	SW8270	NAPHTHALENE	1500	U	1500	UJ	111	1500	ug/kg	HT
SD	NDA046	SW8270	NAPHTHALENE	1520	U	1520	UJ	112	1520	ug/kg	HT
SD	NDA302	SW8270	NAPHTHALENE	1200	U	1200	UJ	89	1200	ug/kg	HT
SD	NDA303	SW8270	NAPHTHALENE	2300	U	2300	UJ	170	2300	ug/kg	HT
SD	NDA307FD1	SW8270	NAPHTHALENE	2130	U	2130	UJ	157	2130	ug/kg	HT
SD	NDA047	SW8270	NAPHTHALENE	503	U	503	UJ	37	503	ug/kg	HT
SD	NDA048	SW8270	NAPHTHALENE	558	U	558	UJ	41	558	ug/kg	HT
SD	NDA049	SW8270	NAPHTHALENE	463	U	463	UJ	34	463	ug/kg	HT
SS	NDA178	SW8270	NAPHTHALENE	644	U	644	UJ	48	644	ug/kg	HT
SS	NDA179	SW8270	NAPHTHALENE	644	U	644	UJ	48	644	ug/kg	HT
SS	NDA180	SW8270	NAPHTHALENE	550	U	550	UJ	41	550	ug/kg	HT
SS	NDA181	SW8270	NAPHTHALENE	566	U	566	UJ	42	566	ug/kg	HT
SS	NDA182	SW8270	NAPHTHALENE	679	U	679	UJ	50	679	ug/kg	HT
SS	NDA183	SW8270	NAPHTHALENE	589	U	589	UJ	44	589	ug/kg	HT
SS	NDA184FD1	SW8270	NAPHTHALENE	662	U	662	UJ	49	662	ug/kg	HT
SS	NDA201	SW8270	NAPHTHALENE	491	U	491	UJ	36	491	ug/kg	HT
SS	NDA202	SW8270	NAPHTHALENE	605	U	605	UJ	45	605	ug/kg	HT
SS	NDA203	SW8270	NAPHTHALENE	617	U	617	UJ	46	617	ug/kg	HT
SS	NDA204	SW8270	NAPHTHALENE	753	U	753	UJ	56	753	ug/kg	HT
SS	NDA205FD1	SW8270	NAPHTHALENE	668	U	668	UJ	49	668	ug/kg	HT
SS	NDA206	SW8270	NAPHTHALENE	529	U	529	UJ	39	529	ug/kg	HT
SS	NDA207	SW8270	NAPHTHALENE	669	U	669	UJ	50	669	ug/kg	HT
SS	NDA208	SW8270	NAPHTHALENE	520	U	520	UJ	38	520	ug/kg	HT
SS	NDA209	SW8270	NAPHTHALENE	570	U	570	UJ	42	570	ug/kg	HT
SS	NDA210	SW8270	NAPHTHALENE	545	U	545	UJ	40	545	ug/kg	HT

Matrix	Sample ID	Analytical Method	Parameter	Lab Result	Lab Qual	Final Result	Final Qual	DL	RL	Units	Comments
SS	NDA211	SW8270	NAPHTHALENE	742	U	742	UJ	55	742	ug/kg	HT
SS	NDA212	SW8270	NAPHTHALENE	651	U	651	UJ	48	651	ug/kg	HT
SS	NDA185	SW8270	NAPHTHALENE	445	U	445	UJ	33	445	ug/kg	HT
SS	NDA186	SW8270	NAPHTHALENE	416	U	416	UJ	31	416	ug/kg	HT
SS	NDA187	SW8270	NAPHTHALENE	380	U	380	UJ	28	380	ug/kg	HT
SS	NDA188	SW8270	NAPHTHALENE	810	U	810	UJ	60	810	ug/kg	HT
SS	NDA189	SW8270	NAPHTHALENE	426	U	426	UJ	31	426	ug/kg	HT
SS	NDA190	SW8270	NAPHTHALENE	430	U	430	UJ	32	430	ug/kg	HT
SS	NDA191	SW8270	NAPHTHALENE	338	U	338	UJ	25	338	ug/kg	HT
SS	NDA192FD1	SW8270	NAPHTHALENE	418	U	418	UJ	31	418	ug/kg	HT
SS	NDA193	SW8270	NAPHTHALENE	1720	U	1720	UJ	127	1720	ug/kg	HT
SS	NDA194	SW8270	NAPHTHALENE	480	U	480	UJ	35	480	ug/kg	HT
SS	NDA195	SW8270	NAPHTHALENE	323	U	323	UJ	24	323	ug/kg	HT
SS	NDA084	SW8270	NAPHTHALENE	344	U	344	UJ	25	344	ug/kg	HT
SS	NDA091	SW8270	NAPHTHALENE	367	U	367	UJ	27	367	ug/kg	HT
SS	NDA057	SW8270	NAPHTHALENE	563	U	563	UJ	42	563	ug/kg	HT
SS	NDA059	SW8270	NAPHTHALENE	465	U	465	UJ	34	465	ug/kg	HT
SS	NDA061	SW8270	NAPHTHALENE	469	U	469	UJ	35	469	ug/kg	HT
SS	NDA062FD1	SW8270	NAPHTHALENE	523	U	523	UJ	39	523	ug/kg	HT
SS	NDA065	SW8270	NAPHTHALENE	421	U	421	UJ	31	421	ug/kg	HT
SS	NDA067	SW8270	NAPHTHALENE	378	U	378	UJ	28	378	ug/kg	HT
SS	NDA069	SW8270	NAPHTHALENE	320	U	320	UJ	24	320	ug/kg	HT
SS	NDA119	SW8270	NAPHTHALENE	503	U	503	UJ	37	503	ug/kg	HT
SS	NDA120	SW8270	NAPHTHALENE	541	U	541	UJ	40	541	ug/kg	HT
SS	NDA121	SW8270	NAPHTHALENE	409	U	409	UJ	30	409	ug/kg	HT
SS	NDA122	SW8270	NAPHTHALENE	450	U	450	UJ	33	450	ug/kg	HT
SS	NDA123	SW8270	NAPHTHALENE	450	U	450	UJ	33	450	ug/kg	HT
SS	NDA124	SW8270	NAPHTHALENE	432	U	432	UJ	32	432	ug/kg	HT
SS	NDA071	SW8270	NAPHTHALENE	554	U	554	UJ	41	554	ug/kg	HT
SS	NDA072FD1	SW8270	NAPHTHALENE	413	U	413	UJ	31	413	ug/kg	HT
SS	NDA074	SW8270	NAPHTHALENE	448	U	448	UJ	33	448	ug/kg	HT
SS	NDA076	SW8270	NAPHTHALENE	419	U	419	UJ	31	419	ug/kg	HT
SS	NDA078	SW8270	NAPHTHALENE	440	U	440	UJ	33	440	ug/kg	HT
SS	NDA080RE1	SW8270	NAPHTHALENE	407	U	407	UJ	30	407	ug/kg	HT
SS	NDA082RE1	SW8270	NAPHTHALENE	4660	U	4660	UJ	345	4660	ug/kg	HT
SB	NDA235	SW8081	METHOXYCHLOR	22	U	22	UJ	0.38	22	ug/kg	HT
SB	NDA236	SW8081	METHOXYCHLOR	19	U	19	UJ	0.33	19	ug/kg	HT
SB	NDA237FD1	SW8081	METHOXYCHLOR	19	U	19	UJ	0.33	19	ug/kg	HT
SB	NDA238	SW8081	METHOXYCHLOR	19	U	19	UJ	0.33	19	ug/kg	HT
SB	NDA239	SW8081	METHOXYCHLOR	19	U	19	UJ	0.33	19	ug/kg	HT
SB	NDA240	SW8081	METHOXYCHLOR	20	U	20	UJ	0.35	20	ug/kg	HT
SB	NDA241	SW8081	METHOXYCHLOR	19	U	19	UJ	0.32	19	ug/kg	HT
SB	NDA242	SW8081	METHOXYCHLOR	21	U	21	UJ	0.36	21	ug/kg	HT
SB	NDA243	SW8081	METHOXYCHLOR	20	U	20	UJ	0.34	20	ug/kg	HT
SB	NDA244	SW8081	METHOXYCHLOR	19	U	19	UJ	0.32	19	ug/kg	HT
SB	NDA245	SW8081	METHOXYCHLOR	20	U	20	UJ	0.33	20	ug/kg	HT
SB	NDA246	SW8081	METHOXYCHLOR	21	U	21	UJ	0.36	21	ug/kg	HT
SB	NDA247FD1	SW8081	METHOXYCHLOR	20	U	20	UJ	0.34	20	ug/kg	HT
SB	NDA248	SW8081	METHOXYCHLOR	21	U	21	UJ	0.35	21	ug/kg	HT
SB	NDA249	SW8081	METHOXYCHLOR	19	U	19	UJ	0.33	19	ug/kg	HT
SB	NDA252	SW8081	METHOXYCHLOR	20	U	20	UJ	0.34	20	ug/kg	HT
SB	NDA253	SW8081	METHOXYCHLOR	21	U	21	UJ	0.37	21	ug/kg	HT
SB	NDA254	SW8081	METHOXYCHLOR	21	U	21	UJ	0.36	21	ug/kg	HT
SB	NDA255	SW8081	METHOXYCHLOR	21	U	21	UJ	0.36	21	ug/kg	HT
SB	NDA058	SW8081	METHOXYCHLOR	19	U	19	UJ	0.32	19	ug/kg	HT
SB	NDA060	SW8081	METHOXYCHLOR	19	U	19	UJ	0.32	19	ug/kg	HT
SB	NDA063	SW8081	METHOXYCHLOR	18	U	18	UJ	0.31	18	ug/kg	HT
SB	NDA064FD1	SW8081	METHOXYCHLOR	18	U	18	UJ	0.31	18	ug/kg	HT
SB	NDA066	SW8081	METHOXYCHLOR	18	U	18	UJ	0.3	18	ug/kg	HT
SB	NDA068	SW8081	METHOXYCHLOR	18	U	18	UJ	0.31	18	ug/kg	HT
SB	NDA070	SW8081	METHOXYCHLOR	18	U	18	UJ	0.31	18	ug/kg	HT
SB	NDA073	SW8081	METHOXYCHLOR	18	U	18	UJ	0.31	18	ug/kg	HT
SB	NDA075	SW8081	METHOXYCHLOR	1.8	U	1.8	UJ	0.03	1.8	ug/kg	HT
SB	NDA077	SW8081	METHOXYCHLOR	2	U	2	UJ	0.03	2	ug/kg	HT
SB	NDA081	SW8081	METHOXYCHLOR	1.8	U	1.8	UJ	0.03	1.8	ug/kg	HT
SB	NDA083	SW8081	METHOXYCHLOR	1.7	U	1.7	UJ	0.03	1.7	ug/kg	HT
SB	NDA114	SW8081	METHOXYCHLOR	22	U	22	UJ	0.38	22	ug/kg	HT
SB	NDA116	SW8081	METHOXYCHLOR	21	U	21	UJ	0.36	21	ug/kg	HT
SB	NDA118	SW8081	METHOXYCHLOR	22	U	22	UJ	0.37	22	ug/kg	HT
SB	NDA102	SW8081	METHOXYCHLOR	26	U	26	UJ	0.45	26	ug/kg	HT

Matrix	Sample ID	Analytical Method	Parameter	Lab Result	Lab Qual	Final Result	Final Qual	DL	RL	Units	Comments
SB	NDA105	SW8081	METHOXYCHLOR	27	U	27	UJ	0.46	27	ug/kg	HT
SB	NDA106FD1	SW8081	METHOXYCHLOR	27	U	27	UJ	0.46	27	ug/kg	HT
SB	NDA108	SW8081	METHOXYCHLOR	23	U	23	UJ	0.39	23	ug/kg	HT
SB	NDA110	SW8081	METHOXYCHLOR	23	U	23	UJ	0.39	23	ug/kg	HT
SB	NDA112	SW8081	METHOXYCHLOR	22	U	22	UJ	0.38	22	ug/kg	HT
SD	NDA047	SW8081	METHOXYCHLOR	19	U	19	UJ	0.32	19	ug/kg	HT
SD	NDA048	SW8081	METHOXYCHLOR	19	U	19	UJ	0.33	19	ug/kg	HT
SD	NDA049	SW8081	METHOXYCHLOR	19	U	19	UJ	0.32	19	ug/kg	HT
SS	NDA185	SW8081	METHOXYCHLOR	20	U	20	UJ	0.34	20	ug/kg	HT
SS	NDA186	SW8081	METHOXYCHLOR	19	U	19	UJ	0.32	19	ug/kg	HT
SS	NDA187	SW8081	METHOXYCHLOR	18	U	18	UJ	0.31	18	ug/kg	HT
SS	NDA188	SW8081	METHOXYCHLOR	23	U	23	UJ	0.4	23	ug/kg	HT
SS	NDA189	SW8081	METHOXYCHLOR	19	U	19	UJ	0.32	19	ug/kg	HT
SS	NDA190	SW8081	METHOXYCHLOR	19	U	19	UJ	0.33	19	ug/kg	HT
SS	NDA191	SW8081	METHOXYCHLOR	17	U	17	UJ	0.3	17	ug/kg	HT
SS	NDA192FD1	SW8081	METHOXYCHLOR	20	U	20	UJ	0.34	20	ug/kg	HT
SS	NDA193	SW8081	METHOXYCHLOR	18	U	18	UJ	0.3	18	ug/kg	HT
SS	NDA194	SW8081	METHOXYCHLOR	21	U	21	UJ	0.36	21	ug/kg	HT
SS	NDA195	SW8081	METHOXYCHLOR	17	U	17	UJ	0.3	17	ug/kg	HT
SS	NDA057	SW8081	METHOXYCHLOR	21	U	21	UJ	0.36	21	ug/kg	HT
SS	NDA059	SW8081	METHOXYCHLOR	18	U	18	UJ	0.31	18	ug/kg	HT
SS	NDA061	SW8081	METHOXYCHLOR	18	U	18	UJ	0.3	18	ug/kg	HT
SS	NDA062FD1	SW8081	METHOXYCHLOR	18	U	18	UJ	0.31	18	ug/kg	HT
SS	NDA065	SW8081	METHOXYCHLOR	21	U	21	UJ	0.36	21	ug/kg	HT
SS	NDA067	SW8081	METHOXYCHLOR	18	U	18	UJ	0.31	18	ug/kg	HT
SS	NDA069	SW8081	METHOXYCHLOR	17	U	17	UJ	0.29	17	ug/kg	HT
SS	NDA119	SW8081	METHOXYCHLOR	19	U	19	UJ	0.33	19	ug/kg	HT
SS	NDA120	SW8081	METHOXYCHLOR	22	U	22	UJ	0.38	22	ug/kg	HT
SS	NDA121	SW8081	METHOXYCHLOR	19	U	19	UJ	0.32	19	ug/kg	HT
SS	NDA122	SW8081	METHOXYCHLOR	19	U	19	UJ	0.33	19	ug/kg	HT
SS	NDA123	SW8081	METHOXYCHLOR	19	U	19	UJ	0.32	19	ug/kg	HT
SS	NDA124	SW8081	METHOXYCHLOR	19	U	19	UJ	0.32	19	ug/kg	HT
SS	NDA071	SW8081	METHOXYCHLOR	20	U	20	UJ	0.35	20	ug/kg	HT
SS	NDA072FD1	SW8081	METHOXYCHLOR	18	U	18	UJ	0.3	18	ug/kg	HT
SS	NDA074	SW8081	METHOXYCHLOR	1.8	U	1.8	UJ	0.03	1.8	ug/kg	HT
SS	NDA078	SW8081	METHOXYCHLOR	1.8	U	1.8	UJ	0.03	1.8	ug/kg	HT
SS	NDA080	SW8081	METHOXYCHLOR	1.7	U	1.7	UJ	0.03	1.7	ug/kg	HT
SS	NDA082	SW8081	METHOXYCHLOR	1.7	U	1.7	UJ	0.03	1.7	ug/kg	HT
SS	NDA113	SW8081	METHOXYCHLOR	21	U	21	UJ	0.36	21	ug/kg	HT
SS	NDA115	SW8081	METHOXYCHLOR	19	U	19	UJ	0.33	19	ug/kg	HT
SS	NDA117	SW8081	METHOXYCHLOR	21	U	21	UJ	0.37	21	ug/kg	HT
SS	NDA101	SW8081	METHOXYCHLOR	23	U	23	UJ	0.39	23	ug/kg	HT
SS	NDA103	SW8081	METHOXYCHLOR	23	U	23	UJ	0.4	23	ug/kg	HT
SS	NDA104FD1	SW8081	METHOXYCHLOR	24	U	24	UJ	0.41	24	ug/kg	HT
SS	NDA107	SW8081	METHOXYCHLOR	21	U	21	UJ	0.36	21	ug/kg	HT
SS	NDA109	SW8081	METHOXYCHLOR	22	U	22	UJ	0.38	22	ug/kg	HT
SS	NDA111	SW8081	METHOXYCHLOR	22	U	22	UJ	0.38	22	ug/kg	HT
SB	NDA213	SW8270	ISOPHORONE	485	U	485	UJ	17	485	ug/kg	HT
SB	NDA214FD1	SW8270	ISOPHORONE	487	U	487	UJ	18	487	ug/kg	HT
SB	NDA215	SW8270	ISOPHORONE	527	U	527	UJ	19	527	ug/kg	HT
SB	NDA216	SW8270	ISOPHORONE	537	U	537	UJ	19	537	ug/kg	HT
SB	NDA217	SW8270	ISOPHORONE	540	U	540	UJ	19	540	ug/kg	HT
SB	NDA218	SW8270	ISOPHORONE	505	U	505	UJ	18	505	ug/kg	HT
SB	NDA219	SW8270	ISOPHORONE	380	U	380	UJ	14	380	ug/kg	HT
SB	NDA220	SW8270	ISOPHORONE	542	U	542	UJ	20	542	ug/kg	HT
SB	NDA221	SW8270	ISOPHORONE	501	U	501	UJ	18	501	ug/kg	HT
SB	NDA222	SW8270	ISOPHORONE	459	U	459	UJ	17	459	ug/kg	HT
SB	NDA223	SW8270	ISOPHORONE	527	U	527	UJ	19	527	ug/kg	HT
SB	NDA235	SW8270	ISOPHORONE	504	U	504	UJ	18	504	ug/kg	HT
SB	NDA236	SW8270	ISOPHORONE	423	U	423	UJ	15	423	ug/kg	HT
SB	NDA237FD1	SW8270	ISOPHORONE	395	U	395	UJ	14	395	ug/kg	HT
SB	NDA238	SW8270	ISOPHORONE	424	U	424	UJ	15	424	ug/kg	HT
SB	NDA239	SW8270	ISOPHORONE	555	U	555	UJ	20	555	ug/kg	HT
SB	NDA240	SW8270	ISOPHORONE	397	U	397	UJ	14	397	ug/kg	HT
SB	NDA241	SW8270	ISOPHORONE	471	U	471	UJ	17	471	ug/kg	HT
SB	NDA242	SW8270	ISOPHORONE	436	U	436	UJ	16	436	ug/kg	HT
SB	NDA243	SW8270	ISOPHORONE	893	U	893	UJ	32	893	ug/kg	HT
SB	NDA244	SW8270	ISOPHORONE	388	U	388	UJ	14	388	ug/kg	HT
SB	NDA245	SW8270	ISOPHORONE	393	U	393	UJ	14	393	ug/kg	HT
SB	NDA246	SW8270	ISOPHORONE	511	U	511	UJ	18	511	ug/kg	HT

Matrix	Sample ID	Analytical Method	Parameter	Lab Result	Lab Qual	Final Result	Final Qual	DL	RL	Units	Comments
SB	NDA247FD1	SW8270	ISOPHORONE	390	U	390	UJ	14	390	ug/kg	HT
SB	NDA248	SW8270	ISOPHORONE	453	U	453	UJ	16	453	ug/kg	HT
SB	NDA249	SW8270	ISOPHORONE	374	U	374	UJ	13	374	ug/kg	HT
SB	NDA252	SW8270	ISOPHORONE	420	U	420	UJ	15	420	ug/kg	HT
SB	NDA253	SW8270	ISOPHORONE	439	U	439	UJ	16	439	ug/kg	HT
SB	NDA254	SW8270	ISOPHORONE	391	U	391	UJ	14	391	ug/kg	HT
SB	NDA255	SW8270	ISOPHORONE	375	U	375	UJ	14	375	ug/kg	HT
SB	NDA085	SW8270	ISOPHORONE	482	U	482	UJ	17	482	ug/kg	HT
SB	NDA092	SW8270	ISOPHORONE	400	U	400	UJ	14	400	ug/kg	HT
SB	NDA093	SW8270	ISOPHORONE	339	U	339	UJ	12	339	ug/kg	HT
SB	NDA094	SW8270	ISOPHORONE	510	U	510	UJ	18	510	ug/kg	HT
SB	NDA095FD1	SW8270	ISOPHORONE	310	U	310	UJ	11	310	ug/kg	HT
SB	NDA296	SW8270	ISOPHORONE	369	U	369	UJ	13	369	ug/kg	HT
SB	NDA297	SW8270	ISOPHORONE	358	U	358	UJ	13	358	ug/kg	HT
SB	NDA298	SW8270	ISOPHORONE	341	U	341	UJ	12	341	ug/kg	HT
SB	NDA299	SW8270	ISOPHORONE	370	U	370	UJ	13	370	ug/kg	HT
SB	NDA058	SW8270	ISOPHORONE	460	U	460	UJ	17	460	ug/kg	HT
SB	NDA060	SW8270	ISOPHORONE	478	U	478	UJ	17	478	ug/kg	HT
SB	NDA063	SW8270	ISOPHORONE	382	U	382	UJ	14	382	ug/kg	HT
SB	NDA064FD1	SW8270	ISOPHORONE	351	U	351	UJ	13	351	ug/kg	HT
SB	NDA066	SW8270	ISOPHORONE	344	U	344	UJ	12	344	ug/kg	HT
SB	NDA068	SW8270	ISOPHORONE	360	U	360	UJ	13	360	ug/kg	HT
SB	NDA070	SW8270	ISOPHORONE	404	U	404	UJ	15	404	ug/kg	HT
SB	NDA073	SW8270	ISOPHORONE	383	U	383	UJ	14	383	ug/kg	HT
SB	NDA075	SW8270	ISOPHORONE	401	U	401	UJ	14	401	ug/kg	HT
SB	NDA077	SW8270	ISOPHORONE	441	U	441	UJ	16	441	ug/kg	HT
SB	NDA079	SW8270	ISOPHORONE	466	U	466	UJ	17	466	ug/kg	HT
SB	NDA081RE1	SW8270	ISOPHORONE	393	U	393	UJ	14	393	ug/kg	HT
SB	NDA083RE1	SW8270	ISOPHORONE	4240	U	4240	UJ	152	4240	ug/kg	HT
SD	NDA054	SW8270	ISOPHORONE	480	U	480	UJ	17	480	ug/kg	HT
SD	NDA055	SW8270	ISOPHORONE	696	U	696	UJ	25	696	ug/kg	HT
SD	NDA042	SW8270	ISOPHORONE	686	U	686	UJ	25	686	ug/kg	HT
SD	NDA043	SW8270	ISOPHORONE	735	U	735	UJ	26	735	ug/kg	HT
SD	NDA044	SW8270	ISOPHORONE	1680	U	1680	UJ	61	1680	ug/kg	HT
SD	NDA045	SW8270	ISOPHORONE	1500	U	1500	UJ	54	1500	ug/kg	HT
SD	NDA046	SW8270	ISOPHORONE	1520	U	1520	UJ	55	1520	ug/kg	HT
SD	NDA302	SW8270	ISOPHORONE	1200	U	1200	UJ	43	1200	ug/kg	HT
SD	NDA303	SW8270	ISOPHORONE	2300	U	2300	UJ	83	2300	ug/kg	HT
SD	NDA307FD1	SW8270	ISOPHORONE	2130	U	2130	UJ	77	2130	ug/kg	HT
SD	NDA047	SW8270	ISOPHORONE	503	U	503	UJ	18	503	ug/kg	HT
SD	NDA048	SW8270	ISOPHORONE	558	U	558	UJ	20	558	ug/kg	HT
SD	NDA049	SW8270	ISOPHORONE	463	U	463	UJ	17	463	ug/kg	HT
SS	NDA178	SW8270	ISOPHORONE	644	U	644	UJ	23	644	ug/kg	HT
SS	NDA179	SW8270	ISOPHORONE	644	U	644	UJ	23	644	ug/kg	HT
SS	NDA180	SW8270	ISOPHORONE	550	U	550	UJ	20	550	ug/kg	HT
SS	NDA181	SW8270	ISOPHORONE	566	U	566	UJ	20	566	ug/kg	HT
SS	NDA182	SW8270	ISOPHORONE	679	U	679	UJ	24	679	ug/kg	HT
SS	NDA183	SW8270	ISOPHORONE	589	U	589	UJ	21	589	ug/kg	HT
SS	NDA184FD1	SW8270	ISOPHORONE	662	U	662	UJ	24	662	ug/kg	HT
SS	NDA201	SW8270	ISOPHORONE	491	U	491	UJ	18	491	ug/kg	HT
SS	NDA202	SW8270	ISOPHORONE	605	U	605	UJ	22	605	ug/kg	HT
SS	NDA203	SW8270	ISOPHORONE	617	U	617	UJ	22	617	ug/kg	HT
SS	NDA204	SW8270	ISOPHORONE	753	U	753	UJ	27	753	ug/kg	HT
SS	NDA205FD1	SW8270	ISOPHORONE	668	U	668	UJ	24	668	ug/kg	HT
SS	NDA206	SW8270	ISOPHORONE	529	U	529	UJ	19	529	ug/kg	HT
SS	NDA207	SW8270	ISOPHORONE	669	U	669	UJ	24	669	ug/kg	HT
SS	NDA208	SW8270	ISOPHORONE	520	U	520	UJ	19	520	ug/kg	HT
SS	NDA209	SW8270	ISOPHORONE	570	U	570	UJ	21	570	ug/kg	HT
SS	NDA210	SW8270	ISOPHORONE	545	U	545	UJ	20	545	ug/kg	HT
SS	NDA211	SW8270	ISOPHORONE	742	U	742	UJ	27	742	ug/kg	HT
SS	NDA212	SW8270	ISOPHORONE	651	U	651	UJ	23	651	ug/kg	HT
SS	NDA185	SW8270	ISOPHORONE	445	U	445	UJ	16	445	ug/kg	HT
SS	NDA186	SW8270	ISOPHORONE	416	U	416	UJ	15	416	ug/kg	HT
SS	NDA187	SW8270	ISOPHORONE	380	U	380	UJ	14	380	ug/kg	HT
SS	NDA188	SW8270	ISOPHORONE	810	U	810	UJ	29	810	ug/kg	HT
SS	NDA189	SW8270	ISOPHORONE	426	U	426	UJ	15	426	ug/kg	HT
SS	NDA190	SW8270	ISOPHORONE	430	U	430	UJ	15	430	ug/kg	HT
SS	NDA191	SW8270	ISOPHORONE	338	U	338	UJ	12	338	ug/kg	HT
SS	NDA192FD1	SW8270	ISOPHORONE	418	U	418	UJ	15	418	ug/kg	HT
SS	NDA193	SW8270	ISOPHORONE	1720	U	1720	UJ	62	1720	ug/kg	HT

Matrix	Sample ID	Analytical Method	Parameter	Lab Result	Lab Qual	Final Result	Final Qual	DL	RL	Units	Comments
SS	NDA194	SW8270	ISOPHORONE	480	U	480	UJ	17	480	ug/kg	HT
SS	NDA195	SW8270	ISOPHORONE	323	U	323	UJ	12	323	ug/kg	HT
SS	NDA084	SW8270	ISOPHORONE	344	U	344	UJ	12	344	ug/kg	HT
SS	NDA091	SW8270	ISOPHORONE	367	U	367	UJ	13	367	ug/kg	HT
SS	NDA057	SW8270	ISOPHORONE	563	U	563	UJ	20	563	ug/kg	HT
SS	NDA059	SW8270	ISOPHORONE	465	U	465	UJ	17	465	ug/kg	HT
SS	NDA061	SW8270	ISOPHORONE	469	U	469	UJ	17	469	ug/kg	HT
SS	NDA062FD1	SW8270	ISOPHORONE	523	U	523	UJ	19	523	ug/kg	HT
SS	NDA065	SW8270	ISOPHORONE	421	U	421	UJ	15	421	ug/kg	HT
SS	NDA067	SW8270	ISOPHORONE	378	U	378	UJ	14	378	ug/kg	HT
SS	NDA069	SW8270	ISOPHORONE	320	U	320	UJ	12	320	ug/kg	HT
SS	NDA119	SW8270	ISOPHORONE	503	U	503	UJ	18	503	ug/kg	HT
SS	NDA120	SW8270	ISOPHORONE	541	U	541	UJ	19	541	ug/kg	HT
SS	NDA121	SW8270	ISOPHORONE	409	U	409	UJ	15	409	ug/kg	HT
SS	NDA122	SW8270	ISOPHORONE	450	U	450	UJ	16	450	ug/kg	HT
SS	NDA123	SW8270	ISOPHORONE	450	U	450	UJ	16	450	ug/kg	HT
SS	NDA124	SW8270	ISOPHORONE	432	U	432	UJ	16	432	ug/kg	HT
SS	NDA071	SW8270	ISOPHORONE	554	U	554	UJ	20	554	ug/kg	HT
SS	NDA072FD1	SW8270	ISOPHORONE	413	U	413	UJ	15	413	ug/kg	HT
SS	NDA074	SW8270	ISOPHORONE	448	U	448	UJ	16	448	ug/kg	HT
SS	NDA076	SW8270	ISOPHORONE	419	U	419	UJ	15	419	ug/kg	HT
SS	NDA078	SW8270	ISOPHORONE	440	U	440	UJ	16	440	ug/kg	HT
SS	NDA080RE1	SW8270	ISOPHORONE	407	U	407	UJ	15	407	ug/kg	HT
SS	NDA082RE1	SW8270	ISOPHORONE	4660	U	4660	UJ	168	4660	ug/kg	HT
SB	NDA213	SW8270	INDENO(1,2,3-c,d)PYRENE	485	U	485	UJ	25	485	ug/kg	HT
SB	NDA214FD1	SW8270	INDENO(1,2,3-c,d)PYRENE	487	U	487	UJ	25	487	ug/kg	HT
SB	NDA215	SW8270	INDENO(1,2,3-c,d)PYRENE	527	U	527	UJ	27	527	ug/kg	HT
SB	NDA216	SW8270	INDENO(1,2,3-c,d)PYRENE	537	U	537	UJ	28	537	ug/kg	HT
SB	NDA217	SW8270	INDENO(1,2,3-c,d)PYRENE	540	U	540	UJ	28	540	ug/kg	HT
SB	NDA218	SW8270	INDENO(1,2,3-c,d)PYRENE	505	U	505	UJ	26	505	ug/kg	HT
SB	NDA219	SW8270	INDENO(1,2,3-c,d)PYRENE	380	U	380	UJ	20	380	ug/kg	HT
SB	NDA220	SW8270	INDENO(1,2,3-c,d)PYRENE	542	U	542	UJ	28	542	ug/kg	HT
SB	NDA221	SW8270	INDENO(1,2,3-c,d)PYRENE	501	U	501	UJ	26	501	ug/kg	HT
SB	NDA222	SW8270	INDENO(1,2,3-c,d)PYRENE	459	U	459	UJ	24	459	ug/kg	HT
SB	NDA223	SW8270	INDENO(1,2,3-c,d)PYRENE	527	U	527	UJ	27	527	ug/kg	HT
SB	NDA235	SW8270	INDENO(1,2,3-c,d)PYRENE	504	U	504	UJ	26	504	ug/kg	HT
SB	NDA236	SW8270	INDENO(1,2,3-c,d)PYRENE	423	U	423	UJ	22	423	ug/kg	HT
SB	NDA237FD1	SW8270	INDENO(1,2,3-c,d)PYRENE	395	U	395	UJ	21	395	ug/kg	HT
SB	NDA238	SW8270	INDENO(1,2,3-c,d)PYRENE	424	U	424	UJ	22	424	ug/kg	HT
SB	NDA239	SW8270	INDENO(1,2,3-c,d)PYRENE	555	U	555	UJ	29	555	ug/kg	HT
SB	NDA240	SW8270	INDENO(1,2,3-c,d)PYRENE	397	U	397	UJ	21	397	ug/kg	HT
SB	NDA241	SW8270	INDENO(1,2,3-c,d)PYRENE	471	U	471	UJ	24	471	ug/kg	HT
SB	NDA242	SW8270	INDENO(1,2,3-c,d)PYRENE	436	U	436	UJ	23	436	ug/kg	HT
SB	NDA243	SW8270	INDENO(1,2,3-c,d)PYRENE	893	U	893	UJ	46	893	ug/kg	HT
SB	NDA244	SW8270	INDENO(1,2,3-c,d)PYRENE	388	U	388	UJ	20	388	ug/kg	HT
SB	NDA245	SW8270	INDENO(1,2,3-c,d)PYRENE	393	U	393	UJ	20	393	ug/kg	HT
SB	NDA246	SW8270	INDENO(1,2,3-c,d)PYRENE	511	U	511	UJ	27	511	ug/kg	HT
SB	NDA247FD1	SW8270	INDENO(1,2,3-c,d)PYRENE	390	U	390	UJ	20	390	ug/kg	HT
SB	NDA248	SW8270	INDENO(1,2,3-c,d)PYRENE	453	U	453	UJ	24	453	ug/kg	HT
SB	NDA249	SW8270	INDENO(1,2,3-c,d)PYRENE	374	U	374	UJ	19	374	ug/kg	HT
SB	NDA252	SW8270	INDENO(1,2,3-c,d)PYRENE	420	U	420	UJ	22	420	ug/kg	HT
SB	NDA253	SW8270	INDENO(1,2,3-c,d)PYRENE	439	U	439	UJ	23	439	ug/kg	HT
SB	NDA254	SW8270	INDENO(1,2,3-c,d)PYRENE	391	U	391	UJ	20	391	ug/kg	HT
SB	NDA255	SW8270	INDENO(1,2,3-c,d)PYRENE	375	U	375	UJ	20	375	ug/kg	HT
SB	NDA085	SW8270	INDENO(1,2,3-c,d)PYRENE	482	U	482	UJ	25	482	ug/kg	HT
SB	NDA092	SW8270	INDENO(1,2,3-c,d)PYRENE	400	U	400	UJ	21	400	ug/kg	HT
SB	NDA093	SW8270	INDENO(1,2,3-c,d)PYRENE	339	U	339	UJ	18	339	ug/kg	HT
SB	NDA094	SW8270	INDENO(1,2,3-c,d)PYRENE	510	U	510	UJ	27	510	ug/kg	HT
SB	NDA095FD1	SW8270	INDENO(1,2,3-c,d)PYRENE	310	U	310	UJ	16	310	ug/kg	HT
SB	NDA296	SW8270	INDENO(1,2,3-c,d)PYRENE	369	U	369	UJ	19	369	ug/kg	HT
SB	NDA299	SW8270	INDENO(1,2,3-c,d)PYRENE	370	U	370	UJ	19	370	ug/kg	HT
SB	NDA058	SW8270	INDENO(1,2,3-c,d)PYRENE	460	U	460	UJ	24	460	ug/kg	HT
SB	NDA060	SW8270	INDENO(1,2,3-c,d)PYRENE	478	U	478	UJ	25	478	ug/kg	HT
SB	NDA063	SW8270	INDENO(1,2,3-c,d)PYRENE	382	U	382	UJ	20	382	ug/kg	HT
SB	NDA064FD1	SW8270	INDENO(1,2,3-c,d)PYRENE	351	U	351	UJ	18	351	ug/kg	HT
SB	NDA066	SW8270	INDENO(1,2,3-c,d)PYRENE	344	U	344	UJ	18	344	ug/kg	HT
SB	NDA068	SW8270	INDENO(1,2,3-c,d)PYRENE	360	U	360	UJ	19	360	ug/kg	HT
SB	NDA070	SW8270	INDENO(1,2,3-c,d)PYRENE	404	U	404	UJ	21	404	ug/kg	HT
SB	NDA073	SW8270	INDENO(1,2,3-c,d)PYRENE	383	U	383	UJ	20	383	ug/kg	HT
SB	NDA075	SW8270	INDENO(1,2,3-c,d)PYRENE	401	U	401	UJ	21	401	ug/kg	HT

Matrix	Sample ID	Analytical Method	Parameter	Lab Result	Lab Qual	Final Result	Final Qual	DL	RL	Units	Comments
SB	NDA077	SW8270	INDENO(1,2,3-c,d)PYRENE	441	U	441	UJ	23	441	ug/kg	HT
SB	NDA079	SW8270	INDENO(1,2,3-c,d)PYRENE	466	U	466	UJ	24	466	ug/kg	HT
SB	NDA081RE1	SW8270	INDENO(1,2,3-c,d)PYRENE	393	U	393	UJ	20	393	ug/kg	HT
SB	NDA083RE1	SW8270	INDENO(1,2,3-c,d)PYRENE	4240	U	4240	UJ	220	4240	ug/kg	HT
SD	NDA054	SW8270	INDENO(1,2,3-c,d)PYRENE	480	U	480	UJ	25	480	ug/kg	HT
SD	NDA055	SW8270	INDENO(1,2,3-c,d)PYRENE	696	U	696	UJ	36	696	ug/kg	HT
SD	NDA042	SW8270	INDENO(1,2,3-c,d)PYRENE	686	U	686	UJ	36	686	ug/kg	HT
SD	NDA043	SW8270	INDENO(1,2,3-c,d)PYRENE	735	U	735	UJ	38	735	ug/kg	HT
SD	NDA044	SW8270	INDENO(1,2,3-c,d)PYRENE	1680	U	1680	UJ	88	1680	ug/kg	HT
SD	NDA045	SW8270	INDENO(1,2,3-c,d)PYRENE	1500	U	1500	UJ	78	1500	ug/kg	HT
SD	NDA046	SW8270	INDENO(1,2,3-c,d)PYRENE	1520	U	1520	UJ	79	1520	ug/kg	HT
SD	NDA302	SW8270	INDENO(1,2,3-c,d)PYRENE	1200	U	1200	UJ	62	1200	ug/kg	HT
SD	NDA303	SW8270	INDENO(1,2,3-c,d)PYRENE	2300	U	2300	UJ	120	2300	ug/kg	HT
SD	NDA307FD1	SW8270	INDENO(1,2,3-c,d)PYRENE	2130	U	2130	UJ	111	2130	ug/kg	HT
SD	NDA047	SW8270	INDENO(1,2,3-c,d)PYRENE	503	U	503	UJ	26	503	ug/kg	HT
SD	NDA048	SW8270	INDENO(1,2,3-c,d)PYRENE	558	U	558	UJ	29	558	ug/kg	HT
SD	NDA049	SW8270	INDENO(1,2,3-c,d)PYRENE	463	U	463	UJ	24	463	ug/kg	HT
SS	NDA178	SW8270	INDENO(1,2,3-c,d)PYRENE	644	U	644	UJ	33	644	ug/kg	HT
SS	NDA179	SW8270	INDENO(1,2,3-c,d)PYRENE	644	U	644	UJ	33	644	ug/kg	HT
SS	NDA180	SW8270	INDENO(1,2,3-c,d)PYRENE	550	U	550	UJ	29	550	ug/kg	HT
SS	NDA181	SW8270	INDENO(1,2,3-c,d)PYRENE	566	U	566	UJ	29	566	ug/kg	HT
SS	NDA182	SW8270	INDENO(1,2,3-c,d)PYRENE	679	U	679	UJ	35	679	ug/kg	HT
SS	NDA183	SW8270	INDENO(1,2,3-c,d)PYRENE	589	U	589	UJ	31	589	ug/kg	HT
SS	NDA184FD1	SW8270	INDENO(1,2,3-c,d)PYRENE	662	U	662	UJ	34	662	ug/kg	HT
SS	NDA201	SW8270	INDENO(1,2,3-c,d)PYRENE	491	U	491	UJ	26	491	ug/kg	HT
SS	NDA202	SW8270	INDENO(1,2,3-c,d)PYRENE	605	U	605	UJ	31	605	ug/kg	HT
SS	NDA203	SW8270	INDENO(1,2,3-c,d)PYRENE	617	U	617	UJ	32	617	ug/kg	HT
SS	NDA204	SW8270	INDENO(1,2,3-c,d)PYRENE	753	U	753	UJ	39	753	ug/kg	HT
SS	NDA205FD1	SW8270	INDENO(1,2,3-c,d)PYRENE	668	U	668	UJ	35	668	ug/kg	HT
SS	NDA206	SW8270	INDENO(1,2,3-c,d)PYRENE	529	U	529	UJ	28	529	ug/kg	HT
SS	NDA207	SW8270	INDENO(1,2,3-c,d)PYRENE	669	U	669	UJ	35	669	ug/kg	HT
SS	NDA208	SW8270	INDENO(1,2,3-c,d)PYRENE	520	U	520	UJ	27	520	ug/kg	HT
SS	NDA209	SW8270	INDENO(1,2,3-c,d)PYRENE	570	U	570	UJ	30	570	ug/kg	HT
SS	NDA210	SW8270	INDENO(1,2,3-c,d)PYRENE	545	U	545	UJ	28	545	ug/kg	HT
SS	NDA211	SW8270	INDENO(1,2,3-c,d)PYRENE	742	U	742	UJ	39	742	ug/kg	HT
SS	NDA212	SW8270	INDENO(1,2,3-c,d)PYRENE	651	U	651	UJ	34	651	ug/kg	HT
SS	NDA185	SW8270	INDENO(1,2,3-c,d)PYRENE	445	U	445	UJ	23	445	ug/kg	HT
SS	NDA187	SW8270	INDENO(1,2,3-c,d)PYRENE	380	U	380	UJ	20	380	ug/kg	HT
SS	NDA188	SW8270	INDENO(1,2,3-c,d)PYRENE	810	U	810	UJ	42	810	ug/kg	HT
SS	NDA189	SW8270	INDENO(1,2,3-c,d)PYRENE	426	U	426	UJ	22	426	ug/kg	HT
SS	NDA190	SW8270	INDENO(1,2,3-c,d)PYRENE	430	U	430	UJ	22	430	ug/kg	HT
SS	NDA191	SW8270	INDENO(1,2,3-c,d)PYRENE	338	U	338	UJ	18	338	ug/kg	HT
SS	NDA192FD1	SW8270	INDENO(1,2,3-c,d)PYRENE	418	U	418	UJ	22	418	ug/kg	HT
SS	NDA193	SW8270	INDENO(1,2,3-c,d)PYRENE	1720	U	1720	UJ	90	1720	ug/kg	HT
SS	NDA194	SW8270	INDENO(1,2,3-c,d)PYRENE	480	U	480	UJ	25	480	ug/kg	HT
SS	NDA195	SW8270	INDENO(1,2,3-c,d)PYRENE	323	U	323	UJ	17	323	ug/kg	HT
SS	NDA057	SW8270	INDENO(1,2,3-c,d)PYRENE	563	U	563	UJ	29	563	ug/kg	HT
SS	NDA059	SW8270	INDENO(1,2,3-c,d)PYRENE	465	U	465	UJ	24	465	ug/kg	HT
SS	NDA061	SW8270	INDENO(1,2,3-c,d)PYRENE	469	U	469	UJ	24	469	ug/kg	HT
SS	NDA062FD1	SW8270	INDENO(1,2,3-c,d)PYRENE	523	U	523	UJ	27	523	ug/kg	HT
SS	NDA065	SW8270	INDENO(1,2,3-c,d)PYRENE	421	U	421	UJ	22	421	ug/kg	HT
SS	NDA067	SW8270	INDENO(1,2,3-c,d)PYRENE	378	U	378	UJ	20	378	ug/kg	HT
SS	NDA069	SW8270	INDENO(1,2,3-c,d)PYRENE	320	U	320	UJ	17	320	ug/kg	HT
SS	NDA119	SW8270	INDENO(1,2,3-c,d)PYRENE	503	U	503	UJ	26	503	ug/kg	HT
SS	NDA120	SW8270	INDENO(1,2,3-c,d)PYRENE	541	U	541	UJ	28	541	ug/kg	HT
SS	NDA124	SW8270	INDENO(1,2,3-c,d)PYRENE	432	U	432	UJ	22	432	ug/kg	HT
SS	NDA071	SW8270	INDENO(1,2,3-c,d)PYRENE	554	U	554	UJ	29	554	ug/kg	HT
SS	NDA072FD1	SW8270	INDENO(1,2,3-c,d)PYRENE	413	U	413	UJ	21	413	ug/kg	HT
SS	NDA074	SW8270	INDENO(1,2,3-c,d)PYRENE	448	U	448	UJ	23	448	ug/kg	HT
SS	NDA076	SW8270	INDENO(1,2,3-c,d)PYRENE	419	U	419	UJ	22	419	ug/kg	HT
SS	NDA078	SW8270	INDENO(1,2,3-c,d)PYRENE	440	U	440	UJ	23	440	ug/kg	HT
SS	NDA080RE1	SW8270	INDENO(1,2,3-c,d)PYRENE	407	U	407	UJ	21	407	ug/kg	HT
SS	NDA082RE1	SW8270	INDENO(1,2,3-c,d)PYRENE	4660	U	4660	UJ	242	4660	ug/kg	HT
SB	NDA213	SW8270	HEXACHLOROETHANE	485	U	485	UJ	44	485	ug/kg	HT
SB	NDA214FD1	SW8270	HEXACHLOROETHANE	487	U	487	UJ	44	487	ug/kg	HT
SB	NDA215	SW8270	HEXACHLOROETHANE	527	U	527	UJ	48	527	ug/kg	HT
SB	NDA216	SW8270	HEXACHLOROETHANE	537	U	537	UJ	49	537	ug/kg	HT
SB	NDA217	SW8270	HEXACHLOROETHANE	540	U	540	UJ	49	540	ug/kg	HT
SB	NDA218	SW8270	HEXACHLOROETHANE	505	U	505	UJ	46	505	ug/kg	HT
SB	NDA219	SW8270	HEXACHLOROETHANE	380	U	380	UJ	35	380	ug/kg	HT

Matrix	Sample ID	Analytical Method	Parameter	Lab Result	Lab Qual	Final Result	Final Qual	DL	RL	Units	Comments
SB	NDA220	SW8270	HEXACHLOROETHANE	542	U	542	UJ	49	542	ug/kg	HT
SB	NDA221	SW8270	HEXACHLOROETHANE	501	U	501	UJ	46	501	ug/kg	HT
SB	NDA222	SW8270	HEXACHLOROETHANE	459	U	459	UJ	42	459	ug/kg	HT
SB	NDA223	SW8270	HEXACHLOROETHANE	527	U	527	UJ	48	527	ug/kg	HT
SB	NDA235	SW8270	HEXACHLOROETHANE	504	U	504	UJ	46	504	ug/kg	HT
SB	NDA236	SW8270	HEXACHLOROETHANE	423	U	423	UJ	38	423	ug/kg	HT
SB	NDA237FD1	SW8270	HEXACHLOROETHANE	395	U	395	UJ	36	395	ug/kg	HT
SB	NDA238	SW8270	HEXACHLOROETHANE	424	U	424	UJ	39	424	ug/kg	HT
SB	NDA239	SW8270	HEXACHLOROETHANE	555	U	555	UJ	51	555	ug/kg	HT
SB	NDA240	SW8270	HEXACHLOROETHANE	397	U	397	UJ	36	397	ug/kg	HT
SB	NDA241	SW8270	HEXACHLOROETHANE	471	U	471	UJ	43	471	ug/kg	HT
SB	NDA242	SW8270	HEXACHLOROETHANE	436	U	436	UJ	40	436	ug/kg	HT
SB	NDA243	SW8270	HEXACHLOROETHANE	893	U	893	UJ	81	893	ug/kg	HT
SB	NDA244	SW8270	HEXACHLOROETHANE	388	U	388	UJ	35	388	ug/kg	HT
SB	NDA245	SW8270	HEXACHLOROETHANE	393	U	393	UJ	36	393	ug/kg	HT
SB	NDA246	SW8270	HEXACHLOROETHANE	511	U	511	UJ	47	511	ug/kg	HT
SB	NDA247FD1	SW8270	HEXACHLOROETHANE	390	U	390	UJ	36	390	ug/kg	HT
SB	NDA248	SW8270	HEXACHLOROETHANE	453	U	453	UJ	41	453	ug/kg	HT
SB	NDA249	SW8270	HEXACHLOROETHANE	374	U	374	UJ	34	374	ug/kg	HT
SB	NDA252	SW8270	HEXACHLOROETHANE	420	U	420	UJ	38	420	ug/kg	HT
SB	NDA253	SW8270	HEXACHLOROETHANE	439	U	439	UJ	40	439	ug/kg	HT
SB	NDA254	SW8270	HEXACHLOROETHANE	391	U	391	UJ	36	391	ug/kg	HT
SB	NDA255	SW8270	HEXACHLOROETHANE	375	U	375	UJ	34	375	ug/kg	HT
SB	NDA085	SW8270	HEXACHLOROETHANE	482	U	482	UJ	44	482	ug/kg	HT
SB	NDA092	SW8270	HEXACHLOROETHANE	400	U	400	UJ	36	400	ug/kg	HT
SB	NDA093	SW8270	HEXACHLOROETHANE	339	U	339	UJ	31	339	ug/kg	HT
SB	NDA094	SW8270	HEXACHLOROETHANE	510	U	510	UJ	46	510	ug/kg	HT
SB	NDA095FD1	SW8270	HEXACHLOROETHANE	310	U	310	UJ	28	310	ug/kg	HT
SB	NDA296	SW8270	HEXACHLOROETHANE	369	U	369	UJ	34	369	ug/kg	HT
SB	NDA297	SW8270	HEXACHLOROETHANE	358	U	358	UJ	33	358	ug/kg	HT
SB	NDA298	SW8270	HEXACHLOROETHANE	341	U	341	UJ	31	341	ug/kg	HT
SB	NDA299	SW8270	HEXACHLOROETHANE	370	U	370	UJ	34	370	ug/kg	HT
SB	NDA058	SW8270	HEXACHLOROETHANE	460	U	460	UJ	42	460	ug/kg	HT
SB	NDA060	SW8270	HEXACHLOROETHANE	478	U	478	UJ	43	478	ug/kg	HT
SB	NDA063	SW8270	HEXACHLOROETHANE	382	U	382	UJ	35	382	ug/kg	HT
SB	NDA064FD1	SW8270	HEXACHLOROETHANE	351	U	351	UJ	32	351	ug/kg	HT
SB	NDA066	SW8270	HEXACHLOROETHANE	344	U	344	UJ	31	344	ug/kg	HT
SB	NDA068	SW8270	HEXACHLOROETHANE	360	U	360	UJ	33	360	ug/kg	HT
SB	NDA070	SW8270	HEXACHLOROETHANE	404	U	404	UJ	37	404	ug/kg	HT
SB	NDA073	SW8270	HEXACHLOROETHANE	383	U	383	UJ	35	383	ug/kg	HT
SB	NDA075	SW8270	HEXACHLOROETHANE	401	U	401	UJ	36	401	ug/kg	HT
SB	NDA077	SW8270	HEXACHLOROETHANE	441	U	441	UJ	40	441	ug/kg	HT
SB	NDA079	SW8270	HEXACHLOROETHANE	466	U	466	UJ	42	466	ug/kg	HT
SB	NDA081RE1	SW8270	HEXACHLOROETHANE	393	U	393	UJ	36	393	ug/kg	HT
SB	NDA083RE1	SW8270	HEXACHLOROETHANE	4240	U	4240	UJ	385	4240	ug/kg	HT
SD	NDA054	SW8270	HEXACHLOROETHANE	480	U	480	UJ	44	480	ug/kg	HT
SD	NDA055	SW8270	HEXACHLOROETHANE	696	U	696	UJ	63	696	ug/kg	HT
SD	NDA042	SW8270	HEXACHLOROETHANE	686	U	686	UJ	62	686	ug/kg	HT
SD	NDA043	SW8270	HEXACHLOROETHANE	735	U	735	UJ	67	735	ug/kg	HT
SD	NDA044	SW8270	HEXACHLOROETHANE	1680	U	1680	UJ	153	1680	ug/kg	HT
SD	NDA045	SW8270	HEXACHLOROETHANE	1500	U	1500	UJ	137	1500	ug/kg	HT
SD	NDA046	SW8270	HEXACHLOROETHANE	1520	U	1520	UJ	138	1520	ug/kg	HT
SD	NDA302	SW8270	HEXACHLOROETHANE	1200	U	1200	UJ	109	1200	ug/kg	HT
SD	NDA303	SW8270	HEXACHLOROETHANE	2300	U	2300	UJ	209	2300	ug/kg	HT
SD	NDA307FD1	SW8270	HEXACHLOROETHANE	2130	U	2130	UJ	193	2130	ug/kg	HT
SD	NDA047	SW8270	HEXACHLOROETHANE	503	U	503	UJ	46	503	ug/kg	HT
SD	NDA048	SW8270	HEXACHLOROETHANE	558	U	558	UJ	51	558	ug/kg	HT
SD	NDA049	SW8270	HEXACHLOROETHANE	463	U	463	UJ	42	463	ug/kg	HT
SS	NDA178	SW8270	HEXACHLOROETHANE	644	U	644	UJ	59	644	ug/kg	HT
SS	NDA179	SW8270	HEXACHLOROETHANE	644	U	644	UJ	59	644	ug/kg	HT
SS	NDA180	SW8270	HEXACHLOROETHANE	550	U	550	UJ	50	550	ug/kg	HT
SS	NDA181	SW8270	HEXACHLOROETHANE	566	U	566	UJ	52	566	ug/kg	HT
SS	NDA182	SW8270	HEXACHLOROETHANE	679	U	679	UJ	62	679	ug/kg	HT
SS	NDA183	SW8270	HEXACHLOROETHANE	589	U	589	UJ	54	589	ug/kg	HT
SS	NDA184FD1	SW8270	HEXACHLOROETHANE	662	U	662	UJ	60	662	ug/kg	HT
SS	NDA201	SW8270	HEXACHLOROETHANE	491	U	491	UJ	45	491	ug/kg	HT
SS	NDA202	SW8270	HEXACHLOROETHANE	605	U	605	UJ	55	605	ug/kg	HT
SS	NDA203	SW8270	HEXACHLOROETHANE	617	U	617	UJ	56	617	ug/kg	HT
SS	NDA204	SW8270	HEXACHLOROETHANE	753	U	753	UJ	69	753	ug/kg	HT
SS	NDA205FD1	SW8270	HEXACHLOROETHANE	668	U	668	UJ	61	668	ug/kg	HT

Matrix	Sample ID	Analytical Method	Parameter	Lab Result	Lab Qual	Final Result	Final Qual	DL	RL	Units	Comments
SS	NDA206	SW8270	HEXACHLOROETHANE	529	U	529	UJ	48	529	ug/kg	HT
SS	NDA207	SW8270	HEXACHLOROETHANE	669	U	669	UJ	61	669	ug/kg	HT
SS	NDA208	SW8270	HEXACHLOROETHANE	520	U	520	UJ	47	520	ug/kg	HT
SS	NDA209	SW8270	HEXACHLOROETHANE	570	U	570	UJ	52	570	ug/kg	HT
SS	NDA210	SW8270	HEXACHLOROETHANE	545	U	545	UJ	50	545	ug/kg	HT
SS	NDA211	SW8270	HEXACHLOROETHANE	742	U	742	UJ	68	742	ug/kg	HT
SS	NDA212	SW8270	HEXACHLOROETHANE	651	U	651	UJ	59	651	ug/kg	HT
SS	NDA185	SW8270	HEXACHLOROETHANE	445	U	445	UJ	41	445	ug/kg	HT
SS	NDA186	SW8270	HEXACHLOROETHANE	416	U	416	UJ	38	416	ug/kg	HT
SS	NDA187	SW8270	HEXACHLOROETHANE	380	U	380	UJ	35	380	ug/kg	HT
SS	NDA188	SW8270	HEXACHLOROETHANE	810	U	810	UJ	74	810	ug/kg	HT
SS	NDA189	SW8270	HEXACHLOROETHANE	426	U	426	UJ	39	426	ug/kg	HT
SS	NDA190	SW8270	HEXACHLOROETHANE	430	U	430	UJ	39	430	ug/kg	HT
SS	NDA191	SW8270	HEXACHLOROETHANE	338	U	338	UJ	31	338	ug/kg	HT
SS	NDA192FD1	SW8270	HEXACHLOROETHANE	418	U	418	UJ	38	418	ug/kg	HT
SS	NDA193	SW8270	HEXACHLOROETHANE	1720	U	1720	UJ	157	1720	ug/kg	HT
SS	NDA194	SW8270	HEXACHLOROETHANE	480	U	480	UJ	44	480	ug/kg	HT
SS	NDA195	SW8270	HEXACHLOROETHANE	323	U	323	UJ	29	323	ug/kg	HT
SS	NDA084	SW8270	HEXACHLOROETHANE	344	U	344	UJ	31	344	ug/kg	HT
SS	NDA091	SW8270	HEXACHLOROETHANE	367	U	367	UJ	33	367	ug/kg	HT
SS	NDA057	SW8270	HEXACHLOROETHANE	563	U	563	UJ	51	563	ug/kg	HT
SS	NDA059	SW8270	HEXACHLOROETHANE	465	U	465	UJ	42	465	ug/kg	HT
SS	NDA061	SW8270	HEXACHLOROETHANE	469	U	469	UJ	43	469	ug/kg	HT
SS	NDA062FD1	SW8270	HEXACHLOROETHANE	523	U	523	UJ	48	523	ug/kg	HT
SS	NDA065	SW8270	HEXACHLOROETHANE	421	U	421	UJ	38	421	ug/kg	HT
SS	NDA067	SW8270	HEXACHLOROETHANE	378	U	378	UJ	34	378	ug/kg	HT
SS	NDA069	SW8270	HEXACHLOROETHANE	320	U	320	UJ	29	320	ug/kg	HT
SS	NDA119	SW8270	HEXACHLOROETHANE	503	U	503	UJ	46	503	ug/kg	HT
SS	NDA120	SW8270	HEXACHLOROETHANE	541	U	541	UJ	49	541	ug/kg	HT
SS	NDA121	SW8270	HEXACHLOROETHANE	409	U	409	UJ	37	409	ug/kg	HT
SS	NDA122	SW8270	HEXACHLOROETHANE	450	U	450	UJ	41	450	ug/kg	HT
SS	NDA123	SW8270	HEXACHLOROETHANE	450	U	450	UJ	41	450	ug/kg	HT
SS	NDA124	SW8270	HEXACHLOROETHANE	432	U	432	UJ	39	432	ug/kg	HT
SS	NDA071	SW8270	HEXACHLOROETHANE	554	U	554	UJ	50	554	ug/kg	HT
SS	NDA072FD1	SW8270	HEXACHLOROETHANE	413	U	413	UJ	38	413	ug/kg	HT
SS	NDA074	SW8270	HEXACHLOROETHANE	448	U	448	UJ	41	448	ug/kg	HT
SS	NDA076	SW8270	HEXACHLOROETHANE	419	U	419	UJ	38	419	ug/kg	HT
SS	NDA078	SW8270	HEXACHLOROETHANE	440	U	440	UJ	40	440	ug/kg	HT
SS	NDA080RE1	SW8270	HEXACHLOROETHANE	407	U	407	UJ	37	407	ug/kg	HT
SS	NDA082RE1	SW8270	HEXACHLOROETHANE	4660	U	4660	UJ	424	4660	ug/kg	HT
SB	NDA213	SW8270	HEXACHLOROCYCLOPENTADIENE	485	U	485	UJ	36	485	ug/kg	HT
SB	NDA214FD1	SW8270	HEXACHLOROCYCLOPENTADIENE	487	U	487	UJ	36	487	ug/kg	HT
SB	NDA215	SW8270	HEXACHLOROCYCLOPENTADIENE	527	U	527	UJ	39	527	ug/kg	HT
SB	NDA216	SW8270	HEXACHLOROCYCLOPENTADIENE	537	U	537	UJ	40	537	ug/kg	HT
SB	NDA217	SW8270	HEXACHLOROCYCLOPENTADIENE	540	U	540	UJ	40	540	ug/kg	HT
SB	NDA218	SW8270	HEXACHLOROCYCLOPENTADIENE	505	U	505	UJ	37	505	ug/kg	HT
SB	NDA219	SW8270	HEXACHLOROCYCLOPENTADIENE	380	U	380	UJ	28	380	ug/kg	HT
SB	NDA220	SW8270	HEXACHLOROCYCLOPENTADIENE	542	U	542	UJ	40	542	ug/kg	HT
SB	NDA221	SW8270	HEXACHLOROCYCLOPENTADIENE	501	U	501	UJ	37	501	ug/kg	HT
SB	NDA222	SW8270	HEXACHLOROCYCLOPENTADIENE	459	U	459	UJ	34	459	ug/kg	HT
SB	NDA223	SW8270	HEXACHLOROCYCLOPENTADIENE	527	U	527	UJ	39	527	ug/kg	HT
SB	NDA235	SW8270	HEXACHLOROCYCLOPENTADIENE	504	U	504	UJ	37	504	ug/kg	HT
SB	NDA236	SW8270	HEXACHLOROCYCLOPENTADIENE	423	U	423	UJ	31	423	ug/kg	HT
SB	NDA237FD1	SW8270	HEXACHLOROCYCLOPENTADIENE	395	U	395	UJ	29	395	ug/kg	HT
SB	NDA238	SW8270	HEXACHLOROCYCLOPENTADIENE	424	U	424	UJ	31	424	ug/kg	HT
SB	NDA239	SW8270	HEXACHLOROCYCLOPENTADIENE	555	U	555	UJ	41	555	ug/kg	HT
SB	NDA240	SW8270	HEXACHLOROCYCLOPENTADIENE	397	U	397	UJ	29	397	ug/kg	HT
SB	NDA241	SW8270	HEXACHLOROCYCLOPENTADIENE	471	U	471	UJ	35	471	ug/kg	HT
SB	NDA242	SW8270	HEXACHLOROCYCLOPENTADIENE	436	U	436	UJ	32	436	ug/kg	HT
SB	NDA243	SW8270	HEXACHLOROCYCLOPENTADIENE	893	U	893	UJ	66	893	ug/kg	HT
SB	NDA244	SW8270	HEXACHLOROCYCLOPENTADIENE	388	U	388	UJ	29	388	ug/kg	HT
SB	NDA245	SW8270	HEXACHLOROCYCLOPENTADIENE	393	U	393	UJ	29	393	ug/kg	HT
SB	NDA246	SW8270	HEXACHLOROCYCLOPENTADIENE	511	U	511	UJ	38	511	ug/kg	HT
SB	NDA247FD1	SW8270	HEXACHLOROCYCLOPENTADIENE	390	U	390	UJ	29	390	ug/kg	HT
SB	NDA248	SW8270	HEXACHLOROCYCLOPENTADIENE	453	U	453	UJ	34	453	ug/kg	HT
SB	NDA249	SW8270	HEXACHLOROCYCLOPENTADIENE	374	U	374	UJ	28	374	ug/kg	HT
SB	NDA252	SW8270	HEXACHLOROCYCLOPENTADIENE	420	U	420	UJ	31	420	ug/kg	HT
SB	NDA253	SW8270	HEXACHLOROCYCLOPENTADIENE	439	U	439	UJ	32	439	ug/kg	HT
SB	NDA254	SW8270	HEXACHLOROCYCLOPENTADIENE	391	U	391	UJ	29	391	ug/kg	HT
SB	NDA255	SW8270	HEXACHLOROCYCLOPENTADIENE	375	U	375	UJ	28	375	ug/kg	HT

Matrix	Sample ID	Analytical Method	Parameter	Lab Result	Lab Qual	Final Result	Final Qual	DL	RL	Units	Comments
SB	NDA085	SW8270	HEXACHLOROCYCLOPENTADIENE	482	U	482	UJ	36	482	ug/kg	HT
SB	NDA092	SW8270	HEXACHLOROCYCLOPENTADIENE	400	U	400	UJ	30	400	ug/kg	HT
SB	NDA093	SW8270	HEXACHLOROCYCLOPENTADIENE	339	U	339	UJ	25	339	ug/kg	HT
SB	NDA094	SW8270	HEXACHLOROCYCLOPENTADIENE	510	U	510	UJ	38	510	ug/kg	HT
SB	NDA095FD1	SW8270	HEXACHLOROCYCLOPENTADIENE	310	U	310	UJ	23	310	ug/kg	HT
SB	NDA296	SW8270	HEXACHLOROCYCLOPENTADIENE	369	U	369	UJ	27	369	ug/kg	HT
SB	NDA297	SW8270	HEXACHLOROCYCLOPENTADIENE	358	U	358	UJ	27	358	ug/kg	HT
SB	NDA298	SW8270	HEXACHLOROCYCLOPENTADIENE	341	U	341	UJ	25	341	ug/kg	HT
SB	NDA299	SW8270	HEXACHLOROCYCLOPENTADIENE	370	U	370	UJ	27	370	ug/kg	HT
SB	NDA058	SW8270	HEXACHLOROCYCLOPENTADIENE	460	U	460	UJ	34	460	ug/kg	HT
SB	NDA060	SW8270	HEXACHLOROCYCLOPENTADIENE	478	U	478	UJ	35	478	ug/kg	HT
SB	NDA063	SW8270	HEXACHLOROCYCLOPENTADIENE	382	U	382	UJ	28	382	ug/kg	HT
SB	NDA064FD1	SW8270	HEXACHLOROCYCLOPENTADIENE	351	U	351	UJ	26	351	ug/kg	HT
SB	NDA066	SW8270	HEXACHLOROCYCLOPENTADIENE	344	U	344	UJ	25	344	ug/kg	HT
SB	NDA068	SW8270	HEXACHLOROCYCLOPENTADIENE	360	U	360	UJ	27	360	ug/kg	HT
SB	NDA070	SW8270	HEXACHLOROCYCLOPENTADIENE	404	U	404	UJ	30	404	ug/kg	HT
SB	NDA073	SW8270	HEXACHLOROCYCLOPENTADIENE	383	U	383	UJ	28	383	ug/kg	HT
SB	NDA075	SW8270	HEXACHLOROCYCLOPENTADIENE	401	U	401	UJ	30	401	ug/kg	HT
SB	NDA077	SW8270	HEXACHLOROCYCLOPENTADIENE	441	U	441	UJ	33	441	ug/kg	HT
SB	NDA079	SW8270	HEXACHLOROCYCLOPENTADIENE	466	U	466	UJ	35	466	ug/kg	HT
SB	NDA081RE1	SW8270	HEXACHLOROCYCLOPENTADIENE	393	U	393	UJ	29	393	ug/kg	HT
SB	NDA083RE1	SW8270	HEXACHLOROCYCLOPENTADIENE	4240	U	4240	UJ	313	4240	ug/kg	HT
SD	NDA054	SW8270	HEXACHLOROCYCLOPENTADIENE	480	U	480	UJ	36	480	ug/kg	HT
SD	NDA055	SW8270	HEXACHLOROCYCLOPENTADIENE	696	U	696	UJ	51	696	ug/kg	HT
SD	NDA042	SW8270	HEXACHLOROCYCLOPENTADIENE	686	U	686	UJ	51	686	ug/kg	HT
SD	NDA043	SW8270	HEXACHLOROCYCLOPENTADIENE	735	U	735	UJ	54	735	ug/kg	HT
SD	NDA044	SW8270	HEXACHLOROCYCLOPENTADIENE	1680	U	1680	UJ	125	1680	ug/kg	HT
SD	NDA045	SW8270	HEXACHLOROCYCLOPENTADIENE	1500	U	1500	UJ	111	1500	ug/kg	HT
SD	NDA046	SW8270	HEXACHLOROCYCLOPENTADIENE	1520	U	1520	UJ	112	1520	ug/kg	HT
SD	NDA302	SW8270	HEXACHLOROCYCLOPENTADIENE	1200	U	1200	UJ	89	1200	ug/kg	HT
SD	NDA303	SW8270	HEXACHLOROCYCLOPENTADIENE	2300	U	2300	UJ	170	2300	ug/kg	HT
SD	NDA307FD1	SW8270	HEXACHLOROCYCLOPENTADIENE	2130	U	2130	UJ	157	2130	ug/kg	HT
SD	NDA047	SW8270	HEXACHLOROCYCLOPENTADIENE	503	U	503	UJ	37	503	ug/kg	HT
SD	NDA048	SW8270	HEXACHLOROCYCLOPENTADIENE	558	U	558	UJ	41	558	ug/kg	HT
SD	NDA049	SW8270	HEXACHLOROCYCLOPENTADIENE	463	U	463	UJ	34	463	ug/kg	HT
SS	NDA178	SW8270	HEXACHLOROCYCLOPENTADIENE	644	U	644	UJ	48	644	ug/kg	HT
SS	NDA179	SW8270	HEXACHLOROCYCLOPENTADIENE	644	U	644	UJ	48	644	ug/kg	HT
SS	NDA180	SW8270	HEXACHLOROCYCLOPENTADIENE	550	U	550	UJ	41	550	ug/kg	HT
SS	NDA181	SW8270	HEXACHLOROCYCLOPENTADIENE	566	U	566	UJ	42	566	ug/kg	HT
SS	NDA182	SW8270	HEXACHLOROCYCLOPENTADIENE	679	U	679	UJ	50	679	ug/kg	HT
SS	NDA183	SW8270	HEXACHLOROCYCLOPENTADIENE	589	U	589	UJ	44	589	ug/kg	HT
SS	NDA184FD1	SW8270	HEXACHLOROCYCLOPENTADIENE	662	U	662	UJ	49	662	ug/kg	HT
SS	NDA201	SW8270	HEXACHLOROCYCLOPENTADIENE	491	U	491	UJ	36	491	ug/kg	HT
SS	NDA202	SW8270	HEXACHLOROCYCLOPENTADIENE	605	U	605	UJ	45	605	ug/kg	HT
SS	NDA203	SW8270	HEXACHLOROCYCLOPENTADIENE	617	U	617	UJ	46	617	ug/kg	HT
SS	NDA204	SW8270	HEXACHLOROCYCLOPENTADIENE	753	U	753	UJ	56	753	ug/kg	HT
SS	NDA205FD1	SW8270	HEXACHLOROCYCLOPENTADIENE	668	U	668	UJ	49	668	ug/kg	HT
SS	NDA206	SW8270	HEXACHLOROCYCLOPENTADIENE	529	U	529	UJ	39	529	ug/kg	HT
SS	NDA207	SW8270	HEXACHLOROCYCLOPENTADIENE	669	U	669	UJ	50	669	ug/kg	HT
SS	NDA208	SW8270	HEXACHLOROCYCLOPENTADIENE	520	U	520	UJ	38	520	ug/kg	HT
SS	NDA209	SW8270	HEXACHLOROCYCLOPENTADIENE	570	U	570	UJ	42	570	ug/kg	HT
SS	NDA210	SW8270	HEXACHLOROCYCLOPENTADIENE	545	U	545	UJ	40	545	ug/kg	HT
SS	NDA211	SW8270	HEXACHLOROCYCLOPENTADIENE	742	U	742	UJ	55	742	ug/kg	HT
SS	NDA212	SW8270	HEXACHLOROCYCLOPENTADIENE	651	U	651	UJ	48	651	ug/kg	HT
SS	NDA185	SW8270	HEXACHLOROCYCLOPENTADIENE	445	U	445	UJ	33	445	ug/kg	HT
SS	NDA186	SW8270	HEXACHLOROCYCLOPENTADIENE	416	U	416	UJ	31	416	ug/kg	HT
SS	NDA187	SW8270	HEXACHLOROCYCLOPENTADIENE	380	U	380	UJ	28	380	ug/kg	HT
SS	NDA188	SW8270	HEXACHLOROCYCLOPENTADIENE	810	U	810	UJ	60	810	ug/kg	HT
SS	NDA189	SW8270	HEXACHLOROCYCLOPENTADIENE	426	U	426	UJ	31	426	ug/kg	HT
SS	NDA190	SW8270	HEXACHLOROCYCLOPENTADIENE	430	U	430	UJ	32	430	ug/kg	HT
SS	NDA191	SW8270	HEXACHLOROCYCLOPENTADIENE	338	U	338	UJ	25	338	ug/kg	HT
SS	NDA192FD1	SW8270	HEXACHLOROCYCLOPENTADIENE	418	U	418	UJ	31	418	ug/kg	HT
SS	NDA193	SW8270	HEXACHLOROCYCLOPENTADIENE	1720	U	1720	UJ	127	1720	ug/kg	HT
SS	NDA194	SW8270	HEXACHLOROCYCLOPENTADIENE	480	U	480	UJ	35	480	ug/kg	HT
SS	NDA195	SW8270	HEXACHLOROCYCLOPENTADIENE	323	U	323	UJ	24	323	ug/kg	HT
SS	NDA084	SW8270	HEXACHLOROCYCLOPENTADIENE	344	U	344	UJ	25	344	ug/kg	HT
SS	NDA091	SW8270	HEXACHLOROCYCLOPENTADIENE	367	U	367	UJ	27	367	ug/kg	HT
SS	NDA057	SW8270	HEXACHLOROCYCLOPENTADIENE	563	U	563	UJ	42	563	ug/kg	HT
SS	NDA059	SW8270	HEXACHLOROCYCLOPENTADIENE	465	U	465	UJ	34	465	ug/kg	HT
SS	NDA061	SW8270	HEXACHLOROCYCLOPENTADIENE	469	U	469	UJ	35	469	ug/kg	HT

Matrix	Sample ID	Analytical Method	Parameter	Lab Result	Lab Qual	Final Result	Final Qual	DL	RL	Units	Comments
SS	NDA062FD1	SW8270	HEXACHLOROCYCLOPENTADIENE	523	U	523	UJ	39	523	ug/kg	HT
SS	NDA065	SW8270	HEXACHLOROCYCLOPENTADIENE	421	U	421	UJ	31	421	ug/kg	HT
SS	NDA067	SW8270	HEXACHLOROCYCLOPENTADIENE	378	U	378	UJ	28	378	ug/kg	HT
SS	NDA069	SW8270	HEXACHLOROCYCLOPENTADIENE	320	U	320	UJ	24	320	ug/kg	HT
SS	NDA119	SW8270	HEXACHLOROCYCLOPENTADIENE	503	U	503	UJ	37	503	ug/kg	HT
SS	NDA120	SW8270	HEXACHLOROCYCLOPENTADIENE	541	U	541	UJ	40	541	ug/kg	HT
SS	NDA121	SW8270	HEXACHLOROCYCLOPENTADIENE	409	U	409	UJ	30	409	ug/kg	HT
SS	NDA122	SW8270	HEXACHLOROCYCLOPENTADIENE	450	U	450	UJ	33	450	ug/kg	HT
SS	NDA123	SW8270	HEXACHLOROCYCLOPENTADIENE	450	U	450	UJ	33	450	ug/kg	HT
SS	NDA124	SW8270	HEXACHLOROCYCLOPENTADIENE	432	U	432	UJ	32	432	ug/kg	HT
SS	NDA071	SW8270	HEXACHLOROCYCLOPENTADIENE	554	U	554	UJ	41	554	ug/kg	HT
SS	NDA072FD1	SW8270	HEXACHLOROCYCLOPENTADIENE	413	U	413	UJ	31	413	ug/kg	HT
SS	NDA074	SW8270	HEXACHLOROCYCLOPENTADIENE	448	U	448	UJ	33	448	ug/kg	HT
SS	NDA076	SW8270	HEXACHLOROCYCLOPENTADIENE	419	U	419	UJ	31	419	ug/kg	HT
SS	NDA078	SW8270	HEXACHLOROCYCLOPENTADIENE	440	U	440	UJ	33	440	ug/kg	HT
SS	NDA080RE1	SW8270	HEXACHLOROCYCLOPENTADIENE	407	U	407	UJ	30	407	ug/kg	HT
SS	NDA082RE1	SW8270	HEXACHLOROCYCLOPENTADIENE	4660	U	4660	UJ	345	4660	ug/kg	HT
SB	NDA213	SW8270	HEXACHLOROBUTADIENE	485	U	485	UJ	40	485	ug/kg	HT
SB	NDA214FD1	SW8270	HEXACHLOROBUTADIENE	487	U	487	UJ	40	487	ug/kg	HT
SB	NDA215	SW8270	HEXACHLOROBUTADIENE	527	U	527	UJ	44	527	ug/kg	HT
SB	NDA216	SW8270	HEXACHLOROBUTADIENE	537	U	537	UJ	45	537	ug/kg	HT
SB	NDA217	SW8270	HEXACHLOROBUTADIENE	540	U	540	UJ	45	540	ug/kg	HT
SB	NDA218	SW8270	HEXACHLOROBUTADIENE	505	U	505	UJ	42	505	ug/kg	HT
SB	NDA219	SW8270	HEXACHLOROBUTADIENE	380	U	380	UJ	32	380	ug/kg	HT
SB	NDA220	SW8270	HEXACHLOROBUTADIENE	542	U	542	UJ	45	542	ug/kg	HT
SB	NDA221	SW8270	HEXACHLOROBUTADIENE	501	U	501	UJ	42	501	ug/kg	HT
SB	NDA222	SW8270	HEXACHLOROBUTADIENE	459	U	459	UJ	38	459	ug/kg	HT
SB	NDA223	SW8270	HEXACHLOROBUTADIENE	527	U	527	UJ	44	527	ug/kg	HT
SB	NDA235	SW8270	HEXACHLOROBUTADIENE	504	U	504	UJ	42	504	ug/kg	HT
SB	NDA236	SW8270	HEXACHLOROBUTADIENE	423	U	423	UJ	35	423	ug/kg	HT
SB	NDA237FD1	SW8270	HEXACHLOROBUTADIENE	395	U	395	UJ	33	395	ug/kg	HT
SB	NDA238	SW8270	HEXACHLOROBUTADIENE	424	U	424	UJ	35	424	ug/kg	HT
SB	NDA239	SW8270	HEXACHLOROBUTADIENE	555	U	555	UJ	46	555	ug/kg	HT
SB	NDA240	SW8270	HEXACHLOROBUTADIENE	397	U	397	UJ	33	397	ug/kg	HT
SB	NDA241	SW8270	HEXACHLOROBUTADIENE	471	U	471	UJ	39	471	ug/kg	HT
SB	NDA242	SW8270	HEXACHLOROBUTADIENE	436	U	436	UJ	36	436	ug/kg	HT
SB	NDA243	SW8270	HEXACHLOROBUTADIENE	893	U	893	UJ	74	893	ug/kg	HT
SB	NDA244	SW8270	HEXACHLOROBUTADIENE	388	U	388	UJ	32	388	ug/kg	HT
SB	NDA245	SW8270	HEXACHLOROBUTADIENE	393	U	393	UJ	33	393	ug/kg	HT
SB	NDA246	SW8270	HEXACHLOROBUTADIENE	511	U	511	UJ	42	511	ug/kg	HT
SB	NDA247FD1	SW8270	HEXACHLOROBUTADIENE	390	U	390	UJ	32	390	ug/kg	HT
SB	NDA248	SW8270	HEXACHLOROBUTADIENE	453	U	453	UJ	38	453	ug/kg	HT
SB	NDA249	SW8270	HEXACHLOROBUTADIENE	374	U	374	UJ	31	374	ug/kg	HT
SB	NDA252	SW8270	HEXACHLOROBUTADIENE	420	U	420	UJ	35	420	ug/kg	HT
SB	NDA253	SW8270	HEXACHLOROBUTADIENE	439	U	439	UJ	36	439	ug/kg	HT
SB	NDA254	SW8270	HEXACHLOROBUTADIENE	391	U	391	UJ	32	391	ug/kg	HT
SB	NDA255	SW8270	HEXACHLOROBUTADIENE	375	U	375	UJ	31	375	ug/kg	HT
SB	NDA085	SW8270	HEXACHLOROBUTADIENE	482	U	482	UJ	40	482	ug/kg	HT
SB	NDA092	SW8270	HEXACHLOROBUTADIENE	400	U	400	UJ	33	400	ug/kg	HT
SB	NDA093	SW8270	HEXACHLOROBUTADIENE	339	U	339	UJ	28	339	ug/kg	HT
SB	NDA094	SW8270	HEXACHLOROBUTADIENE	510	U	510	UJ	42	510	ug/kg	HT
SB	NDA095FD1	SW8270	HEXACHLOROBUTADIENE	310	U	310	UJ	26	310	ug/kg	HT
SB	NDA296	SW8270	HEXACHLOROBUTADIENE	369	U	369	UJ	31	369	ug/kg	HT
SB	NDA297	SW8270	HEXACHLOROBUTADIENE	358	U	358	UJ	30	358	ug/kg	HT
SB	NDA298	SW8270	HEXACHLOROBUTADIENE	341	U	341	UJ	28	341	ug/kg	HT
SB	NDA299	SW8270	HEXACHLOROBUTADIENE	370	U	370	UJ	31	370	ug/kg	HT
SB	NDA058	SW8270	HEXACHLOROBUTADIENE	460	U	460	UJ	38	460	ug/kg	HT
SB	NDA060	SW8270	HEXACHLOROBUTADIENE	478	U	478	UJ	40	478	ug/kg	HT
SB	NDA063	SW8270	HEXACHLOROBUTADIENE	382	U	382	UJ	32	382	ug/kg	HT
SB	NDA064FD1	SW8270	HEXACHLOROBUTADIENE	351	U	351	UJ	29	351	ug/kg	HT
SB	NDA066	SW8270	HEXACHLOROBUTADIENE	344	U	344	UJ	29	344	ug/kg	HT
SB	NDA068	SW8270	HEXACHLOROBUTADIENE	360	U	360	UJ	30	360	ug/kg	HT
SB	NDA070	SW8270	HEXACHLOROBUTADIENE	404	U	404	UJ	33	404	ug/kg	HT
SB	NDA073	SW8270	HEXACHLOROBUTADIENE	383	U	383	UJ	32	383	ug/kg	HT
SB	NDA075	SW8270	HEXACHLOROBUTADIENE	401	U	401	UJ	33	401	ug/kg	HT
SB	NDA077	SW8270	HEXACHLOROBUTADIENE	441	U	441	UJ	37	441	ug/kg	HT
SB	NDA079	SW8270	HEXACHLOROBUTADIENE	466	U	466	UJ	39	466	ug/kg	HT
SB	NDA081RE1	SW8270	HEXACHLOROBUTADIENE	393	U	393	UJ	33	393	ug/kg	HT
SB	NDA083RE1	SW8270	HEXACHLOROBUTADIENE	4240	U	4240	UJ	352	4240	ug/kg	HT
SD	NDA054	SW8270	HEXACHLOROBUTADIENE	480	U	480	UJ	40	480	ug/kg	HT

Matrix	Sample ID	Analytical Method	Parameter	Lab Result	Lab Qual	Final Result	Final Qual	DL	RL	Units	Comments
SD	NDA055	SW8270	HEXACHLOROBUTADIENE	696	U	696	UJ	58	696	ug/kg	HT
SD	NDA042	SW8270	HEXACHLOROBUTADIENE	686	U	686	UJ	57	686	ug/kg	HT
SD	NDA043	SW8270	HEXACHLOROBUTADIENE	735	U	735	UJ	61	735	ug/kg	HT
SD	NDA044	SW8270	HEXACHLOROBUTADIENE	1680	U	1680	UJ	140	1680	ug/kg	HT
SD	NDA045	SW8270	HEXACHLOROBUTADIENE	1500	U	1500	UJ	125	1500	ug/kg	HT
SD	NDA046	SW8270	HEXACHLOROBUTADIENE	1520	U	1520	UJ	126	1520	ug/kg	HT
SD	NDA302	SW8270	HEXACHLOROBUTADIENE	1200	U	1200	UJ	100	1200	ug/kg	HT
SD	NDA303	SW8270	HEXACHLOROBUTADIENE	2300	U	2300	UJ	191	2300	ug/kg	HT
SD	NDA307FD1	SW8270	HEXACHLOROBUTADIENE	2130	U	2130	UJ	176	2130	ug/kg	HT
SD	NDA047	SW8270	HEXACHLOROBUTADIENE	503	U	503	UJ	42	503	ug/kg	HT
SD	NDA048	SW8270	HEXACHLOROBUTADIENE	558	U	558	UJ	46	558	ug/kg	HT
SD	NDA049	SW8270	HEXACHLOROBUTADIENE	463	U	463	UJ	38	463	ug/kg	HT
SS	NDA178	SW8270	HEXACHLOROBUTADIENE	644	U	644	UJ	53	644	ug/kg	HT
SS	NDA179	SW8270	HEXACHLOROBUTADIENE	644	U	644	UJ	53	644	ug/kg	HT
SS	NDA180	SW8270	HEXACHLOROBUTADIENE	550	U	550	UJ	46	550	ug/kg	HT
SS	NDA181	SW8270	HEXACHLOROBUTADIENE	566	U	566	UJ	47	566	ug/kg	HT
SS	NDA182	SW8270	HEXACHLOROBUTADIENE	679	U	679	UJ	56	679	ug/kg	HT
SS	NDA183	SW8270	HEXACHLOROBUTADIENE	589	U	589	UJ	49	589	ug/kg	HT
SS	NDA184FD1	SW8270	HEXACHLOROBUTADIENE	662	U	662	UJ	55	662	ug/kg	HT
SS	NDA201	SW8270	HEXACHLOROBUTADIENE	491	U	491	UJ	41	491	ug/kg	HT
SS	NDA202	SW8270	HEXACHLOROBUTADIENE	605	U	605	UJ	50	605	ug/kg	HT
SS	NDA203	SW8270	HEXACHLOROBUTADIENE	617	U	617	UJ	51	617	ug/kg	HT
SS	NDA204	SW8270	HEXACHLOROBUTADIENE	753	U	753	UJ	63	753	ug/kg	HT
SS	NDA205FD1	SW8270	HEXACHLOROBUTADIENE	668	U	668	UJ	55	668	ug/kg	HT
SS	NDA206	SW8270	HEXACHLOROBUTADIENE	529	U	529	UJ	44	529	ug/kg	HT
SS	NDA207	SW8270	HEXACHLOROBUTADIENE	669	U	669	UJ	56	669	ug/kg	HT
SS	NDA208	SW8270	HEXACHLOROBUTADIENE	520	U	520	UJ	43	520	ug/kg	HT
SS	NDA209	SW8270	HEXACHLOROBUTADIENE	570	U	570	UJ	47	570	ug/kg	HT
SS	NDA210	SW8270	HEXACHLOROBUTADIENE	545	U	545	UJ	45	545	ug/kg	HT
SS	NDA211	SW8270	HEXACHLOROBUTADIENE	742	U	742	UJ	62	742	ug/kg	HT
SS	NDA212	SW8270	HEXACHLOROBUTADIENE	651	U	651	UJ	54	651	ug/kg	HT
SS	NDA185	SW8270	HEXACHLOROBUTADIENE	445	U	445	UJ	37	445	ug/kg	HT
SS	NDA186	SW8270	HEXACHLOROBUTADIENE	416	U	416	UJ	34	416	ug/kg	HT
SS	NDA187	SW8270	HEXACHLOROBUTADIENE	380	U	380	UJ	32	380	ug/kg	HT
SS	NDA188	SW8270	HEXACHLOROBUTADIENE	810	U	810	UJ	67	810	ug/kg	HT
SS	NDA189	SW8270	HEXACHLOROBUTADIENE	426	U	426	UJ	35	426	ug/kg	HT
SS	NDA190	SW8270	HEXACHLOROBUTADIENE	430	U	430	UJ	36	430	ug/kg	HT
SS	NDA191	SW8270	HEXACHLOROBUTADIENE	338	U	338	UJ	28	338	ug/kg	HT
SS	NDA192FD1	SW8270	HEXACHLOROBUTADIENE	418	U	418	UJ	35	418	ug/kg	HT
SS	NDA193	SW8270	HEXACHLOROBUTADIENE	1720	U	1720	UJ	143	1720	ug/kg	HT
SS	NDA194	SW8270	HEXACHLOROBUTADIENE	480	U	480	UJ	40	480	ug/kg	HT
SS	NDA195	SW8270	HEXACHLOROBUTADIENE	323	U	323	UJ	27	323	ug/kg	HT
SS	NDA084	SW8270	HEXACHLOROBUTADIENE	344	U	344	UJ	29	344	ug/kg	HT
SS	NDA091	SW8270	HEXACHLOROBUTADIENE	367	U	367	UJ	30	367	ug/kg	HT
SS	NDA057	SW8270	HEXACHLOROBUTADIENE	563	U	563	UJ	47	563	ug/kg	HT
SS	NDA059	SW8270	HEXACHLOROBUTADIENE	465	U	465	UJ	39	465	ug/kg	HT
SS	NDA061	SW8270	HEXACHLOROBUTADIENE	469	U	469	UJ	39	469	ug/kg	HT
SS	NDA062FD1	SW8270	HEXACHLOROBUTADIENE	523	U	523	UJ	43	523	ug/kg	HT
SS	NDA065	SW8270	HEXACHLOROBUTADIENE	421	U	421	UJ	35	421	ug/kg	HT
SS	NDA067	SW8270	HEXACHLOROBUTADIENE	378	U	378	UJ	31	378	ug/kg	HT
SS	NDA069	SW8270	HEXACHLOROBUTADIENE	320	U	320	UJ	27	320	ug/kg	HT
SS	NDA119	SW8270	HEXACHLOROBUTADIENE	503	U	503	UJ	42	503	ug/kg	HT
SS	NDA120	SW8270	HEXACHLOROBUTADIENE	541	U	541	UJ	45	541	ug/kg	HT
SS	NDA121	SW8270	HEXACHLOROBUTADIENE	409	U	409	UJ	34	409	ug/kg	HT
SS	NDA122	SW8270	HEXACHLOROBUTADIENE	450	U	450	UJ	37	450	ug/kg	HT
SS	NDA123	SW8270	HEXACHLOROBUTADIENE	450	U	450	UJ	37	450	ug/kg	HT
SS	NDA124	SW8270	HEXACHLOROBUTADIENE	432	U	432	UJ	36	432	ug/kg	HT
SS	NDA071	SW8270	HEXACHLOROBUTADIENE	554	U	554	UJ	46	554	ug/kg	HT
SS	NDA072FD1	SW8270	HEXACHLOROBUTADIENE	413	U	413	UJ	34	413	ug/kg	HT
SS	NDA074	SW8270	HEXACHLOROBUTADIENE	448	U	448	UJ	37	448	ug/kg	HT
SS	NDA076	SW8270	HEXACHLOROBUTADIENE	419	U	419	UJ	35	419	ug/kg	HT
SS	NDA078	SW8270	HEXACHLOROBUTADIENE	440	U	440	UJ	37	440	ug/kg	HT
SS	NDA080RE1	SW8270	HEXACHLOROBUTADIENE	407	U	407	UJ	34	407	ug/kg	HT
SS	NDA082RE1	SW8270	HEXACHLOROBUTADIENE	4660	U	4660	UJ	387	4660	ug/kg	HT
SB	NDA213	SW8270	HEXACHLOROBENZENE	485	U	485	UJ	32	485	ug/kg	HT
SB	NDA214FD1	SW8270	HEXACHLOROBENZENE	487	U	487	UJ	32	487	ug/kg	HT
SB	NDA215	SW8270	HEXACHLOROBENZENE	527	U	527	UJ	34	527	ug/kg	HT
SB	NDA216	SW8270	HEXACHLOROBENZENE	537	U	537	UJ	35	537	ug/kg	HT
SB	NDA217	SW8270	HEXACHLOROBENZENE	540	U	540	UJ	35	540	ug/kg	HT
SB	NDA218	SW8270	HEXACHLOROBENZENE	505	U	505	UJ	33	505	ug/kg	HT

Matrix	Sample ID	Analytical Method	Parameter	Lab Result	Lab Qual	Final Result	Final Qual	DL	RL	Units	Comments
SB	NDA219	SW8270	HEXACHLOROBENZENE	380	U	380	UJ	25	380	ug/kg	HT
SB	NDA220	SW8270	HEXACHLOROBENZENE	542	U	542	UJ	35	542	ug/kg	HT
SB	NDA221	SW8270	HEXACHLOROBENZENE	501	U	501	UJ	33	501	ug/kg	HT
SB	NDA222	SW8270	HEXACHLOROBENZENE	459	U	459	UJ	30	459	ug/kg	HT
SB	NDA223	SW8270	HEXACHLOROBENZENE	527	U	527	UJ	34	527	ug/kg	HT
SB	NDA235	SW8270	HEXACHLOROBENZENE	504	U	504	UJ	33	504	ug/kg	HT
SB	NDA236	SW8270	HEXACHLOROBENZENE	423	U	423	UJ	27	423	ug/kg	HT
SB	NDA237FD1	SW8270	HEXACHLOROBENZENE	395	U	395	UJ	26	395	ug/kg	HT
SB	NDA238	SW8270	HEXACHLOROBENZENE	424	U	424	UJ	28	424	ug/kg	HT
SB	NDA239	SW8270	HEXACHLOROBENZENE	555	U	555	UJ	36	555	ug/kg	HT
SB	NDA240	SW8270	HEXACHLOROBENZENE	397	U	397	UJ	26	397	ug/kg	HT
SB	NDA241	SW8270	HEXACHLOROBENZENE	471	U	471	UJ	31	471	ug/kg	HT
SB	NDA242	SW8270	HEXACHLOROBENZENE	436	U	436	UJ	28	436	ug/kg	HT
SB	NDA243	SW8270	HEXACHLOROBENZENE	893	U	893	UJ	58	893	ug/kg	HT
SB	NDA244	SW8270	HEXACHLOROBENZENE	388	U	388	UJ	25	388	ug/kg	HT
SB	NDA245	SW8270	HEXACHLOROBENZENE	393	U	393	UJ	26	393	ug/kg	HT
SB	NDA246	SW8270	HEXACHLOROBENZENE	511	U	511	UJ	33	511	ug/kg	HT
SB	NDA247FD1	SW8270	HEXACHLOROBENZENE	390	U	390	UJ	25	390	ug/kg	HT
SB	NDA248	SW8270	HEXACHLOROBENZENE	453	U	453	UJ	29	453	ug/kg	HT
SB	NDA249	SW8270	HEXACHLOROBENZENE	374	U	374	UJ	24	374	ug/kg	HT
SB	NDA252	SW8270	HEXACHLOROBENZENE	420	U	420	UJ	27	420	ug/kg	HT
SB	NDA253	SW8270	HEXACHLOROBENZENE	439	U	439	UJ	29	439	ug/kg	HT
SB	NDA254	SW8270	HEXACHLOROBENZENE	391	U	391	UJ	25	391	ug/kg	HT
SB	NDA255	SW8270	HEXACHLOROBENZENE	375	U	375	UJ	24	375	ug/kg	HT
SB	NDA085	SW8270	HEXACHLOROBENZENE	482	U	482	UJ	31	482	ug/kg	HT
SB	NDA092	SW8270	HEXACHLOROBENZENE	400	U	400	UJ	26	400	ug/kg	HT
SB	NDA093	SW8270	HEXACHLOROBENZENE	339	U	339	UJ	22	339	ug/kg	HT
SB	NDA094	SW8270	HEXACHLOROBENZENE	510	U	510	UJ	33	510	ug/kg	HT
SB	NDA095FD1	SW8270	HEXACHLOROBENZENE	310	U	310	UJ	20	310	ug/kg	HT
SB	NDA296	SW8270	HEXACHLOROBENZENE	369	U	369	UJ	24	369	ug/kg	HT
SB	NDA297	SW8270	HEXACHLOROBENZENE	358	U	358	UJ	23	358	ug/kg	HT
SB	NDA298	SW8270	HEXACHLOROBENZENE	341	U	341	UJ	22	341	ug/kg	HT
SB	NDA299	SW8270	HEXACHLOROBENZENE	370	U	370	UJ	24	370	ug/kg	HT
SB	NDA058	SW8270	HEXACHLOROBENZENE	460	U	460	UJ	30	460	ug/kg	HT
SB	NDA060	SW8270	HEXACHLOROBENZENE	478	U	478	UJ	31	478	ug/kg	HT
SB	NDA063	SW8270	HEXACHLOROBENZENE	382	U	382	UJ	25	382	ug/kg	HT
SB	NDA064FD1	SW8270	HEXACHLOROBENZENE	351	U	351	UJ	23	351	ug/kg	HT
SB	NDA066	SW8270	HEXACHLOROBENZENE	344	U	344	UJ	22	344	ug/kg	HT
SB	NDA068	SW8270	HEXACHLOROBENZENE	360	U	360	UJ	23	360	ug/kg	HT
SB	NDA070	SW8270	HEXACHLOROBENZENE	404	U	404	UJ	26	404	ug/kg	HT
SB	NDA073	SW8270	HEXACHLOROBENZENE	383	U	383	UJ	25	383	ug/kg	HT
SB	NDA075	SW8270	HEXACHLOROBENZENE	401	U	401	UJ	26	401	ug/kg	HT
SB	NDA077	SW8270	HEXACHLOROBENZENE	441	U	441	UJ	29	441	ug/kg	HT
SB	NDA079	SW8270	HEXACHLOROBENZENE	466	U	466	UJ	30	466	ug/kg	HT
SB	NDA081RE1	SW8270	HEXACHLOROBENZENE	393	U	393	UJ	26	393	ug/kg	HT
SB	NDA083RE1	SW8270	HEXACHLOROBENZENE	4240	U	4240	UJ	275	4240	ug/kg	HT
SD	NDA054	SW8270	HEXACHLOROBENZENE	480	U	480	UJ	31	480	ug/kg	HT
SD	NDA055	SW8270	HEXACHLOROBENZENE	696	U	696	UJ	45	696	ug/kg	HT
SD	NDA042	SW8270	HEXACHLOROBENZENE	686	U	686	UJ	45	686	ug/kg	HT
SD	NDA043	SW8270	HEXACHLOROBENZENE	735	U	735	UJ	48	735	ug/kg	HT
SD	NDA044	SW8270	HEXACHLOROBENZENE	1680	U	1680	UJ	109	1680	ug/kg	HT
SD	NDA045	SW8270	HEXACHLOROBENZENE	1500	U	1500	UJ	98	1500	ug/kg	HT
SD	NDA046	SW8270	HEXACHLOROBENZENE	1520	U	1520	UJ	99	1520	ug/kg	HT
SD	NDA302	SW8270	HEXACHLOROBENZENE	1200	U	1200	UJ	78	1200	ug/kg	HT
SD	NDA303	SW8270	HEXACHLOROBENZENE	2300	U	2300	UJ	150	2300	ug/kg	HT
SD	NDA307FD1	SW8270	HEXACHLOROBENZENE	2130	U	2130	UJ	138	2130	ug/kg	HT
SD	NDA047	SW8270	HEXACHLOROBENZENE	503	U	503	UJ	33	503	ug/kg	HT
SD	NDA048	SW8270	HEXACHLOROBENZENE	558	U	558	UJ	36	558	ug/kg	HT
SD	NDA049	SW8270	HEXACHLOROBENZENE	463	U	463	UJ	30	463	ug/kg	HT
SS	NDA178	SW8270	HEXACHLOROBENZENE	644	U	644	UJ	42	644	ug/kg	HT
SS	NDA179	SW8270	HEXACHLOROBENZENE	644	U	644	UJ	42	644	ug/kg	HT
SS	NDA180	SW8270	HEXACHLOROBENZENE	550	U	550	UJ	36	550	ug/kg	HT
SS	NDA181	SW8270	HEXACHLOROBENZENE	566	U	566	UJ	37	566	ug/kg	HT
SS	NDA182	SW8270	HEXACHLOROBENZENE	679	U	679	UJ	44	679	ug/kg	HT
SS	NDA183	SW8270	HEXACHLOROBENZENE	589	U	589	UJ	38	589	ug/kg	HT
SS	NDA184FD1	SW8270	HEXACHLOROBENZENE	662	U	662	UJ	43	662	ug/kg	HT
SS	NDA201	SW8270	HEXACHLOROBENZENE	491	U	491	UJ	32	491	ug/kg	HT
SS	NDA202	SW8270	HEXACHLOROBENZENE	605	U	605	UJ	39	605	ug/kg	HT
SS	NDA203	SW8270	HEXACHLOROBENZENE	617	U	617	UJ	40	617	ug/kg	HT
SS	NDA204	SW8270	HEXACHLOROBENZENE	753	U	753	UJ	49	753	ug/kg	HT

Matrix	Sample ID	Analytical Method	Parameter	Lab Result	Lab Qual	Final Result	Final Qual	DL	RL	Units	Comments
SS	NDA205FD1	SW8270	HEXACHLOROBENZENE	668	U	668	UJ	43	668	ug/kg	HT
SS	NDA206	SW8270	HEXACHLOROBENZENE	529	U	529	UJ	34	529	ug/kg	HT
SS	NDA207	SW8270	HEXACHLOROBENZENE	669	U	669	UJ	43	669	ug/kg	HT
SS	NDA208	SW8270	HEXACHLOROBENZENE	520	U	520	UJ	34	520	ug/kg	HT
SS	NDA209	SW8270	HEXACHLOROBENZENE	570	U	570	UJ	37	570	ug/kg	HT
SS	NDA210	SW8270	HEXACHLOROBENZENE	545	U	545	UJ	35	545	ug/kg	HT
SS	NDA211	SW8270	HEXACHLOROBENZENE	742	U	742	UJ	48	742	ug/kg	HT
SS	NDA212	SW8270	HEXACHLOROBENZENE	651	U	651	UJ	42	651	ug/kg	HT
SS	NDA185	SW8270	HEXACHLOROBENZENE	445	U	445	UJ	29	445	ug/kg	HT
SS	NDA186	SW8270	HEXACHLOROBENZENE	416	U	416	UJ	27	416	ug/kg	HT
SS	NDA187	SW8270	HEXACHLOROBENZENE	380	U	380	UJ	25	380	ug/kg	HT
SS	NDA188	SW8270	HEXACHLOROBENZENE	810	U	810	UJ	53	810	ug/kg	HT
SS	NDA189	SW8270	HEXACHLOROBENZENE	426	U	426	UJ	28	426	ug/kg	HT
SS	NDA190	SW8270	HEXACHLOROBENZENE	430	U	430	UJ	28	430	ug/kg	HT
SS	NDA191	SW8270	HEXACHLOROBENZENE	338	U	338	UJ	22	338	ug/kg	HT
SS	NDA192FD1	SW8270	HEXACHLOROBENZENE	418	U	418	UJ	27	418	ug/kg	HT
SS	NDA193	SW8270	HEXACHLOROBENZENE	1720	U	1720	UJ	112	1720	ug/kg	HT
SS	NDA194	SW8270	HEXACHLOROBENZENE	480	U	480	UJ	31	480	ug/kg	HT
SS	NDA195	SW8270	HEXACHLOROBENZENE	323	U	323	UJ	21	323	ug/kg	HT
SS	NDA084	SW8270	HEXACHLOROBENZENE	344	U	344	UJ	22	344	ug/kg	HT
SS	NDA091	SW8270	HEXACHLOROBENZENE	367	U	367	UJ	24	367	ug/kg	HT
SS	NDA057	SW8270	HEXACHLOROBENZENE	563	U	563	UJ	37	563	ug/kg	HT
SS	NDA059	SW8270	HEXACHLOROBENZENE	465	U	465	UJ	30	465	ug/kg	HT
SS	NDA061	SW8270	HEXACHLOROBENZENE	469	U	469	UJ	30	469	ug/kg	HT
SS	NDA062FD1	SW8270	HEXACHLOROBENZENE	523	U	523	UJ	34	523	ug/kg	HT
SS	NDA065	SW8270	HEXACHLOROBENZENE	421	U	421	UJ	27	421	ug/kg	HT
SS	NDA067	SW8270	HEXACHLOROBENZENE	378	U	378	UJ	25	378	ug/kg	HT
SS	NDA069	SW8270	HEXACHLOROBENZENE	320	U	320	UJ	21	320	ug/kg	HT
SS	NDA119	SW8270	HEXACHLOROBENZENE	503	U	503	UJ	33	503	ug/kg	HT
SS	NDA120	SW8270	HEXACHLOROBENZENE	541	U	541	UJ	35	541	ug/kg	HT
SS	NDA121	SW8270	HEXACHLOROBENZENE	409	U	409	UJ	27	409	ug/kg	HT
SS	NDA122	SW8270	HEXACHLOROBENZENE	450	U	450	UJ	29	450	ug/kg	HT
SS	NDA123	SW8270	HEXACHLOROBENZENE	450	U	450	UJ	29	450	ug/kg	HT
SS	NDA124	SW8270	HEXACHLOROBENZENE	432	U	432	UJ	28	432	ug/kg	HT
SS	NDA071	SW8270	HEXACHLOROBENZENE	554	U	554	UJ	36	554	ug/kg	HT
SS	NDA072FD1	SW8270	HEXACHLOROBENZENE	413	U	413	UJ	27	413	ug/kg	HT
SS	NDA074	SW8270	HEXACHLOROBENZENE	448	U	448	UJ	29	448	ug/kg	HT
SS	NDA076	SW8270	HEXACHLOROBENZENE	419	U	419	UJ	27	419	ug/kg	HT
SS	NDA078	SW8270	HEXACHLOROBENZENE	440	U	440	UJ	29	440	ug/kg	HT
SS	NDA080RE1	SW8270	HEXACHLOROBENZENE	407	U	407	UJ	26	407	ug/kg	HT
SS	NDA082RE1	SW8270	HEXACHLOROBENZENE	4660	U	4660	UJ	303	4660	ug/kg	HT
SB	NDA165	SW8081	HEPTACHLOR EPOXIDE	1.9	U	1.9	UJ	0.68	1.9	ug/kg	HT
SB	NDA167	SW8081	HEPTACHLOR EPOXIDE	2.1	U	2.1	UJ	0.73	2.1	ug/kg	HT
SB	NDA169	SW8081	HEPTACHLOR EPOXIDE	2	U	2	UJ	0.72	2	ug/kg	HT
SB	NDA171	SW8081	HEPTACHLOR EPOXIDE	1.8	U	1.8	UJ	0.65	1.8	ug/kg	HT
SB	NDA173	SW8081	HEPTACHLOR EPOXIDE	2.2	U	2.2	UJ	0.76	2.2	ug/kg	HT
SB	NDA175	SW8081	HEPTACHLOR EPOXIDE	1.9	U	1.9	UJ	0.67	1.9	ug/kg	HT
SB	NDA177	SW8081	HEPTACHLOR EPOXIDE	2	U	2	UJ	0.7	2	ug/kg	HT
SB	NDA213	SW8081	HEPTACHLOR EPOXIDE	2	U	2	UJ	0.69	2	ug/kg	HT
SB	NDA214FD1	SW8081	HEPTACHLOR EPOXIDE	1.9	U	1.9	UJ	0.67	1.9	ug/kg	HT
SB	NDA215	SW8081	HEPTACHLOR EPOXIDE	2	U	2	UJ	0.69	2	ug/kg	HT
SB	NDA216	SW8081	HEPTACHLOR EPOXIDE	1.8	U	1.8	UJ	0.65	1.8	ug/kg	HT
SB	NDA217	SW8081	HEPTACHLOR EPOXIDE	1.9	U	1.9	UJ	0.69	1.9	ug/kg	HT
SB	NDA218	SW8081	HEPTACHLOR EPOXIDE	1.9	U	1.9	UJ	0.66	1.9	ug/kg	HT
SB	NDA219	SW8081	HEPTACHLOR EPOXIDE	1.9	U	1.9	UJ	0.66	1.9	ug/kg	HT
SB	NDA220	SW8081	HEPTACHLOR EPOXIDE	1.9	U	1.9	UJ	0.69	1.9	ug/kg	HT
SB	NDA221	SW8081	HEPTACHLOR EPOXIDE	1.8	U	1.8	UJ	0.64	1.8	ug/kg	HT
SB	NDA222	SW8081	HEPTACHLOR EPOXIDE	1.7	U	1.7	UJ	0.6	1.7	ug/kg	HT
SB	NDA223	SW8081	HEPTACHLOR EPOXIDE	1.9	U	1.9	UJ	0.68	1.9	ug/kg	HT
SB	NDA235	SW8081	HEPTACHLOR EPOXIDE	2.2	U	2.2	UJ	0.79	2.2	ug/kg	HT
SB	NDA236	SW8081	HEPTACHLOR EPOXIDE	1.9	U	1.9	UJ	0.68	1.9	ug/kg	HT
SB	NDA237FD1	SW8081	HEPTACHLOR EPOXIDE	1.9	U	1.9	UJ	0.67	1.9	ug/kg	HT
SB	NDA238	SW8081	HEPTACHLOR EPOXIDE	1.9	U	1.9	UJ	0.67	1.9	ug/kg	HT
SB	NDA239	SW8081	HEPTACHLOR EPOXIDE	1.9	U	1.9	UJ	0.67	1.9	ug/kg	HT
SB	NDA240	SW8081	HEPTACHLOR EPOXIDE	2	U	2	UJ	0.72	2	ug/kg	HT
SB	NDA241	SW8081	HEPTACHLOR EPOXIDE	1.9	U	1.9	UJ	0.67	1.9	ug/kg	HT
SB	NDA242	SW8081	HEPTACHLOR EPOXIDE	2.1	U	2.1	UJ	0.75	2.1	ug/kg	HT
SB	NDA243	SW8081	HEPTACHLOR EPOXIDE	2	U	2	UJ	0.7	2	ug/kg	HT
SB	NDA244	SW8081	HEPTACHLOR EPOXIDE	1.9	U	1.9	UJ	0.66	1.9	ug/kg	HT
SB	NDA245	SW8081	HEPTACHLOR EPOXIDE	2	U	2	UJ	0.69	2	ug/kg	HT

Matrix	Sample ID	Analytical Method	Parameter	Lab Result	Lab Qual	Final Result	Final Qual	DL	RL	Units	Comments
SB	NDA246	SW8081	HEPTACHLOR EPOXIDE	2.1	U	2.1	UJ	0.73	2.1	ug/kg	HT
SB	NDA247FD1	SW8081	HEPTACHLOR EPOXIDE	2	U	2	UJ	0.69	2	ug/kg	HT
SB	NDA248	SW8081	HEPTACHLOR EPOXIDE	2.1	U	2.1	UJ	0.72	2.1	ug/kg	HT
SB	NDA249	SW8081	HEPTACHLOR EPOXIDE	1.9	U	1.9	UJ	0.67	1.9	ug/kg	HT
SB	NDA252	SW8081	HEPTACHLOR EPOXIDE	2	U	2	UJ	0.7	2	ug/kg	HT
SB	NDA253	SW8081	HEPTACHLOR EPOXIDE	2.1	U	2.1	UJ	0.75	2.1	ug/kg	HT
SB	NDA254	SW8081	HEPTACHLOR EPOXIDE	2.1	U	2.1	UJ	0.75	2.1	ug/kg	HT
SB	NDA255	SW8081	HEPTACHLOR EPOXIDE	2.1	U	2.1	UJ	0.74	2.1	ug/kg	HT
SB	NDA058	SW8081	HEPTACHLOR EPOXIDE	1.9	U	1.9	UJ	0.67	1.9	ug/kg	HT
SB	NDA060	SW8081	HEPTACHLOR EPOXIDE	1.9	U	1.9	UJ	0.66	1.9	ug/kg	HT
SB	NDA063	SW8081	HEPTACHLOR EPOXIDE	1.8	U	1.8	UJ	0.64	1.8	ug/kg	HT
SB	NDA064FD1	SW8081	HEPTACHLOR EPOXIDE	1.8	U	1.8	UJ	0.64	1.8	ug/kg	HT
SB	NDA066	SW8081	HEPTACHLOR EPOXIDE	1.8	U	1.8	UJ	0.63	1.8	ug/kg	HT
SB	NDA068	SW8081	HEPTACHLOR EPOXIDE	1.8	U	1.8	UJ	0.65	1.8	ug/kg	HT
SB	NDA070	SW8081	HEPTACHLOR EPOXIDE	1.8	U	1.8	UJ	0.63	1.8	ug/kg	HT
SB	NDA073	SW8081	HEPTACHLOR EPOXIDE	1.8	U	1.8	UJ	0.64	1.8	ug/kg	HT
SB	NDA075	SW8081	HEPTACHLOR EPOXIDE	0.18	U	0.18	UJ	0.06	0.18	ug/kg	HT
SB	NDA077	SW8081	HEPTACHLOR EPOXIDE	0.2	U	0.2	UJ	0.07	0.2	ug/kg	HT
SB	NDA081	SW8081	HEPTACHLOR EPOXIDE	0.18	U	0.18	UJ	0.06	0.18	ug/kg	HT
SB	NDA083	SW8081	HEPTACHLOR EPOXIDE	0.17	U	0.17	UJ	0.06	0.17	ug/kg	HT
SB	NDA114	SW8081	HEPTACHLOR EPOXIDE	2.2	U	2.2	UJ	0.78	2.2	ug/kg	HT
SB	NDA116	SW8081	HEPTACHLOR EPOXIDE	2.1	U	2.1	UJ	0.75	2.1	ug/kg	HT
SB	NDA118	SW8081	HEPTACHLOR EPOXIDE	2.2	U	2.2	UJ	0.77	2.2	ug/kg	HT
SB	NDA102	SW8081	HEPTACHLOR EPOXIDE	2.6	U	2.6	UJ	0.93	2.6	ug/kg	HT
SB	NDA105	SW8081	HEPTACHLOR EPOXIDE	2.7	U	2.7	UJ	0.95	2.7	ug/kg	HT
SB	NDA106FD1	SW8081	HEPTACHLOR EPOXIDE	2.7	U	2.7	UJ	0.95	2.7	ug/kg	HT
SB	NDA108	SW8081	HEPTACHLOR EPOXIDE	2.3	U	2.3	UJ	0.8	2.3	ug/kg	HT
SB	NDA110	SW8081	HEPTACHLOR EPOXIDE	2.3	U	2.3	UJ	0.8	2.3	ug/kg	HT
SB	NDA112	SW8081	HEPTACHLOR EPOXIDE	2.2	U	2.2	UJ	0.78	2.2	ug/kg	HT
SD	NDA053	SW8081	HEPTACHLOR EPOXIDE	13	U	13	UJ	4.5	13	ug/kg	HT
SD	NDA054	SW8081	HEPTACHLOR EPOXIDE	1.7	U	1.7	UJ	0.61	1.7	ug/kg	HT
SD	NDA055	SW8081	HEPTACHLOR EPOXIDE	1.7	U	1.7	UJ	0.6	1.7	ug/kg	HT
SD	NDA047	SW8081	HEPTACHLOR EPOXIDE	1.9	U	1.9	UJ	0.65	1.9	ug/kg	HT
SD	NDA048	SW8081	HEPTACHLOR EPOXIDE	1.9	U	1.9	UJ	0.69	1.9	ug/kg	HT
SD	NDA049	SW8081	HEPTACHLOR EPOXIDE	1.9	U	1.9	UJ	0.65	1.9	ug/kg	HT
SS	NDA164	SW8081	HEPTACHLOR EPOXIDE	2.1	U	2.1	UJ	0.74	2.1	ug/kg	HT
SS	NDA166	SW8081	HEPTACHLOR EPOXIDE	2.1	U	2.1	UJ	0.75	2.1	ug/kg	HT
SS	NDA168	SW8081	HEPTACHLOR EPOXIDE	2	U	2	UJ	0.7	2	ug/kg	HT
SS	NDA170	SW8081	HEPTACHLOR EPOXIDE	2	U	2	UJ	0.72	2	ug/kg	HT
SS	NDA172	SW8081	HEPTACHLOR EPOXIDE	1.8	U	1.8	UJ	0.64	1.8	ug/kg	HT
SS	NDA174	SW8081	HEPTACHLOR EPOXIDE	1.8	U	1.8	UJ	0.62	1.8	ug/kg	HT
SS	NDA176	SW8081	HEPTACHLOR EPOXIDE	4.8	U	4.8	UJ	1.7	4.8	ug/kg	HT
SS	NDA185	SW8081	HEPTACHLOR EPOXIDE	2	U	2	UJ	0.71	2	ug/kg	HT
SS	NDA186	SW8081	HEPTACHLOR EPOXIDE	1.9	U	1.9	UJ	0.67	1.9	ug/kg	HT
SS	NDA187	SW8081	HEPTACHLOR EPOXIDE	1.8	U	1.8	UJ	0.64	1.8	ug/kg	HT
SS	NDA188	SW8081	HEPTACHLOR EPOXIDE	2.3	U	2.3	UJ	0.82	2.3	ug/kg	HT
SS	NDA189	SW8081	HEPTACHLOR EPOXIDE	1.9	U	1.9	UJ	0.67	1.9	ug/kg	HT
SS	NDA190	SW8081	HEPTACHLOR EPOXIDE	1.9	U	1.9	UJ	0.68	1.9	ug/kg	HT
SS	NDA191	SW8081	HEPTACHLOR EPOXIDE	1.7	U	1.7	UJ	0.61	1.7	ug/kg	HT
SS	NDA192FD1	SW8081	HEPTACHLOR EPOXIDE	2	U	2	UJ	0.7	2	ug/kg	HT
SS	NDA193	SW8081	HEPTACHLOR EPOXIDE	1.8	U	1.8	UJ	0.62	1.8	ug/kg	HT
SS	NDA194	SW8081	HEPTACHLOR EPOXIDE	2.1	U	2.1	UJ	0.74	2.1	ug/kg	HT
SS	NDA195	SW8081	HEPTACHLOR EPOXIDE	1.7	U	1.7	UJ	0.61	1.7	ug/kg	HT
SS	NDA057	SW8081	HEPTACHLOR EPOXIDE	2.1	U	2.1	UJ	0.74	2.1	ug/kg	HT
SS	NDA059	SW8081	HEPTACHLOR EPOXIDE	1.8	U	1.8	UJ	0.64	1.8	ug/kg	HT
SS	NDA061	SW8081	HEPTACHLOR EPOXIDE	1.8	U	1.8	UJ	0.63	1.8	ug/kg	HT
SS	NDA062FD1	SW8081	HEPTACHLOR EPOXIDE	1.8	U	1.8	UJ	0.64	1.8	ug/kg	HT
SS	NDA065	SW8081	HEPTACHLOR EPOXIDE	2.1	U	2.1	UJ	0.75	2.1	ug/kg	HT
SS	NDA067	SW8081	HEPTACHLOR EPOXIDE	1.8	U	1.8	UJ	0.64	1.8	ug/kg	HT
SS	NDA069	SW8081	HEPTACHLOR EPOXIDE	1.7	U	1.7	UJ	0.6	1.7	ug/kg	HT
SS	NDA119	SW8081	HEPTACHLOR EPOXIDE	1.9	U	1.9	UJ	0.67	1.9	ug/kg	HT
SS	NDA120	SW8081	HEPTACHLOR EPOXIDE	2.2	U	2.2	UJ	0.79	2.2	ug/kg	HT
SS	NDA121	SW8081	HEPTACHLOR EPOXIDE	1.9	U	1.9	UJ	0.65	1.9	ug/kg	HT
SS	NDA122	SW8081	HEPTACHLOR EPOXIDE	1.9	U	1.9	UJ	0.67	1.9	ug/kg	HT
SS	NDA123	SW8081	HEPTACHLOR EPOXIDE	1.9	U	1.9	UJ	0.67	1.9	ug/kg	HT
SS	NDA124	SW8081	HEPTACHLOR EPOXIDE	1.9	U	1.9	UJ	0.67	1.9	ug/kg	HT
SS	NDA071	SW8081	HEPTACHLOR EPOXIDE	2	U	2	UJ	0.72	2	ug/kg	HT
SS	NDA072FD1	SW8081	HEPTACHLOR EPOXIDE	1.8	U	1.8	UJ	0.63	1.8	ug/kg	HT
SS	NDA074	SW8081	HEPTACHLOR EPOXIDE	0.18	U	0.18	UJ	0.06	0.18	ug/kg	HT
SS	NDA078	SW8081	HEPTACHLOR EPOXIDE	0.18	U	0.18	UJ	0.06	0.18	ug/kg	HT

Matrix	Sample ID	Analytical Method	Parameter	Lab Result	Lab Qual	Final Result	Final Qual	DL	RL	Units	Comments
SS	NDA080	SW8081	HEPTACHLOR EPOXIDE	0.17	U	0.17	UJ	0.06	0.17	ug/kg	HT
SS	NDA082	SW8081	HEPTACHLOR EPOXIDE	0.17	U	0.17	UJ	0.06	0.17	ug/kg	HT
SS	NDA113	SW8081	HEPTACHLOR EPOXIDE	2.1	U	2.1	UJ	0.74	2.1	ug/kg	HT
SS	NDA115	SW8081	HEPTACHLOR EPOXIDE	1.9	U	1.9	UJ	0.68	1.9	ug/kg	HT
SS	NDA117	SW8081	HEPTACHLOR EPOXIDE	2.1	U	2.1	UJ	0.76	2.1	ug/kg	HT
SS	NDA101	SW8081	HEPTACHLOR EPOXIDE	2.3	U	2.3	UJ	0.8	2.3	ug/kg	HT
SS	NDA103	SW8081	HEPTACHLOR EPOXIDE	2.3	U	2.3	UJ	0.82	2.3	ug/kg	HT
SS	NDA104FD1	SW8081	HEPTACHLOR EPOXIDE	2.4	U	2.4	UJ	0.84	2.4	ug/kg	HT
SS	NDA107	SW8081	HEPTACHLOR EPOXIDE	2.1	U	2.1	UJ	0.75	2.1	ug/kg	HT
SS	NDA109	SW8081	HEPTACHLOR EPOXIDE	2.2	U	2.2	UJ	0.78	2.2	ug/kg	HT
SS	NDA111	SW8081	HEPTACHLOR EPOXIDE	2.2	U	2.2	UJ	0.79	2.2	ug/kg	HT
SB	NDA165	SW8081	HEPTACHLOR	1.9	U	1.9	UJ	0.7	1.9	ug/kg	HT
SB	NDA167	SW8081	HEPTACHLOR	2.1	U	2.1	UJ	0.76	2.1	ug/kg	HT
SB	NDA169	SW8081	HEPTACHLOR	2	U	2	UJ	0.74	2	ug/kg	HT
SB	NDA171	SW8081	HEPTACHLOR	1.8	U	1.8	UJ	0.67	1.8	ug/kg	HT
SB	NDA173	SW8081	HEPTACHLOR	2.2	U	2.2	UJ	0.79	2.2	ug/kg	HT
SB	NDA175	SW8081	HEPTACHLOR	1.9	U	1.9	UJ	0.69	1.9	ug/kg	HT
SB	NDA177	SW8081	HEPTACHLOR	2	U	2	UJ	0.72	2	ug/kg	HT
SB	NDA213	SW8081	HEPTACHLOR	2	U	2	UJ	0.71	2	ug/kg	HT
SB	NDA214FD1	SW8081	HEPTACHLOR	1.9	U	1.9	UJ	0.69	1.9	ug/kg	HT
SB	NDA215	SW8081	HEPTACHLOR	2	U	2	UJ	0.72	2	ug/kg	HT
SB	NDA216	SW8081	HEPTACHLOR	1.8	U	1.8	UJ	0.68	1.8	ug/kg	HT
SB	NDA217	SW8081	HEPTACHLOR	1.9	U	1.9	UJ	0.71	1.9	ug/kg	HT
SB	NDA218	SW8081	HEPTACHLOR	1.9	U	1.9	UJ	0.68	1.9	ug/kg	HT
SB	NDA219	SW8081	HEPTACHLOR	1.9	U	1.9	UJ	0.69	1.9	ug/kg	HT
SB	NDA220	SW8081	HEPTACHLOR	1.9	U	1.9	UJ	0.71	1.9	ug/kg	HT
SB	NDA221	SW8081	HEPTACHLOR	1.8	U	1.8	UJ	0.66	1.8	ug/kg	HT
SB	NDA222	SW8081	HEPTACHLOR	1.7	U	1.7	UJ	0.62	1.7	ug/kg	HT
SB	NDA223	SW8081	HEPTACHLOR	1.9	U	1.9	UJ	0.71	1.9	ug/kg	HT
SB	NDA235	SW8081	HEPTACHLOR	2.2	U	2.2	UJ	0.82	2.2	ug/kg	HT
SB	NDA236	SW8081	HEPTACHLOR	1.9	U	1.9	UJ	0.7	1.9	ug/kg	HT
SB	NDA237FD1	SW8081	HEPTACHLOR	1.9	U	1.9	UJ	0.69	1.9	ug/kg	HT
SB	NDA238	SW8081	HEPTACHLOR	1.9	U	1.9	UJ	0.7	1.9	ug/kg	HT
SB	NDA239	SW8081	HEPTACHLOR	1.9	U	1.9	UJ	0.7	1.9	ug/kg	HT
SB	NDA240	SW8081	HEPTACHLOR	2	U	2	UJ	0.75	2	ug/kg	HT
SB	NDA241	SW8081	HEPTACHLOR	1.9	U	1.9	UJ	0.69	1.9	ug/kg	HT
SB	NDA242	SW8081	HEPTACHLOR	2.1	U	2.1	UJ	0.77	2.1	ug/kg	HT
SB	NDA243	SW8081	HEPTACHLOR	2	U	2	UJ	0.73	2	ug/kg	HT
SB	NDA244	SW8081	HEPTACHLOR	1.9	U	1.9	UJ	0.68	1.9	ug/kg	HT
SB	NDA245	SW8081	HEPTACHLOR	2	U	2	UJ	0.71	2	ug/kg	HT
SB	NDA246	SW8081	HEPTACHLOR	2.1	U	2.1	UJ	0.76	2.1	ug/kg	HT
SB	NDA247FD1	SW8081	HEPTACHLOR	2	U	2	UJ	0.72	2	ug/kg	HT
SB	NDA248	SW8081	HEPTACHLOR	2.1	U	2.1	UJ	0.75	2.1	ug/kg	HT
SB	NDA249	SW8081	HEPTACHLOR	1.9	U	1.9	UJ	0.69	1.9	ug/kg	HT
SB	NDA252	SW8081	HEPTACHLOR	2	U	2	UJ	0.72	2	ug/kg	HT
SB	NDA253	SW8081	HEPTACHLOR	2.1	U	2.1	UJ	0.78	2.1	ug/kg	HT
SB	NDA254	SW8081	HEPTACHLOR	2.1	U	2.1	UJ	0.78	2.1	ug/kg	HT
SB	NDA255	SW8081	HEPTACHLOR	2.1	U	2.1	UJ	0.76	2.1	ug/kg	HT
SB	NDA058	SW8081	HEPTACHLOR	1.9	U	1.9	UJ	0.69	1.9	ug/kg	HT
SB	NDA060	SW8081	HEPTACHLOR	1.9	U	1.9	UJ	0.68	1.9	ug/kg	HT
SB	NDA063	SW8081	HEPTACHLOR	1.8	U	1.8	UJ	0.67	1.8	ug/kg	HT
SB	NDA064FD1	SW8081	HEPTACHLOR	1.8	U	1.8	UJ	0.67	1.8	ug/kg	HT
SB	NDA066	SW8081	HEPTACHLOR	1.8	U	1.8	UJ	0.65	1.8	ug/kg	HT
SB	NDA068	SW8081	HEPTACHLOR	1.8	U	1.8	UJ	0.67	1.8	ug/kg	HT
SB	NDA070	SW8081	HEPTACHLOR	1.8	U	1.8	UJ	0.66	1.8	ug/kg	HT
SB	NDA073	SW8081	HEPTACHLOR	1.8	U	1.8	UJ	0.66	1.8	ug/kg	HT
SB	NDA075	SW8081	HEPTACHLOR	0.18	U	0.18	UJ	0.06	0.18	ug/kg	HT
SB	NDA077	SW8081	HEPTACHLOR	0.2	U	0.2	UJ	0.07	0.2	ug/kg	HT
SB	NDA081	SW8081	HEPTACHLOR	0.18	U	0.18	UJ	0.06	0.18	ug/kg	HT
SB	NDA083	SW8081	HEPTACHLOR	0.17	U	0.17	UJ	0.06	0.17	ug/kg	HT
SB	NDA114	SW8081	HEPTACHLOR	2.2	U	2.2	UJ	0.8	2.2	ug/kg	HT
SB	NDA116	SW8081	HEPTACHLOR	2.1	U	2.1	UJ	0.77	2.1	ug/kg	HT
SB	NDA118	SW8081	HEPTACHLOR	2.2	U	2.2	UJ	0.8	2.2	ug/kg	HT
SB	NDA102	SW8081	HEPTACHLOR	2.6	U	2.6	UJ	0.96	2.6	ug/kg	HT
SB	NDA105	SW8081	HEPTACHLOR	2.7	U	2.7	UJ	0.98	2.7	ug/kg	HT
SB	NDA106FD1	SW8081	HEPTACHLOR	2.7	U	2.7	UJ	0.98	2.7	ug/kg	HT
SB	NDA108	SW8081	HEPTACHLOR	2.3	U	2.3	UJ	0.83	2.3	ug/kg	HT
SB	NDA110	SW8081	HEPTACHLOR	2.3	U	2.3	UJ	0.83	2.3	ug/kg	HT
SB	NDA112	SW8081	HEPTACHLOR	2.2	U	2.2	UJ	0.81	2.2	ug/kg	HT
SD	NDA053	SW8081	HEPTACHLOR	13	U	13	UJ	4.6	13	ug/kg	HT

Matrix	Sample ID	Analytical Method	Parameter	Lab Result	Lab Qual	Final Result	Final Qual	DL	RL	Units	Comments
SD	NDA054	SW8081	HEPTACHLOR	1.7	U	1.7	UJ	0.63	1.7	ug/kg	HT
SD	NDA055	SW8081	HEPTACHLOR	1.7	U	1.7	UJ	0.62	1.7	ug/kg	HT
SD	NDA047	SW8081	HEPTACHLOR	1.9	U	1.9	UJ	0.68	1.9	ug/kg	HT
SD	NDA048	SW8081	HEPTACHLOR	1.9	U	1.9	UJ	0.71	1.9	ug/kg	HT
SD	NDA049	SW8081	HEPTACHLOR	1.9	U	1.9	UJ	0.68	1.9	ug/kg	HT
SS	NDA164	SW8081	HEPTACHLOR	2.1	U	2.1	UJ	0.76	2.1	ug/kg	HT
SS	NDA166	SW8081	HEPTACHLOR	2.1	U	2.1	UJ	0.77	2.1	ug/kg	HT
SS	NDA168	SW8081	HEPTACHLOR	2	U	2	UJ	0.72	2	ug/kg	HT
SS	NDA170	SW8081	HEPTACHLOR	2	U	2	UJ	0.75	2	ug/kg	HT
SS	NDA172	SW8081	HEPTACHLOR	1.8	U	1.8	UJ	0.67	1.8	ug/kg	HT
SS	NDA174	SW8081	HEPTACHLOR	1.8	U	1.8	UJ	0.65	1.8	ug/kg	HT
SS	NDA176	SW8081	HEPTACHLOR	4.8	U	4.8	UJ	1.7	4.8	ug/kg	HT
SS	NDA185	SW8081	HEPTACHLOR	2	U	2	UJ	0.74	2	ug/kg	HT
SS	NDA186	SW8081	HEPTACHLOR	1.9	U	1.9	UJ	0.69	1.9	ug/kg	HT
SS	NDA187	SW8081	HEPTACHLOR	1.8	U	1.8	UJ	0.67	1.8	ug/kg	HT
SS	NDA188	SW8081	HEPTACHLOR	2.3	U	2.3	UJ	0.85	2.3	ug/kg	HT
SS	NDA189	SW8081	HEPTACHLOR	1.9	U	1.9	UJ	0.69	1.9	ug/kg	HT
SS	NDA190	SW8081	HEPTACHLOR	1.9	U	1.9	UJ	0.7	1.9	ug/kg	HT
SS	NDA191	SW8081	HEPTACHLOR	1.7	U	1.7	UJ	0.64	1.7	ug/kg	HT
SS	NDA192FD1	SW8081	HEPTACHLOR	2	U	2	UJ	0.72	2	ug/kg	HT
SS	NDA193	SW8081	HEPTACHLOR	1.8	U	1.8	UJ	0.64	1.8	ug/kg	HT
SS	NDA194	SW8081	HEPTACHLOR	2.1	U	2.1	UJ	0.76	2.1	ug/kg	HT
SS	NDA195	SW8081	HEPTACHLOR	1.7	U	1.7	UJ	0.64	1.7	ug/kg	HT
SS	NDA057	SW8081	HEPTACHLOR	2.1	U	2.1	UJ	0.77	2.1	ug/kg	HT
SS	NDA059	SW8081	HEPTACHLOR	1.8	U	1.8	UJ	0.66	1.8	ug/kg	HT
SS	NDA061	SW8081	HEPTACHLOR	1.8	U	1.8	UJ	0.65	1.8	ug/kg	HT
SS	NDA062FD1	SW8081	HEPTACHLOR	1.8	U	1.8	UJ	0.66	1.8	ug/kg	HT
SS	NDA065	SW8081	HEPTACHLOR	2.1	U	2.1	UJ	0.78	2.1	ug/kg	HT
SS	NDA067	SW8081	HEPTACHLOR	1.8	U	1.8	UJ	0.67	1.8	ug/kg	HT
SS	NDA069	SW8081	HEPTACHLOR	1.7	U	1.7	UJ	0.63	1.7	ug/kg	HT
SS	NDA119	SW8081	HEPTACHLOR	1.9	U	1.9	UJ	0.7	1.9	ug/kg	HT
SS	NDA120	SW8081	HEPTACHLOR	2.2	U	2.2	UJ	0.82	2.2	ug/kg	HT
SS	NDA121	SW8081	HEPTACHLOR	1.9	U	1.9	UJ	0.68	1.9	ug/kg	HT
SS	NDA122	SW8081	HEPTACHLOR	1.9	U	1.9	UJ	0.7	1.9	ug/kg	HT
SS	NDA123	SW8081	HEPTACHLOR	1.9	U	1.9	UJ	0.69	1.9	ug/kg	HT
SS	NDA124	SW8081	HEPTACHLOR	1.9	U	1.9	UJ	0.69	1.9	ug/kg	HT
SS	NDA071	SW8081	HEPTACHLOR	2	U	2	UJ	0.74	2	ug/kg	HT
SS	NDA072FD1	SW8081	HEPTACHLOR	1.8	U	1.8	UJ	0.65	1.8	ug/kg	HT
SS	NDA074	SW8081	HEPTACHLOR	0.18	U	0.18	UJ	0.07	0.18	ug/kg	HT
SS	NDA078	SW8081	HEPTACHLOR	0.18	U	0.18	UJ	0.06	0.18	ug/kg	HT
SS	NDA080	SW8081	HEPTACHLOR	0.17	U	0.17	UJ	0.06	0.17	ug/kg	HT
SS	NDA082	SW8081	HEPTACHLOR	0.17	U	0.17	UJ	0.06	0.17	ug/kg	HT
SS	NDA113	SW8081	HEPTACHLOR	2.1	U	2.1	UJ	0.76	2.1	ug/kg	HT
SS	NDA115	SW8081	HEPTACHLOR	1.9	U	1.9	UJ	0.71	1.9	ug/kg	HT
SS	NDA117	SW8081	HEPTACHLOR	2.1	U	2.1	UJ	0.78	2.1	ug/kg	HT
SS	NDA101	SW8081	HEPTACHLOR	2.3	U	2.3	UJ	0.83	2.3	ug/kg	HT
SS	NDA103	SW8081	HEPTACHLOR	2.3	U	2.3	UJ	0.85	2.3	ug/kg	HT
SS	NDA104FD1	SW8081	HEPTACHLOR	2.4	U	2.4	UJ	0.87	2.4	ug/kg	HT
SS	NDA107	SW8081	HEPTACHLOR	2.1	U	2.1	UJ	0.77	2.1	ug/kg	HT
SS	NDA109	SW8081	HEPTACHLOR	2.2	U	2.2	UJ	0.81	2.2	ug/kg	HT
SS	NDA111	SW8081	HEPTACHLOR	2.2	U	2.2	UJ	0.82	2.2	ug/kg	HT
SB	NDA165	SW8081	GAMMA-CHLORDANE	1.9	U	1.9	UJ	0.57	1.9	ug/kg	HT
SB	NDA167	SW8081	GAMMA-CHLORDANE	2.1	U	2.1	UJ	0.61	2.1	ug/kg	HT
SB	NDA169	SW8081	GAMMA-CHLORDANE	2	U	2	UJ	0.6	2	ug/kg	HT
SB	NDA171	SW8081	GAMMA-CHLORDANE	1.8	U	1.8	UJ	0.54	1.8	ug/kg	HT
SB	NDA173	SW8081	GAMMA-CHLORDANE	2.2	U	2.2	UJ	0.63	2.2	ug/kg	HT
SB	NDA175	SW8081	GAMMA-CHLORDANE	1.9	U	1.9	UJ	0.55	1.9	ug/kg	HT
SB	NDA177	SW8081	GAMMA-CHLORDANE	2	U	2	UJ	0.58	2	ug/kg	HT
SB	NDA213	SW8081	GAMMA-CHLORDANE	2	U	2	UJ	0.57	2	ug/kg	HT
SB	NDA214FD1	SW8081	GAMMA-CHLORDANE	1.9	U	1.9	UJ	0.56	1.9	ug/kg	HT
SB	NDA215	SW8081	GAMMA-CHLORDANE	2	U	2	UJ	0.58	2	ug/kg	HT
SB	NDA216	SW8081	GAMMA-CHLORDANE	1.8	U	1.8	UJ	0.54	1.8	ug/kg	HT
SB	NDA217	SW8081	GAMMA-CHLORDANE	1.9	U	1.9	UJ	0.57	1.9	ug/kg	HT
SB	NDA218	SW8081	GAMMA-CHLORDANE	1.9	U	1.9	UJ	0.55	1.9	ug/kg	HT
SB	NDA219	SW8081	GAMMA-CHLORDANE	1.9	U	1.9	UJ	0.55	1.9	ug/kg	HT
SB	NDA220	SW8081	GAMMA-CHLORDANE	1.9	U	1.9	UJ	0.57	1.9	ug/kg	HT
SB	NDA221	SW8081	GAMMA-CHLORDANE	1.8	U	1.8	UJ	0.53	1.8	ug/kg	HT
SB	NDA222	SW8081	GAMMA-CHLORDANE	1.7	U	1.7	UJ	0.5	1.7	ug/kg	HT
SB	NDA223	SW8081	GAMMA-CHLORDANE	1.9	U	1.9	UJ	0.57	1.9	ug/kg	HT
SB	NDA235	SW8081	GAMMA-CHLORDANE	2.2	U	2.2	UJ	0.66	2.2	ug/kg	HT

Matrix	Sample ID	Analytical Method	Parameter	Lab Result	Lab Qual	Final Result	Final Qual	DL	RL	Units	Comments
SB	NDA236	SW8081	GAMMA-CHLORDANE	1.9	U	1.9	UJ	0.57	1.9	ug/kg	HT
SB	NDA237FD1	SW8081	GAMMA-CHLORDANE	1.9	U	1.9	UJ	0.56	1.9	ug/kg	HT
SB	NDA238	SW8081	GAMMA-CHLORDANE	1.9	U	1.9	UJ	0.56	1.9	ug/kg	HT
SB	NDA239	SW8081	GAMMA-CHLORDANE	1.9	U	1.9	UJ	0.56	1.9	ug/kg	HT
SB	NDA240	SW8081	GAMMA-CHLORDANE	2	U	2	UJ	0.6	2	ug/kg	HT
SB	NDA241	SW8081	GAMMA-CHLORDANE	1.9	U	1.9	UJ	0.56	1.9	ug/kg	HT
SB	NDA242	SW8081	GAMMA-CHLORDANE	2.1	U	2.1	UJ	0.62	2.1	ug/kg	HT
SB	NDA243	SW8081	GAMMA-CHLORDANE	2	U	2	UJ	0.59	2	ug/kg	HT
SB	NDA244	SW8081	GAMMA-CHLORDANE	1.9	U	1.9	UJ	0.55	1.9	ug/kg	HT
SB	NDA245	SW8081	GAMMA-CHLORDANE	2	U	2	UJ	0.58	2	ug/kg	HT
SB	NDA246	SW8081	GAMMA-CHLORDANE	2.1	U	2.1	UJ	0.61	2.1	ug/kg	HT
SB	NDA247FD1	SW8081	GAMMA-CHLORDANE	2	U	2	UJ	0.58	2	ug/kg	HT
SB	NDA248	SW8081	GAMMA-CHLORDANE	2.1	U	2.1	UJ	0.6	2.1	ug/kg	HT
SB	NDA249	SW8081	GAMMA-CHLORDANE	1.9	U	1.9	UJ	0.56	1.9	ug/kg	HT
SB	NDA252	SW8081	GAMMA-CHLORDANE	2	U	2	UJ	0.58	2	ug/kg	HT
SB	NDA253	SW8081	GAMMA-CHLORDANE	2.1	U	2.1	UJ	0.63	2.1	ug/kg	HT
SB	NDA254	SW8081	GAMMA-CHLORDANE	2.1	U	2.1	UJ	0.62	2.1	ug/kg	HT
SB	NDA255	SW8081	GAMMA-CHLORDANE	2.1	U	2.1	UJ	0.61	2.1	ug/kg	HT
SB	NDA058	SW8081	GAMMA-CHLORDANE	1.9	U	1.9	UJ	0.55	1.9	ug/kg	HT
SB	NDA060	SW8081	GAMMA-CHLORDANE	1.9	U	1.9	UJ	0.55	1.9	ug/kg	HT
SB	NDA063	SW8081	GAMMA-CHLORDANE	1.8	U	1.8	UJ	0.54	1.8	ug/kg	HT
SB	NDA064FD1	SW8081	GAMMA-CHLORDANE	1.8	U	1.8	UJ	0.54	1.8	ug/kg	HT
SB	NDA066	SW8081	GAMMA-CHLORDANE	1.8	U	1.8	UJ	0.52	1.8	ug/kg	HT
SB	NDA068	SW8081	GAMMA-CHLORDANE	1.8	U	1.8	UJ	0.54	1.8	ug/kg	HT
SB	NDA070	SW8081	GAMMA-CHLORDANE	1.8	U	1.8	UJ	0.53	1.8	ug/kg	HT
SB	NDA073	SW8081	GAMMA-CHLORDANE	1.8	U	1.8	UJ	0.53	1.8	ug/kg	HT
SB	NDA075	SW8081	GAMMA-CHLORDANE	0.18	U	0.18	UJ	0.05	0.18	ug/kg	HT
SB	NDA077	SW8081	GAMMA-CHLORDANE	0.2	U	0.2	UJ	0.06	0.2	ug/kg	HT
SB	NDA081	SW8081	GAMMA-CHLORDANE	0.18	U	0.18	UJ	0.05	0.18	ug/kg	HT
SB	NDA083	SW8081	GAMMA-CHLORDANE	0.17	U	0.17	UJ	0.05	0.17	ug/kg	HT
SB	NDA114	SW8081	GAMMA-CHLORDANE	2.2	U	2.2	UJ	0.65	2.2	ug/kg	HT
SB	NDA116	SW8081	GAMMA-CHLORDANE	2.1	U	2.1	UJ	0.62	2.1	ug/kg	HT
SB	NDA118	SW8081	GAMMA-CHLORDANE	2.2	U	2.2	UJ	0.64	2.2	ug/kg	HT
SB	NDA102	SW8081	GAMMA-CHLORDANE	2.6	U	2.6	UJ	0.77	2.6	ug/kg	HT
SB	NDA105	SW8081	GAMMA-CHLORDANE	2.7	U	2.7	UJ	0.79	2.7	ug/kg	HT
SB	NDA106FD1	SW8081	GAMMA-CHLORDANE	2.7	U	2.7	UJ	0.79	2.7	ug/kg	HT
SB	NDA108	SW8081	GAMMA-CHLORDANE	2.3	U	2.3	UJ	0.67	2.3	ug/kg	HT
SB	NDA110	SW8081	GAMMA-CHLORDANE	2.3	U	2.3	UJ	0.66	2.3	ug/kg	HT
SB	NDA112	SW8081	GAMMA-CHLORDANE	2.2	U	2.2	UJ	0.65	2.2	ug/kg	HT
SD	NDA053	SW8081	GAMMA-CHLORDANE	13	U	13	UJ	3.7	13	ug/kg	HT
SD	NDA054	SW8081	GAMMA-CHLORDANE	1.7	U	1.7	UJ	0.51	1.7	ug/kg	HT
SD	NDA055	SW8081	GAMMA-CHLORDANE	1.7	U	1.7	UJ	0.5	1.7	ug/kg	HT
SD	NDA047	SW8081	GAMMA-CHLORDANE	1.9	U	1.9	UJ	0.54	1.9	ug/kg	HT
SD	NDA048	SW8081	GAMMA-CHLORDANE	1.9	U	1.9	UJ	0.57	1.9	ug/kg	HT
SD	NDA049	SW8081	GAMMA-CHLORDANE	1.9	U	1.9	UJ	0.55	1.9	ug/kg	HT
SS	NDA164	SW8081	GAMMA-CHLORDANE	2.1	U	2.1	UJ	0.61	2.1	ug/kg	HT
SS	NDA166	SW8081	GAMMA-CHLORDANE	2.1	U	2.1	UJ	0.62	2.1	ug/kg	HT
SS	NDA168	SW8081	GAMMA-CHLORDANE	2	U	2	UJ	0.58	2	ug/kg	HT
SS	NDA170	SW8081	GAMMA-CHLORDANE	2	U	2	UJ	0.6	2	ug/kg	HT
SS	NDA172	SW8081	GAMMA-CHLORDANE	1.8	U	1.8	UJ	0.54	1.8	ug/kg	HT
SS	NDA174	SW8081	GAMMA-CHLORDANE	1.8	U	1.8	UJ	0.52	1.8	ug/kg	HT
SS	NDA176	SW8081	GAMMA-CHLORDANE	4.8	U	4.8	UJ	1.4	4.8	ug/kg	HT
SS	NDA185	SW8081	GAMMA-CHLORDANE	2	U	2	UJ	0.59	2	ug/kg	HT
SS	NDA186	SW8081	GAMMA-CHLORDANE	1.9	U	1.9	UJ	0.56	1.9	ug/kg	HT
SS	NDA187	SW8081	GAMMA-CHLORDANE	1.8	U	1.8	UJ	0.54	1.8	ug/kg	HT
SS	NDA188	SW8081	GAMMA-CHLORDANE	2.3	U	2.3	UJ	0.68	2.3	ug/kg	HT
SS	NDA189	SW8081	GAMMA-CHLORDANE	1.9	U	1.9	UJ	0.56	1.9	ug/kg	HT
SS	NDA190	SW8081	GAMMA-CHLORDANE	1.9	U	1.9	UJ	0.56	1.9	ug/kg	HT
SS	NDA191	SW8081	GAMMA-CHLORDANE	1.7	U	1.7	UJ	0.51	1.7	ug/kg	HT
SS	NDA192FD1	SW8081	GAMMA-CHLORDANE	2	U	2	UJ	0.58	2	ug/kg	HT
SS	NDA193	SW8081	GAMMA-CHLORDANE	1.8	U	1.8	UJ	0.52	1.8	ug/kg	HT
SS	NDA194	SW8081	GAMMA-CHLORDANE	2.1	U	2.1	UJ	0.61	2.1	ug/kg	HT
SS	NDA195	SW8081	GAMMA-CHLORDANE	1.7	U	1.7	UJ	0.51	1.7	ug/kg	HT
SS	NDA057	SW8081	GAMMA-CHLORDANE	2.1	U	2.1	UJ	0.62	2.1	ug/kg	HT
SS	NDA059	SW8081	GAMMA-CHLORDANE	1.8	U	1.8	UJ	0.53	1.8	ug/kg	HT
SS	NDA061	SW8081	GAMMA-CHLORDANE	1.8	U	1.8	UJ	0.52	1.8	ug/kg	HT
SS	NDA062FD1	SW8081	GAMMA-CHLORDANE	1.8	U	1.8	UJ	0.53	1.8	ug/kg	HT
SS	NDA065	SW8081	GAMMA-CHLORDANE	2.1	U	2.1	UJ	0.63	2.1	ug/kg	HT
SS	NDA067	SW8081	GAMMA-CHLORDANE	1.8	U	1.8	UJ	0.54	1.8	ug/kg	HT
SS	NDA069	SW8081	GAMMA-CHLORDANE	1.7	U	1.7	UJ	0.5	1.7	ug/kg	HT

Matrix	Sample ID	Analytical Method	Parameter	Lab Result	Lab Qual	Final Result	Final Qual	DL	RL	Units	Comments
SS	NDA119	SW8081	GAMMA-CHLORDANE	1.9	U	1.9	UJ	0.56	1.9	ug/kg	HT
SS	NDA120	SW8081	GAMMA-CHLORDANE	2.2	U	2.2	UJ	0.66	2.2	ug/kg	HT
SS	NDA121	SW8081	GAMMA-CHLORDANE	1.9	U	1.9	UJ	0.55	1.9	ug/kg	HT
SS	NDA122	SW8081	GAMMA-CHLORDANE	1.9	U	1.9	UJ	0.56	1.9	ug/kg	HT
SS	NDA123	SW8081	GAMMA-CHLORDANE	1.9	U	1.9	UJ	0.56	1.9	ug/kg	HT
SS	NDA124	SW8081	GAMMA-CHLORDANE	1.9	U	1.9	UJ	0.56	1.9	ug/kg	HT
SS	NDA071	SW8081	GAMMA-CHLORDANE	2	U	2	UJ	0.6	2	ug/kg	HT
SS	NDA072FD1	SW8081	GAMMA-CHLORDANE	1.8	U	1.8	UJ	0.52	1.8	ug/kg	HT
SS	NDA074	SW8081	GAMMA-CHLORDANE	0.18	U	0.18	UJ	0.05	0.18	ug/kg	HT
SS	NDA078	SW8081	GAMMA-CHLORDANE	0.18	U	0.18	UJ	0.05	0.18	ug/kg	HT
SS	NDA080	SW8081	GAMMA-CHLORDANE	0.17	U	0.17	UJ	0.05	0.17	ug/kg	HT
SS	NDA082	SW8081	GAMMA-CHLORDANE	0.17	U	0.17	UJ	0.05	0.17	ug/kg	HT
SS	NDA113	SW8081	GAMMA-CHLORDANE	2.1	U	2.1	UJ	0.62	2.1	ug/kg	HT
SS	NDA115	SW8081	GAMMA-CHLORDANE	1.9	U	1.9	UJ	0.57	1.9	ug/kg	HT
SS	NDA117	SW8081	GAMMA-CHLORDANE	2.1	U	2.1	UJ	0.63	2.1	ug/kg	HT
SS	NDA101	SW8081	GAMMA-CHLORDANE	2.3	U	2.3	UJ	0.67	2.3	ug/kg	HT
SS	NDA103	SW8081	GAMMA-CHLORDANE	2.3	U	2.3	UJ	0.68	2.3	ug/kg	HT
SS	NDA104FD1	SW8081	GAMMA-CHLORDANE	2.4	U	2.4	UJ	0.7	2.4	ug/kg	HT
SS	NDA107	SW8081	GAMMA-CHLORDANE	2.1	U	2.1	UJ	0.62	2.1	ug/kg	HT
SS	NDA109	SW8081	GAMMA-CHLORDANE	2.2	U	2.2	UJ	0.65	2.2	ug/kg	HT
SS	NDA111	SW8081	GAMMA-CHLORDANE	2.2	U	2.2	UJ	0.66	2.2	ug/kg	HT
SB	NDA245	SW8081	GAMMA BHC (LINDANE)	2	U	2	UJ	0.54	2	ug/kg	HT
SB	NDA246	SW8081	GAMMA BHC (LINDANE)	2.1	U	2.1	UJ	0.58	2.1	ug/kg	HT
SB	NDA247FD1	SW8081	GAMMA BHC (LINDANE)	2	U	2	UJ	0.54	2	ug/kg	HT
SB	NDA248	SW8081	GAMMA BHC (LINDANE)	2.1	U	2.1	UJ	0.57	2.1	ug/kg	HT
SB	NDA249	SW8081	GAMMA BHC (LINDANE)	1.9	U	1.9	UJ	0.52	1.9	ug/kg	HT
SB	NDA252	SW8081	GAMMA BHC (LINDANE)	2	U	2	UJ	0.55	2	ug/kg	HT
SB	NDA253	SW8081	GAMMA BHC (LINDANE)	2.1	U	2.1	UJ	0.59	2.1	ug/kg	HT
SB	NDA254	SW8081	GAMMA BHC (LINDANE)	2.1	U	2.1	UJ	0.59	2.1	ug/kg	HT
SB	NDA255	SW8081	GAMMA BHC (LINDANE)	2.1	U	2.1	UJ	0.58	2.1	ug/kg	HT
SB	NDA058	SW8081	GAMMA BHC (LINDANE)	1.9	U	1.9	UJ	0.52	1.9	ug/kg	HT
SB	NDA060	SW8081	GAMMA BHC (LINDANE)	1.9	U	1.9	UJ	0.51	1.9	ug/kg	HT
SB	NDA063	SW8081	GAMMA BHC (LINDANE)	1.8	U	1.8	UJ	0.5	1.8	ug/kg	HT
SB	NDA064FD1	SW8081	GAMMA BHC (LINDANE)	1.8	U	1.8	UJ	0.5	1.8	ug/kg	HT
SB	NDA066	SW8081	GAMMA BHC (LINDANE)	1.8	U	1.8	UJ	0.49	1.8	ug/kg	HT
SB	NDA068	SW8081	GAMMA BHC (LINDANE)	1.8	U	1.8	UJ	0.51	1.8	ug/kg	HT
SB	NDA070	SW8081	GAMMA BHC (LINDANE)	1.8	U	1.8	UJ	0.5	1.8	ug/kg	HT
SB	NDA073	SW8081	GAMMA BHC (LINDANE)	1.8	U	1.8	UJ	0.5	1.8	ug/kg	HT
SB	NDA075	SW8081	GAMMA BHC (LINDANE)	0.18	U	0.18	UJ	0.05	0.18	ug/kg	HT
SB	NDA077	SW8081	GAMMA BHC (LINDANE)	0.2	U	0.2	UJ	0.06	0.2	ug/kg	HT
SB	NDA081	SW8081	GAMMA BHC (LINDANE)	0.18	U	0.18	UJ	0.05	0.18	ug/kg	HT
SB	NDA083	SW8081	GAMMA BHC (LINDANE)	0.17	U	0.17	UJ	0.05	0.17	ug/kg	HT
SB	NDA114	SW8081	GAMMA BHC (LINDANE)	2.2	U	2.2	UJ	0.61	2.2	ug/kg	HT
SB	NDA116	SW8081	GAMMA BHC (LINDANE)	2.1	U	2.1	UJ	0.59	2.1	ug/kg	HT
SB	NDA118	SW8081	GAMMA BHC (LINDANE)	2.2	U	2.2	UJ	0.6	2.2	ug/kg	HT
SB	NDA102	SW8081	GAMMA BHC (LINDANE)	2.6	U	2.6	UJ	0.73	2.6	ug/kg	HT
SB	NDA105	SW8081	GAMMA BHC (LINDANE)	2.7	U	2.7	UJ	0.74	2.7	ug/kg	HT
SB	NDA106FD1	SW8081	GAMMA BHC (LINDANE)	2.7	U	2.7	UJ	0.74	2.7	ug/kg	HT
SB	NDA108	SW8081	GAMMA BHC (LINDANE)	2.3	U	2.3	UJ	0.63	2.3	ug/kg	HT
SB	NDA110	SW8081	GAMMA BHC (LINDANE)	2.3	U	2.3	UJ	0.62	2.3	ug/kg	HT
SB	NDA112	SW8081	GAMMA BHC (LINDANE)	2.2	U	2.2	UJ	0.61	2.2	ug/kg	HT
SD	NDA047	SW8081	GAMMA BHC (LINDANE)	1.9	U	1.9	UJ	0.51	1.9	ug/kg	HT
SD	NDA048	SW8081	GAMMA BHC (LINDANE)	1.9	U	1.9	UJ	0.54	1.9	ug/kg	HT
SD	NDA049	SW8081	GAMMA BHC (LINDANE)	1.9	U	1.9	UJ	0.51	1.9	ug/kg	HT
SS	NDA185	SW8081	GAMMA BHC (LINDANE)	2	U	2	UJ	0.56	2	ug/kg	HT
SS	NDA186	SW8081	GAMMA BHC (LINDANE)	1.9	U	1.9	UJ	0.52	1.9	ug/kg	HT
SS	NDA187	SW8081	GAMMA BHC (LINDANE)	1.8	U	1.8	UJ	0.5	1.8	ug/kg	HT
SS	NDA188	SW8081	GAMMA BHC (LINDANE)	2.3	U	2.3	UJ	0.64	2.3	ug/kg	HT
SS	NDA189	SW8081	GAMMA BHC (LINDANE)	1.9	U	1.9	UJ	0.52	1.9	ug/kg	HT
SS	NDA190	SW8081	GAMMA BHC (LINDANE)	1.9	U	1.9	UJ	0.53	1.9	ug/kg	HT
SS	NDA191	SW8081	GAMMA BHC (LINDANE)	1.7	U	1.7	UJ	0.48	1.7	ug/kg	HT
SS	NDA192FD1	SW8081	GAMMA BHC (LINDANE)	2	U	2	UJ	0.55	2	ug/kg	HT
SS	NDA193	SW8081	GAMMA BHC (LINDANE)	1.8	U	1.8	UJ	0.49	1.8	ug/kg	HT
SS	NDA194	SW8081	GAMMA BHC (LINDANE)	2.1	U	2.1	UJ	0.58	2.1	ug/kg	HT
SS	NDA195	SW8081	GAMMA BHC (LINDANE)	1.7	U	1.7	UJ	0.48	1.7	ug/kg	HT
SS	NDA057	SW8081	GAMMA BHC (LINDANE)	2.1	U	2.1	UJ	0.58	2.1	ug/kg	HT
SS	NDA059	SW8081	GAMMA BHC (LINDANE)	1.8	U	1.8	UJ	0.5	1.8	ug/kg	HT
SS	NDA061	SW8081	GAMMA BHC (LINDANE)	1.8	U	1.8	UJ	0.49	1.8	ug/kg	HT
SS	NDA062FD1	SW8081	GAMMA BHC (LINDANE)	1.8	U	1.8	UJ	0.5	1.8	ug/kg	HT
SS	NDA065	SW8081	GAMMA BHC (LINDANE)	2.1	U	2.1	UJ	0.59	2.1	ug/kg	HT

Matrix	Sample ID	Analytical Method	Parameter	Lab Result	Lab Qual	Final Result	Final Qual	DL	RL	Units	Comments
SS	NDA067	SW8081	GAMMA BHC (LINDANE)	1.8	U	1.8	UJ	0.5	1.8	ug/kg	HT
SS	NDA069	SW8081	GAMMA BHC (LINDANE)	1.7	U	1.7	UJ	0.47	1.7	ug/kg	HT
SS	NDA119	SW8081	GAMMA BHC (LINDANE)	1.9	U	1.9	UJ	0.53	1.9	ug/kg	HT
SS	NDA120	SW8081	GAMMA BHC (LINDANE)	2.2	U	2.2	UJ	0.62	2.2	ug/kg	HT
SS	NDA121	SW8081	GAMMA BHC (LINDANE)	1.9	U	1.9	UJ	0.51	1.9	ug/kg	HT
SS	NDA122	SW8081	GAMMA BHC (LINDANE)	1.9	U	1.9	UJ	0.53	1.9	ug/kg	HT
SS	NDA123	SW8081	GAMMA BHC (LINDANE)	1.9	U	1.9	UJ	0.52	1.9	ug/kg	HT
SS	NDA124	SW8081	GAMMA BHC (LINDANE)	1.9	U	1.9	UJ	0.52	1.9	ug/kg	HT
SS	NDA071	SW8081	GAMMA BHC (LINDANE)	2	U	2	UJ	0.56	2	ug/kg	HT
SS	NDA072FD1	SW8081	GAMMA BHC (LINDANE)	1.8	U	1.8	UJ	0.49	1.8	ug/kg	HT
SS	NDA074	SW8081	GAMMA BHC (LINDANE)	0.18	U	0.18	UJ	0.05	0.18	ug/kg	HT
SS	NDA078	SW8081	GAMMA BHC (LINDANE)	0.18	U	0.18	UJ	0.05	0.18	ug/kg	HT
SS	NDA080	SW8081	GAMMA BHC (LINDANE)	0.17	U	0.17	UJ	0.05	0.17	ug/kg	HT
SS	NDA082	SW8081	GAMMA BHC (LINDANE)	0.17	U	0.17	UJ	0.05	0.17	ug/kg	HT
SS	NDA113	SW8081	GAMMA BHC (LINDANE)	2.1	U	2.1	UJ	0.58	2.1	ug/kg	HT
SS	NDA115	SW8081	GAMMA BHC (LINDANE)	1.9	U	1.9	UJ	0.54	1.9	ug/kg	HT
SS	NDA117	SW8081	GAMMA BHC (LINDANE)	2.1	U	2.1	UJ	0.59	2.1	ug/kg	HT
SS	NDA101	SW8081	GAMMA BHC (LINDANE)	2.3	U	2.3	UJ	0.63	2.3	ug/kg	HT
SS	NDA103	SW8081	GAMMA BHC (LINDANE)	2.3	U	2.3	UJ	0.64	2.3	ug/kg	HT
SS	NDA104FD1	SW8081	GAMMA BHC (LINDANE)	2.4	U	2.4	UJ	0.66	2.4	ug/kg	HT
SS	NDA107	SW8081	GAMMA BHC (LINDANE)	2.1	U	2.1	UJ	0.59	2.1	ug/kg	HT
SS	NDA109	SW8081	GAMMA BHC (LINDANE)	2.2	U	2.2	UJ	0.61	2.2	ug/kg	HT
SS	NDA111	SW8081	GAMMA BHC (LINDANE)	2.2	U	2.2	UJ	0.62	2.2	ug/kg	HT
SB	NDA213	SW8270	FLUORENE	485	U	485	UJ	27	485	ug/kg	HT
SB	NDA214FD1	SW8270	FLUORENE	487	U	487	UJ	27	487	ug/kg	HT
SB	NDA215	SW8270	FLUORENE	527	U	527	UJ	30	527	ug/kg	HT
SB	NDA216	SW8270	FLUORENE	537	U	537	UJ	30	537	ug/kg	HT
SB	NDA217	SW8270	FLUORENE	540	U	540	UJ	30	540	ug/kg	HT
SB	NDA218	SW8270	FLUORENE	505	U	505	UJ	28	505	ug/kg	HT
SB	NDA219	SW8270	FLUORENE	380	U	380	UJ	21	380	ug/kg	HT
SB	NDA220	SW8270	FLUORENE	542	U	542	UJ	30	542	ug/kg	HT
SB	NDA221	SW8270	FLUORENE	501	U	501	UJ	28	501	ug/kg	HT
SB	NDA222	SW8270	FLUORENE	459	U	459	UJ	26	459	ug/kg	HT
SB	NDA223	SW8270	FLUORENE	527	U	527	UJ	30	527	ug/kg	HT
SB	NDA235	SW8270	FLUORENE	504	U	504	UJ	28	504	ug/kg	HT
SB	NDA236	SW8270	FLUORENE	423	U	423	UJ	24	423	ug/kg	HT
SB	NDA237FD1	SW8270	FLUORENE	395	U	395	UJ	22	395	ug/kg	HT
SB	NDA238	SW8270	FLUORENE	424	U	424	UJ	24	424	ug/kg	HT
SB	NDA239	SW8270	FLUORENE	555	U	555	UJ	31	555	ug/kg	HT
SB	NDA240	SW8270	FLUORENE	397	U	397	UJ	22	397	ug/kg	HT
SB	NDA241	SW8270	FLUORENE	471	U	471	UJ	26	471	ug/kg	HT
SB	NDA242	SW8270	FLUORENE	436	U	436	UJ	24	436	ug/kg	HT
SB	NDA243	SW8270	FLUORENE	893	U	893	UJ	50	893	ug/kg	HT
SB	NDA244	SW8270	FLUORENE	388	U	388	UJ	22	388	ug/kg	HT
SB	NDA245	SW8270	FLUORENE	393	U	393	UJ	22	393	ug/kg	HT
SB	NDA246	SW8270	FLUORENE	511	U	511	UJ	29	511	ug/kg	HT
SB	NDA247FD1	SW8270	FLUORENE	390	U	390	UJ	22	390	ug/kg	HT
SB	NDA248	SW8270	FLUORENE	453	U	453	UJ	25	453	ug/kg	HT
SB	NDA249	SW8270	FLUORENE	374	U	374	UJ	21	374	ug/kg	HT
SB	NDA252	SW8270	FLUORENE	420	U	420	UJ	24	420	ug/kg	HT
SB	NDA253	SW8270	FLUORENE	439	U	439	UJ	25	439	ug/kg	HT
SB	NDA254	SW8270	FLUORENE	391	U	391	UJ	22	391	ug/kg	HT
SB	NDA255	SW8270	FLUORENE	375	U	375	UJ	21	375	ug/kg	HT
SB	NDA085	SW8270	FLUORENE	482	U	482	UJ	27	482	ug/kg	HT
SB	NDA092	SW8270	FLUORENE	400	U	400	UJ	22	400	ug/kg	HT
SB	NDA093	SW8270	FLUORENE	339	U	339	UJ	19	339	ug/kg	HT
SB	NDA094	SW8270	FLUORENE	510	U	510	UJ	29	510	ug/kg	HT
SB	NDA095FD1	SW8270	FLUORENE	310	U	310	UJ	17	310	ug/kg	HT
SB	NDA296	SW8270	FLUORENE	369	U	369	UJ	21	369	ug/kg	HT
SB	NDA297	SW8270	FLUORENE	358	U	358	UJ	20	358	ug/kg	HT
SB	NDA298	SW8270	FLUORENE	341	U	341	UJ	19	341	ug/kg	HT
SB	NDA299	SW8270	FLUORENE	370	U	370	UJ	21	370	ug/kg	HT
SB	NDA058	SW8270	FLUORENE	460	U	460	UJ	26	460	ug/kg	HT
SB	NDA060	SW8270	FLUORENE	478	U	478	UJ	27	478	ug/kg	HT
SB	NDA063	SW8270	FLUORENE	382	U	382	UJ	21	382	ug/kg	HT
SB	NDA064FD1	SW8270	FLUORENE	351	U	351	UJ	20	351	ug/kg	HT
SB	NDA066	SW8270	FLUORENE	344	U	344	UJ	19	344	ug/kg	HT
SB	NDA068	SW8270	FLUORENE	360	U	360	UJ	20	360	ug/kg	HT
SB	NDA070	SW8270	FLUORENE	404	U	404	UJ	23	404	ug/kg	HT
SB	NDA073	SW8270	FLUORENE	383	U	383	UJ	21	383	ug/kg	HT

Matrix	Sample ID	Analytical Method	Parameter	Lab Result	Lab Qual	Final Result	Final Qual	DL	RL	Units	Comments
SB	NDA075	SW8270	FLUORENE	401	U	401	UJ	22	401	ug/kg	HT
SB	NDA077	SW8270	FLUORENE	441	U	441	UJ	25	441	ug/kg	HT
SB	NDA079	SW8270	FLUORENE	466	U	466	UJ	26	466	ug/kg	HT
SB	NDA081RE1	SW8270	FLUORENE	393	U	393	UJ	22	393	ug/kg	HT
SB	NDA083RE1	SW8270	FLUORENE	4240	U	4240	UJ	237	4240	ug/kg	HT
SD	NDA054	SW8270	FLUORENE	480	U	480	UJ	27	480	ug/kg	HT
SD	NDA055	SW8270	FLUORENE	696	U	696	UJ	39	696	ug/kg	HT
SD	NDA042	SW8270	FLUORENE	686	U	686	UJ	38	686	ug/kg	HT
SD	NDA043	SW8270	FLUORENE	735	U	735	UJ	41	735	ug/kg	HT
SD	NDA044	SW8270	FLUORENE	1680	U	1680	UJ	94	1680	ug/kg	HT
SD	NDA045	SW8270	FLUORENE	1500	U	1500	UJ	84	1500	ug/kg	HT
SD	NDA046	SW8270	FLUORENE	1520	U	1520	UJ	85	1520	ug/kg	HT
SD	NDA302	SW8270	FLUORENE	1200	U	1200	UJ	67	1200	ug/kg	HT
SD	NDA303	SW8270	FLUORENE	2300	U	2300	UJ	129	2300	ug/kg	HT
SD	NDA307FD1	SW8270	FLUORENE	2130	U	2130	UJ	119	2130	ug/kg	HT
SD	NDA047	SW8270	FLUORENE	503	U	503	UJ	28	503	ug/kg	HT
SD	NDA048	SW8270	FLUORENE	558	U	558	UJ	31	558	ug/kg	HT
SD	NDA049	SW8270	FLUORENE	463	U	463	UJ	26	463	ug/kg	HT
SS	NDA178	SW8270	FLUORENE	644	U	644	UJ	36	644	ug/kg	HT
SS	NDA179	SW8270	FLUORENE	644	U	644	UJ	36	644	ug/kg	HT
SS	NDA180	SW8270	FLUORENE	550	U	550	UJ	31	550	ug/kg	HT
SS	NDA181	SW8270	FLUORENE	566	U	566	UJ	32	566	ug/kg	HT
SS	NDA182	SW8270	FLUORENE	679	U	679	UJ	38	679	ug/kg	HT
SS	NDA183	SW8270	FLUORENE	589	U	589	UJ	33	589	ug/kg	HT
SS	NDA184FD1	SW8270	FLUORENE	662	U	662	UJ	37	662	ug/kg	HT
SS	NDA201	SW8270	FLUORENE	491	U	491	UJ	27	491	ug/kg	HT
SS	NDA202	SW8270	FLUORENE	605	U	605	UJ	34	605	ug/kg	HT
SS	NDA203	SW8270	FLUORENE	617	U	617	UJ	35	617	ug/kg	HT
SS	NDA204	SW8270	FLUORENE	753	U	753	UJ	42	753	ug/kg	HT
SS	NDA205FD1	SW8270	FLUORENE	668	U	668	UJ	37	668	ug/kg	HT
SS	NDA206	SW8270	FLUORENE	529	U	529	UJ	30	529	ug/kg	HT
SS	NDA207	SW8270	FLUORENE	669	U	669	UJ	37	669	ug/kg	HT
SS	NDA208	SW8270	FLUORENE	520	U	520	UJ	29	520	ug/kg	HT
SS	NDA209	SW8270	FLUORENE	570	U	570	UJ	32	570	ug/kg	HT
SS	NDA210	SW8270	FLUORENE	545	U	545	UJ	30	545	ug/kg	HT
SS	NDA211	SW8270	FLUORENE	742	U	742	UJ	42	742	ug/kg	HT
SS	NDA212	SW8270	FLUORENE	651	U	651	UJ	36	651	ug/kg	HT
SS	NDA185	SW8270	FLUORENE	445	U	445	UJ	25	445	ug/kg	HT
SS	NDA186	SW8270	FLUORENE	416	U	416	UJ	23	416	ug/kg	HT
SS	NDA187	SW8270	FLUORENE	380	U	380	UJ	21	380	ug/kg	HT
SS	NDA188	SW8270	FLUORENE	810	U	810	UJ	45	810	ug/kg	HT
SS	NDA189	SW8270	FLUORENE	426	U	426	UJ	24	426	ug/kg	HT
SS	NDA190	SW8270	FLUORENE	430	U	430	UJ	24	430	ug/kg	HT
SS	NDA191	SW8270	FLUORENE	338	U	338	UJ	19	338	ug/kg	HT
SS	NDA192FD1	SW8270	FLUORENE	418	U	418	UJ	23	418	ug/kg	HT
SS	NDA193	SW8270	FLUORENE	1720	U	1720	UJ	96	1720	ug/kg	HT
SS	NDA194	SW8270	FLUORENE	480	U	480	UJ	27	480	ug/kg	HT
SS	NDA195	SW8270	FLUORENE	323	U	323	UJ	18	323	ug/kg	HT
SS	NDA084	SW8270	FLUORENE	344	U	344	UJ	19	344	ug/kg	HT
SS	NDA091	SW8270	FLUORENE	367	U	367	UJ	21	367	ug/kg	HT
SS	NDA057	SW8270	FLUORENE	563	U	563	UJ	32	563	ug/kg	HT
SS	NDA059	SW8270	FLUORENE	465	U	465	UJ	26	465	ug/kg	HT
SS	NDA061	SW8270	FLUORENE	469	U	469	UJ	26	469	ug/kg	HT
SS	NDA062FD1	SW8270	FLUORENE	523	U	523	UJ	29	523	ug/kg	HT
SS	NDA065	SW8270	FLUORENE	421	U	421	UJ	24	421	ug/kg	HT
SS	NDA067	SW8270	FLUORENE	378	U	378	UJ	21	378	ug/kg	HT
SS	NDA069	SW8270	FLUORENE	320	U	320	UJ	18	320	ug/kg	HT
SS	NDA119	SW8270	FLUORENE	503	U	503	UJ	28	503	ug/kg	HT
SS	NDA120	SW8270	FLUORENE	541	U	541	UJ	30	541	ug/kg	HT
SS	NDA121	SW8270	FLUORENE	409	U	409	UJ	23	409	ug/kg	HT
SS	NDA122	SW8270	FLUORENE	450	U	450	UJ	25	450	ug/kg	HT
SS	NDA123	SW8270	FLUORENE	450	U	450	UJ	25	450	ug/kg	HT
SS	NDA124	SW8270	FLUORENE	432	U	432	UJ	24	432	ug/kg	HT
SS	NDA071	SW8270	FLUORENE	554	U	554	UJ	31	554	ug/kg	HT
SS	NDA072FD1	SW8270	FLUORENE	413	U	413	UJ	23	413	ug/kg	HT
SS	NDA074	SW8270	FLUORENE	448	U	448	UJ	25	448	ug/kg	HT
SS	NDA076	SW8270	FLUORENE	419	U	419	UJ	23	419	ug/kg	HT
SS	NDA078	SW8270	FLUORENE	440	U	440	UJ	25	440	ug/kg	HT
SS	NDA080RE1	SW8270	FLUORENE	407	U	407	UJ	23	407	ug/kg	HT
SS	NDA082RE1	SW8270	FLUORENE	4660	U	4660	UJ	261	4660	ug/kg	HT

Matrix	Sample ID	Analytical Method	Parameter	Lab Result	Lab Qual	Final Result	Final Qual	DL	RL	Units	Comments
SB	NDA213	SW8270	FLUORANTHENE	485	U	485	UJ	30	485	ug/kg	HT
SB	NDA214FD1	SW8270	FLUORANTHENE	487	U	487	UJ	30	487	ug/kg	HT
SB	NDA215	SW8270	FLUORANTHENE	527	U	527	UJ	33	527	ug/kg	HT
SB	NDA216	SW8270	FLUORANTHENE	537	U	537	UJ	33	537	ug/kg	HT
SB	NDA217	SW8270	FLUORANTHENE	540	U	540	UJ	33	540	ug/kg	HT
SB	NDA218	SW8270	FLUORANTHENE	505	U	505	UJ	31	505	ug/kg	HT
SB	NDA219	SW8270	FLUORANTHENE	380	U	380	UJ	24	380	ug/kg	HT
SB	NDA220	SW8270	FLUORANTHENE	542	U	542	UJ	34	542	ug/kg	HT
SB	NDA221	SW8270	FLUORANTHENE	501	U	501	UJ	31	501	ug/kg	HT
SB	NDA222	SW8270	FLUORANTHENE	459	U	459	UJ	28	459	ug/kg	HT
SB	NDA223	SW8270	FLUORANTHENE	527	U	527	UJ	33	527	ug/kg	HT
SB	NDA235	SW8270	FLUORANTHENE	504	U	504	UJ	31	504	ug/kg	HT
SB	NDA236	SW8270	FLUORANTHENE	423	U	423	UJ	26	423	ug/kg	HT
SB	NDA237FD1	SW8270	FLUORANTHENE	395	U	395	UJ	24	395	ug/kg	HT
SB	NDA238	SW8270	FLUORANTHENE	424	U	424	UJ	26	424	ug/kg	HT
SB	NDA239	SW8270	FLUORANTHENE	555	U	555	UJ	34	555	ug/kg	HT
SB	NDA240	SW8270	FLUORANTHENE	397	U	397	UJ	25	397	ug/kg	HT
SB	NDA241	SW8270	FLUORANTHENE	471	U	471	UJ	29	471	ug/kg	HT
SB	NDA242	SW8270	FLUORANTHENE	436	U	436	UJ	27	436	ug/kg	HT
SB	NDA243	SW8270	FLUORANTHENE	893	U	893	UJ	55	893	ug/kg	HT
SB	NDA244	SW8270	FLUORANTHENE	388	U	388	UJ	24	388	ug/kg	HT
SB	NDA245	SW8270	FLUORANTHENE	393	U	393	UJ	24	393	ug/kg	HT
SB	NDA246	SW8270	FLUORANTHENE	511	U	511	UJ	32	511	ug/kg	HT
SB	NDA247FD1	SW8270	FLUORANTHENE	390	U	390	UJ	24	390	ug/kg	HT
SB	NDA248	SW8270	FLUORANTHENE	453	U	453	UJ	28	453	ug/kg	HT
SB	NDA249	SW8270	FLUORANTHENE	374	U	374	UJ	23	374	ug/kg	HT
SB	NDA252	SW8270	FLUORANTHENE	420	U	420	UJ	26	420	ug/kg	HT
SB	NDA253	SW8270	FLUORANTHENE	439	U	439	UJ	27	439	ug/kg	HT
SB	NDA254	SW8270	FLUORANTHENE	391	U	391	UJ	24	391	ug/kg	HT
SB	NDA255	SW8270	FLUORANTHENE	375	U	375	UJ	23	375	ug/kg	HT
SB	NDA085	SW8270	FLUORANTHENE	482	U	482	UJ	30	482	ug/kg	HT
SB	NDA092	SW8270	FLUORANTHENE	400	U	400	UJ	25	400	ug/kg	HT
SB	NDA093	SW8270	FLUORANTHENE	339	U	339	UJ	21	339	ug/kg	HT
SB	NDA094	SW8270	FLUORANTHENE	510	U	510	UJ	32	510	ug/kg	HT
SB	NDA095FD1	SW8270	FLUORANTHENE	310	U	310	UJ	19	310	ug/kg	HT
SB	NDA296	SW8270	FLUORANTHENE	369	U	369	UJ	23	369	ug/kg	HT
SB	NDA298	SW8270	FLUORANTHENE	21	U	21	J	21	341	ug/kg	HT
SB	NDA299	SW8270	FLUORANTHENE	370	U	370	UJ	23	370	ug/kg	HT
SB	NDA058	SW8270	FLUORANTHENE	460	U	460	UJ	29	460	ug/kg	HT
SB	NDA060	SW8270	FLUORANTHENE	478	U	478	UJ	30	478	ug/kg	HT
SB	NDA063	SW8270	FLUORANTHENE	382	U	382	UJ	24	382	ug/kg	HT
SB	NDA064FD1	SW8270	FLUORANTHENE	351	U	351	UJ	22	351	ug/kg	HT
SB	NDA066	SW8270	FLUORANTHENE	344	U	344	UJ	21	344	ug/kg	HT
SB	NDA068	SW8270	FLUORANTHENE	360	U	360	UJ	22	360	ug/kg	HT
SB	NDA070	SW8270	FLUORANTHENE	404	U	404	UJ	25	404	ug/kg	HT
SB	NDA073	SW8270	FLUORANTHENE	383	U	383	UJ	24	383	ug/kg	HT
SB	NDA075	SW8270	FLUORANTHENE	401	U	401	UJ	25	401	ug/kg	HT
SB	NDA077	SW8270	FLUORANTHENE	441	U	441	UJ	27	441	ug/kg	HT
SB	NDA079	SW8270	FLUORANTHENE	466	U	466	UJ	29	466	ug/kg	HT
SB	NDA081RE1	SW8270	FLUORANTHENE	393	U	393	UJ	24	393	ug/kg	HT
SB	NDA083RE1	SW8270	FLUORANTHENE	4240	U	4240	UJ	263	4240	ug/kg	HT
SD	NDA054	SW8270	FLUORANTHENE	480	U	480	UJ	30	480	ug/kg	HT
SD	NDA055	SW8270	FLUORANTHENE	696	U	696	UJ	43	696	ug/kg	HT
SD	NDA042	SW8270	FLUORANTHENE	686	U	686	UJ	43	686	ug/kg	HT
SD	NDA043	SW8270	FLUORANTHENE	735	U	735	UJ	46	735	ug/kg	HT
SD	NDA044	SW8270	FLUORANTHENE	1680	U	1680	UJ	104	1680	ug/kg	HT
SD	NDA045	SW8270	FLUORANTHENE	1500	U	1500	UJ	93	1500	ug/kg	HT
SD	NDA046	SW8270	FLUORANTHENE	1520	U	1520	UJ	94	1520	ug/kg	HT
SD	NDA302	SW8270	FLUORANTHENE	1200	U	1200	UJ	74	1200	ug/kg	HT
SD	NDA303	SW8270	FLUORANTHENE	2300	U	2300	UJ	143	2300	ug/kg	HT
SD	NDA307FD1	SW8270	FLUORANTHENE	2130	U	2130	UJ	132	2130	ug/kg	HT
SD	NDA047	SW8270	FLUORANTHENE	503	U	503	UJ	31	503	ug/kg	HT
SD	NDA048	SW8270	FLUORANTHENE	558	U	558	UJ	35	558	ug/kg	HT
SD	NDA049	SW8270	FLUORANTHENE	463	U	463	UJ	29	463	ug/kg	HT
SS	NDA178	SW8270	FLUORANTHENE	644	U	644	UJ	40	644	ug/kg	HT
SS	NDA179	SW8270	FLUORANTHENE	644	U	644	UJ	40	644	ug/kg	HT
SS	NDA181	SW8270	FLUORANTHENE	566	U	566	UJ	35	566	ug/kg	HT
SS	NDA182	SW8270	FLUORANTHENE	679	U	679	UJ	42	679	ug/kg	HT
SS	NDA201	SW8270	FLUORANTHENE	491	U	491	UJ	30	491	ug/kg	HT
SS	NDA202	SW8270	FLUORANTHENE	605	U	605	UJ	38	605	ug/kg	HT

Matrix	Sample ID	Analytical Method	Parameter	Lab Result	Lab Qual	Final Result	Final Qual	DL	RL	Units	Comments
SS	NDA203	SW8270	FLUORANTHENE	617	U	617	UJ	38	617	ug/kg	HT
SS	NDA204	SW8270	FLUORANTHENE	753	U	753	UJ	47	753	ug/kg	HT
SS	NDA205FD1	SW8270	FLUORANTHENE	668	U	668	UJ	41	668	ug/kg	HT
SS	NDA206	SW8270	FLUORANTHENE	529	U	529	UJ	33	529	ug/kg	HT
SS	NDA207	SW8270	FLUORANTHENE	669	U	669	UJ	41	669	ug/kg	HT
SS	NDA208	SW8270	FLUORANTHENE	520	U	520	UJ	32	520	ug/kg	HT
SS	NDA209	SW8270	FLUORANTHENE	570	U	570	UJ	35	570	ug/kg	HT
SS	NDA210	SW8270	FLUORANTHENE	545	U	545	UJ	34	545	ug/kg	HT
SS	NDA211	SW8270	FLUORANTHENE	742	U	742	UJ	46	742	ug/kg	HT
SS	NDA212	SW8270	FLUORANTHENE	651	U	651	UJ	40	651	ug/kg	HT
SS	NDA185	SW8270	FLUORANTHENE	445	U	445	UJ	28	445	ug/kg	HT
SS	NDA188	SW8270	FLUORANTHENE	810	U	810	UJ	50	810	ug/kg	HT
SS	NDA189	SW8270	FLUORANTHENE	426	U	426	UJ	26	426	ug/kg	HT
SS	NDA190	SW8270	FLUORANTHENE	430	U	430	UJ	27	430	ug/kg	HT
SS	NDA191	SW8270	FLUORANTHENE	338	U	338	UJ	21	338	ug/kg	HT
SS	NDA192FD1	SW8270	FLUORANTHENE	418	U	418	UJ	26	418	ug/kg	HT
SS	NDA193	SW8270	FLUORANTHENE	1720	U	1720	UJ	107	1720	ug/kg	HT
SS	NDA194	SW8270	FLUORANTHENE	480	U	480	UJ	30	480	ug/kg	HT
SS	NDA195	SW8270	FLUORANTHENE	323	U	323	UJ	20	323	ug/kg	HT
SS	NDA057	SW8270	FLUORANTHENE	563	U	563	UJ	35	563	ug/kg	HT
SS	NDA059	SW8270	FLUORANTHENE	465	U	465	UJ	29	465	ug/kg	HT
SS	NDA061	SW8270	FLUORANTHENE	469	U	469	UJ	29	469	ug/kg	HT
SS	NDA062FD1	SW8270	FLUORANTHENE	523	U	523	UJ	32	523	ug/kg	HT
SS	NDA065	SW8270	FLUORANTHENE	421	U	421	UJ	26	421	ug/kg	HT
SS	NDA067	SW8270	FLUORANTHENE	378	U	378	UJ	23	378	ug/kg	HT
SS	NDA069	SW8270	FLUORANTHENE	320	U	320	UJ	20	320	ug/kg	HT
SS	NDA119	SW8270	FLUORANTHENE	503	U	503	UJ	31	503	ug/kg	HT
SS	NDA120	SW8270	FLUORANTHENE	541	U	541	UJ	34	541	ug/kg	HT
SS	NDA123	SW8270	FLUORANTHENE	558	=	558	J	28	450	ug/kg	HT
SS	NDA071	SW8270	FLUORANTHENE	554	U	554	UJ	34	554	ug/kg	HT
SS	NDA072FD1	SW8270	FLUORANTHENE	413	U	413	UJ	26	413	ug/kg	HT
SS	NDA074	SW8270	FLUORANTHENE	448	U	448	UJ	28	448	ug/kg	HT
SS	NDA076	SW8270	FLUORANTHENE	419	U	419	UJ	26	419	ug/kg	HT
SS	NDA078	SW8270	FLUORANTHENE	440	U	440	UJ	27	440	ug/kg	HT
SS	NDA080RE1	SW8270	FLUORANTHENE	407	U	407	UJ	25	407	ug/kg	HT
SS	NDA082RE1	SW8270	FLUORANTHENE	4660	U	4660	UJ	289	4660	ug/kg	HT
SB	NDA165	SW8081	ENDRIN KETONE	3.8	U	3.8	UJ	0.25	3.8	ug/kg	HT
SB	NDA167	SW8081	ENDRIN KETONE	4.1	U	4.1	UJ	0.27	4.1	ug/kg	HT
SB	NDA169	SW8081	ENDRIN KETONE	4	U	4	UJ	0.26	4	ug/kg	HT
SB	NDA171	SW8081	ENDRIN KETONE	3.6	U	3.6	UJ	0.24	3.6	ug/kg	HT
SB	NDA173	SW8081	ENDRIN KETONE	4.2	U	4.2	UJ	0.28	4.2	ug/kg	HT
SB	NDA175	SW8081	ENDRIN KETONE	3.7	U	3.7	UJ	0.25	3.7	ug/kg	HT
SB	NDA177	SW8081	ENDRIN KETONE	3.9	U	3.9	UJ	0.26	3.9	ug/kg	HT
SB	NDA213	SW8081	ENDRIN KETONE	3.8	U	3.8	UJ	0.25	3.8	ug/kg	HT
SB	NDA214FD1	SW8081	ENDRIN KETONE	3.7	U	3.7	UJ	0.25	3.7	ug/kg	HT
SB	NDA215	SW8081	ENDRIN KETONE	3.8	U	3.8	UJ	0.26	3.8	ug/kg	HT
SB	NDA216	SW8081	ENDRIN KETONE	3.6	U	3.6	UJ	0.24	3.6	ug/kg	HT
SB	NDA217	SW8081	ENDRIN KETONE	3.8	U	3.8	UJ	0.25	3.8	ug/kg	HT
SB	NDA218	SW8081	ENDRIN KETONE	3.7	U	3.7	UJ	0.24	3.7	ug/kg	HT
SB	NDA219	SW8081	ENDRIN KETONE	3.7	U	3.7	UJ	0.24	3.7	ug/kg	HT
SB	NDA220	SW8081	ENDRIN KETONE	3.8	U	3.8	UJ	0.25	3.8	ug/kg	HT
SB	NDA221	SW8081	ENDRIN KETONE	3.6	U	3.6	UJ	0.24	3.6	ug/kg	HT
SB	NDA222	SW8081	ENDRIN KETONE	3.3	U	3.3	UJ	0.22	3.3	ug/kg	HT
SB	NDA223	SW8081	ENDRIN KETONE	3.8	U	3.8	UJ	0.25	3.8	ug/kg	HT
SB	NDA235	SW8081	ENDRIN KETONE	4.4	U	4.4	UJ	0.29	4.4	ug/kg	HT
SB	NDA236	SW8081	ENDRIN KETONE	3.8	U	3.8	UJ	0.25	3.8	ug/kg	HT
SB	NDA237FD1	SW8081	ENDRIN KETONE	3.7	U	3.7	UJ	0.25	3.7	ug/kg	HT
SB	NDA238	SW8081	ENDRIN KETONE	3.7	U	3.7	UJ	0.25	3.7	ug/kg	HT
SB	NDA239	SW8081	ENDRIN KETONE	3.7	U	3.7	UJ	0.25	3.7	ug/kg	HT
SB	NDA240	SW8081	ENDRIN KETONE	4	U	4	UJ	0.27	4	ug/kg	HT
SB	NDA241	SW8081	ENDRIN KETONE	3.7	U	3.7	UJ	0.25	3.7	ug/kg	HT
SB	NDA242	SW8081	ENDRIN KETONE	4.2	U	4.2	UJ	0.28	4.2	ug/kg	HT
SB	NDA243	SW8081	ENDRIN KETONE	3.9	U	3.9	UJ	0.26	3.9	ug/kg	HT
SB	NDA244	SW8081	ENDRIN KETONE	3.7	U	3.7	UJ	0.24	3.7	ug/kg	HT
SB	NDA245	SW8081	ENDRIN KETONE	3.8	U	3.8	UJ	0.25	3.8	ug/kg	HT
SB	NDA246	SW8081	ENDRIN KETONE	4.1	U	4.1	UJ	0.27	4.1	ug/kg	HT
SB	NDA247FD1	SW8081	ENDRIN KETONE	3.8	U	3.8	UJ	0.26	3.8	ug/kg	HT
SB	NDA248	SW8081	ENDRIN KETONE	4	U	4	UJ	0.27	4	ug/kg	HT
SB	NDA249	SW8081	ENDRIN KETONE	3.7	U	3.7	UJ	0.25	3.7	ug/kg	HT
SB	NDA252	SW8081	ENDRIN KETONE	3.9	U	3.9	UJ	0.26	3.9	ug/kg	HT

Matrix	Sample ID	Analytical Method	Parameter	Lab Result	Lab Qual	Final Result	Final Qual	DL	RL	Units	Comments
SB	NDA253	SW8081	ENDRIN KETONE	4.2	U	4.2	UJ	0.28	4.2	ug/kg	HT
SB	NDA254	SW8081	ENDRIN KETONE	4.2	U	4.2	UJ	0.28	4.2	ug/kg	HT
SB	NDA255	SW8081	ENDRIN KETONE	4.1	U	4.1	UJ	0.27	4.1	ug/kg	HT
SB	NDA058	SW8081	ENDRIN KETONE	3.7	U	3.7	UJ	0.25	3.7	ug/kg	HT
SB	NDA060	SW8081	ENDRIN KETONE	3.7	U	3.7	UJ	0.24	3.7	ug/kg	HT
SB	NDA063	SW8081	ENDRIN KETONE	3.6	U	3.6	UJ	0.24	3.6	ug/kg	HT
SB	NDA064FD1	SW8081	ENDRIN KETONE	3.6	U	3.6	UJ	0.24	3.6	ug/kg	HT
SB	NDA066	SW8081	ENDRIN KETONE	3.5	U	3.5	UJ	0.23	3.5	ug/kg	HT
SB	NDA068	SW8081	ENDRIN KETONE	3.6	U	3.6	UJ	0.24	3.6	ug/kg	HT
SB	NDA070	SW8081	ENDRIN KETONE	3.5	U	3.5	UJ	0.23	3.5	ug/kg	HT
SB	NDA073	SW8081	ENDRIN KETONE	3.5	U	3.5	UJ	0.23	3.5	ug/kg	HT
SB	NDA075	SW8081	ENDRIN KETONE	0.35	U	0.35	UJ	0.02	0.35	ug/kg	HT
SB	NDA077	SW8081	ENDRIN KETONE	0.4	U	0.4	UJ	0.03	0.4	ug/kg	HT
SB	NDA081	SW8081	ENDRIN KETONE	0.35	U	0.35	UJ	0.02	0.35	ug/kg	HT
SB	NDA083	SW8081	ENDRIN KETONE	0.34	U	0.34	UJ	0.02	0.34	ug/kg	HT
SB	NDA114	SW8081	ENDRIN KETONE	4.3	U	4.3	UJ	0.29	4.3	ug/kg	HT
SB	NDA116	SW8081	ENDRIN KETONE	4.2	U	4.2	UJ	0.28	4.2	ug/kg	HT
SB	NDA118	SW8081	ENDRIN KETONE	4.3	U	4.3	UJ	0.28	4.3	ug/kg	HT
SB	NDA102	SW8081	ENDRIN KETONE	5.2	U	5.2	UJ	0.34	5.2	ug/kg	HT
SB	NDA105	SW8081	ENDRIN KETONE	5.3	U	5.3	UJ	0.35	5.3	ug/kg	HT
SB	NDA106FD1	SW8081	ENDRIN KETONE	5.3	U	5.3	UJ	0.35	5.3	ug/kg	HT
SB	NDA108	SW8081	ENDRIN KETONE	4.4	U	4.4	UJ	0.29	4.4	ug/kg	HT
SB	NDA110	SW8081	ENDRIN KETONE	4.4	U	4.4	UJ	0.29	4.4	ug/kg	HT
SB	NDA112	SW8081	ENDRIN KETONE	4.3	U	4.3	UJ	0.29	4.3	ug/kg	HT
SD	NDA053	SW8081	ENDRIN KETONE	25	U	25	UJ	1.7	25	ug/kg	HT
SD	NDA054	SW8081	ENDRIN KETONE	3.4	U	3.4	UJ	0.23	3.4	ug/kg	HT
SD	NDA055	SW8081	ENDRIN KETONE	3.3	U	3.3	UJ	0.22	3.3	ug/kg	HT
SD	NDA047	SW8081	ENDRIN KETONE	3.6	U	3.6	UJ	0.24	3.6	ug/kg	HT
SD	NDA048	SW8081	ENDRIN KETONE	3.8	U	3.8	UJ	0.25	3.8	ug/kg	HT
SD	NDA049	SW8081	ENDRIN KETONE	3.6	U	3.6	UJ	0.24	3.6	ug/kg	HT
SS	NDA164	SW8081	ENDRIN KETONE	4.1	U	4.1	UJ	0.27	4.1	ug/kg	HT
SS	NDA166	SW8081	ENDRIN KETONE	4.1	U	4.1	UJ	0.27	4.1	ug/kg	HT
SS	NDA168	SW8081	ENDRIN KETONE	3.9	U	3.9	UJ	0.26	3.9	ug/kg	HT
SS	NDA170	SW8081	ENDRIN KETONE	4	U	4	UJ	0.27	4	ug/kg	HT
SS	NDA172	SW8081	ENDRIN KETONE	3.6	U	3.6	UJ	0.24	3.6	ug/kg	HT
SS	NDA174	SW8081	ENDRIN KETONE	3.5	U	3.5	UJ	0.23	3.5	ug/kg	HT
SS	NDA176	SW8081	ENDRIN KETONE	9.3	U	9.3	UJ	0.62	9.3	ug/kg	HT
SS	NDA185	SW8081	ENDRIN KETONE	3.9	U	3.9	UJ	0.26	3.9	ug/kg	HT
SS	NDA186	SW8081	ENDRIN KETONE	3.7	U	3.7	UJ	0.25	3.7	ug/kg	HT
SS	NDA187	SW8081	ENDRIN KETONE	3.6	U	3.6	UJ	0.24	3.6	ug/kg	HT
SS	NDA188	SW8081	ENDRIN KETONE	4.6	U	4.6	UJ	0.3	4.6	ug/kg	HT
SS	NDA189	SW8081	ENDRIN KETONE	3.7	U	3.7	UJ	0.25	3.7	ug/kg	HT
SS	NDA190	SW8081	ENDRIN KETONE	3.8	U	3.8	UJ	0.25	3.8	ug/kg	HT
SS	NDA191	SW8081	ENDRIN KETONE	3.4	U	3.4	UJ	0.23	3.4	ug/kg	HT
SS	NDA192FD1	SW8081	ENDRIN KETONE	3.9	U	3.9	UJ	0.26	3.9	ug/kg	HT
SS	NDA193	SW8081	ENDRIN KETONE	3.4	U	3.4	UJ	0.23	3.4	ug/kg	HT
SS	NDA194	SW8081	ENDRIN KETONE	4.1	U	4.1	UJ	0.27	4.1	ug/kg	HT
SS	NDA195	SW8081	ENDRIN KETONE	3.4	U	3.4	UJ	0.23	3.4	ug/kg	HT
SS	NDA057	SW8081	ENDRIN KETONE	4.1	U	4.1	UJ	0.27	4.1	ug/kg	HT
SS	NDA059	SW8081	ENDRIN KETONE	3.6	U	3.6	UJ	0.24	3.6	ug/kg	HT
SS	NDA061	SW8081	ENDRIN KETONE	3.5	U	3.5	UJ	0.23	3.5	ug/kg	HT
SS	NDA062FD1	SW8081	ENDRIN KETONE	3.5	U	3.5	UJ	0.23	3.5	ug/kg	HT
SS	NDA065	SW8081	ENDRIN KETONE	4.2	U	4.2	UJ	0.28	4.2	ug/kg	HT
SS	NDA067	SW8081	ENDRIN KETONE	3.6	U	3.6	UJ	0.24	3.6	ug/kg	HT
SS	NDA069	SW8081	ENDRIN KETONE	3.4	U	3.4	UJ	0.22	3.4	ug/kg	HT
SS	NDA119	SW8081	ENDRIN KETONE	3.7	U	3.7	UJ	0.25	3.7	ug/kg	HT
SS	NDA120	SW8081	ENDRIN KETONE	4.4	U	4.4	UJ	0.29	4.4	ug/kg	HT
SS	NDA121	SW8081	ENDRIN KETONE	3.6	U	3.6	UJ	0.24	3.6	ug/kg	HT
SS	NDA122	SW8081	ENDRIN KETONE	3.7	U	3.7	UJ	0.25	3.7	ug/kg	HT
SS	NDA123	SW8081	ENDRIN KETONE	3.7	U	3.7	UJ	0.25	3.7	ug/kg	HT
SS	NDA124	SW8081	ENDRIN KETONE	3.7	U	3.7	UJ	0.25	3.7	ug/kg	HT
SS	NDA071	SW8081	ENDRIN KETONE	4	U	4	UJ	0.26	4	ug/kg	HT
SS	NDA072FD1	SW8081	ENDRIN KETONE	3.5	U	3.5	UJ	0.23	3.5	ug/kg	HT
SS	NDA074	SW8081	ENDRIN KETONE	0.35	U	0.35	UJ	0.02	0.35	ug/kg	HT
SS	NDA078	SW8081	ENDRIN KETONE	0.35	U	0.35	UJ	0.02	0.35	ug/kg	HT
SS	NDA080	SW8081	ENDRIN KETONE	0.34	U	0.34	UJ	0.02	0.34	ug/kg	HT
SS	NDA082	SW8081	ENDRIN KETONE	0.34	U	0.34	UJ	0.02	0.34	ug/kg	HT
SS	NDA113	SW8081	ENDRIN KETONE	4.1	U	4.1	UJ	0.27	4.1	ug/kg	HT
SS	NDA115	SW8081	ENDRIN KETONE	3.8	U	3.8	UJ	0.25	3.8	ug/kg	HT
SS	NDA117	SW8081	ENDRIN KETONE	4.2	U	4.2	UJ	0.28	4.2	ug/kg	HT

Matrix	Sample ID	Analytical Method	Parameter	Lab Result	Lab Qual	Final Result	Final Qual	DL	RL	Units	Comments
SS	NDA101	SW8081	ENDRIN KETONE	4.4	U	4.4	UJ	0.29	4.4	ug/kg	HT
SS	NDA103	SW8081	ENDRIN KETONE	4.5	U	4.5	UJ	0.3	4.5	ug/kg	HT
SS	NDA104FD1	SW8081	ENDRIN KETONE	4.7	U	4.7	UJ	0.31	4.7	ug/kg	HT
SS	NDA107	SW8081	ENDRIN KETONE	4.2	U	4.2	UJ	0.28	4.2	ug/kg	HT
SS	NDA109	SW8081	ENDRIN KETONE	4.3	U	4.3	UJ	0.29	4.3	ug/kg	HT
SS	NDA111	SW8081	ENDRIN KETONE	4.4	U	4.4	UJ	0.29	4.4	ug/kg	HT
SB	NDA165	SW8081	ENDRIN ALDEHYDE	3.8	U	3.8	UJ	0.26	3.8	ug/kg	HT
SB	NDA167	SW8081	ENDRIN ALDEHYDE	4.1	U	4.1	UJ	0.28	4.1	ug/kg	HT
SB	NDA169	SW8081	ENDRIN ALDEHYDE	4	U	4	UJ	0.27	4	ug/kg	HT
SB	NDA171	SW8081	ENDRIN ALDEHYDE	3.6	U	3.6	UJ	0.25	3.6	ug/kg	HT
SB	NDA173	SW8081	ENDRIN ALDEHYDE	4.2	U	4.2	UJ	0.29	4.2	ug/kg	HT
SB	NDA175	SW8081	ENDRIN ALDEHYDE	3.7	U	3.7	UJ	0.26	3.7	ug/kg	HT
SB	NDA177	SW8081	ENDRIN ALDEHYDE	3.9	U	3.9	UJ	0.27	3.9	ug/kg	HT
SB	NDA213	SW8081	ENDRIN ALDEHYDE	3.8	U	3.8	UJ	0.26	3.8	ug/kg	HT
SB	NDA214FD1	SW8081	ENDRIN ALDEHYDE	3.7	U	3.7	UJ	0.26	3.7	ug/kg	HT
SB	NDA215	SW8081	ENDRIN ALDEHYDE	3.8	U	3.8	UJ	0.27	3.8	ug/kg	HT
SB	NDA216	SW8081	ENDRIN ALDEHYDE	3.6	U	3.6	UJ	0.25	3.6	ug/kg	HT
SB	NDA217	SW8081	ENDRIN ALDEHYDE	3.8	U	3.8	UJ	0.26	3.8	ug/kg	HT
SB	NDA218	SW8081	ENDRIN ALDEHYDE	3.7	U	3.7	UJ	0.25	3.7	ug/kg	HT
SB	NDA219	SW8081	ENDRIN ALDEHYDE	3.7	U	3.7	UJ	0.25	3.7	ug/kg	HT
SB	NDA220	SW8081	ENDRIN ALDEHYDE	3.8	U	3.8	UJ	0.26	3.8	ug/kg	HT
SB	NDA221	SW8081	ENDRIN ALDEHYDE	3.6	U	3.6	UJ	0.25	3.6	ug/kg	HT
SB	NDA222	SW8081	ENDRIN ALDEHYDE	3.3	U	3.3	UJ	0.23	3.3	ug/kg	HT
SB	NDA223	SW8081	ENDRIN ALDEHYDE	3.8	U	3.8	UJ	0.26	3.8	ug/kg	HT
SB	NDA235	SW8081	ENDRIN ALDEHYDE	4.4	U	4.4	UJ	0.3	4.4	ug/kg	HT
SB	NDA236	SW8081	ENDRIN ALDEHYDE	3.8	U	3.8	UJ	0.26	3.8	ug/kg	HT
SB	NDA237FD1	SW8081	ENDRIN ALDEHYDE	3.7	U	3.7	UJ	0.26	3.7	ug/kg	HT
SB	NDA238	SW8081	ENDRIN ALDEHYDE	3.7	U	3.7	UJ	0.26	3.7	ug/kg	HT
SB	NDA239	SW8081	ENDRIN ALDEHYDE	3.7	U	3.7	UJ	0.26	3.7	ug/kg	HT
SB	NDA240	SW8081	ENDRIN ALDEHYDE	4	U	4	UJ	0.28	4	ug/kg	HT
SB	NDA241	SW8081	ENDRIN ALDEHYDE	3.7	U	3.7	UJ	0.26	3.7	ug/kg	HT
SB	NDA242	SW8081	ENDRIN ALDEHYDE	4.2	U	4.2	UJ	0.29	4.2	ug/kg	HT
SB	NDA243	SW8081	ENDRIN ALDEHYDE	3.9	U	3.9	UJ	0.27	3.9	ug/kg	HT
SB	NDA244	SW8081	ENDRIN ALDEHYDE	3.7	U	3.7	UJ	0.25	3.7	ug/kg	HT
SB	NDA245	SW8081	ENDRIN ALDEHYDE	3.8	U	3.8	UJ	0.26	3.8	ug/kg	HT
SB	NDA246	SW8081	ENDRIN ALDEHYDE	4.1	U	4.1	UJ	0.28	4.1	ug/kg	HT
SB	NDA247FD1	SW8081	ENDRIN ALDEHYDE	3.8	U	3.8	UJ	0.27	3.8	ug/kg	HT
SB	NDA248	SW8081	ENDRIN ALDEHYDE	4	U	4	UJ	0.28	4	ug/kg	HT
SB	NDA249	SW8081	ENDRIN ALDEHYDE	3.7	U	3.7	UJ	0.26	3.7	ug/kg	HT
SB	NDA252	SW8081	ENDRIN ALDEHYDE	3.9	U	3.9	UJ	0.27	3.9	ug/kg	HT
SB	NDA253	SW8081	ENDRIN ALDEHYDE	4.2	U	4.2	UJ	0.29	4.2	ug/kg	HT
SB	NDA254	SW8081	ENDRIN ALDEHYDE	4.2	U	4.2	UJ	0.29	4.2	ug/kg	HT
SB	NDA255	SW8081	ENDRIN ALDEHYDE	4.1	U	4.1	UJ	0.28	4.1	ug/kg	HT
SB	NDA058	SW8081	ENDRIN ALDEHYDE	3.7	U	3.7	UJ	0.26	3.7	ug/kg	HT
SB	NDA060	SW8081	ENDRIN ALDEHYDE	3.7	U	3.7	UJ	0.25	3.7	ug/kg	HT
SB	NDA063	SW8081	ENDRIN ALDEHYDE	3.6	U	3.6	UJ	0.25	3.6	ug/kg	HT
SB	NDA064FD1	SW8081	ENDRIN ALDEHYDE	3.6	U	3.6	UJ	0.25	3.6	ug/kg	HT
SB	NDA066	SW8081	ENDRIN ALDEHYDE	3.5	U	3.5	UJ	0.24	3.5	ug/kg	HT
SB	NDA068	SW8081	ENDRIN ALDEHYDE	3.6	U	3.6	UJ	0.25	3.6	ug/kg	HT
SB	NDA070	SW8081	ENDRIN ALDEHYDE	3.5	U	3.5	UJ	0.24	3.5	ug/kg	HT
SB	NDA073	SW8081	ENDRIN ALDEHYDE	3.5	U	3.5	UJ	0.24	3.5	ug/kg	HT
SB	NDA075	SW8081	ENDRIN ALDEHYDE	0.35	U	0.35	UJ	0.02	0.35	ug/kg	HT
SB	NDA077	SW8081	ENDRIN ALDEHYDE	0.4	U	0.4	UJ	0.03	0.4	ug/kg	HT
SB	NDA081	SW8081	ENDRIN ALDEHYDE	0.35	U	0.35	UJ	0.02	0.35	ug/kg	HT
SB	NDA083	SW8081	ENDRIN ALDEHYDE	0.34	U	0.34	UJ	0.02	0.34	ug/kg	HT
SB	NDA114	SW8081	ENDRIN ALDEHYDE	4.3	U	4.3	UJ	0.3	4.3	ug/kg	HT
SB	NDA116	SW8081	ENDRIN ALDEHYDE	4.2	U	4.2	UJ	0.29	4.2	ug/kg	HT
SB	NDA118	SW8081	ENDRIN ALDEHYDE	4.3	U	4.3	UJ	0.3	4.3	ug/kg	HT
SB	NDA102	SW8081	ENDRIN ALDEHYDE	5.2	U	5.2	UJ	0.36	5.2	ug/kg	HT
SB	NDA105	SW8081	ENDRIN ALDEHYDE	5.3	U	5.3	UJ	0.36	5.3	ug/kg	HT
SB	NDA106FD1	SW8081	ENDRIN ALDEHYDE	5.3	U	5.3	UJ	0.37	5.3	ug/kg	HT
SB	NDA108	SW8081	ENDRIN ALDEHYDE	4.4	U	4.4	UJ	0.31	4.4	ug/kg	HT
SB	NDA110	SW8081	ENDRIN ALDEHYDE	4.4	U	4.4	UJ	0.31	4.4	ug/kg	HT
SB	NDA112	SW8081	ENDRIN ALDEHYDE	4.3	U	4.3	UJ	0.3	4.3	ug/kg	HT
SD	NDA053	SW8081	ENDRIN ALDEHYDE	25	U	25	UJ	1.7	25	ug/kg	HT
SD	NDA054	SW8081	ENDRIN ALDEHYDE	3.4	U	3.4	UJ	0.24	3.4	ug/kg	HT
SD	NDA055	SW8081	ENDRIN ALDEHYDE	3.3	U	3.3	UJ	0.23	3.3	ug/kg	HT
SD	NDA047	SW8081	ENDRIN ALDEHYDE	3.6	U	3.6	UJ	0.25	3.6	ug/kg	HT
SD	NDA048	SW8081	ENDRIN ALDEHYDE	3.8	U	3.8	UJ	0.26	3.8	ug/kg	HT
SD	NDA049	SW8081	ENDRIN ALDEHYDE	3.6	U	3.6	UJ	0.25	3.6	ug/kg	HT

Matrix	Sample ID	Analytical Method	Parameter	Lab Result	Lab Qual	Final Result	Final Qual	DL	RL	Units	Comments
SS	NDA164	SW8081	ENDRIN ALDEHYDE	4.1	U	4.1	UJ	0.28	4.1	ug/kg	HT
SS	NDA166	SW8081	ENDRIN ALDEHYDE	4.1	U	4.1	UJ	0.29	4.1	ug/kg	HT
SS	NDA168	SW8081	ENDRIN ALDEHYDE	3.9	U	3.9	UJ	0.27	3.9	ug/kg	HT
SS	NDA170	SW8081	ENDRIN ALDEHYDE	4	U	4	UJ	0.28	4	ug/kg	HT
SS	NDA172	SW8081	ENDRIN ALDEHYDE	3.6	U	3.6	UJ	0.25	3.6	ug/kg	HT
SS	NDA174	SW8081	ENDRIN ALDEHYDE	3.5	U	3.5	UJ	0.24	3.5	ug/kg	HT
SS	NDA176	SW8081	ENDRIN ALDEHYDE	9.3	U	9.3	UJ	0.64	9.3	ug/kg	HT
SS	NDA185	SW8081	ENDRIN ALDEHYDE	3.9	U	3.9	UJ	0.27	3.9	ug/kg	HT
SS	NDA186	SW8081	ENDRIN ALDEHYDE	3.7	U	3.7	UJ	0.26	3.7	ug/kg	HT
SS	NDA187	SW8081	ENDRIN ALDEHYDE	3.6	U	3.6	UJ	0.25	3.6	ug/kg	HT
SS	NDA188	SW8081	ENDRIN ALDEHYDE	4.6	U	4.6	UJ	0.31	4.6	ug/kg	HT
SS	NDA189	SW8081	ENDRIN ALDEHYDE	3.7	U	3.7	UJ	0.26	3.7	ug/kg	HT
SS	NDA190	SW8081	ENDRIN ALDEHYDE	3.8	U	3.8	UJ	0.26	3.8	ug/kg	HT
SS	NDA191	SW8081	ENDRIN ALDEHYDE	3.4	U	3.4	UJ	0.24	3.4	ug/kg	HT
SS	NDA192FD1	SW8081	ENDRIN ALDEHYDE	3.9	U	3.9	UJ	0.27	3.9	ug/kg	HT
SS	NDA193	SW8081	ENDRIN ALDEHYDE	3.4	U	3.4	UJ	0.24	3.4	ug/kg	HT
SS	NDA194	SW8081	ENDRIN ALDEHYDE	4.1	U	4.1	UJ	0.28	4.1	ug/kg	HT
SS	NDA195	SW8081	ENDRIN ALDEHYDE	3.4	U	3.4	UJ	0.24	3.4	ug/kg	HT
SS	NDA057	SW8081	ENDRIN ALDEHYDE	4.1	U	4.1	UJ	0.29	4.1	ug/kg	HT
SS	NDA059	SW8081	ENDRIN ALDEHYDE	3.6	U	3.6	UJ	0.25	3.6	ug/kg	HT
SS	NDA061	SW8081	ENDRIN ALDEHYDE	3.5	U	3.5	UJ	0.24	3.5	ug/kg	HT
SS	NDA062FD1	SW8081	ENDRIN ALDEHYDE	3.5	U	3.5	UJ	0.24	3.5	ug/kg	HT
SS	NDA065	SW8081	ENDRIN ALDEHYDE	4.2	U	4.2	UJ	0.29	4.2	ug/kg	HT
SS	NDA067	SW8081	ENDRIN ALDEHYDE	3.6	U	3.6	UJ	0.25	3.6	ug/kg	HT
SS	NDA069	SW8081	ENDRIN ALDEHYDE	3.4	U	3.4	UJ	0.23	3.4	ug/kg	HT
SS	NDA119	SW8081	ENDRIN ALDEHYDE	3.7	U	3.7	UJ	0.26	3.7	ug/kg	HT
SS	NDA120	SW8081	ENDRIN ALDEHYDE	4.4	U	4.4	UJ	0.3	4.4	ug/kg	HT
SS	NDA121	SW8081	ENDRIN ALDEHYDE	3.6	U	3.6	UJ	0.25	3.6	ug/kg	HT
SS	NDA122	SW8081	ENDRIN ALDEHYDE	3.7	U	3.7	UJ	0.26	3.7	ug/kg	HT
SS	NDA123	SW8081	ENDRIN ALDEHYDE	3.7	U	3.7	UJ	0.26	3.7	ug/kg	HT
SS	NDA124	SW8081	ENDRIN ALDEHYDE	3.7	U	3.7	UJ	0.26	3.7	ug/kg	HT
SS	NDA071	SW8081	ENDRIN ALDEHYDE	4	U	4	UJ	0.27	4	ug/kg	HT
SS	NDA072FD1	SW8081	ENDRIN ALDEHYDE	3.5	U	3.5	UJ	0.24	3.5	ug/kg	HT
SS	NDA074	SW8081	ENDRIN ALDEHYDE	0.35	U	0.35	UJ	0.02	0.35	ug/kg	HT
SS	NDA078	SW8081	ENDRIN ALDEHYDE	0.35	U	0.35	UJ	0.02	0.35	ug/kg	HT
SS	NDA080	SW8081	ENDRIN ALDEHYDE	0.34	U	0.34	UJ	0.02	0.34	ug/kg	HT
SS	NDA082	SW8081	ENDRIN ALDEHYDE	0.34	U	0.34	UJ	0.02	0.34	ug/kg	HT
SS	NDA113	SW8081	ENDRIN ALDEHYDE	4.1	U	4.1	UJ	0.28	4.1	ug/kg	HT
SS	NDA115	SW8081	ENDRIN ALDEHYDE	3.8	U	3.8	UJ	0.26	3.8	ug/kg	HT
SS	NDA117	SW8081	ENDRIN ALDEHYDE	4.2	U	4.2	UJ	0.29	4.2	ug/kg	HT
SS	NDA101	SW8081	ENDRIN ALDEHYDE	4.4	U	4.4	UJ	0.31	4.4	ug/kg	HT
SS	NDA103	SW8081	ENDRIN ALDEHYDE	4.5	U	4.5	UJ	0.31	4.5	ug/kg	HT
SS	NDA104FD1	SW8081	ENDRIN ALDEHYDE	4.7	U	4.7	UJ	0.32	4.7	ug/kg	HT
SS	NDA107	SW8081	ENDRIN ALDEHYDE	4.2	U	4.2	UJ	0.29	4.2	ug/kg	HT
SS	NDA109	SW8081	ENDRIN ALDEHYDE	4.3	U	4.3	UJ	0.3	4.3	ug/kg	HT
SS	NDA111	SW8081	ENDRIN ALDEHYDE	4.4	U	4.4	UJ	0.3	4.4	ug/kg	HT
SB	NDA165	SW8081	ENDRIN	3.8	U	3.8	UJ	0.45	3.8	ug/kg	HT
SB	NDA167	SW8081	ENDRIN	4.1	U	4.1	UJ	0.49	4.1	ug/kg	HT
SB	NDA169	SW8081	ENDRIN	4	U	4	UJ	0.48	4	ug/kg	HT
SB	NDA171	SW8081	ENDRIN	3.6	U	3.6	UJ	0.43	3.6	ug/kg	HT
SB	NDA173	SW8081	ENDRIN	4.2	U	4.2	UJ	0.51	4.2	ug/kg	HT
SB	NDA175	SW8081	ENDRIN	3.7	U	3.7	UJ	0.44	3.7	ug/kg	HT
SB	NDA177	SW8081	ENDRIN	3.9	U	3.9	UJ	0.46	3.9	ug/kg	HT
SB	NDA235	SW8081	ENDRIN	4.4	U	4.4	UJ	0.53	4.4	ug/kg	HT
SB	NDA236	SW8081	ENDRIN	3.8	U	3.8	UJ	0.45	3.8	ug/kg	HT
SB	NDA237FD1	SW8081	ENDRIN	3.7	U	3.7	UJ	0.45	3.7	ug/kg	HT
SB	NDA238	SW8081	ENDRIN	3.7	U	3.7	UJ	0.45	3.7	ug/kg	HT
SB	NDA239	SW8081	ENDRIN	3.7	U	3.7	UJ	0.45	3.7	ug/kg	HT
SB	NDA240	SW8081	ENDRIN	4	U	4	UJ	0.48	4	ug/kg	HT
SB	NDA241	SW8081	ENDRIN	3.7	U	3.7	UJ	0.45	3.7	ug/kg	HT
SB	NDA242	SW8081	ENDRIN	4.2	U	4.2	UJ	0.5	4.2	ug/kg	HT
SB	NDA243	SW8081	ENDRIN	3.9	U	3.9	UJ	0.47	3.9	ug/kg	HT
SB	NDA244	SW8081	ENDRIN	3.7	U	3.7	UJ	0.44	3.7	ug/kg	HT
SB	NDA245	SW8081	ENDRIN	3.8	U	3.8	UJ	0.46	3.8	ug/kg	HT
SB	NDA246	SW8081	ENDRIN	4.1	U	4.1	UJ	0.49	4.1	ug/kg	HT
SB	NDA247FD1	SW8081	ENDRIN	3.8	U	3.8	UJ	0.46	3.8	ug/kg	HT
SB	NDA248	SW8081	ENDRIN	4	U	4	UJ	0.48	4	ug/kg	HT
SB	NDA249	SW8081	ENDRIN	3.7	U	3.7	UJ	0.45	3.7	ug/kg	HT
SB	NDA252	SW8081	ENDRIN	3.9	U	3.9	UJ	0.47	3.9	ug/kg	HT
SB	NDA253	SW8081	ENDRIN	4.2	U	4.2	UJ	0.5	4.2	ug/kg	HT

Matrix	Sample ID	Analytical Method	Parameter	Lab Result	Lab Qual	Final Result	Final Qual	DL	RL	Units	Comments
SB	NDA254	SW8081	ENDRIN	4.2	U	4.2	UJ	0.5	4.2	ug/kg	HT
SB	NDA255	SW8081	ENDRIN	4.1	U	4.1	UJ	0.49	4.1	ug/kg	HT
SB	NDA058	SW8081	ENDRIN	3.7	U	3.7	UJ	0.44	3.7	ug/kg	HT
SB	NDA060	SW8081	ENDRIN	3.7	U	3.7	UJ	0.44	3.7	ug/kg	HT
SB	NDA063	SW8081	ENDRIN	3.6	U	3.6	UJ	0.43	3.6	ug/kg	HT
SB	NDA064FD1	SW8081	ENDRIN	3.6	U	3.6	UJ	0.43	3.6	ug/kg	HT
SB	NDA066	SW8081	ENDRIN	3.5	U	3.5	UJ	0.42	3.5	ug/kg	HT
SB	NDA068	SW8081	ENDRIN	3.6	U	3.6	UJ	0.43	3.6	ug/kg	HT
SB	NDA070	SW8081	ENDRIN	3.5	U	3.5	UJ	0.42	3.5	ug/kg	HT
SB	NDA073	SW8081	ENDRIN	3.5	U	3.5	UJ	0.42	3.5	ug/kg	HT
SB	NDA075	SW8081	ENDRIN	0.35	U	0.35	UJ	0.04	0.35	ug/kg	HT
SB	NDA077	SW8081	ENDRIN	0.4	U	0.4	UJ	0.05	0.4	ug/kg	HT
SB	NDA081	SW8081	ENDRIN	0.35	U	0.35	UJ	0.04	0.35	ug/kg	HT
SB	NDA083	SW8081	ENDRIN	0.34	U	0.34	UJ	0.04	0.34	ug/kg	HT
SB	NDA114	SW8081	ENDRIN	4.3	U	4.3	UJ	0.52	4.3	ug/kg	HT
SB	NDA116	SW8081	ENDRIN	4.2	U	4.2	UJ	0.5	4.2	ug/kg	HT
SB	NDA118	SW8081	ENDRIN	4.3	U	4.3	UJ	0.51	4.3	ug/kg	HT
SD	NDA053	SW8081	ENDRIN	25	U	25	UJ	3	25	ug/kg	HT
SD	NDA047	SW8081	ENDRIN	3.6	U	3.6	UJ	0.44	3.6	ug/kg	HT
SD	NDA048	SW8081	ENDRIN	3.8	U	3.8	UJ	0.46	3.8	ug/kg	HT
SD	NDA049	SW8081	ENDRIN	3.6	U	3.6	UJ	0.44	3.6	ug/kg	HT
SS	NDA164	SW8081	ENDRIN	4.1	U	4.1	UJ	0.49	4.1	ug/kg	HT
SS	NDA166	SW8081	ENDRIN	4.1	U	4.1	UJ	0.5	4.1	ug/kg	HT
SS	NDA168	SW8081	ENDRIN	3.9	U	3.9	UJ	0.46	3.9	ug/kg	HT
SS	NDA170	SW8081	ENDRIN	4	U	4	UJ	0.48	4	ug/kg	HT
SS	NDA172	SW8081	ENDRIN	3.6	U	3.6	UJ	0.43	3.6	ug/kg	HT
SS	NDA174	SW8081	ENDRIN	3.5	U	3.5	UJ	0.42	3.5	ug/kg	HT
SS	NDA176	SW8081	ENDRIN	9.3	U	9.3	UJ	1.1	9.3	ug/kg	HT
SS	NDA185	SW8081	ENDRIN	3.9	U	3.9	UJ	0.47	3.9	ug/kg	HT
SS	NDA186	SW8081	ENDRIN	3.7	U	3.7	UJ	0.45	3.7	ug/kg	HT
SS	NDA187	SW8081	ENDRIN	3.6	U	3.6	UJ	0.43	3.6	ug/kg	HT
SS	NDA188	SW8081	ENDRIN	4.6	U	4.6	UJ	0.55	4.6	ug/kg	HT
SS	NDA189	SW8081	ENDRIN	3.7	U	3.7	UJ	0.45	3.7	ug/kg	HT
SS	NDA190	SW8081	ENDRIN	3.8	U	3.8	UJ	0.45	3.8	ug/kg	HT
SS	NDA191	SW8081	ENDRIN	3.4	U	3.4	UJ	0.41	3.4	ug/kg	HT
SS	NDA192FD1	SW8081	ENDRIN	3.9	U	3.9	UJ	0.46	3.9	ug/kg	HT
SS	NDA193	SW8081	ENDRIN	3.4	U	3.4	UJ	0.41	3.4	ug/kg	HT
SS	NDA194	SW8081	ENDRIN	4.1	U	4.1	UJ	0.49	4.1	ug/kg	HT
SS	NDA195	SW8081	ENDRIN	3.4	U	3.4	UJ	0.41	3.4	ug/kg	HT
SS	NDA057	SW8081	ENDRIN	4.1	U	4.1	UJ	0.5	4.1	ug/kg	HT
SS	NDA059	SW8081	ENDRIN	3.6	U	3.6	UJ	0.43	3.6	ug/kg	HT
SS	NDA061	SW8081	ENDRIN	3.5	U	3.5	UJ	0.42	3.5	ug/kg	HT
SS	NDA062FD1	SW8081	ENDRIN	3.5	U	3.5	UJ	0.42	3.5	ug/kg	HT
SS	NDA065	SW8081	ENDRIN	4.2	U	4.2	UJ	0.5	4.2	ug/kg	HT
SS	NDA067	SW8081	ENDRIN	3.6	U	3.6	UJ	0.43	3.6	ug/kg	HT
SS	NDA069	SW8081	ENDRIN	3.4	U	3.4	UJ	0.4	3.4	ug/kg	HT
SS	NDA119	SW8081	ENDRIN	3.7	U	3.7	UJ	0.45	3.7	ug/kg	HT
SS	NDA120	SW8081	ENDRIN	4.4	U	4.4	UJ	0.53	4.4	ug/kg	HT
SS	NDA121	SW8081	ENDRIN	3.6	U	3.6	UJ	0.44	3.6	ug/kg	HT
SS	NDA122	SW8081	ENDRIN	3.7	U	3.7	UJ	0.45	3.7	ug/kg	HT
SS	NDA123	SW8081	ENDRIN	3.7	U	3.7	UJ	0.45	3.7	ug/kg	HT
SS	NDA124	SW8081	ENDRIN	3.7	U	3.7	UJ	0.45	3.7	ug/kg	HT
SS	NDA071	SW8081	ENDRIN	4	U	4	UJ	0.48	4	ug/kg	HT
SS	NDA072FD1	SW8081	ENDRIN	3.5	U	3.5	UJ	0.42	3.5	ug/kg	HT
SS	NDA074	SW8081	ENDRIN	0.35	U	0.35	UJ	0.04	0.35	ug/kg	HT
SS	NDA078	SW8081	ENDRIN	0.35	U	0.35	UJ	0.04	0.35	ug/kg	HT
SS	NDA080	SW8081	ENDRIN	0.34	U	0.34	UJ	0.04	0.34	ug/kg	HT
SS	NDA082	SW8081	ENDRIN	0.34	U	0.34	UJ	0.04	0.34	ug/kg	HT
SS	NDA113	SW8081	ENDRIN	4.1	U	4.1	UJ	0.49	4.1	ug/kg	HT
SS	NDA115	SW8081	ENDRIN	3.8	U	3.8	UJ	0.46	3.8	ug/kg	HT
SS	NDA117	SW8081	ENDRIN	4.2	U	4.2	UJ	0.5	4.2	ug/kg	HT
SB	NDA165	SW8081	ENDOSULFAN SULFATE	3.8	U	3.8	UJ	0.44	3.8	ug/kg	HT
SB	NDA167	SW8081	ENDOSULFAN SULFATE	4.1	U	4.1	UJ	0.48	4.1	ug/kg	HT
SB	NDA169	SW8081	ENDOSULFAN SULFATE	4	U	4	UJ	0.47	4	ug/kg	HT
SB	NDA171	SW8081	ENDOSULFAN SULFATE	3.6	U	3.6	UJ	0.42	3.6	ug/kg	HT
SB	NDA173	SW8081	ENDOSULFAN SULFATE	4.2	U	4.2	UJ	0.5	4.2	ug/kg	HT
SB	NDA175	SW8081	ENDOSULFAN SULFATE	3.7	U	3.7	UJ	0.43	3.7	ug/kg	HT
SB	NDA177	SW8081	ENDOSULFAN SULFATE	3.9	U	3.9	UJ	0.45	3.9	ug/kg	HT
SB	NDA213	SW8081	ENDOSULFAN SULFATE	3.8	U	3.8	UJ	0.45	3.8	ug/kg	HT
SB	NDA214FD1	SW8081	ENDOSULFAN SULFATE	3.7	U	3.7	UJ	0.43	3.7	ug/kg	HT

Matrix	Sample ID	Analytical Method	Parameter	Lab Result	Lab Qual	Final Result	Final Qual	DL	RL	Units	Comments
SB	NDA215	SW8081	ENDOSULFAN SULFATE	3.8	U	3.8	UJ	0.45	3.8	ug/kg	HT
SB	NDA216	SW8081	ENDOSULFAN SULFATE	3.6	U	3.6	UJ	0.43	3.6	ug/kg	HT
SB	NDA217	SW8081	ENDOSULFAN SULFATE	3.8	U	3.8	UJ	0.45	3.8	ug/kg	HT
SB	NDA218	SW8081	ENDOSULFAN SULFATE	3.7	U	3.7	UJ	0.43	3.7	ug/kg	HT
SB	NDA219	SW8081	ENDOSULFAN SULFATE	3.7	U	3.7	UJ	0.43	3.7	ug/kg	HT
SB	NDA220	SW8081	ENDOSULFAN SULFATE	3.8	U	3.8	UJ	0.45	3.8	ug/kg	HT
SB	NDA221	SW8081	ENDOSULFAN SULFATE	3.6	U	3.6	UJ	0.42	3.6	ug/kg	HT
SB	NDA222	SW8081	ENDOSULFAN SULFATE	3.3	U	3.3	UJ	0.39	3.3	ug/kg	HT
SB	NDA223	SW8081	ENDOSULFAN SULFATE	3.8	U	3.8	UJ	0.44	3.8	ug/kg	HT
SB	NDA235	SW8081	ENDOSULFAN SULFATE	4.4	U	4.4	UJ	0.51	4.4	ug/kg	HT
SB	NDA236	SW8081	ENDOSULFAN SULFATE	3.8	U	3.8	UJ	0.44	3.8	ug/kg	HT
SB	NDA237FD1	SW8081	ENDOSULFAN SULFATE	3.7	U	3.7	UJ	0.44	3.7	ug/kg	HT
SB	NDA238	SW8081	ENDOSULFAN SULFATE	3.7	U	3.7	UJ	0.44	3.7	ug/kg	HT
SB	NDA239	SW8081	ENDOSULFAN SULFATE	3.7	U	3.7	UJ	0.44	3.7	ug/kg	HT
SB	NDA240	SW8081	ENDOSULFAN SULFATE	4	U	4	UJ	0.47	4	ug/kg	HT
SB	NDA241	SW8081	ENDOSULFAN SULFATE	3.7	U	3.7	UJ	0.44	3.7	ug/kg	HT
SB	NDA242	SW8081	ENDOSULFAN SULFATE	4.2	U	4.2	UJ	0.49	4.2	ug/kg	HT
SB	NDA243	SW8081	ENDOSULFAN SULFATE	3.9	U	3.9	UJ	0.46	3.9	ug/kg	HT
SB	NDA244	SW8081	ENDOSULFAN SULFATE	3.7	U	3.7	UJ	0.43	3.7	ug/kg	HT
SB	NDA245	SW8081	ENDOSULFAN SULFATE	3.8	U	3.8	UJ	0.45	3.8	ug/kg	HT
SB	NDA246	SW8081	ENDOSULFAN SULFATE	4.1	U	4.1	UJ	0.48	4.1	ug/kg	HT
SB	NDA247FD1	SW8081	ENDOSULFAN SULFATE	3.8	U	3.8	UJ	0.45	3.8	ug/kg	HT
SB	NDA248	SW8081	ENDOSULFAN SULFATE	4	U	4	UJ	0.47	4	ug/kg	HT
SB	NDA249	SW8081	ENDOSULFAN SULFATE	3.7	U	3.7	UJ	0.44	3.7	ug/kg	HT
SB	NDA252	SW8081	ENDOSULFAN SULFATE	3.9	U	3.9	UJ	0.46	3.9	ug/kg	HT
SB	NDA253	SW8081	ENDOSULFAN SULFATE	4.2	U	4.2	UJ	0.49	4.2	ug/kg	HT
SB	NDA254	SW8081	ENDOSULFAN SULFATE	4.2	U	4.2	UJ	0.49	4.2	ug/kg	HT
SB	NDA255	SW8081	ENDOSULFAN SULFATE	4.1	U	4.1	UJ	0.48	4.1	ug/kg	HT
SB	NDA058	SW8081	ENDOSULFAN SULFATE	3.7	U	3.7	UJ	0.43	3.7	ug/kg	HT
SB	NDA060	SW8081	ENDOSULFAN SULFATE	3.7	U	3.7	UJ	0.43	3.7	ug/kg	HT
SB	NDA063	SW8081	ENDOSULFAN SULFATE	3.6	U	3.6	UJ	0.42	3.6	ug/kg	HT
SB	NDA064FD1	SW8081	ENDOSULFAN SULFATE	3.6	U	3.6	UJ	0.42	3.6	ug/kg	HT
SB	NDA066	SW8081	ENDOSULFAN SULFATE	3.5	U	3.5	UJ	0.41	3.5	ug/kg	HT
SB	NDA068	SW8081	ENDOSULFAN SULFATE	3.6	U	3.6	UJ	0.42	3.6	ug/kg	HT
SB	NDA070	SW8081	ENDOSULFAN SULFATE	3.5	U	3.5	UJ	0.41	3.5	ug/kg	HT
SB	NDA073	SW8081	ENDOSULFAN SULFATE	3.5	U	3.5	UJ	0.41	3.5	ug/kg	HT
SB	NDA075	SW8081	ENDOSULFAN SULFATE	0.35	U	0.35	UJ	0.04	0.35	ug/kg	HT
SB	NDA077	SW8081	ENDOSULFAN SULFATE	0.4	U	0.4	UJ	0.05	0.4	ug/kg	HT
SB	NDA081	SW8081	ENDOSULFAN SULFATE	0.35	U	0.35	UJ	0.04	0.35	ug/kg	HT
SB	NDA083	SW8081	ENDOSULFAN SULFATE	0.34	U	0.34	UJ	0.04	0.34	ug/kg	HT
SB	NDA114	SW8081	ENDOSULFAN SULFATE	4.3	U	4.3	UJ	0.51	4.3	ug/kg	HT
SB	NDA116	SW8081	ENDOSULFAN SULFATE	4.2	U	4.2	UJ	0.49	4.2	ug/kg	HT
SB	NDA118	SW8081	ENDOSULFAN SULFATE	4.3	U	4.3	UJ	0.5	4.3	ug/kg	HT
SB	NDA102	SW8081	ENDOSULFAN SULFATE	5.2	U	5.2	UJ	0.61	5.2	ug/kg	HT
SB	NDA105	SW8081	ENDOSULFAN SULFATE	5.3	U	5.3	UJ	0.62	5.3	ug/kg	HT
SB	NDA106FD1	SW8081	ENDOSULFAN SULFATE	5.3	U	5.3	UJ	0.62	5.3	ug/kg	HT
SB	NDA108	SW8081	ENDOSULFAN SULFATE	4.4	U	4.4	UJ	0.52	4.4	ug/kg	HT
SB	NDA110	SW8081	ENDOSULFAN SULFATE	4.4	U	4.4	UJ	0.52	4.4	ug/kg	HT
SB	NDA112	SW8081	ENDOSULFAN SULFATE	4.3	U	4.3	UJ	0.51	4.3	ug/kg	HT
SD	NDA053	SW8081	ENDOSULFAN SULFATE	25	U	25	UJ	2.9	25	ug/kg	HT
SD	NDA054	SW8081	ENDOSULFAN SULFATE	3.4	U	3.4	UJ	0.4	3.4	ug/kg	HT
SD	NDA055	SW8081	ENDOSULFAN SULFATE	3.3	U	3.3	UJ	0.39	3.3	ug/kg	HT
SD	NDA047	SW8081	ENDOSULFAN SULFATE	3.6	U	3.6	UJ	0.43	3.6	ug/kg	HT
SD	NDA048	SW8081	ENDOSULFAN SULFATE	3.8	U	3.8	UJ	0.45	3.8	ug/kg	HT
SD	NDA049	SW8081	ENDOSULFAN SULFATE	3.6	U	3.6	UJ	0.43	3.6	ug/kg	HT
SS	NDA164	SW8081	ENDOSULFAN SULFATE	4.1	U	4.1	UJ	0.48	4.1	ug/kg	HT
SS	NDA166	SW8081	ENDOSULFAN SULFATE	4.1	U	4.1	UJ	0.49	4.1	ug/kg	HT
SS	NDA168	SW8081	ENDOSULFAN SULFATE	3.9	U	3.9	UJ	0.45	3.9	ug/kg	HT
SS	NDA170	SW8081	ENDOSULFAN SULFATE	4	U	4	UJ	0.47	4	ug/kg	HT
SS	NDA172	SW8081	ENDOSULFAN SULFATE	3.6	U	3.6	UJ	0.42	3.6	ug/kg	HT
SS	NDA174	SW8081	ENDOSULFAN SULFATE	3.5	U	3.5	UJ	0.41	3.5	ug/kg	HT
SS	NDA176	SW8081	ENDOSULFAN SULFATE	9.3	U	9.3	UJ	1.1	9.3	ug/kg	HT
SS	NDA185	SW8081	ENDOSULFAN SULFATE	3.9	U	3.9	UJ	0.46	3.9	ug/kg	HT
SS	NDA186	SW8081	ENDOSULFAN SULFATE	3.7	U	3.7	UJ	0.44	3.7	ug/kg	HT
SS	NDA187	SW8081	ENDOSULFAN SULFATE	3.6	U	3.6	UJ	0.42	3.6	ug/kg	HT
SS	NDA188	SW8081	ENDOSULFAN SULFATE	4.6	U	4.6	UJ	0.53	4.6	ug/kg	HT
SS	NDA189	SW8081	ENDOSULFAN SULFATE	3.7	U	3.7	UJ	0.44	3.7	ug/kg	HT
SS	NDA190	SW8081	ENDOSULFAN SULFATE	3.8	U	3.8	UJ	0.44	3.8	ug/kg	HT
SS	NDA191	SW8081	ENDOSULFAN SULFATE	3.4	U	3.4	UJ	0.4	3.4	ug/kg	HT
SS	NDA192FD1	SW8081	ENDOSULFAN SULFATE	3.9	U	3.9	UJ	0.45	3.9	ug/kg	HT

Matrix	Sample ID	Analytical Method	Parameter	Lab Result	Lab Qual	Final Result	Final Qual	DL	RL	Units	Comments
SS	NDA193	SW8081	ENDOSULFAN SULFATE	3.4	U	3.4	UJ	0.4	3.4	ug/kg	HT
SS	NDA194	SW8081	ENDOSULFAN SULFATE	4.1	U	4.1	UJ	0.48	4.1	ug/kg	HT
SS	NDA195	SW8081	ENDOSULFAN SULFATE	3.4	U	3.4	UJ	0.4	3.4	ug/kg	HT
SS	NDA057	SW8081	ENDOSULFAN SULFATE	4.1	U	4.1	UJ	0.49	4.1	ug/kg	HT
SS	NDA059	SW8081	ENDOSULFAN SULFATE	3.6	U	3.6	UJ	0.42	3.6	ug/kg	HT
SS	NDA061	SW8081	ENDOSULFAN SULFATE	3.5	U	3.5	UJ	0.41	3.5	ug/kg	HT
SS	NDA062FD1	SW8081	ENDOSULFAN SULFATE	3.5	U	3.5	UJ	0.41	3.5	ug/kg	HT
SS	NDA065	SW8081	ENDOSULFAN SULFATE	4.2	U	4.2	UJ	0.49	4.2	ug/kg	HT
SS	NDA067	SW8081	ENDOSULFAN SULFATE	3.6	U	3.6	UJ	0.42	3.6	ug/kg	HT
SS	NDA069	SW8081	ENDOSULFAN SULFATE	3.4	U	3.4	UJ	0.39	3.4	ug/kg	HT
SS	NDA119	SW8081	ENDOSULFAN SULFATE	3.7	U	3.7	UJ	0.44	3.7	ug/kg	HT
SS	NDA120	SW8081	ENDOSULFAN SULFATE	4.4	U	4.4	UJ	0.52	4.4	ug/kg	HT
SS	NDA121	SW8081	ENDOSULFAN SULFATE	3.6	U	3.6	UJ	0.43	3.6	ug/kg	HT
SS	NDA122	SW8081	ENDOSULFAN SULFATE	3.7	U	3.7	UJ	0.44	3.7	ug/kg	HT
SS	NDA123	SW8081	ENDOSULFAN SULFATE	3.7	U	3.7	UJ	0.44	3.7	ug/kg	HT
SS	NDA124	SW8081	ENDOSULFAN SULFATE	3.7	U	3.7	UJ	0.44	3.7	ug/kg	HT
SS	NDA071	SW8081	ENDOSULFAN SULFATE	4	U	4	UJ	0.47	4	ug/kg	HT
SS	NDA072FD1	SW8081	ENDOSULFAN SULFATE	3.5	U	3.5	UJ	0.41	3.5	ug/kg	HT
SS	NDA074	SW8081	ENDOSULFAN SULFATE	0.35	U	0.35	UJ	0.04	0.35	ug/kg	HT
SS	NDA078	SW8081	ENDOSULFAN SULFATE	0.35	U	0.35	UJ	0.04	0.35	ug/kg	HT
SS	NDA080	SW8081	ENDOSULFAN SULFATE	0.34	U	0.34	UJ	0.04	0.34	ug/kg	HT
SS	NDA082	SW8081	ENDOSULFAN SULFATE	0.34	U	0.34	UJ	0.04	0.34	ug/kg	HT
SS	NDA113	SW8081	ENDOSULFAN SULFATE	4.1	U	4.1	UJ	0.48	4.1	ug/kg	HT
SS	NDA115	SW8081	ENDOSULFAN SULFATE	3.8	U	3.8	UJ	0.45	3.8	ug/kg	HT
SS	NDA117	SW8081	ENDOSULFAN SULFATE	4.2	U	4.2	UJ	0.49	4.2	ug/kg	HT
SS	NDA101	SW8081	ENDOSULFAN SULFATE	4.4	U	4.4	UJ	0.52	4.4	ug/kg	HT
SS	NDA103	SW8081	ENDOSULFAN SULFATE	4.5	U	4.5	UJ	0.53	4.5	ug/kg	HT
SS	NDA104FD1	SW8081	ENDOSULFAN SULFATE	4.7	U	4.7	UJ	0.55	4.7	ug/kg	HT
SS	NDA107	SW8081	ENDOSULFAN SULFATE	4.2	U	4.2	UJ	0.49	4.2	ug/kg	HT
SS	NDA109	SW8081	ENDOSULFAN SULFATE	4.3	U	4.3	UJ	0.51	4.3	ug/kg	HT
SS	NDA111	SW8081	ENDOSULFAN SULFATE	4.4	U	4.4	UJ	0.52	4.4	ug/kg	HT
SB	NDA213	SW8270	DI-n-OCTYLPHTHALATE	485	U	485	UJ	36	485	ug/kg	HT
SB	NDA214FD1	SW8270	DI-n-OCTYLPHTHALATE	487	U	487	UJ	37	487	ug/kg	HT
SB	NDA215	SW8270	DI-n-OCTYLPHTHALATE	527	U	527	UJ	40	527	ug/kg	HT
SB	NDA216	SW8270	DI-n-OCTYLPHTHALATE	537	U	537	UJ	40	537	ug/kg	HT
SB	NDA217	SW8270	DI-n-OCTYLPHTHALATE	540	U	540	UJ	41	540	ug/kg	HT
SB	NDA218	SW8270	DI-n-OCTYLPHTHALATE	505	U	505	UJ	38	505	ug/kg	HT
SB	NDA219	SW8270	DI-n-OCTYLPHTHALATE	380	U	380	UJ	29	380	ug/kg	HT
SB	NDA220	SW8270	DI-n-OCTYLPHTHALATE	542	U	542	UJ	41	542	ug/kg	HT
SB	NDA221	SW8270	DI-n-OCTYLPHTHALATE	501	U	501	UJ	38	501	ug/kg	HT
SB	NDA222	SW8270	DI-n-OCTYLPHTHALATE	459	U	459	UJ	34	459	ug/kg	HT
SB	NDA223	SW8270	DI-n-OCTYLPHTHALATE	527	U	527	UJ	40	527	ug/kg	HT
SB	NDA235	SW8270	DI-n-OCTYLPHTHALATE	504	U	504	UJ	38	504	ug/kg	HT
SB	NDA236	SW8270	DI-n-OCTYLPHTHALATE	423	U	423	UJ	32	423	ug/kg	HT
SB	NDA238	SW8270	DI-n-OCTYLPHTHALATE	424	U	424	UJ	32	424	ug/kg	HT
SB	NDA239	SW8270	DI-n-OCTYLPHTHALATE	555	U	555	UJ	42	555	ug/kg	HT
SB	NDA240	SW8270	DI-n-OCTYLPHTHALATE	397	U	397	UJ	30	397	ug/kg	HT
SB	NDA241	SW8270	DI-n-OCTYLPHTHALATE	471	U	471	UJ	35	471	ug/kg	HT
SB	NDA242	SW8270	DI-n-OCTYLPHTHALATE	436	U	436	UJ	33	436	ug/kg	HT
SB	NDA243	SW8270	DI-n-OCTYLPHTHALATE	893	U	893	UJ	67	893	ug/kg	HT
SB	NDA244	SW8270	DI-n-OCTYLPHTHALATE	388	U	388	UJ	29	388	ug/kg	HT
SB	NDA085	SW8270	DI-n-OCTYLPHTHALATE	482	U	482	UJ	36	482	ug/kg	HT
SB	NDA092	SW8270	DI-n-OCTYLPHTHALATE	400	U	400	UJ	30	400	ug/kg	HT
SB	NDA093	SW8270	DI-n-OCTYLPHTHALATE	339	U	339	UJ	25	339	ug/kg	HT
SB	NDA094	SW8270	DI-n-OCTYLPHTHALATE	510	U	510	UJ	38	510	ug/kg	HT
SB	NDA095FD1	SW8270	DI-n-OCTYLPHTHALATE	310	U	310	UJ	23	310	ug/kg	HT
SB	NDA058	SW8270	DI-n-OCTYLPHTHALATE	460	U	460	UJ	35	460	ug/kg	HT
SB	NDA060	SW8270	DI-n-OCTYLPHTHALATE	478	U	478	UJ	36	478	ug/kg	HT
SB	NDA063	SW8270	DI-n-OCTYLPHTHALATE	382	U	382	UJ	29	382	ug/kg	HT
SB	NDA064FD1	SW8270	DI-n-OCTYLPHTHALATE	351	U	351	UJ	26	351	ug/kg	HT
SB	NDA066	SW8270	DI-n-OCTYLPHTHALATE	344	U	344	UJ	26	344	ug/kg	HT
SB	NDA068	SW8270	DI-n-OCTYLPHTHALATE	360	U	360	UJ	27	360	ug/kg	HT
SB	NDA070	SW8270	DI-n-OCTYLPHTHALATE	404	U	404	UJ	30	404	ug/kg	HT
SB	NDA073	SW8270	DI-n-OCTYLPHTHALATE	383	U	383	UJ	29	383	ug/kg	HT
SB	NDA075	SW8270	DI-n-OCTYLPHTHALATE	401	U	401	UJ	30	401	ug/kg	HT
SB	NDA077	SW8270	DI-n-OCTYLPHTHALATE	441	U	441	UJ	33	441	ug/kg	HT
SB	NDA079	SW8270	DI-n-OCTYLPHTHALATE	466	U	466	UJ	35	466	ug/kg	HT
SB	NDA081RE1	SW8270	DI-n-OCTYLPHTHALATE	393	U	393	UJ	29	393	ug/kg	HT
SB	NDA083RE1	SW8270	DI-n-OCTYLPHTHALATE	4240	U	4240	UJ	318	4240	ug/kg	HT
SD	NDA054	SW8270	DI-n-OCTYLPHTHALATE	480	U	480	UJ	36	480	ug/kg	HT

Matrix	Sample ID	Analytical Method	Parameter	Lab Result	Lab Qual	Final Result	Final Qual	DL	RL	Units	Comments
SD	NDA055	SW8270	DI-n-OCTYLPHTHALATE	696	U	696	UJ	52	696	ug/kg	HT
SD	NDA042	SW8270	DI-n-OCTYLPHTHALATE	686	U	686	UJ	51	686	ug/kg	HT
SD	NDA043	SW8270	DI-n-OCTYLPHTHALATE	735	U	735	UJ	55	735	ug/kg	HT
SD	NDA044	SW8270	DI-n-OCTYLPHTHALATE	1680	U	1680	UJ	126	1680	ug/kg	HT
SD	NDA045	SW8270	DI-n-OCTYLPHTHALATE	1500	U	1500	UJ	113	1500	ug/kg	HT
SD	NDA046	SW8270	DI-n-OCTYLPHTHALATE	1520	U	1520	UJ	114	1520	ug/kg	HT
SD	NDA302	SW8270	DI-n-OCTYLPHTHALATE	1200	U	1200	UJ	90	1200	ug/kg	HT
SD	NDA303	SW8270	DI-n-OCTYLPHTHALATE	2300	U	2300	UJ	173	2300	ug/kg	HT
SD	NDA307FD1	SW8270	DI-n-OCTYLPHTHALATE	2130	U	2130	UJ	159	2130	ug/kg	HT
SD	NDA047	SW8270	DI-n-OCTYLPHTHALATE	503	U	503	UJ	38	503	ug/kg	HT
SD	NDA048	SW8270	DI-n-OCTYLPHTHALATE	558	U	558	UJ	42	558	ug/kg	HT
SD	NDA049	SW8270	DI-n-OCTYLPHTHALATE	463	U	463	UJ	35	463	ug/kg	HT
SS	NDA178	SW8270	DI-n-OCTYLPHTHALATE	644	U	644	UJ	48	644	ug/kg	HT
SS	NDA179	SW8270	DI-n-OCTYLPHTHALATE	644	U	644	UJ	48	644	ug/kg	HT
SS	NDA180	SW8270	DI-n-OCTYLPHTHALATE	550	U	550	UJ	41	550	ug/kg	HT
SS	NDA181	SW8270	DI-n-OCTYLPHTHALATE	566	U	566	UJ	42	566	ug/kg	HT
SS	NDA182	SW8270	DI-n-OCTYLPHTHALATE	679	U	679	UJ	51	679	ug/kg	HT
SS	NDA201	SW8270	DI-n-OCTYLPHTHALATE	491	U	491	UJ	37	491	ug/kg	HT
SS	NDA202	SW8270	DI-n-OCTYLPHTHALATE	605	U	605	UJ	45	605	ug/kg	HT
SS	NDA203	SW8270	DI-n-OCTYLPHTHALATE	617	U	617	UJ	46	617	ug/kg	HT
SS	NDA205FD1	SW8270	DI-n-OCTYLPHTHALATE	668	U	668	UJ	50	668	ug/kg	HT
SS	NDA084	SW8270	DI-n-OCTYLPHTHALATE	344	U	344	UJ	26	344	ug/kg	HT
SS	NDA057	SW8270	DI-n-OCTYLPHTHALATE	563	U	563	UJ	42	563	ug/kg	HT
SS	NDA059	SW8270	DI-n-OCTYLPHTHALATE	465	U	465	UJ	35	465	ug/kg	HT
SS	NDA061	SW8270	DI-n-OCTYLPHTHALATE	469	U	469	UJ	35	469	ug/kg	HT
SS	NDA062FD1	SW8270	DI-n-OCTYLPHTHALATE	523	U	523	UJ	39	523	ug/kg	HT
SS	NDA065	SW8270	DI-n-OCTYLPHTHALATE	421	U	421	UJ	32	421	ug/kg	HT
SS	NDA067	SW8270	DI-n-OCTYLPHTHALATE	378	U	378	UJ	28	378	ug/kg	HT
SS	NDA069	SW8270	DI-n-OCTYLPHTHALATE	320	U	320	UJ	24	320	ug/kg	HT
SS	NDA119	SW8270	DI-n-OCTYLPHTHALATE	503	U	503	UJ	38	503	ug/kg	HT
SS	NDA120	SW8270	DI-n-OCTYLPHTHALATE	541	U	541	UJ	41	541	ug/kg	HT
SS	NDA121	SW8270	DI-n-OCTYLPHTHALATE	409	U	409	UJ	31	409	ug/kg	HT
SS	NDA122	SW8270	DI-n-OCTYLPHTHALATE	450	U	450	UJ	34	450	ug/kg	HT
SS	NDA123	SW8270	DI-n-OCTYLPHTHALATE	450	U	450	UJ	34	450	ug/kg	HT
SS	NDA124	SW8270	DI-n-OCTYLPHTHALATE	432	U	432	UJ	32	432	ug/kg	HT
SS	NDA071	SW8270	DI-n-OCTYLPHTHALATE	554	U	554	UJ	42	554	ug/kg	HT
SS	NDA072FD1	SW8270	DI-n-OCTYLPHTHALATE	413	U	413	UJ	31	413	ug/kg	HT
SS	NDA074	SW8270	DI-n-OCTYLPHTHALATE	448	U	448	UJ	34	448	ug/kg	HT
SS	NDA076	SW8270	DI-n-OCTYLPHTHALATE	419	U	419	UJ	31	419	ug/kg	HT
SS	NDA078	SW8270	DI-n-OCTYLPHTHALATE	440	U	440	UJ	33	440	ug/kg	HT
SS	NDA080RE1	SW8270	DI-n-OCTYLPHTHALATE	407	U	407	UJ	31	407	ug/kg	HT
SS	NDA082RE1	SW8270	DI-n-OCTYLPHTHALATE	4660	U	4660	UJ	349	4660	ug/kg	HT
SB	NDA213	SW8270	DI-n-BUTYL PHTHALATE	485	U	485	UJ	26	485	ug/kg	HT
SB	NDA214FD1	SW8270	DI-n-BUTYL PHTHALATE	487	U	487	UJ	26	487	ug/kg	HT
SB	NDA215	SW8270	DI-n-BUTYL PHTHALATE	527	U	527	UJ	28	527	ug/kg	HT
SB	NDA216	SW8270	DI-n-BUTYL PHTHALATE	537	U	537	UJ	28	537	ug/kg	HT
SB	NDA217	SW8270	DI-n-BUTYL PHTHALATE	540	U	540	UJ	29	540	ug/kg	HT
SB	NDA218	SW8270	DI-n-BUTYL PHTHALATE	505	U	505	UJ	27	505	ug/kg	HT
SB	NDA219	SW8270	DI-n-BUTYL PHTHALATE	380	U	380	UJ	20	380	ug/kg	HT
SB	NDA220	SW8270	DI-n-BUTYL PHTHALATE	542	U	542	UJ	29	542	ug/kg	HT
SB	NDA221	SW8270	DI-n-BUTYL PHTHALATE	501	U	501	UJ	27	501	ug/kg	HT
SB	NDA222	SW8270	DI-n-BUTYL PHTHALATE	459	U	459	UJ	24	459	ug/kg	HT
SB	NDA223	SW8270	DI-n-BUTYL PHTHALATE	527	U	527	UJ	28	527	ug/kg	HT
SB	NDA235	SW8270	DI-n-BUTYL PHTHALATE	504	U	504	UJ	27	504	ug/kg	HT
SB	NDA236	SW8270	DI-n-BUTYL PHTHALATE	423	U	423	UJ	22	423	ug/kg	HT
SB	NDA237FD1	SW8270	DI-n-BUTYL PHTHALATE	395	U	395	UJ	21	395	ug/kg	HT
SB	NDA238	SW8270	DI-n-BUTYL PHTHALATE	424	U	424	UJ	22	424	ug/kg	HT
SB	NDA239	SW8270	DI-n-BUTYL PHTHALATE	555	U	555	UJ	29	555	ug/kg	HT
SB	NDA240	SW8270	DI-n-BUTYL PHTHALATE	397	U	397	UJ	21	397	ug/kg	HT
SB	NDA241	SW8270	DI-n-BUTYL PHTHALATE	471	U	471	UJ	25	471	ug/kg	HT
SB	NDA242	SW8270	DI-n-BUTYL PHTHALATE	436	U	436	UJ	23	436	ug/kg	HT
SB	NDA243	SW8270	DI-n-BUTYL PHTHALATE	893	U	893	UJ	47	893	ug/kg	HT
SB	NDA244	SW8270	DI-n-BUTYL PHTHALATE	388	U	388	UJ	21	388	ug/kg	HT
SB	NDA245	SW8270	DI-n-BUTYL PHTHALATE	393	U	393	UJ	21	393	ug/kg	HT
SB	NDA246	SW8270	DI-n-BUTYL PHTHALATE	511	U	511	UJ	27	511	ug/kg	HT
SB	NDA247FD1	SW8270	DI-n-BUTYL PHTHALATE	390	U	390	UJ	21	390	ug/kg	HT
SB	NDA248	SW8270	DI-n-BUTYL PHTHALATE	453	U	453	UJ	24	453	ug/kg	HT
SB	NDA249	SW8270	DI-n-BUTYL PHTHALATE	374	U	374	UJ	20	374	ug/kg	HT
SB	NDA252	SW8270	DI-n-BUTYL PHTHALATE	420	U	420	UJ	22	420	ug/kg	HT
SB	NDA253	SW8270	DI-n-BUTYL PHTHALATE	439	U	439	UJ	23	439	ug/kg	HT

Matrix	Sample ID	Analytical Method	Parameter	Lab Result	Lab Qual	Final Result	Final Qual	DL	RL	Units	Comments
SB	NDA254	SW8270	DI-n-BUTYL PHTHALATE	391	U	391	UJ	21	391	ug/kg	HT
SB	NDA255	SW8270	DI-n-BUTYL PHTHALATE	375	U	375	UJ	20	375	ug/kg	HT
SB	NDA085	SW8270	DI-n-BUTYL PHTHALATE	482	U	482	UJ	26	482	ug/kg	HT
SB	NDA092	SW8270	DI-n-BUTYL PHTHALATE	400	U	400	UJ	21	400	ug/kg	HT
SB	NDA093	SW8270	DI-n-BUTYL PHTHALATE	339	U	339	UJ	18	339	ug/kg	HT
SB	NDA094	SW8270	DI-n-BUTYL PHTHALATE	510	U	510	UJ	27	510	ug/kg	HT
SB	NDA095FD1	SW8270	DI-n-BUTYL PHTHALATE	310	U	310	UJ	16	310	ug/kg	HT
SB	NDA296	SW8270	DI-n-BUTYL PHTHALATE	369	U	369	UJ	20	369	ug/kg	HT
SB	NDA297	SW8270	DI-n-BUTYL PHTHALATE	358	U	358	UJ	19	358	ug/kg	HT
SB	NDA298	SW8270	DI-n-BUTYL PHTHALATE	341	U	341	UJ	18	341	ug/kg	HT
SB	NDA299	SW8270	DI-n-BUTYL PHTHALATE	370	U	370	UJ	20	370	ug/kg	HT
SB	NDA058	SW8270	DI-n-BUTYL PHTHALATE	460	U	460	UJ	24	460	ug/kg	HT
SB	NDA060	SW8270	DI-n-BUTYL PHTHALATE	478	U	478	UJ	25	478	ug/kg	HT
SB	NDA063	SW8270	DI-n-BUTYL PHTHALATE	382	U	382	UJ	20	382	ug/kg	HT
SB	NDA064FD1	SW8270	DI-n-BUTYL PHTHALATE	351	U	351	UJ	19	351	ug/kg	HT
SB	NDA066	SW8270	DI-n-BUTYL PHTHALATE	344	U	344	UJ	18	344	ug/kg	HT
SB	NDA068	SW8270	DI-n-BUTYL PHTHALATE	360	U	360	UJ	19	360	ug/kg	HT
SB	NDA070	SW8270	DI-n-BUTYL PHTHALATE	404	U	404	UJ	21	404	ug/kg	HT
SB	NDA073	SW8270	DI-n-BUTYL PHTHALATE	383	U	383	UJ	20	383	ug/kg	HT
SB	NDA075	SW8270	DI-n-BUTYL PHTHALATE	401	U	401	UJ	21	401	ug/kg	HT
SB	NDA077	SW8270	DI-n-BUTYL PHTHALATE	441	U	441	UJ	23	441	ug/kg	HT
SB	NDA079	SW8270	DI-n-BUTYL PHTHALATE	466	U	466	UJ	25	466	ug/kg	HT
SB	NDA081RE1	SW8270	DI-n-BUTYL PHTHALATE	393	U	393	UJ	21	393	ug/kg	HT
SB	NDA083RE1	SW8270	DI-n-BUTYL PHTHALATE	4240	U	4240	UJ	224	4240	ug/kg	HT
SD	NDA054	SW8270	DI-n-BUTYL PHTHALATE	480	U	480	UJ	25	480	ug/kg	HT
SD	NDA055	SW8270	DI-n-BUTYL PHTHALATE	696	U	696	UJ	37	696	ug/kg	HT
SD	NDA042	SW8270	DI-n-BUTYL PHTHALATE	686	U	686	UJ	36	686	ug/kg	HT
SD	NDA043	SW8270	DI-n-BUTYL PHTHALATE	735	U	735	UJ	39	735	ug/kg	HT
SD	NDA044	SW8270	DI-n-BUTYL PHTHALATE	1680	U	1680	UJ	89	1680	ug/kg	HT
SD	NDA045	SW8270	DI-n-BUTYL PHTHALATE	1500	U	1500	UJ	80	1500	ug/kg	HT
SD	NDA046	SW8270	DI-n-BUTYL PHTHALATE	1520	U	1520	UJ	80	1520	ug/kg	HT
SD	NDA302	SW8270	DI-n-BUTYL PHTHALATE	1200	U	1200	UJ	64	1200	ug/kg	HT
SD	NDA303	SW8270	DI-n-BUTYL PHTHALATE	2300	U	2300	UJ	122	2300	ug/kg	HT
SD	NDA307FD1	SW8270	DI-n-BUTYL PHTHALATE	2130	U	2130	UJ	113	2130	ug/kg	HT
SD	NDA047	SW8270	DI-n-BUTYL PHTHALATE	503	U	503	UJ	27	503	ug/kg	HT
SD	NDA048	SW8270	DI-n-BUTYL PHTHALATE	558	U	558	UJ	30	558	ug/kg	HT
SD	NDA049	SW8270	DI-n-BUTYL PHTHALATE	463	U	463	UJ	25	463	ug/kg	HT
SS	NDA178	SW8270	DI-n-BUTYL PHTHALATE	644	U	644	UJ	34	644	ug/kg	HT
SS	NDA179	SW8270	DI-n-BUTYL PHTHALATE	644	U	644	UJ	34	644	ug/kg	HT
SS	NDA180	SW8270	DI-n-BUTYL PHTHALATE	550	U	550	UJ	29	550	ug/kg	HT
SS	NDA181	SW8270	DI-n-BUTYL PHTHALATE	566	U	566	UJ	30	566	ug/kg	HT
SS	NDA182	SW8270	DI-n-BUTYL PHTHALATE	679	U	679	UJ	36	679	ug/kg	HT
SS	NDA183	SW8270	DI-n-BUTYL PHTHALATE	589	U	589	UJ	31	589	ug/kg	HT
SS	NDA184FD1	SW8270	DI-n-BUTYL PHTHALATE	662	U	662	UJ	35	662	ug/kg	HT
SS	NDA201	SW8270	DI-n-BUTYL PHTHALATE	491	U	491	UJ	26	491	ug/kg	HT
SS	NDA202	SW8270	DI-n-BUTYL PHTHALATE	605	U	605	UJ	32	605	ug/kg	HT
SS	NDA203	SW8270	DI-n-BUTYL PHTHALATE	617	U	617	UJ	33	617	ug/kg	HT
SS	NDA205FD1	SW8270	DI-n-BUTYL PHTHALATE	668	U	668	UJ	35	668	ug/kg	HT
SS	NDA206	SW8270	DI-n-BUTYL PHTHALATE	529	U	529	UJ	28	529	ug/kg	HT
SS	NDA207	SW8270	DI-n-BUTYL PHTHALATE	669	U	669	UJ	35	669	ug/kg	HT
SS	NDA208	SW8270	DI-n-BUTYL PHTHALATE	520	U	520	UJ	28	520	ug/kg	HT
SS	NDA209	SW8270	DI-n-BUTYL PHTHALATE	570	U	570	UJ	30	570	ug/kg	HT
SS	NDA210	SW8270	DI-n-BUTYL PHTHALATE	545	U	545	UJ	29	545	ug/kg	HT
SS	NDA211	SW8270	DI-n-BUTYL PHTHALATE	742	U	742	UJ	39	742	ug/kg	HT
SS	NDA212	SW8270	DI-n-BUTYL PHTHALATE	651	U	651	UJ	35	651	ug/kg	HT
SS	NDA185	SW8270	DI-n-BUTYL PHTHALATE	445	U	445	UJ	24	445	ug/kg	HT
SS	NDA186	SW8270	DI-n-BUTYL PHTHALATE	416	U	416	UJ	22	416	ug/kg	HT
SS	NDA187	SW8270	DI-n-BUTYL PHTHALATE	380	U	380	UJ	20	380	ug/kg	HT
SS	NDA188	SW8270	DI-n-BUTYL PHTHALATE	810	U	810	UJ	43	810	ug/kg	HT
SS	NDA189	SW8270	DI-n-BUTYL PHTHALATE	426	U	426	UJ	23	426	ug/kg	HT
SS	NDA190	SW8270	DI-n-BUTYL PHTHALATE	430	U	430	UJ	23	430	ug/kg	HT
SS	NDA191	SW8270	DI-n-BUTYL PHTHALATE	338	U	338	UJ	18	338	ug/kg	HT
SS	NDA192FD1	SW8270	DI-n-BUTYL PHTHALATE	418	U	418	UJ	22	418	ug/kg	HT
SS	NDA193	SW8270	DI-n-BUTYL PHTHALATE	1720	U	1720	UJ	91	1720	ug/kg	HT
SS	NDA194	SW8270	DI-n-BUTYL PHTHALATE	480	U	480	UJ	25	480	ug/kg	HT
SS	NDA195	SW8270	DI-n-BUTYL PHTHALATE	323	U	323	UJ	17	323	ug/kg	HT
SS	NDA084	SW8270	DI-n-BUTYL PHTHALATE	344	U	344	UJ	18	344	ug/kg	HT
SS	NDA091	SW8270	DI-n-BUTYL PHTHALATE	367	U	367	UJ	19	367	ug/kg	HT
SS	NDA057	SW8270	DI-n-BUTYL PHTHALATE	563	U	563	UJ	30	563	ug/kg	HT
SS	NDA061	SW8270	DI-n-BUTYL PHTHALATE	469	U	469	UJ	25	469	ug/kg	HT

Matrix	Sample ID	Analytical Method	Parameter	Lab Result	Lab Qual	Final Result	Final Qual	DL	RL	Units	Comments
SS	NDA062FD1	SW8270	DI-n-BUTYL PHTHALATE	523	U	523	UJ	28	523	ug/kg	HT
SS	NDA065	SW8270	DI-n-BUTYL PHTHALATE	421	U	421	UJ	22	421	ug/kg	HT
SS	NDA067	SW8270	DI-n-BUTYL PHTHALATE	378	U	378	UJ	20	378	ug/kg	HT
SS	NDA069	SW8270	DI-n-BUTYL PHTHALATE	320	U	320	UJ	17	320	ug/kg	HT
SS	NDA119	SW8270	DI-n-BUTYL PHTHALATE	503	U	503	UJ	27	503	ug/kg	HT
SS	NDA120	SW8270	DI-n-BUTYL PHTHALATE	541	U	541	UJ	29	541	ug/kg	HT
SS	NDA121	SW8270	DI-n-BUTYL PHTHALATE	409	U	409	UJ	22	409	ug/kg	HT
SS	NDA122	SW8270	DI-n-BUTYL PHTHALATE	450	U	450	UJ	24	450	ug/kg	HT
SS	NDA123	SW8270	DI-n-BUTYL PHTHALATE	450	U	450	UJ	24	450	ug/kg	HT
SS	NDA124	SW8270	DI-n-BUTYL PHTHALATE	432	U	432	UJ	23	432	ug/kg	HT
SS	NDA071	SW8270	DI-n-BUTYL PHTHALATE	554	U	554	UJ	29	554	ug/kg	HT
SS	NDA072FD1	SW8270	DI-n-BUTYL PHTHALATE	413	U	413	UJ	22	413	ug/kg	HT
SS	NDA074	SW8270	DI-n-BUTYL PHTHALATE	448	U	448	UJ	24	448	ug/kg	HT
SS	NDA076	SW8270	DI-n-BUTYL PHTHALATE	419	U	419	UJ	22	419	ug/kg	HT
SS	NDA078	SW8270	DI-n-BUTYL PHTHALATE	440	U	440	UJ	23	440	ug/kg	HT
SS	NDA080RE1	SW8270	DI-n-BUTYL PHTHALATE	407	U	407	UJ	22	407	ug/kg	HT
SS	NDA082RE1	SW8270	DI-n-BUTYL PHTHALATE	4660	U	4660	UJ	247	4660	ug/kg	HT
SB	NDA213	SW8270	DIMETHYL PHTHALATE	485	U	485	UJ	32	485	ug/kg	HT
SB	NDA214FD1	SW8270	DIMETHYL PHTHALATE	487	U	487	UJ	32	487	ug/kg	HT
SB	NDA215	SW8270	DIMETHYL PHTHALATE	527	U	527	UJ	34	527	ug/kg	HT
SB	NDA216	SW8270	DIMETHYL PHTHALATE	537	U	537	UJ	35	537	ug/kg	HT
SB	NDA217	SW8270	DIMETHYL PHTHALATE	540	U	540	UJ	35	540	ug/kg	HT
SB	NDA218	SW8270	DIMETHYL PHTHALATE	505	U	505	UJ	33	505	ug/kg	HT
SB	NDA219	SW8270	DIMETHYL PHTHALATE	380	U	380	UJ	25	380	ug/kg	HT
SB	NDA220	SW8270	DIMETHYL PHTHALATE	542	U	542	UJ	35	542	ug/kg	HT
SB	NDA221	SW8270	DIMETHYL PHTHALATE	501	U	501	UJ	33	501	ug/kg	HT
SB	NDA222	SW8270	DIMETHYL PHTHALATE	459	U	459	UJ	30	459	ug/kg	HT
SB	NDA223	SW8270	DIMETHYL PHTHALATE	527	U	527	UJ	34	527	ug/kg	HT
SB	NDA235	SW8270	DIMETHYL PHTHALATE	504	U	504	UJ	33	504	ug/kg	HT
SB	NDA236	SW8270	DIMETHYL PHTHALATE	423	U	423	UJ	27	423	ug/kg	HT
SB	NDA237FD1	SW8270	DIMETHYL PHTHALATE	395	U	395	UJ	26	395	ug/kg	HT
SB	NDA238	SW8270	DIMETHYL PHTHALATE	424	U	424	UJ	28	424	ug/kg	HT
SB	NDA239	SW8270	DIMETHYL PHTHALATE	555	U	555	UJ	36	555	ug/kg	HT
SB	NDA240	SW8270	DIMETHYL PHTHALATE	397	U	397	UJ	26	397	ug/kg	HT
SB	NDA241	SW8270	DIMETHYL PHTHALATE	471	U	471	UJ	31	471	ug/kg	HT
SB	NDA242	SW8270	DIMETHYL PHTHALATE	436	U	436	UJ	28	436	ug/kg	HT
SB	NDA243	SW8270	DIMETHYL PHTHALATE	893	U	893	UJ	58	893	ug/kg	HT
SB	NDA244	SW8270	DIMETHYL PHTHALATE	388	U	388	UJ	25	388	ug/kg	HT
SB	NDA245	SW8270	DIMETHYL PHTHALATE	393	U	393	UJ	26	393	ug/kg	HT
SB	NDA246	SW8270	DIMETHYL PHTHALATE	511	U	511	UJ	33	511	ug/kg	HT
SB	NDA247FD1	SW8270	DIMETHYL PHTHALATE	390	U	390	UJ	25	390	ug/kg	HT
SB	NDA248	SW8270	DIMETHYL PHTHALATE	453	U	453	UJ	29	453	ug/kg	HT
SB	NDA249	SW8270	DIMETHYL PHTHALATE	374	U	374	UJ	24	374	ug/kg	HT
SB	NDA252	SW8270	DIMETHYL PHTHALATE	420	U	420	UJ	27	420	ug/kg	HT
SB	NDA253	SW8270	DIMETHYL PHTHALATE	439	U	439	UJ	29	439	ug/kg	HT
SB	NDA254	SW8270	DIMETHYL PHTHALATE	391	U	391	UJ	25	391	ug/kg	HT
SB	NDA255	SW8270	DIMETHYL PHTHALATE	375	U	375	UJ	24	375	ug/kg	HT
SB	NDA085	SW8270	DIMETHYL PHTHALATE	482	U	482	UJ	31	482	ug/kg	HT
SB	NDA092	SW8270	DIMETHYL PHTHALATE	400	U	400	UJ	26	400	ug/kg	HT
SB	NDA093	SW8270	DIMETHYL PHTHALATE	339	U	339	UJ	22	339	ug/kg	HT
SB	NDA094	SW8270	DIMETHYL PHTHALATE	510	U	510	UJ	33	510	ug/kg	HT
SB	NDA095FD1	SW8270	DIMETHYL PHTHALATE	310	U	310	UJ	20	310	ug/kg	HT
SB	NDA296	SW8270	DIMETHYL PHTHALATE	369	U	369	UJ	24	369	ug/kg	HT
SB	NDA297	SW8270	DIMETHYL PHTHALATE	358	U	358	UJ	23	358	ug/kg	HT
SB	NDA298	SW8270	DIMETHYL PHTHALATE	341	U	341	UJ	22	341	ug/kg	HT
SB	NDA299	SW8270	DIMETHYL PHTHALATE	370	U	370	UJ	24	370	ug/kg	HT
SB	NDA058	SW8270	DIMETHYL PHTHALATE	460	U	460	UJ	30	460	ug/kg	HT
SB	NDA060	SW8270	DIMETHYL PHTHALATE	478	U	478	UJ	31	478	ug/kg	HT
SB	NDA063	SW8270	DIMETHYL PHTHALATE	382	U	382	UJ	25	382	ug/kg	HT
SB	NDA064FD1	SW8270	DIMETHYL PHTHALATE	351	U	351	UJ	23	351	ug/kg	HT
SB	NDA066	SW8270	DIMETHYL PHTHALATE	344	U	344	UJ	22	344	ug/kg	HT
SB	NDA068	SW8270	DIMETHYL PHTHALATE	360	U	360	UJ	23	360	ug/kg	HT
SB	NDA070	SW8270	DIMETHYL PHTHALATE	404	U	404	UJ	26	404	ug/kg	HT
SB	NDA073	SW8270	DIMETHYL PHTHALATE	383	U	383	UJ	25	383	ug/kg	HT
SB	NDA075	SW8270	DIMETHYL PHTHALATE	401	U	401	UJ	26	401	ug/kg	HT
SB	NDA077	SW8270	DIMETHYL PHTHALATE	441	U	441	UJ	29	441	ug/kg	HT
SB	NDA079	SW8270	DIMETHYL PHTHALATE	466	U	466	UJ	30	466	ug/kg	HT
SB	NDA081RE1	SW8270	DIMETHYL PHTHALATE	393	U	393	UJ	26	393	ug/kg	HT
SB	NDA083RE1	SW8270	DIMETHYL PHTHALATE	4240	U	4240	UJ	275	4240	ug/kg	HT
SD	NDA054	SW8270	DIMETHYL PHTHALATE	480	U	480	UJ	31	480	ug/kg	HT

Matrix	Sample ID	Analytical Method	Parameter	Lab Result	Lab Qual	Final Result	Final Qual	DL	RL	Units	Comments
SD	NDA055	SW8270	DIMETHYL PHTHALATE	696	U	696	UJ	45	696	ug/kg	HT
SD	NDA042	SW8270	DIMETHYL PHTHALATE	686	U	686	UJ	45	686	ug/kg	HT
SD	NDA043	SW8270	DIMETHYL PHTHALATE	735	U	735	UJ	48	735	ug/kg	HT
SD	NDA044	SW8270	DIMETHYL PHTHALATE	1680	U	1680	UJ	109	1680	ug/kg	HT
SD	NDA045	SW8270	DIMETHYL PHTHALATE	1500	U	1500	UJ	98	1500	ug/kg	HT
SD	NDA046	SW8270	DIMETHYL PHTHALATE	1520	U	1520	UJ	99	1520	ug/kg	HT
SD	NDA302	SW8270	DIMETHYL PHTHALATE	1200	U	1200	UJ	78	1200	ug/kg	HT
SD	NDA303	SW8270	DIMETHYL PHTHALATE	2300	U	2300	UJ	150	2300	ug/kg	HT
SD	NDA307FD1	SW8270	DIMETHYL PHTHALATE	2130	U	2130	UJ	138	2130	ug/kg	HT
SD	NDA047	SW8270	DIMETHYL PHTHALATE	503	U	503	UJ	33	503	ug/kg	HT
SD	NDA048	SW8270	DIMETHYL PHTHALATE	558	U	558	UJ	36	558	ug/kg	HT
SD	NDA049	SW8270	DIMETHYL PHTHALATE	463	U	463	UJ	30	463	ug/kg	HT
SS	NDA178	SW8270	DIMETHYL PHTHALATE	644	U	644	UJ	42	644	ug/kg	HT
SS	NDA179	SW8270	DIMETHYL PHTHALATE	644	U	644	UJ	42	644	ug/kg	HT
SS	NDA180	SW8270	DIMETHYL PHTHALATE	550	U	550	UJ	36	550	ug/kg	HT
SS	NDA181	SW8270	DIMETHYL PHTHALATE	566	U	566	UJ	37	566	ug/kg	HT
SS	NDA182	SW8270	DIMETHYL PHTHALATE	679	U	679	UJ	44	679	ug/kg	HT
SS	NDA183	SW8270	DIMETHYL PHTHALATE	589	U	589	UJ	38	589	ug/kg	HT
SS	NDA184FD1	SW8270	DIMETHYL PHTHALATE	662	U	662	UJ	43	662	ug/kg	HT
SS	NDA201	SW8270	DIMETHYL PHTHALATE	491	U	491	UJ	32	491	ug/kg	HT
SS	NDA202	SW8270	DIMETHYL PHTHALATE	605	U	605	UJ	39	605	ug/kg	HT
SS	NDA203	SW8270	DIMETHYL PHTHALATE	617	U	617	UJ	40	617	ug/kg	HT
SS	NDA204	SW8270	DIMETHYL PHTHALATE	753	U	753	UJ	49	753	ug/kg	HT
SS	NDA205FD1	SW8270	DIMETHYL PHTHALATE	668	U	668	UJ	43	668	ug/kg	HT
SS	NDA206	SW8270	DIMETHYL PHTHALATE	529	U	529	UJ	34	529	ug/kg	HT
SS	NDA207	SW8270	DIMETHYL PHTHALATE	669	U	669	UJ	43	669	ug/kg	HT
SS	NDA208	SW8270	DIMETHYL PHTHALATE	520	U	520	UJ	34	520	ug/kg	HT
SS	NDA209	SW8270	DIMETHYL PHTHALATE	570	U	570	UJ	37	570	ug/kg	HT
SS	NDA210	SW8270	DIMETHYL PHTHALATE	545	U	545	UJ	35	545	ug/kg	HT
SS	NDA211	SW8270	DIMETHYL PHTHALATE	742	U	742	UJ	48	742	ug/kg	HT
SS	NDA212	SW8270	DIMETHYL PHTHALATE	651	U	651	UJ	42	651	ug/kg	HT
SS	NDA185	SW8270	DIMETHYL PHTHALATE	445	U	445	UJ	29	445	ug/kg	HT
SS	NDA186	SW8270	DIMETHYL PHTHALATE	416	U	416	UJ	27	416	ug/kg	HT
SS	NDA187	SW8270	DIMETHYL PHTHALATE	380	U	380	UJ	25	380	ug/kg	HT
SS	NDA188	SW8270	DIMETHYL PHTHALATE	810	U	810	UJ	53	810	ug/kg	HT
SS	NDA189	SW8270	DIMETHYL PHTHALATE	426	U	426	UJ	28	426	ug/kg	HT
SS	NDA190	SW8270	DIMETHYL PHTHALATE	430	U	430	UJ	28	430	ug/kg	HT
SS	NDA191	SW8270	DIMETHYL PHTHALATE	338	U	338	UJ	22	338	ug/kg	HT
SS	NDA192FD1	SW8270	DIMETHYL PHTHALATE	418	U	418	UJ	27	418	ug/kg	HT
SS	NDA193	SW8270	DIMETHYL PHTHALATE	1720	U	1720	UJ	112	1720	ug/kg	HT
SS	NDA194	SW8270	DIMETHYL PHTHALATE	480	U	480	UJ	31	480	ug/kg	HT
SS	NDA195	SW8270	DIMETHYL PHTHALATE	323	U	323	UJ	21	323	ug/kg	HT
SS	NDA084	SW8270	DIMETHYL PHTHALATE	344	U	344	UJ	22	344	ug/kg	HT
SS	NDA091	SW8270	DIMETHYL PHTHALATE	367	U	367	UJ	24	367	ug/kg	HT
SS	NDA057	SW8270	DIMETHYL PHTHALATE	563	U	563	UJ	37	563	ug/kg	HT
SS	NDA059	SW8270	DIMETHYL PHTHALATE	465	U	465	UJ	30	465	ug/kg	HT
SS	NDA061	SW8270	DIMETHYL PHTHALATE	469	U	469	UJ	30	469	ug/kg	HT
SS	NDA062FD1	SW8270	DIMETHYL PHTHALATE	523	U	523	UJ	34	523	ug/kg	HT
SS	NDA065	SW8270	DIMETHYL PHTHALATE	421	U	421	UJ	27	421	ug/kg	HT
SS	NDA067	SW8270	DIMETHYL PHTHALATE	378	U	378	UJ	25	378	ug/kg	HT
SS	NDA069	SW8270	DIMETHYL PHTHALATE	320	U	320	UJ	21	320	ug/kg	HT
SS	NDA119	SW8270	DIMETHYL PHTHALATE	503	U	503	UJ	33	503	ug/kg	HT
SS	NDA120	SW8270	DIMETHYL PHTHALATE	541	U	541	UJ	35	541	ug/kg	HT
SS	NDA121	SW8270	DIMETHYL PHTHALATE	409	U	409	UJ	27	409	ug/kg	HT
SS	NDA122	SW8270	DIMETHYL PHTHALATE	450	U	450	UJ	29	450	ug/kg	HT
SS	NDA123	SW8270	DIMETHYL PHTHALATE	450	U	450	UJ	29	450	ug/kg	HT
SS	NDA124	SW8270	DIMETHYL PHTHALATE	432	U	432	UJ	28	432	ug/kg	HT
SS	NDA071	SW8270	DIMETHYL PHTHALATE	554	U	554	UJ	36	554	ug/kg	HT
SS	NDA072FD1	SW8270	DIMETHYL PHTHALATE	413	U	413	UJ	27	413	ug/kg	HT
SS	NDA074	SW8270	DIMETHYL PHTHALATE	448	U	448	UJ	29	448	ug/kg	HT
SS	NDA076	SW8270	DIMETHYL PHTHALATE	419	U	419	UJ	27	419	ug/kg	HT
SS	NDA078	SW8270	DIMETHYL PHTHALATE	440	U	440	UJ	29	440	ug/kg	HT
SS	NDA080RE1	SW8270	DIMETHYL PHTHALATE	407	U	407	UJ	26	407	ug/kg	HT
SS	NDA082RE1	SW8270	DIMETHYL PHTHALATE	4660	U	4660	UJ	303	4660	ug/kg	HT
SB	NDA213	SW8270	DIETHYL PHTHALATE	485	U	485	UJ	40	485	ug/kg	HT
SB	NDA214FD1	SW8270	DIETHYL PHTHALATE	487	U	487	UJ	40	487	ug/kg	HT
SB	NDA215	SW8270	DIETHYL PHTHALATE	527	U	527	UJ	43	527	ug/kg	HT
SB	NDA216	SW8270	DIETHYL PHTHALATE	537	U	537	UJ	44	537	ug/kg	HT
SB	NDA217	SW8270	DIETHYL PHTHALATE	540	U	540	UJ	44	540	ug/kg	HT
SB	NDA218	SW8270	DIETHYL PHTHALATE	505	U	505	UJ	41	505	ug/kg	HT

Matrix	Sample ID	Analytical Method	Parameter	Lab Result	Lab Qual	Final Result	Final Qual	DL	RL	Units	Comments
SB	NDA219	SW8270	DIETHYL PHTHALATE	380	U	380	UJ	31	380	ug/kg	HT
SB	NDA220	SW8270	DIETHYL PHTHALATE	542	U	542	UJ	44	542	ug/kg	HT
SB	NDA221	SW8270	DIETHYL PHTHALATE	501	U	501	UJ	41	501	ug/kg	HT
SB	NDA222	SW8270	DIETHYL PHTHALATE	459	U	459	UJ	38	459	ug/kg	HT
SB	NDA223	SW8270	DIETHYL PHTHALATE	527	U	527	UJ	43	527	ug/kg	HT
SB	NDA235	SW8270	DIETHYL PHTHALATE	504	U	504	UJ	41	504	ug/kg	HT
SB	NDA236	SW8270	DIETHYL PHTHALATE	423	U	423	UJ	35	423	ug/kg	HT
SB	NDA237FD1	SW8270	DIETHYL PHTHALATE	395	U	395	UJ	32	395	ug/kg	HT
SB	NDA238	SW8270	DIETHYL PHTHALATE	424	U	424	UJ	35	424	ug/kg	HT
SB	NDA239	SW8270	DIETHYL PHTHALATE	555	U	555	UJ	46	555	ug/kg	HT
SB	NDA240	SW8270	DIETHYL PHTHALATE	397	U	397	UJ	33	397	ug/kg	HT
SB	NDA241	SW8270	DIETHYL PHTHALATE	471	U	471	UJ	39	471	ug/kg	HT
SB	NDA242	SW8270	DIETHYL PHTHALATE	436	U	436	UJ	36	436	ug/kg	HT
SB	NDA243	SW8270	DIETHYL PHTHALATE	893	U	893	UJ	73	893	ug/kg	HT
SB	NDA244	SW8270	DIETHYL PHTHALATE	388	U	388	UJ	32	388	ug/kg	HT
SB	NDA245	SW8270	DIETHYL PHTHALATE	393	U	393	UJ	32	393	ug/kg	HT
SB	NDA246	SW8270	DIETHYL PHTHALATE	511	U	511	UJ	42	511	ug/kg	HT
SB	NDA248	SW8270	DIETHYL PHTHALATE	453	U	453	UJ	37	453	ug/kg	HT
SB	NDA249	SW8270	DIETHYL PHTHALATE	374	U	374	UJ	31	374	ug/kg	HT
SB	NDA252	SW8270	DIETHYL PHTHALATE	420	U	420	UJ	34	420	ug/kg	HT
SB	NDA253	SW8270	DIETHYL PHTHALATE	439	U	439	UJ	36	439	ug/kg	HT
SB	NDA254	SW8270	DIETHYL PHTHALATE	391	U	391	UJ	32	391	ug/kg	HT
SB	NDA255	SW8270	DIETHYL PHTHALATE	375	U	375	UJ	31	375	ug/kg	HT
SB	NDA085	SW8270	DIETHYL PHTHALATE	482	U	482	UJ	40	482	ug/kg	HT
SB	NDA092	SW8270	DIETHYL PHTHALATE	400	U	400	UJ	33	400	ug/kg	HT
SB	NDA093	SW8270	DIETHYL PHTHALATE	339	U	339	UJ	28	339	ug/kg	HT
SB	NDA095FD1	SW8270	DIETHYL PHTHALATE	310	U	310	UJ	25	310	ug/kg	HT
SB	NDA296	SW8270	DIETHYL PHTHALATE	369	U	369	UJ	30	369	ug/kg	HT
SB	NDA297	SW8270	DIETHYL PHTHALATE	358	U	358	UJ	29	358	ug/kg	HT
SB	NDA298	SW8270	DIETHYL PHTHALATE	341	U	341	UJ	28	341	ug/kg	HT
SB	NDA299	SW8270	DIETHYL PHTHALATE	370	U	370	UJ	30	370	ug/kg	HT
SB	NDA058	SW8270	DIETHYL PHTHALATE	460	U	460	UJ	38	460	ug/kg	HT
SB	NDA060	SW8270	DIETHYL PHTHALATE	478	U	478	UJ	39	478	ug/kg	HT
SB	NDA063	SW8270	DIETHYL PHTHALATE	382	U	382	UJ	31	382	ug/kg	HT
SB	NDA064FD1	SW8270	DIETHYL PHTHALATE	351	U	351	UJ	29	351	ug/kg	HT
SB	NDA066	SW8270	DIETHYL PHTHALATE	344	U	344	UJ	28	344	ug/kg	HT
SB	NDA068	SW8270	DIETHYL PHTHALATE	360	U	360	UJ	29	360	ug/kg	HT
SB	NDA070	SW8270	DIETHYL PHTHALATE	404	U	404	UJ	33	404	ug/kg	HT
SB	NDA073	SW8270	DIETHYL PHTHALATE	383	U	383	UJ	31	383	ug/kg	HT
SB	NDA075	SW8270	DIETHYL PHTHALATE	401	U	401	UJ	33	401	ug/kg	HT
SB	NDA077	SW8270	DIETHYL PHTHALATE	441	U	441	UJ	36	441	ug/kg	HT
SB	NDA079	SW8270	DIETHYL PHTHALATE	466	U	466	UJ	38	466	ug/kg	HT
SB	NDA081RE1	SW8270	DIETHYL PHTHALATE	393	U	393	UJ	32	393	ug/kg	HT
SB	NDA083RE1	SW8270	DIETHYL PHTHALATE	4240	U	4240	UJ	347	4240	ug/kg	HT
SD	NDA054	SW8270	DIETHYL PHTHALATE	480	U	480	UJ	39	480	ug/kg	HT
SD	NDA055	SW8270	DIETHYL PHTHALATE	696	U	696	UJ	57	696	ug/kg	HT
SD	NDA042	SW8270	DIETHYL PHTHALATE	686	U	686	UJ	56	686	ug/kg	HT
SD	NDA043	SW8270	DIETHYL PHTHALATE	735	U	735	UJ	60	735	ug/kg	HT
SD	NDA044	SW8270	DIETHYL PHTHALATE	1680	U	1680	UJ	138	1680	ug/kg	HT
SD	NDA045	SW8270	DIETHYL PHTHALATE	1500	U	1500	UJ	123	1500	ug/kg	HT
SD	NDA046	SW8270	DIETHYL PHTHALATE	1520	U	1520	UJ	125	1520	ug/kg	HT
SD	NDA302	SW8270	DIETHYL PHTHALATE	1200	U	1200	UJ	98	1200	ug/kg	HT
SD	NDA303	SW8270	DIETHYL PHTHALATE	2300	U	2300	UJ	189	2300	ug/kg	HT
SD	NDA307FD1	SW8270	DIETHYL PHTHALATE	2130	U	2130	UJ	174	2130	ug/kg	HT
SD	NDA047	SW8270	DIETHYL PHTHALATE	503	U	503	UJ	41	503	ug/kg	HT
SD	NDA048	SW8270	DIETHYL PHTHALATE	558	U	558	UJ	46	558	ug/kg	HT
SD	NDA049	SW8270	DIETHYL PHTHALATE	463	U	463	UJ	38	463	ug/kg	HT
SS	NDA178	SW8270	DIETHYL PHTHALATE	644	U	644	UJ	53	644	ug/kg	HT
SS	NDA179	SW8270	DIETHYL PHTHALATE	644	U	644	UJ	53	644	ug/kg	HT
SS	NDA180	SW8270	DIETHYL PHTHALATE	550	U	550	UJ	45	550	ug/kg	HT
SS	NDA181	SW8270	DIETHYL PHTHALATE	566	U	566	UJ	46	566	ug/kg	HT
SS	NDA182	SW8270	DIETHYL PHTHALATE	679	U	679	UJ	56	679	ug/kg	HT
SS	NDA183	SW8270	DIETHYL PHTHALATE	589	U	589	UJ	48	589	ug/kg	HT
SS	NDA184FD1	SW8270	DIETHYL PHTHALATE	662	U	662	UJ	54	662	ug/kg	HT
SS	NDA201	SW8270	DIETHYL PHTHALATE	491	U	491	UJ	40	491	ug/kg	HT
SS	NDA202	SW8270	DIETHYL PHTHALATE	605	U	605	UJ	50	605	ug/kg	HT
SS	NDA203	SW8270	DIETHYL PHTHALATE	617	U	617	UJ	51	617	ug/kg	HT
SS	NDA204	SW8270	DIETHYL PHTHALATE	753	U	753	UJ	62	753	ug/kg	HT
SS	NDA205FD1	SW8270	DIETHYL PHTHALATE	668	U	668	UJ	55	668	ug/kg	HT
SS	NDA206	SW8270	DIETHYL PHTHALATE	529	U	529	UJ	43	529	ug/kg	HT

Matrix	Sample ID	Analytical Method	Parameter	Lab Result	Lab Qual	Final Result	Final Qual	DL	RL	Units	Comments
SS	NDA207	SW8270	DIETHYL PHTHALATE	669	U	669	UJ	55	669	ug/kg	HT
SS	NDA208	SW8270	DIETHYL PHTHALATE	520	U	520	UJ	43	520	ug/kg	HT
SS	NDA209	SW8270	DIETHYL PHTHALATE	570	U	570	UJ	47	570	ug/kg	HT
SS	NDA210	SW8270	DIETHYL PHTHALATE	545	U	545	UJ	45	545	ug/kg	HT
SS	NDA211	SW8270	DIETHYL PHTHALATE	742	U	742	UJ	61	742	ug/kg	HT
SS	NDA212	SW8270	DIETHYL PHTHALATE	651	U	651	UJ	53	651	ug/kg	HT
SS	NDA185	SW8270	DIETHYL PHTHALATE	445	U	445	UJ	37	445	ug/kg	HT
SS	NDA186	SW8270	DIETHYL PHTHALATE	416	U	416	UJ	34	416	ug/kg	HT
SS	NDA187	SW8270	DIETHYL PHTHALATE	380	U	380	UJ	31	380	ug/kg	HT
SS	NDA188	SW8270	DIETHYL PHTHALATE	810	U	810	UJ	66	810	ug/kg	HT
SS	NDA189	SW8270	DIETHYL PHTHALATE	426	U	426	UJ	35	426	ug/kg	HT
SS	NDA190	SW8270	DIETHYL PHTHALATE	430	U	430	UJ	35	430	ug/kg	HT
SS	NDA192FD1	SW8270	DIETHYL PHTHALATE	418	U	418	UJ	34	418	ug/kg	HT
SS	NDA193	SW8270	DIETHYL PHTHALATE	1720	U	1720	UJ	141	1720	ug/kg	HT
SS	NDA194	SW8270	DIETHYL PHTHALATE	480	U	480	UJ	39	480	ug/kg	HT
SS	NDA195	SW8270	DIETHYL PHTHALATE	323	U	323	UJ	26	323	ug/kg	HT
SS	NDA084	SW8270	DIETHYL PHTHALATE	344	U	344	UJ	28	344	ug/kg	HT
SS	NDA091	SW8270	DIETHYL PHTHALATE	367	U	367	UJ	30	367	ug/kg	HT
SS	NDA057	SW8270	DIETHYL PHTHALATE	563	U	563	UJ	46	563	ug/kg	HT
SS	NDA059	SW8270	DIETHYL PHTHALATE	465	U	465	UJ	38	465	ug/kg	HT
SS	NDA062FD1	SW8270	DIETHYL PHTHALATE	523	U	523	UJ	43	523	ug/kg	HT
SS	NDA067	SW8270	DIETHYL PHTHALATE	378	U	378	UJ	31	378	ug/kg	HT
SS	NDA069	SW8270	DIETHYL PHTHALATE	320	U	320	UJ	26	320	ug/kg	HT
SS	NDA119	SW8270	DIETHYL PHTHALATE	503	U	503	UJ	41	503	ug/kg	HT
SS	NDA120	SW8270	DIETHYL PHTHALATE	541	U	541	UJ	44	541	ug/kg	HT
SS	NDA121	SW8270	DIETHYL PHTHALATE	409	U	409	UJ	34	409	ug/kg	HT
SS	NDA122	SW8270	DIETHYL PHTHALATE	450	U	450	UJ	37	450	ug/kg	HT
SS	NDA123	SW8270	DIETHYL PHTHALATE	450	U	450	UJ	37	450	ug/kg	HT
SS	NDA124	SW8270	DIETHYL PHTHALATE	432	U	432	UJ	35	432	ug/kg	HT
SS	NDA071	SW8270	DIETHYL PHTHALATE	554	U	554	UJ	45	554	ug/kg	HT
SS	NDA072FD1	SW8270	DIETHYL PHTHALATE	413	U	413	UJ	34	413	ug/kg	HT
SS	NDA074	SW8270	DIETHYL PHTHALATE	448	U	448	UJ	37	448	ug/kg	HT
SS	NDA076	SW8270	DIETHYL PHTHALATE	419	U	419	UJ	34	419	ug/kg	HT
SS	NDA078	SW8270	DIETHYL PHTHALATE	440	U	440	UJ	36	440	ug/kg	HT
SS	NDA080RE1	SW8270	DIETHYL PHTHALATE	407	U	407	UJ	33	407	ug/kg	HT
SS	NDA082RE1	SW8270	DIETHYL PHTHALATE	4660	U	4660	UJ	382	4660	ug/kg	HT
SB	NDA165	SW8081	DIELDRIN	3.8	U	3.8	UJ	0.46	3.8	ug/kg	HT
SB	NDA167	SW8081	DIELDRIN	4.1	U	4.1	UJ	0.5	4.1	ug/kg	HT
SB	NDA169	SW8081	DIELDRIN	4	U	4	UJ	0.49	4	ug/kg	HT
SB	NDA171	SW8081	DIELDRIN	3.6	U	3.6	UJ	0.44	3.6	ug/kg	HT
SB	NDA173	SW8081	DIELDRIN	4.2	U	4.2	UJ	0.52	4.2	ug/kg	HT
SB	NDA175	SW8081	DIELDRIN	3.7	U	3.7	UJ	0.45	3.7	ug/kg	HT
SB	NDA177	SW8081	DIELDRIN	3.9	U	3.9	UJ	0.47	3.9	ug/kg	HT
SB	NDA213	SW8081	DIELDRIN	3.8	U	3.8	UJ	0.47	3.8	ug/kg	HT
SB	NDA214FD1	SW8081	DIELDRIN	3.7	U	3.7	UJ	0.46	3.7	ug/kg	HT
SB	NDA215	SW8081	DIELDRIN	3.8	U	3.8	UJ	0.47	3.8	ug/kg	HT
SB	NDA216	SW8081	DIELDRIN	3.6	U	3.6	UJ	0.45	3.6	ug/kg	HT
SB	NDA217	SW8081	DIELDRIN	3.8	U	3.8	UJ	0.47	3.8	ug/kg	HT
SB	NDA218	SW8081	DIELDRIN	3.7	U	3.7	UJ	0.45	3.7	ug/kg	HT
SB	NDA219	SW8081	DIELDRIN	3.7	U	3.7	UJ	0.45	3.7	ug/kg	HT
SB	NDA220	SW8081	DIELDRIN	3.8	U	3.8	UJ	0.47	3.8	ug/kg	HT
SB	NDA221	SW8081	DIELDRIN	3.6	U	3.6	UJ	0.44	3.6	ug/kg	HT
SB	NDA222	SW8081	DIELDRIN	3.3	U	3.3	UJ	0.41	3.3	ug/kg	HT
SB	NDA223	SW8081	DIELDRIN	3.8	U	3.8	UJ	0.47	3.8	ug/kg	HT
SB	NDA235	SW8081	DIELDRIN	4.4	U	4.4	UJ	0.54	4.4	ug/kg	HT
SB	NDA236	SW8081	DIELDRIN	3.8	U	3.8	UJ	0.46	3.8	ug/kg	HT
SB	NDA237FD1	SW8081	DIELDRIN	3.7	U	3.7	UJ	0.46	3.7	ug/kg	HT
SB	NDA238	SW8081	DIELDRIN	3.7	U	3.7	UJ	0.46	3.7	ug/kg	HT
SB	NDA239	SW8081	DIELDRIN	3.7	U	3.7	UJ	0.46	3.7	ug/kg	HT
SB	NDA240	SW8081	DIELDRIN	4	U	4	UJ	0.49	4	ug/kg	HT
SB	NDA241	SW8081	DIELDRIN	3.7	U	3.7	UJ	0.46	3.7	ug/kg	HT
SB	NDA242	SW8081	DIELDRIN	4.2	U	4.2	UJ	0.51	4.2	ug/kg	HT
SB	NDA243	SW8081	DIELDRIN	3.9	U	3.9	UJ	0.48	3.9	ug/kg	HT
SB	NDA244	SW8081	DIELDRIN	3.7	U	3.7	UJ	0.45	3.7	ug/kg	HT
SB	NDA245	SW8081	DIELDRIN	3.8	U	3.8	UJ	0.47	3.8	ug/kg	HT
SB	NDA246	SW8081	DIELDRIN	4.1	U	4.1	UJ	0.5	4.1	ug/kg	HT
SB	NDA247FD1	SW8081	DIELDRIN	3.8	U	3.8	UJ	0.47	3.8	ug/kg	HT
SB	NDA248	SW8081	DIELDRIN	4	U	4	UJ	0.49	4	ug/kg	HT
SB	NDA249	SW8081	DIELDRIN	3.7	U	3.7	UJ	0.46	3.7	ug/kg	HT
SB	NDA252	SW8081	DIELDRIN	3.9	U	3.9	UJ	0.48	3.9	ug/kg	HT

Matrix	Sample ID	Analytical Method	Parameter	Lab Result	Lab Qual	Final Result	Final Qual	DL	RL	Units	Comments
SB	NDA253	SW8081	DIELDRIN	4.2	U	4.2	UJ	0.51	4.2	ug/kg	HT
SB	NDA254	SW8081	DIELDRIN	4.2	U	4.2	UJ	0.51	4.2	ug/kg	HT
SB	NDA255	SW8081	DIELDRIN	4.1	U	4.1	UJ	0.5	4.1	ug/kg	HT
SB	NDA058	SW8081	DIELDRIN	3.7	U	3.7	UJ	0.45	3.7	ug/kg	HT
SB	NDA060	SW8081	DIELDRIN	3.7	U	3.7	UJ	0.45	3.7	ug/kg	HT
SB	NDA063	SW8081	DIELDRIN	3.6	U	3.6	UJ	0.44	3.6	ug/kg	HT
SB	NDA064FD1	SW8081	DIELDRIN	3.6	U	3.6	UJ	0.44	3.6	ug/kg	HT
SB	NDA066	SW8081	DIELDRIN	3.5	U	3.5	UJ	0.43	3.5	ug/kg	HT
SB	NDA068	SW8081	DIELDRIN	3.6	U	3.6	UJ	0.44	3.6	ug/kg	HT
SB	NDA070	SW8081	DIELDRIN	3.5	U	3.5	UJ	0.43	3.5	ug/kg	HT
SB	NDA073	SW8081	DIELDRIN	3.5	U	3.5	UJ	0.43	3.5	ug/kg	HT
SB	NDA075	SW8081	DIELDRIN	0.35	U	0.35	UJ	0.04	0.35	ug/kg	HT
SB	NDA077	SW8081	DIELDRIN	0.4	U	0.4	UJ	0.05	0.4	ug/kg	HT
SB	NDA081	SW8081	DIELDRIN	0.35	U	0.35	UJ	0.04	0.35	ug/kg	HT
SB	NDA083	SW8081	DIELDRIN	0.34	U	0.34	UJ	0.04	0.34	ug/kg	HT
SB	NDA114	SW8081	DIELDRIN	4.3	U	4.3	UJ	0.53	4.3	ug/kg	HT
SB	NDA116	SW8081	DIELDRIN	4.2	U	4.2	UJ	0.51	4.2	ug/kg	HT
SB	NDA118	SW8081	DIELDRIN	4.3	U	4.3	UJ	0.53	4.3	ug/kg	HT
SB	NDA102	SW8081	DIELDRIN	5.2	U	5.2	UJ	0.63	5.2	ug/kg	HT
SB	NDA105	SW8081	DIELDRIN	5.3	U	5.3	UJ	0.65	5.3	ug/kg	HT
SB	NDA106FD1	SW8081	DIELDRIN	5.3	U	5.3	UJ	0.65	5.3	ug/kg	HT
SB	NDA108	SW8081	DIELDRIN	4.4	U	4.4	UJ	0.54	4.4	ug/kg	HT
SB	NDA110	SW8081	DIELDRIN	4.4	U	4.4	UJ	0.54	4.4	ug/kg	HT
SB	NDA112	SW8081	DIELDRIN	4.3	U	4.3	UJ	0.53	4.3	ug/kg	HT
SD	NDA053	SW8081	DIELDRIN	25	U	25	UJ	3.1	25	ug/kg	HT
SD	NDA054	SW8081	DIELDRIN	4.4	=	4.4	J	0.42	3.4	ug/kg	HT
SD	NDA055	SW8081	DIELDRIN	3.3	U	3.3	UJ	0.41	3.3	ug/kg	HT
SD	NDA047	SW8081	DIELDRIN	3.6	U	3.6	UJ	0.45	3.6	ug/kg	HT
SD	NDA048	SW8081	DIELDRIN	3.8	U	3.8	UJ	0.47	3.8	ug/kg	HT
SD	NDA049	SW8081	DIELDRIN	3.6	U	3.6	UJ	0.45	3.6	ug/kg	HT
SS	NDA164	SW8081	DIELDRIN	4.1	U	4.1	UJ	0.5	4.1	ug/kg	HT
SS	NDA166	SW8081	DIELDRIN	4.1	U	4.1	UJ	0.51	4.1	ug/kg	HT
SS	NDA170	SW8081	DIELDRIN	4	U	4	UJ	0.49	4	ug/kg	HT
SS	NDA172	SW8081	DIELDRIN	3.6	U	3.6	UJ	0.44	3.6	ug/kg	HT
SS	NDA174	SW8081	DIELDRIN	3.5	U	3.5	UJ	0.43	3.5	ug/kg	HT
SS	NDA176	SW8081	DIELDRIN	9.3	U	9.3	UJ	1.1	9.3	ug/kg	HT
SS	NDA185	SW8081	DIELDRIN	3.9	U	3.9	UJ	0.48	3.9	ug/kg	HT
SS	NDA186	SW8081	DIELDRIN	3.7	U	3.7	UJ	0.46	3.7	ug/kg	HT
SS	NDA187	SW8081	DIELDRIN	3.6	U	3.6	UJ	0.44	3.6	ug/kg	HT
SS	NDA188	SW8081	DIELDRIN	4.6	U	4.6	UJ	0.56	4.6	ug/kg	HT
SS	NDA189	SW8081	DIELDRIN	3.7	U	3.7	UJ	0.46	3.7	ug/kg	HT
SS	NDA190	SW8081	DIELDRIN	3.8	U	3.8	UJ	0.46	3.8	ug/kg	HT
SS	NDA191	SW8081	DIELDRIN	3.4	U	3.4	UJ	0.42	3.4	ug/kg	HT
SS	NDA192FD1	SW8081	DIELDRIN	3.9	U	3.9	UJ	0.47	3.9	ug/kg	HT
SS	NDA194	SW8081	DIELDRIN	4.1	U	4.1	UJ	0.5	4.1	ug/kg	HT
SS	NDA195	SW8081	DIELDRIN	3.4	U	3.4	UJ	0.42	3.4	ug/kg	HT
SS	NDA057	SW8081	DIELDRIN	4.1	U	4.1	UJ	0.51	4.1	ug/kg	HT
SS	NDA059	SW8081	DIELDRIN	3.6	U	3.6	UJ	0.44	3.6	ug/kg	HT
SS	NDA061	SW8081	DIELDRIN	3.5	U	3.5	UJ	0.43	3.5	ug/kg	HT
SS	NDA062FD1	SW8081	DIELDRIN	3.5	U	3.5	UJ	0.43	3.5	ug/kg	HT
SS	NDA065	SW8081	DIELDRIN	4.2	U	4.2	UJ	0.51	4.2	ug/kg	HT
SS	NDA067	SW8081	DIELDRIN	3.6	U	3.6	UJ	0.44	3.6	ug/kg	HT
SS	NDA069	SW8081	DIELDRIN	3.4	U	3.4	UJ	0.41	3.4	ug/kg	HT
SS	NDA119	SW8081	DIELDRIN	3.7	U	3.7	UJ	0.46	3.7	ug/kg	HT
SS	NDA120	SW8081	DIELDRIN	4.4	U	4.4	UJ	0.54	4.4	ug/kg	HT
SS	NDA121	SW8081	DIELDRIN	3.6	U	3.6	UJ	0.45	3.6	ug/kg	HT
SS	NDA122	SW8081	DIELDRIN	3.7	U	3.7	UJ	0.46	3.7	ug/kg	HT
SS	NDA123	SW8081	DIELDRIN	3.7	U	3.7	UJ	0.46	3.7	ug/kg	HT
SS	NDA124	SW8081	DIELDRIN	3.7	U	3.7	UJ	0.46	3.7	ug/kg	HT
SS	NDA071	SW8081	DIELDRIN	4	U	4	UJ	0.49	4	ug/kg	HT
SS	NDA072FD1	SW8081	DIELDRIN	3.5	U	3.5	UJ	0.43	3.5	ug/kg	HT
SS	NDA074	SW8081	DIELDRIN	0.35	U	0.35	UJ	0.04	0.35	ug/kg	HT
SS	NDA078	SW8081	DIELDRIN	0.35	U	0.35	UJ	0.04	0.35	ug/kg	HT
SS	NDA080	SW8081	DIELDRIN	0.34	U	0.34	UJ	0.04	0.34	ug/kg	HT
SS	NDA082	SW8081	DIELDRIN	0.34	U	0.34	UJ	0.04	0.34	ug/kg	HT
SS	NDA113	SW8081	DIELDRIN	4.1	U	4.1	UJ	0.5	4.1	ug/kg	HT
SS	NDA115	SW8081	DIELDRIN	3.8	U	3.8	UJ	0.47	3.8	ug/kg	HT
SS	NDA117	SW8081	DIELDRIN	4.2	U	4.2	UJ	0.51	4.2	ug/kg	HT
SS	NDA101	SW8081	DIELDRIN	4.4	U	4.4	UJ	0.54	4.4	ug/kg	HT
SS	NDA103	SW8081	DIELDRIN	4.5	U	4.5	UJ	0.56	4.5	ug/kg	HT

Matrix	Sample ID	Analytical Method	Parameter	Lab Result	Lab Qual	Final Result	Final Qual	DL	RL	Units	Comments
SS	NDA104FD1	SW8081	DIELDRIN	4.7	U	4.7	UJ	0.58	4.7	ug/kg	HT
SS	NDA107	SW8081	DIELDRIN	4.2	U	4.2	UJ	0.51	4.2	ug/kg	HT
SS	NDA109	SW8081	DIELDRIN	4.3	U	4.3	UJ	0.53	4.3	ug/kg	HT
SS	NDA111	SW8081	DIELDRIN	4.4	U	4.4	UJ	0.54	4.4	ug/kg	HT
SB	NDA213	SW8270	DIBENZOFURAN	485	U	485	UJ	25	485	ug/kg	HT
SB	NDA214FD1	SW8270	DIBENZOFURAN	487	U	487	UJ	25	487	ug/kg	HT
SB	NDA215	SW8270	DIBENZOFURAN	527	U	527	UJ	27	527	ug/kg	HT
SB	NDA216	SW8270	DIBENZOFURAN	537	U	537	UJ	28	537	ug/kg	HT
SB	NDA217	SW8270	DIBENZOFURAN	540	U	540	UJ	28	540	ug/kg	HT
SB	NDA218	SW8270	DIBENZOFURAN	505	U	505	UJ	26	505	ug/kg	HT
SB	NDA219	SW8270	DIBENZOFURAN	380	U	380	UJ	20	380	ug/kg	HT
SB	NDA220	SW8270	DIBENZOFURAN	542	U	542	UJ	28	542	ug/kg	HT
SB	NDA221	SW8270	DIBENZOFURAN	501	U	501	UJ	26	501	ug/kg	HT
SB	NDA222	SW8270	DIBENZOFURAN	459	U	459	UJ	24	459	ug/kg	HT
SB	NDA223	SW8270	DIBENZOFURAN	527	U	527	UJ	27	527	ug/kg	HT
SB	NDA235	SW8270	DIBENZOFURAN	504	U	504	UJ	26	504	ug/kg	HT
SB	NDA236	SW8270	DIBENZOFURAN	423	U	423	UJ	22	423	ug/kg	HT
SB	NDA237FD1	SW8270	DIBENZOFURAN	395	U	395	UJ	21	395	ug/kg	HT
SB	NDA238	SW8270	DIBENZOFURAN	424	U	424	UJ	22	424	ug/kg	HT
SB	NDA239	SW8270	DIBENZOFURAN	555	U	555	UJ	29	555	ug/kg	HT
SB	NDA240	SW8270	DIBENZOFURAN	397	U	397	UJ	21	397	ug/kg	HT
SB	NDA241	SW8270	DIBENZOFURAN	471	U	471	UJ	24	471	ug/kg	HT
SB	NDA242	SW8270	DIBENZOFURAN	436	U	436	UJ	23	436	ug/kg	HT
SB	NDA243	SW8270	DIBENZOFURAN	893	U	893	UJ	46	893	ug/kg	HT
SB	NDA244	SW8270	DIBENZOFURAN	388	U	388	UJ	20	388	ug/kg	HT
SB	NDA245	SW8270	DIBENZOFURAN	393	U	393	UJ	20	393	ug/kg	HT
SB	NDA246	SW8270	DIBENZOFURAN	511	U	511	UJ	27	511	ug/kg	HT
SB	NDA247FD1	SW8270	DIBENZOFURAN	390	U	390	UJ	20	390	ug/kg	HT
SB	NDA248	SW8270	DIBENZOFURAN	453	U	453	UJ	24	453	ug/kg	HT
SB	NDA249	SW8270	DIBENZOFURAN	374	U	374	UJ	19	374	ug/kg	HT
SB	NDA252	SW8270	DIBENZOFURAN	420	U	420	UJ	22	420	ug/kg	HT
SB	NDA253	SW8270	DIBENZOFURAN	439	U	439	UJ	23	439	ug/kg	HT
SB	NDA254	SW8270	DIBENZOFURAN	391	U	391	UJ	20	391	ug/kg	HT
SB	NDA255	SW8270	DIBENZOFURAN	375	U	375	UJ	20	375	ug/kg	HT
SB	NDA085	SW8270	DIBENZOFURAN	482	U	482	UJ	25	482	ug/kg	HT
SB	NDA092	SW8270	DIBENZOFURAN	400	U	400	UJ	21	400	ug/kg	HT
SB	NDA093	SW8270	DIBENZOFURAN	339	U	339	UJ	18	339	ug/kg	HT
SB	NDA094	SW8270	DIBENZOFURAN	510	U	510	UJ	27	510	ug/kg	HT
SB	NDA095FD1	SW8270	DIBENZOFURAN	310	U	310	UJ	16	310	ug/kg	HT
SB	NDA296	SW8270	DIBENZOFURAN	369	U	369	UJ	19	369	ug/kg	HT
SB	NDA297	SW8270	DIBENZOFURAN	358	U	358	UJ	19	358	ug/kg	HT
SB	NDA298	SW8270	DIBENZOFURAN	341	U	341	UJ	18	341	ug/kg	HT
SB	NDA299	SW8270	DIBENZOFURAN	370	U	370	UJ	19	370	ug/kg	HT
SB	NDA058	SW8270	DIBENZOFURAN	460	U	460	UJ	24	460	ug/kg	HT
SB	NDA060	SW8270	DIBENZOFURAN	478	U	478	UJ	25	478	ug/kg	HT
SB	NDA063	SW8270	DIBENZOFURAN	382	U	382	UJ	20	382	ug/kg	HT
SB	NDA064FD1	SW8270	DIBENZOFURAN	351	U	351	UJ	18	351	ug/kg	HT
SB	NDA066	SW8270	DIBENZOFURAN	344	U	344	UJ	18	344	ug/kg	HT
SB	NDA068	SW8270	DIBENZOFURAN	360	U	360	UJ	19	360	ug/kg	HT
SB	NDA070	SW8270	DIBENZOFURAN	404	U	404	UJ	21	404	ug/kg	HT
SB	NDA073	SW8270	DIBENZOFURAN	383	U	383	UJ	20	383	ug/kg	HT
SB	NDA075	SW8270	DIBENZOFURAN	401	U	401	UJ	21	401	ug/kg	HT
SB	NDA077	SW8270	DIBENZOFURAN	441	U	441	UJ	23	441	ug/kg	HT
SB	NDA079	SW8270	DIBENZOFURAN	466	U	466	UJ	24	466	ug/kg	HT
SB	NDA081RE1	SW8270	DIBENZOFURAN	393	U	393	UJ	20	393	ug/kg	HT
SB	NDA083RE1	SW8270	DIBENZOFURAN	4240	U	4240	UJ	220	4240	ug/kg	HT
SD	NDA054	SW8270	DIBENZOFURAN	480	U	480	UJ	25	480	ug/kg	HT
SD	NDA055	SW8270	DIBENZOFURAN	696	U	696	UJ	36	696	ug/kg	HT
SD	NDA042	SW8270	DIBENZOFURAN	686	U	686	UJ	36	686	ug/kg	HT
SD	NDA043	SW8270	DIBENZOFURAN	735	U	735	UJ	38	735	ug/kg	HT
SD	NDA044	SW8270	DIBENZOFURAN	1680	U	1680	UJ	88	1680	ug/kg	HT
SD	NDA045	SW8270	DIBENZOFURAN	1500	U	1500	UJ	78	1500	ug/kg	HT
SD	NDA046	SW8270	DIBENZOFURAN	1520	U	1520	UJ	79	1520	ug/kg	HT
SD	NDA302	SW8270	DIBENZOFURAN	1200	U	1200	UJ	62	1200	ug/kg	HT
SD	NDA303	SW8270	DIBENZOFURAN	2300	U	2300	UJ	120	2300	ug/kg	HT
SD	NDA307FD1	SW8270	DIBENZOFURAN	2130	U	2130	UJ	111	2130	ug/kg	HT
SD	NDA047	SW8270	DIBENZOFURAN	503	U	503	UJ	26	503	ug/kg	HT
SD	NDA048	SW8270	DIBENZOFURAN	558	U	558	UJ	29	558	ug/kg	HT
SD	NDA049	SW8270	DIBENZOFURAN	463	U	463	UJ	24	463	ug/kg	HT
SS	NDA178	SW8270	DIBENZOFURAN	644	U	644	UJ	33	644	ug/kg	HT

Matrix	Sample ID	Analytical Method	Parameter	Lab Result	Lab Qual	Final Result	Final Qual	DL	RL	Units	Comments
SS	NDA179	SW8270	DIBENZOFURAN	644	U	644	UJ	33	644	ug/kg	HT
SS	NDA180	SW8270	DIBENZOFURAN	550	U	550	UJ	29	550	ug/kg	HT
SS	NDA181	SW8270	DIBENZOFURAN	566	U	566	UJ	29	566	ug/kg	HT
SS	NDA182	SW8270	DIBENZOFURAN	679	U	679	UJ	35	679	ug/kg	HT
SS	NDA183	SW8270	DIBENZOFURAN	589	U	589	UJ	31	589	ug/kg	HT
SS	NDA184FD1	SW8270	DIBENZOFURAN	662	U	662	UJ	34	662	ug/kg	HT
SS	NDA201	SW8270	DIBENZOFURAN	491	U	491	UJ	26	491	ug/kg	HT
SS	NDA202	SW8270	DIBENZOFURAN	605	U	605	UJ	31	605	ug/kg	HT
SS	NDA203	SW8270	DIBENZOFURAN	617	U	617	UJ	32	617	ug/kg	HT
SS	NDA204	SW8270	DIBENZOFURAN	753	U	753	UJ	39	753	ug/kg	HT
SS	NDA205FD1	SW8270	DIBENZOFURAN	668	U	668	UJ	35	668	ug/kg	HT
SS	NDA206	SW8270	DIBENZOFURAN	529	U	529	UJ	28	529	ug/kg	HT
SS	NDA207	SW8270	DIBENZOFURAN	669	U	669	UJ	35	669	ug/kg	HT
SS	NDA208	SW8270	DIBENZOFURAN	520	U	520	UJ	27	520	ug/kg	HT
SS	NDA209	SW8270	DIBENZOFURAN	570	U	570	UJ	30	570	ug/kg	HT
SS	NDA210	SW8270	DIBENZOFURAN	545	U	545	UJ	28	545	ug/kg	HT
SS	NDA211	SW8270	DIBENZOFURAN	742	U	742	UJ	39	742	ug/kg	HT
SS	NDA212	SW8270	DIBENZOFURAN	651	U	651	UJ	34	651	ug/kg	HT
SS	NDA185	SW8270	DIBENZOFURAN	445	U	445	UJ	23	445	ug/kg	HT
SS	NDA186	SW8270	DIBENZOFURAN	416	U	416	UJ	22	416	ug/kg	HT
SS	NDA187	SW8270	DIBENZOFURAN	380	U	380	UJ	20	380	ug/kg	HT
SS	NDA188	SW8270	DIBENZOFURAN	810	U	810	UJ	42	810	ug/kg	HT
SS	NDA189	SW8270	DIBENZOFURAN	426	U	426	UJ	22	426	ug/kg	HT
SS	NDA190	SW8270	DIBENZOFURAN	430	U	430	UJ	22	430	ug/kg	HT
SS	NDA191	SW8270	DIBENZOFURAN	338	U	338	UJ	18	338	ug/kg	HT
SS	NDA192FD1	SW8270	DIBENZOFURAN	418	U	418	UJ	22	418	ug/kg	HT
SS	NDA193	SW8270	DIBENZOFURAN	1720	U	1720	UJ	90	1720	ug/kg	HT
SS	NDA194	SW8270	DIBENZOFURAN	480	U	480	UJ	25	480	ug/kg	HT
SS	NDA195	SW8270	DIBENZOFURAN	323	U	323	UJ	17	323	ug/kg	HT
SS	NDA084	SW8270	DIBENZOFURAN	344	U	344	UJ	18	344	ug/kg	HT
SS	NDA091	SW8270	DIBENZOFURAN	367	U	367	UJ	19	367	ug/kg	HT
SS	NDA057	SW8270	DIBENZOFURAN	563	U	563	UJ	29	563	ug/kg	HT
SS	NDA059	SW8270	DIBENZOFURAN	465	U	465	UJ	24	465	ug/kg	HT
SS	NDA061	SW8270	DIBENZOFURAN	469	U	469	UJ	24	469	ug/kg	HT
SS	NDA062FD1	SW8270	DIBENZOFURAN	523	U	523	UJ	27	523	ug/kg	HT
SS	NDA065	SW8270	DIBENZOFURAN	421	U	421	UJ	22	421	ug/kg	HT
SS	NDA067	SW8270	DIBENZOFURAN	378	U	378	UJ	20	378	ug/kg	HT
SS	NDA069	SW8270	DIBENZOFURAN	320	U	320	UJ	17	320	ug/kg	HT
SS	NDA119	SW8270	DIBENZOFURAN	503	U	503	UJ	26	503	ug/kg	HT
SS	NDA120	SW8270	DIBENZOFURAN	541	U	541	UJ	28	541	ug/kg	HT
SS	NDA121	SW8270	DIBENZOFURAN	409	U	409	UJ	21	409	ug/kg	HT
SS	NDA122	SW8270	DIBENZOFURAN	450	U	450	UJ	23	450	ug/kg	HT
SS	NDA123	SW8270	DIBENZOFURAN	450	U	450	UJ	23	450	ug/kg	HT
SS	NDA124	SW8270	DIBENZOFURAN	432	U	432	UJ	22	432	ug/kg	HT
SS	NDA071	SW8270	DIBENZOFURAN	554	U	554	UJ	29	554	ug/kg	HT
SS	NDA072FD1	SW8270	DIBENZOFURAN	413	U	413	UJ	21	413	ug/kg	HT
SS	NDA074	SW8270	DIBENZOFURAN	448	U	448	UJ	23	448	ug/kg	HT
SS	NDA076	SW8270	DIBENZOFURAN	419	U	419	UJ	22	419	ug/kg	HT
SS	NDA078	SW8270	DIBENZOFURAN	440	U	440	UJ	23	440	ug/kg	HT
SS	NDA080RE1	SW8270	DIBENZOFURAN	407	U	407	UJ	21	407	ug/kg	HT
SS	NDA082RE1	SW8270	DIBENZOFURAN	4660	U	4660	UJ	242	4660	ug/kg	HT
SB	NDA213	SW8270	DIBENZ(a,h)ANTHRACENE	485	U	485	UJ	32	485	ug/kg	HT
SB	NDA214FD1	SW8270	DIBENZ(a,h)ANTHRACENE	487	U	487	UJ	32	487	ug/kg	HT
SB	NDA215	SW8270	DIBENZ(a,h)ANTHRACENE	527	U	527	UJ	35	527	ug/kg	HT
SB	NDA216	SW8270	DIBENZ(a,h)ANTHRACENE	537	U	537	UJ	35	537	ug/kg	HT
SB	NDA217	SW8270	DIBENZ(a,h)ANTHRACENE	540	U	540	UJ	36	540	ug/kg	HT
SB	NDA218	SW8270	DIBENZ(a,h)ANTHRACENE	505	U	505	UJ	33	505	ug/kg	HT
SB	NDA219	SW8270	DIBENZ(a,h)ANTHRACENE	380	U	380	UJ	25	380	ug/kg	HT
SB	NDA220	SW8270	DIBENZ(a,h)ANTHRACENE	542	U	542	UJ	36	542	ug/kg	HT
SB	NDA221	SW8270	DIBENZ(a,h)ANTHRACENE	501	U	501	UJ	33	501	ug/kg	HT
SB	NDA222	SW8270	DIBENZ(a,h)ANTHRACENE	459	U	459	UJ	30	459	ug/kg	HT
SB	NDA223	SW8270	DIBENZ(a,h)ANTHRACENE	527	U	527	UJ	35	527	ug/kg	HT
SB	NDA235	SW8270	DIBENZ(a,h)ANTHRACENE	504	U	504	UJ	33	504	ug/kg	HT
SB	NDA236	SW8270	DIBENZ(a,h)ANTHRACENE	423	U	423	UJ	28	423	ug/kg	HT
SB	NDA237FD1	SW8270	DIBENZ(a,h)ANTHRACENE	395	U	395	UJ	26	395	ug/kg	HT
SB	NDA238	SW8270	DIBENZ(a,h)ANTHRACENE	424	U	424	UJ	28	424	ug/kg	HT
SB	NDA239	SW8270	DIBENZ(a,h)ANTHRACENE	555	U	555	UJ	37	555	ug/kg	HT
SB	NDA240	SW8270	DIBENZ(a,h)ANTHRACENE	397	U	397	UJ	26	397	ug/kg	HT
SB	NDA241	SW8270	DIBENZ(a,h)ANTHRACENE	471	U	471	UJ	31	471	ug/kg	HT
SB	NDA242	SW8270	DIBENZ(a,h)ANTHRACENE	436	U	436	UJ	29	436	ug/kg	HT

Matrix	Sample ID	Analytical Method	Parameter	Lab Result	Lab Qual	Final Result	Final Qual	DL	RL	Units	Comments
SB	NDA243	SW8270	DIBENZ(a,h)ANTHRACENE	893	U	893	UJ	59	893	ug/kg	HT
SB	NDA244	SW8270	DIBENZ(a,h)ANTHRACENE	388	U	388	UJ	26	388	ug/kg	HT
SB	NDA245	SW8270	DIBENZ(a,h)ANTHRACENE	393	U	393	UJ	26	393	ug/kg	HT
SB	NDA246	SW8270	DIBENZ(a,h)ANTHRACENE	511	U	511	UJ	34	511	ug/kg	HT
SB	NDA247FD1	SW8270	DIBENZ(a,h)ANTHRACENE	390	U	390	UJ	26	390	ug/kg	HT
SB	NDA248	SW8270	DIBENZ(a,h)ANTHRACENE	453	U	453	UJ	30	453	ug/kg	HT
SB	NDA249	SW8270	DIBENZ(a,h)ANTHRACENE	374	U	374	UJ	25	374	ug/kg	HT
SB	NDA252	SW8270	DIBENZ(a,h)ANTHRACENE	420	U	420	UJ	28	420	ug/kg	HT
SB	NDA253	SW8270	DIBENZ(a,h)ANTHRACENE	439	U	439	UJ	29	439	ug/kg	HT
SB	NDA254	SW8270	DIBENZ(a,h)ANTHRACENE	391	U	391	UJ	26	391	ug/kg	HT
SB	NDA255	SW8270	DIBENZ(a,h)ANTHRACENE	375	U	375	UJ	25	375	ug/kg	HT
SB	NDA085	SW8270	DIBENZ(a,h)ANTHRACENE	482	U	482	UJ	32	482	ug/kg	HT
SB	NDA092	SW8270	DIBENZ(a,h)ANTHRACENE	400	U	400	UJ	26	400	ug/kg	HT
SB	NDA093	SW8270	DIBENZ(a,h)ANTHRACENE	339	U	339	UJ	22	339	ug/kg	HT
SB	NDA094	SW8270	DIBENZ(a,h)ANTHRACENE	510	U	510	UJ	34	510	ug/kg	HT
SB	NDA095FD1	SW8270	DIBENZ(a,h)ANTHRACENE	310	U	310	UJ	20	310	ug/kg	HT
SB	NDA296	SW8270	DIBENZ(a,h)ANTHRACENE	369	U	369	UJ	24	369	ug/kg	HT
SB	NDA298	SW8270	DIBENZ(a,h)ANTHRACENE	341	U	341	UJ	23	341	ug/kg	HT
SB	NDA299	SW8270	DIBENZ(a,h)ANTHRACENE	370	U	370	UJ	24	370	ug/kg	HT
SB	NDA058	SW8270	DIBENZ(a,h)ANTHRACENE	460	U	460	UJ	30	460	ug/kg	HT
SB	NDA060	SW8270	DIBENZ(a,h)ANTHRACENE	478	U	478	UJ	32	478	ug/kg	HT
SB	NDA063	SW8270	DIBENZ(a,h)ANTHRACENE	382	U	382	UJ	25	382	ug/kg	HT
SB	NDA064FD1	SW8270	DIBENZ(a,h)ANTHRACENE	351	U	351	UJ	23	351	ug/kg	HT
SB	NDA066	SW8270	DIBENZ(a,h)ANTHRACENE	344	U	344	UJ	23	344	ug/kg	HT
SB	NDA068	SW8270	DIBENZ(a,h)ANTHRACENE	360	U	360	UJ	24	360	ug/kg	HT
SB	NDA070	SW8270	DIBENZ(a,h)ANTHRACENE	404	U	404	UJ	27	404	ug/kg	HT
SB	NDA073	SW8270	DIBENZ(a,h)ANTHRACENE	383	U	383	UJ	25	383	ug/kg	HT
SB	NDA075	SW8270	DIBENZ(a,h)ANTHRACENE	401	U	401	UJ	26	401	ug/kg	HT
SB	NDA077	SW8270	DIBENZ(a,h)ANTHRACENE	441	U	441	UJ	29	441	ug/kg	HT
SB	NDA079	SW8270	DIBENZ(a,h)ANTHRACENE	466	U	466	UJ	31	466	ug/kg	HT
SB	NDA081RE1	SW8270	DIBENZ(a,h)ANTHRACENE	393	U	393	UJ	26	393	ug/kg	HT
SB	NDA083RE1	SW8270	DIBENZ(a,h)ANTHRACENE	4240	U	4240	UJ	280	4240	ug/kg	HT
SD	NDA054	SW8270	DIBENZ(a,h)ANTHRACENE	480	U	480	UJ	32	480	ug/kg	HT
SD	NDA055	SW8270	DIBENZ(a,h)ANTHRACENE	696	U	696	UJ	46	696	ug/kg	HT
SD	NDA042	SW8270	DIBENZ(a,h)ANTHRACENE	686	U	686	UJ	45	686	ug/kg	HT
SD	NDA043	SW8270	DIBENZ(a,h)ANTHRACENE	735	U	735	UJ	48	735	ug/kg	HT
SD	NDA044	SW8270	DIBENZ(a,h)ANTHRACENE	1680	U	1680	UJ	111	1680	ug/kg	HT
SD	NDA045	SW8270	DIBENZ(a,h)ANTHRACENE	1500	U	1500	UJ	99	1500	ug/kg	HT
SD	NDA046	SW8270	DIBENZ(a,h)ANTHRACENE	1520	U	1520	UJ	100	1520	ug/kg	HT
SD	NDA302	SW8270	DIBENZ(a,h)ANTHRACENE	1200	U	1200	UJ	79	1200	ug/kg	HT
SD	NDA303	SW8270	DIBENZ(a,h)ANTHRACENE	2300	U	2300	UJ	152	2300	ug/kg	HT
SD	NDA307FD1	SW8270	DIBENZ(a,h)ANTHRACENE	2130	U	2130	UJ	140	2130	ug/kg	HT
SD	NDA047	SW8270	DIBENZ(a,h)ANTHRACENE	503	U	503	UJ	33	503	ug/kg	HT
SD	NDA048	SW8270	DIBENZ(a,h)ANTHRACENE	558	U	558	UJ	37	558	ug/kg	HT
SD	NDA049	SW8270	DIBENZ(a,h)ANTHRACENE	463	U	463	UJ	31	463	ug/kg	HT
SS	NDA178	SW8270	DIBENZ(a,h)ANTHRACENE	644	U	644	UJ	42	644	ug/kg	HT
SS	NDA179	SW8270	DIBENZ(a,h)ANTHRACENE	644	U	644	UJ	43	644	ug/kg	HT
SS	NDA180	SW8270	DIBENZ(a,h)ANTHRACENE	550	U	550	UJ	36	550	ug/kg	HT
SS	NDA181	SW8270	DIBENZ(a,h)ANTHRACENE	566	U	566	UJ	37	566	ug/kg	HT
SS	NDA182	SW8270	DIBENZ(a,h)ANTHRACENE	679	U	679	UJ	45	679	ug/kg	HT
SS	NDA183	SW8270	DIBENZ(a,h)ANTHRACENE	589	U	589	UJ	39	589	ug/kg	HT
SS	NDA184FD1	SW8270	DIBENZ(a,h)ANTHRACENE	662	U	662	UJ	44	662	ug/kg	HT
SS	NDA201	SW8270	DIBENZ(a,h)ANTHRACENE	491	U	491	UJ	32	491	ug/kg	HT
SS	NDA202	SW8270	DIBENZ(a,h)ANTHRACENE	605	U	605	UJ	40	605	ug/kg	HT
SS	NDA203	SW8270	DIBENZ(a,h)ANTHRACENE	617	U	617	UJ	41	617	ug/kg	HT
SS	NDA204	SW8270	DIBENZ(a,h)ANTHRACENE	753	U	753	UJ	50	753	ug/kg	HT
SS	NDA205FD1	SW8270	DIBENZ(a,h)ANTHRACENE	668	U	668	UJ	44	668	ug/kg	HT
SS	NDA206	SW8270	DIBENZ(a,h)ANTHRACENE	529	U	529	UJ	35	529	ug/kg	HT
SS	NDA207	SW8270	DIBENZ(a,h)ANTHRACENE	669	U	669	UJ	44	669	ug/kg	HT
SS	NDA208	SW8270	DIBENZ(a,h)ANTHRACENE	520	U	520	UJ	34	520	ug/kg	HT
SS	NDA209	SW8270	DIBENZ(a,h)ANTHRACENE	570	U	570	UJ	38	570	ug/kg	HT
SS	NDA210	SW8270	DIBENZ(a,h)ANTHRACENE	545	U	545	UJ	36	545	ug/kg	HT
SS	NDA211	SW8270	DIBENZ(a,h)ANTHRACENE	742	U	742	UJ	49	742	ug/kg	HT
SS	NDA212	SW8270	DIBENZ(a,h)ANTHRACENE	651	U	651	UJ	43	651	ug/kg	HT
SS	NDA185	SW8270	DIBENZ(a,h)ANTHRACENE	445	U	445	UJ	29	445	ug/kg	HT
SS	NDA186	SW8270	DIBENZ(a,h)ANTHRACENE	416	U	416	UJ	27	416	ug/kg	HT
SS	NDA187	SW8270	DIBENZ(a,h)ANTHRACENE	380	U	380	UJ	25	380	ug/kg	HT
SS	NDA188	SW8270	DIBENZ(a,h)ANTHRACENE	810	U	810	UJ	53	810	ug/kg	HT
SS	NDA189	SW8270	DIBENZ(a,h)ANTHRACENE	426	U	426	UJ	28	426	ug/kg	HT
SS	NDA190	SW8270	DIBENZ(a,h)ANTHRACENE	430	U	430	UJ	28	430	ug/kg	HT

Matrix	Sample ID	Analytical Method	Parameter	Lab Result	Lab Qual	Final Result	Final Qual	DL	RL	Units	Comments
SS	NDA191	SW8270	DIBENZ(a,h)ANTHRACENE	338	U	338	UJ	22	338	ug/kg	HT
SS	NDA192FD1	SW8270	DIBENZ(a,h)ANTHRACENE	418	U	418	UJ	28	418	ug/kg	HT
SS	NDA193	SW8270	DIBENZ(a,h)ANTHRACENE	1720	U	1720	UJ	114	1720	ug/kg	HT
SS	NDA194	SW8270	DIBENZ(a,h)ANTHRACENE	480	U	480	UJ	32	480	ug/kg	HT
SS	NDA195	SW8270	DIBENZ(a,h)ANTHRACENE	323	U	323	UJ	21	323	ug/kg	HT
SS	NDA084	SW8270	DIBENZ(a,h)ANTHRACENE	344	U	344	UJ	23	344	ug/kg	HT
SS	NDA091	SW8270	DIBENZ(a,h)ANTHRACENE	367	U	367	UJ	24	367	ug/kg	HT
SS	NDA057	SW8270	DIBENZ(a,h)ANTHRACENE	563	U	563	UJ	37	563	ug/kg	HT
SS	NDA059	SW8270	DIBENZ(a,h)ANTHRACENE	465	U	465	UJ	31	465	ug/kg	HT
SS	NDA061	SW8270	DIBENZ(a,h)ANTHRACENE	469	U	469	UJ	31	469	ug/kg	HT
SS	NDA062FD1	SW8270	DIBENZ(a,h)ANTHRACENE	523	U	523	UJ	35	523	ug/kg	HT
SS	NDA065	SW8270	DIBENZ(a,h)ANTHRACENE	421	U	421	UJ	28	421	ug/kg	HT
SS	NDA067	SW8270	DIBENZ(a,h)ANTHRACENE	378	U	378	UJ	25	378	ug/kg	HT
SS	NDA069	SW8270	DIBENZ(a,h)ANTHRACENE	320	U	320	UJ	21	320	ug/kg	HT
SS	NDA119	SW8270	DIBENZ(a,h)ANTHRACENE	503	U	503	UJ	33	503	ug/kg	HT
SS	NDA120	SW8270	DIBENZ(a,h)ANTHRACENE	541	U	541	UJ	36	541	ug/kg	HT
SS	NDA122	SW8270	DIBENZ(a,h)ANTHRACENE	450	U	450	UJ	30	450	ug/kg	HT
SS	NDA124	SW8270	DIBENZ(a,h)ANTHRACENE	432	U	432	UJ	28	432	ug/kg	HT
SS	NDA071	SW8270	DIBENZ(a,h)ANTHRACENE	554	U	554	UJ	37	554	ug/kg	HT
SS	NDA072FD1	SW8270	DIBENZ(a,h)ANTHRACENE	413	U	413	UJ	27	413	ug/kg	HT
SS	NDA074	SW8270	DIBENZ(a,h)ANTHRACENE	448	U	448	UJ	30	448	ug/kg	HT
SS	NDA076	SW8270	DIBENZ(a,h)ANTHRACENE	419	U	419	UJ	28	419	ug/kg	HT
SS	NDA078	SW8270	DIBENZ(a,h)ANTHRACENE	440	U	440	UJ	29	440	ug/kg	HT
SS	NDA080RE1	SW8270	DIBENZ(a,h)ANTHRACENE	407	U	407	UJ	27	407	ug/kg	HT
SS	NDA082RE1	SW8270	DIBENZ(a,h)ANTHRACENE	4660	U	4660	UJ	307	4660	ug/kg	HT
SB	NDA213	SW8081	DELTA BHC	2	U	2	UJ	0.5	2	ug/kg	HT
SB	NDA214FD1	SW8081	DELTA BHC	1.9	U	1.9	UJ	0.49	1.9	ug/kg	HT
SB	NDA215	SW8081	DELTA BHC	2	U	2	UJ	0.51	2	ug/kg	HT
SB	NDA216	SW8081	DELTA BHC	1.8	U	1.8	UJ	0.48	1.8	ug/kg	HT
SB	NDA217	SW8081	DELTA BHC	1.9	U	1.9	UJ	0.5	1.9	ug/kg	HT
SB	NDA218	SW8081	DELTA BHC	1.9	U	1.9	UJ	0.48	1.9	ug/kg	HT
SB	NDA219	SW8081	DELTA BHC	1.9	U	1.9	UJ	0.49	1.9	ug/kg	HT
SB	NDA220	SW8081	DELTA BHC	1.9	U	1.9	UJ	0.5	1.9	ug/kg	HT
SB	NDA221	SW8081	DELTA BHC	1.8	U	1.8	UJ	0.47	1.8	ug/kg	HT
SB	NDA222	SW8081	DELTA BHC	1.7	U	1.7	UJ	0.44	1.7	ug/kg	HT
SB	NDA223	SW8081	DELTA BHC	1.9	U	1.9	UJ	0.5	1.9	ug/kg	HT
SB	NDA235	SW8081	DELTA BHC	2.2	U	2.2	UJ	0.58	2.2	ug/kg	HT
SB	NDA236	SW8081	DELTA BHC	1.9	U	1.9	UJ	0.5	1.9	ug/kg	HT
SB	NDA237FD1	SW8081	DELTA BHC	1.9	U	1.9	UJ	0.49	1.9	ug/kg	HT
SB	NDA238	SW8081	DELTA BHC	1.9	U	1.9	UJ	0.49	1.9	ug/kg	HT
SB	NDA239	SW8081	DELTA BHC	1.9	U	1.9	UJ	0.49	1.9	ug/kg	HT
SB	NDA240	SW8081	DELTA BHC	2	U	2	UJ	0.53	2	ug/kg	HT
SB	NDA241	SW8081	DELTA BHC	1.9	U	1.9	UJ	0.49	1.9	ug/kg	HT
SB	NDA242	SW8081	DELTA BHC	2.1	U	2.1	UJ	0.55	2.1	ug/kg	HT
SB	NDA243	SW8081	DELTA BHC	2	U	2	UJ	0.52	2	ug/kg	HT
SB	NDA244	SW8081	DELTA BHC	1.9	U	1.9	UJ	0.48	1.9	ug/kg	HT
SB	NDA245	SW8081	DELTA BHC	2	U	2	UJ	0.51	2	ug/kg	HT
SB	NDA246	SW8081	DELTA BHC	2.1	U	2.1	UJ	0.54	2.1	ug/kg	HT
SB	NDA247FD1	SW8081	DELTA BHC	2	U	2	UJ	0.51	2	ug/kg	HT
SB	NDA248	SW8081	DELTA BHC	2.1	U	2.1	UJ	0.53	2.1	ug/kg	HT
SB	NDA249	SW8081	DELTA BHC	1.9	U	1.9	UJ	0.49	1.9	ug/kg	HT
SB	NDA252	SW8081	DELTA BHC	2	U	2	UJ	0.51	2	ug/kg	HT
SB	NDA253	SW8081	DELTA BHC	2.1	U	2.1	UJ	0.55	2.1	ug/kg	HT
SB	NDA254	SW8081	DELTA BHC	2.1	U	2.1	UJ	0.55	2.1	ug/kg	HT
SB	NDA255	SW8081	DELTA BHC	2.1	U	2.1	UJ	0.54	2.1	ug/kg	HT
SB	NDA058	SW8081	DELTA BHC	1.9	U	1.9	UJ	0.49	1.9	ug/kg	HT
SB	NDA060	SW8081	DELTA BHC	1.9	U	1.9	UJ	0.48	1.9	ug/kg	HT
SB	NDA063	SW8081	DELTA BHC	1.8	U	1.8	UJ	0.47	1.8	ug/kg	HT
SB	NDA064FD1	SW8081	DELTA BHC	1.8	U	1.8	UJ	0.47	1.8	ug/kg	HT
SB	NDA066	SW8081	DELTA BHC	1.8	U	1.8	UJ	0.46	1.8	ug/kg	HT
SB	NDA068	SW8081	DELTA BHC	1.8	U	1.8	UJ	0.47	1.8	ug/kg	HT
SB	NDA070	SW8081	DELTA BHC	1.8	U	1.8	UJ	0.46	1.8	ug/kg	HT
SB	NDA073	SW8081	DELTA BHC	1.8	U	1.8	UJ	0.47	1.8	ug/kg	HT
SB	NDA075	SW8081	DELTA BHC	0.18	U	0.18	UJ	0.05	0.18	ug/kg	HT
SB	NDA077	SW8081	DELTA BHC	0.2	U	0.2	UJ	0.05	0.2	ug/kg	HT
SB	NDA081	SW8081	DELTA BHC	0.18	U	0.18	UJ	0.05	0.18	ug/kg	HT
SB	NDA083	SW8081	DELTA BHC	0.17	U	0.17	UJ	0.04	0.17	ug/kg	HT
SB	NDA114	SW8081	DELTA BHC	2.2	U	2.2	UJ	0.57	2.2	ug/kg	HT
SB	NDA116	SW8081	DELTA BHC	2.1	U	2.1	UJ	0.55	2.1	ug/kg	HT
SB	NDA118	SW8081	DELTA BHC	2.2	U	2.2	UJ	0.56	2.2	ug/kg	HT

Matrix	Sample ID	Analytical Method	Parameter	Lab Result	Lab Qual	Final Result	Final Qual	DL	RL	Units	Comments
SB	NDA102	SW8081	DELTA BHC	2.6	U	2.6	UJ	0.68	2.6	ug/kg	HT
SB	NDA105	SW8081	DELTA BHC	2.7	U	2.7	UJ	0.7	2.7	ug/kg	HT
SB	NDA106FD1	SW8081	DELTA BHC	2.7	U	2.7	UJ	0.7	2.7	ug/kg	HT
SB	NDA108	SW8081	DELTA BHC	2.3	U	2.3	UJ	0.59	2.3	ug/kg	HT
SB	NDA110	SW8081	DELTA BHC	2.3	U	2.3	UJ	0.58	2.3	ug/kg	HT
SB	NDA112	SW8081	DELTA BHC	2.2	U	2.2	UJ	0.57	2.2	ug/kg	HT
SD	NDA054	SW8081	DELTA BHC	1.7	U	1.7	UJ	0.45	1.7	ug/kg	HT
SD	NDA055	SW8081	DELTA BHC	1.7	U	1.7	UJ	0.44	1.7	ug/kg	HT
SD	NDA047	SW8081	DELTA BHC	1.9	U	1.9	UJ	0.48	1.9	ug/kg	HT
SD	NDA048	SW8081	DELTA BHC	1.9	U	1.9	UJ	0.5	1.9	ug/kg	HT
SD	NDA049	SW8081	DELTA BHC	1.9	U	1.9	UJ	0.48	1.9	ug/kg	HT
SS	NDA185	SW8081	DELTA BHC	2	U	2	UJ	0.52	2	ug/kg	HT
SS	NDA186	SW8081	DELTA BHC	1.9	U	1.9	UJ	0.49	1.9	ug/kg	HT
SS	NDA187	SW8081	DELTA BHC	1.8	U	1.8	UJ	0.47	1.8	ug/kg	HT
SS	NDA188	SW8081	DELTA BHC	2.3	U	2.3	UJ	0.6	2.3	ug/kg	HT
SS	NDA189	SW8081	DELTA BHC	1.9	U	1.9	UJ	0.49	1.9	ug/kg	HT
SS	NDA190	SW8081	DELTA BHC	1.9	U	1.9	UJ	0.49	1.9	ug/kg	HT
SS	NDA191	SW8081	DELTA BHC	1.7	U	1.7	UJ	0.45	1.7	ug/kg	HT
SS	NDA192FD1	SW8081	DELTA BHC	2	U	2	UJ	0.51	2	ug/kg	HT
SS	NDA193	SW8081	DELTA BHC	1.8	U	1.8	UJ	0.45	1.8	ug/kg	HT
SS	NDA194	SW8081	DELTA BHC	2.1	U	2.1	UJ	0.54	2.1	ug/kg	HT
SS	NDA195	SW8081	DELTA BHC	1.7	U	1.7	UJ	0.45	1.7	ug/kg	HT
SS	NDA057	SW8081	DELTA BHC	2.1	U	2.1	UJ	0.55	2.1	ug/kg	HT
SS	NDA059	SW8081	DELTA BHC	1.8	U	1.8	UJ	0.47	1.8	ug/kg	HT
SS	NDA061	SW8081	DELTA BHC	1.8	U	1.8	UJ	0.46	1.8	ug/kg	HT
SS	NDA062FD1	SW8081	DELTA BHC	1.8	U	1.8	UJ	0.47	1.8	ug/kg	HT
SS	NDA065	SW8081	DELTA BHC	2.1	U	2.1	UJ	0.55	2.1	ug/kg	HT
SS	NDA067	SW8081	DELTA BHC	1.8	U	1.8	UJ	0.47	1.8	ug/kg	HT
SS	NDA069	SW8081	DELTA BHC	1.7	U	1.7	UJ	0.44	1.7	ug/kg	HT
SS	NDA119	SW8081	DELTA BHC	1.9	U	1.9	UJ	0.49	1.9	ug/kg	HT
SS	NDA120	SW8081	DELTA BHC	2.2	U	2.2	UJ	0.58	2.2	ug/kg	HT
SS	NDA121	SW8081	DELTA BHC	1.9	U	1.9	UJ	0.48	1.9	ug/kg	HT
SS	NDA122	SW8081	DELTA BHC	1.9	U	1.9	UJ	0.49	1.9	ug/kg	HT
SS	NDA123	SW8081	DELTA BHC	1.9	U	1.9	UJ	0.49	1.9	ug/kg	HT
SS	NDA124	SW8081	DELTA BHC	1.9	U	1.9	UJ	0.49	1.9	ug/kg	HT
SS	NDA071	SW8081	DELTA BHC	2	U	2	UJ	0.52	2	ug/kg	HT
SS	NDA072FD1	SW8081	DELTA BHC	1.8	U	1.8	UJ	0.46	1.8	ug/kg	HT
SS	NDA074	SW8081	DELTA BHC	0.18	U	0.18	UJ	0.05	0.18	ug/kg	HT
SS	NDA078	SW8081	DELTA BHC	0.18	U	0.18	UJ	0.05	0.18	ug/kg	HT
SS	NDA080	SW8081	DELTA BHC	0.17	U	0.17	UJ	0.05	0.17	ug/kg	HT
SS	NDA082	SW8081	DELTA BHC	0.17	U	0.17	UJ	0.04	0.17	ug/kg	HT
SS	NDA113	SW8081	DELTA BHC	2.1	U	2.1	UJ	0.54	2.1	ug/kg	HT
SS	NDA115	SW8081	DELTA BHC	1.9	U	1.9	UJ	0.5	1.9	ug/kg	HT
SS	NDA117	SW8081	DELTA BHC	2.1	U	2.1	UJ	0.55	2.1	ug/kg	HT
SS	NDA101	SW8081	DELTA BHC	2.3	U	2.3	UJ	0.59	2.3	ug/kg	HT
SS	NDA103	SW8081	DELTA BHC	2.3	U	2.3	UJ	0.6	2.3	ug/kg	HT
SS	NDA104FD1	SW8081	DELTA BHC	2.4	U	2.4	UJ	0.62	2.4	ug/kg	HT
SS	NDA107	SW8081	DELTA BHC	2.1	U	2.1	UJ	0.55	2.1	ug/kg	HT
SS	NDA109	SW8081	DELTA BHC	2.2	U	2.2	UJ	0.57	2.2	ug/kg	HT
SS	NDA111	SW8081	DELTA BHC	2.2	U	2.2	UJ	0.58	2.2	ug/kg	HT
SB	NDA213	SW8270	CRESOLS, m & p	485	U	485	UJ	32	485	ug/kg	HT
SB	NDA214FD1	SW8270	CRESOLS, m & p	487	U	487	UJ	32	487	ug/kg	HT
SB	NDA215	SW8270	CRESOLS, m & p	527	U	527	UJ	34	527	ug/kg	HT
SB	NDA216	SW8270	CRESOLS, m & p	537	U	537	UJ	35	537	ug/kg	HT
SB	NDA217	SW8270	CRESOLS, m & p	540	U	540	UJ	35	540	ug/kg	HT
SB	NDA218	SW8270	CRESOLS, m & p	505	U	505	UJ	33	505	ug/kg	HT
SB	NDA219	SW8270	CRESOLS, m & p	380	U	380	UJ	25	380	ug/kg	HT
SB	NDA220	SW8270	CRESOLS, m & p	542	U	542	UJ	35	542	ug/kg	HT
SB	NDA221	SW8270	CRESOLS, m & p	501	U	501	UJ	33	501	ug/kg	HT
SB	NDA222	SW8270	CRESOLS, m & p	459	U	459	UJ	30	459	ug/kg	HT
SB	NDA223	SW8270	CRESOLS, m & p	527	U	527	UJ	34	527	ug/kg	HT
SB	NDA235	SW8270	CRESOLS, m & p	504	U	504	UJ	33	504	ug/kg	HT
SB	NDA236	SW8270	CRESOLS, m & p	423	U	423	UJ	27	423	ug/kg	HT
SB	NDA237FD1	SW8270	CRESOLS, m & p	395	U	395	UJ	26	395	ug/kg	HT
SB	NDA238	SW8270	CRESOLS, m & p	424	U	424	UJ	28	424	ug/kg	HT
SB	NDA239	SW8270	CRESOLS, m & p	555	U	555	UJ	36	555	ug/kg	HT
SB	NDA240	SW8270	CRESOLS, m & p	397	U	397	UJ	26	397	ug/kg	HT
SB	NDA241	SW8270	CRESOLS, m & p	471	U	471	UJ	31	471	ug/kg	HT
SB	NDA242	SW8270	CRESOLS, m & p	436	U	436	UJ	28	436	ug/kg	HT
SB	NDA243	SW8270	CRESOLS, m & p	893	U	893	UJ	58	893	ug/kg	HT

Matrix	Sample ID	Analytical Method	Parameter	Lab Result	Lab Qual	Final Result	Final Qual	DL	RL	Units	Comments
SB	NDA244	SW8270	CRESOLS, m & p	388	U	388	UJ	25	388	ug/kg	HT
SB	NDA245	SW8270	CRESOLS, m & p	393	U	393	UJ	26	393	ug/kg	HT
SB	NDA246	SW8270	CRESOLS, m & p	511	U	511	UJ	33	511	ug/kg	HT
SB	NDA247FD1	SW8270	CRESOLS, m & p	390	U	390	UJ	25	390	ug/kg	HT
SB	NDA248	SW8270	CRESOLS, m & p	453	U	453	UJ	29	453	ug/kg	HT
SB	NDA249	SW8270	CRESOLS, m & p	374	U	374	UJ	24	374	ug/kg	HT
SB	NDA252	SW8270	CRESOLS, m & p	420	U	420	UJ	27	420	ug/kg	HT
SB	NDA253	SW8270	CRESOLS, m & p	439	U	439	UJ	29	439	ug/kg	HT
SB	NDA254	SW8270	CRESOLS, m & p	391	U	391	UJ	25	391	ug/kg	HT
SB	NDA255	SW8270	CRESOLS, m & p	375	U	375	UJ	24	375	ug/kg	HT
SB	NDA085	SW8270	CRESOLS, m & p	482	U	482	UJ	31	482	ug/kg	HT
SB	NDA092	SW8270	CRESOLS, m & p	400	U	400	UJ	26	400	ug/kg	HT
SB	NDA093	SW8270	CRESOLS, m & p	339	U	339	UJ	22	339	ug/kg	HT
SB	NDA094	SW8270	CRESOLS, m & p	510	U	510	UJ	33	510	ug/kg	HT
SB	NDA095FD1	SW8270	CRESOLS, m & p	310	U	310	UJ	20	310	ug/kg	HT
SB	NDA296	SW8270	CRESOLS, m & p	369	U	369	UJ	24	369	ug/kg	HT
SB	NDA297	SW8270	CRESOLS, m & p	358	U	358	UJ	23	358	ug/kg	HT
SB	NDA298	SW8270	CRESOLS, m & p	341	U	341	UJ	22	341	ug/kg	HT
SB	NDA299	SW8270	CRESOLS, m & p	370	U	370	UJ	24	370	ug/kg	HT
SB	NDA058	SW8270	CRESOLS, m & p	460	U	460	UJ	30	460	ug/kg	HT
SB	NDA060	SW8270	CRESOLS, m & p	478	U	478	UJ	31	478	ug/kg	HT
SB	NDA063	SW8270	CRESOLS, m & p	382	U	382	UJ	25	382	ug/kg	HT
SB	NDA064FD1	SW8270	CRESOLS, m & p	351	U	351	UJ	23	351	ug/kg	HT
SB	NDA066	SW8270	CRESOLS, m & p	344	U	344	UJ	22	344	ug/kg	HT
SB	NDA068	SW8270	CRESOLS, m & p	360	U	360	UJ	23	360	ug/kg	HT
SB	NDA070	SW8270	CRESOLS, m & p	404	U	404	UJ	26	404	ug/kg	HT
SB	NDA073	SW8270	CRESOLS, m & p	383	U	383	UJ	25	383	ug/kg	HT
SB	NDA075	SW8270	CRESOLS, m & p	401	U	401	UJ	26	401	ug/kg	HT
SB	NDA077	SW8270	CRESOLS, m & p	441	U	441	UJ	29	441	ug/kg	HT
SB	NDA079	SW8270	CRESOLS, m & p	466	U	466	UJ	30	466	ug/kg	HT
SB	NDA081RE1	SW8270	CRESOLS, m & p	393	U	393	UJ	26	393	ug/kg	HT
SB	NDA083RE1	SW8270	CRESOLS, m & p	4240	U	4240	UJ	275	4240	ug/kg	HT
SD	NDA054	SW8270	CRESOLS, m & p	480	U	480	UJ	31	480	ug/kg	HT
SD	NDA055	SW8270	CRESOLS, m & p	696	U	696	UJ	45	696	ug/kg	HT
SD	NDA042	SW8270	CRESOLS, m & p	686	U	686	UJ	45	686	ug/kg	HT
SD	NDA043	SW8270	CRESOLS, m & p	735	U	735	UJ	48	735	ug/kg	HT
SD	NDA044	SW8270	CRESOLS, m & p	1680	U	1680	UJ	109	1680	ug/kg	HT
SD	NDA045	SW8270	CRESOLS, m & p	1500	U	1500	UJ	98	1500	ug/kg	HT
SD	NDA046	SW8270	CRESOLS, m & p	1520	U	1520	UJ	99	1520	ug/kg	HT
SD	NDA302	SW8270	CRESOLS, m & p	1200	U	1200	UJ	78	1200	ug/kg	HT
SD	NDA303	SW8270	CRESOLS, m & p	2300	U	2300	UJ	150	2300	ug/kg	HT
SD	NDA307FD1	SW8270	CRESOLS, m & p	2130	U	2130	UJ	138	2130	ug/kg	HT
SD	NDA047	SW8270	CRESOLS, m & p	503	U	503	UJ	33	503	ug/kg	HT
SD	NDA048	SW8270	CRESOLS, m & p	558	U	558	UJ	36	558	ug/kg	HT
SD	NDA049	SW8270	CRESOLS, m & p	463	U	463	UJ	30	463	ug/kg	HT
SS	NDA178	SW8270	CRESOLS, m & p	644	U	644	UJ	42	644	ug/kg	HT
SS	NDA179	SW8270	CRESOLS, m & p	644	U	644	UJ	42	644	ug/kg	HT
SS	NDA180	SW8270	CRESOLS, m & p	550	U	550	UJ	36	550	ug/kg	HT
SS	NDA181	SW8270	CRESOLS, m & p	566	U	566	UJ	37	566	ug/kg	HT
SS	NDA182	SW8270	CRESOLS, m & p	679	U	679	UJ	44	679	ug/kg	HT
SS	NDA183	SW8270	CRESOLS, m & p	589	U	589	UJ	38	589	ug/kg	HT
SS	NDA184FD1	SW8270	CRESOLS, m & p	662	U	662	UJ	43	662	ug/kg	HT
SS	NDA201	SW8270	CRESOLS, m & p	491	U	491	UJ	32	491	ug/kg	HT
SS	NDA202	SW8270	CRESOLS, m & p	605	U	605	UJ	39	605	ug/kg	HT
SS	NDA203	SW8270	CRESOLS, m & p	617	U	617	UJ	40	617	ug/kg	HT
SS	NDA204	SW8270	CRESOLS, m & p	753	U	753	UJ	49	753	ug/kg	HT
SS	NDA205FD1	SW8270	CRESOLS, m & p	668	U	668	UJ	43	668	ug/kg	HT
SS	NDA206	SW8270	CRESOLS, m & p	529	U	529	UJ	34	529	ug/kg	HT
SS	NDA207	SW8270	CRESOLS, m & p	669	U	669	UJ	43	669	ug/kg	HT
SS	NDA208	SW8270	CRESOLS, m & p	520	U	520	UJ	34	520	ug/kg	HT
SS	NDA209	SW8270	CRESOLS, m & p	570	U	570	UJ	37	570	ug/kg	HT
SS	NDA210	SW8270	CRESOLS, m & p	545	U	545	UJ	35	545	ug/kg	HT
SS	NDA211	SW8270	CRESOLS, m & p	742	U	742	UJ	48	742	ug/kg	HT
SS	NDA212	SW8270	CRESOLS, m & p	651	U	651	UJ	42	651	ug/kg	HT
SS	NDA185	SW8270	CRESOLS, m & p	445	U	445	UJ	29	445	ug/kg	HT
SS	NDA186	SW8270	CRESOLS, m & p	416	U	416	UJ	27	416	ug/kg	HT
SS	NDA187	SW8270	CRESOLS, m & p	380	U	380	UJ	25	380	ug/kg	HT
SS	NDA188	SW8270	CRESOLS, m & p	810	U	810	UJ	53	810	ug/kg	HT
SS	NDA189	SW8270	CRESOLS, m & p	426	U	426	UJ	28	426	ug/kg	HT
SS	NDA190	SW8270	CRESOLS, m & p	430	U	430	UJ	28	430	ug/kg	HT

Matrix	Sample ID	Analytical Method	Parameter	Lab Result	Lab Qual	Final Result	Final Qual	DL	RL	Units	Comments
SS	NDA191	SW8270	CRESOLS, m & p	338	U	338	UJ	22	338	ug/kg	HT
SS	NDA192FD1	SW8270	CRESOLS, m & p	418	U	418	UJ	27	418	ug/kg	HT
SS	NDA193	SW8270	CRESOLS, m & p	1720	U	1720	UJ	112	1720	ug/kg	HT
SS	NDA194	SW8270	CRESOLS, m & p	480	U	480	UJ	31	480	ug/kg	HT
SS	NDA195	SW8270	CRESOLS, m & p	323	U	323	UJ	21	323	ug/kg	HT
SS	NDA084	SW8270	CRESOLS, m & p	344	U	344	UJ	22	344	ug/kg	HT
SS	NDA091	SW8270	CRESOLS, m & p	367	U	367	UJ	24	367	ug/kg	HT
SS	NDA057	SW8270	CRESOLS, m & p	563	U	563	UJ	37	563	ug/kg	HT
SS	NDA059	SW8270	CRESOLS, m & p	465	U	465	UJ	30	465	ug/kg	HT
SS	NDA061	SW8270	CRESOLS, m & p	469	U	469	UJ	30	469	ug/kg	HT
SS	NDA062FD1	SW8270	CRESOLS, m & p	523	U	523	UJ	34	523	ug/kg	HT
SS	NDA065	SW8270	CRESOLS, m & p	421	U	421	UJ	27	421	ug/kg	HT
SS	NDA067	SW8270	CRESOLS, m & p	378	U	378	UJ	25	378	ug/kg	HT
SS	NDA069	SW8270	CRESOLS, m & p	320	U	320	UJ	21	320	ug/kg	HT
SS	NDA119	SW8270	CRESOLS, m & p	503	U	503	UJ	33	503	ug/kg	HT
SS	NDA120	SW8270	CRESOLS, m & p	541	U	541	UJ	35	541	ug/kg	HT
SS	NDA121	SW8270	CRESOLS, m & p	409	U	409	UJ	27	409	ug/kg	HT
SS	NDA122	SW8270	CRESOLS, m & p	450	U	450	UJ	29	450	ug/kg	HT
SS	NDA123	SW8270	CRESOLS, m & p	450	U	450	UJ	29	450	ug/kg	HT
SS	NDA124	SW8270	CRESOLS, m & p	432	U	432	UJ	28	432	ug/kg	HT
SS	NDA071	SW8270	CRESOLS, m & p	554	U	554	UJ	36	554	ug/kg	HT
SS	NDA072FD1	SW8270	CRESOLS, m & p	413	U	413	UJ	27	413	ug/kg	HT
SS	NDA074	SW8270	CRESOLS, m & p	448	U	448	UJ	29	448	ug/kg	HT
SS	NDA076	SW8270	CRESOLS, m & p	419	U	419	UJ	27	419	ug/kg	HT
SS	NDA078	SW8270	CRESOLS, m & p	440	U	440	UJ	29	440	ug/kg	HT
SS	NDA080RE1	SW8270	CRESOLS, m & p	407	U	407	UJ	26	407	ug/kg	HT
SS	NDA082RE1	SW8270	CRESOLS, m & p	4660	U	4660	UJ	303	4660	ug/kg	HT
SB	NDA213	SW8270	CHRYSENE	485	U	485	UJ	28	485	ug/kg	HT
SB	NDA214FD1	SW8270	CHRYSENE	487	U	487	UJ	28	487	ug/kg	HT
SB	NDA215	SW8270	CHRYSENE	527	U	527	UJ	30	527	ug/kg	HT
SB	NDA216	SW8270	CHRYSENE	537	U	537	UJ	31	537	ug/kg	HT
SB	NDA217	SW8270	CHRYSENE	540	U	540	UJ	31	540	ug/kg	HT
SB	NDA218	SW8270	CHRYSENE	505	U	505	UJ	29	505	ug/kg	HT
SB	NDA219	SW8270	CHRYSENE	380	U	380	UJ	22	380	ug/kg	HT
SB	NDA220	SW8270	CHRYSENE	542	U	542	UJ	31	542	ug/kg	HT
SB	NDA221	SW8270	CHRYSENE	501	U	501	UJ	29	501	ug/kg	HT
SB	NDA222	SW8270	CHRYSENE	459	U	459	UJ	26	459	ug/kg	HT
SB	NDA223	SW8270	CHRYSENE	527	U	527	UJ	30	527	ug/kg	HT
SB	NDA235	SW8270	CHRYSENE	504	U	504	UJ	29	504	ug/kg	HT
SB	NDA236	SW8270	CHRYSENE	423	U	423	UJ	24	423	ug/kg	HT
SB	NDA237FD1	SW8270	CHRYSENE	395	U	395	UJ	22	395	ug/kg	HT
SB	NDA238	SW8270	CHRYSENE	424	U	424	UJ	24	424	ug/kg	HT
SB	NDA239	SW8270	CHRYSENE	555	U	555	UJ	32	555	ug/kg	HT
SB	NDA240	SW8270	CHRYSENE	397	U	397	UJ	23	397	ug/kg	HT
SB	NDA241	SW8270	CHRYSENE	471	U	471	UJ	27	471	ug/kg	HT
SB	NDA242	SW8270	CHRYSENE	436	U	436	UJ	25	436	ug/kg	HT
SB	NDA243	SW8270	CHRYSENE	893	U	893	UJ	51	893	ug/kg	HT
SB	NDA244	SW8270	CHRYSENE	388	U	388	UJ	22	388	ug/kg	HT
SB	NDA245	SW8270	CHRYSENE	393	U	393	UJ	22	393	ug/kg	HT
SB	NDA246	SW8270	CHRYSENE	511	U	511	UJ	29	511	ug/kg	HT
SB	NDA247FD1	SW8270	CHRYSENE	390	U	390	UJ	22	390	ug/kg	HT
SB	NDA248	SW8270	CHRYSENE	453	U	453	UJ	26	453	ug/kg	HT
SB	NDA249	SW8270	CHRYSENE	374	U	374	UJ	21	374	ug/kg	HT
SB	NDA252	SW8270	CHRYSENE	420	U	420	UJ	24	420	ug/kg	HT
SB	NDA253	SW8270	CHRYSENE	439	U	439	UJ	25	439	ug/kg	HT
SB	NDA254	SW8270	CHRYSENE	391	U	391	UJ	22	391	ug/kg	HT
SB	NDA255	SW8270	CHRYSENE	375	U	375	UJ	21	375	ug/kg	HT
SB	NDA085	SW8270	CHRYSENE	482	U	482	UJ	27	482	ug/kg	HT
SB	NDA092	SW8270	CHRYSENE	400	U	400	UJ	23	400	ug/kg	HT
SB	NDA093	SW8270	CHRYSENE	339	U	339	UJ	19	339	ug/kg	HT
SB	NDA094	SW8270	CHRYSENE	510	U	510	UJ	29	510	ug/kg	HT
SB	NDA095FD1	SW8270	CHRYSENE	310	U	310	UJ	18	310	ug/kg	HT
SB	NDA296	SW8270	CHRYSENE	369	U	369	UJ	21	369	ug/kg	HT
SB	NDA299	SW8270	CHRYSENE	370	U	370	UJ	21	370	ug/kg	HT
SB	NDA058	SW8270	CHRYSENE	460	U	460	UJ	26	460	ug/kg	HT
SB	NDA060	SW8270	CHRYSENE	478	U	478	UJ	27	478	ug/kg	HT
SB	NDA063	SW8270	CHRYSENE	382	U	382	UJ	22	382	ug/kg	HT
SB	NDA064FD1	SW8270	CHRYSENE	351	U	351	UJ	20	351	ug/kg	HT
SB	NDA066	SW8270	CHRYSENE	344	U	344	UJ	20	344	ug/kg	HT
SB	NDA068	SW8270	CHRYSENE	360	U	360	UJ	21	360	ug/kg	HT

Matrix	Sample ID	Analytical Method	Parameter	Lab Result	Lab Qual	Final Result	Final Qual	DL	RL	Units	Comments
SB	NDA070	SW8270	CHRYSENE	404	U	404	UJ	23	404	ug/kg	HT
SB	NDA073	SW8270	CHRYSENE	383	U	383	UJ	22	383	ug/kg	HT
SB	NDA075	SW8270	CHRYSENE	401	U	401	UJ	23	401	ug/kg	HT
SB	NDA077	SW8270	CHRYSENE	441	U	441	UJ	25	441	ug/kg	HT
SB	NDA079	SW8270	CHRYSENE	466	U	466	UJ	27	466	ug/kg	HT
SB	NDA081RE1	SW8270	CHRYSENE	393	U	393	UJ	22	393	ug/kg	HT
SB	NDA083RE1	SW8270	CHRYSENE	4240	U	4240	UJ	241	4240	ug/kg	HT
SD	NDA054	SW8270	CHRYSENE	480	U	480	UJ	27	480	ug/kg	HT
SD	NDA055	SW8270	CHRYSENE	696	U	696	UJ	40	696	ug/kg	HT
SD	NDA042	SW8270	CHRYSENE	686	U	686	UJ	39	686	ug/kg	HT
SD	NDA043	SW8270	CHRYSENE	735	U	735	UJ	42	735	ug/kg	HT
SD	NDA044	SW8270	CHRYSENE	1680	U	1680	UJ	96	1680	ug/kg	HT
SD	NDA045	SW8270	CHRYSENE	1500	U	1500	UJ	86	1500	ug/kg	HT
SD	NDA046	SW8270	CHRYSENE	1520	U	1520	UJ	87	1520	ug/kg	HT
SD	NDA302	SW8270	CHRYSENE	1200	U	1200	UJ	68	1200	ug/kg	HT
SD	NDA303	SW8270	CHRYSENE	2300	U	2300	UJ	131	2300	ug/kg	HT
SD	NDA307FD1	SW8270	CHRYSENE	2130	U	2130	UJ	121	2130	ug/kg	HT
SD	NDA047	SW8270	CHRYSENE	503	U	503	UJ	29	503	ug/kg	HT
SD	NDA048	SW8270	CHRYSENE	558	U	558	UJ	32	558	ug/kg	HT
SD	NDA049	SW8270	CHRYSENE	463	U	463	UJ	26	463	ug/kg	HT
SS	NDA178	SW8270	CHRYSENE	644	U	644	UJ	37	644	ug/kg	HT
SS	NDA179	SW8270	CHRYSENE	644	U	644	UJ	37	644	ug/kg	HT
SS	NDA181	SW8270	CHRYSENE	566	U	566	UJ	32	566	ug/kg	HT
SS	NDA182	SW8270	CHRYSENE	679	U	679	UJ	39	679	ug/kg	HT
SS	NDA183	SW8270	CHRYSENE	589	U	589	UJ	34	589	ug/kg	HT
SS	NDA201	SW8270	CHRYSENE	491	U	491	UJ	28	491	ug/kg	HT
SS	NDA202	SW8270	CHRYSENE	605	U	605	UJ	35	605	ug/kg	HT
SS	NDA203	SW8270	CHRYSENE	617	U	617	UJ	35	617	ug/kg	HT
SS	NDA204	SW8270	CHRYSENE	753	U	753	UJ	43	753	ug/kg	HT
SS	NDA205FD1	SW8270	CHRYSENE	668	U	668	UJ	38	668	ug/kg	HT
SS	NDA206	SW8270	CHRYSENE	529	U	529	UJ	30	529	ug/kg	HT
SS	NDA207	SW8270	CHRYSENE	669	U	669	UJ	38	669	ug/kg	HT
SS	NDA208	SW8270	CHRYSENE	520	U	520	UJ	30	520	ug/kg	HT
SS	NDA209	SW8270	CHRYSENE	570	U	570	UJ	33	570	ug/kg	HT
SS	NDA210	SW8270	CHRYSENE	545	U	545	UJ	31	545	ug/kg	HT
SS	NDA211	SW8270	CHRYSENE	742	U	742	UJ	42	742	ug/kg	HT
SS	NDA212	SW8270	CHRYSENE	651	U	651	UJ	37	651	ug/kg	HT
SS	NDA185	SW8270	CHRYSENE	445	U	445	UJ	25	445	ug/kg	HT
SS	NDA188	SW8270	CHRYSENE	810	U	810	UJ	46	810	ug/kg	HT
SS	NDA189	SW8270	CHRYSENE	426	U	426	UJ	24	426	ug/kg	HT
SS	NDA190	SW8270	CHRYSENE	430	U	430	UJ	24	430	ug/kg	HT
SS	NDA191	SW8270	CHRYSENE	338	U	338	UJ	19	338	ug/kg	HT
SS	NDA192FD1	SW8270	CHRYSENE	418	U	418	UJ	24	418	ug/kg	HT
SS	NDA193	SW8270	CHRYSENE	1720	U	1720	UJ	98	1720	ug/kg	HT
SS	NDA194	SW8270	CHRYSENE	480	U	480	UJ	27	480	ug/kg	HT
SS	NDA195	SW8270	CHRYSENE	323	U	323	UJ	18	323	ug/kg	HT
SS	NDA057	SW8270	CHRYSENE	563	U	563	UJ	32	563	ug/kg	HT
SS	NDA059	SW8270	CHRYSENE	465	U	465	UJ	26	465	ug/kg	HT
SS	NDA061	SW8270	CHRYSENE	469	U	469	UJ	27	469	ug/kg	HT
SS	NDA062FD1	SW8270	CHRYSENE	523	U	523	UJ	30	523	ug/kg	HT
SS	NDA065	SW8270	CHRYSENE	421	U	421	UJ	24	421	ug/kg	HT
SS	NDA067	SW8270	CHRYSENE	378	U	378	UJ	22	378	ug/kg	HT
SS	NDA069	SW8270	CHRYSENE	320	U	320	UJ	18	320	ug/kg	HT
SS	NDA119	SW8270	CHRYSENE	503	U	503	UJ	29	503	ug/kg	HT
SS	NDA120	SW8270	CHRYSENE	541	U	541	UJ	31	541	ug/kg	HT
SS	NDA071	SW8270	CHRYSENE	554	U	554	UJ	32	554	ug/kg	HT
SS	NDA072FD1	SW8270	CHRYSENE	413	U	413	UJ	24	413	ug/kg	HT
SS	NDA074	SW8270	CHRYSENE	448	U	448	UJ	26	448	ug/kg	HT
SS	NDA076	SW8270	CHRYSENE	419	U	419	UJ	24	419	ug/kg	HT
SS	NDA078	SW8270	CHRYSENE	440	U	440	UJ	25	440	ug/kg	HT
SS	NDA080RE1	SW8270	CHRYSENE	407	U	407	UJ	23	407	ug/kg	HT
SS	NDA082RE1	SW8270	CHRYSENE	4660	U	4660	UJ	266	4660	ug/kg	HT
SB	NDA213	SW8270	CARBAZOLE	485	U	485	UJ	31	485	ug/kg	HT
SB	NDA214FD1	SW8270	CARBAZOLE	487	U	487	UJ	31	487	ug/kg	HT
SB	NDA215	SW8270	CARBAZOLE	527	U	527	UJ	33	527	ug/kg	HT
SB	NDA216	SW8270	CARBAZOLE	537	U	537	UJ	34	537	ug/kg	HT
SB	NDA217	SW8270	CARBAZOLE	540	U	540	UJ	34	540	ug/kg	HT
SB	NDA218	SW8270	CARBAZOLE	505	U	505	UJ	32	505	ug/kg	HT
SB	NDA219	SW8270	CARBAZOLE	380	U	380	UJ	24	380	ug/kg	HT
SB	NDA220	SW8270	CARBAZOLE	542	U	542	UJ	34	542	ug/kg	HT

Matrix	Sample ID	Analytical Method	Parameter	Lab Result	Lab Qual	Final Result	Final Qual	DL	RL	Units	Comments
SB	NDA221	SW8270	CARBAZOLE	501	U	501	UJ	32	501	ug/kg	HT
SB	NDA222	SW8270	CARBAZOLE	459	U	459	UJ	29	459	ug/kg	HT
SB	NDA223	SW8270	CARBAZOLE	527	U	527	UJ	33	527	ug/kg	HT
SB	NDA235	SW8270	CARBAZOLE	504	U	504	UJ	32	504	ug/kg	HT
SB	NDA236	SW8270	CARBAZOLE	423	U	423	UJ	27	423	ug/kg	HT
SB	NDA237FD1	SW8270	CARBAZOLE	395	U	395	UJ	25	395	ug/kg	HT
SB	NDA238	SW8270	CARBAZOLE	424	U	424	UJ	27	424	ug/kg	HT
SB	NDA239	SW8270	CARBAZOLE	555	U	555	UJ	35	555	ug/kg	HT
SB	NDA240	SW8270	CARBAZOLE	397	U	397	UJ	25	397	ug/kg	HT
SB	NDA241	SW8270	CARBAZOLE	471	U	471	UJ	30	471	ug/kg	HT
SB	NDA242	SW8270	CARBAZOLE	436	U	436	UJ	27	436	ug/kg	HT
SB	NDA243	SW8270	CARBAZOLE	893	U	893	UJ	56	893	ug/kg	HT
SB	NDA244	SW8270	CARBAZOLE	388	U	388	UJ	24	388	ug/kg	HT
SB	NDA245	SW8270	CARBAZOLE	393	U	393	UJ	25	393	ug/kg	HT
SB	NDA246	SW8270	CARBAZOLE	511	U	511	UJ	32	511	ug/kg	HT
SB	NDA247FD1	SW8270	CARBAZOLE	390	U	390	UJ	25	390	ug/kg	HT
SB	NDA248	SW8270	CARBAZOLE	453	U	453	UJ	29	453	ug/kg	HT
SB	NDA249	SW8270	CARBAZOLE	374	U	374	UJ	24	374	ug/kg	HT
SB	NDA252	SW8270	CARBAZOLE	420	U	420	UJ	26	420	ug/kg	HT
SB	NDA253	SW8270	CARBAZOLE	439	U	439	UJ	28	439	ug/kg	HT
SB	NDA254	SW8270	CARBAZOLE	391	U	391	UJ	25	391	ug/kg	HT
SB	NDA255	SW8270	CARBAZOLE	375	U	375	UJ	24	375	ug/kg	HT
SB	NDA085	SW8270	CARBAZOLE	482	U	482	UJ	30	482	ug/kg	HT
SB	NDA092	SW8270	CARBAZOLE	400	U	400	UJ	25	400	ug/kg	HT
SB	NDA093	SW8270	CARBAZOLE	339	U	339	UJ	21	339	ug/kg	HT
SB	NDA094	SW8270	CARBAZOLE	510	U	510	UJ	32	510	ug/kg	HT
SB	NDA095FD1	SW8270	CARBAZOLE	310	U	310	UJ	20	310	ug/kg	HT
SB	NDA296	SW8270	CARBAZOLE	369	U	369	UJ	23	369	ug/kg	HT
SB	NDA297	SW8270	CARBAZOLE	358	U	358	UJ	23	358	ug/kg	HT
SB	NDA298	SW8270	CARBAZOLE	341	U	341	UJ	22	341	ug/kg	HT
SB	NDA299	SW8270	CARBAZOLE	370	U	370	UJ	23	370	ug/kg	HT
SB	NDA058	SW8270	CARBAZOLE	460	U	460	UJ	29	460	ug/kg	HT
SB	NDA060	SW8270	CARBAZOLE	478	U	478	UJ	30	478	ug/kg	HT
SB	NDA063	SW8270	CARBAZOLE	382	U	382	UJ	24	382	ug/kg	HT
SB	NDA064FD1	SW8270	CARBAZOLE	351	U	351	UJ	22	351	ug/kg	HT
SB	NDA066	SW8270	CARBAZOLE	344	U	344	UJ	22	344	ug/kg	HT
SB	NDA068	SW8270	CARBAZOLE	360	U	360	UJ	23	360	ug/kg	HT
SB	NDA070	SW8270	CARBAZOLE	404	U	404	UJ	25	404	ug/kg	HT
SB	NDA073	SW8270	CARBAZOLE	383	U	383	UJ	24	383	ug/kg	HT
SB	NDA075	SW8270	CARBAZOLE	401	U	401	UJ	25	401	ug/kg	HT
SB	NDA077	SW8270	CARBAZOLE	441	U	441	UJ	28	441	ug/kg	HT
SB	NDA079	SW8270	CARBAZOLE	466	U	466	UJ	29	466	ug/kg	HT
SB	NDA081RE1	SW8270	CARBAZOLE	393	U	393	UJ	25	393	ug/kg	HT
SB	NDA083RE1	SW8270	CARBAZOLE	4240	U	4240	UJ	267	4240	ug/kg	HT
SD	NDA054	SW8270	CARBAZOLE	480	U	480	UJ	30	480	ug/kg	HT
SD	NDA055	SW8270	CARBAZOLE	696	U	696	UJ	44	696	ug/kg	HT
SD	NDA042	SW8270	CARBAZOLE	686	U	686	UJ	43	686	ug/kg	HT
SD	NDA043	SW8270	CARBAZOLE	735	U	735	UJ	46	735	ug/kg	HT
SD	NDA044	SW8270	CARBAZOLE	1680	U	1680	UJ	106	1680	ug/kg	HT
SD	NDA045	SW8270	CARBAZOLE	1500	U	1500	UJ	95	1500	ug/kg	HT
SD	NDA046	SW8270	CARBAZOLE	1520	U	1520	UJ	96	1520	ug/kg	HT
SD	NDA302	SW8270	CARBAZOLE	1200	U	1200	UJ	76	1200	ug/kg	HT
SD	NDA303	SW8270	CARBAZOLE	2300	U	2300	UJ	145	2300	ug/kg	HT
SD	NDA307FD1	SW8270	CARBAZOLE	2130	U	2130	UJ	134	2130	ug/kg	HT
SD	NDA047	SW8270	CARBAZOLE	503	U	503	UJ	32	503	ug/kg	HT
SD	NDA048	SW8270	CARBAZOLE	558	U	558	UJ	35	558	ug/kg	HT
SD	NDA049	SW8270	CARBAZOLE	463	U	463	UJ	29	463	ug/kg	HT
SS	NDA178	SW8270	CARBAZOLE	644	U	644	UJ	41	644	ug/kg	HT
SS	NDA179	SW8270	CARBAZOLE	644	U	644	UJ	41	644	ug/kg	HT
SS	NDA180	SW8270	CARBAZOLE	550	U	550	UJ	35	550	ug/kg	HT
SS	NDA181	SW8270	CARBAZOLE	566	U	566	UJ	36	566	ug/kg	HT
SS	NDA182	SW8270	CARBAZOLE	679	U	679	UJ	43	679	ug/kg	HT
SS	NDA183	SW8270	CARBAZOLE	589	U	589	UJ	37	589	ug/kg	HT
SS	NDA184FD1	SW8270	CARBAZOLE	662	U	662	UJ	42	662	ug/kg	HT
SS	NDA201	SW8270	CARBAZOLE	491	U	491	UJ	31	491	ug/kg	HT
SS	NDA202	SW8270	CARBAZOLE	605	U	605	UJ	38	605	ug/kg	HT
SS	NDA203	SW8270	CARBAZOLE	617	U	617	UJ	39	617	ug/kg	HT
SS	NDA204	SW8270	CARBAZOLE	753	U	753	UJ	47	753	ug/kg	HT
SS	NDA205FD1	SW8270	CARBAZOLE	668	U	668	UJ	42	668	ug/kg	HT
SS	NDA206	SW8270	CARBAZOLE	529	U	529	UJ	33	529	ug/kg	HT

Matrix	Sample ID	Analytical Method	Parameter	Lab Result	Lab Qual	Final Result	Final Qual	DL	RL	Units	Comments
SS	NDA207	SW8270	CARBAZOLE	669	U	669	UJ	42	669	ug/kg	HT
SS	NDA208	SW8270	CARBAZOLE	520	U	520	UJ	33	520	ug/kg	HT
SS	NDA209	SW8270	CARBAZOLE	570	U	570	UJ	36	570	ug/kg	HT
SS	NDA210	SW8270	CARBAZOLE	545	U	545	UJ	34	545	ug/kg	HT
SS	NDA211	SW8270	CARBAZOLE	742	U	742	UJ	47	742	ug/kg	HT
SS	NDA212	SW8270	CARBAZOLE	651	U	651	UJ	41	651	ug/kg	HT
SS	NDA185	SW8270	CARBAZOLE	445	U	445	UJ	28	445	ug/kg	HT
SS	NDA186	SW8270	CARBAZOLE	416	U	416	UJ	26	416	ug/kg	HT
SS	NDA187	SW8270	CARBAZOLE	380	U	380	UJ	24	380	ug/kg	HT
SS	NDA188	SW8270	CARBAZOLE	810	U	810	UJ	51	810	ug/kg	HT
SS	NDA189	SW8270	CARBAZOLE	426	U	426	UJ	27	426	ug/kg	HT
SS	NDA190	SW8270	CARBAZOLE	430	U	430	UJ	27	430	ug/kg	HT
SS	NDA191	SW8270	CARBAZOLE	338	U	338	UJ	21	338	ug/kg	HT
SS	NDA192FD1	SW8270	CARBAZOLE	418	U	418	UJ	26	418	ug/kg	HT
SS	NDA193	SW8270	CARBAZOLE	1720	U	1720	UJ	108	1720	ug/kg	HT
SS	NDA194	SW8270	CARBAZOLE	480	U	480	UJ	30	480	ug/kg	HT
SS	NDA195	SW8270	CARBAZOLE	323	U	323	UJ	20	323	ug/kg	HT
SS	NDA084	SW8270	CARBAZOLE	344	U	344	UJ	22	344	ug/kg	HT
SS	NDA091	SW8270	CARBAZOLE	367	U	367	UJ	23	367	ug/kg	HT
SS	NDA057	SW8270	CARBAZOLE	563	U	563	UJ	35	563	ug/kg	HT
SS	NDA059	SW8270	CARBAZOLE	465	U	465	UJ	29	465	ug/kg	HT
SS	NDA061	SW8270	CARBAZOLE	469	U	469	UJ	30	469	ug/kg	HT
SS	NDA062FD1	SW8270	CARBAZOLE	523	U	523	UJ	33	523	ug/kg	HT
SS	NDA065	SW8270	CARBAZOLE	421	U	421	UJ	27	421	ug/kg	HT
SS	NDA067	SW8270	CARBAZOLE	378	U	378	UJ	24	378	ug/kg	HT
SS	NDA069	SW8270	CARBAZOLE	320	U	320	UJ	20	320	ug/kg	HT
SS	NDA119	SW8270	CARBAZOLE	503	U	503	UJ	32	503	ug/kg	HT
SS	NDA120	SW8270	CARBAZOLE	541	U	541	UJ	34	541	ug/kg	HT
SS	NDA121	SW8270	CARBAZOLE	409	U	409	UJ	26	409	ug/kg	HT
SS	NDA122	SW8270	CARBAZOLE	450	U	450	UJ	28	450	ug/kg	HT
SS	NDA124	SW8270	CARBAZOLE	432	U	432	UJ	27	432	ug/kg	HT
SS	NDA071	SW8270	CARBAZOLE	554	U	554	UJ	35	554	ug/kg	HT
SS	NDA072FD1	SW8270	CARBAZOLE	413	U	413	UJ	26	413	ug/kg	HT
SS	NDA074	SW8270	CARBAZOLE	448	U	448	UJ	28	448	ug/kg	HT
SS	NDA076	SW8270	CARBAZOLE	419	U	419	UJ	26	419	ug/kg	HT
SS	NDA078	SW8270	CARBAZOLE	440	U	440	UJ	28	440	ug/kg	HT
SS	NDA080RE1	SW8270	CARBAZOLE	407	U	407	UJ	26	407	ug/kg	HT
SS	NDA082RE1	SW8270	CARBAZOLE	4660	U	4660	UJ	294	4660	ug/kg	HT
SB	NDA213	SW8270	bis(2-ETHYLHEXYL) PHTHALATE	485	U	485	UJ	36	485	ug/kg	HT
SB	NDA214FD1	SW8270	bis(2-ETHYLHEXYL) PHTHALATE	487	U	487	UJ	37	487	ug/kg	HT
SB	NDA215	SW8270	bis(2-ETHYLHEXYL) PHTHALATE	527	U	527	UJ	40	527	ug/kg	HT
SB	NDA216	SW8270	bis(2-ETHYLHEXYL) PHTHALATE	537	U	537	UJ	40	537	ug/kg	HT
SB	NDA217	SW8270	bis(2-ETHYLHEXYL) PHTHALATE	540	U	540	UJ	41	540	ug/kg	HT
SB	NDA218	SW8270	bis(2-ETHYLHEXYL) PHTHALATE	505	U	505	UJ	38	505	ug/kg	HT
SB	NDA219	SW8270	bis(2-ETHYLHEXYL) PHTHALATE	380	U	380	UJ	29	380	ug/kg	HT
SB	NDA220	SW8270	bis(2-ETHYLHEXYL) PHTHALATE	542	U	542	UJ	41	542	ug/kg	HT
SB	NDA221	SW8270	bis(2-ETHYLHEXYL) PHTHALATE	501	U	501	UJ	38	501	ug/kg	HT
SB	NDA222	SW8270	bis(2-ETHYLHEXYL) PHTHALATE	459	U	459	UJ	34	459	ug/kg	HT
SB	NDA223	SW8270	bis(2-ETHYLHEXYL) PHTHALATE	527	U	527	UJ	40	527	ug/kg	HT
SB	NDA235	SW8270	bis(2-ETHYLHEXYL) PHTHALATE	504	U	504	UJ	38	504	ug/kg	HT
SB	NDA236	SW8270	bis(2-ETHYLHEXYL) PHTHALATE	423	U	423	UJ	32	423	ug/kg	HT
SB	NDA237FD1	SW8270	bis(2-ETHYLHEXYL) PHTHALATE	395	U	395	UJ	30	395	ug/kg	HT
SB	NDA238	SW8270	bis(2-ETHYLHEXYL) PHTHALATE	424	U	424	UJ	32	424	ug/kg	HT
SB	NDA239	SW8270	bis(2-ETHYLHEXYL) PHTHALATE	555	U	555	UJ	42	555	ug/kg	HT
SB	NDA240	SW8270	bis(2-ETHYLHEXYL) PHTHALATE	397	U	397	UJ	30	397	ug/kg	HT
SB	NDA241	SW8270	bis(2-ETHYLHEXYL) PHTHALATE	471	U	471	UJ	35	471	ug/kg	HT
SB	NDA242	SW8270	bis(2-ETHYLHEXYL) PHTHALATE	436	U	436	UJ	33	436	ug/kg	HT
SB	NDA243	SW8270	bis(2-ETHYLHEXYL) PHTHALATE	893	U	893	UJ	67	893	ug/kg	HT
SB	NDA244	SW8270	bis(2-ETHYLHEXYL) PHTHALATE	388	U	388	UJ	29	388	ug/kg	HT
SB	NDA245	SW8270	bis(2-ETHYLHEXYL) PHTHALATE	393	U	393	UJ	29	393	ug/kg	HT
SB	NDA246	SW8270	bis(2-ETHYLHEXYL) PHTHALATE	511	U	511	UJ	38	511	ug/kg	HT
SB	NDA247FD1	SW8270	bis(2-ETHYLHEXYL) PHTHALATE	390	U	390	UJ	29	390	ug/kg	HT
SB	NDA248	SW8270	bis(2-ETHYLHEXYL) PHTHALATE	453	U	453	UJ	34	453	ug/kg	HT
SB	NDA249	SW8270	bis(2-ETHYLHEXYL) PHTHALATE	374	U	374	UJ	28	374	ug/kg	HT
SB	NDA252	SW8270	bis(2-ETHYLHEXYL) PHTHALATE	420	U	420	UJ	31	420	ug/kg	HT
SB	NDA253	SW8270	bis(2-ETHYLHEXYL) PHTHALATE	439	U	439	UJ	33	439	ug/kg	HT
SB	NDA254	SW8270	bis(2-ETHYLHEXYL) PHTHALATE	391	U	391	UJ	29	391	ug/kg	HT
SB	NDA255	SW8270	bis(2-ETHYLHEXYL) PHTHALATE	375	U	375	UJ	28	375	ug/kg	HT
SB	NDA085	SW8270	bis(2-ETHYLHEXYL) PHTHALATE	482	U	482	UJ	36	482	ug/kg	HT
SB	NDA093	SW8270	bis(2-ETHYLHEXYL) PHTHALATE	339	U	339	UJ	25	339	ug/kg	HT

Matrix	Sample ID	Analytical Method	Parameter	Lab Result	Lab Qual	Final Result	Final Qual	DL	RL	Units	Comments
SB	NDA094	SW8270	bis(2-ETHYLHEXYL) PHTHALATE	510	U	510	UJ	38	510	ug/kg	HT
SB	NDA095FD1	SW8270	bis(2-ETHYLHEXYL) PHTHALATE	310	U	310	UJ	23	310	ug/kg	HT
SB	NDA296	SW8270	bis(2-ETHYLHEXYL) PHTHALATE	369	U	369	UJ	28	369	ug/kg	HT
SB	NDA297	SW8270	bis(2-ETHYLHEXYL) PHTHALATE	358	U	358	UJ	27	358	ug/kg	HT
SB	NDA298	SW8270	bis(2-ETHYLHEXYL) PHTHALATE	341	U	341	UJ	26	341	ug/kg	HT
SB	NDA299	SW8270	bis(2-ETHYLHEXYL) PHTHALATE	370	U	370	UJ	28	370	ug/kg	HT
SB	NDA058	SW8270	bis(2-ETHYLHEXYL) PHTHALATE	460	U	460	UJ	35	460	ug/kg	HT
SB	NDA060	SW8270	bis(2-ETHYLHEXYL) PHTHALATE	478	U	478	UJ	36	478	ug/kg	HT
SB	NDA063	SW8270	bis(2-ETHYLHEXYL) PHTHALATE	382	U	382	UJ	29	382	ug/kg	HT
SB	NDA064FD1	SW8270	bis(2-ETHYLHEXYL) PHTHALATE	351	U	351	UJ	26	351	ug/kg	HT
SB	NDA066	SW8270	bis(2-ETHYLHEXYL) PHTHALATE	344	U	344	UJ	26	344	ug/kg	HT
SB	NDA068	SW8270	bis(2-ETHYLHEXYL) PHTHALATE	360	U	360	UJ	27	360	ug/kg	HT
SB	NDA073	SW8270	bis(2-ETHYLHEXYL) PHTHALATE	383	U	383	UJ	29	383	ug/kg	HT
SB	NDA075	SW8270	bis(2-ETHYLHEXYL) PHTHALATE	401	U	401	UJ	30	401	ug/kg	HT
SB	NDA077	SW8270	bis(2-ETHYLHEXYL) PHTHALATE	441	U	441	UJ	33	441	ug/kg	HT
SB	NDA079	SW8270	bis(2-ETHYLHEXYL) PHTHALATE	466	U	466	UJ	35	466	ug/kg	HT
SB	NDA081RE1	SW8270	bis(2-ETHYLHEXYL) PHTHALATE	393	U	393	UJ	29	393	ug/kg	HT
SB	NDA083RE1	SW8270	bis(2-ETHYLHEXYL) PHTHALATE	4240	U	4240	UJ	318	4240	ug/kg	HT
SD	NDA054	SW8270	bis(2-ETHYLHEXYL) PHTHALATE	480	U	480	UJ	36	480	ug/kg	HT
SD	NDA055	SW8270	bis(2-ETHYLHEXYL) PHTHALATE	696	U	696	UJ	52	696	ug/kg	HT
SD	NDA042	SW8270	bis(2-ETHYLHEXYL) PHTHALATE	686	U	686	UJ	51	686	ug/kg	HT
SD	NDA043	SW8270	bis(2-ETHYLHEXYL) PHTHALATE	735	U	735	UJ	55	735	ug/kg	HT
SD	NDA044	SW8270	bis(2-ETHYLHEXYL) PHTHALATE	1680	U	1680	UJ	126	1680	ug/kg	HT
SD	NDA045	SW8270	bis(2-ETHYLHEXYL) PHTHALATE	1500	U	1500	UJ	113	1500	ug/kg	HT
SD	NDA046	SW8270	bis(2-ETHYLHEXYL) PHTHALATE	1520	U	1520	UJ	114	1520	ug/kg	HT
SD	NDA302	SW8270	bis(2-ETHYLHEXYL) PHTHALATE	1200	U	1200	UJ	90	1200	ug/kg	HT
SD	NDA303	SW8270	bis(2-ETHYLHEXYL) PHTHALATE	2300	U	2300	UJ	173	2300	ug/kg	HT
SD	NDA307FD1	SW8270	bis(2-ETHYLHEXYL) PHTHALATE	2130	U	2130	UJ	159	2130	ug/kg	HT
SD	NDA047	SW8270	bis(2-ETHYLHEXYL) PHTHALATE	503	U	503	UJ	38	503	ug/kg	HT
SD	NDA048	SW8270	bis(2-ETHYLHEXYL) PHTHALATE	558	U	558	UJ	42	558	ug/kg	HT
SD	NDA049	SW8270	bis(2-ETHYLHEXYL) PHTHALATE	463	U	463	UJ	35	463	ug/kg	HT
SS	NDA178	SW8270	bis(2-ETHYLHEXYL) PHTHALATE	644	U	644	UJ	48	644	ug/kg	HT
SS	NDA179	SW8270	bis(2-ETHYLHEXYL) PHTHALATE	644	U	644	UJ	48	644	ug/kg	HT
SS	NDA181	SW8270	bis(2-ETHYLHEXYL) PHTHALATE	566	U	566	UJ	42	566	ug/kg	HT
SS	NDA182	SW8270	bis(2-ETHYLHEXYL) PHTHALATE	679	U	679	UJ	51	679	ug/kg	HT
SS	NDA183	SW8270	bis(2-ETHYLHEXYL) PHTHALATE	589	U	589	UJ	44	589	ug/kg	HT
SS	NDA184FD1	SW8270	bis(2-ETHYLHEXYL) PHTHALATE	662	U	662	UJ	50	662	ug/kg	HT
SS	NDA201	SW8270	bis(2-ETHYLHEXYL) PHTHALATE	491	U	491	UJ	37	491	ug/kg	HT
SS	NDA202	SW8270	bis(2-ETHYLHEXYL) PHTHALATE	605	U	605	UJ	45	605	ug/kg	HT
SS	NDA203	SW8270	bis(2-ETHYLHEXYL) PHTHALATE	617	U	617	UJ	46	617	ug/kg	HT
SS	NDA204	SW8270	bis(2-ETHYLHEXYL) PHTHALATE	753	U	753	UJ	57	753	ug/kg	HT
SS	NDA205FD1	SW8270	bis(2-ETHYLHEXYL) PHTHALATE	668	U	668	UJ	50	668	ug/kg	HT
SS	NDA206	SW8270	bis(2-ETHYLHEXYL) PHTHALATE	529	U	529	UJ	40	529	ug/kg	HT
SS	NDA207	SW8270	bis(2-ETHYLHEXYL) PHTHALATE	669	U	669	UJ	50	669	ug/kg	HT
SS	NDA208	SW8270	bis(2-ETHYLHEXYL) PHTHALATE	520	U	520	UJ	39	520	ug/kg	HT
SS	NDA209	SW8270	bis(2-ETHYLHEXYL) PHTHALATE	570	U	570	UJ	43	570	ug/kg	HT
SS	NDA210	SW8270	bis(2-ETHYLHEXYL) PHTHALATE	545	U	545	UJ	41	545	ug/kg	HT
SS	NDA211	SW8270	bis(2-ETHYLHEXYL) PHTHALATE	742	U	742	UJ	56	742	ug/kg	HT
SS	NDA212	SW8270	bis(2-ETHYLHEXYL) PHTHALATE	651	U	651	UJ	49	651	ug/kg	HT
SS	NDA185	SW8270	bis(2-ETHYLHEXYL) PHTHALATE	445	U	445	UJ	33	445	ug/kg	HT
SS	NDA186	SW8270	bis(2-ETHYLHEXYL) PHTHALATE	416	U	416	UJ	31	416	ug/kg	HT
SS	NDA187	SW8270	bis(2-ETHYLHEXYL) PHTHALATE	380	U	380	UJ	28	380	ug/kg	HT
SS	NDA188	SW8270	bis(2-ETHYLHEXYL) PHTHALATE	810	U	810	UJ	61	810	ug/kg	HT
SS	NDA189	SW8270	bis(2-ETHYLHEXYL) PHTHALATE	426	U	426	UJ	32	426	ug/kg	HT
SS	NDA190	SW8270	bis(2-ETHYLHEXYL) PHTHALATE	430	U	430	UJ	32	430	ug/kg	HT
SS	NDA191	SW8270	bis(2-ETHYLHEXYL) PHTHALATE	338	U	338	UJ	25	338	ug/kg	HT
SS	NDA192FD1	SW8270	bis(2-ETHYLHEXYL) PHTHALATE	418	U	418	UJ	31	418	ug/kg	HT
SS	NDA193	SW8270	bis(2-ETHYLHEXYL) PHTHALATE	1720	U	1720	UJ	129	1720	ug/kg	HT
SS	NDA194	SW8270	bis(2-ETHYLHEXYL) PHTHALATE	480	U	480	UJ	36	480	ug/kg	HT
SS	NDA195	SW8270	bis(2-ETHYLHEXYL) PHTHALATE	323	U	323	UJ	24	323	ug/kg	HT
SS	NDA084	SW8270	bis(2-ETHYLHEXYL) PHTHALATE	344	U	344	UJ	26	344	ug/kg	HT
SS	NDA091	SW8270	bis(2-ETHYLHEXYL) PHTHALATE	367	U	367	UJ	27	367	ug/kg	HT
SS	NDA057	SW8270	bis(2-ETHYLHEXYL) PHTHALATE	563	U	563	UJ	42	563	ug/kg	HT
SS	NDA061	SW8270	bis(2-ETHYLHEXYL) PHTHALATE	469	U	469	UJ	35	469	ug/kg	HT
SS	NDA062FD1	SW8270	bis(2-ETHYLHEXYL) PHTHALATE	523	U	523	UJ	39	523	ug/kg	HT
SS	NDA065	SW8270	bis(2-ETHYLHEXYL) PHTHALATE	421	U	421	UJ	32	421	ug/kg	HT
SS	NDA067	SW8270	bis(2-ETHYLHEXYL) PHTHALATE	378	U	378	UJ	28	378	ug/kg	HT
SS	NDA069	SW8270	bis(2-ETHYLHEXYL) PHTHALATE	320	U	320	UJ	24	320	ug/kg	HT
SS	NDA119	SW8270	bis(2-ETHYLHEXYL) PHTHALATE	503	U	503	UJ	38	503	ug/kg	HT
SS	NDA120	SW8270	bis(2-ETHYLHEXYL) PHTHALATE	919	=	919	J	41	541	ug/kg	HT

Matrix	Sample ID	Analytical Method	Parameter	Lab Result	Lab Qual	Final Result	Final Qual	DL	RL	Units	Comments
SS	NDA122	SW8270	bis(2-ETHYLHEXYL) PHTHALATE	450	U	450	UJ	34	450	ug/kg	HT
SS	NDA124	SW8270	bis(2-ETHYLHEXYL) PHTHALATE	432	U	432	UJ	32	432	ug/kg	HT
SS	NDA071	SW8270	bis(2-ETHYLHEXYL) PHTHALATE	554	U	554	UJ	42	554	ug/kg	HT
SS	NDA072FD1	SW8270	bis(2-ETHYLHEXYL) PHTHALATE	413	U	413	UJ	31	413	ug/kg	HT
SS	NDA074	SW8270	bis(2-ETHYLHEXYL) PHTHALATE	448	U	448	UJ	34	448	ug/kg	HT
SS	NDA076	SW8270	bis(2-ETHYLHEXYL) PHTHALATE	419	U	419	UJ	31	419	ug/kg	HT
SS	NDA078	SW8270	bis(2-ETHYLHEXYL) PHTHALATE	440	U	440	UJ	33	440	ug/kg	HT
SS	NDA080RE1	SW8270	bis(2-ETHYLHEXYL) PHTHALATE	407	U	407	UJ	31	407	ug/kg	HT
SS	NDA082RE1	SW8270	bis(2-ETHYLHEXYL) PHTHALATE	4660	U	4660	UJ	349	4660	ug/kg	HT
SB	NDA213	SW8270	bis(2-CHLOROISOPROPYL) ETHER	485	U	485	UJ	35	485	ug/kg	HT
SB	NDA214FD1	SW8270	bis(2-CHLOROISOPROPYL) ETHER	487	U	487	UJ	36	487	ug/kg	HT
SB	NDA215	SW8270	bis(2-CHLOROISOPROPYL) ETHER	527	U	527	UJ	39	527	ug/kg	HT
SB	NDA216	SW8270	bis(2-CHLOROISOPROPYL) ETHER	537	U	537	UJ	39	537	ug/kg	HT
SB	NDA217	SW8270	bis(2-CHLOROISOPROPYL) ETHER	540	U	540	UJ	39	540	ug/kg	HT
SB	NDA218	SW8270	bis(2-CHLOROISOPROPYL) ETHER	505	U	505	UJ	37	505	ug/kg	HT
SB	NDA219	SW8270	bis(2-CHLOROISOPROPYL) ETHER	380	U	380	UJ	28	380	ug/kg	HT
SB	NDA220	SW8270	bis(2-CHLOROISOPROPYL) ETHER	542	U	542	UJ	40	542	ug/kg	HT
SB	NDA221	SW8270	bis(2-CHLOROISOPROPYL) ETHER	501	U	501	UJ	37	501	ug/kg	HT
SB	NDA222	SW8270	bis(2-CHLOROISOPROPYL) ETHER	459	U	459	UJ	34	459	ug/kg	HT
SB	NDA223	SW8270	bis(2-CHLOROISOPROPYL) ETHER	527	U	527	UJ	38	527	ug/kg	HT
SB	NDA235	SW8270	bis(2-CHLOROISOPROPYL) ETHER	504	U	504	UJ	37	504	ug/kg	HT
SB	NDA236	SW8270	bis(2-CHLOROISOPROPYL) ETHER	423	U	423	UJ	31	423	ug/kg	HT
SB	NDA237FD1	SW8270	bis(2-CHLOROISOPROPYL) ETHER	395	U	395	UJ	29	395	ug/kg	HT
SB	NDA238	SW8270	bis(2-CHLOROISOPROPYL) ETHER	424	U	424	UJ	31	424	ug/kg	HT
SB	NDA239	SW8270	bis(2-CHLOROISOPROPYL) ETHER	555	U	555	UJ	41	555	ug/kg	HT
SB	NDA240	SW8270	bis(2-CHLOROISOPROPYL) ETHER	397	U	397	UJ	29	397	ug/kg	HT
SB	NDA241	SW8270	bis(2-CHLOROISOPROPYL) ETHER	471	U	471	UJ	34	471	ug/kg	HT
SB	NDA242	SW8270	bis(2-CHLOROISOPROPYL) ETHER	436	U	436	UJ	32	436	ug/kg	HT
SB	NDA243	SW8270	bis(2-CHLOROISOPROPYL) ETHER	893	U	893	UJ	65	893	ug/kg	HT
SB	NDA244	SW8270	bis(2-CHLOROISOPROPYL) ETHER	388	U	388	UJ	28	388	ug/kg	HT
SB	NDA245	SW8270	bis(2-CHLOROISOPROPYL) ETHER	393	U	393	UJ	29	393	ug/kg	HT
SB	NDA246	SW8270	bis(2-CHLOROISOPROPYL) ETHER	511	U	511	UJ	37	511	ug/kg	HT
SB	NDA247FD1	SW8270	bis(2-CHLOROISOPROPYL) ETHER	390	U	390	UJ	28	390	ug/kg	HT
SB	NDA248	SW8270	bis(2-CHLOROISOPROPYL) ETHER	453	U	453	UJ	33	453	ug/kg	HT
SB	NDA249	SW8270	bis(2-CHLOROISOPROPYL) ETHER	374	U	374	UJ	27	374	ug/kg	HT
SB	NDA252	SW8270	bis(2-CHLOROISOPROPYL) ETHER	420	U	420	UJ	31	420	ug/kg	HT
SB	NDA253	SW8270	bis(2-CHLOROISOPROPYL) ETHER	439	U	439	UJ	32	439	ug/kg	HT
SB	NDA254	SW8270	bis(2-CHLOROISOPROPYL) ETHER	391	U	391	UJ	29	391	ug/kg	HT
SB	NDA255	SW8270	bis(2-CHLOROISOPROPYL) ETHER	375	U	375	UJ	27	375	ug/kg	HT
SB	NDA085	SW8270	bis(2-CHLOROISOPROPYL) ETHER	482	U	482	UJ	35	482	ug/kg	HT
SB	NDA092	SW8270	bis(2-CHLOROISOPROPYL) ETHER	400	U	400	UJ	29	400	ug/kg	HT
SB	NDA093	SW8270	bis(2-CHLOROISOPROPYL) ETHER	339	U	339	UJ	25	339	ug/kg	HT
SB	NDA094	SW8270	bis(2-CHLOROISOPROPYL) ETHER	510	U	510	UJ	37	510	ug/kg	HT
SB	NDA095FD1	SW8270	bis(2-CHLOROISOPROPYL) ETHER	310	U	310	UJ	23	310	ug/kg	HT
SB	NDA296	SW8270	bis(2-CHLOROISOPROPYL) ETHER	369	U	369	UJ	27	369	ug/kg	HT
SB	NDA297	SW8270	bis(2-CHLOROISOPROPYL) ETHER	358	U	358	UJ	26	358	ug/kg	HT
SB	NDA298	SW8270	bis(2-CHLOROISOPROPYL) ETHER	341	U	341	UJ	25	341	ug/kg	HT
SB	NDA299	SW8270	bis(2-CHLOROISOPROPYL) ETHER	370	U	370	UJ	27	370	ug/kg	HT
SB	NDA058	SW8270	bis(2-CHLOROISOPROPYL) ETHER	460	U	460	UJ	34	460	ug/kg	HT
SB	NDA060	SW8270	bis(2-CHLOROISOPROPYL) ETHER	478	U	478	UJ	35	478	ug/kg	HT
SB	NDA063	SW8270	bis(2-CHLOROISOPROPYL) ETHER	382	U	382	UJ	28	382	ug/kg	HT
SB	NDA064FD1	SW8270	bis(2-CHLOROISOPROPYL) ETHER	351	U	351	UJ	26	351	ug/kg	HT
SB	NDA066	SW8270	bis(2-CHLOROISOPROPYL) ETHER	344	U	344	UJ	25	344	ug/kg	HT
SB	NDA068	SW8270	bis(2-CHLOROISOPROPYL) ETHER	360	U	360	UJ	26	360	ug/kg	HT
SB	NDA070	SW8270	bis(2-CHLOROISOPROPYL) ETHER	404	U	404	UJ	29	404	ug/kg	HT
SB	NDA073	SW8270	bis(2-CHLOROISOPROPYL) ETHER	383	U	383	UJ	28	383	ug/kg	HT
SB	NDA075	SW8270	bis(2-CHLOROISOPROPYL) ETHER	401	U	401	UJ	29	401	ug/kg	HT
SB	NDA077	SW8270	bis(2-CHLOROISOPROPYL) ETHER	441	U	441	UJ	32	441	ug/kg	HT
SB	NDA079	SW8270	bis(2-CHLOROISOPROPYL) ETHER	466	U	466	UJ	34	466	ug/kg	HT
SB	NDA081RE1	SW8270	bis(2-CHLOROISOPROPYL) ETHER	393	U	393	UJ	29	393	ug/kg	HT
SB	NDA083RE1	SW8270	bis(2-CHLOROISOPROPYL) ETHER	4240	U	4240	UJ	309	4240	ug/kg	HT
SD	NDA054	SW8270	bis(2-CHLOROISOPROPYL) ETHER	480	U	480	UJ	35	480	ug/kg	HT
SD	NDA055	SW8270	bis(2-CHLOROISOPROPYL) ETHER	696	U	696	UJ	51	696	ug/kg	HT
SD	NDA042	SW8270	bis(2-CHLOROISOPROPYL) ETHER	686	U	686	UJ	50	686	ug/kg	HT
SD	NDA043	SW8270	bis(2-CHLOROISOPROPYL) ETHER	735	U	735	UJ	54	735	ug/kg	HT
SD	NDA044	SW8270	bis(2-CHLOROISOPROPYL) ETHER	1680	U	1680	UJ	123	1680	ug/kg	HT
SD	NDA045	SW8270	bis(2-CHLOROISOPROPYL) ETHER	1500	U	1500	UJ	110	1500	ug/kg	HT
SD	NDA046	SW8270	bis(2-CHLOROISOPROPYL) ETHER	1520	U	1520	UJ	111	1520	ug/kg	HT
SD	NDA302	SW8270	bis(2-CHLOROISOPROPYL) ETHER	1200	U	1200	UJ	88	1200	ug/kg	HT
SD	NDA303	SW8270	bis(2-CHLOROISOPROPYL) ETHER	2300	U	2300	UJ	168	2300	ug/kg	HT

Matrix	Sample ID	Analytical Method	Parameter	Lab Result	Lab Qual	Final Result	Final Qual	DL	RL	Units	Comments
SD	NDA307FD1	SW8270	bis(2-CHLOROISOPROPYL) ETHER	2130	U	2130	UJ	155	2130	ug/kg	HT
SD	NDA047	SW8270	bis(2-CHLOROISOPROPYL) ETHER	503	U	503	UJ	37	503	ug/kg	HT
SD	NDA048	SW8270	bis(2-CHLOROISOPROPYL) ETHER	558	U	558	UJ	41	558	ug/kg	HT
SD	NDA049	SW8270	bis(2-CHLOROISOPROPYL) ETHER	463	U	463	UJ	34	463	ug/kg	HT
SS	NDA178	SW8270	bis(2-CHLOROISOPROPYL) ETHER	644	U	644	UJ	47	644	ug/kg	HT
SS	NDA179	SW8270	bis(2-CHLOROISOPROPYL) ETHER	644	U	644	UJ	47	644	ug/kg	HT
SS	NDA180	SW8270	bis(2-CHLOROISOPROPYL) ETHER	550	U	550	UJ	40	550	ug/kg	HT
SS	NDA181	SW8270	bis(2-CHLOROISOPROPYL) ETHER	566	U	566	UJ	41	566	ug/kg	HT
SS	NDA182	SW8270	bis(2-CHLOROISOPROPYL) ETHER	679	U	679	UJ	50	679	ug/kg	HT
SS	NDA183	SW8270	bis(2-CHLOROISOPROPYL) ETHER	589	U	589	UJ	43	589	ug/kg	HT
SS	NDA184FD1	SW8270	bis(2-CHLOROISOPROPYL) ETHER	662	U	662	UJ	48	662	ug/kg	HT
SS	NDA201	SW8270	bis(2-CHLOROISOPROPYL) ETHER	491	U	491	UJ	36	491	ug/kg	HT
SS	NDA202	SW8270	bis(2-CHLOROISOPROPYL) ETHER	605	U	605	UJ	44	605	ug/kg	HT
SS	NDA203	SW8270	bis(2-CHLOROISOPROPYL) ETHER	617	U	617	UJ	45	617	ug/kg	HT
SS	NDA204	SW8270	bis(2-CHLOROISOPROPYL) ETHER	753	U	753	UJ	55	753	ug/kg	HT
SS	NDA205FD1	SW8270	bis(2-CHLOROISOPROPYL) ETHER	668	U	668	UJ	49	668	ug/kg	HT
SS	NDA206	SW8270	bis(2-CHLOROISOPROPYL) ETHER	529	U	529	UJ	39	529	ug/kg	HT
SS	NDA207	SW8270	bis(2-CHLOROISOPROPYL) ETHER	669	U	669	UJ	49	669	ug/kg	HT
SS	NDA208	SW8270	bis(2-CHLOROISOPROPYL) ETHER	520	U	520	UJ	38	520	ug/kg	HT
SS	NDA209	SW8270	bis(2-CHLOROISOPROPYL) ETHER	570	U	570	UJ	42	570	ug/kg	HT
SS	NDA210	SW8270	bis(2-CHLOROISOPROPYL) ETHER	545	U	545	UJ	40	545	ug/kg	HT
SS	NDA211	SW8270	bis(2-CHLOROISOPROPYL) ETHER	742	U	742	UJ	54	742	ug/kg	HT
SS	NDA212	SW8270	bis(2-CHLOROISOPROPYL) ETHER	651	U	651	UJ	48	651	ug/kg	HT
SS	NDA185	SW8270	bis(2-CHLOROISOPROPYL) ETHER	445	U	445	UJ	33	445	ug/kg	HT
SS	NDA186	SW8270	bis(2-CHLOROISOPROPYL) ETHER	416	U	416	UJ	30	416	ug/kg	HT
SS	NDA187	SW8270	bis(2-CHLOROISOPROPYL) ETHER	380	U	380	UJ	28	380	ug/kg	HT
SS	NDA188	SW8270	bis(2-CHLOROISOPROPYL) ETHER	810	U	810	UJ	59	810	ug/kg	HT
SS	NDA189	SW8270	bis(2-CHLOROISOPROPYL) ETHER	426	U	426	UJ	31	426	ug/kg	HT
SS	NDA190	SW8270	bis(2-CHLOROISOPROPYL) ETHER	430	U	430	UJ	31	430	ug/kg	HT
SS	NDA191	SW8270	bis(2-CHLOROISOPROPYL) ETHER	338	U	338	UJ	25	338	ug/kg	HT
SS	NDA192FD1	SW8270	bis(2-CHLOROISOPROPYL) ETHER	418	U	418	UJ	30	418	ug/kg	HT
SS	NDA193	SW8270	bis(2-CHLOROISOPROPYL) ETHER	1720	U	1720	UJ	126	1720	ug/kg	HT
SS	NDA194	SW8270	bis(2-CHLOROISOPROPYL) ETHER	480	U	480	UJ	35	480	ug/kg	HT
SS	NDA195	SW8270	bis(2-CHLOROISOPROPYL) ETHER	323	U	323	UJ	24	323	ug/kg	HT
SS	NDA084	SW8270	bis(2-CHLOROISOPROPYL) ETHER	344	U	344	UJ	25	344	ug/kg	HT
SS	NDA091	SW8270	bis(2-CHLOROISOPROPYL) ETHER	367	U	367	UJ	27	367	ug/kg	HT
SS	NDA057	SW8270	bis(2-CHLOROISOPROPYL) ETHER	563	U	563	UJ	41	563	ug/kg	HT
SS	NDA059	SW8270	bis(2-CHLOROISOPROPYL) ETHER	465	U	465	UJ	34	465	ug/kg	HT
SS	NDA061	SW8270	bis(2-CHLOROISOPROPYL) ETHER	469	U	469	UJ	34	469	ug/kg	HT
SS	NDA062FD1	SW8270	bis(2-CHLOROISOPROPYL) ETHER	523	U	523	UJ	38	523	ug/kg	HT
SS	NDA065	SW8270	bis(2-CHLOROISOPROPYL) ETHER	421	U	421	UJ	31	421	ug/kg	HT
SS	NDA067	SW8270	bis(2-CHLOROISOPROPYL) ETHER	378	U	378	UJ	28	378	ug/kg	HT
SS	NDA069	SW8270	bis(2-CHLOROISOPROPYL) ETHER	320	U	320	UJ	23	320	ug/kg	HT
SS	NDA119	SW8270	bis(2-CHLOROISOPROPYL) ETHER	503	U	503	UJ	37	503	ug/kg	HT
SS	NDA120	SW8270	bis(2-CHLOROISOPROPYL) ETHER	541	U	541	UJ	40	541	ug/kg	HT
SS	NDA121	SW8270	bis(2-CHLOROISOPROPYL) ETHER	409	U	409	UJ	30	409	ug/kg	HT
SS	NDA122	SW8270	bis(2-CHLOROISOPROPYL) ETHER	450	U	450	UJ	33	450	ug/kg	HT
SS	NDA123	SW8270	bis(2-CHLOROISOPROPYL) ETHER	450	U	450	UJ	33	450	ug/kg	HT
SS	NDA124	SW8270	bis(2-CHLOROISOPROPYL) ETHER	432	U	432	UJ	32	432	ug/kg	HT
SS	NDA071	SW8270	bis(2-CHLOROISOPROPYL) ETHER	554	U	554	UJ	40	554	ug/kg	HT
SS	NDA072FD1	SW8270	bis(2-CHLOROISOPROPYL) ETHER	413	U	413	UJ	30	413	ug/kg	HT
SS	NDA074	SW8270	bis(2-CHLOROISOPROPYL) ETHER	448	U	448	UJ	33	448	ug/kg	HT
SS	NDA076	SW8270	bis(2-CHLOROISOPROPYL) ETHER	419	U	419	UJ	31	419	ug/kg	HT
SS	NDA078	SW8270	bis(2-CHLOROISOPROPYL) ETHER	440	U	440	UJ	32	440	ug/kg	HT
SS	NDA080RE1	SW8270	bis(2-CHLOROISOPROPYL) ETHER	407	U	407	UJ	30	407	ug/kg	HT
SS	NDA082RE1	SW8270	bis(2-CHLOROISOPROPYL) ETHER	4660	U	4660	UJ	340	4660	ug/kg	HT
SB	NDA213	SW8270	CHLOROETHYL ETHER)	485	U	485	UJ	33	485	ug/kg	HT
SB	NDA214FD1	SW8270	CHLOROETHYL ETHER)	487	U	487	UJ	34	487	ug/kg	HT
SB	NDA215	SW8270	CHLOROETHYL ETHER)	527	U	527	UJ	36	527	ug/kg	HT
SB	NDA216	SW8270	CHLOROETHYL ETHER)	537	U	537	UJ	37	537	ug/kg	HT
SB	NDA217	SW8270	CHLOROETHYL ETHER)	540	U	540	UJ	37	540	ug/kg	HT
SB	NDA218	SW8270	CHLOROETHYL ETHER)	505	U	505	UJ	35	505	ug/kg	HT
SB	NDA219	SW8270	CHLOROETHYL ETHER)	380	U	380	UJ	26	380	ug/kg	HT
SB	NDA220	SW8270	CHLOROETHYL ETHER)	542	U	542	UJ	37	542	ug/kg	HT
SB	NDA221	SW8270	CHLOROETHYL ETHER)	501	U	501	UJ	35	501	ug/kg	HT
SB	NDA222	SW8270	CHLOROETHYL ETHER)	459	U	459	UJ	32	459	ug/kg	HT
SB	NDA223	SW8270	CHLOROETHYL ETHER)	527	U	527	UJ	36	527	ug/kg	HT
SB	NDA235	SW8270	CHLOROETHYL ETHER)	504	U	504	UJ	35	504	ug/kg	HT
SB	NDA236	SW8270	CHLOROETHYL ETHER)	423	U	423	UJ	29	423	ug/kg	HT
SB	NDA237FD1	SW8270	CHLOROETHYL ETHER)	395	U	395	UJ	27	395	ug/kg	HT

Matrix	Sample ID	Analytical Method	Parameter	Lab Result	Lab Qual	Final Result	Final Qual	DL	RL	Units	Comments
SB	NDA238	SW8270	CHLOROETHYL ETHER)	424	U	424	UJ	29	424	ug/kg	HT
SB	NDA239	SW8270	CHLOROETHYL ETHER)	555	U	555	UJ	38	555	ug/kg	HT
SB	NDA240	SW8270	CHLOROETHYL ETHER)	397	U	397	UJ	27	397	ug/kg	HT
SB	NDA241	SW8270	CHLOROETHYL ETHER)	471	U	471	UJ	32	471	ug/kg	HT
SB	NDA242	SW8270	CHLOROETHYL ETHER)	436	U	436	UJ	30	436	ug/kg	HT
SB	NDA243	SW8270	CHLOROETHYL ETHER)	893	U	893	UJ	62	893	ug/kg	HT
SB	NDA244	SW8270	CHLOROETHYL ETHER)	388	U	388	UJ	27	388	ug/kg	HT
SB	NDA245	SW8270	CHLOROETHYL ETHER)	393	U	393	UJ	27	393	ug/kg	HT
SB	NDA246	SW8270	CHLOROETHYL ETHER)	511	U	511	UJ	35	511	ug/kg	HT
SB	NDA247FD1	SW8270	CHLOROETHYL ETHER)	390	U	390	UJ	27	390	ug/kg	HT
SB	NDA248	SW8270	CHLOROETHYL ETHER)	453	U	453	UJ	31	453	ug/kg	HT
SB	NDA249	SW8270	CHLOROETHYL ETHER)	374	U	374	UJ	26	374	ug/kg	HT
SB	NDA252	SW8270	CHLOROETHYL ETHER)	420	U	420	UJ	29	420	ug/kg	HT
SB	NDA253	SW8270	CHLOROETHYL ETHER)	439	U	439	UJ	30	439	ug/kg	HT
SB	NDA254	SW8270	CHLOROETHYL ETHER)	391	U	391	UJ	27	391	ug/kg	HT
SB	NDA255	SW8270	CHLOROETHYL ETHER)	375	U	375	UJ	26	375	ug/kg	HT
SB	NDA085	SW8270	CHLOROETHYL ETHER)	482	U	482	UJ	33	482	ug/kg	HT
SB	NDA092	SW8270	CHLOROETHYL ETHER)	400	U	400	UJ	28	400	ug/kg	HT
SB	NDA093	SW8270	CHLOROETHYL ETHER)	339	U	339	UJ	23	339	ug/kg	HT
SB	NDA094	SW8270	CHLOROETHYL ETHER)	510	U	510	UJ	35	510	ug/kg	HT
SB	NDA095FD1	SW8270	CHLOROETHYL ETHER)	310	U	310	UJ	21	310	ug/kg	HT
SB	NDA296	SW8270	CHLOROETHYL ETHER)	369	U	369	UJ	25	369	ug/kg	HT
SB	NDA297	SW8270	CHLOROETHYL ETHER)	358	U	358	UJ	25	358	ug/kg	HT
SB	NDA298	SW8270	CHLOROETHYL ETHER)	341	U	341	UJ	24	341	ug/kg	HT
SB	NDA299	SW8270	CHLOROETHYL ETHER)	370	U	370	UJ	26	370	ug/kg	HT
SB	NDA058	SW8270	CHLOROETHYL ETHER)	460	U	460	UJ	32	460	ug/kg	HT
SB	NDA060	SW8270	CHLOROETHYL ETHER)	478	U	478	UJ	33	478	ug/kg	HT
SB	NDA063	SW8270	CHLOROETHYL ETHER)	382	U	382	UJ	26	382	ug/kg	HT
SB	NDA064FD1	SW8270	CHLOROETHYL ETHER)	351	U	351	UJ	24	351	ug/kg	HT
SB	NDA066	SW8270	CHLOROETHYL ETHER)	344	U	344	UJ	24	344	ug/kg	HT
SB	NDA068	SW8270	CHLOROETHYL ETHER)	360	U	360	UJ	25	360	ug/kg	HT
SB	NDA070	SW8270	CHLOROETHYL ETHER)	404	U	404	UJ	28	404	ug/kg	HT
SB	NDA073	SW8270	CHLOROETHYL ETHER)	383	U	383	UJ	26	383	ug/kg	HT
SB	NDA075	SW8270	CHLOROETHYL ETHER)	401	U	401	UJ	28	401	ug/kg	HT
SB	NDA077	SW8270	CHLOROETHYL ETHER)	441	U	441	UJ	30	441	ug/kg	HT
SB	NDA079	SW8270	CHLOROETHYL ETHER)	466	U	466	UJ	32	466	ug/kg	HT
SB	NDA081RE1	SW8270	CHLOROETHYL ETHER)	393	U	393	UJ	27	393	ug/kg	HT
SB	NDA083RE1	SW8270	CHLOROETHYL ETHER)	4240	U	4240	UJ	292	4240	ug/kg	HT
SD	NDA054	SW8270	CHLOROETHYL ETHER)	480	U	480	UJ	33	480	ug/kg	HT
SD	NDA055	SW8270	CHLOROETHYL ETHER)	696	U	696	UJ	48	696	ug/kg	HT
SD	NDA042	SW8270	CHLOROETHYL ETHER)	686	U	686	UJ	47	686	ug/kg	HT
SD	NDA043	SW8270	CHLOROETHYL ETHER)	735	U	735	UJ	51	735	ug/kg	HT
SD	NDA044	SW8270	CHLOROETHYL ETHER)	1680	U	1680	UJ	116	1680	ug/kg	HT
SD	NDA045	SW8270	CHLOROETHYL ETHER)	1500	U	1500	UJ	104	1500	ug/kg	HT
SD	NDA046	SW8270	CHLOROETHYL ETHER)	1520	U	1520	UJ	105	1520	ug/kg	HT
SD	NDA302	SW8270	CHLOROETHYL ETHER)	1200	U	1200	UJ	83	1200	ug/kg	HT
SD	NDA303	SW8270	CHLOROETHYL ETHER)	2300	U	2300	UJ	159	2300	ug/kg	HT
SD	NDA307FD1	SW8270	CHLOROETHYL ETHER)	2130	U	2130	UJ	147	2130	ug/kg	HT
SD	NDA047	SW8270	CHLOROETHYL ETHER)	503	U	503	UJ	35	503	ug/kg	HT
SD	NDA048	SW8270	CHLOROETHYL ETHER)	558	U	558	UJ	39	558	ug/kg	HT
SD	NDA049	SW8270	CHLOROETHYL ETHER)	463	U	463	UJ	32	463	ug/kg	HT
SS	NDA178	SW8270	CHLOROETHYL ETHER)	644	U	644	UJ	44	644	ug/kg	HT
SS	NDA179	SW8270	CHLOROETHYL ETHER)	644	U	644	UJ	44	644	ug/kg	HT
SS	NDA180	SW8270	CHLOROETHYL ETHER)	550	U	550	UJ	38	550	ug/kg	HT
SS	NDA181	SW8270	CHLOROETHYL ETHER)	566	U	566	UJ	39	566	ug/kg	HT
SS	NDA182	SW8270	CHLOROETHYL ETHER)	679	U	679	UJ	47	679	ug/kg	HT
SS	NDA183	SW8270	CHLOROETHYL ETHER)	589	U	589	UJ	41	589	ug/kg	HT
SS	NDA184FD1	SW8270	CHLOROETHYL ETHER)	662	U	662	UJ	46	662	ug/kg	HT
SS	NDA201	SW8270	CHLOROETHYL ETHER)	491	U	491	UJ	34	491	ug/kg	HT
SS	NDA202	SW8270	CHLOROETHYL ETHER)	605	U	605	UJ	42	605	ug/kg	HT
SS	NDA203	SW8270	CHLOROETHYL ETHER)	617	U	617	UJ	43	617	ug/kg	HT
SS	NDA204	SW8270	CHLOROETHYL ETHER)	753	U	753	UJ	52	753	ug/kg	HT
SS	NDA205FD1	SW8270	CHLOROETHYL ETHER)	668	U	668	UJ	46	668	ug/kg	HT
SS	NDA206	SW8270	CHLOROETHYL ETHER)	529	U	529	UJ	37	529	ug/kg	HT
SS	NDA207	SW8270	CHLOROETHYL ETHER)	669	U	669	UJ	46	669	ug/kg	HT
SS	NDA208	SW8270	CHLOROETHYL ETHER)	520	U	520	UJ	36	520	ug/kg	HT
SS	NDA209	SW8270	CHLOROETHYL ETHER)	570	U	570	UJ	39	570	ug/kg	HT
SS	NDA210	SW8270	CHLOROETHYL ETHER)	545	U	545	UJ	38	545	ug/kg	HT
SS	NDA211	SW8270	CHLOROETHYL ETHER)	742	U	742	UJ	51	742	ug/kg	HT
SS	NDA212	SW8270	CHLOROETHYL ETHER)	651	U	651	UJ	45	651	ug/kg	HT

Matrix	Sample ID	Analytical Method	Parameter	Lab Result	Lab Qual	Final Result	Final Qual	DL	RL	Units	Comments
SS	NDA185	SW8270	CHLOROETHYL ETHER)	445	U	445	UJ	31	445	ug/kg	HT
SS	NDA186	SW8270	CHLOROETHYL ETHER)	416	U	416	UJ	29	416	ug/kg	HT
SS	NDA187	SW8270	CHLOROETHYL ETHER)	380	U	380	UJ	26	380	ug/kg	HT
SS	NDA188	SW8270	CHLOROETHYL ETHER)	810	U	810	UJ	56	810	ug/kg	HT
SS	NDA189	SW8270	CHLOROETHYL ETHER)	426	U	426	UJ	29	426	ug/kg	HT
SS	NDA190	SW8270	CHLOROETHYL ETHER)	430	U	430	UJ	30	430	ug/kg	HT
SS	NDA191	SW8270	CHLOROETHYL ETHER)	338	U	338	UJ	23	338	ug/kg	HT
SS	NDA192FD1	SW8270	CHLOROETHYL ETHER)	418	U	418	UJ	29	418	ug/kg	HT
SS	NDA193	SW8270	CHLOROETHYL ETHER)	1720	U	1720	UJ	119	1720	ug/kg	HT
SS	NDA194	SW8270	CHLOROETHYL ETHER)	480	U	480	UJ	33	480	ug/kg	HT
SS	NDA195	SW8270	CHLOROETHYL ETHER)	323	U	323	UJ	22	323	ug/kg	HT
SS	NDA084	SW8270	CHLOROETHYL ETHER)	344	U	344	UJ	24	344	ug/kg	HT
SS	NDA091	SW8270	CHLOROETHYL ETHER)	367	U	367	UJ	25	367	ug/kg	HT
SS	NDA057	SW8270	CHLOROETHYL ETHER)	563	U	563	UJ	39	563	ug/kg	HT
SS	NDA059	SW8270	CHLOROETHYL ETHER)	465	U	465	UJ	32	465	ug/kg	HT
SS	NDA061	SW8270	CHLOROETHYL ETHER)	469	U	469	UJ	32	469	ug/kg	HT
SS	NDA062FD1	SW8270	CHLOROETHYL ETHER)	523	U	523	UJ	36	523	ug/kg	HT
SS	NDA065	SW8270	CHLOROETHYL ETHER)	421	U	421	UJ	29	421	ug/kg	HT
SS	NDA067	SW8270	CHLOROETHYL ETHER)	378	U	378	UJ	26	378	ug/kg	HT
SS	NDA069	SW8270	CHLOROETHYL ETHER)	320	U	320	UJ	22	320	ug/kg	HT
SS	NDA119	SW8270	CHLOROETHYL ETHER)	503	U	503	UJ	35	503	ug/kg	HT
SS	NDA120	SW8270	CHLOROETHYL ETHER)	541	U	541	UJ	37	541	ug/kg	HT
SS	NDA121	SW8270	CHLOROETHYL ETHER)	409	U	409	UJ	28	409	ug/kg	HT
SS	NDA122	SW8270	CHLOROETHYL ETHER)	450	U	450	UJ	31	450	ug/kg	HT
SS	NDA123	SW8270	CHLOROETHYL ETHER)	450	U	450	UJ	31	450	ug/kg	HT
SS	NDA124	SW8270	CHLOROETHYL ETHER)	432	U	432	UJ	30	432	ug/kg	HT
SS	NDA071	SW8270	CHLOROETHYL ETHER)	554	U	554	UJ	38	554	ug/kg	HT
SS	NDA072FD1	SW8270	CHLOROETHYL ETHER)	413	U	413	UJ	29	413	ug/kg	HT
SS	NDA074	SW8270	CHLOROETHYL ETHER)	448	U	448	UJ	31	448	ug/kg	HT
SS	NDA076	SW8270	CHLOROETHYL ETHER)	419	U	419	UJ	29	419	ug/kg	HT
SS	NDA078	SW8270	CHLOROETHYL ETHER)	440	U	440	UJ	30	440	ug/kg	HT
SS	NDA080RE1	SW8270	CHLOROETHYL ETHER)	407	U	407	UJ	28	407	ug/kg	HT
SS	NDA082RE1	SW8270	CHLOROETHYL ETHER)	4660	U	4660	UJ	321	4660	ug/kg	HT
SB	NDA213	SW8270	bis(2-CHLOROETHOXY) METHANE	485	U	485	UJ	36	485	ug/kg	HT
SB	NDA214FD1	SW8270	bis(2-CHLOROETHOXY) METHANE	487	U	487	UJ	36	487	ug/kg	HT
SB	NDA215	SW8270	bis(2-CHLOROETHOXY) METHANE	527	U	527	UJ	39	527	ug/kg	HT
SB	NDA216	SW8270	bis(2-CHLOROETHOXY) METHANE	537	U	537	UJ	40	537	ug/kg	HT
SB	NDA217	SW8270	bis(2-CHLOROETHOXY) METHANE	540	U	540	UJ	40	540	ug/kg	HT
SB	NDA218	SW8270	bis(2-CHLOROETHOXY) METHANE	505	U	505	UJ	37	505	ug/kg	HT
SB	NDA219	SW8270	bis(2-CHLOROETHOXY) METHANE	380	U	380	UJ	28	380	ug/kg	HT
SB	NDA220	SW8270	bis(2-CHLOROETHOXY) METHANE	542	U	542	UJ	40	542	ug/kg	HT
SB	NDA221	SW8270	bis(2-CHLOROETHOXY) METHANE	501	U	501	UJ	37	501	ug/kg	HT
SB	NDA222	SW8270	bis(2-CHLOROETHOXY) METHANE	459	U	459	UJ	34	459	ug/kg	HT
SB	NDA223	SW8270	bis(2-CHLOROETHOXY) METHANE	527	U	527	UJ	39	527	ug/kg	HT
SB	NDA235	SW8270	bis(2-CHLOROETHOXY) METHANE	504	U	504	UJ	37	504	ug/kg	HT
SB	NDA236	SW8270	bis(2-CHLOROETHOXY) METHANE	423	U	423	UJ	31	423	ug/kg	HT
SB	NDA237FD1	SW8270	bis(2-CHLOROETHOXY) METHANE	395	U	395	UJ	29	395	ug/kg	HT
SB	NDA238	SW8270	bis(2-CHLOROETHOXY) METHANE	424	U	424	UJ	31	424	ug/kg	HT
SB	NDA239	SW8270	bis(2-CHLOROETHOXY) METHANE	555	U	555	UJ	41	555	ug/kg	HT
SB	NDA240	SW8270	bis(2-CHLOROETHOXY) METHANE	397	U	397	UJ	29	397	ug/kg	HT
SB	NDA241	SW8270	bis(2-CHLOROETHOXY) METHANE	471	U	471	UJ	35	471	ug/kg	HT
SB	NDA242	SW8270	bis(2-CHLOROETHOXY) METHANE	436	U	436	UJ	32	436	ug/kg	HT
SB	NDA243	SW8270	bis(2-CHLOROETHOXY) METHANE	893	U	893	UJ	66	893	ug/kg	HT
SB	NDA244	SW8270	bis(2-CHLOROETHOXY) METHANE	388	U	388	UJ	29	388	ug/kg	HT
SB	NDA245	SW8270	bis(2-CHLOROETHOXY) METHANE	393	U	393	UJ	29	393	ug/kg	HT
SB	NDA246	SW8270	bis(2-CHLOROETHOXY) METHANE	511	U	511	UJ	38	511	ug/kg	HT
SB	NDA247FD1	SW8270	bis(2-CHLOROETHOXY) METHANE	390	U	390	UJ	29	390	ug/kg	HT
SB	NDA248	SW8270	bis(2-CHLOROETHOXY) METHANE	453	U	453	UJ	34	453	ug/kg	HT
SB	NDA249	SW8270	bis(2-CHLOROETHOXY) METHANE	374	U	374	UJ	28	374	ug/kg	HT
SB	NDA252	SW8270	bis(2-CHLOROETHOXY) METHANE	420	U	420	UJ	31	420	ug/kg	HT
SB	NDA253	SW8270	bis(2-CHLOROETHOXY) METHANE	439	U	439	UJ	32	439	ug/kg	HT
SB	NDA254	SW8270	bis(2-CHLOROETHOXY) METHANE	391	U	391	UJ	29	391	ug/kg	HT
SB	NDA255	SW8270	bis(2-CHLOROETHOXY) METHANE	375	U	375	UJ	28	375	ug/kg	HT
SB	NDA085	SW8270	bis(2-CHLOROETHOXY) METHANE	482	U	482	UJ	36	482	ug/kg	HT
SB	NDA092	SW8270	bis(2-CHLOROETHOXY) METHANE	400	U	400	UJ	30	400	ug/kg	HT
SB	NDA093	SW8270	bis(2-CHLOROETHOXY) METHANE	339	U	339	UJ	25	339	ug/kg	HT
SB	NDA094	SW8270	bis(2-CHLOROETHOXY) METHANE	510	U	510	UJ	38	510	ug/kg	HT
SB	NDA095FD1	SW8270	bis(2-CHLOROETHOXY) METHANE	310	U	310	UJ	23	310	ug/kg	HT
SB	NDA296	SW8270	bis(2-CHLOROETHOXY) METHANE	369	U	369	UJ	27	369	ug/kg	HT
SB	NDA297	SW8270	bis(2-CHLOROETHOXY) METHANE	358	U	358	UJ	27	358	ug/kg	HT

Matrix	Sample ID	Analytical Method	Parameter	Lab Result	Lab Qual	Final Result	Final Qual	DL	RL	Units	Comments
SB	NDA298	SW8270	bis(2-CHLOROETHOXY) METHANE	341	U	341	UJ	25	341	ug/kg	HT
SB	NDA299	SW8270	bis(2-CHLOROETHOXY) METHANE	370	U	370	UJ	27	370	ug/kg	HT
SB	NDA058	SW8270	bis(2-CHLOROETHOXY) METHANE	460	U	460	UJ	34	460	ug/kg	HT
SB	NDA060	SW8270	bis(2-CHLOROETHOXY) METHANE	478	U	478	UJ	35	478	ug/kg	HT
SB	NDA063	SW8270	bis(2-CHLOROETHOXY) METHANE	382	U	382	UJ	28	382	ug/kg	HT
SB	NDA064FD1	SW8270	bis(2-CHLOROETHOXY) METHANE	351	U	351	UJ	26	351	ug/kg	HT
SB	NDA066	SW8270	bis(2-CHLOROETHOXY) METHANE	344	U	344	UJ	25	344	ug/kg	HT
SB	NDA068	SW8270	bis(2-CHLOROETHOXY) METHANE	360	U	360	UJ	27	360	ug/kg	HT
SB	NDA070	SW8270	bis(2-CHLOROETHOXY) METHANE	404	U	404	UJ	30	404	ug/kg	HT
SB	NDA073	SW8270	bis(2-CHLOROETHOXY) METHANE	383	U	383	UJ	28	383	ug/kg	HT
SB	NDA075	SW8270	bis(2-CHLOROETHOXY) METHANE	401	U	401	UJ	30	401	ug/kg	HT
SB	NDA077	SW8270	bis(2-CHLOROETHOXY) METHANE	441	U	441	UJ	33	441	ug/kg	HT
SB	NDA079	SW8270	bis(2-CHLOROETHOXY) METHANE	466	U	466	UJ	35	466	ug/kg	HT
SB	NDA081RE1	SW8270	bis(2-CHLOROETHOXY) METHANE	393	U	393	UJ	29	393	ug/kg	HT
SB	NDA083RE1	SW8270	bis(2-CHLOROETHOXY) METHANE	4240	U	4240	UJ	313	4240	ug/kg	HT
SD	NDA054	SW8270	bis(2-CHLOROETHOXY) METHANE	480	U	480	UJ	36	480	ug/kg	HT
SD	NDA055	SW8270	bis(2-CHLOROETHOXY) METHANE	696	U	696	UJ	51	696	ug/kg	HT
SD	NDA042	SW8270	bis(2-CHLOROETHOXY) METHANE	686	U	686	UJ	51	686	ug/kg	HT
SD	NDA043	SW8270	bis(2-CHLOROETHOXY) METHANE	735	U	735	UJ	54	735	ug/kg	HT
SD	NDA044	SW8270	bis(2-CHLOROETHOXY) METHANE	1680	U	1680	UJ	125	1680	ug/kg	HT
SD	NDA045	SW8270	bis(2-CHLOROETHOXY) METHANE	1500	U	1500	UJ	111	1500	ug/kg	HT
SD	NDA046	SW8270	bis(2-CHLOROETHOXY) METHANE	1520	U	1520	UJ	112	1520	ug/kg	HT
SD	NDA302	SW8270	bis(2-CHLOROETHOXY) METHANE	1200	U	1200	UJ	89	1200	ug/kg	HT
SD	NDA303	SW8270	bis(2-CHLOROETHOXY) METHANE	2300	U	2300	UJ	170	2300	ug/kg	HT
SD	NDA307FD1	SW8270	bis(2-CHLOROETHOXY) METHANE	2130	U	2130	UJ	157	2130	ug/kg	HT
SD	NDA047	SW8270	bis(2-CHLOROETHOXY) METHANE	503	U	503	UJ	37	503	ug/kg	HT
SD	NDA048	SW8270	bis(2-CHLOROETHOXY) METHANE	558	U	558	UJ	41	558	ug/kg	HT
SD	NDA049	SW8270	bis(2-CHLOROETHOXY) METHANE	463	U	463	UJ	34	463	ug/kg	HT
SS	NDA178	SW8270	bis(2-CHLOROETHOXY) METHANE	644	U	644	UJ	48	644	ug/kg	HT
SS	NDA179	SW8270	bis(2-CHLOROETHOXY) METHANE	644	U	644	UJ	48	644	ug/kg	HT
SS	NDA180	SW8270	bis(2-CHLOROETHOXY) METHANE	550	U	550	UJ	41	550	ug/kg	HT
SS	NDA181	SW8270	bis(2-CHLOROETHOXY) METHANE	566	U	566	UJ	42	566	ug/kg	HT
SS	NDA182	SW8270	bis(2-CHLOROETHOXY) METHANE	679	U	679	UJ	50	679	ug/kg	HT
SS	NDA183	SW8270	bis(2-CHLOROETHOXY) METHANE	589	U	589	UJ	44	589	ug/kg	HT
SS	NDA184FD1	SW8270	bis(2-CHLOROETHOXY) METHANE	662	U	662	UJ	49	662	ug/kg	HT
SS	NDA201	SW8270	bis(2-CHLOROETHOXY) METHANE	491	U	491	UJ	36	491	ug/kg	HT
SS	NDA202	SW8270	bis(2-CHLOROETHOXY) METHANE	605	U	605	UJ	45	605	ug/kg	HT
SS	NDA203	SW8270	bis(2-CHLOROETHOXY) METHANE	617	U	617	UJ	46	617	ug/kg	HT
SS	NDA204	SW8270	bis(2-CHLOROETHOXY) METHANE	753	U	753	UJ	56	753	ug/kg	HT
SS	NDA205FD1	SW8270	bis(2-CHLOROETHOXY) METHANE	668	U	668	UJ	49	668	ug/kg	HT
SS	NDA206	SW8270	bis(2-CHLOROETHOXY) METHANE	529	U	529	UJ	39	529	ug/kg	HT
SS	NDA207	SW8270	bis(2-CHLOROETHOXY) METHANE	669	U	669	UJ	50	669	ug/kg	HT
SS	NDA208	SW8270	bis(2-CHLOROETHOXY) METHANE	520	U	520	UJ	38	520	ug/kg	HT
SS	NDA209	SW8270	bis(2-CHLOROETHOXY) METHANE	570	U	570	UJ	42	570	ug/kg	HT
SS	NDA210	SW8270	bis(2-CHLOROETHOXY) METHANE	545	U	545	UJ	40	545	ug/kg	HT
SS	NDA211	SW8270	bis(2-CHLOROETHOXY) METHANE	742	U	742	UJ	55	742	ug/kg	HT
SS	NDA212	SW8270	bis(2-CHLOROETHOXY) METHANE	651	U	651	UJ	48	651	ug/kg	HT
SS	NDA185	SW8270	bis(2-CHLOROETHOXY) METHANE	445	U	445	UJ	33	445	ug/kg	HT
SS	NDA186	SW8270	bis(2-CHLOROETHOXY) METHANE	416	U	416	UJ	31	416	ug/kg	HT
SS	NDA187	SW8270	bis(2-CHLOROETHOXY) METHANE	380	U	380	UJ	28	380	ug/kg	HT
SS	NDA188	SW8270	bis(2-CHLOROETHOXY) METHANE	810	U	810	UJ	60	810	ug/kg	HT
SS	NDA189	SW8270	bis(2-CHLOROETHOXY) METHANE	426	U	426	UJ	31	426	ug/kg	HT
SS	NDA190	SW8270	bis(2-CHLOROETHOXY) METHANE	430	U	430	UJ	32	430	ug/kg	HT
SS	NDA191	SW8270	bis(2-CHLOROETHOXY) METHANE	338	U	338	UJ	25	338	ug/kg	HT
SS	NDA192FD1	SW8270	bis(2-CHLOROETHOXY) METHANE	418	U	418	UJ	31	418	ug/kg	HT
SS	NDA193	SW8270	bis(2-CHLOROETHOXY) METHANE	1720	U	1720	UJ	127	1720	ug/kg	HT
SS	NDA194	SW8270	bis(2-CHLOROETHOXY) METHANE	480	U	480	UJ	35	480	ug/kg	HT
SS	NDA195	SW8270	bis(2-CHLOROETHOXY) METHANE	323	U	323	UJ	24	323	ug/kg	HT
SS	NDA084	SW8270	bis(2-CHLOROETHOXY) METHANE	344	U	344	UJ	25	344	ug/kg	HT
SS	NDA091	SW8270	bis(2-CHLOROETHOXY) METHANE	367	U	367	UJ	27	367	ug/kg	HT
SS	NDA057	SW8270	bis(2-CHLOROETHOXY) METHANE	563	U	563	UJ	42	563	ug/kg	HT
SS	NDA059	SW8270	bis(2-CHLOROETHOXY) METHANE	465	U	465	UJ	34	465	ug/kg	HT
SS	NDA061	SW8270	bis(2-CHLOROETHOXY) METHANE	469	U	469	UJ	35	469	ug/kg	HT
SS	NDA062FD1	SW8270	bis(2-CHLOROETHOXY) METHANE	523	U	523	UJ	39	523	ug/kg	HT
SS	NDA065	SW8270	bis(2-CHLOROETHOXY) METHANE	421	U	421	UJ	31	421	ug/kg	HT
SS	NDA067	SW8270	bis(2-CHLOROETHOXY) METHANE	378	U	378	UJ	28	378	ug/kg	HT
SS	NDA069	SW8270	bis(2-CHLOROETHOXY) METHANE	320	U	320	UJ	24	320	ug/kg	HT
SS	NDA119	SW8270	bis(2-CHLOROETHOXY) METHANE	503	U	503	UJ	37	503	ug/kg	HT
SS	NDA120	SW8270	bis(2-CHLOROETHOXY) METHANE	541	U	541	UJ	40	541	ug/kg	HT
SS	NDA121	SW8270	bis(2-CHLOROETHOXY) METHANE	409	U	409	UJ	30	409	ug/kg	HT

Matrix	Sample ID	Analytical Method	Parameter	Lab Result	Lab Qual	Final Result	Final Qual	DL	RL	Units	Comments
SS	NDA122	SW8270	bis(2-CHLOROETHOXY) METHANE	450	U	450	UJ	33	450	ug/kg	HT
SS	NDA123	SW8270	bis(2-CHLOROETHOXY) METHANE	450	U	450	UJ	33	450	ug/kg	HT
SS	NDA124	SW8270	bis(2-CHLOROETHOXY) METHANE	432	U	432	UJ	32	432	ug/kg	HT
SS	NDA071	SW8270	bis(2-CHLOROETHOXY) METHANE	554	U	554	UJ	41	554	ug/kg	HT
SS	NDA072FD1	SW8270	bis(2-CHLOROETHOXY) METHANE	413	U	413	UJ	31	413	ug/kg	HT
SS	NDA074	SW8270	bis(2-CHLOROETHOXY) METHANE	448	U	448	UJ	33	448	ug/kg	HT
SS	NDA076	SW8270	bis(2-CHLOROETHOXY) METHANE	419	U	419	UJ	31	419	ug/kg	HT
SS	NDA078	SW8270	bis(2-CHLOROETHOXY) METHANE	440	U	440	UJ	33	440	ug/kg	HT
SS	NDA080RE1	SW8270	bis(2-CHLOROETHOXY) METHANE	407	U	407	UJ	30	407	ug/kg	HT
SS	NDA082RE1	SW8270	bis(2-CHLOROETHOXY) METHANE	4660	U	4660	UJ	345	4660	ug/kg	HT
SB	NDA165	SW8081	BETA ENDOSULFAN (ENDOSULFAN II)	3.8	U	3.8	UJ	0.34	3.8	ug/kg	HT
SB	NDA167	SW8081	BETA ENDOSULFAN (ENDOSULFAN II)	4.1	U	4.1	UJ	0.37	4.1	ug/kg	HT
SB	NDA169	SW8081	BETA ENDOSULFAN (ENDOSULFAN II)	4	U	4	UJ	0.36	4	ug/kg	HT
SB	NDA171	SW8081	BETA ENDOSULFAN (ENDOSULFAN II)	3.6	U	3.6	UJ	0.33	3.6	ug/kg	HT
SB	NDA173	SW8081	BETA ENDOSULFAN (ENDOSULFAN II)	4.2	U	4.2	UJ	0.38	4.2	ug/kg	HT
SB	NDA175	SW8081	BETA ENDOSULFAN (ENDOSULFAN II)	3.7	U	3.7	UJ	0.33	3.7	ug/kg	HT
SB	NDA177	SW8081	BETA ENDOSULFAN (ENDOSULFAN II)	3.9	U	3.9	UJ	0.35	3.9	ug/kg	HT
SB	NDA213	SW8081	BETA ENDOSULFAN (ENDOSULFAN II)	3.8	U	3.8	UJ	0.34	3.8	ug/kg	HT
SB	NDA214FD1	SW8081	BETA ENDOSULFAN (ENDOSULFAN II)	3.7	U	3.7	UJ	0.33	3.7	ug/kg	HT
SB	NDA215	SW8081	BETA ENDOSULFAN (ENDOSULFAN II)	3.8	U	3.8	UJ	0.35	3.8	ug/kg	HT
SB	NDA216	SW8081	BETA ENDOSULFAN (ENDOSULFAN II)	3.6	U	3.6	UJ	0.33	3.6	ug/kg	HT
SB	NDA217	SW8081	BETA ENDOSULFAN (ENDOSULFAN II)	3.8	U	3.8	UJ	0.34	3.8	ug/kg	HT
SB	NDA218	SW8081	BETA ENDOSULFAN (ENDOSULFAN II)	3.7	U	3.7	UJ	0.33	3.7	ug/kg	HT
SB	NDA219	SW8081	BETA ENDOSULFAN (ENDOSULFAN II)	3.7	U	3.7	UJ	0.33	3.7	ug/kg	HT
SB	NDA220	SW8081	BETA ENDOSULFAN (ENDOSULFAN II)	3.8	U	3.8	UJ	0.34	3.8	ug/kg	HT
SB	NDA221	SW8081	BETA ENDOSULFAN (ENDOSULFAN II)	3.6	U	3.6	UJ	0.32	3.6	ug/kg	HT
SB	NDA222	SW8081	BETA ENDOSULFAN (ENDOSULFAN II)	3.3	U	3.3	UJ	0.3	3.3	ug/kg	HT
SB	NDA223	SW8081	BETA ENDOSULFAN (ENDOSULFAN II)	3.8	U	3.8	UJ	0.34	3.8	ug/kg	HT
SB	NDA235	SW8081	BETA ENDOSULFAN (ENDOSULFAN II)	4.4	U	4.4	UJ	0.39	4.4	ug/kg	HT
SB	NDA236	SW8081	BETA ENDOSULFAN (ENDOSULFAN II)	3.8	U	3.8	UJ	0.34	3.8	ug/kg	HT
SB	NDA237FD1	SW8081	BETA ENDOSULFAN (ENDOSULFAN II)	3.7	U	3.7	UJ	0.34	3.7	ug/kg	HT
SB	NDA238	SW8081	BETA ENDOSULFAN (ENDOSULFAN II)	3.7	U	3.7	UJ	0.34	3.7	ug/kg	HT
SB	NDA239	SW8081	BETA ENDOSULFAN (ENDOSULFAN II)	3.7	U	3.7	UJ	0.34	3.7	ug/kg	HT
SB	NDA240	SW8081	BETA ENDOSULFAN (ENDOSULFAN II)	4	U	4	UJ	0.36	4	ug/kg	HT
SB	NDA241	SW8081	BETA ENDOSULFAN (ENDOSULFAN II)	3.7	U	3.7	UJ	0.33	3.7	ug/kg	HT
SB	NDA242	SW8081	BETA ENDOSULFAN (ENDOSULFAN II)	4.2	U	4.2	UJ	0.37	4.2	ug/kg	HT
SB	NDA243	SW8081	BETA ENDOSULFAN (ENDOSULFAN II)	3.9	U	3.9	UJ	0.35	3.9	ug/kg	HT
SB	NDA244	SW8081	BETA ENDOSULFAN (ENDOSULFAN II)	3.7	U	3.7	UJ	0.33	3.7	ug/kg	HT
SB	NDA245	SW8081	BETA ENDOSULFAN (ENDOSULFAN II)	3.8	U	3.8	UJ	0.35	3.8	ug/kg	HT
SB	NDA246	SW8081	BETA ENDOSULFAN (ENDOSULFAN II)	4.1	U	4.1	UJ	0.37	4.1	ug/kg	HT
SB	NDA247FD1	SW8081	BETA ENDOSULFAN (ENDOSULFAN II)	3.8	U	3.8	UJ	0.35	3.8	ug/kg	HT
SB	NDA248	SW8081	BETA ENDOSULFAN (ENDOSULFAN II)	4	U	4	UJ	0.36	4	ug/kg	HT
SB	NDA249	SW8081	BETA ENDOSULFAN (ENDOSULFAN II)	3.7	U	3.7	UJ	0.34	3.7	ug/kg	HT
SB	NDA252	SW8081	BETA ENDOSULFAN (ENDOSULFAN II)	3.9	U	3.9	UJ	0.35	3.9	ug/kg	HT
SB	NDA253	SW8081	BETA ENDOSULFAN (ENDOSULFAN II)	4.2	U	4.2	UJ	0.38	4.2	ug/kg	HT
SB	NDA254	SW8081	BETA ENDOSULFAN (ENDOSULFAN II)	4.2	U	4.2	UJ	0.37	4.2	ug/kg	HT
SB	NDA255	SW8081	BETA ENDOSULFAN (ENDOSULFAN II)	4.1	U	4.1	UJ	0.37	4.1	ug/kg	HT
SB	NDA058	SW8081	BETA ENDOSULFAN (ENDOSULFAN II)	3.7	U	3.7	UJ	0.33	3.7	ug/kg	HT
SB	NDA060	SW8081	BETA ENDOSULFAN (ENDOSULFAN II)	3.7	U	3.7	UJ	0.33	3.7	ug/kg	HT
SB	NDA063	SW8081	BETA ENDOSULFAN (ENDOSULFAN II)	3.6	U	3.6	UJ	0.32	3.6	ug/kg	HT
SB	NDA064FD1	SW8081	BETA ENDOSULFAN (ENDOSULFAN II)	3.6	U	3.6	UJ	0.32	3.6	ug/kg	HT
SB	NDA066	SW8081	BETA ENDOSULFAN (ENDOSULFAN II)	3.5	U	3.5	UJ	0.31	3.5	ug/kg	HT
SB	NDA068	SW8081	BETA ENDOSULFAN (ENDOSULFAN II)	3.6	U	3.6	UJ	0.32	3.6	ug/kg	HT
SB	NDA070	SW8081	BETA ENDOSULFAN (ENDOSULFAN II)	3.5	U	3.5	UJ	0.32	3.5	ug/kg	HT
SB	NDA073	SW8081	BETA ENDOSULFAN (ENDOSULFAN II)	3.5	U	3.5	UJ	0.32	3.5	ug/kg	HT
SB	NDA075	SW8081	BETA ENDOSULFAN (ENDOSULFAN II)	0.35	U	0.35	UJ	0.03	0.35	ug/kg	HT
SB	NDA077	SW8081	BETA ENDOSULFAN (ENDOSULFAN II)	0.4	U	0.4	UJ	0.04	0.4	ug/kg	HT
SB	NDA081	SW8081	BETA ENDOSULFAN (ENDOSULFAN II)	0.35	U	0.35	UJ	0.03	0.35	ug/kg	HT
SB	NDA083	SW8081	BETA ENDOSULFAN (ENDOSULFAN II)	0.34	U	0.34	UJ	0.03	0.34	ug/kg	HT
SB	NDA114	SW8081	BETA ENDOSULFAN (ENDOSULFAN II)	4.3	U	4.3	UJ	0.39	4.3	ug/kg	HT
SB	NDA116	SW8081	BETA ENDOSULFAN (ENDOSULFAN II)	4.2	U	4.2	UJ	0.37	4.2	ug/kg	HT
SB	NDA118	SW8081	BETA ENDOSULFAN (ENDOSULFAN II)	4.3	U	4.3	UJ	0.39	4.3	ug/kg	HT
SD	NDA053	SW8081	BETA ENDOSULFAN (ENDOSULFAN II)	25	U	25	UJ	2.2	25	ug/kg	HT
SD	NDA054	SW8081	BETA ENDOSULFAN (ENDOSULFAN II)	3.4	U	3.4	UJ	0.31	3.4	ug/kg	HT
SD	NDA055	SW8081	BETA ENDOSULFAN (ENDOSULFAN II)	3.3	U	3.3	UJ	0.3	3.3	ug/kg	HT
SD	NDA047	SW8081	BETA ENDOSULFAN (ENDOSULFAN II)	3.6	U	3.6	UJ	0.33	3.6	ug/kg	HT
SD	NDA048	SW8081	BETA ENDOSULFAN (ENDOSULFAN II)	3.8	U	3.8	UJ	0.34	3.8	ug/kg	HT
SD	NDA049	SW8081	BETA ENDOSULFAN (ENDOSULFAN II)	3.6	U	3.6	UJ	0.33	3.6	ug/kg	HT
SS	NDA164	SW8081	BETA ENDOSULFAN (ENDOSULFAN II)	4.1	U	4.1	UJ	0.37	4.1	ug/kg	HT
SS	NDA166	SW8081	BETA ENDOSULFAN (ENDOSULFAN II)	4.1	U	4.1	UJ	0.37	4.1	ug/kg	HT

Matrix	Sample ID	Analytical Method	Parameter	Lab Result	Lab Qual	Final Result	Final Qual	DL	RL	Units	Comments
SS	NDA168	SW8081	BETA ENDOSULFAN (ENDOSULFAN II)	3.9	U	3.9	UJ	0.35	3.9	ug/kg	HT
SS	NDA170	SW8081	BETA ENDOSULFAN (ENDOSULFAN II)	4	U	4	UJ	0.36	4	ug/kg	HT
SS	NDA172	SW8081	BETA ENDOSULFAN (ENDOSULFAN II)	3.6	U	3.6	UJ	0.32	3.6	ug/kg	HT
SS	NDA174	SW8081	BETA ENDOSULFAN (ENDOSULFAN II)	3.5	U	3.5	UJ	0.31	3.5	ug/kg	HT
SS	NDA176	SW8081	BETA ENDOSULFAN (ENDOSULFAN II)	9.3	U	9.3	UJ	0.84	9.3	ug/kg	HT
SS	NDA185	SW8081	BETA ENDOSULFAN (ENDOSULFAN II)	3.9	U	3.9	UJ	0.36	3.9	ug/kg	HT
SS	NDA186	SW8081	BETA ENDOSULFAN (ENDOSULFAN II)	3.7	U	3.7	UJ	0.33	3.7	ug/kg	HT
SS	NDA187	SW8081	BETA ENDOSULFAN (ENDOSULFAN II)	3.6	U	3.6	UJ	0.32	3.6	ug/kg	HT
SS	NDA188	SW8081	BETA ENDOSULFAN (ENDOSULFAN II)	4.6	U	4.6	UJ	0.41	4.6	ug/kg	HT
SS	NDA189	SW8081	BETA ENDOSULFAN (ENDOSULFAN II)	3.7	U	3.7	UJ	0.33	3.7	ug/kg	HT
SS	NDA190	SW8081	BETA ENDOSULFAN (ENDOSULFAN II)	3.8	U	3.8	UJ	0.34	3.8	ug/kg	HT
SS	NDA191	SW8081	BETA ENDOSULFAN (ENDOSULFAN II)	3.4	U	3.4	UJ	0.31	3.4	ug/kg	HT
SS	NDA192FD1	SW8081	BETA ENDOSULFAN (ENDOSULFAN II)	3.9	U	3.9	UJ	0.35	3.9	ug/kg	HT
SS	NDA193	SW8081	BETA ENDOSULFAN (ENDOSULFAN II)	3.4	U	3.4	UJ	0.31	3.4	ug/kg	HT
SS	NDA194	SW8081	BETA ENDOSULFAN (ENDOSULFAN II)	4.1	U	4.1	UJ	0.37	4.1	ug/kg	HT
SS	NDA195	SW8081	BETA ENDOSULFAN (ENDOSULFAN II)	3.4	U	3.4	UJ	0.31	3.4	ug/kg	HT
SS	NDA057	SW8081	BETA ENDOSULFAN (ENDOSULFAN II)	4.1	U	4.1	UJ	0.37	4.1	ug/kg	HT
SS	NDA059	SW8081	BETA ENDOSULFAN (ENDOSULFAN II)	3.6	U	3.6	UJ	0.32	3.6	ug/kg	HT
SS	NDA061	SW8081	BETA ENDOSULFAN (ENDOSULFAN II)	3.5	U	3.5	UJ	0.31	3.5	ug/kg	HT
SS	NDA062FD1	SW8081	BETA ENDOSULFAN (ENDOSULFAN II)	3.5	U	3.5	UJ	0.32	3.5	ug/kg	HT
SS	NDA065	SW8081	BETA ENDOSULFAN (ENDOSULFAN II)	4.2	U	4.2	UJ	0.38	4.2	ug/kg	HT
SS	NDA067	SW8081	BETA ENDOSULFAN (ENDOSULFAN II)	3.6	U	3.6	UJ	0.32	3.6	ug/kg	HT
SS	NDA069	SW8081	BETA ENDOSULFAN (ENDOSULFAN II)	3.4	U	3.4	UJ	0.3	3.4	ug/kg	HT
SS	NDA119	SW8081	BETA ENDOSULFAN (ENDOSULFAN II)	3.7	U	3.7	UJ	0.34	3.7	ug/kg	HT
SS	NDA120	SW8081	BETA ENDOSULFAN (ENDOSULFAN II)	4.4	U	4.4	UJ	0.4	4.4	ug/kg	HT
SS	NDA121	SW8081	BETA ENDOSULFAN (ENDOSULFAN II)	3.6	U	3.6	UJ	0.33	3.6	ug/kg	HT
SS	NDA122	SW8081	BETA ENDOSULFAN (ENDOSULFAN II)	3.7	U	3.7	UJ	0.34	3.7	ug/kg	HT
SS	NDA123	SW8081	BETA ENDOSULFAN (ENDOSULFAN II)	3.7	U	3.7	UJ	0.33	3.7	ug/kg	HT
SS	NDA124	SW8081	BETA ENDOSULFAN (ENDOSULFAN II)	3.7	U	3.7	UJ	0.33	3.7	ug/kg	HT
SS	NDA071	SW8081	BETA ENDOSULFAN (ENDOSULFAN II)	4	U	4	UJ	0.36	4	ug/kg	HT
SS	NDA072FD1	SW8081	BETA ENDOSULFAN (ENDOSULFAN II)	3.5	U	3.5	UJ	0.31	3.5	ug/kg	HT
SS	NDA074	SW8081	BETA ENDOSULFAN (ENDOSULFAN II)	0.35	U	0.35	UJ	0.03	0.35	ug/kg	HT
SS	NDA078	SW8081	BETA ENDOSULFAN (ENDOSULFAN II)	0.35	U	0.35	UJ	0.03	0.35	ug/kg	HT
SS	NDA080	SW8081	BETA ENDOSULFAN (ENDOSULFAN II)	0.34	U	0.34	UJ	0.03	0.34	ug/kg	HT
SS	NDA082	SW8081	BETA ENDOSULFAN (ENDOSULFAN II)	0.34	U	0.34	UJ	0.03	0.34	ug/kg	HT
SS	NDA113	SW8081	BETA ENDOSULFAN (ENDOSULFAN II)	4.1	U	4.1	UJ	0.37	4.1	ug/kg	HT
SS	NDA115	SW8081	BETA ENDOSULFAN (ENDOSULFAN II)	3.8	U	3.8	UJ	0.34	3.8	ug/kg	HT
SS	NDA117	SW8081	BETA ENDOSULFAN (ENDOSULFAN II)	4.2	U	4.2	UJ	0.38	4.2	ug/kg	HT
SB	NDA165	SW8081	BETA BHC	1.9	U	1.9	UJ	0.51	1.9	ug/kg	HT
SB	NDA167	SW8081	BETA BHC	2.1	U	2.1	UJ	0.55	2.1	ug/kg	HT
SB	NDA169	SW8081	BETA BHC	2	U	2	UJ	0.54	2	ug/kg	HT
SB	NDA171	SW8081	BETA BHC	1.8	U	1.8	UJ	0.49	1.8	ug/kg	HT
SB	NDA173	SW8081	BETA BHC	2.2	U	2.2	UJ	0.57	2.2	ug/kg	HT
SB	NDA175	SW8081	BETA BHC	1.9	U	1.9	UJ	0.5	1.9	ug/kg	HT
SB	NDA177	SW8081	BETA BHC	2	U	2	UJ	0.52	2	ug/kg	HT
SB	NDA213	SW8081	BETA BHC	2	U	2	UJ	0.52	2	ug/kg	HT
SB	NDA214FD1	SW8081	BETA BHC	1.9	U	1.9	UJ	0.5	1.9	ug/kg	HT
SB	NDA215	SW8081	BETA BHC	2	U	2	UJ	0.52	2	ug/kg	HT
SB	NDA216	SW8081	BETA BHC	1.8	U	1.8	UJ	0.49	1.8	ug/kg	HT
SB	NDA217	SW8081	BETA BHC	1.9	U	1.9	UJ	0.52	1.9	ug/kg	HT
SB	NDA218	SW8081	BETA BHC	1.9	U	1.9	UJ	0.5	1.9	ug/kg	HT
SB	NDA219	SW8081	BETA BHC	1.9	U	1.9	UJ	0.5	1.9	ug/kg	HT
SB	NDA220	SW8081	BETA BHC	1.9	U	1.9	UJ	0.52	1.9	ug/kg	HT
SB	NDA221	SW8081	BETA BHC	1.8	U	1.8	UJ	0.48	1.8	ug/kg	HT
SB	NDA222	SW8081	BETA BHC	1.7	U	1.7	UJ	0.45	1.7	ug/kg	HT
SB	NDA223	SW8081	BETA BHC	1.9	U	1.9	UJ	0.51	1.9	ug/kg	HT
SB	NDA235	SW8081	BETA BHC	2.2	U	2.2	UJ	0.59	2.2	ug/kg	HT
SB	NDA236	SW8081	BETA BHC	1.9	U	1.9	UJ	0.51	1.9	ug/kg	HT
SB	NDA237FD1	SW8081	BETA BHC	1.9	U	1.9	UJ	0.5	1.9	ug/kg	HT
SB	NDA238	SW8081	BETA BHC	1.9	U	1.9	UJ	0.51	1.9	ug/kg	HT
SB	NDA239	SW8081	BETA BHC	1.9	U	1.9	UJ	0.51	1.9	ug/kg	HT
SB	NDA240	SW8081	BETA BHC	2	U	2	UJ	0.54	2	ug/kg	HT
SB	NDA241	SW8081	BETA BHC	1.9	U	1.9	UJ	0.5	1.9	ug/kg	HT
SB	NDA242	SW8081	BETA BHC	2.1	U	2.1	UJ	0.56	2.1	ug/kg	HT
SB	NDA243	SW8081	BETA BHC	2	U	2	UJ	0.53	2	ug/kg	HT
SB	NDA244	SW8081	BETA BHC	1.9	U	1.9	UJ	0.49	1.9	ug/kg	HT
SB	NDA245	SW8081	BETA BHC	2	U	2	UJ	0.52	2	ug/kg	HT
SB	NDA246	SW8081	BETA BHC	2.1	U	2.1	UJ	0.55	2.1	ug/kg	HT
SB	NDA247FD1	SW8081	BETA BHC	2	U	2	UJ	0.52	2	ug/kg	HT
SB	NDA248	SW8081	BETA BHC	2.1	U	2.1	UJ	0.54	2.1	ug/kg	HT

Matrix	Sample ID	Analytical Method	Parameter	Lab Result	Lab Qual	Final Result	Final Qual	DL	RL	Units	Comments
SB	NDA249	SW8081	BETA BHC	1.9	U	1.9	UJ	0.5	1.9	ug/kg	HT
SB	NDA252	SW8081	BETA BHC	2	U	2	UJ	0.53	2	ug/kg	HT
SB	NDA253	SW8081	BETA BHC	2.1	U	2.1	UJ	0.57	2.1	ug/kg	HT
SB	NDA254	SW8081	BETA BHC	2.1	U	2.1	UJ	0.56	2.1	ug/kg	HT
SB	NDA255	SW8081	BETA BHC	2.1	U	2.1	UJ	0.56	2.1	ug/kg	HT
SB	NDA058	SW8081	BETA BHC	1.9	U	1.9	UJ	0.5	1.9	ug/kg	HT
SB	NDA060	SW8081	BETA BHC	1.9	U	1.9	UJ	0.49	1.9	ug/kg	HT
SB	NDA063	SW8081	BETA BHC	1.8	U	1.8	UJ	0.48	1.8	ug/kg	HT
SB	NDA064FD1	SW8081	BETA BHC	1.8	U	1.8	UJ	0.48	1.8	ug/kg	HT
SB	NDA066	SW8081	BETA BHC	1.8	U	1.8	UJ	0.47	1.8	ug/kg	HT
SB	NDA068	SW8081	BETA BHC	1.8	U	1.8	UJ	0.49	1.8	ug/kg	HT
SB	NDA070	SW8081	BETA BHC	1.8	U	1.8	UJ	0.48	1.8	ug/kg	HT
SB	NDA073	SW8081	BETA BHC	1.8	U	1.8	UJ	0.48	1.8	ug/kg	HT
SB	NDA075	SW8081	BETA BHC	0.18	U	0.18	UJ	0.05	0.18	ug/kg	HT
SB	NDA077	SW8081	BETA BHC	0.2	U	0.2	UJ	0.05	0.2	ug/kg	HT
SB	NDA081	SW8081	BETA BHC	0.18	U	0.18	UJ	0.05	0.18	ug/kg	HT
SB	NDA083	SW8081	BETA BHC	0.17	U	0.17	UJ	0.05	0.17	ug/kg	HT
SB	NDA114	SW8081	BETA BHC	2.2	U	2.2	UJ	0.58	2.2	ug/kg	HT
SB	NDA116	SW8081	BETA BHC	2.1	U	2.1	UJ	0.56	2.1	ug/kg	HT
SB	NDA118	SW8081	BETA BHC	2.2	U	2.2	UJ	0.58	2.2	ug/kg	HT
SB	NDA102	SW8081	BETA BHC	2.6	U	2.6	UJ	0.7	2.6	ug/kg	HT
SB	NDA105	SW8081	BETA BHC	2.7	U	2.7	UJ	0.72	2.7	ug/kg	HT
SB	NDA106FD1	SW8081	BETA BHC	2.7	U	2.7	UJ	0.72	2.7	ug/kg	HT
SB	NDA108	SW8081	BETA BHC	2.3	U	2.3	UJ	0.6	2.3	ug/kg	HT
SB	NDA110	SW8081	BETA BHC	2.3	U	2.3	UJ	0.6	2.3	ug/kg	HT
SB	NDA112	SW8081	BETA BHC	2.2	U	2.2	UJ	0.59	2.2	ug/kg	HT
SD	NDA053	SW8081	BETA BHC	13	U	13	UJ	3.4	13	ug/kg	HT
SD	NDA054	SW8081	BETA BHC	1.7	U	1.7	UJ	0.46	1.7	ug/kg	HT
SD	NDA055	SW8081	BETA BHC	1.7	U	1.7	UJ	0.45	1.7	ug/kg	HT
SD	NDA047	SW8081	BETA BHC	1.9	U	1.9	UJ	0.49	1.9	ug/kg	HT
SD	NDA048	SW8081	BETA BHC	1.9	U	1.9	UJ	0.52	1.9	ug/kg	HT
SD	NDA049	SW8081	BETA BHC	1.9	U	1.9	UJ	0.49	1.9	ug/kg	HT
SS	NDA164	SW8081	BETA BHC	2.1	U	2.1	UJ	0.55	2.1	ug/kg	HT
SS	NDA166	SW8081	BETA BHC	2.1	U	2.1	UJ	0.56	2.1	ug/kg	HT
SS	NDA168	SW8081	BETA BHC	2	U	2	UJ	0.52	2	ug/kg	HT
SS	NDA170	SW8081	BETA BHC	2	U	2	UJ	0.54	2	ug/kg	HT
SS	NDA172	SW8081	BETA BHC	1.8	U	1.8	UJ	0.48	1.8	ug/kg	HT
SS	NDA174	SW8081	BETA BHC	1.8	U	1.8	UJ	0.47	1.8	ug/kg	HT
SS	NDA176	SW8081	BETA BHC	4.8	U	4.8	UJ	1.3	4.8	ug/kg	HT
SS	NDA185	SW8081	BETA BHC	2	U	2	UJ	0.53	2	ug/kg	HT
SS	NDA186	SW8081	BETA BHC	1.9	U	1.9	UJ	0.5	1.9	ug/kg	HT
SS	NDA187	SW8081	BETA BHC	1.8	U	1.8	UJ	0.48	1.8	ug/kg	HT
SS	NDA188	SW8081	BETA BHC	2.3	U	2.3	UJ	0.62	2.3	ug/kg	HT
SS	NDA189	SW8081	BETA BHC	1.9	U	1.9	UJ	0.5	1.9	ug/kg	HT
SS	NDA190	SW8081	BETA BHC	1.9	U	1.9	UJ	0.51	1.9	ug/kg	HT
SS	NDA191	SW8081	BETA BHC	1.7	U	1.7	UJ	0.46	1.7	ug/kg	HT
SS	NDA192FD1	SW8081	BETA BHC	2	U	2	UJ	0.52	2	ug/kg	HT
SS	NDA193	SW8081	BETA BHC	1.8	U	1.8	UJ	0.47	1.8	ug/kg	HT
SS	NDA194	SW8081	BETA BHC	2.1	U	2.1	UJ	0.55	2.1	ug/kg	HT
SS	NDA195	SW8081	BETA BHC	1.7	U	1.7	UJ	0.46	1.7	ug/kg	HT
SS	NDA057	SW8081	BETA BHC	2.1	U	2.1	UJ	0.56	2.1	ug/kg	HT
SS	NDA059	SW8081	BETA BHC	1.8	U	1.8	UJ	0.48	1.8	ug/kg	HT
SS	NDA061	SW8081	BETA BHC	1.8	U	1.8	UJ	0.47	1.8	ug/kg	HT
SS	NDA062FD1	SW8081	BETA BHC	1.8	U	1.8	UJ	0.48	1.8	ug/kg	HT
SS	NDA065	SW8081	BETA BHC	2.1	U	2.1	UJ	0.56	2.1	ug/kg	HT
SS	NDA067	SW8081	BETA BHC	1.8	U	1.8	UJ	0.49	1.8	ug/kg	HT
SS	NDA069	SW8081	BETA BHC	1.7	U	1.7	UJ	0.46	1.7	ug/kg	HT
SS	NDA119	SW8081	BETA BHC	1.9	U	1.9	UJ	0.51	1.9	ug/kg	HT
SS	NDA120	SW8081	BETA BHC	2.2	U	2.2	UJ	0.6	2.2	ug/kg	HT
SS	NDA121	SW8081	BETA BHC	1.9	U	1.9	UJ	0.49	1.9	ug/kg	HT
SS	NDA122	SW8081	BETA BHC	1.9	U	1.9	UJ	0.51	1.9	ug/kg	HT
SS	NDA123	SW8081	BETA BHC	1.9	U	1.9	UJ	0.5	1.9	ug/kg	HT
SS	NDA124	SW8081	BETA BHC	1.9	U	1.9	UJ	0.5	1.9	ug/kg	HT
SS	NDA071	SW8081	BETA BHC	2	U	2	UJ	0.54	2	ug/kg	HT
SS	NDA072FD1	SW8081	BETA BHC	1.8	U	1.8	UJ	0.47	1.8	ug/kg	HT
SS	NDA074	SW8081	BETA BHC	0.18	U	0.18	UJ	0.05	0.18	ug/kg	HT
SS	NDA078	SW8081	BETA BHC	0.18	U	0.18	UJ	0.05	0.18	ug/kg	HT
SS	NDA080	SW8081	BETA BHC	0.17	U	0.17	UJ	0.05	0.17	ug/kg	HT
SS	NDA082	SW8081	BETA BHC	0.17	U	0.17	UJ	0.05	0.17	ug/kg	HT
SS	NDA113	SW8081	BETA BHC	2.1	U	2.1	UJ	0.56	2.1	ug/kg	HT

Matrix	Sample ID	Analytical Method	Parameter	Lab Result	Lab Qual	Final Result	Final Qual	DL	RL	Units	Comments
SS	NDA115	SW8081	BETA BHC	1.9	U	1.9	UJ	0.51	1.9	ug/kg	HT
SS	NDA117	SW8081	BETA BHC	2.1	U	2.1	UJ	0.57	2.1	ug/kg	HT
SS	NDA101	SW8081	BETA BHC	2.3	U	2.3	UJ	0.6	2.3	ug/kg	HT
SS	NDA103	SW8081	BETA BHC	2.3	U	2.3	UJ	0.62	2.3	ug/kg	HT
SS	NDA104FD1	SW8081	BETA BHC	2.4	U	2.4	UJ	0.64	2.4	ug/kg	HT
SS	NDA107	SW8081	BETA BHC	2.1	U	2.1	UJ	0.56	2.1	ug/kg	HT
SS	NDA109	SW8081	BETA BHC	2.2	U	2.2	UJ	0.59	2.2	ug/kg	HT
SS	NDA111	SW8081	BETA BHC	2.2	U	2.2	UJ	0.6	2.2	ug/kg	HT
SB	NDA213	SW8270	BENZYL BUTYL PHTHALATE	485	U	485	UJ	26	485	ug/kg	HT
SB	NDA214FD1	SW8270	BENZYL BUTYL PHTHALATE	487	U	487	UJ	26	487	ug/kg	HT
SB	NDA215	SW8270	BENZYL BUTYL PHTHALATE	527	U	527	UJ	28	527	ug/kg	HT
SB	NDA216	SW8270	BENZYL BUTYL PHTHALATE	537	U	537	UJ	28	537	ug/kg	HT
SB	NDA217	SW8270	BENZYL BUTYL PHTHALATE	540	U	540	UJ	29	540	ug/kg	HT
SB	NDA218	SW8270	BENZYL BUTYL PHTHALATE	505	U	505	UJ	27	505	ug/kg	HT
SB	NDA219	SW8270	BENZYL BUTYL PHTHALATE	380	U	380	UJ	20	380	ug/kg	HT
SB	NDA220	SW8270	BENZYL BUTYL PHTHALATE	542	U	542	UJ	29	542	ug/kg	HT
SB	NDA221	SW8270	BENZYL BUTYL PHTHALATE	501	U	501	UJ	27	501	ug/kg	HT
SB	NDA222	SW8270	BENZYL BUTYL PHTHALATE	459	U	459	UJ	24	459	ug/kg	HT
SB	NDA223	SW8270	BENZYL BUTYL PHTHALATE	527	U	527	UJ	28	527	ug/kg	HT
SB	NDA235	SW8270	BENZYL BUTYL PHTHALATE	504	U	504	UJ	27	504	ug/kg	HT
SB	NDA236	SW8270	BENZYL BUTYL PHTHALATE	423	U	423	UJ	22	423	ug/kg	HT
SB	NDA237FD1	SW8270	BENZYL BUTYL PHTHALATE	395	U	395	UJ	21	395	ug/kg	HT
SB	NDA238	SW8270	BENZYL BUTYL PHTHALATE	424	U	424	UJ	22	424	ug/kg	HT
SB	NDA239	SW8270	BENZYL BUTYL PHTHALATE	555	U	555	UJ	29	555	ug/kg	HT
SB	NDA240	SW8270	BENZYL BUTYL PHTHALATE	397	U	397	UJ	21	397	ug/kg	HT
SB	NDA241	SW8270	BENZYL BUTYL PHTHALATE	471	U	471	UJ	25	471	ug/kg	HT
SB	NDA242	SW8270	BENZYL BUTYL PHTHALATE	436	U	436	UJ	23	436	ug/kg	HT
SB	NDA243	SW8270	BENZYL BUTYL PHTHALATE	893	U	893	UJ	47	893	ug/kg	HT
SB	NDA244	SW8270	BENZYL BUTYL PHTHALATE	388	U	388	UJ	21	388	ug/kg	HT
SB	NDA245	SW8270	BENZYL BUTYL PHTHALATE	393	U	393	UJ	21	393	ug/kg	HT
SB	NDA246	SW8270	BENZYL BUTYL PHTHALATE	511	U	511	UJ	27	511	ug/kg	HT
SB	NDA247FD1	SW8270	BENZYL BUTYL PHTHALATE	390	U	390	UJ	21	390	ug/kg	HT
SB	NDA248	SW8270	BENZYL BUTYL PHTHALATE	453	U	453	UJ	24	453	ug/kg	HT
SB	NDA249	SW8270	BENZYL BUTYL PHTHALATE	374	U	374	UJ	20	374	ug/kg	HT
SB	NDA252	SW8270	BENZYL BUTYL PHTHALATE	420	U	420	UJ	22	420	ug/kg	HT
SB	NDA253	SW8270	BENZYL BUTYL PHTHALATE	439	U	439	UJ	23	439	ug/kg	HT
SB	NDA254	SW8270	BENZYL BUTYL PHTHALATE	391	U	391	UJ	21	391	ug/kg	HT
SB	NDA255	SW8270	BENZYL BUTYL PHTHALATE	375	U	375	UJ	20	375	ug/kg	HT
SB	NDA085	SW8270	BENZYL BUTYL PHTHALATE	482	U	482	UJ	26	482	ug/kg	HT
SB	NDA092	SW8270	BENZYL BUTYL PHTHALATE	400	U	400	UJ	21	400	ug/kg	HT
SB	NDA093	SW8270	BENZYL BUTYL PHTHALATE	339	U	339	UJ	18	339	ug/kg	HT
SB	NDA094	SW8270	BENZYL BUTYL PHTHALATE	510	U	510	UJ	27	510	ug/kg	HT
SB	NDA095FD1	SW8270	BENZYL BUTYL PHTHALATE	310	U	310	UJ	16	310	ug/kg	HT
SB	NDA296	SW8270	BENZYL BUTYL PHTHALATE	369	U	369	UJ	20	369	ug/kg	HT
SB	NDA297	SW8270	BENZYL BUTYL PHTHALATE	358	U	358	UJ	19	358	ug/kg	HT
SB	NDA298	SW8270	BENZYL BUTYL PHTHALATE	341	U	341	UJ	18	341	ug/kg	HT
SB	NDA299	SW8270	BENZYL BUTYL PHTHALATE	370	U	370	UJ	20	370	ug/kg	HT
SB	NDA058	SW8270	BENZYL BUTYL PHTHALATE	460	U	460	UJ	24	460	ug/kg	HT
SB	NDA060	SW8270	BENZYL BUTYL PHTHALATE	478	U	478	UJ	25	478	ug/kg	HT
SB	NDA063	SW8270	BENZYL BUTYL PHTHALATE	382	U	382	UJ	20	382	ug/kg	HT
SB	NDA064FD1	SW8270	BENZYL BUTYL PHTHALATE	351	U	351	UJ	19	351	ug/kg	HT
SB	NDA066	SW8270	BENZYL BUTYL PHTHALATE	344	U	344	UJ	18	344	ug/kg	HT
SB	NDA068	SW8270	BENZYL BUTYL PHTHALATE	360	U	360	UJ	19	360	ug/kg	HT
SB	NDA070	SW8270	BENZYL BUTYL PHTHALATE	404	U	404	UJ	21	404	ug/kg	HT
SB	NDA073	SW8270	BENZYL BUTYL PHTHALATE	383	U	383	UJ	20	383	ug/kg	HT
SB	NDA075	SW8270	BENZYL BUTYL PHTHALATE	401	U	401	UJ	21	401	ug/kg	HT
SB	NDA077	SW8270	BENZYL BUTYL PHTHALATE	441	U	441	UJ	23	441	ug/kg	HT
SB	NDA079	SW8270	BENZYL BUTYL PHTHALATE	466	U	466	UJ	25	466	ug/kg	HT
SB	NDA081RE1	SW8270	BENZYL BUTYL PHTHALATE	393	U	393	UJ	21	393	ug/kg	HT
SB	NDA083RE1	SW8270	BENZYL BUTYL PHTHALATE	4240	U	4240	UJ	224	4240	ug/kg	HT
SD	NDA054	SW8270	BENZYL BUTYL PHTHALATE	480	U	480	UJ	25	480	ug/kg	HT
SD	NDA055	SW8270	BENZYL BUTYL PHTHALATE	696	U	696	UJ	37	696	ug/kg	HT
SD	NDA042	SW8270	BENZYL BUTYL PHTHALATE	686	U	686	UJ	36	686	ug/kg	HT
SD	NDA043	SW8270	BENZYL BUTYL PHTHALATE	735	U	735	UJ	39	735	ug/kg	HT
SD	NDA044	SW8270	BENZYL BUTYL PHTHALATE	1680	U	1680	UJ	89	1680	ug/kg	HT
SD	NDA045	SW8270	BENZYL BUTYL PHTHALATE	1500	U	1500	UJ	80	1500	ug/kg	HT
SD	NDA046	SW8270	BENZYL BUTYL PHTHALATE	1520	U	1520	UJ	80	1520	ug/kg	HT
SD	NDA302	SW8270	BENZYL BUTYL PHTHALATE	1200	U	1200	UJ	64	1200	ug/kg	HT
SD	NDA303	SW8270	BENZYL BUTYL PHTHALATE	2300	U	2300	UJ	122	2300	ug/kg	HT
SD	NDA307FD1	SW8270	BENZYL BUTYL PHTHALATE	2130	U	2130	UJ	113	2130	ug/kg	HT

Matrix	Sample ID	Analytical Method	Parameter	Lab Result	Lab Qual	Final Result	Final Qual	DL	RL	Units	Comments
SD	NDA047	SW8270	BENZYL BUTYL PHTHALATE	503	U	503	UJ	27	503	ug/kg	HT
SD	NDA048	SW8270	BENZYL BUTYL PHTHALATE	558	U	558	UJ	30	558	ug/kg	HT
SD	NDA049	SW8270	BENZYL BUTYL PHTHALATE	463	U	463	UJ	25	463	ug/kg	HT
SS	NDA178	SW8270	BENZYL BUTYL PHTHALATE	644	U	644	UJ	34	644	ug/kg	HT
SS	NDA179	SW8270	BENZYL BUTYL PHTHALATE	644	U	644	UJ	34	644	ug/kg	HT
SS	NDA181	SW8270	BENZYL BUTYL PHTHALATE	566	U	566	UJ	30	566	ug/kg	HT
SS	NDA182	SW8270	BENZYL BUTYL PHTHALATE	679	U	679	UJ	36	679	ug/kg	HT
SS	NDA183	SW8270	BENZYL BUTYL PHTHALATE	589	U	589	UJ	31	589	ug/kg	HT
SS	NDA184FD1	SW8270	BENZYL BUTYL PHTHALATE	662	U	662	UJ	35	662	ug/kg	HT
SS	NDA201	SW8270	BENZYL BUTYL PHTHALATE	491	U	491	UJ	26	491	ug/kg	HT
SS	NDA202	SW8270	BENZYL BUTYL PHTHALATE	605	U	605	UJ	32	605	ug/kg	HT
SS	NDA203	SW8270	BENZYL BUTYL PHTHALATE	617	U	617	UJ	33	617	ug/kg	HT
SS	NDA204	SW8270	BENZYL BUTYL PHTHALATE	753	U	753	UJ	40	753	ug/kg	HT
SS	NDA205FD1	SW8270	BENZYL BUTYL PHTHALATE	668	U	668	UJ	35	668	ug/kg	HT
SS	NDA206	SW8270	BENZYL BUTYL PHTHALATE	529	U	529	UJ	28	529	ug/kg	HT
SS	NDA207	SW8270	BENZYL BUTYL PHTHALATE	669	U	669	UJ	35	669	ug/kg	HT
SS	NDA208	SW8270	BENZYL BUTYL PHTHALATE	520	U	520	UJ	28	520	ug/kg	HT
SS	NDA209	SW8270	BENZYL BUTYL PHTHALATE	570	U	570	UJ	30	570	ug/kg	HT
SS	NDA210	SW8270	BENZYL BUTYL PHTHALATE	545	U	545	UJ	29	545	ug/kg	HT
SS	NDA211	SW8270	BENZYL BUTYL PHTHALATE	742	U	742	UJ	39	742	ug/kg	HT
SS	NDA212	SW8270	BENZYL BUTYL PHTHALATE	651	U	651	UJ	35	651	ug/kg	HT
SS	NDA185	SW8270	BENZYL BUTYL PHTHALATE	445	U	445	UJ	24	445	ug/kg	HT
SS	NDA186	SW8270	BENZYL BUTYL PHTHALATE	416	U	416	UJ	22	416	ug/kg	HT
SS	NDA187	SW8270	BENZYL BUTYL PHTHALATE	380	U	380	UJ	20	380	ug/kg	HT
SS	NDA188	SW8270	BENZYL BUTYL PHTHALATE	810	U	810	UJ	43	810	ug/kg	HT
SS	NDA189	SW8270	BENZYL BUTYL PHTHALATE	426	U	426	UJ	23	426	ug/kg	HT
SS	NDA190	SW8270	BENZYL BUTYL PHTHALATE	430	U	430	UJ	23	430	ug/kg	HT
SS	NDA191	SW8270	BENZYL BUTYL PHTHALATE	338	U	338	UJ	18	338	ug/kg	HT
SS	NDA192FD1	SW8270	BENZYL BUTYL PHTHALATE	418	U	418	UJ	22	418	ug/kg	HT
SS	NDA193	SW8270	BENZYL BUTYL PHTHALATE	1720	U	1720	UJ	91	1720	ug/kg	HT
SS	NDA194	SW8270	BENZYL BUTYL PHTHALATE	480	U	480	UJ	25	480	ug/kg	HT
SS	NDA195	SW8270	BENZYL BUTYL PHTHALATE	323	U	323	UJ	17	323	ug/kg	HT
SS	NDA084	SW8270	BENZYL BUTYL PHTHALATE	344	U	344	UJ	18	344	ug/kg	HT
SS	NDA091	SW8270	BENZYL BUTYL PHTHALATE	367	U	367	UJ	19	367	ug/kg	HT
SS	NDA057	SW8270	BENZYL BUTYL PHTHALATE	563	U	563	UJ	30	563	ug/kg	HT
SS	NDA059	SW8270	BENZYL BUTYL PHTHALATE	465	U	465	UJ	25	465	ug/kg	HT
SS	NDA061	SW8270	BENZYL BUTYL PHTHALATE	469	U	469	UJ	25	469	ug/kg	HT
SS	NDA062FD1	SW8270	BENZYL BUTYL PHTHALATE	523	U	523	UJ	28	523	ug/kg	HT
SS	NDA065	SW8270	BENZYL BUTYL PHTHALATE	421	U	421	UJ	22	421	ug/kg	HT
SS	NDA067	SW8270	BENZYL BUTYL PHTHALATE	378	U	378	UJ	20	378	ug/kg	HT
SS	NDA069	SW8270	BENZYL BUTYL PHTHALATE	320	U	320	UJ	17	320	ug/kg	HT
SS	NDA119	SW8270	BENZYL BUTYL PHTHALATE	503	U	503	UJ	27	503	ug/kg	HT
SS	NDA120	SW8270	BENZYL BUTYL PHTHALATE	541	U	541	UJ	29	541	ug/kg	HT
SS	NDA121	SW8270	BENZYL BUTYL PHTHALATE	409	U	409	UJ	22	409	ug/kg	HT
SS	NDA122	SW8270	BENZYL BUTYL PHTHALATE	450	U	450	UJ	24	450	ug/kg	HT
SS	NDA123	SW8270	BENZYL BUTYL PHTHALATE	450	U	450	UJ	24	450	ug/kg	HT
SS	NDA124	SW8270	BENZYL BUTYL PHTHALATE	432	U	432	UJ	23	432	ug/kg	HT
SS	NDA071	SW8270	BENZYL BUTYL PHTHALATE	554	U	554	UJ	29	554	ug/kg	HT
SS	NDA072FD1	SW8270	BENZYL BUTYL PHTHALATE	413	U	413	UJ	22	413	ug/kg	HT
SS	NDA074	SW8270	BENZYL BUTYL PHTHALATE	448	U	448	UJ	24	448	ug/kg	HT
SS	NDA076	SW8270	BENZYL BUTYL PHTHALATE	419	U	419	UJ	22	419	ug/kg	HT
SS	NDA078	SW8270	BENZYL BUTYL PHTHALATE	440	U	440	UJ	23	440	ug/kg	HT
SS	NDA080RE1	SW8270	BENZYL BUTYL PHTHALATE	407	U	407	UJ	22	407	ug/kg	HT
SS	NDA082RE1	SW8270	BENZYL BUTYL PHTHALATE	4660	U	4660	UJ	247	4660	ug/kg	HT
SB	NDA213	SW8270	BENZO(k)FLUORANTHENE	485	U	485	UJ	34	485	ug/kg	HT
SB	NDA214FD1	SW8270	BENZO(k)FLUORANTHENE	487	U	487	UJ	35	487	ug/kg	HT
SB	NDA215	SW8270	BENZO(k)FLUORANTHENE	527	U	527	UJ	37	527	ug/kg	HT
SB	NDA216	SW8270	BENZO(k)FLUORANTHENE	537	U	537	UJ	38	537	ug/kg	HT
SB	NDA217	SW8270	BENZO(k)FLUORANTHENE	540	U	540	UJ	38	540	ug/kg	HT
SB	NDA218	SW8270	BENZO(k)FLUORANTHENE	505	U	505	UJ	36	505	ug/kg	HT
SB	NDA219	SW8270	BENZO(k)FLUORANTHENE	380	U	380	UJ	27	380	ug/kg	HT
SB	NDA220	SW8270	BENZO(k)FLUORANTHENE	542	U	542	UJ	38	542	ug/kg	HT
SB	NDA221	SW8270	BENZO(k)FLUORANTHENE	501	U	501	UJ	36	501	ug/kg	HT
SB	NDA222	SW8270	BENZO(k)FLUORANTHENE	459	U	459	UJ	33	459	ug/kg	HT
SB	NDA223	SW8270	BENZO(k)FLUORANTHENE	527	U	527	UJ	37	527	ug/kg	HT
SB	NDA235	SW8270	BENZO(k)FLUORANTHENE	504	U	504	UJ	36	504	ug/kg	HT
SB	NDA236	SW8270	BENZO(k)FLUORANTHENE	423	U	423	UJ	30	423	ug/kg	HT
SB	NDA237FD1	SW8270	BENZO(k)FLUORANTHENE	395	U	395	UJ	28	395	ug/kg	HT
SB	NDA238	SW8270	BENZO(k)FLUORANTHENE	424	U	424	UJ	30	424	ug/kg	HT
SB	NDA239	SW8270	BENZO(k)FLUORANTHENE	555	U	555	UJ	39	555	ug/kg	HT

Matrix	Sample ID	Analytical Method	Parameter	Lab Result	Lab Qual	Final Result	Final Qual	DL	RL	Units	Comments
SB	NDA240	SW8270	BENZO(k)FLUORANTHENE	397	U	397	UJ	28	397	ug/kg	HT
SB	NDA241	SW8270	BENZO(k)FLUORANTHENE	471	U	471	UJ	33	471	ug/kg	HT
SB	NDA242	SW8270	BENZO(k)FLUORANTHENE	436	U	436	UJ	31	436	ug/kg	HT
SB	NDA243	SW8270	BENZO(k)FLUORANTHENE	893	U	893	UJ	63	893	ug/kg	HT
SB	NDA244	SW8270	BENZO(k)FLUORANTHENE	388	U	388	UJ	28	388	ug/kg	HT
SB	NDA245	SW8270	BENZO(k)FLUORANTHENE	393	U	393	UJ	28	393	ug/kg	HT
SB	NDA246	SW8270	BENZO(k)FLUORANTHENE	511	U	511	UJ	36	511	ug/kg	HT
SB	NDA247FD1	SW8270	BENZO(k)FLUORANTHENE	390	U	390	UJ	28	390	ug/kg	HT
SB	NDA248	SW8270	BENZO(k)FLUORANTHENE	453	U	453	UJ	32	453	ug/kg	HT
SB	NDA249	SW8270	BENZO(k)FLUORANTHENE	374	U	374	UJ	27	374	ug/kg	HT
SB	NDA252	SW8270	BENZO(k)FLUORANTHENE	420	U	420	UJ	30	420	ug/kg	HT
SB	NDA253	SW8270	BENZO(k)FLUORANTHENE	439	U	439	UJ	31	439	ug/kg	HT
SB	NDA254	SW8270	BENZO(k)FLUORANTHENE	391	U	391	UJ	28	391	ug/kg	HT
SB	NDA255	SW8270	BENZO(k)FLUORANTHENE	375	U	375	UJ	27	375	ug/kg	HT
SB	NDA085	SW8270	BENZO(k)FLUORANTHENE	482	U	482	UJ	34	482	ug/kg	HT
SB	NDA092	SW8270	BENZO(k)FLUORANTHENE	400	U	400	UJ	28	400	ug/kg	HT
SB	NDA093	SW8270	BENZO(k)FLUORANTHENE	339	U	339	UJ	24	339	ug/kg	HT
SB	NDA094	SW8270	BENZO(k)FLUORANTHENE	510	U	510	UJ	36	510	ug/kg	HT
SB	NDA095FD1	SW8270	BENZO(k)FLUORANTHENE	310	U	310	UJ	22	310	ug/kg	HT
SB	NDA296	SW8270	BENZO(k)FLUORANTHENE	369	U	369	UJ	26	369	ug/kg	HT
SB	NDA299	SW8270	BENZO(k)FLUORANTHENE	370	U	370	UJ	26	370	ug/kg	HT
SB	NDA058	SW8270	BENZO(k)FLUORANTHENE	460	U	460	UJ	33	460	ug/kg	HT
SB	NDA060	SW8270	BENZO(k)FLUORANTHENE	478	U	478	UJ	34	478	ug/kg	HT
SB	NDA063	SW8270	BENZO(k)FLUORANTHENE	382	U	382	UJ	27	382	ug/kg	HT
SB	NDA064FD1	SW8270	BENZO(k)FLUORANTHENE	351	U	351	UJ	25	351	ug/kg	HT
SB	NDA066	SW8270	BENZO(k)FLUORANTHENE	344	U	344	UJ	24	344	ug/kg	HT
SB	NDA068	SW8270	BENZO(k)FLUORANTHENE	360	U	360	UJ	26	360	ug/kg	HT
SB	NDA070	SW8270	BENZO(k)FLUORANTHENE	404	U	404	UJ	29	404	ug/kg	HT
SB	NDA073	SW8270	BENZO(k)FLUORANTHENE	383	U	383	UJ	27	383	ug/kg	HT
SB	NDA075	SW8270	BENZO(k)FLUORANTHENE	401	U	401	UJ	28	401	ug/kg	HT
SB	NDA077	SW8270	BENZO(k)FLUORANTHENE	441	U	441	UJ	31	441	ug/kg	HT
SB	NDA079	SW8270	BENZO(k)FLUORANTHENE	466	U	466	UJ	33	466	ug/kg	HT
SB	NDA081RE1	SW8270	BENZO(k)FLUORANTHENE	393	U	393	UJ	28	393	ug/kg	HT
SB	NDA083RE1	SW8270	BENZO(k)FLUORANTHENE	4240	U	4240	UJ	301	4240	ug/kg	HT
SD	NDA054	SW8270	BENZO(k)FLUORANTHENE	480	U	480	UJ	34	480	ug/kg	HT
SD	NDA055	SW8270	BENZO(k)FLUORANTHENE	696	U	696	UJ	49	696	ug/kg	HT
SD	NDA042	SW8270	BENZO(k)FLUORANTHENE	686	U	686	UJ	49	686	ug/kg	HT
SD	NDA043	SW8270	BENZO(k)FLUORANTHENE	735	U	735	UJ	52	735	ug/kg	HT
SD	NDA044	SW8270	BENZO(k)FLUORANTHENE	1680	U	1680	UJ	120	1680	ug/kg	HT
SD	NDA045	SW8270	BENZO(k)FLUORANTHENE	1500	U	1500	UJ	107	1500	ug/kg	HT
SD	NDA046	SW8270	BENZO(k)FLUORANTHENE	1520	U	1520	UJ	108	1520	ug/kg	HT
SD	NDA302	SW8270	BENZO(k)FLUORANTHENE	1200	U	1200	UJ	85	1200	ug/kg	HT
SD	NDA303	SW8270	BENZO(k)FLUORANTHENE	2300	U	2300	UJ	163	2300	ug/kg	HT
SD	NDA307FD1	SW8270	BENZO(k)FLUORANTHENE	2130	U	2130	UJ	151	2130	ug/kg	HT
SD	NDA047	SW8270	BENZO(k)FLUORANTHENE	503	U	503	UJ	36	503	ug/kg	HT
SD	NDA048	SW8270	BENZO(k)FLUORANTHENE	558	U	558	UJ	40	558	ug/kg	HT
SD	NDA049	SW8270	BENZO(k)FLUORANTHENE	463	U	463	UJ	33	463	ug/kg	HT
SS	NDA178	SW8270	BENZO(k)FLUORANTHENE	644	U	644	UJ	46	644	ug/kg	HT
SS	NDA179	SW8270	BENZO(k)FLUORANTHENE	644	U	644	UJ	46	644	ug/kg	HT
SS	NDA181	SW8270	BENZO(k)FLUORANTHENE	566	U	566	UJ	40	566	ug/kg	HT
SS	NDA182	SW8270	BENZO(k)FLUORANTHENE	679	U	679	UJ	48	679	ug/kg	HT
SS	NDA183	SW8270	BENZO(k)FLUORANTHENE	589	U	589	UJ	42	589	ug/kg	HT
SS	NDA184FD1	SW8270	BENZO(k)FLUORANTHENE	662	U	662	UJ	47	662	ug/kg	HT
SS	NDA201	SW8270	BENZO(k)FLUORANTHENE	491	U	491	UJ	35	491	ug/kg	HT
SS	NDA202	SW8270	BENZO(k)FLUORANTHENE	605	U	605	UJ	43	605	ug/kg	HT
SS	NDA203	SW8270	BENZO(k)FLUORANTHENE	617	U	617	UJ	44	617	ug/kg	HT
SS	NDA204	SW8270	BENZO(k)FLUORANTHENE	753	U	753	UJ	53	753	ug/kg	HT
SS	NDA205FD1	SW8270	BENZO(k)FLUORANTHENE	668	U	668	UJ	47	668	ug/kg	HT
SS	NDA206	SW8270	BENZO(k)FLUORANTHENE	529	U	529	UJ	38	529	ug/kg	HT
SS	NDA207	SW8270	BENZO(k)FLUORANTHENE	669	U	669	UJ	48	669	ug/kg	HT
SS	NDA208	SW8270	BENZO(k)FLUORANTHENE	520	U	520	UJ	37	520	ug/kg	HT
SS	NDA209	SW8270	BENZO(k)FLUORANTHENE	570	U	570	UJ	40	570	ug/kg	HT
SS	NDA210	SW8270	BENZO(k)FLUORANTHENE	545	U	545	UJ	39	545	ug/kg	HT
SS	NDA211	SW8270	BENZO(k)FLUORANTHENE	742	U	742	UJ	53	742	ug/kg	HT
SS	NDA212	SW8270	BENZO(k)FLUORANTHENE	651	U	651	UJ	46	651	ug/kg	HT
SS	NDA185	SW8270	BENZO(k)FLUORANTHENE	445	U	445	UJ	32	445	ug/kg	HT
SS	NDA188	SW8270	BENZO(k)FLUORANTHENE	810	U	810	UJ	57	810	ug/kg	HT
SS	NDA189	SW8270	BENZO(k)FLUORANTHENE	426	U	426	UJ	30	426	ug/kg	HT
SS	NDA190	SW8270	BENZO(k)FLUORANTHENE	430	U	430	UJ	31	430	ug/kg	HT
SS	NDA191	SW8270	BENZO(k)FLUORANTHENE	338	U	338	UJ	24	338	ug/kg	HT

Matrix	Sample ID	Analytical Method	Parameter	Lab Result	Lab Qual	Final Result	Final Qual	DL	RL	Units	Comments
SS	NDA192FD1	SW8270	BENZO(k)FLUORANTHENE	418	U	418	UJ	30	418	ug/kg	HT
SS	NDA193	SW8270	BENZO(k)FLUORANTHENE	1720	U	1720	UJ	122	1720	ug/kg	HT
SS	NDA194	SW8270	BENZO(k)FLUORANTHENE	480	U	480	UJ	34	480	ug/kg	HT
SS	NDA195	SW8270	BENZO(k)FLUORANTHENE	323	U	323	UJ	23	323	ug/kg	HT
SS	NDA057	SW8270	BENZO(k)FLUORANTHENE	563	U	563	UJ	40	563	ug/kg	HT
SS	NDA059	SW8270	BENZO(k)FLUORANTHENE	465	U	465	UJ	33	465	ug/kg	HT
SS	NDA061	SW8270	BENZO(k)FLUORANTHENE	469	U	469	UJ	33	469	ug/kg	HT
SS	NDA062FD1	SW8270	BENZO(k)FLUORANTHENE	523	U	523	UJ	37	523	ug/kg	HT
SS	NDA065	SW8270	BENZO(k)FLUORANTHENE	421	U	421	UJ	30	421	ug/kg	HT
SS	NDA067	SW8270	BENZO(k)FLUORANTHENE	378	U	378	UJ	27	378	ug/kg	HT
SS	NDA069	SW8270	BENZO(k)FLUORANTHENE	320	U	320	UJ	23	320	ug/kg	HT
SS	NDA119	SW8270	BENZO(k)FLUORANTHENE	503	U	503	UJ	36	503	ug/kg	HT
SS	NDA120	SW8270	BENZO(k)FLUORANTHENE	541	U	541	UJ	38	541	ug/kg	HT
SS	NDA071	SW8270	BENZO(k)FLUORANTHENE	554	U	554	UJ	39	554	ug/kg	HT
SS	NDA072FD1	SW8270	BENZO(k)FLUORANTHENE	413	U	413	UJ	29	413	ug/kg	HT
SS	NDA074	SW8270	BENZO(k)FLUORANTHENE	448	U	448	UJ	32	448	ug/kg	HT
SS	NDA076	SW8270	BENZO(k)FLUORANTHENE	419	U	419	UJ	30	419	ug/kg	HT
SS	NDA078	SW8270	BENZO(k)FLUORANTHENE	440	U	440	UJ	31	440	ug/kg	HT
SS	NDA080RE1	SW8270	BENZO(k)FLUORANTHENE	407	U	407	UJ	29	407	ug/kg	HT
SS	NDA082RE1	SW8270	BENZO(k)FLUORANTHENE	4660	U	4660	UJ	331	4660	ug/kg	HT
SB	NDA213	SW8270	BENZO(g,h,i)PERYLENE	485	U	485	UJ	29	485	ug/kg	HT
SB	NDA214FD1	SW8270	BENZO(g,h,i)PERYLENE	487	U	487	UJ	29	487	ug/kg	HT
SB	NDA215	SW8270	BENZO(g,h,i)PERYLENE	527	U	527	UJ	32	527	ug/kg	HT
SB	NDA216	SW8270	BENZO(g,h,i)PERYLENE	537	U	537	UJ	32	537	ug/kg	HT
SB	NDA217	SW8270	BENZO(g,h,i)PERYLENE	540	U	540	UJ	32	540	ug/kg	HT
SB	NDA218	SW8270	BENZO(g,h,i)PERYLENE	505	U	505	UJ	30	505	ug/kg	HT
SB	NDA219	SW8270	BENZO(g,h,i)PERYLENE	380	U	380	UJ	23	380	ug/kg	HT
SB	NDA220	SW8270	BENZO(g,h,i)PERYLENE	542	U	542	UJ	33	542	ug/kg	HT
SB	NDA221	SW8270	BENZO(g,h,i)PERYLENE	501	U	501	UJ	30	501	ug/kg	HT
SB	NDA222	SW8270	BENZO(g,h,i)PERYLENE	459	U	459	UJ	28	459	ug/kg	HT
SB	NDA223	SW8270	BENZO(g,h,i)PERYLENE	527	U	527	UJ	32	527	ug/kg	HT
SB	NDA235	SW8270	BENZO(g,h,i)PERYLENE	504	U	504	UJ	30	504	ug/kg	HT
SB	NDA236	SW8270	BENZO(g,h,i)PERYLENE	423	U	423	UJ	25	423	ug/kg	HT
SB	NDA237FD1	SW8270	BENZO(g,h,i)PERYLENE	395	U	395	UJ	24	395	ug/kg	HT
SB	NDA238	SW8270	BENZO(g,h,i)PERYLENE	424	U	424	UJ	25	424	ug/kg	HT
SB	NDA239	SW8270	BENZO(g,h,i)PERYLENE	555	U	555	UJ	33	555	ug/kg	HT
SB	NDA240	SW8270	BENZO(g,h,i)PERYLENE	397	U	397	UJ	24	397	ug/kg	HT
SB	NDA241	SW8270	BENZO(g,h,i)PERYLENE	471	U	471	UJ	28	471	ug/kg	HT
SB	NDA242	SW8270	BENZO(g,h,i)PERYLENE	436	U	436	UJ	26	436	ug/kg	HT
SB	NDA243	SW8270	BENZO(g,h,i)PERYLENE	893	U	893	UJ	54	893	ug/kg	HT
SB	NDA244	SW8270	BENZO(g,h,i)PERYLENE	388	U	388	UJ	23	388	ug/kg	HT
SB	NDA245	SW8270	BENZO(g,h,i)PERYLENE	393	U	393	UJ	24	393	ug/kg	HT
SB	NDA246	SW8270	BENZO(g,h,i)PERYLENE	511	U	511	UJ	31	511	ug/kg	HT
SB	NDA247FD1	SW8270	BENZO(g,h,i)PERYLENE	390	U	390	UJ	23	390	ug/kg	HT
SB	NDA248	SW8270	BENZO(g,h,i)PERYLENE	453	U	453	UJ	27	453	ug/kg	HT
SB	NDA249	SW8270	BENZO(g,h,i)PERYLENE	374	U	374	UJ	22	374	ug/kg	HT
SB	NDA252	SW8270	BENZO(g,h,i)PERYLENE	420	U	420	UJ	25	420	ug/kg	HT
SB	NDA253	SW8270	BENZO(g,h,i)PERYLENE	439	U	439	UJ	26	439	ug/kg	HT
SB	NDA254	SW8270	BENZO(g,h,i)PERYLENE	391	U	391	UJ	23	391	ug/kg	HT
SB	NDA255	SW8270	BENZO(g,h,i)PERYLENE	375	U	375	UJ	23	375	ug/kg	HT
SB	NDA085	SW8270	BENZO(g,h,i)PERYLENE	482	U	482	UJ	29	482	ug/kg	HT
SB	NDA092	SW8270	BENZO(g,h,i)PERYLENE	400	U	400	UJ	24	400	ug/kg	HT
SB	NDA093	SW8270	BENZO(g,h,i)PERYLENE	339	U	339	UJ	20	339	ug/kg	HT
SB	NDA094	SW8270	BENZO(g,h,i)PERYLENE	510	U	510	UJ	31	510	ug/kg	HT
SB	NDA095FD1	SW8270	BENZO(g,h,i)PERYLENE	310	U	310	UJ	19	310	ug/kg	HT
SB	NDA296	SW8270	BENZO(g,h,i)PERYLENE	369	U	369	UJ	22	369	ug/kg	HT
SB	NDA299	SW8270	BENZO(g,h,i)PERYLENE	370	U	370	UJ	22	370	ug/kg	HT
SB	NDA058	SW8270	BENZO(g,h,i)PERYLENE	460	U	460	UJ	28	460	ug/kg	HT
SB	NDA060	SW8270	BENZO(g,h,i)PERYLENE	478	U	478	UJ	29	478	ug/kg	HT
SB	NDA063	SW8270	BENZO(g,h,i)PERYLENE	382	U	382	UJ	23	382	ug/kg	HT
SB	NDA064FD1	SW8270	BENZO(g,h,i)PERYLENE	351	U	351	UJ	21	351	ug/kg	HT
SB	NDA066	SW8270	BENZO(g,h,i)PERYLENE	344	U	344	UJ	21	344	ug/kg	HT
SB	NDA068	SW8270	BENZO(g,h,i)PERYLENE	360	U	360	UJ	22	360	ug/kg	HT
SB	NDA070	SW8270	BENZO(g,h,i)PERYLENE	404	U	404	UJ	24	404	ug/kg	HT
SB	NDA073	SW8270	BENZO(g,h,i)PERYLENE	383	U	383	UJ	23	383	ug/kg	HT
SB	NDA075	SW8270	BENZO(g,h,i)PERYLENE	401	U	401	UJ	24	401	ug/kg	HT
SB	NDA077	SW8270	BENZO(g,h,i)PERYLENE	441	U	441	UJ	26	441	ug/kg	HT
SB	NDA079	SW8270	BENZO(g,h,i)PERYLENE	466	U	466	UJ	28	466	ug/kg	HT
SB	NDA081RE1	SW8270	BENZO(g,h,i)PERYLENE	393	U	393	UJ	24	393	ug/kg	HT
SB	NDA083RE1	SW8270	BENZO(g,h,i)PERYLENE	4240	U	4240	UJ	254	4240	ug/kg	HT

Matrix	Sample ID	Analytical Method	Parameter	Lab Result	Lab Qual	Final Result	Final Qual	DL	RL	Units	Comments
SD	NDA054	SW8270	BENZO(g,h,i)PERYLENE	480	U	480	UJ	29	480	ug/kg	HT
SD	NDA055	SW8270	BENZO(g,h,i)PERYLENE	696	U	696	UJ	42	696	ug/kg	HT
SD	NDA042	SW8270	BENZO(g,h,i)PERYLENE	686	U	686	UJ	41	686	ug/kg	HT
SD	NDA043	SW8270	BENZO(g,h,i)PERYLENE	735	U	735	UJ	44	735	ug/kg	HT
SD	NDA044	SW8270	BENZO(g,h,i)PERYLENE	1680	U	1680	UJ	101	1680	ug/kg	HT
SD	NDA045	SW8270	BENZO(g,h,i)PERYLENE	1500	U	1500	UJ	90	1500	ug/kg	HT
SD	NDA046	SW8270	BENZO(g,h,i)PERYLENE	1520	U	1520	UJ	91	1520	ug/kg	HT
SD	NDA302	SW8270	BENZO(g,h,i)PERYLENE	1200	U	1200	UJ	72	1200	ug/kg	HT
SD	NDA303	SW8270	BENZO(g,h,i)PERYLENE	2300	U	2300	UJ	138	2300	ug/kg	HT
SD	NDA307FD1	SW8270	BENZO(g,h,i)PERYLENE	2130	U	2130	UJ	128	2130	ug/kg	HT
SD	NDA047	SW8270	BENZO(g,h,i)PERYLENE	503	U	503	UJ	30	503	ug/kg	HT
SD	NDA048	SW8270	BENZO(g,h,i)PERYLENE	558	U	558	UJ	34	558	ug/kg	HT
SD	NDA049	SW8270	BENZO(g,h,i)PERYLENE	463	U	463	UJ	28	463	ug/kg	HT
SS	NDA178	SW8270	BENZO(g,h,i)PERYLENE	644	U	644	UJ	39	644	ug/kg	HT
SS	NDA179	SW8270	BENZO(g,h,i)PERYLENE	644	U	644	UJ	39	644	ug/kg	HT
SS	NDA180	SW8270	BENZO(g,h,i)PERYLENE	550	U	550	UJ	33	550	ug/kg	HT
SS	NDA181	SW8270	BENZO(g,h,i)PERYLENE	566	U	566	UJ	34	566	ug/kg	HT
SS	NDA182	SW8270	BENZO(g,h,i)PERYLENE	679	U	679	UJ	41	679	ug/kg	HT
SS	NDA183	SW8270	BENZO(g,h,i)PERYLENE	589	U	589	UJ	35	589	ug/kg	HT
SS	NDA184FD1	SW8270	BENZO(g,h,i)PERYLENE	662	U	662	UJ	40	662	ug/kg	HT
SS	NDA201	SW8270	BENZO(g,h,i)PERYLENE	491	U	491	UJ	29	491	ug/kg	HT
SS	NDA202	SW8270	BENZO(g,h,i)PERYLENE	605	U	605	UJ	36	605	ug/kg	HT
SS	NDA203	SW8270	BENZO(g,h,i)PERYLENE	617	U	617	UJ	37	617	ug/kg	HT
SS	NDA204	SW8270	BENZO(g,h,i)PERYLENE	753	U	753	UJ	45	753	ug/kg	HT
SS	NDA205FD1	SW8270	BENZO(g,h,i)PERYLENE	668	U	668	UJ	40	668	ug/kg	HT
SS	NDA206	SW8270	BENZO(g,h,i)PERYLENE	529	U	529	UJ	32	529	ug/kg	HT
SS	NDA207	SW8270	BENZO(g,h,i)PERYLENE	669	U	669	UJ	40	669	ug/kg	HT
SS	NDA208	SW8270	BENZO(g,h,i)PERYLENE	520	U	520	UJ	31	520	ug/kg	HT
SS	NDA209	SW8270	BENZO(g,h,i)PERYLENE	570	U	570	UJ	34	570	ug/kg	HT
SS	NDA210	SW8270	BENZO(g,h,i)PERYLENE	545	U	545	UJ	33	545	ug/kg	HT
SS	NDA211	SW8270	BENZO(g,h,i)PERYLENE	742	U	742	UJ	45	742	ug/kg	HT
SS	NDA212	SW8270	BENZO(g,h,i)PERYLENE	651	U	651	UJ	39	651	ug/kg	HT
SS	NDA185	SW8270	BENZO(g,h,i)PERYLENE	445	U	445	UJ	27	445	ug/kg	HT
SS	NDA187	SW8270	BENZO(g,h,i)PERYLENE	380	U	380	UJ	23	380	ug/kg	HT
SS	NDA188	SW8270	BENZO(g,h,i)PERYLENE	810	U	810	UJ	49	810	ug/kg	HT
SS	NDA189	SW8270	BENZO(g,h,i)PERYLENE	426	U	426	UJ	26	426	ug/kg	HT
SS	NDA190	SW8270	BENZO(g,h,i)PERYLENE	430	U	430	UJ	26	430	ug/kg	HT
SS	NDA191	SW8270	BENZO(g,h,i)PERYLENE	338	U	338	UJ	20	338	ug/kg	HT
SS	NDA192FD1	SW8270	BENZO(g,h,i)PERYLENE	418	U	418	UJ	25	418	ug/kg	HT
SS	NDA193	SW8270	BENZO(g,h,i)PERYLENE	1720	U	1720	UJ	103	1720	ug/kg	HT
SS	NDA194	SW8270	BENZO(g,h,i)PERYLENE	480	U	480	UJ	29	480	ug/kg	HT
SS	NDA195	SW8270	BENZO(g,h,i)PERYLENE	323	U	323	UJ	19	323	ug/kg	HT
SS	NDA057	SW8270	BENZO(g,h,i)PERYLENE	563	U	563	UJ	34	563	ug/kg	HT
SS	NDA059	SW8270	BENZO(g,h,i)PERYLENE	465	U	465	UJ	28	465	ug/kg	HT
SS	NDA061	SW8270	BENZO(g,h,i)PERYLENE	469	U	469	UJ	28	469	ug/kg	HT
SS	NDA062FD1	SW8270	BENZO(g,h,i)PERYLENE	523	U	523	UJ	31	523	ug/kg	HT
SS	NDA065	SW8270	BENZO(g,h,i)PERYLENE	421	U	421	UJ	25	421	ug/kg	HT
SS	NDA067	SW8270	BENZO(g,h,i)PERYLENE	378	U	378	UJ	23	378	ug/kg	HT
SS	NDA069	SW8270	BENZO(g,h,i)PERYLENE	320	U	320	UJ	19	320	ug/kg	HT
SS	NDA119	SW8270	BENZO(g,h,i)PERYLENE	503	U	503	UJ	30	503	ug/kg	HT
SS	NDA120	SW8270	BENZO(g,h,i)PERYLENE	541	U	541	UJ	32	541	ug/kg	HT
SS	NDA124	SW8270	BENZO(g,h,i)PERYLENE	432	U	432	UJ	26	432	ug/kg	HT
SS	NDA071	SW8270	BENZO(g,h,i)PERYLENE	554	U	554	UJ	33	554	ug/kg	HT
SS	NDA072FD1	SW8270	BENZO(g,h,i)PERYLENE	413	U	413	UJ	25	413	ug/kg	HT
SS	NDA074	SW8270	BENZO(g,h,i)PERYLENE	448	U	448	UJ	27	448	ug/kg	HT
SS	NDA076	SW8270	BENZO(g,h,i)PERYLENE	419	U	419	UJ	25	419	ug/kg	HT
SS	NDA078	SW8270	BENZO(g,h,i)PERYLENE	440	U	440	UJ	26	440	ug/kg	HT
SS	NDA080RE1	SW8270	BENZO(g,h,i)PERYLENE	407	U	407	UJ	24	407	ug/kg	HT
SS	NDA082RE1	SW8270	BENZO(g,h,i)PERYLENE	4660	U	4660	UJ	280	4660	ug/kg	HT
SB	NDA213	SW8270	BENZO(b)FLUORANTHENE	485	U	485	UJ	29	485	ug/kg	HT
SB	NDA214FD1	SW8270	BENZO(b)FLUORANTHENE	487	U	487	UJ	29	487	ug/kg	HT
SB	NDA215	SW8270	BENZO(b)FLUORANTHENE	527	U	527	UJ	31	527	ug/kg	HT
SB	NDA216	SW8270	BENZO(b)FLUORANTHENE	537	U	537	UJ	32	537	ug/kg	HT
SB	NDA217	SW8270	BENZO(b)FLUORANTHENE	540	U	540	UJ	32	540	ug/kg	HT
SB	NDA218	SW8270	BENZO(b)FLUORANTHENE	505	U	505	UJ	30	505	ug/kg	HT
SB	NDA219	SW8270	BENZO(b)FLUORANTHENE	380	U	380	UJ	22	380	ug/kg	HT
SB	NDA220	SW8270	BENZO(b)FLUORANTHENE	542	U	542	UJ	32	542	ug/kg	HT
SB	NDA221	SW8270	BENZO(b)FLUORANTHENE	501	U	501	UJ	30	501	ug/kg	HT
SB	NDA222	SW8270	BENZO(b)FLUORANTHENE	459	U	459	UJ	27	459	ug/kg	HT
SB	NDA223	SW8270	BENZO(b)FLUORANTHENE	527	U	527	UJ	31	527	ug/kg	HT

Matrix	Sample ID	Analytical Method	Parameter	Lab Result	Lab Qual	Final Result	Final Qual	DL	RL	Units	Comments
SB	NDA235	SW8270	BENZO(b)FLUORANTHENE	504	U	504	UJ	30	504	ug/kg	HT
SB	NDA236	SW8270	BENZO(b)FLUORANTHENE	423	U	423	UJ	25	423	ug/kg	HT
SB	NDA237FD1	SW8270	BENZO(b)FLUORANTHENE	395	U	395	UJ	23	395	ug/kg	HT
SB	NDA238	SW8270	BENZO(b)FLUORANTHENE	424	U	424	UJ	25	424	ug/kg	HT
SB	NDA239	SW8270	BENZO(b)FLUORANTHENE	555	U	555	UJ	33	555	ug/kg	HT
SB	NDA240	SW8270	BENZO(b)FLUORANTHENE	397	U	397	UJ	23	397	ug/kg	HT
SB	NDA241	SW8270	BENZO(b)FLUORANTHENE	471	U	471	UJ	28	471	ug/kg	HT
SB	NDA242	SW8270	BENZO(b)FLUORANTHENE	436	U	436	UJ	26	436	ug/kg	HT
SB	NDA243	SW8270	BENZO(b)FLUORANTHENE	893	U	893	UJ	53	893	ug/kg	HT
SB	NDA244	SW8270	BENZO(b)FLUORANTHENE	388	U	388	UJ	23	388	ug/kg	HT
SB	NDA245	SW8270	BENZO(b)FLUORANTHENE	393	U	393	UJ	23	393	ug/kg	HT
SB	NDA246	SW8270	BENZO(b)FLUORANTHENE	511	U	511	UJ	30	511	ug/kg	HT
SB	NDA247FD1	SW8270	BENZO(b)FLUORANTHENE	390	U	390	UJ	23	390	ug/kg	HT
SB	NDA248	SW8270	BENZO(b)FLUORANTHENE	453	U	453	UJ	27	453	ug/kg	HT
SB	NDA249	SW8270	BENZO(b)FLUORANTHENE	374	U	374	UJ	22	374	ug/kg	HT
SB	NDA252	SW8270	BENZO(b)FLUORANTHENE	420	U	420	UJ	25	420	ug/kg	HT
SB	NDA253	SW8270	BENZO(b)FLUORANTHENE	439	U	439	UJ	26	439	ug/kg	HT
SB	NDA254	SW8270	BENZO(b)FLUORANTHENE	391	U	391	UJ	23	391	ug/kg	HT
SB	NDA255	SW8270	BENZO(b)FLUORANTHENE	375	U	375	UJ	22	375	ug/kg	HT
SB	NDA085	SW8270	BENZO(b)FLUORANTHENE	482	U	482	UJ	28	482	ug/kg	HT
SB	NDA092	SW8270	BENZO(b)FLUORANTHENE	400	U	400	UJ	24	400	ug/kg	HT
SB	NDA093	SW8270	BENZO(b)FLUORANTHENE	339	U	339	UJ	20	339	ug/kg	HT
SB	NDA094	SW8270	BENZO(b)FLUORANTHENE	510	U	510	UJ	30	510	ug/kg	HT
SB	NDA095FD1	SW8270	BENZO(b)FLUORANTHENE	310	U	310	UJ	18	310	ug/kg	HT
SB	NDA296	SW8270	BENZO(b)FLUORANTHENE	369	U	369	UJ	22	369	ug/kg	HT
SB	NDA299	SW8270	BENZO(b)FLUORANTHENE	370	U	370	UJ	22	370	ug/kg	HT
SB	NDA058	SW8270	BENZO(b)FLUORANTHENE	460	U	460	UJ	27	460	ug/kg	HT
SB	NDA060	SW8270	BENZO(b)FLUORANTHENE	478	U	478	UJ	28	478	ug/kg	HT
SB	NDA063	SW8270	BENZO(b)FLUORANTHENE	382	U	382	UJ	23	382	ug/kg	HT
SB	NDA064FD1	SW8270	BENZO(b)FLUORANTHENE	351	U	351	UJ	21	351	ug/kg	HT
SB	NDA066	SW8270	BENZO(b)FLUORANTHENE	344	U	344	UJ	20	344	ug/kg	HT
SB	NDA068	SW8270	BENZO(b)FLUORANTHENE	360	U	360	UJ	21	360	ug/kg	HT
SB	NDA070	SW8270	BENZO(b)FLUORANTHENE	404	U	404	UJ	24	404	ug/kg	HT
SB	NDA073	SW8270	BENZO(b)FLUORANTHENE	383	U	383	UJ	23	383	ug/kg	HT
SB	NDA075	SW8270	BENZO(b)FLUORANTHENE	401	U	401	UJ	24	401	ug/kg	HT
SB	NDA077	SW8270	BENZO(b)FLUORANTHENE	441	U	441	UJ	26	441	ug/kg	HT
SB	NDA079	SW8270	BENZO(b)FLUORANTHENE	466	U	466	UJ	28	466	ug/kg	HT
SB	NDA081RE1	SW8270	BENZO(b)FLUORANTHENE	393	U	393	UJ	23	393	ug/kg	HT
SB	NDA083RE1	SW8270	BENZO(b)FLUORANTHENE	4240	U	4240	UJ	250	4240	ug/kg	HT
SD	NDA054	SW8270	BENZO(b)FLUORANTHENE	480	U	480	UJ	28	480	ug/kg	HT
SD	NDA055	SW8270	BENZO(b)FLUORANTHENE	696	U	696	UJ	41	696	ug/kg	HT
SD	NDA042	SW8270	BENZO(b)FLUORANTHENE	686	U	686	UJ	40	686	ug/kg	HT
SD	NDA043	SW8270	BENZO(b)FLUORANTHENE	735	U	735	UJ	43	735	ug/kg	HT
SD	NDA044	SW8270	BENZO(b)FLUORANTHENE	1680	U	1680	UJ	99	1680	ug/kg	HT
SD	NDA045	SW8270	BENZO(b)FLUORANTHENE	1500	U	1500	UJ	89	1500	ug/kg	HT
SD	NDA046	SW8270	BENZO(b)FLUORANTHENE	1520	U	1520	UJ	90	1520	ug/kg	HT
SD	NDA302	SW8270	BENZO(b)FLUORANTHENE	1200	U	1200	UJ	71	1200	ug/kg	HT
SD	NDA303	SW8270	BENZO(b)FLUORANTHENE	2300	U	2300	UJ	136	2300	ug/kg	HT
SD	NDA307FD1	SW8270	BENZO(b)FLUORANTHENE	2130	U	2130	UJ	125	2130	ug/kg	HT
SD	NDA047	SW8270	BENZO(b)FLUORANTHENE	503	U	503	UJ	30	503	ug/kg	HT
SD	NDA048	SW8270	BENZO(b)FLUORANTHENE	558	U	558	UJ	33	558	ug/kg	HT
SD	NDA049	SW8270	BENZO(b)FLUORANTHENE	463	U	463	UJ	27	463	ug/kg	HT
SS	NDA178	SW8270	BENZO(b)FLUORANTHENE	644	U	644	UJ	38	644	ug/kg	HT
SS	NDA179	SW8270	BENZO(b)FLUORANTHENE	644	U	644	UJ	38	644	ug/kg	HT
SS	NDA181	SW8270	BENZO(b)FLUORANTHENE	566	U	566	UJ	33	566	ug/kg	HT
SS	NDA182	SW8270	BENZO(b)FLUORANTHENE	679	U	679	UJ	40	679	ug/kg	HT
SS	NDA183	SW8270	BENZO(b)FLUORANTHENE	589	U	589	UJ	35	589	ug/kg	HT
SS	NDA184FD1	SW8270	BENZO(b)FLUORANTHENE	662	U	662	UJ	39	662	ug/kg	HT
SS	NDA201	SW8270	BENZO(b)FLUORANTHENE	491	U	491	UJ	29	491	ug/kg	HT
SS	NDA202	SW8270	BENZO(b)FLUORANTHENE	605	U	605	UJ	36	605	ug/kg	HT
SS	NDA203	SW8270	BENZO(b)FLUORANTHENE	617	U	617	UJ	36	617	ug/kg	HT
SS	NDA204	SW8270	BENZO(b)FLUORANTHENE	753	U	753	UJ	44	753	ug/kg	HT
SS	NDA205FD1	SW8270	BENZO(b)FLUORANTHENE	668	U	668	UJ	39	668	ug/kg	HT
SS	NDA206	SW8270	BENZO(b)FLUORANTHENE	529	U	529	UJ	31	529	ug/kg	HT
SS	NDA207	SW8270	BENZO(b)FLUORANTHENE	669	U	669	UJ	39	669	ug/kg	HT
SS	NDA208	SW8270	BENZO(b)FLUORANTHENE	520	U	520	UJ	31	520	ug/kg	HT
SS	NDA209	SW8270	BENZO(b)FLUORANTHENE	570	U	570	UJ	34	570	ug/kg	HT
SS	NDA210	SW8270	BENZO(b)FLUORANTHENE	545	U	545	UJ	32	545	ug/kg	HT
SS	NDA211	SW8270	BENZO(b)FLUORANTHENE	742	U	742	UJ	44	742	ug/kg	HT
SS	NDA212	SW8270	BENZO(b)FLUORANTHENE	651	U	651	UJ	38	651	ug/kg	HT

Matrix	Sample ID	Analytical Method	Parameter	Lab Result	Lab Qual	Final Result	Final Qual	DL	RL	Units	Comments
SS	NDA185	SW8270	BENZO(b)FLUORANTHENE	445	U	445	UJ	26	445	ug/kg	HT
SS	NDA188	SW8270	BENZO(b)FLUORANTHENE	810	U	810	UJ	48	810	ug/kg	HT
SS	NDA189	SW8270	BENZO(b)FLUORANTHENE	426	U	426	UJ	25	426	ug/kg	HT
SS	NDA190	SW8270	BENZO(b)FLUORANTHENE	430	U	430	UJ	25	430	ug/kg	HT
SS	NDA191	SW8270	BENZO(b)FLUORANTHENE	338	U	338	UJ	20	338	ug/kg	HT
SS	NDA192FD1	SW8270	BENZO(b)FLUORANTHENE	418	U	418	UJ	25	418	ug/kg	HT
SS	NDA193	SW8270	BENZO(b)FLUORANTHENE	1720	U	1720	UJ	102	1720	ug/kg	HT
SS	NDA194	SW8270	BENZO(b)FLUORANTHENE	480	U	480	UJ	28	480	ug/kg	HT
SS	NDA195	SW8270	BENZO(b)FLUORANTHENE	323	U	323	UJ	19	323	ug/kg	HT
SS	NDA057	SW8270	BENZO(b)FLUORANTHENE	563	U	563	UJ	33	563	ug/kg	HT
SS	NDA059	SW8270	BENZO(b)FLUORANTHENE	465	U	465	UJ	27	465	ug/kg	HT
SS	NDA061	SW8270	BENZO(b)FLUORANTHENE	469	U	469	UJ	28	469	ug/kg	HT
SS	NDA062FD1	SW8270	BENZO(b)FLUORANTHENE	523	U	523	UJ	31	523	ug/kg	HT
SS	NDA065	SW8270	BENZO(b)FLUORANTHENE	421	U	421	UJ	25	421	ug/kg	HT
SS	NDA067	SW8270	BENZO(b)FLUORANTHENE	378	U	378	UJ	22	378	ug/kg	HT
SS	NDA069	SW8270	BENZO(b)FLUORANTHENE	320	U	320	UJ	19	320	ug/kg	HT
SS	NDA119	SW8270	BENZO(b)FLUORANTHENE	503	U	503	UJ	30	503	ug/kg	HT
SS	NDA120	SW8270	BENZO(b)FLUORANTHENE	541	U	541	UJ	32	541	ug/kg	HT
SS	NDA071	SW8270	BENZO(b)FLUORANTHENE	554	U	554	UJ	33	554	ug/kg	HT
SS	NDA072FD1	SW8270	BENZO(b)FLUORANTHENE	413	U	413	UJ	24	413	ug/kg	HT
SS	NDA074	SW8270	BENZO(b)FLUORANTHENE	448	U	448	UJ	26	448	ug/kg	HT
SS	NDA076	SW8270	BENZO(b)FLUORANTHENE	419	U	419	UJ	25	419	ug/kg	HT
SS	NDA078	SW8270	BENZO(b)FLUORANTHENE	440	U	440	UJ	26	440	ug/kg	HT
SS	NDA080RE1	SW8270	BENZO(b)FLUORANTHENE	407	U	407	UJ	24	407	ug/kg	HT
SS	NDA082RE1	SW8270	BENZO(b)FLUORANTHENE	4660	U	4660	UJ	275	4660	ug/kg	HT
SB	NDA213	SW8270	BENZO(a)PYRENE	485	U	485	UJ	32	485	ug/kg	HT
SB	NDA214FD1	SW8270	BENZO(a)PYRENE	487	U	487	UJ	33	487	ug/kg	HT
SB	NDA215	SW8270	BENZO(a)PYRENE	527	U	527	UJ	35	527	ug/kg	HT
SB	NDA216	SW8270	BENZO(a)PYRENE	537	U	537	UJ	36	537	ug/kg	HT
SB	NDA217	SW8270	BENZO(a)PYRENE	540	U	540	UJ	36	540	ug/kg	HT
SB	NDA218	SW8270	BENZO(a)PYRENE	505	U	505	UJ	34	505	ug/kg	HT
SB	NDA219	SW8270	BENZO(a)PYRENE	380	U	380	UJ	25	380	ug/kg	HT
SB	NDA220	SW8270	BENZO(a)PYRENE	542	U	542	UJ	36	542	ug/kg	HT
SB	NDA221	SW8270	BENZO(a)PYRENE	501	U	501	UJ	34	501	ug/kg	HT
SB	NDA222	SW8270	BENZO(a)PYRENE	459	U	459	UJ	31	459	ug/kg	HT
SB	NDA223	SW8270	BENZO(a)PYRENE	527	U	527	UJ	35	527	ug/kg	HT
SB	NDA235	SW8270	BENZO(a)PYRENE	504	U	504	UJ	34	504	ug/kg	HT
SB	NDA236	SW8270	BENZO(a)PYRENE	423	U	423	UJ	28	423	ug/kg	HT
SB	NDA237FD1	SW8270	BENZO(a)PYRENE	395	U	395	UJ	26	395	ug/kg	HT
SB	NDA238	SW8270	BENZO(a)PYRENE	424	U	424	UJ	28	424	ug/kg	HT
SB	NDA239	SW8270	BENZO(a)PYRENE	555	U	555	UJ	37	555	ug/kg	HT
SB	NDA240	SW8270	BENZO(a)PYRENE	397	U	397	UJ	27	397	ug/kg	HT
SB	NDA241	SW8270	BENZO(a)PYRENE	471	U	471	UJ	32	471	ug/kg	HT
SB	NDA242	SW8270	BENZO(a)PYRENE	436	U	436	UJ	29	436	ug/kg	HT
SB	NDA243	SW8270	BENZO(a)PYRENE	893	U	893	UJ	60	893	ug/kg	HT
SB	NDA244	SW8270	BENZO(a)PYRENE	388	U	388	UJ	26	388	ug/kg	HT
SB	NDA245	SW8270	BENZO(a)PYRENE	393	U	393	UJ	26	393	ug/kg	HT
SB	NDA246	SW8270	BENZO(a)PYRENE	511	U	511	UJ	34	511	ug/kg	HT
SB	NDA247FD1	SW8270	BENZO(a)PYRENE	390	U	390	UJ	26	390	ug/kg	HT
SB	NDA248	SW8270	BENZO(a)PYRENE	453	U	453	UJ	30	453	ug/kg	HT
SB	NDA249	SW8270	BENZO(a)PYRENE	374	U	374	UJ	25	374	ug/kg	HT
SB	NDA252	SW8270	BENZO(a)PYRENE	420	U	420	UJ	28	420	ug/kg	HT
SB	NDA253	SW8270	BENZO(a)PYRENE	439	U	439	UJ	29	439	ug/kg	HT
SB	NDA254	SW8270	BENZO(a)PYRENE	391	U	391	UJ	26	391	ug/kg	HT
SB	NDA255	SW8270	BENZO(a)PYRENE	375	U	375	UJ	25	375	ug/kg	HT
SB	NDA085	SW8270	BENZO(a)PYRENE	482	U	482	UJ	32	482	ug/kg	HT
SB	NDA092	SW8270	BENZO(a)PYRENE	400	U	400	UJ	27	400	ug/kg	HT
SB	NDA093	SW8270	BENZO(a)PYRENE	339	U	339	UJ	23	339	ug/kg	HT
SB	NDA094	SW8270	BENZO(a)PYRENE	510	U	510	UJ	34	510	ug/kg	HT
SB	NDA095FD1	SW8270	BENZO(a)PYRENE	310	U	310	UJ	21	310	ug/kg	HT
SB	NDA296	SW8270	BENZO(a)PYRENE	369	U	369	UJ	25	369	ug/kg	HT
SB	NDA299	SW8270	BENZO(a)PYRENE	370	U	370	UJ	25	370	ug/kg	HT
SB	NDA058	SW8270	BENZO(a)PYRENE	460	U	460	UJ	31	460	ug/kg	HT
SB	NDA060	SW8270	BENZO(a)PYRENE	478	U	478	UJ	32	478	ug/kg	HT
SB	NDA063	SW8270	BENZO(a)PYRENE	382	U	382	UJ	26	382	ug/kg	HT
SB	NDA064FD1	SW8270	BENZO(a)PYRENE	351	U	351	UJ	23	351	ug/kg	HT
SB	NDA066	SW8270	BENZO(a)PYRENE	344	U	344	UJ	23	344	ug/kg	HT
SB	NDA068	SW8270	BENZO(a)PYRENE	360	U	360	UJ	24	360	ug/kg	HT
SB	NDA070	SW8270	BENZO(a)PYRENE	404	U	404	UJ	27	404	ug/kg	HT
SB	NDA073	SW8270	BENZO(a)PYRENE	383	U	383	UJ	26	383	ug/kg	HT

Matrix	Sample ID	Analytical Method	Parameter	Lab Result	Lab Qual	Final Result	Final Qual	DL	RL	Units	Comments
SB	NDA075	SW8270	BENZO(a)PYRENE	401	U	401	UJ	27	401	ug/kg	HT
SB	NDA077	SW8270	BENZO(a)PYRENE	441	U	441	UJ	30	441	ug/kg	HT
SB	NDA079	SW8270	BENZO(a)PYRENE	466	U	466	UJ	31	466	ug/kg	HT
SB	NDA081RE1	SW8270	BENZO(a)PYRENE	393	U	393	UJ	26	393	ug/kg	HT
SB	NDA083RE1	SW8270	BENZO(a)PYRENE	4240	U	4240	UJ	284	4240	ug/kg	HT
SD	NDA054	SW8270	BENZO(a)PYRENE	480	U	480	UJ	32	480	ug/kg	HT
SD	NDA055	SW8270	BENZO(a)PYRENE	696	U	696	UJ	47	696	ug/kg	HT
SD	NDA042	SW8270	BENZO(a)PYRENE	686	U	686	UJ	46	686	ug/kg	HT
SD	NDA043	SW8270	BENZO(a)PYRENE	735	U	735	UJ	49	735	ug/kg	HT
SD	NDA044	SW8270	BENZO(a)PYRENE	1680	U	1680	UJ	113	1680	ug/kg	HT
SD	NDA045	SW8270	BENZO(a)PYRENE	1500	U	1500	UJ	101	1500	ug/kg	HT
SD	NDA046	SW8270	BENZO(a)PYRENE	1520	U	1520	UJ	102	1520	ug/kg	HT
SD	NDA302	SW8270	BENZO(a)PYRENE	1200	U	1200	UJ	80	1200	ug/kg	HT
SD	NDA303	SW8270	BENZO(a)PYRENE	2300	U	2300	UJ	154	2300	ug/kg	HT
SD	NDA307FD1	SW8270	BENZO(a)PYRENE	2130	U	2130	UJ	142	2130	ug/kg	HT
SD	NDA047	SW8270	BENZO(a)PYRENE	503	U	503	UJ	34	503	ug/kg	HT
SD	NDA048	SW8270	BENZO(a)PYRENE	558	U	558	UJ	37	558	ug/kg	HT
SD	NDA049	SW8270	BENZO(a)PYRENE	463	U	463	UJ	31	463	ug/kg	HT
SS	NDA178	SW8270	BENZO(a)PYRENE	644	U	644	UJ	43	644	ug/kg	HT
SS	NDA179	SW8270	BENZO(a)PYRENE	644	U	644	UJ	43	644	ug/kg	HT
SS	NDA181	SW8270	BENZO(a)PYRENE	566	U	566	UJ	38	566	ug/kg	HT
SS	NDA182	SW8270	BENZO(a)PYRENE	679	U	679	UJ	45	679	ug/kg	HT
SS	NDA183	SW8270	BENZO(a)PYRENE	589	U	589	UJ	39	589	ug/kg	HT
SS	NDA184FD1	SW8270	BENZO(a)PYRENE	662	U	662	UJ	44	662	ug/kg	HT
SS	NDA201	SW8270	BENZO(a)PYRENE	491	U	491	UJ	33	491	ug/kg	HT
SS	NDA202	SW8270	BENZO(a)PYRENE	605	U	605	UJ	41	605	ug/kg	HT
SS	NDA203	SW8270	BENZO(a)PYRENE	617	U	617	UJ	41	617	ug/kg	HT
SS	NDA204	SW8270	BENZO(a)PYRENE	753	U	753	UJ	50	753	ug/kg	HT
SS	NDA205FD1	SW8270	BENZO(a)PYRENE	668	U	668	UJ	45	668	ug/kg	HT
SS	NDA206	SW8270	BENZO(a)PYRENE	529	U	529	UJ	35	529	ug/kg	HT
SS	NDA207	SW8270	BENZO(a)PYRENE	669	U	669	UJ	45	669	ug/kg	HT
SS	NDA208	SW8270	BENZO(a)PYRENE	520	U	520	UJ	35	520	ug/kg	HT
SS	NDA209	SW8270	BENZO(a)PYRENE	570	U	570	UJ	38	570	ug/kg	HT
SS	NDA210	SW8270	BENZO(a)PYRENE	545	U	545	UJ	36	545	ug/kg	HT
SS	NDA211	SW8270	BENZO(a)PYRENE	742	U	742	UJ	50	742	ug/kg	HT
SS	NDA212	SW8270	BENZO(a)PYRENE	651	U	651	UJ	44	651	ug/kg	HT
SS	NDA185	SW8270	BENZO(a)PYRENE	445	U	445	UJ	30	445	ug/kg	HT
SS	NDA187	SW8270	BENZO(a)PYRENE	380	U	380	UJ	25	380	ug/kg	HT
SS	NDA188	SW8270	BENZO(a)PYRENE	810	U	810	UJ	54	810	ug/kg	HT
SS	NDA189	SW8270	BENZO(a)PYRENE	426	U	426	UJ	29	426	ug/kg	HT
SS	NDA190	SW8270	BENZO(a)PYRENE	430	U	430	UJ	29	430	ug/kg	HT
SS	NDA191	SW8270	BENZO(a)PYRENE	338	U	338	UJ	23	338	ug/kg	HT
SS	NDA192FD1	SW8270	BENZO(a)PYRENE	418	U	418	UJ	28	418	ug/kg	HT
SS	NDA193	SW8270	BENZO(a)PYRENE	1720	U	1720	UJ	115	1720	ug/kg	HT
SS	NDA194	SW8270	BENZO(a)PYRENE	480	U	480	UJ	32	480	ug/kg	HT
SS	NDA195	SW8270	BENZO(a)PYRENE	323	U	323	UJ	22	323	ug/kg	HT
SS	NDA057	SW8270	BENZO(a)PYRENE	563	U	563	UJ	38	563	ug/kg	HT
SS	NDA059	SW8270	BENZO(a)PYRENE	465	U	465	UJ	31	465	ug/kg	HT
SS	NDA061	SW8270	BENZO(a)PYRENE	469	U	469	UJ	31	469	ug/kg	HT
SS	NDA062FD1	SW8270	BENZO(a)PYRENE	523	U	523	UJ	35	523	ug/kg	HT
SS	NDA065	SW8270	BENZO(a)PYRENE	421	U	421	UJ	28	421	ug/kg	HT
SS	NDA067	SW8270	BENZO(a)PYRENE	378	U	378	UJ	25	378	ug/kg	HT
SS	NDA069	SW8270	BENZO(a)PYRENE	320	U	320	UJ	21	320	ug/kg	HT
SS	NDA119	SW8270	BENZO(a)PYRENE	503	U	503	UJ	34	503	ug/kg	HT
SS	NDA120	SW8270	BENZO(a)PYRENE	541	U	541	UJ	36	541	ug/kg	HT
SS	NDA071	SW8270	BENZO(a)PYRENE	554	U	554	UJ	37	554	ug/kg	HT
SS	NDA072FD1	SW8270	BENZO(a)PYRENE	413	U	413	UJ	28	413	ug/kg	HT
SS	NDA074	SW8270	BENZO(a)PYRENE	448	U	448	UJ	30	448	ug/kg	HT
SS	NDA076	SW8270	BENZO(a)PYRENE	419	U	419	UJ	28	419	ug/kg	HT
SS	NDA078	SW8270	BENZO(a)PYRENE	440	U	440	UJ	30	440	ug/kg	HT
SS	NDA080RE1	SW8270	BENZO(a)PYRENE	407	U	407	UJ	27	407	ug/kg	HT
SS	NDA082RE1	SW8270	BENZO(a)PYRENE	4660	U	4660	UJ	312	4660	ug/kg	HT
SB	NDA213	SW8270	BENZO(a)ANTHRACENE	485	U	485	UJ	25	485	ug/kg	HT
SB	NDA214FD1	SW8270	BENZO(a)ANTHRACENE	487	U	487	UJ	25	487	ug/kg	HT
SB	NDA215	SW8270	BENZO(a)ANTHRACENE	527	U	527	UJ	27	527	ug/kg	HT
SB	NDA216	SW8270	BENZO(a)ANTHRACENE	537	U	537	UJ	28	537	ug/kg	HT
SB	NDA217	SW8270	BENZO(a)ANTHRACENE	540	U	540	UJ	28	540	ug/kg	HT
SB	NDA218	SW8270	BENZO(a)ANTHRACENE	505	U	505	UJ	26	505	ug/kg	HT
SB	NDA219	SW8270	BENZO(a)ANTHRACENE	380	U	380	UJ	20	380	ug/kg	HT
SB	NDA220	SW8270	BENZO(a)ANTHRACENE	542	U	542	UJ	28	542	ug/kg	HT

Matrix	Sample ID	Analytical Method	Parameter	Lab Result	Lab Qual	Final Result	Final Qual	DL	RL	Units	Comments
SB	NDA221	SW8270	BENZO(a)ANTHRACENE	501	U	501	UJ	26	501	ug/kg	HT
SB	NDA222	SW8270	BENZO(a)ANTHRACENE	459	U	459	UJ	24	459	ug/kg	HT
SB	NDA223	SW8270	BENZO(a)ANTHRACENE	527	U	527	UJ	27	527	ug/kg	HT
SB	NDA235	SW8270	BENZO(a)ANTHRACENE	504	U	504	UJ	26	504	ug/kg	HT
SB	NDA236	SW8270	BENZO(a)ANTHRACENE	423	U	423	UJ	22	423	ug/kg	HT
SB	NDA237FD1	SW8270	BENZO(a)ANTHRACENE	395	U	395	UJ	21	395	ug/kg	HT
SB	NDA238	SW8270	BENZO(a)ANTHRACENE	424	U	424	UJ	22	424	ug/kg	HT
SB	NDA239	SW8270	BENZO(a)ANTHRACENE	555	U	555	UJ	29	555	ug/kg	HT
SB	NDA240	SW8270	BENZO(a)ANTHRACENE	397	U	397	UJ	21	397	ug/kg	HT
SB	NDA241	SW8270	BENZO(a)ANTHRACENE	471	U	471	UJ	24	471	ug/kg	HT
SB	NDA242	SW8270	BENZO(a)ANTHRACENE	436	U	436	UJ	23	436	ug/kg	HT
SB	NDA243	SW8270	BENZO(a)ANTHRACENE	893	U	893	UJ	46	893	ug/kg	HT
SB	NDA244	SW8270	BENZO(a)ANTHRACENE	388	U	388	UJ	20	388	ug/kg	HT
SB	NDA245	SW8270	BENZO(a)ANTHRACENE	393	U	393	UJ	20	393	ug/kg	HT
SB	NDA246	SW8270	BENZO(a)ANTHRACENE	511	U	511	UJ	27	511	ug/kg	HT
SB	NDA247FD1	SW8270	BENZO(a)ANTHRACENE	390	U	390	UJ	20	390	ug/kg	HT
SB	NDA248	SW8270	BENZO(a)ANTHRACENE	453	U	453	UJ	24	453	ug/kg	HT
SB	NDA249	SW8270	BENZO(a)ANTHRACENE	374	U	374	UJ	19	374	ug/kg	HT
SB	NDA252	SW8270	BENZO(a)ANTHRACENE	420	U	420	UJ	22	420	ug/kg	HT
SB	NDA253	SW8270	BENZO(a)ANTHRACENE	439	U	439	UJ	23	439	ug/kg	HT
SB	NDA254	SW8270	BENZO(a)ANTHRACENE	391	U	391	UJ	20	391	ug/kg	HT
SB	NDA255	SW8270	BENZO(a)ANTHRACENE	375	U	375	UJ	20	375	ug/kg	HT
SB	NDA085	SW8270	BENZO(a)ANTHRACENE	482	U	482	UJ	25	482	ug/kg	HT
SB	NDA092	SW8270	BENZO(a)ANTHRACENE	400	U	400	UJ	21	400	ug/kg	HT
SB	NDA093	SW8270	BENZO(a)ANTHRACENE	339	U	339	UJ	18	339	ug/kg	HT
SB	NDA094	SW8270	BENZO(a)ANTHRACENE	510	U	510	UJ	27	510	ug/kg	HT
SB	NDA095FD1	SW8270	BENZO(a)ANTHRACENE	310	U	310	UJ	16	310	ug/kg	HT
SB	NDA296	SW8270	BENZO(a)ANTHRACENE	369	U	369	UJ	19	369	ug/kg	HT
SB	NDA298	SW8270	BENZO(a)ANTHRACENE	18	U	18	J	18	341	ug/kg	HT
SB	NDA299	SW8270	BENZO(a)ANTHRACENE	370	U	370	UJ	19	370	ug/kg	HT
SB	NDA058	SW8270	BENZO(a)ANTHRACENE	460	U	460	UJ	24	460	ug/kg	HT
SB	NDA060	SW8270	BENZO(a)ANTHRACENE	478	U	478	UJ	25	478	ug/kg	HT
SB	NDA063	SW8270	BENZO(a)ANTHRACENE	382	U	382	UJ	20	382	ug/kg	HT
SB	NDA064FD1	SW8270	BENZO(a)ANTHRACENE	351	U	351	UJ	18	351	ug/kg	HT
SB	NDA066	SW8270	BENZO(a)ANTHRACENE	344	U	344	UJ	18	344	ug/kg	HT
SB	NDA068	SW8270	BENZO(a)ANTHRACENE	360	U	360	UJ	19	360	ug/kg	HT
SB	NDA070	SW8270	BENZO(a)ANTHRACENE	404	U	404	UJ	21	404	ug/kg	HT
SB	NDA073	SW8270	BENZO(a)ANTHRACENE	383	U	383	UJ	20	383	ug/kg	HT
SB	NDA075	SW8270	BENZO(a)ANTHRACENE	401	U	401	UJ	21	401	ug/kg	HT
SB	NDA077	SW8270	BENZO(a)ANTHRACENE	441	U	441	UJ	23	441	ug/kg	HT
SB	NDA079	SW8270	BENZO(a)ANTHRACENE	466	U	466	UJ	24	466	ug/kg	HT
SB	NDA081RE1	SW8270	BENZO(a)ANTHRACENE	393	U	393	UJ	20	393	ug/kg	HT
SB	NDA083RE1	SW8270	BENZO(a)ANTHRACENE	4240	U	4240	UJ	220	4240	ug/kg	HT
SD	NDA054	SW8270	BENZO(a)ANTHRACENE	480	U	480	UJ	25	480	ug/kg	HT
SD	NDA055	SW8270	BENZO(a)ANTHRACENE	696	U	696	UJ	36	696	ug/kg	HT
SD	NDA042	SW8270	BENZO(a)ANTHRACENE	686	U	686	UJ	36	686	ug/kg	HT
SD	NDA043	SW8270	BENZO(a)ANTHRACENE	735	U	735	UJ	38	735	ug/kg	HT
SD	NDA044	SW8270	BENZO(a)ANTHRACENE	1680	U	1680	UJ	88	1680	ug/kg	HT
SD	NDA045	SW8270	BENZO(a)ANTHRACENE	1500	U	1500	UJ	78	1500	ug/kg	HT
SD	NDA046	SW8270	BENZO(a)ANTHRACENE	1520	U	1520	UJ	79	1520	ug/kg	HT
SD	NDA302	SW8270	BENZO(a)ANTHRACENE	1200	U	1200	UJ	62	1200	ug/kg	HT
SD	NDA303	SW8270	BENZO(a)ANTHRACENE	2300	U	2300	UJ	120	2300	ug/kg	HT
SD	NDA307FD1	SW8270	BENZO(a)ANTHRACENE	2130	U	2130	UJ	111	2130	ug/kg	HT
SD	NDA047	SW8270	BENZO(a)ANTHRACENE	503	U	503	UJ	26	503	ug/kg	HT
SD	NDA048	SW8270	BENZO(a)ANTHRACENE	558	U	558	UJ	29	558	ug/kg	HT
SD	NDA049	SW8270	BENZO(a)ANTHRACENE	463	U	463	UJ	24	463	ug/kg	HT
SS	NDA178	SW8270	BENZO(a)ANTHRACENE	644	U	644	UJ	33	644	ug/kg	HT
SS	NDA179	SW8270	BENZO(a)ANTHRACENE	644	U	644	UJ	33	644	ug/kg	HT
SS	NDA181	SW8270	BENZO(a)ANTHRACENE	566	U	566	UJ	29	566	ug/kg	HT
SS	NDA182	SW8270	BENZO(a)ANTHRACENE	679	U	679	UJ	35	679	ug/kg	HT
SS	NDA183	SW8270	BENZO(a)ANTHRACENE	589	U	589	UJ	31	589	ug/kg	HT
SS	NDA184FD1	SW8270	BENZO(a)ANTHRACENE	662	U	662	UJ	34	662	ug/kg	HT
SS	NDA201	SW8270	BENZO(a)ANTHRACENE	491	U	491	UJ	26	491	ug/kg	HT
SS	NDA202	SW8270	BENZO(a)ANTHRACENE	605	U	605	UJ	31	605	ug/kg	HT
SS	NDA203	SW8270	BENZO(a)ANTHRACENE	617	U	617	UJ	32	617	ug/kg	HT
SS	NDA204	SW8270	BENZO(a)ANTHRACENE	753	U	753	UJ	39	753	ug/kg	HT
SS	NDA205FD1	SW8270	BENZO(a)ANTHRACENE	668	U	668	UJ	35	668	ug/kg	HT
SS	NDA206	SW8270	BENZO(a)ANTHRACENE	529	U	529	UJ	28	529	ug/kg	HT
SS	NDA207	SW8270	BENZO(a)ANTHRACENE	669	U	669	UJ	35	669	ug/kg	HT
SS	NDA208	SW8270	BENZO(a)ANTHRACENE	520	U	520	UJ	27	520	ug/kg	HT

Matrix	Sample ID	Analytical Method	Parameter	Lab Result	Lab Qual	Final Result	Final Qual	DL	RL	Units	Comments
SS	NDA209	SW8270	BENZO(a)ANTHRACENE	570	U	570	UJ	30	570	ug/kg	HT
SS	NDA210	SW8270	BENZO(a)ANTHRACENE	545	U	545	UJ	28	545	ug/kg	HT
SS	NDA211	SW8270	BENZO(a)ANTHRACENE	742	U	742	UJ	39	742	ug/kg	HT
SS	NDA212	SW8270	BENZO(a)ANTHRACENE	651	U	651	UJ	34	651	ug/kg	HT
SS	NDA185	SW8270	BENZO(a)ANTHRACENE	445	U	445	UJ	23	445	ug/kg	HT
SS	NDA187	SW8270	BENZO(a)ANTHRACENE	380	U	380	UJ	20	380	ug/kg	HT
SS	NDA188	SW8270	BENZO(a)ANTHRACENE	810	U	810	UJ	42	810	ug/kg	HT
SS	NDA189	SW8270	BENZO(a)ANTHRACENE	426	U	426	UJ	22	426	ug/kg	HT
SS	NDA190	SW8270	BENZO(a)ANTHRACENE	430	U	430	UJ	22	430	ug/kg	HT
SS	NDA191	SW8270	BENZO(a)ANTHRACENE	338	U	338	UJ	18	338	ug/kg	HT
SS	NDA192FD1	SW8270	BENZO(a)ANTHRACENE	418	U	418	UJ	22	418	ug/kg	HT
SS	NDA193	SW8270	BENZO(a)ANTHRACENE	1720	U	1720	UJ	90	1720	ug/kg	HT
SS	NDA194	SW8270	BENZO(a)ANTHRACENE	480	U	480	UJ	25	480	ug/kg	HT
SS	NDA195	SW8270	BENZO(a)ANTHRACENE	323	U	323	UJ	17	323	ug/kg	HT
SS	NDA057	SW8270	BENZO(a)ANTHRACENE	563	U	563	UJ	29	563	ug/kg	HT
SS	NDA059	SW8270	BENZO(a)ANTHRACENE	465	U	465	UJ	24	465	ug/kg	HT
SS	NDA061	SW8270	BENZO(a)ANTHRACENE	469	U	469	UJ	24	469	ug/kg	HT
SS	NDA062FD1	SW8270	BENZO(a)ANTHRACENE	523	U	523	UJ	27	523	ug/kg	HT
SS	NDA065	SW8270	BENZO(a)ANTHRACENE	421	U	421	UJ	22	421	ug/kg	HT
SS	NDA067	SW8270	BENZO(a)ANTHRACENE	378	U	378	UJ	20	378	ug/kg	HT
SS	NDA069	SW8270	BENZO(a)ANTHRACENE	320	U	320	UJ	17	320	ug/kg	HT
SS	NDA119	SW8270	BENZO(a)ANTHRACENE	503	U	503	UJ	26	503	ug/kg	HT
SS	NDA120	SW8270	BENZO(a)ANTHRACENE	541	U	541	UJ	28	541	ug/kg	HT
SS	NDA071	SW8270	BENZO(a)ANTHRACENE	554	U	554	UJ	29	554	ug/kg	HT
SS	NDA072FD1	SW8270	BENZO(a)ANTHRACENE	413	U	413	UJ	21	413	ug/kg	HT
SS	NDA074	SW8270	BENZO(a)ANTHRACENE	448	U	448	UJ	23	448	ug/kg	HT
SS	NDA076	SW8270	BENZO(a)ANTHRACENE	419	U	419	UJ	22	419	ug/kg	HT
SS	NDA078	SW8270	BENZO(a)ANTHRACENE	440	U	440	UJ	23	440	ug/kg	HT
SS	NDA080RE1	SW8270	BENZO(a)ANTHRACENE	407	U	407	UJ	21	407	ug/kg	HT
SS	NDA082RE1	SW8270	BENZO(a)ANTHRACENE	4660	U	4660	UJ	242	4660	ug/kg	HT
SB	NDA213	SW8270	ANTHRACENE	485	U	485	UJ	27	485	ug/kg	HT
SB	NDA214FD1	SW8270	ANTHRACENE	487	U	487	UJ	27	487	ug/kg	HT
SB	NDA215	SW8270	ANTHRACENE	527	U	527	UJ	30	527	ug/kg	HT
SB	NDA216	SW8270	ANTHRACENE	537	U	537	UJ	30	537	ug/kg	HT
SB	NDA217	SW8270	ANTHRACENE	540	U	540	UJ	30	540	ug/kg	HT
SB	NDA218	SW8270	ANTHRACENE	505	U	505	UJ	28	505	ug/kg	HT
SB	NDA219	SW8270	ANTHRACENE	380	U	380	UJ	21	380	ug/kg	HT
SB	NDA220	SW8270	ANTHRACENE	542	U	542	UJ	30	542	ug/kg	HT
SB	NDA221	SW8270	ANTHRACENE	501	U	501	UJ	28	501	ug/kg	HT
SB	NDA222	SW8270	ANTHRACENE	459	U	459	UJ	26	459	ug/kg	HT
SB	NDA223	SW8270	ANTHRACENE	527	U	527	UJ	30	527	ug/kg	HT
SB	NDA235	SW8270	ANTHRACENE	504	U	504	UJ	28	504	ug/kg	HT
SB	NDA236	SW8270	ANTHRACENE	423	U	423	UJ	24	423	ug/kg	HT
SB	NDA237FD1	SW8270	ANTHRACENE	395	U	395	UJ	22	395	ug/kg	HT
SB	NDA238	SW8270	ANTHRACENE	424	U	424	UJ	24	424	ug/kg	HT
SB	NDA239	SW8270	ANTHRACENE	555	U	555	UJ	31	555	ug/kg	HT
SB	NDA240	SW8270	ANTHRACENE	397	U	397	UJ	22	397	ug/kg	HT
SB	NDA241	SW8270	ANTHRACENE	471	U	471	UJ	26	471	ug/kg	HT
SB	NDA242	SW8270	ANTHRACENE	436	U	436	UJ	24	436	ug/kg	HT
SB	NDA243	SW8270	ANTHRACENE	893	U	893	UJ	50	893	ug/kg	HT
SB	NDA244	SW8270	ANTHRACENE	388	U	388	UJ	22	388	ug/kg	HT
SB	NDA245	SW8270	ANTHRACENE	393	U	393	UJ	22	393	ug/kg	HT
SB	NDA246	SW8270	ANTHRACENE	511	U	511	UJ	29	511	ug/kg	HT
SB	NDA247FD1	SW8270	ANTHRACENE	390	U	390	UJ	22	390	ug/kg	HT
SB	NDA248	SW8270	ANTHRACENE	453	U	453	UJ	25	453	ug/kg	HT
SB	NDA249	SW8270	ANTHRACENE	374	U	374	UJ	21	374	ug/kg	HT
SB	NDA252	SW8270	ANTHRACENE	420	U	420	UJ	24	420	ug/kg	HT
SB	NDA253	SW8270	ANTHRACENE	439	U	439	UJ	25	439	ug/kg	HT
SB	NDA254	SW8270	ANTHRACENE	391	U	391	UJ	22	391	ug/kg	HT
SB	NDA255	SW8270	ANTHRACENE	375	U	375	UJ	21	375	ug/kg	HT
SB	NDA085	SW8270	ANTHRACENE	482	U	482	UJ	27	482	ug/kg	HT
SB	NDA092	SW8270	ANTHRACENE	400	U	400	UJ	22	400	ug/kg	HT
SB	NDA093	SW8270	ANTHRACENE	339	U	339	UJ	19	339	ug/kg	HT
SB	NDA094	SW8270	ANTHRACENE	510	U	510	UJ	29	510	ug/kg	HT
SB	NDA095FD1	SW8270	ANTHRACENE	310	U	310	UJ	17	310	ug/kg	HT
SB	NDA296	SW8270	ANTHRACENE	369	U	369	UJ	21	369	ug/kg	HT
SB	NDA297	SW8270	ANTHRACENE	20	U	20	J	20	358	ug/kg	HT
SB	NDA298	SW8270	ANTHRACENE	341	U	341	UJ	19	341	ug/kg	HT
SB	NDA299	SW8270	ANTHRACENE	370	U	370	UJ	21	370	ug/kg	HT
SB	NDA058	SW8270	ANTHRACENE	460	U	460	UJ	26	460	ug/kg	HT

Matrix	Sample ID	Analytical Method	Parameter	Lab Result	Lab Qual	Final Result	Final Qual	DL	RL	Units	Comments
SB	NDA060	SW8270	ANTHRACENE	478	U	478	UJ	27	478	ug/kg	HT
SB	NDA063	SW8270	ANTHRACENE	382	U	382	UJ	21	382	ug/kg	HT
SB	NDA064FD1	SW8270	ANTHRACENE	351	U	351	UJ	20	351	ug/kg	HT
SB	NDA066	SW8270	ANTHRACENE	344	U	344	UJ	19	344	ug/kg	HT
SB	NDA068	SW8270	ANTHRACENE	360	U	360	UJ	20	360	ug/kg	HT
SB	NDA070	SW8270	ANTHRACENE	404	U	404	UJ	23	404	ug/kg	HT
SB	NDA073	SW8270	ANTHRACENE	383	U	383	UJ	21	383	ug/kg	HT
SB	NDA075	SW8270	ANTHRACENE	401	U	401	UJ	22	401	ug/kg	HT
SB	NDA077	SW8270	ANTHRACENE	441	U	441	UJ	25	441	ug/kg	HT
SB	NDA079	SW8270	ANTHRACENE	466	U	466	UJ	26	466	ug/kg	HT
SB	NDA081RE1	SW8270	ANTHRACENE	393	U	393	UJ	22	393	ug/kg	HT
SB	NDA083RE1	SW8270	ANTHRACENE	4240	U	4240	UJ	237	4240	ug/kg	HT
SD	NDA054	SW8270	ANTHRACENE	480	U	480	UJ	27	480	ug/kg	HT
SD	NDA055	SW8270	ANTHRACENE	696	U	696	UJ	39	696	ug/kg	HT
SD	NDA042	SW8270	ANTHRACENE	686	U	686	UJ	38	686	ug/kg	HT
SD	NDA043	SW8270	ANTHRACENE	735	U	735	UJ	41	735	ug/kg	HT
SD	NDA044	SW8270	ANTHRACENE	1680	U	1680	UJ	94	1680	ug/kg	HT
SD	NDA045	SW8270	ANTHRACENE	1500	U	1500	UJ	84	1500	ug/kg	HT
SD	NDA046	SW8270	ANTHRACENE	1520	U	1520	UJ	85	1520	ug/kg	HT
SD	NDA302	SW8270	ANTHRACENE	1200	U	1200	UJ	67	1200	ug/kg	HT
SD	NDA303	SW8270	ANTHRACENE	2300	U	2300	UJ	129	2300	ug/kg	HT
SD	NDA307FD1	SW8270	ANTHRACENE	2130	U	2130	UJ	119	2130	ug/kg	HT
SD	NDA047	SW8270	ANTHRACENE	503	U	503	UJ	28	503	ug/kg	HT
SD	NDA048	SW8270	ANTHRACENE	558	U	558	UJ	31	558	ug/kg	HT
SD	NDA049	SW8270	ANTHRACENE	463	U	463	UJ	26	463	ug/kg	HT
SS	NDA178	SW8270	ANTHRACENE	644	U	644	UJ	36	644	ug/kg	HT
SS	NDA179	SW8270	ANTHRACENE	644	U	644	UJ	36	644	ug/kg	HT
SS	NDA180	SW8270	ANTHRACENE	550	U	550	UJ	31	550	ug/kg	HT
SS	NDA181	SW8270	ANTHRACENE	566	U	566	UJ	32	566	ug/kg	HT
SS	NDA182	SW8270	ANTHRACENE	679	U	679	UJ	38	679	ug/kg	HT
SS	NDA183	SW8270	ANTHRACENE	589	U	589	UJ	33	589	ug/kg	HT
SS	NDA184FD1	SW8270	ANTHRACENE	662	U	662	UJ	37	662	ug/kg	HT
SS	NDA201	SW8270	ANTHRACENE	491	U	491	UJ	27	491	ug/kg	HT
SS	NDA202	SW8270	ANTHRACENE	605	U	605	UJ	34	605	ug/kg	HT
SS	NDA203	SW8270	ANTHRACENE	617	U	617	UJ	35	617	ug/kg	HT
SS	NDA204	SW8270	ANTHRACENE	753	U	753	UJ	42	753	ug/kg	HT
SS	NDA205FD1	SW8270	ANTHRACENE	668	U	668	UJ	37	668	ug/kg	HT
SS	NDA206	SW8270	ANTHRACENE	529	U	529	UJ	30	529	ug/kg	HT
SS	NDA207	SW8270	ANTHRACENE	669	U	669	UJ	37	669	ug/kg	HT
SS	NDA208	SW8270	ANTHRACENE	520	U	520	UJ	29	520	ug/kg	HT
SS	NDA209	SW8270	ANTHRACENE	570	U	570	UJ	32	570	ug/kg	HT
SS	NDA210	SW8270	ANTHRACENE	545	U	545	UJ	30	545	ug/kg	HT
SS	NDA211	SW8270	ANTHRACENE	742	U	742	UJ	42	742	ug/kg	HT
SS	NDA212	SW8270	ANTHRACENE	651	U	651	UJ	36	651	ug/kg	HT
SS	NDA185	SW8270	ANTHRACENE	445	U	445	UJ	25	445	ug/kg	HT
SS	NDA186	SW8270	ANTHRACENE	17	U	17	J	17	416	ug/kg	HT
SS	NDA187	SW8270	ANTHRACENE	380	U	380	UJ	21	380	ug/kg	HT
SS	NDA188	SW8270	ANTHRACENE	810	U	810	UJ	45	810	ug/kg	HT
SS	NDA189	SW8270	ANTHRACENE	426	U	426	UJ	24	426	ug/kg	HT
SS	NDA190	SW8270	ANTHRACENE	430	U	430	UJ	24	430	ug/kg	HT
SS	NDA191	SW8270	ANTHRACENE	338	U	338	UJ	19	338	ug/kg	HT
SS	NDA192FD1	SW8270	ANTHRACENE	418	U	418	UJ	23	418	ug/kg	HT
SS	NDA193	SW8270	ANTHRACENE	1720	U	1720	UJ	96	1720	ug/kg	HT
SS	NDA194	SW8270	ANTHRACENE	480	U	480	UJ	27	480	ug/kg	HT
SS	NDA195	SW8270	ANTHRACENE	323	U	323	UJ	18	323	ug/kg	HT
SS	NDA084	SW8270	ANTHRACENE	344	U	344	UJ	19	344	ug/kg	HT
SS	NDA091	SW8270	ANTHRACENE	367	U	367	UJ	21	367	ug/kg	HT
SS	NDA057	SW8270	ANTHRACENE	563	U	563	UJ	32	563	ug/kg	HT
SS	NDA059	SW8270	ANTHRACENE	465	U	465	UJ	26	465	ug/kg	HT
SS	NDA061	SW8270	ANTHRACENE	469	U	469	UJ	26	469	ug/kg	HT
SS	NDA062FD1	SW8270	ANTHRACENE	523	U	523	UJ	29	523	ug/kg	HT
SS	NDA065	SW8270	ANTHRACENE	421	U	421	UJ	24	421	ug/kg	HT
SS	NDA067	SW8270	ANTHRACENE	378	U	378	UJ	21	378	ug/kg	HT
SS	NDA069	SW8270	ANTHRACENE	320	U	320	UJ	18	320	ug/kg	HT
SS	NDA119	SW8270	ANTHRACENE	503	U	503	UJ	28	503	ug/kg	HT
SS	NDA120	SW8270	ANTHRACENE	541	U	541	UJ	30	541	ug/kg	HT
SS	NDA122	SW8270	ANTHRACENE	450	U	450	UJ	25	450	ug/kg	HT
SS	NDA124	SW8270	ANTHRACENE	432	U	432	UJ	24	432	ug/kg	HT
SS	NDA071	SW8270	ANTHRACENE	554	U	554	UJ	31	554	ug/kg	HT
SS	NDA072FD1	SW8270	ANTHRACENE	413	U	413	UJ	23	413	ug/kg	HT

Matrix	Sample ID	Analytical Method	Parameter	Lab Result	Lab Qual	Final Result	Final Qual	DL	RL	Units	Comments
SS	NDA074	SW8270	ANTHRACENE	448	U	448	UJ	25	448	ug/kg	HT
SS	NDA076	SW8270	ANTHRACENE	419	U	419	UJ	23	419	ug/kg	HT
SS	NDA078	SW8270	ANTHRACENE	440	U	440	UJ	25	440	ug/kg	HT
SS	NDA080RE1	SW8270	ANTHRACENE	407	U	407	UJ	23	407	ug/kg	HT
SS	NDA082RE1	SW8270	ANTHRACENE	4660	U	4660	UJ	261	4660	ug/kg	HT
SB	NDA165	SW8081	ALPHA-CHLORDANE	1.9	U	1.9	UJ	0.54	1.9	ug/kg	HT
SB	NDA167	SW8081	ALPHA-CHLORDANE	2.1	U	2.1	UJ	0.59	2.1	ug/kg	HT
SB	NDA169	SW8081	ALPHA-CHLORDANE	2	U	2	UJ	0.57	2	ug/kg	HT
SB	NDA171	SW8081	ALPHA-CHLORDANE	1.8	U	1.8	UJ	0.52	1.8	ug/kg	HT
SB	NDA173	SW8081	ALPHA-CHLORDANE	2.2	U	2.2	UJ	0.61	2.2	ug/kg	HT
SB	NDA175	SW8081	ALPHA-CHLORDANE	1.9	U	1.9	UJ	0.53	1.9	ug/kg	HT
SB	NDA177	SW8081	ALPHA-CHLORDANE	2	U	2	UJ	0.56	2	ug/kg	HT
SB	NDA213	SW8081	ALPHA-CHLORDANE	2	U	2	UJ	0.55	2	ug/kg	HT
SB	NDA214FD1	SW8081	ALPHA-CHLORDANE	1.9	U	1.9	UJ	0.53	1.9	ug/kg	HT
SB	NDA215	SW8081	ALPHA-CHLORDANE	2	U	2	UJ	0.55	2	ug/kg	HT
SB	NDA216	SW8081	ALPHA-CHLORDANE	1.8	U	1.8	UJ	0.52	1.8	ug/kg	HT
SB	NDA217	SW8081	ALPHA-CHLORDANE	1.9	U	1.9	UJ	0.55	1.9	ug/kg	HT
SB	NDA218	SW8081	ALPHA-CHLORDANE	1.9	U	1.9	UJ	0.53	1.9	ug/kg	HT
SB	NDA219	SW8081	ALPHA-CHLORDANE	1.9	U	1.9	UJ	0.53	1.9	ug/kg	HT
SB	NDA220	SW8081	ALPHA-CHLORDANE	1.9	U	1.9	UJ	0.55	1.9	ug/kg	HT
SB	NDA221	SW8081	ALPHA-CHLORDANE	1.8	U	1.8	UJ	0.51	1.8	ug/kg	HT
SB	NDA222	SW8081	ALPHA-CHLORDANE	1.7	U	1.7	UJ	0.48	1.7	ug/kg	HT
SB	NDA223	SW8081	ALPHA-CHLORDANE	1.9	U	1.9	UJ	0.54	1.9	ug/kg	HT
SB	NDA235	SW8081	ALPHA-CHLORDANE	2.2	U	2.2	UJ	0.63	2.2	ug/kg	HT
SB	NDA236	SW8081	ALPHA-CHLORDANE	1.9	U	1.9	UJ	0.54	1.9	ug/kg	HT
SB	NDA237FD1	SW8081	ALPHA-CHLORDANE	1.9	U	1.9	UJ	0.54	1.9	ug/kg	HT
SB	NDA238	SW8081	ALPHA-CHLORDANE	1.9	U	1.9	UJ	0.54	1.9	ug/kg	HT
SB	NDA239	SW8081	ALPHA-CHLORDANE	1.9	U	1.9	UJ	0.54	1.9	ug/kg	HT
SB	NDA240	SW8081	ALPHA-CHLORDANE	2	U	2	UJ	0.58	2	ug/kg	HT
SB	NDA241	SW8081	ALPHA-CHLORDANE	1.9	U	1.9	UJ	0.54	1.9	ug/kg	HT
SB	NDA242	SW8081	ALPHA-CHLORDANE	2.1	U	2.1	UJ	0.6	2.1	ug/kg	HT
SB	NDA243	SW8081	ALPHA-CHLORDANE	2	U	2	UJ	0.57	2	ug/kg	HT
SB	NDA244	SW8081	ALPHA-CHLORDANE	1.9	U	1.9	UJ	0.53	1.9	ug/kg	HT
SB	NDA245	SW8081	ALPHA-CHLORDANE	2	U	2	UJ	0.55	2	ug/kg	HT
SB	NDA246	SW8081	ALPHA-CHLORDANE	2.1	U	2.1	UJ	0.59	2.1	ug/kg	HT
SB	NDA247FD1	SW8081	ALPHA-CHLORDANE	2	U	2	UJ	0.56	2	ug/kg	HT
SB	NDA248	SW8081	ALPHA-CHLORDANE	2.1	U	2.1	UJ	0.58	2.1	ug/kg	HT
SB	NDA249	SW8081	ALPHA-CHLORDANE	1.9	U	1.9	UJ	0.54	1.9	ug/kg	HT
SB	NDA252	SW8081	ALPHA-CHLORDANE	2	U	2	UJ	0.56	2	ug/kg	HT
SB	NDA253	SW8081	ALPHA-CHLORDANE	2.1	U	2.1	UJ	0.6	2.1	ug/kg	HT
SB	NDA254	SW8081	ALPHA-CHLORDANE	2.1	U	2.1	UJ	0.6	2.1	ug/kg	HT
SB	NDA255	SW8081	ALPHA-CHLORDANE	2.1	U	2.1	UJ	0.59	2.1	ug/kg	HT
SB	NDA058	SW8081	ALPHA-CHLORDANE	1.9	U	1.9	UJ	0.53	1.9	ug/kg	HT
SB	NDA060	SW8081	ALPHA-CHLORDANE	1.9	U	1.9	UJ	0.53	1.9	ug/kg	HT
SB	NDA063	SW8081	ALPHA-CHLORDANE	1.8	U	1.8	UJ	0.52	1.8	ug/kg	HT
SB	NDA064FD1	SW8081	ALPHA-CHLORDANE	1.8	U	1.8	UJ	0.52	1.8	ug/kg	HT
SB	NDA066	SW8081	ALPHA-CHLORDANE	1.8	U	1.8	UJ	0.5	1.8	ug/kg	HT
SB	NDA068	SW8081	ALPHA-CHLORDANE	1.8	U	1.8	UJ	0.52	1.8	ug/kg	HT
SB	NDA070	SW8081	ALPHA-CHLORDANE	1.8	U	1.8	UJ	0.51	1.8	ug/kg	HT
SB	NDA073	SW8081	ALPHA-CHLORDANE	1.8	U	1.8	UJ	0.51	1.8	ug/kg	HT
SB	NDA075	SW8081	ALPHA-CHLORDANE	0.18	U	0.18	UJ	0.05	0.18	ug/kg	HT
SB	NDA077	SW8081	ALPHA-CHLORDANE	0.2	U	0.2	UJ	0.06	0.2	ug/kg	HT
SB	NDA081	SW8081	ALPHA-CHLORDANE	0.18	U	0.18	UJ	0.05	0.18	ug/kg	HT
SB	NDA083	SW8081	ALPHA-CHLORDANE	0.17	U	0.17	UJ	0.05	0.17	ug/kg	HT
SB	NDA114	SW8081	ALPHA-CHLORDANE	2.2	U	2.2	UJ	0.62	2.2	ug/kg	HT
SB	NDA116	SW8081	ALPHA-CHLORDANE	2.1	U	2.1	UJ	0.6	2.1	ug/kg	HT
SB	NDA118	SW8081	ALPHA-CHLORDANE	2.2	U	2.2	UJ	0.62	2.2	ug/kg	HT
SB	NDA102	SW8081	ALPHA-CHLORDANE	2.6	U	2.6	UJ	0.75	2.6	ug/kg	HT
SB	NDA105	SW8081	ALPHA-CHLORDANE	2.7	U	2.7	UJ	0.76	2.7	ug/kg	HT
SB	NDA106FD1	SW8081	ALPHA-CHLORDANE	2.7	U	2.7	UJ	0.76	2.7	ug/kg	HT
SB	NDA108	SW8081	ALPHA-CHLORDANE	2.3	U	2.3	UJ	0.64	2.3	ug/kg	HT
SB	NDA110	SW8081	ALPHA-CHLORDANE	2.3	U	2.3	UJ	0.64	2.3	ug/kg	HT
SB	NDA112	SW8081	ALPHA-CHLORDANE	2.2	U	2.2	UJ	0.63	2.2	ug/kg	HT
SD	NDA053	SW8081	ALPHA-CHLORDANE	13	U	13	UJ	3.6	13	ug/kg	HT
SD	NDA054	SW8081	ALPHA-CHLORDANE	1.7	U	1.7	UJ	0.49	1.7	ug/kg	HT
SD	NDA055	SW8081	ALPHA-CHLORDANE	1.7	U	1.7	UJ	0.48	1.7	ug/kg	HT
SD	NDA047	SW8081	ALPHA-CHLORDANE	1.9	U	1.9	UJ	0.52	1.9	ug/kg	HT
SD	NDA048	SW8081	ALPHA-CHLORDANE	1.9	U	1.9	UJ	0.55	1.9	ug/kg	HT
SD	NDA049	SW8081	ALPHA-CHLORDANE	1.9	U	1.9	UJ	0.53	1.9	ug/kg	HT
SS	NDA164	SW8081	ALPHA-CHLORDANE	2.1	U	2.1	UJ	0.59	2.1	ug/kg	HT

Matrix	Sample ID	Analytical Method	Parameter	Lab Result	Lab Qual	Final Result	Final Qual	DL	RL	Units	Comments
SS	NDA166	SW8081	ALPHA-CHLORDANE	2.1	U	2.1	UJ	0.6	2.1	ug/kg	HT
SS	NDA168	SW8081	ALPHA-CHLORDANE	2	U	2	UJ	0.56	2	ug/kg	HT
SS	NDA170	SW8081	ALPHA-CHLORDANE	2	U	2	UJ	0.58	2	ug/kg	HT
SS	NDA172	SW8081	ALPHA-CHLORDANE	1.8	U	1.8	UJ	0.52	1.8	ug/kg	HT
SS	NDA174	SW8081	ALPHA-CHLORDANE	1.8	U	1.8	UJ	0.5	1.8	ug/kg	HT
SS	NDA176	SW8081	ALPHA-CHLORDANE	4.8	U	4.8	UJ	1.3	4.8	ug/kg	HT
SS	NDA185	SW8081	ALPHA-CHLORDANE	2	U	2	UJ	0.57	2	ug/kg	HT
SS	NDA186	SW8081	ALPHA-CHLORDANE	1.9	U	1.9	UJ	0.54	1.9	ug/kg	HT
SS	NDA187	SW8081	ALPHA-CHLORDANE	1.8	U	1.8	UJ	0.52	1.8	ug/kg	HT
SS	NDA188	SW8081	ALPHA-CHLORDANE	2.3	U	2.3	UJ	0.66	2.3	ug/kg	HT
SS	NDA189	SW8081	ALPHA-CHLORDANE	1.9	U	1.9	UJ	0.54	1.9	ug/kg	HT
SS	NDA190	SW8081	ALPHA-CHLORDANE	1.9	U	1.9	UJ	0.54	1.9	ug/kg	HT
SS	NDA191	SW8081	ALPHA-CHLORDANE	1.7	U	1.7	UJ	0.49	1.7	ug/kg	HT
SS	NDA192FD1	SW8081	ALPHA-CHLORDANE	2	U	2	UJ	0.56	2	ug/kg	HT
SS	NDA193	SW8081	ALPHA-CHLORDANE	1.8	U	1.8	UJ	0.5	1.8	ug/kg	HT
SS	NDA194	SW8081	ALPHA-CHLORDANE	2.1	U	2.1	UJ	0.59	2.1	ug/kg	HT
SS	NDA195	SW8081	ALPHA-CHLORDANE	1.7	U	1.7	UJ	0.49	1.7	ug/kg	HT
SS	NDA057	SW8081	ALPHA-CHLORDANE	2.1	U	2.1	UJ	0.6	2.1	ug/kg	HT
SS	NDA059	SW8081	ALPHA-CHLORDANE	1.8	U	1.8	UJ	0.51	1.8	ug/kg	HT
SS	NDA061	SW8081	ALPHA-CHLORDANE	1.8	U	1.8	UJ	0.5	1.8	ug/kg	HT
SS	NDA062FD1	SW8081	ALPHA-CHLORDANE	1.8	U	1.8	UJ	0.51	1.8	ug/kg	HT
SS	NDA065	SW8081	ALPHA-CHLORDANE	2.1	U	2.1	UJ	0.6	2.1	ug/kg	HT
SS	NDA067	SW8081	ALPHA-CHLORDANE	1.8	U	1.8	UJ	0.52	1.8	ug/kg	HT
SS	NDA069	SW8081	ALPHA-CHLORDANE	1.7	U	1.7	UJ	0.49	1.7	ug/kg	HT
SS	NDA119	SW8081	ALPHA-CHLORDANE	1.9	U	1.9	UJ	0.54	1.9	ug/kg	HT
SS	NDA120	SW8081	ALPHA-CHLORDANE	2.2	U	2.2	UJ	0.64	2.2	ug/kg	HT
SS	NDA121	SW8081	ALPHA-CHLORDANE	1.9	U	1.9	UJ	0.53	1.9	ug/kg	HT
SS	NDA122	SW8081	ALPHA-CHLORDANE	1.9	U	1.9	UJ	0.54	1.9	ug/kg	HT
SS	NDA123	SW8081	ALPHA-CHLORDANE	1.9	U	1.9	UJ	0.54	1.9	ug/kg	HT
SS	NDA124	SW8081	ALPHA-CHLORDANE	1.9	U	1.9	UJ	0.54	1.9	ug/kg	HT
SS	NDA071	SW8081	ALPHA-CHLORDANE	2	U	2	UJ	0.57	2	ug/kg	HT
SS	NDA072FD1	SW8081	ALPHA-CHLORDANE	1.8	U	1.8	UJ	0.5	1.8	ug/kg	HT
SS	NDA074	SW8081	ALPHA-CHLORDANE	0.18	U	0.18	UJ	0.05	0.18	ug/kg	HT
SS	NDA078	SW8081	ALPHA-CHLORDANE	0.18	U	0.18	UJ	0.05	0.18	ug/kg	HT
SS	NDA080	SW8081	ALPHA-CHLORDANE	0.17	U	0.17	UJ	0.05	0.17	ug/kg	HT
SS	NDA082	SW8081	ALPHA-CHLORDANE	0.17	U	0.17	UJ	0.05	0.17	ug/kg	HT
SS	NDA115	SW8081	ALPHA-CHLORDANE	1.9	U	1.9	UJ	0.55	1.9	ug/kg	HT
SS	NDA117	SW8081	ALPHA-CHLORDANE	2.1	U	2.1	UJ	0.61	2.1	ug/kg	HT
SS	NDA101	SW8081	ALPHA-CHLORDANE	2.3	U	2.3	UJ	0.64	2.3	ug/kg	HT
SS	NDA103	SW8081	ALPHA-CHLORDANE	2.3	U	2.3	UJ	0.66	2.3	ug/kg	HT
SS	NDA104FD1	SW8081	ALPHA-CHLORDANE	2.4	U	2.4	UJ	0.68	2.4	ug/kg	HT
SS	NDA107	SW8081	ALPHA-CHLORDANE	2.1	U	2.1	UJ	0.6	2.1	ug/kg	HT
SS	NDA109	SW8081	ALPHA-CHLORDANE	2.2	U	2.2	UJ	0.63	2.2	ug/kg	HT
SS	NDA111	SW8081	ALPHA-CHLORDANE	2.2	U	2.2	UJ	0.64	2.2	ug/kg	HT
SB	NDA165	SW8081	ALPHA ENDOSULFAN (ENDOSULFAN I)	1.9	U	1.9	UJ	0.53	1.9	ug/kg	HT
SB	NDA167	SW8081	ALPHA ENDOSULFAN (ENDOSULFAN I)	2.1	U	2.1	UJ	0.57	2.1	ug/kg	HT
SB	NDA169	SW8081	ALPHA ENDOSULFAN (ENDOSULFAN I)	2	U	2	UJ	0.56	2	ug/kg	HT
SB	NDA171	SW8081	ALPHA ENDOSULFAN (ENDOSULFAN I)	1.8	U	1.8	UJ	0.51	1.8	ug/kg	HT
SB	NDA173	SW8081	ALPHA ENDOSULFAN (ENDOSULFAN I)	2.2	U	2.2	UJ	0.6	2.2	ug/kg	HT
SB	NDA175	SW8081	ALPHA ENDOSULFAN (ENDOSULFAN I)	1.9	U	1.9	UJ	0.52	1.9	ug/kg	HT
SB	NDA177	SW8081	ALPHA ENDOSULFAN (ENDOSULFAN I)	2	U	2	UJ	0.54	2	ug/kg	HT
SB	NDA213	SW8081	ALPHA ENDOSULFAN (ENDOSULFAN I)	2	U	2	UJ	0.54	2	ug/kg	HT
SB	NDA214FD1	SW8081	ALPHA ENDOSULFAN (ENDOSULFAN I)	1.9	U	1.9	UJ	0.52	1.9	ug/kg	HT
SB	NDA215	SW8081	ALPHA ENDOSULFAN (ENDOSULFAN I)	2	U	2	UJ	0.54	2	ug/kg	HT
SB	NDA216	SW8081	ALPHA ENDOSULFAN (ENDOSULFAN I)	1.8	U	1.8	UJ	0.51	1.8	ug/kg	HT
SB	NDA217	SW8081	ALPHA ENDOSULFAN (ENDOSULFAN I)	1.9	U	1.9	UJ	0.54	1.9	ug/kg	HT
SB	NDA218	SW8081	ALPHA ENDOSULFAN (ENDOSULFAN I)	1.9	U	1.9	UJ	0.52	1.9	ug/kg	HT
SB	NDA219	SW8081	ALPHA ENDOSULFAN (ENDOSULFAN I)	1.9	U	1.9	UJ	0.52	1.9	ug/kg	HT
SB	NDA220	SW8081	ALPHA ENDOSULFAN (ENDOSULFAN I)	1.9	U	1.9	UJ	0.54	1.9	ug/kg	HT
SB	NDA221	SW8081	ALPHA ENDOSULFAN (ENDOSULFAN I)	1.8	U	1.8	UJ	0.5	1.8	ug/kg	HT
SB	NDA222	SW8081	ALPHA ENDOSULFAN (ENDOSULFAN I)	1.7	U	1.7	UJ	0.47	1.7	ug/kg	HT
SB	NDA223	SW8081	ALPHA ENDOSULFAN (ENDOSULFAN I)	1.9	U	1.9	UJ	0.53	1.9	ug/kg	HT
SB	NDA235	SW8081	ALPHA ENDOSULFAN (ENDOSULFAN I)	2.2	U	2.2	UJ	0.62	2.2	ug/kg	HT
SB	NDA236	SW8081	ALPHA ENDOSULFAN (ENDOSULFAN I)	1.9	U	1.9	UJ	0.53	1.9	ug/kg	HT
SB	NDA237FD1	SW8081	ALPHA ENDOSULFAN (ENDOSULFAN I)	1.9	U	1.9	UJ	0.53	1.9	ug/kg	HT
SB	NDA238	SW8081	ALPHA ENDOSULFAN (ENDOSULFAN I)	1.9	U	1.9	UJ	0.53	1.9	ug/kg	HT
SB	NDA239	SW8081	ALPHA ENDOSULFAN (ENDOSULFAN I)	1.9	U	1.9	UJ	0.53	1.9	ug/kg	HT
SB	NDA240	SW8081	ALPHA ENDOSULFAN (ENDOSULFAN I)	2	U	2	UJ	0.56	2	ug/kg	HT
SB	NDA241	SW8081	ALPHA ENDOSULFAN (ENDOSULFAN I)	1.9	U	1.9	UJ	0.52	1.9	ug/kg	HT
SB	NDA242	SW8081	ALPHA ENDOSULFAN (ENDOSULFAN I)	2.1	U	2.1	UJ	0.59	2.1	ug/kg	HT

Matrix	Sample ID	Analytical Method	Parameter	Lab Result	Lab Qual	Final Result	Final Qual	DL	RL	Units	Comments
SB	NDA243	SW8081	ALPHA ENDOSULFAN (ENDOSULFAN I)	2	U	2	UJ	0.55	2	ug/kg	HT
SB	NDA244	SW8081	ALPHA ENDOSULFAN (ENDOSULFAN I)	1.9	U	1.9	UJ	0.51	1.9	ug/kg	HT
SB	NDA245	SW8081	ALPHA ENDOSULFAN (ENDOSULFAN I)	2	U	2	UJ	0.54	2	ug/kg	HT
SB	NDA246	SW8081	ALPHA ENDOSULFAN (ENDOSULFAN I)	2.1	U	2.1	UJ	0.58	2.1	ug/kg	HT
SB	NDA247FD1	SW8081	ALPHA ENDOSULFAN (ENDOSULFAN I)	2	U	2	UJ	0.54	2	ug/kg	HT
SB	NDA248	SW8081	ALPHA ENDOSULFAN (ENDOSULFAN I)	2.1	U	2.1	UJ	0.57	2.1	ug/kg	HT
SB	NDA249	SW8081	ALPHA ENDOSULFAN (ENDOSULFAN I)	1.9	U	1.9	UJ	0.52	1.9	ug/kg	HT
SB	NDA252	SW8081	ALPHA ENDOSULFAN (ENDOSULFAN I)	2	U	2	UJ	0.55	2	ug/kg	HT
SB	NDA253	SW8081	ALPHA ENDOSULFAN (ENDOSULFAN I)	2.1	U	2.1	UJ	0.59	2.1	ug/kg	HT
SB	NDA254	SW8081	ALPHA ENDOSULFAN (ENDOSULFAN I)	2.1	U	2.1	UJ	0.59	2.1	ug/kg	HT
SB	NDA255	SW8081	ALPHA ENDOSULFAN (ENDOSULFAN I)	2.1	U	2.1	UJ	0.58	2.1	ug/kg	HT
SB	NDA058	SW8081	ALPHA ENDOSULFAN (ENDOSULFAN I)	1.9	U	1.9	UJ	0.52	1.9	ug/kg	HT
SB	NDA060	SW8081	ALPHA ENDOSULFAN (ENDOSULFAN I)	1.9	U	1.9	UJ	0.51	1.9	ug/kg	HT
SB	NDA063	SW8081	ALPHA ENDOSULFAN (ENDOSULFAN I)	1.8	U	1.8	UJ	0.5	1.8	ug/kg	HT
SB	NDA064FD1	SW8081	ALPHA ENDOSULFAN (ENDOSULFAN I)	1.8	U	1.8	UJ	0.5	1.8	ug/kg	HT
SB	NDA066	SW8081	ALPHA ENDOSULFAN (ENDOSULFAN I)	1.8	U	1.8	UJ	0.49	1.8	ug/kg	HT
SB	NDA068	SW8081	ALPHA ENDOSULFAN (ENDOSULFAN I)	1.8	U	1.8	UJ	0.51	1.8	ug/kg	HT
SB	NDA070	SW8081	ALPHA ENDOSULFAN (ENDOSULFAN I)	1.8	U	1.8	UJ	0.5	1.8	ug/kg	HT
SB	NDA073	SW8081	ALPHA ENDOSULFAN (ENDOSULFAN I)	1.8	U	1.8	UJ	0.5	1.8	ug/kg	HT
SB	NDA075	SW8081	ALPHA ENDOSULFAN (ENDOSULFAN I)	0.18	U	0.18	UJ	0.05	0.18	ug/kg	HT
SB	NDA077	SW8081	ALPHA ENDOSULFAN (ENDOSULFAN I)	0.2	U	0.2	UJ	0.06	0.2	ug/kg	HT
SB	NDA081	SW8081	ALPHA ENDOSULFAN (ENDOSULFAN I)	0.18	U	0.18	UJ	0.05	0.18	ug/kg	HT
SB	NDA083	SW8081	ALPHA ENDOSULFAN (ENDOSULFAN I)	0.17	U	0.17	UJ	0.05	0.17	ug/kg	HT
SB	NDA114	SW8081	ALPHA ENDOSULFAN (ENDOSULFAN I)	2.2	U	2.2	UJ	0.61	2.2	ug/kg	HT
SB	NDA116	SW8081	ALPHA ENDOSULFAN (ENDOSULFAN I)	2.1	U	2.1	UJ	0.59	2.1	ug/kg	HT
SB	NDA118	SW8081	ALPHA ENDOSULFAN (ENDOSULFAN I)	2.2	U	2.2	UJ	0.6	2.2	ug/kg	HT
SB	NDA102	SW8081	ALPHA ENDOSULFAN (ENDOSULFAN I)	2.6	U	2.6	UJ	0.73	2.6	ug/kg	HT
SB	NDA105	SW8081	ALPHA ENDOSULFAN (ENDOSULFAN I)	2.7	U	2.7	UJ	0.74	2.7	ug/kg	HT
SB	NDA106FD1	SW8081	ALPHA ENDOSULFAN (ENDOSULFAN I)	2.7	U	2.7	UJ	0.74	2.7	ug/kg	HT
SB	NDA108	SW8081	ALPHA ENDOSULFAN (ENDOSULFAN I)	2.3	U	2.3	UJ	0.63	2.3	ug/kg	HT
SB	NDA110	SW8081	ALPHA ENDOSULFAN (ENDOSULFAN I)	2.3	U	2.3	UJ	0.62	2.3	ug/kg	HT
SB	NDA112	SW8081	ALPHA ENDOSULFAN (ENDOSULFAN I)	2.2	U	2.2	UJ	0.61	2.2	ug/kg	HT
SD	NDA053	SW8081	ALPHA ENDOSULFAN (ENDOSULFAN I)	13	U	13	UJ	3.5	13	ug/kg	HT
SD	NDA054	SW8081	ALPHA ENDOSULFAN (ENDOSULFAN I)	1.7	U	1.7	UJ	0.48	1.7	ug/kg	HT
SD	NDA055	SW8081	ALPHA ENDOSULFAN (ENDOSULFAN I)	1.7	U	1.7	UJ	0.47	1.7	ug/kg	HT
SD	NDA047	SW8081	ALPHA ENDOSULFAN (ENDOSULFAN I)	1.9	U	1.9	UJ	0.51	1.9	ug/kg	HT
SD	NDA048	SW8081	ALPHA ENDOSULFAN (ENDOSULFAN I)	1.9	U	1.9	UJ	0.54	1.9	ug/kg	HT
SD	NDA049	SW8081	ALPHA ENDOSULFAN (ENDOSULFAN I)	1.9	U	1.9	UJ	0.51	1.9	ug/kg	HT
SS	NDA164	SW8081	ALPHA ENDOSULFAN (ENDOSULFAN I)	2.1	U	2.1	UJ	0.58	2.1	ug/kg	HT
SS	NDA166	SW8081	ALPHA ENDOSULFAN (ENDOSULFAN I)	2.1	U	2.1	UJ	0.58	2.1	ug/kg	HT
SS	NDA168	SW8081	ALPHA ENDOSULFAN (ENDOSULFAN I)	2	U	2	UJ	0.55	2	ug/kg	HT
SS	NDA170	SW8081	ALPHA ENDOSULFAN (ENDOSULFAN I)	2	U	2	UJ	0.56	2	ug/kg	HT
SS	NDA172	SW8081	ALPHA ENDOSULFAN (ENDOSULFAN I)	1.8	U	1.8	UJ	0.5	1.8	ug/kg	HT
SS	NDA174	SW8081	ALPHA ENDOSULFAN (ENDOSULFAN I)	1.8	U	1.8	UJ	0.49	1.8	ug/kg	HT
SS	NDA176	SW8081	ALPHA ENDOSULFAN (ENDOSULFAN I)	4.8	U	4.8	UJ	1.3	4.8	ug/kg	HT
SS	NDA185	SW8081	ALPHA ENDOSULFAN (ENDOSULFAN I)	2	U	2	UJ	0.56	2	ug/kg	HT
SS	NDA186	SW8081	ALPHA ENDOSULFAN (ENDOSULFAN I)	1.9	U	1.9	UJ	0.52	1.9	ug/kg	HT
SS	NDA187	SW8081	ALPHA ENDOSULFAN (ENDOSULFAN I)	1.8	U	1.8	UJ	0.5	1.8	ug/kg	HT
SS	NDA188	SW8081	ALPHA ENDOSULFAN (ENDOSULFAN I)	2.3	U	2.3	UJ	0.64	2.3	ug/kg	HT
SS	NDA189	SW8081	ALPHA ENDOSULFAN (ENDOSULFAN I)	1.9	U	1.9	UJ	0.52	1.9	ug/kg	HT
SS	NDA190	SW8081	ALPHA ENDOSULFAN (ENDOSULFAN I)	1.9	U	1.9	UJ	0.53	1.9	ug/kg	HT
SS	NDA191	SW8081	ALPHA ENDOSULFAN (ENDOSULFAN I)	1.7	U	1.7	UJ	0.48	1.7	ug/kg	HT
SS	NDA192FD1	SW8081	ALPHA ENDOSULFAN (ENDOSULFAN I)	2	U	2	UJ	0.55	2	ug/kg	HT
SS	NDA193	SW8081	ALPHA ENDOSULFAN (ENDOSULFAN I)	1.8	U	1.8	UJ	0.49	1.8	ug/kg	HT
SS	NDA194	SW8081	ALPHA ENDOSULFAN (ENDOSULFAN I)	2.1	U	2.1	UJ	0.58	2.1	ug/kg	HT
SS	NDA195	SW8081	ALPHA ENDOSULFAN (ENDOSULFAN I)	1.7	U	1.7	UJ	0.48	1.7	ug/kg	HT
SS	NDA057	SW8081	ALPHA ENDOSULFAN (ENDOSULFAN I)	2.1	U	2.1	UJ	0.58	2.1	ug/kg	HT
SS	NDA059	SW8081	ALPHA ENDOSULFAN (ENDOSULFAN I)	1.8	U	1.8	UJ	0.5	1.8	ug/kg	HT
SS	NDA061	SW8081	ALPHA ENDOSULFAN (ENDOSULFAN I)	1.8	U	1.8	UJ	0.49	1.8	ug/kg	HT
SS	NDA062FD1	SW8081	ALPHA ENDOSULFAN (ENDOSULFAN I)	1.8	U	1.8	UJ	0.5	1.8	ug/kg	HT
SS	NDA065	SW8081	ALPHA ENDOSULFAN (ENDOSULFAN I)	2.1	U	2.1	UJ	0.59	2.1	ug/kg	HT
SS	NDA067	SW8081	ALPHA ENDOSULFAN (ENDOSULFAN I)	1.8	U	1.8	UJ	0.5	1.8	ug/kg	HT
SS	NDA069	SW8081	ALPHA ENDOSULFAN (ENDOSULFAN I)	1.7	U	1.7	UJ	0.47	1.7	ug/kg	HT
SS	NDA119	SW8081	ALPHA ENDOSULFAN (ENDOSULFAN I)	1.9	U	1.9	UJ	0.53	1.9	ug/kg	HT
SS	NDA120	SW8081	ALPHA ENDOSULFAN (ENDOSULFAN I)	2.2	U	2.2	UJ	0.62	2.2	ug/kg	HT
SS	NDA121	SW8081	ALPHA ENDOSULFAN (ENDOSULFAN I)	1.9	U	1.9	UJ	0.51	1.9	ug/kg	HT
SS	NDA122	SW8081	ALPHA ENDOSULFAN (ENDOSULFAN I)	1.9	U	1.9	UJ	0.53	1.9	ug/kg	HT
SS	NDA123	SW8081	ALPHA ENDOSULFAN (ENDOSULFAN I)	1.9	U	1.9	UJ	0.52	1.9	ug/kg	HT
SS	NDA124	SW8081	ALPHA ENDOSULFAN (ENDOSULFAN I)	1.9	U	1.9	UJ	0.52	1.9	ug/kg	HT
SS	NDA071	SW8081	ALPHA ENDOSULFAN (ENDOSULFAN I)	2	U	2	UJ	0.56	2	ug/kg	HT

Matrix	Sample ID	Analytical Method	Parameter	Lab Result	Lab Qual	Final Result	Final Qual	DL	RL	Units	Comments
SS	NDA072FD1	SW8081	ALPHA ENDOSULFAN (ENDOSULFAN I)	1.8	U	1.8	UJ	0.49	1.8	ug/kg	HT
SS	NDA074	SW8081	ALPHA ENDOSULFAN (ENDOSULFAN I)	0.18	U	0.18	UJ	0.05	0.18	ug/kg	HT
SS	NDA078	SW8081	ALPHA ENDOSULFAN (ENDOSULFAN I)	0.18	U	0.18	UJ	0.05	0.18	ug/kg	HT
SS	NDA080	SW8081	ALPHA ENDOSULFAN (ENDOSULFAN I)	0.17	U	0.17	UJ	0.05	0.17	ug/kg	HT
SS	NDA082	SW8081	ALPHA ENDOSULFAN (ENDOSULFAN I)	0.17	U	0.17	UJ	0.05	0.17	ug/kg	HT
SS	NDA113	SW8081	ALPHA ENDOSULFAN (ENDOSULFAN I)	2.1	U	2.1	UJ	0.58	2.1	ug/kg	HT
SS	NDA115	SW8081	ALPHA ENDOSULFAN (ENDOSULFAN I)	1.9	U	1.9	UJ	0.54	1.9	ug/kg	HT
SS	NDA117	SW8081	ALPHA ENDOSULFAN (ENDOSULFAN I)	2.1	U	2.1	UJ	0.59	2.1	ug/kg	HT
SS	NDA101	SW8081	ALPHA ENDOSULFAN (ENDOSULFAN I)	2.3	U	2.3	UJ	0.63	2.3	ug/kg	HT
SS	NDA103	SW8081	ALPHA ENDOSULFAN (ENDOSULFAN I)	2.3	U	2.3	UJ	0.64	2.3	ug/kg	HT
SS	NDA104FD1	SW8081	ALPHA ENDOSULFAN (ENDOSULFAN I)	2.4	U	2.4	UJ	0.66	2.4	ug/kg	HT
SS	NDA107	SW8081	ALPHA ENDOSULFAN (ENDOSULFAN I)	2.1	U	2.1	UJ	0.59	2.1	ug/kg	HT
SS	NDA109	SW8081	ALPHA ENDOSULFAN (ENDOSULFAN I)	2.2	U	2.2	UJ	0.61	2.2	ug/kg	HT
SS	NDA111	SW8081	ALPHA ENDOSULFAN (ENDOSULFAN I)	2.2	U	2.2	UJ	0.62	2.2	ug/kg	HT
SB	NDA245	SW8081	ALPHA BHC	2	U	2	UJ	0.56	2	ug/kg	HT
SB	NDA246	SW8081	ALPHA BHC	2.1	U	2.1	UJ	0.6	2.1	ug/kg	HT
SB	NDA247FD1	SW8081	ALPHA BHC	2	U	2	UJ	0.57	2	ug/kg	HT
SB	NDA248	SW8081	ALPHA BHC	2.1	U	2.1	UJ	0.59	2.1	ug/kg	HT
SB	NDA249	SW8081	ALPHA BHC	1.9	U	1.9	UJ	0.55	1.9	ug/kg	HT
SB	NDA252	SW8081	ALPHA BHC	2	U	2	UJ	0.57	2	ug/kg	HT
SB	NDA253	SW8081	ALPHA BHC	2.1	U	2.1	UJ	0.62	2.1	ug/kg	HT
SB	NDA254	SW8081	ALPHA BHC	2.1	U	2.1	UJ	0.61	2.1	ug/kg	HT
SB	NDA255	SW8081	ALPHA BHC	2.1	U	2.1	UJ	0.6	2.1	ug/kg	HT
SB	NDA058	SW8081	ALPHA BHC	1.9	U	1.9	UJ	0.54	1.9	ug/kg	HT
SB	NDA060	SW8081	ALPHA BHC	1.9	U	1.9	UJ	0.54	1.9	ug/kg	HT
SB	NDA063	SW8081	ALPHA BHC	1.8	U	1.8	UJ	0.53	1.8	ug/kg	HT
SB	NDA064FD1	SW8081	ALPHA BHC	1.8	U	1.8	UJ	0.53	1.8	ug/kg	HT
SB	NDA066	SW8081	ALPHA BHC	1.8	U	1.8	UJ	0.51	1.8	ug/kg	HT
SB	NDA068	SW8081	ALPHA BHC	1.8	U	1.8	UJ	0.53	1.8	ug/kg	HT
SB	NDA070	SW8081	ALPHA BHC	1.8	U	1.8	UJ	0.52	1.8	ug/kg	HT
SB	NDA073	SW8081	ALPHA BHC	1.8	U	1.8	UJ	0.52	1.8	ug/kg	HT
SB	NDA075	SW8081	ALPHA BHC	0.18	U	0.18	UJ	0.05	0.18	ug/kg	HT
SB	NDA077	SW8081	ALPHA BHC	0.2	U	0.2	UJ	0.06	0.2	ug/kg	HT
SB	NDA081	SW8081	ALPHA BHC	0.18	U	0.18	UJ	0.05	0.18	ug/kg	HT
SB	NDA083	SW8081	ALPHA BHC	0.17	U	0.17	UJ	0.05	0.17	ug/kg	HT
SB	NDA114	SW8081	ALPHA BHC	2.2	U	2.2	UJ	0.63	2.2	ug/kg	HT
SB	NDA116	SW8081	ALPHA BHC	2.1	U	2.1	UJ	0.61	2.1	ug/kg	HT
SB	NDA118	SW8081	ALPHA BHC	2.2	U	2.2	UJ	0.63	2.2	ug/kg	HT
SB	NDA102	SW8081	ALPHA BHC	2.6	U	2.6	UJ	0.76	2.6	ug/kg	HT
SB	NDA105	SW8081	ALPHA BHC	2.7	U	2.7	UJ	0.78	2.7	ug/kg	HT
SB	NDA106FD1	SW8081	ALPHA BHC	2.7	U	2.7	UJ	0.78	2.7	ug/kg	HT
SB	NDA108	SW8081	ALPHA BHC	2.3	U	2.3	UJ	0.65	2.3	ug/kg	HT
SB	NDA110	SW8081	ALPHA BHC	2.3	U	2.3	UJ	0.65	2.3	ug/kg	HT
SB	NDA112	SW8081	ALPHA BHC	2.2	U	2.2	UJ	0.64	2.2	ug/kg	HT
SD	NDA047	SW8081	ALPHA BHC	1.9	U	1.9	UJ	0.53	1.9	ug/kg	HT
SD	NDA048	SW8081	ALPHA BHC	1.9	U	1.9	UJ	0.56	1.9	ug/kg	HT
SD	NDA049	SW8081	ALPHA BHC	1.9	U	1.9	UJ	0.54	1.9	ug/kg	HT
SS	NDA185	SW8081	ALPHA BHC	2	U	2	UJ	0.58	2	ug/kg	HT
SS	NDA186	SW8081	ALPHA BHC	1.9	U	1.9	UJ	0.55	1.9	ug/kg	HT
SS	NDA187	SW8081	ALPHA BHC	1.8	U	1.8	UJ	0.53	1.8	ug/kg	HT
SS	NDA188	SW8081	ALPHA BHC	2.3	U	2.3	UJ	0.67	2.3	ug/kg	HT
SS	NDA189	SW8081	ALPHA BHC	1.9	U	1.9	UJ	0.55	1.9	ug/kg	HT
SS	NDA190	SW8081	ALPHA BHC	1.9	U	1.9	UJ	0.55	1.9	ug/kg	HT
SS	NDA191	SW8081	ALPHA BHC	1.7	U	1.7	UJ	0.5	1.7	ug/kg	HT
SS	NDA192FD1	SW8081	ALPHA BHC	2	U	2	UJ	0.57	2	ug/kg	HT
SS	NDA193	SW8081	ALPHA BHC	1.8	U	1.8	UJ	0.51	1.8	ug/kg	HT
SS	NDA194	SW8081	ALPHA BHC	2.1	U	2.1	UJ	0.6	2.1	ug/kg	HT
SS	NDA195	SW8081	ALPHA BHC	1.7	U	1.7	UJ	0.5	1.7	ug/kg	HT
SS	NDA057	SW8081	ALPHA BHC	2.1	U	2.1	UJ	0.61	2.1	ug/kg	HT
SS	NDA059	SW8081	ALPHA BHC	1.8	U	1.8	UJ	0.52	1.8	ug/kg	HT
SS	NDA061	SW8081	ALPHA BHC	1.8	U	1.8	UJ	0.51	1.8	ug/kg	HT
SS	NDA062FD1	SW8081	ALPHA BHC	1.8	U	1.8	UJ	0.52	1.8	ug/kg	HT
SS	NDA065	SW8081	ALPHA BHC	2.1	U	2.1	UJ	0.61	2.1	ug/kg	HT
SS	NDA067	SW8081	ALPHA BHC	1.8	U	1.8	UJ	0.53	1.8	ug/kg	HT
SS	NDA069	SW8081	ALPHA BHC	1.7	U	1.7	UJ	0.49	1.7	ug/kg	HT
SS	NDA119	SW8081	ALPHA BHC	1.9	U	1.9	UJ	0.55	1.9	ug/kg	HT
SS	NDA120	SW8081	ALPHA BHC	2.2	U	2.2	UJ	0.65	2.2	ug/kg	HT
SS	NDA121	SW8081	ALPHA BHC	1.9	U	1.9	UJ	0.54	1.9	ug/kg	HT
SS	NDA122	SW8081	ALPHA BHC	1.9	U	1.9	UJ	0.55	1.9	ug/kg	HT
SS	NDA123	SW8081	ALPHA BHC	1.9	U	1.9	UJ	0.55	1.9	ug/kg	HT

Matrix	Sample ID	Analytical Method	Parameter	Lab Result	Lab Qual	Final Result	Final Qual	DL	RL	Units	Comments
SS	NDA124	SW8081	ALPHA BHC	1.9	U	1.9	UJ	0.55	1.9	ug/kg	HT
SS	NDA071	SW8081	ALPHA BHC	2	U	2	UJ	0.59	2	ug/kg	HT
SS	NDA072FD1	SW8081	ALPHA BHC	1.8	U	1.8	UJ	0.51	1.8	ug/kg	HT
SS	NDA074	SW8081	ALPHA BHC	0.18	U	0.18	UJ	0.05	0.18	ug/kg	HT
SS	NDA078	SW8081	ALPHA BHC	0.18	U	0.18	UJ	0.05	0.18	ug/kg	HT
SS	NDA080	SW8081	ALPHA BHC	0.17	U	0.17	UJ	0.05	0.17	ug/kg	HT
SS	NDA082	SW8081	ALPHA BHC	0.17	U	0.17	UJ	0.05	0.17	ug/kg	HT
SS	NDA113	SW8081	ALPHA BHC	2.1	U	2.1	UJ	0.6	2.1	ug/kg	HT
SS	NDA115	SW8081	ALPHA BHC	1.9	U	1.9	UJ	0.56	1.9	ug/kg	HT
SS	NDA117	SW8081	ALPHA BHC	2.1	U	2.1	UJ	0.62	2.1	ug/kg	HT
SS	NDA101	SW8081	ALPHA BHC	2.3	U	2.3	UJ	0.65	2.3	ug/kg	HT
SS	NDA103	SW8081	ALPHA BHC	2.3	U	2.3	UJ	0.67	2.3	ug/kg	HT
SS	NDA104FD1	SW8081	ALPHA BHC	2.4	U	2.4	UJ	0.69	2.4	ug/kg	HT
SS	NDA107	SW8081	ALPHA BHC	2.1	U	2.1	UJ	0.61	2.1	ug/kg	HT
SS	NDA109	SW8081	ALPHA BHC	2.2	U	2.2	UJ	0.64	2.2	ug/kg	HT
SS	NDA111	SW8081	ALPHA BHC	2.2	U	2.2	UJ	0.65	2.2	ug/kg	HT
SB	NDA165	SW8081	ALDRIN	1.9	U	1.9	UJ	0.53	1.9	ug/kg	HT
SB	NDA167	SW8081	ALDRIN	2.1	U	2.1	UJ	0.57	2.1	ug/kg	HT
SB	NDA169	SW8081	ALDRIN	2	U	2	UJ	0.56	2	ug/kg	HT
SB	NDA171	SW8081	ALDRIN	1.8	U	1.8	UJ	0.51	1.8	ug/kg	HT
SB	NDA173	SW8081	ALDRIN	2.2	U	2.2	UJ	0.6	2.2	ug/kg	HT
SB	NDA175	SW8081	ALDRIN	1.9	U	1.9	UJ	0.52	1.9	ug/kg	HT
SB	NDA177	SW8081	ALDRIN	2	U	2	UJ	0.54	2	ug/kg	HT
SB	NDA213	SW8081	ALDRIN	2	U	2	UJ	0.54	2	ug/kg	HT
SB	NDA214FD1	SW8081	ALDRIN	1.9	U	1.9	UJ	0.52	1.9	ug/kg	HT
SB	NDA215	SW8081	ALDRIN	2	U	2	UJ	0.54	2	ug/kg	HT
SB	NDA216	SW8081	ALDRIN	1.8	U	1.8	UJ	0.51	1.8	ug/kg	HT
SB	NDA217	SW8081	ALDRIN	1.9	U	1.9	UJ	0.54	1.9	ug/kg	HT
SB	NDA218	SW8081	ALDRIN	1.9	U	1.9	UJ	0.52	1.9	ug/kg	HT
SB	NDA219	SW8081	ALDRIN	1.9	U	1.9	UJ	0.52	1.9	ug/kg	HT
SB	NDA220	SW8081	ALDRIN	1.9	U	1.9	UJ	0.54	1.9	ug/kg	HT
SB	NDA221	SW8081	ALDRIN	1.8	U	1.8	UJ	0.5	1.8	ug/kg	HT
SB	NDA222	SW8081	ALDRIN	1.7	U	1.7	UJ	0.47	1.7	ug/kg	HT
SB	NDA223	SW8081	ALDRIN	1.9	U	1.9	UJ	0.53	1.9	ug/kg	HT
SB	NDA235	SW8081	ALDRIN	2.2	U	2.2	UJ	0.62	2.2	ug/kg	HT
SB	NDA236	SW8081	ALDRIN	1.9	U	1.9	UJ	0.53	1.9	ug/kg	HT
SB	NDA237FD1	SW8081	ALDRIN	1.9	U	1.9	UJ	0.53	1.9	ug/kg	HT
SB	NDA238	SW8081	ALDRIN	1.9	U	1.9	UJ	0.53	1.9	ug/kg	HT
SB	NDA239	SW8081	ALDRIN	1.9	U	1.9	UJ	0.53	1.9	ug/kg	HT
SB	NDA240	SW8081	ALDRIN	2	U	2	UJ	0.56	2	ug/kg	HT
SB	NDA241	SW8081	ALDRIN	1.9	U	1.9	UJ	0.52	1.9	ug/kg	HT
SB	NDA242	SW8081	ALDRIN	2.1	U	2.1	UJ	0.59	2.1	ug/kg	HT
SB	NDA243	SW8081	ALDRIN	2	U	2	UJ	0.55	2	ug/kg	HT
SB	NDA244	SW8081	ALDRIN	1.9	U	1.9	UJ	0.51	1.9	ug/kg	HT
SB	NDA245	SW8081	ALDRIN	2	U	2	UJ	0.54	2	ug/kg	HT
SB	NDA246	SW8081	ALDRIN	2.1	U	2.1	UJ	0.58	2.1	ug/kg	HT
SB	NDA247FD1	SW8081	ALDRIN	2	U	2	UJ	0.54	2	ug/kg	HT
SB	NDA248	SW8081	ALDRIN	2.1	U	2.1	UJ	0.57	2.1	ug/kg	HT
SB	NDA249	SW8081	ALDRIN	1.9	U	1.9	UJ	0.52	1.9	ug/kg	HT
SB	NDA252	SW8081	ALDRIN	2	U	2	UJ	0.55	2	ug/kg	HT
SB	NDA253	SW8081	ALDRIN	2.1	U	2.1	UJ	0.59	2.1	ug/kg	HT
SB	NDA254	SW8081	ALDRIN	2.1	U	2.1	UJ	0.59	2.1	ug/kg	HT
SB	NDA255	SW8081	ALDRIN	2.1	U	2.1	UJ	0.58	2.1	ug/kg	HT
SB	NDA058	SW8081	ALDRIN	1.9	U	1.9	UJ	0.52	1.9	ug/kg	HT
SB	NDA060	SW8081	ALDRIN	1.9	U	1.9	UJ	0.51	1.9	ug/kg	HT
SB	NDA063	SW8081	ALDRIN	1.8	U	1.8	UJ	0.5	1.8	ug/kg	HT
SB	NDA064FD1	SW8081	ALDRIN	1.8	U	1.8	UJ	0.5	1.8	ug/kg	HT
SB	NDA066	SW8081	ALDRIN	1.8	U	1.8	UJ	0.49	1.8	ug/kg	HT
SB	NDA068	SW8081	ALDRIN	1.8	U	1.8	UJ	0.51	1.8	ug/kg	HT
SB	NDA070	SW8081	ALDRIN	1.8	U	1.8	UJ	0.5	1.8	ug/kg	HT
SB	NDA073	SW8081	ALDRIN	1.8	U	1.8	UJ	0.5	1.8	ug/kg	HT
SB	NDA075	SW8081	ALDRIN	0.18	U	0.18	UJ	0.05	0.18	ug/kg	HT
SB	NDA077	SW8081	ALDRIN	0.2	U	0.2	UJ	0.06	0.2	ug/kg	HT
SB	NDA081	SW8081	ALDRIN	0.18	U	0.18	UJ	0.05	0.18	ug/kg	HT
SB	NDA083	SW8081	ALDRIN	0.17	U	0.17	UJ	0.05	0.17	ug/kg	HT
SB	NDA114	SW8081	ALDRIN	2.2	U	2.2	UJ	0.61	2.2	ug/kg	HT
SB	NDA116	SW8081	ALDRIN	2.1	U	2.1	UJ	0.59	2.1	ug/kg	HT
SB	NDA118	SW8081	ALDRIN	2.2	U	2.2	UJ	0.6	2.2	ug/kg	HT
SB	NDA102	SW8081	ALDRIN	2.6	U	2.6	UJ	0.73	2.6	ug/kg	HT
SB	NDA105	SW8081	ALDRIN	2.7	U	2.7	UJ	0.74	2.7	ug/kg	HT

Matrix	Sample ID	Analytical Method	Parameter	Lab Result	Lab Qual	Final Result	Final Qual	DL	RL	Units	Comments
SB	NDA106FD1	SW8081	ALDRIN	2.7	U	2.7	UJ	0.74	2.7	ug/kg	HT
SB	NDA108	SW8081	ALDRIN	2.3	U	2.3	UJ	0.63	2.3	ug/kg	HT
SB	NDA110	SW8081	ALDRIN	2.3	U	2.3	UJ	0.62	2.3	ug/kg	HT
SB	NDA112	SW8081	ALDRIN	2.2	U	2.2	UJ	0.61	2.2	ug/kg	HT
SD	NDA053	SW8081	ALDRIN	13	U	13	UJ	3.5	13	ug/kg	HT
SD	NDA054	SW8081	ALDRIN	1.7	U	1.7	UJ	0.48	1.7	ug/kg	HT
SD	NDA055	SW8081	ALDRIN	1.7	U	1.7	UJ	0.47	1.7	ug/kg	HT
SD	NDA047	SW8081	ALDRIN	1.9	U	1.9	UJ	0.51	1.9	ug/kg	HT
SD	NDA048	SW8081	ALDRIN	1.9	U	1.9	UJ	0.54	1.9	ug/kg	HT
SD	NDA049	SW8081	ALDRIN	1.9	U	1.9	UJ	0.51	1.9	ug/kg	HT
SS	NDA164	SW8081	ALDRIN	2.1	U	2.1	UJ	0.58	2.1	ug/kg	HT
SS	NDA166	SW8081	ALDRIN	2.1	U	2.1	UJ	0.58	2.1	ug/kg	HT
SS	NDA168	SW8081	ALDRIN	2	U	2	UJ	0.55	2	ug/kg	HT
SS	NDA170	SW8081	ALDRIN	2	U	2	UJ	0.56	2	ug/kg	HT
SS	NDA172	SW8081	ALDRIN	1.8	U	1.8	UJ	0.5	1.8	ug/kg	HT
SS	NDA174	SW8081	ALDRIN	1.8	U	1.8	UJ	0.49	1.8	ug/kg	HT
SS	NDA176	SW8081	ALDRIN	4.8	U	4.8	UJ	1.3	4.8	ug/kg	HT
SS	NDA185	SW8081	ALDRIN	2	U	2	UJ	0.56	2	ug/kg	HT
SS	NDA186	SW8081	ALDRIN	1.9	U	1.9	UJ	0.52	1.9	ug/kg	HT
SS	NDA187	SW8081	ALDRIN	1.8	U	1.8	UJ	0.5	1.8	ug/kg	HT
SS	NDA188	SW8081	ALDRIN	2.3	U	2.3	UJ	0.64	2.3	ug/kg	HT
SS	NDA189	SW8081	ALDRIN	1.9	U	1.9	UJ	0.52	1.9	ug/kg	HT
SS	NDA190	SW8081	ALDRIN	1.9	U	1.9	UJ	0.53	1.9	ug/kg	HT
SS	NDA191	SW8081	ALDRIN	1.7	U	1.7	UJ	0.48	1.7	ug/kg	HT
SS	NDA192FD1	SW8081	ALDRIN	2	U	2	UJ	0.55	2	ug/kg	HT
SS	NDA193	SW8081	ALDRIN	1.8	U	1.8	UJ	0.49	1.8	ug/kg	HT
SS	NDA194	SW8081	ALDRIN	2.1	U	2.1	UJ	0.58	2.1	ug/kg	HT
SS	NDA195	SW8081	ALDRIN	1.7	U	1.7	UJ	0.48	1.7	ug/kg	HT
SS	NDA057	SW8081	ALDRIN	2.1	U	2.1	UJ	0.58	2.1	ug/kg	HT
SS	NDA059	SW8081	ALDRIN	1.8	U	1.8	UJ	0.5	1.8	ug/kg	HT
SS	NDA061	SW8081	ALDRIN	1.8	U	1.8	UJ	0.49	1.8	ug/kg	HT
SS	NDA062FD1	SW8081	ALDRIN	1.8	U	1.8	UJ	0.5	1.8	ug/kg	HT
SS	NDA065	SW8081	ALDRIN	2.1	U	2.1	UJ	0.59	2.1	ug/kg	HT
SS	NDA067	SW8081	ALDRIN	1.8	U	1.8	UJ	0.5	1.8	ug/kg	HT
SS	NDA069	SW8081	ALDRIN	1.7	U	1.7	UJ	0.47	1.7	ug/kg	HT
SS	NDA119	SW8081	ALDRIN	1.9	U	1.9	UJ	0.53	1.9	ug/kg	HT
SS	NDA120	SW8081	ALDRIN	2.2	U	2.2	UJ	0.62	2.2	ug/kg	HT
SS	NDA121	SW8081	ALDRIN	1.9	U	1.9	UJ	0.51	1.9	ug/kg	HT
SS	NDA122	SW8081	ALDRIN	1.9	U	1.9	UJ	0.53	1.9	ug/kg	HT
SS	NDA123	SW8081	ALDRIN	1.9	U	1.9	UJ	0.52	1.9	ug/kg	HT
SS	NDA124	SW8081	ALDRIN	1.9	U	1.9	UJ	0.52	1.9	ug/kg	HT
SS	NDA071	SW8081	ALDRIN	2	U	2	UJ	0.56	2	ug/kg	HT
SS	NDA072FD1	SW8081	ALDRIN	1.8	U	1.8	UJ	0.49	1.8	ug/kg	HT
SS	NDA074	SW8081	ALDRIN	0.18	U	0.18	UJ	0.05	0.18	ug/kg	HT
SS	NDA078	SW8081	ALDRIN	0.18	U	0.18	UJ	0.05	0.18	ug/kg	HT
SS	NDA080	SW8081	ALDRIN	0.17	U	0.17	UJ	0.05	0.17	ug/kg	HT
SS	NDA082	SW8081	ALDRIN	0.17	U	0.17	UJ	0.05	0.17	ug/kg	HT
SS	NDA113	SW8081	ALDRIN	2.1	U	2.1	UJ	0.58	2.1	ug/kg	HT
SS	NDA115	SW8081	ALDRIN	1.9	U	1.9	UJ	0.54	1.9	ug/kg	HT
SS	NDA117	SW8081	ALDRIN	2.1	U	2.1	UJ	0.59	2.1	ug/kg	HT
SS	NDA101	SW8081	ALDRIN	2.3	U	2.3	UJ	0.63	2.3	ug/kg	HT
SS	NDA103	SW8081	ALDRIN	2.3	U	2.3	UJ	0.64	2.3	ug/kg	HT
SS	NDA104FD1	SW8081	ALDRIN	2.4	U	2.4	UJ	0.66	2.4	ug/kg	HT
SS	NDA107	SW8081	ALDRIN	2.1	U	2.1	UJ	0.59	2.1	ug/kg	HT
SS	NDA109	SW8081	ALDRIN	2.2	U	2.2	UJ	0.61	2.2	ug/kg	HT
SS	NDA111	SW8081	ALDRIN	2.2	U	2.2	UJ	0.62	2.2	ug/kg	HT
SB	NDA213	SW8270	ACENAPHTHYLENE	485	U	485	UJ	49	485	ug/kg	HT
SB	NDA214FD1	SW8270	ACENAPHTHYLENE	487	U	487	UJ	49	487	ug/kg	HT
SB	NDA215	SW8270	ACENAPHTHYLENE	527	U	527	UJ	53	527	ug/kg	HT
SB	NDA216	SW8270	ACENAPHTHYLENE	537	U	537	UJ	54	537	ug/kg	HT
SB	NDA217	SW8270	ACENAPHTHYLENE	540	U	540	UJ	54	540	ug/kg	HT
SB	NDA218	SW8270	ACENAPHTHYLENE	505	U	505	UJ	51	505	ug/kg	HT
SB	NDA219	SW8270	ACENAPHTHYLENE	380	U	380	UJ	38	380	ug/kg	HT
SB	NDA220	SW8270	ACENAPHTHYLENE	542	U	542	UJ	54	542	ug/kg	HT
SB	NDA221	SW8270	ACENAPHTHYLENE	501	U	501	UJ	50	501	ug/kg	HT
SB	NDA222	SW8270	ACENAPHTHYLENE	459	U	459	UJ	46	459	ug/kg	HT
SB	NDA223	SW8270	ACENAPHTHYLENE	527	U	527	UJ	53	527	ug/kg	HT
SB	NDA235	SW8270	ACENAPHTHYLENE	504	U	504	UJ	50	504	ug/kg	HT
SB	NDA236	SW8270	ACENAPHTHYLENE	423	U	423	UJ	42	423	ug/kg	HT
SB	NDA237FD1	SW8270	ACENAPHTHYLENE	395	U	395	UJ	39	395	ug/kg	HT

Matrix	Sample ID	Analytical Method	Parameter	Lab Result	Lab Qual	Final Result	Final Qual	DL	RL	Units	Comments
SB	NDA238	SW8270	ACENAPHTHYLENE	424	U	424	UJ	42	424	ug/kg	HT
SB	NDA239	SW8270	ACENAPHTHYLENE	555	U	555	UJ	55	555	ug/kg	HT
SB	NDA240	SW8270	ACENAPHTHYLENE	397	U	397	UJ	40	397	ug/kg	HT
SB	NDA241	SW8270	ACENAPHTHYLENE	471	U	471	UJ	47	471	ug/kg	HT
SB	NDA242	SW8270	ACENAPHTHYLENE	436	U	436	UJ	44	436	ug/kg	HT
SB	NDA243	SW8270	ACENAPHTHYLENE	893	U	893	UJ	89	893	ug/kg	HT
SB	NDA244	SW8270	ACENAPHTHYLENE	388	U	388	UJ	39	388	ug/kg	HT
SB	NDA245	SW8270	ACENAPHTHYLENE	393	U	393	UJ	39	393	ug/kg	HT
SB	NDA246	SW8270	ACENAPHTHYLENE	511	U	511	UJ	51	511	ug/kg	HT
SB	NDA247FD1	SW8270	ACENAPHTHYLENE	390	U	390	UJ	39	390	ug/kg	HT
SB	NDA248	SW8270	ACENAPHTHYLENE	453	U	453	UJ	45	453	ug/kg	HT
SB	NDA249	SW8270	ACENAPHTHYLENE	374	U	374	UJ	37	374	ug/kg	HT
SB	NDA252	SW8270	ACENAPHTHYLENE	420	U	420	UJ	42	420	ug/kg	HT
SB	NDA253	SW8270	ACENAPHTHYLENE	439	U	439	UJ	44	439	ug/kg	HT
SB	NDA254	SW8270	ACENAPHTHYLENE	391	U	391	UJ	39	391	ug/kg	HT
SB	NDA255	SW8270	ACENAPHTHYLENE	375	U	375	UJ	38	375	ug/kg	HT
SB	NDA085	SW8270	ACENAPHTHYLENE	482	U	482	UJ	48	482	ug/kg	HT
SB	NDA092	SW8270	ACENAPHTHYLENE	400	U	400	UJ	40	400	ug/kg	HT
SB	NDA093	SW8270	ACENAPHTHYLENE	339	U	339	UJ	34	339	ug/kg	HT
SB	NDA094	SW8270	ACENAPHTHYLENE	510	U	510	UJ	51	510	ug/kg	HT
SB	NDA095FD1	SW8270	ACENAPHTHYLENE	310	U	310	UJ	31	310	ug/kg	HT
SB	NDA296	SW8270	ACENAPHTHYLENE	369	U	369	UJ	37	369	ug/kg	HT
SB	NDA298	SW8270	ACENAPHTHYLENE	341	U	341	UJ	34	341	ug/kg	HT
SB	NDA299	SW8270	ACENAPHTHYLENE	370	U	370	UJ	37	370	ug/kg	HT
SB	NDA058	SW8270	ACENAPHTHYLENE	460	U	460	UJ	46	460	ug/kg	HT
SB	NDA060	SW8270	ACENAPHTHYLENE	478	U	478	UJ	48	478	ug/kg	HT
SB	NDA063	SW8270	ACENAPHTHYLENE	382	U	382	UJ	38	382	ug/kg	HT
SB	NDA064FD1	SW8270	ACENAPHTHYLENE	351	U	351	UJ	35	351	ug/kg	HT
SB	NDA066	SW8270	ACENAPHTHYLENE	344	U	344	UJ	34	344	ug/kg	HT
SB	NDA068	SW8270	ACENAPHTHYLENE	360	U	360	UJ	36	360	ug/kg	HT
SB	NDA070	SW8270	ACENAPHTHYLENE	404	U	404	UJ	40	404	ug/kg	HT
SB	NDA073	SW8270	ACENAPHTHYLENE	383	U	383	UJ	38	383	ug/kg	HT
SB	NDA075	SW8270	ACENAPHTHYLENE	401	U	401	UJ	40	401	ug/kg	HT
SB	NDA077	SW8270	ACENAPHTHYLENE	441	U	441	UJ	44	441	ug/kg	HT
SB	NDA079	SW8270	ACENAPHTHYLENE	466	U	466	UJ	47	466	ug/kg	HT
SB	NDA081RE1	SW8270	ACENAPHTHYLENE	393	U	393	UJ	39	393	ug/kg	HT
SB	NDA083RE1	SW8270	ACENAPHTHYLENE	4240	U	4240	UJ	424	4240	ug/kg	HT
SD	NDA054	SW8270	ACENAPHTHYLENE	480	U	480	UJ	48	480	ug/kg	HT
SD	NDA055	SW8270	ACENAPHTHYLENE	696	U	696	UJ	70	696	ug/kg	HT
SD	NDA042	SW8270	ACENAPHTHYLENE	686	U	686	UJ	69	686	ug/kg	HT
SD	NDA043	SW8270	ACENAPHTHYLENE	735	U	735	UJ	73	735	ug/kg	HT
SD	NDA044	SW8270	ACENAPHTHYLENE	1680	U	1680	UJ	168	1680	ug/kg	HT
SD	NDA045	SW8270	ACENAPHTHYLENE	1500	U	1500	UJ	150	1500	ug/kg	HT
SD	NDA046	SW8270	ACENAPHTHYLENE	1520	U	1520	UJ	152	1520	ug/kg	HT
SD	NDA302	SW8270	ACENAPHTHYLENE	1200	U	1200	UJ	120	1200	ug/kg	HT
SD	NDA303	SW8270	ACENAPHTHYLENE	2300	U	2300	UJ	230	2300	ug/kg	HT
SD	NDA307FD1	SW8270	ACENAPHTHYLENE	2130	U	2130	UJ	213	2130	ug/kg	HT
SD	NDA047	SW8270	ACENAPHTHYLENE	503	U	503	UJ	50	503	ug/kg	HT
SD	NDA048	SW8270	ACENAPHTHYLENE	558	U	558	UJ	56	558	ug/kg	HT
SD	NDA049	SW8270	ACENAPHTHYLENE	463	U	463	UJ	46	463	ug/kg	HT
SS	NDA178	SW8270	ACENAPHTHYLENE	644	U	644	UJ	64	644	ug/kg	HT
SS	NDA179	SW8270	ACENAPHTHYLENE	644	U	644	UJ	64	644	ug/kg	HT
SS	NDA180	SW8270	ACENAPHTHYLENE	550	U	550	UJ	55	550	ug/kg	HT
SS	NDA181	SW8270	ACENAPHTHYLENE	566	U	566	UJ	57	566	ug/kg	HT
SS	NDA182	SW8270	ACENAPHTHYLENE	679	U	679	UJ	68	679	ug/kg	HT
SS	NDA183	SW8270	ACENAPHTHYLENE	589	U	589	UJ	59	589	ug/kg	HT
SS	NDA184FD1	SW8270	ACENAPHTHYLENE	662	U	662	UJ	66	662	ug/kg	HT
SS	NDA201	SW8270	ACENAPHTHYLENE	491	U	491	UJ	49	491	ug/kg	HT
SS	NDA202	SW8270	ACENAPHTHYLENE	605	U	605	UJ	61	605	ug/kg	HT
SS	NDA203	SW8270	ACENAPHTHYLENE	617	U	617	UJ	62	617	ug/kg	HT
SS	NDA204	SW8270	ACENAPHTHYLENE	753	U	753	UJ	75	753	ug/kg	HT
SS	NDA205FD1	SW8270	ACENAPHTHYLENE	668	U	668	UJ	67	668	ug/kg	HT
SS	NDA206	SW8270	ACENAPHTHYLENE	529	U	529	UJ	53	529	ug/kg	HT
SS	NDA207	SW8270	ACENAPHTHYLENE	669	U	669	UJ	67	669	ug/kg	HT
SS	NDA208	SW8270	ACENAPHTHYLENE	520	U	520	UJ	52	520	ug/kg	HT
SS	NDA209	SW8270	ACENAPHTHYLENE	570	U	570	UJ	57	570	ug/kg	HT
SS	NDA210	SW8270	ACENAPHTHYLENE	545	U	545	UJ	54	545	ug/kg	HT
SS	NDA211	SW8270	ACENAPHTHYLENE	742	U	742	UJ	74	742	ug/kg	HT
SS	NDA212	SW8270	ACENAPHTHYLENE	651	U	651	UJ	65	651	ug/kg	HT
SS	NDA185	SW8270	ACENAPHTHYLENE	445	U	445	UJ	45	445	ug/kg	HT

Matrix	Sample ID	Analytical Method	Parameter	Lab Result	Lab Qual	Final Result	Final Qual	DL	RL	Units	Comments
SS	NDA186	SW8270	ACENAPHTHYLENE	416	U	416	UJ	42	416	ug/kg	HT
SS	NDA187	SW8270	ACENAPHTHYLENE	380	U	380	UJ	38	380	ug/kg	HT
SS	NDA188	SW8270	ACENAPHTHYLENE	810	U	810	UJ	81	810	ug/kg	HT
SS	NDA189	SW8270	ACENAPHTHYLENE	426	U	426	UJ	43	426	ug/kg	HT
SS	NDA190	SW8270	ACENAPHTHYLENE	430	U	430	UJ	43	430	ug/kg	HT
SS	NDA191	SW8270	ACENAPHTHYLENE	338	U	338	UJ	34	338	ug/kg	HT
SS	NDA192FD1	SW8270	ACENAPHTHYLENE	418	U	418	UJ	42	418	ug/kg	HT
SS	NDA193	SW8270	ACENAPHTHYLENE	1720	U	1720	UJ	172	1720	ug/kg	HT
SS	NDA194	SW8270	ACENAPHTHYLENE	480	U	480	UJ	48	480	ug/kg	HT
SS	NDA195	SW8270	ACENAPHTHYLENE	323	U	323	UJ	32	323	ug/kg	HT
SS	NDA084	SW8270	ACENAPHTHYLENE	344	U	344	UJ	34	344	ug/kg	HT
SS	NDA091	SW8270	ACENAPHTHYLENE	367	U	367	UJ	37	367	ug/kg	HT
SS	NDA057	SW8270	ACENAPHTHYLENE	563	U	563	UJ	56	563	ug/kg	HT
SS	NDA059	SW8270	ACENAPHTHYLENE	465	U	465	UJ	46	465	ug/kg	HT
SS	NDA061	SW8270	ACENAPHTHYLENE	469	U	469	UJ	47	469	ug/kg	HT
SS	NDA062FD1	SW8270	ACENAPHTHYLENE	523	U	523	UJ	52	523	ug/kg	HT
SS	NDA065	SW8270	ACENAPHTHYLENE	421	U	421	UJ	42	421	ug/kg	HT
SS	NDA067	SW8270	ACENAPHTHYLENE	378	U	378	UJ	38	378	ug/kg	HT
SS	NDA069	SW8270	ACENAPHTHYLENE	320	U	320	UJ	32	320	ug/kg	HT
SS	NDA119	SW8270	ACENAPHTHYLENE	503	U	503	UJ	50	503	ug/kg	HT
SS	NDA120	SW8270	ACENAPHTHYLENE	541	U	541	UJ	54	541	ug/kg	HT
SS	NDA121	SW8270	ACENAPHTHYLENE	409	U	409	UJ	41	409	ug/kg	HT
SS	NDA122	SW8270	ACENAPHTHYLENE	450	U	450	UJ	45	450	ug/kg	HT
SS	NDA123	SW8270	ACENAPHTHYLENE	450	U	450	UJ	45	450	ug/kg	HT
SS	NDA124	SW8270	ACENAPHTHYLENE	432	U	432	UJ	43	432	ug/kg	HT
SS	NDA071	SW8270	ACENAPHTHYLENE	554	U	554	UJ	55	554	ug/kg	HT
SS	NDA072FD1	SW8270	ACENAPHTHYLENE	413	U	413	UJ	41	413	ug/kg	HT
SS	NDA074	SW8270	ACENAPHTHYLENE	448	U	448	UJ	45	448	ug/kg	HT
SS	NDA076	SW8270	ACENAPHTHYLENE	419	U	419	UJ	42	419	ug/kg	HT
SS	NDA078	SW8270	ACENAPHTHYLENE	440	U	440	UJ	44	440	ug/kg	HT
SS	NDA080RE1	SW8270	ACENAPHTHYLENE	407	U	407	UJ	41	407	ug/kg	HT
SS	NDA082RE1	SW8270	ACENAPHTHYLENE	4660	U	4660	UJ	466	4660	ug/kg	HT
SB	NDA213	SW8270	ACENAPHTHENE	485	U	485	UJ	24	485	ug/kg	HT
SB	NDA214FD1	SW8270	ACENAPHTHENE	487	U	487	UJ	24	487	ug/kg	HT
SB	NDA215	SW8270	ACENAPHTHENE	527	U	527	UJ	26	527	ug/kg	HT
SB	NDA216	SW8270	ACENAPHTHENE	537	U	537	UJ	27	537	ug/kg	HT
SB	NDA217	SW8270	ACENAPHTHENE	540	U	540	UJ	27	540	ug/kg	HT
SB	NDA218	SW8270	ACENAPHTHENE	505	U	505	UJ	25	505	ug/kg	HT
SB	NDA219	SW8270	ACENAPHTHENE	380	U	380	UJ	19	380	ug/kg	HT
SB	NDA220	SW8270	ACENAPHTHENE	542	U	542	UJ	27	542	ug/kg	HT
SB	NDA221	SW8270	ACENAPHTHENE	501	U	501	UJ	25	501	ug/kg	HT
SB	NDA222	SW8270	ACENAPHTHENE	459	U	459	UJ	23	459	ug/kg	HT
SB	NDA223	SW8270	ACENAPHTHENE	527	U	527	UJ	26	527	ug/kg	HT
SB	NDA235	SW8270	ACENAPHTHENE	504	U	504	UJ	25	504	ug/kg	HT
SB	NDA236	SW8270	ACENAPHTHENE	423	U	423	UJ	21	423	ug/kg	HT
SB	NDA237FD1	SW8270	ACENAPHTHENE	395	U	395	UJ	20	395	ug/kg	HT
SB	NDA238	SW8270	ACENAPHTHENE	424	U	424	UJ	21	424	ug/kg	HT
SB	NDA239	SW8270	ACENAPHTHENE	555	U	555	UJ	28	555	ug/kg	HT
SB	NDA240	SW8270	ACENAPHTHENE	397	U	397	UJ	20	397	ug/kg	HT
SB	NDA241	SW8270	ACENAPHTHENE	471	U	471	UJ	24	471	ug/kg	HT
SB	NDA242	SW8270	ACENAPHTHENE	436	U	436	UJ	22	436	ug/kg	HT
SB	NDA243	SW8270	ACENAPHTHENE	893	U	893	UJ	45	893	ug/kg	HT
SB	NDA244	SW8270	ACENAPHTHENE	388	U	388	UJ	19	388	ug/kg	HT
SB	NDA245	SW8270	ACENAPHTHENE	393	U	393	UJ	20	393	ug/kg	HT
SB	NDA246	SW8270	ACENAPHTHENE	511	U	511	UJ	26	511	ug/kg	HT
SB	NDA247FD1	SW8270	ACENAPHTHENE	390	U	390	UJ	20	390	ug/kg	HT
SB	NDA248	SW8270	ACENAPHTHENE	453	U	453	UJ	23	453	ug/kg	HT
SB	NDA249	SW8270	ACENAPHTHENE	374	U	374	UJ	19	374	ug/kg	HT
SB	NDA252	SW8270	ACENAPHTHENE	420	U	420	UJ	21	420	ug/kg	HT
SB	NDA253	SW8270	ACENAPHTHENE	439	U	439	UJ	22	439	ug/kg	HT
SB	NDA254	SW8270	ACENAPHTHENE	391	U	391	UJ	20	391	ug/kg	HT
SB	NDA255	SW8270	ACENAPHTHENE	375	U	375	UJ	19	375	ug/kg	HT
SB	NDA085	SW8270	ACENAPHTHENE	482	U	482	UJ	24	482	ug/kg	HT
SB	NDA092	SW8270	ACENAPHTHENE	400	U	400	UJ	20	400	ug/kg	HT
SB	NDA093	SW8270	ACENAPHTHENE	339	U	339	UJ	17	339	ug/kg	HT
SB	NDA094	SW8270	ACENAPHTHENE	510	U	510	UJ	26	510	ug/kg	HT
SB	NDA095FD1	SW8270	ACENAPHTHENE	310	U	310	UJ	16	310	ug/kg	HT
SB	NDA296	SW8270	ACENAPHTHENE	369	U	369	UJ	18	369	ug/kg	HT
SB	NDA297	SW8270	ACENAPHTHENE	358	U	358	UJ	18	358	ug/kg	HT
SB	NDA298	SW8270	ACENAPHTHENE	341	U	341	UJ	17	341	ug/kg	HT

Matrix	Sample ID	Analytical Method	Parameter	Lab Result	Lab Qual	Final Result	Final Qual	DL	RL	Units	Comments
SB	NDA299	SW8270	ACENAPHTHENE	370	U	370	UJ	19	370	ug/kg	HT
SB	NDA058	SW8270	ACENAPHTHENE	460	U	460	UJ	23	460	ug/kg	HT
SB	NDA060	SW8270	ACENAPHTHENE	478	U	478	UJ	24	478	ug/kg	HT
SB	NDA063	SW8270	ACENAPHTHENE	382	U	382	UJ	19	382	ug/kg	HT
SB	NDA064FD1	SW8270	ACENAPHTHENE	351	U	351	UJ	18	351	ug/kg	HT
SB	NDA066	SW8270	ACENAPHTHENE	344	U	344	UJ	17	344	ug/kg	HT
SB	NDA068	SW8270	ACENAPHTHENE	360	U	360	UJ	18	360	ug/kg	HT
SB	NDA070	SW8270	ACENAPHTHENE	404	U	404	UJ	20	404	ug/kg	HT
SB	NDA073	SW8270	ACENAPHTHENE	383	U	383	UJ	19	383	ug/kg	HT
SB	NDA075	SW8270	ACENAPHTHENE	401	U	401	UJ	20	401	ug/kg	HT
SB	NDA077	SW8270	ACENAPHTHENE	441	U	441	UJ	22	441	ug/kg	HT
SB	NDA079	SW8270	ACENAPHTHENE	466	U	466	UJ	23	466	ug/kg	HT
SB	NDA081RE1	SW8270	ACENAPHTHENE	393	U	393	UJ	20	393	ug/kg	HT
SB	NDA083RE1	SW8270	ACENAPHTHENE	4240	U	4240	UJ	212	4240	ug/kg	HT
SD	NDA054	SW8270	ACENAPHTHENE	480	U	480	UJ	24	480	ug/kg	HT
SD	NDA055	SW8270	ACENAPHTHENE	696	U	696	UJ	35	696	ug/kg	HT
SD	NDA042	SW8270	ACENAPHTHENE	686	U	686	UJ	34	686	ug/kg	HT
SD	NDA043	SW8270	ACENAPHTHENE	735	U	735	UJ	37	735	ug/kg	HT
SD	NDA044	SW8270	ACENAPHTHENE	1680	U	1680	UJ	84	1680	ug/kg	HT
SD	NDA045	SW8270	ACENAPHTHENE	1500	U	1500	UJ	75	1500	ug/kg	HT
SD	NDA046	SW8270	ACENAPHTHENE	1520	U	1520	UJ	76	1520	ug/kg	HT
SD	NDA302	SW8270	ACENAPHTHENE	1200	U	1200	UJ	60	1200	ug/kg	HT
SD	NDA303	SW8270	ACENAPHTHENE	2300	U	2300	UJ	115	2300	ug/kg	HT
SD	NDA307FD1	SW8270	ACENAPHTHENE	2130	U	2130	UJ	106	2130	ug/kg	HT
SD	NDA047	SW8270	ACENAPHTHENE	503	U	503	UJ	25	503	ug/kg	HT
SD	NDA048	SW8270	ACENAPHTHENE	558	U	558	UJ	28	558	ug/kg	HT
SD	NDA049	SW8270	ACENAPHTHENE	463	U	463	UJ	23	463	ug/kg	HT
SS	NDA178	SW8270	ACENAPHTHENE	644	U	644	UJ	32	644	ug/kg	HT
SS	NDA179	SW8270	ACENAPHTHENE	644	U	644	UJ	32	644	ug/kg	HT
SS	NDA180	SW8270	ACENAPHTHENE	550	U	550	UJ	27	550	ug/kg	HT
SS	NDA181	SW8270	ACENAPHTHENE	566	U	566	UJ	28	566	ug/kg	HT
SS	NDA182	SW8270	ACENAPHTHENE	679	U	679	UJ	34	679	ug/kg	HT
SS	NDA183	SW8270	ACENAPHTHENE	589	U	589	UJ	29	589	ug/kg	HT
SS	NDA184FD1	SW8270	ACENAPHTHENE	662	U	662	UJ	33	662	ug/kg	HT
SS	NDA201	SW8270	ACENAPHTHENE	491	U	491	UJ	25	491	ug/kg	HT
SS	NDA202	SW8270	ACENAPHTHENE	605	U	605	UJ	30	605	ug/kg	HT
SS	NDA203	SW8270	ACENAPHTHENE	617	U	617	UJ	31	617	ug/kg	HT
SS	NDA204	SW8270	ACENAPHTHENE	753	U	753	UJ	38	753	ug/kg	HT
SS	NDA205FD1	SW8270	ACENAPHTHENE	668	U	668	UJ	33	668	ug/kg	HT
SS	NDA206	SW8270	ACENAPHTHENE	529	U	529	UJ	26	529	ug/kg	HT
SS	NDA207	SW8270	ACENAPHTHENE	669	U	669	UJ	33	669	ug/kg	HT
SS	NDA208	SW8270	ACENAPHTHENE	520	U	520	UJ	26	520	ug/kg	HT
SS	NDA209	SW8270	ACENAPHTHENE	570	U	570	UJ	29	570	ug/kg	HT
SS	NDA210	SW8270	ACENAPHTHENE	545	U	545	UJ	27	545	ug/kg	HT
SS	NDA211	SW8270	ACENAPHTHENE	742	U	742	UJ	37	742	ug/kg	HT
SS	NDA212	SW8270	ACENAPHTHENE	651	U	651	UJ	33	651	ug/kg	HT
SS	NDA185	SW8270	ACENAPHTHENE	445	U	445	UJ	22	445	ug/kg	HT
SS	NDA186	SW8270	ACENAPHTHENE	416	U	416	UJ	21	416	ug/kg	HT
SS	NDA187	SW8270	ACENAPHTHENE	380	U	380	UJ	19	380	ug/kg	HT
SS	NDA188	SW8270	ACENAPHTHENE	810	U	810	UJ	40	810	ug/kg	HT
SS	NDA189	SW8270	ACENAPHTHENE	426	U	426	UJ	21	426	ug/kg	HT
SS	NDA190	SW8270	ACENAPHTHENE	430	U	430	UJ	21	430	ug/kg	HT
SS	NDA191	SW8270	ACENAPHTHENE	338	U	338	UJ	17	338	ug/kg	HT
SS	NDA192FD1	SW8270	ACENAPHTHENE	418	U	418	UJ	21	418	ug/kg	HT
SS	NDA193	SW8270	ACENAPHTHENE	1720	U	1720	UJ	86	1720	ug/kg	HT
SS	NDA194	SW8270	ACENAPHTHENE	480	U	480	UJ	24	480	ug/kg	HT
SS	NDA195	SW8270	ACENAPHTHENE	323	U	323	UJ	16	323	ug/kg	HT
SS	NDA084	SW8270	ACENAPHTHENE	344	U	344	UJ	17	344	ug/kg	HT
SS	NDA091	SW8270	ACENAPHTHENE	367	U	367	UJ	18	367	ug/kg	HT
SS	NDA057	SW8270	ACENAPHTHENE	563	U	563	UJ	28	563	ug/kg	HT
SS	NDA059	SW8270	ACENAPHTHENE	465	U	465	UJ	23	465	ug/kg	HT
SS	NDA061	SW8270	ACENAPHTHENE	469	U	469	UJ	23	469	ug/kg	HT
SS	NDA062FD1	SW8270	ACENAPHTHENE	523	U	523	UJ	26	523	ug/kg	HT
SS	NDA065	SW8270	ACENAPHTHENE	421	U	421	UJ	21	421	ug/kg	HT
SS	NDA067	SW8270	ACENAPHTHENE	378	U	378	UJ	19	378	ug/kg	HT
SS	NDA069	SW8270	ACENAPHTHENE	320	U	320	UJ	16	320	ug/kg	HT
SS	NDA119	SW8270	ACENAPHTHENE	503	U	503	UJ	25	503	ug/kg	HT
SS	NDA120	SW8270	ACENAPHTHENE	541	U	541	UJ	27	541	ug/kg	HT
SS	NDA121	SW8270	ACENAPHTHENE	409	U	409	UJ	20	409	ug/kg	HT
SS	NDA122	SW8270	ACENAPHTHENE	450	U	450	UJ	23	450	ug/kg	HT

Matrix	Sample ID	Analytical Method	Parameter	Lab Result	Lab Qual	Final Result	Final Qual	DL	RL	Units	Comments
SS	NDA123	SW8270	ACENAPHTHENE	450	U	450	UJ	23	450	ug/kg	HT
SS	NDA124	SW8270	ACENAPHTHENE	432	U	432	UJ	22	432	ug/kg	HT
SS	NDA071	SW8270	ACENAPHTHENE	554	U	554	UJ	28	554	ug/kg	HT
SS	NDA072FD1	SW8270	ACENAPHTHENE	413	U	413	UJ	21	413	ug/kg	HT
SS	NDA074	SW8270	ACENAPHTHENE	448	U	448	UJ	22	448	ug/kg	HT
SS	NDA076	SW8270	ACENAPHTHENE	419	U	419	UJ	21	419	ug/kg	HT
SS	NDA078	SW8270	ACENAPHTHENE	440	U	440	UJ	22	440	ug/kg	HT
SS	NDA080RE1	SW8270	ACENAPHTHENE	407	U	407	UJ	20	407	ug/kg	HT
SS	NDA082RE1	SW8270	ACENAPHTHENE	4660	U	4660	UJ	233	4660	ug/kg	HT
SB	NDA213	SW8270	4-NITROPHENOL	1440	U	1440	UJ	24	1440	ug/kg	HT
SB	NDA214FD1	SW8270	4-NITROPHENOL	1450	U	1450	UJ	24	1450	ug/kg	HT
SB	NDA215	SW8270	4-NITROPHENOL	1570	U	1570	UJ	26	1570	ug/kg	HT
SB	NDA216	SW8270	4-NITROPHENOL	1590	U	1590	UJ	27	1590	ug/kg	HT
SB	NDA217	SW8270	4-NITROPHENOL	1600	U	1600	UJ	27	1600	ug/kg	HT
SB	NDA218	SW8270	4-NITROPHENOL	1500	U	1500	UJ	25	1500	ug/kg	HT
SB	NDA219	SW8270	4-NITROPHENOL	1130	U	1130	UJ	19	1130	ug/kg	HT
SB	NDA220	SW8270	4-NITROPHENOL	1610	U	1610	UJ	27	1610	ug/kg	HT
SB	NDA221	SW8270	4-NITROPHENOL	1490	U	1490	UJ	25	1490	ug/kg	HT
SB	NDA222	SW8270	4-NITROPHENOL	1360	U	1360	UJ	23	1360	ug/kg	HT
SB	NDA223	SW8270	4-NITROPHENOL	1570	U	1570	UJ	26	1570	ug/kg	HT
SB	NDA235	SW8270	4-NITROPHENOL	1510	U	1510	UJ	25	1510	ug/kg	HT
SB	NDA236	SW8270	4-NITROPHENOL	1270	U	1270	UJ	21	1270	ug/kg	HT
SB	NDA237FD1	SW8270	4-NITROPHENOL	1180	U	1180	UJ	20	1180	ug/kg	HT
SB	NDA238	SW8270	4-NITROPHENOL	1270	U	1270	UJ	21	1270	ug/kg	HT
SB	NDA239	SW8270	4-NITROPHENOL	1660	U	1660	UJ	28	1660	ug/kg	HT
SB	NDA240	SW8270	4-NITROPHENOL	1190	U	1190	UJ	20	1190	ug/kg	HT
SB	NDA241	SW8270	4-NITROPHENOL	1410	U	1410	UJ	24	1410	ug/kg	HT
SB	NDA242	SW8270	4-NITROPHENOL	1310	U	1310	UJ	22	1310	ug/kg	HT
SB	NDA243	SW8270	4-NITROPHENOL	2680	U	2680	UJ	45	2680	ug/kg	HT
SB	NDA244	SW8270	4-NITROPHENOL	1160	U	1160	UJ	19	1160	ug/kg	HT
SB	NDA245	SW8270	4-NITROPHENOL	1180	U	1180	UJ	20	1180	ug/kg	HT
SB	NDA246	SW8270	4-NITROPHENOL	1530	U	1530	UJ	26	1530	ug/kg	HT
SB	NDA247FD1	SW8270	4-NITROPHENOL	1170	U	1170	UJ	20	1170	ug/kg	HT
SB	NDA248	SW8270	4-NITROPHENOL	1360	U	1360	UJ	23	1360	ug/kg	HT
SB	NDA249	SW8270	4-NITROPHENOL	1120	U	1120	UJ	19	1120	ug/kg	HT
SB	NDA252	SW8270	4-NITROPHENOL	1260	U	1260	UJ	21	1260	ug/kg	HT
SB	NDA253	SW8270	4-NITROPHENOL	1320	U	1320	UJ	22	1320	ug/kg	HT
SB	NDA254	SW8270	4-NITROPHENOL	1170	U	1170	UJ	20	1170	ug/kg	HT
SB	NDA255	SW8270	4-NITROPHENOL	1130	U	1130	UJ	19	1130	ug/kg	HT
SB	NDA085	SW8270	4-NITROPHENOL	1450	U	1450	UJ	24	1450	ug/kg	HT
SB	NDA092	SW8270	4-NITROPHENOL	1200	U	1200	UJ	20	1200	ug/kg	HT
SB	NDA093	SW8270	4-NITROPHENOL	1020	U	1020	UJ	17	1020	ug/kg	HT
SB	NDA094	SW8270	4-NITROPHENOL	1530	U	1530	UJ	26	1530	ug/kg	HT
SB	NDA095FD1	SW8270	4-NITROPHENOL	931	U	931	UJ	16	931	ug/kg	HT
SB	NDA296	SW8270	4-NITROPHENOL	1110	U	1110	UJ	18	1110	ug/kg	HT
SB	NDA297	SW8270	4-NITROPHENOL	1080	U	1080	UJ	18	1080	ug/kg	HT
SB	NDA298	SW8270	4-NITROPHENOL	1020	U	1020	UJ	17	1020	ug/kg	HT
SB	NDA299	SW8270	4-NITROPHENOL	1110	U	1110	UJ	19	1110	ug/kg	HT
SB	NDA058	SW8270	4-NITROPHENOL	1380	U	1380	UJ	23	1380	ug/kg	HT
SB	NDA060	SW8270	4-NITROPHENOL	1430	U	1430	UJ	24	1430	ug/kg	HT
SB	NDA063	SW8270	4-NITROPHENOL	1150	U	1150	UJ	19	1150	ug/kg	HT
SB	NDA064FD1	SW8270	4-NITROPHENOL	1050	U	1050	UJ	18	1050	ug/kg	HT
SB	NDA066	SW8270	4-NITROPHENOL	1030	U	1030	UJ	17	1030	ug/kg	HT
SB	NDA068	SW8270	4-NITROPHENOL	1080	U	1080	UJ	18	1080	ug/kg	HT
SB	NDA070	SW8270	4-NITROPHENOL	1210	U	1210	UJ	20	1210	ug/kg	HT
SB	NDA073	SW8270	4-NITROPHENOL	1150	U	1150	UJ	19	1150	ug/kg	HT
SB	NDA075	SW8270	4-NITROPHENOL	1200	U	1200	UJ	20	1200	ug/kg	HT
SB	NDA077	SW8270	4-NITROPHENOL	1320	U	1320	UJ	22	1320	ug/kg	HT
SB	NDA079	SW8270	4-NITROPHENOL	1400	U	1400	UJ	23	1400	ug/kg	HT
SB	NDA081RE1	SW8270	4-NITROPHENOL	1180	U	1180	UJ	20	1180	ug/kg	HT
SB	NDA083RE1	SW8270	4-NITROPHENOL	12700	U	12700	UJ	212	12700	ug/kg	HT
SD	NDA054	SW8270	4-NITROPHENOL	1430	U	1430	UJ	24	1430	ug/kg	HT
SD	NDA055	SW8270	4-NITROPHENOL	2070	U	2070	UJ	35	2070	ug/kg	HT
SD	NDA042	SW8270	4-NITROPHENOL	2060	U	2060	UJ	34	2060	ug/kg	HT
SD	NDA043	SW8270	4-NITROPHENOL	2200	U	2200	UJ	37	2200	ug/kg	HT
SD	NDA044	SW8270	4-NITROPHENOL	5050	U	5050	UJ	84	5050	ug/kg	HT
SD	NDA045	SW8270	4-NITROPHENOL	4500	U	4500	UJ	75	4500	ug/kg	HT
SD	NDA046	SW8270	4-NITROPHENOL	4560	U	4560	UJ	76	4560	ug/kg	HT
SD	NDA302	SW8270	4-NITROPHENOL	3600	U	3600	UJ	60	3600	ug/kg	HT
SD	NDA303	SW8270	4-NITROPHENOL	6900	U	6900	UJ	115	6900	ug/kg	HT

Matrix	Sample ID	Analytical Method	Parameter	Lab Result	Lab Qual	Final Result	Final Qual	DL	RL	Units	Comments
SD	NDA307FD1	SW8270	4-NITROPHENOL	6380	U	6380	UJ	106	6380	ug/kg	HT
SD	NDA047	SW8270	4-NITROPHENOL	1510	U	1510	UJ	25	1510	ug/kg	HT
SD	NDA048	SW8270	4-NITROPHENOL	1680	U	1680	UJ	28	1680	ug/kg	HT
SD	NDA049	SW8270	4-NITROPHENOL	1390	U	1390	UJ	23	1390	ug/kg	HT
SS	NDA178	SW8270	4-NITROPHENOL	1930	U	1930	UJ	32	1930	ug/kg	HT
SS	NDA179	SW8270	4-NITROPHENOL	1930	U	1930	UJ	32	1930	ug/kg	HT
SS	NDA180	SW8270	4-NITROPHENOL	1650	U	1650	UJ	27	1650	ug/kg	HT
SS	NDA181	SW8270	4-NITROPHENOL	1700	U	1700	UJ	28	1700	ug/kg	HT
SS	NDA182	SW8270	4-NITROPHENOL	2040	U	2040	UJ	34	2040	ug/kg	HT
SS	NDA183	SW8270	4-NITROPHENOL	1770	U	1770	UJ	29	1770	ug/kg	HT
SS	NDA184FD1	SW8270	4-NITROPHENOL	1990	U	1990	UJ	33	1990	ug/kg	HT
SS	NDA201	SW8270	4-NITROPHENOL	1470	U	1470	UJ	25	1470	ug/kg	HT
SS	NDA202	SW8270	4-NITROPHENOL	1820	U	1820	UJ	30	1820	ug/kg	HT
SS	NDA203	SW8270	4-NITROPHENOL	1850	U	1850	UJ	31	1850	ug/kg	HT
SS	NDA204	SW8270	4-NITROPHENOL	2260	U	2260	UJ	38	2260	ug/kg	HT
SS	NDA205FD1	SW8270	4-NITROPHENOL	2000	U	2000	UJ	33	2000	ug/kg	HT
SS	NDA206	SW8270	4-NITROPHENOL	1590	U	1590	UJ	26	1590	ug/kg	HT
SS	NDA207	SW8270	4-NITROPHENOL	2010	U	2010	UJ	33	2010	ug/kg	HT
SS	NDA208	SW8270	4-NITROPHENOL	1560	U	1560	UJ	26	1560	ug/kg	HT
SS	NDA209	SW8270	4-NITROPHENOL	1710	U	1710	UJ	29	1710	ug/kg	HT
SS	NDA210	SW8270	4-NITROPHENOL	1630	U	1630	UJ	27	1630	ug/kg	HT
SS	NDA211	SW8270	4-NITROPHENOL	2230	U	2230	UJ	37	2230	ug/kg	HT
SS	NDA212	SW8270	4-NITROPHENOL	1950	U	1950	UJ	33	1950	ug/kg	HT
SS	NDA185	SW8270	4-NITROPHENOL	1340	U	1340	UJ	22	1340	ug/kg	HT
SS	NDA186	SW8270	4-NITROPHENOL	1250	U	1250	UJ	21	1250	ug/kg	HT
SS	NDA187	SW8270	4-NITROPHENOL	1140	U	1140	UJ	19	1140	ug/kg	HT
SS	NDA188	SW8270	4-NITROPHENOL	2430	U	2430	UJ	40	2430	ug/kg	HT
SS	NDA189	SW8270	4-NITROPHENOL	1280	U	1280	UJ	21	1280	ug/kg	HT
SS	NDA190	SW8270	4-NITROPHENOL	1290	U	1290	UJ	21	1290	ug/kg	HT
SS	NDA191	SW8270	4-NITROPHENOL	1010	U	1010	UJ	17	1010	ug/kg	HT
SS	NDA192FD1	SW8270	4-NITROPHENOL	1250	U	1250	UJ	21	1250	ug/kg	HT
SS	NDA193	SW8270	4-NITROPHENOL	5160	U	5160	UJ	86	5160	ug/kg	HT
SS	NDA194	SW8270	4-NITROPHENOL	1440	U	1440	UJ	24	1440	ug/kg	HT
SS	NDA195	SW8270	4-NITROPHENOL	969	U	969	UJ	16	969	ug/kg	HT
SS	NDA084	SW8270	4-NITROPHENOL	1030	U	1030	UJ	17	1030	ug/kg	HT
SS	NDA091	SW8270	4-NITROPHENOL	1100	U	1100	UJ	18	1100	ug/kg	HT
SS	NDA057	SW8270	4-NITROPHENOL	1690	U	1690	UJ	28	1690	ug/kg	HT
SS	NDA059	SW8270	4-NITROPHENOL	1390	U	1390	UJ	23	1390	ug/kg	HT
SS	NDA061	SW8270	4-NITROPHENOL	1410	U	1410	UJ	23	1410	ug/kg	HT
SS	NDA062FD1	SW8270	4-NITROPHENOL	1570	U	1570	UJ	26	1570	ug/kg	HT
SS	NDA065	SW8270	4-NITROPHENOL	1260	U	1260	UJ	21	1260	ug/kg	HT
SS	NDA067	SW8270	4-NITROPHENOL	1130	U	1130	UJ	19	1130	ug/kg	HT
SS	NDA069	SW8270	4-NITROPHENOL	959	U	959	UJ	16	959	ug/kg	HT
SS	NDA119	SW8270	4-NITROPHENOL	1510	U	1510	UJ	25	1510	ug/kg	HT
SS	NDA120	SW8270	4-NITROPHENOL	1620	U	1620	UJ	27	1620	ug/kg	HT
SS	NDA121	SW8270	4-NITROPHENOL	1230	U	1230	UJ	20	1230	ug/kg	HT
SS	NDA122	SW8270	4-NITROPHENOL	1350	U	1350	UJ	23	1350	ug/kg	HT
SS	NDA123	SW8270	4-NITROPHENOL	1350	U	1350	UJ	23	1350	ug/kg	HT
SS	NDA124	SW8270	4-NITROPHENOL	1290	U	1290	UJ	22	1290	ug/kg	HT
SS	NDA071	SW8270	4-NITROPHENOL	1660	U	1660	UJ	28	1660	ug/kg	HT
SS	NDA072FD1	SW8270	4-NITROPHENOL	1240	U	1240	UJ	21	1240	ug/kg	HT
SS	NDA074	SW8270	4-NITROPHENOL	1340	U	1340	UJ	22	1340	ug/kg	HT
SS	NDA076	SW8270	4-NITROPHENOL	1260	U	1260	UJ	21	1260	ug/kg	HT
SS	NDA078	SW8270	4-NITROPHENOL	1320	U	1320	UJ	22	1320	ug/kg	HT
SS	NDA080RE1	SW8270	4-NITROPHENOL	1220	U	1220	UJ	20	1220	ug/kg	HT
SS	NDA082RE1	SW8270	4-NITROPHENOL	14000	U	14000	UJ	233	14000	ug/kg	HT
SB	NDA213	SW8270	4-NITROANILINE	1440	U	1440	UJ	17	1440	ug/kg	HT
SB	NDA214FD1	SW8270	4-NITROANILINE	1450	U	1450	UJ	18	1450	ug/kg	HT
SB	NDA215	SW8270	4-NITROANILINE	1570	U	1570	UJ	19	1570	ug/kg	HT
SB	NDA216	SW8270	4-NITROANILINE	1590	U	1590	UJ	19	1590	ug/kg	HT
SB	NDA217	SW8270	4-NITROANILINE	1600	U	1600	UJ	19	1600	ug/kg	HT
SB	NDA218	SW8270	4-NITROANILINE	1500	U	1500	UJ	18	1500	ug/kg	HT
SB	NDA219	SW8270	4-NITROANILINE	1130	U	1130	UJ	14	1130	ug/kg	HT
SB	NDA220	SW8270	4-NITROANILINE	1610	U	1610	UJ	20	1610	ug/kg	HT
SB	NDA221	SW8270	4-NITROANILINE	1490	U	1490	UJ	18	1490	ug/kg	HT
SB	NDA222	SW8270	4-NITROANILINE	1360	U	1360	UJ	17	1360	ug/kg	HT
SB	NDA223	SW8270	4-NITROANILINE	1570	U	1570	UJ	19	1570	ug/kg	HT
SB	NDA235	SW8270	4-NITROANILINE	1510	U	1510	UJ	18	1510	ug/kg	HT
SB	NDA236	SW8270	4-NITROANILINE	1270	U	1270	UJ	15	1270	ug/kg	HT
SB	NDA237FD1	SW8270	4-NITROANILINE	1180	U	1180	UJ	14	1180	ug/kg	HT

Matrix	Sample ID	Analytical Method	Parameter	Lab Result	Lab Qual	Final Result	Final Qual	DL	RL	Units	Comments
SB	NDA238	SW8270	4-NITROANILINE	1270	U	1270	UJ	15	1270	ug/kg	HT
SB	NDA239	SW8270	4-NITROANILINE	1660	U	1660	UJ	20	1660	ug/kg	HT
SB	NDA240	SW8270	4-NITROANILINE	1190	U	1190	UJ	14	1190	ug/kg	HT
SB	NDA241	SW8270	4-NITROANILINE	1410	U	1410	UJ	17	1410	ug/kg	HT
SB	NDA242	SW8270	4-NITROANILINE	1310	U	1310	UJ	16	1310	ug/kg	HT
SB	NDA243	SW8270	4-NITROANILINE	2680	U	2680	UJ	32	2680	ug/kg	HT
SB	NDA244	SW8270	4-NITROANILINE	1160	U	1160	UJ	14	1160	ug/kg	HT
SB	NDA245	SW8270	4-NITROANILINE	1180	U	1180	UJ	14	1180	ug/kg	HT
SB	NDA246	SW8270	4-NITROANILINE	1530	U	1530	UJ	18	1530	ug/kg	HT
SB	NDA247FD1	SW8270	4-NITROANILINE	1170	U	1170	UJ	14	1170	ug/kg	HT
SB	NDA248	SW8270	4-NITROANILINE	1360	U	1360	UJ	16	1360	ug/kg	HT
SB	NDA249	SW8270	4-NITROANILINE	1120	U	1120	UJ	13	1120	ug/kg	HT
SB	NDA252	SW8270	4-NITROANILINE	1260	U	1260	UJ	15	1260	ug/kg	HT
SB	NDA253	SW8270	4-NITROANILINE	1320	U	1320	UJ	16	1320	ug/kg	HT
SB	NDA254	SW8270	4-NITROANILINE	1170	U	1170	UJ	14	1170	ug/kg	HT
SB	NDA255	SW8270	4-NITROANILINE	1130	U	1130	UJ	14	1130	ug/kg	HT
SB	NDA085	SW8270	4-NITROANILINE	1450	U	1450	UJ	17	1450	ug/kg	HT
SB	NDA092	SW8270	4-NITROANILINE	1200	U	1200	UJ	14	1200	ug/kg	HT
SB	NDA093	SW8270	4-NITROANILINE	1020	U	1020	UJ	12	1020	ug/kg	HT
SB	NDA094	SW8270	4-NITROANILINE	1530	U	1530	UJ	18	1530	ug/kg	HT
SB	NDA095FD1	SW8270	4-NITROANILINE	931	U	931	UJ	11	931	ug/kg	HT
SB	NDA296	SW8270	4-NITROANILINE	1110	U	1110	UJ	13	1110	ug/kg	HT
SB	NDA297	SW8270	4-NITROANILINE	1080	U	1080	UJ	13	1080	ug/kg	HT
SB	NDA298	SW8270	4-NITROANILINE	1020	U	1020	UJ	12	1020	ug/kg	HT
SB	NDA299	SW8270	4-NITROANILINE	1110	U	1110	UJ	13	1110	ug/kg	HT
SB	NDA058	SW8270	4-NITROANILINE	1380	U	1380	UJ	17	1380	ug/kg	HT
SB	NDA060	SW8270	4-NITROANILINE	1430	U	1430	UJ	17	1430	ug/kg	HT
SB	NDA063	SW8270	4-NITROANILINE	1150	U	1150	UJ	14	1150	ug/kg	HT
SB	NDA064FD1	SW8270	4-NITROANILINE	1050	U	1050	UJ	13	1050	ug/kg	HT
SB	NDA066	SW8270	4-NITROANILINE	1030	U	1030	UJ	12	1030	ug/kg	HT
SB	NDA068	SW8270	4-NITROANILINE	1080	U	1080	UJ	13	1080	ug/kg	HT
SB	NDA070	SW8270	4-NITROANILINE	1210	U	1210	UJ	15	1210	ug/kg	HT
SB	NDA073	SW8270	4-NITROANILINE	1150	U	1150	UJ	14	1150	ug/kg	HT
SB	NDA075	SW8270	4-NITROANILINE	1200	U	1200	UJ	14	1200	ug/kg	HT
SB	NDA077	SW8270	4-NITROANILINE	1320	U	1320	UJ	16	1320	ug/kg	HT
SB	NDA079	SW8270	4-NITROANILINE	1400	U	1400	UJ	17	1400	ug/kg	HT
SB	NDA081RE1	SW8270	4-NITROANILINE	1180	U	1180	UJ	14	1180	ug/kg	HT
SB	NDA083RE1	SW8270	4-NITROANILINE	12700	U	12700	UJ	152	12700	ug/kg	HT
SD	NDA054	SW8270	4-NITROANILINE	1430	U	1430	UJ	17	1430	ug/kg	HT
SD	NDA055	SW8270	4-NITROANILINE	2070	U	2070	UJ	25	2070	ug/kg	HT
SD	NDA042	SW8270	4-NITROANILINE	2060	U	2060	UJ	25	2060	ug/kg	HT
SD	NDA043	SW8270	4-NITROANILINE	2200	U	2200	UJ	26	2200	ug/kg	HT
SD	NDA044	SW8270	4-NITROANILINE	5050	U	5050	UJ	61	5050	ug/kg	HT
SD	NDA045	SW8270	4-NITROANILINE	4500	U	4500	UJ	54	4500	ug/kg	HT
SD	NDA046	SW8270	4-NITROANILINE	4560	U	4560	UJ	55	4560	ug/kg	HT
SD	NDA302	SW8270	4-NITROANILINE	3600	U	3600	UJ	43	3600	ug/kg	HT
SD	NDA303	SW8270	4-NITROANILINE	6900	U	6900	UJ	83	6900	ug/kg	HT
SD	NDA307FD1	SW8270	4-NITROANILINE	6380	U	6380	UJ	77	6380	ug/kg	HT
SD	NDA047	SW8270	4-NITROANILINE	1510	U	1510	UJ	18	1510	ug/kg	HT
SD	NDA048	SW8270	4-NITROANILINE	1680	U	1680	UJ	20	1680	ug/kg	HT
SD	NDA049	SW8270	4-NITROANILINE	1390	U	1390	UJ	17	1390	ug/kg	HT
SS	NDA178	SW8270	4-NITROANILINE	1930	U	1930	UJ	23	1930	ug/kg	HT
SS	NDA179	SW8270	4-NITROANILINE	1930	U	1930	UJ	23	1930	ug/kg	HT
SS	NDA180	SW8270	4-NITROANILINE	1650	U	1650	UJ	20	1650	ug/kg	HT
SS	NDA181	SW8270	4-NITROANILINE	1700	U	1700	UJ	20	1700	ug/kg	HT
SS	NDA182	SW8270	4-NITROANILINE	2040	U	2040	UJ	24	2040	ug/kg	HT
SS	NDA183	SW8270	4-NITROANILINE	1770	U	1770	UJ	21	1770	ug/kg	HT
SS	NDA184FD1	SW8270	4-NITROANILINE	1990	U	1990	UJ	24	1990	ug/kg	HT
SS	NDA201	SW8270	4-NITROANILINE	1470	U	1470	UJ	18	1470	ug/kg	HT
SS	NDA202	SW8270	4-NITROANILINE	1820	U	1820	UJ	22	1820	ug/kg	HT
SS	NDA203	SW8270	4-NITROANILINE	1850	U	1850	UJ	22	1850	ug/kg	HT
SS	NDA204	SW8270	4-NITROANILINE	2260	U	2260	UJ	27	2260	ug/kg	HT
SS	NDA205FD1	SW8270	4-NITROANILINE	2000	U	2000	UJ	24	2000	ug/kg	HT
SS	NDA206	SW8270	4-NITROANILINE	1590	U	1590	UJ	19	1590	ug/kg	HT
SS	NDA207	SW8270	4-NITROANILINE	2010	U	2010	UJ	24	2010	ug/kg	HT
SS	NDA208	SW8270	4-NITROANILINE	1560	U	1560	UJ	19	1560	ug/kg	HT
SS	NDA209	SW8270	4-NITROANILINE	1710	U	1710	UJ	21	1710	ug/kg	HT
SS	NDA210	SW8270	4-NITROANILINE	1630	U	1630	UJ	20	1630	ug/kg	HT
SS	NDA211	SW8270	4-NITROANILINE	2230	U	2230	UJ	27	2230	ug/kg	HT
SS	NDA212	SW8270	4-NITROANILINE	1950	U	1950	UJ	23	1950	ug/kg	HT

Matrix	Sample ID	Analytical Method	Parameter	Lab Result	Lab Qual	Final Result	Final Qual	DL	RL	Units	Comments
SS	NDA185	SW8270	4-NITROANILINE	1340	U	1340	UJ	16	1340	ug/kg	HT
SS	NDA186	SW8270	4-NITROANILINE	1250	U	1250	UJ	15	1250	ug/kg	HT
SS	NDA187	SW8270	4-NITROANILINE	1140	U	1140	UJ	14	1140	ug/kg	HT
SS	NDA188	SW8270	4-NITROANILINE	2430	U	2430	UJ	29	2430	ug/kg	HT
SS	NDA189	SW8270	4-NITROANILINE	1280	U	1280	UJ	15	1280	ug/kg	HT
SS	NDA190	SW8270	4-NITROANILINE	1290	U	1290	UJ	15	1290	ug/kg	HT
SS	NDA191	SW8270	4-NITROANILINE	1010	U	1010	UJ	12	1010	ug/kg	HT
SS	NDA192FD1	SW8270	4-NITROANILINE	1250	U	1250	UJ	15	1250	ug/kg	HT
SS	NDA193	SW8270	4-NITROANILINE	5160	U	5160	UJ	62	5160	ug/kg	HT
SS	NDA194	SW8270	4-NITROANILINE	1440	U	1440	UJ	17	1440	ug/kg	HT
SS	NDA195	SW8270	4-NITROANILINE	969	U	969	UJ	12	969	ug/kg	HT
SS	NDA084	SW8270	4-NITROANILINE	1030	U	1030	UJ	12	1030	ug/kg	HT
SS	NDA091	SW8270	4-NITROANILINE	1100	U	1100	UJ	13	1100	ug/kg	HT
SS	NDA057	SW8270	4-NITROANILINE	1690	U	1690	UJ	20	1690	ug/kg	HT
SS	NDA059	SW8270	4-NITROANILINE	1390	U	1390	UJ	17	1390	ug/kg	HT
SS	NDA061	SW8270	4-NITROANILINE	1410	U	1410	UJ	17	1410	ug/kg	HT
SS	NDA062FD1	SW8270	4-NITROANILINE	1570	U	1570	UJ	19	1570	ug/kg	HT
SS	NDA065	SW8270	4-NITROANILINE	1260	U	1260	UJ	15	1260	ug/kg	HT
SS	NDA067	SW8270	4-NITROANILINE	1130	U	1130	UJ	14	1130	ug/kg	HT
SS	NDA069	SW8270	4-NITROANILINE	959	U	959	UJ	12	959	ug/kg	HT
SS	NDA119	SW8270	4-NITROANILINE	1510	U	1510	UJ	18	1510	ug/kg	HT
SS	NDA120	SW8270	4-NITROANILINE	1620	U	1620	UJ	19	1620	ug/kg	HT
SS	NDA121	SW8270	4-NITROANILINE	1230	U	1230	UJ	15	1230	ug/kg	HT
SS	NDA122	SW8270	4-NITROANILINE	1350	U	1350	UJ	16	1350	ug/kg	HT
SS	NDA123	SW8270	4-NITROANILINE	1350	U	1350	UJ	16	1350	ug/kg	HT
SS	NDA124	SW8270	4-NITROANILINE	1290	U	1290	UJ	16	1290	ug/kg	HT
SS	NDA071	SW8270	4-NITROANILINE	1660	U	1660	UJ	20	1660	ug/kg	HT
SS	NDA072FD1	SW8270	4-NITROANILINE	1240	U	1240	UJ	15	1240	ug/kg	HT
SS	NDA074	SW8270	4-NITROANILINE	1340	U	1340	UJ	16	1340	ug/kg	HT
SS	NDA076	SW8270	4-NITROANILINE	1260	U	1260	UJ	15	1260	ug/kg	HT
SS	NDA078	SW8270	4-NITROANILINE	1320	U	1320	UJ	16	1320	ug/kg	HT
SS	NDA080RE1	SW8270	4-NITROANILINE	1220	U	1220	UJ	15	1220	ug/kg	HT
SS	NDA082RE1	SW8270	4-NITROANILINE	14000	U	14000	UJ	168	14000	ug/kg	HT
SB	NDA213	SW8270	4-CHLOROPHENYL PHENYL ETHER	485	U	485	UJ	29	485	ug/kg	HT
SB	NDA214FD1	SW8270	4-CHLOROPHENYL PHENYL ETHER	487	U	487	UJ	29	487	ug/kg	HT
SB	NDA215	SW8270	4-CHLOROPHENYL PHENYL ETHER	527	U	527	UJ	31	527	ug/kg	HT
SB	NDA216	SW8270	4-CHLOROPHENYL PHENYL ETHER	537	U	537	UJ	32	537	ug/kg	HT
SB	NDA217	SW8270	4-CHLOROPHENYL PHENYL ETHER	540	U	540	UJ	32	540	ug/kg	HT
SB	NDA218	SW8270	4-CHLOROPHENYL PHENYL ETHER	505	U	505	UJ	30	505	ug/kg	HT
SB	NDA219	SW8270	4-CHLOROPHENYL PHENYL ETHER	380	U	380	UJ	22	380	ug/kg	HT
SB	NDA220	SW8270	4-CHLOROPHENYL PHENYL ETHER	542	U	542	UJ	32	542	ug/kg	HT
SB	NDA221	SW8270	4-CHLOROPHENYL PHENYL ETHER	501	U	501	UJ	30	501	ug/kg	HT
SB	NDA222	SW8270	4-CHLOROPHENYL PHENYL ETHER	459	U	459	UJ	27	459	ug/kg	HT
SB	NDA223	SW8270	4-CHLOROPHENYL PHENYL ETHER	527	U	527	UJ	31	527	ug/kg	HT
SB	NDA235	SW8270	4-CHLOROPHENYL PHENYL ETHER	504	U	504	UJ	30	504	ug/kg	HT
SB	NDA236	SW8270	4-CHLOROPHENYL PHENYL ETHER	423	U	423	UJ	25	423	ug/kg	HT
SB	NDA237FD1	SW8270	4-CHLOROPHENYL PHENYL ETHER	395	U	395	UJ	23	395	ug/kg	HT
SB	NDA238	SW8270	4-CHLOROPHENYL PHENYL ETHER	424	U	424	UJ	25	424	ug/kg	HT
SB	NDA239	SW8270	4-CHLOROPHENYL PHENYL ETHER	555	U	555	UJ	33	555	ug/kg	HT
SB	NDA240	SW8270	4-CHLOROPHENYL PHENYL ETHER	397	U	397	UJ	23	397	ug/kg	HT
SB	NDA241	SW8270	4-CHLOROPHENYL PHENYL ETHER	471	U	471	UJ	28	471	ug/kg	HT
SB	NDA242	SW8270	4-CHLOROPHENYL PHENYL ETHER	436	U	436	UJ	26	436	ug/kg	HT
SB	NDA243	SW8270	4-CHLOROPHENYL PHENYL ETHER	893	U	893	UJ	53	893	ug/kg	HT
SB	NDA244	SW8270	4-CHLOROPHENYL PHENYL ETHER	388	U	388	UJ	23	388	ug/kg	HT
SB	NDA245	SW8270	4-CHLOROPHENYL PHENYL ETHER	393	U	393	UJ	23	393	ug/kg	HT
SB	NDA246	SW8270	4-CHLOROPHENYL PHENYL ETHER	511	U	511	UJ	30	511	ug/kg	HT
SB	NDA247FD1	SW8270	4-CHLOROPHENYL PHENYL ETHER	390	U	390	UJ	23	390	ug/kg	HT
SB	NDA248	SW8270	4-CHLOROPHENYL PHENYL ETHER	453	U	453	UJ	27	453	ug/kg	HT
SB	NDA249	SW8270	4-CHLOROPHENYL PHENYL ETHER	374	U	374	UJ	22	374	ug/kg	HT
SB	NDA252	SW8270	4-CHLOROPHENYL PHENYL ETHER	420	U	420	UJ	25	420	ug/kg	HT
SB	NDA253	SW8270	4-CHLOROPHENYL PHENYL ETHER	439	U	439	UJ	26	439	ug/kg	HT
SB	NDA254	SW8270	4-CHLOROPHENYL PHENYL ETHER	391	U	391	UJ	23	391	ug/kg	HT
SB	NDA255	SW8270	4-CHLOROPHENYL PHENYL ETHER	375	U	375	UJ	22	375	ug/kg	HT
SB	NDA085	SW8270	4-CHLOROPHENYL PHENYL ETHER	482	U	482	UJ	28	482	ug/kg	HT
SB	NDA092	SW8270	4-CHLOROPHENYL PHENYL ETHER	400	U	400	UJ	24	400	ug/kg	HT
SB	NDA093	SW8270	4-CHLOROPHENYL PHENYL ETHER	339	U	339	UJ	20	339	ug/kg	HT
SB	NDA094	SW8270	4-CHLOROPHENYL PHENYL ETHER	510	U	510	UJ	30	510	ug/kg	HT
SB	NDA095FD1	SW8270	4-CHLOROPHENYL PHENYL ETHER	310	U	310	UJ	18	310	ug/kg	HT
SB	NDA296	SW8270	4-CHLOROPHENYL PHENYL ETHER	369	U	369	UJ	22	369	ug/kg	HT
SB	NDA297	SW8270	4-CHLOROPHENYL PHENYL ETHER	358	U	358	UJ	21	358	ug/kg	HT

Matrix	Sample ID	Analytical Method	Parameter	Lab Result	Lab Qual	Final Result	Final Qual	DL	RL	Units	Comments
SB	NDA298	SW8270	4-CHLOROPHENYL PHENYL ETHER	341	U	341	UJ	20	341	ug/kg	HT
SB	NDA299	SW8270	4-CHLOROPHENYL PHENYL ETHER	370	U	370	UJ	22	370	ug/kg	HT
SB	NDA058	SW8270	4-CHLOROPHENYL PHENYL ETHER	460	U	460	UJ	27	460	ug/kg	HT
SB	NDA060	SW8270	4-CHLOROPHENYL PHENYL ETHER	478	U	478	UJ	28	478	ug/kg	HT
SB	NDA063	SW8270	4-CHLOROPHENYL PHENYL ETHER	382	U	382	UJ	23	382	ug/kg	HT
SB	NDA064FD1	SW8270	4-CHLOROPHENYL PHENYL ETHER	351	U	351	UJ	21	351	ug/kg	HT
SB	NDA066	SW8270	4-CHLOROPHENYL PHENYL ETHER	344	U	344	UJ	20	344	ug/kg	HT
SB	NDA068	SW8270	4-CHLOROPHENYL PHENYL ETHER	360	U	360	UJ	21	360	ug/kg	HT
SB	NDA070	SW8270	4-CHLOROPHENYL PHENYL ETHER	404	U	404	UJ	24	404	ug/kg	HT
SB	NDA073	SW8270	4-CHLOROPHENYL PHENYL ETHER	383	U	383	UJ	23	383	ug/kg	HT
SB	NDA075	SW8270	4-CHLOROPHENYL PHENYL ETHER	401	U	401	UJ	24	401	ug/kg	HT
SB	NDA077	SW8270	4-CHLOROPHENYL PHENYL ETHER	441	U	441	UJ	26	441	ug/kg	HT
SB	NDA079	SW8270	4-CHLOROPHENYL PHENYL ETHER	466	U	466	UJ	28	466	ug/kg	HT
SB	NDA081RE1	SW8270	4-CHLOROPHENYL PHENYL ETHER	393	U	393	UJ	23	393	ug/kg	HT
SB	NDA083RE1	SW8270	4-CHLOROPHENYL PHENYL ETHER	4240	U	4240	UJ	250	4240	ug/kg	HT
SD	NDA054	SW8270	4-CHLOROPHENYL PHENYL ETHER	480	U	480	UJ	28	480	ug/kg	HT
SD	NDA055	SW8270	4-CHLOROPHENYL PHENYL ETHER	696	U	696	UJ	41	696	ug/kg	HT
SD	NDA042	SW8270	4-CHLOROPHENYL PHENYL ETHER	686	U	686	UJ	40	686	ug/kg	HT
SD	NDA043	SW8270	4-CHLOROPHENYL PHENYL ETHER	735	U	735	UJ	43	735	ug/kg	HT
SD	NDA044	SW8270	4-CHLOROPHENYL PHENYL ETHER	1680	U	1680	UJ	99	1680	ug/kg	HT
SD	NDA045	SW8270	4-CHLOROPHENYL PHENYL ETHER	1500	U	1500	UJ	89	1500	ug/kg	HT
SD	NDA046	SW8270	4-CHLOROPHENYL PHENYL ETHER	1520	U	1520	UJ	90	1520	ug/kg	HT
SD	NDA302	SW8270	4-CHLOROPHENYL PHENYL ETHER	1200	U	1200	UJ	71	1200	ug/kg	HT
SD	NDA303	SW8270	4-CHLOROPHENYL PHENYL ETHER	2300	U	2300	UJ	136	2300	ug/kg	HT
SD	NDA307FD1	SW8270	4-CHLOROPHENYL PHENYL ETHER	2130	U	2130	UJ	125	2130	ug/kg	HT
SD	NDA047	SW8270	4-CHLOROPHENYL PHENYL ETHER	503	U	503	UJ	30	503	ug/kg	HT
SD	NDA048	SW8270	4-CHLOROPHENYL PHENYL ETHER	558	U	558	UJ	33	558	ug/kg	HT
SD	NDA049	SW8270	4-CHLOROPHENYL PHENYL ETHER	463	U	463	UJ	27	463	ug/kg	HT
SS	NDA178	SW8270	4-CHLOROPHENYL PHENYL ETHER	644	U	644	UJ	38	644	ug/kg	HT
SS	NDA179	SW8270	4-CHLOROPHENYL PHENYL ETHER	644	U	644	UJ	38	644	ug/kg	HT
SS	NDA180	SW8270	4-CHLOROPHENYL PHENYL ETHER	550	U	550	UJ	32	550	ug/kg	HT
SS	NDA181	SW8270	4-CHLOROPHENYL PHENYL ETHER	566	U	566	UJ	33	566	ug/kg	HT
SS	NDA182	SW8270	4-CHLOROPHENYL PHENYL ETHER	679	U	679	UJ	40	679	ug/kg	HT
SS	NDA183	SW8270	4-CHLOROPHENYL PHENYL ETHER	589	U	589	UJ	35	589	ug/kg	HT
SS	NDA184FD1	SW8270	4-CHLOROPHENYL PHENYL ETHER	662	U	662	UJ	39	662	ug/kg	HT
SS	NDA201	SW8270	4-CHLOROPHENYL PHENYL ETHER	491	U	491	UJ	29	491	ug/kg	HT
SS	NDA202	SW8270	4-CHLOROPHENYL PHENYL ETHER	605	U	605	UJ	36	605	ug/kg	HT
SS	NDA203	SW8270	4-CHLOROPHENYL PHENYL ETHER	617	U	617	UJ	36	617	ug/kg	HT
SS	NDA204	SW8270	4-CHLOROPHENYL PHENYL ETHER	753	U	753	UJ	44	753	ug/kg	HT
SS	NDA205FD1	SW8270	4-CHLOROPHENYL PHENYL ETHER	668	U	668	UJ	39	668	ug/kg	HT
SS	NDA206	SW8270	4-CHLOROPHENYL PHENYL ETHER	529	U	529	UJ	31	529	ug/kg	HT
SS	NDA207	SW8270	4-CHLOROPHENYL PHENYL ETHER	669	U	669	UJ	39	669	ug/kg	HT
SS	NDA208	SW8270	4-CHLOROPHENYL PHENYL ETHER	520	U	520	UJ	31	520	ug/kg	HT
SS	NDA209	SW8270	4-CHLOROPHENYL PHENYL ETHER	570	U	570	UJ	34	570	ug/kg	HT
SS	NDA210	SW8270	4-CHLOROPHENYL PHENYL ETHER	545	U	545	UJ	32	545	ug/kg	HT
SS	NDA211	SW8270	4-CHLOROPHENYL PHENYL ETHER	742	U	742	UJ	44	742	ug/kg	HT
SS	NDA212	SW8270	4-CHLOROPHENYL PHENYL ETHER	651	U	651	UJ	38	651	ug/kg	HT
SS	NDA185	SW8270	4-CHLOROPHENYL PHENYL ETHER	445	U	445	UJ	26	445	ug/kg	HT
SS	NDA186	SW8270	4-CHLOROPHENYL PHENYL ETHER	416	U	416	UJ	25	416	ug/kg	HT
SS	NDA187	SW8270	4-CHLOROPHENYL PHENYL ETHER	380	U	380	UJ	22	380	ug/kg	HT
SS	NDA188	SW8270	4-CHLOROPHENYL PHENYL ETHER	810	U	810	UJ	48	810	ug/kg	HT
SS	NDA189	SW8270	4-CHLOROPHENYL PHENYL ETHER	426	U	426	UJ	25	426	ug/kg	HT
SS	NDA190	SW8270	4-CHLOROPHENYL PHENYL ETHER	430	U	430	UJ	25	430	ug/kg	HT
SS	NDA191	SW8270	4-CHLOROPHENYL PHENYL ETHER	338	U	338	UJ	20	338	ug/kg	HT
SS	NDA192FD1	SW8270	4-CHLOROPHENYL PHENYL ETHER	418	U	418	UJ	25	418	ug/kg	HT
SS	NDA193	SW8270	4-CHLOROPHENYL PHENYL ETHER	1720	U	1720	UJ	102	1720	ug/kg	HT
SS	NDA194	SW8270	4-CHLOROPHENYL PHENYL ETHER	480	U	480	UJ	28	480	ug/kg	HT
SS	NDA195	SW8270	4-CHLOROPHENYL PHENYL ETHER	323	U	323	UJ	19	323	ug/kg	HT
SS	NDA084	SW8270	4-CHLOROPHENYL PHENYL ETHER	344	U	344	UJ	20	344	ug/kg	HT
SS	NDA091	SW8270	4-CHLOROPHENYL PHENYL ETHER	367	U	367	UJ	22	367	ug/kg	HT
SS	NDA057	SW8270	4-CHLOROPHENYL PHENYL ETHER	563	U	563	UJ	33	563	ug/kg	HT
SS	NDA059	SW8270	4-CHLOROPHENYL PHENYL ETHER	465	U	465	UJ	27	465	ug/kg	HT
SS	NDA061	SW8270	4-CHLOROPHENYL PHENYL ETHER	469	U	469	UJ	28	469	ug/kg	HT
SS	NDA062FD1	SW8270	4-CHLOROPHENYL PHENYL ETHER	523	U	523	UJ	31	523	ug/kg	HT
SS	NDA065	SW8270	4-CHLOROPHENYL PHENYL ETHER	421	U	421	UJ	25	421	ug/kg	HT
SS	NDA067	SW8270	4-CHLOROPHENYL PHENYL ETHER	378	U	378	UJ	22	378	ug/kg	HT
SS	NDA069	SW8270	4-CHLOROPHENYL PHENYL ETHER	320	U	320	UJ	19	320	ug/kg	HT
SS	NDA119	SW8270	4-CHLOROPHENYL PHENYL ETHER	503	U	503	UJ	30	503	ug/kg	HT
SS	NDA120	SW8270	4-CHLOROPHENYL PHENYL ETHER	541	U	541	UJ	32	541	ug/kg	HT
SS	NDA121	SW8270	4-CHLOROPHENYL PHENYL ETHER	409	U	409	UJ	24	409	ug/kg	HT

Matrix	Sample ID	Analytical Method	Parameter	Lab Result	Lab Qual	Final Result	Final Qual	DL	RL	Units	Comments
SS	NDA122	SW8270	4-CHLOROPHENYL PHENYL ETHER	450	U	450	UJ	27	450	ug/kg	HT
SS	NDA123	SW8270	4-CHLOROPHENYL PHENYL ETHER	450	U	450	UJ	27	450	ug/kg	HT
SS	NDA124	SW8270	4-CHLOROPHENYL PHENYL ETHER	432	U	432	UJ	25	432	ug/kg	HT
SS	NDA071	SW8270	4-CHLOROPHENYL PHENYL ETHER	554	U	554	UJ	33	554	ug/kg	HT
SS	NDA072FD1	SW8270	4-CHLOROPHENYL PHENYL ETHER	413	U	413	UJ	24	413	ug/kg	HT
SS	NDA074	SW8270	4-CHLOROPHENYL PHENYL ETHER	448	U	448	UJ	26	448	ug/kg	HT
SS	NDA076	SW8270	4-CHLOROPHENYL PHENYL ETHER	419	U	419	UJ	25	419	ug/kg	HT
SS	NDA078	SW8270	4-CHLOROPHENYL PHENYL ETHER	440	U	440	UJ	26	440	ug/kg	HT
SS	NDA080RE1	SW8270	4-CHLOROPHENYL PHENYL ETHER	407	U	407	UJ	24	407	ug/kg	HT
SS	NDA082RE1	SW8270	4-CHLOROPHENYL PHENYL ETHER	4660	U	4660	UJ	275	4660	ug/kg	HT
SB	NDA213	SW8270	4-CHLOROANILINE	485	U	485	UJ	30	485	ug/kg	HT
SB	NDA214FD1	SW8270	4-CHLOROANILINE	487	U	487	UJ	30	487	ug/kg	HT
SB	NDA215	SW8270	4-CHLOROANILINE	527	U	527	UJ	33	527	ug/kg	HT
SB	NDA216	SW8270	4-CHLOROANILINE	537	U	537	UJ	33	537	ug/kg	HT
SB	NDA217	SW8270	4-CHLOROANILINE	540	U	540	UJ	33	540	ug/kg	HT
SB	NDA218	SW8270	4-CHLOROANILINE	505	U	505	UJ	31	505	ug/kg	HT
SB	NDA219	SW8270	4-CHLOROANILINE	380	U	380	UJ	24	380	ug/kg	HT
SB	NDA220	SW8270	4-CHLOROANILINE	542	U	542	UJ	34	542	ug/kg	HT
SB	NDA221	SW8270	4-CHLOROANILINE	501	U	501	UJ	31	501	ug/kg	HT
SB	NDA222	SW8270	4-CHLOROANILINE	459	U	459	UJ	28	459	ug/kg	HT
SB	NDA223	SW8270	4-CHLOROANILINE	527	U	527	UJ	33	527	ug/kg	HT
SB	NDA235	SW8270	4-CHLOROANILINE	504	U	504	UJ	31	504	ug/kg	HT
SB	NDA236	SW8270	4-CHLOROANILINE	423	U	423	UJ	26	423	ug/kg	HT
SB	NDA237FD1	SW8270	4-CHLOROANILINE	395	U	395	UJ	24	395	ug/kg	HT
SB	NDA238	SW8270	4-CHLOROANILINE	424	U	424	UJ	26	424	ug/kg	HT
SB	NDA239	SW8270	4-CHLOROANILINE	555	U	555	UJ	34	555	ug/kg	HT
SB	NDA240	SW8270	4-CHLOROANILINE	397	U	397	UJ	25	397	ug/kg	HT
SB	NDA241	SW8270	4-CHLOROANILINE	471	U	471	UJ	29	471	ug/kg	HT
SB	NDA242	SW8270	4-CHLOROANILINE	436	U	436	UJ	27	436	ug/kg	HT
SB	NDA243	SW8270	4-CHLOROANILINE	893	U	893	UJ	55	893	ug/kg	HT
SB	NDA244	SW8270	4-CHLOROANILINE	388	U	388	UJ	24	388	ug/kg	HT
SB	NDA245	SW8270	4-CHLOROANILINE	393	U	393	UJ	24	393	ug/kg	HT
SB	NDA246	SW8270	4-CHLOROANILINE	511	U	511	UJ	32	511	ug/kg	HT
SB	NDA247FD1	SW8270	4-CHLOROANILINE	390	U	390	UJ	24	390	ug/kg	HT
SB	NDA248	SW8270	4-CHLOROANILINE	453	U	453	UJ	28	453	ug/kg	HT
SB	NDA249	SW8270	4-CHLOROANILINE	374	U	374	UJ	23	374	ug/kg	HT
SB	NDA252	SW8270	4-CHLOROANILINE	420	U	420	UJ	26	420	ug/kg	HT
SB	NDA253	SW8270	4-CHLOROANILINE	439	U	439	UJ	27	439	ug/kg	HT
SB	NDA254	SW8270	4-CHLOROANILINE	391	U	391	UJ	24	391	ug/kg	HT
SB	NDA255	SW8270	4-CHLOROANILINE	375	U	375	UJ	23	375	ug/kg	HT
SB	NDA085	SW8270	4-CHLOROANILINE	482	U	482	UJ	30	482	ug/kg	HT
SB	NDA092	SW8270	4-CHLOROANILINE	400	U	400	UJ	25	400	ug/kg	HT
SB	NDA093	SW8270	4-CHLOROANILINE	339	U	339	UJ	21	339	ug/kg	HT
SB	NDA094	SW8270	4-CHLOROANILINE	510	U	510	UJ	32	510	ug/kg	HT
SB	NDA095FD1	SW8270	4-CHLOROANILINE	310	U	310	UJ	19	310	ug/kg	HT
SB	NDA296	SW8270	4-CHLOROANILINE	369	U	369	UJ	23	369	ug/kg	HT
SB	NDA297	SW8270	4-CHLOROANILINE	358	U	358	UJ	22	358	ug/kg	HT
SB	NDA298	SW8270	4-CHLOROANILINE	341	U	341	UJ	21	341	ug/kg	HT
SB	NDA299	SW8270	4-CHLOROANILINE	370	U	370	UJ	23	370	ug/kg	HT
SB	NDA058	SW8270	4-CHLOROANILINE	460	U	460	UJ	29	460	ug/kg	HT
SB	NDA060	SW8270	4-CHLOROANILINE	478	U	478	UJ	30	478	ug/kg	HT
SB	NDA063	SW8270	4-CHLOROANILINE	382	U	382	UJ	24	382	ug/kg	HT
SB	NDA064FD1	SW8270	4-CHLOROANILINE	351	U	351	UJ	22	351	ug/kg	HT
SB	NDA066	SW8270	4-CHLOROANILINE	344	U	344	UJ	21	344	ug/kg	HT
SB	NDA068	SW8270	4-CHLOROANILINE	360	U	360	UJ	22	360	ug/kg	HT
SB	NDA070	SW8270	4-CHLOROANILINE	404	U	404	UJ	25	404	ug/kg	HT
SB	NDA073	SW8270	4-CHLOROANILINE	383	U	383	UJ	24	383	ug/kg	HT
SB	NDA075	SW8270	4-CHLOROANILINE	401	U	401	UJ	25	401	ug/kg	HT
SB	NDA077	SW8270	4-CHLOROANILINE	441	U	441	UJ	27	441	ug/kg	HT
SB	NDA079	SW8270	4-CHLOROANILINE	466	U	466	UJ	29	466	ug/kg	HT
SB	NDA081RE1	SW8270	4-CHLOROANILINE	393	U	393	UJ	24	393	ug/kg	HT
SB	NDA083RE1	SW8270	4-CHLOROANILINE	4240	U	4240	UJ	263	4240	ug/kg	HT
SD	NDA054	SW8270	4-CHLOROANILINE	480	U	480	UJ	30	480	ug/kg	HT
SD	NDA055	SW8270	4-CHLOROANILINE	696	U	696	UJ	43	696	ug/kg	HT
SD	NDA042	SW8270	4-CHLOROANILINE	686	U	686	UJ	43	686	ug/kg	HT
SD	NDA043	SW8270	4-CHLOROANILINE	735	U	735	UJ	46	735	ug/kg	HT
SD	NDA044	SW8270	4-CHLOROANILINE	1680	U	1680	UJ	104	1680	ug/kg	HT
SD	NDA045	SW8270	4-CHLOROANILINE	1500	U	1500	UJ	93	1500	ug/kg	HT
SD	NDA046	SW8270	4-CHLOROANILINE	1520	U	1520	UJ	94	1520	ug/kg	HT
SD	NDA302	SW8270	4-CHLOROANILINE	1200	U	1200	UJ	74	1200	ug/kg	HT

Matrix	Sample ID	Analytical Method	Parameter	Lab Result	Lab Qual	Final Result	Final Qual	DL	RL	Units	Comments
SD	NDA303	SW8270	4-CHLOROANILINE	2300	U	2300	UJ	143	2300	ug/kg	HT
SD	NDA307FD1	SW8270	4-CHLOROANILINE	2130	U	2130	UJ	132	2130	ug/kg	HT
SD	NDA047	SW8270	4-CHLOROANILINE	503	U	503	UJ	31	503	ug/kg	HT
SD	NDA048	SW8270	4-CHLOROANILINE	558	U	558	UJ	35	558	ug/kg	HT
SD	NDA049	SW8270	4-CHLOROANILINE	463	U	463	UJ	29	463	ug/kg	HT
SS	NDA178	SW8270	4-CHLOROANILINE	644	U	644	UJ	40	644	ug/kg	HT
SS	NDA179	SW8270	4-CHLOROANILINE	644	U	644	UJ	40	644	ug/kg	HT
SS	NDA180	SW8270	4-CHLOROANILINE	550	U	550	UJ	34	550	ug/kg	HT
SS	NDA181	SW8270	4-CHLOROANILINE	566	U	566	UJ	35	566	ug/kg	HT
SS	NDA182	SW8270	4-CHLOROANILINE	679	U	679	UJ	42	679	ug/kg	HT
SS	NDA183	SW8270	4-CHLOROANILINE	589	U	589	UJ	37	589	ug/kg	HT
SS	NDA184FD1	SW8270	4-CHLOROANILINE	662	U	662	UJ	41	662	ug/kg	HT
SS	NDA201	SW8270	4-CHLOROANILINE	491	U	491	UJ	30	491	ug/kg	HT
SS	NDA202	SW8270	4-CHLOROANILINE	605	U	605	UJ	38	605	ug/kg	HT
SS	NDA203	SW8270	4-CHLOROANILINE	617	U	617	UJ	38	617	ug/kg	HT
SS	NDA204	SW8270	4-CHLOROANILINE	753	U	753	UJ	47	753	ug/kg	HT
SS	NDA205FD1	SW8270	4-CHLOROANILINE	668	U	668	UJ	41	668	ug/kg	HT
SS	NDA206	SW8270	4-CHLOROANILINE	529	U	529	UJ	33	529	ug/kg	HT
SS	NDA207	SW8270	4-CHLOROANILINE	669	U	669	UJ	41	669	ug/kg	HT
SS	NDA208	SW8270	4-CHLOROANILINE	520	U	520	UJ	32	520	ug/kg	HT
SS	NDA209	SW8270	4-CHLOROANILINE	570	U	570	UJ	35	570	ug/kg	HT
SS	NDA210	SW8270	4-CHLOROANILINE	545	U	545	UJ	34	545	ug/kg	HT
SS	NDA211	SW8270	4-CHLOROANILINE	742	U	742	UJ	46	742	ug/kg	HT
SS	NDA212	SW8270	4-CHLOROANILINE	651	U	651	UJ	40	651	ug/kg	HT
SS	NDA185	SW8270	4-CHLOROANILINE	445	U	445	UJ	28	445	ug/kg	HT
SS	NDA186	SW8270	4-CHLOROANILINE	416	U	416	UJ	26	416	ug/kg	HT
SS	NDA187	SW8270	4-CHLOROANILINE	380	U	380	UJ	24	380	ug/kg	HT
SS	NDA188	SW8270	4-CHLOROANILINE	810	U	810	UJ	50	810	ug/kg	HT
SS	NDA189	SW8270	4-CHLOROANILINE	426	U	426	UJ	26	426	ug/kg	HT
SS	NDA190	SW8270	4-CHLOROANILINE	430	U	430	UJ	27	430	ug/kg	HT
SS	NDA191	SW8270	4-CHLOROANILINE	338	U	338	UJ	21	338	ug/kg	HT
SS	NDA192FD1	SW8270	4-CHLOROANILINE	418	U	418	UJ	26	418	ug/kg	HT
SS	NDA193	SW8270	4-CHLOROANILINE	1720	U	1720	UJ	107	1720	ug/kg	HT
SS	NDA194	SW8270	4-CHLOROANILINE	480	U	480	UJ	30	480	ug/kg	HT
SS	NDA195	SW8270	4-CHLOROANILINE	323	U	323	UJ	20	323	ug/kg	HT
SS	NDA084	SW8270	4-CHLOROANILINE	344	U	344	UJ	21	344	ug/kg	HT
SS	NDA091	SW8270	4-CHLOROANILINE	367	U	367	UJ	23	367	ug/kg	HT
SS	NDA057	SW8270	4-CHLOROANILINE	563	U	563	UJ	35	563	ug/kg	HT
SS	NDA059	SW8270	4-CHLOROANILINE	465	U	465	UJ	29	465	ug/kg	HT
SS	NDA061	SW8270	4-CHLOROANILINE	469	U	469	UJ	29	469	ug/kg	HT
SS	NDA062FD1	SW8270	4-CHLOROANILINE	523	U	523	UJ	32	523	ug/kg	HT
SS	NDA065	SW8270	4-CHLOROANILINE	421	U	421	UJ	26	421	ug/kg	HT
SS	NDA067	SW8270	4-CHLOROANILINE	378	U	378	UJ	23	378	ug/kg	HT
SS	NDA069	SW8270	4-CHLOROANILINE	320	U	320	UJ	20	320	ug/kg	HT
SS	NDA119	SW8270	4-CHLOROANILINE	503	U	503	UJ	31	503	ug/kg	HT
SS	NDA120	SW8270	4-CHLOROANILINE	541	U	541	UJ	34	541	ug/kg	HT
SS	NDA121	SW8270	4-CHLOROANILINE	409	U	409	UJ	25	409	ug/kg	HT
SS	NDA122	SW8270	4-CHLOROANILINE	450	U	450	UJ	28	450	ug/kg	HT
SS	NDA123	SW8270	4-CHLOROANILINE	450	U	450	UJ	28	450	ug/kg	HT
SS	NDA124	SW8270	4-CHLOROANILINE	432	U	432	UJ	27	432	ug/kg	HT
SS	NDA071	SW8270	4-CHLOROANILINE	554	U	554	UJ	34	554	ug/kg	HT
SS	NDA072FD1	SW8270	4-CHLOROANILINE	413	U	413	UJ	26	413	ug/kg	HT
SS	NDA074	SW8270	4-CHLOROANILINE	448	U	448	UJ	28	448	ug/kg	HT
SS	NDA076	SW8270	4-CHLOROANILINE	419	U	419	UJ	26	419	ug/kg	HT
SS	NDA078	SW8270	4-CHLOROANILINE	440	U	440	UJ	27	440	ug/kg	HT
SS	NDA080RE1	SW8270	4-CHLOROANILINE	407	U	407	UJ	25	407	ug/kg	HT
SS	NDA082RE1	SW8270	4-CHLOROANILINE	4660	U	4660	UJ	289	4660	ug/kg	HT
SB	NDA213	SW8270	4-CHLORO-3-METHYLPHENOL	485	U	485	UJ	29	485	ug/kg	HT
SB	NDA214FD1	SW8270	4-CHLORO-3-METHYLPHENOL	487	U	487	UJ	29	487	ug/kg	HT
SB	NDA215	SW8270	4-CHLORO-3-METHYLPHENOL	527	U	527	UJ	31	527	ug/kg	HT
SB	NDA216	SW8270	4-CHLORO-3-METHYLPHENOL	537	U	537	UJ	32	537	ug/kg	HT
SB	NDA217	SW8270	4-CHLORO-3-METHYLPHENOL	540	U	540	UJ	32	540	ug/kg	HT
SB	NDA218	SW8270	4-CHLORO-3-METHYLPHENOL	505	U	505	UJ	30	505	ug/kg	HT
SB	NDA219	SW8270	4-CHLORO-3-METHYLPHENOL	380	U	380	UJ	22	380	ug/kg	HT
SB	NDA220	SW8270	4-CHLORO-3-METHYLPHENOL	542	U	542	UJ	32	542	ug/kg	HT
SB	NDA221	SW8270	4-CHLORO-3-METHYLPHENOL	501	U	501	UJ	30	501	ug/kg	HT
SB	NDA222	SW8270	4-CHLORO-3-METHYLPHENOL	459	U	459	UJ	27	459	ug/kg	HT
SB	NDA223	SW8270	4-CHLORO-3-METHYLPHENOL	527	U	527	UJ	31	527	ug/kg	HT
SB	NDA235	SW8270	4-CHLORO-3-METHYLPHENOL	504	U	504	UJ	30	504	ug/kg	HT
SB	NDA236	SW8270	4-CHLORO-3-METHYLPHENOL	423	U	423	UJ	25	423	ug/kg	HT

Matrix	Sample ID	Analytical Method	Parameter	Lab Result	Lab Qual	Final Result	Final Qual	DL	RL	Units	Comments
SB	NDA237FD1	SW8270	4-CHLORO-3-METHYLPHENOL	395	U	395	UJ	23	395	ug/kg	HT
SB	NDA238	SW8270	4-CHLORO-3-METHYLPHENOL	424	U	424	UJ	25	424	ug/kg	HT
SB	NDA239	SW8270	4-CHLORO-3-METHYLPHENOL	555	U	555	UJ	33	555	ug/kg	HT
SB	NDA240	SW8270	4-CHLORO-3-METHYLPHENOL	397	U	397	UJ	23	397	ug/kg	HT
SB	NDA241	SW8270	4-CHLORO-3-METHYLPHENOL	471	U	471	UJ	28	471	ug/kg	HT
SB	NDA242	SW8270	4-CHLORO-3-METHYLPHENOL	436	U	436	UJ	26	436	ug/kg	HT
SB	NDA243	SW8270	4-CHLORO-3-METHYLPHENOL	893	U	893	UJ	53	893	ug/kg	HT
SB	NDA244	SW8270	4-CHLORO-3-METHYLPHENOL	388	U	388	UJ	23	388	ug/kg	HT
SB	NDA245	SW8270	4-CHLORO-3-METHYLPHENOL	393	U	393	UJ	23	393	ug/kg	HT
SB	NDA246	SW8270	4-CHLORO-3-METHYLPHENOL	511	U	511	UJ	30	511	ug/kg	HT
SB	NDA247FD1	SW8270	4-CHLORO-3-METHYLPHENOL	390	U	390	UJ	23	390	ug/kg	HT
SB	NDA248	SW8270	4-CHLORO-3-METHYLPHENOL	453	U	453	UJ	27	453	ug/kg	HT
SB	NDA249	SW8270	4-CHLORO-3-METHYLPHENOL	374	U	374	UJ	22	374	ug/kg	HT
SB	NDA252	SW8270	4-CHLORO-3-METHYLPHENOL	420	U	420	UJ	25	420	ug/kg	HT
SB	NDA253	SW8270	4-CHLORO-3-METHYLPHENOL	439	U	439	UJ	26	439	ug/kg	HT
SB	NDA254	SW8270	4-CHLORO-3-METHYLPHENOL	391	U	391	UJ	23	391	ug/kg	HT
SB	NDA255	SW8270	4-CHLORO-3-METHYLPHENOL	375	U	375	UJ	22	375	ug/kg	HT
SB	NDA085	SW8270	4-CHLORO-3-METHYLPHENOL	482	U	482	UJ	28	482	ug/kg	HT
SB	NDA092	SW8270	4-CHLORO-3-METHYLPHENOL	400	U	400	UJ	24	400	ug/kg	HT
SB	NDA093	SW8270	4-CHLORO-3-METHYLPHENOL	339	U	339	UJ	20	339	ug/kg	HT
SB	NDA094	SW8270	4-CHLORO-3-METHYLPHENOL	510	U	510	UJ	30	510	ug/kg	HT
SB	NDA095FD1	SW8270	4-CHLORO-3-METHYLPHENOL	310	U	310	UJ	18	310	ug/kg	HT
SB	NDA296	SW8270	4-CHLORO-3-METHYLPHENOL	369	U	369	UJ	22	369	ug/kg	HT
SB	NDA297	SW8270	4-CHLORO-3-METHYLPHENOL	358	U	358	UJ	21	358	ug/kg	HT
SB	NDA298	SW8270	4-CHLORO-3-METHYLPHENOL	341	U	341	UJ	20	341	ug/kg	HT
SB	NDA299	SW8270	4-CHLORO-3-METHYLPHENOL	370	U	370	UJ	22	370	ug/kg	HT
SB	NDA058	SW8270	4-CHLORO-3-METHYLPHENOL	460	U	460	UJ	27	460	ug/kg	HT
SB	NDA060	SW8270	4-CHLORO-3-METHYLPHENOL	478	U	478	UJ	28	478	ug/kg	HT
SB	NDA063	SW8270	4-CHLORO-3-METHYLPHENOL	382	U	382	UJ	23	382	ug/kg	HT
SB	NDA064FD1	SW8270	4-CHLORO-3-METHYLPHENOL	351	U	351	UJ	21	351	ug/kg	HT
SB	NDA066	SW8270	4-CHLORO-3-METHYLPHENOL	344	U	344	UJ	20	344	ug/kg	HT
SB	NDA068	SW8270	4-CHLORO-3-METHYLPHENOL	360	U	360	UJ	21	360	ug/kg	HT
SB	NDA070	SW8270	4-CHLORO-3-METHYLPHENOL	404	U	404	UJ	24	404	ug/kg	HT
SB	NDA073	SW8270	4-CHLORO-3-METHYLPHENOL	383	U	383	UJ	23	383	ug/kg	HT
SB	NDA075	SW8270	4-CHLORO-3-METHYLPHENOL	401	U	401	UJ	24	401	ug/kg	HT
SB	NDA077	SW8270	4-CHLORO-3-METHYLPHENOL	441	U	441	UJ	26	441	ug/kg	HT
SB	NDA079	SW8270	4-CHLORO-3-METHYLPHENOL	466	U	466	UJ	28	466	ug/kg	HT
SB	NDA081RE1	SW8270	4-CHLORO-3-METHYLPHENOL	393	U	393	UJ	23	393	ug/kg	HT
SB	NDA083RE1	SW8270	4-CHLORO-3-METHYLPHENOL	4240	U	4240	UJ	250	4240	ug/kg	HT
SD	NDA054	SW8270	4-CHLORO-3-METHYLPHENOL	480	U	480	UJ	28	480	ug/kg	HT
SD	NDA055	SW8270	4-CHLORO-3-METHYLPHENOL	696	U	696	UJ	41	696	ug/kg	HT
SD	NDA042	SW8270	4-CHLORO-3-METHYLPHENOL	686	U	686	UJ	40	686	ug/kg	HT
SD	NDA043	SW8270	4-CHLORO-3-METHYLPHENOL	735	U	735	UJ	43	735	ug/kg	HT
SD	NDA044	SW8270	4-CHLORO-3-METHYLPHENOL	1680	U	1680	UJ	99	1680	ug/kg	HT
SD	NDA045	SW8270	4-CHLORO-3-METHYLPHENOL	1500	U	1500	UJ	89	1500	ug/kg	HT
SD	NDA046	SW8270	4-CHLORO-3-METHYLPHENOL	1520	U	1520	UJ	90	1520	ug/kg	HT
SD	NDA302	SW8270	4-CHLORO-3-METHYLPHENOL	1200	U	1200	UJ	71	1200	ug/kg	HT
SD	NDA303	SW8270	4-CHLORO-3-METHYLPHENOL	2300	U	2300	UJ	136	2300	ug/kg	HT
SD	NDA307FD1	SW8270	4-CHLORO-3-METHYLPHENOL	2130	U	2130	UJ	125	2130	ug/kg	HT
SD	NDA047	SW8270	4-CHLORO-3-METHYLPHENOL	503	U	503	UJ	30	503	ug/kg	HT
SD	NDA048	SW8270	4-CHLORO-3-METHYLPHENOL	558	U	558	UJ	33	558	ug/kg	HT
SD	NDA049	SW8270	4-CHLORO-3-METHYLPHENOL	463	U	463	UJ	27	463	ug/kg	HT
SS	NDA178	SW8270	4-CHLORO-3-METHYLPHENOL	644	U	644	UJ	38	644	ug/kg	HT
SS	NDA179	SW8270	4-CHLORO-3-METHYLPHENOL	644	U	644	UJ	38	644	ug/kg	HT
SS	NDA180	SW8270	4-CHLORO-3-METHYLPHENOL	550	U	550	UJ	32	550	ug/kg	HT
SS	NDA181	SW8270	4-CHLORO-3-METHYLPHENOL	566	U	566	UJ	33	566	ug/kg	HT
SS	NDA182	SW8270	4-CHLORO-3-METHYLPHENOL	679	U	679	UJ	40	679	ug/kg	HT
SS	NDA183	SW8270	4-CHLORO-3-METHYLPHENOL	589	U	589	UJ	35	589	ug/kg	HT
SS	NDA184FD1	SW8270	4-CHLORO-3-METHYLPHENOL	662	U	662	UJ	39	662	ug/kg	HT
SS	NDA201	SW8270	4-CHLORO-3-METHYLPHENOL	491	U	491	UJ	29	491	ug/kg	HT
SS	NDA202	SW8270	4-CHLORO-3-METHYLPHENOL	605	U	605	UJ	36	605	ug/kg	HT
SS	NDA203	SW8270	4-CHLORO-3-METHYLPHENOL	617	U	617	UJ	36	617	ug/kg	HT
SS	NDA204	SW8270	4-CHLORO-3-METHYLPHENOL	753	U	753	UJ	44	753	ug/kg	HT
SS	NDA205FD1	SW8270	4-CHLORO-3-METHYLPHENOL	668	U	668	UJ	39	668	ug/kg	HT
SS	NDA206	SW8270	4-CHLORO-3-METHYLPHENOL	529	U	529	UJ	31	529	ug/kg	HT
SS	NDA207	SW8270	4-CHLORO-3-METHYLPHENOL	669	U	669	UJ	39	669	ug/kg	HT
SS	NDA208	SW8270	4-CHLORO-3-METHYLPHENOL	520	U	520	UJ	31	520	ug/kg	HT
SS	NDA209	SW8270	4-CHLORO-3-METHYLPHENOL	570	U	570	UJ	34	570	ug/kg	HT
SS	NDA210	SW8270	4-CHLORO-3-METHYLPHENOL	545	U	545	UJ	32	545	ug/kg	HT
SS	NDA211	SW8270	4-CHLORO-3-METHYLPHENOL	742	U	742	UJ	44	742	ug/kg	HT

Matrix	Sample ID	Analytical Method	Parameter	Lab Result	Lab Qual	Final Result	Final Qual	DL	RL	Units	Comments
SS	NDA212	SW8270	4-CHLORO-3-METHYLPHENOL	651	U	651	UJ	38	651	ug/kg	HT
SS	NDA185	SW8270	4-CHLORO-3-METHYLPHENOL	445	U	445	UJ	26	445	ug/kg	HT
SS	NDA186	SW8270	4-CHLORO-3-METHYLPHENOL	416	U	416	UJ	25	416	ug/kg	HT
SS	NDA187	SW8270	4-CHLORO-3-METHYLPHENOL	380	U	380	UJ	22	380	ug/kg	HT
SS	NDA188	SW8270	4-CHLORO-3-METHYLPHENOL	810	U	810	UJ	48	810	ug/kg	HT
SS	NDA189	SW8270	4-CHLORO-3-METHYLPHENOL	426	U	426	UJ	25	426	ug/kg	HT
SS	NDA190	SW8270	4-CHLORO-3-METHYLPHENOL	430	U	430	UJ	25	430	ug/kg	HT
SS	NDA191	SW8270	4-CHLORO-3-METHYLPHENOL	338	U	338	UJ	20	338	ug/kg	HT
SS	NDA192FD1	SW8270	4-CHLORO-3-METHYLPHENOL	418	U	418	UJ	25	418	ug/kg	HT
SS	NDA193	SW8270	4-CHLORO-3-METHYLPHENOL	1720	U	1720	UJ	102	1720	ug/kg	HT
SS	NDA194	SW8270	4-CHLORO-3-METHYLPHENOL	480	U	480	UJ	28	480	ug/kg	HT
SS	NDA195	SW8270	4-CHLORO-3-METHYLPHENOL	323	U	323	UJ	19	323	ug/kg	HT
SS	NDA084	SW8270	4-CHLORO-3-METHYLPHENOL	344	U	344	UJ	20	344	ug/kg	HT
SS	NDA091	SW8270	4-CHLORO-3-METHYLPHENOL	367	U	367	UJ	22	367	ug/kg	HT
SS	NDA057	SW8270	4-CHLORO-3-METHYLPHENOL	563	U	563	UJ	33	563	ug/kg	HT
SS	NDA059	SW8270	4-CHLORO-3-METHYLPHENOL	465	U	465	UJ	27	465	ug/kg	HT
SS	NDA061	SW8270	4-CHLORO-3-METHYLPHENOL	469	U	469	UJ	28	469	ug/kg	HT
SS	NDA062FD1	SW8270	4-CHLORO-3-METHYLPHENOL	523	U	523	UJ	31	523	ug/kg	HT
SS	NDA065	SW8270	4-CHLORO-3-METHYLPHENOL	421	U	421	UJ	25	421	ug/kg	HT
SS	NDA067	SW8270	4-CHLORO-3-METHYLPHENOL	378	U	378	UJ	22	378	ug/kg	HT
SS	NDA069	SW8270	4-CHLORO-3-METHYLPHENOL	320	U	320	UJ	19	320	ug/kg	HT
SS	NDA119	SW8270	4-CHLORO-3-METHYLPHENOL	503	U	503	UJ	30	503	ug/kg	HT
SS	NDA120	SW8270	4-CHLORO-3-METHYLPHENOL	541	U	541	UJ	32	541	ug/kg	HT
SS	NDA121	SW8270	4-CHLORO-3-METHYLPHENOL	409	U	409	UJ	24	409	ug/kg	HT
SS	NDA122	SW8270	4-CHLORO-3-METHYLPHENOL	450	U	450	UJ	27	450	ug/kg	HT
SS	NDA123	SW8270	4-CHLORO-3-METHYLPHENOL	450	U	450	UJ	27	450	ug/kg	HT
SS	NDA124	SW8270	4-CHLORO-3-METHYLPHENOL	432	U	432	UJ	25	432	ug/kg	HT
SS	NDA071	SW8270	4-CHLORO-3-METHYLPHENOL	554	U	554	UJ	33	554	ug/kg	HT
SS	NDA072FD1	SW8270	4-CHLORO-3-METHYLPHENOL	413	U	413	UJ	24	413	ug/kg	HT
SS	NDA074	SW8270	4-CHLORO-3-METHYLPHENOL	448	U	448	UJ	26	448	ug/kg	HT
SS	NDA076	SW8270	4-CHLORO-3-METHYLPHENOL	419	U	419	UJ	25	419	ug/kg	HT
SS	NDA078	SW8270	4-CHLORO-3-METHYLPHENOL	440	U	440	UJ	26	440	ug/kg	HT
SS	NDA080RE1	SW8270	4-CHLORO-3-METHYLPHENOL	407	U	407	UJ	24	407	ug/kg	HT
SS	NDA082RE1	SW8270	4-CHLORO-3-METHYLPHENOL	4660	U	4660	UJ	275	4660	ug/kg	HT
SB	NDA213	SW8270	4-BROMOPHENYL PHENYL ETHER	485	U	485	UJ	29	485	ug/kg	HT
SB	NDA214FD1	SW8270	4-BROMOPHENYL PHENYL ETHER	487	U	487	UJ	29	487	ug/kg	HT
SB	NDA215	SW8270	4-BROMOPHENYL PHENYL ETHER	527	U	527	UJ	32	527	ug/kg	HT
SB	NDA216	SW8270	4-BROMOPHENYL PHENYL ETHER	537	U	537	UJ	32	537	ug/kg	HT
SB	NDA217	SW8270	4-BROMOPHENYL PHENYL ETHER	540	U	540	UJ	32	540	ug/kg	HT
SB	NDA218	SW8270	4-BROMOPHENYL PHENYL ETHER	505	U	505	UJ	30	505	ug/kg	HT
SB	NDA219	SW8270	4-BROMOPHENYL PHENYL ETHER	380	U	380	UJ	23	380	ug/kg	HT
SB	NDA220	SW8270	4-BROMOPHENYL PHENYL ETHER	542	U	542	UJ	33	542	ug/kg	HT
SB	NDA221	SW8270	4-BROMOPHENYL PHENYL ETHER	501	U	501	UJ	30	501	ug/kg	HT
SB	NDA222	SW8270	4-BROMOPHENYL PHENYL ETHER	459	U	459	UJ	28	459	ug/kg	HT
SB	NDA223	SW8270	4-BROMOPHENYL PHENYL ETHER	527	U	527	UJ	32	527	ug/kg	HT
SB	NDA235	SW8270	4-BROMOPHENYL PHENYL ETHER	504	U	504	UJ	30	504	ug/kg	HT
SB	NDA236	SW8270	4-BROMOPHENYL PHENYL ETHER	423	U	423	UJ	25	423	ug/kg	HT
SB	NDA237FD1	SW8270	4-BROMOPHENYL PHENYL ETHER	395	U	395	UJ	24	395	ug/kg	HT
SB	NDA238	SW8270	4-BROMOPHENYL PHENYL ETHER	424	U	424	UJ	25	424	ug/kg	HT
SB	NDA239	SW8270	4-BROMOPHENYL PHENYL ETHER	555	U	555	UJ	33	555	ug/kg	HT
SB	NDA240	SW8270	4-BROMOPHENYL PHENYL ETHER	397	U	397	UJ	24	397	ug/kg	HT
SB	NDA241	SW8270	4-BROMOPHENYL PHENYL ETHER	471	U	471	UJ	28	471	ug/kg	HT
SB	NDA242	SW8270	4-BROMOPHENYL PHENYL ETHER	436	U	436	UJ	26	436	ug/kg	HT
SB	NDA243	SW8270	4-BROMOPHENYL PHENYL ETHER	893	U	893	UJ	54	893	ug/kg	HT
SB	NDA244	SW8270	4-BROMOPHENYL PHENYL ETHER	388	U	388	UJ	23	388	ug/kg	HT
SB	NDA245	SW8270	4-BROMOPHENYL PHENYL ETHER	393	U	393	UJ	24	393	ug/kg	HT
SB	NDA246	SW8270	4-BROMOPHENYL PHENYL ETHER	511	U	511	UJ	31	511	ug/kg	HT
SB	NDA247FD1	SW8270	4-BROMOPHENYL PHENYL ETHER	390	U	390	UJ	23	390	ug/kg	HT
SB	NDA248	SW8270	4-BROMOPHENYL PHENYL ETHER	453	U	453	UJ	27	453	ug/kg	HT
SB	NDA249	SW8270	4-BROMOPHENYL PHENYL ETHER	374	U	374	UJ	22	374	ug/kg	HT
SB	NDA252	SW8270	4-BROMOPHENYL PHENYL ETHER	420	U	420	UJ	25	420	ug/kg	HT
SB	NDA253	SW8270	4-BROMOPHENYL PHENYL ETHER	439	U	439	UJ	26	439	ug/kg	HT
SB	NDA254	SW8270	4-BROMOPHENYL PHENYL ETHER	391	U	391	UJ	23	391	ug/kg	HT
SB	NDA255	SW8270	4-BROMOPHENYL PHENYL ETHER	375	U	375	UJ	23	375	ug/kg	HT
SB	NDA085	SW8270	4-BROMOPHENYL PHENYL ETHER	482	U	482	UJ	29	482	ug/kg	HT
SB	NDA092	SW8270	4-BROMOPHENYL PHENYL ETHER	400	U	400	UJ	24	400	ug/kg	HT
SB	NDA093	SW8270	4-BROMOPHENYL PHENYL ETHER	339	U	339	UJ	20	339	ug/kg	HT
SB	NDA094	SW8270	4-BROMOPHENYL PHENYL ETHER	510	U	510	UJ	31	510	ug/kg	HT
SB	NDA095FD1	SW8270	4-BROMOPHENYL PHENYL ETHER	310	U	310	UJ	19	310	ug/kg	HT
SB	NDA296	SW8270	4-BROMOPHENYL PHENYL ETHER	369	U	369	UJ	22	369	ug/kg	HT

Matrix	Sample ID	Analytical Method	Parameter	Lab Result	Lab Qual	Final Result	Final Qual	DL	RL	Units	Comments
SB	NDA297	SW8270	4-BROMOPHENYL PHENYL ETHER	358	U	358	UJ	22	358	ug/kg	HT
SB	NDA298	SW8270	4-BROMOPHENYL PHENYL ETHER	341	U	341	UJ	20	341	ug/kg	HT
SB	NDA299	SW8270	4-BROMOPHENYL PHENYL ETHER	370	U	370	UJ	22	370	ug/kg	HT
SB	NDA058	SW8270	4-BROMOPHENYL PHENYL ETHER	460	U	460	UJ	28	460	ug/kg	HT
SB	NDA060	SW8270	4-BROMOPHENYL PHENYL ETHER	478	U	478	UJ	29	478	ug/kg	HT
SB	NDA063	SW8270	4-BROMOPHENYL PHENYL ETHER	382	U	382	UJ	23	382	ug/kg	HT
SB	NDA064FD1	SW8270	4-BROMOPHENYL PHENYL ETHER	351	U	351	UJ	21	351	ug/kg	HT
SB	NDA066	SW8270	4-BROMOPHENYL PHENYL ETHER	344	U	344	UJ	21	344	ug/kg	HT
SB	NDA068	SW8270	4-BROMOPHENYL PHENYL ETHER	360	U	360	UJ	22	360	ug/kg	HT
SB	NDA070	SW8270	4-BROMOPHENYL PHENYL ETHER	404	U	404	UJ	24	404	ug/kg	HT
SB	NDA073	SW8270	4-BROMOPHENYL PHENYL ETHER	383	U	383	UJ	23	383	ug/kg	HT
SB	NDA075	SW8270	4-BROMOPHENYL PHENYL ETHER	401	U	401	UJ	24	401	ug/kg	HT
SB	NDA077	SW8270	4-BROMOPHENYL PHENYL ETHER	441	U	441	UJ	26	441	ug/kg	HT
SB	NDA079	SW8270	4-BROMOPHENYL PHENYL ETHER	466	U	466	UJ	28	466	ug/kg	HT
SB	NDA081RE1	SW8270	4-BROMOPHENYL PHENYL ETHER	393	U	393	UJ	24	393	ug/kg	HT
SB	NDA083RE1	SW8270	4-BROMOPHENYL PHENYL ETHER	4240	U	4240	UJ	254	4240	ug/kg	HT
SD	NDA054	SW8270	4-BROMOPHENYL PHENYL ETHER	480	U	480	UJ	29	480	ug/kg	HT
SD	NDA055	SW8270	4-BROMOPHENYL PHENYL ETHER	696	U	696	UJ	42	696	ug/kg	HT
SD	NDA042	SW8270	4-BROMOPHENYL PHENYL ETHER	686	U	686	UJ	41	686	ug/kg	HT
SD	NDA043	SW8270	4-BROMOPHENYL PHENYL ETHER	735	U	735	UJ	44	735	ug/kg	HT
SD	NDA044	SW8270	4-BROMOPHENYL PHENYL ETHER	1680	U	1680	UJ	101	1680	ug/kg	HT
SD	NDA045	SW8270	4-BROMOPHENYL PHENYL ETHER	1500	U	1500	UJ	90	1500	ug/kg	HT
SD	NDA046	SW8270	4-BROMOPHENYL PHENYL ETHER	1520	U	1520	UJ	91	1520	ug/kg	HT
SD	NDA302	SW8270	4-BROMOPHENYL PHENYL ETHER	1200	U	1200	UJ	72	1200	ug/kg	HT
SD	NDA303	SW8270	4-BROMOPHENYL PHENYL ETHER	2300	U	2300	UJ	138	2300	ug/kg	HT
SD	NDA307FD1	SW8270	4-BROMOPHENYL PHENYL ETHER	2130	U	2130	UJ	128	2130	ug/kg	HT
SD	NDA047	SW8270	4-BROMOPHENYL PHENYL ETHER	503	U	503	UJ	30	503	ug/kg	HT
SD	NDA048	SW8270	4-BROMOPHENYL PHENYL ETHER	558	U	558	UJ	34	558	ug/kg	HT
SD	NDA049	SW8270	4-BROMOPHENYL PHENYL ETHER	463	U	463	UJ	28	463	ug/kg	HT
SS	NDA178	SW8270	4-BROMOPHENYL PHENYL ETHER	644	U	644	UJ	39	644	ug/kg	HT
SS	NDA179	SW8270	4-BROMOPHENYL PHENYL ETHER	644	U	644	UJ	39	644	ug/kg	HT
SS	NDA180	SW8270	4-BROMOPHENYL PHENYL ETHER	550	U	550	UJ	33	550	ug/kg	HT
SS	NDA181	SW8270	4-BROMOPHENYL PHENYL ETHER	566	U	566	UJ	34	566	ug/kg	HT
SS	NDA182	SW8270	4-BROMOPHENYL PHENYL ETHER	679	U	679	UJ	41	679	ug/kg	HT
SS	NDA183	SW8270	4-BROMOPHENYL PHENYL ETHER	589	U	589	UJ	35	589	ug/kg	HT
SS	NDA184FD1	SW8270	4-BROMOPHENYL PHENYL ETHER	662	U	662	UJ	40	662	ug/kg	HT
SS	NDA201	SW8270	4-BROMOPHENYL PHENYL ETHER	491	U	491	UJ	29	491	ug/kg	HT
SS	NDA202	SW8270	4-BROMOPHENYL PHENYL ETHER	605	U	605	UJ	36	605	ug/kg	HT
SS	NDA203	SW8270	4-BROMOPHENYL PHENYL ETHER	617	U	617	UJ	37	617	ug/kg	HT
SS	NDA204	SW8270	4-BROMOPHENYL PHENYL ETHER	753	U	753	UJ	45	753	ug/kg	HT
SS	NDA205FD1	SW8270	4-BROMOPHENYL PHENYL ETHER	668	U	668	UJ	40	668	ug/kg	HT
SS	NDA206	SW8270	4-BROMOPHENYL PHENYL ETHER	529	U	529	UJ	32	529	ug/kg	HT
SS	NDA207	SW8270	4-BROMOPHENYL PHENYL ETHER	669	U	669	UJ	40	669	ug/kg	HT
SS	NDA208	SW8270	4-BROMOPHENYL PHENYL ETHER	520	U	520	UJ	31	520	ug/kg	HT
SS	NDA209	SW8270	4-BROMOPHENYL PHENYL ETHER	570	U	570	UJ	34	570	ug/kg	HT
SS	NDA210	SW8270	4-BROMOPHENYL PHENYL ETHER	545	U	545	UJ	33	545	ug/kg	HT
SS	NDA211	SW8270	4-BROMOPHENYL PHENYL ETHER	742	U	742	UJ	45	742	ug/kg	HT
SS	NDA212	SW8270	4-BROMOPHENYL PHENYL ETHER	651	U	651	UJ	39	651	ug/kg	HT
SS	NDA185	SW8270	4-BROMOPHENYL PHENYL ETHER	445	U	445	UJ	27	445	ug/kg	HT
SS	NDA186	SW8270	4-BROMOPHENYL PHENYL ETHER	416	U	416	UJ	25	416	ug/kg	HT
SS	NDA187	SW8270	4-BROMOPHENYL PHENYL ETHER	380	U	380	UJ	23	380	ug/kg	HT
SS	NDA188	SW8270	4-BROMOPHENYL PHENYL ETHER	810	U	810	UJ	49	810	ug/kg	HT
SS	NDA189	SW8270	4-BROMOPHENYL PHENYL ETHER	426	U	426	UJ	26	426	ug/kg	HT
SS	NDA190	SW8270	4-BROMOPHENYL PHENYL ETHER	430	U	430	UJ	26	430	ug/kg	HT
SS	NDA191	SW8270	4-BROMOPHENYL PHENYL ETHER	338	U	338	UJ	20	338	ug/kg	HT
SS	NDA192FD1	SW8270	4-BROMOPHENYL PHENYL ETHER	418	U	418	UJ	25	418	ug/kg	HT
SS	NDA193	SW8270	4-BROMOPHENYL PHENYL ETHER	1720	U	1720	UJ	103	1720	ug/kg	HT
SS	NDA194	SW8270	4-BROMOPHENYL PHENYL ETHER	480	U	480	UJ	29	480	ug/kg	HT
SS	NDA195	SW8270	4-BROMOPHENYL PHENYL ETHER	323	U	323	UJ	19	323	ug/kg	HT
SS	NDA084	SW8270	4-BROMOPHENYL PHENYL ETHER	344	U	344	UJ	21	344	ug/kg	HT
SS	NDA091	SW8270	4-BROMOPHENYL PHENYL ETHER	367	U	367	UJ	22	367	ug/kg	HT
SS	NDA057	SW8270	4-BROMOPHENYL PHENYL ETHER	563	U	563	UJ	34	563	ug/kg	HT
SS	NDA059	SW8270	4-BROMOPHENYL PHENYL ETHER	465	U	465	UJ	28	465	ug/kg	HT
SS	NDA061	SW8270	4-BROMOPHENYL PHENYL ETHER	469	U	469	UJ	28	469	ug/kg	HT
SS	NDA062FD1	SW8270	4-BROMOPHENYL PHENYL ETHER	523	U	523	UJ	31	523	ug/kg	HT
SS	NDA065	SW8270	4-BROMOPHENYL PHENYL ETHER	421	U	421	UJ	25	421	ug/kg	HT
SS	NDA067	SW8270	4-BROMOPHENYL PHENYL ETHER	378	U	378	UJ	23	378	ug/kg	HT
SS	NDA069	SW8270	4-BROMOPHENYL PHENYL ETHER	320	U	320	UJ	19	320	ug/kg	HT
SS	NDA119	SW8270	4-BROMOPHENYL PHENYL ETHER	503	U	503	UJ	30	503	ug/kg	HT
SS	NDA120	SW8270	4-BROMOPHENYL PHENYL ETHER	541	U	541	UJ	32	541	ug/kg	HT

Matrix	Sample ID	Analytical Method	Parameter	Lab Result	Lab Qual	Final Result	Final Qual	DL	RL	Units	Comments
SS	NDA121	SW8270	4-BROMOPHENYL PHENYL ETHER	409	U	409	UJ	25	409	ug/kg	HT
SS	NDA122	SW8270	4-BROMOPHENYL PHENYL ETHER	450	U	450	UJ	27	450	ug/kg	HT
SS	NDA123	SW8270	4-BROMOPHENYL PHENYL ETHER	450	U	450	UJ	27	450	ug/kg	HT
SS	NDA124	SW8270	4-BROMOPHENYL PHENYL ETHER	432	U	432	UJ	26	432	ug/kg	HT
SS	NDA071	SW8270	4-BROMOPHENYL PHENYL ETHER	554	U	554	UJ	33	554	ug/kg	HT
SS	NDA072FD1	SW8270	4-BROMOPHENYL PHENYL ETHER	413	U	413	UJ	25	413	ug/kg	HT
SS	NDA074	SW8270	4-BROMOPHENYL PHENYL ETHER	448	U	448	UJ	27	448	ug/kg	HT
SS	NDA076	SW8270	4-BROMOPHENYL PHENYL ETHER	419	U	419	UJ	25	419	ug/kg	HT
SS	NDA078	SW8270	4-BROMOPHENYL PHENYL ETHER	440	U	440	UJ	26	440	ug/kg	HT
SS	NDA080RE1	SW8270	4-BROMOPHENYL PHENYL ETHER	407	U	407	UJ	24	407	ug/kg	HT
SS	NDA082RE1	SW8270	4-BROMOPHENYL PHENYL ETHER	4660	U	4660	UJ	280	4660	ug/kg	HT
SB	NDA213	SW8270	4,6-DINITRO-2-METHYLPHENOL	1440	U	1440	UJ	27	1440	ug/kg	HT
SB	NDA214FD1	SW8270	4,6-DINITRO-2-METHYLPHENOL	1450	U	1450	UJ	27	1450	ug/kg	HT
SB	NDA215	SW8270	4,6-DINITRO-2-METHYLPHENOL	1570	U	1570	UJ	29	1570	ug/kg	HT
SB	NDA216	SW8270	4,6-DINITRO-2-METHYLPHENOL	1590	U	1590	UJ	30	1590	ug/kg	HT
SB	NDA217	SW8270	4,6-DINITRO-2-METHYLPHENOL	1600	U	1600	UJ	30	1600	ug/kg	HT
SB	NDA218	SW8270	4,6-DINITRO-2-METHYLPHENOL	1500	U	1500	UJ	28	1500	ug/kg	HT
SB	NDA219	SW8270	4,6-DINITRO-2-METHYLPHENOL	1130	U	1130	UJ	21	1130	ug/kg	HT
SB	NDA220	SW8270	4,6-DINITRO-2-METHYLPHENOL	1610	U	1610	UJ	30	1610	ug/kg	HT
SB	NDA221	SW8270	4,6-DINITRO-2-METHYLPHENOL	1490	U	1490	UJ	28	1490	ug/kg	HT
SB	NDA222	SW8270	4,6-DINITRO-2-METHYLPHENOL	1360	U	1360	UJ	25	1360	ug/kg	HT
SB	NDA223	SW8270	4,6-DINITRO-2-METHYLPHENOL	1570	U	1570	UJ	29	1570	ug/kg	HT
SB	NDA235	SW8270	4,6-DINITRO-2-METHYLPHENOL	1510	U	1510	UJ	28	1510	ug/kg	HT
SB	NDA236	SW8270	4,6-DINITRO-2-METHYLPHENOL	1270	U	1270	UJ	23	1270	ug/kg	HT
SB	NDA237FD1	SW8270	4,6-DINITRO-2-METHYLPHENOL	1180	U	1180	UJ	22	1180	ug/kg	HT
SB	NDA238	SW8270	4,6-DINITRO-2-METHYLPHENOL	1270	U	1270	UJ	23	1270	ug/kg	HT
SB	NDA239	SW8270	4,6-DINITRO-2-METHYLPHENOL	1660	U	1660	UJ	31	1660	ug/kg	HT
SB	NDA240	SW8270	4,6-DINITRO-2-METHYLPHENOL	1190	U	1190	UJ	22	1190	ug/kg	HT
SB	NDA241	SW8270	4,6-DINITRO-2-METHYLPHENOL	1410	U	1410	UJ	26	1410	ug/kg	HT
SB	NDA242	SW8270	4,6-DINITRO-2-METHYLPHENOL	1310	U	1310	UJ	24	1310	ug/kg	HT
SB	NDA243	SW8270	4,6-DINITRO-2-METHYLPHENOL	2680	U	2680	UJ	49	2680	ug/kg	HT
SB	NDA244	SW8270	4,6-DINITRO-2-METHYLPHENOL	1160	U	1160	UJ	21	1160	ug/kg	HT
SB	NDA245	SW8270	4,6-DINITRO-2-METHYLPHENOL	1180	U	1180	UJ	22	1180	ug/kg	HT
SB	NDA246	SW8270	4,6-DINITRO-2-METHYLPHENOL	1530	U	1530	UJ	28	1530	ug/kg	HT
SB	NDA247FD1	SW8270	4,6-DINITRO-2-METHYLPHENOL	1170	U	1170	UJ	21	1170	ug/kg	HT
SB	NDA248	SW8270	4,6-DINITRO-2-METHYLPHENOL	1360	U	1360	UJ	25	1360	ug/kg	HT
SB	NDA249	SW8270	4,6-DINITRO-2-METHYLPHENOL	1120	U	1120	UJ	21	1120	ug/kg	HT
SB	NDA252	SW8270	4,6-DINITRO-2-METHYLPHENOL	1260	U	1260	UJ	23	1260	ug/kg	HT
SB	NDA253	SW8270	4,6-DINITRO-2-METHYLPHENOL	1320	U	1320	UJ	24	1320	ug/kg	HT
SB	NDA254	SW8270	4,6-DINITRO-2-METHYLPHENOL	1170	U	1170	UJ	21	1170	ug/kg	HT
SB	NDA255	SW8270	4,6-DINITRO-2-METHYLPHENOL	1130	U	1130	UJ	21	1130	ug/kg	HT
SB	NDA085	SW8270	4,6-DINITRO-2-METHYLPHENOL	1450	U	1450	UJ	27	1450	ug/kg	HT
SB	NDA092	SW8270	4,6-DINITRO-2-METHYLPHENOL	1200	U	1200	UJ	22	1200	ug/kg	HT
SB	NDA093	SW8270	4,6-DINITRO-2-METHYLPHENOL	1020	U	1020	UJ	19	1020	ug/kg	HT
SB	NDA094	SW8270	4,6-DINITRO-2-METHYLPHENOL	1530	U	1530	UJ	28	1530	ug/kg	HT
SB	NDA095FD1	SW8270	4,6-DINITRO-2-METHYLPHENOL	931	U	931	UJ	17	931	ug/kg	HT
SB	NDA296	SW8270	4,6-DINITRO-2-METHYLPHENOL	1110	U	1110	UJ	20	1110	ug/kg	HT
SB	NDA297	SW8270	4,6-DINITRO-2-METHYLPHENOL	1080	U	1080	UJ	20	1080	ug/kg	HT
SB	NDA298	SW8270	4,6-DINITRO-2-METHYLPHENOL	1020	U	1020	UJ	19	1020	ug/kg	HT
SB	NDA299	SW8270	4,6-DINITRO-2-METHYLPHENOL	1110	U	1110	UJ	20	1110	ug/kg	HT
SB	NDA058	SW8270	4,6-DINITRO-2-METHYLPHENOL	1380	U	1380	UJ	25	1380	ug/kg	HT
SB	NDA060	SW8270	4,6-DINITRO-2-METHYLPHENOL	1430	U	1430	UJ	26	1430	ug/kg	HT
SB	NDA063	SW8270	4,6-DINITRO-2-METHYLPHENOL	1150	U	1150	UJ	21	1150	ug/kg	HT
SB	NDA064FD1	SW8270	4,6-DINITRO-2-METHYLPHENOL	1050	U	1050	UJ	19	1050	ug/kg	HT
SB	NDA066	SW8270	4,6-DINITRO-2-METHYLPHENOL	1030	U	1030	UJ	19	1030	ug/kg	HT
SB	NDA068	SW8270	4,6-DINITRO-2-METHYLPHENOL	1080	U	1080	UJ	20	1080	ug/kg	HT
SB	NDA070	SW8270	4,6-DINITRO-2-METHYLPHENOL	1210	U	1210	UJ	22	1210	ug/kg	HT
SB	NDA073	SW8270	4,6-DINITRO-2-METHYLPHENOL	1150	U	1150	UJ	21	1150	ug/kg	HT
SB	NDA075	SW8270	4,6-DINITRO-2-METHYLPHENOL	1200	U	1200	UJ	22	1200	ug/kg	HT
SB	NDA077	SW8270	4,6-DINITRO-2-METHYLPHENOL	1320	U	1320	UJ	24	1320	ug/kg	HT
SB	NDA079	SW8270	4,6-DINITRO-2-METHYLPHENOL	1400	U	1400	UJ	26	1400	ug/kg	HT
SB	NDA081RE1	SW8270	4,6-DINITRO-2-METHYLPHENOL	1180	U	1180	UJ	22	1180	ug/kg	HT
SB	NDA083RE1	SW8270	4,6-DINITRO-2-METHYLPHENOL	12700	U	12700	UJ	233	12700	ug/kg	HT
SD	NDA054	SW8270	4,6-DINITRO-2-METHYLPHENOL	1430	U	1430	UJ	26	1430	ug/kg	HT
SD	NDA055	SW8270	4,6-DINITRO-2-METHYLPHENOL	2070	U	2070	UJ	38	2070	ug/kg	HT
SD	NDA042	SW8270	4,6-DINITRO-2-METHYLPHENOL	2060	U	2060	UJ	38	2060	ug/kg	HT
SD	NDA043	SW8270	4,6-DINITRO-2-METHYLPHENOL	2200	U	2200	UJ	40	2200	ug/kg	HT
SD	NDA044	SW8270	4,6-DINITRO-2-METHYLPHENOL	5050	U	5050	UJ	93	5050	ug/kg	HT
SD	NDA045	SW8270	4,6-DINITRO-2-METHYLPHENOL	4500	U	4500	UJ	83	4500	ug/kg	HT
SD	NDA046	SW8270	4,6-DINITRO-2-METHYLPHENOL	4560	U	4560	UJ	84	4560	ug/kg	HT

Matrix	Sample ID	Analytical Method	Parameter	Lab Result	Lab Qual	Final Result	Final Qual	DL	RL	Units	Comments
SD	NDA302	SW8270	4,6-DINITRO-2-METHYLPHENOL	3600	U	3600	UJ	66	3600	ug/kg	HT
SD	NDA303	SW8270	4,6-DINITRO-2-METHYLPHENOL	6900	U	6900	UJ	127	6900	ug/kg	HT
SD	NDA307FD1	SW8270	4,6-DINITRO-2-METHYLPHENOL	6380	U	6380	UJ	117	6380	ug/kg	HT
SD	NDA047	SW8270	4,6-DINITRO-2-METHYLPHENOL	1510	U	1510	UJ	28	1510	ug/kg	HT
SD	NDA048	SW8270	4,6-DINITRO-2-METHYLPHENOL	1680	U	1680	UJ	31	1680	ug/kg	HT
SD	NDA049	SW8270	4,6-DINITRO-2-METHYLPHENOL	1390	U	1390	UJ	25	1390	ug/kg	HT
SS	NDA178	SW8270	4,6-DINITRO-2-METHYLPHENOL	1930	U	1930	UJ	35	1930	ug/kg	HT
SS	NDA179	SW8270	4,6-DINITRO-2-METHYLPHENOL	1930	U	1930	UJ	35	1930	ug/kg	HT
SS	NDA180	SW8270	4,6-DINITRO-2-METHYLPHENOL	1650	U	1650	UJ	30	1650	ug/kg	HT
SS	NDA181	SW8270	4,6-DINITRO-2-METHYLPHENOL	1700	U	1700	UJ	31	1700	ug/kg	HT
SS	NDA182	SW8270	4,6-DINITRO-2-METHYLPHENOL	2040	U	2040	UJ	37	2040	ug/kg	HT
SS	NDA183	SW8270	4,6-DINITRO-2-METHYLPHENOL	1770	U	1770	UJ	32	1770	ug/kg	HT
SS	NDA184FD1	SW8270	4,6-DINITRO-2-METHYLPHENOL	1990	U	1990	UJ	36	1990	ug/kg	HT
SS	NDA201	SW8270	4,6-DINITRO-2-METHYLPHENOL	1470	U	1470	UJ	27	1470	ug/kg	HT
SS	NDA202	SW8270	4,6-DINITRO-2-METHYLPHENOL	1820	U	1820	UJ	33	1820	ug/kg	HT
SS	NDA203	SW8270	4,6-DINITRO-2-METHYLPHENOL	1850	U	1850	UJ	34	1850	ug/kg	HT
SS	NDA204	SW8270	4,6-DINITRO-2-METHYLPHENOL	2260	U	2260	UJ	41	2260	ug/kg	HT
SS	NDA205FD1	SW8270	4,6-DINITRO-2-METHYLPHENOL	2000	U	2000	UJ	37	2000	ug/kg	HT
SS	NDA206	SW8270	4,6-DINITRO-2-METHYLPHENOL	1590	U	1590	UJ	29	1590	ug/kg	HT
SS	NDA207	SW8270	4,6-DINITRO-2-METHYLPHENOL	2010	U	2010	UJ	37	2010	ug/kg	HT
SS	NDA208	SW8270	4,6-DINITRO-2-METHYLPHENOL	1560	U	1560	UJ	29	1560	ug/kg	HT
SS	NDA209	SW8270	4,6-DINITRO-2-METHYLPHENOL	1710	U	1710	UJ	31	1710	ug/kg	HT
SS	NDA210	SW8270	4,6-DINITRO-2-METHYLPHENOL	1630	U	1630	UJ	30	1630	ug/kg	HT
SS	NDA211	SW8270	4,6-DINITRO-2-METHYLPHENOL	2230	U	2230	UJ	41	2230	ug/kg	HT
SS	NDA212	SW8270	4,6-DINITRO-2-METHYLPHENOL	1950	U	1950	UJ	36	1950	ug/kg	HT
SS	NDA185	SW8270	4,6-DINITRO-2-METHYLPHENOL	1340	U	1340	UJ	24	1340	ug/kg	HT
SS	NDA186	SW8270	4,6-DINITRO-2-METHYLPHENOL	1250	U	1250	UJ	23	1250	ug/kg	HT
SS	NDA187	SW8270	4,6-DINITRO-2-METHYLPHENOL	1140	U	1140	UJ	21	1140	ug/kg	HT
SS	NDA188	SW8270	4,6-DINITRO-2-METHYLPHENOL	2430	U	2430	UJ	45	2430	ug/kg	HT
SS	NDA189	SW8270	4,6-DINITRO-2-METHYLPHENOL	1280	U	1280	UJ	23	1280	ug/kg	HT
SS	NDA190	SW8270	4,6-DINITRO-2-METHYLPHENOL	1290	U	1290	UJ	24	1290	ug/kg	HT
SS	NDA191	SW8270	4,6-DINITRO-2-METHYLPHENOL	1010	U	1010	UJ	19	1010	ug/kg	HT
SS	NDA192FD1	SW8270	4,6-DINITRO-2-METHYLPHENOL	1250	U	1250	UJ	23	1250	ug/kg	HT
SS	NDA193	SW8270	4,6-DINITRO-2-METHYLPHENOL	5160	U	5160	UJ	95	5160	ug/kg	HT
SS	NDA194	SW8270	4,6-DINITRO-2-METHYLPHENOL	1440	U	1440	UJ	26	1440	ug/kg	HT
SS	NDA195	SW8270	4,6-DINITRO-2-METHYLPHENOL	969	U	969	UJ	18	969	ug/kg	HT
SS	NDA084	SW8270	4,6-DINITRO-2-METHYLPHENOL	1030	U	1030	UJ	19	1030	ug/kg	HT
SS	NDA091	SW8270	4,6-DINITRO-2-METHYLPHENOL	1100	U	1100	UJ	20	1100	ug/kg	HT
SS	NDA057	SW8270	4,6-DINITRO-2-METHYLPHENOL	1690	U	1690	UJ	31	1690	ug/kg	HT
SS	NDA059	SW8270	4,6-DINITRO-2-METHYLPHENOL	1390	U	1390	UJ	26	1390	ug/kg	HT
SS	NDA061	SW8270	4,6-DINITRO-2-METHYLPHENOL	1410	U	1410	UJ	26	1410	ug/kg	HT
SS	NDA062FD1	SW8270	4,6-DINITRO-2-METHYLPHENOL	1570	U	1570	UJ	29	1570	ug/kg	HT
SS	NDA065	SW8270	4,6-DINITRO-2-METHYLPHENOL	1260	U	1260	UJ	23	1260	ug/kg	HT
SS	NDA067	SW8270	4,6-DINITRO-2-METHYLPHENOL	1130	U	1130	UJ	21	1130	ug/kg	HT
SS	NDA069	SW8270	4,6-DINITRO-2-METHYLPHENOL	959	U	959	UJ	18	959	ug/kg	HT
SS	NDA119	SW8270	4,6-DINITRO-2-METHYLPHENOL	1510	U	1510	UJ	28	1510	ug/kg	HT
SS	NDA120	SW8270	4,6-DINITRO-2-METHYLPHENOL	1620	U	1620	UJ	30	1620	ug/kg	HT
SS	NDA121	SW8270	4,6-DINITRO-2-METHYLPHENOL	1230	U	1230	UJ	22	1230	ug/kg	HT
SS	NDA122	SW8270	4,6-DINITRO-2-METHYLPHENOL	1350	U	1350	UJ	25	1350	ug/kg	HT
SS	NDA123	SW8270	4,6-DINITRO-2-METHYLPHENOL	1350	U	1350	UJ	25	1350	ug/kg	HT
SS	NDA124	SW8270	4,6-DINITRO-2-METHYLPHENOL	1290	U	1290	UJ	24	1290	ug/kg	HT
SS	NDA071	SW8270	4,6-DINITRO-2-METHYLPHENOL	1660	U	1660	UJ	30	1660	ug/kg	HT
SS	NDA072FD1	SW8270	4,6-DINITRO-2-METHYLPHENOL	1240	U	1240	UJ	23	1240	ug/kg	HT
SS	NDA074	SW8270	4,6-DINITRO-2-METHYLPHENOL	1340	U	1340	UJ	25	1340	ug/kg	HT
SS	NDA076	SW8270	4,6-DINITRO-2-METHYLPHENOL	1260	U	1260	UJ	23	1260	ug/kg	HT
SS	NDA078	SW8270	4,6-DINITRO-2-METHYLPHENOL	1320	U	1320	UJ	24	1320	ug/kg	HT
SS	NDA080RE1	SW8270	4,6-DINITRO-2-METHYLPHENOL	1220	U	1220	UJ	22	1220	ug/kg	HT
SS	NDA082RE1	SW8270	4,6-DINITRO-2-METHYLPHENOL	14000	U	14000	UJ	256	14000	ug/kg	HT
SB	NDA213	SW8270	3-NITROANILINE	1440	U	1440	UJ	23	1440	ug/kg	HT
SB	NDA214FD1	SW8270	3-NITROANILINE	1450	U	1450	UJ	23	1450	ug/kg	HT
SB	NDA215	SW8270	3-NITROANILINE	1570	U	1570	UJ	25	1570	ug/kg	HT
SB	NDA216	SW8270	3-NITROANILINE	1590	U	1590	UJ	25	1590	ug/kg	HT
SB	NDA217	SW8270	3-NITROANILINE	1600	U	1600	UJ	25	1600	ug/kg	HT
SB	NDA218	SW8270	3-NITROANILINE	1500	U	1500	UJ	24	1500	ug/kg	HT
SB	NDA219	SW8270	3-NITROANILINE	1130	U	1130	UJ	18	1130	ug/kg	HT
SB	NDA220	SW8270	3-NITROANILINE	1610	U	1610	UJ	25	1610	ug/kg	HT
SB	NDA221	SW8270	3-NITROANILINE	1490	U	1490	UJ	24	1490	ug/kg	HT
SB	NDA222	SW8270	3-NITROANILINE	1360	U	1360	UJ	22	1360	ug/kg	HT
SB	NDA223	SW8270	3-NITROANILINE	1570	U	1570	UJ	25	1570	ug/kg	HT
SB	NDA235	SW8270	3-NITROANILINE	1510	U	1510	UJ	24	1510	ug/kg	HT

Matrix	Sample ID	Analytical Method	Parameter	Lab Result	Lab Qual	Final Result	Final Qual	DL	RL	Units	Comments
SB	NDA236	SW8270	3-NITROANILINE	1270	U	1270	UJ	20	1270	ug/kg	HT
SB	NDA237FD1	SW8270	3-NITROANILINE	1180	U	1180	UJ	19	1180	ug/kg	HT
SB	NDA238	SW8270	3-NITROANILINE	1270	U	1270	UJ	20	1270	ug/kg	HT
SB	NDA239	SW8270	3-NITROANILINE	1660	U	1660	UJ	26	1660	ug/kg	HT
SB	NDA240	SW8270	3-NITROANILINE	1190	U	1190	UJ	19	1190	ug/kg	HT
SB	NDA241	SW8270	3-NITROANILINE	1410	U	1410	UJ	22	1410	ug/kg	HT
SB	NDA242	SW8270	3-NITROANILINE	1310	U	1310	UJ	20	1310	ug/kg	HT
SB	NDA243	SW8270	3-NITROANILINE	2680	U	2680	UJ	42	2680	ug/kg	HT
SB	NDA244	SW8270	3-NITROANILINE	1160	U	1160	UJ	18	1160	ug/kg	HT
SB	NDA245	SW8270	3-NITROANILINE	1180	U	1180	UJ	18	1180	ug/kg	HT
SB	NDA246	SW8270	3-NITROANILINE	1530	U	1530	UJ	24	1530	ug/kg	HT
SB	NDA247FD1	SW8270	3-NITROANILINE	1170	U	1170	UJ	18	1170	ug/kg	HT
SB	NDA248	SW8270	3-NITROANILINE	1360	U	1360	UJ	21	1360	ug/kg	HT
SB	NDA249	SW8270	3-NITROANILINE	1120	U	1120	UJ	18	1120	ug/kg	HT
SB	NDA252	SW8270	3-NITROANILINE	1260	U	1260	UJ	20	1260	ug/kg	HT
SB	NDA253	SW8270	3-NITROANILINE	1320	U	1320	UJ	21	1320	ug/kg	HT
SB	NDA254	SW8270	3-NITROANILINE	1170	U	1170	UJ	18	1170	ug/kg	HT
SB	NDA255	SW8270	3-NITROANILINE	1130	U	1130	UJ	18	1130	ug/kg	HT
SB	NDA085	SW8270	3-NITROANILINE	1450	U	1450	UJ	23	1450	ug/kg	HT
SB	NDA092	SW8270	3-NITROANILINE	1200	U	1200	UJ	19	1200	ug/kg	HT
SB	NDA093	SW8270	3-NITROANILINE	1020	U	1020	UJ	16	1020	ug/kg	HT
SB	NDA094	SW8270	3-NITROANILINE	1530	U	1530	UJ	24	1530	ug/kg	HT
SB	NDA095FD1	SW8270	3-NITROANILINE	931	U	931	UJ	15	931	ug/kg	HT
SB	NDA296	SW8270	3-NITROANILINE	1110	U	1110	UJ	17	1110	ug/kg	HT
SB	NDA297	SW8270	3-NITROANILINE	1080	U	1080	UJ	17	1080	ug/kg	HT
SB	NDA298	SW8270	3-NITROANILINE	1020	U	1020	UJ	16	1020	ug/kg	HT
SB	NDA299	SW8270	3-NITROANILINE	1110	U	1110	UJ	17	1110	ug/kg	HT
SB	NDA058	SW8270	3-NITROANILINE	1380	U	1380	UJ	22	1380	ug/kg	HT
SB	NDA060	SW8270	3-NITROANILINE	1430	U	1430	UJ	22	1430	ug/kg	HT
SB	NDA063	SW8270	3-NITROANILINE	1150	U	1150	UJ	18	1150	ug/kg	HT
SB	NDA064FD1	SW8270	3-NITROANILINE	1050	U	1050	UJ	16	1050	ug/kg	HT
SB	NDA066	SW8270	3-NITROANILINE	1030	U	1030	UJ	16	1030	ug/kg	HT
SB	NDA068	SW8270	3-NITROANILINE	1080	U	1080	UJ	17	1080	ug/kg	HT
SB	NDA070	SW8270	3-NITROANILINE	1210	U	1210	UJ	19	1210	ug/kg	HT
SB	NDA073	SW8270	3-NITROANILINE	1150	U	1150	UJ	18	1150	ug/kg	HT
SB	NDA075	SW8270	3-NITROANILINE	1200	U	1200	UJ	19	1200	ug/kg	HT
SB	NDA077	SW8270	3-NITROANILINE	1320	U	1320	UJ	21	1320	ug/kg	HT
SB	NDA079	SW8270	3-NITROANILINE	1400	U	1400	UJ	22	1400	ug/kg	HT
SB	NDA081RE1	SW8270	3-NITROANILINE	1180	U	1180	UJ	18	1180	ug/kg	HT
SB	NDA083RE1	SW8270	3-NITROANILINE	12700	U	12700	UJ	199	12700	ug/kg	HT
SD	NDA054	SW8270	3-NITROANILINE	1430	U	1430	UJ	23	1430	ug/kg	HT
SD	NDA055	SW8270	3-NITROANILINE	2070	U	2070	UJ	33	2070	ug/kg	HT
SD	NDA042	SW8270	3-NITROANILINE	2060	U	2060	UJ	32	2060	ug/kg	HT
SD	NDA043	SW8270	3-NITROANILINE	2200	U	2200	UJ	35	2200	ug/kg	HT
SD	NDA044	SW8270	3-NITROANILINE	5050	U	5050	UJ	79	5050	ug/kg	HT
SD	NDA045	SW8270	3-NITROANILINE	4500	U	4500	UJ	71	4500	ug/kg	HT
SD	NDA046	SW8270	3-NITROANILINE	4560	U	4560	UJ	71	4560	ug/kg	HT
SD	NDA302	SW8270	3-NITROANILINE	3600	U	3600	UJ	56	3600	ug/kg	HT
SD	NDA303	SW8270	3-NITROANILINE	6900	U	6900	UJ	108	6900	ug/kg	HT
SD	NDA307FD1	SW8270	3-NITROANILINE	6380	U	6380	UJ	100	6380	ug/kg	HT
SD	NDA047	SW8270	3-NITROANILINE	1510	U	1510	UJ	24	1510	ug/kg	HT
SD	NDA048	SW8270	3-NITROANILINE	1680	U	1680	UJ	26	1680	ug/kg	HT
SD	NDA049	SW8270	3-NITROANILINE	1390	U	1390	UJ	22	1390	ug/kg	HT
SS	NDA178	SW8270	3-NITROANILINE	1930	U	1930	UJ	30	1930	ug/kg	HT
SS	NDA179	SW8270	3-NITROANILINE	1930	U	1930	UJ	30	1930	ug/kg	HT
SS	NDA180	SW8270	3-NITROANILINE	1650	U	1650	UJ	26	1650	ug/kg	HT
SS	NDA181	SW8270	3-NITROANILINE	1700	U	1700	UJ	27	1700	ug/kg	HT
SS	NDA182	SW8270	3-NITROANILINE	2040	U	2040	UJ	32	2040	ug/kg	HT
SS	NDA183	SW8270	3-NITROANILINE	1770	U	1770	UJ	28	1770	ug/kg	HT
SS	NDA184FD1	SW8270	3-NITROANILINE	1990	U	1990	UJ	31	1990	ug/kg	HT
SS	NDA201	SW8270	3-NITROANILINE	1470	U	1470	UJ	23	1470	ug/kg	HT
SS	NDA202	SW8270	3-NITROANILINE	1820	U	1820	UJ	28	1820	ug/kg	HT
SS	NDA203	SW8270	3-NITROANILINE	1850	U	1850	UJ	29	1850	ug/kg	HT
SS	NDA204	SW8270	3-NITROANILINE	2260	U	2260	UJ	35	2260	ug/kg	HT
SS	NDA205FD1	SW8270	3-NITROANILINE	2000	U	2000	UJ	31	2000	ug/kg	HT
SS	NDA206	SW8270	3-NITROANILINE	1590	U	1590	UJ	25	1590	ug/kg	HT
SS	NDA207	SW8270	3-NITROANILINE	2010	U	2010	UJ	31	2010	ug/kg	HT
SS	NDA208	SW8270	3-NITROANILINE	1560	U	1560	UJ	24	1560	ug/kg	HT
SS	NDA209	SW8270	3-NITROANILINE	1710	U	1710	UJ	27	1710	ug/kg	HT
SS	NDA210	SW8270	3-NITROANILINE	1630	U	1630	UJ	26	1630	ug/kg	HT

Matrix	Sample ID	Analytical Method	Parameter	Lab Result	Lab Qual	Final Result	Final Qual	DL	RL	Units	Comments
SS	NDA211	SW8270	3-NITROANILINE	2230	U	2230	UJ	35	2230	ug/kg	HT
SS	NDA212	SW8270	3-NITROANILINE	1950	U	1950	UJ	31	1950	ug/kg	HT
SS	NDA185	SW8270	3-NITROANILINE	1340	U	1340	UJ	21	1340	ug/kg	HT
SS	NDA186	SW8270	3-NITROANILINE	1250	U	1250	UJ	20	1250	ug/kg	HT
SS	NDA187	SW8270	3-NITROANILINE	1140	U	1140	UJ	18	1140	ug/kg	HT
SS	NDA188	SW8270	3-NITROANILINE	2430	U	2430	UJ	38	2430	ug/kg	HT
SS	NDA189	SW8270	3-NITROANILINE	1280	U	1280	UJ	20	1280	ug/kg	HT
SS	NDA190	SW8270	3-NITROANILINE	1290	U	1290	UJ	20	1290	ug/kg	HT
SS	NDA191	SW8270	3-NITROANILINE	1010	U	1010	UJ	16	1010	ug/kg	HT
SS	NDA192FD1	SW8270	3-NITROANILINE	1250	U	1250	UJ	20	1250	ug/kg	HT
SS	NDA193	SW8270	3-NITROANILINE	5160	U	5160	UJ	81	5160	ug/kg	HT
SS	NDA194	SW8270	3-NITROANILINE	1440	U	1440	UJ	23	1440	ug/kg	HT
SS	NDA195	SW8270	3-NITROANILINE	969	U	969	UJ	15	969	ug/kg	HT
SS	NDA084	SW8270	3-NITROANILINE	1030	U	1030	UJ	16	1030	ug/kg	HT
SS	NDA091	SW8270	3-NITROANILINE	1100	U	1100	UJ	17	1100	ug/kg	HT
SS	NDA057	SW8270	3-NITROANILINE	1690	U	1690	UJ	26	1690	ug/kg	HT
SS	NDA059	SW8270	3-NITROANILINE	1390	U	1390	UJ	22	1390	ug/kg	HT
SS	NDA061	SW8270	3-NITROANILINE	1410	U	1410	UJ	22	1410	ug/kg	HT
SS	NDA062FD1	SW8270	3-NITROANILINE	1570	U	1570	UJ	25	1570	ug/kg	HT
SS	NDA065	SW8270	3-NITROANILINE	1260	U	1260	UJ	20	1260	ug/kg	HT
SS	NDA067	SW8270	3-NITROANILINE	1130	U	1130	UJ	18	1130	ug/kg	HT
SS	NDA069	SW8270	3-NITROANILINE	959	U	959	UJ	15	959	ug/kg	HT
SS	NDA119	SW8270	3-NITROANILINE	1510	U	1510	UJ	24	1510	ug/kg	HT
SS	NDA120	SW8270	3-NITROANILINE	1620	U	1620	UJ	25	1620	ug/kg	HT
SS	NDA121	SW8270	3-NITROANILINE	1230	U	1230	UJ	19	1230	ug/kg	HT
SS	NDA122	SW8270	3-NITROANILINE	1350	U	1350	UJ	21	1350	ug/kg	HT
SS	NDA123	SW8270	3-NITROANILINE	1350	U	1350	UJ	21	1350	ug/kg	HT
SS	NDA124	SW8270	3-NITROANILINE	1290	U	1290	UJ	20	1290	ug/kg	HT
SS	NDA071	SW8270	3-NITROANILINE	1660	U	1660	UJ	26	1660	ug/kg	HT
SS	NDA072FD1	SW8270	3-NITROANILINE	1240	U	1240	UJ	19	1240	ug/kg	HT
SS	NDA074	SW8270	3-NITROANILINE	1340	U	1340	UJ	21	1340	ug/kg	HT
SS	NDA076	SW8270	3-NITROANILINE	1260	U	1260	UJ	20	1260	ug/kg	HT
SS	NDA078	SW8270	3-NITROANILINE	1320	U	1320	UJ	21	1320	ug/kg	HT
SS	NDA080RE1	SW8270	3-NITROANILINE	1220	U	1220	UJ	19	1220	ug/kg	HT
SS	NDA082RE1	SW8270	3-NITROANILINE	14000	U	14000	UJ	219	14000	ug/kg	HT
SB	NDA213	SW8270	3,3'-DICHLOROBENZIDINE	970	U	970	UJ	23	970	ug/kg	HT
SB	NDA214FD1	SW8270	3,3'-DICHLOROBENZIDINE	973	U	973	UJ	23	973	ug/kg	HT
SB	NDA215	SW8270	3,3'-DICHLOROBENZIDINE	1050	U	1050	UJ	25	1050	ug/kg	HT
SB	NDA216	SW8270	3,3'-DICHLOROBENZIDINE	1070	U	1070	UJ	25	1070	ug/kg	HT
SB	NDA217	SW8270	3,3'-DICHLOROBENZIDINE	1080	U	1080	UJ	25	1080	ug/kg	HT
SB	NDA218	SW8270	3,3'-DICHLOROBENZIDINE	1010	U	1010	UJ	24	1010	ug/kg	HT
SB	NDA219	SW8270	3,3'-DICHLOROBENZIDINE	760	U	760	UJ	18	760	ug/kg	HT
SB	NDA220	SW8270	3,3'-DICHLOROBENZIDINE	1080	U	1080	UJ	25	1080	ug/kg	HT
SB	NDA221	SW8270	3,3'-DICHLOROBENZIDINE	1000	U	1000	UJ	24	1000	ug/kg	HT
SB	NDA222	SW8270	3,3'-DICHLOROBENZIDINE	918	U	918	UJ	22	918	ug/kg	HT
SB	NDA223	SW8270	3,3'-DICHLOROBENZIDINE	1050	U	1050	UJ	25	1050	ug/kg	HT
SB	NDA235	SW8270	3,3'-DICHLOROBENZIDINE	1010	U	1010	UJ	24	1010	ug/kg	HT
SB	NDA236	SW8270	3,3'-DICHLOROBENZIDINE	846	U	846	UJ	20	846	ug/kg	HT
SB	NDA237FD1	SW8270	3,3'-DICHLOROBENZIDINE	789	U	789	UJ	19	789	ug/kg	HT
SB	NDA238	SW8270	3,3'-DICHLOROBENZIDINE	849	U	849	UJ	20	849	ug/kg	HT
SB	NDA239	SW8270	3,3'-DICHLOROBENZIDINE	1110	U	1110	UJ	26	1110	ug/kg	HT
SB	NDA240	SW8270	3,3'-DICHLOROBENZIDINE	795	U	795	UJ	19	795	ug/kg	HT
SB	NDA241	SW8270	3,3'-DICHLOROBENZIDINE	941	U	941	UJ	22	941	ug/kg	HT
SB	NDA242	SW8270	3,3'-DICHLOROBENZIDINE	872	U	872	UJ	20	872	ug/kg	HT
SB	NDA243	SW8270	3,3'-DICHLOROBENZIDINE	1790	U	1790	UJ	42	1790	ug/kg	HT
SB	NDA244	SW8270	3,3'-DICHLOROBENZIDINE	775	U	775	UJ	18	775	ug/kg	HT
SB	NDA245	SW8270	3,3'-DICHLOROBENZIDINE	785	U	785	UJ	18	785	ug/kg	HT
SB	NDA246	SW8270	3,3'-DICHLOROBENZIDINE	1020	U	1020	UJ	24	1020	ug/kg	HT
SB	NDA247FD1	SW8270	3,3'-DICHLOROBENZIDINE	781	U	781	UJ	18	781	ug/kg	HT
SB	NDA248	SW8270	3,3'-DICHLOROBENZIDINE	906	U	906	UJ	21	906	ug/kg	HT
SB	NDA249	SW8270	3,3'-DICHLOROBENZIDINE	749	U	749	UJ	18	749	ug/kg	HT
SB	NDA252	SW8270	3,3'-DICHLOROBENZIDINE	840	U	840	UJ	20	840	ug/kg	HT
SB	NDA253	SW8270	3,3'-DICHLOROBENZIDINE	878	U	878	UJ	21	878	ug/kg	HT
SB	NDA254	SW8270	3,3'-DICHLOROBENZIDINE	781	U	781	UJ	18	781	ug/kg	HT
SB	NDA255	SW8270	3,3'-DICHLOROBENZIDINE	751	U	751	UJ	18	751	ug/kg	HT
SB	NDA085	SW8270	3,3'-DICHLOROBENZIDINE	964	U	964	UJ	23	964	ug/kg	HT
SB	NDA092	SW8270	3,3'-DICHLOROBENZIDINE	799	U	799	UJ	19	799	ug/kg	HT
SB	NDA093	SW8270	3,3'-DICHLOROBENZIDINE	679	U	679	UJ	16	679	ug/kg	HT
SB	NDA094	SW8270	3,3'-DICHLOROBENZIDINE	1020	U	1020	UJ	24	1020	ug/kg	HT
SB	NDA095FD1	SW8270	3,3'-DICHLOROBENZIDINE	620	U	620	UJ	15	620	ug/kg	HT

Matrix	Sample ID	Analytical Method	Parameter	Lab Result	Lab Qual	Final Result	Final Qual	DL	RL	Units	Comments
SB	NDA296	SW8270	3,3'-DICHLOROBENZIDINE	739	U	739	UJ	17	739	ug/kg	HT
SB	NDA297	SW8270	3,3'-DICHLOROBENZIDINE	717	U	717	UJ	17	717	ug/kg	HT
SB	NDA298	SW8270	3,3'-DICHLOROBENZIDINE	683	U	683	UJ	16	683	ug/kg	HT
SB	NDA299	SW8270	3,3'-DICHLOROBENZIDINE	740	U	740	UJ	17	740	ug/kg	HT
SB	NDA058	SW8270	3,3'-DICHLOROBENZIDINE	921	U	921	UJ	22	921	ug/kg	HT
SB	NDA060	SW8270	3,3'-DICHLOROBENZIDINE	955	U	955	UJ	22	955	ug/kg	HT
SB	NDA063	SW8270	3,3'-DICHLOROBENZIDINE	765	U	765	UJ	18	765	ug/kg	HT
SB	NDA064FD1	SW8270	3,3'-DICHLOROBENZIDINE	701	U	701	UJ	16	701	ug/kg	HT
SB	NDA066	SW8270	3,3'-DICHLOROBENZIDINE	687	U	687	UJ	16	687	ug/kg	HT
SB	NDA068	SW8270	3,3'-DICHLOROBENZIDINE	720	U	720	UJ	17	720	ug/kg	HT
SB	NDA070	SW8270	3,3'-DICHLOROBENZIDINE	807	U	807	UJ	19	807	ug/kg	HT
SB	NDA073	SW8270	3,3'-DICHLOROBENZIDINE	766	U	766	UJ	18	766	ug/kg	HT
SB	NDA075	SW8270	3,3'-DICHLOROBENZIDINE	802	U	802	UJ	19	802	ug/kg	HT
SB	NDA077	SW8270	3,3'-DICHLOROBENZIDINE	882	U	882	UJ	21	882	ug/kg	HT
SB	NDA079	SW8270	3,3'-DICHLOROBENZIDINE	933	U	933	UJ	22	933	ug/kg	HT
SB	NDA081RE1	SW8270	3,3'-DICHLOROBENZIDINE	786	U	786	UJ	18	786	ug/kg	HT
SB	NDA083RE1	SW8270	3,3'-DICHLOROBENZIDINE	8470	U	8470	UJ	199	8470	ug/kg	HT
SD	NDA054	SW8270	3,3'-DICHLOROBENZIDINE	961	U	961	UJ	23	961	ug/kg	HT
SD	NDA055	SW8270	3,3'-DICHLOROBENZIDINE	1390	U	1390	UJ	33	1390	ug/kg	HT
SD	NDA042	SW8270	3,3'-DICHLOROBENZIDINE	1370	U	1370	UJ	32	1370	ug/kg	HT
SD	NDA043	SW8270	3,3'-DICHLOROBENZIDINE	1470	U	1470	UJ	35	1470	ug/kg	HT
SD	NDA044	SW8270	3,3'-DICHLOROBENZIDINE	3370	U	3370	UJ	79	3370	ug/kg	HT
SD	NDA045	SW8270	3,3'-DICHLOROBENZIDINE	3000	U	3000	UJ	71	3000	ug/kg	HT
SD	NDA046	SW8270	3,3'-DICHLOROBENZIDINE	3040	U	3040	UJ	71	3040	ug/kg	HT
SD	NDA302	SW8270	3,3'-DICHLOROBENZIDINE	2400	U	2400	UJ	56	2400	ug/kg	HT
SD	NDA303	SW8270	3,3'-DICHLOROBENZIDINE	4600	U	4600	UJ	108	4600	ug/kg	HT
SD	NDA307FD1	SW8270	3,3'-DICHLOROBENZIDINE	4250	U	4250	UJ	100	4250	ug/kg	HT
SD	NDA047	SW8270	3,3'-DICHLOROBENZIDINE	1010	U	1010	UJ	24	1010	ug/kg	HT
SD	NDA048	SW8270	3,3'-DICHLOROBENZIDINE	1120	U	1120	UJ	26	1120	ug/kg	HT
SD	NDA049	SW8270	3,3'-DICHLOROBENZIDINE	926	U	926	UJ	22	926	ug/kg	HT
SS	NDA178	SW8270	3,3'-DICHLOROBENZIDINE	1290	U	1290	UJ	30	1290	ug/kg	HT
SS	NDA179	SW8270	3,3'-DICHLOROBENZIDINE	1290	U	1290	UJ	30	1290	ug/kg	HT
SS	NDA180	SW8270	3,3'-DICHLOROBENZIDINE	1100	U	1100	UJ	26	1100	ug/kg	HT
SS	NDA181	SW8270	3,3'-DICHLOROBENZIDINE	1130	U	1130	UJ	27	1130	ug/kg	HT
SS	NDA182	SW8270	3,3'-DICHLOROBENZIDINE	1360	U	1360	UJ	32	1360	ug/kg	HT
SS	NDA183	SW8270	3,3'-DICHLOROBENZIDINE	1180	U	1180	UJ	28	1180	ug/kg	HT
SS	NDA184FD1	SW8270	3,3'-DICHLOROBENZIDINE	1320	U	1320	UJ	31	1320	ug/kg	HT
SS	NDA201	SW8270	3,3'-DICHLOROBENZIDINE	981	U	981	UJ	23	981	ug/kg	HT
SS	NDA202	SW8270	3,3'-DICHLOROBENZIDINE	1210	U	1210	UJ	28	1210	ug/kg	HT
SS	NDA203	SW8270	3,3'-DICHLOROBENZIDINE	1230	U	1230	UJ	29	1230	ug/kg	HT
SS	NDA204	SW8270	3,3'-DICHLOROBENZIDINE	1510	U	1510	UJ	35	1510	ug/kg	HT
SS	NDA205FD1	SW8270	3,3'-DICHLOROBENZIDINE	1340	U	1340	UJ	31	1340	ug/kg	HT
SS	NDA206	SW8270	3,3'-DICHLOROBENZIDINE	1060	U	1060	UJ	25	1060	ug/kg	HT
SS	NDA207	SW8270	3,3'-DICHLOROBENZIDINE	1340	U	1340	UJ	31	1340	ug/kg	HT
SS	NDA208	SW8270	3,3'-DICHLOROBENZIDINE	1040	U	1040	UJ	24	1040	ug/kg	HT
SS	NDA209	SW8270	3,3'-DICHLOROBENZIDINE	1140	U	1140	UJ	27	1140	ug/kg	HT
SS	NDA210	SW8270	3,3'-DICHLOROBENZIDINE	1090	U	1090	UJ	26	1090	ug/kg	HT
SS	NDA211	SW8270	3,3'-DICHLOROBENZIDINE	1480	U	1480	UJ	35	1480	ug/kg	HT
SS	NDA212	SW8270	3,3'-DICHLOROBENZIDINE	1300	U	1300	UJ	31	1300	ug/kg	HT
SS	NDA185	SW8270	3,3'-DICHLOROBENZIDINE	891	U	891	UJ	21	891	ug/kg	HT
SS	NDA186	SW8270	3,3'-DICHLOROBENZIDINE	831	U	831	UJ	20	831	ug/kg	HT
SS	NDA187	SW8270	3,3'-DICHLOROBENZIDINE	759	U	759	UJ	18	759	ug/kg	HT
SS	NDA188	SW8270	3,3'-DICHLOROBENZIDINE	1620	U	1620	UJ	38	1620	ug/kg	HT
SS	NDA189	SW8270	3,3'-DICHLOROBENZIDINE	851	U	851	UJ	20	851	ug/kg	HT
SS	NDA190	SW8270	3,3'-DICHLOROBENZIDINE	859	U	859	UJ	20	859	ug/kg	HT
SS	NDA191	SW8270	3,3'-DICHLOROBENZIDINE	677	U	677	UJ	16	677	ug/kg	HT
SS	NDA192FD1	SW8270	3,3'-DICHLOROBENZIDINE	835	U	835	UJ	20	835	ug/kg	HT
SS	NDA193	SW8270	3,3'-DICHLOROBENZIDINE	3440	U	3440	UJ	81	3440	ug/kg	HT
SS	NDA194	SW8270	3,3'-DICHLOROBENZIDINE	959	U	959	UJ	23	959	ug/kg	HT
SS	NDA195	SW8270	3,3'-DICHLOROBENZIDINE	646	U	646	UJ	15	646	ug/kg	HT
SS	NDA084	SW8270	3,3'-DICHLOROBENZIDINE	687	U	687	UJ	16	687	ug/kg	HT
SS	NDA091	SW8270	3,3'-DICHLOROBENZIDINE	733	U	733	UJ	17	733	ug/kg	HT
SS	NDA057	SW8270	3,3'-DICHLOROBENZIDINE	1130	U	1130	UJ	26	1130	ug/kg	HT
SS	NDA059	SW8270	3,3'-DICHLOROBENZIDINE	929	U	929	UJ	22	929	ug/kg	HT
SS	NDA061	SW8270	3,3'-DICHLOROBENZIDINE	938	U	938	UJ	22	938	ug/kg	HT
SS	NDA062FD1	SW8270	3,3'-DICHLOROBENZIDINE	1050	U	1050	UJ	25	1050	ug/kg	HT
SS	NDA065	SW8270	3,3'-DICHLOROBENZIDINE	842	U	842	UJ	20	842	ug/kg	HT
SS	NDA067	SW8270	3,3'-DICHLOROBENZIDINE	755	U	755	UJ	18	755	ug/kg	HT
SS	NDA069	SW8270	3,3'-DICHLOROBENZIDINE	639	U	639	UJ	15	639	ug/kg	HT
SS	NDA119	SW8270	3,3'-DICHLOROBENZIDINE	1010	U	1010	UJ	24	1010	ug/kg	HT

Matrix	Sample ID	Analytical Method	Parameter	Lab Result	Lab Qual	Final Result	Final Qual	DL	RL	Units	Comments
SS	NDA120	SW8270	3,3'-DICHLOROBENZIDINE	1080	U	1080	UJ	25	1080	ug/kg	HT
SS	NDA121	SW8270	3,3'-DICHLOROBENZIDINE	817	U	817	UJ	19	817	ug/kg	HT
SS	NDA122	SW8270	3,3'-DICHLOROBENZIDINE	901	U	901	UJ	21	901	ug/kg	HT
SS	NDA123	SW8270	3,3'-DICHLOROBENZIDINE	900	U	900	UJ	21	900	ug/kg	HT
SS	NDA124	SW8270	3,3'-DICHLOROBENZIDINE	863	U	863	UJ	20	863	ug/kg	HT
SS	NDA071	SW8270	3,3'-DICHLOROBENZIDINE	1110	U	1110	UJ	26	1110	ug/kg	HT
SS	NDA072FD1	SW8270	3,3'-DICHLOROBENZIDINE	826	U	826	UJ	19	826	ug/kg	HT
SS	NDA074	SW8270	3,3'-DICHLOROBENZIDINE	896	U	896	UJ	21	896	ug/kg	HT
SS	NDA076	SW8270	3,3'-DICHLOROBENZIDINE	838	U	838	UJ	20	838	ug/kg	HT
SS	NDA078	SW8270	3,3'-DICHLOROBENZIDINE	881	U	881	UJ	21	881	ug/kg	HT
SS	NDA080RE1	SW8270	3,3'-DICHLOROBENZIDINE	814	U	814	UJ	19	814	ug/kg	HT
SS	NDA082RE1	SW8270	3,3'-DICHLOROBENZIDINE	9320	U	9320	UJ	219	9320	ug/kg	HT
SB	NDA213	SW8270	2-NITROPHENOL	485	U	485	UJ	29	485	ug/kg	HT
SB	NDA214FD1	SW8270	2-NITROPHENOL	487	U	487	UJ	29	487	ug/kg	HT
SB	NDA215	SW8270	2-NITROPHENOL	527	U	527	UJ	32	527	ug/kg	HT
SB	NDA216	SW8270	2-NITROPHENOL	537	U	537	UJ	32	537	ug/kg	HT
SB	NDA217	SW8270	2-NITROPHENOL	540	U	540	UJ	32	540	ug/kg	HT
SB	NDA218	SW8270	2-NITROPHENOL	505	U	505	UJ	30	505	ug/kg	HT
SB	NDA219	SW8270	2-NITROPHENOL	380	U	380	UJ	23	380	ug/kg	HT
SB	NDA220	SW8270	2-NITROPHENOL	542	U	542	UJ	33	542	ug/kg	HT
SB	NDA221	SW8270	2-NITROPHENOL	501	U	501	UJ	30	501	ug/kg	HT
SB	NDA222	SW8270	2-NITROPHENOL	459	U	459	UJ	28	459	ug/kg	HT
SB	NDA223	SW8270	2-NITROPHENOL	527	U	527	UJ	32	527	ug/kg	HT
SB	NDA235	SW8270	2-NITROPHENOL	504	U	504	UJ	30	504	ug/kg	HT
SB	NDA236	SW8270	2-NITROPHENOL	423	U	423	UJ	25	423	ug/kg	HT
SB	NDA237FD1	SW8270	2-NITROPHENOL	395	U	395	UJ	24	395	ug/kg	HT
SB	NDA238	SW8270	2-NITROPHENOL	424	U	424	UJ	25	424	ug/kg	HT
SB	NDA239	SW8270	2-NITROPHENOL	555	U	555	UJ	33	555	ug/kg	HT
SB	NDA240	SW8270	2-NITROPHENOL	397	U	397	UJ	24	397	ug/kg	HT
SB	NDA241	SW8270	2-NITROPHENOL	471	U	471	UJ	28	471	ug/kg	HT
SB	NDA242	SW8270	2-NITROPHENOL	436	U	436	UJ	26	436	ug/kg	HT
SB	NDA243	SW8270	2-NITROPHENOL	893	U	893	UJ	54	893	ug/kg	HT
SB	NDA244	SW8270	2-NITROPHENOL	388	U	388	UJ	23	388	ug/kg	HT
SB	NDA245	SW8270	2-NITROPHENOL	393	U	393	UJ	24	393	ug/kg	HT
SB	NDA246	SW8270	2-NITROPHENOL	511	U	511	UJ	31	511	ug/kg	HT
SB	NDA247FD1	SW8270	2-NITROPHENOL	390	U	390	UJ	23	390	ug/kg	HT
SB	NDA248	SW8270	2-NITROPHENOL	453	U	453	UJ	27	453	ug/kg	HT
SB	NDA249	SW8270	2-NITROPHENOL	374	U	374	UJ	22	374	ug/kg	HT
SB	NDA252	SW8270	2-NITROPHENOL	420	U	420	UJ	25	420	ug/kg	HT
SB	NDA253	SW8270	2-NITROPHENOL	439	U	439	UJ	26	439	ug/kg	HT
SB	NDA254	SW8270	2-NITROPHENOL	391	U	391	UJ	23	391	ug/kg	HT
SB	NDA255	SW8270	2-NITROPHENOL	375	U	375	UJ	23	375	ug/kg	HT
SB	NDA085	SW8270	2-NITROPHENOL	482	U	482	UJ	29	482	ug/kg	HT
SB	NDA092	SW8270	2-NITROPHENOL	400	U	400	UJ	24	400	ug/kg	HT
SB	NDA093	SW8270	2-NITROPHENOL	339	U	339	UJ	20	339	ug/kg	HT
SB	NDA094	SW8270	2-NITROPHENOL	510	U	510	UJ	31	510	ug/kg	HT
SB	NDA095FD1	SW8270	2-NITROPHENOL	310	U	310	UJ	19	310	ug/kg	HT
SB	NDA296	SW8270	2-NITROPHENOL	369	U	369	UJ	22	369	ug/kg	HT
SB	NDA297	SW8270	2-NITROPHENOL	358	U	358	UJ	22	358	ug/kg	HT
SB	NDA298	SW8270	2-NITROPHENOL	341	U	341	UJ	20	341	ug/kg	HT
SB	NDA299	SW8270	2-NITROPHENOL	370	U	370	UJ	22	370	ug/kg	HT
SB	NDA058	SW8270	2-NITROPHENOL	460	U	460	UJ	28	460	ug/kg	HT
SB	NDA060	SW8270	2-NITROPHENOL	478	U	478	UJ	29	478	ug/kg	HT
SB	NDA063	SW8270	2-NITROPHENOL	382	U	382	UJ	23	382	ug/kg	HT
SB	NDA064FD1	SW8270	2-NITROPHENOL	351	U	351	UJ	21	351	ug/kg	HT
SB	NDA066	SW8270	2-NITROPHENOL	344	U	344	UJ	21	344	ug/kg	HT
SB	NDA068	SW8270	2-NITROPHENOL	360	U	360	UJ	22	360	ug/kg	HT
SB	NDA070	SW8270	2-NITROPHENOL	404	U	404	UJ	24	404	ug/kg	HT
SB	NDA073	SW8270	2-NITROPHENOL	383	U	383	UJ	23	383	ug/kg	HT
SB	NDA075	SW8270	2-NITROPHENOL	401	U	401	UJ	24	401	ug/kg	HT
SB	NDA077	SW8270	2-NITROPHENOL	441	U	441	UJ	26	441	ug/kg	HT
SB	NDA079	SW8270	2-NITROPHENOL	466	U	466	UJ	28	466	ug/kg	HT
SB	NDA081RE1	SW8270	2-NITROPHENOL	393	U	393	UJ	24	393	ug/kg	HT
SB	NDA083RE1	SW8270	2-NITROPHENOL	4240	U	4240	UJ	254	4240	ug/kg	HT
SD	NDA054	SW8270	2-NITROPHENOL	480	U	480	UJ	29	480	ug/kg	HT
SD	NDA055	SW8270	2-NITROPHENOL	696	U	696	UJ	42	696	ug/kg	HT
SD	NDA042	SW8270	2-NITROPHENOL	686	U	686	UJ	41	686	ug/kg	HT
SD	NDA043	SW8270	2-NITROPHENOL	735	U	735	UJ	44	735	ug/kg	HT
SD	NDA044	SW8270	2-NITROPHENOL	1680	U	1680	UJ	101	1680	ug/kg	HT
SD	NDA045	SW8270	2-NITROPHENOL	1500	U	1500	UJ	90	1500	ug/kg	HT

Matrix	Sample ID	Analytical Method	Parameter	Lab Result	Lab Qual	Final Result	Final Qual	DL	RL	Units	Comments
SD	NDA046	SW8270	2-NITROPHENOL	1520	U	1520	UJ	91	1520	ug/kg	HT
SD	NDA302	SW8270	2-NITROPHENOL	1200	U	1200	UJ	72	1200	ug/kg	HT
SD	NDA303	SW8270	2-NITROPHENOL	2300	U	2300	UJ	138	2300	ug/kg	HT
SD	NDA307FD1	SW8270	2-NITROPHENOL	2130	U	2130	UJ	128	2130	ug/kg	HT
SD	NDA047	SW8270	2-NITROPHENOL	503	U	503	UJ	30	503	ug/kg	HT
SD	NDA048	SW8270	2-NITROPHENOL	558	U	558	UJ	34	558	ug/kg	HT
SD	NDA049	SW8270	2-NITROPHENOL	463	U	463	UJ	28	463	ug/kg	HT
SS	NDA178	SW8270	2-NITROPHENOL	644	U	644	UJ	39	644	ug/kg	HT
SS	NDA179	SW8270	2-NITROPHENOL	644	U	644	UJ	39	644	ug/kg	HT
SS	NDA180	SW8270	2-NITROPHENOL	550	U	550	UJ	33	550	ug/kg	HT
SS	NDA181	SW8270	2-NITROPHENOL	566	U	566	UJ	34	566	ug/kg	HT
SS	NDA182	SW8270	2-NITROPHENOL	679	U	679	UJ	41	679	ug/kg	HT
SS	NDA183	SW8270	2-NITROPHENOL	589	U	589	UJ	35	589	ug/kg	HT
SS	NDA184FD1	SW8270	2-NITROPHENOL	662	U	662	UJ	40	662	ug/kg	HT
SS	NDA201	SW8270	2-NITROPHENOL	491	U	491	UJ	29	491	ug/kg	HT
SS	NDA202	SW8270	2-NITROPHENOL	605	U	605	UJ	36	605	ug/kg	HT
SS	NDA203	SW8270	2-NITROPHENOL	617	U	617	UJ	37	617	ug/kg	HT
SS	NDA204	SW8270	2-NITROPHENOL	753	U	753	UJ	45	753	ug/kg	HT
SS	NDA205FD1	SW8270	2-NITROPHENOL	668	U	668	UJ	40	668	ug/kg	HT
SS	NDA206	SW8270	2-NITROPHENOL	529	U	529	UJ	32	529	ug/kg	HT
SS	NDA207	SW8270	2-NITROPHENOL	669	U	669	UJ	40	669	ug/kg	HT
SS	NDA208	SW8270	2-NITROPHENOL	520	U	520	UJ	31	520	ug/kg	HT
SS	NDA209	SW8270	2-NITROPHENOL	570	U	570	UJ	34	570	ug/kg	HT
SS	NDA210	SW8270	2-NITROPHENOL	545	U	545	UJ	33	545	ug/kg	HT
SS	NDA211	SW8270	2-NITROPHENOL	742	U	742	UJ	45	742	ug/kg	HT
SS	NDA212	SW8270	2-NITROPHENOL	651	U	651	UJ	39	651	ug/kg	HT
SS	NDA185	SW8270	2-NITROPHENOL	445	U	445	UJ	27	445	ug/kg	HT
SS	NDA186	SW8270	2-NITROPHENOL	416	U	416	UJ	25	416	ug/kg	HT
SS	NDA187	SW8270	2-NITROPHENOL	380	U	380	UJ	23	380	ug/kg	HT
SS	NDA188	SW8270	2-NITROPHENOL	810	U	810	UJ	49	810	ug/kg	HT
SS	NDA189	SW8270	2-NITROPHENOL	426	U	426	UJ	26	426	ug/kg	HT
SS	NDA190	SW8270	2-NITROPHENOL	430	U	430	UJ	26	430	ug/kg	HT
SS	NDA191	SW8270	2-NITROPHENOL	338	U	338	UJ	20	338	ug/kg	HT
SS	NDA192FD1	SW8270	2-NITROPHENOL	418	U	418	UJ	25	418	ug/kg	HT
SS	NDA193	SW8270	2-NITROPHENOL	1720	U	1720	UJ	103	1720	ug/kg	HT
SS	NDA194	SW8270	2-NITROPHENOL	480	U	480	UJ	29	480	ug/kg	HT
SS	NDA195	SW8270	2-NITROPHENOL	323	U	323	UJ	19	323	ug/kg	HT
SS	NDA084	SW8270	2-NITROPHENOL	344	U	344	UJ	21	344	ug/kg	HT
SS	NDA091	SW8270	2-NITROPHENOL	367	U	367	UJ	22	367	ug/kg	HT
SS	NDA057	SW8270	2-NITROPHENOL	563	U	563	UJ	34	563	ug/kg	HT
SS	NDA059	SW8270	2-NITROPHENOL	465	U	465	UJ	28	465	ug/kg	HT
SS	NDA061	SW8270	2-NITROPHENOL	469	U	469	UJ	28	469	ug/kg	HT
SS	NDA062FD1	SW8270	2-NITROPHENOL	523	U	523	UJ	31	523	ug/kg	HT
SS	NDA065	SW8270	2-NITROPHENOL	421	U	421	UJ	25	421	ug/kg	HT
SS	NDA067	SW8270	2-NITROPHENOL	378	U	378	UJ	23	378	ug/kg	HT
SS	NDA069	SW8270	2-NITROPHENOL	320	U	320	UJ	19	320	ug/kg	HT
SS	NDA119	SW8270	2-NITROPHENOL	503	U	503	UJ	30	503	ug/kg	HT
SS	NDA120	SW8270	2-NITROPHENOL	541	U	541	UJ	32	541	ug/kg	HT
SS	NDA121	SW8270	2-NITROPHENOL	409	U	409	UJ	25	409	ug/kg	HT
SS	NDA122	SW8270	2-NITROPHENOL	450	U	450	UJ	27	450	ug/kg	HT
SS	NDA123	SW8270	2-NITROPHENOL	450	U	450	UJ	27	450	ug/kg	HT
SS	NDA124	SW8270	2-NITROPHENOL	432	U	432	UJ	26	432	ug/kg	HT
SS	NDA071	SW8270	2-NITROPHENOL	554	U	554	UJ	33	554	ug/kg	HT
SS	NDA072FD1	SW8270	2-NITROPHENOL	413	U	413	UJ	25	413	ug/kg	HT
SS	NDA074	SW8270	2-NITROPHENOL	448	U	448	UJ	27	448	ug/kg	HT
SS	NDA076	SW8270	2-NITROPHENOL	419	U	419	UJ	25	419	ug/kg	HT
SS	NDA078	SW8270	2-NITROPHENOL	440	U	440	UJ	26	440	ug/kg	HT
SS	NDA080RE1	SW8270	2-NITROPHENOL	407	U	407	UJ	24	407	ug/kg	HT
SS	NDA082RE1	SW8270	2-NITROPHENOL	4660	U	4660	UJ	280	4660	ug/kg	HT
SB	NDA213	SW8270	2-NITROANILINE	1440	U	1440	UJ	24	1440	ug/kg	HT
SB	NDA214FD1	SW8270	2-NITROANILINE	1450	U	1450	UJ	24	1450	ug/kg	HT
SB	NDA215	SW8270	2-NITROANILINE	1570	U	1570	UJ	26	1570	ug/kg	HT
SB	NDA216	SW8270	2-NITROANILINE	1590	U	1590	UJ	27	1590	ug/kg	HT
SB	NDA217	SW8270	2-NITROANILINE	1600	U	1600	UJ	27	1600	ug/kg	HT
SB	NDA218	SW8270	2-NITROANILINE	1500	U	1500	UJ	25	1500	ug/kg	HT
SB	NDA219	SW8270	2-NITROANILINE	1130	U	1130	UJ	19	1130	ug/kg	HT
SB	NDA220	SW8270	2-NITROANILINE	1610	U	1610	UJ	27	1610	ug/kg	HT
SB	NDA221	SW8270	2-NITROANILINE	1490	U	1490	UJ	25	1490	ug/kg	HT
SB	NDA222	SW8270	2-NITROANILINE	1360	U	1360	UJ	23	1360	ug/kg	HT
SB	NDA223	SW8270	2-NITROANILINE	1570	U	1570	UJ	26	1570	ug/kg	HT

Matrix	Sample ID	Analytical Method	Parameter	Lab Result	Lab Qual	Final Result	Final Qual	DL	RL	Units	Comments
SB	NDA235	SW8270	2-NITROANILINE	1510	U	1510	UJ	25	1510	ug/kg	HT
SB	NDA236	SW8270	2-NITROANILINE	1270	U	1270	UJ	21	1270	ug/kg	HT
SB	NDA237FD1	SW8270	2-NITROANILINE	1180	U	1180	UJ	20	1180	ug/kg	HT
SB	NDA238	SW8270	2-NITROANILINE	1270	U	1270	UJ	21	1270	ug/kg	HT
SB	NDA239	SW8270	2-NITROANILINE	1660	U	1660	UJ	28	1660	ug/kg	HT
SB	NDA240	SW8270	2-NITROANILINE	1190	U	1190	UJ	20	1190	ug/kg	HT
SB	NDA241	SW8270	2-NITROANILINE	1410	U	1410	UJ	24	1410	ug/kg	HT
SB	NDA242	SW8270	2-NITROANILINE	1310	U	1310	UJ	22	1310	ug/kg	HT
SB	NDA243	SW8270	2-NITROANILINE	2680	U	2680	UJ	45	2680	ug/kg	HT
SB	NDA244	SW8270	2-NITROANILINE	1160	U	1160	UJ	19	1160	ug/kg	HT
SB	NDA245	SW8270	2-NITROANILINE	1180	U	1180	UJ	20	1180	ug/kg	HT
SB	NDA246	SW8270	2-NITROANILINE	1530	U	1530	UJ	26	1530	ug/kg	HT
SB	NDA247FD1	SW8270	2-NITROANILINE	1170	U	1170	UJ	20	1170	ug/kg	HT
SB	NDA248	SW8270	2-NITROANILINE	1360	U	1360	UJ	23	1360	ug/kg	HT
SB	NDA249	SW8270	2-NITROANILINE	1120	U	1120	UJ	19	1120	ug/kg	HT
SB	NDA252	SW8270	2-NITROANILINE	1260	U	1260	UJ	21	1260	ug/kg	HT
SB	NDA253	SW8270	2-NITROANILINE	1320	U	1320	UJ	22	1320	ug/kg	HT
SB	NDA254	SW8270	2-NITROANILINE	1170	U	1170	UJ	20	1170	ug/kg	HT
SB	NDA255	SW8270	2-NITROANILINE	1130	U	1130	UJ	19	1130	ug/kg	HT
SB	NDA085	SW8270	2-NITROANILINE	1450	U	1450	UJ	24	1450	ug/kg	HT
SB	NDA092	SW8270	2-NITROANILINE	1200	U	1200	UJ	20	1200	ug/kg	HT
SB	NDA093	SW8270	2-NITROANILINE	1020	U	1020	UJ	17	1020	ug/kg	HT
SB	NDA094	SW8270	2-NITROANILINE	1530	U	1530	UJ	26	1530	ug/kg	HT
SB	NDA095FD1	SW8270	2-NITROANILINE	931	U	931	UJ	16	931	ug/kg	HT
SB	NDA296	SW8270	2-NITROANILINE	1110	U	1110	UJ	18	1110	ug/kg	HT
SB	NDA297	SW8270	2-NITROANILINE	1080	U	1080	UJ	18	1080	ug/kg	HT
SB	NDA298	SW8270	2-NITROANILINE	1020	U	1020	UJ	17	1020	ug/kg	HT
SB	NDA299	SW8270	2-NITROANILINE	1110	U	1110	UJ	19	1110	ug/kg	HT
SB	NDA058	SW8270	2-NITROANILINE	1380	U	1380	UJ	23	1380	ug/kg	HT
SB	NDA060	SW8270	2-NITROANILINE	1430	U	1430	UJ	24	1430	ug/kg	HT
SB	NDA063	SW8270	2-NITROANILINE	1150	U	1150	UJ	19	1150	ug/kg	HT
SB	NDA064FD1	SW8270	2-NITROANILINE	1050	U	1050	UJ	18	1050	ug/kg	HT
SB	NDA066	SW8270	2-NITROANILINE	1030	U	1030	UJ	17	1030	ug/kg	HT
SB	NDA068	SW8270	2-NITROANILINE	1080	U	1080	UJ	18	1080	ug/kg	HT
SB	NDA070	SW8270	2-NITROANILINE	1210	U	1210	UJ	20	1210	ug/kg	HT
SB	NDA073	SW8270	2-NITROANILINE	1150	U	1150	UJ	19	1150	ug/kg	HT
SB	NDA075	SW8270	2-NITROANILINE	1200	U	1200	UJ	20	1200	ug/kg	HT
SB	NDA077	SW8270	2-NITROANILINE	1320	U	1320	UJ	22	1320	ug/kg	HT
SB	NDA079	SW8270	2-NITROANILINE	1400	U	1400	UJ	23	1400	ug/kg	HT
SB	NDA081RE1	SW8270	2-NITROANILINE	1180	U	1180	UJ	20	1180	ug/kg	HT
SB	NDA083RE1	SW8270	2-NITROANILINE	12700	U	12700	UJ	212	12700	ug/kg	HT
SD	NDA054	SW8270	2-NITROANILINE	1430	U	1430	UJ	24	1430	ug/kg	HT
SD	NDA055	SW8270	2-NITROANILINE	2070	U	2070	UJ	35	2070	ug/kg	HT
SD	NDA042	SW8270	2-NITROANILINE	2060	U	2060	UJ	34	2060	ug/kg	HT
SD	NDA043	SW8270	2-NITROANILINE	2200	U	2200	UJ	37	2200	ug/kg	HT
SD	NDA044	SW8270	2-NITROANILINE	5050	U	5050	UJ	84	5050	ug/kg	HT
SD	NDA045	SW8270	2-NITROANILINE	4500	U	4500	UJ	75	4500	ug/kg	HT
SD	NDA046	SW8270	2-NITROANILINE	4560	U	4560	UJ	76	4560	ug/kg	HT
SD	NDA302	SW8270	2-NITROANILINE	3600	U	3600	UJ	60	3600	ug/kg	HT
SD	NDA303	SW8270	2-NITROANILINE	6900	U	6900	UJ	115	6900	ug/kg	HT
SD	NDA307FD1	SW8270	2-NITROANILINE	6380	U	6380	UJ	106	6380	ug/kg	HT
SD	NDA047	SW8270	2-NITROANILINE	1510	U	1510	UJ	25	1510	ug/kg	HT
SD	NDA048	SW8270	2-NITROANILINE	1680	U	1680	UJ	28	1680	ug/kg	HT
SD	NDA049	SW8270	2-NITROANILINE	1390	U	1390	UJ	23	1390	ug/kg	HT
SS	NDA178	SW8270	2-NITROANILINE	1930	U	1930	UJ	32	1930	ug/kg	HT
SS	NDA179	SW8270	2-NITROANILINE	1930	U	1930	UJ	32	1930	ug/kg	HT
SS	NDA180	SW8270	2-NITROANILINE	1650	U	1650	UJ	27	1650	ug/kg	HT
SS	NDA181	SW8270	2-NITROANILINE	1700	U	1700	UJ	28	1700	ug/kg	HT
SS	NDA182	SW8270	2-NITROANILINE	2040	U	2040	UJ	34	2040	ug/kg	HT
SS	NDA183	SW8270	2-NITROANILINE	1770	U	1770	UJ	29	1770	ug/kg	HT
SS	NDA184FD1	SW8270	2-NITROANILINE	1990	U	1990	UJ	33	1990	ug/kg	HT
SS	NDA201	SW8270	2-NITROANILINE	1470	U	1470	UJ	25	1470	ug/kg	HT
SS	NDA202	SW8270	2-NITROANILINE	1820	U	1820	UJ	30	1820	ug/kg	HT
SS	NDA203	SW8270	2-NITROANILINE	1850	U	1850	UJ	31	1850	ug/kg	HT
SS	NDA204	SW8270	2-NITROANILINE	2260	U	2260	UJ	38	2260	ug/kg	HT
SS	NDA205FD1	SW8270	2-NITROANILINE	2000	U	2000	UJ	33	2000	ug/kg	HT
SS	NDA206	SW8270	2-NITROANILINE	1590	U	1590	UJ	26	1590	ug/kg	HT
SS	NDA207	SW8270	2-NITROANILINE	2010	U	2010	UJ	33	2010	ug/kg	HT
SS	NDA208	SW8270	2-NITROANILINE	1560	U	1560	UJ	26	1560	ug/kg	HT
SS	NDA209	SW8270	2-NITROANILINE	1710	U	1710	UJ	29	1710	ug/kg	HT

Matrix	Sample ID	Analytical Method	Parameter	Lab Result	Lab Qual	Final Result	Final Qual	DL	RL	Units	Comments
SS	NDA210	SW8270	2-NITROANILINE	1630	U	1630	UJ	27	1630	ug/kg	HT
SS	NDA211	SW8270	2-NITROANILINE	2230	U	2230	UJ	37	2230	ug/kg	HT
SS	NDA212	SW8270	2-NITROANILINE	1950	U	1950	UJ	33	1950	ug/kg	HT
SS	NDA185	SW8270	2-NITROANILINE	1340	U	1340	UJ	22	1340	ug/kg	HT
SS	NDA186	SW8270	2-NITROANILINE	1250	U	1250	UJ	21	1250	ug/kg	HT
SS	NDA187	SW8270	2-NITROANILINE	1140	U	1140	UJ	19	1140	ug/kg	HT
SS	NDA188	SW8270	2-NITROANILINE	2430	U	2430	UJ	40	2430	ug/kg	HT
SS	NDA189	SW8270	2-NITROANILINE	1280	U	1280	UJ	21	1280	ug/kg	HT
SS	NDA190	SW8270	2-NITROANILINE	1290	U	1290	UJ	21	1290	ug/kg	HT
SS	NDA191	SW8270	2-NITROANILINE	1010	U	1010	UJ	17	1010	ug/kg	HT
SS	NDA192FD1	SW8270	2-NITROANILINE	1250	U	1250	UJ	21	1250	ug/kg	HT
SS	NDA193	SW8270	2-NITROANILINE	5160	U	5160	UJ	86	5160	ug/kg	HT
SS	NDA194	SW8270	2-NITROANILINE	1440	U	1440	UJ	24	1440	ug/kg	HT
SS	NDA195	SW8270	2-NITROANILINE	969	U	969	UJ	16	969	ug/kg	HT
SS	NDA084	SW8270	2-NITROANILINE	1030	U	1030	UJ	17	1030	ug/kg	HT
SS	NDA091	SW8270	2-NITROANILINE	1100	U	1100	UJ	18	1100	ug/kg	HT
SS	NDA057	SW8270	2-NITROANILINE	1690	U	1690	UJ	28	1690	ug/kg	HT
SS	NDA059	SW8270	2-NITROANILINE	1390	U	1390	UJ	23	1390	ug/kg	HT
SS	NDA061	SW8270	2-NITROANILINE	1410	U	1410	UJ	23	1410	ug/kg	HT
SS	NDA062FD1	SW8270	2-NITROANILINE	1570	U	1570	UJ	26	1570	ug/kg	HT
SS	NDA065	SW8270	2-NITROANILINE	1260	U	1260	UJ	21	1260	ug/kg	HT
SS	NDA067	SW8270	2-NITROANILINE	1130	U	1130	UJ	19	1130	ug/kg	HT
SS	NDA069	SW8270	2-NITROANILINE	959	U	959	UJ	16	959	ug/kg	HT
SS	NDA119	SW8270	2-NITROANILINE	1510	U	1510	UJ	25	1510	ug/kg	HT
SS	NDA120	SW8270	2-NITROANILINE	1620	U	1620	UJ	27	1620	ug/kg	HT
SS	NDA121	SW8270	2-NITROANILINE	1230	U	1230	UJ	20	1230	ug/kg	HT
SS	NDA122	SW8270	2-NITROANILINE	1350	U	1350	UJ	23	1350	ug/kg	HT
SS	NDA123	SW8270	2-NITROANILINE	1350	U	1350	UJ	23	1350	ug/kg	HT
SS	NDA124	SW8270	2-NITROANILINE	1290	U	1290	UJ	22	1290	ug/kg	HT
SS	NDA071	SW8270	2-NITROANILINE	1660	U	1660	UJ	28	1660	ug/kg	HT
SS	NDA072FD1	SW8270	2-NITROANILINE	1240	U	1240	UJ	21	1240	ug/kg	HT
SS	NDA074	SW8270	2-NITROANILINE	1340	U	1340	UJ	22	1340	ug/kg	HT
SS	NDA076	SW8270	2-NITROANILINE	1260	U	1260	UJ	21	1260	ug/kg	HT
SS	NDA078	SW8270	2-NITROANILINE	1320	U	1320	UJ	22	1320	ug/kg	HT
SS	NDA080RE1	SW8270	2-NITROANILINE	1220	U	1220	UJ	20	1220	ug/kg	HT
SS	NDA082RE1	SW8270	2-NITROANILINE	14000	U	14000	UJ	233	14000	ug/kg	HT
SB	NDA213	SW8270	2-METHYLPHENOL (o-CRESOL)	485	U	485	UJ	35	485	ug/kg	HT
SB	NDA214FD1	SW8270	2-METHYLPHENOL (o-CRESOL)	487	U	487	UJ	36	487	ug/kg	HT
SB	NDA215	SW8270	2-METHYLPHENOL (o-CRESOL)	527	U	527	UJ	39	527	ug/kg	HT
SB	NDA216	SW8270	2-METHYLPHENOL (o-CRESOL)	537	U	537	UJ	39	537	ug/kg	HT
SB	NDA217	SW8270	2-METHYLPHENOL (o-CRESOL)	540	U	540	UJ	39	540	ug/kg	HT
SB	NDA218	SW8270	2-METHYLPHENOL (o-CRESOL)	505	U	505	UJ	37	505	ug/kg	HT
SB	NDA219	SW8270	2-METHYLPHENOL (o-CRESOL)	380	U	380	UJ	28	380	ug/kg	HT
SB	NDA220	SW8270	2-METHYLPHENOL (o-CRESOL)	542	U	542	UJ	40	542	ug/kg	HT
SB	NDA221	SW8270	2-METHYLPHENOL (o-CRESOL)	501	U	501	UJ	37	501	ug/kg	HT
SB	NDA222	SW8270	2-METHYLPHENOL (o-CRESOL)	459	U	459	UJ	34	459	ug/kg	HT
SB	NDA223	SW8270	2-METHYLPHENOL (o-CRESOL)	527	U	527	UJ	38	527	ug/kg	HT
SB	NDA235	SW8270	2-METHYLPHENOL (o-CRESOL)	504	U	504	UJ	37	504	ug/kg	HT
SB	NDA236	SW8270	2-METHYLPHENOL (o-CRESOL)	423	U	423	UJ	31	423	ug/kg	HT
SB	NDA237FD1	SW8270	2-METHYLPHENOL (o-CRESOL)	395	U	395	UJ	29	395	ug/kg	HT
SB	NDA238	SW8270	2-METHYLPHENOL (o-CRESOL)	424	U	424	UJ	31	424	ug/kg	HT
SB	NDA239	SW8270	2-METHYLPHENOL (o-CRESOL)	555	U	555	UJ	41	555	ug/kg	HT
SB	NDA240	SW8270	2-METHYLPHENOL (o-CRESOL)	397	U	397	UJ	29	397	ug/kg	HT
SB	NDA241	SW8270	2-METHYLPHENOL (o-CRESOL)	471	U	471	UJ	34	471	ug/kg	HT
SB	NDA242	SW8270	2-METHYLPHENOL (o-CRESOL)	436	U	436	UJ	32	436	ug/kg	HT
SB	NDA243	SW8270	2-METHYLPHENOL (o-CRESOL)	893	U	893	UJ	65	893	ug/kg	HT
SB	NDA244	SW8270	2-METHYLPHENOL (o-CRESOL)	388	U	388	UJ	28	388	ug/kg	HT
SB	NDA245	SW8270	2-METHYLPHENOL (o-CRESOL)	393	U	393	UJ	29	393	ug/kg	HT
SB	NDA246	SW8270	2-METHYLPHENOL (o-CRESOL)	511	U	511	UJ	37	511	ug/kg	HT
SB	NDA247FD1	SW8270	2-METHYLPHENOL (o-CRESOL)	390	U	390	UJ	28	390	ug/kg	HT
SB	NDA248	SW8270	2-METHYLPHENOL (o-CRESOL)	453	U	453	UJ	33	453	ug/kg	HT
SB	NDA249	SW8270	2-METHYLPHENOL (o-CRESOL)	374	U	374	UJ	27	374	ug/kg	HT
SB	NDA252	SW8270	2-METHYLPHENOL (o-CRESOL)	420	U	420	UJ	31	420	ug/kg	HT
SB	NDA253	SW8270	2-METHYLPHENOL (o-CRESOL)	439	U	439	UJ	32	439	ug/kg	HT
SB	NDA254	SW8270	2-METHYLPHENOL (o-CRESOL)	391	U	391	UJ	29	391	ug/kg	HT
SB	NDA255	SW8270	2-METHYLPHENOL (o-CRESOL)	375	U	375	UJ	27	375	ug/kg	HT
SB	NDA085	SW8270	2-METHYLPHENOL (o-CRESOL)	482	U	482	UJ	35	482	ug/kg	HT
SB	NDA092	SW8270	2-METHYLPHENOL (o-CRESOL)	400	U	400	UJ	29	400	ug/kg	HT
SB	NDA093	SW8270	2-METHYLPHENOL (o-CRESOL)	339	U	339	UJ	25	339	ug/kg	HT
SB	NDA094	SW8270	2-METHYLPHENOL (o-CRESOL)	510	U	510	UJ	37	510	ug/kg	HT

Matrix	Sample ID	Analytical Method	Parameter	Lab Result	Lab Qual	Final Result	Final Qual	DL	RL	Units	Comments
SB	NDA095FD1	SW8270	2-METHYLPHENOL (o-CRESOL)	310	U	310	UJ	23	310	ug/kg	HT
SB	NDA296	SW8270	2-METHYLPHENOL (o-CRESOL)	369	U	369	UJ	27	369	ug/kg	HT
SB	NDA297	SW8270	2-METHYLPHENOL (o-CRESOL)	358	U	358	UJ	26	358	ug/kg	HT
SB	NDA298	SW8270	2-METHYLPHENOL (o-CRESOL)	341	U	341	UJ	25	341	ug/kg	HT
SB	NDA299	SW8270	2-METHYLPHENOL (o-CRESOL)	370	U	370	UJ	27	370	ug/kg	HT
SB	NDA058	SW8270	2-METHYLPHENOL (o-CRESOL)	460	U	460	UJ	34	460	ug/kg	HT
SB	NDA060	SW8270	2-METHYLPHENOL (o-CRESOL)	478	U	478	UJ	35	478	ug/kg	HT
SB	NDA063	SW8270	2-METHYLPHENOL (o-CRESOL)	382	U	382	UJ	28	382	ug/kg	HT
SB	NDA064FD1	SW8270	2-METHYLPHENOL (o-CRESOL)	351	U	351	UJ	26	351	ug/kg	HT
SB	NDA066	SW8270	2-METHYLPHENOL (o-CRESOL)	344	U	344	UJ	25	344	ug/kg	HT
SB	NDA068	SW8270	2-METHYLPHENOL (o-CRESOL)	360	U	360	UJ	26	360	ug/kg	HT
SB	NDA070	SW8270	2-METHYLPHENOL (o-CRESOL)	404	U	404	UJ	29	404	ug/kg	HT
SB	NDA073	SW8270	2-METHYLPHENOL (o-CRESOL)	383	U	383	UJ	28	383	ug/kg	HT
SB	NDA075	SW8270	2-METHYLPHENOL (o-CRESOL)	401	U	401	UJ	29	401	ug/kg	HT
SB	NDA077	SW8270	2-METHYLPHENOL (o-CRESOL)	441	U	441	UJ	32	441	ug/kg	HT
SB	NDA079	SW8270	2-METHYLPHENOL (o-CRESOL)	466	U	466	UJ	34	466	ug/kg	HT
SB	NDA081RE1	SW8270	2-METHYLPHENOL (o-CRESOL)	393	U	393	UJ	29	393	ug/kg	HT
SB	NDA083RE1	SW8270	2-METHYLPHENOL (o-CRESOL)	4240	U	4240	UJ	309	4240	ug/kg	HT
SD	NDA054	SW8270	2-METHYLPHENOL (o-CRESOL)	480	U	480	UJ	35	480	ug/kg	HT
SD	NDA055	SW8270	2-METHYLPHENOL (o-CRESOL)	696	U	696	UJ	51	696	ug/kg	HT
SD	NDA042	SW8270	2-METHYLPHENOL (o-CRESOL)	686	U	686	UJ	50	686	ug/kg	HT
SD	NDA043	SW8270	2-METHYLPHENOL (o-CRESOL)	735	U	735	UJ	54	735	ug/kg	HT
SD	NDA044	SW8270	2-METHYLPHENOL (o-CRESOL)	1680	U	1680	UJ	123	1680	ug/kg	HT
SD	NDA045	SW8270	2-METHYLPHENOL (o-CRESOL)	1500	U	1500	UJ	110	1500	ug/kg	HT
SD	NDA046	SW8270	2-METHYLPHENOL (o-CRESOL)	1520	U	1520	UJ	111	1520	ug/kg	HT
SD	NDA302	SW8270	2-METHYLPHENOL (o-CRESOL)	1200	U	1200	UJ	88	1200	ug/kg	HT
SD	NDA303	SW8270	2-METHYLPHENOL (o-CRESOL)	2300	U	2300	UJ	168	2300	ug/kg	HT
SD	NDA307FD1	SW8270	2-METHYLPHENOL (o-CRESOL)	2130	U	2130	UJ	155	2130	ug/kg	HT
SD	NDA047	SW8270	2-METHYLPHENOL (o-CRESOL)	503	U	503	UJ	37	503	ug/kg	HT
SD	NDA048	SW8270	2-METHYLPHENOL (o-CRESOL)	558	U	558	UJ	41	558	ug/kg	HT
SD	NDA049	SW8270	2-METHYLPHENOL (o-CRESOL)	463	U	463	UJ	34	463	ug/kg	HT
SS	NDA178	SW8270	2-METHYLPHENOL (o-CRESOL)	644	U	644	UJ	47	644	ug/kg	HT
SS	NDA179	SW8270	2-METHYLPHENOL (o-CRESOL)	644	U	644	UJ	47	644	ug/kg	HT
SS	NDA180	SW8270	2-METHYLPHENOL (o-CRESOL)	550	U	550	UJ	40	550	ug/kg	HT
SS	NDA181	SW8270	2-METHYLPHENOL (o-CRESOL)	566	U	566	UJ	41	566	ug/kg	HT
SS	NDA182	SW8270	2-METHYLPHENOL (o-CRESOL)	679	U	679	UJ	50	679	ug/kg	HT
SS	NDA183	SW8270	2-METHYLPHENOL (o-CRESOL)	589	U	589	UJ	43	589	ug/kg	HT
SS	NDA184FD1	SW8270	2-METHYLPHENOL (o-CRESOL)	662	U	662	UJ	48	662	ug/kg	HT
SS	NDA201	SW8270	2-METHYLPHENOL (o-CRESOL)	491	U	491	UJ	36	491	ug/kg	HT
SS	NDA202	SW8270	2-METHYLPHENOL (o-CRESOL)	605	U	605	UJ	44	605	ug/kg	HT
SS	NDA203	SW8270	2-METHYLPHENOL (o-CRESOL)	617	U	617	UJ	45	617	ug/kg	HT
SS	NDA204	SW8270	2-METHYLPHENOL (o-CRESOL)	753	U	753	UJ	55	753	ug/kg	HT
SS	NDA205FD1	SW8270	2-METHYLPHENOL (o-CRESOL)	668	U	668	UJ	49	668	ug/kg	HT
SS	NDA206	SW8270	2-METHYLPHENOL (o-CRESOL)	529	U	529	UJ	39	529	ug/kg	HT
SS	NDA207	SW8270	2-METHYLPHENOL (o-CRESOL)	669	U	669	UJ	49	669	ug/kg	HT
SS	NDA208	SW8270	2-METHYLPHENOL (o-CRESOL)	520	U	520	UJ	38	520	ug/kg	HT
SS	NDA209	SW8270	2-METHYLPHENOL (o-CRESOL)	570	U	570	UJ	42	570	ug/kg	HT
SS	NDA210	SW8270	2-METHYLPHENOL (o-CRESOL)	545	U	545	UJ	40	545	ug/kg	HT
SS	NDA211	SW8270	2-METHYLPHENOL (o-CRESOL)	742	U	742	UJ	54	742	ug/kg	HT
SS	NDA212	SW8270	2-METHYLPHENOL (o-CRESOL)	651	U	651	UJ	48	651	ug/kg	HT
SS	NDA185	SW8270	2-METHYLPHENOL (o-CRESOL)	445	U	445	UJ	33	445	ug/kg	HT
SS	NDA186	SW8270	2-METHYLPHENOL (o-CRESOL)	416	U	416	UJ	30	416	ug/kg	HT
SS	NDA187	SW8270	2-METHYLPHENOL (o-CRESOL)	380	U	380	UJ	28	380	ug/kg	HT
SS	NDA188	SW8270	2-METHYLPHENOL (o-CRESOL)	810	U	810	UJ	59	810	ug/kg	HT
SS	NDA189	SW8270	2-METHYLPHENOL (o-CRESOL)	426	U	426	UJ	31	426	ug/kg	HT
SS	NDA190	SW8270	2-METHYLPHENOL (o-CRESOL)	430	U	430	UJ	31	430	ug/kg	HT
SS	NDA191	SW8270	2-METHYLPHENOL (o-CRESOL)	338	U	338	UJ	25	338	ug/kg	HT
SS	NDA192FD1	SW8270	2-METHYLPHENOL (o-CRESOL)	418	U	418	UJ	30	418	ug/kg	HT
SS	NDA193	SW8270	2-METHYLPHENOL (o-CRESOL)	1720	U	1720	UJ	126	1720	ug/kg	HT
SS	NDA194	SW8270	2-METHYLPHENOL (o-CRESOL)	480	U	480	UJ	35	480	ug/kg	HT
SS	NDA195	SW8270	2-METHYLPHENOL (o-CRESOL)	323	U	323	UJ	24	323	ug/kg	HT
SS	NDA084	SW8270	2-METHYLPHENOL (o-CRESOL)	344	U	344	UJ	25	344	ug/kg	HT
SS	NDA091	SW8270	2-METHYLPHENOL (o-CRESOL)	367	U	367	UJ	27	367	ug/kg	HT
SS	NDA057	SW8270	2-METHYLPHENOL (o-CRESOL)	563	U	563	UJ	41	563	ug/kg	HT
SS	NDA059	SW8270	2-METHYLPHENOL (o-CRESOL)	465	U	465	UJ	34	465	ug/kg	HT
SS	NDA061	SW8270	2-METHYLPHENOL (o-CRESOL)	469	U	469	UJ	34	469	ug/kg	HT
SS	NDA062FD1	SW8270	2-METHYLPHENOL (o-CRESOL)	523	U	523	UJ	38	523	ug/kg	HT
SS	NDA065	SW8270	2-METHYLPHENOL (o-CRESOL)	421	U	421	UJ	31	421	ug/kg	HT
SS	NDA067	SW8270	2-METHYLPHENOL (o-CRESOL)	378	U	378	UJ	28	378	ug/kg	HT
SS	NDA069	SW8270	2-METHYLPHENOL (o-CRESOL)	320	U	320	UJ	23	320	ug/kg	HT

Matrix	Sample ID	Analytical Method	Parameter	Lab Result	Lab Qual	Final Result	Final Qual	DL	RL	Units	Comments
SS	NDA119	SW8270	2-METHYLPHENOL (o-CRESOL)	503	U	503	UJ	37	503	ug/kg	HT
SS	NDA120	SW8270	2-METHYLPHENOL (o-CRESOL)	541	U	541	UJ	40	541	ug/kg	HT
SS	NDA121	SW8270	2-METHYLPHENOL (o-CRESOL)	409	U	409	UJ	30	409	ug/kg	HT
SS	NDA122	SW8270	2-METHYLPHENOL (o-CRESOL)	450	U	450	UJ	33	450	ug/kg	HT
SS	NDA123	SW8270	2-METHYLPHENOL (o-CRESOL)	450	U	450	UJ	33	450	ug/kg	HT
SS	NDA124	SW8270	2-METHYLPHENOL (o-CRESOL)	432	U	432	UJ	32	432	ug/kg	HT
SS	NDA071	SW8270	2-METHYLPHENOL (o-CRESOL)	554	U	554	UJ	40	554	ug/kg	HT
SS	NDA072FD1	SW8270	2-METHYLPHENOL (o-CRESOL)	413	U	413	UJ	30	413	ug/kg	HT
SS	NDA074	SW8270	2-METHYLPHENOL (o-CRESOL)	448	U	448	UJ	33	448	ug/kg	HT
SS	NDA076	SW8270	2-METHYLPHENOL (o-CRESOL)	419	U	419	UJ	31	419	ug/kg	HT
SS	NDA078	SW8270	2-METHYLPHENOL (o-CRESOL)	440	U	440	UJ	32	440	ug/kg	HT
SS	NDA080RE1	SW8270	2-METHYLPHENOL (o-CRESOL)	407	U	407	UJ	30	407	ug/kg	HT
SS	NDA082RE1	SW8270	2-METHYLPHENOL (o-CRESOL)	4660	U	4660	UJ	340	4660	ug/kg	HT
SB	NDA213	SW8270	2-METHYLNAPHTHALENE	485	U	485	UJ	29	485	ug/kg	HT
SB	NDA214FD1	SW8270	2-METHYLNAPHTHALENE	487	U	487	UJ	29	487	ug/kg	HT
SB	NDA215	SW8270	2-METHYLNAPHTHALENE	527	U	527	UJ	31	527	ug/kg	HT
SB	NDA216	SW8270	2-METHYLNAPHTHALENE	537	U	537	UJ	32	537	ug/kg	HT
SB	NDA217	SW8270	2-METHYLNAPHTHALENE	540	U	540	UJ	32	540	ug/kg	HT
SB	NDA218	SW8270	2-METHYLNAPHTHALENE	505	U	505	UJ	30	505	ug/kg	HT
SB	NDA219	SW8270	2-METHYLNAPHTHALENE	380	U	380	UJ	22	380	ug/kg	HT
SB	NDA220	SW8270	2-METHYLNAPHTHALENE	542	U	542	UJ	32	542	ug/kg	HT
SB	NDA221	SW8270	2-METHYLNAPHTHALENE	501	U	501	UJ	30	501	ug/kg	HT
SB	NDA222	SW8270	2-METHYLNAPHTHALENE	459	U	459	UJ	27	459	ug/kg	HT
SB	NDA223	SW8270	2-METHYLNAPHTHALENE	527	U	527	UJ	31	527	ug/kg	HT
SB	NDA235	SW8270	2-METHYLNAPHTHALENE	504	U	504	UJ	30	504	ug/kg	HT
SB	NDA236	SW8270	2-METHYLNAPHTHALENE	423	U	423	UJ	25	423	ug/kg	HT
SB	NDA237FD1	SW8270	2-METHYLNAPHTHALENE	395	U	395	UJ	23	395	ug/kg	HT
SB	NDA238	SW8270	2-METHYLNAPHTHALENE	424	U	424	UJ	25	424	ug/kg	HT
SB	NDA239	SW8270	2-METHYLNAPHTHALENE	555	U	555	UJ	33	555	ug/kg	HT
SB	NDA240	SW8270	2-METHYLNAPHTHALENE	397	U	397	UJ	23	397	ug/kg	HT
SB	NDA241	SW8270	2-METHYLNAPHTHALENE	471	U	471	UJ	28	471	ug/kg	HT
SB	NDA242	SW8270	2-METHYLNAPHTHALENE	436	U	436	UJ	26	436	ug/kg	HT
SB	NDA243	SW8270	2-METHYLNAPHTHALENE	893	U	893	UJ	53	893	ug/kg	HT
SB	NDA244	SW8270	2-METHYLNAPHTHALENE	388	U	388	UJ	23	388	ug/kg	HT
SB	NDA245	SW8270	2-METHYLNAPHTHALENE	393	U	393	UJ	23	393	ug/kg	HT
SB	NDA246	SW8270	2-METHYLNAPHTHALENE	511	U	511	UJ	30	511	ug/kg	HT
SB	NDA247FD1	SW8270	2-METHYLNAPHTHALENE	390	U	390	UJ	23	390	ug/kg	HT
SB	NDA248	SW8270	2-METHYLNAPHTHALENE	453	U	453	UJ	27	453	ug/kg	HT
SB	NDA249	SW8270	2-METHYLNAPHTHALENE	374	U	374	UJ	22	374	ug/kg	HT
SB	NDA252	SW8270	2-METHYLNAPHTHALENE	420	U	420	UJ	25	420	ug/kg	HT
SB	NDA253	SW8270	2-METHYLNAPHTHALENE	439	U	439	UJ	26	439	ug/kg	HT
SB	NDA254	SW8270	2-METHYLNAPHTHALENE	391	U	391	UJ	23	391	ug/kg	HT
SB	NDA255	SW8270	2-METHYLNAPHTHALENE	375	U	375	UJ	22	375	ug/kg	HT
SB	NDA085	SW8270	2-METHYLNAPHTHALENE	482	U	482	UJ	28	482	ug/kg	HT
SB	NDA092	SW8270	2-METHYLNAPHTHALENE	400	U	400	UJ	24	400	ug/kg	HT
SB	NDA093	SW8270	2-METHYLNAPHTHALENE	339	U	339	UJ	20	339	ug/kg	HT
SB	NDA094	SW8270	2-METHYLNAPHTHALENE	510	U	510	UJ	30	510	ug/kg	HT
SB	NDA095FD1	SW8270	2-METHYLNAPHTHALENE	310	U	310	UJ	18	310	ug/kg	HT
SB	NDA296	SW8270	2-METHYLNAPHTHALENE	369	U	369	UJ	22	369	ug/kg	HT
SB	NDA297	SW8270	2-METHYLNAPHTHALENE	358	U	358	UJ	21	358	ug/kg	HT
SB	NDA298	SW8270	2-METHYLNAPHTHALENE	341	U	341	UJ	20	341	ug/kg	HT
SB	NDA299	SW8270	2-METHYLNAPHTHALENE	370	U	370	UJ	22	370	ug/kg	HT
SB	NDA058	SW8270	2-METHYLNAPHTHALENE	460	U	460	UJ	27	460	ug/kg	HT
SB	NDA060	SW8270	2-METHYLNAPHTHALENE	478	U	478	UJ	28	478	ug/kg	HT
SB	NDA063	SW8270	2-METHYLNAPHTHALENE	382	U	382	UJ	23	382	ug/kg	HT
SB	NDA064FD1	SW8270	2-METHYLNAPHTHALENE	351	U	351	UJ	21	351	ug/kg	HT
SB	NDA066	SW8270	2-METHYLNAPHTHALENE	344	U	344	UJ	20	344	ug/kg	HT
SB	NDA068	SW8270	2-METHYLNAPHTHALENE	360	U	360	UJ	21	360	ug/kg	HT
SB	NDA070	SW8270	2-METHYLNAPHTHALENE	404	U	404	UJ	24	404	ug/kg	HT
SB	NDA073	SW8270	2-METHYLNAPHTHALENE	383	U	383	UJ	23	383	ug/kg	HT
SB	NDA075	SW8270	2-METHYLNAPHTHALENE	401	U	401	UJ	24	401	ug/kg	HT
SB	NDA077	SW8270	2-METHYLNAPHTHALENE	441	U	441	UJ	26	441	ug/kg	HT
SB	NDA079	SW8270	2-METHYLNAPHTHALENE	466	U	466	UJ	28	466	ug/kg	HT
SB	NDA081RE1	SW8270	2-METHYLNAPHTHALENE	393	U	393	UJ	23	393	ug/kg	HT
SB	NDA083RE1	SW8270	2-METHYLNAPHTHALENE	4240	U	4240	UJ	250	4240	ug/kg	HT
SD	NDA054	SW8270	2-METHYLNAPHTHALENE	480	U	480	UJ	28	480	ug/kg	HT
SD	NDA055	SW8270	2-METHYLNAPHTHALENE	696	U	696	UJ	41	696	ug/kg	HT
SD	NDA042	SW8270	2-METHYLNAPHTHALENE	686	U	686	UJ	40	686	ug/kg	HT
SD	NDA043	SW8270	2-METHYLNAPHTHALENE	735	U	735	UJ	43	735	ug/kg	HT
SD	NDA044	SW8270	2-METHYLNAPHTHALENE	1680	U	1680	UJ	99	1680	ug/kg	HT

Matrix	Sample ID	Analytical Method	Parameter	Lab Result	Lab Qual	Final Result	Final Qual	DL	RL	Units	Comments
SD	NDA045	SW8270	2-METHYLNAPHTHALENE	1500	U	1500	UJ	89	1500	ug/kg	HT
SD	NDA046	SW8270	2-METHYLNAPHTHALENE	1520	U	1520	UJ	90	1520	ug/kg	HT
SD	NDA302	SW8270	2-METHYLNAPHTHALENE	1200	U	1200	UJ	71	1200	ug/kg	HT
SD	NDA303	SW8270	2-METHYLNAPHTHALENE	2300	U	2300	UJ	136	2300	ug/kg	HT
SD	NDA307FD1	SW8270	2-METHYLNAPHTHALENE	2130	U	2130	UJ	125	2130	ug/kg	HT
SD	NDA047	SW8270	2-METHYLNAPHTHALENE	503	U	503	UJ	30	503	ug/kg	HT
SD	NDA048	SW8270	2-METHYLNAPHTHALENE	558	U	558	UJ	33	558	ug/kg	HT
SD	NDA049	SW8270	2-METHYLNAPHTHALENE	463	U	463	UJ	27	463	ug/kg	HT
SS	NDA178	SW8270	2-METHYLNAPHTHALENE	644	U	644	UJ	38	644	ug/kg	HT
SS	NDA179	SW8270	2-METHYLNAPHTHALENE	644	U	644	UJ	38	644	ug/kg	HT
SS	NDA180	SW8270	2-METHYLNAPHTHALENE	550	U	550	UJ	32	550	ug/kg	HT
SS	NDA181	SW8270	2-METHYLNAPHTHALENE	566	U	566	UJ	33	566	ug/kg	HT
SS	NDA182	SW8270	2-METHYLNAPHTHALENE	679	U	679	UJ	40	679	ug/kg	HT
SS	NDA183	SW8270	2-METHYLNAPHTHALENE	589	U	589	UJ	35	589	ug/kg	HT
SS	NDA184FD1	SW8270	2-METHYLNAPHTHALENE	662	U	662	UJ	39	662	ug/kg	HT
SS	NDA201	SW8270	2-METHYLNAPHTHALENE	491	U	491	UJ	29	491	ug/kg	HT
SS	NDA202	SW8270	2-METHYLNAPHTHALENE	605	U	605	UJ	36	605	ug/kg	HT
SS	NDA203	SW8270	2-METHYLNAPHTHALENE	617	U	617	UJ	36	617	ug/kg	HT
SS	NDA204	SW8270	2-METHYLNAPHTHALENE	753	U	753	UJ	44	753	ug/kg	HT
SS	NDA205FD1	SW8270	2-METHYLNAPHTHALENE	668	U	668	UJ	39	668	ug/kg	HT
SS	NDA206	SW8270	2-METHYLNAPHTHALENE	529	U	529	UJ	31	529	ug/kg	HT
SS	NDA207	SW8270	2-METHYLNAPHTHALENE	669	U	669	UJ	39	669	ug/kg	HT
SS	NDA208	SW8270	2-METHYLNAPHTHALENE	520	U	520	UJ	31	520	ug/kg	HT
SS	NDA209	SW8270	2-METHYLNAPHTHALENE	570	U	570	UJ	34	570	ug/kg	HT
SS	NDA210	SW8270	2-METHYLNAPHTHALENE	545	U	545	UJ	32	545	ug/kg	HT
SS	NDA211	SW8270	2-METHYLNAPHTHALENE	742	U	742	UJ	44	742	ug/kg	HT
SS	NDA212	SW8270	2-METHYLNAPHTHALENE	651	U	651	UJ	38	651	ug/kg	HT
SS	NDA185	SW8270	2-METHYLNAPHTHALENE	445	U	445	UJ	26	445	ug/kg	HT
SS	NDA186	SW8270	2-METHYLNAPHTHALENE	416	U	416	UJ	25	416	ug/kg	HT
SS	NDA187	SW8270	2-METHYLNAPHTHALENE	380	U	380	UJ	22	380	ug/kg	HT
SS	NDA188	SW8270	2-METHYLNAPHTHALENE	810	U	810	UJ	48	810	ug/kg	HT
SS	NDA189	SW8270	2-METHYLNAPHTHALENE	426	U	426	UJ	25	426	ug/kg	HT
SS	NDA190	SW8270	2-METHYLNAPHTHALENE	430	U	430	UJ	25	430	ug/kg	HT
SS	NDA191	SW8270	2-METHYLNAPHTHALENE	338	U	338	UJ	20	338	ug/kg	HT
SS	NDA192FD1	SW8270	2-METHYLNAPHTHALENE	418	U	418	UJ	25	418	ug/kg	HT
SS	NDA193	SW8270	2-METHYLNAPHTHALENE	1720	U	1720	UJ	102	1720	ug/kg	HT
SS	NDA194	SW8270	2-METHYLNAPHTHALENE	480	U	480	UJ	28	480	ug/kg	HT
SS	NDA195	SW8270	2-METHYLNAPHTHALENE	323	U	323	UJ	19	323	ug/kg	HT
SS	NDA084	SW8270	2-METHYLNAPHTHALENE	344	U	344	UJ	20	344	ug/kg	HT
SS	NDA091	SW8270	2-METHYLNAPHTHALENE	367	U	367	UJ	22	367	ug/kg	HT
SS	NDA057	SW8270	2-METHYLNAPHTHALENE	563	U	563	UJ	33	563	ug/kg	HT
SS	NDA059	SW8270	2-METHYLNAPHTHALENE	465	U	465	UJ	27	465	ug/kg	HT
SS	NDA061	SW8270	2-METHYLNAPHTHALENE	469	U	469	UJ	28	469	ug/kg	HT
SS	NDA062FD1	SW8270	2-METHYLNAPHTHALENE	523	U	523	UJ	31	523	ug/kg	HT
SS	NDA065	SW8270	2-METHYLNAPHTHALENE	421	U	421	UJ	25	421	ug/kg	HT
SS	NDA067	SW8270	2-METHYLNAPHTHALENE	378	U	378	UJ	22	378	ug/kg	HT
SS	NDA069	SW8270	2-METHYLNAPHTHALENE	320	U	320	UJ	19	320	ug/kg	HT
SS	NDA119	SW8270	2-METHYLNAPHTHALENE	503	U	503	UJ	30	503	ug/kg	HT
SS	NDA120	SW8270	2-METHYLNAPHTHALENE	541	U	541	UJ	32	541	ug/kg	HT
SS	NDA121	SW8270	2-METHYLNAPHTHALENE	409	U	409	UJ	24	409	ug/kg	HT
SS	NDA122	SW8270	2-METHYLNAPHTHALENE	450	U	450	UJ	27	450	ug/kg	HT
SS	NDA123	SW8270	2-METHYLNAPHTHALENE	450	U	450	UJ	27	450	ug/kg	HT
SS	NDA124	SW8270	2-METHYLNAPHTHALENE	432	U	432	UJ	25	432	ug/kg	HT
SS	NDA071	SW8270	2-METHYLNAPHTHALENE	554	U	554	UJ	33	554	ug/kg	HT
SS	NDA072FD1	SW8270	2-METHYLNAPHTHALENE	413	U	413	UJ	24	413	ug/kg	HT
SS	NDA074	SW8270	2-METHYLNAPHTHALENE	448	U	448	UJ	26	448	ug/kg	HT
SS	NDA076	SW8270	2-METHYLNAPHTHALENE	419	U	419	UJ	25	419	ug/kg	HT
SS	NDA078	SW8270	2-METHYLNAPHTHALENE	440	U	440	UJ	26	440	ug/kg	HT
SS	NDA080RE1	SW8270	2-METHYLNAPHTHALENE	407	U	407	UJ	24	407	ug/kg	HT
SS	NDA082RE1	SW8270	2-METHYLNAPHTHALENE	4660	U	4660	UJ	275	4660	ug/kg	HT
SB	NDA213	SW8270	2-CHLOROPHENOL	485	U	485	UJ	32	485	ug/kg	HT
SB	NDA214FD1	SW8270	2-CHLOROPHENOL	487	U	487	UJ	32	487	ug/kg	HT
SB	NDA215	SW8270	2-CHLOROPHENOL	527	U	527	UJ	34	527	ug/kg	HT
SB	NDA216	SW8270	2-CHLOROPHENOL	537	U	537	UJ	35	537	ug/kg	HT
SB	NDA217	SW8270	2-CHLOROPHENOL	540	U	540	UJ	35	540	ug/kg	HT
SB	NDA218	SW8270	2-CHLOROPHENOL	505	U	505	UJ	33	505	ug/kg	HT
SB	NDA219	SW8270	2-CHLOROPHENOL	380	U	380	UJ	25	380	ug/kg	HT
SB	NDA220	SW8270	2-CHLOROPHENOL	542	U	542	UJ	35	542	ug/kg	HT
SB	NDA221	SW8270	2-CHLOROPHENOL	501	U	501	UJ	33	501	ug/kg	HT
SB	NDA222	SW8270	2-CHLOROPHENOL	459	U	459	UJ	30	459	ug/kg	HT

Matrix	Sample ID	Analytical Method	Parameter	Lab Result	Lab Qual	Final Result	Final Qual	DL	RL	Units	Comments
SB	NDA223	SW8270	2-CHLOROPHENOL	527	U	527	UJ	34	527	ug/kg	HT
SB	NDA235	SW8270	2-CHLOROPHENOL	504	U	504	UJ	33	504	ug/kg	HT
SB	NDA236	SW8270	2-CHLOROPHENOL	423	U	423	UJ	27	423	ug/kg	HT
SB	NDA237FD1	SW8270	2-CHLOROPHENOL	395	U	395	UJ	26	395	ug/kg	HT
SB	NDA238	SW8270	2-CHLOROPHENOL	424	U	424	UJ	28	424	ug/kg	HT
SB	NDA239	SW8270	2-CHLOROPHENOL	555	U	555	UJ	36	555	ug/kg	HT
SB	NDA240	SW8270	2-CHLOROPHENOL	397	U	397	UJ	26	397	ug/kg	HT
SB	NDA241	SW8270	2-CHLOROPHENOL	471	U	471	UJ	31	471	ug/kg	HT
SB	NDA242	SW8270	2-CHLOROPHENOL	436	U	436	UJ	28	436	ug/kg	HT
SB	NDA243	SW8270	2-CHLOROPHENOL	893	U	893	UJ	58	893	ug/kg	HT
SB	NDA244	SW8270	2-CHLOROPHENOL	388	U	388	UJ	25	388	ug/kg	HT
SB	NDA245	SW8270	2-CHLOROPHENOL	393	U	393	UJ	26	393	ug/kg	HT
SB	NDA246	SW8270	2-CHLOROPHENOL	511	U	511	UJ	33	511	ug/kg	HT
SB	NDA247FD1	SW8270	2-CHLOROPHENOL	390	U	390	UJ	25	390	ug/kg	HT
SB	NDA248	SW8270	2-CHLOROPHENOL	453	U	453	UJ	29	453	ug/kg	HT
SB	NDA249	SW8270	2-CHLOROPHENOL	374	U	374	UJ	24	374	ug/kg	HT
SB	NDA252	SW8270	2-CHLOROPHENOL	420	U	420	UJ	27	420	ug/kg	HT
SB	NDA253	SW8270	2-CHLOROPHENOL	439	U	439	UJ	29	439	ug/kg	HT
SB	NDA254	SW8270	2-CHLOROPHENOL	391	U	391	UJ	25	391	ug/kg	HT
SB	NDA255	SW8270	2-CHLOROPHENOL	375	U	375	UJ	24	375	ug/kg	HT
SB	NDA085	SW8270	2-CHLOROPHENOL	482	U	482	UJ	31	482	ug/kg	HT
SB	NDA092	SW8270	2-CHLOROPHENOL	400	U	400	UJ	26	400	ug/kg	HT
SB	NDA093	SW8270	2-CHLOROPHENOL	339	U	339	UJ	22	339	ug/kg	HT
SB	NDA094	SW8270	2-CHLOROPHENOL	510	U	510	UJ	33	510	ug/kg	HT
SB	NDA095FD1	SW8270	2-CHLOROPHENOL	310	U	310	UJ	20	310	ug/kg	HT
SB	NDA296	SW8270	2-CHLOROPHENOL	369	U	369	UJ	24	369	ug/kg	HT
SB	NDA297	SW8270	2-CHLOROPHENOL	358	U	358	UJ	23	358	ug/kg	HT
SB	NDA298	SW8270	2-CHLOROPHENOL	341	U	341	UJ	22	341	ug/kg	HT
SB	NDA299	SW8270	2-CHLOROPHENOL	370	U	370	UJ	24	370	ug/kg	HT
SB	NDA058	SW8270	2-CHLOROPHENOL	460	U	460	UJ	30	460	ug/kg	HT
SB	NDA060	SW8270	2-CHLOROPHENOL	478	U	478	UJ	31	478	ug/kg	HT
SB	NDA063	SW8270	2-CHLOROPHENOL	382	U	382	UJ	25	382	ug/kg	HT
SB	NDA064FD1	SW8270	2-CHLOROPHENOL	351	U	351	UJ	23	351	ug/kg	HT
SB	NDA066	SW8270	2-CHLOROPHENOL	344	U	344	UJ	22	344	ug/kg	HT
SB	NDA068	SW8270	2-CHLOROPHENOL	360	U	360	UJ	23	360	ug/kg	HT
SB	NDA070	SW8270	2-CHLOROPHENOL	404	U	404	UJ	26	404	ug/kg	HT
SB	NDA073	SW8270	2-CHLOROPHENOL	383	U	383	UJ	25	383	ug/kg	HT
SB	NDA075	SW8270	2-CHLOROPHENOL	401	U	401	UJ	26	401	ug/kg	HT
SB	NDA077	SW8270	2-CHLOROPHENOL	441	U	441	UJ	29	441	ug/kg	HT
SB	NDA079	SW8270	2-CHLOROPHENOL	466	U	466	UJ	30	466	ug/kg	HT
SB	NDA081RE1	SW8270	2-CHLOROPHENOL	393	U	393	UJ	26	393	ug/kg	HT
SB	NDA083RE1	SW8270	2-CHLOROPHENOL	4240	U	4240	UJ	275	4240	ug/kg	HT
SD	NDA054	SW8270	2-CHLOROPHENOL	480	U	480	UJ	31	480	ug/kg	HT
SD	NDA055	SW8270	2-CHLOROPHENOL	696	U	696	UJ	45	696	ug/kg	HT
SD	NDA042	SW8270	2-CHLOROPHENOL	686	U	686	UJ	45	686	ug/kg	HT
SD	NDA043	SW8270	2-CHLOROPHENOL	735	U	735	UJ	48	735	ug/kg	HT
SD	NDA044	SW8270	2-CHLOROPHENOL	1680	U	1680	UJ	109	1680	ug/kg	HT
SD	NDA045	SW8270	2-CHLOROPHENOL	1500	U	1500	UJ	98	1500	ug/kg	HT
SD	NDA046	SW8270	2-CHLOROPHENOL	1520	U	1520	UJ	99	1520	ug/kg	HT
SD	NDA302	SW8270	2-CHLOROPHENOL	1200	U	1200	UJ	78	1200	ug/kg	HT
SD	NDA303	SW8270	2-CHLOROPHENOL	2300	U	2300	UJ	150	2300	ug/kg	HT
SD	NDA307FD1	SW8270	2-CHLOROPHENOL	2130	U	2130	UJ	138	2130	ug/kg	HT
SD	NDA047	SW8270	2-CHLOROPHENOL	503	U	503	UJ	33	503	ug/kg	HT
SD	NDA048	SW8270	2-CHLOROPHENOL	558	U	558	UJ	36	558	ug/kg	HT
SD	NDA049	SW8270	2-CHLOROPHENOL	463	U	463	UJ	30	463	ug/kg	HT
SS	NDA178	SW8270	2-CHLOROPHENOL	644	U	644	UJ	42	644	ug/kg	HT
SS	NDA179	SW8270	2-CHLOROPHENOL	644	U	644	UJ	42	644	ug/kg	HT
SS	NDA180	SW8270	2-CHLOROPHENOL	550	U	550	UJ	36	550	ug/kg	HT
SS	NDA181	SW8270	2-CHLOROPHENOL	566	U	566	UJ	37	566	ug/kg	HT
SS	NDA182	SW8270	2-CHLOROPHENOL	679	U	679	UJ	44	679	ug/kg	HT
SS	NDA183	SW8270	2-CHLOROPHENOL	589	U	589	UJ	38	589	ug/kg	HT
SS	NDA184FD1	SW8270	2-CHLOROPHENOL	662	U	662	UJ	43	662	ug/kg	HT
SS	NDA201	SW8270	2-CHLOROPHENOL	491	U	491	UJ	32	491	ug/kg	HT
SS	NDA202	SW8270	2-CHLOROPHENOL	605	U	605	UJ	39	605	ug/kg	HT
SS	NDA203	SW8270	2-CHLOROPHENOL	617	U	617	UJ	40	617	ug/kg	HT
SS	NDA204	SW8270	2-CHLOROPHENOL	753	U	753	UJ	49	753	ug/kg	HT
SS	NDA205FD1	SW8270	2-CHLOROPHENOL	668	U	668	UJ	43	668	ug/kg	HT
SS	NDA206	SW8270	2-CHLOROPHENOL	529	U	529	UJ	34	529	ug/kg	HT
SS	NDA207	SW8270	2-CHLOROPHENOL	669	U	669	UJ	43	669	ug/kg	HT
SS	NDA208	SW8270	2-CHLOROPHENOL	520	U	520	UJ	34	520	ug/kg	HT

Matrix	Sample ID	Analytical Method	Parameter	Lab Result	Lab Qual	Final Result	Final Qual	DL	RL	Units	Comments
SS	NDA209	SW8270	2-CHLOROPHENOL	570	U	570	UJ	37	570	ug/kg	HT
SS	NDA210	SW8270	2-CHLOROPHENOL	545	U	545	UJ	35	545	ug/kg	HT
SS	NDA211	SW8270	2-CHLOROPHENOL	742	U	742	UJ	48	742	ug/kg	HT
SS	NDA212	SW8270	2-CHLOROPHENOL	651	U	651	UJ	42	651	ug/kg	HT
SS	NDA185	SW8270	2-CHLOROPHENOL	445	U	445	UJ	29	445	ug/kg	HT
SS	NDA186	SW8270	2-CHLOROPHENOL	416	U	416	UJ	27	416	ug/kg	HT
SS	NDA187	SW8270	2-CHLOROPHENOL	380	U	380	UJ	25	380	ug/kg	HT
SS	NDA188	SW8270	2-CHLOROPHENOL	810	U	810	UJ	53	810	ug/kg	HT
SS	NDA189	SW8270	2-CHLOROPHENOL	426	U	426	UJ	28	426	ug/kg	HT
SS	NDA190	SW8270	2-CHLOROPHENOL	430	U	430	UJ	28	430	ug/kg	HT
SS	NDA191	SW8270	2-CHLOROPHENOL	338	U	338	UJ	22	338	ug/kg	HT
SS	NDA192FD1	SW8270	2-CHLOROPHENOL	418	U	418	UJ	27	418	ug/kg	HT
SS	NDA193	SW8270	2-CHLOROPHENOL	1720	U	1720	UJ	112	1720	ug/kg	HT
SS	NDA194	SW8270	2-CHLOROPHENOL	480	U	480	UJ	31	480	ug/kg	HT
SS	NDA195	SW8270	2-CHLOROPHENOL	323	U	323	UJ	21	323	ug/kg	HT
SS	NDA084	SW8270	2-CHLOROPHENOL	344	U	344	UJ	22	344	ug/kg	HT
SS	NDA091	SW8270	2-CHLOROPHENOL	367	U	367	UJ	24	367	ug/kg	HT
SS	NDA057	SW8270	2-CHLOROPHENOL	563	U	563	UJ	37	563	ug/kg	HT
SS	NDA059	SW8270	2-CHLOROPHENOL	465	U	465	UJ	30	465	ug/kg	HT
SS	NDA061	SW8270	2-CHLOROPHENOL	469	U	469	UJ	30	469	ug/kg	HT
SS	NDA062FD1	SW8270	2-CHLOROPHENOL	523	U	523	UJ	34	523	ug/kg	HT
SS	NDA065	SW8270	2-CHLOROPHENOL	421	U	421	UJ	27	421	ug/kg	HT
SS	NDA067	SW8270	2-CHLOROPHENOL	378	U	378	UJ	25	378	ug/kg	HT
SS	NDA069	SW8270	2-CHLOROPHENOL	320	U	320	UJ	21	320	ug/kg	HT
SS	NDA119	SW8270	2-CHLOROPHENOL	503	U	503	UJ	33	503	ug/kg	HT
SS	NDA120	SW8270	2-CHLOROPHENOL	541	U	541	UJ	35	541	ug/kg	HT
SS	NDA121	SW8270	2-CHLOROPHENOL	409	U	409	UJ	27	409	ug/kg	HT
SS	NDA122	SW8270	2-CHLOROPHENOL	450	U	450	UJ	29	450	ug/kg	HT
SS	NDA123	SW8270	2-CHLOROPHENOL	450	U	450	UJ	29	450	ug/kg	HT
SS	NDA124	SW8270	2-CHLOROPHENOL	432	U	432	UJ	28	432	ug/kg	HT
SS	NDA071	SW8270	2-CHLOROPHENOL	554	U	554	UJ	36	554	ug/kg	HT
SS	NDA072FD1	SW8270	2-CHLOROPHENOL	413	U	413	UJ	27	413	ug/kg	HT
SS	NDA074	SW8270	2-CHLOROPHENOL	448	U	448	UJ	29	448	ug/kg	HT
SS	NDA076	SW8270	2-CHLOROPHENOL	419	U	419	UJ	27	419	ug/kg	HT
SS	NDA078	SW8270	2-CHLOROPHENOL	440	U	440	UJ	29	440	ug/kg	HT
SS	NDA080RE1	SW8270	2-CHLOROPHENOL	407	U	407	UJ	26	407	ug/kg	HT
SS	NDA082RE1	SW8270	2-CHLOROPHENOL	4660	U	4660	UJ	303	4660	ug/kg	HT
SB	NDA213	SW8270	2-CHLORONAPHTHALENE	485	U	485	UJ	30	485	ug/kg	HT
SB	NDA214FD1	SW8270	2-CHLORONAPHTHALENE	487	U	487	UJ	30	487	ug/kg	HT
SB	NDA215	SW8270	2-CHLORONAPHTHALENE	527	U	527	UJ	32	527	ug/kg	HT
SB	NDA216	SW8270	2-CHLORONAPHTHALENE	537	U	537	UJ	33	537	ug/kg	HT
SB	NDA217	SW8270	2-CHLORONAPHTHALENE	540	U	540	UJ	33	540	ug/kg	HT
SB	NDA218	SW8270	2-CHLORONAPHTHALENE	505	U	505	UJ	31	505	ug/kg	HT
SB	NDA219	SW8270	2-CHLORONAPHTHALENE	380	U	380	UJ	23	380	ug/kg	HT
SB	NDA220	SW8270	2-CHLORONAPHTHALENE	542	U	542	UJ	33	542	ug/kg	HT
SB	NDA221	SW8270	2-CHLORONAPHTHALENE	501	U	501	UJ	31	501	ug/kg	HT
SB	NDA222	SW8270	2-CHLORONAPHTHALENE	459	U	459	UJ	28	459	ug/kg	HT
SB	NDA223	SW8270	2-CHLORONAPHTHALENE	527	U	527	UJ	32	527	ug/kg	HT
SB	NDA235	SW8270	2-CHLORONAPHTHALENE	504	U	504	UJ	31	504	ug/kg	HT
SB	NDA236	SW8270	2-CHLORONAPHTHALENE	423	U	423	UJ	26	423	ug/kg	HT
SB	NDA237FD1	SW8270	2-CHLORONAPHTHALENE	395	U	395	UJ	24	395	ug/kg	HT
SB	NDA238	SW8270	2-CHLORONAPHTHALENE	424	U	424	UJ	26	424	ug/kg	HT
SB	NDA239	SW8270	2-CHLORONAPHTHALENE	555	U	555	UJ	34	555	ug/kg	HT
SB	NDA240	SW8270	2-CHLORONAPHTHALENE	397	U	397	UJ	24	397	ug/kg	HT
SB	NDA241	SW8270	2-CHLORONAPHTHALENE	471	U	471	UJ	29	471	ug/kg	HT
SB	NDA242	SW8270	2-CHLORONAPHTHALENE	436	U	436	UJ	27	436	ug/kg	HT
SB	NDA243	SW8270	2-CHLORONAPHTHALENE	893	U	893	UJ	54	893	ug/kg	HT
SB	NDA244	SW8270	2-CHLORONAPHTHALENE	388	U	388	UJ	24	388	ug/kg	HT
SB	NDA245	SW8270	2-CHLORONAPHTHALENE	393	U	393	UJ	24	393	ug/kg	HT
SB	NDA246	SW8270	2-CHLORONAPHTHALENE	511	U	511	UJ	31	511	ug/kg	HT
SB	NDA247FD1	SW8270	2-CHLORONAPHTHALENE	390	U	390	UJ	24	390	ug/kg	HT
SB	NDA248	SW8270	2-CHLORONAPHTHALENE	453	U	453	UJ	28	453	ug/kg	HT
SB	NDA249	SW8270	2-CHLORONAPHTHALENE	374	U	374	UJ	23	374	ug/kg	HT
SB	NDA252	SW8270	2-CHLORONAPHTHALENE	420	U	420	UJ	26	420	ug/kg	HT
SB	NDA253	SW8270	2-CHLORONAPHTHALENE	439	U	439	UJ	27	439	ug/kg	HT
SB	NDA254	SW8270	2-CHLORONAPHTHALENE	391	U	391	UJ	24	391	ug/kg	HT
SB	NDA255	SW8270	2-CHLORONAPHTHALENE	375	U	375	UJ	23	375	ug/kg	HT
SB	NDA085	SW8270	2-CHLORONAPHTHALENE	482	U	482	UJ	29	482	ug/kg	HT
SB	NDA092	SW8270	2-CHLORONAPHTHALENE	400	U	400	UJ	24	400	ug/kg	HT
SB	NDA093	SW8270	2-CHLORONAPHTHALENE	339	U	339	UJ	21	339	ug/kg	HT

Matrix	Sample ID	Analytical Method	Parameter	Lab Result	Lab Qual	Final Result	Final Qual	DL	RL	Units	Comments
SB	NDA094	SW8270	2-CHLORONAPHTHALENE	510	U	510	UJ	31	510	ug/kg	HT
SB	NDA095FD1	SW8270	2-CHLORONAPHTHALENE	310	U	310	UJ	19	310	ug/kg	HT
SB	NDA296	SW8270	2-CHLORONAPHTHALENE	369	U	369	UJ	23	369	ug/kg	HT
SB	NDA297	SW8270	2-CHLORONAPHTHALENE	358	U	358	UJ	22	358	ug/kg	HT
SB	NDA298	SW8270	2-CHLORONAPHTHALENE	341	U	341	UJ	21	341	ug/kg	HT
SB	NDA299	SW8270	2-CHLORONAPHTHALENE	370	U	370	UJ	23	370	ug/kg	HT
SB	NDA058	SW8270	2-CHLORONAPHTHALENE	460	U	460	UJ	28	460	ug/kg	HT
SB	NDA060	SW8270	2-CHLORONAPHTHALENE	478	U	478	UJ	29	478	ug/kg	HT
SB	NDA063	SW8270	2-CHLORONAPHTHALENE	382	U	382	UJ	23	382	ug/kg	HT
SB	NDA064FD1	SW8270	2-CHLORONAPHTHALENE	351	U	351	UJ	21	351	ug/kg	HT
SB	NDA066	SW8270	2-CHLORONAPHTHALENE	344	U	344	UJ	21	344	ug/kg	HT
SB	NDA068	SW8270	2-CHLORONAPHTHALENE	360	U	360	UJ	22	360	ug/kg	HT
SB	NDA070	SW8270	2-CHLORONAPHTHALENE	404	U	404	UJ	25	404	ug/kg	HT
SB	NDA073	SW8270	2-CHLORONAPHTHALENE	383	U	383	UJ	23	383	ug/kg	HT
SB	NDA075	SW8270	2-CHLORONAPHTHALENE	401	U	401	UJ	24	401	ug/kg	HT
SB	NDA077	SW8270	2-CHLORONAPHTHALENE	441	U	441	UJ	27	441	ug/kg	HT
SB	NDA079	SW8270	2-CHLORONAPHTHALENE	466	U	466	UJ	28	466	ug/kg	HT
SB	NDA081RE1	SW8270	2-CHLORONAPHTHALENE	393	U	393	UJ	24	393	ug/kg	HT
SB	NDA083RE1	SW8270	2-CHLORONAPHTHALENE	4240	U	4240	UJ	258	4240	ug/kg	HT
SD	NDA054	SW8270	2-CHLORONAPHTHALENE	480	U	480	UJ	29	480	ug/kg	HT
SD	NDA055	SW8270	2-CHLORONAPHTHALENE	696	U	696	UJ	42	696	ug/kg	HT
SD	NDA042	SW8270	2-CHLORONAPHTHALENE	686	U	686	UJ	42	686	ug/kg	HT
SD	NDA043	SW8270	2-CHLORONAPHTHALENE	735	U	735	UJ	45	735	ug/kg	HT
SD	NDA044	SW8270	2-CHLORONAPHTHALENE	1680	U	1680	UJ	103	1680	ug/kg	HT
SD	NDA045	SW8270	2-CHLORONAPHTHALENE	1500	U	1500	UJ	92	1500	ug/kg	HT
SD	NDA046	SW8270	2-CHLORONAPHTHALENE	1520	U	1520	UJ	93	1520	ug/kg	HT
SD	NDA302	SW8270	2-CHLORONAPHTHALENE	1200	U	1200	UJ	73	1200	ug/kg	HT
SD	NDA303	SW8270	2-CHLORONAPHTHALENE	2300	U	2300	UJ	140	2300	ug/kg	HT
SD	NDA307FD1	SW8270	2-CHLORONAPHTHALENE	2130	U	2130	UJ	130	2130	ug/kg	HT
SD	NDA047	SW8270	2-CHLORONAPHTHALENE	503	U	503	UJ	31	503	ug/kg	HT
SD	NDA048	SW8270	2-CHLORONAPHTHALENE	558	U	558	UJ	34	558	ug/kg	HT
SD	NDA049	SW8270	2-CHLORONAPHTHALENE	463	U	463	UJ	28	463	ug/kg	HT
SS	NDA178	SW8270	2-CHLORONAPHTHALENE	644	U	644	UJ	39	644	ug/kg	HT
SS	NDA179	SW8270	2-CHLORONAPHTHALENE	644	U	644	UJ	39	644	ug/kg	HT
SS	NDA180	SW8270	2-CHLORONAPHTHALENE	550	U	550	UJ	34	550	ug/kg	HT
SS	NDA181	SW8270	2-CHLORONAPHTHALENE	566	U	566	UJ	35	566	ug/kg	HT
SS	NDA182	SW8270	2-CHLORONAPHTHALENE	679	U	679	UJ	41	679	ug/kg	HT
SS	NDA183	SW8270	2-CHLORONAPHTHALENE	589	U	589	UJ	36	589	ug/kg	HT
SS	NDA184FD1	SW8270	2-CHLORONAPHTHALENE	662	U	662	UJ	40	662	ug/kg	HT
SS	NDA201	SW8270	2-CHLORONAPHTHALENE	491	U	491	UJ	30	491	ug/kg	HT
SS	NDA202	SW8270	2-CHLORONAPHTHALENE	605	U	605	UJ	37	605	ug/kg	HT
SS	NDA203	SW8270	2-CHLORONAPHTHALENE	617	U	617	UJ	38	617	ug/kg	HT
SS	NDA204	SW8270	2-CHLORONAPHTHALENE	753	U	753	UJ	46	753	ug/kg	HT
SS	NDA205FD1	SW8270	2-CHLORONAPHTHALENE	668	U	668	UJ	41	668	ug/kg	HT
SS	NDA206	SW8270	2-CHLORONAPHTHALENE	529	U	529	UJ	32	529	ug/kg	HT
SS	NDA207	SW8270	2-CHLORONAPHTHALENE	669	U	669	UJ	41	669	ug/kg	HT
SS	NDA208	SW8270	2-CHLORONAPHTHALENE	520	U	520	UJ	32	520	ug/kg	HT
SS	NDA209	SW8270	2-CHLORONAPHTHALENE	570	U	570	UJ	35	570	ug/kg	HT
SS	NDA210	SW8270	2-CHLORONAPHTHALENE	545	U	545	UJ	33	545	ug/kg	HT
SS	NDA211	SW8270	2-CHLORONAPHTHALENE	742	U	742	UJ	45	742	ug/kg	HT
SS	NDA212	SW8270	2-CHLORONAPHTHALENE	651	U	651	UJ	40	651	ug/kg	HT
SS	NDA185	SW8270	2-CHLORONAPHTHALENE	445	U	445	UJ	27	445	ug/kg	HT
SS	NDA186	SW8270	2-CHLORONAPHTHALENE	416	U	416	UJ	25	416	ug/kg	HT
SS	NDA187	SW8270	2-CHLORONAPHTHALENE	380	U	380	UJ	23	380	ug/kg	HT
SS	NDA188	SW8270	2-CHLORONAPHTHALENE	810	U	810	UJ	49	810	ug/kg	HT
SS	NDA189	SW8270	2-CHLORONAPHTHALENE	426	U	426	UJ	26	426	ug/kg	HT
SS	NDA190	SW8270	2-CHLORONAPHTHALENE	430	U	430	UJ	26	430	ug/kg	HT
SS	NDA191	SW8270	2-CHLORONAPHTHALENE	338	U	338	UJ	21	338	ug/kg	HT
SS	NDA192FD1	SW8270	2-CHLORONAPHTHALENE	418	U	418	UJ	25	418	ug/kg	HT
SS	NDA193	SW8270	2-CHLORONAPHTHALENE	1720	U	1720	UJ	105	1720	ug/kg	HT
SS	NDA194	SW8270	2-CHLORONAPHTHALENE	480	U	480	UJ	29	480	ug/kg	HT
SS	NDA195	SW8270	2-CHLORONAPHTHALENE	323	U	323	UJ	20	323	ug/kg	HT
SS	NDA084	SW8270	2-CHLORONAPHTHALENE	344	U	344	UJ	21	344	ug/kg	HT
SS	NDA091	SW8270	2-CHLORONAPHTHALENE	367	U	367	UJ	22	367	ug/kg	HT
SS	NDA057	SW8270	2-CHLORONAPHTHALENE	563	U	563	UJ	34	563	ug/kg	HT
SS	NDA059	SW8270	2-CHLORONAPHTHALENE	465	U	465	UJ	28	465	ug/kg	HT
SS	NDA061	SW8270	2-CHLORONAPHTHALENE	469	U	469	UJ	29	469	ug/kg	HT
SS	NDA062FD1	SW8270	2-CHLORONAPHTHALENE	523	U	523	UJ	32	523	ug/kg	HT
SS	NDA065	SW8270	2-CHLORONAPHTHALENE	421	U	421	UJ	26	421	ug/kg	HT
SS	NDA067	SW8270	2-CHLORONAPHTHALENE	378	U	378	UJ	23	378	ug/kg	HT

Matrix	Sample ID	Analytical Method	Parameter	Lab Result	Lab Qual	Final Result	Final Qual	DL	RL	Units	Comments
SS	NDA069	SW8270	2-CHLORONAPHTHALENE	320	U	320	UJ	19	320	ug/kg	HT
SS	NDA119	SW8270	2-CHLORONAPHTHALENE	503	U	503	UJ	31	503	ug/kg	HT
SS	NDA120	SW8270	2-CHLORONAPHTHALENE	541	U	541	UJ	33	541	ug/kg	HT
SS	NDA121	SW8270	2-CHLORONAPHTHALENE	409	U	409	UJ	25	409	ug/kg	HT
SS	NDA122	SW8270	2-CHLORONAPHTHALENE	450	U	450	UJ	27	450	ug/kg	HT
SS	NDA123	SW8270	2-CHLORONAPHTHALENE	450	U	450	UJ	27	450	ug/kg	HT
SS	NDA124	SW8270	2-CHLORONAPHTHALENE	432	U	432	UJ	26	432	ug/kg	HT
SS	NDA071	SW8270	2-CHLORONAPHTHALENE	554	U	554	UJ	34	554	ug/kg	HT
SS	NDA072FD1	SW8270	2-CHLORONAPHTHALENE	413	U	413	UJ	25	413	ug/kg	HT
SS	NDA074	SW8270	2-CHLORONAPHTHALENE	448	U	448	UJ	27	448	ug/kg	HT
SS	NDA076	SW8270	2-CHLORONAPHTHALENE	419	U	419	UJ	26	419	ug/kg	HT
SS	NDA078	SW8270	2-CHLORONAPHTHALENE	440	U	440	UJ	27	440	ug/kg	HT
SS	NDA080RE1	SW8270	2-CHLORONAPHTHALENE	407	U	407	UJ	25	407	ug/kg	HT
SS	NDA082RE1	SW8270	2-CHLORONAPHTHALENE	4660	U	4660	UJ	284	4660	ug/kg	HT
SB	NDA213	SW8270	2,6-DINITROTOLUENE	485	U	485	UJ	29	485	ug/kg	HT
SB	NDA214FD1	SW8270	2,6-DINITROTOLUENE	487	U	487	UJ	29	487	ug/kg	HT
SB	NDA215	SW8270	2,6-DINITROTOLUENE	527	U	527	UJ	31	527	ug/kg	HT
SB	NDA216	SW8270	2,6-DINITROTOLUENE	537	U	537	UJ	32	537	ug/kg	HT
SB	NDA217	SW8270	2,6-DINITROTOLUENE	540	U	540	UJ	32	540	ug/kg	HT
SB	NDA218	SW8270	2,6-DINITROTOLUENE	505	U	505	UJ	30	505	ug/kg	HT
SB	NDA219	SW8270	2,6-DINITROTOLUENE	380	U	380	UJ	22	380	ug/kg	HT
SB	NDA220	SW8270	2,6-DINITROTOLUENE	542	U	542	UJ	32	542	ug/kg	HT
SB	NDA221	SW8270	2,6-DINITROTOLUENE	501	U	501	UJ	30	501	ug/kg	HT
SB	NDA222	SW8270	2,6-DINITROTOLUENE	459	U	459	UJ	27	459	ug/kg	HT
SB	NDA223	SW8270	2,6-DINITROTOLUENE	527	U	527	UJ	31	527	ug/kg	HT
SB	NDA235	SW8270	2,6-DINITROTOLUENE	504	U	504	UJ	30	504	ug/kg	HT
SB	NDA236	SW8270	2,6-DINITROTOLUENE	423	U	423	UJ	25	423	ug/kg	HT
SB	NDA237FD1	SW8270	2,6-DINITROTOLUENE	395	U	395	UJ	23	395	ug/kg	HT
SB	NDA238	SW8270	2,6-DINITROTOLUENE	424	U	424	UJ	25	424	ug/kg	HT
SB	NDA239	SW8270	2,6-DINITROTOLUENE	555	U	555	UJ	33	555	ug/kg	HT
SB	NDA240	SW8270	2,6-DINITROTOLUENE	397	U	397	UJ	23	397	ug/kg	HT
SB	NDA241	SW8270	2,6-DINITROTOLUENE	471	U	471	UJ	28	471	ug/kg	HT
SB	NDA242	SW8270	2,6-DINITROTOLUENE	436	U	436	UJ	26	436	ug/kg	HT
SB	NDA243	SW8270	2,6-DINITROTOLUENE	893	U	893	UJ	53	893	ug/kg	HT
SB	NDA244	SW8270	2,6-DINITROTOLUENE	388	U	388	UJ	23	388	ug/kg	HT
SB	NDA245	SW8270	2,6-DINITROTOLUENE	393	U	393	UJ	23	393	ug/kg	HT
SB	NDA246	SW8270	2,6-DINITROTOLUENE	511	U	511	UJ	30	511	ug/kg	HT
SB	NDA247FD1	SW8270	2,6-DINITROTOLUENE	390	U	390	UJ	23	390	ug/kg	HT
SB	NDA248	SW8270	2,6-DINITROTOLUENE	453	U	453	UJ	27	453	ug/kg	HT
SB	NDA249	SW8270	2,6-DINITROTOLUENE	374	U	374	UJ	22	374	ug/kg	HT
SB	NDA252	SW8270	2,6-DINITROTOLUENE	420	U	420	UJ	25	420	ug/kg	HT
SB	NDA253	SW8270	2,6-DINITROTOLUENE	439	U	439	UJ	26	439	ug/kg	HT
SB	NDA254	SW8270	2,6-DINITROTOLUENE	391	U	391	UJ	23	391	ug/kg	HT
SB	NDA255	SW8270	2,6-DINITROTOLUENE	375	U	375	UJ	22	375	ug/kg	HT
SB	NDA085	SW8270	2,6-DINITROTOLUENE	482	U	482	UJ	28	482	ug/kg	HT
SB	NDA092	SW8270	2,6-DINITROTOLUENE	400	U	400	UJ	24	400	ug/kg	HT
SB	NDA093	SW8270	2,6-DINITROTOLUENE	339	U	339	UJ	20	339	ug/kg	HT
SB	NDA094	SW8270	2,6-DINITROTOLUENE	510	U	510	UJ	30	510	ug/kg	HT
SB	NDA095FD1	SW8270	2,6-DINITROTOLUENE	310	U	310	UJ	18	310	ug/kg	HT
SB	NDA296	SW8270	2,6-DINITROTOLUENE	369	U	369	UJ	22	369	ug/kg	HT
SB	NDA297	SW8270	2,6-DINITROTOLUENE	358	U	358	UJ	21	358	ug/kg	HT
SB	NDA298	SW8270	2,6-DINITROTOLUENE	341	U	341	UJ	20	341	ug/kg	HT
SB	NDA299	SW8270	2,6-DINITROTOLUENE	370	U	370	UJ	22	370	ug/kg	HT
SB	NDA058	SW8270	2,6-DINITROTOLUENE	460	U	460	UJ	27	460	ug/kg	HT
SB	NDA060	SW8270	2,6-DINITROTOLUENE	478	U	478	UJ	28	478	ug/kg	HT
SB	NDA063	SW8270	2,6-DINITROTOLUENE	382	U	382	UJ	23	382	ug/kg	HT
SB	NDA064FD1	SW8270	2,6-DINITROTOLUENE	351	U	351	UJ	21	351	ug/kg	HT
SB	NDA066	SW8270	2,6-DINITROTOLUENE	344	U	344	UJ	20	344	ug/kg	HT
SB	NDA068	SW8270	2,6-DINITROTOLUENE	360	U	360	UJ	21	360	ug/kg	HT
SB	NDA070	SW8270	2,6-DINITROTOLUENE	404	U	404	UJ	24	404	ug/kg	HT
SB	NDA073	SW8270	2,6-DINITROTOLUENE	383	U	383	UJ	23	383	ug/kg	HT
SB	NDA075	SW8270	2,6-DINITROTOLUENE	401	U	401	UJ	24	401	ug/kg	HT
SB	NDA077	SW8270	2,6-DINITROTOLUENE	441	U	441	UJ	26	441	ug/kg	HT
SB	NDA079	SW8270	2,6-DINITROTOLUENE	466	U	466	UJ	28	466	ug/kg	HT
SB	NDA081RE1	SW8270	2,6-DINITROTOLUENE	393	U	393	UJ	23	393	ug/kg	HT
SB	NDA083RE1	SW8270	2,6-DINITROTOLUENE	4240	U	4240	UJ	250	4240	ug/kg	HT
SD	NDA054	SW8270	2,6-DINITROTOLUENE	480	U	480	UJ	28	480	ug/kg	HT
SD	NDA055	SW8270	2,6-DINITROTOLUENE	696	U	696	UJ	41	696	ug/kg	HT
SD	NDA042	SW8270	2,6-DINITROTOLUENE	686	U	686	UJ	40	686	ug/kg	HT
SD	NDA043	SW8270	2,6-DINITROTOLUENE	735	U	735	UJ	43	735	ug/kg	HT

Matrix	Sample ID	Analytical Method	Parameter	Lab Result	Lab Qual	Final Result	Final Qual	DL	RL	Units	Comments
SD	NDA044	SW8270	2,6-DINITROTOLUENE	1680	U	1680	UJ	99	1680	ug/kg	HT
SD	NDA045	SW8270	2,6-DINITROTOLUENE	1500	U	1500	UJ	89	1500	ug/kg	HT
SD	NDA046	SW8270	2,6-DINITROTOLUENE	1520	U	1520	UJ	90	1520	ug/kg	HT
SD	NDA302	SW8270	2,6-DINITROTOLUENE	1200	U	1200	UJ	71	1200	ug/kg	HT
SD	NDA303	SW8270	2,6-DINITROTOLUENE	2300	U	2300	UJ	136	2300	ug/kg	HT
SD	NDA307FD1	SW8270	2,6-DINITROTOLUENE	2130	U	2130	UJ	125	2130	ug/kg	HT
SD	NDA047	SW8270	2,6-DINITROTOLUENE	503	U	503	UJ	30	503	ug/kg	HT
SD	NDA048	SW8270	2,6-DINITROTOLUENE	558	U	558	UJ	33	558	ug/kg	HT
SD	NDA049	SW8270	2,6-DINITROTOLUENE	463	U	463	UJ	27	463	ug/kg	HT
SS	NDA178	SW8270	2,6-DINITROTOLUENE	644	U	644	UJ	38	644	ug/kg	HT
SS	NDA179	SW8270	2,6-DINITROTOLUENE	644	U	644	UJ	38	644	ug/kg	HT
SS	NDA180	SW8270	2,6-DINITROTOLUENE	550	U	550	UJ	32	550	ug/kg	HT
SS	NDA181	SW8270	2,6-DINITROTOLUENE	566	U	566	UJ	33	566	ug/kg	HT
SS	NDA182	SW8270	2,6-DINITROTOLUENE	679	U	679	UJ	40	679	ug/kg	HT
SS	NDA183	SW8270	2,6-DINITROTOLUENE	589	U	589	UJ	35	589	ug/kg	HT
SS	NDA184FD1	SW8270	2,6-DINITROTOLUENE	662	U	662	UJ	39	662	ug/kg	HT
SS	NDA201	SW8270	2,6-DINITROTOLUENE	491	U	491	UJ	29	491	ug/kg	HT
SS	NDA202	SW8270	2,6-DINITROTOLUENE	605	U	605	UJ	36	605	ug/kg	HT
SS	NDA203	SW8270	2,6-DINITROTOLUENE	617	U	617	UJ	36	617	ug/kg	HT
SS	NDA204	SW8270	2,6-DINITROTOLUENE	753	U	753	UJ	44	753	ug/kg	HT
SS	NDA205FD1	SW8270	2,6-DINITROTOLUENE	668	U	668	UJ	39	668	ug/kg	HT
SS	NDA206	SW8270	2,6-DINITROTOLUENE	529	U	529	UJ	31	529	ug/kg	HT
SS	NDA207	SW8270	2,6-DINITROTOLUENE	669	U	669	UJ	39	669	ug/kg	HT
SS	NDA208	SW8270	2,6-DINITROTOLUENE	520	U	520	UJ	31	520	ug/kg	HT
SS	NDA209	SW8270	2,6-DINITROTOLUENE	570	U	570	UJ	34	570	ug/kg	HT
SS	NDA210	SW8270	2,6-DINITROTOLUENE	545	U	545	UJ	32	545	ug/kg	HT
SS	NDA211	SW8270	2,6-DINITROTOLUENE	742	U	742	UJ	44	742	ug/kg	HT
SS	NDA212	SW8270	2,6-DINITROTOLUENE	651	U	651	UJ	38	651	ug/kg	HT
SS	NDA185	SW8270	2,6-DINITROTOLUENE	445	U	445	UJ	26	445	ug/kg	HT
SS	NDA186	SW8270	2,6-DINITROTOLUENE	416	U	416	UJ	25	416	ug/kg	HT
SS	NDA187	SW8270	2,6-DINITROTOLUENE	380	U	380	UJ	22	380	ug/kg	HT
SS	NDA188	SW8270	2,6-DINITROTOLUENE	810	U	810	UJ	48	810	ug/kg	HT
SS	NDA189	SW8270	2,6-DINITROTOLUENE	426	U	426	UJ	25	426	ug/kg	HT
SS	NDA190	SW8270	2,6-DINITROTOLUENE	430	U	430	UJ	25	430	ug/kg	HT
SS	NDA191	SW8270	2,6-DINITROTOLUENE	338	U	338	UJ	20	338	ug/kg	HT
SS	NDA192FD1	SW8270	2,6-DINITROTOLUENE	418	U	418	UJ	25	418	ug/kg	HT
SS	NDA193	SW8270	2,6-DINITROTOLUENE	1720	U	1720	UJ	102	1720	ug/kg	HT
SS	NDA194	SW8270	2,6-DINITROTOLUENE	480	U	480	UJ	28	480	ug/kg	HT
SS	NDA195	SW8270	2,6-DINITROTOLUENE	323	U	323	UJ	19	323	ug/kg	HT
SS	NDA084	SW8270	2,6-DINITROTOLUENE	344	U	344	UJ	20	344	ug/kg	HT
SS	NDA091	SW8270	2,6-DINITROTOLUENE	367	U	367	UJ	22	367	ug/kg	HT
SS	NDA057	SW8270	2,6-DINITROTOLUENE	563	U	563	UJ	33	563	ug/kg	HT
SS	NDA061	SW8270	2,6-DINITROTOLUENE	469	U	469	UJ	28	469	ug/kg	HT
SS	NDA062FD1	SW8270	2,6-DINITROTOLUENE	523	U	523	UJ	31	523	ug/kg	HT
SS	NDA065	SW8270	2,6-DINITROTOLUENE	421	U	421	UJ	25	421	ug/kg	HT
SS	NDA067	SW8270	2,6-DINITROTOLUENE	378	U	378	UJ	22	378	ug/kg	HT
SS	NDA069	SW8270	2,6-DINITROTOLUENE	320	U	320	UJ	19	320	ug/kg	HT
SS	NDA119	SW8270	2,6-DINITROTOLUENE	503	U	503	UJ	30	503	ug/kg	HT
SS	NDA120	SW8270	2,6-DINITROTOLUENE	541	U	541	UJ	32	541	ug/kg	HT
SS	NDA121	SW8270	2,6-DINITROTOLUENE	409	U	409	UJ	24	409	ug/kg	HT
SS	NDA122	SW8270	2,6-DINITROTOLUENE	450	U	450	UJ	27	450	ug/kg	HT
SS	NDA123	SW8270	2,6-DINITROTOLUENE	450	U	450	UJ	27	450	ug/kg	HT
SS	NDA124	SW8270	2,6-DINITROTOLUENE	432	U	432	UJ	25	432	ug/kg	HT
SS	NDA071	SW8270	2,6-DINITROTOLUENE	554	U	554	UJ	33	554	ug/kg	HT
SS	NDA072FD1	SW8270	2,6-DINITROTOLUENE	413	U	413	UJ	24	413	ug/kg	HT
SS	NDA074	SW8270	2,6-DINITROTOLUENE	448	U	448	UJ	26	448	ug/kg	HT
SS	NDA076	SW8270	2,6-DINITROTOLUENE	419	U	419	UJ	25	419	ug/kg	HT
SS	NDA078	SW8270	2,6-DINITROTOLUENE	440	U	440	UJ	26	440	ug/kg	HT
SS	NDA080RE1	SW8270	2,6-DINITROTOLUENE	407	U	407	UJ	24	407	ug/kg	HT
SS	NDA082RE1	SW8270	2,6-DINITROTOLUENE	4660	U	4660	UJ	275	4660	ug/kg	HT
SB	NDA213	SW8270	2,4-DINITROTOLUENE	485	U	485	UJ	34	485	ug/kg	HT
SB	NDA214FD1	SW8270	2,4-DINITROTOLUENE	487	U	487	UJ	34	487	ug/kg	HT
SB	NDA215	SW8270	2,4-DINITROTOLUENE	527	U	527	UJ	37	527	ug/kg	HT
SB	NDA216	SW8270	2,4-DINITROTOLUENE	537	U	537	UJ	38	537	ug/kg	HT
SB	NDA217	SW8270	2,4-DINITROTOLUENE	540	U	540	UJ	38	540	ug/kg	HT
SB	NDA218	SW8270	2,4-DINITROTOLUENE	505	U	505	UJ	35	505	ug/kg	HT
SB	NDA219	SW8270	2,4-DINITROTOLUENE	380	U	380	UJ	27	380	ug/kg	HT
SB	NDA220	SW8270	2,4-DINITROTOLUENE	542	U	542	UJ	38	542	ug/kg	HT
SB	NDA221	SW8270	2,4-DINITROTOLUENE	501	U	501	UJ	35	501	ug/kg	HT
SB	NDA222	SW8270	2,4-DINITROTOLUENE	459	U	459	UJ	32	459	ug/kg	HT

Matrix	Sample ID	Analytical Method	Parameter	Lab Result	Lab Qual	Final Result	Final Qual	DL	RL	Units	Comments
SB	NDA223	SW8270	2,4-DINITROTOLUENE	527	U	527	UJ	37	527	ug/kg	HT
SB	NDA235	SW8270	2,4-DINITROTOLUENE	504	U	504	UJ	35	504	ug/kg	HT
SB	NDA236	SW8270	2,4-DINITROTOLUENE	423	U	423	UJ	30	423	ug/kg	HT
SB	NDA237FD1	SW8270	2,4-DINITROTOLUENE	395	U	395	UJ	28	395	ug/kg	HT
SB	NDA238	SW8270	2,4-DINITROTOLUENE	424	U	424	UJ	30	424	ug/kg	HT
SB	NDA239	SW8270	2,4-DINITROTOLUENE	555	U	555	UJ	39	555	ug/kg	HT
SB	NDA240	SW8270	2,4-DINITROTOLUENE	397	U	397	UJ	28	397	ug/kg	HT
SB	NDA241	SW8270	2,4-DINITROTOLUENE	471	U	471	UJ	33	471	ug/kg	HT
SB	NDA242	SW8270	2,4-DINITROTOLUENE	436	U	436	UJ	31	436	ug/kg	HT
SB	NDA243	SW8270	2,4-DINITROTOLUENE	893	U	893	UJ	62	893	ug/kg	HT
SB	NDA244	SW8270	2,4-DINITROTOLUENE	388	U	388	UJ	27	388	ug/kg	HT
SB	NDA245	SW8270	2,4-DINITROTOLUENE	393	U	393	UJ	27	393	ug/kg	HT
SB	NDA246	SW8270	2,4-DINITROTOLUENE	511	U	511	UJ	36	511	ug/kg	HT
SB	NDA247FD1	SW8270	2,4-DINITROTOLUENE	390	U	390	UJ	27	390	ug/kg	HT
SB	NDA248	SW8270	2,4-DINITROTOLUENE	453	U	453	UJ	32	453	ug/kg	HT
SB	NDA249	SW8270	2,4-DINITROTOLUENE	374	U	374	UJ	26	374	ug/kg	HT
SB	NDA252	SW8270	2,4-DINITROTOLUENE	420	U	420	UJ	29	420	ug/kg	HT
SB	NDA253	SW8270	2,4-DINITROTOLUENE	439	U	439	UJ	31	439	ug/kg	HT
SB	NDA254	SW8270	2,4-DINITROTOLUENE	391	U	391	UJ	27	391	ug/kg	HT
SB	NDA255	SW8270	2,4-DINITROTOLUENE	375	U	375	UJ	26	375	ug/kg	HT
SB	NDA085	SW8270	2,4-DINITROTOLUENE	482	U	482	UJ	34	482	ug/kg	HT
SB	NDA092	SW8270	2,4-DINITROTOLUENE	400	U	400	UJ	28	400	ug/kg	HT
SB	NDA093	SW8270	2,4-DINITROTOLUENE	339	U	339	UJ	24	339	ug/kg	HT
SB	NDA094	SW8270	2,4-DINITROTOLUENE	510	U	510	UJ	36	510	ug/kg	HT
SB	NDA095FD1	SW8270	2,4-DINITROTOLUENE	310	U	310	UJ	22	310	ug/kg	HT
SB	NDA296	SW8270	2,4-DINITROTOLUENE	369	U	369	UJ	26	369	ug/kg	HT
SB	NDA297	SW8270	2,4-DINITROTOLUENE	358	U	358	UJ	25	358	ug/kg	HT
SB	NDA298	SW8270	2,4-DINITROTOLUENE	341	U	341	UJ	24	341	ug/kg	HT
SB	NDA299	SW8270	2,4-DINITROTOLUENE	370	U	370	UJ	26	370	ug/kg	HT
SB	NDA058	SW8270	2,4-DINITROTOLUENE	460	U	460	UJ	32	460	ug/kg	HT
SB	NDA060	SW8270	2,4-DINITROTOLUENE	478	U	478	UJ	33	478	ug/kg	HT
SB	NDA063	SW8270	2,4-DINITROTOLUENE	382	U	382	UJ	27	382	ug/kg	HT
SB	NDA064FD1	SW8270	2,4-DINITROTOLUENE	351	U	351	UJ	25	351	ug/kg	HT
SB	NDA066	SW8270	2,4-DINITROTOLUENE	344	U	344	UJ	24	344	ug/kg	HT
SB	NDA068	SW8270	2,4-DINITROTOLUENE	360	U	360	UJ	25	360	ug/kg	HT
SB	NDA070	SW8270	2,4-DINITROTOLUENE	404	U	404	UJ	28	404	ug/kg	HT
SB	NDA073	SW8270	2,4-DINITROTOLUENE	383	U	383	UJ	27	383	ug/kg	HT
SB	NDA075	SW8270	2,4-DINITROTOLUENE	401	U	401	UJ	28	401	ug/kg	HT
SB	NDA077	SW8270	2,4-DINITROTOLUENE	441	U	441	UJ	31	441	ug/kg	HT
SB	NDA079	SW8270	2,4-DINITROTOLUENE	466	U	466	UJ	33	466	ug/kg	HT
SB	NDA081RE1	SW8270	2,4-DINITROTOLUENE	393	U	393	UJ	28	393	ug/kg	HT
SB	NDA083RE1	SW8270	2,4-DINITROTOLUENE	4240	U	4240	UJ	297	4240	ug/kg	HT
SD	NDA054	SW8270	2,4-DINITROTOLUENE	480	U	480	UJ	34	480	ug/kg	HT
SD	NDA055	SW8270	2,4-DINITROTOLUENE	696	U	696	UJ	49	696	ug/kg	HT
SD	NDA042	SW8270	2,4-DINITROTOLUENE	686	U	686	UJ	48	686	ug/kg	HT
SD	NDA043	SW8270	2,4-DINITROTOLUENE	735	U	735	UJ	51	735	ug/kg	HT
SD	NDA044	SW8270	2,4-DINITROTOLUENE	1680	U	1680	UJ	118	1680	ug/kg	HT
SD	NDA045	SW8270	2,4-DINITROTOLUENE	1500	U	1500	UJ	105	1500	ug/kg	HT
SD	NDA046	SW8270	2,4-DINITROTOLUENE	1520	U	1520	UJ	106	1520	ug/kg	HT
SD	NDA302	SW8270	2,4-DINITROTOLUENE	1200	U	1200	UJ	84	1200	ug/kg	HT
SD	NDA303	SW8270	2,4-DINITROTOLUENE	2300	U	2300	UJ	161	2300	ug/kg	HT
SD	NDA307FD1	SW8270	2,4-DINITROTOLUENE	2130	U	2130	UJ	149	2130	ug/kg	HT
SD	NDA047	SW8270	2,4-DINITROTOLUENE	503	U	503	UJ	35	503	ug/kg	HT
SD	NDA048	SW8270	2,4-DINITROTOLUENE	558	U	558	UJ	39	558	ug/kg	HT
SD	NDA049	SW8270	2,4-DINITROTOLUENE	463	U	463	UJ	32	463	ug/kg	HT
SS	NDA178	SW8270	2,4-DINITROTOLUENE	644	U	644	UJ	45	644	ug/kg	HT
SS	NDA179	SW8270	2,4-DINITROTOLUENE	644	U	644	UJ	45	644	ug/kg	HT
SS	NDA180	SW8270	2,4-DINITROTOLUENE	550	U	550	UJ	38	550	ug/kg	HT
SS	NDA181	SW8270	2,4-DINITROTOLUENE	566	U	566	UJ	40	566	ug/kg	HT
SS	NDA182	SW8270	2,4-DINITROTOLUENE	679	U	679	UJ	48	679	ug/kg	HT
SS	NDA183	SW8270	2,4-DINITROTOLUENE	589	U	589	UJ	41	589	ug/kg	HT
SS	NDA184FD1	SW8270	2,4-DINITROTOLUENE	662	U	662	UJ	46	662	ug/kg	HT
SS	NDA201	SW8270	2,4-DINITROTOLUENE	491	U	491	UJ	34	491	ug/kg	HT
SS	NDA202	SW8270	2,4-DINITROTOLUENE	605	U	605	UJ	42	605	ug/kg	HT
SS	NDA203	SW8270	2,4-DINITROTOLUENE	617	U	617	UJ	43	617	ug/kg	HT
SS	NDA204	SW8270	2,4-DINITROTOLUENE	753	U	753	UJ	53	753	ug/kg	HT
SS	NDA205FD1	SW8270	2,4-DINITROTOLUENE	668	U	668	UJ	47	668	ug/kg	HT
SS	NDA206	SW8270	2,4-DINITROTOLUENE	529	U	529	UJ	37	529	ug/kg	HT
SS	NDA207	SW8270	2,4-DINITROTOLUENE	669	U	669	UJ	47	669	ug/kg	HT
SS	NDA208	SW8270	2,4-DINITROTOLUENE	520	U	520	UJ	36	520	ug/kg	HT

Matrix	Sample ID	Analytical Method	Parameter	Lab Result	Lab Qual	Final Result	Final Qual	DL	RL	Units	Comments
SS	NDA209	SW8270	2,4-DINITROTOLUENE	570	U	570	UJ	40	570	ug/kg	HT
SS	NDA210	SW8270	2,4-DINITROTOLUENE	545	U	545	UJ	38	545	ug/kg	HT
SS	NDA211	SW8270	2,4-DINITROTOLUENE	742	U	742	UJ	52	742	ug/kg	HT
SS	NDA212	SW8270	2,4-DINITROTOLUENE	651	U	651	UJ	46	651	ug/kg	HT
SS	NDA185	SW8270	2,4-DINITROTOLUENE	445	U	445	UJ	31	445	ug/kg	HT
SS	NDA186	SW8270	2,4-DINITROTOLUENE	416	U	416	UJ	29	416	ug/kg	HT
SS	NDA187	SW8270	2,4-DINITROTOLUENE	380	U	380	UJ	27	380	ug/kg	HT
SS	NDA188	SW8270	2,4-DINITROTOLUENE	810	U	810	UJ	57	810	ug/kg	HT
SS	NDA189	SW8270	2,4-DINITROTOLUENE	426	U	426	UJ	30	426	ug/kg	HT
SS	NDA190	SW8270	2,4-DINITROTOLUENE	430	U	430	UJ	30	430	ug/kg	HT
SS	NDA191	SW8270	2,4-DINITROTOLUENE	338	U	338	UJ	24	338	ug/kg	HT
SS	NDA192FD1	SW8270	2,4-DINITROTOLUENE	418	U	418	UJ	29	418	ug/kg	HT
SS	NDA193	SW8270	2,4-DINITROTOLUENE	1720	U	1720	UJ	120	1720	ug/kg	HT
SS	NDA194	SW8270	2,4-DINITROTOLUENE	480	U	480	UJ	34	480	ug/kg	HT
SS	NDA195	SW8270	2,4-DINITROTOLUENE	323	U	323	UJ	23	323	ug/kg	HT
SS	NDA084	SW8270	2,4-DINITROTOLUENE	344	U	344	UJ	24	344	ug/kg	HT
SS	NDA091	SW8270	2,4-DINITROTOLUENE	367	U	367	UJ	26	367	ug/kg	HT
SS	NDA057	SW8270	2,4-DINITROTOLUENE	563	U	563	UJ	39	563	ug/kg	HT
SS	NDA059	SW8270	2,4-DINITROTOLUENE	1980	=	1980	J	33	465	ug/kg	HT
SS	NDA061	SW8270	2,4-DINITROTOLUENE	469	U	469	UJ	33	469	ug/kg	HT
SS	NDA062FD1	SW8270	2,4-DINITROTOLUENE	523	U	523	UJ	37	523	ug/kg	HT
SS	NDA065	SW8270	2,4-DINITROTOLUENE	421	U	421	UJ	29	421	ug/kg	HT
SS	NDA067	SW8270	2,4-DINITROTOLUENE	378	U	378	UJ	26	378	ug/kg	HT
SS	NDA069	SW8270	2,4-DINITROTOLUENE	320	U	320	UJ	22	320	ug/kg	HT
SS	NDA119	SW8270	2,4-DINITROTOLUENE	503	U	503	UJ	35	503	ug/kg	HT
SS	NDA120	SW8270	2,4-DINITROTOLUENE	541	U	541	UJ	38	541	ug/kg	HT
SS	NDA121	SW8270	2,4-DINITROTOLUENE	409	U	409	UJ	29	409	ug/kg	HT
SS	NDA122	SW8270	2,4-DINITROTOLUENE	450	U	450	UJ	32	450	ug/kg	HT
SS	NDA123	SW8270	2,4-DINITROTOLUENE	450	U	450	UJ	32	450	ug/kg	HT
SS	NDA124	SW8270	2,4-DINITROTOLUENE	432	U	432	UJ	30	432	ug/kg	HT
SS	NDA071	SW8270	2,4-DINITROTOLUENE	554	U	554	UJ	39	554	ug/kg	HT
SS	NDA072FD1	SW8270	2,4-DINITROTOLUENE	413	U	413	UJ	29	413	ug/kg	HT
SS	NDA074	SW8270	2,4-DINITROTOLUENE	448	U	448	UJ	31	448	ug/kg	HT
SS	NDA076	SW8270	2,4-DINITROTOLUENE	419	U	419	UJ	29	419	ug/kg	HT
SS	NDA078	SW8270	2,4-DINITROTOLUENE	440	U	440	UJ	31	440	ug/kg	HT
SS	NDA080RE1	SW8270	2,4-DINITROTOLUENE	407	U	407	UJ	28	407	ug/kg	HT
SS	NDA082RE1	SW8270	2,4-DINITROTOLUENE	4660	U	4660	UJ	326	4660	ug/kg	HT
SB	NDA213	SW8270	2,4-DINITROPHENOL	1440	U	1440	UJ	33	1440	ug/kg	HT
SB	NDA214FD1	SW8270	2,4-DINITROPHENOL	1450	U	1450	UJ	33	1450	ug/kg	HT
SB	NDA215	SW8270	2,4-DINITROPHENOL	1570	U	1570	UJ	36	1570	ug/kg	HT
SB	NDA216	SW8270	2,4-DINITROPHENOL	1590	U	1590	UJ	37	1590	ug/kg	HT
SB	NDA217	SW8270	2,4-DINITROPHENOL	1600	U	1600	UJ	37	1600	ug/kg	HT
SB	NDA218	SW8270	2,4-DINITROPHENOL	1500	U	1500	UJ	34	1500	ug/kg	HT
SB	NDA219	SW8270	2,4-DINITROPHENOL	1130	U	1130	UJ	26	1130	ug/kg	HT
SB	NDA220	SW8270	2,4-DINITROPHENOL	1610	U	1610	UJ	37	1610	ug/kg	HT
SB	NDA221	SW8270	2,4-DINITROPHENOL	1490	U	1490	UJ	34	1490	ug/kg	HT
SB	NDA222	SW8270	2,4-DINITROPHENOL	1360	U	1360	UJ	31	1360	ug/kg	HT
SB	NDA223	SW8270	2,4-DINITROPHENOL	1570	U	1570	UJ	36	1570	ug/kg	HT
SB	NDA235	SW8270	2,4-DINITROPHENOL	1510	U	1510	UJ	34	1510	ug/kg	HT
SB	NDA236	SW8270	2,4-DINITROPHENOL	1270	U	1270	UJ	29	1270	ug/kg	HT
SB	NDA237FD1	SW8270	2,4-DINITROPHENOL	1180	U	1180	UJ	27	1180	ug/kg	HT
SB	NDA238	SW8270	2,4-DINITROPHENOL	1270	U	1270	UJ	29	1270	ug/kg	HT
SB	NDA239	SW8270	2,4-DINITROPHENOL	1660	U	1660	UJ	38	1660	ug/kg	HT
SB	NDA240	SW8270	2,4-DINITROPHENOL	1190	U	1190	UJ	27	1190	ug/kg	HT
SB	NDA241	SW8270	2,4-DINITROPHENOL	1410	U	1410	UJ	32	1410	ug/kg	HT
SB	NDA242	SW8270	2,4-DINITROPHENOL	1310	U	1310	UJ	30	1310	ug/kg	HT
SB	NDA243	SW8270	2,4-DINITROPHENOL	2680	U	2680	UJ	61	2680	ug/kg	HT
SB	NDA244	SW8270	2,4-DINITROPHENOL	1160	U	1160	UJ	26	1160	ug/kg	HT
SB	NDA245	SW8270	2,4-DINITROPHENOL	1180	U	1180	UJ	27	1180	ug/kg	HT
SB	NDA246	SW8270	2,4-DINITROPHENOL	1530	U	1530	UJ	35	1530	ug/kg	HT
SB	NDA247FD1	SW8270	2,4-DINITROPHENOL	1170	U	1170	UJ	27	1170	ug/kg	HT
SB	NDA248	SW8270	2,4-DINITROPHENOL	1360	U	1360	UJ	31	1360	ug/kg	HT
SB	NDA249	SW8270	2,4-DINITROPHENOL	1120	U	1120	UJ	25	1120	ug/kg	HT
SB	NDA252	SW8270	2,4-DINITROPHENOL	1260	U	1260	UJ	29	1260	ug/kg	HT
SB	NDA253	SW8270	2,4-DINITROPHENOL	1320	U	1320	UJ	30	1320	ug/kg	HT
SB	NDA254	SW8270	2,4-DINITROPHENOL	1170	U	1170	UJ	27	1170	ug/kg	HT
SB	NDA255	SW8270	2,4-DINITROPHENOL	1130	U	1130	UJ	26	1130	ug/kg	HT
SB	NDA085	SW8270	2,4-DINITROPHENOL	1450	U	1450	UJ	33	1450	ug/kg	HT
SB	NDA092	SW8270	2,4-DINITROPHENOL	1200	U	1200	UJ	27	1200	ug/kg	HT
SB	NDA093	SW8270	2,4-DINITROPHENOL	1020	U	1020	UJ	23	1020	ug/kg	HT

Matrix	Sample ID	Analytical Method	Parameter	Lab Result	Lab Qual	Final Result	Final Qual	DL	RL	Units	Comments
SB	NDA094	SW8270	2,4-DINITROPHENOL	1530	U	1530	UJ	35	1530	ug/kg	HT
SB	NDA095FD1	SW8270	2,4-DINITROPHENOL	931	U	931	UJ	21	931	ug/kg	HT
SB	NDA296	SW8270	2,4-DINITROPHENOL	1110	U	1110	UJ	25	1110	ug/kg	HT
SB	NDA297	SW8270	2,4-DINITROPHENOL	1080	U	1080	UJ	24	1080	ug/kg	HT
SB	NDA298	SW8270	2,4-DINITROPHENOL	1020	U	1020	UJ	23	1020	ug/kg	HT
SB	NDA299	SW8270	2,4-DINITROPHENOL	1110	U	1110	UJ	25	1110	ug/kg	HT
SB	NDA058	SW8270	2,4-DINITROPHENOL	1380	U	1380	UJ	31	1380	ug/kg	HT
SB	NDA060	SW8270	2,4-DINITROPHENOL	1430	U	1430	UJ	32	1430	ug/kg	HT
SB	NDA063	SW8270	2,4-DINITROPHENOL	1150	U	1150	UJ	26	1150	ug/kg	HT
SB	NDA064FD1	SW8270	2,4-DINITROPHENOL	1050	U	1050	UJ	24	1050	ug/kg	HT
SB	NDA066	SW8270	2,4-DINITROPHENOL	1030	U	1030	UJ	23	1030	ug/kg	HT
SB	NDA068	SW8270	2,4-DINITROPHENOL	1080	U	1080	UJ	24	1080	ug/kg	HT
SB	NDA070	SW8270	2,4-DINITROPHENOL	1210	U	1210	UJ	27	1210	ug/kg	HT
SB	NDA073	SW8270	2,4-DINITROPHENOL	1150	U	1150	UJ	26	1150	ug/kg	HT
SB	NDA075	SW8270	2,4-DINITROPHENOL	1200	U	1200	UJ	27	1200	ug/kg	HT
SB	NDA077	SW8270	2,4-DINITROPHENOL	1320	U	1320	UJ	30	1320	ug/kg	HT
SB	NDA079	SW8270	2,4-DINITROPHENOL	1400	U	1400	UJ	32	1400	ug/kg	HT
SB	NDA081RE1	SW8270	2,4-DINITROPHENOL	1180	U	1180	UJ	27	1180	ug/kg	HT
SB	NDA083RE1	SW8270	2,4-DINITROPHENOL	12700	U	12700	UJ	288	12700	ug/kg	HT
SD	NDA054	SW8270	2,4-DINITROPHENOL	1430	U	1430	UJ	33	1430	ug/kg	HT
SD	NDA055	SW8270	2,4-DINITROPHENOL	2070	U	2070	UJ	47	2070	ug/kg	HT
SD	NDA042	SW8270	2,4-DINITROPHENOL	2060	U	2060	UJ	47	2060	ug/kg	HT
SD	NDA043	SW8270	2,4-DINITROPHENOL	2200	U	2200	UJ	50	2200	ug/kg	HT
SD	NDA044	SW8270	2,4-DINITROPHENOL	5050	U	5050	UJ	115	5050	ug/kg	HT
SD	NDA045	SW8270	2,4-DINITROPHENOL	4500	U	4500	UJ	102	4500	ug/kg	HT
SD	NDA046	SW8270	2,4-DINITROPHENOL	4560	U	4560	UJ	103	4560	ug/kg	HT
SD	NDA302	SW8270	2,4-DINITROPHENOL	3600	U	3600	UJ	82	3600	ug/kg	HT
SD	NDA303	SW8270	2,4-DINITROPHENOL	6900	U	6900	UJ	156	6900	ug/kg	HT
SD	NDA307FD1	SW8270	2,4-DINITROPHENOL	6380	U	6380	UJ	145	6380	ug/kg	HT
SD	NDA047	SW8270	2,4-DINITROPHENOL	1510	U	1510	UJ	34	1510	ug/kg	HT
SD	NDA048	SW8270	2,4-DINITROPHENOL	1680	U	1680	UJ	38	1680	ug/kg	HT
SD	NDA049	SW8270	2,4-DINITROPHENOL	1390	U	1390	UJ	31	1390	ug/kg	HT
SS	NDA178	SW8270	2,4-DINITROPHENOL	1930	U	1930	UJ	44	1930	ug/kg	HT
SS	NDA179	SW8270	2,4-DINITROPHENOL	1930	U	1930	UJ	44	1930	ug/kg	HT
SS	NDA180	SW8270	2,4-DINITROPHENOL	1650	U	1650	UJ	37	1650	ug/kg	HT
SS	NDA181	SW8270	2,4-DINITROPHENOL	1700	U	1700	UJ	39	1700	ug/kg	HT
SS	NDA182	SW8270	2,4-DINITROPHENOL	2040	U	2040	UJ	46	2040	ug/kg	HT
SS	NDA183	SW8270	2,4-DINITROPHENOL	1770	U	1770	UJ	40	1770	ug/kg	HT
SS	NDA184FD1	SW8270	2,4-DINITROPHENOL	1990	U	1990	UJ	45	1990	ug/kg	HT
SS	NDA201	SW8270	2,4-DINITROPHENOL	1470	U	1470	UJ	33	1470	ug/kg	HT
SS	NDA202	SW8270	2,4-DINITROPHENOL	1820	U	1820	UJ	41	1820	ug/kg	HT
SS	NDA203	SW8270	2,4-DINITROPHENOL	1850	U	1850	UJ	42	1850	ug/kg	HT
SS	NDA204	SW8270	2,4-DINITROPHENOL	2260	U	2260	UJ	51	2260	ug/kg	HT
SS	NDA205FD1	SW8270	2,4-DINITROPHENOL	2000	U	2000	UJ	45	2000	ug/kg	HT
SS	NDA206	SW8270	2,4-DINITROPHENOL	1590	U	1590	UJ	36	1590	ug/kg	HT
SS	NDA207	SW8270	2,4-DINITROPHENOL	2010	U	2010	UJ	46	2010	ug/kg	HT
SS	NDA208	SW8270	2,4-DINITROPHENOL	1560	U	1560	UJ	35	1560	ug/kg	HT
SS	NDA209	SW8270	2,4-DINITROPHENOL	1710	U	1710	UJ	39	1710	ug/kg	HT
SS	NDA210	SW8270	2,4-DINITROPHENOL	1630	U	1630	UJ	37	1630	ug/kg	HT
SS	NDA211	SW8270	2,4-DINITROPHENOL	2230	U	2230	UJ	50	2230	ug/kg	HT
SS	NDA212	SW8270	2,4-DINITROPHENOL	1950	U	1950	UJ	44	1950	ug/kg	HT
SS	NDA185	SW8270	2,4-DINITROPHENOL	1340	U	1340	UJ	30	1340	ug/kg	HT
SS	NDA186	SW8270	2,4-DINITROPHENOL	1250	U	1250	UJ	28	1250	ug/kg	HT
SS	NDA187	SW8270	2,4-DINITROPHENOL	1140	U	1140	UJ	26	1140	ug/kg	HT
SS	NDA188	SW8270	2,4-DINITROPHENOL	2430	U	2430	UJ	55	2430	ug/kg	HT
SS	NDA189	SW8270	2,4-DINITROPHENOL	1280	U	1280	UJ	29	1280	ug/kg	HT
SS	NDA190	SW8270	2,4-DINITROPHENOL	1290	U	1290	UJ	29	1290	ug/kg	HT
SS	NDA191	SW8270	2,4-DINITROPHENOL	1010	U	1010	UJ	23	1010	ug/kg	HT
SS	NDA192FD1	SW8270	2,4-DINITROPHENOL	1250	U	1250	UJ	28	1250	ug/kg	HT
SS	NDA193	SW8270	2,4-DINITROPHENOL	5160	U	5160	UJ	117	5160	ug/kg	HT
SS	NDA194	SW8270	2,4-DINITROPHENOL	1440	U	1440	UJ	33	1440	ug/kg	HT
SS	NDA195	SW8270	2,4-DINITROPHENOL	969	U	969	UJ	22	969	ug/kg	HT
SS	NDA084	SW8270	2,4-DINITROPHENOL	1030	U	1030	UJ	23	1030	ug/kg	HT
SS	NDA091	SW8270	2,4-DINITROPHENOL	1100	U	1100	UJ	25	1100	ug/kg	HT
SS	NDA057	SW8270	2,4-DINITROPHENOL	1690	U	1690	UJ	38	1690	ug/kg	HT
SS	NDA059	SW8270	2,4-DINITROPHENOL	1390	U	1390	UJ	32	1390	ug/kg	HT
SS	NDA061	SW8270	2,4-DINITROPHENOL	1410	U	1410	UJ	32	1410	ug/kg	HT
SS	NDA062FD1	SW8270	2,4-DINITROPHENOL	1570	U	1570	UJ	36	1570	ug/kg	HT
SS	NDA065	SW8270	2,4-DINITROPHENOL	1260	U	1260	UJ	29	1260	ug/kg	HT
SS	NDA067	SW8270	2,4-DINITROPHENOL	1130	U	1130	UJ	26	1130	ug/kg	HT

Matrix	Sample ID	Analytical Method	Parameter	Lab Result	Lab Qual	Final Result	Final Qual	DL	RL	Units	Comments
SS	NDA069	SW8270	2,4-DINITROPHENOL	959	U	959	UJ	22	959	ug/kg	HT
SS	NDA119	SW8270	2,4-DINITROPHENOL	1510	U	1510	UJ	34	1510	ug/kg	HT
SS	NDA120	SW8270	2,4-DINITROPHENOL	1620	U	1620	UJ	37	1620	ug/kg	HT
SS	NDA121	SW8270	2,4-DINITROPHENOL	1230	U	1230	UJ	28	1230	ug/kg	HT
SS	NDA122	SW8270	2,4-DINITROPHENOL	1350	U	1350	UJ	31	1350	ug/kg	HT
SS	NDA123	SW8270	2,4-DINITROPHENOL	1350	U	1350	UJ	31	1350	ug/kg	HT
SS	NDA124	SW8270	2,4-DINITROPHENOL	1290	U	1290	UJ	29	1290	ug/kg	HT
SS	NDA071	SW8270	2,4-DINITROPHENOL	1660	U	1660	UJ	38	1660	ug/kg	HT
SS	NDA072FD1	SW8270	2,4-DINITROPHENOL	1240	U	1240	UJ	28	1240	ug/kg	HT
SS	NDA074	SW8270	2,4-DINITROPHENOL	1340	U	1340	UJ	30	1340	ug/kg	HT
SS	NDA076	SW8270	2,4-DINITROPHENOL	1260	U	1260	UJ	29	1260	ug/kg	HT
SS	NDA078	SW8270	2,4-DINITROPHENOL	1320	U	1320	UJ	30	1320	ug/kg	HT
SS	NDA080RE1	SW8270	2,4-DINITROPHENOL	1220	U	1220	UJ	28	1220	ug/kg	HT
SS	NDA082RE1	SW8270	2,4-DINITROPHENOL	14000	U	14000	UJ	317	14000	ug/kg	HT
SB	NDA213	SW8270	2,4-DIMETHYLPHENOL	485	U	485	UJ	38	485	ug/kg	HT
SB	NDA214FD1	SW8270	2,4-DIMETHYLPHENOL	487	U	487	UJ	38	487	ug/kg	HT
SB	NDA215	SW8270	2,4-DIMETHYLPHENOL	527	U	527	UJ	41	527	ug/kg	HT
SB	NDA216	SW8270	2,4-DIMETHYLPHENOL	537	U	537	UJ	42	537	ug/kg	HT
SB	NDA217	SW8270	2,4-DIMETHYLPHENOL	540	U	540	UJ	42	540	ug/kg	HT
SB	NDA218	SW8270	2,4-DIMETHYLPHENOL	505	U	505	UJ	39	505	ug/kg	HT
SB	NDA219	SW8270	2,4-DIMETHYLPHENOL	380	U	380	UJ	30	380	ug/kg	HT
SB	NDA220	SW8270	2,4-DIMETHYLPHENOL	542	U	542	UJ	42	542	ug/kg	HT
SB	NDA221	SW8270	2,4-DIMETHYLPHENOL	501	U	501	UJ	39	501	ug/kg	HT
SB	NDA222	SW8270	2,4-DIMETHYLPHENOL	459	U	459	UJ	36	459	ug/kg	HT
SB	NDA223	SW8270	2,4-DIMETHYLPHENOL	527	U	527	UJ	41	527	ug/kg	HT
SB	NDA235	SW8270	2,4-DIMETHYLPHENOL	504	U	504	UJ	39	504	ug/kg	HT
SB	NDA236	SW8270	2,4-DIMETHYLPHENOL	423	U	423	UJ	33	423	ug/kg	HT
SB	NDA237FD1	SW8270	2,4-DIMETHYLPHENOL	395	U	395	UJ	31	395	ug/kg	HT
SB	NDA238	SW8270	2,4-DIMETHYLPHENOL	424	U	424	UJ	33	424	ug/kg	HT
SB	NDA239	SW8270	2,4-DIMETHYLPHENOL	555	U	555	UJ	43	555	ug/kg	HT
SB	NDA240	SW8270	2,4-DIMETHYLPHENOL	397	U	397	UJ	31	397	ug/kg	HT
SB	NDA241	SW8270	2,4-DIMETHYLPHENOL	471	U	471	UJ	37	471	ug/kg	HT
SB	NDA242	SW8270	2,4-DIMETHYLPHENOL	436	U	436	UJ	34	436	ug/kg	HT
SB	NDA243	SW8270	2,4-DIMETHYLPHENOL	893	U	893	UJ	70	893	ug/kg	HT
SB	NDA244	SW8270	2,4-DIMETHYLPHENOL	388	U	388	UJ	30	388	ug/kg	HT
SB	NDA245	SW8270	2,4-DIMETHYLPHENOL	393	U	393	UJ	31	393	ug/kg	HT
SB	NDA246	SW8270	2,4-DIMETHYLPHENOL	511	U	511	UJ	40	511	ug/kg	HT
SB	NDA247FD1	SW8270	2,4-DIMETHYLPHENOL	390	U	390	UJ	30	390	ug/kg	HT
SB	NDA248	SW8270	2,4-DIMETHYLPHENOL	453	U	453	UJ	35	453	ug/kg	HT
SB	NDA249	SW8270	2,4-DIMETHYLPHENOL	374	U	374	UJ	29	374	ug/kg	HT
SB	NDA252	SW8270	2,4-DIMETHYLPHENOL	420	U	420	UJ	33	420	ug/kg	HT
SB	NDA253	SW8270	2,4-DIMETHYLPHENOL	439	U	439	UJ	34	439	ug/kg	HT
SB	NDA254	SW8270	2,4-DIMETHYLPHENOL	391	U	391	UJ	30	391	ug/kg	HT
SB	NDA255	SW8270	2,4-DIMETHYLPHENOL	375	U	375	UJ	29	375	ug/kg	HT
SB	NDA085	SW8270	2,4-DIMETHYLPHENOL	482	U	482	UJ	38	482	ug/kg	HT
SB	NDA092	SW8270	2,4-DIMETHYLPHENOL	400	U	400	UJ	31	400	ug/kg	HT
SB	NDA093	SW8270	2,4-DIMETHYLPHENOL	339	U	339	UJ	26	339	ug/kg	HT
SB	NDA094	SW8270	2,4-DIMETHYLPHENOL	510	U	510	UJ	40	510	ug/kg	HT
SB	NDA095FD1	SW8270	2,4-DIMETHYLPHENOL	310	U	310	UJ	24	310	ug/kg	HT
SB	NDA296	SW8270	2,4-DIMETHYLPHENOL	369	U	369	UJ	29	369	ug/kg	HT
SB	NDA297	SW8270	2,4-DIMETHYLPHENOL	358	U	358	UJ	28	358	ug/kg	HT
SB	NDA298	SW8270	2,4-DIMETHYLPHENOL	341	U	341	UJ	27	341	ug/kg	HT
SB	NDA299	SW8270	2,4-DIMETHYLPHENOL	370	U	370	UJ	29	370	ug/kg	HT
SB	NDA058	SW8270	2,4-DIMETHYLPHENOL	460	U	460	UJ	36	460	ug/kg	HT
SB	NDA060	SW8270	2,4-DIMETHYLPHENOL	478	U	478	UJ	37	478	ug/kg	HT
SB	NDA063	SW8270	2,4-DIMETHYLPHENOL	382	U	382	UJ	30	382	ug/kg	HT
SB	NDA064FD1	SW8270	2,4-DIMETHYLPHENOL	351	U	351	UJ	27	351	ug/kg	HT
SB	NDA066	SW8270	2,4-DIMETHYLPHENOL	344	U	344	UJ	27	344	ug/kg	HT
SB	NDA068	SW8270	2,4-DIMETHYLPHENOL	360	U	360	UJ	28	360	ug/kg	HT
SB	NDA070	SW8270	2,4-DIMETHYLPHENOL	404	U	404	UJ	31	404	ug/kg	HT
SB	NDA073	SW8270	2,4-DIMETHYLPHENOL	383	U	383	UJ	30	383	ug/kg	HT
SB	NDA075	SW8270	2,4-DIMETHYLPHENOL	401	U	401	UJ	31	401	ug/kg	HT
SB	NDA077	SW8270	2,4-DIMETHYLPHENOL	441	U	441	UJ	34	441	ug/kg	HT
SB	NDA079	SW8270	2,4-DIMETHYLPHENOL	466	U	466	UJ	36	466	ug/kg	HT
SB	NDA081RE1	SW8270	2,4-DIMETHYLPHENOL	393	U	393	UJ	31	393	ug/kg	HT
SB	NDA083RE1	SW8270	2,4-DIMETHYLPHENOL	4240	U	4240	UJ	330	4240	ug/kg	HT
SD	NDA054	SW8270	2,4-DIMETHYLPHENOL	480	U	480	UJ	37	480	ug/kg	HT
SD	NDA055	SW8270	2,4-DIMETHYLPHENOL	696	U	696	UJ	54	696	ug/kg	HT
SD	NDA042	SW8270	2,4-DIMETHYLPHENOL	686	U	686	UJ	54	686	ug/kg	HT
SD	NDA043	SW8270	2,4-DIMETHYLPHENOL	735	U	735	UJ	57	735	ug/kg	HT

Matrix	Sample ID	Analytical Method	Parameter	Lab Result	Lab Qual	Final Result	Final Qual	DL	RL	Units	Comments
SD	NDA044	SW8270	2,4-DIMETHYLPHENOL	1680	U	1680	UJ	131	1680	ug/kg	HT
SD	NDA045	SW8270	2,4-DIMETHYLPHENOL	1500	U	1500	UJ	117	1500	ug/kg	HT
SD	NDA046	SW8270	2,4-DIMETHYLPHENOL	1520	U	1520	UJ	118	1520	ug/kg	HT
SD	NDA302	SW8270	2,4-DIMETHYLPHENOL	1200	U	1200	UJ	94	1200	ug/kg	HT
SD	NDA303	SW8270	2,4-DIMETHYLPHENOL	2300	U	2300	UJ	179	2300	ug/kg	HT
SD	NDA307FD1	SW8270	2,4-DIMETHYLPHENOL	2130	U	2130	UJ	166	2130	ug/kg	HT
SD	NDA047	SW8270	2,4-DIMETHYLPHENOL	503	U	503	UJ	39	503	ug/kg	HT
SD	NDA048	SW8270	2,4-DIMETHYLPHENOL	558	U	558	UJ	44	558	ug/kg	HT
SD	NDA049	SW8270	2,4-DIMETHYLPHENOL	463	U	463	UJ	36	463	ug/kg	HT
SS	NDA178	SW8270	2,4-DIMETHYLPHENOL	644	U	644	UJ	50	644	ug/kg	HT
SS	NDA179	SW8270	2,4-DIMETHYLPHENOL	644	U	644	UJ	50	644	ug/kg	HT
SS	NDA180	SW8270	2,4-DIMETHYLPHENOL	550	U	550	UJ	43	550	ug/kg	HT
SS	NDA181	SW8270	2,4-DIMETHYLPHENOL	566	U	566	UJ	44	566	ug/kg	HT
SS	NDA182	SW8270	2,4-DIMETHYLPHENOL	679	U	679	UJ	53	679	ug/kg	HT
SS	NDA183	SW8270	2,4-DIMETHYLPHENOL	589	U	589	UJ	46	589	ug/kg	HT
SS	NDA184FD1	SW8270	2,4-DIMETHYLPHENOL	662	U	662	UJ	52	662	ug/kg	HT
SS	NDA201	SW8270	2,4-DIMETHYLPHENOL	491	U	491	UJ	38	491	ug/kg	HT
SS	NDA202	SW8270	2,4-DIMETHYLPHENOL	605	U	605	UJ	47	605	ug/kg	HT
SS	NDA203	SW8270	2,4-DIMETHYLPHENOL	617	U	617	UJ	48	617	ug/kg	HT
SS	NDA204	SW8270	2,4-DIMETHYLPHENOL	753	U	753	UJ	59	753	ug/kg	HT
SS	NDA205FD1	SW8270	2,4-DIMETHYLPHENOL	668	U	668	UJ	52	668	ug/kg	HT
SS	NDA206	SW8270	2,4-DIMETHYLPHENOL	529	U	529	UJ	41	529	ug/kg	HT
SS	NDA207	SW8270	2,4-DIMETHYLPHENOL	669	U	669	UJ	52	669	ug/kg	HT
SS	NDA208	SW8270	2,4-DIMETHYLPHENOL	520	U	520	UJ	41	520	ug/kg	HT
SS	NDA209	SW8270	2,4-DIMETHYLPHENOL	570	U	570	UJ	44	570	ug/kg	HT
SS	NDA210	SW8270	2,4-DIMETHYLPHENOL	545	U	545	UJ	42	545	ug/kg	HT
SS	NDA211	SW8270	2,4-DIMETHYLPHENOL	742	U	742	UJ	58	742	ug/kg	HT
SS	NDA212	SW8270	2,4-DIMETHYLPHENOL	651	U	651	UJ	51	651	ug/kg	HT
SS	NDA185	SW8270	2,4-DIMETHYLPHENOL	445	U	445	UJ	35	445	ug/kg	HT
SS	NDA186	SW8270	2,4-DIMETHYLPHENOL	416	U	416	UJ	32	416	ug/kg	HT
SS	NDA187	SW8270	2,4-DIMETHYLPHENOL	380	U	380	UJ	30	380	ug/kg	HT
SS	NDA188	SW8270	2,4-DIMETHYLPHENOL	810	U	810	UJ	63	810	ug/kg	HT
SS	NDA189	SW8270	2,4-DIMETHYLPHENOL	426	U	426	UJ	33	426	ug/kg	HT
SS	NDA190	SW8270	2,4-DIMETHYLPHENOL	430	U	430	UJ	34	430	ug/kg	HT
SS	NDA191	SW8270	2,4-DIMETHYLPHENOL	338	U	338	UJ	26	338	ug/kg	HT
SS	NDA192FD1	SW8270	2,4-DIMETHYLPHENOL	418	U	418	UJ	33	418	ug/kg	HT
SS	NDA193	SW8270	2,4-DIMETHYLPHENOL	1720	U	1720	UJ	134	1720	ug/kg	HT
SS	NDA194	SW8270	2,4-DIMETHYLPHENOL	480	U	480	UJ	37	480	ug/kg	HT
SS	NDA195	SW8270	2,4-DIMETHYLPHENOL	323	U	323	UJ	25	323	ug/kg	HT
SS	NDA084	SW8270	2,4-DIMETHYLPHENOL	344	U	344	UJ	27	344	ug/kg	HT
SS	NDA091	SW8270	2,4-DIMETHYLPHENOL	367	U	367	UJ	29	367	ug/kg	HT
SS	NDA057	SW8270	2,4-DIMETHYLPHENOL	563	U	563	UJ	44	563	ug/kg	HT
SS	NDA059	SW8270	2,4-DIMETHYLPHENOL	465	U	465	UJ	36	465	ug/kg	HT
SS	NDA061	SW8270	2,4-DIMETHYLPHENOL	469	U	469	UJ	37	469	ug/kg	HT
SS	NDA062FD1	SW8270	2,4-DIMETHYLPHENOL	523	U	523	UJ	41	523	ug/kg	HT
SS	NDA065	SW8270	2,4-DIMETHYLPHENOL	421	U	421	UJ	33	421	ug/kg	HT
SS	NDA067	SW8270	2,4-DIMETHYLPHENOL	378	U	378	UJ	29	378	ug/kg	HT
SS	NDA069	SW8270	2,4-DIMETHYLPHENOL	320	U	320	UJ	25	320	ug/kg	HT
SS	NDA119	SW8270	2,4-DIMETHYLPHENOL	503	U	503	UJ	39	503	ug/kg	HT
SS	NDA120	SW8270	2,4-DIMETHYLPHENOL	541	U	541	UJ	42	541	ug/kg	HT
SS	NDA121	SW8270	2,4-DIMETHYLPHENOL	409	U	409	UJ	32	409	ug/kg	HT
SS	NDA122	SW8270	2,4-DIMETHYLPHENOL	450	U	450	UJ	35	450	ug/kg	HT
SS	NDA123	SW8270	2,4-DIMETHYLPHENOL	450	U	450	UJ	35	450	ug/kg	HT
SS	NDA124	SW8270	2,4-DIMETHYLPHENOL	432	U	432	UJ	34	432	ug/kg	HT
SS	NDA071	SW8270	2,4-DIMETHYLPHENOL	554	U	554	UJ	43	554	ug/kg	HT
SS	NDA072FD1	SW8270	2,4-DIMETHYLPHENOL	413	U	413	UJ	32	413	ug/kg	HT
SS	NDA074	SW8270	2,4-DIMETHYLPHENOL	448	U	448	UJ	35	448	ug/kg	HT
SS	NDA076	SW8270	2,4-DIMETHYLPHENOL	419	U	419	UJ	33	419	ug/kg	HT
SS	NDA078	SW8270	2,4-DIMETHYLPHENOL	440	U	440	UJ	34	440	ug/kg	HT
SS	NDA080RE1	SW8270	2,4-DIMETHYLPHENOL	407	U	407	UJ	32	407	ug/kg	HT
SS	NDA082RE1	SW8270	2,4-DIMETHYLPHENOL	4660	U	4660	UJ	363	4660	ug/kg	HT
SB	NDA213	SW8270	2,4-DICHLOROPHENOL	485	U	485	UJ	28	485	ug/kg	HT
SB	NDA214FD1	SW8270	2,4-DICHLOROPHENOL	487	U	487	UJ	28	487	ug/kg	HT
SB	NDA215	SW8270	2,4-DICHLOROPHENOL	527	U	527	UJ	30	527	ug/kg	HT
SB	NDA216	SW8270	2,4-DICHLOROPHENOL	537	U	537	UJ	31	537	ug/kg	HT
SB	NDA217	SW8270	2,4-DICHLOROPHENOL	540	U	540	UJ	31	540	ug/kg	HT
SB	NDA218	SW8270	2,4-DICHLOROPHENOL	505	U	505	UJ	29	505	ug/kg	HT
SB	NDA219	SW8270	2,4-DICHLOROPHENOL	380	U	380	UJ	22	380	ug/kg	HT
SB	NDA220	SW8270	2,4-DICHLOROPHENOL	542	U	542	UJ	31	542	ug/kg	HT
SB	NDA221	SW8270	2,4-DICHLOROPHENOL	501	U	501	UJ	29	501	ug/kg	HT

Matrix	Sample ID	Analytical Method	Parameter	Lab Result	Lab Qual	Final Result	Final Qual	DL	RL	Units	Comments
SB	NDA222	SW8270	2,4-DICHLOROPHENOL	459	U	459	UJ	26	459	ug/kg	HT
SB	NDA223	SW8270	2,4-DICHLOROPHENOL	527	U	527	UJ	30	527	ug/kg	HT
SB	NDA235	SW8270	2,4-DICHLOROPHENOL	504	U	504	UJ	29	504	ug/kg	HT
SB	NDA236	SW8270	2,4-DICHLOROPHENOL	423	U	423	UJ	24	423	ug/kg	HT
SB	NDA237FD1	SW8270	2,4-DICHLOROPHENOL	395	U	395	UJ	22	395	ug/kg	HT
SB	NDA238	SW8270	2,4-DICHLOROPHENOL	424	U	424	UJ	24	424	ug/kg	HT
SB	NDA239	SW8270	2,4-DICHLOROPHENOL	555	U	555	UJ	32	555	ug/kg	HT
SB	NDA240	SW8270	2,4-DICHLOROPHENOL	397	U	397	UJ	23	397	ug/kg	HT
SB	NDA241	SW8270	2,4-DICHLOROPHENOL	471	U	471	UJ	27	471	ug/kg	HT
SB	NDA242	SW8270	2,4-DICHLOROPHENOL	436	U	436	UJ	25	436	ug/kg	HT
SB	NDA243	SW8270	2,4-DICHLOROPHENOL	893	U	893	UJ	51	893	ug/kg	HT
SB	NDA244	SW8270	2,4-DICHLOROPHENOL	388	U	388	UJ	22	388	ug/kg	HT
SB	NDA245	SW8270	2,4-DICHLOROPHENOL	393	U	393	UJ	22	393	ug/kg	HT
SB	NDA246	SW8270	2,4-DICHLOROPHENOL	511	U	511	UJ	29	511	ug/kg	HT
SB	NDA247FD1	SW8270	2,4-DICHLOROPHENOL	390	U	390	UJ	22	390	ug/kg	HT
SB	NDA248	SW8270	2,4-DICHLOROPHENOL	453	U	453	UJ	26	453	ug/kg	HT
SB	NDA249	SW8270	2,4-DICHLOROPHENOL	374	U	374	UJ	21	374	ug/kg	HT
SB	NDA252	SW8270	2,4-DICHLOROPHENOL	420	U	420	UJ	24	420	ug/kg	HT
SB	NDA253	SW8270	2,4-DICHLOROPHENOL	439	U	439	UJ	25	439	ug/kg	HT
SB	NDA254	SW8270	2,4-DICHLOROPHENOL	391	U	391	UJ	22	391	ug/kg	HT
SB	NDA255	SW8270	2,4-DICHLOROPHENOL	375	U	375	UJ	21	375	ug/kg	HT
SB	NDA085	SW8270	2,4-DICHLOROPHENOL	482	U	482	UJ	27	482	ug/kg	HT
SB	NDA092	SW8270	2,4-DICHLOROPHENOL	400	U	400	UJ	23	400	ug/kg	HT
SB	NDA093	SW8270	2,4-DICHLOROPHENOL	339	U	339	UJ	19	339	ug/kg	HT
SB	NDA094	SW8270	2,4-DICHLOROPHENOL	510	U	510	UJ	29	510	ug/kg	HT
SB	NDA095FD1	SW8270	2,4-DICHLOROPHENOL	310	U	310	UJ	18	310	ug/kg	HT
SB	NDA296	SW8270	2,4-DICHLOROPHENOL	369	U	369	UJ	21	369	ug/kg	HT
SB	NDA297	SW8270	2,4-DICHLOROPHENOL	358	U	358	UJ	20	358	ug/kg	HT
SB	NDA298	SW8270	2,4-DICHLOROPHENOL	341	U	341	UJ	19	341	ug/kg	HT
SB	NDA299	SW8270	2,4-DICHLOROPHENOL	370	U	370	UJ	21	370	ug/kg	HT
SB	NDA058	SW8270	2,4-DICHLOROPHENOL	460	U	460	UJ	26	460	ug/kg	HT
SB	NDA060	SW8270	2,4-DICHLOROPHENOL	478	U	478	UJ	27	478	ug/kg	HT
SB	NDA063	SW8270	2,4-DICHLOROPHENOL	382	U	382	UJ	22	382	ug/kg	HT
SB	NDA064FD1	SW8270	2,4-DICHLOROPHENOL	351	U	351	UJ	20	351	ug/kg	HT
SB	NDA066	SW8270	2,4-DICHLOROPHENOL	344	U	344	UJ	20	344	ug/kg	HT
SB	NDA068	SW8270	2,4-DICHLOROPHENOL	360	U	360	UJ	21	360	ug/kg	HT
SB	NDA070	SW8270	2,4-DICHLOROPHENOL	404	U	404	UJ	23	404	ug/kg	HT
SB	NDA073	SW8270	2,4-DICHLOROPHENOL	383	U	383	UJ	22	383	ug/kg	HT
SB	NDA075	SW8270	2,4-DICHLOROPHENOL	401	U	401	UJ	23	401	ug/kg	HT
SB	NDA077	SW8270	2,4-DICHLOROPHENOL	441	U	441	UJ	25	441	ug/kg	HT
SB	NDA079	SW8270	2,4-DICHLOROPHENOL	466	U	466	UJ	27	466	ug/kg	HT
SB	NDA081RE1	SW8270	2,4-DICHLOROPHENOL	393	U	393	UJ	22	393	ug/kg	HT
SB	NDA083RE1	SW8270	2,4-DICHLOROPHENOL	4240	U	4240	UJ	241	4240	ug/kg	HT
SD	NDA054	SW8270	2,4-DICHLOROPHENOL	480	U	480	UJ	27	480	ug/kg	HT
SD	NDA055	SW8270	2,4-DICHLOROPHENOL	696	U	696	UJ	40	696	ug/kg	HT
SD	NDA042	SW8270	2,4-DICHLOROPHENOL	686	U	686	UJ	39	686	ug/kg	HT
SD	NDA043	SW8270	2,4-DICHLOROPHENOL	735	U	735	UJ	42	735	ug/kg	HT
SD	NDA044	SW8270	2,4-DICHLOROPHENOL	1680	U	1680	UJ	96	1680	ug/kg	HT
SD	NDA045	SW8270	2,4-DICHLOROPHENOL	1500	U	1500	UJ	86	1500	ug/kg	HT
SD	NDA046	SW8270	2,4-DICHLOROPHENOL	1520	U	1520	UJ	87	1520	ug/kg	HT
SD	NDA302	SW8270	2,4-DICHLOROPHENOL	1200	U	1200	UJ	68	1200	ug/kg	HT
SD	NDA303	SW8270	2,4-DICHLOROPHENOL	2300	U	2300	UJ	131	2300	ug/kg	HT
SD	NDA307FD1	SW8270	2,4-DICHLOROPHENOL	2130	U	2130	UJ	121	2130	ug/kg	HT
SD	NDA047	SW8270	2,4-DICHLOROPHENOL	503	U	503	UJ	29	503	ug/kg	HT
SD	NDA048	SW8270	2,4-DICHLOROPHENOL	558	U	558	UJ	32	558	ug/kg	HT
SD	NDA049	SW8270	2,4-DICHLOROPHENOL	463	U	463	UJ	26	463	ug/kg	HT
SS	NDA178	SW8270	2,4-DICHLOROPHENOL	644	U	644	UJ	37	644	ug/kg	HT
SS	NDA179	SW8270	2,4-DICHLOROPHENOL	644	U	644	UJ	37	644	ug/kg	HT
SS	NDA180	SW8270	2,4-DICHLOROPHENOL	550	U	550	UJ	31	550	ug/kg	HT
SS	NDA181	SW8270	2,4-DICHLOROPHENOL	566	U	566	UJ	32	566	ug/kg	HT
SS	NDA182	SW8270	2,4-DICHLOROPHENOL	679	U	679	UJ	39	679	ug/kg	HT
SS	NDA183	SW8270	2,4-DICHLOROPHENOL	589	U	589	UJ	34	589	ug/kg	HT
SS	NDA184FD1	SW8270	2,4-DICHLOROPHENOL	662	U	662	UJ	38	662	ug/kg	HT
SS	NDA201	SW8270	2,4-DICHLOROPHENOL	491	U	491	UJ	28	491	ug/kg	HT
SS	NDA202	SW8270	2,4-DICHLOROPHENOL	605	U	605	UJ	35	605	ug/kg	HT
SS	NDA203	SW8270	2,4-DICHLOROPHENOL	617	U	617	UJ	35	617	ug/kg	HT
SS	NDA204	SW8270	2,4-DICHLOROPHENOL	753	U	753	UJ	43	753	ug/kg	HT
SS	NDA205FD1	SW8270	2,4-DICHLOROPHENOL	668	U	668	UJ	38	668	ug/kg	HT
SS	NDA206	SW8270	2,4-DICHLOROPHENOL	529	U	529	UJ	30	529	ug/kg	HT
SS	NDA207	SW8270	2,4-DICHLOROPHENOL	669	U	669	UJ	38	669	ug/kg	HT

Matrix	Sample ID	Analytical Method	Parameter	Lab Result	Lab Qual	Final Result	Final Qual	DL	RL	Units	Comments
SS	NDA208	SW8270	2,4-DICHLOROPHENOL	520	U	520	UJ	30	520	ug/kg	HT
SS	NDA209	SW8270	2,4-DICHLOROPHENOL	570	U	570	UJ	33	570	ug/kg	HT
SS	NDA210	SW8270	2,4-DICHLOROPHENOL	545	U	545	UJ	31	545	ug/kg	HT
SS	NDA211	SW8270	2,4-DICHLOROPHENOL	742	U	742	UJ	42	742	ug/kg	HT
SS	NDA212	SW8270	2,4-DICHLOROPHENOL	651	U	651	UJ	37	651	ug/kg	HT
SS	NDA185	SW8270	2,4-DICHLOROPHENOL	445	U	445	UJ	25	445	ug/kg	HT
SS	NDA186	SW8270	2,4-DICHLOROPHENOL	416	U	416	UJ	24	416	ug/kg	HT
SS	NDA187	SW8270	2,4-DICHLOROPHENOL	380	U	380	UJ	22	380	ug/kg	HT
SS	NDA188	SW8270	2,4-DICHLOROPHENOL	810	U	810	UJ	46	810	ug/kg	HT
SS	NDA189	SW8270	2,4-DICHLOROPHENOL	426	U	426	UJ	24	426	ug/kg	HT
SS	NDA190	SW8270	2,4-DICHLOROPHENOL	430	U	430	UJ	24	430	ug/kg	HT
SS	NDA191	SW8270	2,4-DICHLOROPHENOL	338	U	338	UJ	19	338	ug/kg	HT
SS	NDA192FD1	SW8270	2,4-DICHLOROPHENOL	418	U	418	UJ	24	418	ug/kg	HT
SS	NDA193	SW8270	2,4-DICHLOROPHENOL	1720	U	1720	UJ	98	1720	ug/kg	HT
SS	NDA194	SW8270	2,4-DICHLOROPHENOL	480	U	480	UJ	27	480	ug/kg	HT
SS	NDA195	SW8270	2,4-DICHLOROPHENOL	323	U	323	UJ	18	323	ug/kg	HT
SS	NDA084	SW8270	2,4-DICHLOROPHENOL	344	U	344	UJ	20	344	ug/kg	HT
SS	NDA091	SW8270	2,4-DICHLOROPHENOL	367	U	367	UJ	21	367	ug/kg	HT
SS	NDA057	SW8270	2,4-DICHLOROPHENOL	563	U	563	UJ	32	563	ug/kg	HT
SS	NDA059	SW8270	2,4-DICHLOROPHENOL	465	U	465	UJ	26	465	ug/kg	HT
SS	NDA061	SW8270	2,4-DICHLOROPHENOL	469	U	469	UJ	27	469	ug/kg	HT
SS	NDA062FD1	SW8270	2,4-DICHLOROPHENOL	523	U	523	UJ	30	523	ug/kg	HT
SS	NDA065	SW8270	2,4-DICHLOROPHENOL	421	U	421	UJ	24	421	ug/kg	HT
SS	NDA067	SW8270	2,4-DICHLOROPHENOL	378	U	378	UJ	22	378	ug/kg	HT
SS	NDA069	SW8270	2,4-DICHLOROPHENOL	320	U	320	UJ	18	320	ug/kg	HT
SS	NDA119	SW8270	2,4-DICHLOROPHENOL	503	U	503	UJ	29	503	ug/kg	HT
SS	NDA120	SW8270	2,4-DICHLOROPHENOL	541	U	541	UJ	31	541	ug/kg	HT
SS	NDA121	SW8270	2,4-DICHLOROPHENOL	409	U	409	UJ	23	409	ug/kg	HT
SS	NDA122	SW8270	2,4-DICHLOROPHENOL	450	U	450	UJ	26	450	ug/kg	HT
SS	NDA123	SW8270	2,4-DICHLOROPHENOL	450	U	450	UJ	26	450	ug/kg	HT
SS	NDA124	SW8270	2,4-DICHLOROPHENOL	432	U	432	UJ	25	432	ug/kg	HT
SS	NDA071	SW8270	2,4-DICHLOROPHENOL	554	U	554	UJ	32	554	ug/kg	HT
SS	NDA072FD1	SW8270	2,4-DICHLOROPHENOL	413	U	413	UJ	24	413	ug/kg	HT
SS	NDA074	SW8270	2,4-DICHLOROPHENOL	448	U	448	UJ	26	448	ug/kg	HT
SS	NDA076	SW8270	2,4-DICHLOROPHENOL	419	U	419	UJ	24	419	ug/kg	HT
SS	NDA078	SW8270	2,4-DICHLOROPHENOL	440	U	440	UJ	25	440	ug/kg	HT
SS	NDA080RE1	SW8270	2,4-DICHLOROPHENOL	407	U	407	UJ	23	407	ug/kg	HT
SS	NDA082RE1	SW8270	2,4-DICHLOROPHENOL	4660	U	4660	UJ	266	4660	ug/kg	HT
SB	NDA213	SW8270	2,4,6-TRICHLOROPHENOL	485	U	485	UJ	28	485	ug/kg	HT
SB	NDA214FD1	SW8270	2,4,6-TRICHLOROPHENOL	487	U	487	UJ	28	487	ug/kg	HT
SB	NDA215	SW8270	2,4,6-TRICHLOROPHENOL	527	U	527	UJ	31	527	ug/kg	HT
SB	NDA216	SW8270	2,4,6-TRICHLOROPHENOL	537	U	537	UJ	31	537	ug/kg	HT
SB	NDA217	SW8270	2,4,6-TRICHLOROPHENOL	540	U	540	UJ	31	540	ug/kg	HT
SB	NDA218	SW8270	2,4,6-TRICHLOROPHENOL	505	U	505	UJ	29	505	ug/kg	HT
SB	NDA219	SW8270	2,4,6-TRICHLOROPHENOL	380	U	380	UJ	22	380	ug/kg	HT
SB	NDA220	SW8270	2,4,6-TRICHLOROPHENOL	542	U	542	UJ	31	542	ug/kg	HT
SB	NDA221	SW8270	2,4,6-TRICHLOROPHENOL	501	U	501	UJ	29	501	ug/kg	HT
SB	NDA222	SW8270	2,4,6-TRICHLOROPHENOL	459	U	459	UJ	27	459	ug/kg	HT
SB	NDA223	SW8270	2,4,6-TRICHLOROPHENOL	527	U	527	UJ	31	527	ug/kg	HT
SB	NDA235	SW8270	2,4,6-TRICHLOROPHENOL	504	U	504	UJ	29	504	ug/kg	HT
SB	NDA236	SW8270	2,4,6-TRICHLOROPHENOL	423	U	423	UJ	25	423	ug/kg	HT
SB	NDA237FD1	SW8270	2,4,6-TRICHLOROPHENOL	395	U	395	UJ	23	395	ug/kg	HT
SB	NDA238	SW8270	2,4,6-TRICHLOROPHENOL	424	U	424	UJ	25	424	ug/kg	HT
SB	NDA239	SW8270	2,4,6-TRICHLOROPHENOL	555	U	555	UJ	32	555	ug/kg	HT
SB	NDA240	SW8270	2,4,6-TRICHLOROPHENOL	397	U	397	UJ	23	397	ug/kg	HT
SB	NDA241	SW8270	2,4,6-TRICHLOROPHENOL	471	U	471	UJ	27	471	ug/kg	HT
SB	NDA242	SW8270	2,4,6-TRICHLOROPHENOL	436	U	436	UJ	25	436	ug/kg	HT
SB	NDA243	SW8270	2,4,6-TRICHLOROPHENOL	893	U	893	UJ	52	893	ug/kg	HT
SB	NDA244	SW8270	2,4,6-TRICHLOROPHENOL	388	U	388	UJ	22	388	ug/kg	HT
SB	NDA245	SW8270	2,4,6-TRICHLOROPHENOL	393	U	393	UJ	23	393	ug/kg	HT
SB	NDA246	SW8270	2,4,6-TRICHLOROPHENOL	511	U	511	UJ	30	511	ug/kg	HT
SB	NDA247FD1	SW8270	2,4,6-TRICHLOROPHENOL	390	U	390	UJ	23	390	ug/kg	HT
SB	NDA248	SW8270	2,4,6-TRICHLOROPHENOL	453	U	453	UJ	26	453	ug/kg	HT
SB	NDA249	SW8270	2,4,6-TRICHLOROPHENOL	374	U	374	UJ	22	374	ug/kg	HT
SB	NDA252	SW8270	2,4,6-TRICHLOROPHENOL	420	U	420	UJ	24	420	ug/kg	HT
SB	NDA253	SW8270	2,4,6-TRICHLOROPHENOL	439	U	439	UJ	25	439	ug/kg	HT
SB	NDA254	SW8270	2,4,6-TRICHLOROPHENOL	391	U	391	UJ	23	391	ug/kg	HT
SB	NDA255	SW8270	2,4,6-TRICHLOROPHENOL	375	U	375	UJ	22	375	ug/kg	HT
SB	NDA085	SW8270	2,4,6-TRICHLOROPHENOL	482	U	482	UJ	28	482	ug/kg	HT
SB	NDA092	SW8270	2,4,6-TRICHLOROPHENOL	400	U	400	UJ	23	400	ug/kg	HT

Matrix	Sample ID	Analytical Method	Parameter	Lab Result	Lab Qual	Final Result	Final Qual	DL	RL	Units	Comments
SB	NDA093	SW8270	2,4,6-TRICHLOROPHENOL	339	U	339	UJ	20	339	ug/kg	HT
SB	NDA094	SW8270	2,4,6-TRICHLOROPHENOL	510	U	510	UJ	30	510	ug/kg	HT
SB	NDA095FD1	SW8270	2,4,6-TRICHLOROPHENOL	310	U	310	UJ	18	310	ug/kg	HT
SB	NDA296	SW8270	2,4,6-TRICHLOROPHENOL	369	U	369	UJ	21	369	ug/kg	HT
SB	NDA297	SW8270	2,4,6-TRICHLOROPHENOL	358	U	358	UJ	21	358	ug/kg	HT
SB	NDA298	SW8270	2,4,6-TRICHLOROPHENOL	341	U	341	UJ	20	341	ug/kg	HT
SB	NDA299	SW8270	2,4,6-TRICHLOROPHENOL	370	U	370	UJ	21	370	ug/kg	HT
SB	NDA058	SW8270	2,4,6-TRICHLOROPHENOL	460	U	460	UJ	27	460	ug/kg	HT
SB	NDA060	SW8270	2,4,6-TRICHLOROPHENOL	478	U	478	UJ	28	478	ug/kg	HT
SB	NDA063	SW8270	2,4,6-TRICHLOROPHENOL	382	U	382	UJ	22	382	ug/kg	HT
SB	NDA064FD1	SW8270	2,4,6-TRICHLOROPHENOL	351	U	351	UJ	20	351	ug/kg	HT
SB	NDA066	SW8270	2,4,6-TRICHLOROPHENOL	344	U	344	UJ	20	344	ug/kg	HT
SB	NDA068	SW8270	2,4,6-TRICHLOROPHENOL	360	U	360	UJ	21	360	ug/kg	HT
SB	NDA070	SW8270	2,4,6-TRICHLOROPHENOL	404	U	404	UJ	23	404	ug/kg	HT
SB	NDA073	SW8270	2,4,6-TRICHLOROPHENOL	383	U	383	UJ	22	383	ug/kg	HT
SB	NDA075	SW8270	2,4,6-TRICHLOROPHENOL	401	U	401	UJ	23	401	ug/kg	HT
SB	NDA077	SW8270	2,4,6-TRICHLOROPHENOL	441	U	441	UJ	26	441	ug/kg	HT
SB	NDA079	SW8270	2,4,6-TRICHLOROPHENOL	466	U	466	UJ	27	466	ug/kg	HT
SB	NDA081RE1	SW8270	2,4,6-TRICHLOROPHENOL	393	U	393	UJ	23	393	ug/kg	HT
SB	NDA083RE1	SW8270	2,4,6-TRICHLOROPHENOL	4240	U	4240	UJ	246	4240	ug/kg	HT
SD	NDA054	SW8270	2,4,6-TRICHLOROPHENOL	480	U	480	UJ	28	480	ug/kg	HT
SD	NDA055	SW8270	2,4,6-TRICHLOROPHENOL	696	U	696	UJ	40	696	ug/kg	HT
SD	NDA042	SW8270	2,4,6-TRICHLOROPHENOL	686	U	686	UJ	40	686	ug/kg	HT
SD	NDA043	SW8270	2,4,6-TRICHLOROPHENOL	735	U	735	UJ	43	735	ug/kg	HT
SD	NDA044	SW8270	2,4,6-TRICHLOROPHENOL	1680	U	1680	UJ	98	1680	ug/kg	HT
SD	NDA045	SW8270	2,4,6-TRICHLOROPHENOL	1500	U	1500	UJ	87	1500	ug/kg	HT
SD	NDA046	SW8270	2,4,6-TRICHLOROPHENOL	1520	U	1520	UJ	88	1520	ug/kg	HT
SD	NDA302	SW8270	2,4,6-TRICHLOROPHENOL	1200	U	1200	UJ	70	1200	ug/kg	HT
SD	NDA303	SW8270	2,4,6-TRICHLOROPHENOL	2300	U	2300	UJ	133	2300	ug/kg	HT
SD	NDA307FD1	SW8270	2,4,6-TRICHLOROPHENOL	2130	U	2130	UJ	123	2130	ug/kg	HT
SD	NDA047	SW8270	2,4,6-TRICHLOROPHENOL	503	U	503	UJ	29	503	ug/kg	HT
SD	NDA048	SW8270	2,4,6-TRICHLOROPHENOL	558	U	558	UJ	32	558	ug/kg	HT
SD	NDA049	SW8270	2,4,6-TRICHLOROPHENOL	463	U	463	UJ	27	463	ug/kg	HT
SS	NDA178	SW8270	2,4,6-TRICHLOROPHENOL	644	U	644	UJ	37	644	ug/kg	HT
SS	NDA179	SW8270	2,4,6-TRICHLOROPHENOL	644	U	644	UJ	37	644	ug/kg	HT
SS	NDA180	SW8270	2,4,6-TRICHLOROPHENOL	550	U	550	UJ	32	550	ug/kg	HT
SS	NDA181	SW8270	2,4,6-TRICHLOROPHENOL	566	U	566	UJ	33	566	ug/kg	HT
SS	NDA182	SW8270	2,4,6-TRICHLOROPHENOL	679	U	679	UJ	39	679	ug/kg	HT
SS	NDA183	SW8270	2,4,6-TRICHLOROPHENOL	589	U	589	UJ	34	589	ug/kg	HT
SS	NDA184FD1	SW8270	2,4,6-TRICHLOROPHENOL	662	U	662	UJ	38	662	ug/kg	HT
SS	NDA201	SW8270	2,4,6-TRICHLOROPHENOL	491	U	491	UJ	28	491	ug/kg	HT
SS	NDA202	SW8270	2,4,6-TRICHLOROPHENOL	605	U	605	UJ	35	605	ug/kg	HT
SS	NDA203	SW8270	2,4,6-TRICHLOROPHENOL	617	U	617	UJ	36	617	ug/kg	HT
SS	NDA204	SW8270	2,4,6-TRICHLOROPHENOL	753	U	753	UJ	44	753	ug/kg	HT
SS	NDA205FD1	SW8270	2,4,6-TRICHLOROPHENOL	668	U	668	UJ	39	668	ug/kg	HT
SS	NDA206	SW8270	2,4,6-TRICHLOROPHENOL	529	U	529	UJ	31	529	ug/kg	HT
SS	NDA207	SW8270	2,4,6-TRICHLOROPHENOL	669	U	669	UJ	39	669	ug/kg	HT
SS	NDA208	SW8270	2,4,6-TRICHLOROPHENOL	520	U	520	UJ	30	520	ug/kg	HT
SS	NDA209	SW8270	2,4,6-TRICHLOROPHENOL	570	U	570	UJ	33	570	ug/kg	HT
SS	NDA210	SW8270	2,4,6-TRICHLOROPHENOL	545	U	545	UJ	32	545	ug/kg	HT
SS	NDA211	SW8270	2,4,6-TRICHLOROPHENOL	742	U	742	UJ	43	742	ug/kg	HT
SS	NDA212	SW8270	2,4,6-TRICHLOROPHENOL	651	U	651	UJ	38	651	ug/kg	HT
SS	NDA185	SW8270	2,4,6-TRICHLOROPHENOL	445	U	445	UJ	26	445	ug/kg	HT
SS	NDA186	SW8270	2,4,6-TRICHLOROPHENOL	416	U	416	UJ	24	416	ug/kg	HT
SS	NDA187	SW8270	2,4,6-TRICHLOROPHENOL	380	U	380	UJ	22	380	ug/kg	HT
SS	NDA188	SW8270	2,4,6-TRICHLOROPHENOL	810	U	810	UJ	47	810	ug/kg	HT
SS	NDA189	SW8270	2,4,6-TRICHLOROPHENOL	426	U	426	UJ	25	426	ug/kg	HT
SS	NDA190	SW8270	2,4,6-TRICHLOROPHENOL	430	U	430	UJ	25	430	ug/kg	HT
SS	NDA191	SW8270	2,4,6-TRICHLOROPHENOL	338	U	338	UJ	20	338	ug/kg	HT
SS	NDA192FD1	SW8270	2,4,6-TRICHLOROPHENOL	418	U	418	UJ	24	418	ug/kg	HT
SS	NDA193	SW8270	2,4,6-TRICHLOROPHENOL	1720	U	1720	UJ	100	1720	ug/kg	HT
SS	NDA194	SW8270	2,4,6-TRICHLOROPHENOL	480	U	480	UJ	28	480	ug/kg	HT
SS	NDA195	SW8270	2,4,6-TRICHLOROPHENOL	323	U	323	UJ	19	323	ug/kg	HT
SS	NDA084	SW8270	2,4,6-TRICHLOROPHENOL	344	U	344	UJ	20	344	ug/kg	HT
SS	NDA091	SW8270	2,4,6-TRICHLOROPHENOL	367	U	367	UJ	21	367	ug/kg	HT
SS	NDA057	SW8270	2,4,6-TRICHLOROPHENOL	563	U	563	UJ	33	563	ug/kg	HT
SS	NDA059	SW8270	2,4,6-TRICHLOROPHENOL	465	U	465	UJ	27	465	ug/kg	HT
SS	NDA061	SW8270	2,4,6-TRICHLOROPHENOL	469	U	469	UJ	27	469	ug/kg	HT
SS	NDA062FD1	SW8270	2,4,6-TRICHLOROPHENOL	523	U	523	UJ	30	523	ug/kg	HT
SS	NDA065	SW8270	2,4,6-TRICHLOROPHENOL	421	U	421	UJ	24	421	ug/kg	HT

Matrix	Sample ID	Analytical Method	Parameter	Lab Result	Lab Qual	Final Result	Final Qual	DL	RL	Units	Comments
SS	NDA067	SW8270	2,4,6-TRICHLOROPHENOL	378	U	378	UJ	22	378	ug/kg	HT
SS	NDA069	SW8270	2,4,6-TRICHLOROPHENOL	320	U	320	UJ	19	320	ug/kg	HT
SS	NDA119	SW8270	2,4,6-TRICHLOROPHENOL	503	U	503	UJ	29	503	ug/kg	HT
SS	NDA120	SW8270	2,4,6-TRICHLOROPHENOL	541	U	541	UJ	31	541	ug/kg	HT
SS	NDA121	SW8270	2,4,6-TRICHLOROPHENOL	409	U	409	UJ	24	409	ug/kg	HT
SS	NDA122	SW8270	2,4,6-TRICHLOROPHENOL	450	U	450	UJ	26	450	ug/kg	HT
SS	NDA123	SW8270	2,4,6-TRICHLOROPHENOL	450	U	450	UJ	26	450	ug/kg	HT
SS	NDA124	SW8270	2,4,6-TRICHLOROPHENOL	432	U	432	UJ	25	432	ug/kg	HT
SS	NDA071	SW8270	2,4,6-TRICHLOROPHENOL	554	U	554	UJ	32	554	ug/kg	HT
SS	NDA072FD1	SW8270	2,4,6-TRICHLOROPHENOL	413	U	413	UJ	24	413	ug/kg	HT
SS	NDA074	SW8270	2,4,6-TRICHLOROPHENOL	448	U	448	UJ	26	448	ug/kg	HT
SS	NDA076	SW8270	2,4,6-TRICHLOROPHENOL	419	U	419	UJ	24	419	ug/kg	HT
SS	NDA078	SW8270	2,4,6-TRICHLOROPHENOL	440	U	440	UJ	26	440	ug/kg	HT
SS	NDA080RE1	SW8270	2,4,6-TRICHLOROPHENOL	407	U	407	UJ	24	407	ug/kg	HT
SS	NDA082RE1	SW8270	2,4,6-TRICHLOROPHENOL	4660	U	4660	UJ	270	4660	ug/kg	HT
SB	NDA213	SW8270	2,4,5-TRICHLOROPHENOL	1440	U	1440	UJ	28	1440	ug/kg	HT
SB	NDA214FD1	SW8270	2,4,5-TRICHLOROPHENOL	1450	U	1450	UJ	28	1450	ug/kg	HT
SB	NDA215	SW8270	2,4,5-TRICHLOROPHENOL	1570	U	1570	UJ	30	1570	ug/kg	HT
SB	NDA216	SW8270	2,4,5-TRICHLOROPHENOL	1590	U	1590	UJ	31	1590	ug/kg	HT
SB	NDA217	SW8270	2,4,5-TRICHLOROPHENOL	1600	U	1600	UJ	31	1600	ug/kg	HT
SB	NDA218	SW8270	2,4,5-TRICHLOROPHENOL	1500	U	1500	UJ	29	1500	ug/kg	HT
SB	NDA219	SW8270	2,4,5-TRICHLOROPHENOL	1130	U	1130	UJ	22	1130	ug/kg	HT
SB	NDA220	SW8270	2,4,5-TRICHLOROPHENOL	1610	U	1610	UJ	31	1610	ug/kg	HT
SB	NDA221	SW8270	2,4,5-TRICHLOROPHENOL	1490	U	1490	UJ	29	1490	ug/kg	HT
SB	NDA222	SW8270	2,4,5-TRICHLOROPHENOL	1360	U	1360	UJ	26	1360	ug/kg	HT
SB	NDA223	SW8270	2,4,5-TRICHLOROPHENOL	1570	U	1570	UJ	30	1570	ug/kg	HT
SB	NDA235	SW8270	2,4,5-TRICHLOROPHENOL	1510	U	1510	UJ	29	1510	ug/kg	HT
SB	NDA236	SW8270	2,4,5-TRICHLOROPHENOL	1270	U	1270	UJ	24	1270	ug/kg	HT
SB	NDA237FD1	SW8270	2,4,5-TRICHLOROPHENOL	1180	U	1180	UJ	22	1180	ug/kg	HT
SB	NDA238	SW8270	2,4,5-TRICHLOROPHENOL	1270	U	1270	UJ	24	1270	ug/kg	HT
SB	NDA239	SW8270	2,4,5-TRICHLOROPHENOL	1660	U	1660	UJ	32	1660	ug/kg	HT
SB	NDA240	SW8270	2,4,5-TRICHLOROPHENOL	1190	U	1190	UJ	23	1190	ug/kg	HT
SB	NDA241	SW8270	2,4,5-TRICHLOROPHENOL	1410	U	1410	UJ	27	1410	ug/kg	HT
SB	NDA242	SW8270	2,4,5-TRICHLOROPHENOL	1310	U	1310	UJ	25	1310	ug/kg	HT
SB	NDA243	SW8270	2,4,5-TRICHLOROPHENOL	2680	U	2680	UJ	51	2680	ug/kg	HT
SB	NDA244	SW8270	2,4,5-TRICHLOROPHENOL	1160	U	1160	UJ	22	1160	ug/kg	HT
SB	NDA245	SW8270	2,4,5-TRICHLOROPHENOL	1180	U	1180	UJ	22	1180	ug/kg	HT
SB	NDA246	SW8270	2,4,5-TRICHLOROPHENOL	1530	U	1530	UJ	29	1530	ug/kg	HT
SB	NDA247FD1	SW8270	2,4,5-TRICHLOROPHENOL	1170	U	1170	UJ	22	1170	ug/kg	HT
SB	NDA248	SW8270	2,4,5-TRICHLOROPHENOL	1360	U	1360	UJ	26	1360	ug/kg	HT
SB	NDA249	SW8270	2,4,5-TRICHLOROPHENOL	1120	U	1120	UJ	21	1120	ug/kg	HT
SB	NDA252	SW8270	2,4,5-TRICHLOROPHENOL	1260	U	1260	UJ	24	1260	ug/kg	HT
SB	NDA253	SW8270	2,4,5-TRICHLOROPHENOL	1320	U	1320	UJ	25	1320	ug/kg	HT
SB	NDA254	SW8270	2,4,5-TRICHLOROPHENOL	1170	U	1170	UJ	22	1170	ug/kg	HT
SB	NDA255	SW8270	2,4,5-TRICHLOROPHENOL	1130	U	1130	UJ	21	1130	ug/kg	HT
SB	NDA085	SW8270	2,4,5-TRICHLOROPHENOL	1450	U	1450	UJ	27	1450	ug/kg	HT
SB	NDA092	SW8270	2,4,5-TRICHLOROPHENOL	1200	U	1200	UJ	23	1200	ug/kg	HT
SB	NDA093	SW8270	2,4,5-TRICHLOROPHENOL	1020	U	1020	UJ	19	1020	ug/kg	HT
SB	NDA094	SW8270	2,4,5-TRICHLOROPHENOL	1530	U	1530	UJ	29	1530	ug/kg	HT
SB	NDA095FD1	SW8270	2,4,5-TRICHLOROPHENOL	931	U	931	UJ	18	931	ug/kg	HT
SB	NDA296	SW8270	2,4,5-TRICHLOROPHENOL	1110	U	1110	UJ	21	1110	ug/kg	HT
SB	NDA297	SW8270	2,4,5-TRICHLOROPHENOL	1080	U	1080	UJ	20	1080	ug/kg	HT
SB	NDA298	SW8270	2,4,5-TRICHLOROPHENOL	1020	U	1020	UJ	19	1020	ug/kg	HT
SB	NDA299	SW8270	2,4,5-TRICHLOROPHENOL	1110	U	1110	UJ	21	1110	ug/kg	HT
SB	NDA058	SW8270	2,4,5-TRICHLOROPHENOL	1380	U	1380	UJ	26	1380	ug/kg	HT
SB	NDA060	SW8270	2,4,5-TRICHLOROPHENOL	1430	U	1430	UJ	27	1430	ug/kg	HT
SB	NDA063	SW8270	2,4,5-TRICHLOROPHENOL	1150	U	1150	UJ	22	1150	ug/kg	HT
SB	NDA064FD1	SW8270	2,4,5-TRICHLOROPHENOL	1050	U	1050	UJ	20	1050	ug/kg	HT
SB	NDA066	SW8270	2,4,5-TRICHLOROPHENOL	1030	U	1030	UJ	20	1030	ug/kg	HT
SB	NDA068	SW8270	2,4,5-TRICHLOROPHENOL	1080	U	1080	UJ	21	1080	ug/kg	HT
SB	NDA070	SW8270	2,4,5-TRICHLOROPHENOL	1210	U	1210	UJ	23	1210	ug/kg	HT
SB	NDA073	SW8270	2,4,5-TRICHLOROPHENOL	1150	U	1150	UJ	22	1150	ug/kg	HT
SB	NDA075	SW8270	2,4,5-TRICHLOROPHENOL	1200	U	1200	UJ	23	1200	ug/kg	HT
SB	NDA077	SW8270	2,4,5-TRICHLOROPHENOL	1320	U	1320	UJ	25	1320	ug/kg	HT
SB	NDA079	SW8270	2,4,5-TRICHLOROPHENOL	1400	U	1400	UJ	27	1400	ug/kg	HT
SB	NDA081RE1	SW8270	2,4,5-TRICHLOROPHENOL	1180	U	1180	UJ	22	1180	ug/kg	HT
SB	NDA083RE1	SW8270	2,4,5-TRICHLOROPHENOL	12700	U	12700	UJ	241	12700	ug/kg	HT
SD	NDA054	SW8270	2,4,5-TRICHLOROPHENOL	1430	U	1430	UJ	27	1430	ug/kg	HT
SD	NDA055	SW8270	2,4,5-TRICHLOROPHENOL	2070	U	2070	UJ	40	2070	ug/kg	HT
SD	NDA042	SW8270	2,4,5-TRICHLOROPHENOL	2060	U	2060	UJ	39	2060	ug/kg	HT

Matrix	Sample ID	Analytical Method	Parameter	Lab Result	Lab Qual	Final Result	Final Qual	DL	RL	Units	Comments
SD	NDA043	SW8270	2,4,5-TRICHLOROPHENOL	2200	U	2200	UJ	42	2200	ug/kg	HT
SD	NDA044	SW8270	2,4,5-TRICHLOROPHENOL	5050	U	5050	UJ	96	5050	ug/kg	HT
SD	NDA045	SW8270	2,4,5-TRICHLOROPHENOL	4500	U	4500	UJ	86	4500	ug/kg	HT
SD	NDA046	SW8270	2,4,5-TRICHLOROPHENOL	4560	U	4560	UJ	87	4560	ug/kg	HT
SD	NDA302	SW8270	2,4,5-TRICHLOROPHENOL	3600	U	3600	UJ	68	3600	ug/kg	HT
SD	NDA303	SW8270	2,4,5-TRICHLOROPHENOL	6900	U	6900	UJ	131	6900	ug/kg	HT
SD	NDA307FD1	SW8270	2,4,5-TRICHLOROPHENOL	6380	U	6380	UJ	121	6380	ug/kg	HT
SD	NDA047	SW8270	2,4,5-TRICHLOROPHENOL	1510	U	1510	UJ	29	1510	ug/kg	HT
SD	NDA048	SW8270	2,4,5-TRICHLOROPHENOL	1680	U	1680	UJ	32	1680	ug/kg	HT
SD	NDA049	SW8270	2,4,5-TRICHLOROPHENOL	1390	U	1390	UJ	26	1390	ug/kg	HT
SS	NDA178	SW8270	2,4,5-TRICHLOROPHENOL	1930	U	1930	UJ	37	1930	ug/kg	HT
SS	NDA179	SW8270	2,4,5-TRICHLOROPHENOL	1930	U	1930	UJ	37	1930	ug/kg	HT
SS	NDA180	SW8270	2,4,5-TRICHLOROPHENOL	1650	U	1650	UJ	31	1650	ug/kg	HT
SS	NDA181	SW8270	2,4,5-TRICHLOROPHENOL	1700	U	1700	UJ	32	1700	ug/kg	HT
SS	NDA182	SW8270	2,4,5-TRICHLOROPHENOL	2040	U	2040	UJ	39	2040	ug/kg	HT
SS	NDA183	SW8270	2,4,5-TRICHLOROPHENOL	1770	U	1770	UJ	34	1770	ug/kg	HT
SS	NDA184FD1	SW8270	2,4,5-TRICHLOROPHENOL	1990	U	1990	UJ	38	1990	ug/kg	HT
SS	NDA201	SW8270	2,4,5-TRICHLOROPHENOL	1470	U	1470	UJ	28	1470	ug/kg	HT
SS	NDA202	SW8270	2,4,5-TRICHLOROPHENOL	1820	U	1820	UJ	35	1820	ug/kg	HT
SS	NDA203	SW8270	2,4,5-TRICHLOROPHENOL	1850	U	1850	UJ	35	1850	ug/kg	HT
SS	NDA204	SW8270	2,4,5-TRICHLOROPHENOL	2260	U	2260	UJ	43	2260	ug/kg	HT
SS	NDA205FD1	SW8270	2,4,5-TRICHLOROPHENOL	2000	U	2000	UJ	38	2000	ug/kg	HT
SS	NDA206	SW8270	2,4,5-TRICHLOROPHENOL	1590	U	1590	UJ	30	1590	ug/kg	HT
SS	NDA207	SW8270	2,4,5-TRICHLOROPHENOL	2010	U	2010	UJ	38	2010	ug/kg	HT
SS	NDA208	SW8270	2,4,5-TRICHLOROPHENOL	1560	U	1560	UJ	30	1560	ug/kg	HT
SS	NDA209	SW8270	2,4,5-TRICHLOROPHENOL	1710	U	1710	UJ	33	1710	ug/kg	HT
SS	NDA210	SW8270	2,4,5-TRICHLOROPHENOL	1630	U	1630	UJ	31	1630	ug/kg	HT
SS	NDA211	SW8270	2,4,5-TRICHLOROPHENOL	2230	U	2230	UJ	42	2230	ug/kg	HT
SS	NDA212	SW8270	2,4,5-TRICHLOROPHENOL	1950	U	1950	UJ	37	1950	ug/kg	HT
SS	NDA185	SW8270	2,4,5-TRICHLOROPHENOL	1340	U	1340	UJ	25	1340	ug/kg	HT
SS	NDA186	SW8270	2,4,5-TRICHLOROPHENOL	1250	U	1250	UJ	24	1250	ug/kg	HT
SS	NDA188	SW8270	2,4,5-TRICHLOROPHENOL	2430	U	2430	UJ	46	2430	ug/kg	HT
SS	NDA189	SW8270	2,4,5-TRICHLOROPHENOL	1280	U	1280	UJ	24	1280	ug/kg	HT
SS	NDA190	SW8270	2,4,5-TRICHLOROPHENOL	1290	U	1290	UJ	24	1290	ug/kg	HT
SS	NDA191	SW8270	2,4,5-TRICHLOROPHENOL	1010	U	1010	UJ	19	1010	ug/kg	HT
SS	NDA192FD1	SW8270	2,4,5-TRICHLOROPHENOL	1250	U	1250	UJ	24	1250	ug/kg	HT
SS	NDA193	SW8270	2,4,5-TRICHLOROPHENOL	5160	U	5160	UJ	98	5160	ug/kg	HT
SS	NDA194	SW8270	2,4,5-TRICHLOROPHENOL	1440	U	1440	UJ	27	1440	ug/kg	HT
SS	NDA195	SW8270	2,4,5-TRICHLOROPHENOL	969	U	969	UJ	18	969	ug/kg	HT
SS	NDA084	SW8270	2,4,5-TRICHLOROPHENOL	1030	U	1030	UJ	20	1030	ug/kg	HT
SS	NDA091	SW8270	2,4,5-TRICHLOROPHENOL	1100	U	1100	UJ	21	1100	ug/kg	HT
SS	NDA057	SW8270	2,4,5-TRICHLOROPHENOL	1690	U	1690	UJ	32	1690	ug/kg	HT
SS	NDA059	SW8270	2,4,5-TRICHLOROPHENOL	1390	U	1390	UJ	26	1390	ug/kg	HT
SS	NDA061	SW8270	2,4,5-TRICHLOROPHENOL	1410	U	1410	UJ	27	1410	ug/kg	HT
SS	NDA062FD1	SW8270	2,4,5-TRICHLOROPHENOL	1570	U	1570	UJ	30	1570	ug/kg	HT
SS	NDA065	SW8270	2,4,5-TRICHLOROPHENOL	1260	U	1260	UJ	24	1260	ug/kg	HT
SS	NDA067	SW8270	2,4,5-TRICHLOROPHENOL	1130	U	1130	UJ	22	1130	ug/kg	HT
SS	NDA069	SW8270	2,4,5-TRICHLOROPHENOL	959	U	959	UJ	18	959	ug/kg	HT
SS	NDA119	SW8270	2,4,5-TRICHLOROPHENOL	1510	U	1510	UJ	29	1510	ug/kg	HT
SS	NDA120	SW8270	2,4,5-TRICHLOROPHENOL	1620	U	1620	UJ	31	1620	ug/kg	HT
SS	NDA121	SW8270	2,4,5-TRICHLOROPHENOL	1230	U	1230	UJ	23	1230	ug/kg	HT
SS	NDA122	SW8270	2,4,5-TRICHLOROPHENOL	1350	U	1350	UJ	26	1350	ug/kg	HT
SS	NDA123	SW8270	2,4,5-TRICHLOROPHENOL	1350	U	1350	UJ	26	1350	ug/kg	HT
SS	NDA124	SW8270	2,4,5-TRICHLOROPHENOL	1290	U	1290	UJ	25	1290	ug/kg	HT
SS	NDA071	SW8270	2,4,5-TRICHLOROPHENOL	1660	U	1660	UJ	32	1660	ug/kg	HT
SS	NDA072FD1	SW8270	2,4,5-TRICHLOROPHENOL	1240	U	1240	UJ	24	1240	ug/kg	HT
SS	NDA074	SW8270	2,4,5-TRICHLOROPHENOL	1340	U	1340	UJ	26	1340	ug/kg	HT
SS	NDA076	SW8270	2,4,5-TRICHLOROPHENOL	1260	U	1260	UJ	24	1260	ug/kg	HT
SS	NDA078	SW8270	2,4,5-TRICHLOROPHENOL	1320	U	1320	UJ	25	1320	ug/kg	HT
SS	NDA080RE1	SW8270	2,4,5-TRICHLOROPHENOL	1220	U	1220	UJ	23	1220	ug/kg	HT
SS	NDA082RE1	SW8270	2,4,5-TRICHLOROPHENOL	14000	U	14000	UJ	266	14000	ug/kg	HT
SB	NDA213	SW8270	1,4-DICHLOROBENZENE	485	U	485	UJ	45	485	ug/kg	HT
SB	NDA214FD1	SW8270	1,4-DICHLOROBENZENE	487	U	487	UJ	45	487	ug/kg	HT
SB	NDA215	SW8270	1,4-DICHLOROBENZENE	527	U	527	UJ	49	527	ug/kg	HT
SB	NDA216	SW8270	1,4-DICHLOROBENZENE	537	U	537	UJ	49	537	ug/kg	HT
SB	NDA217	SW8270	1,4-DICHLOROBENZENE	540	U	540	UJ	50	540	ug/kg	HT
SB	NDA218	SW8270	1,4-DICHLOROBENZENE	505	U	505	UJ	46	505	ug/kg	HT
SB	NDA219	SW8270	1,4-DICHLOROBENZENE	380	U	380	UJ	35	380	ug/kg	HT
SB	NDA220	SW8270	1,4-DICHLOROBENZENE	542	U	542	UJ	50	542	ug/kg	HT
SB	NDA221	SW8270	1,4-DICHLOROBENZENE	501	U	501	UJ	46	501	ug/kg	HT

Matrix	Sample ID	Analytical Method	Parameter	Lab Result	Lab Qual	Final Result	Final Qual	DL	RL	Units	Comments
SB	NDA222	SW8270	1,4-DICHLOROBENZENE	459	U	459	UJ	42	459	ug/kg	HT
SB	NDA223	SW8270	1,4-DICHLOROBENZENE	527	U	527	UJ	49	527	ug/kg	HT
SB	NDA235	SW8270	1,4-DICHLOROBENZENE	504	U	504	UJ	46	504	ug/kg	HT
SB	NDA236	SW8270	1,4-DICHLOROBENZENE	423	U	423	UJ	39	423	ug/kg	HT
SB	NDA237FD1	SW8270	1,4-DICHLOROBENZENE	395	U	395	UJ	36	395	ug/kg	HT
SB	NDA238	SW8270	1,4-DICHLOROBENZENE	424	U	424	UJ	39	424	ug/kg	HT
SB	NDA239	SW8270	1,4-DICHLOROBENZENE	555	U	555	UJ	51	555	ug/kg	HT
SB	NDA240	SW8270	1,4-DICHLOROBENZENE	397	U	397	UJ	37	397	ug/kg	HT
SB	NDA241	SW8270	1,4-DICHLOROBENZENE	471	U	471	UJ	43	471	ug/kg	HT
SB	NDA242	SW8270	1,4-DICHLOROBENZENE	436	U	436	UJ	40	436	ug/kg	HT
SB	NDA243	SW8270	1,4-DICHLOROBENZENE	893	U	893	UJ	82	893	ug/kg	HT
SB	NDA244	SW8270	1,4-DICHLOROBENZENE	388	U	388	UJ	36	388	ug/kg	HT
SB	NDA245	SW8270	1,4-DICHLOROBENZENE	393	U	393	UJ	36	393	ug/kg	HT
SB	NDA246	SW8270	1,4-DICHLOROBENZENE	511	U	511	UJ	47	511	ug/kg	HT
SB	NDA247FD1	SW8270	1,4-DICHLOROBENZENE	390	U	390	UJ	36	390	ug/kg	HT
SB	NDA248	SW8270	1,4-DICHLOROBENZENE	453	U	453	UJ	42	453	ug/kg	HT
SB	NDA249	SW8270	1,4-DICHLOROBENZENE	374	U	374	UJ	34	374	ug/kg	HT
SB	NDA252	SW8270	1,4-DICHLOROBENZENE	420	U	420	UJ	39	420	ug/kg	HT
SB	NDA253	SW8270	1,4-DICHLOROBENZENE	439	U	439	UJ	40	439	ug/kg	HT
SB	NDA254	SW8270	1,4-DICHLOROBENZENE	391	U	391	UJ	36	391	ug/kg	HT
SB	NDA255	SW8270	1,4-DICHLOROBENZENE	375	U	375	UJ	35	375	ug/kg	HT
SB	NDA085	SW8270	1,4-DICHLOROBENZENE	482	U	482	UJ	44	482	ug/kg	HT
SB	NDA092	SW8270	1,4-DICHLOROBENZENE	400	U	400	UJ	37	400	ug/kg	HT
SB	NDA093	SW8270	1,4-DICHLOROBENZENE	339	U	339	UJ	31	339	ug/kg	HT
SB	NDA094	SW8270	1,4-DICHLOROBENZENE	510	U	510	UJ	47	510	ug/kg	HT
SB	NDA095FD1	SW8270	1,4-DICHLOROBENZENE	310	U	310	UJ	29	310	ug/kg	HT
SB	NDA296	SW8270	1,4-DICHLOROBENZENE	369	U	369	UJ	34	369	ug/kg	HT
SB	NDA297	SW8270	1,4-DICHLOROBENZENE	358	U	358	UJ	33	358	ug/kg	HT
SB	NDA298	SW8270	1,4-DICHLOROBENZENE	341	U	341	UJ	31	341	ug/kg	HT
SB	NDA299	SW8270	1,4-DICHLOROBENZENE	370	U	370	UJ	34	370	ug/kg	HT
SB	NDA058	SW8270	1,4-DICHLOROBENZENE	460	U	460	UJ	42	460	ug/kg	HT
SB	NDA060	SW8270	1,4-DICHLOROBENZENE	478	U	478	UJ	44	478	ug/kg	HT
SB	NDA063	SW8270	1,4-DICHLOROBENZENE	382	U	382	UJ	35	382	ug/kg	HT
SB	NDA064FD1	SW8270	1,4-DICHLOROBENZENE	351	U	351	UJ	32	351	ug/kg	HT
SB	NDA066	SW8270	1,4-DICHLOROBENZENE	344	U	344	UJ	32	344	ug/kg	HT
SB	NDA068	SW8270	1,4-DICHLOROBENZENE	360	U	360	UJ	33	360	ug/kg	HT
SB	NDA070	SW8270	1,4-DICHLOROBENZENE	404	U	404	UJ	37	404	ug/kg	HT
SB	NDA073	SW8270	1,4-DICHLOROBENZENE	383	U	383	UJ	35	383	ug/kg	HT
SB	NDA075	SW8270	1,4-DICHLOROBENZENE	401	U	401	UJ	37	401	ug/kg	HT
SB	NDA077	SW8270	1,4-DICHLOROBENZENE	441	U	441	UJ	41	441	ug/kg	HT
SB	NDA079	SW8270	1,4-DICHLOROBENZENE	466	U	466	UJ	43	466	ug/kg	HT
SB	NDA081RE1	SW8270	1,4-DICHLOROBENZENE	393	U	393	UJ	36	393	ug/kg	HT
SB	NDA083RE1	SW8270	1,4-DICHLOROBENZENE	4240	U	4240	UJ	390	4240	ug/kg	HT
SD	NDA054	SW8270	1,4-DICHLOROBENZENE	480	U	480	UJ	44	480	ug/kg	HT
SD	NDA055	SW8270	1,4-DICHLOROBENZENE	696	U	696	UJ	64	696	ug/kg	HT
SD	NDA042	SW8270	1,4-DICHLOROBENZENE	686	U	686	UJ	63	686	ug/kg	HT
SD	NDA043	SW8270	1,4-DICHLOROBENZENE	735	U	735	UJ	68	735	ug/kg	HT
SD	NDA044	SW8270	1,4-DICHLOROBENZENE	1680	U	1680	UJ	155	1680	ug/kg	HT
SD	NDA045	SW8270	1,4-DICHLOROBENZENE	1500	U	1500	UJ	138	1500	ug/kg	HT
SD	NDA046	SW8270	1,4-DICHLOROBENZENE	1520	U	1520	UJ	140	1520	ug/kg	HT
SD	NDA302	SW8270	1,4-DICHLOROBENZENE	1200	U	1200	UJ	110	1200	ug/kg	HT
SD	NDA303	SW8270	1,4-DICHLOROBENZENE	2300	U	2300	UJ	212	2300	ug/kg	HT
SD	NDA307FD1	SW8270	1,4-DICHLOROBENZENE	2130	U	2130	UJ	196	2130	ug/kg	HT
SD	NDA047	SW8270	1,4-DICHLOROBENZENE	503	U	503	UJ	46	503	ug/kg	HT
SD	NDA048	SW8270	1,4-DICHLOROBENZENE	558	U	558	UJ	51	558	ug/kg	HT
SD	NDA049	SW8270	1,4-DICHLOROBENZENE	463	U	463	UJ	43	463	ug/kg	HT
SS	NDA178	SW8270	1,4-DICHLOROBENZENE	644	U	644	UJ	59	644	ug/kg	HT
SS	NDA179	SW8270	1,4-DICHLOROBENZENE	644	U	644	UJ	59	644	ug/kg	HT
SS	NDA180	SW8270	1,4-DICHLOROBENZENE	550	U	550	UJ	51	550	ug/kg	HT
SS	NDA181	SW8270	1,4-DICHLOROBENZENE	566	U	566	UJ	52	566	ug/kg	HT
SS	NDA182	SW8270	1,4-DICHLOROBENZENE	679	U	679	UJ	62	679	ug/kg	HT
SS	NDA183	SW8270	1,4-DICHLOROBENZENE	589	U	589	UJ	54	589	ug/kg	HT
SS	NDA184FD1	SW8270	1,4-DICHLOROBENZENE	662	U	662	UJ	61	662	ug/kg	HT
SS	NDA201	SW8270	1,4-DICHLOROBENZENE	491	U	491	UJ	45	491	ug/kg	HT
SS	NDA202	SW8270	1,4-DICHLOROBENZENE	605	U	605	UJ	56	605	ug/kg	HT
SS	NDA203	SW8270	1,4-DICHLOROBENZENE	617	U	617	UJ	57	617	ug/kg	HT
SS	NDA204	SW8270	1,4-DICHLOROBENZENE	753	U	753	UJ	69	753	ug/kg	HT
SS	NDA205FD1	SW8270	1,4-DICHLOROBENZENE	668	U	668	UJ	61	668	ug/kg	HT
SS	NDA206	SW8270	1,4-DICHLOROBENZENE	529	U	529	UJ	49	529	ug/kg	HT
SS	NDA207	SW8270	1,4-DICHLOROBENZENE	669	U	669	UJ	62	669	ug/kg	HT

Matrix	Sample ID	Analytical Method	Parameter	Lab Result	Lab Qual	Final Result	Final Qual	DL	RL	Units	Comments
SS	NDA208	SW8270	1,4-DICHLOROBENZENE	520	U	520	UJ	48	520	ug/kg	HT
SS	NDA209	SW8270	1,4-DICHLOROBENZENE	570	U	570	UJ	52	570	ug/kg	HT
SS	NDA210	SW8270	1,4-DICHLOROBENZENE	545	U	545	UJ	50	545	ug/kg	HT
SS	NDA211	SW8270	1,4-DICHLOROBENZENE	742	U	742	UJ	68	742	ug/kg	HT
SS	NDA212	SW8270	1,4-DICHLOROBENZENE	651	U	651	UJ	60	651	ug/kg	HT
SS	NDA185	SW8270	1,4-DICHLOROBENZENE	445	U	445	UJ	41	445	ug/kg	HT
SS	NDA186	SW8270	1,4-DICHLOROBENZENE	416	U	416	UJ	38	416	ug/kg	HT
SS	NDA187	SW8270	1,4-DICHLOROBENZENE	380	U	380	UJ	35	380	ug/kg	HT
SS	NDA188	SW8270	1,4-DICHLOROBENZENE	810	U	810	UJ	74	810	ug/kg	HT
SS	NDA189	SW8270	1,4-DICHLOROBENZENE	426	U	426	UJ	39	426	ug/kg	HT
SS	NDA190	SW8270	1,4-DICHLOROBENZENE	430	U	430	UJ	40	430	ug/kg	HT
SS	NDA191	SW8270	1,4-DICHLOROBENZENE	338	U	338	UJ	31	338	ug/kg	HT
SS	NDA192FD1	SW8270	1,4-DICHLOROBENZENE	418	U	418	UJ	38	418	ug/kg	HT
SS	NDA193	SW8270	1,4-DICHLOROBENZENE	1720	U	1720	UJ	158	1720	ug/kg	HT
SS	NDA194	SW8270	1,4-DICHLOROBENZENE	480	U	480	UJ	44	480	ug/kg	HT
SS	NDA195	SW8270	1,4-DICHLOROBENZENE	323	U	323	UJ	30	323	ug/kg	HT
SS	NDA084	SW8270	1,4-DICHLOROBENZENE	344	U	344	UJ	32	344	ug/kg	HT
SS	NDA091	SW8270	1,4-DICHLOROBENZENE	367	U	367	UJ	34	367	ug/kg	HT
SS	NDA057	SW8270	1,4-DICHLOROBENZENE	563	U	563	UJ	52	563	ug/kg	HT
SS	NDA059	SW8270	1,4-DICHLOROBENZENE	465	U	465	UJ	43	465	ug/kg	HT
SS	NDA061	SW8270	1,4-DICHLOROBENZENE	469	U	469	UJ	43	469	ug/kg	HT
SS	NDA062FD1	SW8270	1,4-DICHLOROBENZENE	523	U	523	UJ	48	523	ug/kg	HT
SS	NDA065	SW8270	1,4-DICHLOROBENZENE	421	U	421	UJ	39	421	ug/kg	HT
SS	NDA067	SW8270	1,4-DICHLOROBENZENE	378	U	378	UJ	35	378	ug/kg	HT
SS	NDA069	SW8270	1,4-DICHLOROBENZENE	320	U	320	UJ	29	320	ug/kg	HT
SS	NDA119	SW8270	1,4-DICHLOROBENZENE	503	U	503	UJ	46	503	ug/kg	HT
SS	NDA120	SW8270	1,4-DICHLOROBENZENE	541	U	541	UJ	50	541	ug/kg	HT
SS	NDA121	SW8270	1,4-DICHLOROBENZENE	409	U	409	UJ	38	409	ug/kg	HT
SS	NDA122	SW8270	1,4-DICHLOROBENZENE	450	U	450	UJ	41	450	ug/kg	HT
SS	NDA123	SW8270	1,4-DICHLOROBENZENE	450	U	450	UJ	41	450	ug/kg	HT
SS	NDA124	SW8270	1,4-DICHLOROBENZENE	432	U	432	UJ	40	432	ug/kg	HT
SS	NDA071	SW8270	1,4-DICHLOROBENZENE	554	U	554	UJ	51	554	ug/kg	HT
SS	NDA072FD1	SW8270	1,4-DICHLOROBENZENE	413	U	413	UJ	38	413	ug/kg	HT
SS	NDA074	SW8270	1,4-DICHLOROBENZENE	448	U	448	UJ	41	448	ug/kg	HT
SS	NDA076	SW8270	1,4-DICHLOROBENZENE	419	U	419	UJ	39	419	ug/kg	HT
SS	NDA078	SW8270	1,4-DICHLOROBENZENE	440	U	440	UJ	41	440	ug/kg	HT
SS	NDA080RE1	SW8270	1,4-DICHLOROBENZENE	407	U	407	UJ	37	407	ug/kg	HT
SS	NDA082RE1	SW8270	1,4-DICHLOROBENZENE	4660	U	4660	UJ	429	4660	ug/kg	HT
SB	NDA213	SW8270	1,3-DICHLOROBENZENE	485	U	485	UJ	39	485	ug/kg	HT
SB	NDA214FD1	SW8270	1,3-DICHLOROBENZENE	487	U	487	UJ	39	487	ug/kg	HT
SB	NDA215	SW8270	1,3-DICHLOROBENZENE	527	U	527	UJ	42	527	ug/kg	HT
SB	NDA216	SW8270	1,3-DICHLOROBENZENE	537	U	537	UJ	43	537	ug/kg	HT
SB	NDA217	SW8270	1,3-DICHLOROBENZENE	540	U	540	UJ	43	540	ug/kg	HT
SB	NDA218	SW8270	1,3-DICHLOROBENZENE	505	U	505	UJ	40	505	ug/kg	HT
SB	NDA219	SW8270	1,3-DICHLOROBENZENE	380	U	380	UJ	30	380	ug/kg	HT
SB	NDA220	SW8270	1,3-DICHLOROBENZENE	542	U	542	UJ	43	542	ug/kg	HT
SB	NDA221	SW8270	1,3-DICHLOROBENZENE	501	U	501	UJ	40	501	ug/kg	HT
SB	NDA222	SW8270	1,3-DICHLOROBENZENE	459	U	459	UJ	37	459	ug/kg	HT
SB	NDA223	SW8270	1,3-DICHLOROBENZENE	527	U	527	UJ	42	527	ug/kg	HT
SB	NDA235	SW8270	1,3-DICHLOROBENZENE	504	U	504	UJ	40	504	ug/kg	HT
SB	NDA236	SW8270	1,3-DICHLOROBENZENE	423	U	423	UJ	34	423	ug/kg	HT
SB	NDA237FD1	SW8270	1,3-DICHLOROBENZENE	395	U	395	UJ	32	395	ug/kg	HT
SB	NDA238	SW8270	1,3-DICHLOROBENZENE	424	U	424	UJ	34	424	ug/kg	HT
SB	NDA239	SW8270	1,3-DICHLOROBENZENE	555	U	555	UJ	44	555	ug/kg	HT
SB	NDA240	SW8270	1,3-DICHLOROBENZENE	397	U	397	UJ	32	397	ug/kg	HT
SB	NDA241	SW8270	1,3-DICHLOROBENZENE	471	U	471	UJ	38	471	ug/kg	HT
SB	NDA242	SW8270	1,3-DICHLOROBENZENE	436	U	436	UJ	35	436	ug/kg	HT
SB	NDA243	SW8270	1,3-DICHLOROBENZENE	893	U	893	UJ	71	893	ug/kg	HT
SB	NDA244	SW8270	1,3-DICHLOROBENZENE	388	U	388	UJ	31	388	ug/kg	HT
SB	NDA245	SW8270	1,3-DICHLOROBENZENE	393	U	393	UJ	31	393	ug/kg	HT
SB	NDA246	SW8270	1,3-DICHLOROBENZENE	511	U	511	UJ	41	511	ug/kg	HT
SB	NDA247FD1	SW8270	1,3-DICHLOROBENZENE	390	U	390	UJ	31	390	ug/kg	HT
SB	NDA248	SW8270	1,3-DICHLOROBENZENE	453	U	453	UJ	36	453	ug/kg	HT
SB	NDA249	SW8270	1,3-DICHLOROBENZENE	374	U	374	UJ	30	374	ug/kg	HT
SB	NDA252	SW8270	1,3-DICHLOROBENZENE	420	U	420	UJ	34	420	ug/kg	HT
SB	NDA253	SW8270	1,3-DICHLOROBENZENE	439	U	439	UJ	35	439	ug/kg	HT
SB	NDA254	SW8270	1,3-DICHLOROBENZENE	391	U	391	UJ	31	391	ug/kg	HT
SB	NDA255	SW8270	1,3-DICHLOROBENZENE	375	U	375	UJ	30	375	ug/kg	HT
SB	NDA085	SW8270	1,3-DICHLOROBENZENE	482	U	482	UJ	39	482	ug/kg	HT
SB	NDA092	SW8270	1,3-DICHLOROBENZENE	400	U	400	UJ	32	400	ug/kg	HT

Matrix	Sample ID	Analytical Method	Parameter	Lab Result	Lab Qual	Final Result	Final Qual	DL	RL	Units	Comments
SB	NDA093	SW8270	1,3-DICHLOROBENZENE	339	U	339	UJ	27	339	ug/kg	HT
SB	NDA094	SW8270	1,3-DICHLOROBENZENE	510	U	510	UJ	41	510	ug/kg	HT
SB	NDA095FD1	SW8270	1,3-DICHLOROBENZENE	310	U	310	UJ	25	310	ug/kg	HT
SB	NDA296	SW8270	1,3-DICHLOROBENZENE	369	U	369	UJ	30	369	ug/kg	HT
SB	NDA297	SW8270	1,3-DICHLOROBENZENE	358	U	358	UJ	29	358	ug/kg	HT
SB	NDA298	SW8270	1,3-DICHLOROBENZENE	341	U	341	UJ	27	341	ug/kg	HT
SB	NDA299	SW8270	1,3-DICHLOROBENZENE	370	U	370	UJ	30	370	ug/kg	HT
SB	NDA058	SW8270	1,3-DICHLOROBENZENE	460	U	460	UJ	37	460	ug/kg	HT
SB	NDA060	SW8270	1,3-DICHLOROBENZENE	478	U	478	UJ	38	478	ug/kg	HT
SB	NDA063	SW8270	1,3-DICHLOROBENZENE	382	U	382	UJ	31	382	ug/kg	HT
SB	NDA064FD1	SW8270	1,3-DICHLOROBENZENE	351	U	351	UJ	28	351	ug/kg	HT
SB	NDA066	SW8270	1,3-DICHLOROBENZENE	344	U	344	UJ	27	344	ug/kg	HT
SB	NDA068	SW8270	1,3-DICHLOROBENZENE	360	U	360	UJ	29	360	ug/kg	HT
SB	NDA070	SW8270	1,3-DICHLOROBENZENE	404	U	404	UJ	32	404	ug/kg	HT
SB	NDA073	SW8270	1,3-DICHLOROBENZENE	383	U	383	UJ	31	383	ug/kg	HT
SB	NDA075	SW8270	1,3-DICHLOROBENZENE	401	U	401	UJ	32	401	ug/kg	HT
SB	NDA077	SW8270	1,3-DICHLOROBENZENE	441	U	441	UJ	35	441	ug/kg	HT
SB	NDA079	SW8270	1,3-DICHLOROBENZENE	466	U	466	UJ	37	466	ug/kg	HT
SB	NDA081RE1	SW8270	1,3-DICHLOROBENZENE	393	U	393	UJ	31	393	ug/kg	HT
SB	NDA083RE1	SW8270	1,3-DICHLOROBENZENE	4240	U	4240	UJ	339	4240	ug/kg	HT
SD	NDA054	SW8270	1,3-DICHLOROBENZENE	480	U	480	UJ	38	480	ug/kg	HT
SD	NDA055	SW8270	1,3-DICHLOROBENZENE	696	U	696	UJ	56	696	ug/kg	HT
SD	NDA042	SW8270	1,3-DICHLOROBENZENE	686	U	686	UJ	55	686	ug/kg	HT
SD	NDA043	SW8270	1,3-DICHLOROBENZENE	735	U	735	UJ	59	735	ug/kg	HT
SD	NDA044	SW8270	1,3-DICHLOROBENZENE	1680	U	1680	UJ	135	1680	ug/kg	HT
SD	NDA045	SW8270	1,3-DICHLOROBENZENE	1500	U	1500	UJ	120	1500	ug/kg	HT
SD	NDA046	SW8270	1,3-DICHLOROBENZENE	1520	U	1520	UJ	122	1520	ug/kg	HT
SD	NDA302	SW8270	1,3-DICHLOROBENZENE	1200	U	1200	UJ	96	1200	ug/kg	HT
SD	NDA303	SW8270	1,3-DICHLOROBENZENE	2300	U	2300	UJ	184	2300	ug/kg	HT
SD	NDA307FD1	SW8270	1,3-DICHLOROBENZENE	2130	U	2130	UJ	170	2130	ug/kg	HT
SD	NDA047	SW8270	1,3-DICHLOROBENZENE	503	U	503	UJ	40	503	ug/kg	HT
SD	NDA048	SW8270	1,3-DICHLOROBENZENE	558	U	558	UJ	45	558	ug/kg	HT
SD	NDA049	SW8270	1,3-DICHLOROBENZENE	463	U	463	UJ	37	463	ug/kg	HT
SS	NDA178	SW8270	1,3-DICHLOROBENZENE	644	U	644	UJ	52	644	ug/kg	HT
SS	NDA179	SW8270	1,3-DICHLOROBENZENE	644	U	644	UJ	52	644	ug/kg	HT
SS	NDA180	SW8270	1,3-DICHLOROBENZENE	550	U	550	UJ	44	550	ug/kg	HT
SS	NDA181	SW8270	1,3-DICHLOROBENZENE	566	U	566	UJ	45	566	ug/kg	HT
SS	NDA182	SW8270	1,3-DICHLOROBENZENE	679	U	679	UJ	54	679	ug/kg	HT
SS	NDA183	SW8270	1,3-DICHLOROBENZENE	589	U	589	UJ	47	589	ug/kg	HT
SS	NDA184FD1	SW8270	1,3-DICHLOROBENZENE	662	U	662	UJ	53	662	ug/kg	HT
SS	NDA201	SW8270	1,3-DICHLOROBENZENE	491	U	491	UJ	39	491	ug/kg	HT
SS	NDA202	SW8270	1,3-DICHLOROBENZENE	605	U	605	UJ	48	605	ug/kg	HT
SS	NDA203	SW8270	1,3-DICHLOROBENZENE	617	U	617	UJ	49	617	ug/kg	HT
SS	NDA204	SW8270	1,3-DICHLOROBENZENE	753	U	753	UJ	60	753	ug/kg	HT
SS	NDA205FD1	SW8270	1,3-DICHLOROBENZENE	668	U	668	UJ	53	668	ug/kg	HT
SS	NDA206	SW8270	1,3-DICHLOROBENZENE	529	U	529	UJ	42	529	ug/kg	HT
SS	NDA207	SW8270	1,3-DICHLOROBENZENE	669	U	669	UJ	54	669	ug/kg	HT
SS	NDA208	SW8270	1,3-DICHLOROBENZENE	520	U	520	UJ	42	520	ug/kg	HT
SS	NDA209	SW8270	1,3-DICHLOROBENZENE	570	U	570	UJ	46	570	ug/kg	HT
SS	NDA210	SW8270	1,3-DICHLOROBENZENE	545	U	545	UJ	44	545	ug/kg	HT
SS	NDA211	SW8270	1,3-DICHLOROBENZENE	742	U	742	UJ	59	742	ug/kg	HT
SS	NDA212	SW8270	1,3-DICHLOROBENZENE	651	U	651	UJ	52	651	ug/kg	HT
SS	NDA185	SW8270	1,3-DICHLOROBENZENE	445	U	445	UJ	36	445	ug/kg	HT
SS	NDA186	SW8270	1,3-DICHLOROBENZENE	416	U	416	UJ	33	416	ug/kg	HT
SS	NDA187	SW8270	1,3-DICHLOROBENZENE	380	U	380	UJ	30	380	ug/kg	HT
SS	NDA188	SW8270	1,3-DICHLOROBENZENE	810	U	810	UJ	65	810	ug/kg	HT
SS	NDA189	SW8270	1,3-DICHLOROBENZENE	426	U	426	UJ	34	426	ug/kg	HT
SS	NDA190	SW8270	1,3-DICHLOROBENZENE	430	U	430	UJ	34	430	ug/kg	HT
SS	NDA191	SW8270	1,3-DICHLOROBENZENE	338	U	338	UJ	27	338	ug/kg	HT
SS	NDA192FD1	SW8270	1,3-DICHLOROBENZENE	418	U	418	UJ	33	418	ug/kg	HT
SS	NDA193	SW8270	1,3-DICHLOROBENZENE	1720	U	1720	UJ	138	1720	ug/kg	HT
SS	NDA194	SW8270	1,3-DICHLOROBENZENE	480	U	480	UJ	38	480	ug/kg	HT
SS	NDA195	SW8270	1,3-DICHLOROBENZENE	323	U	323	UJ	26	323	ug/kg	HT
SS	NDA084	SW8270	1,3-DICHLOROBENZENE	344	U	344	UJ	27	344	ug/kg	HT
SS	NDA091	SW8270	1,3-DICHLOROBENZENE	367	U	367	UJ	29	367	ug/kg	HT
SS	NDA057	SW8270	1,3-DICHLOROBENZENE	563	U	563	UJ	45	563	ug/kg	HT
SS	NDA059	SW8270	1,3-DICHLOROBENZENE	465	U	465	UJ	37	465	ug/kg	HT
SS	NDA061	SW8270	1,3-DICHLOROBENZENE	469	U	469	UJ	38	469	ug/kg	HT
SS	NDA062FD1	SW8270	1,3-DICHLOROBENZENE	523	U	523	UJ	42	523	ug/kg	HT
SS	NDA065	SW8270	1,3-DICHLOROBENZENE	421	U	421	UJ	34	421	ug/kg	HT

Matrix	Sample ID	Analytical Method	Parameter	Lab Result	Lab Qual	Final Result	Final Qual	DL	RL	Units	Comments
SS	NDA067	SW8270	1,3-DICHLOROBENZENE	378	U	378	UJ	30	378	ug/kg	HT
SS	NDA069	SW8270	1,3-DICHLOROBENZENE	320	U	320	UJ	26	320	ug/kg	HT
SS	NDA119	SW8270	1,3-DICHLOROBENZENE	503	U	503	UJ	40	503	ug/kg	HT
SS	NDA120	SW8270	1,3-DICHLOROBENZENE	541	U	541	UJ	43	541	ug/kg	HT
SS	NDA121	SW8270	1,3-DICHLOROBENZENE	409	U	409	UJ	33	409	ug/kg	HT
SS	NDA122	SW8270	1,3-DICHLOROBENZENE	450	U	450	UJ	36	450	ug/kg	HT
SS	NDA123	SW8270	1,3-DICHLOROBENZENE	450	U	450	UJ	36	450	ug/kg	HT
SS	NDA124	SW8270	1,3-DICHLOROBENZENE	432	U	432	UJ	35	432	ug/kg	HT
SS	NDA071	SW8270	1,3-DICHLOROBENZENE	554	U	554	UJ	44	554	ug/kg	HT
SS	NDA072FD1	SW8270	1,3-DICHLOROBENZENE	413	U	413	UJ	33	413	ug/kg	HT
SS	NDA074	SW8270	1,3-DICHLOROBENZENE	448	U	448	UJ	36	448	ug/kg	HT
SS	NDA076	SW8270	1,3-DICHLOROBENZENE	419	U	419	UJ	34	419	ug/kg	HT
SS	NDA078	SW8270	1,3-DICHLOROBENZENE	440	U	440	UJ	35	440	ug/kg	HT
SS	NDA080RE1	SW8270	1,3-DICHLOROBENZENE	407	U	407	UJ	33	407	ug/kg	HT
SS	NDA082RE1	SW8270	1,3-DICHLOROBENZENE	4660	U	4660	UJ	373	4660	ug/kg	HT
SB	NDA213	SW8270	1,2-DICHLOROBENZENE	485	U	485	UJ	46	485	ug/kg	HT
SB	NDA214FD1	SW8270	1,2-DICHLOROBENZENE	487	U	487	UJ	46	487	ug/kg	HT
SB	NDA215	SW8270	1,2-DICHLOROBENZENE	527	U	527	UJ	50	527	ug/kg	HT
SB	NDA216	SW8270	1,2-DICHLOROBENZENE	537	U	537	UJ	50	537	ug/kg	HT
SB	NDA217	SW8270	1,2-DICHLOROBENZENE	540	U	540	UJ	51	540	ug/kg	HT
SB	NDA218	SW8270	1,2-DICHLOROBENZENE	505	U	505	UJ	47	505	ug/kg	HT
SB	NDA219	SW8270	1,2-DICHLOROBENZENE	380	U	380	UJ	36	380	ug/kg	HT
SB	NDA220	SW8270	1,2-DICHLOROBENZENE	542	U	542	UJ	51	542	ug/kg	HT
SB	NDA221	SW8270	1,2-DICHLOROBENZENE	501	U	501	UJ	47	501	ug/kg	HT
SB	NDA222	SW8270	1,2-DICHLOROBENZENE	459	U	459	UJ	43	459	ug/kg	HT
SB	NDA223	SW8270	1,2-DICHLOROBENZENE	527	U	527	UJ	50	527	ug/kg	HT
SB	NDA235	SW8270	1,2-DICHLOROBENZENE	504	U	504	UJ	47	504	ug/kg	HT
SB	NDA236	SW8270	1,2-DICHLOROBENZENE	423	U	423	UJ	40	423	ug/kg	HT
SB	NDA237FD1	SW8270	1,2-DICHLOROBENZENE	395	U	395	UJ	37	395	ug/kg	HT
SB	NDA238	SW8270	1,2-DICHLOROBENZENE	424	U	424	UJ	40	424	ug/kg	HT
SB	NDA239	SW8270	1,2-DICHLOROBENZENE	555	U	555	UJ	52	555	ug/kg	HT
SB	NDA240	SW8270	1,2-DICHLOROBENZENE	397	U	397	UJ	37	397	ug/kg	HT
SB	NDA241	SW8270	1,2-DICHLOROBENZENE	471	U	471	UJ	44	471	ug/kg	HT
SB	NDA242	SW8270	1,2-DICHLOROBENZENE	436	U	436	UJ	41	436	ug/kg	HT
SB	NDA243	SW8270	1,2-DICHLOROBENZENE	893	U	893	UJ	84	893	ug/kg	HT
SB	NDA244	SW8270	1,2-DICHLOROBENZENE	388	U	388	UJ	36	388	ug/kg	HT
SB	NDA245	SW8270	1,2-DICHLOROBENZENE	393	U	393	UJ	37	393	ug/kg	HT
SB	NDA246	SW8270	1,2-DICHLOROBENZENE	511	U	511	UJ	48	511	ug/kg	HT
SB	NDA247FD1	SW8270	1,2-DICHLOROBENZENE	390	U	390	UJ	37	390	ug/kg	HT
SB	NDA248	SW8270	1,2-DICHLOROBENZENE	453	U	453	UJ	43	453	ug/kg	HT
SB	NDA249	SW8270	1,2-DICHLOROBENZENE	374	U	374	UJ	35	374	ug/kg	HT
SB	NDA252	SW8270	1,2-DICHLOROBENZENE	420	U	420	UJ	39	420	ug/kg	HT
SB	NDA253	SW8270	1,2-DICHLOROBENZENE	439	U	439	UJ	41	439	ug/kg	HT
SB	NDA254	SW8270	1,2-DICHLOROBENZENE	391	U	391	UJ	37	391	ug/kg	HT
SB	NDA255	SW8270	1,2-DICHLOROBENZENE	375	U	375	UJ	35	375	ug/kg	HT
SB	NDA085	SW8270	1,2-DICHLOROBENZENE	482	U	482	UJ	45	482	ug/kg	HT
SB	NDA092	SW8270	1,2-DICHLOROBENZENE	400	U	400	UJ	38	400	ug/kg	HT
SB	NDA093	SW8270	1,2-DICHLOROBENZENE	339	U	339	UJ	32	339	ug/kg	HT
SB	NDA094	SW8270	1,2-DICHLOROBENZENE	510	U	510	UJ	48	510	ug/kg	HT
SB	NDA095FD1	SW8270	1,2-DICHLOROBENZENE	310	U	310	UJ	29	310	ug/kg	HT
SB	NDA296	SW8270	1,2-DICHLOROBENZENE	369	U	369	UJ	35	369	ug/kg	HT
SB	NDA297	SW8270	1,2-DICHLOROBENZENE	358	U	358	UJ	34	358	ug/kg	HT
SB	NDA298	SW8270	1,2-DICHLOROBENZENE	341	U	341	UJ	32	341	ug/kg	HT
SB	NDA299	SW8270	1,2-DICHLOROBENZENE	370	U	370	UJ	35	370	ug/kg	HT
SB	NDA058	SW8270	1,2-DICHLOROBENZENE	460	U	460	UJ	43	460	ug/kg	HT
SB	NDA060	SW8270	1,2-DICHLOROBENZENE	478	U	478	UJ	45	478	ug/kg	HT
SB	NDA063	SW8270	1,2-DICHLOROBENZENE	382	U	382	UJ	36	382	ug/kg	HT
SB	NDA064FD1	SW8270	1,2-DICHLOROBENZENE	351	U	351	UJ	33	351	ug/kg	HT
SB	NDA066	SW8270	1,2-DICHLOROBENZENE	344	U	344	UJ	32	344	ug/kg	HT
SB	NDA068	SW8270	1,2-DICHLOROBENZENE	360	U	360	UJ	34	360	ug/kg	HT
SB	NDA070	SW8270	1,2-DICHLOROBENZENE	404	U	404	UJ	38	404	ug/kg	HT
SB	NDA073	SW8270	1,2-DICHLOROBENZENE	383	U	383	UJ	36	383	ug/kg	HT
SB	NDA075	SW8270	1,2-DICHLOROBENZENE	401	U	401	UJ	38	401	ug/kg	HT
SB	NDA077	SW8270	1,2-DICHLOROBENZENE	441	U	441	UJ	41	441	ug/kg	HT
SB	NDA079	SW8270	1,2-DICHLOROBENZENE	466	U	466	UJ	44	466	ug/kg	HT
SB	NDA081RE1	SW8270	1,2-DICHLOROBENZENE	393	U	393	UJ	37	393	ug/kg	HT
SB	NDA083RE1	SW8270	1,2-DICHLOROBENZENE	4240	U	4240	UJ	398	4240	ug/kg	HT
SD	NDA054	SW8270	1,2-DICHLOROBENZENE	480	U	480	UJ	45	480	ug/kg	HT
SD	NDA055	SW8270	1,2-DICHLOROBENZENE	696	U	696	UJ	65	696	ug/kg	HT
SD	NDA042	SW8270	1,2-DICHLOROBENZENE	686	U	686	UJ	65	686	ug/kg	HT

Matrix	Sample ID	Analytical Method	Parameter	Lab Result	Lab Qual	Final Result	Final Qual	DL	RL	Units	Comments
SD	NDA043	SW8270	1,2-DICHLOROBENZENE	735	U	735	UJ	69	735	ug/kg	HT
SD	NDA044	SW8270	1,2-DICHLOROBENZENE	1680	U	1680	UJ	158	1680	ug/kg	HT
SD	NDA045	SW8270	1,2-DICHLOROBENZENE	1500	U	1500	UJ	141	1500	ug/kg	HT
SD	NDA046	SW8270	1,2-DICHLOROBENZENE	1520	U	1520	UJ	143	1520	ug/kg	HT
SD	NDA302	SW8270	1,2-DICHLOROBENZENE	1200	U	1200	UJ	113	1200	ug/kg	HT
SD	NDA303	SW8270	1,2-DICHLOROBENZENE	2300	U	2300	UJ	216	2300	ug/kg	HT
SD	NDA307FD1	SW8270	1,2-DICHLOROBENZENE	2130	U	2130	UJ	200	2130	ug/kg	HT
SD	NDA047	SW8270	1,2-DICHLOROBENZENE	503	U	503	UJ	47	503	ug/kg	HT
SD	NDA048	SW8270	1,2-DICHLOROBENZENE	558	U	558	UJ	52	558	ug/kg	HT
SD	NDA049	SW8270	1,2-DICHLOROBENZENE	463	U	463	UJ	44	463	ug/kg	HT
SS	NDA178	SW8270	1,2-DICHLOROBENZENE	644	U	644	UJ	61	644	ug/kg	HT
SS	NDA179	SW8270	1,2-DICHLOROBENZENE	644	U	644	UJ	61	644	ug/kg	HT
SS	NDA180	SW8270	1,2-DICHLOROBENZENE	550	U	550	UJ	52	550	ug/kg	HT
SS	NDA181	SW8270	1,2-DICHLOROBENZENE	566	U	566	UJ	53	566	ug/kg	HT
SS	NDA182	SW8270	1,2-DICHLOROBENZENE	679	U	679	UJ	64	679	ug/kg	HT
SS	NDA183	SW8270	1,2-DICHLOROBENZENE	589	U	589	UJ	55	589	ug/kg	HT
SS	NDA184FD1	SW8270	1,2-DICHLOROBENZENE	662	U	662	UJ	62	662	ug/kg	HT
SS	NDA201	SW8270	1,2-DICHLOROBENZENE	491	U	491	UJ	46	491	ug/kg	HT
SS	NDA202	SW8270	1,2-DICHLOROBENZENE	605	U	605	UJ	57	605	ug/kg	HT
SS	NDA203	SW8270	1,2-DICHLOROBENZENE	617	U	617	UJ	58	617	ug/kg	HT
SS	NDA204	SW8270	1,2-DICHLOROBENZENE	753	U	753	UJ	71	753	ug/kg	HT
SS	NDA205FD1	SW8270	1,2-DICHLOROBENZENE	668	U	668	UJ	63	668	ug/kg	HT
SS	NDA206	SW8270	1,2-DICHLOROBENZENE	529	U	529	UJ	50	529	ug/kg	HT
SS	NDA207	SW8270	1,2-DICHLOROBENZENE	669	U	669	UJ	63	669	ug/kg	HT
SS	NDA208	SW8270	1,2-DICHLOROBENZENE	520	U	520	UJ	49	520	ug/kg	HT
SS	NDA209	SW8270	1,2-DICHLOROBENZENE	570	U	570	UJ	54	570	ug/kg	HT
SS	NDA210	SW8270	1,2-DICHLOROBENZENE	545	U	545	UJ	51	545	ug/kg	HT
SS	NDA211	SW8270	1,2-DICHLOROBENZENE	742	U	742	UJ	70	742	ug/kg	HT
SS	NDA212	SW8270	1,2-DICHLOROBENZENE	651	U	651	UJ	61	651	ug/kg	HT
SS	NDA185	SW8270	1,2-DICHLOROBENZENE	445	U	445	UJ	42	445	ug/kg	HT
SS	NDA186	SW8270	1,2-DICHLOROBENZENE	416	U	416	UJ	39	416	ug/kg	HT
SS	NDA187	SW8270	1,2-DICHLOROBENZENE	380	U	380	UJ	36	380	ug/kg	HT
SS	NDA188	SW8270	1,2-DICHLOROBENZENE	810	U	810	UJ	76	810	ug/kg	HT
SS	NDA189	SW8270	1,2-DICHLOROBENZENE	426	U	426	UJ	40	426	ug/kg	HT
SS	NDA190	SW8270	1,2-DICHLOROBENZENE	430	U	430	UJ	40	430	ug/kg	HT
SS	NDA191	SW8270	1,2-DICHLOROBENZENE	338	U	338	UJ	32	338	ug/kg	HT
SS	NDA192FD1	SW8270	1,2-DICHLOROBENZENE	418	U	418	UJ	39	418	ug/kg	HT
SS	NDA193	SW8270	1,2-DICHLOROBENZENE	1720	U	1720	UJ	162	1720	ug/kg	HT
SS	NDA194	SW8270	1,2-DICHLOROBENZENE	480	U	480	UJ	45	480	ug/kg	HT
SS	NDA195	SW8270	1,2-DICHLOROBENZENE	323	U	323	UJ	30	323	ug/kg	HT
SS	NDA084	SW8270	1,2-DICHLOROBENZENE	344	U	344	UJ	32	344	ug/kg	HT
SS	NDA091	SW8270	1,2-DICHLOROBENZENE	367	U	367	UJ	34	367	ug/kg	HT
SS	NDA057	SW8270	1,2-DICHLOROBENZENE	563	U	563	UJ	53	563	ug/kg	HT
SS	NDA059	SW8270	1,2-DICHLOROBENZENE	465	U	465	UJ	44	465	ug/kg	HT
SS	NDA061	SW8270	1,2-DICHLOROBENZENE	469	U	469	UJ	44	469	ug/kg	HT
SS	NDA062FD1	SW8270	1,2-DICHLOROBENZENE	523	U	523	UJ	49	523	ug/kg	HT
SS	NDA065	SW8270	1,2-DICHLOROBENZENE	421	U	421	UJ	40	421	ug/kg	HT
SS	NDA067	SW8270	1,2-DICHLOROBENZENE	378	U	378	UJ	36	378	ug/kg	HT
SS	NDA069	SW8270	1,2-DICHLOROBENZENE	320	U	320	UJ	30	320	ug/kg	HT
SS	NDA119	SW8270	1,2-DICHLOROBENZENE	503	U	503	UJ	47	503	ug/kg	HT
SS	NDA120	SW8270	1,2-DICHLOROBENZENE	541	U	541	UJ	51	541	ug/kg	HT
SS	NDA121	SW8270	1,2-DICHLOROBENZENE	409	U	409	UJ	38	409	ug/kg	HT
SS	NDA122	SW8270	1,2-DICHLOROBENZENE	450	U	450	UJ	42	450	ug/kg	HT
SS	NDA123	SW8270	1,2-DICHLOROBENZENE	450	U	450	UJ	42	450	ug/kg	HT
SS	NDA124	SW8270	1,2-DICHLOROBENZENE	432	U	432	UJ	41	432	ug/kg	HT
SS	NDA071	SW8270	1,2-DICHLOROBENZENE	554	U	554	UJ	52	554	ug/kg	HT
SS	NDA072FD1	SW8270	1,2-DICHLOROBENZENE	413	U	413	UJ	39	413	ug/kg	HT
SS	NDA074	SW8270	1,2-DICHLOROBENZENE	448	U	448	UJ	42	448	ug/kg	HT
SS	NDA076	SW8270	1,2-DICHLOROBENZENE	419	U	419	UJ	39	419	ug/kg	HT
SS	NDA078	SW8270	1,2-DICHLOROBENZENE	440	U	440	UJ	41	440	ug/kg	HT
SS	NDA080RE1	SW8270	1,2-DICHLOROBENZENE	407	U	407	UJ	38	407	ug/kg	HT
SS	NDA082RE1	SW8270	1,2-DICHLOROBENZENE	4660	U	4660	UJ	438	4660	ug/kg	HT
SB	NDA213	SW8270	1,2,4-TRICHLOROBENZENE	485	U	485	UJ	38	485	ug/kg	HT
SB	NDA214FD1	SW8270	1,2,4-TRICHLOROBENZENE	487	U	487	UJ	38	487	ug/kg	HT
SB	NDA215	SW8270	1,2,4-TRICHLOROBENZENE	527	U	527	UJ	41	527	ug/kg	HT
SB	NDA216	SW8270	1,2,4-TRICHLOROBENZENE	537	U	537	UJ	42	537	ug/kg	HT
SB	NDA217	SW8270	1,2,4-TRICHLOROBENZENE	540	U	540	UJ	42	540	ug/kg	HT
SB	NDA218	SW8270	1,2,4-TRICHLOROBENZENE	505	U	505	UJ	39	505	ug/kg	HT
SB	NDA219	SW8270	1,2,4-TRICHLOROBENZENE	380	U	380	UJ	30	380	ug/kg	HT
SB	NDA220	SW8270	1,2,4-TRICHLOROBENZENE	542	U	542	UJ	42	542	ug/kg	HT

Matrix	Sample ID	Analytical Method	Parameter	Lab Result	Lab Qual	Final Result	Final Qual	DL	RL	Units	Comments
SB	NDA221	SW8270	1,2,4-TRICHLOROBENZENE	501	U	501	UJ	39	501	ug/kg	HT
SB	NDA222	SW8270	1,2,4-TRICHLOROBENZENE	459	U	459	UJ	36	459	ug/kg	HT
SB	NDA223	SW8270	1,2,4-TRICHLOROBENZENE	527	U	527	UJ	41	527	ug/kg	HT
SB	NDA235	SW8270	1,2,4-TRICHLOROBENZENE	504	U	504	UJ	39	504	ug/kg	HT
SB	NDA236	SW8270	1,2,4-TRICHLOROBENZENE	423	U	423	UJ	33	423	ug/kg	HT
SB	NDA237FD1	SW8270	1,2,4-TRICHLOROBENZENE	395	U	395	UJ	31	395	ug/kg	HT
SB	NDA238	SW8270	1,2,4-TRICHLOROBENZENE	424	U	424	UJ	33	424	ug/kg	HT
SB	NDA239	SW8270	1,2,4-TRICHLOROBENZENE	555	U	555	UJ	43	555	ug/kg	HT
SB	NDA240	SW8270	1,2,4-TRICHLOROBENZENE	397	U	397	UJ	31	397	ug/kg	HT
SB	NDA241	SW8270	1,2,4-TRICHLOROBENZENE	471	U	471	UJ	37	471	ug/kg	HT
SB	NDA242	SW8270	1,2,4-TRICHLOROBENZENE	436	U	436	UJ	34	436	ug/kg	HT
SB	NDA243	SW8270	1,2,4-TRICHLOROBENZENE	893	U	893	UJ	70	893	ug/kg	HT
SB	NDA244	SW8270	1,2,4-TRICHLOROBENZENE	388	U	388	UJ	30	388	ug/kg	HT
SB	NDA245	SW8270	1,2,4-TRICHLOROBENZENE	393	U	393	UJ	31	393	ug/kg	HT
SB	NDA246	SW8270	1,2,4-TRICHLOROBENZENE	511	U	511	UJ	40	511	ug/kg	HT
SB	NDA247FD1	SW8270	1,2,4-TRICHLOROBENZENE	390	U	390	UJ	30	390	ug/kg	HT
SB	NDA248	SW8270	1,2,4-TRICHLOROBENZENE	453	U	453	UJ	35	453	ug/kg	HT
SB	NDA249	SW8270	1,2,4-TRICHLOROBENZENE	374	U	374	UJ	29	374	ug/kg	HT
SB	NDA252	SW8270	1,2,4-TRICHLOROBENZENE	420	U	420	UJ	33	420	ug/kg	HT
SB	NDA253	SW8270	1,2,4-TRICHLOROBENZENE	439	U	439	UJ	34	439	ug/kg	HT
SB	NDA254	SW8270	1,2,4-TRICHLOROBENZENE	391	U	391	UJ	30	391	ug/kg	HT
SB	NDA255	SW8270	1,2,4-TRICHLOROBENZENE	375	U	375	UJ	29	375	ug/kg	HT
SB	NDA085	SW8270	1,2,4-TRICHLOROBENZENE	482	U	482	UJ	38	482	ug/kg	HT
SB	NDA092	SW8270	1,2,4-TRICHLOROBENZENE	400	U	400	UJ	31	400	ug/kg	HT
SB	NDA093	SW8270	1,2,4-TRICHLOROBENZENE	339	U	339	UJ	26	339	ug/kg	HT
SB	NDA094	SW8270	1,2,4-TRICHLOROBENZENE	510	U	510	UJ	40	510	ug/kg	HT
SB	NDA095FD1	SW8270	1,2,4-TRICHLOROBENZENE	310	U	310	UJ	24	310	ug/kg	HT
SB	NDA296	SW8270	1,2,4-TRICHLOROBENZENE	369	U	369	UJ	29	369	ug/kg	HT
SB	NDA297	SW8270	1,2,4-TRICHLOROBENZENE	358	U	358	UJ	28	358	ug/kg	HT
SB	NDA298	SW8270	1,2,4-TRICHLOROBENZENE	341	U	341	UJ	27	341	ug/kg	HT
SB	NDA299	SW8270	1,2,4-TRICHLOROBENZENE	370	U	370	UJ	29	370	ug/kg	HT
SB	NDA058	SW8270	1,2,4-TRICHLOROBENZENE	460	U	460	UJ	36	460	ug/kg	HT
SB	NDA060	SW8270	1,2,4-TRICHLOROBENZENE	478	U	478	UJ	37	478	ug/kg	HT
SB	NDA063	SW8270	1,2,4-TRICHLOROBENZENE	382	U	382	UJ	30	382	ug/kg	HT
SB	NDA064FD1	SW8270	1,2,4-TRICHLOROBENZENE	351	U	351	UJ	27	351	ug/kg	HT
SB	NDA066	SW8270	1,2,4-TRICHLOROBENZENE	344	U	344	UJ	27	344	ug/kg	HT
SB	NDA068	SW8270	1,2,4-TRICHLOROBENZENE	360	U	360	UJ	28	360	ug/kg	HT
SB	NDA070	SW8270	1,2,4-TRICHLOROBENZENE	404	U	404	UJ	31	404	ug/kg	HT
SB	NDA073	SW8270	1,2,4-TRICHLOROBENZENE	383	U	383	UJ	30	383	ug/kg	HT
SB	NDA075	SW8270	1,2,4-TRICHLOROBENZENE	401	U	401	UJ	31	401	ug/kg	HT
SB	NDA077	SW8270	1,2,4-TRICHLOROBENZENE	441	U	441	UJ	34	441	ug/kg	HT
SB	NDA079	SW8270	1,2,4-TRICHLOROBENZENE	466	U	466	UJ	36	466	ug/kg	HT
SB	NDA081RE1	SW8270	1,2,4-TRICHLOROBENZENE	393	U	393	UJ	31	393	ug/kg	HT
SB	NDA083RE1	SW8270	1,2,4-TRICHLOROBENZENE	4240	U	4240	UJ	330	4240	ug/kg	HT
SD	NDA054	SW8270	1,2,4-TRICHLOROBENZENE	480	U	480	UJ	37	480	ug/kg	HT
SD	NDA055	SW8270	1,2,4-TRICHLOROBENZENE	696	U	696	UJ	54	696	ug/kg	HT
SD	NDA042	SW8270	1,2,4-TRICHLOROBENZENE	686	U	686	UJ	54	686	ug/kg	HT
SD	NDA043	SW8270	1,2,4-TRICHLOROBENZENE	735	U	735	UJ	57	735	ug/kg	HT
SD	NDA044	SW8270	1,2,4-TRICHLOROBENZENE	1680	U	1680	UJ	131	1680	ug/kg	HT
SD	NDA045	SW8270	1,2,4-TRICHLOROBENZENE	1500	U	1500	UJ	117	1500	ug/kg	HT
SD	NDA046	SW8270	1,2,4-TRICHLOROBENZENE	1520	U	1520	UJ	118	1520	ug/kg	HT
SD	NDA302	SW8270	1,2,4-TRICHLOROBENZENE	1200	U	1200	UJ	94	1200	ug/kg	HT
SD	NDA303	SW8270	1,2,4-TRICHLOROBENZENE	2300	U	2300	UJ	179	2300	ug/kg	HT
SD	NDA307FD1	SW8270	1,2,4-TRICHLOROBENZENE	2130	U	2130	UJ	166	2130	ug/kg	HT
SD	NDA047	SW8270	1,2,4-TRICHLOROBENZENE	503	U	503	UJ	39	503	ug/kg	HT
SD	NDA048	SW8270	1,2,4-TRICHLOROBENZENE	558	U	558	UJ	44	558	ug/kg	HT
SD	NDA049	SW8270	1,2,4-TRICHLOROBENZENE	463	U	463	UJ	36	463	ug/kg	HT
SS	NDA178	SW8270	1,2,4-TRICHLOROBENZENE	644	U	644	UJ	50	644	ug/kg	HT
SS	NDA179	SW8270	1,2,4-TRICHLOROBENZENE	644	U	644	UJ	50	644	ug/kg	HT
SS	NDA180	SW8270	1,2,4-TRICHLOROBENZENE	550	U	550	UJ	43	550	ug/kg	HT
SS	NDA181	SW8270	1,2,4-TRICHLOROBENZENE	566	U	566	UJ	44	566	ug/kg	HT
SS	NDA182	SW8270	1,2,4-TRICHLOROBENZENE	679	U	679	UJ	53	679	ug/kg	HT
SS	NDA183	SW8270	1,2,4-TRICHLOROBENZENE	589	U	589	UJ	46	589	ug/kg	HT
SS	NDA184FD1	SW8270	1,2,4-TRICHLOROBENZENE	662	U	662	UJ	52	662	ug/kg	HT
SS	NDA201	SW8270	1,2,4-TRICHLOROBENZENE	491	U	491	UJ	38	491	ug/kg	HT
SS	NDA202	SW8270	1,2,4-TRICHLOROBENZENE	605	U	605	UJ	47	605	ug/kg	HT
SS	NDA203	SW8270	1,2,4-TRICHLOROBENZENE	617	U	617	UJ	48	617	ug/kg	HT
SS	NDA204	SW8270	1,2,4-TRICHLOROBENZENE	753	U	753	UJ	59	753	ug/kg	HT
SS	NDA205FD1	SW8270	1,2,4-TRICHLOROBENZENE	668	U	668	UJ	52	668	ug/kg	HT
SS	NDA206	SW8270	1,2,4-TRICHLOROBENZENE	529	U	529	UJ	41	529	ug/kg	HT

Matrix	Sample ID	Analytical Method	Parameter	Lab Result	Lab Qual	Final Result	Final Qual	DL	RL	Units	Comments
SS	NDA207	SW8270	1,2,4-TRICHLOROBENZENE	669	U	669	UJ	52	669	ug/kg	HT
SS	NDA208	SW8270	1,2,4-TRICHLOROBENZENE	520	U	520	UJ	41	520	ug/kg	HT
SS	NDA209	SW8270	1,2,4-TRICHLOROBENZENE	570	U	570	UJ	44	570	ug/kg	HT
SS	NDA210	SW8270	1,2,4-TRICHLOROBENZENE	545	U	545	UJ	42	545	ug/kg	HT
SS	NDA211	SW8270	1,2,4-TRICHLOROBENZENE	742	U	742	UJ	58	742	ug/kg	HT
SS	NDA212	SW8270	1,2,4-TRICHLOROBENZENE	651	U	651	UJ	51	651	ug/kg	HT
SS	NDA185	SW8270	1,2,4-TRICHLOROBENZENE	445	U	445	UJ	35	445	ug/kg	HT
SS	NDA186	SW8270	1,2,4-TRICHLOROBENZENE	416	U	416	UJ	32	416	ug/kg	HT
SS	NDA187	SW8270	1,2,4-TRICHLOROBENZENE	380	U	380	UJ	30	380	ug/kg	HT
SS	NDA188	SW8270	1,2,4-TRICHLOROBENZENE	810	U	810	UJ	63	810	ug/kg	HT
SS	NDA189	SW8270	1,2,4-TRICHLOROBENZENE	426	U	426	UJ	33	426	ug/kg	HT
SS	NDA190	SW8270	1,2,4-TRICHLOROBENZENE	430	U	430	UJ	34	430	ug/kg	HT
SS	NDA191	SW8270	1,2,4-TRICHLOROBENZENE	338	U	338	UJ	26	338	ug/kg	HT
SS	NDA192FD1	SW8270	1,2,4-TRICHLOROBENZENE	418	U	418	UJ	33	418	ug/kg	HT
SS	NDA193	SW8270	1,2,4-TRICHLOROBENZENE	1720	U	1720	UJ	134	1720	ug/kg	HT
SS	NDA194	SW8270	1,2,4-TRICHLOROBENZENE	480	U	480	UJ	37	480	ug/kg	HT
SS	NDA195	SW8270	1,2,4-TRICHLOROBENZENE	323	U	323	UJ	25	323	ug/kg	HT
SS	NDA084	SW8270	1,2,4-TRICHLOROBENZENE	344	U	344	UJ	27	344	ug/kg	HT
SS	NDA091	SW8270	1,2,4-TRICHLOROBENZENE	367	U	367	UJ	29	367	ug/kg	HT
SS	NDA057	SW8270	1,2,4-TRICHLOROBENZENE	563	U	563	UJ	44	563	ug/kg	HT
SS	NDA059	SW8270	1,2,4-TRICHLOROBENZENE	465	U	465	UJ	36	465	ug/kg	HT
SS	NDA061	SW8270	1,2,4-TRICHLOROBENZENE	469	U	469	UJ	37	469	ug/kg	HT
SS	NDA062FD1	SW8270	1,2,4-TRICHLOROBENZENE	523	U	523	UJ	41	523	ug/kg	HT
SS	NDA065	SW8270	1,2,4-TRICHLOROBENZENE	421	U	421	UJ	33	421	ug/kg	HT
SS	NDA067	SW8270	1,2,4-TRICHLOROBENZENE	378	U	378	UJ	29	378	ug/kg	HT
SS	NDA069	SW8270	1,2,4-TRICHLOROBENZENE	320	U	320	UJ	25	320	ug/kg	HT
SS	NDA119	SW8270	1,2,4-TRICHLOROBENZENE	503	U	503	UJ	39	503	ug/kg	HT
SS	NDA120	SW8270	1,2,4-TRICHLOROBENZENE	541	U	541	UJ	42	541	ug/kg	HT
SS	NDA121	SW8270	1,2,4-TRICHLOROBENZENE	409	U	409	UJ	32	409	ug/kg	HT
SS	NDA122	SW8270	1,2,4-TRICHLOROBENZENE	450	U	450	UJ	35	450	ug/kg	HT
SS	NDA123	SW8270	1,2,4-TRICHLOROBENZENE	450	U	450	UJ	35	450	ug/kg	HT
SS	NDA124	SW8270	1,2,4-TRICHLOROBENZENE	432	U	432	UJ	34	432	ug/kg	HT
SS	NDA071	SW8270	1,2,4-TRICHLOROBENZENE	554	U	554	UJ	43	554	ug/kg	HT
SS	NDA072FD1	SW8270	1,2,4-TRICHLOROBENZENE	413	U	413	UJ	32	413	ug/kg	HT
SS	NDA074	SW8270	1,2,4-TRICHLOROBENZENE	448	U	448	UJ	35	448	ug/kg	HT
SS	NDA076	SW8270	1,2,4-TRICHLOROBENZENE	419	U	419	UJ	33	419	ug/kg	HT
SS	NDA078	SW8270	1,2,4-TRICHLOROBENZENE	440	U	440	UJ	34	440	ug/kg	HT
SS	NDA080RE1	SW8270	1,2,4-TRICHLOROBENZENE	407	U	407	UJ	32	407	ug/kg	HT
SS	NDA082RE1	SW8270	1,2,4-TRICHLOROBENZENE	4660	U	4660	UJ	363	4660	ug/kg	HT
SS	NDA197FD1	SW8260	XYLENES, TOTAL	26	=	26	J	0.25	12	ug/kg	FD
SS	NDA204	SW8081	p,p'-DDD	4.3	U	4.3	UJ	0.3	4.3	ug/kg	FD
SS	NDA197FD1	SW8260	M,P-XYLENE (SUM OF ISOMERS)	22	=	22	J	0.25	12	ug/kg	FD
SS	NDA149	SW8270	DIMETHYL PHTHALATE	5800	=	5800	J	36	556	ug/kg	FD
SS	NDA150FD1	SW8270	DIMETHYL PHTHALATE	514	U	514	UJ	33	514	ug/kg	FD
SD	NDA050	SW8270	bis(2-ETHYLHEXYL) PHTHALATE	8850	=	8850	J	469	6260	ug/kg	FD
SS	NDA149	E200.7	ZINC	94	=	94	J	0.27	4.4	mg/kg	FD
SS	NDA150FD1	E200.7	ZINC	333	=	333	J	0.26	4.1	mg/kg	FD
SB	NDA114	SW8081	p,p'-DDE	375	E	316	J	0.44	4.3	ug/kg	DL, HT
SB	NDA096	SW8260	ACETONE	1020	E	1270	R	10	10	ug/kg	DL, CC
SB	NDA165DL1	SW8260	XYLENES, TOTAL	1180	U	1180	R	26	1180	ug/kg	DL
SB	NDA096DL1	SW8260	XYLENES, TOTAL	121	J	121	R	20	917	ug/kg	DL
SB	NDA097DL1	SW8260	XYLENES, TOTAL	71	J	71	R	22	990	ug/kg	DL
SB	NDA296DL1	SW8260	XYLENES, TOTAL	1040	U	1040	R	23	1040	ug/kg	DL
SB	NDA297DL1	SW8260	XYLENES, TOTAL	1030	U	1030	R	22	1030	ug/kg	DL
SB	NDA298DL1	SW8260	XYLENES, TOTAL	1090	U	1090	R	24	1090	ug/kg	DL
SB	NDA066DL1	SW8260	XYLENES, TOTAL	1190	U	1190	R	26	1190	ug/kg	DL
SD	1	SW8260	XYLENES, TOTAL	2250	U	2250	R	49	2250	ug/kg	DL
SD	NDA052DL1	SW8260	XYLENES, TOTAL	2480	U	2480	R	55	2480	ug/kg	DL
SD	NDA053DL1	SW8260	XYLENES, TOTAL	1520	U	1520	R	34	1520	ug/kg	DL
SD	NDA047DL1	SW8260	XYLENES, TOTAL	858	U	858	R	19	858	ug/kg	DL
SD	NDA048DL1	SW8260	XYLENES, TOTAL	1200	U	1200	R	26	1200	ug/kg	DL
SD	NDA049DL1	SW8260	XYLENES, TOTAL	1120	U	1120	R	25	1120	ug/kg	DL
SS	NDA131DL1	SW8260	XYLENES, TOTAL	1200	U	1200	R	26	1200	ug/kg	DL
SS	NDA149DL1	SW8260	XYLENES, TOTAL	1130	U	1130	R	25	1130	ug/kg	DL
SS	1	SW8260	XYLENES, TOTAL	964	U	964	R	21	964	ug/kg	DL
SS	NDA166DL1	SW8260	XYLENES, TOTAL	1110	U	1110	R	25	1110	ug/kg	DL
SS	NDA176DL1	SW8260	XYLENES, TOTAL	1480	U	1480	R	33	1480	ug/kg	DL
SS	NDA196DL1	SW8260	XYLENES, TOTAL	937	U	937	R	21	937	ug/kg	DL
SS	1	SW8260	XYLENES, TOTAL	1820	U	1820	R	40	1820	ug/kg	DL
SS	NDA198DL1	SW8260	XYLENES, TOTAL	1160	U	1160	R	25	1160	ug/kg	DL

Matrix	Sample ID	Analytical Method	Parameter	Lab Result	Lab Qual	Final Result	Final Qual	DL	RL	Units	Comments
SS	NDA200DL1	SW8260	XYLENES, TOTAL	1220	U	1220	R	27	1220	ug/kg	DL
SS	NDA204DL1	SW8260	XYLENES, TOTAL	1350	U	1350	R	30	1350	ug/kg	DL
SS	1	SW8260	XYLENES, TOTAL	1380	U	1380	R	30	1380	ug/kg	DL
SS	NDA206DL1	SW8260	XYLENES, TOTAL	1430	U	1430	R	32	1430	ug/kg	DL
SS	NDA207DL1	SW8260	XYLENES, TOTAL	1290	U	1290	R	28	1290	ug/kg	DL
SS	NDA059DL1	SW8260	XYLENES, TOTAL	1170	U	1170	R	26	1170	ug/kg	DL
SS	NDA065DL1	SW8260	XYLENES, TOTAL	1220	U	1220	R	27	1220	ug/kg	DL
SS	NDA069DL1	SW8260	XYLENES, TOTAL	1080	U	1080	R	24	1080	ug/kg	DL
SS	NDA121DL1	SW8260	XYLENES, TOTAL	1130	U	1130	R	25	1130	ug/kg	DL
SS	NDA123DL1	SW8260	XYLENES, TOTAL	1200	U	1200	R	26	1200	ug/kg	DL
SS	NDA124DL1	SW8260	XYLENES, TOTAL	1000	U	1000	R	22	1000	ug/kg	DL
SB	NDA165DL1	SW8260	VINYL CHLORIDE	1180	U	1180	R	57	1180	ug/kg	DL
SB	NDA096DL1	SW8260	VINYL CHLORIDE	917	U	917	R	44	917	ug/kg	DL
SB	NDA097DL1	SW8260	VINYL CHLORIDE	990	U	990	R	48	990	ug/kg	DL
SB	NDA296DL1	SW8260	VINYL CHLORIDE	1040	U	1040	R	50	1040	ug/kg	DL
SB	NDA297DL1	SW8260	VINYL CHLORIDE	1030	U	1030	R	49	1030	ug/kg	DL
SB	NDA298DL1	SW8260	VINYL CHLORIDE	1090	U	1090	R	52	1090	ug/kg	DL
SB	NDA066DL1	SW8260	VINYL CHLORIDE	1190	U	1190	R	57	1190	ug/kg	DL
SD	1	SW8260	VINYL CHLORIDE	2250	U	2250	R	107	2250	ug/kg	DL
SD	NDA052DL1	SW8260	VINYL CHLORIDE	2480	U	2480	R	119	2480	ug/kg	DL
SD	NDA053DL1	SW8260	VINYL CHLORIDE	1520	U	1520	R	73	1520	ug/kg	DL
SD	NDA047DL1	SW8260	VINYL CHLORIDE	858	U	858	R	41	858	ug/kg	DL
SD	NDA048DL1	SW8260	VINYL CHLORIDE	1200	U	1200	R	58	1200	ug/kg	DL
SD	NDA049DL1	SW8260	VINYL CHLORIDE	1120	U	1120	R	54	1120	ug/kg	DL
SS	NDA131DL1	SW8260	VINYL CHLORIDE	1200	U	1200	R	58	1200	ug/kg	DL
SS	NDA149DL1	SW8260	VINYL CHLORIDE	1130	U	1130	R	54	1130	ug/kg	DL
SS	1	SW8260	VINYL CHLORIDE	964	U	964	R	46	964	ug/kg	DL
SS	NDA166DL1	SW8260	VINYL CHLORIDE	1110	U	1110	R	54	1110	ug/kg	DL
SS	NDA176DL1	SW8260	VINYL CHLORIDE	1480	U	1480	R	71	1480	ug/kg	DL
SS	NDA196DL1	SW8260	VINYL CHLORIDE	937	U	937	R	45	937	ug/kg	DL
SS	1	SW8260	VINYL CHLORIDE	1820	U	1820	R	87	1820	ug/kg	DL
SS	NDA198DL1	SW8260	VINYL CHLORIDE	1160	U	1160	R	55	1160	ug/kg	DL
SS	NDA200DL1	SW8260	VINYL CHLORIDE	1220	U	1220	R	59	1220	ug/kg	DL
SS	NDA204DL1	SW8260	VINYL CHLORIDE	1350	U	1350	R	65	1350	ug/kg	DL
SS	1	SW8260	VINYL CHLORIDE	1380	U	1380	R	66	1380	ug/kg	DL
SS	NDA206DL1	SW8260	VINYL CHLORIDE	1430	U	1430	R	69	1430	ug/kg	DL
SS	NDA207DL1	SW8260	VINYL CHLORIDE	1290	U	1290	R	62	1290	ug/kg	DL
SS	NDA059DL1	SW8260	VINYL CHLORIDE	1170	U	1170	R	56	1170	ug/kg	DL
SS	NDA065DL1	SW8260	VINYL CHLORIDE	1220	U	1220	R	58	1220	ug/kg	DL
SS	NDA069DL1	SW8260	VINYL CHLORIDE	1080	U	1080	R	52	1080	ug/kg	DL
SS	NDA121DL1	SW8260	VINYL CHLORIDE	1130	U	1130	R	54	1130	ug/kg	DL
SS	NDA123DL1	SW8260	VINYL CHLORIDE	1200	U	1200	R	58	1200	ug/kg	DL
SS	NDA124DL1	SW8260	VINYL CHLORIDE	1000	U	1000	R	48	1000	ug/kg	DL
SB	NDA165DL1	SW8260	TRICHLOROETHYLENE (TCE)	1180	U	1180	R	31	1180	ug/kg	DL
SB	NDA096DL1	SW8260	TRICHLOROETHYLENE (TCE)	917	U	917	R	24	917	ug/kg	DL
SB	NDA097DL1	SW8260	TRICHLOROETHYLENE (TCE)	990	U	990	R	26	990	ug/kg	DL
SB	NDA296DL1	SW8260	TRICHLOROETHYLENE (TCE)	1040	U	1040	R	27	1040	ug/kg	DL
SB	NDA297DL1	SW8260	TRICHLOROETHYLENE (TCE)	1030	U	1030	R	27	1030	ug/kg	DL
SB	NDA298DL1	SW8260	TRICHLOROETHYLENE (TCE)	1090	U	1090	R	28	1090	ug/kg	DL
SB	NDA066DL1	SW8260	TRICHLOROETHYLENE (TCE)	1190	U	1190	R	31	1190	ug/kg	DL
SD	1	SW8260	TRICHLOROETHYLENE (TCE)	2250	U	2250	R	58	2250	ug/kg	DL
SD	NDA052DL1	SW8260	TRICHLOROETHYLENE (TCE)	2480	U	2480	R	65	2480	ug/kg	DL
SD	NDA053DL1	SW8260	TRICHLOROETHYLENE (TCE)	1520	U	1520	R	40	1520	ug/kg	DL
SD	NDA047DL1	SW8260	TRICHLOROETHYLENE (TCE)	858	U	858	R	22	858	ug/kg	DL
SD	NDA048DL1	SW8260	TRICHLOROETHYLENE (TCE)	1200	U	1200	R	31	1200	ug/kg	DL
SD	NDA049DL1	SW8260	TRICHLOROETHYLENE (TCE)	1120	U	1120	R	29	1120	ug/kg	DL
SS	NDA131DL1	SW8260	TRICHLOROETHYLENE (TCE)	1200	U	1200	R	31	1200	ug/kg	DL
SS	NDA149DL1	SW8260	TRICHLOROETHYLENE (TCE)	1130	U	1130	R	29	1130	ug/kg	DL
SS	1	SW8260	TRICHLOROETHYLENE (TCE)	964	U	964	R	25	964	ug/kg	DL
SS	NDA166DL1	SW8260	TRICHLOROETHYLENE (TCE)	1110	U	1110	R	29	1110	ug/kg	DL
SS	NDA176DL1	SW8260	TRICHLOROETHYLENE (TCE)	1480	U	1480	R	39	1480	ug/kg	DL
SS	NDA196DL1	SW8260	TRICHLOROETHYLENE (TCE)	937	U	937	R	24	937	ug/kg	DL
SS	1	SW8260	TRICHLOROETHYLENE (TCE)	1820	U	1820	R	47	1820	ug/kg	DL
SS	NDA198DL1	SW8260	TRICHLOROETHYLENE (TCE)	1160	U	1160	R	30	1160	ug/kg	DL
SS	NDA200DL1	SW8260	TRICHLOROETHYLENE (TCE)	1220	U	1220	R	32	1220	ug/kg	DL
SS	NDA204DL1	SW8260	TRICHLOROETHYLENE (TCE)	1350	U	1350	R	35	1350	ug/kg	DL
SS	1	SW8260	TRICHLOROETHYLENE (TCE)	1380	U	1380	R	36	1380	ug/kg	DL
SS	NDA206DL1	SW8260	TRICHLOROETHYLENE (TCE)	1430	U	1430	R	37	1430	ug/kg	DL
SS	NDA207DL1	SW8260	TRICHLOROETHYLENE (TCE)	1290	U	1290	R	34	1290	ug/kg	DL
SS	NDA059DL1	SW8260	TRICHLOROETHYLENE (TCE)	1170	U	1170	R	30	1170	ug/kg	DL

Matrix	Sample ID	Analytical Method	Parameter	Lab Result	Lab Qual	Final Result	Final Qual	DL	RL	Units	Comments
SS	NDA065DL1	SW8260	TRICHLOROETHYLENE (TCE)	1220	U	1220	R	32	1220	ug/kg	DL
SS	NDA069DL1	SW8260	TRICHLOROETHYLENE (TCE)	1080	U	1080	R	28	1080	ug/kg	DL
SS	NDA121DL1	SW8260	TRICHLOROETHYLENE (TCE)	1130	U	1130	R	29	1130	ug/kg	DL
SS	NDA123DL1	SW8260	TRICHLOROETHYLENE (TCE)	1200	U	1200	R	31	1200	ug/kg	DL
SS	NDA124DL1	SW8260	TRICHLOROETHYLENE (TCE)	1000	U	1000	R	26	1000	ug/kg	DL
SB	NDA165DL1	SW8260	trans-1,3-DICHLOROPROPENE	1180	U	1180	R	32	1180	ug/kg	DL
SB	NDA096DL1	SW8260	trans-1,3-DICHLOROPROPENE	917	U	917	R	25	917	ug/kg	DL
SB	NDA097DL1	SW8260	trans-1,3-DICHLOROPROPENE	990	U	990	R	27	990	ug/kg	DL
SB	NDA296DL1	SW8260	trans-1,3-DICHLOROPROPENE	1040	U	1040	R	28	1040	ug/kg	DL
SB	NDA297DL1	SW8260	trans-1,3-DICHLOROPROPENE	1030	U	1030	R	28	1030	ug/kg	DL
SB	NDA298DL1	SW8260	trans-1,3-DICHLOROPROPENE	1090	U	1090	R	29	1090	ug/kg	DL
SB	NDA066DL1	SW8260	trans-1,3-DICHLOROPROPENE	1190	U	1190	R	32	1190	ug/kg	DL
SD	1	SW8260	trans-1,3-DICHLOROPROPENE	2250	U	2250	R	60	2250	ug/kg	DL
SD	NDA052DL1	SW8260	trans-1,3-DICHLOROPROPENE	2480	U	2480	R	67	2480	ug/kg	DL
SD	NDA053DL1	SW8260	trans-1,3-DICHLOROPROPENE	1520	U	1520	R	41	1520	ug/kg	DL
SD	NDA047DL1	SW8260	trans-1,3-DICHLOROPROPENE	858	U	858	R	23	858	ug/kg	DL
SD	NDA048DL1	SW8260	trans-1,3-DICHLOROPROPENE	1200	U	1200	R	33	1200	ug/kg	DL
SD	NDA049DL1	SW8260	trans-1,3-DICHLOROPROPENE	1120	U	1120	R	30	1120	ug/kg	DL
SS	NDA131DL1	SW8260	trans-1,3-DICHLOROPROPENE	1200	U	1200	R	32	1200	ug/kg	DL
SS	NDA149DL1	SW8260	trans-1,3-DICHLOROPROPENE	1130	U	1130	R	31	1130	ug/kg	DL
SS	1	SW8260	trans-1,3-DICHLOROPROPENE	964	U	964	R	26	964	ug/kg	DL
SS	NDA166DL1	SW8260	trans-1,3-DICHLOROPROPENE	1110	U	1110	R	30	1110	ug/kg	DL
SS	NDA176DL1	SW8260	trans-1,3-DICHLOROPROPENE	1480	U	1480	R	40	1480	ug/kg	DL
SS	NDA196DL1	SW8260	trans-1,3-DICHLOROPROPENE	937	U	937	R	25	937	ug/kg	DL
SS	1	SW8260	trans-1,3-DICHLOROPROPENE	1820	U	1820	R	49	1820	ug/kg	DL
SS	NDA198DL1	SW8260	trans-1,3-DICHLOROPROPENE	1160	U	1160	R	31	1160	ug/kg	DL
SS	NDA200DL1	SW8260	trans-1,3-DICHLOROPROPENE	1220	U	1220	R	33	1220	ug/kg	DL
SS	NDA204DL1	SW8260	trans-1,3-DICHLOROPROPENE	1350	U	1350	R	37	1350	ug/kg	DL
SS	1	SW8260	trans-1,3-DICHLOROPROPENE	1380	U	1380	R	37	1380	ug/kg	DL
SS	NDA206DL1	SW8260	trans-1,3-DICHLOROPROPENE	1430	U	1430	R	39	1430	ug/kg	DL
SS	NDA207DL1	SW8260	trans-1,3-DICHLOROPROPENE	1290	U	1290	R	35	1290	ug/kg	DL
SS	NDA059DL1	SW8260	trans-1,3-DICHLOROPROPENE	1170	U	1170	R	32	1170	ug/kg	DL
SS	NDA065DL1	SW8260	trans-1,3-DICHLOROPROPENE	1220	U	1220	R	33	1220	ug/kg	DL
SS	NDA069DL1	SW8260	trans-1,3-DICHLOROPROPENE	1080	U	1080	R	29	1080	ug/kg	DL
SS	NDA121DL1	SW8260	trans-1,3-DICHLOROPROPENE	1130	U	1130	R	30	1130	ug/kg	DL
SS	NDA123DL1	SW8260	trans-1,3-DICHLOROPROPENE	1200	U	1200	R	32	1200	ug/kg	DL
SS	NDA124DL1	SW8260	trans-1,3-DICHLOROPROPENE	1000	U	1000	R	27	1000	ug/kg	DL
SB	NDA114DL1	SW8081	TOXAPHENE	4400	U	4400	R	408	4400	ug/kg	DL
SS	NDA125DL1	SW8081	TOXAPHENE	2000	U	2000	R	185	2000	ug/kg	DL
SS	NDA137DL1	SW8081	TOXAPHENE	361	U	361	R	33	361	ug/kg	DL
SS	NDA113DL1	SW8081	TOXAPHENE	418	U	418	R	39	418	ug/kg	DL
SB	NDA165DL1	SW8260	TOLUENE	1180	U	1180	R	33	1180	ug/kg	DL
SB	NDA096DL1	SW8260	TOLUENE	917	U	917	R	26	917	ug/kg	DL
SB	NDA097DL1	SW8260	TOLUENE	990	U	990	R	28	990	ug/kg	DL
SB	NDA296DL1	SW8260	TOLUENE	1040	U	1040	R	29	1040	ug/kg	DL
SB	NDA297DL1	SW8260	TOLUENE	1030	U	1030	R	29	1030	ug/kg	DL
SB	NDA298DL1	SW8260	TOLUENE	1090	U	1090	R	30	1090	ug/kg	DL
SB	NDA066DL1	SW8260	TOLUENE	1190	U	1190	R	33	1190	ug/kg	DL
SD	1	SW8260	TOLUENE	2250	U	2250	R	63	2250	ug/kg	DL
SD	NDA052DL1	SW8260	TOLUENE	2480	U	2480	R	70	2480	ug/kg	DL
SD	NDA053DL1	SW8260	TOLUENE	1520	U	1520	R	43	1520	ug/kg	DL
SD	NDA047DL1	SW8260	TOLUENE	858	U	858	R	24	858	ug/kg	DL
SD	NDA048DL1	SW8260	TOLUENE	1200	U	1200	R	34	1200	ug/kg	DL
SD	NDA049DL1	SW8260	TOLUENE	1120	U	1120	R	31	1120	ug/kg	DL
SS	NDA131DL1	SW8260	TOLUENE	1200	U	1200	R	34	1200	ug/kg	DL
SS	NDA149DL1	SW8260	TOLUENE	1130	U	1130	R	32	1130	ug/kg	DL
SS	1	SW8260	TOLUENE	964	U	964	R	27	964	ug/kg	DL
SS	NDA166DL1	SW8260	TOLUENE	1110	U	1110	R	31	1110	ug/kg	DL
SS	NDA176DL1	SW8260	TOLUENE	1480	U	1480	R	42	1480	ug/kg	DL
SS	NDA196DL1	SW8260	TOLUENE	937	U	937	R	26	937	ug/kg	DL
SS	1	SW8260	TOLUENE	1820	U	1820	R	51	1820	ug/kg	DL
SS	NDA198DL1	SW8260	TOLUENE	1160	U	1160	R	32	1160	ug/kg	DL
SS	NDA200DL1	SW8260	TOLUENE	1220	U	1220	R	34	1220	ug/kg	DL
SS	NDA204DL1	SW8260	TOLUENE	1350	U	1350	R	38	1350	ug/kg	DL
SS	1	SW8260	TOLUENE	1380	U	1380	R	39	1380	ug/kg	DL
SS	NDA206DL1	SW8260	TOLUENE	1430	U	1430	R	40	1430	ug/kg	DL
SS	NDA207DL1	SW8260	TOLUENE	1290	U	1290	R	36	1290	ug/kg	DL
SS	NDA059DL1	SW8260	TOLUENE	1170	U	1170	R	33	1170	ug/kg	DL
SS	NDA065DL1	SW8260	TOLUENE	1220	U	1220	R	34	1220	ug/kg	DL
SS	NDA069DL1	SW8260	TOLUENE	1080	U	1080	R	30	1080	ug/kg	DL

Matrix	Sample ID	Analytical Method	Parameter	Lab Result	Lab Qual	Final Result	Final Qual	DL	RL	Units	Comments
SS	NDA121DL1	SW8260	TOLUENE	1130	U	1130	R	32	1130	ug/kg	DL
SS	NDA123DL1	SW8260	TOLUENE	1200	U	1200	R	34	1200	ug/kg	DL
SS	NDA124DL1	SW8260	TOLUENE	1000	U	1000	R	28	1000	ug/kg	DL
SB	NDA165DL1	SW8260	TETRACHLOROETHYLENE(PCE)	1180	U	1180	R	63	1180	ug/kg	DL
SB	NDA096DL1	SW8260	TETRACHLOROETHYLENE(PCE)	917	U	917	R	49	917	ug/kg	DL
SB	NDA097DL1	SW8260	TETRACHLOROETHYLENE(PCE)	990	U	990	R	52	990	ug/kg	DL
SB	NDA296DL1	SW8260	TETRACHLOROETHYLENE(PCE)	1040	U	1040	R	55	1040	ug/kg	DL
SB	NDA297DL1	SW8260	TETRACHLOROETHYLENE(PCE)	1030	U	1030	R	54	1030	ug/kg	DL
SB	NDA298DL1	SW8260	TETRACHLOROETHYLENE(PCE)	1090	U	1090	R	58	1090	ug/kg	DL
SB	NDA066DL1	SW8260	TETRACHLOROETHYLENE(PCE)	1190	U	1190	R	63	1190	ug/kg	DL
SD	1	SW8260	TETRACHLOROETHYLENE(PCE)	2250	U	2250	R	119	2250	ug/kg	DL
SD	NDA052DL1	SW8260	TETRACHLOROETHYLENE(PCE)	2480	U	2480	R	132	2480	ug/kg	DL
SD	NDA053DL1	SW8260	TETRACHLOROETHYLENE(PCE)	1520	U	1520	R	81	1520	ug/kg	DL
SD	NDA047DL1	SW8260	TETRACHLOROETHYLENE(PCE)	858	U	858	R	46	858	ug/kg	DL
SD	NDA048DL1	SW8260	TETRACHLOROETHYLENE(PCE)	1200	U	1200	R	64	1200	ug/kg	DL
SD	NDA049DL1	SW8260	TETRACHLOROETHYLENE(PCE)	1120	U	1120	R	59	1120	ug/kg	DL
SS	NDA131DL1	SW8260	TETRACHLOROETHYLENE(PCE)	1200	U	1200	R	64	1200	ug/kg	DL
SS	NDA149DL1	SW8260	TETRACHLOROETHYLENE(PCE)	1130	U	1130	R	60	1130	ug/kg	DL
SS	1	SW8260	TETRACHLOROETHYLENE(PCE)	964	U	964	R	51	964	ug/kg	DL
SS	NDA166DL1	SW8260	TETRACHLOROETHYLENE(PCE)	1110	U	1110	R	59	1110	ug/kg	DL
SS	NDA176DL1	SW8260	TETRACHLOROETHYLENE(PCE)	1480	U	1480	R	79	1480	ug/kg	DL
SS	NDA196DL1	SW8260	TETRACHLOROETHYLENE(PCE)	937	U	937	R	50	937	ug/kg	DL
SS	1	SW8260	TETRACHLOROETHYLENE(PCE)	1820	U	1820	R	96	1820	ug/kg	DL
SS	NDA198DL1	SW8260	TETRACHLOROETHYLENE(PCE)	1160	U	1160	R	61	1160	ug/kg	DL
SS	NDA200DL1	SW8260	TETRACHLOROETHYLENE(PCE)	1220	U	1220	R	65	1220	ug/kg	DL
SS	NDA204DL1	SW8260	TETRACHLOROETHYLENE(PCE)	1350	U	1350	R	72	1350	ug/kg	DL
SS	1	SW8260	TETRACHLOROETHYLENE(PCE)	1380	U	1380	R	73	1380	ug/kg	DL
SS	NDA206DL1	SW8260	TETRACHLOROETHYLENE(PCE)	1430	U	1430	R	76	1430	ug/kg	DL
SS	NDA207DL1	SW8260	TETRACHLOROETHYLENE(PCE)	1290	U	1290	R	69	1290	ug/kg	DL
SS	NDA059DL1	SW8260	TETRACHLOROETHYLENE(PCE)	1170	U	1170	R	62	1170	ug/kg	DL
SS	NDA065DL1	SW8260	TETRACHLOROETHYLENE(PCE)	1220	U	1220	R	65	1220	ug/kg	DL
SS	NDA069DL1	SW8260	TETRACHLOROETHYLENE(PCE)	1080	U	1080	R	57	1080	ug/kg	DL
SS	NDA121DL1	SW8260	TETRACHLOROETHYLENE(PCE)	1130	U	1130	R	60	1130	ug/kg	DL
SS	NDA123DL1	SW8260	TETRACHLOROETHYLENE(PCE)	1200	U	1200	R	64	1200	ug/kg	DL
SS	NDA124DL1	SW8260	TETRACHLOROETHYLENE(PCE)	1000	U	1000	R	53	1000	ug/kg	DL
SB	NDA165DL1	SW8260	STYRENE	1180	U	1180	R	24	1180	ug/kg	DL
SB	NDA096DL1	SW8260	STYRENE	917	U	917	R	18	917	ug/kg	DL
SB	NDA097DL1	SW8260	STYRENE	990	U	990	R	20	990	ug/kg	DL
SB	NDA296DL1	SW8260	STYRENE	1040	U	1040	R	21	1040	ug/kg	DL
SB	NDA297DL1	SW8260	STYRENE	1030	U	1030	R	20	1030	ug/kg	DL
SB	NDA298DL1	SW8260	STYRENE	1090	U	1090	R	22	1090	ug/kg	DL
SB	NDA066DL1	SW8260	STYRENE	1190	U	1190	R	24	1190	ug/kg	DL
SD	1	SW8260	STYRENE	2250	U	2250	R	45	2250	ug/kg	DL
SD	NDA052DL1	SW8260	STYRENE	2480	U	2480	R	50	2480	ug/kg	DL
SD	NDA053DL1	SW8260	STYRENE	1520	U	1520	R	30	1520	ug/kg	DL
SD	NDA047DL1	SW8260	STYRENE	858	U	858	R	17	858	ug/kg	DL
SD	NDA048DL1	SW8260	STYRENE	1200	U	1200	R	24	1200	ug/kg	DL
SD	NDA049DL1	SW8260	STYRENE	1120	U	1120	R	22	1120	ug/kg	DL
SS	NDA131DL1	SW8260	STYRENE	1200	U	1200	R	24	1200	ug/kg	DL
SS	NDA149DL1	SW8260	STYRENE	1130	U	1130	R	23	1130	ug/kg	DL
SS	1	SW8260	STYRENE	964	U	964	R	19	964	ug/kg	DL
SS	NDA166DL1	SW8260	STYRENE	1110	U	1110	R	22	1110	ug/kg	DL
SS	NDA176DL1	SW8260	STYRENE	1480	U	1480	R	30	1480	ug/kg	DL
SS	NDA196DL1	SW8260	STYRENE	937	U	937	R	19	937	ug/kg	DL
SS	1	SW8260	STYRENE	1820	U	1820	R	36	1820	ug/kg	DL
SS	NDA198DL1	SW8260	STYRENE	1160	U	1160	R	23	1160	ug/kg	DL
SS	NDA200DL1	SW8260	STYRENE	1220	U	1220	R	24	1220	ug/kg	DL
SS	NDA204DL1	SW8260	STYRENE	1350	U	1350	R	27	1350	ug/kg	DL
SS	1	SW8260	STYRENE	1380	U	1380	R	28	1380	ug/kg	DL
SS	NDA206DL1	SW8260	STYRENE	1430	U	1430	R	29	1430	ug/kg	DL
SS	NDA207DL1	SW8260	STYRENE	1290	U	1290	R	26	1290	ug/kg	DL
SS	NDA059DL1	SW8260	STYRENE	1170	U	1170	R	23	1170	ug/kg	DL
SS	NDA065DL1	SW8260	STYRENE	1220	U	1220	R	24	1220	ug/kg	DL
SS	NDA069DL1	SW8260	STYRENE	1080	U	1080	R	22	1080	ug/kg	DL
SS	NDA121DL1	SW8260	STYRENE	1130	U	1130	R	23	1130	ug/kg	DL
SS	NDA123DL1	SW8260	STYRENE	1200	U	1200	R	24	1200	ug/kg	DL
SS	NDA124DL1	SW8260	STYRENE	1000	U	1000	R	20	1000	ug/kg	DL
SB	NDA114DL1	SW8081	p,p'-DDT	15	J	15	R	10	86	ug/kg	DL
SS	NDA137DL1	SW8081	p,p'-DDT	28	=	28	R	0.83	7.1	ug/kg	DL
SS	NDA113DL1	SW8081	p,p'-DDT	22	=	22	R	0.96	8.2	ug/kg	DL

Matrix	Sample ID	Analytical Method	Parameter	Lab Result	Lab Qual	Final Result	Final Qual	DL	RL	Units	Comments
SB	NDA114DL1	SW8081	p,p'-DDE	316	=	316	R	8.8	86	ug/kg	DL
SS	NDA137DL1	SW8081	p,p'-DDE	48	=	48	R	0.72	7.1	ug/kg	DL
SS	NDA113DL1	SW8081	p,p'-DDE	75	=	75	R	0.83	8.2	ug/kg	DL
SB	NDA114DL1	SW8081	p,p'-DDD	8.2	J	8.2	R	6	86	ug/kg	DL
SS	NDA125DL1	SW8081	p,p'-DDD	39	U	39	R	2.71	39	ug/kg	DL
SS	NDA137DL1	SW8081	p,p'-DDD	7.1	U	7.1	R	0.49	7.1	ug/kg	DL
SS	NDA113DL1	SW8081	p,p'-DDD	2.8	J	2.8	R	0.57	8.2	ug/kg	DL
SB	NDA165DL1	SW8260	O-XYLENE (1,2-DIMETHYLBENZENE)	1180	U	1180	R	26	1180	ug/kg	DL
SB	NDA096DL1	SW8260	O-XYLENE (1,2-DIMETHYLBENZENE)	917	U	917	R	20	917	ug/kg	DL
SB	NDA097DL1	SW8260	O-XYLENE (1,2-DIMETHYLBENZENE)	990	U	990	R	22	990	ug/kg	DL
SB	NDA296DL1	SW8260	O-XYLENE (1,2-DIMETHYLBENZENE)	1040	U	1040	R	23	1040	ug/kg	DL
SB	NDA297DL1	SW8260	O-XYLENE (1,2-DIMETHYLBENZENE)	1030	U	1030	R	22	1030	ug/kg	DL
SB	NDA298DL1	SW8260	O-XYLENE (1,2-DIMETHYLBENZENE)	1090	U	1090	R	24	1090	ug/kg	DL
SB	NDA066DL1	SW8260	O-XYLENE (1,2-DIMETHYLBENZENE)	1190	U	1190	R	26	1190	ug/kg	DL
SD	1	SW8260	O-XYLENE (1,2-DIMETHYLBENZENE)	2250	U	2250	R	49	2250	ug/kg	DL
SD	NDA052DL1	SW8260	O-XYLENE (1,2-DIMETHYLBENZENE)	2480	U	2480	R	55	2480	ug/kg	DL
SD	NDA053DL1	SW8260	O-XYLENE (1,2-DIMETHYLBENZENE)	1520	U	1520	R	34	1520	ug/kg	DL
SD	NDA047DL1	SW8260	O-XYLENE (1,2-DIMETHYLBENZENE)	858	U	858	R	19	858	ug/kg	DL
SD	NDA048DL1	SW8260	O-XYLENE (1,2-DIMETHYLBENZENE)	1200	U	1200	R	26	1200	ug/kg	DL
SD	NDA049DL1	SW8260	O-XYLENE (1,2-DIMETHYLBENZENE)	1120	U	1120	R	25	1120	ug/kg	DL
SS	NDA131DL1	SW8260	O-XYLENE (1,2-DIMETHYLBENZENE)	1200	U	1200	R	26	1200	ug/kg	DL
SS	NDA149DL1	SW8260	O-XYLENE (1,2-DIMETHYLBENZENE)	1130	U	1130	R	25	1130	ug/kg	DL
SS	1	SW8260	O-XYLENE (1,2-DIMETHYLBENZENE)	964	U	964	R	21	964	ug/kg	DL
SS	NDA166DL1	SW8260	O-XYLENE (1,2-DIMETHYLBENZENE)	1110	U	1110	R	25	1110	ug/kg	DL
SS	NDA176DL1	SW8260	O-XYLENE (1,2-DIMETHYLBENZENE)	1480	U	1480	R	33	1480	ug/kg	DL
SS	NDA196DL1	SW8260	O-XYLENE (1,2-DIMETHYLBENZENE)	937	U	937	R	21	937	ug/kg	DL
SS	1	SW8260	O-XYLENE (1,2-DIMETHYLBENZENE)	1820	U	1820	R	40	1820	ug/kg	DL
SS	NDA198DL1	SW8260	O-XYLENE (1,2-DIMETHYLBENZENE)	1160	U	1160	R	25	1160	ug/kg	DL
SS	NDA200DL1	SW8260	O-XYLENE (1,2-DIMETHYLBENZENE)	1220	U	1220	R	27	1220	ug/kg	DL
SS	NDA204DL1	SW8260	O-XYLENE (1,2-DIMETHYLBENZENE)	1350	U	1350	R	30	1350	ug/kg	DL
SS	1	SW8260	O-XYLENE (1,2-DIMETHYLBENZENE)	1380	U	1380	R	30	1380	ug/kg	DL
SS	NDA206DL1	SW8260	O-XYLENE (1,2-DIMETHYLBENZENE)	1430	U	1430	R	32	1430	ug/kg	DL
SS	NDA207DL1	SW8260	O-XYLENE (1,2-DIMETHYLBENZENE)	1290	U	1290	R	28	1290	ug/kg	DL
SS	NDA059DL1	SW8260	O-XYLENE (1,2-DIMETHYLBENZENE)	1170	U	1170	R	26	1170	ug/kg	DL
SS	NDA065DL1	SW8260	O-XYLENE (1,2-DIMETHYLBENZENE)	1220	U	1220	R	27	1220	ug/kg	DL
SS	NDA069DL1	SW8260	O-XYLENE (1,2-DIMETHYLBENZENE)	1080	U	1080	R	24	1080	ug/kg	DL
SS	NDA121DL1	SW8260	O-XYLENE (1,2-DIMETHYLBENZENE)	1130	U	1130	R	25	1130	ug/kg	DL
SS	NDA123DL1	SW8260	O-XYLENE (1,2-DIMETHYLBENZENE)	1200	U	1200	R	26	1200	ug/kg	DL
SS	NDA124DL1	SW8260	O-XYLENE (1,2-DIMETHYLBENZENE)	1000	U	1000	R	22	1000	ug/kg	DL
SB	NDA165DL1	SW8260	METHYLENE CHLORIDE	1180	U	1180	R	236	1180	ug/kg	DL
SB	NDA096DL1	SW8260	METHYLENE CHLORIDE	917	U	917	R	183	917	ug/kg	DL
SB	NDA097DL1	SW8260	METHYLENE CHLORIDE	990	U	990	R	198	990	ug/kg	DL
SB	NDA296DL1	SW8260	METHYLENE CHLORIDE	1040	U	1040	R	208	1040	ug/kg	DL
SB	NDA297DL1	SW8260	METHYLENE CHLORIDE	1030	U	1030	R	204	1030	ug/kg	DL
SB	NDA298DL1	SW8260	METHYLENE CHLORIDE	1090	U	1090	R	217	1090	ug/kg	DL
SB	NDA066DL1	SW8260	METHYLENE CHLORIDE	1190	U	1190	R	239	1190	ug/kg	DL
SD	1	SW8260	METHYLENE CHLORIDE	2250	U	2250	R	448	2250	ug/kg	DL
SD	NDA052DL1	SW8260	METHYLENE CHLORIDE	2480	U	2480	R	497	2480	ug/kg	DL
SD	NDA053DL1	SW8260	METHYLENE CHLORIDE	1520	U	1520	R	305	1520	ug/kg	DL
SD	NDA047DL1	SW8260	METHYLENE CHLORIDE	858	U	858	R	172	858	ug/kg	DL
SD	NDA048DL1	SW8260	METHYLENE CHLORIDE	1200	U	1200	R	241	1200	ug/kg	DL
SD	NDA049DL1	SW8260	METHYLENE CHLORIDE	1120	U	1120	R	224	1120	ug/kg	DL
SS	NDA131DL1	SW8260	METHYLENE CHLORIDE	1200	U	1200	R	240	1200	ug/kg	DL
SS	NDA149DL1	SW8260	METHYLENE CHLORIDE	1130	U	1130	R	227	1130	ug/kg	DL
SS	1	SW8260	METHYLENE CHLORIDE	964	U	964	R	194	964	ug/kg	DL
SS	NDA166DL1	SW8260	METHYLENE CHLORIDE	1110	U	1110	R	224	1110	ug/kg	DL
SS	NDA176DL1	SW8260	METHYLENE CHLORIDE	1480	U	1480	R	297	1480	ug/kg	DL
SS	NDA196DL1	SW8260	METHYLENE CHLORIDE	937	U	937	R	188	937	ug/kg	DL
SS	1	SW8260	METHYLENE CHLORIDE	1820	U	1820	R	364	1820	ug/kg	DL
SS	NDA198DL1	SW8260	METHYLENE CHLORIDE	1160	U	1160	R	231	1160	ug/kg	DL
SS	NDA200DL1	SW8260	METHYLENE CHLORIDE	1220	U	1220	R	245	1220	ug/kg	DL
SS	NDA204DL1	SW8260	METHYLENE CHLORIDE	1350	U	1350	R	270	1350	ug/kg	DL
SS	1	SW8260	METHYLENE CHLORIDE	1380	U	1380	R	275	1380	ug/kg	DL
SS	NDA206DL1	SW8260	METHYLENE CHLORIDE	1430	U	1430	R	287	1430	ug/kg	DL
SS	NDA207DL1	SW8260	METHYLENE CHLORIDE	1290	U	1290	R	259	1290	ug/kg	DL
SS	NDA059DL1	SW8260	METHYLENE CHLORIDE	1170	U	1170	R	234	1170	ug/kg	DL
SS	NDA065DL1	SW8260	METHYLENE CHLORIDE	1220	U	1220	R	244	1220	ug/kg	DL
SS	NDA069DL1	SW8260	METHYLENE CHLORIDE	1080	U	1080	R	216	1080	ug/kg	DL
SS	NDA121DL1	SW8260	METHYLENE CHLORIDE	1130	U	1130	R	226	1130	ug/kg	DL
SS	NDA123DL1	SW8260	METHYLENE CHLORIDE	1200	U	1200	R	240	1200	ug/kg	DL

Matrix	Sample ID	Analytical Method	Parameter	Lab Result	Lab Qual	Final Result	Final Qual	DL	RL	Units	Comments
SS	NDA124DL1	SW8260	METHYLENE CHLORIDE	1000	U	1000	R	200	1000	ug/kg	DL
SB	NDA165DL1	SW8260	4-METHYL-2-PENTANONE (MIBK)	1180	U	1180	R	153	1180	ug/kg	DL
SB	NDA096DL1	SW8260	4-METHYL-2-PENTANONE (MIBK)	917	U	917	R	119	917	ug/kg	DL
SB	NDA097DL1	SW8260	4-METHYL-2-PENTANONE (MIBK)	990	U	990	R	129	990	ug/kg	DL
SB	NDA296DL1	SW8260	4-METHYL-2-PENTANONE (MIBK)	1040	U	1040	R	135	1040	ug/kg	DL
SB	NDA297DL1	SW8260	4-METHYL-2-PENTANONE (MIBK)	1030	U	1030	R	133	1030	ug/kg	DL
SB	NDA298DL1	SW8260	4-METHYL-2-PENTANONE (MIBK)	1090	U	1090	R	141	1090	ug/kg	DL
SB	NDA066DL1	SW8260	4-METHYL-2-PENTANONE (MIBK)	1190	U	1190	R	155	1190	ug/kg	DL
SD	1	SW8260	4-METHYL-2-PENTANONE (MIBK)	2250	U	2250	R	291	2250	ug/kg	DL
SD	NDA052DL1	SW8260	4-METHYL-2-PENTANONE (MIBK)	2480	U	2480	R	323	2480	ug/kg	DL
SD	NDA053DL1	SW8260	4-METHYL-2-PENTANONE (MIBK)	1520	U	1520	R	198	1520	ug/kg	DL
SD	NDA047DL1	SW8260	4-METHYL-2-PENTANONE (MIBK)	858	U	858	R	112	858	ug/kg	DL
SD	NDA048DL1	SW8260	4-METHYL-2-PENTANONE (MIBK)	1200	U	1200	R	157	1200	ug/kg	DL
SD	NDA049DL1	SW8260	4-METHYL-2-PENTANONE (MIBK)	1120	U	1120	R	146	1120	ug/kg	DL
SS	NDA131DL1	SW8260	4-METHYL-2-PENTANONE (MIBK)	1200	U	1200	R	156	1200	ug/kg	DL
SS	NDA149DL1	SW8260	4-METHYL-2-PENTANONE (MIBK)	1130	U	1130	R	147	1130	ug/kg	DL
SS	1	SW8260	4-METHYL-2-PENTANONE (MIBK)	964	U	964	R	126	964	ug/kg	DL
SS	NDA166DL1	SW8260	4-METHYL-2-PENTANONE (MIBK)	1110	U	1110	R	145	1110	ug/kg	DL
SS	NDA176DL1	SW8260	4-METHYL-2-PENTANONE (MIBK)	1480	U	1480	R	193	1480	ug/kg	DL
SS	NDA196DL1	SW8260	4-METHYL-2-PENTANONE (MIBK)	937	U	937	R	122	937	ug/kg	DL
SS	1	SW8260	4-METHYL-2-PENTANONE (MIBK)	1820	U	1820	R	237	1820	ug/kg	DL
SS	NDA198DL1	SW8260	4-METHYL-2-PENTANONE (MIBK)	1160	U	1160	R	150	1160	ug/kg	DL
SS	NDA200DL1	SW8260	4-METHYL-2-PENTANONE (MIBK)	1220	U	1220	R	159	1220	ug/kg	DL
SS	NDA204DL1	SW8260	4-METHYL-2-PENTANONE (MIBK)	1350	U	1350	R	176	1350	ug/kg	DL
SS	1	SW8260	4-METHYL-2-PENTANONE (MIBK)	1380	U	1380	R	179	1380	ug/kg	DL
SS	NDA206DL1	SW8260	4-METHYL-2-PENTANONE (MIBK)	1430	U	1430	R	186	1430	ug/kg	DL
SS	NDA207DL1	SW8260	4-METHYL-2-PENTANONE (MIBK)	1290	U	1290	R	168	1290	ug/kg	DL
SS	NDA059DL1	SW8260	4-METHYL-2-PENTANONE (MIBK)	1170	U	1170	R	152	1170	ug/kg	DL
SS	NDA065DL1	SW8260	4-METHYL-2-PENTANONE (MIBK)	1220	U	1220	R	158	1220	ug/kg	DL
SS	NDA069DL1	SW8260	4-METHYL-2-PENTANONE (MIBK)	1080	U	1080	R	141	1080	ug/kg	DL
SS	NDA121DL1	SW8260	4-METHYL-2-PENTANONE (MIBK)	1130	U	1130	R	147	1130	ug/kg	DL
SS	NDA123DL1	SW8260	4-METHYL-2-PENTANONE (MIBK)	1200	U	1200	R	156	1200	ug/kg	DL
SS	NDA124DL1	SW8260	4-METHYL-2-PENTANONE (MIBK)	1000	U	1000	R	130	1000	ug/kg	DL
SB	NDA165DL1	SW8260	METHYL ETHYL KETONE (2-BUTANONE)	1180	U	1180	R	201	1180	ug/kg	DL
SB	NDA096DL1	SW8260	METHYL ETHYL KETONE (2-BUTANONE)	917	U	917	R	156	917	ug/kg	DL
SB	NDA097DL1	SW8260	METHYL ETHYL KETONE (2-BUTANONE)	990	U	990	R	168	990	ug/kg	DL
SB	NDA296DL1	SW8260	METHYL ETHYL KETONE (2-BUTANONE)	1040	U	1040	R	177	1040	ug/kg	DL
SB	NDA297DL1	SW8260	METHYL ETHYL KETONE (2-BUTANONE)	1030	U	1030	R	174	1030	ug/kg	DL
SB	NDA298DL1	SW8260	METHYL ETHYL KETONE (2-BUTANONE)	1090	U	1090	R	185	1090	ug/kg	DL
SB	NDA066DL1	SW8260	METHYL ETHYL KETONE (2-BUTANONE)	1190	U	1190	R	203	1190	ug/kg	DL
SD	1	SW8260	METHYL ETHYL KETONE (2-BUTANONE)	2250	U	2250	R	381	2250	ug/kg	DL
SD	NDA052DL1	SW8260	METHYL ETHYL KETONE (2-BUTANONE)	2480	U	2480	R	422	2480	ug/kg	DL
SD	NDA053DL1	SW8260	METHYL ETHYL KETONE (2-BUTANONE)	1520	U	1520	R	259	1520	ug/kg	DL
SD	NDA047DL1	SW8260	METHYL ETHYL KETONE (2-BUTANONE)	858	U	858	R	147	858	ug/kg	DL
SD	NDA048DL1	SW8260	METHYL ETHYL KETONE (2-BUTANONE)	1200	U	1200	R	205	1200	ug/kg	DL
SD	NDA049DL1	SW8260	METHYL ETHYL KETONE (2-BUTANONE)	1120	U	1120	R	190	1120	ug/kg	DL
SS	NDA131DL1	SW8260	METHYL ETHYL KETONE (2-BUTANONE)	1200	U	1200	R	204	1200	ug/kg	DL
SS	NDA149DL1	SW8260	METHYL ETHYL KETONE (2-BUTANONE)	1130	U	1130	R	193	1130	ug/kg	DL
SS	1	SW8260	METHYL ETHYL KETONE (2-BUTANONE)	964	U	964	R	165	964	ug/kg	DL
SS	NDA166DL1	SW8260	METHYL ETHYL KETONE (2-BUTANONE)	1110	U	1110	R	190	1110	ug/kg	DL
SS	NDA176DL1	SW8260	METHYL ETHYL KETONE (2-BUTANONE)	1480	U	1480	R	252	1480	ug/kg	DL
SS	NDA196DL1	SW8260	METHYL ETHYL KETONE (2-BUTANONE)	937	U	937	R	159	937	ug/kg	DL
SS	1	SW8260	METHYL ETHYL KETONE (2-BUTANONE)	1820	U	1820	R	309	1820	ug/kg	DL
SS	NDA198DL1	SW8260	METHYL ETHYL KETONE (2-BUTANONE)	1160	U	1160	R	196	1160	ug/kg	DL
SS	NDA200DL1	SW8260	METHYL ETHYL KETONE (2-BUTANONE)	1220	U	1220	R	208	1220	ug/kg	DL
SS	NDA204DL1	SW8260	METHYL ETHYL KETONE (2-BUTANONE)	1350	U	1350	R	230	1350	ug/kg	DL
SS	1	SW8260	METHYL ETHYL KETONE (2-BUTANONE)	1380	U	1380	R	234	1380	ug/kg	DL
SS	NDA206DL1	SW8260	METHYL ETHYL KETONE (2-BUTANONE)	1430	U	1430	R	244	1430	ug/kg	DL
SS	NDA207DL1	SW8260	METHYL ETHYL KETONE (2-BUTANONE)	1290	U	1290	R	220	1290	ug/kg	DL
SS	NDA059DL1	SW8260	METHYL ETHYL KETONE (2-BUTANONE)	1170	U	1170	R	199	1170	ug/kg	DL
SS	NDA065DL1	SW8260	METHYL ETHYL KETONE (2-BUTANONE)	1220	U	1220	R	207	1220	ug/kg	DL
SS	NDA069DL1	SW8260	METHYL ETHYL KETONE (2-BUTANONE)	1080	U	1080	R	184	1080	ug/kg	DL
SS	NDA121DL1	SW8260	METHYL ETHYL KETONE (2-BUTANONE)	1130	U	1130	R	192	1130	ug/kg	DL
SS	NDA123DL1	SW8260	METHYL ETHYL KETONE (2-BUTANONE)	1200	U	1200	R	204	1200	ug/kg	DL
SS	NDA124DL1	SW8260	METHYL ETHYL KETONE (2-BUTANONE)	1000	U	1000	R	170	1000	ug/kg	DL
SB	NDA114DL1	SW8081	METHOXYCHLOR	440	U	440	R	7.5	440	ug/kg	DL
SS	NDA125DL1	SW8081	METHOXYCHLOR	200	U	200	R	3.42	200	ug/kg	DL
SS	NDA137DL1	SW8081	METHOXYCHLOR	36	U	36	R	0.62	36	ug/kg	DL
SS	NDA113DL1	SW8081	METHOXYCHLOR	42	U	42	R	0.72	42	ug/kg	DL
SB	NDA165DL1	SW8260	M,P-XYLENE (SUM OF ISOMERS)	1180	U	1180	R	26	1180	ug/kg	DL

Matrix	Sample ID	Analytical Method	Parameter	Lab Result	Lab Qual	Final Result	Final Qual	DL	RL	Units	Comments
SB	NDA096DL1	SW8260	M,P-XYLENE (SUM OF ISOMERS)	121	J	121	R	20	917	ug/kg	DL
SB	NDA097DL1	SW8260	M,P-XYLENE (SUM OF ISOMERS)	71	J	71	R	22	990	ug/kg	DL
SB	NDA296DL1	SW8260	M,P-XYLENE (SUM OF ISOMERS)	1040	U	1040	R	23	1040	ug/kg	DL
SB	NDA297DL1	SW8260	M,P-XYLENE (SUM OF ISOMERS)	1030	U	1030	R	22	1030	ug/kg	DL
SB	NDA298DL1	SW8260	M,P-XYLENE (SUM OF ISOMERS)	1090	U	1090	R	24	1090	ug/kg	DL
SB	NDA066DL1	SW8260	M,P-XYLENE (SUM OF ISOMERS)	1190	U	1190	R	26	1190	ug/kg	DL
SD	1	SW8260	M,P-XYLENE (SUM OF ISOMERS)	2250	U	2250	R	49	2250	ug/kg	DL
SD	NDA052DL1	SW8260	M,P-XYLENE (SUM OF ISOMERS)	2480	U	2480	R	55	2480	ug/kg	DL
SD	NDA053DL1	SW8260	M,P-XYLENE (SUM OF ISOMERS)	1520	U	1520	R	34	1520	ug/kg	DL
SD	NDA047DL1	SW8260	M,P-XYLENE (SUM OF ISOMERS)	858	U	858	R	19	858	ug/kg	DL
SD	NDA048DL1	SW8260	M,P-XYLENE (SUM OF ISOMERS)	1200	U	1200	R	26	1200	ug/kg	DL
SD	NDA049DL1	SW8260	M,P-XYLENE (SUM OF ISOMERS)	1120	U	1120	R	25	1120	ug/kg	DL
SS	NDA131DL1	SW8260	M,P-XYLENE (SUM OF ISOMERS)	1200	U	1200	R	26	1200	ug/kg	DL
SS	NDA149DL1	SW8260	M,P-XYLENE (SUM OF ISOMERS)	1130	U	1130	R	25	1130	ug/kg	DL
SS	1	SW8260	M,P-XYLENE (SUM OF ISOMERS)	964	U	964	R	21	964	ug/kg	DL
SS	NDA166DL1	SW8260	M,P-XYLENE (SUM OF ISOMERS)	1110	U	1110	R	25	1110	ug/kg	DL
SS	NDA176DL1	SW8260	M,P-XYLENE (SUM OF ISOMERS)	1480	U	1480	R	33	1480	ug/kg	DL
SS	NDA196DL1	SW8260	M,P-XYLENE (SUM OF ISOMERS)	937	U	937	R	21	937	ug/kg	DL
SS	1	SW8260	M,P-XYLENE (SUM OF ISOMERS)	1820	U	1820	R	40	1820	ug/kg	DL
SS	NDA198DL1	SW8260	M,P-XYLENE (SUM OF ISOMERS)	1160	U	1160	R	25	1160	ug/kg	DL
SS	NDA200DL1	SW8260	M,P-XYLENE (SUM OF ISOMERS)	1220	U	1220	R	27	1220	ug/kg	DL
SS	NDA204DL1	SW8260	M,P-XYLENE (SUM OF ISOMERS)	1350	U	1350	R	30	1350	ug/kg	DL
SS	1	SW8260	M,P-XYLENE (SUM OF ISOMERS)	1380	U	1380	R	30	1380	ug/kg	DL
SS	NDA206DL1	SW8260	M,P-XYLENE (SUM OF ISOMERS)	1430	U	1430	R	32	1430	ug/kg	DL
SS	NDA207DL1	SW8260	M,P-XYLENE (SUM OF ISOMERS)	1290	U	1290	R	28	1290	ug/kg	DL
SS	NDA059DL1	SW8260	M,P-XYLENE (SUM OF ISOMERS)	1170	U	1170	R	26	1170	ug/kg	DL
SS	NDA065DL1	SW8260	M,P-XYLENE (SUM OF ISOMERS)	1220	U	1220	R	27	1220	ug/kg	DL
SS	NDA069DL1	SW8260	M,P-XYLENE (SUM OF ISOMERS)	1080	U	1080	R	24	1080	ug/kg	DL
SS	NDA121DL1	SW8260	M,P-XYLENE (SUM OF ISOMERS)	1130	U	1130	R	25	1130	ug/kg	DL
SS	NDA123DL1	SW8260	M,P-XYLENE (SUM OF ISOMERS)	1200	U	1200	R	26	1200	ug/kg	DL
SS	NDA124DL1	SW8260	M,P-XYLENE (SUM OF ISOMERS)	1000	U	1000	R	22	1000	ug/kg	DL
SB	NDA114DL1	SW8081	HEPTACHLOR EPOXIDE	44	U	44	R	16	44	ug/kg	DL
SS	NDA125DL1	SW8081	HEPTACHLOR EPOXIDE	20	U	20	R	7.1	20	ug/kg	DL
SS	NDA137DL1	SW8081	HEPTACHLOR EPOXIDE	3.6	U	3.6	R	1.3	3.6	ug/kg	DL
SS	NDA113DL1	SW8081	HEPTACHLOR EPOXIDE	4.2	U	4.2	R	1.5	4.2	ug/kg	DL
SB	NDA114DL1	SW8081	HEPTACHLOR	44	U	44	R	16	44	ug/kg	DL
SS	NDA125DL1	SW8081	HEPTACHLOR	20	U	20	R	7.31	20	ug/kg	DL
SS	NDA137DL1	SW8081	HEPTACHLOR	3.6	U	3.6	R	1.32	3.6	ug/kg	DL
SS	NDA113DL1	SW8081	HEPTACHLOR	4.2	U	4.2	R	1.5	4.2	ug/kg	DL
SB	NDA114DL1	SW8081	GAMMA-CHLORDANE	44	U	44	R	13	44	ug/kg	DL
SS	NDA125DL1	SW8081	GAMMA-CHLORDANE	20	U	20	R	5.88	20	ug/kg	DL
SS	NDA137DL1	SW8081	GAMMA-CHLORDANE	3.6	U	3.6	R	1.06	3.6	ug/kg	DL
SS	NDA113DL1	SW8081	GAMMA-CHLORDANE	4.2	U	4.2	R	1.2	4.2	ug/kg	DL
SB	NDA114DL1	SW8081	GAMMA BHC (LINDANE)	44	U	44	R	12	44	ug/kg	DL
SS	NDA125DL1	SW8081	GAMMA BHC (LINDANE)	20	U	20	R	5.5	20	ug/kg	DL
SS	NDA137DL1	SW8081	GAMMA BHC (LINDANE)	3.6	U	3.6	R	1	3.6	ug/kg	DL
SS	NDA113DL1	SW8081	GAMMA BHC (LINDANE)	4.2	U	4.2	R	1.2	4.2	ug/kg	DL
SB	NDA165DL1	SW8260	ETHYLBENZENE	1180	U	1180	R	33	1180	ug/kg	DL
SB	NDA096DL1	SW8260	ETHYLBENZENE	32	J	32	R	26	917	ug/kg	DL
SB	NDA097DL1	SW8260	ETHYLBENZENE	990	U	990	R	28	990	ug/kg	DL
SB	NDA296DL1	SW8260	ETHYLBENZENE	1040	U	1040	R	29	1040	ug/kg	DL
SB	NDA297DL1	SW8260	ETHYLBENZENE	1030	U	1030	R	29	1030	ug/kg	DL
SB	NDA298DL1	SW8260	ETHYLBENZENE	1090	U	1090	R	30	1090	ug/kg	DL
SB	NDA066DL1	SW8260	ETHYLBENZENE	1190	U	1190	R	33	1190	ug/kg	DL
SD	NDA051FD1	SW8260	ETHYLBENZENE	1030	E	1030	R	0.6	23	ug/kg	DL
SD	NDA052DL1	SW8260	ETHYLBENZENE	111	J	111	R	70	2480	ug/kg	DL
SD	NDA053	SW8260	ETHYLBENZENE	155	E	155	R	0.38	14	ug/kg	DL
SD	NDA047DL1	SW8260	ETHYLBENZENE	858	U	858	R	24	858	ug/kg	DL
SD	NDA048DL1	SW8260	ETHYLBENZENE	1200	U	1200	R	34	1200	ug/kg	DL
SD	NDA049DL1	SW8260	ETHYLBENZENE	1120	U	1120	R	31	1120	ug/kg	DL
SS	NDA131DL1	SW8260	ETHYLBENZENE	1200	U	1200	R	34	1200	ug/kg	DL
SS	NDA149DL1	SW8260	ETHYLBENZENE	1130	U	1130	R	32	1130	ug/kg	DL
SS	1	SW8260	ETHYLBENZENE	964	U	964	R	27	964	ug/kg	DL
SS	NDA166DL1	SW8260	ETHYLBENZENE	1110	U	1110	R	31	1110	ug/kg	DL
SS	NDA176DL1	SW8260	ETHYLBENZENE	1480	U	1480	R	42	1480	ug/kg	DL
SS	NDA196DL1	SW8260	ETHYLBENZENE	937	U	937	R	26	937	ug/kg	DL
SS	1	SW8260	ETHYLBENZENE	1820	U	1820	R	51	1820	ug/kg	DL
SS	NDA198DL1	SW8260	ETHYLBENZENE	1160	U	1160	R	32	1160	ug/kg	DL
SS	NDA200DL1	SW8260	ETHYLBENZENE	1220	U	1220	R	34	1220	ug/kg	DL
SS	NDA204DL1	SW8260	ETHYLBENZENE	1350	U	1350	R	38	1350	ug/kg	DL

Matrix	Sample ID	Analytical Method	Parameter	Lab Result	Lab Qual	Final Result	Final Qual	DL	RL	Units	Comments
SS	1	SW8260	ETHYLBENZENE	1380	U	1380	R	39	1380	ug/kg	DL
SS	NDA206DL1	SW8260	ETHYLBENZENE	1430	U	1430	R	40	1430	ug/kg	DL
SS	NDA207DL1	SW8260	ETHYLBENZENE	1290	U	1290	R	36	1290	ug/kg	DL
SS	NDA059DL1	SW8260	ETHYLBENZENE	1170	U	1170	R	33	1170	ug/kg	DL
SS	NDA065DL1	SW8260	ETHYLBENZENE	1220	U	1220	R	34	1220	ug/kg	DL
SS	NDA069DL1	SW8260	ETHYLBENZENE	1080	U	1080	R	30	1080	ug/kg	DL
SS	NDA121DL1	SW8260	ETHYLBENZENE	1130	U	1130	R	32	1130	ug/kg	DL
SS	NDA123DL1	SW8260	ETHYLBENZENE	1200	U	1200	R	34	1200	ug/kg	DL
SS	NDA124DL1	SW8260	ETHYLBENZENE	1000	U	1000	R	28	1000	ug/kg	DL
SB	NDA114DL1	SW8081	ENDRIN KETONE	86	U	86	R	5.7	86	ug/kg	DL
SS	NDA125DL1	SW8081	ENDRIN KETONE	39	U	39	R	2.6	39	ug/kg	DL
SS	NDA137DL1	SW8081	ENDRIN KETONE	7.1	U	7.1	R	0.47	7.1	ug/kg	DL
SS	NDA113DL1	SW8081	ENDRIN KETONE	8.2	U	8.2	R	0.54	8.2	ug/kg	DL
SB	NDA114DL1	SW8081	ENDRIN ALDEHYDE	86	U	86	R	6	86	ug/kg	DL
SS	NDA125DL1	SW8081	ENDRIN ALDEHYDE	39	U	39	R	2.71	39	ug/kg	DL
SS	NDA137DL1	SW8081	ENDRIN ALDEHYDE	7.1	U	7.1	R	0.49	7.1	ug/kg	DL
SS	NDA113DL1	SW8081	ENDRIN ALDEHYDE	8.2	U	8.2	R	0.57	8.2	ug/kg	DL
SB	NDA114DL1	SW8081	ENDRIN	86	U	86	R	10	86	ug/kg	DL
SS	NDA125DL1	SW8081	ENDRIN	39	U	39	R	4.7	39	ug/kg	DL
SS	NDA137DL1	SW8081	ENDRIN	7.1	U	7.1	R	0.85	7.1	ug/kg	DL
SS	NDA113DL1	SW8081	ENDRIN	8.2	U	8.2	R	0.98	8.2	ug/kg	DL
SB	NDA114DL1	SW8081	ENDOSULFAN SULFATE	86	U	86	R	10	86	ug/kg	DL
SS	NDA125DL1	SW8081	ENDOSULFAN SULFATE	39	U	39	R	4.6	39	ug/kg	DL
SS	NDA137DL1	SW8081	ENDOSULFAN SULFATE	7.1	U	7.1	R	0.83	7.1	ug/kg	DL
SS	NDA113DL1	SW8081	ENDOSULFAN SULFATE	8.2	U	8.2	R	0.96	8.2	ug/kg	DL
SB	NDA114DL1	SW8081	DIELDRIN	86	U	86	R	11	86	ug/kg	DL
SS	NDA125DL1	SW8081	DIELDRIN	39	U	39	R	4.8	39	ug/kg	DL
SS	NDA137DL1	SW8081	DIELDRIN	7.1	U	7.1	R	0.87	7.1	ug/kg	DL
SS	NDA113DL1	SW8081	DIELDRIN	8.2	U	8.2	R	1	8.2	ug/kg	DL
SB	NDA165DL1	SW8260	DIBROMOCHLOROMETHANE	1180	U	1180	R	26	1180	ug/kg	DL
SB	NDA096DL1	SW8260	DIBROMOCHLOROMETHANE	917	U	917	R	20	917	ug/kg	DL
SB	NDA097DL1	SW8260	DIBROMOCHLOROMETHANE	990	U	990	R	22	990	ug/kg	DL
SB	NDA296DL1	SW8260	DIBROMOCHLOROMETHANE	1040	U	1040	R	23	1040	ug/kg	DL
SB	NDA297DL1	SW8260	DIBROMOCHLOROMETHANE	1030	U	1030	R	22	1030	ug/kg	DL
SB	NDA298DL1	SW8260	DIBROMOCHLOROMETHANE	1090	U	1090	R	24	1090	ug/kg	DL
SB	NDA066DL1	SW8260	DIBROMOCHLOROMETHANE	1190	U	1190	R	26	1190	ug/kg	DL
SD	1	SW8260	DIBROMOCHLOROMETHANE	2250	U	2250	R	49	2250	ug/kg	DL
SD	NDA052DL1	SW8260	DIBROMOCHLOROMETHANE	2480	U	2480	R	55	2480	ug/kg	DL
SD	NDA053DL1	SW8260	DIBROMOCHLOROMETHANE	1520	U	1520	R	34	1520	ug/kg	DL
SD	NDA047DL1	SW8260	DIBROMOCHLOROMETHANE	858	U	858	R	19	858	ug/kg	DL
SD	NDA048DL1	SW8260	DIBROMOCHLOROMETHANE	1200	U	1200	R	26	1200	ug/kg	DL
SD	NDA049DL1	SW8260	DIBROMOCHLOROMETHANE	1120	U	1120	R	25	1120	ug/kg	DL
SS	NDA131DL1	SW8260	DIBROMOCHLOROMETHANE	1200	U	1200	R	26	1200	ug/kg	DL
SS	NDA149DL1	SW8260	DIBROMOCHLOROMETHANE	1130	U	1130	R	25	1130	ug/kg	DL
SS	1	SW8260	DIBROMOCHLOROMETHANE	964	U	964	R	21	964	ug/kg	DL
SS	NDA166DL1	SW8260	DIBROMOCHLOROMETHANE	1110	U	1110	R	25	1110	ug/kg	DL
SS	NDA176DL1	SW8260	DIBROMOCHLOROMETHANE	1480	U	1480	R	33	1480	ug/kg	DL
SS	NDA196DL1	SW8260	DIBROMOCHLOROMETHANE	937	U	937	R	21	937	ug/kg	DL
SS	1	SW8260	DIBROMOCHLOROMETHANE	1820	U	1820	R	40	1820	ug/kg	DL
SS	NDA198DL1	SW8260	DIBROMOCHLOROMETHANE	1160	U	1160	R	25	1160	ug/kg	DL
SS	NDA200DL1	SW8260	DIBROMOCHLOROMETHANE	1220	U	1220	R	27	1220	ug/kg	DL
SS	NDA204DL1	SW8260	DIBROMOCHLOROMETHANE	1350	U	1350	R	30	1350	ug/kg	DL
SS	1	SW8260	DIBROMOCHLOROMETHANE	1380	U	1380	R	30	1380	ug/kg	DL
SS	NDA206DL1	SW8260	DIBROMOCHLOROMETHANE	1430	U	1430	R	32	1430	ug/kg	DL
SS	NDA207DL1	SW8260	DIBROMOCHLOROMETHANE	1290	U	1290	R	28	1290	ug/kg	DL
SS	NDA059DL1	SW8260	DIBROMOCHLOROMETHANE	1170	U	1170	R	26	1170	ug/kg	DL
SS	NDA065DL1	SW8260	DIBROMOCHLOROMETHANE	1220	U	1220	R	27	1220	ug/kg	DL
SS	NDA069DL1	SW8260	DIBROMOCHLOROMETHANE	1080	U	1080	R	24	1080	ug/kg	DL
SS	NDA121DL1	SW8260	DIBROMOCHLOROMETHANE	1130	U	1130	R	25	1130	ug/kg	DL
SS	NDA123DL1	SW8260	DIBROMOCHLOROMETHANE	1200	U	1200	R	26	1200	ug/kg	DL
SS	NDA124DL1	SW8260	DIBROMOCHLOROMETHANE	1000	U	1000	R	22	1000	ug/kg	DL
SB	NDA114DL1	SW8081	DELTA BHC	44	U	44	R	11	44	ug/kg	DL
SS	NDA125DL1	SW8081	DELTA BHC	20	U	20	R	5.2	20	ug/kg	DL
SS	NDA137DL1	SW8081	DELTA BHC	3.6	U	3.6	R	0.93	3.6	ug/kg	DL
SS	NDA113DL1	SW8081	DELTA BHC	4.2	U	4.2	R	1.1	4.2	ug/kg	DL
SB	NDA165DL1	SW8260	cis-1,3-DICHLOROPROPENE	1180	U	1180	R	33	1180	ug/kg	DL
SB	NDA096DL1	SW8260	cis-1,3-DICHLOROPROPENE	917	U	917	R	26	917	ug/kg	DL
SB	NDA097DL1	SW8260	cis-1,3-DICHLOROPROPENE	990	U	990	R	28	990	ug/kg	DL
SB	NDA296DL1	SW8260	cis-1,3-DICHLOROPROPENE	1040	U	1040	R	29	1040	ug/kg	DL
SB	NDA297DL1	SW8260	cis-1,3-DICHLOROPROPENE	1030	U	1030	R	29	1030	ug/kg	DL

Matrix	Sample ID	Analytical Method	Parameter	Lab Result	Lab Qual	Final Result	Final Qual	DL	RL	Units	Comments
SB	NDA298DL1	SW8260	cis-1,3-DICHLOROPROPENE	1090	U	1090	R	30	1090	ug/kg	DL
SB	NDA066DL1	SW8260	cis-1,3-DICHLOROPROPENE	1190	U	1190	R	33	1190	ug/kg	DL
SD	1	SW8260	cis-1,3-DICHLOROPROPENE	2250	U	2250	R	63	2250	ug/kg	DL
SD	NDA052DL1	SW8260	cis-1,3-DICHLOROPROPENE	2480	U	2480	R	70	2480	ug/kg	DL
SD	NDA053DL1	SW8260	cis-1,3-DICHLOROPROPENE	1520	U	1520	R	43	1520	ug/kg	DL
SD	NDA047DL1	SW8260	cis-1,3-DICHLOROPROPENE	858	U	858	R	24	858	ug/kg	DL
SD	NDA048DL1	SW8260	cis-1,3-DICHLOROPROPENE	1200	U	1200	R	34	1200	ug/kg	DL
SD	NDA049DL1	SW8260	cis-1,3-DICHLOROPROPENE	1120	U	1120	R	31	1120	ug/kg	DL
SS	NDA131DL1	SW8260	cis-1,3-DICHLOROPROPENE	1200	U	1200	R	34	1200	ug/kg	DL
SS	NDA149DL1	SW8260	cis-1,3-DICHLOROPROPENE	1130	U	1130	R	32	1130	ug/kg	DL
SS	1	SW8260	cis-1,3-DICHLOROPROPENE	964	U	964	R	27	964	ug/kg	DL
SS	NDA166DL1	SW8260	cis-1,3-DICHLOROPROPENE	1110	U	1110	R	31	1110	ug/kg	DL
SS	NDA176DL1	SW8260	cis-1,3-DICHLOROPROPENE	1480	U	1480	R	42	1480	ug/kg	DL
SS	NDA196DL1	SW8260	cis-1,3-DICHLOROPROPENE	937	U	937	R	26	937	ug/kg	DL
SS	1	SW8260	cis-1,3-DICHLOROPROPENE	1820	U	1820	R	51	1820	ug/kg	DL
SS	NDA198DL1	SW8260	cis-1,3-DICHLOROPROPENE	1160	U	1160	R	32	1160	ug/kg	DL
SS	NDA200DL1	SW8260	cis-1,3-DICHLOROPROPENE	1220	U	1220	R	34	1220	ug/kg	DL
SS	NDA204DL1	SW8260	cis-1,3-DICHLOROPROPENE	1350	U	1350	R	38	1350	ug/kg	DL
SS	1	SW8260	cis-1,3-DICHLOROPROPENE	1380	U	1380	R	39	1380	ug/kg	DL
SS	NDA206DL1	SW8260	cis-1,3-DICHLOROPROPENE	1430	U	1430	R	40	1430	ug/kg	DL
SS	NDA207DL1	SW8260	cis-1,3-DICHLOROPROPENE	1290	U	1290	R	36	1290	ug/kg	DL
SS	NDA059DL1	SW8260	cis-1,3-DICHLOROPROPENE	1170	U	1170	R	33	1170	ug/kg	DL
SS	NDA065DL1	SW8260	cis-1,3-DICHLOROPROPENE	1220	U	1220	R	34	1220	ug/kg	DL
SS	NDA069DL1	SW8260	cis-1,3-DICHLOROPROPENE	1080	U	1080	R	30	1080	ug/kg	DL
SS	NDA121DL1	SW8260	cis-1,3-DICHLOROPROPENE	1130	U	1130	R	32	1130	ug/kg	DL
SS	NDA123DL1	SW8260	cis-1,3-DICHLOROPROPENE	1200	U	1200	R	34	1200	ug/kg	DL
SS	NDA124DL1	SW8260	cis-1,3-DICHLOROPROPENE	1000	U	1000	R	28	1000	ug/kg	DL
SB	NDA165DL1	SW8260	CHLOROMETHANE	1180	U	1180	R	93	1180	ug/kg	DL
SB	NDA096DL1	SW8260	CHLOROMETHANE	917	U	917	R	72	917	ug/kg	DL
SB	NDA097DL1	SW8260	CHLOROMETHANE	990	U	990	R	78	990	ug/kg	DL
SB	NDA296DL1	SW8260	CHLOROMETHANE	1040	U	1040	R	82	1040	ug/kg	DL
SB	NDA297DL1	SW8260	CHLOROMETHANE	1030	U	1030	R	81	1030	ug/kg	DL
SB	NDA298DL1	SW8260	CHLOROMETHANE	1090	U	1090	R	86	1090	ug/kg	DL
SB	NDA066DL1	SW8260	CHLOROMETHANE	1190	U	1190	R	94	1190	ug/kg	DL
SD	1	SW8260	CHLOROMETHANE	2250	U	2250	R	177	2250	ug/kg	DL
SD	NDA052DL1	SW8260	CHLOROMETHANE	2480	U	2480	R	196	2480	ug/kg	DL
SD	NDA053DL1	SW8260	CHLOROMETHANE	1520	U	1520	R	120	1520	ug/kg	DL
SD	NDA047DL1	SW8260	CHLOROMETHANE	858	U	858	R	68	858	ug/kg	DL
SD	NDA048DL1	SW8260	CHLOROMETHANE	1200	U	1200	R	95	1200	ug/kg	DL
SD	NDA049DL1	SW8260	CHLOROMETHANE	1120	U	1120	R	88	1120	ug/kg	DL
SS	NDA131DL1	SW8260	CHLOROMETHANE	1200	U	1200	R	95	1200	ug/kg	DL
SS	NDA149DL1	SW8260	CHLOROMETHANE	1130	U	1130	R	89	1130	ug/kg	DL
SS	1	SW8260	CHLOROMETHANE	964	U	964	R	76	964	ug/kg	DL
SS	NDA166DL1	SW8260	CHLOROMETHANE	1110	U	1110	R	88	1110	ug/kg	DL
SS	NDA176DL1	SW8260	CHLOROMETHANE	1480	U	1480	R	117	1480	ug/kg	DL
SS	NDA196DL1	SW8260	CHLOROMETHANE	937	U	937	R	74	937	ug/kg	DL
SS	1	SW8260	CHLOROMETHANE	1820	U	1820	R	144	1820	ug/kg	DL
SS	NDA198DL1	SW8260	CHLOROMETHANE	1160	U	1160	R	91	1160	ug/kg	DL
SS	NDA200DL1	SW8260	CHLOROMETHANE	1220	U	1220	R	97	1220	ug/kg	DL
SS	NDA204DL1	SW8260	CHLOROMETHANE	1350	U	1350	R	107	1350	ug/kg	DL
SS	1	SW8260	CHLOROMETHANE	1380	U	1380	R	109	1380	ug/kg	DL
SS	NDA206DL1	SW8260	CHLOROMETHANE	1430	U	1430	R	113	1430	ug/kg	DL
SS	NDA207DL1	SW8260	CHLOROMETHANE	1290	U	1290	R	102	1290	ug/kg	DL
SS	NDA059DL1	SW8260	CHLOROMETHANE	1170	U	1170	R	93	1170	ug/kg	DL
SS	NDA065DL1	SW8260	CHLOROMETHANE	1220	U	1220	R	96	1220	ug/kg	DL
SS	NDA069DL1	SW8260	CHLOROMETHANE	1080	U	1080	R	85	1080	ug/kg	DL
SS	NDA121DL1	SW8260	CHLOROMETHANE	1130	U	1130	R	89	1130	ug/kg	DL
SS	NDA123DL1	SW8260	CHLOROMETHANE	1200	U	1200	R	95	1200	ug/kg	DL
SS	NDA124DL1	SW8260	CHLOROMETHANE	1000	U	1000	R	79	1000	ug/kg	DL
SB	NDA165DL1	SW8260	CHLOROFORM	1180	U	1180	R	118	1180	ug/kg	DL
SB	NDA096DL1	SW8260	CHLOROFORM	917	U	917	R	92	917	ug/kg	DL
SB	NDA097DL1	SW8260	CHLOROFORM	990	U	990	R	99	990	ug/kg	DL
SB	NDA296DL1	SW8260	CHLOROFORM	1040	U	1040	R	104	1040	ug/kg	DL
SB	NDA297DL1	SW8260	CHLOROFORM	1030	U	1030	R	102	1030	ug/kg	DL
SB	NDA298DL1	SW8260	CHLOROFORM	1090	U	1090	R	109	1090	ug/kg	DL
SB	NDA066DL1	SW8260	CHLOROFORM	1190	U	1190	R	119	1190	ug/kg	DL
SD	1	SW8260	CHLOROFORM	2250	U	2250	R	224	2250	ug/kg	DL
SD	NDA052DL1	SW8260	CHLOROFORM	2480	U	2480	R	249	2480	ug/kg	DL
SD	NDA053DL1	SW8260	CHLOROFORM	1520	U	1520	R	152	1520	ug/kg	DL
SD	NDA047DL1	SW8260	CHLOROFORM	858	U	858	R	86	858	ug/kg	DL

Matrix	Sample ID	Analytical Method	Parameter	Lab Result	Lab Qual	Final Result	Final Qual	DL	RL	Units	Comments
SD	NDA048DL1	SW8260	CHLOROFORM	1200	U	1200	R	120	1200	ug/kg	DL
SD	NDA049DL1	SW8260	CHLOROFORM	1120	U	1120	R	112	1120	ug/kg	DL
SS	NDA131DL1	SW8260	CHLOROFORM	1200	U	1200	R	120	1200	ug/kg	DL
SS	NDA149DL1	SW8260	CHLOROFORM	1130	U	1130	R	113	1130	ug/kg	DL
SS	1	SW8260	CHLOROFORM	964	U	964	R	97	964	ug/kg	DL
SS	NDA166DL1	SW8260	CHLOROFORM	1110	U	1110	R	112	1110	ug/kg	DL
SS	NDA176DL1	SW8260	CHLOROFORM	1480	U	1480	R	148	1480	ug/kg	DL
SS	NDA196DL1	SW8260	CHLOROFORM	937	U	937	R	94	937	ug/kg	DL
SS	1	SW8260	CHLOROFORM	1820	U	1820	R	182	1820	ug/kg	DL
SS	NDA198DL1	SW8260	CHLOROFORM	1160	U	1160	R	116	1160	ug/kg	DL
SS	NDA200DL1	SW8260	CHLOROFORM	1220	U	1220	R	122	1220	ug/kg	DL
SS	NDA204DL1	SW8260	CHLOROFORM	1350	U	1350	R	135	1350	ug/kg	DL
SS	1	SW8260	CHLOROFORM	1380	U	1380	R	138	1380	ug/kg	DL
SS	NDA206DL1	SW8260	CHLOROFORM	1430	U	1430	R	143	1430	ug/kg	DL
SS	NDA207DL1	SW8260	CHLOROFORM	1290	U	1290	R	129	1290	ug/kg	DL
SS	NDA059DL1	SW8260	CHLOROFORM	1170	U	1170	R	117	1170	ug/kg	DL
SS	NDA065DL1	SW8260	CHLOROFORM	1220	U	1220	R	122	1220	ug/kg	DL
SS	NDA069DL1	SW8260	CHLOROFORM	1080	U	1080	R	108	1080	ug/kg	DL
SS	NDA121DL1	SW8260	CHLOROFORM	1130	U	1130	R	113	1130	ug/kg	DL
SS	NDA123DL1	SW8260	CHLOROFORM	1200	U	1200	R	120	1200	ug/kg	DL
SS	NDA124DL1	SW8260	CHLOROFORM	1000	U	1000	R	100	1000	ug/kg	DL
SB	NDA165DL1	SW8260	CHLOROETHANE	1180	U	1180	R	65	1180	ug/kg	DL
SB	NDA096DL1	SW8260	CHLOROETHANE	917	U	917	R	50	917	ug/kg	DL
SB	NDA097DL1	SW8260	CHLOROETHANE	990	U	990	R	54	990	ug/kg	DL
SB	NDA296DL1	SW8260	CHLOROETHANE	1040	U	1040	R	57	1040	ug/kg	DL
SB	NDA297DL1	SW8260	CHLOROETHANE	1030	U	1030	R	56	1030	ug/kg	DL
SB	NDA298DL1	SW8260	CHLOROETHANE	1090	U	1090	R	60	1090	ug/kg	DL
SB	NDA066DL1	SW8260	CHLOROETHANE	1190	U	1190	R	66	1190	ug/kg	DL
SD	1	SW8260	CHLOROETHANE	2250	U	2250	R	123	2250	ug/kg	DL
SD	NDA052DL1	SW8260	CHLOROETHANE	2480	U	2480	R	137	2480	ug/kg	DL
SD	NDA053DL1	SW8260	CHLOROETHANE	1520	U	1520	R	84	1520	ug/kg	DL
SD	NDA047DL1	SW8260	CHLOROETHANE	858	U	858	R	47	858	ug/kg	DL
SD	NDA048DL1	SW8260	CHLOROETHANE	1200	U	1200	R	66	1200	ug/kg	DL
SD	NDA049DL1	SW8260	CHLOROETHANE	1120	U	1120	R	62	1120	ug/kg	DL
SS	NDA131DL1	SW8260	CHLOROETHANE	1200	U	1200	R	66	1200	ug/kg	DL
SS	NDA149DL1	SW8260	CHLOROETHANE	1130	U	1130	R	62	1130	ug/kg	DL
SS	1	SW8260	CHLOROETHANE	964	U	964	R	53	964	ug/kg	DL
SS	NDA166DL1	SW8260	CHLOROETHANE	1110	U	1110	R	62	1110	ug/kg	DL
SS	NDA176DL1	SW8260	CHLOROETHANE	1480	U	1480	R	82	1480	ug/kg	DL
SS	NDA196DL1	SW8260	CHLOROETHANE	937	U	937	R	52	937	ug/kg	DL
SS	1	SW8260	CHLOROETHANE	1820	U	1820	R	100	1820	ug/kg	DL
SS	NDA198DL1	SW8260	CHLOROETHANE	1160	U	1160	R	64	1160	ug/kg	DL
SS	NDA200DL1	SW8260	CHLOROETHANE	1220	U	1220	R	67	1220	ug/kg	DL
SS	NDA204DL1	SW8260	CHLOROETHANE	1350	U	1350	R	74	1350	ug/kg	DL
SS	1	SW8260	CHLOROETHANE	1380	U	1380	R	76	1380	ug/kg	DL
SS	NDA206DL1	SW8260	CHLOROETHANE	1430	U	1430	R	79	1430	ug/kg	DL
SS	NDA207DL1	SW8260	CHLOROETHANE	1290	U	1290	R	71	1290	ug/kg	DL
SS	NDA059DL1	SW8260	CHLOROETHANE	1170	U	1170	R	64	1170	ug/kg	DL
SS	NDA065DL1	SW8260	CHLOROETHANE	1220	U	1220	R	67	1220	ug/kg	DL
SS	NDA069DL1	SW8260	CHLOROETHANE	1080	U	1080	R	59	1080	ug/kg	DL
SS	NDA121DL1	SW8260	CHLOROETHANE	1130	U	1130	R	62	1130	ug/kg	DL
SS	NDA123DL1	SW8260	CHLOROETHANE	1200	U	1200	R	66	1200	ug/kg	DL
SS	NDA124DL1	SW8260	CHLOROETHANE	1000	U	1000	R	55	1000	ug/kg	DL
SB	NDA165DL1	SW8260	CHLOROBENZENE	1180	U	1180	R	24	1180	ug/kg	DL
SB	NDA096DL1	SW8260	CHLOROBENZENE	917	U	917	R	18	917	ug/kg	DL
SB	NDA097DL1	SW8260	CHLOROBENZENE	990	U	990	R	20	990	ug/kg	DL
SB	NDA296DL1	SW8260	CHLOROBENZENE	1040	U	1040	R	21	1040	ug/kg	DL
SB	NDA297DL1	SW8260	CHLOROBENZENE	1030	U	1030	R	20	1030	ug/kg	DL
SB	NDA298DL1	SW8260	CHLOROBENZENE	1090	U	1090	R	22	1090	ug/kg	DL
SB	NDA066DL1	SW8260	CHLOROBENZENE	1190	U	1190	R	24	1190	ug/kg	DL
SD	1	SW8260	CHLOROBENZENE	2250	U	2250	R	45	2250	ug/kg	DL
SD	NDA052DL1	SW8260	CHLOROBENZENE	2480	U	2480	R	50	2480	ug/kg	DL
SD	NDA053DL1	SW8260	CHLOROBENZENE	1520	U	1520	R	30	1520	ug/kg	DL
SD	NDA047DL1	SW8260	CHLOROBENZENE	858	U	858	R	17	858	ug/kg	DL
SD	NDA048DL1	SW8260	CHLOROBENZENE	1200	U	1200	R	24	1200	ug/kg	DL
SD	NDA049DL1	SW8260	CHLOROBENZENE	1120	U	1120	R	22	1120	ug/kg	DL
SS	NDA131DL1	SW8260	CHLOROBENZENE	1200	U	1200	R	24	1200	ug/kg	DL
SS	NDA149DL1	SW8260	CHLOROBENZENE	1130	U	1130	R	23	1130	ug/kg	DL
SS	1	SW8260	CHLOROBENZENE	964	U	964	R	19	964	ug/kg	DL
SS	NDA166DL1	SW8260	CHLOROBENZENE	1110	U	1110	R	22	1110	ug/kg	DL

Matrix	Sample ID	Analytical Method	Parameter	Lab Result	Lab Qual	Final Result	Final Qual	DL	RL	Units	Comments
SS	NDA176DL1	SW8260	CHLOROBENZENE	1480	U	1480	R	30	1480	ug/kg	DL
SS	NDA196DL1	SW8260	CHLOROBENZENE	937	U	937	R	19	937	ug/kg	DL
SS	1	SW8260	CHLOROBENZENE	1820	U	1820	R	36	1820	ug/kg	DL
SS	NDA198DL1	SW8260	CHLOROBENZENE	1160	U	1160	R	23	1160	ug/kg	DL
SS	NDA200DL1	SW8260	CHLOROBENZENE	1220	U	1220	R	24	1220	ug/kg	DL
SS	NDA204DL1	SW8260	CHLOROBENZENE	1350	U	1350	R	27	1350	ug/kg	DL
SS	1	SW8260	CHLOROBENZENE	1380	U	1380	R	28	1380	ug/kg	DL
SS	NDA206DL1	SW8260	CHLOROBENZENE	1430	U	1430	R	29	1430	ug/kg	DL
SS	NDA207DL1	SW8260	CHLOROBENZENE	1290	U	1290	R	26	1290	ug/kg	DL
SS	NDA059DL1	SW8260	CHLOROBENZENE	1170	U	1170	R	23	1170	ug/kg	DL
SS	NDA065DL1	SW8260	CHLOROBENZENE	1220	U	1220	R	24	1220	ug/kg	DL
SS	NDA069DL1	SW8260	CHLOROBENZENE	1080	U	1080	R	22	1080	ug/kg	DL
SS	NDA121DL1	SW8260	CHLOROBENZENE	1130	U	1130	R	23	1130	ug/kg	DL
SS	NDA123DL1	SW8260	CHLOROBENZENE	1200	U	1200	R	24	1200	ug/kg	DL
SS	NDA124DL1	SW8260	CHLOROBENZENE	1000	U	1000	R	20	1000	ug/kg	DL
SB	NDA165DL1	SW8260	CARBON TETRACHLORIDE	1180	U	1180	R	45	1180	ug/kg	DL
SB	NDA096DL1	SW8260	CARBON TETRACHLORIDE	917	U	917	R	35	917	ug/kg	DL
SB	NDA097DL1	SW8260	CARBON TETRACHLORIDE	990	U	990	R	38	990	ug/kg	DL
SB	NDA296DL1	SW8260	CARBON TETRACHLORIDE	1040	U	1040	R	40	1040	ug/kg	DL
SB	NDA297DL1	SW8260	CARBON TETRACHLORIDE	1030	U	1030	R	39	1030	ug/kg	DL
SB	NDA298DL1	SW8260	CARBON TETRACHLORIDE	1090	U	1090	R	41	1090	ug/kg	DL
SB	NDA066DL1	SW8260	CARBON TETRACHLORIDE	1190	U	1190	R	45	1190	ug/kg	DL
SD	1	SW8260	CARBON TETRACHLORIDE	2250	U	2250	R	85	2250	ug/kg	DL
SD	NDA052DL1	SW8260	CARBON TETRACHLORIDE	2480	U	2480	R	94	2480	ug/kg	DL
SD	NDA053DL1	SW8260	CARBON TETRACHLORIDE	1520	U	1520	R	58	1520	ug/kg	DL
SD	NDA047DL1	SW8260	CARBON TETRACHLORIDE	858	U	858	R	33	858	ug/kg	DL
SD	NDA048DL1	SW8260	CARBON TETRACHLORIDE	1200	U	1200	R	46	1200	ug/kg	DL
SD	NDA049DL1	SW8260	CARBON TETRACHLORIDE	1120	U	1120	R	43	1120	ug/kg	DL
SS	NDA131DL1	SW8260	CARBON TETRACHLORIDE	1200	U	1200	R	46	1200	ug/kg	DL
SS	NDA149DL1	SW8260	CARBON TETRACHLORIDE	1130	U	1130	R	43	1130	ug/kg	DL
SS	1	SW8260	CARBON TETRACHLORIDE	964	U	964	R	37	964	ug/kg	DL
SS	NDA166DL1	SW8260	CARBON TETRACHLORIDE	1110	U	1110	R	43	1110	ug/kg	DL
SS	NDA176DL1	SW8260	CARBON TETRACHLORIDE	1480	U	1480	R	56	1480	ug/kg	DL
SS	NDA196DL1	SW8260	CARBON TETRACHLORIDE	937	U	937	R	36	937	ug/kg	DL
SS	1	SW8260	CARBON TETRACHLORIDE	1820	U	1820	R	69	1820	ug/kg	DL
SS	NDA198DL1	SW8260	CARBON TETRACHLORIDE	1160	U	1160	R	44	1160	ug/kg	DL
SS	NDA200DL1	SW8260	CARBON TETRACHLORIDE	1220	U	1220	R	47	1220	ug/kg	DL
SS	NDA204DL1	SW8260	CARBON TETRACHLORIDE	1350	U	1350	R	51	1350	ug/kg	DL
SS	1	SW8260	CARBON TETRACHLORIDE	1380	U	1380	R	52	1380	ug/kg	DL
SS	NDA206DL1	SW8260	CARBON TETRACHLORIDE	1430	U	1430	R	54	1430	ug/kg	DL
SS	NDA207DL1	SW8260	CARBON TETRACHLORIDE	1290	U	1290	R	49	1290	ug/kg	DL
SS	NDA059DL1	SW8260	CARBON TETRACHLORIDE	1170	U	1170	R	45	1170	ug/kg	DL
SS	NDA065DL1	SW8260	CARBON TETRACHLORIDE	1220	U	1220	R	46	1220	ug/kg	DL
SS	NDA069DL1	SW8260	CARBON TETRACHLORIDE	1080	U	1080	R	41	1080	ug/kg	DL
SS	NDA121DL1	SW8260	CARBON TETRACHLORIDE	1130	U	1130	R	43	1130	ug/kg	DL
SS	NDA123DL1	SW8260	CARBON TETRACHLORIDE	1200	U	1200	R	46	1200	ug/kg	DL
SS	NDA124DL1	SW8260	CARBON TETRACHLORIDE	1000	U	1000	R	38	1000	ug/kg	DL
SB	NDA165DL1	SW8260	CARBON DISULFIDE	1180	U	1180	R	37	1180	ug/kg	DL
SB	NDA096DL1	SW8260	CARBON DISULFIDE	917	U	917	R	28	917	ug/kg	DL
SB	NDA097DL1	SW8260	CARBON DISULFIDE	990	U	990	R	31	990	ug/kg	DL
SB	NDA296DL1	SW8260	CARBON DISULFIDE	1040	U	1040	R	32	1040	ug/kg	DL
SB	NDA297DL1	SW8260	CARBON DISULFIDE	1030	U	1030	R	32	1030	ug/kg	DL
SB	NDA298DL1	SW8260	CARBON DISULFIDE	1090	U	1090	R	34	1090	ug/kg	DL
SB	NDA066DL1	SW8260	CARBON DISULFIDE	1190	U	1190	R	37	1190	ug/kg	DL
SD	1	SW8260	CARBON DISULFIDE	2250	U	2250	R	69	2250	ug/kg	DL
SD	NDA052DL1	SW8260	CARBON DISULFIDE	2480	U	2480	R	77	2480	ug/kg	DL
SD	NDA053DL1	SW8260	CARBON DISULFIDE	1520	U	1520	R	47	1520	ug/kg	DL
SD	NDA047DL1	SW8260	CARBON DISULFIDE	858	U	858	R	27	858	ug/kg	DL
SD	NDA048DL1	SW8260	CARBON DISULFIDE	1200	U	1200	R	37	1200	ug/kg	DL
SD	NDA049DL1	SW8260	CARBON DISULFIDE	1120	U	1120	R	35	1120	ug/kg	DL
SS	NDA131DL1	SW8260	CARBON DISULFIDE	1200	U	1200	R	37	1200	ug/kg	DL
SS	NDA149DL1	SW8260	CARBON DISULFIDE	1130	U	1130	R	35	1130	ug/kg	DL
SS	1	SW8260	CARBON DISULFIDE	964	U	964	R	30	964	ug/kg	DL
SS	NDA166DL1	SW8260	CARBON DISULFIDE	1110	U	1110	R	35	1110	ug/kg	DL
SS	NDA176DL1	SW8260	CARBON DISULFIDE	1480	U	1480	R	46	1480	ug/kg	DL
SS	NDA196DL1	SW8260	CARBON DISULFIDE	937	U	937	R	29	937	ug/kg	DL
SS	1	SW8260	CARBON DISULFIDE	1820	U	1820	R	56	1820	ug/kg	DL
SS	NDA198DL1	SW8260	CARBON DISULFIDE	1160	U	1160	R	36	1160	ug/kg	DL
SS	NDA200DL1	SW8260	CARBON DISULFIDE	1220	U	1220	R	38	1220	ug/kg	DL
SS	NDA204DL1	SW8260	CARBON DISULFIDE	1350	U	1350	R	42	1350	ug/kg	DL

Matrix	Sample ID	Analytical Method	Parameter	Lab Result	Lab Qual	Final Result	Final Qual	DL	RL	Units	Comments
SS	1	SW8260	CARBON DISULFIDE	1380	U	1380	R	43	1380	ug/kg	DL
SS	NDA206DL1	SW8260	CARBON DISULFIDE	1430	U	1430	R	44	1430	ug/kg	DL
SS	NDA207DL1	SW8260	CARBON DISULFIDE	1290	U	1290	R	40	1290	ug/kg	DL
SS	NDA059DL1	SW8260	CARBON DISULFIDE	1170	U	1170	R	36	1170	ug/kg	DL
SS	NDA065DL1	SW8260	CARBON DISULFIDE	1220	U	1220	R	38	1220	ug/kg	DL
SS	NDA069DL1	SW8260	CARBON DISULFIDE	1080	U	1080	R	34	1080	ug/kg	DL
SS	NDA121DL1	SW8260	CARBON DISULFIDE	1130	U	1130	R	35	1130	ug/kg	DL
SS	NDA123DL1	SW8260	CARBON DISULFIDE	1200	U	1200	R	37	1200	ug/kg	DL
SS	NDA124DL1	SW8260	CARBON DISULFIDE	1000	U	1000	R	31	1000	ug/kg	DL
SB	NDA165DL1	SW8260	BROMOMETHANE	1180	U	1180	R	53	1180	ug/kg	DL
SB	NDA096DL1	SW8260	BROMOMETHANE	917	U	917	R	41	917	ug/kg	DL
SB	NDA097DL1	SW8260	BROMOMETHANE	990	U	990	R	45	990	ug/kg	DL
SB	NDA296DL1	SW8260	BROMOMETHANE	1040	U	1040	R	47	1040	ug/kg	DL
SB	NDA297DL1	SW8260	BROMOMETHANE	1030	U	1030	R	46	1030	ug/kg	DL
SB	NDA298DL1	SW8260	BROMOMETHANE	1090	U	1090	R	49	1090	ug/kg	DL
SB	NDA066DL1	SW8260	BROMOMETHANE	1190	U	1190	R	54	1190	ug/kg	DL
SD	1	SW8260	BROMOMETHANE	2250	U	2250	R	101	2250	ug/kg	DL
SD	NDA052DL1	SW8260	BROMOMETHANE	2480	U	2480	R	112	2480	ug/kg	DL
SD	NDA053DL1	SW8260	BROMOMETHANE	1520	U	1520	R	69	1520	ug/kg	DL
SD	NDA047DL1	SW8260	BROMOMETHANE	858	U	858	R	39	858	ug/kg	DL
SD	NDA048DL1	SW8260	BROMOMETHANE	1200	U	1200	R	54	1200	ug/kg	DL
SD	NDA049DL1	SW8260	BROMOMETHANE	1120	U	1120	R	50	1120	ug/kg	DL
SS	NDA131DL1	SW8260	BROMOMETHANE	1200	U	1200	R	54	1200	ug/kg	DL
SS	NDA149DL1	SW8260	BROMOMETHANE	1130	U	1130	R	51	1130	ug/kg	DL
SS	1	SW8260	BROMOMETHANE	964	U	964	R	44	964	ug/kg	DL
SS	NDA166DL1	SW8260	BROMOMETHANE	1110	U	1110	R	50	1110	ug/kg	DL
SS	NDA176DL1	SW8260	BROMOMETHANE	1480	U	1480	R	67	1480	ug/kg	DL
SS	NDA196DL1	SW8260	BROMOMETHANE	937	U	937	R	42	937	ug/kg	DL
SS	1	SW8260	BROMOMETHANE	1820	U	1820	R	82	1820	ug/kg	DL
SS	NDA198DL1	SW8260	BROMOMETHANE	1160	U	1160	R	52	1160	ug/kg	DL
SS	NDA200DL1	SW8260	BROMOMETHANE	1220	U	1220	R	55	1220	ug/kg	DL
SS	NDA204DL1	SW8260	BROMOMETHANE	1350	U	1350	R	61	1350	ug/kg	DL
SS	1	SW8260	BROMOMETHANE	1380	U	1380	R	62	1380	ug/kg	DL
SS	NDA206DL1	SW8260	BROMOMETHANE	1430	U	1430	R	65	1430	ug/kg	DL
SS	NDA207DL1	SW8260	BROMOMETHANE	1290	U	1290	R	58	1290	ug/kg	DL
SS	NDA059DL1	SW8260	BROMOMETHANE	1170	U	1170	R	53	1170	ug/kg	DL
SS	NDA065DL1	SW8260	BROMOMETHANE	1220	U	1220	R	55	1220	ug/kg	DL
SS	NDA069DL1	SW8260	BROMOMETHANE	1080	U	1080	R	49	1080	ug/kg	DL
SS	NDA121DL1	SW8260	BROMOMETHANE	1130	U	1130	R	51	1130	ug/kg	DL
SS	NDA123DL1	SW8260	BROMOMETHANE	1200	U	1200	R	54	1200	ug/kg	DL
SS	NDA124DL1	SW8260	BROMOMETHANE	1000	U	1000	R	45	1000	ug/kg	DL
SB	NDA165DL1	SW8260	BROMOFORM	1180	U	1180	R	30	1180	ug/kg	DL
SB	NDA096DL1	SW8260	BROMOFORM	917	U	917	R	23	917	ug/kg	DL
SB	NDA097DL1	SW8260	BROMOFORM	990	U	990	R	25	990	ug/kg	DL
SB	NDA296DL1	SW8260	BROMOFORM	1040	U	1040	R	26	1040	ug/kg	DL
SB	NDA297DL1	SW8260	BROMOFORM	1030	U	1030	R	26	1030	ug/kg	DL
SB	NDA298DL1	SW8260	BROMOFORM	1090	U	1090	R	27	1090	ug/kg	DL
SB	NDA066DL1	SW8260	BROMOFORM	1190	U	1190	R	30	1190	ug/kg	DL
SD	1	SW8260	BROMOFORM	2250	U	2250	R	56	2250	ug/kg	DL
SD	NDA052DL1	SW8260	BROMOFORM	2480	U	2480	R	62	2480	ug/kg	DL
SD	NDA053DL1	SW8260	BROMOFORM	1520	U	1520	R	38	1520	ug/kg	DL
SD	NDA047DL1	SW8260	BROMOFORM	858	U	858	R	22	858	ug/kg	DL
SD	NDA048DL1	SW8260	BROMOFORM	1200	U	1200	R	30	1200	ug/kg	DL
SD	NDA049DL1	SW8260	BROMOFORM	1120	U	1120	R	28	1120	ug/kg	DL
SS	NDA131DL1	SW8260	BROMOFORM	1200	U	1200	R	30	1200	ug/kg	DL
SS	NDA149DL1	SW8260	BROMOFORM	1130	U	1130	R	28	1130	ug/kg	DL
SS	1	SW8260	BROMOFORM	964	U	964	R	24	964	ug/kg	DL
SS	NDA166DL1	SW8260	BROMOFORM	1110	U	1110	R	28	1110	ug/kg	DL
SS	NDA176DL1	SW8260	BROMOFORM	1480	U	1480	R	37	1480	ug/kg	DL
SS	NDA196DL1	SW8260	BROMOFORM	937	U	937	R	23	937	ug/kg	DL
SS	1	SW8260	BROMOFORM	1820	U	1820	R	46	1820	ug/kg	DL
SS	NDA198DL1	SW8260	BROMOFORM	1160	U	1160	R	29	1160	ug/kg	DL
SS	NDA200DL1	SW8260	BROMOFORM	1220	U	1220	R	31	1220	ug/kg	DL
SS	NDA204DL1	SW8260	BROMOFORM	1350	U	1350	R	34	1350	ug/kg	DL
SS	1	SW8260	BROMOFORM	1380	U	1380	R	34	1380	ug/kg	DL
SS	NDA206DL1	SW8260	BROMOFORM	1430	U	1430	R	36	1430	ug/kg	DL
SS	NDA207DL1	SW8260	BROMOFORM	1290	U	1290	R	32	1290	ug/kg	DL
SS	NDA059DL1	SW8260	BROMOFORM	1170	U	1170	R	29	1170	ug/kg	DL
SS	NDA065DL1	SW8260	BROMOFORM	1220	U	1220	R	30	1220	ug/kg	DL
SS	NDA069DL1	SW8260	BROMOFORM	1080	U	1080	R	27	1080	ug/kg	DL

Matrix	Sample ID	Analytical Method	Parameter	Lab Result	Lab Qual	Final Result	Final Qual	DL	RL	Units	Comments
SS	NDA121DL1	SW8260	BROMOFORM	1130	U	1130	R	28	1130	ug/kg	DL
SS	NDA123DL1	SW8260	BROMOFORM	1200	U	1200	R	30	1200	ug/kg	DL
SS	NDA124DL1	SW8260	BROMOFORM	1000	U	1000	R	25	1000	ug/kg	DL
SB	NDA165DL1	SW8260	BROMODICHLOROMETHANE	1180	U	1180	R	24	1180	ug/kg	DL
SB	NDA096DL1	SW8260	BROMODICHLOROMETHANE	917	U	917	R	18	917	ug/kg	DL
SB	NDA097DL1	SW8260	BROMODICHLOROMETHANE	990	U	990	R	20	990	ug/kg	DL
SB	NDA296DL1	SW8260	BROMODICHLOROMETHANE	1040	U	1040	R	21	1040	ug/kg	DL
SB	NDA297DL1	SW8260	BROMODICHLOROMETHANE	1030	U	1030	R	20	1030	ug/kg	DL
SB	NDA298DL1	SW8260	BROMODICHLOROMETHANE	1090	U	1090	R	22	1090	ug/kg	DL
SB	NDA066DL1	SW8260	BROMODICHLOROMETHANE	1190	U	1190	R	24	1190	ug/kg	DL
SD	1	SW8260	BROMODICHLOROMETHANE	2250	U	2250	R	45	2250	ug/kg	DL
SD	NDA052DL1	SW8260	BROMODICHLOROMETHANE	2480	U	2480	R	50	2480	ug/kg	DL
SD	NDA053DL1	SW8260	BROMODICHLOROMETHANE	1520	U	1520	R	30	1520	ug/kg	DL
SD	NDA047DL1	SW8260	BROMODICHLOROMETHANE	858	U	858	R	17	858	ug/kg	DL
SD	NDA048DL1	SW8260	BROMODICHLOROMETHANE	1200	U	1200	R	24	1200	ug/kg	DL
SD	NDA049DL1	SW8260	BROMODICHLOROMETHANE	1120	U	1120	R	22	1120	ug/kg	DL
SS	NDA131DL1	SW8260	BROMODICHLOROMETHANE	1200	U	1200	R	24	1200	ug/kg	DL
SS	NDA149DL1	SW8260	BROMODICHLOROMETHANE	1130	U	1130	R	23	1130	ug/kg	DL
SS	1	SW8260	BROMODICHLOROMETHANE	964	U	964	R	19	964	ug/kg	DL
SS	NDA166DL1	SW8260	BROMODICHLOROMETHANE	1110	U	1110	R	22	1110	ug/kg	DL
SS	NDA176DL1	SW8260	BROMODICHLOROMETHANE	1480	U	1480	R	30	1480	ug/kg	DL
SS	NDA196DL1	SW8260	BROMODICHLOROMETHANE	937	U	937	R	19	937	ug/kg	DL
SS	1	SW8260	BROMODICHLOROMETHANE	1820	U	1820	R	36	1820	ug/kg	DL
SS	NDA198DL1	SW8260	BROMODICHLOROMETHANE	1160	U	1160	R	23	1160	ug/kg	DL
SS	NDA200DL1	SW8260	BROMODICHLOROMETHANE	1220	U	1220	R	24	1220	ug/kg	DL
SS	NDA204DL1	SW8260	BROMODICHLOROMETHANE	1350	U	1350	R	27	1350	ug/kg	DL
SS	1	SW8260	BROMODICHLOROMETHANE	1380	U	1380	R	28	1380	ug/kg	DL
SS	NDA206DL1	SW8260	BROMODICHLOROMETHANE	1430	U	1430	R	29	1430	ug/kg	DL
SS	NDA207DL1	SW8260	BROMODICHLOROMETHANE	1290	U	1290	R	26	1290	ug/kg	DL
SS	NDA059DL1	SW8260	BROMODICHLOROMETHANE	1170	U	1170	R	23	1170	ug/kg	DL
SS	NDA065DL1	SW8260	BROMODICHLOROMETHANE	1220	U	1220	R	24	1220	ug/kg	DL
SS	NDA069DL1	SW8260	BROMODICHLOROMETHANE	1080	U	1080	R	22	1080	ug/kg	DL
SS	NDA121DL1	SW8260	BROMODICHLOROMETHANE	1130	U	1130	R	23	1130	ug/kg	DL
SS	NDA123DL1	SW8260	BROMODICHLOROMETHANE	1200	U	1200	R	24	1200	ug/kg	DL
SS	NDA124DL1	SW8260	BROMODICHLOROMETHANE	1000	U	1000	R	20	1000	ug/kg	DL
SB	NDA114DL1	SW8081	BETA ENDOSULFAN (ENDOSULFAN II)	86	U	86	R	7.8	86	ug/kg	DL
SS	NDA125DL1	SW8081	BETA ENDOSULFAN (ENDOSULFAN II)	39	U	39	R	3.5	39	ug/kg	DL
SS	NDA137DL1	SW8081	BETA ENDOSULFAN (ENDOSULFAN II)	7.1	U	7.1	R	0.64	7.1	ug/kg	DL
SS	NDA113DL1	SW8081	BETA ENDOSULFAN (ENDOSULFAN II)	8.2	U	8.2	R	0.74	8.2	ug/kg	DL
SB	NDA114DL1	SW8081	BETA BHC	44	U	44	R	12	44	ug/kg	DL
SS	NDA125DL1	SW8081	BETA BHC	20	U	20	R	5.3	20	ug/kg	DL
SS	NDA137DL1	SW8081	BETA BHC	3.6	U	3.6	R	0.96	3.6	ug/kg	DL
SS	NDA113DL1	SW8081	BETA BHC	4.2	U	4.2	R	1.1	4.2	ug/kg	DL
SB	NDA165DL1	SW8260	BENZENE	1180	U	1180	R	13	1180	ug/kg	DL
SB	NDA096DL1	SW8260	BENZENE	917	U	917	R	10	917	ug/kg	DL
SB	NDA097DL1	SW8260	BENZENE	990	U	990	R	11	990	ug/kg	DL
SB	NDA296DL1	SW8260	BENZENE	1040	U	1040	R	11	1040	ug/kg	DL
SB	NDA297DL1	SW8260	BENZENE	1030	U	1030	R	11	1030	ug/kg	DL
SB	NDA298DL1	SW8260	BENZENE	1090	U	1090	R	12	1090	ug/kg	DL
SB	NDA066DL1	SW8260	BENZENE	1190	U	1190	R	13	1190	ug/kg	DL
SD	1	SW8260	BENZENE	2250	U	2250	R	25	2250	ug/kg	DL
SD	NDA052DL1	SW8260	BENZENE	2480	U	2480	R	27	2480	ug/kg	DL
SD	NDA053DL1	SW8260	BENZENE	1520	U	1520	R	17	1520	ug/kg	DL
SD	NDA047DL1	SW8260	BENZENE	858	U	858	R	9	858	ug/kg	DL
SD	NDA048DL1	SW8260	BENZENE	1200	U	1200	R	13	1200	ug/kg	DL
SD	NDA049DL1	SW8260	BENZENE	1120	U	1120	R	12	1120	ug/kg	DL
SS	NDA131DL1	SW8260	BENZENE	1200	U	1200	R	13	1200	ug/kg	DL
SS	NDA149DL1	SW8260	BENZENE	1130	U	1130	R	12	1130	ug/kg	DL
SS	1	SW8260	BENZENE	964	U	964	R	11	964	ug/kg	DL
SS	NDA166DL1	SW8260	BENZENE	1110	U	1110	R	12	1110	ug/kg	DL
SS	NDA176DL1	SW8260	BENZENE	1480	U	1480	R	16	1480	ug/kg	DL
SS	NDA196DL1	SW8260	BENZENE	937	U	937	R	10	937	ug/kg	DL
SS	1	SW8260	BENZENE	1820	U	1820	R	20	1820	ug/kg	DL
SS	NDA198DL1	SW8260	BENZENE	1160	U	1160	R	13	1160	ug/kg	DL
SS	NDA200DL1	SW8260	BENZENE	1220	U	1220	R	13	1220	ug/kg	DL
SS	NDA204DL1	SW8260	BENZENE	1350	U	1350	R	15	1350	ug/kg	DL
SS	1	SW8260	BENZENE	1380	U	1380	R	15	1380	ug/kg	DL
SS	NDA206DL1	SW8260	BENZENE	1430	U	1430	R	16	1430	ug/kg	DL
SS	NDA207DL1	SW8260	BENZENE	1290	U	1290	R	14	1290	ug/kg	DL
SS	NDA059DL1	SW8260	BENZENE	1170	U	1170	R	13	1170	ug/kg	DL

Matrix	Sample ID	Analytical Method	Parameter	Lab Result	Lab Qual	Final Result	Final Qual	DL	RL	Units	Comments
SS	NDA065DL1	SW8260	BENZENE	1220	U	1220	R	13	1220	ug/kg	DL
SS	NDA069DL1	SW8260	BENZENE	1080	U	1080	R	12	1080	ug/kg	DL
SS	NDA121DL1	SW8260	BENZENE	1130	U	1130	R	12	1130	ug/kg	DL
SS	NDA123DL1	SW8260	BENZENE	1200	U	1200	R	13	1200	ug/kg	DL
SS	NDA124DL1	SW8260	BENZENE	1000	U	1000	R	11	1000	ug/kg	DL
SB	NDA114DL1	SW8081	ALPHA-CHLORDANE	44	U	44	R	12	44	ug/kg	DL
SS	NDA125DL1	SW8081	ALPHA-CHLORDANE	20	U	20	R	5.63	20	ug/kg	DL
SS	NDA137DL1	SW8081	ALPHA-CHLORDANE	3.6	U	3.6	R	1.02	3.6	ug/kg	DL
SS	NDA113DL1	SW8081	ALPHA-CHLORDANE	4.2	U	4.2	R	1.2	4.2	ug/kg	DL
SB	NDA114DL1	SW8081	ALPHA ENDOSULFAN (ENDOSULFAN I)	44	U	44	R	12	44	ug/kg	DL
SS	NDA125DL1	SW8081	ALPHA ENDOSULFAN (ENDOSULFAN I)	20	U	20	R	5.53	20	ug/kg	DL
SS	NDA137DL1	SW8081	ALPHA ENDOSULFAN (ENDOSULFAN I)	3.6	U	3.6	R	1	3.6	ug/kg	DL
SS	NDA113DL1	SW8081	ALPHA ENDOSULFAN (ENDOSULFAN I)	4.2	U	4.2	R	1.2	4.2	ug/kg	DL
SB	NDA114DL1	SW8081	ALPHA BHC	44	U	44	R	13	44	ug/kg	DL
SS	NDA125DL1	SW8081	ALPHA BHC	20	U	20	R	5.78	20	ug/kg	DL
SS	NDA137DL1	SW8081	ALPHA BHC	3.6	U	3.6	R	1.04	3.6	ug/kg	DL
SS	NDA113DL1	SW8081	ALPHA BHC	4.2	U	4.2	R	1.2	4.2	ug/kg	DL
SB	NDA114DL1	SW8081	ALDRIN	44	U	44	R	12	44	ug/kg	DL
SS	NDA125DL1	SW8081	ALDRIN	20	U	20	R	5.53	20	ug/kg	DL
SS	NDA137DL1	SW8081	ALDRIN	3.6	U	3.6	R	1	3.6	ug/kg	DL
SS	NDA113DL1	SW8081	ALDRIN	4.2	U	4.2	R	1.2	4.2	ug/kg	DL
SB	NDA096DL1	SW8260	ACETONE	1270	=	1270	R	917	917	ug/kg	DL
SB	NDA097DL1	SW8260	ACETONE	2100	=	2100	R	990	990	ug/kg	DL
SD	1	SW8260	ACETONE	2250	U	2250	R	2240	2250	ug/kg	DL
SD	NDA052DL1	SW8260	ACETONE	2480	U	2480	R	2480	2480	ug/kg	DL
SD	NDA053DL1	SW8260	ACETONE	1520	U	1520	R	1520	1520	ug/kg	DL
SS	NDA166DL1	SW8260	ACETONE	1110	U	1110	R	1110	1110	ug/kg	DL
SS	NDA176DL1	SW8260	ACETONE	1480	U	1480	R	1480	1480	ug/kg	DL
SB	NDA165DL1	SW8260	2-HEXANONE	1180	U	1180	R	130	1180	ug/kg	DL
SB	NDA096DL1	SW8260	2-HEXANONE	917	U	917	R	101	917	ug/kg	DL
SB	NDA097DL1	SW8260	2-HEXANONE	990	U	990	R	109	990	ug/kg	DL
SB	NDA296DL1	SW8260	2-HEXANONE	1040	U	1040	R	115	1040	ug/kg	DL
SB	NDA297DL1	SW8260	2-HEXANONE	1030	U	1030	R	112	1030	ug/kg	DL
SB	NDA298DL1	SW8260	2-HEXANONE	1090	U	1090	R	119	1090	ug/kg	DL
SB	NDA066DL1	SW8260	2-HEXANONE	1190	U	1190	R	131	1190	ug/kg	DL
SD	1	SW8260	2-HEXANONE	2250	U	2250	R	246	2250	ug/kg	DL
SD	NDA052DL1	SW8260	2-HEXANONE	2480	U	2480	R	273	2480	ug/kg	DL
SD	NDA053DL1	SW8260	2-HEXANONE	1520	U	1520	R	168	1520	ug/kg	DL
SD	NDA047DL1	SW8260	2-HEXANONE	858	U	858	R	95	858	ug/kg	DL
SD	NDA048DL1	SW8260	2-HEXANONE	1200	U	1200	R	132	1200	ug/kg	DL
SD	NDA049DL1	SW8260	2-HEXANONE	1120	U	1120	R	123	1120	ug/kg	DL
SS	NDA131DL1	SW8260	2-HEXANONE	1200	U	1200	R	132	1200	ug/kg	DL
SS	NDA149DL1	SW8260	2-HEXANONE	1130	U	1130	R	125	1130	ug/kg	DL
SS	1	SW8260	2-HEXANONE	964	U	964	R	106	964	ug/kg	DL
SS	NDA166DL1	SW8260	2-HEXANONE	1110	U	1110	R	123	1110	ug/kg	DL
SS	NDA176DL1	SW8260	2-HEXANONE	1480	U	1480	R	163	1480	ug/kg	DL
SS	NDA196DL1	SW8260	2-HEXANONE	937	U	937	R	103	937	ug/kg	DL
SS	1	SW8260	2-HEXANONE	1820	U	1820	R	200	1820	ug/kg	DL
SS	NDA198DL1	SW8260	2-HEXANONE	1160	U	1160	R	127	1160	ug/kg	DL
SS	NDA200DL1	SW8260	2-HEXANONE	1220	U	1220	R	135	1220	ug/kg	DL
SS	NDA204DL1	SW8260	2-HEXANONE	1350	U	1350	R	149	1350	ug/kg	DL
SS	1	SW8260	2-HEXANONE	1380	U	1380	R	151	1380	ug/kg	DL
SS	NDA206DL1	SW8260	2-HEXANONE	1430	U	1430	R	158	1430	ug/kg	DL
SS	NDA207DL1	SW8260	2-HEXANONE	1290	U	1290	R	142	1290	ug/kg	DL
SS	NDA059DL1	SW8260	2-HEXANONE	1170	U	1170	R	129	1170	ug/kg	DL
SS	NDA065DL1	SW8260	2-HEXANONE	1220	U	1220	R	134	1220	ug/kg	DL
SS	NDA069DL1	SW8260	2-HEXANONE	1080	U	1080	R	119	1080	ug/kg	DL
SS	NDA121DL1	SW8260	2-HEXANONE	1130	U	1130	R	124	1130	ug/kg	DL
SS	NDA123DL1	SW8260	2-HEXANONE	1200	U	1200	R	132	1200	ug/kg	DL
SS	NDA124DL1	SW8260	2-HEXANONE	1000	U	1000	R	110	1000	ug/kg	DL
SB	NDA165DL1	SW8260	1,2-DICHLOROPROPANE	1180	U	1180	R	17	1180	ug/kg	DL
SB	NDA096DL1	SW8260	1,2-DICHLOROPROPANE	917	U	917	R	13	917	ug/kg	DL
SB	NDA097DL1	SW8260	1,2-DICHLOROPROPANE	990	U	990	R	14	990	ug/kg	DL
SB	NDA296DL1	SW8260	1,2-DICHLOROPROPANE	1040	U	1040	R	15	1040	ug/kg	DL
SB	NDA297DL1	SW8260	1,2-DICHLOROPROPANE	1030	U	1030	R	14	1030	ug/kg	DL
SB	NDA298DL1	SW8260	1,2-DICHLOROPROPANE	1090	U	1090	R	15	1090	ug/kg	DL
SB	NDA066DL1	SW8260	1,2-DICHLOROPROPANE	1190	U	1190	R	17	1190	ug/kg	DL
SD	1	SW8260	1,2-DICHLOROPROPANE	2250	U	2250	R	31	2250	ug/kg	DL
SD	NDA052DL1	SW8260	1,2-DICHLOROPROPANE	2480	U	2480	R	35	2480	ug/kg	DL
SD	NDA053DL1	SW8260	1,2-DICHLOROPROPANE	1520	U	1520	R	21	1520	ug/kg	DL

Matrix	Sample ID	Analytical Method	Parameter	Lab Result	Lab Qual	Final Result	Final Qual	DL	RL	Units	Comments
SD	NDA047DL1	SW8260	1,2-DICHLOROPROPANE	858	U	858	R	12	858	ug/kg	DL
SD	NDA048DL1	SW8260	1,2-DICHLOROPROPANE	1200	U	1200	R	17	1200	ug/kg	DL
SD	NDA049DL1	SW8260	1,2-DICHLOROPROPANE	1120	U	1120	R	16	1120	ug/kg	DL
SS	NDA131DL1	SW8260	1,2-DICHLOROPROPANE	1200	U	1200	R	17	1200	ug/kg	DL
SS	NDA149DL1	SW8260	1,2-DICHLOROPROPANE	1130	U	1130	R	16	1130	ug/kg	DL
SS	1	SW8260	1,2-DICHLOROPROPANE	964	U	964	R	14	964	ug/kg	DL
SS	NDA166DL1	SW8260	1,2-DICHLOROPROPANE	1110	U	1110	R	16	1110	ug/kg	DL
SS	NDA176DL1	SW8260	1,2-DICHLOROPROPANE	1480	U	1480	R	21	1480	ug/kg	DL
SS	NDA196DL1	SW8260	1,2-DICHLOROPROPANE	937	U	937	R	13	937	ug/kg	DL
SS	1	SW8260	1,2-DICHLOROPROPANE	1820	U	1820	R	25	1820	ug/kg	DL
SS	NDA198DL1	SW8260	1,2-DICHLOROPROPANE	1160	U	1160	R	16	1160	ug/kg	DL
SS	NDA200DL1	SW8260	1,2-DICHLOROPROPANE	1220	U	1220	R	17	1220	ug/kg	DL
SS	NDA204DL1	SW8260	1,2-DICHLOROPROPANE	1350	U	1350	R	19	1350	ug/kg	DL
SS	1	SW8260	1,2-DICHLOROPROPANE	1380	U	1380	R	19	1380	ug/kg	DL
SS	NDA206DL1	SW8260	1,2-DICHLOROPROPANE	1430	U	1430	R	20	1430	ug/kg	DL
SS	NDA207DL1	SW8260	1,2-DICHLOROPROPANE	1290	U	1290	R	18	1290	ug/kg	DL
SS	NDA059DL1	SW8260	1,2-DICHLOROPROPANE	1170	U	1170	R	16	1170	ug/kg	DL
SS	NDA065DL1	SW8260	1,2-DICHLOROPROPANE	1220	U	1220	R	17	1220	ug/kg	DL
SS	NDA069DL1	SW8260	1,2-DICHLOROPROPANE	1080	U	1080	R	15	1080	ug/kg	DL
SS	NDA121DL1	SW8260	1,2-DICHLOROPROPANE	1130	U	1130	R	16	1130	ug/kg	DL
SS	NDA123DL1	SW8260	1,2-DICHLOROPROPANE	1200	U	1200	R	17	1200	ug/kg	DL
SS	NDA124DL1	SW8260	1,2-DICHLOROPROPANE	1000	U	1000	R	14	1000	ug/kg	DL
SB	NDA165DL1	SW8260	1,2-DICHLOROETHANE	1180	U	1180	R	28	1180	ug/kg	DL
SB	NDA096DL1	SW8260	1,2-DICHLOROETHANE	917	U	917	R	22	917	ug/kg	DL
SB	NDA097DL1	SW8260	1,2-DICHLOROETHANE	990	U	990	R	24	990	ug/kg	DL
SB	NDA296DL1	SW8260	1,2-DICHLOROETHANE	1040	U	1040	R	25	1040	ug/kg	DL
SB	NDA297DL1	SW8260	1,2-DICHLOROETHANE	1030	U	1030	R	25	1030	ug/kg	DL
SB	NDA298DL1	SW8260	1,2-DICHLOROETHANE	1090	U	1090	R	26	1090	ug/kg	DL
SB	NDA066DL1	SW8260	1,2-DICHLOROETHANE	1190	U	1190	R	29	1190	ug/kg	DL
SD	1	SW8260	1,2-DICHLOROETHANE	2250	U	2250	R	54	2250	ug/kg	DL
SD	NDA052DL1	SW8260	1,2-DICHLOROETHANE	2480	U	2480	R	60	2480	ug/kg	DL
SD	NDA053DL1	SW8260	1,2-DICHLOROETHANE	1520	U	1520	R	37	1520	ug/kg	DL
SD	NDA047DL1	SW8260	1,2-DICHLOROETHANE	858	U	858	R	21	858	ug/kg	DL
SD	NDA048DL1	SW8260	1,2-DICHLOROETHANE	1200	U	1200	R	29	1200	ug/kg	DL
SD	NDA049DL1	SW8260	1,2-DICHLOROETHANE	1120	U	1120	R	27	1120	ug/kg	DL
SS	NDA131DL1	SW8260	1,2-DICHLOROETHANE	1200	U	1200	R	29	1200	ug/kg	DL
SS	NDA149DL1	SW8260	1,2-DICHLOROETHANE	1130	U	1130	R	27	1130	ug/kg	DL
SS	1	SW8260	1,2-DICHLOROETHANE	964	U	964	R	23	964	ug/kg	DL
SS	NDA166DL1	SW8260	1,2-DICHLOROETHANE	1110	U	1110	R	27	1110	ug/kg	DL
SS	NDA176DL1	SW8260	1,2-DICHLOROETHANE	1480	U	1480	R	36	1480	ug/kg	DL
SS	NDA196DL1	SW8260	1,2-DICHLOROETHANE	937	U	937	R	23	937	ug/kg	DL
SS	1	SW8260	1,2-DICHLOROETHANE	1820	U	1820	R	44	1820	ug/kg	DL
SS	NDA198DL1	SW8260	1,2-DICHLOROETHANE	1160	U	1160	R	28	1160	ug/kg	DL
SS	NDA200DL1	SW8260	1,2-DICHLOROETHANE	1220	U	1220	R	29	1220	ug/kg	DL
SS	NDA204DL1	SW8260	1,2-DICHLOROETHANE	1350	U	1350	R	32	1350	ug/kg	DL
SS	1	SW8260	1,2-DICHLOROETHANE	1380	U	1380	R	33	1380	ug/kg	DL
SS	NDA206DL1	SW8260	1,2-DICHLOROETHANE	1430	U	1430	R	34	1430	ug/kg	DL
SS	NDA207DL1	SW8260	1,2-DICHLOROETHANE	1290	U	1290	R	31	1290	ug/kg	DL
SS	NDA059DL1	SW8260	1,2-DICHLOROETHANE	1170	U	1170	R	28	1170	ug/kg	DL
SS	NDA065DL1	SW8260	1,2-DICHLOROETHANE	1220	U	1220	R	29	1220	ug/kg	DL
SS	NDA069DL1	SW8260	1,2-DICHLOROETHANE	1080	U	1080	R	26	1080	ug/kg	DL
SS	NDA121DL1	SW8260	1,2-DICHLOROETHANE	1130	U	1130	R	27	1130	ug/kg	DL
SS	NDA123DL1	SW8260	1,2-DICHLOROETHANE	1200	U	1200	R	29	1200	ug/kg	DL
SS	NDA124DL1	SW8260	1,2-DICHLOROETHANE	1000	U	1000	R	24	1000	ug/kg	DL
SB	NDA165DL1	SW8260	1,1-DICHLOROETHENE	1180	U	1180	R	46	1180	ug/kg	DL
SB	NDA096DL1	SW8260	1,1-DICHLOROETHENE	917	U	917	R	36	917	ug/kg	DL
SB	NDA097DL1	SW8260	1,1-DICHLOROETHENE	990	U	990	R	39	990	ug/kg	DL
SB	NDA296DL1	SW8260	1,1-DICHLOROETHENE	1040	U	1040	R	41	1040	ug/kg	DL
SB	NDA297DL1	SW8260	1,1-DICHLOROETHENE	1030	U	1030	R	40	1030	ug/kg	DL
SB	NDA298DL1	SW8260	1,1-DICHLOROETHENE	1090	U	1090	R	42	1090	ug/kg	DL
SB	NDA066DL1	SW8260	1,1-DICHLOROETHENE	1190	U	1190	R	47	1190	ug/kg	DL
SD	1	SW8260	1,1-DICHLOROETHENE	2250	U	2250	R	87	2250	ug/kg	DL
SD	NDA052DL1	SW8260	1,1-DICHLOROETHENE	2480	U	2480	R	97	2480	ug/kg	DL
SD	NDA053DL1	SW8260	1,1-DICHLOROETHENE	1520	U	1520	R	59	1520	ug/kg	DL
SD	NDA047DL1	SW8260	1,1-DICHLOROETHENE	858	U	858	R	34	858	ug/kg	DL
SD	NDA048DL1	SW8260	1,1-DICHLOROETHENE	1200	U	1200	R	47	1200	ug/kg	DL
SD	NDA049DL1	SW8260	1,1-DICHLOROETHENE	1120	U	1120	R	44	1120	ug/kg	DL
SS	NDA131DL1	SW8260	1,1-DICHLOROETHENE	1200	U	1200	R	47	1200	ug/kg	DL
SS	NDA149DL1	SW8260	1,1-DICHLOROETHENE	1130	U	1130	R	44	1130	ug/kg	DL
SS	1	SW8260	1,1-DICHLOROETHENE	964	U	964	R	38	964	ug/kg	DL

Matrix	Sample ID	Analytical Method	Parameter	Lab Result	Lab Qual	Final Result	Final Qual	DL	RL	Units	Comments
SS	NDA166DL1	SW8260	1,1-DICHLOROETHENE	1110	U	1110	R	44	1110	ug/kg	DL
SS	NDA176DL1	SW8260	1,1-DICHLOROETHENE	1480	U	1480	R	58	1480	ug/kg	DL
SS	NDA196DL1	SW8260	1,1-DICHLOROETHENE	937	U	937	R	37	937	ug/kg	DL
SS	1	SW8260	1,1-DICHLOROETHENE	1820	U	1820	R	71	1820	ug/kg	DL
SS	NDA198DL1	SW8260	1,1-DICHLOROETHENE	1160	U	1160	R	45	1160	ug/kg	DL
SS	NDA200DL1	SW8260	1,1-DICHLOROETHENE	1220	U	1220	R	48	1220	ug/kg	DL
SS	NDA204DL1	SW8260	1,1-DICHLOROETHENE	1350	U	1350	R	53	1350	ug/kg	DL
SS	1	SW8260	1,1-DICHLOROETHENE	1380	U	1380	R	54	1380	ug/kg	DL
SS	NDA206DL1	SW8260	1,1-DICHLOROETHENE	1430	U	1430	R	56	1430	ug/kg	DL
SS	NDA207DL1	SW8260	1,1-DICHLOROETHENE	1290	U	1290	R	50	1290	ug/kg	DL
SS	NDA059DL1	SW8260	1,1-DICHLOROETHENE	1170	U	1170	R	46	1170	ug/kg	DL
SS	NDA065DL1	SW8260	1,1-DICHLOROETHENE	1220	U	1220	R	48	1220	ug/kg	DL
SS	NDA069DL1	SW8260	1,1-DICHLOROETHENE	1080	U	1080	R	42	1080	ug/kg	DL
SS	NDA121DL1	SW8260	1,1-DICHLOROETHENE	1130	U	1130	R	44	1130	ug/kg	DL
SS	NDA123DL1	SW8260	1,1-DICHLOROETHENE	1200	U	1200	R	47	1200	ug/kg	DL
SS	NDA124DL1	SW8260	1,1-DICHLOROETHENE	1000	U	1000	R	39	1000	ug/kg	DL
SB	NDA165DL1	SW8260	1,1-DICHLOROETHANE	1180	U	1180	R	46	1180	ug/kg	DL
SB	NDA096DL1	SW8260	1,1-DICHLOROETHANE	917	U	917	R	36	917	ug/kg	DL
SB	NDA097DL1	SW8260	1,1-DICHLOROETHANE	990	U	990	R	39	990	ug/kg	DL
SB	NDA296DL1	SW8260	1,1-DICHLOROETHANE	1040	U	1040	R	41	1040	ug/kg	DL
SB	NDA297DL1	SW8260	1,1-DICHLOROETHANE	1030	U	1030	R	40	1030	ug/kg	DL
SB	NDA298DL1	SW8260	1,1-DICHLOROETHANE	1090	U	1090	R	42	1090	ug/kg	DL
SB	NDA066DL1	SW8260	1,1-DICHLOROETHANE	1190	U	1190	R	47	1190	ug/kg	DL
SD	1	SW8260	1,1-DICHLOROETHANE	2250	U	2250	R	87	2250	ug/kg	DL
SD	NDA052DL1	SW8260	1,1-DICHLOROETHANE	2480	U	2480	R	97	2480	ug/kg	DL
SD	NDA053DL1	SW8260	1,1-DICHLOROETHANE	1520	U	1520	R	59	1520	ug/kg	DL
SD	NDA047DL1	SW8260	1,1-DICHLOROETHANE	858	U	858	R	34	858	ug/kg	DL
SD	NDA048DL1	SW8260	1,1-DICHLOROETHANE	1200	U	1200	R	47	1200	ug/kg	DL
SD	NDA049DL1	SW8260	1,1-DICHLOROETHANE	1120	U	1120	R	44	1120	ug/kg	DL
SS	NDA131DL1	SW8260	1,1-DICHLOROETHANE	1200	U	1200	R	47	1200	ug/kg	DL
SS	NDA149DL1	SW8260	1,1-DICHLOROETHANE	1130	U	1130	R	44	1130	ug/kg	DL
SS	1	SW8260	1,1-DICHLOROETHANE	964	U	964	R	38	964	ug/kg	DL
SS	NDA166DL1	SW8260	1,1-DICHLOROETHANE	1110	U	1110	R	44	1110	ug/kg	DL
SS	NDA176DL1	SW8260	1,1-DICHLOROETHANE	1480	U	1480	R	58	1480	ug/kg	DL
SS	NDA196DL1	SW8260	1,1-DICHLOROETHANE	937	U	937	R	37	937	ug/kg	DL
SS	1	SW8260	1,1-DICHLOROETHANE	1820	U	1820	R	71	1820	ug/kg	DL
SS	NDA198DL1	SW8260	1,1-DICHLOROETHANE	1160	U	1160	R	45	1160	ug/kg	DL
SS	NDA200DL1	SW8260	1,1-DICHLOROETHANE	1220	U	1220	R	48	1220	ug/kg	DL
SS	NDA204DL1	SW8260	1,1-DICHLOROETHANE	1350	U	1350	R	53	1350	ug/kg	DL
SS	1	SW8260	1,1-DICHLOROETHANE	1380	U	1380	R	54	1380	ug/kg	DL
SS	NDA206DL1	SW8260	1,1-DICHLOROETHANE	1430	U	1430	R	56	1430	ug/kg	DL
SS	NDA207DL1	SW8260	1,1-DICHLOROETHANE	1290	U	1290	R	50	1290	ug/kg	DL
SS	NDA059DL1	SW8260	1,1-DICHLOROETHANE	1170	U	1170	R	46	1170	ug/kg	DL
SS	NDA065DL1	SW8260	1,1-DICHLOROETHANE	1220	U	1220	R	48	1220	ug/kg	DL
SS	NDA069DL1	SW8260	1,1-DICHLOROETHANE	1080	U	1080	R	42	1080	ug/kg	DL
SS	NDA121DL1	SW8260	1,1-DICHLOROETHANE	1130	U	1130	R	44	1130	ug/kg	DL
SS	NDA123DL1	SW8260	1,1-DICHLOROETHANE	1200	U	1200	R	47	1200	ug/kg	DL
SS	NDA124DL1	SW8260	1,1-DICHLOROETHANE	1000	U	1000	R	39	1000	ug/kg	DL
SB	NDA165DL1	SW8260	1,1,2-TRICHLOROETHANE	1180	U	1180	R	40	1180	ug/kg	DL
SB	NDA096DL1	SW8260	1,1,2-TRICHLOROETHANE	917	U	917	R	31	917	ug/kg	DL
SB	NDA097DL1	SW8260	1,1,2-TRICHLOROETHANE	990	U	990	R	34	990	ug/kg	DL
SB	NDA296DL1	SW8260	1,1,2-TRICHLOROETHANE	1040	U	1040	R	35	1040	ug/kg	DL
SB	NDA297DL1	SW8260	1,1,2-TRICHLOROETHANE	1030	U	1030	R	35	1030	ug/kg	DL
SB	NDA298DL1	SW8260	1,1,2-TRICHLOROETHANE	1090	U	1090	R	37	1090	ug/kg	DL
SB	NDA066DL1	SW8260	1,1,2-TRICHLOROETHANE	1190	U	1190	R	41	1190	ug/kg	DL
SD	1	SW8260	1,1,2-TRICHLOROETHANE	2250	U	2250	R	76	2250	ug/kg	DL
SD	NDA052DL1	SW8260	1,1,2-TRICHLOROETHANE	2480	U	2480	R	84	2480	ug/kg	DL
SD	NDA053DL1	SW8260	1,1,2-TRICHLOROETHANE	1520	U	1520	R	52	1520	ug/kg	DL
SD	NDA047DL1	SW8260	1,1,2-TRICHLOROETHANE	858	U	858	R	29	858	ug/kg	DL
SD	NDA048DL1	SW8260	1,1,2-TRICHLOROETHANE	1200	U	1200	R	41	1200	ug/kg	DL
SD	NDA049DL1	SW8260	1,1,2-TRICHLOROETHANE	1120	U	1120	R	38	1120	ug/kg	DL
SS	NDA131DL1	SW8260	1,1,2-TRICHLOROETHANE	1200	U	1200	R	41	1200	ug/kg	DL
SS	NDA149DL1	SW8260	1,1,2-TRICHLOROETHANE	1130	U	1130	R	39	1130	ug/kg	DL
SS	1	SW8260	1,1,2-TRICHLOROETHANE	964	U	964	R	33	964	ug/kg	DL
SS	NDA166DL1	SW8260	1,1,2-TRICHLOROETHANE	1110	U	1110	R	38	1110	ug/kg	DL
SS	NDA176DL1	SW8260	1,1,2-TRICHLOROETHANE	1480	U	1480	R	50	1480	ug/kg	DL
SS	NDA196DL1	SW8260	1,1,2-TRICHLOROETHANE	937	U	937	R	32	937	ug/kg	DL
SS	1	SW8260	1,1,2-TRICHLOROETHANE	1820	U	1820	R	62	1820	ug/kg	DL
SS	NDA198DL1	SW8260	1,1,2-TRICHLOROETHANE	1160	U	1160	R	39	1160	ug/kg	DL
SS	NDA200DL1	SW8260	1,1,2-TRICHLOROETHANE	1220	U	1220	R	42	1220	ug/kg	DL

Matrix	Sample ID	Analytical Method	Parameter	Lab Result	Lab Qual	Final Result	Final Qual	DL	RL	Units	Comments
SS	NDA204DL1	SW8260	1,1,2-TRICHLOROETHANE	1350	U	1350	R	46	1350	ug/kg	DL
SS	1	SW8260	1,1,2-TRICHLOROETHANE	1380	U	1380	R	47	1380	ug/kg	DL
SS	NDA206DL1	SW8260	1,1,2-TRICHLOROETHANE	1430	U	1430	R	49	1430	ug/kg	DL
SS	NDA207DL1	SW8260	1,1,2-TRICHLOROETHANE	1290	U	1290	R	44	1290	ug/kg	DL
SS	NDA059DL1	SW8260	1,1,2-TRICHLOROETHANE	1170	U	1170	R	40	1170	ug/kg	DL
SS	NDA065DL1	SW8260	1,1,2-TRICHLOROETHANE	1220	U	1220	R	41	1220	ug/kg	DL
SS	NDA069DL1	SW8260	1,1,2-TRICHLOROETHANE	1080	U	1080	R	37	1080	ug/kg	DL
SS	NDA121DL1	SW8260	1,1,2-TRICHLOROETHANE	1130	U	1130	R	38	1130	ug/kg	DL
SS	NDA123DL1	SW8260	1,1,2-TRICHLOROETHANE	1200	U	1200	R	41	1200	ug/kg	DL
SS	NDA124DL1	SW8260	1,1,2-TRICHLOROETHANE	1000	U	1000	R	34	1000	ug/kg	DL
SB	NDA165DL1	SW8260	1,1,2,2-TETRACHLOROETHANE	1180	U	1180	R	18	1180	ug/kg	DL
SB	NDA096DL1	SW8260	1,1,2,2-TETRACHLOROETHANE	917	U	917	R	14	917	ug/kg	DL
SB	NDA097DL1	SW8260	1,1,2,2-TETRACHLOROETHANE	990	U	990	R	15	990	ug/kg	DL
SB	NDA296DL1	SW8260	1,1,2,2-TETRACHLOROETHANE	1040	U	1040	R	16	1040	ug/kg	DL
SB	NDA297DL1	SW8260	1,1,2,2-TETRACHLOROETHANE	1030	U	1030	R	15	1030	ug/kg	DL
SB	NDA298DL1	SW8260	1,1,2,2-TETRACHLOROETHANE	1090	U	1090	R	16	1090	ug/kg	DL
SB	NDA066DL1	SW8260	1,1,2,2-TETRACHLOROETHANE	1190	U	1190	R	18	1190	ug/kg	DL
SD	1	SW8260	1,1,2,2-TETRACHLOROETHANE	2250	U	2250	R	34	2250	ug/kg	DL
SD	NDA052DL1	SW8260	1,1,2,2-TETRACHLOROETHANE	2480	U	2480	R	37	2480	ug/kg	DL
SD	NDA053DL1	SW8260	1,1,2,2-TETRACHLOROETHANE	1520	U	1520	R	23	1520	ug/kg	DL
SD	NDA047DL1	SW8260	1,1,2,2-TETRACHLOROETHANE	858	U	858	R	13	858	ug/kg	DL
SD	NDA048DL1	SW8260	1,1,2,2-TETRACHLOROETHANE	1200	U	1200	R	18	1200	ug/kg	DL
SD	NDA049DL1	SW8260	1,1,2,2-TETRACHLOROETHANE	1120	U	1120	R	17	1120	ug/kg	DL
SS	NDA131DL1	SW8260	1,1,2,2-TETRACHLOROETHANE	1200	U	1200	R	18	1200	ug/kg	DL
SS	NDA149DL1	SW8260	1,1,2,2-TETRACHLOROETHANE	1130	U	1130	R	17	1130	ug/kg	DL
SS	1	SW8260	1,1,2,2-TETRACHLOROETHANE	964	U	964	R	15	964	ug/kg	DL
SS	NDA166DL1	SW8260	1,1,2,2-TETRACHLOROETHANE	1110	U	1110	R	17	1110	ug/kg	DL
SS	NDA176DL1	SW8260	1,1,2,2-TETRACHLOROETHANE	1480	U	1480	R	22	1480	ug/kg	DL
SS	NDA196DL1	SW8260	1,1,2,2-TETRACHLOROETHANE	937	U	937	R	14	937	ug/kg	DL
SS	1	SW8260	1,1,2,2-TETRACHLOROETHANE	1820	U	1820	R	27	1820	ug/kg	DL
SS	NDA198DL1	SW8260	1,1,2,2-TETRACHLOROETHANE	1160	U	1160	R	17	1160	ug/kg	DL
SS	NDA200DL1	SW8260	1,1,2,2-TETRACHLOROETHANE	1220	U	1220	R	18	1220	ug/kg	DL
SS	NDA204DL1	SW8260	1,1,2,2-TETRACHLOROETHANE	1350	U	1350	R	20	1350	ug/kg	DL
SS	1	SW8260	1,1,2,2-TETRACHLOROETHANE	1380	U	1380	R	21	1380	ug/kg	DL
SS	NDA206DL1	SW8260	1,1,2,2-TETRACHLOROETHANE	1430	U	1430	R	22	1430	ug/kg	DL
SS	NDA207DL1	SW8260	1,1,2,2-TETRACHLOROETHANE	1290	U	1290	R	19	1290	ug/kg	DL
SS	NDA059DL1	SW8260	1,1,2,2-TETRACHLOROETHANE	1170	U	1170	R	18	1170	ug/kg	DL
SS	NDA065DL1	SW8260	1,1,2,2-TETRACHLOROETHANE	1220	U	1220	R	18	1220	ug/kg	DL
SS	NDA069DL1	SW8260	1,1,2,2-TETRACHLOROETHANE	1080	U	1080	R	16	1080	ug/kg	DL
SS	NDA121DL1	SW8260	1,1,2,2-TETRACHLOROETHANE	1130	U	1130	R	17	1130	ug/kg	DL
SS	NDA123DL1	SW8260	1,1,2,2-TETRACHLOROETHANE	1200	U	1200	R	18	1200	ug/kg	DL
SS	NDA124DL1	SW8260	1,1,2,2-TETRACHLOROETHANE	1000	U	1000	R	15	1000	ug/kg	DL
SB	NDA165DL1	SW8260	1,1,1-TRICHLOROETHANE	1180	U	1180	R	37	1180	ug/kg	DL
SB	NDA096DL1	SW8260	1,1,1-TRICHLOROETHANE	917	U	917	R	28	917	ug/kg	DL
SB	NDA097DL1	SW8260	1,1,1-TRICHLOROETHANE	990	U	990	R	31	990	ug/kg	DL
SB	NDA296DL1	SW8260	1,1,1-TRICHLOROETHANE	1040	U	1040	R	32	1040	ug/kg	DL
SB	NDA297DL1	SW8260	1,1,1-TRICHLOROETHANE	1030	U	1030	R	32	1030	ug/kg	DL
SB	NDA298DL1	SW8260	1,1,1-TRICHLOROETHANE	1090	U	1090	R	34	1090	ug/kg	DL
SB	NDA066DL1	SW8260	1,1,1-TRICHLOROETHANE	1190	U	1190	R	37	1190	ug/kg	DL
SD	1	SW8260	1,1,1-TRICHLOROETHANE	2250	U	2250	R	69	2250	ug/kg	DL
SD	NDA052DL1	SW8260	1,1,1-TRICHLOROETHANE	2480	U	2480	R	77	2480	ug/kg	DL
SD	NDA053DL1	SW8260	1,1,1-TRICHLOROETHANE	1520	U	1520	R	47	1520	ug/kg	DL
SD	NDA047DL1	SW8260	1,1,1-TRICHLOROETHANE	858	U	858	R	27	858	ug/kg	DL
SD	NDA048DL1	SW8260	1,1,1-TRICHLOROETHANE	1200	U	1200	R	37	1200	ug/kg	DL
SD	NDA049DL1	SW8260	1,1,1-TRICHLOROETHANE	1120	U	1120	R	35	1120	ug/kg	DL
SS	NDA131DL1	SW8260	1,1,1-TRICHLOROETHANE	1200	U	1200	R	37	1200	ug/kg	DL
SS	NDA149DL1	SW8260	1,1,1-TRICHLOROETHANE	1130	U	1130	R	35	1130	ug/kg	DL
SS	1	SW8260	1,1,1-TRICHLOROETHANE	964	U	964	R	30	964	ug/kg	DL
SS	NDA166DL1	SW8260	1,1,1-TRICHLOROETHANE	1110	U	1110	R	35	1110	ug/kg	DL
SS	NDA176DL1	SW8260	1,1,1-TRICHLOROETHANE	1480	U	1480	R	46	1480	ug/kg	DL
SS	NDA196DL1	SW8260	1,1,1-TRICHLOROETHANE	937	U	937	R	29	937	ug/kg	DL
SS	1	SW8260	1,1,1-TRICHLOROETHANE	1820	U	1820	R	56	1820	ug/kg	DL
SS	NDA198DL1	SW8260	1,1,1-TRICHLOROETHANE	1160	U	1160	R	36	1160	ug/kg	DL
SS	NDA200DL1	SW8260	1,1,1-TRICHLOROETHANE	1220	U	1220	R	38	1220	ug/kg	DL
SS	NDA204DL1	SW8260	1,1,1-TRICHLOROETHANE	1350	U	1350	R	42	1350	ug/kg	DL
SS	1	SW8260	1,1,1-TRICHLOROETHANE	1380	U	1380	R	43	1380	ug/kg	DL
SS	NDA206DL1	SW8260	1,1,1-TRICHLOROETHANE	1430	U	1430	R	44	1430	ug/kg	DL
SS	NDA207DL1	SW8260	1,1,1-TRICHLOROETHANE	1290	U	1290	R	40	1290	ug/kg	DL
SS	NDA059DL1	SW8260	1,1,1-TRICHLOROETHANE	1170	U	1170	R	36	1170	ug/kg	DL
SS	NDA065DL1	SW8260	1,1,1-TRICHLOROETHANE	1220	U	1220	R	38	1220	ug/kg	DL

Matrix	Sample ID	Analytical Method	Parameter	Lab Result	Lab Qual	Final Result	Final Qual	DL	RL	Units	Comments
SS	NDA069DL1	SW8260	1,1,1-TRICHLOROETHANE	1080	U	1080	R	34	1080	ug/kg	DL
SS	NDA121DL1	SW8260	1,1,1-TRICHLOROETHANE	1130	U	1130	R	35	1130	ug/kg	DL
SS	NDA123DL1	SW8260	1,1,1-TRICHLOROETHANE	1200	U	1200	R	37	1200	ug/kg	DL
SS	NDA124DL1	SW8260	1,1,1-TRICHLOROETHANE	1000	U	1000	R	31	1000	ug/kg	DL
SB	NDA064FD1	E200.7	BARIUM	869	E	869	R	0.01	43.4	mg/kg	DL
SB	NDA068	E200.7	BARIUM	829	E	829	R	0.01	44	mg/kg	DL
SS	NDA133	SW8260	CHLOROETHANE	16	U	16	UJ	0.87	16	ug/kg	CC, SS
SS	NDA139	SW8260	CHLOROETHANE	11	U	11	UJ	0.58	11	ug/kg	CC, SS
SS	NDA196	SW8260	CHLOROETHANE	10	U	10	UJ	0.5	10	ug/kg	CC, SS
SS	NDA198	SW8260	CHLOROETHANE	11	U	11	UJ	0.62	11	ug/kg	CC, SS
SS	NDA189	SW8260	CHLOROETHANE	10	U	10	UJ	0.56	10	ug/kg	CC, SS
SS	NDA147	SW8081	METHOXYCHLOR	18	U	18	UJ	0.3	18	ug/kg	CC, IC
SS	NDA185	SW8270	DI-n-OCTYLPHTHALATE	445	U	445	UJ	33	445	ug/kg	CC, HT
SS	NDA061	SW8260	ACETONE	33	=	33	J	12	12	ug/kg	CC, FD
SS	NDA062FD1	SW8260	ACETONE	14	=	14	J	12	12	ug/kg	CC, FD
SB	NDA097	SW8260	ACETONE	505	E	2100	R	9	10	ug/kg	CC, DL
SB	NDA095FD1	SW8260	ACETONE	41	=	41	R	10	10	ug/kg	CC, BL
SB	NDA070	SW8260	ACETONE	16	=	16	R	9	10	ug/kg	CC, BL
SB	NDA073	SW8260	ACETONE	12	=	12	R	10	10	ug/kg	CC, BL
SB	NDA075	SW8260	ACETONE	13	=	13	R	10	10	ug/kg	CC, BL
SB	NDA077	SW8260	ACETONE	18	=	18	R	10	10	ug/kg	CC, BL
SB	NDA079	SW8260	ACETONE	11	=	11	R	10	10	ug/kg	CC, BL
SB	NDA083	SW8260	ACETONE	12	=	12	R	9	10	ug/kg	CC, BL
SB	NDA114	SW8260	ACETONE	13	=	13	R	11	11	ug/kg	CC, BL
SB	NDA116	SW8260	ACETONE	26	=	26	R	11	11	ug/kg	CC, BL
SB	NDA118	SW8260	ACETONE	67	=	67	R	12	12	ug/kg	CC, BL
SB	NDA102	SW8260	ACETONE	25	=	25	R	14	14	ug/kg	CC, BL
SD	NDA302	SW8260	ACETONE	41	=	41	R	26	26	ug/kg	CC, BL
SD	NDA307FD1	SW8260	ACETONE	145	=	145	R	56	56	ug/kg	CC, BL
SS	NDA119	SW8260	ACETONE	149	=	149	R	12	12	ug/kg	CC, BL
SS	NDA122	SW8260	ACETONE	12	=	12	R	12	12	ug/kg	CC, BL
SS	NDA072FD1	SW8260	ACETONE	41	=	41	R	11	11	ug/kg	CC, BL
SS	NDA074	SW8260	ACETONE	60	=	60	R	9	10	ug/kg	CC, BL
SS	NDA078	SW8260	ACETONE	14	=	14	R	11	11	ug/kg	CC, BL
SS	NDA115	SW8260	ACETONE	20	=	20	R	10	10	ug/kg	CC, BL
SS	NDA117	SW8260	ACETONE	11	=	11	R	10	10	ug/kg	CC, BL
SS	NDA101	SW8260	ACETONE	20	=	20	R	14	14	ug/kg	CC, BL
WG	NDA015	SW8260	TETRACHLOROETHYLENE(PCE)	1	U	1	UJ	0.5	1	ug/L	CC
WG	NDA016	SW8260	TETRACHLOROETHYLENE(PCE)	1	U	1	UJ	0.5	1	ug/L	CC
WG	NDA026	SW8260	TETRACHLOROETHYLENE(PCE)	1	U	1	UJ	0.5	1	ug/L	CC
WG	NDA005	SW8260	TETRACHLOROETHYLENE(PCE)	1	U	1	UJ	0.5	1	ug/L	CC
WG	NDA006	SW8260	TETRACHLOROETHYLENE(PCE)	1	U	1	UJ	0.5	1	ug/L	CC
WG	NDA008	SW8260	TETRACHLOROETHYLENE(PCE)	1	U	1	UJ	0.5	1	ug/L	CC
WG	NDA009	SW8260	TETRACHLOROETHYLENE(PCE)	1	U	1	UJ	0.5	1	ug/L	CC
WG	NDA010	SW8260	TETRACHLOROETHYLENE(PCE)	1	U	1	UJ	0.5	1	ug/L	CC
WG	NDA011	SW8260	TETRACHLOROETHYLENE(PCE)	1	U	1	UJ	0.5	1	ug/L	CC
WG	NDA012	SW8260	TETRACHLOROETHYLENE(PCE)	1	U	1	UJ	0.5	1	ug/L	CC
SW	NDA035	SW8330	TETRAZOCINE	5	U	5	UJ	0.3	5	ug/L	CC
SW	NDA036	SW8330	TETRAZOCINE	5	U	5	UJ	0.3	5	ug/L	CC
SW	NDA038FD1	SW8330	TETRAZOCINE	5	U	5	UJ	0.3	5	ug/L	CC
SW	NDA040	SW8330	TETRAZOCINE	5	U	5	UJ	0.3	5	ug/L	CC
SW	NDA301	SW8330	TETRAZOCINE	5	U	5	UJ	0.3	5	ug/L	CC
SW	NDA035	SW8260	METHYL ETHYL KETONE (2-BUTANONE)	10	U	10	R	2	10	ug/L	CC
SW	NDA036	SW8260	METHYL ETHYL KETONE (2-BUTANONE)	10	U	10	R	2	10	ug/L	CC
SW	NDA037	SW8260	METHYL ETHYL KETONE (2-BUTANONE)	10	U	10	R	2	10	ug/L	CC
SW	NDA038FD1	SW8260	METHYL ETHYL KETONE (2-BUTANONE)	10	U	10	R	2	10	ug/L	CC
SW	NDA039	SW8260	METHYL ETHYL KETONE (2-BUTANONE)	10	U	10	R	2	10	ug/L	CC
SW	NDA040	SW8260	METHYL ETHYL KETONE (2-BUTANONE)	10	U	10	R	2	10	ug/L	CC
SW	NDA300	SW8260	METHYL ETHYL KETONE (2-BUTANONE)	10	U	10	R	2	10	ug/L	CC
SW	NDA301	SW8260	METHYL ETHYL KETONE (2-BUTANONE)	10	U	10	R	2	10	ug/L	CC
WG	NDA015	SW8260	METHYL ETHYL KETONE (2-BUTANONE)	5	U	5	UJ	2	5	ug/L	CC
WG	NDA016	SW8260	METHYL ETHYL KETONE (2-BUTANONE)	5	U	5	UJ	2	5	ug/L	CC
WG	NDA026	SW8260	METHYL ETHYL KETONE (2-BUTANONE)	5	U	5	UJ	2	5	ug/L	CC
WG	NDA005	SW8260	METHYL ETHYL KETONE (2-BUTANONE)	5	U	5	UJ	2	5	ug/L	CC
WG	NDA006	SW8260	METHYL ETHYL KETONE (2-BUTANONE)	5	U	5	UJ	2	5	ug/L	CC
WG	NDA008	SW8260	METHYL ETHYL KETONE (2-BUTANONE)	5	U	5	UJ	2	5	ug/L	CC
WG	NDA009	SW8260	METHYL ETHYL KETONE (2-BUTANONE)	5	U	5	UJ	2	5	ug/L	CC
WG	NDA010	SW8260	METHYL ETHYL KETONE (2-BUTANONE)	5	U	5	UJ	2	5	ug/L	CC
WG	NDA011	SW8260	METHYL ETHYL KETONE (2-BUTANONE)	5	U	5	UJ	2	5	ug/L	CC
WG	NDA012	SW8260	METHYL ETHYL KETONE (2-BUTANONE)	5	U	5	UJ	2	5	ug/L	CC

Matrix	Sample ID	Analytical Method	Parameter	Lab Result	Lab Qual	Final Result	Final Qual	DL	RL	Units	Comments
SW	NDA035	SW8260	ACETONE	10	U	10	R	10	10	ug/L	CC
SW	NDA036	SW8260	ACETONE	10	U	10	R	10	10	ug/L	CC
SW	NDA037	SW8260	ACETONE	10	U	10	R	10	10	ug/L	CC
SW	NDA038FD1	SW8260	ACETONE	10	U	10	R	10	10	ug/L	CC
SW	NDA039	SW8260	ACETONE	10	U	10	R	10	10	ug/L	CC
SW	NDA040	SW8260	ACETONE	10	U	10	R	10	10	ug/L	CC
SW	NDA300	SW8260	ACETONE	10	U	10	R	10	10	ug/L	CC
SW	NDA301	SW8260	ACETONE	10	U	10	R	10	10	ug/L	CC
SB	NDA165	SW8260	METHYL ETHYL KETONE (2-BUTANONE)	10	U	10	R	2	10	ug/kg	CC
SB	NDA167	SW8260	METHYL ETHYL KETONE (2-BUTANONE)	10	U	10	R	2	10	ug/kg	CC
SB	NDA169	SW8260	METHYL ETHYL KETONE (2-BUTANONE)	10	U	10	R	2	10	ug/kg	CC
SB	NDA171	SW8260	METHYL ETHYL KETONE (2-BUTANONE)	11	U	11	R	2	11	ug/kg	CC
SB	NDA173	SW8260	METHYL ETHYL KETONE (2-BUTANONE)	11	U	11	R	2	11	ug/kg	CC
SB	NDA175	SW8260	METHYL ETHYL KETONE (2-BUTANONE)	10	U	10	R	2	10	ug/kg	CC
SB	NDA177	SW8260	METHYL ETHYL KETONE (2-BUTANONE)	10	U	10	R	2	10	ug/kg	CC
SB	NDA213	SW8260	METHYL ETHYL KETONE (2-BUTANONE)	12	U	12	R	2	12	ug/kg	CC
SB	NDA224	SW8260	METHYL ETHYL KETONE (2-BUTANONE)	10	U	10	R	2	10	ug/kg	CC
SB	NDA225	SW8260	METHYL ETHYL KETONE (2-BUTANONE)	11	U	11	R	2	11	ug/kg	CC
SB	NDA226	SW8260	METHYL ETHYL KETONE (2-BUTANONE)	11	U	11	R	2	11	ug/kg	CC
SB	NDA227FD1	SW8260	METHYL ETHYL KETONE (2-BUTANONE)	10	U	10	R	2	10	ug/kg	CC
SB	NDA228	SW8260	METHYL ETHYL KETONE (2-BUTANONE)	11	U	11	R	2	11	ug/kg	CC
SB	NDA229	SW8260	METHYL ETHYL KETONE (2-BUTANONE)	12	U	12	R	2	12	ug/kg	CC
SB	NDA230	SW8260	METHYL ETHYL KETONE (2-BUTANONE)	10	U	10	R	2	10	ug/kg	CC
SB	NDA231	SW8260	METHYL ETHYL KETONE (2-BUTANONE)	10	U	10	R	2	10	ug/kg	CC
SB	NDA232	SW8260	METHYL ETHYL KETONE (2-BUTANONE)	10	U	10	R	1	10	ug/kg	CC
SB	NDA233	SW8260	METHYL ETHYL KETONE (2-BUTANONE)	10	U	10	R	2	10	ug/kg	CC
SB	NDA234	SW8260	METHYL ETHYL KETONE (2-BUTANONE)	10	U	10	R	2	10	ug/kg	CC
SB	NDA235	SW8260	METHYL ETHYL KETONE (2-BUTANONE)	12	U	12	R	2	12	ug/kg	CC
SB	NDA236	SW8260	METHYL ETHYL KETONE (2-BUTANONE)	10	U	10	R	2	10	ug/kg	CC
SB	NDA237FD1	SW8260	METHYL ETHYL KETONE (2-BUTANONE)	11	U	11	R	2	11	ug/kg	CC
SB	NDA238	SW8260	METHYL ETHYL KETONE (2-BUTANONE)	10	U	10	R	2	10	ug/kg	CC
SB	NDA239	SW8260	METHYL ETHYL KETONE (2-BUTANONE)	11	U	11	R	2	11	ug/kg	CC
SB	NDA240	SW8260	METHYL ETHYL KETONE (2-BUTANONE)	12	U	12	R	2	12	ug/kg	CC
SB	NDA241	SW8260	METHYL ETHYL KETONE (2-BUTANONE)	10	U	10	R	2	10	ug/kg	CC
SB	NDA242	SW8260	METHYL ETHYL KETONE (2-BUTANONE)	10	U	10	R	2	10	ug/kg	CC
SB	NDA243	SW8260	METHYL ETHYL KETONE (2-BUTANONE)	10	U	10	R	2	10	ug/kg	CC
SB	NDA244	SW8260	METHYL ETHYL KETONE (2-BUTANONE)	11	U	11	R	2	11	ug/kg	CC
SB	NDA248	SW8260	METHYL ETHYL KETONE (2-BUTANONE)	11	U	11	R	2	11	ug/kg	CC
SB	NDA249	SW8260	METHYL ETHYL KETONE (2-BUTANONE)	2	U	2	J	2	10	ug/kg	CC
SB	NDA252	SW8260	METHYL ETHYL KETONE (2-BUTANONE)	2	U	2	J	2	12	ug/kg	CC
SB	NDA253	SW8260	METHYL ETHYL KETONE (2-BUTANONE)	11	U	11	R	2	11	ug/kg	CC
SB	NDA254	SW8260	METHYL ETHYL KETONE (2-BUTANONE)	11	U	11	R	2	11	ug/kg	CC
SB	NDA255	SW8260	METHYL ETHYL KETONE (2-BUTANONE)	10	U	10	R	2	10	ug/kg	CC
SB	NDA085	SW8260	METHYL ETHYL KETONE (2-BUTANONE)	2	U	2	J	2	12	ug/kg	CC
SB	NDA093	SW8260	METHYL ETHYL KETONE (2-BUTANONE)	2	U	2	J	2	10	ug/kg	CC
SB	NDA095FD1	SW8260	METHYL ETHYL KETONE (2-BUTANONE)	2	U	2	J	2	10	ug/kg	CC
SB	NDA087	SW8260	METHYL ETHYL KETONE (2-BUTANONE)	10	U	10	R	2	10	ug/kg	CC
SB	NDA089	SW8260	METHYL ETHYL KETONE (2-BUTANONE)	10	U	10	R	2	10	ug/kg	CC
SB	NDA096	SW8260	METHYL ETHYL KETONE (2-BUTANONE)	2	U	2	J	2	10	ug/kg	CC
SB	NDA099	SW8260	METHYL ETHYL KETONE (2-BUTANONE)	10	U	10	R	2	10	ug/kg	CC
SB	NDA296	SW8260	METHYL ETHYL KETONE (2-BUTANONE)	10	U	10	R	2	10	ug/kg	CC
SB	NDA297	SW8260	METHYL ETHYL KETONE (2-BUTANONE)	2	U	2	J	2	10	ug/kg	CC
SB	NDA298	SW8260	METHYL ETHYL KETONE (2-BUTANONE)	11	U	11	R	2	11	ug/kg	CC
SB	NDA299	SW8260	METHYL ETHYL KETONE (2-BUTANONE)	11	U	11	R	2	11	ug/kg	CC
SB	NDA058	SW8260	METHYL ETHYL KETONE (2-BUTANONE)	10	U	10	R	1	10	ug/kg	CC
SB	NDA063	SW8260	METHYL ETHYL KETONE (2-BUTANONE)	11	U	11	R	2	11	ug/kg	CC
SB	NDA064FD1	SW8260	METHYL ETHYL KETONE (2-BUTANONE)	10	U	10	R	2	10	ug/kg	CC
SB	NDA066	SW8260	METHYL ETHYL KETONE (2-BUTANONE)	10	U	10	R	2	10	ug/kg	CC
SB	NDA068	SW8260	METHYL ETHYL KETONE (2-BUTANONE)	11	U	11	R	2	11	ug/kg	CC
SB	NDA070	SW8260	METHYL ETHYL KETONE (2-BUTANONE)	10	U	10	R	1	10	ug/kg	CC
SB	NDA073	SW8260	METHYL ETHYL KETONE (2-BUTANONE)	10	U	10	R	2	10	ug/kg	CC
SB	NDA075	SW8260	METHYL ETHYL KETONE (2-BUTANONE)	10	U	10	R	2	10	ug/kg	CC
SB	NDA077	SW8260	METHYL ETHYL KETONE (2-BUTANONE)	10	U	10	R	2	10	ug/kg	CC
SB	NDA079	SW8260	METHYL ETHYL KETONE (2-BUTANONE)	10	U	10	R	2	10	ug/kg	CC
SB	NDA081	SW8260	METHYL ETHYL KETONE (2-BUTANONE)	10	U	10	R	2	10	ug/kg	CC
SB	NDA083	SW8260	METHYL ETHYL KETONE (2-BUTANONE)	10	U	10	R	2	10	ug/kg	CC
SB	NDA114	SW8260	METHYL ETHYL KETONE (2-BUTANONE)	11	U	11	R	2	11	ug/kg	CC
SB	NDA116	SW8260	METHYL ETHYL KETONE (2-BUTANONE)	11	U	11	R	2	11	ug/kg	CC
SB	NDA118	SW8260	METHYL ETHYL KETONE (2-BUTANONE)	12	U	12	R	2	12	ug/kg	CC
SB	NDA105	SW8260	METHYL ETHYL KETONE (2-BUTANONE)	17	U	17	R	3	17	ug/kg	CC

Matrix	Sample ID	Analytical Method	Parameter	Lab Result	Lab Qual	Final Result	Final Qual	DL	RL	Units	Comments
SB	NDA106FD1	SW8260	METHYL ETHYL KETONE (2-BUTANONE)	16	U	16	R	3	16	ug/kg	CC
SB	NDA108	SW8260	METHYL ETHYL KETONE (2-BUTANONE)	13	U	13	R	2	13	ug/kg	CC
SB	NDA110	SW8260	METHYL ETHYL KETONE (2-BUTANONE)	11	U	11	R	2	11	ug/kg	CC
SB	NDA112	SW8260	METHYL ETHYL KETONE (2-BUTANONE)	11	U	11	R	2	11	ug/kg	CC
SD	NDA050	SW8260	METHYL ETHYL KETONE (2-BUTANONE)	2160	U	2160	R	369	2160	ug/kg	CC
SD	NDA051FD1	SW8260	METHYL ETHYL KETONE (2-BUTANONE)	23	U	23	R	4	23	ug/kg	CC
SD	NDA052	SW8260	METHYL ETHYL KETONE (2-BUTANONE)	29	=	29	J	3	20	ug/kg	CC
SD	NDA053	SW8260	METHYL ETHYL KETONE (2-BUTANONE)	25	=	25	J	2	14	ug/kg	CC
SD	NDA045	SW8260	METHYL ETHYL KETONE (2-BUTANONE)	36	U	36	R	6	36	ug/kg	CC
SD	NDA302	SW8260	METHYL ETHYL KETONE (2-BUTANONE)	26	U	26	R	4	26	ug/kg	CC
SD	NDA047	SW8260	METHYL ETHYL KETONE (2-BUTANONE)	10	U	10	R	2	10	ug/kg	CC
SD	NDA048	SW8260	METHYL ETHYL KETONE (2-BUTANONE)	13	U	13	R	2	13	ug/kg	CC
SD	NDA049	SW8260	METHYL ETHYL KETONE (2-BUTANONE)	11	U	11	R	2	11	ug/kg	CC
SS	NDA164	SW8260	METHYL ETHYL KETONE (2-BUTANONE)	13	U	13	R	2	13	ug/kg	CC
SS	NDA166	SW8260	METHYL ETHYL KETONE (2-BUTANONE)	11	U	11	R	2	11	ug/kg	CC
SS	NDA168	SW8260	METHYL ETHYL KETONE (2-BUTANONE)	20	U	20	R	3	20	ug/kg	CC
SS	NDA170	SW8260	METHYL ETHYL KETONE (2-BUTANONE)	16	U	16	R	3	16	ug/kg	CC
SS	NDA172	SW8260	METHYL ETHYL KETONE (2-BUTANONE)	10	U	10	R	2	10	ug/kg	CC
SS	NDA174	SW8260	METHYL ETHYL KETONE (2-BUTANONE)	10	U	10	R	2	10	ug/kg	CC
SS	NDA176	SW8260	METHYL ETHYL KETONE (2-BUTANONE)	18	=	18	J	2	14	ug/kg	CC
SS	NDA196	SW8260	METHYL ETHYL KETONE (2-BUTANONE)	10	U	10	R	2	10	ug/kg	CC
SS	NDA197FD1	SW8260	METHYL ETHYL KETONE (2-BUTANONE)	12	U	12	R	2	12	ug/kg	CC
SS	NDA198	SW8260	METHYL ETHYL KETONE (2-BUTANONE)	11	U	11	R	2	11	ug/kg	CC
SS	NDA199	SW8260	METHYL ETHYL KETONE (2-BUTANONE)	14	U	14	R	2	14	ug/kg	CC
SS	NDA200	SW8260	METHYL ETHYL KETONE (2-BUTANONE)	12	U	12	R	2	12	ug/kg	CC
SS	NDA178	SW8260	METHYL ETHYL KETONE (2-BUTANONE)	10	U	10	R	2	10	ug/kg	CC
SS	NDA179	SW8260	METHYL ETHYL KETONE (2-BUTANONE)	11	U	11	R	2	11	ug/kg	CC
SS	NDA180	SW8260	METHYL ETHYL KETONE (2-BUTANONE)	11	U	11	R	2	11	ug/kg	CC
SS	NDA181	SW8260	METHYL ETHYL KETONE (2-BUTANONE)	11	U	11	R	2	11	ug/kg	CC
SS	NDA182	SW8260	METHYL ETHYL KETONE (2-BUTANONE)	14	U	14	R	2	14	ug/kg	CC
SS	NDA183	SW8260	METHYL ETHYL KETONE (2-BUTANONE)	12	U	12	R	2	12	ug/kg	CC
SS	NDA184FD1	SW8260	METHYL ETHYL KETONE (2-BUTANONE)	11	U	11	R	2	11	ug/kg	CC
SS	NDA201	SW8260	METHYL ETHYL KETONE (2-BUTANONE)	19	U	19	R	3	19	ug/kg	CC
SS	NDA202	SW8260	METHYL ETHYL KETONE (2-BUTANONE)	14	U	14	R	2	14	ug/kg	CC
SS	NDA203	SW8260	METHYL ETHYL KETONE (2-BUTANONE)	11	U	11	R	2	11	ug/kg	CC
SS	NDA204	SW8260	METHYL ETHYL KETONE (2-BUTANONE)	14	U	14	R	2	14	ug/kg	CC
SS	NDA205FD1	SW8260	METHYL ETHYL KETONE (2-BUTANONE)	12	U	12	R	2	12	ug/kg	CC
SS	NDA206	SW8260	METHYL ETHYL KETONE (2-BUTANONE)	11	U	11	R	2	11	ug/kg	CC
SS	NDA207	SW8260	METHYL ETHYL KETONE (2-BUTANONE)	12	U	12	R	2	12	ug/kg	CC
SS	NDA208	SW8260	METHYL ETHYL KETONE (2-BUTANONE)	10	U	10	R	2	10	ug/kg	CC
SS	NDA209	SW8260	METHYL ETHYL KETONE (2-BUTANONE)	16	U	16	R	3	16	ug/kg	CC
SS	NDA210	SW8260	METHYL ETHYL KETONE (2-BUTANONE)	11	U	11	R	2	11	ug/kg	CC
SS	NDA211	SW8260	METHYL ETHYL KETONE (2-BUTANONE)	11	U	11	R	2	11	ug/kg	CC
SS	NDA212	SW8260	METHYL ETHYL KETONE (2-BUTANONE)	14	U	14	R	2	14	ug/kg	CC
SS	NDA185	SW8260	METHYL ETHYL KETONE (2-BUTANONE)	12	U	12	R	2	12	ug/kg	CC
SS	NDA186	SW8260	METHYL ETHYL KETONE (2-BUTANONE)	10	U	10	R	2	10	ug/kg	CC
SS	NDA187	SW8260	METHYL ETHYL KETONE (2-BUTANONE)	10	U	10	R	2	10	ug/kg	CC
SS	NDA188	SW8260	METHYL ETHYL KETONE (2-BUTANONE)	13	U	13	R	2	13	ug/kg	CC
SS	NDA189	SW8260	METHYL ETHYL KETONE (2-BUTANONE)	10	U	10	R	2	10	ug/kg	CC
SS	NDA190	SW8260	METHYL ETHYL KETONE (2-BUTANONE)	11	U	11	R	2	11	ug/kg	CC
SS	NDA191	SW8260	METHYL ETHYL KETONE (2-BUTANONE)	10	U	10	R	2	10	ug/kg	CC
SS	NDA192FD1	SW8260	METHYL ETHYL KETONE (2-BUTANONE)	11	U	11	R	2	11	ug/kg	CC
SS	NDA193	SW8260	METHYL ETHYL KETONE (2-BUTANONE)	10	U	10	R	2	10	ug/kg	CC
SS	NDA194	SW8260	METHYL ETHYL KETONE (2-BUTANONE)	11	U	11	R	2	11	ug/kg	CC
SS	NDA195	SW8260	METHYL ETHYL KETONE (2-BUTANONE)	10	U	10	R	1	10	ug/kg	CC
SS	NDA084	SW8260	METHYL ETHYL KETONE (2-BUTANONE)	2	U	2	J	2	13	ug/kg	CC
SS	NDA086	SW8260	METHYL ETHYL KETONE (2-BUTANONE)	11	U	11	R	2	11	ug/kg	CC
SS	NDA088	SW8260	METHYL ETHYL KETONE (2-BUTANONE)	10	U	10	R	2	10	ug/kg	CC
SS	NDA091	SW8260	METHYL ETHYL KETONE (2-BUTANONE)	11	U	11	R	2	11	ug/kg	CC
SS	NDA057	SW8260	METHYL ETHYL KETONE (2-BUTANONE)	10	U	10	R	2	10	ug/kg	CC
SS	NDA059	SW8260	METHYL ETHYL KETONE (2-BUTANONE)	11	U	11	R	2	11	ug/kg	CC
SS	NDA061	SW8260	METHYL ETHYL KETONE (2-BUTANONE)	12	U	12	R	2	12	ug/kg	CC
SS	NDA062FD1	SW8260	METHYL ETHYL KETONE (2-BUTANONE)	12	U	12	R	2	12	ug/kg	CC
SS	NDA065	SW8260	METHYL ETHYL KETONE (2-BUTANONE)	12	U	12	R	2	12	ug/kg	CC
SS	NDA067	SW8260	METHYL ETHYL KETONE (2-BUTANONE)	12	U	12	R	2	12	ug/kg	CC
SS	NDA069	SW8260	METHYL ETHYL KETONE (2-BUTANONE)	11	U	11	R	2	11	ug/kg	CC
SS	NDA119	SW8260	METHYL ETHYL KETONE (2-BUTANONE)	12	U	12	R	2	12	ug/kg	CC
SS	NDA120	SW8260	METHYL ETHYL KETONE (2-BUTANONE)	16	U	16	R	3	16	ug/kg	CC
SS	NDA121	SW8260	METHYL ETHYL KETONE (2-BUTANONE)	10	U	10	R	2	10	ug/kg	CC
SS	NDA122	SW8260	METHYL ETHYL KETONE (2-BUTANONE)	12	U	12	R	2	12	ug/kg	CC

Matrix	Sample ID	Analytical Method	Parameter	Lab Result	Lab Qual	Final Result	Final Qual	DL	RL	Units	Comments
SS	NDA123	SW8260	METHYL ETHYL KETONE (2-BUTANONE)	13	U	13	R	2	13	ug/kg	CC
SS	NDA124	SW8260	METHYL ETHYL KETONE (2-BUTANONE)	11	U	11	R	2	11	ug/kg	CC
SS	NDA072FD1	SW8260	METHYL ETHYL KETONE (2-BUTANONE)	11	U	11	R	2	11	ug/kg	CC
SS	NDA074	SW8260	METHYL ETHYL KETONE (2-BUTANONE)	10	U	10	R	2	10	ug/kg	CC
SS	NDA076	SW8260	METHYL ETHYL KETONE (2-BUTANONE)	10	U	10	R	2	10	ug/kg	CC
SS	NDA078	SW8260	METHYL ETHYL KETONE (2-BUTANONE)	11	U	11	R	2	11	ug/kg	CC
SS	NDA080	SW8260	METHYL ETHYL KETONE (2-BUTANONE)	10	U	10	R	2	10	ug/kg	CC
SS	NDA082	SW8260	METHYL ETHYL KETONE (2-BUTANONE)	13	U	13	R	2	13	ug/kg	CC
SS	NDA113	SW8260	METHYL ETHYL KETONE (2-BUTANONE)	10	U	10	R	2	10	ug/kg	CC
SS	NDA115	SW8260	METHYL ETHYL KETONE (2-BUTANONE)	10	U	10	R	2	10	ug/kg	CC
SS	NDA117	SW8260	METHYL ETHYL KETONE (2-BUTANONE)	10	U	10	R	2	10	ug/kg	CC
SS	NDA103	SW8260	METHYL ETHYL KETONE (2-BUTANONE)	13	U	13	R	2	13	ug/kg	CC
SS	NDA104FD1	SW8260	METHYL ETHYL KETONE (2-BUTANONE)	14	U	14	R	2	14	ug/kg	CC
SS	NDA107	SW8260	METHYL ETHYL KETONE (2-BUTANONE)	12	U	12	R	2	12	ug/kg	CC
SS	NDA109	SW8260	METHYL ETHYL KETONE (2-BUTANONE)	11	U	11	R	2	11	ug/kg	CC
SS	NDA111	SW8260	METHYL ETHYL KETONE (2-BUTANONE)	12	U	12	R	2	12	ug/kg	CC
SB	NDA148	SW8081	ENDRIN	4.1	U	4.1	UJ	0.49	4.1	ug/kg	CC
SB	NDA151	SW8081	ENDRIN	3.8	U	3.8	UJ	0.45	3.8	ug/kg	CC
SB	NDA152FD1	SW8081	ENDRIN	4.7	U	4.7	UJ	0.57	4.7	ug/kg	CC
SB	NDA154	SW8081	ENDRIN	3.7	U	3.7	UJ	0.45	3.7	ug/kg	CC
SB	NDA156	SW8081	ENDRIN	3.6	U	3.6	UJ	0.43	3.6	ug/kg	CC
SB	NDA158	SW8081	ENDRIN	3.6	U	3.6	UJ	0.43	3.6	ug/kg	CC
SB	NDA160	SW8081	ENDRIN	4	U	4	UJ	0.48	4	ug/kg	CC
SB	NDA162	SW8081	ENDRIN	3.8	U	3.8	UJ	0.46	3.8	ug/kg	CC
SB	NDA163FD1	SW8081	ENDRIN	3.9	U	3.9	UJ	0.47	3.9	ug/kg	CC
SS	NDA149	SW8081	ENDRIN	3.6	U	3.6	UJ	0.44	3.6	ug/kg	CC
SS	NDA150FD1	SW8081	ENDRIN	3.4	U	3.4	UJ	0.41	3.4	ug/kg	CC
SS	NDA155	SW8081	ENDRIN	3.8	U	3.8	UJ	0.45	3.8	ug/kg	CC
SS	NDA157	SW8081	ENDRIN	3.4	U	3.4	UJ	0.4	3.4	ug/kg	CC
SS	NDA159	SW8081	ENDRIN	3.4	U	3.4	UJ	0.41	3.4	ug/kg	CC
SS	NDA161	SW8081	ENDRIN	3.5	U	3.5	UJ	0.42	3.5	ug/kg	CC
SB	NDA087	SW8270	DI-n-OCTYLPHTHALATE	383	U	383	UJ	29	383	ug/kg	CC
SB	NDA089	SW8270	DI-n-OCTYLPHTHALATE	321	U	321	UJ	24	321	ug/kg	CC
SB	NDA096	SW8270	DI-n-OCTYLPHTHALATE	365	U	365	UJ	27	365	ug/kg	CC
SB	NDA097	SW8270	DI-n-OCTYLPHTHALATE	382	U	382	UJ	29	382	ug/kg	CC
SB	NDA099	SW8270	DI-n-OCTYLPHTHALATE	356	U	356	UJ	27	356	ug/kg	CC
SS	NDA086	SW8270	DI-n-OCTYLPHTHALATE	364	U	364	UJ	27	364	ug/kg	CC
SS	NDA088	SW8270	DI-n-OCTYLPHTHALATE	346	U	346	UJ	26	346	ug/kg	CC
SB	NDA126	SW8260	CHLOROETHANE	13	U	13	UJ	0.7	13	ug/kg	CC
SB	NDA129	SW8260	CHLOROETHANE	12	U	12	UJ	0.66	12	ug/kg	CC
SB	NDA130FD1	SW8260	CHLOROETHANE	12	U	12	UJ	0.66	12	ug/kg	CC
SB	NDA132	SW8260	CHLOROETHANE	10	U	10	UJ	0.56	10	ug/kg	CC
SB	NDA134	SW8260	CHLOROETHANE	10	U	10	UJ	0.53	10	ug/kg	CC
SB	NDA136	SW8260	CHLOROETHANE	11	U	11	UJ	0.59	11	ug/kg	CC
SB	NDA138	SW8260	CHLOROETHANE	10	U	10	UJ	0.54	10	ug/kg	CC
SB	NDA140	SW8260	CHLOROETHANE	10	U	10	UJ	0.5	10	ug/kg	CC
SB	NDA142	SW8260	CHLOROETHANE	10	U	10	UJ	0.54	10	ug/kg	CC
SB	NDA146	SW8260	CHLOROETHANE	11	U	11	UJ	0.58	11	ug/kg	CC
SB	NDA160	SW8260	CHLOROETHANE	10	U	10	UJ	0.52	10	ug/kg	CC
SB	NDA213	SW8260	CHLOROETHANE	12	U	12	R	0.7	12	ug/kg	CC
SB	NDA219	SW8260	CHLOROETHANE	11	U	11	UJ	0.61	11	ug/kg	CC
SB	NDA220	SW8260	CHLOROETHANE	12	U	12	UJ	0.64	12	ug/kg	CC
SB	NDA221	SW8260	CHLOROETHANE	10	U	10	UJ	0.51	10	ug/kg	CC
SB	NDA222	SW8260	CHLOROETHANE	10	U	10	UJ	0.54	10	ug/kg	CC
SB	NDA223	SW8260	CHLOROETHANE	10	U	10	UJ	0.56	10	ug/kg	CC
SB	NDA224	SW8260	CHLOROETHANE	10	U	10	UJ	0.53	10	ug/kg	CC
SB	NDA226	SW8260	CHLOROETHANE	11	U	11	UJ	0.59	11	ug/kg	CC
SB	NDA235	SW8260	CHLOROETHANE	12	U	12	UJ	0.67	12	ug/kg	CC
SB	NDA236	SW8260	CHLOROETHANE	10	U	10	UJ	0.57	10	ug/kg	CC
SB	NDA237FD1	SW8260	CHLOROETHANE	11	U	11	UJ	0.6	11	ug/kg	CC
SB	NDA238	SW8260	CHLOROETHANE	10	U	10	UJ	0.53	10	ug/kg	CC
SB	NDA239	SW8260	CHLOROETHANE	11	U	11	UJ	0.62	11	ug/kg	CC
SB	NDA240	SW8260	CHLOROETHANE	12	U	12	UJ	0.63	12	ug/kg	CC
SB	NDA241	SW8260	CHLOROETHANE	10	U	10	UJ	0.54	10	ug/kg	CC
SB	NDA242	SW8260	CHLOROETHANE	10	U	10	UJ	0.6	10	ug/kg	CC
SB	NDA243	SW8260	CHLOROETHANE	10	U	10	UJ	0.5	10	ug/kg	CC
SB	NDA244	SW8260	CHLOROETHANE	11	U	11	UJ	0.6	11	ug/kg	CC
SB	NDA245	SW8260	CHLOROETHANE	10	U	10	UJ	0.5	10	ug/kg	CC
SB	NDA246	SW8260	CHLOROETHANE	10	U	10	UJ	0.56	10	ug/kg	CC
SB	NDA247FD1	SW8260	CHLOROETHANE	10	U	10	UJ	0.5	10	ug/kg	CC

Matrix	Sample ID	Analytical Method	Parameter	Lab Result	Lab Qual	Final Result	Final Qual	DL	RL	Units	Comments
SB	NDA248	SW8260	CHLOROETHANE	11	U	11	UJ	0.6	11	ug/kg	CC
SB	NDA249	SW8260	CHLOROETHANE	10	U	10	UJ	0.5	10	ug/kg	CC
SB	NDA252	SW8260	CHLOROETHANE	12	U	12	UJ	0.64	12	ug/kg	CC
SB	NDA253	SW8260	CHLOROETHANE	11	U	11	UJ	0.6	11	ug/kg	CC
SB	NDA254	SW8260	CHLOROETHANE	11	U	11	UJ	0.6	11	ug/kg	CC
SB	NDA255	SW8260	CHLOROETHANE	10	U	10	UJ	0.55	10	ug/kg	CC
SB	NDA087	SW8260	CHLOROETHANE	10	U	10	UJ	0.55	10	ug/kg	CC
SB	NDA089	SW8260	CHLOROETHANE	10	U	10	UJ	0.53	10	ug/kg	CC
SB	NDA096	SW8260	CHLOROETHANE	10	U	10	UJ	0.56	10	ug/kg	CC
SB	NDA097	SW8260	CHLOROETHANE	10	U	10	UJ	0.48	10	ug/kg	CC
SB	NDA099	SW8260	CHLOROETHANE	10	U	10	UJ	0.57	10	ug/kg	CC
SB	NDA296	SW8260	CHLOROETHANE	10	U	10	UJ	0.6	10	ug/kg	CC
SB	NDA297	SW8260	CHLOROETHANE	10	U	10	UJ	0.6	10	ug/kg	CC
SB	NDA298	SW8260	CHLOROETHANE	11	U	11	UJ	0.6	11	ug/kg	CC
SB	NDA299	SW8260	CHLOROETHANE	11	U	11	UJ	0.61	11	ug/kg	CC
SS	NDA125	SW8260	CHLOROETHANE	18	U	18	UJ	0.99	18	ug/kg	CC
SS	NDA127	SW8260	CHLOROETHANE	10	U	10	UJ	0.57	10	ug/kg	CC
SS	NDA128FD1	SW8260	CHLOROETHANE	17	U	17	UJ	0.9	17	ug/kg	CC
SS	NDA197FD1	SW8260	CHLOROETHANE	12	U	12	UJ	0.6	12	ug/kg	CC
SS	NDA178	SW8260	CHLOROETHANE	10	U	10	UJ	0.5	10	ug/kg	CC
SS	NDA179	SW8260	CHLOROETHANE	11	U	11	UJ	0.63	11	ug/kg	CC
SS	NDA181	SW8260	CHLOROETHANE	11	U	11	UJ	0.62	11	ug/kg	CC
SS	NDA183	SW8260	CHLOROETHANE	12	U	12	UJ	0.63	12	ug/kg	CC
SS	NDA184FD1	SW8260	CHLOROETHANE	11	U	11	UJ	0.6	11	ug/kg	CC
SS	NDA201	SW8260	CHLOROETHANE	19	U	19	UJ	1	19	ug/kg	CC
SS	NDA202	SW8260	CHLOROETHANE	14	U	14	UJ	0.8	14	ug/kg	CC
SS	NDA203	SW8260	CHLOROETHANE	11	U	11	UJ	0.59	11	ug/kg	CC
SS	NDA204	SW8260	CHLOROETHANE	14	U	14	UJ	0.76	14	ug/kg	CC
SS	NDA205FD1	SW8260	CHLOROETHANE	12	U	12	UJ	0.68	12	ug/kg	CC
SS	NDA206	SW8260	CHLOROETHANE	11	U	11	UJ	0.58	11	ug/kg	CC
SS	NDA207	SW8260	CHLOROETHANE	12	U	12	UJ	0.7	12	ug/kg	CC
SS	NDA208	SW8260	CHLOROETHANE	10	U	10	UJ	0.6	10	ug/kg	CC
SS	NDA209	SW8260	CHLOROETHANE	16	U	16	UJ	0.87	16	ug/kg	CC
SS	NDA210	SW8260	CHLOROETHANE	11	U	11	UJ	0.62	11	ug/kg	CC
SS	NDA212	SW8260	CHLOROETHANE	14	U	14	UJ	0.8	14	ug/kg	CC
SS	NDA185	SW8260	CHLOROETHANE	12	U	12	UJ	0.6	12	ug/kg	CC
SS	NDA186	SW8260	CHLOROETHANE	10	U	10	UJ	0.56	10	ug/kg	CC
SS	NDA187	SW8260	CHLOROETHANE	10	U	10	UJ	0.52	10	ug/kg	CC
SS	NDA188	SW8260	CHLOROETHANE	13	U	13	UJ	0.72	13	ug/kg	CC
SS	NDA190	SW8260	CHLOROETHANE	11	U	11	UJ	0.62	11	ug/kg	CC
SS	NDA191	SW8260	CHLOROETHANE	10	U	10	UJ	0.6	10	ug/kg	CC
SS	NDA192FD1	SW8260	CHLOROETHANE	11	U	11	UJ	0.62	11	ug/kg	CC
SS	NDA193	SW8260	CHLOROETHANE	10	U	10	UJ	0.55	10	ug/kg	CC
SS	NDA194	SW8260	CHLOROETHANE	11	U	11	UJ	0.6	11	ug/kg	CC
SS	NDA195	SW8260	CHLOROETHANE	10	U	10	UJ	0.5	10	ug/kg	CC
SS	NDA086	SW8260	CHLOROETHANE	11	U	11	UJ	0.59	11	ug/kg	CC
SS	NDA088	SW8260	CHLOROETHANE	10	U	10	UJ	0.53	10	ug/kg	CC
SS	NDA091	SW8260	CHLOROETHANE	11	U	11	UJ	0.58	11	ug/kg	CC
SB	NDA167	SW8260	ACETONE	49	=	49	R	10	10	ug/kg	CC
SB	NDA169	SW8260	ACETONE	74	=	74	R	10	10	ug/kg	CC
SB	NDA171	SW8260	ACETONE	42	=	42	R	11	11	ug/kg	CC
SB	NDA173	SW8260	ACETONE	107	=	107	R	11	11	ug/kg	CC
SB	NDA175	SW8260	ACETONE	84	=	84	R	10	10	ug/kg	CC
SB	NDA177	SW8260	ACETONE	72	=	72	R	9	10	ug/kg	CC
SB	NDA213	SW8260	ACETONE	51	=	51	R	12	12	ug/kg	CC
SB	NDA224	SW8260	ACETONE	34	=	34	R	10	10	ug/kg	CC
SB	NDA225	SW8260	ACETONE	22	=	22	R	11	11	ug/kg	CC
SB	NDA226	SW8260	ACETONE	14	=	14	R	11	11	ug/kg	CC
SB	NDA227FD1	SW8260	ACETONE	23	=	23	R	10	10	ug/kg	CC
SB	NDA228	SW8260	ACETONE	13	=	13	R	11	11	ug/kg	CC
SB	NDA229	SW8260	ACETONE	13	=	13	R	12	12	ug/kg	CC
SB	NDA230	SW8260	ACETONE	25	=	25	R	10	10	ug/kg	CC
SB	NDA231	SW8260	ACETONE	31	=	31	R	10	10	ug/kg	CC
SB	NDA232	SW8260	ACETONE	22	=	22	R	9	10	ug/kg	CC
SB	NDA233	SW8260	ACETONE	21	=	21	R	10	10	ug/kg	CC
SB	NDA234	SW8260	ACETONE	22	=	22	R	9	10	ug/kg	CC
SB	NDA235	SW8260	ACETONE	21	=	21	R	12	12	ug/kg	CC
SB	NDA236	SW8260	ACETONE	20	=	20	R	10	10	ug/kg	CC
SB	NDA237FD1	SW8260	ACETONE	22	=	22	R	11	11	ug/kg	CC
SB	NDA238	SW8260	ACETONE	16	=	16	R	10	10	ug/kg	CC

Matrix	Sample ID	Analytical Method	Parameter	Lab Result	Lab Qual	Final Result	Final Qual	DL	RL	Units	Comments
SB	NDA239	SW8260	ACETONE	23	=	23	R	11	11	ug/kg	CC
SB	NDA240	SW8260	ACETONE	21	=	21	R	12	12	ug/kg	CC
SB	NDA241	SW8260	ACETONE	12	=	12	R	10	10	ug/kg	CC
SB	NDA242	SW8260	ACETONE	20	=	20	R	10	10	ug/kg	CC
SB	NDA243	SW8260	ACETONE	17	=	17	R	10	10	ug/kg	CC
SB	NDA244	SW8260	ACETONE	21	=	21	R	11	11	ug/kg	CC
SB	NDA245	SW8260	ACETONE	27	=	27	R	9	10	ug/kg	CC
SB	NDA246	SW8260	ACETONE	44	=	44	R	10	10	ug/kg	CC
SB	NDA247FD1	SW8260	ACETONE	30	=	30	R	10	10	ug/kg	CC
SB	NDA248	SW8260	ACETONE	18	=	18	R	11	11	ug/kg	CC
SB	NDA249	SW8260	ACETONE	36	=	36	R	9	10	ug/kg	CC
SB	NDA252	SW8260	ACETONE	106	=	106	R	12	12	ug/kg	CC
SB	NDA253	SW8260	ACETONE	24	=	24	R	11	11	ug/kg	CC
SB	NDA254	SW8260	ACETONE	15	=	15	R	11	11	ug/kg	CC
SB	NDA255	SW8260	ACETONE	20	=	20	R	10	10	ug/kg	CC
SB	NDA085	SW8260	ACETONE	29	=	29	R	12	12	ug/kg	CC
SB	NDA092	SW8260	ACETONE	40	=	40	R	11	11	ug/kg	CC
SB	NDA093	SW8260	ACETONE	39	=	39	R	9	10	ug/kg	CC
SB	NDA094	SW8260	ACETONE	50	=	50	R	12	12	ug/kg	CC
SB	NDA087	SW8260	ACETONE	91	=	91	R	10	10	ug/kg	CC
SB	NDA089	SW8260	ACETONE	10	U	10	R	10	10	ug/kg	CC
SB	NDA099	SW8260	ACETONE	25	=	25	R	10	10	ug/kg	CC
SB	NDA296DL1	SW8260	ACETONE	1240	=	1240	R	1040	1040	ug/kg	CC
SB	NDA297DL1	SW8260	ACETONE	1120	=	1120	R	1020	1030	ug/kg	CC
SB	NDA298DL1	SW8260	ACETONE	1600	=	1600	R	1090	1090	ug/kg	CC
SB	NDA299	SW8260	ACETONE	103	=	103	R	11	11	ug/kg	CC
SB	NDA064FD1	SW8260	ACETONE	10	U	10	R	10	10	ug/kg	CC
SB	NDA066DL1	SW8260	ACETONE	2020	=	2020	R	1190	1190	ug/kg	CC
SB	NDA081	SW8260	ACETONE	10	U	10	R	10	10	ug/kg	CC
SB	NDA110	SW8260	ACETONE	11	U	11	R	11	11	ug/kg	CC
SD	NDA050	SW8260	ACETONE	2160	U	2160	R	2160	2160	ug/kg	CC
SD	NDA051FD1	SW8260	ACETONE	296	=	296	R	23	23	ug/kg	CC
SD	NDA052	SW8260	ACETONE	540	E	540	R	20	20	ug/kg	CC
SD	NDA053	SW8260	ACETONE	139	=	139	R	14	14	ug/kg	CC
SD	NDA042	SW8260	ACETONE	37	=	37	R	12	12	ug/kg	CC
SD	NDA043	SW8260	ACETONE	36	=	36	R	11	11	ug/kg	CC
SD	NDA044	SW8260	ACETONE	140	=	140	R	59	59	ug/kg	CC
SD	NDA045	SW8260	ACETONE	70	=	70	R	36	36	ug/kg	CC
SD	NDA046	SW8260	ACETONE	97	=	97	R	43	43	ug/kg	CC
SD	NDA047DL1	SW8260	ACETONE	2190	=	2190	R	862	862	ug/kg	CC
SD	NDA048DL1	SW8260	ACETONE	15000	=	15000	R	1200	1200	ug/kg	CC
SD	NDA049DL1	SW8260	ACETONE	1790	=	1790	R	1120	1120	ug/kg	CC
SS	NDA164	SW8260	ACETONE	40	=	40	R	13	13	ug/kg	CC
SS	NDA166	SW8260	ACETONE	205	E	205	R	11	11	ug/kg	CC
SS	NDA168	SW8260	ACETONE	73	=	73	R	20	20	ug/kg	CC
SS	NDA170	SW8260	ACETONE	57	=	57	R	16	16	ug/kg	CC
SS	NDA172	SW8260	ACETONE	41	=	41	R	10	10	ug/kg	CC
SS	NDA174	SW8260	ACETONE	60	=	60	R	10	10	ug/kg	CC
SS	NDA176	SW8260	ACETONE	277	E	277	R	14	14	ug/kg	CC
SS	NDA196DL1	SW8260	ACETONE	1480	=	1480	R	937	937	ug/kg	CC
SS	1	SW8260	ACETONE	2140	=	2140	R	1820	1820	ug/kg	CC
SS	NDA198DL1	SW8260	ACETONE	5620	=	5620	R	1160	1160	ug/kg	CC
SS	NDA199	SW8260	ACETONE	125	=	125	R	14	14	ug/kg	CC
SS	NDA200DL1	SW8260	ACETONE	2220	=	2220	R	1220	1220	ug/kg	CC
SS	NDA178	SW8260	ACETONE	26	=	26	R	10	10	ug/kg	CC
SS	NDA179	SW8260	ACETONE	29	=	29	R	11	11	ug/kg	CC
SS	NDA180	SW8260	ACETONE	22	=	22	R	11	11	ug/kg	CC
SS	NDA181	SW8260	ACETONE	31	=	31	R	11	11	ug/kg	CC
SS	NDA182	SW8260	ACETONE	17	=	17	R	14	14	ug/kg	CC
SS	NDA183	SW8260	ACETONE	27	=	27	R	11	12	ug/kg	CC
SS	NDA184FD1	SW8260	ACETONE	32	=	32	R	11	11	ug/kg	CC
SS	NDA201	SW8260	ACETONE	62	=	62	R	19	19	ug/kg	CC
SS	NDA202	SW8260	ACETONE	146	=	146	R	14	14	ug/kg	CC
SS	NDA203	SW8260	ACETONE	38	=	38	R	11	11	ug/kg	CC
SS	NDA204DL1	SW8260	ACETONE	2340	=	2340	R	1350	1350	ug/kg	CC
SS	1	SW8260	ACETONE	1880	=	1880	R	1380	1380	ug/kg	CC
SS	NDA206DL1	SW8260	ACETONE	1680	=	1680	R	1430	1430	ug/kg	CC
SS	NDA207DL1	SW8260	ACETONE	1800	=	1800	R	1290	1290	ug/kg	CC
SS	NDA208	SW8260	ACETONE	17	=	17	R	10	10	ug/kg	CC
SS	NDA209	SW8260	ACETONE	98	=	98	R	16	16	ug/kg	CC

Matrix	Sample ID	Analytical Method	Parameter	Lab Result	Lab Qual	Final Result	Final Qual	DL	RL	Units	Comments
SS	NDA210	SW8260	ACETONE	43	=	43	R	11	11	ug/kg	CC
SS	NDA211	SW8260	ACETONE	46	=	46	R	11	11	ug/kg	CC
SS	NDA212	SW8260	ACETONE	14	U	14	R	14	14	ug/kg	CC
SS	NDA185	SW8260	ACETONE	18	=	18	R	12	12	ug/kg	CC
SS	NDA186	SW8260	ACETONE	10	U	10	R	10	10	ug/kg	CC
SS	NDA187	SW8260	ACETONE	10	U	10	R	10	10	ug/kg	CC
SS	NDA188	SW8260	ACETONE	16	=	16	R	13	13	ug/kg	CC
SS	NDA189	SW8260	ACETONE	11	=	11	R	10	10	ug/kg	CC
SS	NDA190	SW8260	ACETONE	12	=	12	R	11	11	ug/kg	CC
SS	NDA191	SW8260	ACETONE	16	=	16	R	10	10	ug/kg	CC
SS	NDA192FD1	SW8260	ACETONE	15	=	15	R	11	11	ug/kg	CC
SS	NDA193	SW8260	ACETONE	10	U	10	R	10	10	ug/kg	CC
SS	NDA194	SW8260	ACETONE	11	=	11	R	11	11	ug/kg	CC
SS	NDA195	SW8260	ACETONE	11	=	11	R	9	10	ug/kg	CC
SS	NDA084	SW8260	ACETONE	36	=	36	R	13	13	ug/kg	CC
SS	NDA086	SW8260	ACETONE	20	=	20	R	11	11	ug/kg	CC
SS	NDA088	SW8260	ACETONE	13	=	13	R	10	10	ug/kg	CC
SS	NDA091	SW8260	ACETONE	74	=	74	R	11	11	ug/kg	CC
SS	NDA057	SW8260	ACETONE	62	=	62	J	10	10	ug/kg	CC
SS	NDA059DL1	SW8260	ACETONE	1840	=	1840	R	1170	1170	ug/kg	CC
SS	NDA065DL1	SW8260	ACETONE	1630	=	1630	R	1220	1220	ug/kg	CC
SS	NDA069DL1	SW8260	ACETONE	1600	=	1600	R	1080	1080	ug/kg	CC
SS	NDA121DL1	SW8260	ACETONE	1350	=	1350	R	1130	1130	ug/kg	CC
SS	NDA123DL1	SW8260	ACETONE	2510	=	2510	J	1200	1200	ug/kg	CC
SS	NDA124DL1	SW8260	ACETONE	5070	=	5070	J	1000	1000	ug/kg	CC
SS	NDA076	SW8260	ACETONE	10	U	10	R	10	10	ug/kg	CC
SS	NDA080	SW8260	ACETONE	10	U	10	R	10	10	ug/kg	CC
SS	NDA082	SW8260	ACETONE	13	U	13	R	13	13	ug/kg	CC
SS	NDA113	SW8260	ACETONE	10	U	10	R	10	10	ug/kg	CC
SS	NDA104FD1	SW8260	ACETONE	14	U	14	R	14	14	ug/kg	CC
SS	NDA107	SW8260	ACETONE	12	U	12	R	12	12	ug/kg	CC
SS	NDA109	SW8260	ACETONE	11	U	11	R	11	11	ug/kg	CC
SS	NDA111	SW8260	ACETONE	12	U	12	R	12	12	ug/kg	CC
SB	NDA058	SW8260	ACETONE	11	=	11	R	9	10	ug/kg	BL, SS, CC
SS	NDA121	SW8260	ACETONE	487	E	487	R	10	10	ug/kg	BL, LR
SB	NDA126	SW8260	ACETONE	96	=	96	R	13	13	ug/kg	BL, IC
SB	NDA129	SW8260	ACETONE	19	=	19	R	12	12	ug/kg	BL, IC
SB	NDA130FD1	SW8260	ACETONE	23	=	23	R	12	12	ug/kg	BL, IC
SB	NDA132	SW8260	ACETONE	27	=	27	R	10	10	ug/kg	BL, IC
SB	NDA134	SW8260	ACETONE	14	=	14	R	10	10	ug/kg	BL, IC
SB	NDA136	SW8260	ACETONE	19	=	19	R	11	11	ug/kg	BL, IC
SB	NDA138	SW8260	ACETONE	23	=	23	R	10	10	ug/kg	BL, IC
SB	NDA140	SW8260	ACETONE	15	=	15	R	9	10	ug/kg	BL, IC
SB	NDA142	SW8260	ACETONE	13	=	13	R	10	10	ug/kg	BL, IC
SB	NDA148	SW8260	ACETONE	49	=	49	R	10	10	ug/kg	BL, IC
SB	NDA151	SW8260	ACETONE	59	=	59	R	11	11	ug/kg	BL, IC
SB	NDA152FD1	SW8260	ACETONE	42	=	42	R	12	12	ug/kg	BL, IC
SB	NDA154	SW8260	ACETONE	50	=	50	R	11	11	ug/kg	BL, IC
SB	NDA156	SW8260	ACETONE	45	=	45	R	10	10	ug/kg	BL, IC
SB	NDA158	SW8260	ACETONE	55	=	55	R	10	10	ug/kg	BL, IC
SB	NDA160	SW8260	ACETONE	34	=	34	R	9	10	ug/kg	BL, IC
SB	NDA162	SW8260	ACETONE	50	=	50	R	11	11	ug/kg	BL, IC
SB	NDA163FD1	SW8260	ACETONE	107	=	107	R	12	12	ug/kg	BL, IC
SB	NDA214FD1	SW8260	ACETONE	47	=	47	R	10	10	ug/kg	BL, IC
SB	NDA216	SW8260	ACETONE	13	=	13	R	10	10	ug/kg	BL, IC
SB	NDA217	SW8260	ACETONE	16	=	16	R	12	12	ug/kg	BL, IC
SB	NDA218	SW8260	ACETONE	11	=	11	R	9	10	ug/kg	BL, IC
SB	NDA219	SW8260	ACETONE	45	=	45	U, R	11	11	ug/kg	BL, IC
SB	NDA220	SW8260	ACETONE	17	=	17	R	12	12	ug/kg	BL, IC
SB	NDA221	SW8260	ACETONE	15	=	15	R	9	10	ug/kg	BL, IC
SB	NDA222	SW8260	ACETONE	14	=	14	R	10	10	ug/kg	BL, IC
SB	NDA223	SW8260	ACETONE	12	=	12	R	10	10	ug/kg	BL, IC
SD	NDA054	SW8260	ACETONE	25	=	25	R	15	15	ug/kg	BL, IC
SD	NDA055	SW8260	ACETONE	16	=	16	R	10	10	ug/kg	BL, IC
SS	NDA125	SW8260	ACETONE	25	=	25	R	18	18	ug/kg	BL, IC
SS	NDA127	SW8260	ACETONE	16	=	16	R	10	10	ug/kg	BL, IC
SS	NDA128FD1	SW8260	ACETONE	19	=	19	R	17	17	ug/kg	BL, IC
SS	NDA143	SW8260	ACETONE	10	J	10	R	9	10	ug/kg	BL, IC
SS	NDA145	SW8260	ACETONE	51	=	51	R	13	13	ug/kg	BL, IC
SS	NDA147	SW8260	ACETONE	133	=	133	R	11	11	ug/kg	BL, IC

Matrix	Sample ID	Analytical Method	Parameter	Lab Result	Lab Qual	Final Result	Final Qual	DL	RL	Units	Comments
SS	NDA153	SW8260	ACETONE	86	=	86	R	12	12	ug/kg	BL, IC
SS	NDA157	SW8260	ACETONE	32	=	32	R	11	11	ug/kg	BL, IC
SS	NDA159	SW8260	ACETONE	46	=	46	R	14	14	ug/kg	BL, IC
SS	NDA161	SW8260	ACETONE	39	=	39	R	11	11	ug/kg	BL, IC
SB	NDA165DL1	SW8260	ACETONE	1260	=	1260	UJ	1180	1180	ug/kg	BL, CC
SB	NDA060	SW8260	ACETONE	30	=	30	R	10	10	ug/kg	BL, CC
SB	NDA063	SW8260	ACETONE	22	=	22	R	11	11	ug/kg	BL, CC
SB	NDA068	SW8260	ACETONE	26	=	26	R	11	11	ug/kg	BL, CC
SB	NDA105	SW8260	ACETONE	22	=	22	R	17	17	ug/kg	BL, CC
SB	NDA106FD1	SW8260	ACETONE	21	=	21	R	16	16	ug/kg	BL, CC
SB	NDA108	SW8260	ACETONE	18	=	18	R	13	13	ug/kg	BL, CC
SB	NDA112	SW8260	ACETONE	12	=	12	R	11	11	ug/kg	BL, CC
SD	NDA303	SW8260	ACETONE	100	=	100	R	47	47	ug/kg	BL, CC
SS	NDA067	SW8260	ACETONE	15	=	15	R	12	12	ug/kg	BL, CC
SS	NDA120	SW8260	ACETONE	23	=	23	R	16	16	ug/kg	BL, CC
SS	NDA103	SW8260	ACETONE	25	=	25	R	13	13	ug/kg	BL, CC
SS	NDA155	SW8260	ACETONE	70	=	70	R	11	11	ug/kg	BL ,IC
WG	NDA024	SW8270	DIETHYL PHTHALATE	2	J	5	U	0.5	5	ug/L	BL
WG	NDA025FD1	SW8270	DIETHYL PHTHALATE	2	J	5	U	0.5	5	ug/L	BL
WG	NDA029	SW8270	DIETHYL PHTHALATE	0.8	J	5	U	0.5	5	ug/L	BL
WG	NDA003	SW8270	bis(2-ETHYLHEXYL) PHTHALATE	7	=	7	U	0.9	5	ug/L	BL
WG	NDA015	SW8270	bis(2-ETHYLHEXYL) PHTHALATE	4	J	5	U	0.89	5	ug/L	BL
WG	NDA016	SW8270	bis(2-ETHYLHEXYL) PHTHALATE	2	J	5	U	0.94	5	ug/L	BL
WG	NDA026	SW8270	bis(2-ETHYLHEXYL) PHTHALATE	2	J	6	U	1	6	ug/L	BL
WG	NDA005	SW8270	bis(2-ETHYLHEXYL) PHTHALATE	4	J	6	U	1	6	ug/L	BL
WG	NDA006	SW8270	bis(2-ETHYLHEXYL) PHTHALATE	3	J	6	U	1	6	ug/L	BL
WG	NDA008	SW8270	bis(2-ETHYLHEXYL) PHTHALATE	4	J	6	U	1	6	ug/L	BL
WG	NDA009	SW8270	bis(2-ETHYLHEXYL) PHTHALATE	2	J	6	U	1	6	ug/L	BL
WG	NDA010	SW8270	bis(2-ETHYLHEXYL) PHTHALATE	3	J	6	U	1	6	ug/L	BL
WG	NDA012	SW8270	bis(2-ETHYLHEXYL) PHTHALATE	1	J	5	U	0.9	5	ug/L	BL
SB	NDA079	SW8260	XYLENES, TOTAL	0.8	J	10	U	0.21	10	ug/kg	BL
SB	NDA105	SW8260	XYLENES, TOTAL	7	J	17	U	0.37	17	ug/kg	BL
SB	NDA110	SW8260	XYLENES, TOTAL	0.3	J	11	U	0.24	11	ug/kg	BL
SD	NDA048	SW8260	XYLENES, TOTAL	0.4	J	13	U	0.29	13	ug/kg	BL
SD	NDA049	SW8260	XYLENES, TOTAL	0.4	J	11	U	0.23	11	ug/kg	BL
SS	NDA057	SW8260	XYLENES, TOTAL	0.9	J	10	U	0.2	10	ug/kg	BL
SS	NDA080	SW8260	XYLENES, TOTAL	0.3	J	10	U	0.21	10	ug/kg	BL
SS	NDA082	SW8260	XYLENES, TOTAL	0.3	J	13	U	0.29	13	ug/kg	BL
SS	NDA103	SW8260	XYLENES, TOTAL	0.3	J	13	U	0.28	13	ug/kg	BL
SS	NDA107	SW8260	XYLENES, TOTAL	0.3	J	12	U	0.26	12	ug/kg	BL
SS	NDA109	SW8260	XYLENES, TOTAL	0.4	J	11	U	0.25	11	ug/kg	BL
SB	NDA093	SW8260	TOLUENE	0.3	J	10	U	0.26	10	ug/kg	BL
SB	NDA094	SW8260	TOLUENE	0.5	J	12	U	0.32	12	ug/kg	BL
SB	NDA095FD1	SW8260	TOLUENE	0.4	J	10	U	0.27	10	ug/kg	BL
SS	NDA190	SW8260	TOLUENE	0.4	J	11	U	0.31	11	ug/kg	BL
SS	NDA191	SW8260	TOLUENE	0.4	J	10	U	0.28	10	ug/kg	BL
SS	NDA192FD1	SW8260	TOLUENE	0.7	J	11	U	0.31	11	ug/kg	BL
SS	NDA194	SW8260	TOLUENE	0.7	J	11	U	0.31	11	ug/kg	BL
SB	NDA094	SW8260	METHYLENE CHLORIDE	3	J	12	U	2	12	ug/kg	BL
SB	NDA095FD1	SW8260	METHYLENE CHLORIDE	3	J	10	U	2	10	ug/kg	BL
SB	NDA079	SW8260	M,P-XYLENE (SUM OF ISOMERS)	0.8	J	10	U	0.21	10	ug/kg	BL
SB	NDA105	SW8260	M,P-XYLENE (SUM OF ISOMERS)	6	J	17	U	0.37	17	ug/kg	BL
SB	NDA110	SW8260	M,P-XYLENE (SUM OF ISOMERS)	0.3	J	11	U	0.24	11	ug/kg	BL
SD	NDA048	SW8260	M,P-XYLENE (SUM OF ISOMERS)	0.4	J	13	U	0.29	13	ug/kg	BL
SD	NDA049	SW8260	M,P-XYLENE (SUM OF ISOMERS)	0.4	J	11	U	0.23	11	ug/kg	BL
SS	NDA057	SW8260	M,P-XYLENE (SUM OF ISOMERS)	0.6	J	10	U	0.2	10	ug/kg	BL
SS	NDA080	SW8260	M,P-XYLENE (SUM OF ISOMERS)	0.3	J	10	U	0.21	10	ug/kg	BL
SS	NDA082	SW8260	M,P-XYLENE (SUM OF ISOMERS)	0.3	J	13	U	0.29	13	ug/kg	BL
SS	NDA103	SW8260	M,P-XYLENE (SUM OF ISOMERS)	0.3	J	13	U	0.28	13	ug/kg	BL
SS	NDA107	SW8260	M,P-XYLENE (SUM OF ISOMERS)	0.3	J	12	U	0.26	12	ug/kg	BL
SS	NDA109	SW8260	M,P-XYLENE (SUM OF ISOMERS)	0.4	J	11	U	0.25	11	ug/kg	BL
SB	NDA126	SW8270	DIETHYL PHTHALATE	426	J	453	U	37	453	ug/kg	BL
SB	NDA129	SW8270	DIETHYL PHTHALATE	369	J	484	U	40	484	ug/kg	BL
SB	NDA130FD1	SW8270	DIETHYL PHTHALATE	363	J	452	U	37	452	ug/kg	BL
SB	NDA132	SW8270	DIETHYL PHTHALATE	146	J	562	U	46	562	ug/kg	BL
SB	NDA134	SW8270	DIETHYL PHTHALATE	93	J	515	U	42	515	ug/kg	BL
SB	NDA136	SW8270	DIETHYL PHTHALATE	96	J	475	U	39	475	ug/kg	BL
SB	NDA151	SW8270	DIETHYL PHTHALATE	247	J	431	U	35	431	ug/kg	BL
SB	NDA152FD1	SW8270	DIETHYL PHTHALATE	213	J	620	U	51	620	ug/kg	BL
SB	NDA154	SW8270	DIETHYL PHTHALATE	210	J	488	U	40	488	ug/kg	BL

Matrix	Sample ID	Analytical Method	Parameter	Lab Result	Lab Qual	Final Result	Final Qual	DL	RL	Units	Comments
SB	NDA156	SW8270	DIETHYL PHTHALATE	396	J	478	U	39	478	ug/kg	BL
SB	NDA158	SW8270	DIETHYL PHTHALATE	100	J	461	U	38	461	ug/kg	BL
SB	NDA160	SW8270	DIETHYL PHTHALATE	174	J	559	U	46	559	ug/kg	BL
SB	NDA162	SW8270	DIETHYL PHTHALATE	209	J	499	U	41	499	ug/kg	BL
SB	NDA163FD1	SW8270	DIETHYL PHTHALATE	176	J	518	U	42	518	ug/kg	BL
SS	NDA125	SW8270	DIETHYL PHTHALATE	512	J	591	U	48	591	ug/kg	BL
SS	NDA127	SW8270	DIETHYL PHTHALATE	477	J	535	U	44	535	ug/kg	BL
SS	NDA128FD1	SW8270	DIETHYL PHTHALATE	436	J	781	U	64	781	ug/kg	BL
SS	NDA131	SW8270	DIETHYL PHTHALATE	121	J	603	U	49	603	ug/kg	BL
SS	NDA133	SW8270	DIETHYL PHTHALATE	138	J	561	U	46	561	ug/kg	BL
SS	NDA135	SW8270	DIETHYL PHTHALATE	134	J	627	U	51	627	ug/kg	BL
SS	NDA137	SW8270	DIETHYL PHTHALATE	109	J	467	U	38	467	ug/kg	BL
SS	NDA147	SW8270	DIETHYL PHTHALATE	149	J	471	U	39	471	ug/kg	BL
SS	NDA149	SW8270	DIETHYL PHTHALATE	251	J	556	U	46	556	ug/kg	BL
SS	NDA150FD1	SW8270	DIETHYL PHTHALATE	457	J	514	U	42	514	ug/kg	BL
SS	NDA155	SW8270	DIETHYL PHTHALATE	225	J	591	U	48	591	ug/kg	BL
SS	NDA157	SW8270	DIETHYL PHTHALATE	165	J	552	U	45	552	ug/kg	BL
SS	NDA159	SW8270	DIETHYL PHTHALATE	121	J	409	U	33	409	ug/kg	BL
SS	NDA161	SW8270	DIETHYL PHTHALATE	172	J	524	U	43	524	ug/kg	BL
WG	NDA015	SW8260	CHLOROFORM	2	=	2	U	1	1	ug/L	BB
SB	NDA114	SW8081	p,p'-DDD	12	=	12	J	0.3	4.3	ug/kg	2C, HT
SB	NDA142	SW8081	p,p'-DDT	0.71	J	3.9	U	0.45	3.9	ug/kg	2C
SB	NDA144	SW8081	p,p'-DDT	7.6	=	7.6	J	0.43	3.7	ug/kg	2C
SS	NDA131	SW8081	p,p'-DDT	10	=	10	J	0.44	3.8	ug/kg	2C
SS	NDA133	SW8081	p,p'-DDT	9.4	=	9.4	J	0.45	3.9	ug/kg	2C
SS	NDA139	SW8081	p,p'-DDT	5.7	=	5.7	J	0.41	3.5	ug/kg	2C
SS	NDA143	SW8081	p,p'-DDT	7.1	=	7.1	J	0.4	3.4	ug/kg	2C
SS	NDA208	SW8081	p,p'-DDE	1.3	J	3.4	U	0.34	3.4	ug/kg	2C
SS	NDA211	SW8260	CHLOROETHANE	11	U	11	UJ	0.6	11	ug/kg	CC
WG	NDA013	E200.7	IRON, DISSOLVED	12.2	U	12.2	=	12.2	100	ug/L	
WG	NDA014	E200.7	IRON, DISSOLVED	12.2	U	12.2	=	12.2	100	ug/L	
SB	NDA087	SW8260	CARBON DISULFIDE	10	U	10	J	0.31	10	ug/kg	
SB	NDA132	E200.7	POTASSIUM	1190	J	1190	=	3.3	1250	mg/kg	
SB	NDA136	E200.7	POTASSIUM	1040	J	1040	=	3.2	1180	mg/kg	
SB	NDA163FD1	E200.7	POTASSIUM	1010	J	1010	=	3.1	1170	mg/kg	
SS	NDA164	SW7471	MERCURY	0.054	J	0.054	=	0.01	0.05	mg/kg	
SS	NDA166	SW7471	MERCURY	0.04	J	0.04	=	0.01	0.05	mg/kg	
SB	NDA132	E200.7	COBALT	10.9	J	10.9	=	0.06	12.5	mg/kg	
SB	NDA165	E200.7	COBALT	11.4	J	11.4	=	0.05	11.5	mg/kg	
SB	NDA175	E200.7	COBALT	10	J	10	=	0.05	11.2	mg/kg	
SB	NDA140	E200.7	CALCIUM	1060	J	1060	=	1.3	1100	mg/kg	

Matrix	Analytical Method	Prep Method	Sample ID	Type	Parameter	Lab Result	Lab Qual	RL	DL	Units
WQ	E200.7	SW3050	NDA325AB1	AB	BARIUM	0.26	J	200	0.1	ug/L
WQ	E200.7	SW3050	NDA325AB1	AB	BERYLLIUM	0.49	J	5	0.3	ug/L
WQ	SW8270	SW3510	NDA325AB1	AB	PHTHALATE	1	J	5	0.9	ug/L
WQ	SW8260	SW5030	NDA033AB1	AB	BROMODICHLOROMETHANE	0.5	J	10	0.2	ug/L
WQ	SW8260	SW5030	NDA325AB1	AB	BROMODICHLOROMETHANE	1	J	10	0.2	ug/L
WQ	E200.7	SW3050	NDA033AB1	AB	CALCIUM	26.8	J	5000	11.7	ug/L
WQ	E200.7	SW3050	NDA325AB1	AB	CALCIUM	67	J	5000	11.7	ug/L
WQ	SW8260	SW5030	NDA033AB1	AB	CHLOROFORM	6	J	10	1	ug/L
WQ	SW8260	SW5030	NDA325AB1	AB	CHLOROFORM	11	=	10	1	ug/L
WQ	E200.7	SW3050	NDA325AB1	AB	COPPER	2.6	J	25	1.9	ug/L
WQ	E200.7	SW3050	NDA325AB1	AB	IRON	19.3	J	100	12.2	ug/L
WQ	E200.7	SW3050	NDA325AB1	AB	MANGANESE	0.15	J	15	0.1	ug/L
WQ	E200.7	SW3050	NDA325AB1	AB	ZINC	2.9	J	20	2.5	ug/L
WQ	SW8260	SW5030	NDA034AB2	AB	1,2-DICHLOROETHANE	2	J	10	0.2	ug/L
WQ	SW8270	SW3510	NDA034AB2	AB	PHTHALATE	3	J	5	0.89	ug/L
WQ	SW8260	SW5030	NDA034AB2	AB	BROMODICHLOROMETHANE	0.9	J	10	0.2	ug/L
WQ	E200.7	SW3050	NDA034AB2	AB	CALCIUM	54.4	J	5000	11.7	ug/L
WQ	SW8260	SW5030	NDA034AB2	AB	CHLOROFORM	9	J	10	1	ug/L
WQ	E200.7	SW3050	NDA034AB2	AB	POTASSIUM	127	J	5000	26.6	ug/L
WQ	E200.7	SW3050	NDA034AB2	AB	SODIUM	144	J	5000	115	ug/L
WQ	E200.7	SW3050	NDA275AB3	AB	BARIUM	0.14	J	200	0.1	ug/L
WQ	E200.7	SW3050	NDA275AB3	AB	CALCIUM	72.7	J	5000	11.7	ug/L
WQ	SW8260	SW5030	NDA275AB3	AB	CHLOROFORM	18	=	10	1	ug/L
WQ	E200.7	SW3050	NDA275AB3	AB	IRON	21.2	J	100	12.2	ug/L
WQ	E200.7	SW3050	NDA275AB3	AB	MAGNESIUM	11.4	J	5000	9	ug/L
WQ	E200.7	SW3050	NDA275AB3	AB	MANGANESE	0.22	J	15	0.1	ug/L
WQ	E200.7	SW3050	NDA276AB4	AB	BARIUM	0.11	J	200	0.1	ug/L
WQ	E200.7	SW3050	NDA276AB4	AB	CALCIUM	23	J	5000	11.7	ug/L
WQ	SW8260	SW5030	NDA276AB4	AB	CHLOROFORM	16	=	10	1	ug/L
WQ	E200.7	SW3050	NDA276AB4	AB	MANGANESE	0.12	J	15	0.1	ug/L
WQ	E200.7	SW3050	NDA276AB4	AB	POTASSIUM	45.3	J	5000	26.6	ug/L
WQ	E200.7	SW3050	NDA320EB1	EB	ALUMINUM	100	J	200	25.8	ug/L
WQ	E200.7	SW3050	NDA311EB1	EB	BARIUM	0.11	J	200	0.1	ug/L
WQ	E200.7	SW3050	NDA323EB1	EB	BARIUM	0.13	J	200	0.1	ug/L
WQ	E200.7	SW3050	NDA272EB1	EB	BARIUM	0.14	J	200	0.1	ug/L
WQ	E200.7	SW3050	NDA305EB1	EB	BARIUM	0.14	J	200	0.1	ug/L
WQ	E200.7	SW3050	NDA304EB1	EB	BARIUM	0.15	J	200	0.1	ug/L
WQ	E200.7	SW3050	NDA313EB1	EB	BARIUM	0.44	J	200	0.1	ug/L
WQ	E200.7	SW3050	NDA318EB1	EB	BARIUM	0.52	J	200	0.1	ug/L
WQ	E200.7	SW3050	NDA316EB1	EB	BARIUM	0.74	J	200	0.1	ug/L
WQ	E200.7	SW3050	NDA309EB1	EB	BARIUM	1	J	200	0.1	ug/L
WQ	E200.7	SW3050	NDA320EB1	EB	BARIUM	1.9	J	200	0.1	ug/L
WQ	E200.7	SW3050	NDA320EB1	EB	BERYLLIUM	0.37	J	5	0.3	ug/L
WQ	E200.7	SW3050	NDA323EB1	EB	BERYLLIUM	0.56	J	5	0.3	ug/L
WQ	SW8270	SW3510	NDA320EB1	EB	PHTHALATE	2	J	5	0.9	ug/L
WQ	SW8270	SW3510	NDA323EB1	EB	PHTHALATE	2	J	5	0.9	ug/L
WQ	SW8270	SW3510	NDA313EB1	EB	PHTHALATE	4	J	5	0.89	ug/L
WQ	SW8270	SW3510	NDA316EB1	EB	PHTHALATE	7	=	5	0.88	ug/L
WQ	SW8260	SW5030	NDA030EB1	EB	BROMODICHLOROMETHANE	0.6	J	10	0.2	ug/L
WQ	SW8260	SW5030	NDA309EB1	EB	BROMODICHLOROMETHANE	0.7	J	10	0.2	ug/L
WQ	SW8260	SW5030	NDA311EB1	EB	BROMODICHLOROMETHANE	0.7	J	10	0.2	ug/L
WQ	SW8260	SW5030	NDA313EB1	EB	BROMODICHLOROMETHANE	0.8	J	10	0.2	ug/L
WQ	SW8260	SW5030	NDA318EB1	EB	BROMODICHLOROMETHANE	0.8	J	10	0.2	ug/L
WQ	SW8260	SW5030	NDA320EB1	EB	BROMODICHLOROMETHANE	0.8	J	10	0.2	ug/L
WQ	E200.7	SW3050	NDA272EB1	EB	CALCIUM	37.6	J	5000	11.7	ug/L
WQ	E200.7	SW3050	NDA311EB1	EB	CALCIUM	40.7	J	5000	11.7	ug/L
WQ	E200.7	SW3050	NDA309EB1	EB	CALCIUM	61.8	J	5000	11.7	ug/L

Matrix	Analytical Method	Prep Method	Sample ID	Type	Parameter	Lab Result	Lab Qual	RL	DL	Units
WQ	E200.7	SW3050	NDA318EB1	EB	CALCIUM	72.5	J	5000	11.7	ug/l
WQ	E200.7	SW3050	NDA304EB1	EB	CALCIUM	74.2	J	5000	11.7	ug/L
WQ	E200.7	SW3050	NDA323EB1	EB	CALCIUM	77.2	J	5000	11.7	ug/L
WQ	E200.7	SW3050	NDA305EB1	EB	CALCIUM	82.7	J	5000	11.7	ug/L
WQ	E200.7	SW3050	NDA316EB1	EB	CALCIUM	94.8	J	5000	11.7	ug/L
WQ	E200.7	SW3050	NDA030EB1	EB	CALCIUM	103	J	5000	11.7	ug/L
WQ	E200.7	SW3050	NDA313EB1	EB	CALCIUM	153	J	5000	11.7	ug/L
WQ	E200.7	SW3050	NDA320EB1	EB	CALCIUM	170	J	5000	11.7	ug/L
WQ	SW8260	SW5030	NDA316EB1	EB	CHLOROFORM	5	J	10	1	ug/L
WQ	SW8260	SW5030	NDA041EB1	EB	CHLOROFORM	6	J	10	1	ug/L
WQ	SW8260	SW5030	NDA030EB1	EB	CHLOROFORM	6	J	10	1	ug/L
WQ	SW8260	SW5030	NDA323EB1	EB	CHLOROFORM	6	J	10	1	ug/L
WQ	SW8260	SW5030	NDA272EB1	EB	CHLOROFORM	7	J	10	1	ug/L
WQ	SW8260	SW5030	NDA311EB1	EB	CHLOROFORM	7	J	10	1	ug/L
WQ	SW8260	SW5030	NDA320EB1	EB	CHLOROFORM	7	J	10	1	ug/L
WQ	SW8260	SW5030	NDA263EB1	EB	CHLOROFORM	8	J	10	1	ug/L
WQ	SW8260	SW5030	NDA305EB1	EB	CHLOROFORM	8	J	10	1	ug/L
WQ	SW8260	SW5030	NDA309EB1	EB	CHLOROFORM	8	J	10	1	ug/L
WQ	SW8260	SW5030	NDA313EB1	EB	CHLOROFORM	8	J	10	1	ug/L
WQ	SW8260	SW5030	NDA318EB1	EB	CHLOROFORM	8	J	10	1	ug/L
WQ	SW8260	SW5030	NDA304EB1	EB	CHLOROFORM	9	J	10	1	ug/L
WQ	SW8260	SW5030	NDA308EB1	EB	CHLOROFORM	12	=	10	1	ug/L
WQ	E200.7	SW3050	NDA030EB1	EB	CHROMIUM, TOTAL	0.67	J	10	0.5	ug/L
WQ	E200.7	SW3050	NDA313EB1	EB	CHROMIUM, TOTAL	1.1	J	10	0.5	ug/L
WQ	E200.7	SW3050	NDA316EB1	EB	CHROMIUM, TOTAL	2	J	10	0.5	ug/L
WQ	E200.7	SW3050	NDA272EB1	EB	CHROMIUM, TOTAL	3.3	J	10	0.5	ug/L
WQ	E200.7	SW3050	NDA320EB1	EB	CHROMIUM, TOTAL	3.3	J	10	0.5	ug/L
WQ	E200.7	SW3050	NDA323EB1	EB	CHROMIUM, TOTAL	3.3	J	10	0.5	ug/L
WQ	E200.7	SW3050	NDA309EB1	EB	CHROMIUM, TOTAL	5.8	J	10	0.5	ug/L
WQ	E200.7	SW3050	NDA320EB1	EB	COBALT	1.7	J	50	0.5	ug/L
WQ	E200.7	SW3050	NDA272EB1	EB	COPPER	2	J	25	1.9	ug/L
WQ	E200.7	SW3050	NDA304EB1	EB	COPPER	2.1	J	25	1.9	ug/L
WQ	E200.7	SW3050	NDA316EB1	EB	COPPER	2.1	J	25	1.9	ug/L
WQ	E200.7	SW3050	NDA311EB1	EB	COPPER	3.7	J	25	1.9	ug/L
WQ	E200.7	SW3050	NDA313EB1	EB	COPPER	3.9	J	25	1.9	ug/L
WQ	SW8270	SW3510	NDA263EB1	EB	DIETHYL PHTHALATE	0.6	J	11	0.5	ug/L
WQ	SW8270	SW3510	NDA308EB1	EB	DIETHYL PHTHALATE	0.6	J	10	0.4	ug/L
WQ	E200.7	SW3050	NDA318EB1	EB	IRON	14.7	J	100	12.2	ug/L
WQ	E200.7	SW3050	NDA030EB1	EB	IRON	15.7	J	100	12.2	ug/L
WQ	E200.7	SW3050	NDA305EB1	EB	IRON	17.4	J	100	12.2	ug/L
WQ	E200.7	SW3050	NDA272EB1	EB	IRON	33	J	100	12.2	ug/L
WQ	E200.7	SW3050	NDA323EB1	EB	IRON	33.2	J	100	12.2	ug/L
WQ	E200.7	SW3050	NDA313EB1	EB	IRON	33.5	J	100	12.2	ug/L
WQ	E200.7	SW3050	NDA316EB1	EB	IRON	34.8	J	100	12.2	ug/L
WQ	E200.7	SW3050	NDA309EB1	EB	IRON	99.7	J	100	12.2	ug/L
WQ	E200.7	SW3050	NDA320EB1	EB	IRON	160	=	100	12.2	ug/L
WQ	E200.7	SW3050	NDA030EB1	EB	LEAD	1.2	J	3	1.1	ug/L
WQ	E200.7	SW3050	NDA313EB1	EB	LEAD	1.6	J	3	1.1	ug/L
WQ	E200.7	SW3050	NDA304EB1	EB	LEAD	1.7	J	3	1.1	ug/L
WQ	E200.7	SW3050	NDA318EB1	EB	MAGNESIUM	11.5	J	5000	9	ug/L
WQ	E200.7	SW3050	NDA323EB1	EB	MAGNESIUM	12.8	J	5000	9	ug/L
WQ	E200.7	SW3050	NDA030EB1	EB	MAGNESIUM	15.7	J	5000	9	ug/L
WQ	E200.7	SW3050	NDA316EB1	EB	MAGNESIUM	21.5	J	5000	9	ug/L
WQ	E200.7	SW3050	NDA313EB1	EB	MAGNESIUM	31.9	J	5000	9	ug/L
WQ	E200.7	SW3050	NDA320EB1	EB	MAGNESIUM	57.4	J	5000	9	ug/L
WQ	E200.7	SW3050	NDA311EB1	EB	MANGANESE	0.15	J	15	0.1	ug/L
WQ	E200.7	SW3050	NDA305EB1	EB	MANGANESE	0.25	J	15	0.1	ug/L

Matrix	Analytical Method	Prep Method	Sample ID	Type	Parameter	Lab Result	Lab Qual	RL	DL	Units
WQ	E200.7	SW3050	NDA030EB1	EB	MANGANESE	0.29	J	15	0.1	ug/L
WQ	E200.7	SW3050	NDA323EB1	EB	MANGANESE	0.42	J	15	0.1	ug/L
WQ	E200.7	SW3050	NDA304EB1	EB	MANGANESE	0.44	J	15	0.1	ug/L
WQ	E200.7	SW3050	NDA318EB1	EB	MANGANESE	0.87	J	15	0.1	ug/L
WQ	E200.7	SW3050	NDA272EB1	EB	MANGANESE	1.1	J	15	0.1	ug/L
WQ	E200.7	SW3050	NDA313EB1	EB	MANGANESE	1.6	J	15	0.1	ug/L
WQ	E200.7	SW3050	NDA316EB1	EB	MANGANESE	2.1	J	15	0.1	ug/L
WQ	E200.7	SW3050	NDA309EB1	EB	MANGANESE	2.3	J	15	0.1	ug/L
WQ	E200.7	SW3050	NDA320EB1	EB	MANGANESE	7.1	J	15	0.1	ug/L
WQ	E200.7	SW3050	NDA316EB1	EB	NICKEL	0.91	J	40	0.8	ug/L
WQ	E200.7	SW3050	NDA320EB1	EB	NICKEL	0.98	J	40	0.8	ug/L
WQ	SW8270	SW3510	NDA263EB1	EB	PHENOL	0.3	J	11	0.2	ug/L
WQ	E200.7	SW3050	NDA305EB1	EB	POTASSIUM	29.5	J	5000	26.6	ug/L
WQ	E200.7	SW3050	NDA272EB1	EB	POTASSIUM	68.4	J	5000	26.6	ug/L
WQ	E200.7	SW3050	NDA304EB1	EB	POTASSIUM	74.2	J	5000	26.6	ug/L
WQ	E200.7	SW3050	NDA030EB1	EB	POTASSIUM	126	J	5000	26.6	ug/L
WQ	E200.7	SW3050	NDA316EB1	EB	POTASSIUM	143	J	5000	26.6	ug/L
WQ	E200.7	SW3050	NDA313EB1	EB	POTASSIUM	261	J	5000	26.6	ug/L
WQ	E200.7	SW3050	NDA304EB1	EB	SELENIUM	2.4	J	5	2.1	ug/L
WQ	E200.7	SW3050	NDA272EB1	EB	SODIUM	119	J	5000	115	ug/L
WQ	E200.7	SW3050	NDA320EB1	EB	SODIUM	130	J	5000	115	ug/L
WQ	E200.7	SW3050	NDA313EB1	EB	SODIUM	148	J	5000	115	ug/L
WQ	E200.7	SW3050	NDA323EB1	EB	SODIUM	215	J	5000	115	ug/L
WQ	E200.7	SW3050	NDA305EB1	EB	SODIUM	240	J	5000	115	ug/L
WQ	E200.7	SW3050	NDA304EB1	EB	SODIUM	275	J	5000	115	ug/L
WQ	E200.7	SW3050	NDA272EB1	EB	VANADIUM	1.1	J	50	0.8	ug/L
WQ	E200.7	SW3050	NDA320EB1	EB	VANADIUM	1.3	J	50	0.8	ug/L
WQ	E200.7	SW3050	NDA318EB1	EB	ZINC	3.4	J	20	2.5	ug/L
WQ	E200.7	SW3050	NDA305EB1	EB	ZINC	3.5	J	20	2.5	ug/L
WQ	E200.7	SW3050	NDA320EB1	EB	ZINC	3.6	J	20	2.5	ug/L
WQ	E200.7	SW3050	NDA304EB1	EB	ZINC	4.9	J	20	2.5	ug/L
WQ	E200.7	SW3050	NDA313EB1	EB	ZINC	5.2	J	20	2.5	ug/L
WQ	E200.7	SW3050	NDA311EB1	EB	ZINC	7.7	J	20	2.5	ug/L
WQ	E200.7	SW3050	NDA031EB2	EB	ALUMINUM	39.3	J	200	25.8	ug/L
WQ	E200.7	SW3050	NDA310EB2	EB	BARIUM	0.24	J	200	0.1	ug/L
WQ	E200.7	SW3050	NDA324EB2	EB	BARIUM	0.25	J	200	0.1	ug/L
WQ	E200.7	SW3050	NDA031EB2	EB	BARIUM	0.29	J	200	0.1	ug/L
WQ	E200.7	SW3050	NDA312EB2	EB	BARIUM	0.38	J	200	0.1	ug/L
WQ	E200.7	SW3050	NDA306EB2	EB	BARIUM	1	J	200	0.1	ug/L
WQ	E200.7	SW3050	NDA306EB2	EB	BERYLLIUM	0.32	J	5	0.3	ug/L
WQ	E200.7	SW3050	NDA324EB2	EB	BERYLLIUM	0.47	J	5	0.3	ug/L
WQ	SW8270	SW3510	NDA306EB2	EB	PHTHALATE	1	J	11	0.94	ug/L
WQ	SW8270	SW3510	NDA324EB2	EB	PHTHALATE	2	J	6	1	ug/L
WQ	SW8270	SW3510	NDA031EB2	EB	PHTHALATE	3	J	10	0.9	ug/L
WQ	SW8260	SW5030	NDA312EB2	EB	BROMODICHLOROMETHANE	0.7	J	10	0.2	ug/L
WQ	E200.7	SW3050	NDA031EB2	EB	CALCIUM	57.4	J	5000	11.6	ug/L
WQ	E200.7	SW3050	NDA310EB2	EB	CALCIUM	72.8	J	5000	11.7	ug/L
WQ	E200.7	SW3050	NDA324EB2	EB	CALCIUM	110	J	5000	11.7	ug/L
WQ	E200.7	SW3050	NDA312EB2	EB	CALCIUM	122	J	5000	11.7	ug/L
WQ	E200.7	SW3050	NDA306EB2	EB	CALCIUM	180	J	5000	11.7	ug/L
WQ	SW8260	SW5030	NDA310EB2	EB	CHLOROFORM	5	J	10	1	ug/L
WQ	SW8260	SW5030	NDA031EB2	EB	CHLOROFORM	7	J	10	1	ug/L
WQ	SW8260	SW5030	NDA312EB2	EB	CHLOROFORM	7	J	10	1	ug/L
WQ	SW8260	SW5030	NDA324EB2	EB	CHLOROFORM	10	=	10	1	ug/L
WQ	SW8260	SW5030	NDA306EB2	EB	CHLOROFORM	13	=	10	1	ug/L
WQ	E200.7	SW3050	NDA310EB2	EB	CHROMIUM, TOTAL	0.79	J	10	0.5	ug/L
WQ	E200.7	SW3050	NDA312EB2	EB	CHROMIUM, TOTAL	1.2	J	10	0.5	ug/L

Matrix	Analytical Method	Prep Method	Sample ID	Type	Parameter	Lab Result	Lab Qual	RL	DL	Units
WQ	E200.7	SW3050	NDA306EB2	EB	CHROMIUM, TOTAL	3.7	J	10	0.5	ug/L
WQ	E200.7	SW3050	NDA306EB2	EB	COPPER	2	J	25	1.9	ug/L
WQ	E200.7	SW3050	NDA310EB2	EB	COPPER	2.7	J	25	1.9	ug/L
WQ	E200.7	SW3050	NDA324EB2	EB	IRON	19.5	J	100	12.2	ug/L
WQ	E200.7	SW3050	NDA310EB2	EB	IRON	35.1	J	100	12.2	ug/L
WQ	E200.7	SW3050	NDA312EB2	EB	IRON	71.6	J	100	12.2	ug/L
WQ	E200.7	SW3050	NDA306EB2	EB	IRON	93.5	J	100	12.2	ug/L
WQ	E200.7	SW3050	NDA324EB2	EB	MAGNESIUM	9.3	J	5000	9	ug/L
WQ	E200.7	SW3050	NDA306EB2	EB	MAGNESIUM	12.4	J	5000	9	ug/L
WQ	E200.7	SW3050	NDA312EB2	EB	MAGNESIUM	24.7	J	5000	9	ug/L
WQ	E200.7	SW3050	NDA031EB2	EB	MAGNESIUM	28.5	J	5000	9	ug/L
WQ	E200.7	SW3050	NDA310EB2	EB	MANGANESE	0.42	J	15	0.1	ug/L
WQ	E200.7	SW3050	NDA031EB2	EB	MANGANESE	0.61	J	15	0.1	ug/L
WQ	E200.7	SW3050	NDA324EB2	EB	MANGANESE	0.64	J	15	0.1	ug/L
WQ	E200.7	SW3050	NDA312EB2	EB	MANGANESE	1.6	J	15	0.1	ug/L
WQ	E200.7	SW3050	NDA306EB2	EB	MANGANESE	2.7	J	15	0.1	ug/L
WQ	E200.7	SW3050	NDA306EB2	EB	NICKEL	2.8	J	40	0.8	ug/L
WQ	E200.7	SW3050	NDA310EB2	EB	POTASSIUM	29.5	J	5000	26.6	ug/L
WQ	E200.7	SW3050	NDA312EB2	EB	POTASSIUM	53.9	J	5000	26.6	ug/L
WQ	E200.7	SW3050	NDA306EB2	EB	POTASSIUM	103	J	5000	26.6	ug/L
WQ	E200.7	SW3050	NDA312EB2	EB	SODIUM	138	J	5000	115	ug/L
WQ	E200.7	SW3050	NDA310EB2	EB	SODIUM	168	J	5000	115	ug/L
WQ	E200.7	SW3050	NDA306EB2	EB	SODIUM	654	J	5000	115	ug/L
WQ	SW8260	SW5030	NDA310EB2	EB	STYRENE	0.4	J	10	0.2	ug/L
WQ	E200.7	SW3050	NDA310EB2	EB	ZINC	2.6	J	20	2.5	ug/L
WQ	E200.7	SW3050	NDA031EB2	EB	ZINC	2.8	J	20	2.5	ug/L
WQ	E200.7	SW3050	NDA312EB2	EB	ZINC	2.8	J	20	2.5	ug/L
WQ	E200.7	SW3050	NDA324EB2	EB	ZINC	5.3	J	20	2.5	ug/L
WQ	E200.7	SW3050	NDA306EB2	EB	ZINC	6.7	J	20	2.5	ug/L
WQ	E200.7	SW3050	NDA032EB3	EB	BARIUM	0.13	J	200	0.1	ug/L
WQ	E200.7	SW3050	NDA032EB3	EB	CALCIUM	47.2	J	5000	11.6	ug/L
WQ	SW8260	SW5030	NDA032EB3	EB	CHLOROFORM	10	J	10	1	ug/L
WQ	SW8270	SW3510	NDA032EB3	EB	DIETHYL PHTHALATE	0.6	J	5	0.45	ug/L
WQ	E200.7	SW3050	NDA032EB3	EB	IRON	16.6	J	100	12.2	ug/L
WQ	E200.7	SW3050	NDA032EB3	EB	MAGNESIUM	14.1	J	5000	9	ug/L
WQ	E200.7	SW3050	NDA032EB3	EB	MANGANESE	0.8	J	15	0.1	ug/L
WQ	E200.7	SW3050	NDA266EB4	EB	ALUMINUM	31.6	J	200	25.8	ug/L
WQ	E200.7	SW3050	NDA266EB4	EB	BARIUM	0.17	J	200	0.1	ug/L
WQ	E200.7	SW3050	NDA266EB4	EB	CALCIUM	94.6	J	5000	11.7	ug/L
WQ	SW8260	SW5030	NDA266EB4	EB	CHLOROFORM	14	=	10	1	ug/L
WQ	E200.7	SW3050	NDA266EB4	EB	IRON	17.4	J	100	12.2	ug/L
WQ	E200.7	SW3050	NDA266EB4	EB	MAGNESIUM	26.7	J	5000	9	ug/L
WQ	E200.7	SW3050	NDA266EB4	EB	MANGANESE	0.59	J	15	0.1	ug/L
WQ	E200.7	SW3050	NDA266EB4	EB	POTASSIUM	42.6	J	5000	26.6	ug/L
WQ	E200.7	SW3050	NDA267EB5	EB	BARIUM	0.31	J	200	0.1	ug/L
WQ	E200.7	SW3050	NDA267EB5	EB	CALCIUM	153	J	5000	11.7	ug/L
WQ	SW8260	SW5030	NDA267EB5	EB	CHLOROFORM	9	J	10	1	ug/L
WQ	E200.7	SW3050	NDA267EB5	EB	IRON	37.9	J	100	12.2	ug/L
WQ	E200.7	SW3050	NDA267EB5	EB	MAGNESIUM	25.5	J	5000	9	ug/L
WQ	E200.7	SW3050	NDA267EB5	EB	MANGANESE	0.85	J	15	0.1	ug/L
WQ	E200.7	SW3050	NDA267EB5	EB	POTASSIUM	47.4	J	5000	26.6	ug/L
WQ	E200.7	SW3050	NDA267EB5	EB	THALLIUM	2.8	J	10	2.7	ug/L
WQ	E200.7	SW3050	NDA267EB5	EB	ZINC	11.6	J	20	2.5	ug/L
WQ	SW8260	SW5030	NDA268EB6	EB	ACETONE	1390	E	10	10	ug/L
WQ	E200.7	SW3050	NDA268EB6	EB	BARIUM	0.2	J	200	0.1	ug/L
WQ	E200.7	SW3050	NDA268EB6	EB	CALCIUM	141	J	5000	11.7	ug/L
WQ	SW8260	SW5030	NDA268EB6	EB	CHLOROFORM	10	J	10	1	ug/L

Matrix	Analytical Method	Prep Method	Sample ID	Type	Parameter	Lab Result	Lab Qual	RL	DL	Units
WQ	E200.7	SW3050	NDA268EB6	EB	CHROMIUM, TOTAL	0.81	J	10	0.5	ug/L
WQ	E200.7	SW3050	NDA268EB6	EB	IRON	32.7	J	100	12.2	ug/L
WQ	E200.7	SW3050	NDA268EB6	EB	MAGNESIUM	15.4	J	5000	9	ug/L
WQ	E200.7	SW3050	NDA268EB6	EB	MANGANESE	0.42	J	15	0.1	ug/L
WQ	E200.7	SW3050	NDA268EB6	EB	POTASSIUM	46.9	J	5000	26.6	ug/L
WQ	E200.7	SW3050	NDA268EB6	EB	ZINC	8.6	J	20	2.5	ug/L
WQ	SW8260	SW5030	NDA269EB7	EB	ACETONE	649	E	10	10	ug/L
WQ	E200.7	SW3050	NDA269EB7	EB	BARIUM	0.15	J	200	0.1	ug/L
WQ	SW8270	SW3510	NDA269EB7	EB	BENZO(g,h,i)PERYLENE	1	J	11	0.4	ug/L
WQ	SW8270	SW3510	NDA269EB7	EB	PHTHALATE	2	J	11	0.9	ug/L
WQ	E200.7	SW3050	NDA269EB7	EB	CALCIUM	77.9	J	5000	11.6	ug/L
WQ	SW8260	SW5030	NDA269EB7	EB	CHLOROFORM	9	J	10	1	ug/L
WQ	E200.7	SW3050	NDA269EB7	EB	CHROMIUM, TOTAL	1.2	J	10	0.5	ug/L
WQ	SW8270	SW3510	NDA269EB7	EB	INDENO(1,2,3-c,d)PYRENE	0.5	J	11	0.4	ug/L
WQ	E200.7	SW3050	NDA269EB7	EB	IRON	25.2	J	100	12.2	ug/L
WQ	E200.7	SW3050	NDA269EB7	EB	MANGANESE	0.31	J	15	0.1	ug/L
WQ	E200.7	SW3050	NDA269EB7	EB	ZINC	3.9	J	20	2.5	ug/L
WQ	SW8260	SW5030	NDA270EB8	EB	ACETONE	10	=	10	10	ug/L
WQ	E200.7	SW3050	NDA270EB8	EB	BARIUM	0.13	J	200	0.1	ug/L
WQ	E200.7	SW3050	NDA270EB8	EB	CALCIUM	93.7	J	5000	11.7	ug/L
WQ	E200.7	SW3050	NDA270EB8	EB	COPPER	2.5	J	25	1.9	ug/L
WQ	E200.7	SW3050	NDA270EB8	EB	IRON	18.2	J	100	12.2	ug/L
WQ	E200.7	SW3050	NDA270EB8	EB	MANGANESE	0.46	J	15	0.1	ug/L
WQ	E200.7	SW3050	NDA270EB8	EB	POTASSIUM	29.1	J	5000	26.6	ug/L
WQ	E200.7	SW3050	NDA270EB8	EB	ZINC	4.9	J	20	2.5	ug/L
WQ	E200.7	SW3050	NDA271EB9	EB	BARIUM	0.12	J	200	0.1	ug/L
WQ	E200.7	SW3050	NDA271EB9	EB	CALCIUM	94.3	J	5000	11.7	ug/L
WQ	SW8260	SW5030	NDA271EB9	EB	CHLOROFORM	10	J	10	1	ug/L
WQ	E200.7	SW3050	NDA271EB9	EB	MANGANESE	0.22	J	15	0.1	ug/L
WQ	E200.7	SW3050	NDA271EB9	EB	POTASSIUM	73.5	J	5000	26.6	ug/L
WQ	E200.7	SW3050	NDA271EB9	EB	SELENIUM	2.3	J	5	2.1	ug/L
WQ	E200.7	SW3050	NDA271EB9	EB	SODIUM	172	J	5000	115	ug/L
SOIL	E200.7	SW3050	BLKS050400M17	LB	ALUMINUM	2.704	J	40	2.58	mg/kg
SOIL	E200.7	SW3050	BLKS050200M08	LB	ALUMINUM	3.847	J	40	2.58	mg/kg
SOIL	E200.7	SW3050	BLKS041300M07	LB	ALUMINUM	4.447	J	40	2.58	mg/kg
SOIL	E200.7	SW3050	BLKS042100M07	LB	ALUMINUM	6.467	J	40	2.58	mg/kg
SOIL	E200.7	SW3050	BLKS042100M07	LB	ALUMINUM	6.467	J	40	2.58	mg/kg
SOIL	E200.7	SW3050	BLKS042100M08	LB	ALUMINUM	6.467	J	40	2.58	mg/kg
SOIL	E200.7	SW3050	BLKS050400M17	LB	BARIUM	0.011	J	40	0.01	mg/kg
SOIL	E200.7	SW3050	BLKS041100M01	LB	BARIUM	0.015	J	40	0.01	mg/kg
SOIL	E200.7	SW3050	BLKS041100M02	LB	BARIUM	0.015	J	40	0.01	mg/kg
SOIL	E200.7	SW3050	BLKS041100M03	LB	BARIUM	0.015	J	40	0.01	mg/kg
SOIL	E200.7	SW3050	BLKS041100M05	LB	BARIUM	0.015	J	40	0.01	mg/kg
SOIL	E200.7	SW3050	BLKS050200M08	LB	BARIUM	0.015	J	40	0.01	mg/kg
SOIL	E200.7	SW3050	BLKS040800M01	LB	BARIUM	0.019	J	40	0.01	mg/kg
SOIL	E200.7	SW3050	BLKS041500M10	LB	BARIUM	0.019	J	40	0.01	mg/kg
SOIL	E200.7	SW3050	BLKB040800M01	LB	BARIUM	0.025	J	40	0.01	mg/kg
SOIL	E200.7	SW3050	BLKB040800M02	LB	BARIUM	0.025	J	40	0.01	mg/kg
SOIL	E200.7	SW3050	BLKS042100M16	LB	CALCIUM	1.421	J	1000	1.17	mg/kg
SOIL	E200.7	SW3050	BLKS041300M08	LB	CALCIUM	1.562	J	1000	1.17	mg/kg
SOIL	E200.7	SW3050	BLKS040800M01	LB	CALCIUM	2.303	J	1000	1.2	mg/kg
SOIL	E200.7	SW3050	BLKS050400M17	LB	CALCIUM	2.838	J	1000	1.17	mg/kg
SOIL	E200.7	SW3050	BLKB040800M01	LB	CALCIUM	2.904	J	1000	1.2	mg/kg
SOIL	E200.7	SW3050	BLKB040800M02	LB	CALCIUM	2.904	J	1000	1.2	mg/kg
SOIL	E200.7	SW3050	BLKS041500M08	LB	CALCIUM	3.464	J	1000	1.17	mg/kg
SOIL	E200.7	SW3050	BLKS041300M07	LB	CALCIUM	3.847	J	1000	1.2	mg/kg
SOIL	E200.7	SW3050	BLKS042100M07	LB	CALCIUM	6.699	J	1000	1.2	mg/kg

Matrix	Analytical Method	Prep Method	Sample ID	Type	Parameter	Lab Result	Lab Qual	RL	DL	Units
SOIL	E200.7	SW3050	BLKS042100M07	LB	CALCIUM	6.699	J	1000	1.2	mg/k
SOIL	E200.7	SW3050	BLKS042100M08	LB	CALCIUM	6.699	J	1000	1.17	mg/kg
SOIL	E200.7	SW3050	BLKS040900M03	LB	CALCIUM	7.345	J	1000	1.2	mg/kg
SOIL	E200.7	SW3050	BLKS041300M07	LB	CALCIUM	9.387	J	1000	1.2	mg/kg
SOIL	E200.7	SW3050	BLKS040900M05	LB	CALCIUM	14.331	J	1000	1.2	mg/kg
SOIL	E200.7	SW3050	BLKS041500M10	LB	CALCIUM	15.381	J	1000	1.17	mg/kg
SOIL	E200.7	SW3050	BLKS050200M08	LB	CALCIUM	17.273	J	1000	1.17	mg/kg
SOIL	E200.7	SW3050	BLKS041100M01	LB	CALCIUM	20.094	J	1000	1.2	mg/kg
SOIL	E200.7	SW3050	BLKS041100M02	LB	CALCIUM	20.094	J	1000	1.2	mg/kg
SOIL	E200.7	SW3050	BLKS041100M03	LB	CALCIUM	20.094	J	1000	1.2	mg/kg
SOIL	E200.7	SW3050	BLKS041100M05	LB	CALCIUM	20.094	J	1000	1.2	mg/kg
SOIL	E200.7	SW3050	BLKS041300M07	LB	CHROMIUM, TOTAL	0.054	J	2	0.05	mg/kg
SOIL	E200.7	SW3050	BLKS041300M08	LB	CHROMIUM, TOTAL	0.057	J	2	0.05	mg/kg
SOIL	E200.7	SW3050	BLKS040900M05	LB	CHROMIUM, TOTAL	0.068	J	2	0.05	mg/kg
SOIL	E200.7	SW3050	BLKS041100M01	LB	CHROMIUM, TOTAL	0.135	J	2	0.05	mg/kg
SOIL	E200.7	SW3050	BLKS041100M02	LB	CHROMIUM, TOTAL	0.135	J	2	0.05	mg/kg
SOIL	E200.7	SW3050	BLKS041100M03	LB	CHROMIUM, TOTAL	0.135	J	2	0.05	mg/kg
SOIL	E200.7	SW3050	BLKS041100M05	LB	CHROMIUM, TOTAL	0.135	J	2	0.05	mg/kg
SOIL	E200.7	SW3050	BLKS040900M05	LB	COPPER	0.298	J	5	0.19	mg/kg
SOIL	E200.7	SW3050	BLKS042100M14	LB	IRON	1.387	J	20	1.22	mg/kg
SOIL	E200.7	SW3050	BLKS040800M01	LB	IRON	1.399	J	20	1.22	mg/kg
SOIL	E200.7	SW3050	BLKS050400M17	LB	IRON	1.462	J	20	1.22	mg/kg
SOIL	E200.7	SW3050	BLKS051800M19	LB	IRON	1.954	J	20	1.22	mg/kg
SOIL	E200.7	SW3050	BLKS040900M05	LB	IRON	2.269	J	20	1.22	mg/kg
SOIL	E200.7	SW3050	BLKS041300M07	LB	IRON	2.287	J	20	1.22	mg/kg
SOIL	E200.7	SW3050	BLKS042100M14	LB	IRON	2.738	J	20	1.22	mg/kg
SOIL	E200.7	SW3050	BLKS042100M16	LB	IRON	2.738	J	20	1.22	mg/kg
SOIL	E200.7	SW3050	BLKB040800M01	LB	IRON	3.086	J	20	1.22	mg/kg
SOIL	E200.7	SW3050	BLKB040800M02	LB	IRON	3.086	J	20	1.22	mg/kg
SOIL	E200.7	SW3050	BLKS041100M01	LB	IRON	3.194	J	20	1.22	mg/kg
SOIL	E200.7	SW3050	BLKS041100M02	LB	IRON	3.194	J	20	1.22	mg/kg
SOIL	E200.7	SW3050	BLKS041100M03	LB	IRON	3.194	J	20	1.22	mg/kg
SOIL	E200.7	SW3050	BLKS041100M05	LB	IRON	3.194	J	20	1.22	mg/kg
SOIL	E200.7	SW3050	BLKS042100M07	LB	IRON	3.459	J	20	1.22	mg/kg
SOIL	E200.7	SW3050	BLKS042100M07	LB	IRON	3.459	J	20	1.22	mg/kg
SOIL	E200.7	SW3050	BLKS042100M08	LB	IRON	3.459	J	20	1.22	mg/kg
SOIL	E200.7	SW3050	BLKS050200M08	LB	IRON	3.812	J	20	1.22	mg/kg
SOIL	E200.7	SW3050	BLKS041300M07	LB	IRON	3.894	J	20	1.22	mg/kg
SOIL	E200.7	SW3050	BLKS041500M10	LB	IRON	5.078	J	20	1.22	mg/kg
SOIL	E200.7	SW3050	BLKS041300M07	LB	LEAD	0.111	J	0.6	0.11	mg/kg
SOIL	E200.7	SW3050	BLKS041300M07	LB	LEAD	0.135	J	0.6	0.11	mg/kg
SOIL	E200.7	SW3050	BLKS041300M08	LB	LEAD	0.145	J	0.6	0.11	mg/kg
SOIL	E200.7	SW3050	BLKS050400M17	LB	LEAD	0.167	J	0.6	0.11	mg/kg
SOIL	E200.7	SW3050	BLKS040900M03	LB	MAGNESIUM	1.065	J	1000	0.9	mg/kg
SOIL	E200.7	SW3050	BLKS040800M01	LB	MAGNESIUM	1.252	J	1000	0.9	mg/kg
SOIL	E200.7	SW3050	BLKS040900M05	LB	MAGNESIUM	1.654	J	1000	0.9	mg/kg
SOIL	E200.7	SW3050	BLKS041100M01	LB	MAGNESIUM	3.062	J	1000	0.9	mg/kg
SOIL	E200.7	SW3050	BLKS041100M02	LB	MAGNESIUM	3.062	J	1000	0.9	mg/kg
SOIL	E200.7	SW3050	BLKS041100M03	LB	MAGNESIUM	3.062	J	1000	0.9	mg/kg
SOIL	E200.7	SW3050	BLKS041100M05	LB	MAGNESIUM	3.062	J	1000	0.9	mg/kg
SOIL	E200.7	SW3050	BLKS050200M08	LB	MAGNESIUM	5.438	J	1000	0.9	mg/kg
SOIL	E200.7	SW3050	BLKS042100M07	LB	MAGNESIUM	5.857	J	1000	0.9	mg/kg
SOIL	E200.7	SW3050	BLKS042100M07	LB	MAGNESIUM	5.857	J	1000	0.9	mg/kg
SOIL	E200.7	SW3050	BLKS042100M08	LB	MAGNESIUM	5.857	J	1000	0.9	mg/kg
SOIL	E200.7	SW3050	BLKS041300M07	LB	MAGNESIUM	6.72	J	1000	0.9	mg/kg
SOIL	E200.7	SW3050	BLKS041300M08	LB	MANGANESE	0.012	J	3	0.01	mg/kg
SOIL	E200.7	SW3050	BLKS040800M01	LB	MANGANESE	0.014	J	3	0.01	mg/kg

Matrix	Analytical Method	Prep Method	Sample ID	Type	Parameter	Lab Result	Lab Qual	RL	DL	Units
SOIL	E200.7	SW3050	BLKS040900M03	LB	MANGANESE	0.015	J	3	0.01	mg/kg
SOIL	E200.7	SW3050	BLKS042100M07	LB	MANGANESE	0.016	J	3	0.01	mg/kg
SOIL	E200.7	SW3050	BLKS042100M07	LB	MANGANESE	0.016	J	3	0.01	mg/kg
SOIL	E200.7	SW3050	BLKS042100M08	LB	MANGANESE	0.016	J	3	0.01	mg/kg
SOIL	E200.7	SW3050	BLKS050200M08	LB	MANGANESE	0.016	J	3	0.01	mg/kg
SOIL	E200.7	SW3050	BLKS050400M17	LB	MANGANESE	0.016	J	3	0.01	mg/kg
SOIL	E200.7	SW3050	BLKS041300M07	LB	MANGANESE	0.018	J	3	0.01	mg/kg
SOIL	E200.7	SW3050	BLKS042100M14	LB	MANGANESE	0.018	J	3	0.01	mg/kg
SOIL	E200.7	SW3050	BLKS040900M05	LB	MANGANESE	0.022	J	3	0.01	mg/kg
SOIL	E200.7	SW3050	BLKS041100M01	LB	MANGANESE	0.035	J	3	0.01	mg/kg
SOIL	E200.7	SW3050	BLKS041100M02	LB	MANGANESE	0.035	J	3	0.01	mg/kg
SOIL	E200.7	SW3050	BLKS041100M03	LB	MANGANESE	0.035	J	3	0.01	mg/kg
SOIL	E200.7	SW3050	BLKS041100M05	LB	MANGANESE	0.035	J	3	0.01	mg/kg
SOIL	E200.7	SW3050	BLKS042100M14	LB	MANGANESE	0.037	J	3	0.01	mg/kg
SOIL	E200.7	SW3050	BLKS041300M07	LB	MANGANESE	0.041	J	3	0.01	mg/kg
SOIL	E200.7	SW3050	BLKS042100M16	LB	MANGANESE	0.054	J	3	0.01	mg/kg
SOIL	E200.7	SW3050	BLKS041500M10	LB	MANGANESE	0.102	J	3	0.01	mg/kg
SOIL	E200.7	SW3050	BLKB040800M01	LB	MANGANESE	0.104	J	3	0.01	mg/kg
SOIL	E200.7	SW3050	BLKB040800M02	LB	MANGANESE	0.104	J	3	0.01	mg/kg
SOIL	E200.7	SW3050	BLKS041300M07	LB	POTASSIUM	2.704	J	1000	2.7	mg/kg
SOIL	E200.7	SW3050	BLKS042100M16	LB	POTASSIUM	2.96	J	1000	2.66	mg/kg
SOIL	E200.7	SW3050	BLKS040900M03	LB	POTASSIUM	3.409	J	1000	2.7	mg/kg
SOIL	E200.7	SW3050	BLKS042100M07	LB	POTASSIUM	3.492	J	1000	2.7	mg/kg
SOIL	E200.7	SW3050	BLKS042100M07	LB	POTASSIUM	3.492	J	1000	2.7	mg/kg
SOIL	E200.7	SW3050	BLKS042100M08	LB	POTASSIUM	3.492	J	1000	2.66	mg/kg
SOIL	E200.7	SW3050	BLKS041500M08	LB	POTASSIUM	3.726	J	1000	2.66	mg/kg
SOIL	E200.7	SW3050	BLKS041100M01	LB	POTASSIUM	3.868	J	1000	2.7	mg/kg
SOIL	E200.7	SW3050	BLKS041100M02	LB	POTASSIUM	3.868	J	1000	2.7	mg/kg
SOIL	E200.7	SW3050	BLKS041100M03	LB	POTASSIUM	3.868	J	1000	2.7	mg/kg
SOIL	E200.7	SW3050	BLKS041100M05	LB	POTASSIUM	3.868	J	1000	2.7	mg/kg
SOIL	E200.7	SW3050	BLKS050200M08	LB	POTASSIUM	4.631	J	1000	2.66	mg/kg
SOIL	E200.7	SW3050	BLKS040900M05	LB	POTASSIUM	4.999	J	1000	2.7	mg/kg
SOIL	E200.7	SW3050	BLKS040800M01	LB	POTASSIUM	5.045	J	1000	2.7	mg/kg
SOIL	E200.7	SW3050	BLKS041300M07	LB	POTASSIUM	5.333	J	1000	2.7	mg/kg
SOIL	E200.7	SW3050	BLKS041300M08	LB	POTASSIUM	5.641	J	1000	2.66	mg/kg
SOIL	E200.7	SW3050	BLKB040800M01	LB	POTASSIUM	6.181	J	1000	2.7	mg/kg
SOIL	E200.7	SW3050	BLKB040800M02	LB	POTASSIUM	6.181	J	1000	2.7	mg/kg
SOIL	E200.7	SW3050	BLKS041500M10	LB	POTASSIUM	7.126	J	1000	2.66	mg/kg
SOIL	E200.7	SW3050	BLKS050400M17	LB	POTASSIUM	12.084	J	1000	2.66	mg/kg
SOIL	E200.7	SW3050	BLKS041500M08	LB	SELENIUM	0.252	J	1	0.21	mg/kg
SOIL	E200.7	SW3050	BLKS050200M08	LB	SODIUM	11.765	J	1000	11.5	mg/kg
SOIL	E200.7	SW3050	BLKS041300M07	LB	ZINC	0.302	J	4	0.25	mg/kg
SOIL	E200.7	SW3050	BLKS041300M08	LB	ZINC	0.346	J	4	0.25	mg/kg
SOIL	E200.7	SW3050	BLKB040800M01	LB	ZINC	0.408	J	4	0.25	mg/kg
SOIL	E200.7	SW3050	BLKB040800M02	LB	ZINC	0.408	J	4	0.25	mg/kg
SOIL	E200.7	SW3050	BLKS040900M05	LB	ZINC	0.56	J	4	0.25	mg/kg
SOIL	E200.7	SW3050	BLKS041100M01	LB	ZINC	0.744	J	4	0.25	mg/kg
SOIL	E200.7	SW3050	BLKS041100M02	LB	ZINC	0.744	J	4	0.25	mg/kg
SOIL	E200.7	SW3050	BLKS041100M03	LB	ZINC	0.744	J	4	0.25	mg/kg
SOIL	E200.7	SW3050	BLKS041100M05	LB	ZINC	0.744	J	4	0.25	mg/kg
SOIL	E200.7	SW3050	BLKS041500M10	LB	ZINC	1.12	J	4	0.25	mg/kg
SOIL	SW8260	SW5030	041900BLKS12	LB	1,2-DICHLOROETHANE	0.3	J	10	0.2	ug/kg
SOIL	SW8260	SW5030	041900BLKS12	LB	1,2-DICHLOROETHANE	0.3	J	10	0.2	ug/kg
SOIL	SW8260	SW5030	042000BLKS12	LB	1,2-DICHLOROETHANE	0.3	J	10	0.2	ug/kg
SOIL	SW8260	SW5030	042000BLKS12	LB	1,2-DICHLOROETHANE	0.3	J	10	0.2	ug/kg
SOIL	SW8260	SW5030	042400BLKS14	LB	ACETONE	11	=	10	10	ug/kg
SOIL	SW8260	SW5030	042400BLKS14	LB	ACETONE	11	=	10	10	ug/kg

Matrix	Analytical Method	Prep Method	Sample ID	Type	Parameter	Lab Result	Lab Qual	RL	DL	Units
SOIL	SW8260	SW5030	041800BLKS12	LB	ACETONE	12	=	10	10	ug/kg
SOIL	SW8260	SW5030	041800BLKS12	LB	ACETONE	12	=	10	10	ug/kg
SOIL	SW8260	SW5030	042000BLKS12	LB	ACETONE	13	=	10	10	ug/kg
SOIL	SW8260	SW5030	042000BLKS12	LB	ACETONE	13	=	10	10	ug/kg
SOIL	SW8260	SW5030	042500BLKS16	LB	ACETONE	13	=	10	10	ug/kg
SOIL	SW8260	SW5030	041100BLKS14	LB	ACETONE	14	=	10	10	ug/kg
SOIL	SW8260	SW5030	041100BLKS14	LB	ACETONE	14	=	10	10	ug/kg
SOIL	SW8260	SW5030	041300BLKS14	LB	ACETONE	14	=	10	10	ug/kg
SOIL	SW8260	SW5030	041300BLKS14	LB	ACETONE	14	=	10	10	ug/kg
SOIL	SW8260	SW5030	041400BLKS14	LB	ACETONE	14	=	10	10	ug/kg
SOIL	SW8260	SW5030	041400BLKS14	LB	ACETONE	14	=	10	10	ug/kg
SOIL	SW8260	SW5030	042400BLKS12	LB	ACETONE	14	=	10	10	ug/kg
SOIL	SW8260	SW5030	042400BLKS12	LB	ACETONE	14	=	10	10	ug/kg
SOIL	SW8260	SW5030	042500BLKS13	LB	ACETONE	14	=	10	10	ug/kg
SOIL	SW8260	SW5030	042500BLKS13	LB	ACETONE	14	=	10	10	ug/kg
SOIL	SW8260	SW5030	041900BLKS12	LB	ACETONE	15	=	10	10	ug/kg
SOIL	SW8260	SW5030	041700BLKS14	LB	ACETONE	15	=	10	10	ug/kg
SOIL	SW8260	SW5030	041900BLKS12	LB	ACETONE	15	=	10	10	ug/kg
SOIL	SW8260	SW5030	042600BLKS12	LB	ACETONE	15	=	10	10	ug/kg
SOIL	SW8260	SW5030	041000BLKS12	LB	ACETONE	16	=	10	10	ug/kg
SOIL	SW8260	SW5030	041000BLKS12	LB	ACETONE	16	=	10	10	ug/kg
SOIL	SW8260	SW5030	041000BLKS14	LB	ACETONE	17	=	10	10	ug/kg
SOIL	SW8260	SW5030	041000BLKS14	LB	ACETONE	17	=	10	10	ug/kg
SOIL	SW8260	SW5030	041000BLKS14	LB	ACETONE	17	=	10	10	ug/kg
SOIL	SW8260	SW5030	041400BLKS32	LB	ACETONE	17	=	10	10	ug/kg
SOIL	SW8260	SW5030	041400BLKS32	LB	ACETONE	17	=	10	10	ug/kg
SOIL	SW8260	SW5030	042400BLKA22	LB	ACETONE	17	=	10	10	ug/kg
SOIL	SW8260	SW5030	042400BLKA22	LB	ACETONE	17	=	10	10	ug/kg
SOIL	SW8260	SW5030	042400BLKA22	LB	ACETONE	17	=	10	10	ug/kg
SOIL	SW8260	SW5030	040900BLKS12	LB	ACETONE	19	=	10	10	ug/kg
SOIL	SW8260	SW5030	041500BLKS12	LB	ACETONE	19	=	10	10	ug/kg
SOIL	SW8260	SW5030	041500BLKS12	LB	ACETONE	19	=	10	10	ug/kg
SOIL	SW8260	SW5030	041100BLKS12	LB	ACETONE	20	=	10	10	ug/kg
SOIL	SW8260	SW5030	041100BLKS12	LB	ACETONE	20	=	10	10	ug/kg
SOIL	SW8260	SW5030	041400BLKS12	LB	ACETONE	21	=	10	10	ug/kg
SOIL	SW8260	SW5030	041400BLKS12	LB	ACETONE	21	=	10	10	ug/kg
SOIL	SW8260	SW5030	040900BLKS13	LB	ACETONE	24	=	10	10	ug/kg
SOIL	SW8260	SW5030	041700BLKS12	LB	ACETONE	25	=	10	10	ug/kg
SOIL	SW8260	SW5030	041200BLKS12	LB	ACETONE	26	=	10	10	ug/kg
SOIL	SW8260	SW5030	041200BLKS14	LB	ACETONE	27	=	10	10	ug/kg
SOIL	SW8260	SW5030	040500BLKS12	LB	ACETONE	30	=	10	10	ug/kg
SOIL	SW8260	SW5030	041300BLKS12	LB	ACETONE	38	=	10	10	ug/kg
SOIL	SW8260	SW5030	040600BLKS12	LB	ACETONE	46	=	10	10	ug/kg
SOIL	SW8260	SW5030	040600BLKS17	LB	ACETONE	49	=	10	10	ug/kg
SOIL	SW8260	SW5030	040600BLKS12	LB	ACETONE	52	=	10	10	ug/kg
SOIL	SW8260	SW5030	040600BLKS14	LB	ACETONE	52	=	10	10	ug/kg
SOIL	SW8260	SW5030	041700BLKS15	LB	ACETONE	642	=	500	500	ug/kg
SOIL	SW8260	SW5030	042400BLKA23	LB	ACETONE	707	=	500	500	ug/kg
SOIL	SW8260	SW5030	042400BLKA23	LB	ACETONE	707	=	500	500	ug/kg
SOIL	SW8260	SW5030	042400BLKA23	LB	ACETONE	707	=	500	500	ug/kg
SOIL	SW8260	SW5030	040900BLKS33	LB	ACETONE	1650	=	500	500	ug/kg
SOIL	SW8260	SW5030	040900BLKS33	LB	ACETONE	1650	=	500	500	ug/kg
SOIL	SW8270	SW3550	040800BLKS1	LB	DIETHYL PHTHALATE	159	J	333	27	ug/kg
SOIL	SW8270	SW3550	041100BLKS	LB	DIETHYL PHTHALATE	162	J	333	27	ug/kg
SOIL	SW8260	SW5030	041700BLKS14	LB	ETHYLBENZENE	0.4	J	10	0.3	ug/kg
SOIL	SW8260	SW5030	041700BLKS15	LB	ETHYLBENZENE	22	J	500	14	ug/kg
SOIL	SW8260	SW5030	042600BLKS12	LB	M,P-XYLENE (SUM)	0.4	J	10	0.2	ug/kg

Matrix	Analytical Method	Prep Method	Sample ID	Type	Parameter	Lab Result	Lab Qual	RL	DL	Units
SOIL	SW8260	SW5030	042500BLKS16	LB	M,P-XYLENE (SUM)	0.6	J	10	0.2	ug/kg
SOIL	SW8260	SW5030	042400BLKS12	LB	M,P-XYLENE (SUM)	0.7	J	10	0.2	ug/kg
SOIL	SW8260	SW5030	042400BLKS12	LB	M,P-XYLENE (SUM)	0.7	J	10	0.2	ug/kg
SOIL	SW8260	SW5030	041900BLKS13	LB	M,P-XYLENE (SUM)	0.8	J	10	0.2	ug/kg
SOIL	SW8260	SW5030	041900BLKS13	LB	M,P-XYLENE (SUM)	0.8	J	10	0.2	ug/kg
SOIL	SW8260	SW5030	042400BLKS14	LB	M,P-XYLENE (SUM)	0.9	J	10	0.2	ug/kg
SOIL	SW8260	SW5030	042400BLKS14	LB	M,P-XYLENE (SUM)	0.9	J	10	0.2	ug/kg
SOIL	SW8260	SW5030	041700BLKS14	LB	M,P-XYLENE (SUM)	1	J	10	0.2	ug/kg
SOIL	SW8260	SW5030	041700BLKS15	LB	M,P-XYLENE (SUM)	70	J	500	11	ug/kg
SOIL	SW8260	SW5030	041700BLKS15	LB	O-XYLENE	13	J	500	11	ug/kg
SOIL	SW8081	SW3550	042400IBLK3	LB	p,p'-DDT	1.7	J	3.3	0.39	ug/kg
SOIL	SW8260	SW5030	041300BLKS12	LB	TOLUENE	0.4	J	10	0.3	ug/kg
SOIL	SW8260	SW5030	041500BLKS12	LB	TOLUENE	0.4	J	10	0.3	ug/kg
SOIL	SW8260	SW5030	041500BLKS12	LB	TOLUENE	0.4	J	10	0.3	ug/kg
SOIL	SW8260	SW5030	041300BLKS14	LB	TOLUENE	0.5	J	10	0.3	ug/kg
SOIL	SW8260	SW5030	041300BLKS14	LB	TOLUENE	0.5	J	10	0.3	ug/kg
SOIL	SW8260	SW5030	042600BLKS12	LB	XYLENES, TOTAL	0.4	J	10	0.2	ug/kg
SOIL	SW8260	SW5030	042500BLKS16	LB	XYLENES, TOTAL	0.6	J	10	0.2	ug/kg
SOIL	SW8260	SW5030	042400BLKS12	LB	XYLENES, TOTAL	0.7	J	10	0.2	ug/kg
SOIL	SW8260	SW5030	042400BLKS12	LB	XYLENES, TOTAL	0.7	J	10	0.2	ug/kg
SOIL	SW8260	SW5030	041900BLKS13	LB	XYLENES, TOTAL	0.8	J	10	0.2	ug/kg
SOIL	SW8260	SW5030	041900BLKS13	LB	XYLENES, TOTAL	0.8	J	10	0.2	ug/kg
SOIL	SW8260	SW5030	042400BLKS14	LB	XYLENES, TOTAL	0.9	J	10	0.2	ug/kg
SOIL	SW8260	SW5030	042400BLKS14	LB	XYLENES, TOTAL	0.9	J	10	0.2	ug/kg
SOIL	SW8260	SW5030	041700BLKS14	LB	XYLENES, TOTAL	1	J	10	0.2	ug/kg
SOIL	SW8260	SW5030	041700BLKS15	LB	XYLENES, TOTAL	83	J	500	11	ug/kg
WATER	SW8260	SW5030	042500BLKA22	LB	ACETONE	11	=	10	10	ug/L
WATER	SW8260	SW5030	042500BLKA22	LB	ACETONE	11	=	10	10	ug/L
WATER	SW8260	SW5030	041800BLKA32	LB	ACETONE	15	=	10	10	ug/L
WATER	SW8260	SW5030	041800BLKA32	LB	ACETONE	15	=	10	10	ug/L
WATER	SW8260	SW5030	040700BLKA31	LB	ACETONE	36	=	10	10	ug/L
WATER	E200.7	SW3050	BLKW050300M24	LB	ALUMINUM	30.001	J	200	25.8	ug/L
WATER	E200.7	SW3050	BLKW050300M10	LB	ALUMINUM	43.788	J	200	25.8	ug/L
WATER	E200.7	SW3050	BLKW041100M02	LB	ALUMINUM	96.088	J	200	25.8	ug/L
WATER	E200.7	SW3050	BLKW041100M03	LB	ALUMINUM	96.088	J	200	25.8	ug/L
WATER	E200.7	SW3050	BLKW041100M05	LB	ALUMINUM	96.088	J	200	25.8	ug/L
WATER	E200.7	SW3050	BLKW041100M07	LB	ALUMINUM	96.088	J	200	25.8	ug/L
WATER	E200.7	SW3050	BLKW041500M08	LB	BARIUM	0.108	J	200	0.1	ug/L
WATER	E200.7	SW3050	BLKW041500M08	LB	BARIUM	0.108	J	200	0.1	ug/L
WATER	E200.7	SW3050	BLKW041500M10	LB	BARIUM	0.108	J	200	0.1	ug/L
WATER	E200.7	SW3050	BLKW050300M00	LB	BARIUM	0.118	J	200	0.1	ug/L
WATER	E200.7	SW3050	BLKW050500M01	LB	BARIUM	0.145	J	200	0.1	ug/L
WATER	E200.7	SW3050	BLKW042100M14	LB	BARIUM	0.42	J	200	0.1	ug/L
WATER	E200.7	SW3050	BLKW042100M16	LB	BARIUM	0.42	J	200	0.1	ug/L
WATER	E200.7	FLDFLT	BLKF050500M01	LB	BARIUM, DISSOLVED	0.176	J	200	0.1	ug/L
WATER	E200.7	SW3050	BLKW042100M14	LB	BERYLLIUM	0.361	J	5	0.3	ug/L
WATER	E200.7	SW3050	BLKW042100M16	LB	BERYLLIUM	0.361	J	5	0.3	ug/L
WATER	E200.7	SW3050	BLKW050500M01	LB	BERYLLIUM	0.467	J	5	0.3	ug/L
WATER	E200.7	SW3050	BLKW050300M00	LB	BERYLLIUM	0.472	J	5	0.3	ug/L
WATER	E200.7	FLDFLT	BLKF050500M01	LB	BERYLLIUM, DISSOLVED	0.352	J	5	0.3	ug/L
WATER	E200.7	SW3050	BLKW050300M00	LB	CALCIUM	20.966	J	5000	11.7	ug/L
WATER	E200.7	SW3050	BLKW050300M23	LB	CALCIUM	23.813	J	5000	11.7	ug/L
WATER	E200.7	SW3050	BLKW042100M14	LB	CALCIUM	25.211	J	5000	11.7	ug/L
WATER	E200.7	SW3050	BLKW042100M16	LB	CALCIUM	25.211	J	5000	11.7	ug/L
WATER	E200.7	SW3050	BLKW042600M17	LB	CALCIUM	26.691	J	5000	11.7	ug/L
WATER	E200.7	SW3050	BLKW050300M10	LB	CALCIUM	36.771	J	5000	11.7	ug/L
WATER	E200.7	SW3050	BLKW050300M24	LB	CALCIUM	48.822	J	5000	11.7	ug/L

Matrix	Analytical Method	Prep Method	Sample ID	Type	Parameter	Lab Result	Lab Qual	RL	DL	Units
WATER	E200.7	SW3050	BLKW050500M01	LB	CALCIUM	73.34	J	5000	11.7	ug/L
WATER	E200.7	SW3050	BLKW042600M19	LB	CALCIUM	87.818	J	5000	11.7	ug/L
WATER	E200.7	SW3050	BLKW042600M21	LB	CALCIUM	87.818	J	5000	11.7	ug/L
WATER	E200.7	SW3050	BLKW041100M02	LB	CALCIUM	151.523	J	5000	11.6	ug/L
WATER	E200.7	SW3050	BLKW041100M03	LB	CALCIUM	151.523	J	5000	11.7	ug/L
WATER	E200.7	SW3050	BLKW041100M05	LB	CALCIUM	151.523	J	5000	11.6	ug/L
WATER	E200.7	SW3050	BLKW041100M07	LB	CALCIUM	151.523	J	5000	11.7	ug/L
WATER	E200.7	FLDFLT	BLKF050500M01	LB	CALCIUM, DISSOLVED	52.259	J	5000	11.7	ug/L
WATER	E200.7	SW3050	BLKW041500M08	LB	COPPER	2.204	J	25	1.9	ug/L
WATER	E200.7	SW3050	BLKW041500M08	LB	COPPER	2.204	J	25	1.9	ug/L
WATER	E200.7	SW3050	BLKW041500M10	LB	COPPER	2.204	J	25	1.9	ug/L
WATER	SW8270	SW3510	041500BLKA1	LB	DIETHYL PHTHALATE	1	J	10	0.4	ug/L
WATER	SW8270	SW3510	041500BLKA1	LB	DI-n-OCTYLPHTHALATE	2	J	10	1	ug/L
WATER	E200.7	SW3050	BLKW042600M19	LB	IRON	12.349	J	100	12.2	ug/L
WATER	E200.7	SW3050	BLKW042600M21	LB	IRON	12.349	J	100	12.2	ug/L
WATER	E200.7	SW3050	BLKW042100M14	LB	IRON	16.384	J	100	12.2	ug/L
WATER	E200.7	SW3050	BLKW042100M16	LB	IRON	16.384	J	100	12.2	ug/L
WATER	E200.7	SW3050	BLKW050300M10	LB	IRON	16.711	J	100	12.2	ug/L
WATER	E200.7	SW3050	BLKW042600M17	LB	IRON	21.383	J	100	12.2	ug/L
WATER	E200.7	SW3050	BLKW041500M08	LB	IRON	24.162	J	100	12.2	ug/L
WATER	E200.7	SW3050	BLKW041500M08	LB	IRON	24.162	J	100	12.2	ug/L
WATER	E200.7	SW3050	BLKW041500M10	LB	IRON	24.162	J	100	12.2	ug/L
WATER	E200.7	SW3050	BLKW041100M02	LB	IRON	74.796	J	100	12.2	ug/L
WATER	E200.7	SW3050	BLKW041100M03	LB	IRON	74.796	J	100	12.2	ug/L
WATER	E200.7	SW3050	BLKW041100M05	LB	IRON	74.796	J	100	12.2	ug/L
WATER	E200.7	SW3050	BLKW041100M07	LB	IRON	74.796	J	100	12.2	ug/L
WATER	E200.7	FLDFLT	BLKF050500M01	LB	IRON, DISSOLVED	13.56	J	100	12.2	ug/L
WATER	E200.7	SW3050	BLKW050300M23	LB	LEAD	1.412	J	3	1.1	ug/L
WATER	E200.7	SW3050	BLKW042600M19	LB	LEAD	2.099	J	3	1.1	ug/L
WATER	E200.7	SW3050	BLKW042600M21	LB	LEAD	2.099	J	3	1.1	ug/L
WATER	E200.7	FLDFLT	BLKF050500M01	LB	LEAD, DISSOLVED	1.336	J	3	1.1	ug/L
WATER	E200.7	SW3050	BLKW050300M10	LB	MAGNESIUM	11.92	J	5000	9	ug/L
WATER	E200.7	SW3050	BLKW042600M17	LB	MAGNESIUM	20.503	J	5000	9	ug/L
WATER	E200.7	SW3050	BLKW041100M02	LB	MAGNESIUM	114.14	J	5000	9	ug/L
WATER	E200.7	SW3050	BLKW041100M03	LB	MAGNESIUM	114.14	J	5000	9	ug/L
WATER	E200.7	SW3050	BLKW041100M05	LB	MAGNESIUM	114.14	J	5000	9	ug/L
WATER	E200.7	SW3050	BLKW041100M07	LB	MAGNESIUM	114.14	J	5000	9	ug/L
WATER	E200.7	SW3050	BLKW042600M19	LB	MANGANESE	0.101	J	15	0.1	ug/L
WATER	E200.7	SW3050	BLKW042600M21	LB	MANGANESE	0.101	J	15	0.1	ug/L
WATER	E200.7	SW3050	BLKW050300M00	LB	MANGANESE	0.104	J	15	0.1	ug/L
WATER	E200.7	SW3050	BLKW050300M24	LB	MANGANESE	0.207	J	15	0.1	ug/L
WATER	E200.7	SW3050	BLKW050500M01	LB	MANGANESE	0.211	J	15	0.1	ug/L
WATER	E200.7	SW3050	BLKW042100M14	LB	MANGANESE	0.221	J	15	0.1	ug/L
WATER	E200.7	SW3050	BLKW042100M16	LB	MANGANESE	0.221	J	15	0.1	ug/L
WATER	E200.7	SW3050	BLKW041500M08	LB	MANGANESE	0.388	J	15	0.1	ug/L
WATER	E200.7	SW3050	BLKW041500M08	LB	MANGANESE	0.388	J	15	0.1	ug/L
WATER	E200.7	SW3050	BLKW041500M10	LB	MANGANESE	0.388	J	15	0.1	ug/L
WATER	E200.7	SW3050	BLKW041100M02	LB	MANGANESE	0.43	J	15	0.1	ug/L
WATER	E200.7	SW3050	BLKW041100M03	LB	MANGANESE	0.43	J	15	0.1	ug/L
WATER	E200.7	SW3050	BLKW041100M05	LB	MANGANESE	0.43	J	15	0.1	ug/L
WATER	E200.7	SW3050	BLKW041100M07	LB	MANGANESE	0.43	J	15	0.1	ug/L
WATER	E200.7	FLDFLT	BLKF050500M01	LB	MANGANESE, DISSOLVED	0.136	J	15	0.1	ug/L
WATER	SW8082	SW3510	041800IBLK3	LB	AROCHLOR 1016	0.1	J	1	0.08	ug/L
WATER	E200.7	SW3050	BLKW050300M24	LB	POTASSIUM	46.035	J	5000	26.6	ug/L
WATER	E200.7	SW3050	BLKW042100M14	LB	POTASSIUM	51.656	J	5000	26.6	ug/L
WATER	E200.7	SW3050	BLKW042100M16	LB	POTASSIUM	51.656	J	5000	26.6	ug/L
WATER	E200.7	SW3050	BLKW041500M10	LB	POTASSIUM	68.922	J	5000	26.6	ug/L

Attachment B - Detections in Blank Samples

Matrix	Analytical Method	Prep Method	Sample ID	Type	Parameter	Lab Result	Lab Qual	RL	DL	Units
WATER	E200.7	SW3050	BLKW041500M08	LB	POTASSIUM	68.982	J	5000	26.6	ug/L
WATER	E200.7	SW3050	BLKW041500M08	LB	POTASSIUM	68.982	J	5000	26.6	ug/L
WATER	E200.7	SW3050	BLKW050300M10	LB	POTASSIUM	74.977	J	5000	26.6	ug/L
WATER	E200.7	SW3050	BLKW042600M19	LB	POTASSIUM	130.989	J	5000	26.6	ug/L
WATER	E200.7	SW3050	BLKW042600M21	LB	POTASSIUM	130.989	J	5000	26.6	ug/L
WATER	E200.7	SW3050	BLKW050300M23	LB	POTASSIUM	131.739	J	5000	26.6	ug/L
WATER	E200.7	SW3050	BLKW050300M24	LB	SODIUM	121.202	J	5000	115	ug/L
WATER	E200.7	SW3050	BLKW050300M10	LB	SODIUM	121.354	J	5000	115	ug/L
WATER	E200.7	SW3050	BLKW042100M14	LB	SODIUM	121.661	J	5000	115	ug/L
WATER	E200.7	SW3050	BLKW042100M16	LB	SODIUM	121.661	J	5000	115	ug/L
WATER	E200.7	SW3050	BLKW042600M19	LB	SODIUM	239.485	J	5000	115	ug/L
WATER	E200.7	SW3050	BLKW042600M21	LB	SODIUM	239.485	J	5000	115	ug/L
WATER	E200.7	SW3050	BLKW041500M08	LB	VANADIUM	0.899	J	50	0.8	ug/L
WATER	E200.7	SW3050	BLKW041500M08	LB	VANADIUM	0.899	J	50	0.8	ug/L
WATER	E200.7	SW3050	BLKW041500M10	LB	VANADIUM	0.899	J	50	0.8	ug/L
WATER	E200.7	SW3050	BLKW041100M02	LB	ZINC	10.105	J	20	2.5	ug/L
WATER	E200.7	SW3050	BLKW041100M03	LB	ZINC	10.105	J	20	2.5	ug/L
WATER	E200.7	SW3050	BLKW041100M05	LB	ZINC	10.105	J	20	2.5	ug/L
WATER	E200.7	SW3050	BLKW041100M07	LB	ZINC	10.105	J	20	2.5	ug/L
WQ	SW8260	SW5030	NDA315TB1	TB	1,1-DICHLOROETHENE	0.9	J	10	0.4	ug/L
WQ	SW8260	SW5030	NDA291TB5	TB	1,1-DICHLOROETHENE	2	J	10	0.4	ug/L
WQ	SW8260	SW5030	NDA294TB8	TB	1,1-DICHLOROETHENE	2	J	10	0.4	ug/L

Analytical Method	Preparation Method	Matrix	Sample ID	Sample Type	SW8081 (SW3510/NONE) = 2,4,5,6-TETRACHLORO-META-XYLENE	SW8081 (SW3510/NONE) = DECACHLOROBIPHENYL	SW8081 (SW3550/NONE) = 2,4,5,6-TETRACHLORO-META-XYLENE	SW8081 (SW3550/NONE) = DECACHLOROBIPHENYL	SW8082 (SW3510/NONE) = 2,4,5,6-TETRACHLORO-META-XYLENE	SW8082 (SW3510/NONE) = DECACHLOROBIPHENYL	SW8082 (SW3550/NONE) = 2,4,5,6-TETRACHLORO-META-XYLENE	SW8082 (SW3550/NONE) = DECACHLOROBIPHENYL	SW8260 (SW5030/NONE) = 1,2-DICHLOROETHANE-D4	SW8260 (SW5030/NONE) = 1-BROMO-4-FLUOROBENZENE (4-BROMOFLUOROBEN	SW8260 (SW5030/NONE) = TOLUENE-D8	SW8270 (SW3510/NONE) = 2,4,6-TRIBROMOPHENOL	SW8270 (SW3510/NONE) = 2-FLUOROBIPHENYL	SW8270 (SW3510/NONE) = 2-FLUOROPHENOL	SW8270 (SW3510/NONE) = NITROBENZENE-D5	SW8270 (SW3510/NONE) = PHENOL-D5	SW8270 (SW3510/NONE) = TERPHENYL-D14	SW8270 (SW3550/NONE) = 2,4,6-TRIBROMOPHENOL	SW8270 (SW3550/NONE) = 2-FLUOROBIPHENYL	SW8270 (SW3550/NONE) = 2-FLUOROPHENOL	SW8270 (SW3550/NONE) = NITROBENZENE-D5	SW8270 (SW3550/NONE) = PHENOL-D5	SW8270 (SW3550/NONE) = TERPHENYL-D14	SW8330 (SW3510/NONE) = 3,4-DINITROTOLUENE	SW8330 (SW3550/NONE) = 3,4-DINITROTOLUENE
SW8081	SW3510	SW	NDA035	N1	61	52																						
SW8081	SW3510	SW	NDA036	N1	84	62																						
SW8081	SW3510	SW	NDA037	N1	81	61																						
SW8081	SW3510	SW	NDA037MS	MS	72	56																						
SW8081	SW3510	SW	NDA037SD	SD	66	57																						
SW8081	SW3510	SW	NDA038FD1	FD1	74	59																						
SW8081	SW3510	SW	NDA039	N1	60	50																						
SW8081	SW3510	SW	NDA040	N1	61	55																						
SW8081	SW3510	SW	NDA300	N1	65	50																						
SW8081	SW3510	SW	NDA301	N1	75	54																						
SW8081	SW3510	WATER	040700BLKA	LB	70	35																						
SW8081	SW3510	WATER	040700LCSA	BS	136	42																						
SW8081	SW3510	WATER	041900BLKA	LB	68	39																						
SW8081	SW3510	WATER	041900LCSA	BS	61	24																						
SW8081	SW3510	WATER	042500BLKA1	LB	64	59																						
SW8081	SW3510	WATER	042500BLKA1MS	BS	59	68																						
SW8081	SW3510	WATER	042500BLKA1SD	BD	57	54																						
SW8081	SW3510	WATER	042500BLKA2	LB	65	50																						
SW8081	SW3510	WATER	042500LCSA	BS	66	78																						
SW8081	SW3510	WATER	042600BLKA1	LB	66	34																						
SW8081	SW3510	WATER	042600BLKA2	LB	71	35																						
SW8081	SW3510	WATER	042600BLKA2MS	BS	64	70																						
SW8081	SW3510	WATER	042600BLKA2SD	BD	60	65																						
SW8081	SW3510	WATER	042600LCSA	BS	68	56																						
SW8081	SW3510	WATER	050200BLKA	LB	60	60																						
SW8081	SW3510	WATER	050200BLKAMS	BS	60	60																						
SW8081	SW3510	WATER	050200BLKASD	BD	65	55																						
SW8081	SW3510	WATER	050200LCSA	BS	65	37																						
SW8081	SW3510	WATER	050200BLKA	LB	60	60																						
SW8081	SW3510	WATER	050200BLKAMS	BS	60	60																						
SW8081	SW3510	WATER	050200BLKASD	BD	65	55																						
SW8081	SW3510	WATER	050200LCSA	BS	65	36																						
SW8081	SW3510	WATER	050200BLKA	LB	60	60																						
SW8081	SW3510	WATER	050200BLKAMS	BS	60	60																						
SW8081	SW3510	WATER	050200BLKASD	BD	65	55																						
SW8081	SW3510	WATER	050200LCSA	BS	65	36																						

Analytical Method	Preparation Method	Matrix	Sample ID	Sample Type	SW8081 (SW3510/NONE) = 2,4,5,6-TETRACHLORO-META-XYLENE	SW8081 (SW3510/NONE) = DECACHLOROBIPHENYL	SW8081 (SW3550/NONE) = 2,4,5,6-TETRACHLORO-META-XYLENE	SW8081 (SW3550/NONE) = DECACHLOROBIPHENYL	SW8082 (SW3510/NONE) = 2,4,5,6-TETRACHLORO-META-XYLENE	SW8082 (SW3510/NONE) = DECACHLOROBIPHENYL	SW8082 (SW3550/NONE) = 2,4,5,6-TETRACHLORO-META-XYLENE	SW8082 (SW3550/NONE) = DECACHLOROBIPHENYL	SW8260 (SW5030/NONE) = 1,2-DICHLOROETHANE-D4	SW8260 (SW5030/NONE) = 1-BROMO-4-FLUOROBENZENE (4-BROMOFLUOROBEN	SW8260 (SW5030/NONE) = TOLUENE-D8	SW8270 (SW3510/NONE) = 2,4,6-TRIBROMOPHENOL	SW8270 (SW3510/NONE) = 2-FLUOROBIPHENYL	SW8270 (SW3510/NONE) = 2-FLUOROPHENOL	SW8270 (SW3510/NONE) = NITROBENZENE-D5	SW8270 (SW3510/NONE) = PHENOL-D5	SW8270 (SW3510/NONE) = TERPHENYL-D14	SW8270 (SW3550/NONE) = 2,4,6-TRIBROMOPHENOL	SW8270 (SW3550/NONE) = 2-FLUOROBIPHENYL	SW8270 (SW3550/NONE) = 2-FLUOROPHENOL	SW8270 (SW3550/NONE) = NITROBENZENE-D5	SW8270 (SW3550/NONE) = PHENOL-D5	SW8270 (SW3550/NONE) = TERPHENYL-D14	SW8330 (SW3510/NONE) = 3,4-DINITROTOLUENE	SW8330 (SW3550/NONE) = 3,4-DINITROTOLUENE
SW8081	SW3510	WATER	050600BLKA	LB	60	44																						
SW8081	SW3510	WATER	050600LCSA	BS	71	78																						
SW8081	SW3510	WATER	050600BLKA	LB	60	44																						
SW8081	SW3510	WATER	050600BLKAS	LB	61	43																						
SW8081	SW3510	WATER	050600LCSA	BS	71	78																						
SW8081	SW3510	WG	NDA024	N1	43	13																						
SW8081	SW3510	WG	NDA025FD1	FD1	37	18																						
SW8081	SW3510	WG	NDA029	N1	67	21																						
SW8081	SW3510	WG	NDA029MS	MS	128	59																						
SW8081	SW3510	WG	NDA029SD	SD	111	43																						
SW8081	SW3510	WG	NDA017	N1	70	72																						
SW8081	SW3510	WG	NDA022	N1	78	36																						
SW8081	SW3510	WG	NDA019	N1	67	62																						
SW8081	SW3510	WG	NDA020	N1	62	67																						
SW8081	SW3510	WG	NDA021	N1	67	67																						
SW8081	SW3510	WG	NDA002	N1	29	24																						
SW8081	SW3510	WG	NDA003	N1	64	54																						
SW8081	SW3510	WG	NDA004	N1	61	56																						
SW8081	SW3510	WG	NDA003FD1	N1	58	54																						
SW8081	SW3510	WG	NDA023	N1	52	24																						
SW8081	SW3510	WG	NDA028	N1	47	46																						
SW8081	SW3510	WG	NDA001	N1	54	29																						
SW8081	SW3510	WG	NDA013	N1	61	41																						
SW8081	SW3510	WG	NDA014	N1	60	65																						
SW8081	SW3510	WG	NDA015	N1	65	36																						
SW8081	SW3510	WG	NDA016	N1	52	31																						
SW8081	SW3510	WG	NDA026	N1	55	27																						
SW8081	SW3510	WG	NDA005	N1	57	73																						
SW8081	SW3510	WG	NDA006	N1	64	62																						
SW8081	SW3510	WG	NDA008	N1	21	21																						
SW8081	SW3510	WG	NDA009	N1	36	57																						
SW8081	SW3510	WG	NDA010	N1	60	53																						
SW8081	SW3510	WG	NDA011	N1	74	49																						
SW8081	SW3510	WG	NDA011MS	MS	66	47																						
SW8081	SW3510	WG	NDA011SD	SD	76	68																						
SW8081	SW3510	WG	NDA012	N1	63	33																						

Analytical Method	Preparation Method	Matrix	Sample ID	Sample Type	SW8081 (SW3510/NONE) = 2,4,5,6-TETRACHLORO-META-XYLENE	SW8081 (SW3510/NONE) = DECACHLOROBIPHENYL	SW8081 (SW3550/NONE) = 2,4,5,6-TETRACHLORO-META-XYLENE	SW8081 (SW3550/NONE) = DECACHLOROBIPHENYL	SW8082 (SW3510/NONE) = 2,4,5,6-TETRACHLORO-META-XYLENE	SW8082 (SW3510/NONE) = DECACHLOROBIPHENYL	SW8082 (SW3550/NONE) = 2,4,5,6-TETRACHLORO-META-XYLENE	SW8082 (SW3550/NONE) = DECACHLOROBIPHENYL	SW8260 (SW5030/NONE) = 1,2-DICHLOROETHANE-D4	SW8260 (SW5030/NONE) = 1-BROMO-4-FLUOROBENZENE (4-BROMOFLUOROBEN	SW8260 (SW5030/NONE) = TOLUENE-D8	SW8270 (SW3510/NONE) = 2,4,6-TRIBROMOPHENOL	SW8270 (SW3510/NONE) = 2-FLUOROBIPHENYL	SW8270 (SW3510/NONE) = 2-FLUOROPHENOL	SW8270 (SW3510/NONE) = NITROBENZENE-D5	SW8270 (SW3510/NONE) = PHENOL-D5	SW8270 (SW3510/NONE) = TERPHENYL-D14	SW8270 (SW3550/NONE) = 2,4,6-TRIBROMOPHENOL	SW8270 (SW3550/NONE) = 2-FLUOROBIPHENYL	SW8270 (SW3550/NONE) = 2-FLUOROPHENOL	SW8270 (SW3550/NONE) = NITROBENZENE-D5	SW8270 (SW3550/NONE) = PHENOL-D5	SW8270 (SW3550/NONE) = TERPHENYL-D14	SW8330 (SW3510/NONE) = 3,4-DINITROTOLUENE	SW8330 (SW3550/NONE) = 3,4-DINITROTOLUENE
SW8081	SW3510	WG	NDA0321FD1	FD1	75	60																							
SW8081	SW3510	WQ	NDA031EB2	EB2	61	29																							
SW8081	SW3510	WQ	NDA032EB3	EB3	58	35																							
SW8081	SW3510	WQ	NDA266EB4	EB4	64	22																							
SW8081	SW3510	WQ	NDA275AB3	AB3	66	24																							
SW8081	SW3510	WQ	NDA267EB5	EB5	75	39																							
SW8081	SW3510	WQ	NDA268EB6	EB6	83	67																							
SW8081	SW3510	WQ	NDA269EB7	EB7	74	56																							
SW8081	SW3510	WQ	NDA270EB8	EB8	76	55																							
SW8081	SW3510	WQ	NDA271EB9	EB9	78	47																							
SW8081	SW3510	WQ	NDA276AB4	AB4	83	49																							
SW8081	SW3510	WQ	NDA272EB1	EB1	60	40																							
SW8081	SW3510	WQ	NDA304EB1	EB1	68	34																							
SW8081	SW3510	WQ	NDA305EB1	EB1	69	41																							
SW8081	SW3510	WQ	NDA306EB2	EB2	64	24																							
SW8081	SW3510	WQ	NDA310EB2	EB2	62	34																							
SW8081	SW3510	WQ	NDA033AB1	AB1	73	68																							
SW8081	SW3510	WQ	NDA309EB1	EB1	74	28																							
SW8081	SW3510	WQ	NDA311EB1	EB1	84	75																							
SW8081	SW3510	WQ	NDA312EB2	EB2	63	32																							
SW8081	SW3510	WQ	NDA030EB1	EB1	62	20																							
SW8081	SW3510	WQ	NDA313EB1	EB1	62	24																							
SW8081	SW3510	WQ	NDA034AB2	AB2	88	52																							
SW8081	SW3510	WQ	NDA316EB1	EB1	45	18																							
SW8081	SW3510	WQ	NDA318EB1	EB1	67	44																							
SW8081	SW3510	WQ	NDA320EB1	EB1	53	75																							
SW8081	SW3510	WQ	NDA323EB1	EB1	64	51																							
SW8081	SW3510	WQ	NDA324EB2	EB2	66	56																							
SW8081	SW3510	WQ	NDA325AB1	AB1	64	53																							
SW8081	SW3550	SB	NDA126	N1			82	69																					
SW8081	SW3550	SB	NDA129	N1			68	69																					
SW8081	SW3550	SB	NDA130FD1	FD1			76	70																					
SW8081	SW3550	SB	NDA132	N1			73	66																					
SW8081	SW3550	SB	NDA134	N1			77	68																					
SW8081	SW3550	SB	NDA136	N1			72	71																					
SW8081	SW3550	SB	NDA138	N1			79	72																					

Analytical Method	Preparation Method	Matrix	Sample ID	Sample Type	SW8081 (SW3510/NONE) = 2,4,5,6-TETRACHLORO-META-XYLENE	SW8081 (SW3510/NONE) = DECACHLOROBIPHENYL	SW8081 (SW3550/NONE) = 2,4,5,6-TETRACHLORO-META-XYLENE	SW8081 (SW3550/NONE) = DECACHLOROBIPHENYL	SW8082 (SW3510/NONE) = 2,4,5,6-TETRACHLORO-META-XYLENE	SW8082 (SW3510/NONE) = DECACHLOROBIPHENYL	SW8082 (SW3550/NONE) = 2,4,5,6-TETRACHLORO-META-XYLENE	SW8082 (SW3550/NONE) = DECACHLOROBIPHENYL	SW8260 (SW5030/NONE) = 1,2-DICHLOROETHANE-D4	SW8260 (SW5030/NONE) = 1-BROMO-4-FLUOROBENZENE (4-BROMOFLUOROBEN	SW8260 (SW5030/NONE) = TOLUENE-D8	SW8270 (SW3510/NONE) = 2,4,6-TRIBROMOPHENOL	SW8270 (SW3510/NONE) = 2-FLUOROBIPHENYL	SW8270 (SW3510/NONE) = 2-FLUOROPHENOL	SW8270 (SW3510/NONE) = NITROBENZENE-D5	SW8270 (SW3510/NONE) = PHENOL-D5	SW8270 (SW3510/NONE) = TERPHENYL-D14	SW8270 (SW3550/NONE) = 2,4,6-TRIBROMOPHENOL	SW8270 (SW3550/NONE) = 2-FLUOROBIPHENYL	SW8270 (SW3550/NONE) = 2-FLUOROPHENOL	SW8270 (SW3550/NONE) = NITROBENZENE-D5	SW8270 (SW3550/NONE) = PHENOL-D5	SW8270 (SW3550/NONE) = TERPHENYL-D14	SW8330 (SW3510/NONE) = 3,4-DINITROTOLUENE	SW8330 (SW3550/NONE) = 3,4-DINITROTOLUENE
SW8081	SW3550	SB	NDA140	N1			79	76																				
SW8081	SW3550	SB	NDA142	N1			78	75																				
SW8081	SW3550	SB	NDA144	N1			86	77																				
SW8081	SW3550	SB	NDA146	N1			84	80																				
SW8081	SW3550	SB	NDA148	N1			79	77																				
SW8081	SW3550	SB	NDA151	N1			83	67																				
SW8081	SW3550	SB	NDA151MS	MS			88	81																				
SW8081	SW3550	SB	NDA151SD	SD			86	65																				
SW8081	SW3550	SB	NDA152FD1	FD1			82	64																				
SW8081	SW3550	SB	NDA154	N1			86	70																				
SW8081	SW3550	SB	NDA156	N1			88	66																				
SW8081	SW3550	SB	NDA158	N1			85	64																				
SW8081	SW3550	SB	NDA160	N1			79	65																				
SW8081	SW3550	SB	NDA162	N1			83	71																				
SW8081	SW3550	SB	NDA163FD1	FD1			72	68																				
SW8081	SW3550	SB	NDA165	N1			92	97																				
SW8081	SW3550	SB	NDA167	N1			91	109																				
SW8081	SW3550	SB	NDA169	N1			91	96																				
SW8081	SW3550	SB	NDA171	N1			97	97																				
SW8081	SW3550	SB	NDA173	N1			89	97																				
SW8081	SW3550	SB	NDA175	N1			93	100																				
SW8081	SW3550	SB	NDA177	N1			83	109																				
SW8081	SW3550	SB	NDA213	N1			61	55																				
SW8081	SW3550	SB	NDA213MS	MS			70	67																				
SW8081	SW3550	SB	NDA213SD	SD			62	54																				
SW8081	SW3550	SB	NDA214FD1	FD1			60	58																				
SW8081	SW3550	SB	NDA215	N1			62	64																				
SW8081	SW3550	SB	NDA216	N1			60	56																				
SW8081	SW3550	SB	NDA217	N1			66	61																				
SW8081	SW3550	SB	NDA218	N1			64	59																				
SW8081	SW3550	SB	NDA219	N1			71	61																				
SW8081	SW3550	SB	NDA220	N1			64	60																				
SW8081	SW3550	SB	NDA221	N1			65	61																				
SW8081	SW3550	SB	NDA222	N1			64	61																				
SW8081	SW3550	SB	NDA223	N1			59	56																				
SW8081	SW3550	SB	NDA224	N1			74	85																				

Analytical Method	Preparation Method	Matrix	Sample ID	Sample Type	SW8081 (SW3510/NONE) = 2,4,5,6-TETRACHLORO-META-XYLENE		SW8081 (SW3510/NONE) = DECACHLOROBIPHENYL		SW8081 (SW3550/NONE) = 2,4,5,6-TETRACHLORO-META-XYLENE		SW8081 (SW3550/NONE) = DECACHLOROBIPHENYL		SW8082 (SW3510/NONE) = 2,4,5,6-TETRACHLORO-META-XYLENE		SW8082 (SW3510/NONE) = DECACHLOROBIPHENYL		SW8082 (SW3550/NONE) = 2,4,5,6-TETRACHLORO-META-XYLENE		SW8082 (SW3550/NONE) = DECACHLOROBIPHENYL		SW8260 (SW5030/NONE) = 1,2-DICHLOROETHANE-D4		SW8260 (SW5030/NONE) = 1-BROMO-4-FLUOROBENZENE (4-BROMOFLUOROBEN		SW8260 (SW5030/NONE) = TOLUENE-D8		SW8270 (SW3510/NONE) = 2,4,6-TRIBROMOPHENOL		SW8270 (SW3510/NONE) = 2-FLUOROBIPHENYL		SW8270 (SW3510/NONE) = 2-FLUOROPHENOL		SW8270 (SW3510/NONE) = NITROBENZENE-D5		SW8270 (SW3510/NONE) = PHENOL-D5		SW8270 (SW3510/NONE) = TERPHENYL-D14		SW8270 (SW3550/NONE) = 2,4,6-TRIBROMOPHENOL		SW8270 (SW3550/NONE) = 2-FLUOROBIPHENYL		SW8270 (SW3550/NONE) = 2-FLUOROPHENOL		SW8270 (SW3550/NONE) = NITROBENZENE-D5		SW8270 (SW3550/NONE) = PHENOL-D5		SW8270 (SW3550/NONE) = TERPHENYL-D14		SW8330 (SW3510/NONE) = 3,4-DINITROTOLUENE		SW8330 (SW3550/NONE) = 3,4-DINITROTOLUENE	
SW8081	SW3550	SB	NDA225	N1					68	83																																						
SW8081	SW3550	SB	NDA226	N1					69	78																																						
SW8081	SW3550	SB	NDA226MS	MS					72	91																																						
SW8081	SW3550	SB	NDA226SD	SD					68	82																																						
SW8081	SW3550	SB	NDA227FD1	FD1					66	83																																						
SW8081	SW3550	SB	NDA228	N1					65	81																																						
SW8081	SW3550	SB	NDA229	N1					63	81																																						
SW8081	SW3550	SB	NDA230	N1					67	81																																						
SW8081	SW3550	SB	NDA231	N1					65	82																																						
SW8081	SW3550	SB	NDA232	N1					59	74																																						
SW8081	SW3550	SB	NDA233	N1					65	80																																						
SW8081	SW3550	SB	NDA234	N1					60	79																																						
SW8081	SW3550	SB	NDA235	N1					81	86																																						
SW8081	SW3550	SB	NDA236	N1					76	82																																						
SW8081	SW3550	SB	NDA237FD1	FD1					85	85																																						
SW8081	SW3550	SB	NDA238	N1					84	90																																						
SW8081	SW3550	SB	NDA239	N1					86	90																																						
SW8081	SW3550	SB	NDA240	N1					77	86																																						
SW8081	SW3550	SB	NDA241	N1					69	82																																						
SW8081	SW3550	SB	NDA242	N1					67	86																																						
SW8081	SW3550	SB	NDA243	N1					72	88																																						
SW8081	SW3550	SB	NDA244	N1					78	89																																						
SW8081	SW3550	SB	NDA245	N1					44	70																																						
SW8081	SW3550	SB	NDA246	N1					44	69																																						
SW8081	SW3550	SB	NDA246MS	MS					50	74																																						
SW8081	SW3550	SB	NDA246SD	SD					49	71																																						
SW8081	SW3550	SB	NDA247FD1	FD1					41	74																																						
SW8081	SW3550	SB	NDA248	N1					58	67																																						
SW8081	SW3550	SB	NDA249	N1					58	67																																						
SW8081	SW3550	SB	NDA252	N1					58	71																																						
SW8081	SW3550	SB	NDA253	N1					65	76																																						
SW8081	SW3550	SB	NDA254	N1					66	77																																						
SW8081	SW3550	SB	NDA255	N1					57	72																																						
SW8081	SW3550	SB	NDA058	N1					46	62																																						
SW8081	SW3550	SB	NDA060	N1					52	64																																						
SW8081	SW3550	SB	NDA063	N1					53	72																																						

Analytical Method	Preparation Method	Matrix	Sample ID	Sample Type	SW8081 (SW3510/NONE) = 2,4,5,6-TETRACHLORO-META-XYLENE	SW8081 (SW3510/NONE) = DECACHLOROBIPHENYL	SW8081 (SW3550/NONE) = 2,4,5,6-TETRACHLORO-META-XYLENE	SW8081 (SW3550/NONE) = DECACHLOROBIPHENYL	SW8082 (SW3510/NONE) = 2,4,5,6-TETRACHLORO-META-XYLENE	SW8082 (SW3510/NONE) = DECACHLOROBIPHENYL	SW8082 (SW3550/NONE) = 2,4,5,6-TETRACHLORO-META-XYLENE	SW8082 (SW3550/NONE) = DECACHLOROBIPHENYL	SW8260 (SW5030/NONE) = 1,2-DICHLOROETHANE-D4	SW8260 (SW5030/NONE) = 1-BROMO-4-FLUOROBENZENE (4-BROMOFLUOROBEN	SW8260 (SW5030/NONE) = TOLUENE-D8	SW8270 (SW3510/NONE) = 2,4,6-TRIBROMOPHENOL	SW8270 (SW3510/NONE) = 2-FLUOROBIPHENYL	SW8270 (SW3510/NONE) = 2-FLUOROPHENOL	SW8270 (SW3510/NONE) = NITROBENZENE-D5	SW8270 (SW3510/NONE) = PHENOL-D5	SW8270 (SW3510/NONE) = TERPHENYL-D14	SW8270 (SW3550/NONE) = 2,4,6-TRIBROMOPHENOL	SW8270 (SW3550/NONE) = 2-FLUOROBIPHENYL	SW8270 (SW3550/NONE) = 2-FLUOROPHENOL	SW8270 (SW3550/NONE) = NITROBENZENE-D5	SW8270 (SW3550/NONE) = PHENOL-D5	SW8270 (SW3550/NONE) = TERPHENYL-D14	SW8330 (SW3510/NONE) = 3,4-DINITROTOLUENE	SW8330 (SW3550/NONE) = 3,4-DINITROTOLUENE
SW8081	SW3550	SB	NDA063MS	MS			45	65																				
SW8081	SW3550	SB	NDA063SD	SD			59	74																				
SW8081	SW3550	SB	NDA064FD1	FD1			52	70																				
SW8081	SW3550	SB	NDA066	N1			68	88																				
SW8081	SW3550	SB	NDA068	N1			44	67																				
SW8081	SW3550	SB	NDA070	N1			46	85																				
SW8081	SW3550	SB	NDA073	N1			56	93																				
SW8081	SW3550	SB	NDA075	N1			31	84																				
SW8081	SW3550	SB	NDA077	N1			44	78																				
SW8081	SW3550	SB	NDA079	N1			13	62																				
SW8081	SW3550	SB	NDA081	N1			51	63																				
SW8081	SW3550	SB	NDA083	N1			53	64																				
SW8081	SW3550	SB	NDA114	N1			54	74																				
SW8081	SW3550	SB	NDA114DL1	LR			62	78																				
SW8081	SW3550	SB	NDA116	N1			52	61																				
SW8081	SW3550	SB	NDA118	N1			46	71																				
SW8081	SW3550	SB	NDA102	N1			38	39																				
SW8081	SW3550	SB	NDA105	N1			48	58																				
SW8081	SW3550	SB	NDA106FD1	FD1			47	50																				
SW8081	SW3550	SB	NDA108	N1			45	78																				
SW8081	SW3550	SB	NDA108MS	MS			52	54																				
SW8081	SW3550	SB	NDA108SD	SD			64	60																				
SW8081	SW3550	SB	NDA110	N1			50	71																				
SW8081	SW3550	SB	NDA112	N1			54	62																				
SW8081	SW3550	SD	NDA050	N1			57	75																				
SW8081	SW3550	SD	NDA050MS	MS			52	69																				
SW8081	SW3550	SD	NDA050SD	SD			79	87																				
SW8081	SW3550	SD	NDA051FD1	FD1			67	82																				
SW8081	SW3550	SD	NDA052	N1			61	80																				
SW8081	SW3550	SD	NDA053	N1			69	83																				
SW8081	SW3550	SD	NDA054	N1			73	58																				
SW8081	SW3550	SD	NDA055	N1			70	59																				
SW8081	SW3550	SD	NDA042	N1			80	86																				
SW8081	SW3550	SD	NDA043	N1			83	90																				
SW8081	SW3550	SD	NDA044	N1			77	91																				
SW8081	SW3550	SD	NDA045	N1			82	89																				

Analytical Method	Preparation Method	Matrix	Sample ID	Sample Type	SW8081 (SW3510/NONE) = 2,4,5,6-TETRACHLORO-META-XYLENE	SW8081 (SW3510/NONE) = DECACHLOROBIPHENYL	SW8081 (SW3550/NONE) = 2,4,5,6-TETRACHLORO-META-XYLENE	SW8081 (SW3550/NONE) = DECACHLOROBIPHENYL	SW8082 (SW3510/NONE) = 2,4,5,6-TETRACHLORO-META-XYLENE	SW8082 (SW3510/NONE) = DECACHLOROBIPHENYL	SW8082 (SW3550/NONE) = 2,4,5,6-TETRACHLORO-META-XYLENE	SW8082 (SW3550/NONE) = DECACHLOROBIPHENYL	SW8260 (SW5030/NONE) = 1,2-DICHLOROETHANE-D4	SW8260 (SW5030/NONE) = 1-BROMO-4-FLUOROBENZENE (4-BROMOFLUOROBEN	SW8260 (SW5030/NONE) = TOLUENE-D8	SW8270 (SW3510/NONE) = 2,4,6-TRIBROMOPHENOL	SW8270 (SW3510/NONE) = 2-FLUOROBIPHENYL	SW8270 (SW3510/NONE) = 2-FLUOROPHENOL	SW8270 (SW3510/NONE) = NITROBENZENE-D5	SW8270 (SW3510/NONE) = PHENOL-D5	SW8270 (SW3510/NONE) = TERPHENYL-D14	SW8270 (SW3550/NONE) = 2,4,6-TRIBROMOPHENOL	SW8270 (SW3550/NONE) = 2-FLUOROBIPHENYL	SW8270 (SW3550/NONE) = 2-FLUOROPHENOL	SW8270 (SW3550/NONE) = NITROBENZENE-D5	SW8270 (SW3550/NONE) = PHENOL-D5	SW8270 (SW3550/NONE) = TERPHENYL-D14	SW8330 (SW3510/NONE) = 3,4-DINITROTOLUENE	SW8330 (SW3550/NONE) = 3,4-DINITROTOLUENE
SW8081	SW3550	SD	NDA046	N1			79	86																				
SW8081	SW3550	SD	NDA302	N1			77	82																				
SW8081	SW3550	SD	NDA303	N1			73	80																				
SW8081	SW3550	SD	NDA307FD1	FD1			75	82																				
SW8081	SW3550	SD	NDA047	N1			62	79																				
SW8081	SW3550	SD	NDA048	N1			55	75																				
SW8081	SW3550	SD	NDA049	N1			50	55																				
SW8081	SW3550	SOIL	041000BLKS	LB			75	77																				
SW8081	SW3550	SOIL	041000LCSS	BS			69	77																				
SW8081	SW3550	SOIL	041100BLKS	LB			78	77																				
SW8081	SW3550	SOIL	041100LCSS	BS			80	80																				
SW8081	SW3550	SOIL	041200BLKS	LB			88	82																				
SW8081	SW3550	SOIL	041200LCSS	BS			87	78																				
SW8081	SW3550	SOIL	041400BLKS	LB			84	100																				
SW8081	SW3550	SOIL	041400LCSS	BS			71	103																				
SW8081	SW3550	SOIL	041600BLKS	LB			74	74																				
SW8081	SW3550	SOIL	041600LCSS	BS			72	70																				
SW8081	SW3550	SOIL	041700BLKS	LB			67	92																				
SW8081	SW3550	SOIL	041700LCSS	BS			68	97																				
SW8081	SW3550	SOIL	041900BLKS	LB			52	72																				
SW8081	SW3550	SOIL	041900LCSS	BS			62	93																				
SW8081	SW3550	SOIL	042000BLKS	LB			74	96																				
SW8081	SW3550	SOIL	042000BLKSMS	BS			79	91																				
SW8081	SW3550	SOIL	042000BLKSSD	BD			78	89																				
SW8081	SW3550	SOIL	042000LCSS	BS			84	98																				
SW8081	SW3550	SOIL	042400BLKS	LB			65	94																				
SW8081	SW3550	SOIL	042400LCSS	BS			63	83																				
SW8081	SW3550	SOIL	042000BLKS	LB			74	96																				
SW8081	SW3550	SOIL	042000BLKSMS	BS			79	91																				
SW8081	SW3550	SOIL	042000BLKSSD	BD			78	89																				
SW8081	SW3550	SOIL	042000LCSS	BS			84	98																				
SW8081	SW3550	SOIL	042800BLKS	LB			55	69																				
SW8081	SW3550	SOIL	042800BLKSMS	BS			82	98																				
SW8081	SW3550	SOIL	042800BLKSSD	BD			61	74																				
SW8081	SW3550	SOIL	042800LCSS	BS			70	98																				
SW8081	SW3550	SOIL	050100BLKS	LB			60	90																				

Analytical Method	Preparation Method	Matrix	Sample ID	Sample Type	SW8081 (SW3510/NONE) = 2,4,5,6-TETRACHLORO-META-XYLENE	SW8081 (SW3510/NONE) = DECACHLOROBIPHENYL	SW8081 (SW3550/NONE) = 2,4,5,6-TETRACHLORO-META-XYLENE	SW8081 (SW3550/NONE) = DECACHLOROBIPHENYL	SW8082 (SW3510/NONE) = 2,4,5,6-TETRACHLORO-META-XYLENE	SW8082 (SW3510/NONE) = DECACHLOROBIPHENYL	SW8082 (SW3550/NONE) = 2,4,5,6-TETRACHLORO-META-XYLENE	SW8082 (SW3550/NONE) = DECACHLOROBIPHENYL	SW8260 (SW5030/NONE) = 1,2-DICHLOROETHANE-D4	SW8260 (SW5030/NONE) = 1-BROMO-4-FLUOROBENZENE (4-BROMOFLUOROBEN	SW8260 (SW5030/NONE) = TOLUENE-D8	SW8270 (SW3510/NONE) = 2,4,6-TRIBROMOPHENOL	SW8270 (SW3510/NONE) = 2-FLUOROBIPHENYL	SW8270 (SW3510/NONE) = 2-FLUOROPHENOL	SW8270 (SW3510/NONE) = NITROBENZENE-D5	SW8270 (SW3510/NONE) = PHENOL-D5	SW8270 (SW3510/NONE) = TERPHENYL-D14	SW8270 (SW3550/NONE) = 2,4,6-TRIBROMOPHENOL	SW8270 (SW3550/NONE) = 2-FLUOROBIPHENYL	SW8270 (SW3550/NONE) = 2-FLUOROPHENOL	SW8270 (SW3550/NONE) = NITROBENZENE-D5	SW8270 (SW3550/NONE) = PHENOL-D5	SW8270 (SW3550/NONE) = TERPHENYL-D14	SW8330 (SW3510/NONE) = 3,4-DINITROTOLUENE	SW8330 (SW3550/NONE) = 3,4-DINITROTOLUENE
SW8081	SW3550	SOIL	050100LCSS	BS			54	83																				
SW8081	SW3550	SOIL	050200BLKS	LB			48	70																				
SW8081	SW3550	SOIL	050200LCSS	BS			20	76																				
SW8081	SW3550	SOIL	042800BLKS	LB			55	69																				
SW8081	SW3550	SOIL	042800BLKSMS	BS			82	98																				
SW8081	SW3550	SOIL	042800BLKSSD	BD			61	74																				
SW8081	SW3550	SOIL	042800LCSS	BS			70	98																				
SW8081	SW3550	SOIL	050300BLKS	LB			67	99																				
SW8081	SW3550	SOIL	050300LCSS	BS			64	83																				
SW8081	SW3550	SS	NDA125	N1			85	77																				
SW8081	SW3550	SS	NDA125DL1	LR			73	101																				
SW8081	SW3550	SS	NDA127	N1			84	77																				
SW8081	SW3550	SS	NDA127MS	MS			78	71																				
SW8081	SW3550	SS	NDA127SD	SD			72	73																				
SW8081	SW3550	SS	NDA128FD1	FD1			75	70																				
SW8081	SW3550	SS	NDA131	N1			81	75																				
SW8081	SW3550	SS	NDA133	N1			70	63																				
SW8081	SW3550	SS	NDA135	N1			85	90																				
SW8081	SW3550	SS	NDA135MS	MS			86	79																				
SW8081	SW3550	SS	NDA135SD	SD			85	81																				
SW8081	SW3550	SS	NDA137	N1			85	90																				
SW8081	SW3550	SS	NDA137DL1	LR			79	98																				
SW8081	SW3550	SS	NDA139	N1			78	74																				
SW8081	SW3550	SS	NDA141	N1			79	73																				
SW8081	SW3550	SS	NDA143	N1			88	80																				
SW8081	SW3550	SS	NDA145	N1			82	73																				
SW8081	SW3550	SS	NDA147	N1			85	83																				
SW8081	SW3550	SS	NDA149	N1			84	70																				
SW8081	SW3550	SS	NDA149MS	MS			86	77																				
SW8081	SW3550	SS	NDA149SD	SD			84	86																				
SW8081	SW3550	SS	NDA150FD1	FD1			84	65																				
SW8081	SW3550	SS	NDA153	N1			83	90																				
SW8081	SW3550	SS	NDA155	N1			82	62																				
SW8081	SW3550	SS	NDA157	N1			91	79																				
SW8081	SW3550	SS	NDA159	N1			83	70																				
SW8081	SW3550	SS	NDA161	N1			76	79																				

Analytical Method	Preparation Method	Matrix	Sample ID	Sample Type	SW8081 (SW3510/NONE) = 2,4,5,6-TETRACHLORO-META-XYLENE	SW8081 (SW3510/NONE) = DECACHLOROBIPHENYL	SW8081 (SW3550/NONE) = 2,4,5,6-TETRACHLORO-META-XYLENE	SW8081 (SW3550/NONE) = DECACHLOROBIPHENYL	SW8082 (SW3510/NONE) = 2,4,5,6-TETRACHLORO-META-XYLENE	SW8082 (SW3510/NONE) = DECACHLOROBIPHENYL	SW8082 (SW3550/NONE) = 2,4,5,6-TETRACHLORO-META-XYLENE	SW8082 (SW3550/NONE) = DECACHLOROBIPHENYL	SW8260 (SW5030/NONE) = 1,2-DICHLOROETHANE-D4	SW8260 (SW5030/NONE) = 1-BROMO-4-FLUOROBENZENE (4-BROMOFLUOROBEN	SW8260 (SW5030/NONE) = TOLUENE-D8	SW8270 (SW3510/NONE) = 2,4,6-TRIBROMOPHENOL	SW8270 (SW3510/NONE) = 2-FLUOROBIPHENYL	SW8270 (SW3510/NONE) = 2-FLUOROPHENOL	SW8270 (SW3510/NONE) = NITROBENZENE-D5	SW8270 (SW3510/NONE) = PHENOL-D5	SW8270 (SW3510/NONE) = TERPHENYL-D14	SW8270 (SW3550/NONE) = 2,4,6-TRIBROMOPHENOL	SW8270 (SW3550/NONE) = 2-FLUOROBIPHENYL	SW8270 (SW3550/NONE) = 2-FLUOROPHENOL	SW8270 (SW3550/NONE) = NITROBENZENE-D5	SW8270 (SW3550/NONE) = PHENOL-D6	SW8270 (SW3550/NONE) = TERPHENYL-D14	SW8330 (SW3510/NONE) = 3,4-DINITROTOLUENE	SW8330 (SW3550/NONE) = 3,4-DINITROTOLUENE
SW8081	SW3550	SS	NDA164	N1			92	110																				
SW8081	SW3550	SS	NDA166	N1			82	101																				
SW8081	SW3550	SS	NDA168	N1			95	97																				
SW8081	SW3550	SS	NDA170	N1			92	92																				
SW8081	SW3550	SS	NDA172	N1			99	103																				
SW8081	SW3550	SS	NDA174	N1			97	98																				
SW8081	SW3550	SS	NDA176	N1			48	47																				
SW8081	SW3550	SS	NDA196	N1			70	91																				
SW8081	SW3550	SS	NDA197FD1	FD1			64	81																				
SW8081	SW3550	SS	NDA198	N1			70	84																				
SW8081	SW3550	SS	NDA199	N1			64	74																				
SW8081	SW3550	SS	NDA200	N1			70	88																				
SW8081	SW3550	SS	NDA178	N1			64	80																				
SW8081	SW3550	SS	NDA179	N1			62	76																				
SW8081	SW3550	SS	NDA180	N1			51	60																				
SW8081	SW3550	SS	NDA181	N1			46	63																				
SW8081	SW3550	SS	NDA182	N1			53	55																				
SW8081	SW3550	SS	NDA183	N1			77	74																				
SW8081	SW3550	SS	NDA183MS	MS			78	72																				
SW8081	SW3550	SS	NDA183SD	SD			57	60																				
SW8081	SW3550	SS	NDA184FD1	FD1			76	73																				
SW8081	SW3550	SS	NDA201	N1			58	70																				
SW8081	SW3550	SS	NDA202	N1			61	76																				
SW8081	SW3550	SS	NDA203	N1			60	73																				
SW8081	SW3550	SS	NDA204	N1			54	68																				
SW8081	SW3550	SS	NDA205FD1	FD1			64	72																				
SW8081	SW3550	SS	NDA206	N1			64	72																				
SW8081	SW3550	SS	NDA207	N1			53	60																				
SW8081	SW3550	SS	NDA208	N1			61	77																				
SW8081	SW3550	SS	NDA209	N1			58	71																				
SW8081	SW3550	SS	NDA210	N1			68	76																				
SW8081	SW3550	SS	NDA211	N1			57	67																				
SW8081	SW3550	SS	NDA212	N1			57	65																				
SW8081	SW3550	SS	NDA185	N1			62	82																				
SW8081	SW3550	SS	NDA186	N1			48	67																				
SW8081	SW3550	SS	NDA187	N1			50	72																				

Analytical Method	Preparation Method	Matrix	Sample ID	Sample Type	SW8081 (SW3510/NONE) = 2,4,5,6-TETRACHLORO-META-XYLENE	SW8081 (SW3510/NONE) = DECACHLOROBIPHENYL	SW8081 (SW3550/NONE) = 2,4,5,6-TETRACHLORO-META-XYLENE	SW8081 (SW3550/NONE) = DECACHLOROBIPHENYL	SW8082 (SW3510/NONE) = 2,4,5,6-TETRACHLORO-META-XYLENE	SW8082 (SW3510/NONE) = DECACHLOROBIPHENYL	SW8082 (SW3550/NONE) = 2,4,5,6-TETRACHLORO-META-XYLENE	SW8082 (SW3550/NONE) = DECACHLOROBIPHENYL	SW8260 (SW5030/NONE) = 1,2-DICHLOROETHANE-D4	SW8260 (SW5030/NONE) = 1-BROMO-4-FLUOROBENZENE (4-BROMOFLUOROBEN	SW8260 (SW5030/NONE) = TOLUENE-D8	SW8270 (SW3510/NONE) = 2,4,6-TRIBROMOPHENOL	SW8270 (SW3510/NONE) = 2-FLUOROBIPHENYL	SW8270 (SW3510/NONE) = 2-FLUOROPHENOL	SW8270 (SW3510/NONE) = NITROBENZENE-D5	SW8270 (SW3510/NONE) = PHENOL-D5	SW8270 (SW3510/NONE) = TERPHENYL-D14	SW8270 (SW3550/NONE) = 2,4,6-TRIBROMOPHENOL	SW8270 (SW3550/NONE) = 2-FLUOROBIPHENYL	SW8270 (SW3550/NONE) = 2-FLUOROPHENOL	SW8270 (SW3550/NONE) = NITROBENZENE-D5	SW8270 (SW3550/NONE) = PHENOL-D5	SW8270 (SW3550/NONE) = TERPHENYL-D14	SW8330 (SW3510/NONE) = 3,4-DINITROTOLUENE	SW8330 (SW3550/NONE) = 3,4-DINITROTOLUENE
SW8081	SW3550	SS	NDA188	N1			57	77																				
SW8081	SW3550	SS	NDA189	N1			62	84																				
SW8081	SW3550	SS	NDA190	N1			56	75																				
SW8081	SW3550	SS	NDA191	N1			62	76																				
SW8081	SW3550	SS	NDA192FD1	FD1			51	75																				
SW8081	SW3550	SS	NDA193	N1			61	78																				
SW8081	SW3550	SS	NDA194	N1			51	66																				
SW8081	SW3550	SS	NDA195	N1			51	71																				
SW8081	SW3550	SS	NDA057	N1			57	64																				
SW8081	SW3550	SS	NDA059	N1			46	82																				
SW8081	SW3550	SS	NDA061	N1			53	66																				
SW8081	SW3550	SS	NDA061MS	MS			86	90																				
SW8081	SW3550	SS	NDA061SD	SD			64	68																				
SW8081	SW3550	SS	NDA062FD1	FD1			64	72																				
SW8081	SW3550	SS	NDA065	N1			52	72																				
SW8081	SW3550	SS	NDA067	N1			59	77																				
SW8081	SW3550	SS	NDA069	N1			38	64																				
SW8081	SW3550	SS	NDA119	N1			49	66																				
SW8081	SW3550	SS	NDA120	N1			52	66																				
SW8081	SW3550	SS	NDA121	N1			52	63																				
SW8081	SW3550	SS	NDA122	N1			70	88																				
SW8081	SW3550	SS	NDA123	N1			51	68																				
SW8081	SW3550	SS	NDA124	N1			55	65																				
SW8081	SW3550	SS	NDA071	N1			32	61																				
SW8081	SW3550	SS	NDA071MS	MS			81	106																				
SW8081	SW3550	SS	NDA071SD	SD			38	73																				
SW8081	SW3550	SS	NDA072FD1	FD1			45	78																				
SW8081	SW3550	SS	NDA074	N1			56	78																				
SW8081	SW3550	SS	NDA076	N1			24	91																				
SW8081	SW3550	SS	NDA078	N1			49	75																				
SW8081	SW3550	SS	NDA080	N1			48	68																				
SW8081	SW3550	SS	NDA082	N1			57	70																				
SW8081	SW3550	SS	NDA113	N1			60	76																				
SW8081	SW3550	SS	NDA113DL1	LR			65	81																				
SW8081	SW3550	SS	NDA115	N1			57	84																				
SW8081	SW3550	SS	NDA117	N1			51	51																				

Analytical Method	Preparation Method	Matrix	Sample ID	Sample Type	SW8081 (SW3510/NONE) = 2,4,5,6-TETRACHLORO-META-XYLENE	SW8081 (SW3510/NONE) = DECACHLOROBIPHENYL	SW8081 (SW3550/NONE) = 2,4,5,6-TETRACHLORO-META-XYLENE	SW8081 (SW3550/NONE) = DECACHLOROBIPHENYL	SW8082 (SW3510/NONE) = 2,4,5,6-TETRACHLORO-META-XYLENE	SW8082 (SW3510/NONE) = DECACHLOROBIPHENYL	SW8082 (SW3550/NONE) = 2,4,5,6-TETRACHLORO-META-XYLENE	SW8082 (SW3550/NONE) = DECACHLOROBIPHENYL	SW8260 (SW5030/NONE) = 1,2-DICHLOROETHANE-D4	SW8260 (SW5030/NONE) = 1-BROMO-4-FLUOROBENZENE (4-BROMOFLUOROBEN	SW8260 (SW5030/NONE) = TOLUENE-D8	SW8270 (SW3510/NONE) = 2,4,6-TRIBROMOPHENOL	SW8270 (SW3510/NONE) = 2-FLUOROBIPHENYL	SW8270 (SW3510/NONE) = 2-FLUOROPHENOL	SW8270 (SW3510/NONE) = NITROBENZENE-D5	SW8270 (SW3510/NONE) = PHENOL-D5	SW8270 (SW3510/NONE) = TERPHENYL-D14	SW8270 (SW3550/NONE) = 2,4,6-TRIBROMOPHENOL	SW8270 (SW3550/NONE) = 2-FLUOROBIPHENYL	SW8270 (SW3550/NONE) = 2-FLUOROPHENOL	SW8270 (SW3550/NONE) = NITROBENZENE-D5	SW8270 (SW3550/NONE) = PHENOL-D5	SW8270 (SW3550/NONE) = TERPHENYL-D14	SW8330 (SW3510/NONE) = 3,4-DINITROTOLUENE	SW8330 (SW3550/NONE) = 3,4-DINITROTOLUENE
SW8081	SW3550	SS	NDA101	N1			58	76																				
SW8081	SW3550	SS	NDA103	N1			62	74																				
SW8081	SW3550	SS	NDA104FD1	FD1			49	68																				
SW8081	SW3550	SS	NDA107	N1			62	78																				
SW8081	SW3550	SS	NDA109	N1			66	91																				
SW8081	SW3550	SS	NDA111	N1			52	75																				
SW8082	SW3510	SOIL	041300IBLK1	LB					0	0																		
SW8082	SW3510	SOIL	041300IBLK2	LB					0	0																		
SW8082	SW3510	SW	NDA035	N1					82	71																		
SW8082	SW3510	SW	NDA036	N1					100	81																		
SW8082	SW3510	SW	NDA037	N1					100	82																		
SW8082	SW3510	SW	NDA037MS	MS					87	63																		
SW8082	SW3510	SW	NDA037SD	SD					88	75																		
SW8082	SW3510	SW	NDA038FD1	FD1					91	76																		
SW8082	SW3510	SW	NDA039	N1					72	62																		
SW8082	SW3510	SW	NDA040	N1					73	70																		
SW8082	SW3510	SW	NDA300	N1					81	64																		
SW8082	SW3510	SW	NDA301	N1					88	66																		
SW8082	SW3510	WATER	040700BLKA	LB					30	46																		
SW8082	SW3510	WATER	040700LCSA	BS					72	72																		
SW8082	SW3510	WATER	041900BLKA	LB					82	52																		
SW8082	SW3510	WATER	041900LCSA	BS					82	58																		
SW8082	SW3510	WATER	042500BLKA	LB					83	79																		
SW8082	SW3510	WATER	042500BLKAMS	BS					81	68																		
SW8082	SW3510	WATER	042500BLKASD	BD					93	90																		
SW8082	SW3510	WATER	042500LCSA	BS					92	87																		
SW8082	SW3510	WATER	042600BLKA	LB					78	40																		
SW8082	SW3510	WATER	042600BLKAMS	BS					75	86																		
SW8082	SW3510	WATER	042600BLKASD	BD					72	54																		
SW8082	SW3510	WATER	042600LCSA	BS					76	94																		
SW8082	SW3510	WATER	050200BLKA	LB					75	65																		
SW8082	SW3510	WATER	050200BLKAMS	BS					80	85																		
SW8082	SW3510	WATER	050200BLKASD	BD					80	90																		
SW8082	SW3510	WATER	050200LCSA	BS					75	65																		
SW8082	SW3510	WATER	050200BLKA	LB					75	65																		
SW8082	SW3510	WATER	050200BLKAMS	BS					80	85																		

Analytical Method	Preparation Method	Matrix	Sample ID	Sample Type	SW8081 (SW3510/NONE) = 2,4,5,6-TETRACHLORO-META-XYLENE	SW8081 (SW3510/NONE) = DECACHLOROBIPHENYL	SW8081 (SW3550/NONE) = 2,4,5,6-TETRACHLORO-META-XYLENE	SW8081 (SW3550/NONE) = DECACHLOROBIPHENYL	SW8082 (SW3510/NONE) = 2,4,5,6-TETRACHLORO-META-XYLENE	SW8082 (SW3510/NONE) = DECACHLOROBIPHENYL	SW8082 (SW3550/NONE) = 2,4,5,6-TETRACHLORO-META-XYLENE	SW8082 (SW3550/NONE) = DECACHLOROBIPHENYL	SW8260 (SW5030/NONE) = 1,2-DICHLOROETHANE-D4	SW8260 (SW5030/NONE) = 1-BROMO-4-FLUOROBENZENE (4-BROMOFLUOROBEN	SW8260 (SW5030/NONE) = TOLUENE-D8	SW8270 (SW3510/NONE) = 2,4,6-TRIBROMOPHENOL	SW8270 (SW3510/NONE) = 2-FLUOROBIPHENYL	SW8270 (SW3510/NONE) = 2-FLUOROPHENOL	SW8270 (SW3510/NONE) = NITROBENZENE-D5	SW8270 (SW3510/NONE) = PHENOL-D5	SW8270 (SW3510/NONE) = TERPHENYL-D14	SW8270 (SW3550/NONE) = 2,4,6-TRIBROMOPHENOL	SW8270 (SW3550/NONE) = 2-FLUOROBIPHENYL	SW8270 (SW3550/NONE) = 2-FLUOROPHENOL	SW8270 (SW3550/NONE) = NITROBENZENE-D5	SW8270 (SW3550/NONE) = PHENOL-D5	SW8270 (SW3550/NONE) = TERPHENYL-D14	SW8330 (SW3510/NONE) = 3,4-DINITROTOLUENE	SW8330 (SW3550/NONE) = 3,4-DINITROTOLUENE
SW8082	SW3510	WATER	050200BLKASD	BD					80	90																			
SW8082	SW3510	WATER	050200LCSA	BS					75	65																			
SW8082	SW3510	WATER	050200BLKA	LB					75	65																			
SW8082	SW3510	WATER	050200BLKAMS	BS					80	85																			
SW8082	SW3510	WATER	050200BLKASD	BD					80	90																			
SW8082	SW3510	WATER	050200LCSA	BS					75	65																			
SW8082	SW3510	WATER	050900BLKA	LB					76	55																			
SW8082	SW3510	WATER	050900LCSA	BS					57	40																			
SW8082	SW3510	WATER	050600BLKA	LB					76	55																			
SW8082	SW3510	WATER	050600BLKAS	LB					89	68																			
SW8082	SW3510	WATER	050600LCSA	BS					57	40																			
SW8082	SW3510	WG	NDA024	N1					41	19																			
SW8082	SW3510	WG	NDA025FD1	FD1					40	33																			
SW8082	SW3510	WG	NDA029	N1					59	29																			
SW8082	SW3510	WG	NDA029MS	MS					62	35																			
SW8082	SW3510	WG	NDA029SD	SD					63	29																			
SW8082	SW3510	WG	NDA017	N1					41	41																			
SW8082	SW3510	WG	NDA022	N1					100	48																			
SW8082	SW3510	WG	NDA019	N1					95	80																			
SW8082	SW3510	WG	NDA020	N1					85	85																			
SW8082	SW3510	WG	NDA021	N1					80	85																			
SW8082	SW3510	WG	NDA002	N1					38	32																			
SW8082	SW3510	WG	NDA003	N1					80	65																			
SW8082	SW3510	WG	NDA004	N1					85	70																			
SW8082	SW3510	WG	NDA003FD1	N1					83	70																			
SW8082	SW3510	WG	NDA023	N1					71	34																			
SW8082	SW3510	WG	NDA028	N1					65	60																			
SW8082	SW3510	WG	NDA001	N1					75	37																			
SW8082	SW3510	WG	NDA013	N1					83	56																			
SW8082	SW3510	WG	NDA014	N1					90	85																			
SW8082	SW3510	WG	NDA015	N1					71	36																			
SW8082	SW3510	WG	NDA016	N1					69	40																			
SW8082	SW3510	WG	NDA026	N1					79	34																			
SW8082	SW3510	WG	NDA005	N1					83	117																			
SW8082	SW3510	WG	NDA006	N1					91	109																			
SW8082	SW3510	WG	NDA008	N1					100	110																			

Analytical Method	Preparation Method	Matrix	Sample ID	Sample Type	SW8081 (SW3510/NONE) = 2,4,5,6-TETRACHLORO-META-XYLENE	SW8081 (SW3510/NONE) = DECACHLOROBIPHENYL	SW8081 (SW3550/NONE) = 2,4,5,6-TETRACHLORO-META-XYLENE	SW8081 (SW3550/NONE) = DECACHLOROBIPHENYL	SW8082 (SW3510/NONE) = 2,4,5,6-TETRACHLORO-META-XYLENE	SW8082 (SW3510/NONE) = DECACHLOROBIPHENYL	SW8082 (SW3550/NONE) = 2,4,5,6-TETRACHLORO-META-XYLENE	SW8082 (SW3550/NONE) = DECACHLOROBIPHENYL	SW8260 (SW5030/NONE) = 1,2-DICHLOROETHANE-D4	SW8260 (SW5030/NONE) = 1-BROMO-4-FLUOROBENZENE (4-BROMOFLUOROBEN	SW8260 (SW5030/NONE) = TOLUENE-D8	SW8270 (SW3510/NONE) = 2,4,6-TRIBROMOPHENOL	SW8270 (SW3510/NONE) = 2-FLUOROBIPHENYL	SW8270 (SW3510/NONE) = 2-FLUOROPHENOL	SW8270 (SW3510/NONE) = NITROBENZENE-D5	SW8270 (SW3510/NONE) = PHENOL-D5	SW8270 (SW3510/NONE) = TERPHENYL-D14	SW8270 (SW3550/NONE) = 2,4,6-TRIBROMOPHENOL	SW8270 (SW3550/NONE) = 2-FLUOROBIPHENYL	SW8270 (SW3550/NONE) = 2-FLUOROPHENOL	SW8270 (SW3550/NONE) = NITROBENZENE-D5	SW8270 (SW3550/NONE) = PHENOL-D5	SW8270 (SW3550/NONE) = TERPHENYL-D14	SW8330 (SW3510/NONE) = 3,4-DINITROTOLUENE	SW8330 (SW3550/NONE) = 3,4-DINITROTOLUENE
SW8082	SW3510	WG	NDA009	N1					52	118																			
SW8082	SW3510	WG	NDA010	N1					64	48																			
SW8082	SW3510	WG	NDA011	N1					71	39																			
SW8082	SW3510	WG	NDA011MS	MS					67	42																			
SW8082	SW3510	WG	NDA011SD	SD					68	43																			
SW8082	SW3510	WG	NDA012	N1					64	30																			
SW8082	SW3510	WG	NDA0321FD1	FD1					88	70																			
SW8082	SW3510	WQ	NDA031EB2	EB2					69	72																			
SW8082	SW3510	WQ	NDA032EB3	EB3					56	58																			
SW8082	SW3510	WQ	NDA266EB4	EB4					61	33																			
SW8082	SW3510	WQ	NDA275AB3	AB3					64	38																			
SW8082	SW3510	WQ	NDA267EB5	EB5					83	56																			
SW8082	SW3510	WQ	NDA268EB6	EB6					88	99																			
SW8082	SW3510	WQ	NDA269EB7	EB7					85	85																			
SW8082	SW3510	WQ	NDA270EB8	EB8					86	86																			
SW8082	SW3510	WQ	NDA271EB9	EB9					87	74																			
SW8082	SW3510	WQ	NDA276AB4	AB4					91	77																			
SW8082	SW3510	WQ	NDA272EB1	EB1					79	53																			
SW8082	SW3510	WQ	NDA304EB1	EB1					80	43																			
SW8082	SW3510	WQ	NDA305EB1	EB1					84	49																			
SW8082	SW3510	WQ	NDA306EB2	EB2					76	29																			
SW8082	SW3510	WQ	NDA310EB2	EB2					49	24																			
SW8082	SW3510	WQ	NDA033AB1	AB1					91	86																			
SW8082	SW3510	WQ	NDA309EB1	EB1					100	35																			
SW8082	SW3510	WQ	NDA311EB1	EB1					88	80																			
SW8082	SW3510	WQ	NDA312EB2	EB2					81	45																			
SW8082	SW3510	WQ	NDA030EB1	EB1					80	25																			
SW8082	SW3510	WQ	NDA313EB1	EB1					85	30																			
SW8082	SW3510	WQ	NDA034AB2	AB2					85	46																			
SW8082	SW3510	WQ	NDA316EB1	EB1					80	29																			
SW8082	SW3510	WQ	NDA318EB1	EB1					86	62																			
SW8082	SW3510	WQ	NDA320EB1	EB1					55	81																			
SW8082	SW3510	WQ	NDA323EB1	EB1					78	55																			
SW8082	SW3510	WQ	NDA324EB2	EB2					79	64																			
SW8082	SW3510	WQ	NDA325AB1	AB1					76	58																			
SW8082	SW3550	SB	NDA126	N1							36	94																	

Analytical Method	Preparation Method	Matrix	Sample ID	Sample Type	SW8081 (SW3510/NONE) = 2,4,5,6-TETRACHLORO-META-XYLENE	SW8081 (SW3510/NONE) = DECACHLOROBIPHENYL	SW8081 (SW3550/NONE) = 2,4,5,6-TETRACHLORO-META-XYLENE	SW8081 (SW3550/NONE) = DECACHLOROBIPHENYL	SW8082 (SW3510/NONE) = 2,4,5,6-TETRACHLORO-META-XYLENE	SW8082 (SW3510/NONE) = DECACHLOROBIPHENYL	SW8082 (SW3550/NONE) = 2,4,5,6-TETRACHLORO-META-XYLENE	SW8082 (SW3550/NONE) = DECACHLOROBIPHENYL	SW8260 (SW5030/NONE) = 1,2-DICHLOROETHANE-D4	SW8260 (SW5030/NONE) = 1-BROMO-4-FLUOROBENZENE (4-BROMOFLUOROBEN	SW8260 (SW5030/NONE) = TOLUENE-D8	SW8270 (SW3510/NONE) = 2,4,6-TRIBROMOPHENOL	SW8270 (SW3510/NONE) = 2-FLUOROBIPHENYL	SW8270 (SW3510/NONE) = 2-FLUOROPHENOL	SW8270 (SW3510/NONE) = NITROBENZENE-D5	SW8270 (SW3510/NONE) = PHENOL-D5	SW8270 (SW3510/NONE) = TERPHENYL-D14	SW8270 (SW3550/NONE) = 2,4,6-TRIBROMOPHENOL	SW8270 (SW3550/NONE) = 2-FLUOROBIPHENYL	SW8270 (SW3550/NONE) = 2-FLUOROPHENOL	SW8270 (SW3550/NONE) = NITROBENZENE-D5	SW8270 (SW3550/NONE) = PHENOL-D5	SW8270 (SW3550/NONE) = TERPHENYL-D14	SW8330 (SW3510/NONE) = 3,4-DINITROTOLUENE	SW8330 (SW3550/NONE) = 3,4-DINITROTOLUENE
SW8082	SW3550	SB	NDA129	N1								36	100																
SW8082	SW3550	SB	NDA130FD1	FD1								36	95																
SW8082	SW3550	SB	NDA132	N1								45	100																
SW8082	SW3550	SB	NDA134	N1								33	100																
SW8082	SW3550	SB	NDA136	N1								58	100																
SW8082	SW3550	SB	NDA138	N1								90	100																
SW8082	SW3550	SB	NDA140	N1								89	110																
SW8082	SW3550	SB	NDA142	N1								89	110																
SW8082	SW3550	SB	NDA144	N1								91	110																
SW8082	SW3550	SB	NDA146	N1								90	110																
SW8082	SW3550	SB	NDA148	N1								49	92																
SW8082	SW3550	SB	NDA151	N1								53	98																
SW8082	SW3550	SB	NDA151MS	MS								77	110																
SW8082	SW3550	SB	NDA151SD	SD								45	98																
SW8082	SW3550	SB	NDA152FD1	FD1								62	100																
SW8082	SW3550	SB	NDA154	N1								68	100																
SW8082	SW3550	SB	NDA156	N1								61	110																
SW8082	SW3550	SB	NDA158	N1								54	110																
SW8082	SW3550	SB	NDA160	N1								43	110																
SW8082	SW3550	SB	NDA162	N1								53	110																
SW8082	SW3550	SB	NDA163FD1	FD1								35	98																
SW8082	SW3550	SB	NDA165	N1								51	110																
SW8082	SW3550	SB	NDA167	N1								30	110																
SW8082	SW3550	SB	NDA169	N1								87	110																
SW8082	SW3550	SB	NDA171	N1								54	110																
SW8082	SW3550	SB	NDA173	N1								42	110																
SW8082	SW3550	SB	NDA175	N1								54	98																
SW8082	SW3550	SB	NDA177	N1								78	100																
SW8082	SW3550	SB	NDA213	N1								75	98																
SW8082	SW3550	SB	NDA213MS	MS								81	100																
SW8082	SW3550	SB	NDA213SD	SD								66	96																
SW8082	SW3550	SB	NDA214FD1	FD1								32	96																
SW8082	SW3550	SB	NDA215	N1								44	100																
SW8082	SW3550	SB	NDA216	N1								74	99																
SW8082	SW3550	SB	NDA217	N1								80	100																
SW8082	SW3550	SB	NDA218	N1								19	100																

Analytical Method	Preparation Method	Matrix	Sample ID	Sample Type	SW8081 (SW3510/NONE) = 2,4,5,6-TETRACHLORO-META-XYLENE	SW8081 (SW3510/NONE) = DECACHLOROBIPHENYL	SW8081 (SW3550/NONE) = 2,4,5,6-TETRACHLORO-META-XYLENE	SW8081 (SW3550/NONE) = DECACHLOROBIPHENYL	SW8082 (SW3510/NONE) = 2,4,5,6-TETRACHLORO-META-XYLENE	SW8082 (SW3510/NONE) = DECACHLOROBIPHENYL	SW8082 (SW3550/NONE) = 2,4,5,6-TETRACHLORO-META-XYLENE	SW8082 (SW3550/NONE) = DECACHLOROBIPHENYL	SW8260 (SW5030/NONE) = 1,2-DICHLOROETHANE-D4	SW8260 (SW5030/NONE) = 1-BROMO-4-FLUOROBENZENE (4-BROMOFLUOROBEN	SW8260 (SW5030/NONE) = TOLUENE-D8	SW8270 (SW3510/NONE) = 2,4,6-TRIBROMOPHENOL	SW8270 (SW3510/NONE) = 2-FLUOROBIPHENYL	SW8270 (SW3510/NONE) = 2-FLUOROPHENOL	SW8270 (SW3510/NONE) = NITROBENZENE-D5	SW8270 (SW3510/NONE) = PHENOL-D5	SW8270 (SW3510/NONE) = TERPHENYL-D14	SW8270 (SW3550/NONE) = 2,4,6-TRIBROMOPHENOL	SW8270 (SW3550/NONE) = 2-FLUOROBIPHENYL	SW8270 (SW3550/NONE) = 2-FLUOROPHENOL	SW8270 (SW3550/NONE) = NITROBENZENE-D5	SW8270 (SW3550/NONE) = PHENOL-D5	SW8270 (SW3550/NONE) = TERPHENYL-D14	SW8330 (SW3510/NONE) = 3,4-DINITROTOLUENE	SW8330 (SW3550/NONE) = 3,4-DINITROTOLUENE
SW8082	SW3550	SB	NDA219	N1							32	97																
SW8082	SW3550	SB	NDA220	N1							32	100																
SW8082	SW3550	SB	NDA221	N1							27	100																
SW8082	SW3550	SB	NDA222	N1							17	100																
SW8082	SW3550	SB	NDA223	N1							70	95																
SW8082	SW3550	SB	NDA224	N1							85	87																
SW8082	SW3550	SB	NDA225	N1							75	93																
SW8082	SW3550	SB	NDA226	N1							78	91																
SW8082	SW3550	SB	NDA226MS	MS							82	97																
SW8082	SW3550	SB	NDA226SD	SD							86	99																
SW8082	SW3550	SB	NDA227FD1	FD1							77	98																
SW8082	SW3550	SB	NDA228	N1							76	95																
SW8082	SW3550	SB	NDA229	N1							72	91																
SW8082	SW3550	SB	NDA230	N1							73	91																
SW8082	SW3550	SB	NDA231	N1							72	96																
SW8082	SW3550	SB	NDA232	N1							67	89																
SW8082	SW3550	SB	NDA233	N1							72	90																
SW8082	SW3550	SB	NDA234	N1							68	93																
SW8082	SW3550	SB	NDA235	N1							94	110																
SW8082	SW3550	SB	NDA235MS	MS							120	130																
SW8082	SW3550	SB	NDA235SD	SD							93	120																
SW8082	SW3550	SB	NDA236	N1							85	100																
SW8082	SW3550	SB	NDA237FD1	FD1							95	110																
SW8082	SW3550	SB	NDA238	N1							96	120																
SW8082	SW3550	SB	NDA239	N1							100	120																
SW8082	SW3550	SB	NDA240	N1							89	110																
SW8082	SW3550	SB	NDA241	N1							82	110																
SW8082	SW3550	SB	NDA242	N1							76	120																
SW8082	SW3550	SB	NDA243	N1							85	110																
SW8082	SW3550	SB	NDA244	N1							87	110																
SW8082	SW3550	SB	NDA245	N1							65	100																
SW8082	SW3550	SB	NDA246	N1							60	92																
SW8082	SW3550	SB	NDA246MS	MS							83	100																
SW8082	SW3550	SB	NDA246SD	SD							87	100																
SW8082	SW3550	SB	NDA247FD1	FD1							52	91																
SW8082	SW3550	SB	NDA248	N1							81	100																

Analytical Method	Preparation Method	Matrix	Sample ID	Sample Type	SW8081 (SW3510/NONE) = 2,4,5,6-TETRACHLORO-META-XYLENE	SW8081 (SW3510/NONE) = DECACHLOROBIPHENYL	SW8081 (SW3550/NONE) = 2,4,5,6-TETRACHLORO-META-XYLENE	SW8081 (SW3550/NONE) = DECACHLOROBIPHENYL	SW8082 (SW3510/NONE) = 2,4,5,6-TETRACHLORO-META-XYLENE	SW8082 (SW3510/NONE) = DECACHLOROBIPHENYL	SW8082 (SW3550/NONE) = 2,4,5,6-TETRACHLORO-META-XYLENE	SW8082 (SW3550/NONE) = DECACHLOROBIPHENYL	SW8260 (SW5030/NONE) = 1,2-DICHLOROETHANE-D4	SW8260 (SW5030/NONE) = 1-BROMO-4-FLUOROBENZENE (4-BROMOFLUOROBEN	SW8260 (SW5030/NONE) = TOLUENE-D8	SW8270 (SW3510/NONE) = 2,4,6-TRIBROMOPHENOL	SW8270 (SW3510/NONE) = 2-FLUOROBIPHENYL	SW8270 (SW3510/NONE) = 2-FLUOROPHENOL	SW8270 (SW3510/NONE) = NITROBENZENE-D5	SW8270 (SW3510/NONE) = PHENOL-D5	SW8270 (SW3510/NONE) = TERPHENYL-D14	SW8270 (SW3550/NONE) = 2,4,6-TRIBROMOPHENOL	SW8270 (SW3550/NONE) = 2-FLUOROBIPHENYL	SW8270 (SW3550/NONE) = 2-FLUOROPHENOL	SW8270 (SW3550/NONE) = NITROBENZENE-D5	SW8270 (SW3550/NONE) = PHENOL-D5	SW8270 (SW3550/NONE) = TERPHENYL-D14	SW8330 (SW3510/NONE) = 3,4-DINITROTOLUENE	SW8330 (SW3550/NONE) = 3,4-DINITROTOLUENE
SW8082	SW3550	SB	NDA249	N1							82	95																
SW8082	SW3550	SB	NDA252	N1							91	96																
SW8082	SW3550	SB	NDA253	N1							84	100																
SW8082	SW3550	SB	NDA254	N1							80	95																
SW8082	SW3550	SB	NDA255	N1							80	100																
SW8082	SW3550	SB	NDA058	N1							72	92																
SW8082	SW3550	SB	NDA060	N1							73	93																
SW8082	SW3550	SB	NDA063	N1							70	95																
SW8082	SW3550	SB	NDA063MS	MS							65	95																
SW8082	SW3550	SB	NDA063SD	SD							60	95																
SW8082	SW3550	SB	NDA064FD1	FD1							75	95																
SW8082	SW3550	SB	NDA066	N1							80	100																
SW8082	SW3550	SB	NDA068	N1							65	95																
SW8082	SW3550	SB	NDA070	N1							75	110																
SW8082	SW3550	SB	NDA073	N1							87	120																
SW8082	SW3550	SB	NDA075	N1							50	120																
SW8082	SW3550	SB	NDA077	N1							60	100																
SW8082	SW3550	SB	NDA079	N1							18	85																
SW8082	SW3550	SB	NDA081	N1							90	100																
SW8082	SW3550	SB	NDA083	N1							90	100																
SW8082	SW3550	SB	NDA114	N1							86	91																
SW8082	SW3550	SB	NDA116	N1							77	94																
SW8082	SW3550	SB	NDA118	N1							68	100																
SW8082	SW3550	SB	NDA102	N1							46	39																
SW8082	SW3550	SB	NDA105	N1							61	74																
SW8082	SW3550	SB	NDA106FD1	FD1							54	60																
SW8082	SW3550	SB	NDA108	N1							54	80																
SW8082	SW3550	SB	NDA108MS	MS							53	100																
SW8082	SW3550	SB	NDA108SD	SD							88	96																
SW8082	SW3550	SB	NDA110	N1							56	81																
SW8082	SW3550	SB	NDA112	N1							68	74																
SW8082	SW3550	SD	NDA050	N1							65	80																
SW8082	SW3550	SD	NDA050MS	MS							80	98																
SW8082	SW3550	SD	NDA050SD	SD							96	110																
SW8082	SW3550	SD	NDA051FD1	FD1							72	86																
SW8082	SW3550	SD	NDA052	N1							76	93																

Analytical Method	Preparation Method	Matrix	Sample ID	Sample Type	SW8081 (SW3510/NONE) = 2,4,5,6-TETRACHLORO-META-XYLENE	SW8081 (SW3510/NONE) = DECACHLOROBIPHENYL	SW8081 (SW3550/NONE) = 2,4,5,6-TETRACHLORO-META-XYLENE	SW8081 (SW3550/NONE) = DECACHLOROBIPHENYL	SW8082 (SW3510/NONE) = 2,4,5,6-TETRACHLORO-META-XYLENE	SW8082 (SW3510/NONE) = DECACHLOROBIPHENYL	SW8082 (SW3550/NONE) = 2,4,5,6-TETRACHLORO-META-XYLENE	SW8082 (SW3550/NONE) = DECACHLOROBIPHENYL	SW8260 (SW5030/NONE) = 1,2-DICHLOROETHANE-D4	SW8260 (SW5030/NONE) = 1-BROMO-4-FLUOROBENZENE (4-BROMOFLUOROBEN	SW8260 (SW5030/NONE) = TOLUENE-D8	SW8270 (SW3510/NONE) = 2,4,6-TRIBROMOPHENOL	SW8270 (SW3510/NONE) = 2-FLUOROBIPHENYL	SW8270 (SW3510/NONE) = 2-FLUOROPHENOL	SW8270 (SW3510/NONE) = NITROBENZENE-D5	SW8270 (SW3510/NONE) = PHENOL-D5	SW8270 (SW3510/NONE) = TERPHENYL-D14	SW8270 (SW3550/NONE) = 2,4,6-TRIBROMOPHENOL	SW8270 (SW3550/NONE) = 2-FLUOROBIPHENYL	SW8270 (SW3550/NONE) = 2-FLUOROPHENOL	SW8270 (SW3550/NONE) = NITROBENZENE-D5	SW8270 (SW3550/NONE) = PHENOL-D5	SW8270 (SW3550/NONE) = TERPHENYL-D14	SW8330 (SW3510/NONE) = 3,4-DINITROTOLUENE	SW8330 (SW3550/NONE) = 3,4-DINITROTOLUENE
SW8082	SW3550	SD	NDA053	N1							44	88																
SW8082	SW3550	SD	NDA054	N1							85	95																
SW8082	SW3550	SD	NDA055	N1							49	94																
SW8082	SW3550	SD	NDA042	N1							95	110																
SW8082	SW3550	SD	NDA043	N1							110	110																
SW8082	SW3550	SD	NDA044	N1							97	120																
SW8082	SW3550	SD	NDA045	N1							100	120																
SW8082	SW3550	SD	NDA046	N1							100	110																
SW8082	SW3550	SD	NDA302	N1							99	110																
SW8082	SW3550	SD	NDA303	N1							92	110																
SW8082	SW3550	SD	NDA307FD1	FD1							92	110																
SW8082	SW3550	SD	NDA047	N1							76	93																
SW8082	SW3550	SD	NDA048	N1							69	86																
SW8082	SW3550	SD	NDA049	N1							78	92																
SW8082	SW3550	SOIL	041000BLKS	LB							42	100																
SW8082	SW3550	SOIL	041000LCSS	BS							22	100																
SW8082	SW3550	SOIL	041100BLKS	LB							88	110																
SW8082	SW3550	SOIL	041100LCSS	BS							88	120																
SW8082	SW3550	SOIL	041200BLKS	LB							65	100																
SW8082	SW3550	SOIL	041200LCSS	BS							44	98																
SW8082	SW3550	SOIL	041600IBLK2	LB							0	0																
SW8082	SW3550	SOIL	041600IBLK3	LB							0	0.3																
SW8082	SW3550	SOIL	041600IBLK4	LB							0	0.39																
SW8082	SW3550	SOIL	041200BLKS	LB							80	110																
SW8082	SW3550	SOIL	041200LCSS	BS							96	120																
SW8082	SW3550	SOIL	041600BLKS	LB							78	110																
SW8082	SW3550	SOIL	041600LCSS	BS							80	110																
SW8082	SW3550	SOIL	041700BLKS	LB							76	94																
SW8082	SW3550	SOIL	041700LCSS	BS							87	100																
SW8082	SW3550	SOIL	041800BLKS	LB							69	100																
SW8082	SW3550	SOIL	041800LCSS	BS							48	100																
SW8082	SW3550	SOIL	042000BLKS	LB							88	130																
SW8082	SW3550	SOIL	042000LCSS	BS							110	140																
SW8082	SW3550	SOIL	042400BLKS	LB							69	94																
SW8082	SW3550	SOIL	042400LCSS	BS							95	110																
SW8082	SW3550	SOIL	042000BLKS	LB							88	130																

Analytical Method	Preparation Method	Matrix	Sample ID	Sample Type	SW8081 (SW3510/NONE) = 2,4,5,6-TETRACHLORO-META-XYLENE	SW8081 (SW3510/NONE) = DECACHLOROBIPHENYL	SW8081 (SW3550/NONE) = 2,4,5,6-TETRACHLORO-META-XYLENE	SW8081 (SW3550/NONE) = DECACHLOROBIPHENYL	SW8082 (SW3510/NONE) = 2,4,5,6-TETRACHLORO-META-XYLENE	SW8082 (SW3510/NONE) = DECACHLOROBIPHENYL	SW8082 (SW3550/NONE) = 2,4,5,6-TETRACHLORO-META-XYLENE	SW8082 (SW3550/NONE) = DECACHLOROBIPHENYL	SW8260 (SW5030/NONE) = 1,2-DICHLOROETHANE-D4	SW8260 (SW5030/NONE) = 1-BROMO-4-FLUOROBENZENE (4-BROMOFLUOROBEN	SW8260 (SW5030/NONE) = TOLUENE-D8	SW8270 (SW3510/NONE) = 2,4,6-TRIBROMOPHENOL	SW8270 (SW3510/NONE) = 2-FLUOROBIPHENYL	SW8270 (SW3510/NONE) = 2-FLUOROPHENOL	SW8270 (SW3510/NONE) = NITROBENZENE-D5	SW8270 (SW3510/NONE) = PHENOL-D5	SW8270 (SW3510/NONE) = TERPHENYL-D14	SW8270 (SW3550/NONE) = 2,4,6-TRIBROMOPHENOL	SW8270 (SW3550/NONE) = 2-FLUOROBIPHENYL	SW8270 (SW3550/NONE) = 2-FLUOROPHENOL	SW8270 (SW3550/NONE) = NITROBENZENE-D5	SW8270 (SW3550/NONE) = PHENOL-D5	SW8270 (SW3550/NONE) = TERPHENYL-D14	SW8330 (SW3510/NONE) = 3,4-DINITROTOLUENE	SW8330 (SW3550/NONE) = 3,4-DINITROTOLUENE
SW8082	SW3550	SOIL	042000BLKSMS	BS							95	120																	
SW8082	SW3550	SOIL	042000BLKSSD	BD							87	130																	
SW8082	SW3550	SOIL	042000LCSS	BS							110	140																	
SW8082	SW3550	SOIL	042800BLKS	LB							77	100																	
SW8082	SW3550	SOIL	042800LCSS	BS							75	110																	
SW8082	SW3550	SOIL	050400IBLK5	LB							0	0																	
SW8082	SW3550	SOIL	050400IBLK6	LB							0	0																	
SW8082	SW3550	SOIL	050400IBLK7	LB							0	0																	
SW8082	SW3550	SOIL	050100BLKS	LB							65	100																	
SW8082	SW3550	SOIL	050100LCSS	BS							75	105																	
SW8082	SW3550	SOIL	050200BLKS	LB							75	100																	
SW8082	SW3550	SOIL	050200BLKSMS	BS							75	100																	
SW8082	SW3550	SOIL	050200BLKSSD	BD							70	95																	
SW8082	SW3550	SOIL	050200LCSS	BS							75	105																	
SW8082	SW3550	SOIL	042800BLKS	LB							77	100																	
SW8082	SW3550	SOIL	042800BLKSMS	BS							80	110																	
SW8082	SW3550	SOIL	042800BLKSSD	BD							72	110																	
SW8082	SW3550	SOIL	042800LCSS	BS							75	110																	
SW8082	SW3550	SOIL	050300BLKS	LB							74	99																	
SW8082	SW3550	SOIL	050300BLKSMS	BS							76	110																	
SW8082	SW3550	SOIL	050300BLKSSD	BD							71	100																	
SW8082	SW3550	SOIL	050300LCSS	BS							56	100																	
SW8082	SW3550	SS	NDA125	N1							29	98																	
SW8082	SW3550	SS	NDA127	N1							37	100																	
SW8082	SW3550	SS	NDA127MS	MS							38	100																	
SW8082	SW3550	SS	NDA127SD	SD							63	110																	
SW8082	SW3550	SS	NDA128FD1	FD1							28	90																	
SW8082	SW3550	SS	NDA131	N1							38	100																	
SW8082	SW3550	SS	NDA133	N1							37	93																	
SW8082	SW3550	SS	NDA135	N1							94	120																	
SW8082	SW3550	SS	NDA135MS	MS							110	130																	
SW8082	SW3550	SS	NDA135SD	SD							110	130																	
SW8082	SW3550	SS	NDA137	N1							97	130																	
SW8082	SW3550	SS	NDA139	N1							42	120																	
SW8082	SW3550	SS	NDA141	N1							46	110																	
SW8082	SW3550	SS	NDA143	N1							45	120																	

Analytical Method	Preparation Method	Matrix	Sample ID	Sample Type	SW8081 (SW3510/NONE) = 2,4,5,6-TETRACHLORO-META-XYLENE	SW8081 (SW3510/NONE) = DECACHLOROBIPHENYL	SW8081 (SW3550/NONE) = 2,4,5,6-TETRACHLORO-META-XYLENE	SW8081 (SW3550/NONE) = DECACHLOROBIPHENYL	SW8082 (SW3510/NONE) = 2,4,5,6-TETRACHLORO-META-XYLENE	SW8082 (SW3510/NONE) = DECACHLOROBIPHENYL	SW8082 (SW3550/NONE) = 2,4,5,6-TETRACHLORO-META-XYLENE	SW8082 (SW3550/NONE) = DECACHLOROBIPHENYL	SW8260 (SW5030/NONE) = 1,2-DICHLOROETHANE-D4	SW8260 (SW5030/NONE) = 1-BROMO-4-FLUOROBENZENE (4-BROMOFLUOROBEN	SW8260 (SW5030/NONE) = TOLUENE-D8	SW8270 (SW3510/NONE) = 2,4,6-TRIBROMOPHENOL	SW8270 (SW3510/NONE) = 2-FLUOROBIPHENYL	SW8270 (SW3510/NONE) = 2-FLUOROPHENOL	SW8270 (SW3510/NONE) = NITROBENZENE-D5	SW8270 (SW3510/NONE) = PHENOL-D5	SW8270 (SW3510/NONE) = TERPHENYL-D14	SW8270 (SW3550/NONE) = 2,4,6-TRIBROMOPHENOL	SW8270 (SW3550/NONE) = 2-FLUOROBIPHENYL	SW8270 (SW3550/NONE) = 2-FLUOROPHENOL	SW8270 (SW3550/NONE) = NITROBENZENE-D5	SW8270 (SW3550/NONE) = PHENOL-D5	SW8270 (SW3550/NONE) = TERPHENYL-D14	SW8330 (SW3510/NONE) = 3,4-DINITROTOLUENE	SW8330 (SW3550/NONE) = 3,4-DINITROTOLUENE
SW8082	SW3550	SS	NDA145	N1							53	110																
SW8082	SW3550	SS	NDA147	N1							52	100																
SW8082	SW3550	SS	NDA149	N1							53	96																
SW8082	SW3550	SS	NDA149MS	MS							39	88																
SW8082	SW3550	SS	NDA149SD	SD							21	83																
SW8082	SW3550	SS	NDA150FD1	FD1							40	92																
SW8082	SW3550	SS	NDA153	N1							79	100																
SW8082	SW3550	SS	NDA155	N1							48	100																
SW8082	SW3550	SS	NDA157	N1							58	110																
SW8082	SW3550	SS	NDA159	N1							50	100																
SW8082	SW3550	SS	NDA161	N1							47	96																
SW8082	SW3550	SS	NDA164	N1							87	97																
SW8082	SW3550	SS	NDA166	N1							41	100																
SW8082	SW3550	SS	NDA168	N1							55	100																
SW8082	SW3550	SS	NDA170	N1							86	96																
SW8082	SW3550	SS	NDA172	N1							41	110																
SW8082	SW3550	SS	NDA174	N1							63	110																
SW8082	SW3550	SS	NDA176	N1							46	48																
SW8082	SW3550	SS	NDA196	N1							81	95																
SW8082	SW3550	SS	NDA197FD1	FD1							78	93																
SW8082	SW3550	SS	NDA198	N1							83	99																
SW8082	SW3550	SS	NDA199	N1							75	93																
SW8082	SW3550	SS	NDA200	N1							80	94																
SW8082	SW3550	SS	NDA178	N1							66	92																
SW8082	SW3550	SS	NDA179	N1							69	92																
SW8082	SW3550	SS	NDA180	N1							67	94																
SW8082	SW3550	SS	NDA181	N1							58	92																
SW8082	SW3550	SS	NDA182	N1							62	76																
SW8082	SW3550	SS	NDA183	N1							82	100																
SW8082	SW3550	SS	NDA183MS	MS							79	100																
SW8082	SW3550	SS	NDA183SD	SD							87	100																
SW8082	SW3550	SS	NDA184FD1	FD1							86	85																
SW8082	SW3550	SS	NDA201	N1							61	88																
SW8082	SW3550	SS	NDA202	N1							66	97																
SW8082	SW3550	SS	NDA203	N1							69	100																
SW8082	SW3550	SS	NDA204	N1							88	110																

Analytical Method	Preparation Method	Matrix	Sample ID	Sample Type	SW8081 (SW3510/NONE) = 2,4,5,6-TETRACHLORO-META-XYLENE	SW8081 (SW3510/NONE) = DECACHLOROBIPHENYL	SW8081 (SW3550/NONE) = 2,4,5,6-TETRACHLORO-META-XYLENE	SW8081 (SW3550/NONE) = DECACHLOROBIPHENYL	SW8082 (SW3510/NONE) = 2,4,5,6-TETRACHLORO-META-XYLENE	SW8082 (SW3510/NONE) = DECACHLOROBIPHENYL	SW8082 (SW3550/NONE) = 2,4,5,6-TETRACHLORO-META-XYLENE	SW8082 (SW3550/NONE) = DECACHLOROBIPHENYL	SW8260 (SW5030/NONE) = 1,2-DICHLOROETHANE-D4	SW8260 (SW5030/NONE) = 1-BROMO-4-FLUOROBENZENE (4-BROMOFLUOROBEN	SW8260 (SW5030/NONE) = TOLUENE-D8	SW8270 (SW3510/NONE) = 2,4,6-TRIBROMOPHENOL	SW8270 (SW3510/NONE) = 2-FLUOROBIPHENYL	SW8270 (SW3510/NONE) = 2-FLUOROPHENOL	SW8270 (SW3510/NONE) = NITROBENZENE-D5	SW8270 (SW3510/NONE) = PHENOL-D5	SW8270 (SW3510/NONE) = TERPHENYL-D14	SW8270 (SW3550/NONE) = 2,4,6-TRIBROMOPHENOL	SW8270 (SW3550/NONE) = 2-FLUOROBIPHENYL	SW8270 (SW3550/NONE) = 2-FLUOROPHENOL	SW8270 (SW3550/NONE) = NITROBENZENE-D5	SW8270 (SW3550/NONE) = PHENOL-D5	SW8270 (SW3550/NONE) = TERPHENYL-D14	SW8330 (SW3510/NONE) = 3,4-DINITROTOLUENE	SW8330 (SW3550/NONE) = 3,4-DINITROTOLUENE
SW8082	SW3550	SS	NDA205FD1	FD1							66	93																	
SW8082	SW3550	SS	NDA206	N1							71	110																	
SW8082	SW3550	SS	NDA207	N1							62	95																	
SW8082	SW3550	SS	NDA208	N1							67	110																	
SW8082	SW3550	SS	NDA209	N1							68	110																	
SW8082	SW3550	SS	NDA210	N1							70	110																	
SW8082	SW3550	SS	NDA211	N1							76	110																	
SW8082	SW3550	SS	NDA212	N1							74	100																	
SW8082	SW3550	SS	NDA185	N1							90	88																	
SW8082	SW3550	SS	NDA186	N1							72	87																	
SW8082	SW3550	SS	NDA187	N1							77	80																	
SW8082	SW3550	SS	NDA188	N1							88	90																	
SW8082	SW3550	SS	NDA189	N1							88	92																	
SW8082	SW3550	SS	NDA190	N1							86	91																	
SW8082	SW3550	SS	NDA191	N1							99	99																	
SW8082	SW3550	SS	NDA192FD1	FD1							98	96																	
SW8082	SW3550	SS	NDA193	N1							89	97																	
SW8082	SW3550	SS	NDA194	N1							75	92																	
SW8082	SW3550	SS	NDA195	N1							82	94																	
SW8082	SW3550	SS	NDA057	N1							87	110																	
SW8082	SW3550	SS	NDA059	N1							100	90																	
SW8082	SW3550	SS	NDA061	N1							78	94																	
SW8082	SW3550	SS	NDA061MS	MS							67	96																	
SW8082	SW3550	SS	NDA061SD	SD							77	97																	
SW8082	SW3550	SS	NDA062FD1	FD1							88	100																	
SW8082	SW3550	SS	NDA065	N1							70	100																	
SW8082	SW3550	SS	NDA067	N1							90	95																	
SW8082	SW3550	SS	NDA069	N1							60	85																	
SW8082	SW3550	SS	NDA119	N1							70	90																	
SW8082	SW3550	SS	NDA120	N1							75	85																	
SW8082	SW3550	SS	NDA121	N1							70	120																	
SW8082	SW3550	SS	NDA122	N1							70	100																	
SW8082	SW3550	SS	NDA123	N1							80	100																	
SW8082	SW3550	SS	NDA124	N1							75	90																	
SW8082	SW3550	SS	NDA071	N1							46	79																	
SW8082	SW3550	SS	NDA071MS	MS							70	95																	

Analytical Method	Preparation Method	Matrix	Sample ID	Sample Type	SW8081 (SW3510/NONE) = 2,4,5,6-TETRACHLORO-META-XYLENE	SW8081 (SW3510/NONE) = DECACHLOROBIPHENYL	SW8081 (SW3550/NONE) = 2,4,5,6-TETRACHLORO-META-XYLENE	SW8081 (SW3550/NONE) = DECACHLOROBIPHENYL	SW8082 (SW3510/NONE) = 2,4,5,6-TETRACHLORO-META-XYLENE	SW8082 (SW3510/NONE) = DECACHLOROBIPHENYL	SW8082 (SW3550/NONE) = 2,4,5,6-TETRACHLORO-META-XYLENE	SW8082 (SW3550/NONE) = DECACHLOROBIPHENYL	SW8260 (SW5030/NONE) = 1,2-DICHLOROETHANE-D4	SW8260 (SW5030/NONE) = 1-BROMO-4-FLUOROBENZENE (4-BROMOFLUOROBEN	SW8260 (SW5030/NONE) = TOLUENE-D8	SW8270 (SW3510/NONE) = 2,4,6-TRIBROMOPHENOL	SW8270 (SW3510/NONE) = 2-FLUOROBIPHENYL	SW8270 (SW3510/NONE) = 2-FLUOROPHENOL	SW8270 (SW3510/NONE) = NITROBENZENE-D5	SW8270 (SW3510/NONE) = PHENOL-D5	SW8270 (SW3510/NONE) = TERPHENYL-D14	SW8270 (SW3550/NONE) = 2,4,6-TRIBROMOPHENOL	SW8270 (SW3550/NONE) = 2-FLUOROBIPHENYL	SW8270 (SW3550/NONE) = 2-FLUOROPHENOL	SW8270 (SW3550/NONE) = NITROBENZENE-D5	SW8270 (SW3550/NONE) = PHENOL-D5	SW8270 (SW3550/NONE) = TERPHENYL-D14	SW8330 (SW3510/NONE) = 3,4-DINITROTOLUENE	SW8330 (SW3550/NONE) = 3,4-DINITROTOLUENE
SW8082	SW3550	SS	NDA071SD	SD									70	100														
SW8082	SW3550	SS	NDA072FD1	FD1									83	110														
SW8082	SW3550	SS	NDA074	N1									93	120														
SW8082	SW3550	SS	NDA076	N1									35	120														
SW8082	SW3550	SS	NDA078	N1									70	95														
SW8082	SW3550	SS	NDA080	N1									75	100														
SW8082	SW3550	SS	NDA082	N1									85	100														
SW8082	SW3550	SS	NDA113	N1									92	89														
SW8082	SW3550	SS	NDA115	N1									83	100														
SW8082	SW3550	SS	NDA117	N1									73	72														
SW8082	SW3550	SS	NDA101	N1									64	77														
SW8082	SW3550	SS	NDA103	N1									76	80														
SW8082	SW3550	SS	NDA104FD1	FD1									60	78														
SW8082	SW3550	SS	NDA107	N1									62	79														
SW8082	SW3550	SS	NDA109	N1									67	100														
SW8082	SW3550	SS	NDA111	N1									63	79														
SW8260	SW5030	SB	NDA126	N1											96	86	94											
SW8260	SW5030	SB	NDA129	N1											96	88	94											
SW8260	SW5030	SB	NDA130FD1	FD1											98	88	96											
SW8260	SW5030	SB	NDA132	N1											91	88	94											
SW8260	SW5030	SB	NDA134	N1											93	90	96											
SW8260	SW5030	SB	NDA136	N1											97	91	98											
SW8260	SW5030	SB	NDA138	N1											94	90	98											
SW8260	SW5030	SB	NDA140	N1											95	88	95											
SW8260	SW5030	SB	NDA142	N1											95	83	92											
SW8260	SW5030	SB	NDA144	N1											95	76	91											
SW8260	SW5030	SB	NDA146	N1											93	81	89											
SW8260	SW5030	SB	NDA148	N1											94	90	97											
SW8260	SW5030	SB	NDA151	N1											91	83	95											
SW8260	SW5030	SB	NDA151MS	MS											89	82	92											
SW8260	SW5030	SB	NDA151SD	SD											89	81	90											
SW8260	SW5030	SB	NDA152FD1	FD1											74	63	84											
SW8260	SW5030	SB	NDA154	N1											95	85	94											
SW8260	SW5030	SB	NDA156	N1											93	89	93											
SW8260	SW5030	SB	NDA158	N1											96	88	98											
SW8260	SW5030	SB	NDA160	N1											91	86	94											

Analytical Method	Preparation Method	Matrix	Sample ID	Sample Type	SW8081 (SW3510/NONE) = 2,4,5,6-TETRACHLORO-META-XYLENE	SW8081 (SW3510/NONE) = DECACHLOROBIPHENYL	SW8081 (SW3550/NONE) = 2,4,5,6-TETRACHLORO-META-XYLENE	SW8081 (SW3550/NONE) = DECACHLOROBIPHENYL	SW8082 (SW3510/NONE) = 2,4,5,6-TETRACHLORO-META-XYLENE	SW8082 (SW3510/NONE) = DECACHLOROBIPHENYL	SW8082 (SW3550/NONE) = 2,4,5,6-TETRACHLORO-META-XYLENE	SW8082 (SW3550/NONE) = DECACHLOROBIPHENYL	SW8260 (SW5030/NONE) = 1,2-DICHLOROETHANE-D4	SW8260 (SW5030/NONE) = 1-BROMO-4-FLUOROBENZENE (4-BROMOFLUOROBEN	SW8260 (SW5030/NONE) = TOLUENE-D8	SW8270 (SW3510/NONE) = 2,4,6-TRIBROMOPHENOL	SW8270 (SW3510/NONE) = 2-FLUOROBIPHENYL	SW8270 (SW3510/NONE) = 2-FLUOROPHENOL	SW8270 (SW3510/NONE) = NITROBENZENE-D5	SW8270 (SW3510/NONE) = PHENOL-D5	SW8270 (SW3510/NONE) = TERPHENYL-D14	SW8270 (SW3550/NONE) = 2,4,6-TRIBROMOPHENOL	SW8270 (SW3550/NONE) = 2-FLUOROBIPHENYL	SW8270 (SW3550/NONE) = 2-FLUOROPHENOL	SW8270 (SW3550/NONE) = NITROBENZENE-D5	SW8270 (SW3550/NONE) = PHENOL-D5	SW8270 (SW3550/NONE) = TERPHENYL-D14	SW8330 (SW3510/NONE) = 3,4-DINITROTOLUENE	SW8330 (SW3550/NONE) = 3,4-DINITROTOLUENE
SW8260	SW5030	SB	NDA162	N1									95	87	95														
SW8260	SW5030	SB	NDA163FD1	FD1									96	86	96														
SW8260	SW5030	SB	NDA165	N1									98	95	101														
SW8260	SW5030	SB	NDA165DL1	LR									98	92	94														
SW8260	SW5030	SB	NDA167	N1									96	88	96														
SW8260	SW5030	SB	NDA169	N1									93	88	96														
SW8260	SW5030	SB	NDA171	N1									94	85	92														
SW8260	SW5030	SB	NDA173	N1									91	86	92														
SW8260	SW5030	SB	NDA175	N1									93	84	95														
SW8260	SW5030	SB	NDA177	N1									83	68	86														
SW8260	SW5030	SB	NDA213	N1									98	93	101														
SW8260	SW5030	SB	NDA213MS	MS									98	94	100														
SW8260	SW5030	SB	NDA213SD	SD									96	93	101														
SW8260	SW5030	SB	NDA214FD1	FD1									99	89	101														
SW8260	SW5030	SB	NDA215	N1									99	88	101														
SW8260	SW5030	SB	NDA216	N1									95	88	99														
SW8260	SW5030	SB	NDA217	N1									100	90	101														
SW8260	SW5030	SB	NDA218	N1									90	83	96														
SW8260	SW5030	SB	NDA219	N1									97	90	98														
SW8260	SW5030	SB	NDA220	N1									96	83	94														
SW8260	SW5030	SB	NDA221	N1									85	72	86														
SW8260	SW5030	SB	NDA222	N1									86	79	90														
SW8260	SW5030	SB	NDA223	N1									92	85	97														
SW8260	SW5030	SB	NDA224	N1									89	68	86														
SW8260	SW5030	SB	NDA225	N1									70	63	86														
SW8260	SW5030	SB	NDA226	N1									94	88	97														
SW8260	SW5030	SB	NDA226MS	MS									94	86	94														
SW8260	SW5030	SB	NDA226SD	SD									94	87	96														
SW8260	SW5030	SB	NDA227FD1	FD1									96	86	98														
SW8260	SW5030	SB	NDA228	N1									102	95	106														
SW8260	SW5030	SB	NDA229	N1									96	89	99														
SW8260	SW5030	SB	NDA230	N1									99	95	101														
SW8260	SW5030	SB	NDA231	N1									100	90	100														
SW8260	SW5030	SB	NDA232	N1									100	89	101														
SW8260	SW5030	SB	NDA233	N1									99	89	99														
SW8260	SW5030	SB	NDA234	N1									62	59	77														

Analytical Method	Preparation Method	Matrix	Sample ID	Sample Type	SW8081 (SW3510/NONE) = 2,4,5,6-TETRACHLORO-META-XYLENE	SW8081 (SW3510/NONE) = DECACHLOROBIPHENYL	SW8081 (SW3550/NONE) = 2,4,5,6-TETRACHLORO-META-XYLENE	SW8081 (SW3550/NONE) = DECACHLOROBIPHENYL	SW8082 (SW3510/NONE) = 2,4,5,6-TETRACHLORO-META-XYLENE	SW8082 (SW3510/NONE) = DECACHLOROBIPHENYL	SW8082 (SW3550/NONE) = 2,4,5,6-TETRACHLORO-META-XYLENE	SW8082 (SW3550/NONE) = DECACHLOROBIPHENYL	SW8260 (SW5030/NONE) = 1,2-DICHLOROETHANE-D4	SW8260 (SW5030/NONE) = 1-BROMO-4-FLUOROBENZENE (4-BROMOFLUOROBEN	SW8260 (SW5030/NONE) = TOLUENE-D8	SW8270 (SW3510/NONE) = 2,4,6-TRIBROMOPHENOL	SW8270 (SW3510/NONE) = 2-FLUOROBIPHENYL	SW8270 (SW3510/NONE) = 2-FLUOROPHENOL	SW8270 (SW3510/NONE) = NITROBENZENE-D5	SW8270 (SW3510/NONE) = PHENOL-D5	SW8270 (SW3510/NONE) = TERPHENYL-D14	SW8270 (SW3550/NONE) = 2,4,6-TRIBROMOPHENOL	SW8270 (SW3550/NONE) = 2-FLUOROBIPHENYL	SW8270 (SW3550/NONE) = 2-FLUOROPHENOL	SW8270 (SW3550/NONE) = NITROBENZENE-D5	SW8270 (SW3550/NONE) = PHENOL-D5	SW8270 (SW3550/NONE) = TERPHENYL-D14	SW8330 (SW3510/NONE) = 3,4-DINITROTOLUENE	SW8330 (SW3550/NONE) = 3,4-DINITROTOLUENE
SW8260	SW5030	SB	NDA235	N1									95	84	96														
SW8260	SW5030	SB	NDA236	N1									96	86	98														
SW8260	SW5030	SB	NDA237FD1	FD1									98	86	100														
SW8260	SW5030	SB	NDA238	N1									95	84	98														
SW8260	SW5030	SB	NDA239	N1									96	84	97														
SW8260	SW5030	SB	NDA240	N1									92	81	95														
SW8260	SW5030	SB	NDA241	N1									93	79	93														
SW8260	SW5030	SB	NDA242	N1									86	84	90														
SW8260	SW5030	SB	NDA243	N1									96	87	101														
SW8260	SW5030	SB	NDA244	N1									95	68	88														
SW8260	SW5030	SB	NDA245	N1									91	82	98														
SW8260	SW5030	SB	NDA246	N1									91	84	92														
SW8260	SW5030	SB	NDA246MS	MS									93	87	95														
SW8260	SW5030	SB	NDA246SD	SD									92	87	94														
SW8260	SW5030	SB	NDA247FD1	FD1									93	84	94														
SW8260	SW5030	SB	NDA248	N1									91	85	98														
SW8260	SW5030	SB	NDA249	N1									93	87	99														
SW8260	SW5030	SB	NDA252	N1									98	82	96														
SW8260	SW5030	SB	NDA253	N1									96	87	100														
SW8260	SW5030	SB	NDA254	N1									87	81	96														
SW8260	SW5030	SB	NDA255	N1									81	73	91														
SW8260	SW5030	SB	NDA085	N1									97	79	94														
SW8260	SW5030	SB	NDA092	N1									98	87	90														
SW8260	SW5030	SB	NDA093	N1									99	90	98														
SW8260	SW5030	SB	NDA094	N1									103	85	100														
SW8260	SW5030	SB	NDA095FD1	FD1									97	86	96														
SW8260	SW5030	SB	NDA087	N1									90	100	92														
SW8260	SW5030	SB	NDA089	N1									93	79	88														
SW8260	SW5030	SB	NDA096	N1									94	100	97														
SW8260	SW5030	SB	NDA096DL1	LR									99	90	101														
SW8260	SW5030	SB	NDA097	N1									92	84	89														
SW8260	SW5030	SB	NDA097DL1	LR									104	95	105														
SW8260	SW5030	SB	NDA099	N1									96	84	97														
SW8260	SW5030	SB	NDA296	N1									82	79	92														
SW8260	SW5030	SB	NDA296DL1	LR									98	96	97														
SW8260	SW5030	SB	NDA297	N1									89	88	93														

Analytical Method	Preparation Method	Matrix	Sample ID	Sample Type	SW8081 (SW3510/NONE) = 2,4,5,6-TETRACHLORO-META-XYLENE	SW8081 (SW3510/NONE) = DECACHLOROBIPHENYL	SW8081 (SW3550/NONE) = 2,4,5,6-TETRACHLORO-META-XYLENE	SW8081 (SW3550/NONE) = DECACHLOROBIPHENYL	SW8082 (SW3510/NONE) = 2,4,5,6-TETRACHLORO-META-XYLENE	SW8082 (SW3510/NONE) = DECACHLOROBIPHENYL	SW8082 (SW3550/NONE) = 2,4,5,6-TETRACHLORO-META-XYLENE	SW8082 (SW3550/NONE) = DECACHLOROBIPHENYL	SW8260 (SW5030/NONE) = 1,2-DICHLOROETHANE-D4	SW8260 (SW5030/NONE) = 1-BROMO-4-FLUOROBENZENE (4-BROMOFLUOROBEN	SW8260 (SW5030/NONE) = TOLUENE-D8	SW8270 (SW3510/NONE) = 2,4,6-TRIBROMOPHENOL	SW8270 (SW3510/NONE) = 2-FLUOROBIPHENYL	SW8270 (SW3510/NONE) = 2-FLUOROPHENOL	SW8270 (SW3510/NONE) = NITROBENZENE-D5	SW8270 (SW3510/NONE) = PHENOL-D5	SW8270 (SW3510/NONE) = TERPHENYL-D14	SW8270 (SW3550/NONE) = 2,4,6-TRIBROMOPHENOL	SW8270 (SW3550/NONE) = 2-FLUOROBIPHENYL	SW8270 (SW3550/NONE) = 2-FLUOROPHENOL	SW8270 (SW3550/NONE) = NITROBENZENE-D5	SW8270 (SW3550/NONE) = PHENOL-D5	SW8270 (SW3550/NONE) = TERPHENYL-D14	SW8330 (SW3510/NONE) = 3,4-DINITROTOLUENE	SW8330 (SW3550/NONE) = 3,4-DINITROTOLUENE
SW8260	SW5030	SB	NDA297DL1	LR									97	92	96													
SW8260	SW5030	SB	NDA298	N1									93	98	102													
SW8260	SW5030	SB	NDA298DL1	LR									103	95	98													
SW8260	SW5030	SB	NDA299	N1									91	89	96													
SW8260	SW5030	SB	NDA058	N1									73	63	75													
SW8260	SW5030	SB	NDA060	N1									84	81	89													
SW8260	SW5030	SB	NDA063	N1									65	63	78													
SW8260	SW5030	SB	NDA063MS	MS									61	58	75													
SW8260	SW5030	SB	NDA063SD	SD									69	64	83													
SW8260	SW5030	SB	NDA064FD1	FD1									62	58	73													
SW8260	SW5030	SB	NDA066	N1									70	63	80													
SW8260	SW5030	SB	NDA066DL1	LR									101	96	98													
SW8260	SW5030	SB	NDA068	N1									93	94	100													
SW8260	SW5030	SB	NDA070	N1									70	62	82													
SW8260	SW5030	SB	NDA073	N1									89	100	106													
SW8260	SW5030	SB	NDA075	N1									89	95	103													
SW8260	SW5030	SB	NDA077	N1									92	104	106													
SW8260	SW5030	SB	NDA079	N1									82	92	100													
SW8260	SW5030	SB	NDA081	N1									49	58	77													
SW8260	SW5030	SB	NDA083	N1									85	74	92													
SW8260	SW5030	SB	NDA114	N1									83	98	93													
SW8260	SW5030	SB	NDA116	N1									76	87	91													
SW8260	SW5030	SB	NDA118	N1									73	67	79													
SW8260	SW5030	SB	NDA102	N1									82	87	93													
SW8260	SW5030	SB	NDA105	N1									83	119	98													
SW8260	SW5030	SB	NDA106FD1	FD1									84	117	97													
SW8260	SW5030	SB	NDA108	N1									82	95	95													
SW8260	SW5030	SB	NDA110	N1									88	100	100													
SW8260	SW5030	SB	NDA112	N1									83	95	91													
SW8260	SW5030	SD	NDA050	N1									73	80	74													
SW8260	SW5030	SD	NDA050MS	MS									75	85	79													
SW8260	SW5030	SD	NDA050SD	SD									76	84	81													
SW8260	SW5030	SD	NDA051FD1	FD1									87	82	79													
SW8260	SW5030	SD	NDA051FD1DL1	LR									79	88	79													
SW8260	SW5030	SD	NDA052	N1									85	85	71													
SW8260	SW5030	SD	NDA052DL1	LR									71	75	72													

Analytical Method	Preparation Method	Matrix	Sample ID	Sample Type	SW8081 (SW3510/NONE) = 2,4,5,6-TETRACHLORO-META-XYLENE	SW8081 (SW3510/NONE) = DECACHLOROBIPHENYL	SW8081 (SW3550/NONE) = 2,4,5,6-TETRACHLORO-META-XYLENE	SW8081 (SW3550/NONE) = DECACHLOROBIPHENYL	SW8082 (SW3510/NONE) = 2,4,5,6-TETRACHLORO-META-XYLENE	SW8082 (SW3510/NONE) = DECACHLOROBIPHENYL	SW8082 (SW3550/NONE) = 2,4,5,6-TETRACHLORO-META-XYLENE	SW8082 (SW3550/NONE) = DECACHLOROBIPHENYL	SW8260 (SW5030/NONE) = 1,2-DICHLOROETHANE-D4	SW8260 (SW5030/NONE) = 1-BROMO-4-FLUOROBENZENE (4-BROMOFLUOROBEN	SW8260 (SW5030/NONE) = TOLUENE-D8	SW8270 (SW3510/NONE) = 2,4,6-TRIBROMOPHENOL	SW8270 (SW3510/NONE) = 2-FLUOROBIPHENYL	SW8270 (SW3510/NONE) = 2-FLUOROPHENOL	SW8270 (SW3510/NONE) = NITROBENZENE-D5	SW8270 (SW3510/NONE) = PHENOL-D5	SW8270 (SW3510/NONE) = TERPHENYL-D14	SW8270 (SW3550/NONE) = 2,4,6-TRIBROMOPHENOL	SW8270 (SW3550/NONE) = 2-FLUOROBIPHENYL	SW8270 (SW3550/NONE) = 2-FLUOROPHENOL	SW8270 (SW3550/NONE) = NITROBENZENE-D5	SW8270 (SW3550/NONE) = PHENOL-D5	SW8270 (SW3550/NONE) = TERPHENYL-D14	SW8330 (SW3510/NONE) = 3,4-DINITROTOLUENE	SW8330 (SW3550/NONE) = 3,4-DINITROTOLUENE
SW8260	SW5030	SD	NDA053	N1									85	73	69														
SW8260	SW5030	SD	NDA053DL1	LR									80	87	81														
SW8260	SW5030	SD	NDA054	N1									94	86	91														
SW8260	SW5030	SD	NDA055	N1									95	75	78														
SW8260	SW5030	SD	NDA042	N1									83	108	98														
SW8260	SW5030	SD	NDA043	N1									88	110	105														
SW8260	SW5030	SD	NDA044	N1									79	82	92														
SW8260	SW5030	SD	NDA045	N1									71	62	80														
SW8260	SW5030	SD	NDA046	N1									70	65	81														
SW8260	SW5030	SD	NDA302	N1									58	42	61														
SW8260	SW5030	SD	NDA303	N1									70	66	82														
SW8260	SW5030	SD	NDA307FD1	FD1									80	77	92														
SW8260	SW5030	SD	NDA047	N1									91	103	93														
SW8260	SW5030	SD	NDA047DL1	LR									96	91	92														
SW8260	SW5030	SD	NDA048	N1									86	101	88														
SW8260	SW5030	SD	NDA048DL1	LR									102	97	98														
SW8260	SW5030	SD	NDA049	N1									86	82	88														
SW8260	SW5030	SD	NDA049DL1	LR									100	95	98														
SW8260	SW5030	SOIL	040500BLKS12	LB									102	94	99														
SW8260	SW5030	SOIL	040500LCSS21	BS									102	92	97														
SW8260	SW5030	SOIL	040600BLKS12	LB									101	94	99														
SW8260	SW5030	SOIL	040600BLKS14	LB									99	95	99														
SW8260	SW5030	SOIL	040600BLKS17	LB									97	92	97														
SW8260	SW5030	SOIL	040600LCSS11	BS									99	91	96														
SW8260	SW5030	SOIL	040600LCSS13	BS									99	94	99														
SW8260	SW5030	SOIL	040700LCSS11	BS									100	90	95														
SW8260	SW5030	SOIL	040900BLKS33	LB									91	86	87														
SW8260	SW5030	SOIL	040900BLKS32	LB									98	95	95														
SW8260	SW5030	SOIL	040900LCSS31	BS									97	92	93														
SW8260	SW5030	SOIL	040600BLKS12	LB									101	94	99														
SW8260	SW5030	SOIL	040700LCSS11	BS									100	90	95														
SW8260	SW5030	SOIL	040900BLKS33	LB									91	86	87														
SW8260	SW5030	SOIL	040900BLKS12	LB									100	93	98														
SW8260	SW5030	SOIL	040900BLKS32	LB									98	95	95														
SW8260	SW5030	SOIL	040900LCSS11	BS									102	93	99														
SW8260	SW5030	SOIL	040900LCSS31	BS									97	92	93														

Analytical Method	Preparation Method	Matrix	Sample ID	Sample Type	SW8081 (SW3510/NONE) = 2,4,5,6-TETRACHLORO-META-XYLENE	SW8081 (SW3510/NONE) = DECACHLOROBIPHENYL	SW8081 (SW3550/NONE) = 2,4,5,6-TETRACHLORO-META-XYLENE	SW8081 (SW3550/NONE) = DECACHLOROBIPHENYL	SW8082 (SW3510/NONE) = 2,4,5,6-TETRACHLORO-META-XYLENE	SW8082 (SW3510/NONE) = DECACHLOROBIPHENYL	SW8082 (SW3550/NONE) = 2,4,5,6-TETRACHLORO-META-XYLENE	SW8082 (SW3550/NONE) = DECACHLOROBIPHENYL	SW8260 (SW5030/NONE) = 1,2-DICHLOROETHANE-D4	SW8260 (SW5030/NONE) = 1-BROMO-4-FLUOROBENZENE (4-BROMOFLUOROBEN	SW8260 (SW5030/NONE) = TOLUENE-D8	SW8270 (SW3510/NONE) = 2,4,6-TRIBROMOPHENOL	SW8270 (SW3510/NONE) = 2-FLUOROBIPHENYL	SW8270 (SW3510/NONE) = 2-FLUOROPHENOL	SW8270 (SW3510/NONE) = NITROBENZENE-D5	SW8270 (SW3510/NONE) = PHENOL-D5	SW8270 (SW3510/NONE) = TERPHENYL-D14	SW8270 (SW3550/NONE) = 2,4,6-TRIBROMOPHENOL	SW8270 (SW3550/NONE) = 2-FLUOROBIPHENYL	SW8270 (SW3550/NONE) = 2-FLUOROPHENOL	SW8270 (SW3550/NONE) = NITROBENZENE-D5	SW8270 (SW3550/NONE) = PHENOL-D5	SW8270 (SW3550/NONE) = TERPHENYL-D14	SW8330 (SW3510/NONE) = 3,4-DINITROTOLUENE	SW8330 (SW3550/NONE) = 3,4-DINITROTOLUENE
SW8260	SW5030	SOIL	041000BLKS12	LB									104	92	100															
SW8260	SW5030	SOIL	041000BLKS14	LB									101	92	98															
SW8260	SW5030	SOIL	041000LCSS11	BS									101	92	99															
SW8260	SW5030	SOIL	041000LCSS12	BS									102	94	100															
SW8260	SW5030	SOIL	040900BLKS13	LB									99	92	97															
SW8260	SW5030	SOIL	040900LCSS11	BS									102	93	99															
SW8260	SW5030	SOIL	041000BLKA22	LB									91	95	94															
SW8260	SW5030	SOIL	041000BLKA23	LB									95	91	93															
SW8260	SW5030	SOIL	041000BLKA26	LB									92	97	93															
SW8260	SW5030	SOIL	041000BLKA27	LB									92	99	95															
SW8260	SW5030	SOIL	041000BLKS12	LB									104	92	100															
SW8260	SW5030	SOIL	041000BLKS14	LB									101	92	98															
SW8260	SW5030	SOIL	041000LCSA21	BS									91	96	94															
SW8260	SW5030	SOIL	041000LCSA22	BS									90	95	94															
SW8260	SW5030	SOIL	041000LCSS11	BS									101	92	99															
SW8260	SW5030	SOIL	041000LCSS12	BS									102	94	100															
SW8260	SW5030	SOIL	041100BLKA35	LB									98	94	96															
SW8260	SW5030	SOIL	041100BLKA36	LB									98	90	94															
SW8260	SW5030	SOIL	041100BLKS12	LB									102	93	101															
SW8260	SW5030	SOIL	041100LCSA32	BS									98	93	96															
SW8260	SW5030	SOIL	041100LCSS11	BS									106	92	100															
SW8260	SW5030	SOIL	041000BLKS14	LB									101	92	98															
SW8260	SW5030	SOIL	041000LCSS12	BS									102	94	100															
SW8260	SW5030	SOIL	041100BLKS12	LB									102	93	101															
SW8260	SW5030	SOIL	041100BLKS14	LB									98	93	98															
SW8260	SW5030	SOIL	041100LCSS11	BS									106	92	100															
SW8260	SW5030	SOIL	041100LCSS12	BS									100	92	98															
SW8260	SW5030	SOIL	041100BLKS14	LB									98	93	98															
SW8260	SW5030	SOIL	041100LCSS12	BS									100	92	98															
SW8260	SW5030	SOIL	041200BLKS12	LB									101	92	99															
SW8260	SW5030	SOIL	041200LCSS11	BS									104	91	99															
SW8260	SW5030	SOIL	041400BLKS32	LB									97	95	96															
SW8260	SW5030	SOIL	041400BLKS33	LB									99	94	94															
SW8260	SW5030	SOIL	041400LCSA31	BS									94	94	93															
SW8260	SW5030	SOIL	041200BLKS14	LB									100	92	98															
SW8260	SW5030	SOIL	041200LCSS12	BS									99	91	97															

Analytical Method	Preparation Method	Matrix	Sample ID	Sample Type	SW8081 (SW3510/NONE) = 2,4,5,6-TETRACHLORO-META-XYLENE	SW8081 (SW3510/NONE) = DECACHLOROBIPHENYL	SW8081 (SW3550/NONE) = 2,4,5,6-TETRACHLORO-META-XYLENE	SW8081 (SW3550/NONE) = DECACHLOROBIPHENYL	SW8082 (SW3510/NONE) = 2,4,5,6-TETRACHLORO-META-XYLENE	SW8082 (SW3510/NONE) = DECACHLOROBIPHENYL	SW8082 (SW3550/NONE) = 2,4,5,6-TETRACHLORO-META-XYLENE	SW8082 (SW3550/NONE) = DECACHLOROBIPHENYL	SW8260 (SW5030/NONE) = 1,2-DICHLOROETHANE-D4	SW8260 (SW5030/NONE) = 1-BROMO-4-FLUOROBENZENE (4-BROMOFLUOROBEN	SW8260 (SW5030/NONE) = TOLUENE-D8	SW8270 (SW3510/NONE) = 2,4,6-TRIBROMOPHENOL	SW8270 (SW3510/NONE) = 2-FLUOROBIPHENYL	SW8270 (SW3510/NONE) = 2-FLUOROPHENOL	SW8270 (SW3510/NONE) = NITROBENZENE-D5	SW8270 (SW3510/NONE) = PHENOL-D5	SW8270 (SW3510/NONE) = TERPHENYL-D14	SW8270 (SW3550/NONE) = 2,4,6-TRIBROMOPHENOL	SW8270 (SW3550/NONE) = 2-FLUOROBIPHENYL	SW8270 (SW3550/NONE) = 2-FLUOROPHENOL	SW8270 (SW3550/NONE) = NITROBENZENE-D5	SW8270 (SW3550/NONE) = PHENOL-D5	SW8270 (SW3550/NONE) = TERPHENYL-D14	SW8330 (SW3510/NONE) = 3,4-DINITROTOLUENE	SW8330 (SW3550/NONE) = 3,4-DINITROTOLUENE
SW8260	SW5030	SOIL	041300BLKS12	LB									102	93	99													
SW8260	SW5030	SOIL	041300BLKS14	LB									102	91	101													
SW8260	SW5030	SOIL	041300LCSS11	BS									100	90	99													
SW8260	SW5030	SOIL	041300LCSS12	BS									104	90	100													
SW8260	SW5030	SOIL	041400BLKS32	LB									97	95	96													
SW8260	SW5030	SOIL	041400BLKS33	LB									99	94	94													
SW8260	SW5030	SOIL	041400LCSA31	BS									94	94	93													
SW8260	SW5030	SOIL	041300BLKS14	LB									102	91	101													
SW8260	SW5030	SOIL	041300BLKS14M	BS									99	88	99													
SW8260	SW5030	SOIL	041300BLKS14S	BD									101	91	101													
SW8260	SW5030	SOIL	041300LCSS12	BS									104	90	100													
SW8260	SW5030	SOIL	041400BLKS12	LB									102	94	100													
SW8260	SW5030	SOIL	041400LCSS11	BS									99	91	96													
SW8260	SW5030	SOIL	041400BLKS12	LB									102	94	100													
SW8260	SW5030	SOIL	041400BLKS14	LB									97	91	98													
SW8260	SW5030	SOIL	041400LCSS11	BS									99	91	96													
SW8260	SW5030	SOIL	041400LCSS12	BS									99	90	98													
SW8260	SW5030	SOIL	041500BLKS12	LB									99	90	97													
SW8260	SW5030	SOIL	041500LCSS11	BS									100	91	99													
SW8260	SW5030	SOIL	041400BLKS14	LB									97	91	98													
SW8260	SW5030	SOIL	041400LCSS12	BS									99	90	98													
SW8260	SW5030	SOIL	041500BLKS12	LB									99	90	97													
SW8260	SW5030	SOIL	041500LCSS11	BS									100	91	99													
SW8260	SW5030	SOIL	041800BLKS12	LB									93	97	101													
SW8260	SW5030	SOIL	041800LCSS11	BS									93	93	99													
SW8260	SW5030	SOIL	041900BLKS12	LB									92	95	100													
SW8260	SW5030	SOIL	041900LCSS12	BS									91	94	100													
SW8260	SW5030	SOIL	041700BLKS12	LB									101	92	101													
SW8260	SW5030	SOIL	041700BLKS14	LB									97	92	100													
SW8260	SW5030	SOIL	041700BLKS15	LB									97	90	99													
SW8260	SW5030	SOIL	041700LCSS11	BS									99	91	99													
SW8260	SW5030	SOIL	041700LCSS12	BS									98	92	102													
SW8260	SW5030	SOIL	041800BLKS12	LB									93	97	101													
SW8260	SW5030	SOIL	041800LCSS11	BS									93	93	99													
SW8260	SW5030	SOIL	041900BLKS12	LB									92	95	100													
SW8260	SW5030	SOIL	041900LCSS12	BS									91	94	100													

Analytical Method	Preparation Method	Matrix	Sample ID	Sample Type	SW8081 (SW3510/NONE) = 2,4,5,6-TETRACHLORO-META-XYLENE	SW8081 (SW3510/NONE) = DECACHLOROBIPHENYL	SW8081 (SW3550/NONE) = 2,4,5,6-TETRACHLORO-META-XYLENE	SW8081 (SW3550/NONE) = DECACHLOROBIPHENYL	SW8082 (SW3510/NONE) = 2,4,5,6-TETRACHLORO-META-XYLENE	SW8082 (SW3510/NONE) = DECACHLOROBIPHENYL	SW8082 (SW3550/NONE) = 2,4,5,6-TETRACHLORO-META-XYLENE	SW8082 (SW3550/NONE) = DECACHLOROBIPHENYL	SW8260 (SW5030/NONE) = 1,2-DICHLOROETHANE-D4	SW8260 (SW5030/NONE) = 1-BROMO-4-FLUOROBENZENE (4-BROMOFLUOROBEN	SW8260 (SW5030/NONE) = TOLUENE-D8	SW8270 (SW3510/NONE) = 2,4,6-TRIBROMOPHENOL	SW8270 (SW3510/NONE) = 2-FLUOROBIPHENYL	SW8270 (SW3510/NONE) = 2-FLUOROPHENOL	SW8270 (SW3510/NONE) = NITROBENZENE-D5	SW8270 (SW3510/NONE) = PHENOL-D5	SW8270 (SW3510/NONE) = TERPHENYL-D14	SW8270 (SW3550/NONE) = 2,4,6-TRIBROMOPHENOL	SW8270 (SW3550/NONE) = 2-FLUOROBIPHENYL	SW8270 (SW3550/NONE) = 2-FLUOROPHENOL	SW8270 (SW3550/NONE) = NITROBENZENE-D5	SW8270 (SW3550/NONE) = PHENOL-D5	SW8270 (SW3550/NONE) = TERPHENYL-D14	SW8330 (SW3510/NONE) = 3,4-DINITROTOLUENE	SW8330 (SW3550/NONE) = 3,4-DINITROTOLUENE
SW8260	SW5030	SOIL	042400BLKA22	LB									93	87	89													
SW8260	SW5030	SOIL	042400BLKA23	LB									103	102	104													
SW8260	SW5030	SOIL	042400LCSA21	BS									92	92	96													
SW8260	SW5030	SOIL	041900BLKS13	LB									91	100	103													
SW8260	SW5030	SOIL	041900LCSS13	BS									90	97	104													
SW8260	SW5030	SOIL	042000BLKS12	LB									99	100	102													
SW8260	SW5030	SOIL	042000LCSS11	BS									97	95	96													
SW8260	SW5030	SOIL	042400BLKA22	LB									93	87	89													
SW8260	SW5030	SOIL	042400BLKA23	LB									103	102	104													
SW8260	SW5030	SOIL	042400LCSA21	BS									92	92	96													
SW8260	SW5030	SOIL	041900BLKS13	LB									91	100	103													
SW8260	SW5030	SOIL	041900LCSS13	BS									90	97	104													
SW8260	SW5030	SOIL	042000BLKS12	LB									99	100	102													
SW8260	SW5030	SOIL	042000LCSS11	BS									97	95	96													
SW8260	SW5030	SOIL	042400BLKA22	LB									93	87	89													
SW8260	SW5030	SOIL	042400BLKA23	LB									103	102	104													
SW8260	SW5030	SOIL	042400BLKA25	LB									101	94	96													
SW8260	SW5030	SOIL	042400BLKA26	LB									99	92	96													
SW8260	SW5030	SOIL	042400BLKS12	LB									99	106	110													
SW8260	SW5030	SOIL	042400LCSA21	BS									92	92	96													
SW8260	SW5030	SOIL	042400LCSA22	BS									98	93	97													
SW8260	SW5030	SOIL	042400LCSS11	BS									100	100	106													
SW8260	SW5030	SOIL	042400BLKS12	LB									99	106	110													
SW8260	SW5030	SOIL	042400BLKS14	LB									96	108	108													
SW8260	SW5030	SOIL	042400LCSS11	BS									100	100	106													
SW8260	SW5030	SOIL	042400LCSS13	BS									99	105	119													
SW8260	SW5030	SOIL	042400BLKS14	LB									96	108	108													
SW8260	SW5030	SOIL	042400BLKS14M	BS									92	99	101													
SW8260	SW5030	SOIL	042400BLKS14S	BD									93	99	102													
SW8260	SW5030	SOIL	042400LCSS13	BS									99	105	119													
SW8260	SW5030	SOIL	042500BLKS13	LB									98	108	107													
SW8260	SW5030	SOIL	042500LCSS11	BS									91	101	102													
SW8260	SW5030	SOIL	042500BLKS13	LB									98	108	107													
SW8260	SW5030	SOIL	042500BLKS16	LB									98	108	112													
SW8260	SW5030	SOIL	042500BLKS16M	BS									103	108	112													
SW8260	SW5030	SOIL	042500BLKS16S	BD									102	106	113													

Analytical Method	Preparation Method	Matrix	Sample ID	Sample Type	SW8081 (SW3510/NONE) = 2,4,5,6-TETRACHLORO-META-XYLENE	SW8081 (SW3510/NONE) = DECACHLOROBIPHENYL	SW8081 (SW3550/NONE) = 2,4,5,6-TETRACHLORO-META-XYLENE	SW8081 (SW3550/NONE) = DECACHLOROBIPHENYL	SW8082 (SW3510/NONE) = 2,4,5,6-TETRACHLORO-META-XYLENE	SW8082 (SW3510/NONE) = DECACHLOROBIPHENYL	SW8082 (SW3550/NONE) = 2,4,5,6-TETRACHLORO-META-XYLENE	SW8082 (SW3550/NONE) = DECACHLOROBIPHENYL	SW8260 (SW5030/NONE) = 1,2-DICHLOROETHANE-D4	SW8260 (SW5030/NONE) = 1-BROMO-4-FLUOROBENZENE (4-BROMOFLUOROBEN	SW8260 (SW5030/NONE) = TOLUENE-D8	SW8270 (SW3510/NONE) = 2,4,6-TRIBROMOPHENOL	SW8270 (SW3510/NONE) = 2-FLUOROBIPHENYL	SW8270 (SW3510/NONE) = 2-FLUOROPHENOL	SW8270 (SW3510/NONE) = NITROBENZENE-D5	SW8270 (SW3510/NONE) = PHENOL-D5	SW8270 (SW3510/NONE) = TERPHENYL-D14	SW8270 (SW3550/NONE) = 2,4,6-TRIBROMOPHENOL	SW8270 (SW3550/NONE) = 2-FLUOROBIPHENYL	SW8270 (SW3550/NONE) = 2-FLUOROPHENOL	SW8270 (SW3550/NONE) = NITROBENZENE-D5	SW8270 (SW3550/NONE) = PHENOL-D5	SW8270 (SW3550/NONE) = TERPHENYL-D14	SW8330 (SW3510/NONE) = 3,4-DINITROTOLUENE	SW8330 (SW3550/NONE) = 3,4-DINITROTOLUENE
SW8260	SW5030	SOIL	042500LCSS11	BS									91	101	102														
SW8260	SW5030	SOIL	042500LCSS12	BS									101	103	106														
SW8260	SW5030	SOIL	042600BLKS12	LB									95	102	107														
SW8260	SW5030	SOIL	042600LCSS11	BS									95	100	105														
SW8260	SW5030	SS	NDA125	N1									99	91	94														
SW8260	SW5030	SS	NDA127	N1									96	96	91														
SW8260	SW5030	SS	NDA127MS	MS									99	91	97														
SW8260	SW5030	SS	NDA127SD	SD									99	90	96														
SW8260	SW5030	SS	NDA128FD1	FD1									98	85	85														
SW8260	SW5030	SS	NDA131	N1									93	87	86														
SW8260	SW5030	SS	NDA131DL1	LR									98	93	94														
SW8260	SW5030	SS	NDA133	N1									90	78	75														
SW8260	SW5030	SS	NDA135	N1									88	65	68														
SW8260	SW5030	SS	NDA137	N1									89	70	82														
SW8260	SW5030	SS	NDA139	N1									88	71	76														
SW8260	SW5030	SS	NDA141	N1									90	67	71														
SW8260	SW5030	SS	NDA143	N1									88	81	94														
SW8260	SW5030	SS	NDA145	N1									92	73	85														
SW8260	SW5030	SS	NDA147	N1									92	83	85														
SW8260	SW5030	SS	NDA149	N1									95	86	90														
SW8260	SW5030	SS	NDA149DL1	LR									102	93	95														
SW8260	SW5030	SS	NDA149MS	MS									94	84	89														
SW8260	SW5030	SS	NDA149SD	SD									92	75	63														
SW8260	SW5030	SS	NDA150FD1	FD1									76	37	56														
SW8260	SW5030	SS	NDA150FD1DL1	LR									104	96	98														
SW8260	SW5030	SS	NDA150FD1RE1	LR									78	42	66														
SW8260	SW5030	SS	NDA153	N1									94	85	84														
SW8260	SW5030	SS	NDA155	N1									95	87	96														
SW8260	SW5030	SS	NDA157	N1									96	84	90														
SW8260	SW5030	SS	NDA159	N1									91	80	83														
SW8260	SW5030	SS	NDA161	N1									92	86	84														
SW8260	SW5030	SS	NDA164	N1									97	98	92														
SW8260	SW5030	SS	NDA166	N1									95	92	97														
SW8260	SW5030	SS	NDA166DL1	LR									93	95	95														
SW8260	SW5030	SS	NDA168	N1									96	84	86														
SW8260	SW5030	SS	NDA170	N1									90	82	76														

Analytical Method	Preparation Method	Matrix	Sample ID	Sample Type	SW8081 (SW3510/NONE) = 2,4,5,6-TETRACHLORO-META-XYLENE	SW8081 (SW3510/NONE) = DECACHLOROBIPHENYL	SW8081 (SW3550/NONE) = 2,4,5,6-TETRACHLORO-META-XYLENE	SW8081 (SW3550/NONE) = DECACHLOROBIPHENYL	SW8082 (SW3510/NONE) = 2,4,5,6-TETRACHLORO-META-XYLENE	SW8082 (SW3510/NONE) = DECACHLOROBIPHENYL	SW8082 (SW3550/NONE) = 2,4,5,6-TETRACHLORO-META-XYLENE	SW8082 (SW3550/NONE) = DECACHLOROBIPHENYL	SW8260 (SW5030/NONE) = 1,2-DICHLOROETHANE-D4	SW8260 (SW5030/NONE) = 1-BROMO-4-FLUOROBENZENE (4-BROMOFLUOROBEN	SW8260 (SW5030/NONE) = TOLUENE-D8	SW8270 (SW3510/NONE) = 2,4,6-TRIBROMOPHENOL	SW8270 (SW3510/NONE) = 2-FLUOROBIPHENYL	SW8270 (SW3510/NONE) = 2-FLUOROPHENOL	SW8270 (SW3510/NONE) = NITROBENZENE-D5	SW8270 (SW3510/NONE) = PHENOL-D5	SW8270 (SW3510/NONE) = TERPHENYL-D14	SW8270 (SW3550/NONE) = 2,4,6-TRIBROMOPHENOL	SW8270 (SW3550/NONE) = 2-FLUOROBIPHENYL	SW8270 (SW3550/NONE) = 2-FLUOROPHENOL	SW8270 (SW3550/NONE) = NITROBENZENE-D5	SW8270 (SW3550/NONE) = PHENOL-D5	SW8270 (SW3550/NONE) = TERPHENYL-D14	SW8330 (SW3510/NONE) = 3,4-DINITROTOLUENE	SW8330 (SW3550/NONE) = 3,4-DINITROTOLUENE
SW8260	SW5030	SS	NDA172	N1									94	84	87														
SW8260	SW5030	SS	NDA174	N1									98	88	92														
SW8260	SW5030	SS	NDA176	N1									95	78	88														
SW8260	SW5030	SS	NDA176DL1	LR									99	92	95														
SW8260	SW5030	SS	NDA196	N1									85	69	78														
SW8260	SW5030	SS	NDA196DL1	LR									100	98	98														
SW8260	SW5030	SS	NDA197FD1	FD1									94	97	87														
SW8260	SW5030	SS	NDA197FD1DL1	LR									97	91	91														
SW8260	SW5030	SS	NDA198	N1									93	71	80														
SW8260	SW5030	SS	NDA198DL1	LR									107	104	103														
SW8260	SW5030	SS	NDA199	N1									78	55	77														
SW8260	SW5030	SS	NDA200	N1									99	96	99														
SW8260	SW5030	SS	NDA200DL1	LR									102	96	96														
SW8260	SW5030	SS	NDA178	N1									99	94	94														
SW8260	SW5030	SS	NDA179	N1									95	82	91														
SW8260	SW5030	SS	NDA180	N1									91	83	78														
SW8260	SW5030	SS	NDA181	N1									93	88	86														
SW8260	SW5030	SS	NDA182	N1									92	93	75														
SW8260	SW5030	SS	NDA183	N1									95	92	87														
SW8260	SW5030	SS	NDA183MS	MS									91	88	85														
SW8260	SW5030	SS	NDA183SD	SD									92	87	86														
SW8260	SW5030	SS	NDA184FD1	FD1									99	90	90														
SW8260	SW5030	SS	NDA201	N1									95	80	91														
SW8260	SW5030	SS	NDA202	N1									93	72	88														
SW8260	SW5030	SS	NDA203	N1									95	98	97														
SW8260	SW5030	SS	NDA204	N1									71	32	53														
SW8260	SW5030	SS	NDA204DL1	LR									108	102	102														
SW8260	SW5030	SS	NDA205FD1	FD1									96	79	90														
SW8260	SW5030	SS	NDA205FD1DL1	LR									96	92	94														
SW8260	SW5030	SS	NDA206	N1									90	68	76														
SW8260	SW5030	SS	NDA206DL1	LR									102	105	116														
SW8260	SW5030	SS	NDA207	N1									97	84	87														
SW8260	SW5030	SS	NDA207DL1	LR									105	96	101														
SW8260	SW5030	SS	NDA208	N1									100	88	96														
SW8260	SW5030	SS	NDA209	N1									92	76	91														
SW8260	SW5030	SS	NDA210	N1									99	84	90														

Analytical Method	Preparation Method	Matrix	Sample ID	Sample Type	SW8081 (SW3510/NONE) = 2,4,5,6-TETRACHLORO-META-XYLENE	SW8081 (SW3510/NONE) = DECACHLOROBIPHENYL	SW8081 (SW3550/NONE) = 2,4,5,6-TETRACHLORO-META-XYLENE	SW8081 (SW3550/NONE) = DECACHLOROBIPHENYL	SW8082 (SW3510/NONE) = 2,4,5,6-TETRACHLORO-META-XYLENE	SW8082 (SW3510/NONE) = DECACHLOROBIPHENYL	SW8082 (SW3550/NONE) = 2,4,5,6-TETRACHLORO-META-XYLENE	SW8082 (SW3550/NONE) = DECACHLOROBIPHENYL	SW8260 (SW5030/NONE) = 1,2-DICHLOROETHANE-D4	SW8260 (SW5030/NONE) = 1-BROMO-4-FLUOROBENZENE (4-BROMOFLUOROBEN	SW8260 (SW5030/NONE) = TOLUENE-D8	SW8270 (SW3510/NONE) = 2,4,6-TRIBROMOPHENOL	SW8270 (SW3510/NONE) = 2-FLUOROBIPHENYL	SW8270 (SW3510/NONE) = 2-FLUOROPHENOL	SW8270 (SW3510/NONE) = NITROBENZENE-D5	SW8270 (SW3510/NONE) = PHENOL-D5	SW8270 (SW3510/NONE) = TERPHENYL-D14	SW8270 (SW3550/NONE) = 2,4,6-TRIBROMOPHENOL	SW8270 (SW3550/NONE) = 2-FLUOROBIPHENYL	SW8270 (SW3550/NONE) = 2-FLUOROPHENOL	SW8270 (SW3550/NONE) = NITROBENZENE-D5	SW8270 (SW3550/NONE) = PHENOL-D5	SW8270 (SW3550/NONE) = TERPHENYL-D14	SW8330 (SW3510/NONE) = 3,4-DINITROTOLUENE	SW8330 (SW3550/NONE) = 3,4-DINITROTOLUENE
SW8260	SW5030	SS	NDA211	N1									94	82	88														
SW8260	SW5030	SS	NDA212	N1									92	82	88														
SW8260	SW5030	SS	NDA185	N1									93	75	87														
SW8260	SW5030	SS	NDA186	N1									96	89	91														
SW8260	SW5030	SS	NDA187	N1									92	85	90														
SW8260	SW5030	SS	NDA188	N1									90	76	84														
SW8260	SW5030	SS	NDA189	N1									79	44	73														
SW8260	SW5030	SS	NDA190	N1									94	87	87														
SW8260	SW5030	SS	NDA191	N1									96	88	87														
SW8260	SW5030	SS	NDA192FD1	FD1									92	81	84														
SW8260	SW5030	SS	NDA193	N1									96	83	88														
SW8260	SW5030	SS	NDA194	N1									96	87	97														
SW8260	SW5030	SS	NDA195	N1									92	83	90														
SW8260	SW5030	SS	NDA084	N1									92	97	74														
SW8260	SW5030	SS	NDA086	N1									100	99	100														
SW8260	SW5030	SS	NDA088	N1									98	90	98														
SW8260	SW5030	SS	NDA088MS	MS									80	72	86														
SW8260	SW5030	SS	NDA088SD	SD									90	74	89														
SW8260	SW5030	SS	NDA091	N1									91	94	97														
SW8260	SW5030	SS	NDA057	N1									91	97	98														
SW8260	SW5030	SS	NDA059	N1									92	95	87														
SW8260	SW5030	SS	NDA059DL1	LR									91	87	90														
SW8260	SW5030	SS	NDA061	N1									90	97	94														
SW8260	SW5030	SS	NDA061MS	MS									87	94	93														
SW8260	SW5030	SS	NDA061SD	SD									92	96	99														
SW8260	SW5030	SS	NDA062FD1	FD1									91	92	89														
SW8260	SW5030	SS	NDA065	N1									94	96	100														
SW8260	SW5030	SS	NDA065DL1	LR									97	93	95														
SW8260	SW5030	SS	NDA067	N1									100	106	97														
SW8260	SW5030	SS	NDA069	N1									98	102	99														
SW8260	SW5030	SS	NDA069DL1	LR									103	97	100														
SW8260	SW5030	SS	NDA119	N1									96	94	92														
SW8260	SW5030	SS	NDA120	N1									99	110	98														
SW8260	SW5030	SS	NDA121	N1									100	110	101														
SW8260	SW5030	SS	NDA121DL1	LR									102	98	102														
SW8260	SW5030	SS	NDA122	N1									96	110	90														

Analytical Method	Preparation Method	Matrix	Sample ID	Sample Type	SW8081 (SW3510/NONE) = 2,4,5,6-TETRACHLORO-META-XYLENE	SW8081 (SW3510/NONE) = DECACHLOROBIPHENYL	SW8081 (SW3550/NONE) = 2,4,5,6-TETRACHLORO-META-XYLENE	SW8081 (SW3550/NONE) = DECACHLOROBIPHENYL	SW8082 (SW3510/NONE) = 2,4,5,6-TETRACHLORO-META-XYLENE	SW8082 (SW3510/NONE) = DECACHLOROBIPHENYL	SW8082 (SW3550/NONE) = 2,4,5,8-TETRACHLORO-META-XYLENE	SW8082 (SW3550/NONE) = DECACHLOROBIPHENYL	SW8260 (SW5030/NONE) = 1,2-DICHLOROETHANE-D4	SW8260 (SW5030/NONE) = 1-BROMO-4-FLUOROBENZENE (4-BROMOFLUOROBEN	SW8260 (SW5030/NONE) = TOLUENE-D8	SW8270 (SW3510/NONE) = 2,4,6-TRIBROMOPHENOL	SW8270 (SW3510/NONE) = 2-FLUOROBIPHENYL	SW8270 (SW3510/NONE) = 2-FLUOROPHENOL	SW8270 (SW3510/NONE) = NITROBENZENE-D5	SW8270 (SW3510/NONE) = PHENOL-D5	SW8270 (SW3510/NONE) = TERPHENYL-D14	SW8270 (SW3550/NONE) = 2,4,6-TRIBROMOPHENOL	SW8270 (SW3550/NONE) = 2-FLUOROBIPHENYL	SW8270 (SW3550/NONE) = 2-FLUOROPHENOL	SW8270 (SW3550/NONE) = NITROBENZENE-D5	SW8270 (SW3550/NONE) = PHENOL-D5	SW8270 (SW3550/NONE) = TERPHENYL-D14	SW8330 (SW3510/NONE) = 3,4-DINITROTOLUENE	SW8330 (SW3550/NONE) = 3,4-DINITROTOLUENE
SW8260	SW5030	SS	NDA123	N1									96	114	99														
SW8260	SW5030	SS	NDA123DL1	LR									102	96	99														
SW8260	SW5030	SS	NDA124	N1									95	112	102														
SW8260	SW5030	SS	NDA124DL1	LR									106	100	103														
SW8260	SW5030	SS	NDA071	N1									84	96	100														
SW8260	SW5030	SS	NDA071MS	MS									50	52	74														
SW8260	SW5030	SS	NDA071SD	SD									57	54	77														
SW8260	SW5030	SS	NDA072FD1	FD1									57	50	74														
SW8260	SW5030	SS	NDA074	N1									73	77	91														
SW8260	SW5030	SS	NDA076	N1									79	80	97														
SW8260	SW5030	SS	NDA078	N1									71	75	88														
SW8260	SW5030	SS	NDA080	N1									91	102	102														
SW8260	SW5030	SS	NDA082	N1									93	99	100														
SW8260	SW5030	SS	NDA113	N1									84	91	90														
SW8260	SW5030	SS	NDA115	N1									86	100	101														
SW8260	SW5030	SS	NDA117	N1									56	41	58														
SW8260	SW5030	SS	NDA101	N1									82	92	94														
SW8260	SW5030	SS	NDA103	N1									87	108	96														
SW8260	SW5030	SS	NDA104FD1	FD1									85	106	93														
SW8260	SW5030	SS	NDA107	N1									85	97	97														
SW8260	SW5030	SS	NDA109	N1									87	99	96														
SW8260	SW5030	SS	NDA111	N1									77	79	82														
SW8260	SW5030	SW	NDA035	N1									103	99	95														
SW8260	SW5030	SW	NDA036	N1									97	93	90														
SW8260	SW5030	SW	NDA037	N1									100	97	94														
SW8260	SW5030	SW	NDA037MS	MS									98	97	94														
SW8260	SW5030	SW	NDA037SD	SD									100	100	95														
SW8260	SW5030	SW	NDA038FD1	FD1									99	96	94														
SW8260	SW5030	SW	NDA039	N1									105	102	97														
SW8260	SW5030	SW	NDA040	N1									108	104	102														
SW8260	SW5030	SW	NDA300	N1									104	94	92														
SW8260	SW5030	SW	NDA301	N1									101	98	93														
SW8260	SW5030	WATER	040700BLKA31	LB									96	87	91														
SW8260	SW5030	WATER	041400BLKA22	LB									90	100	90														
SW8260	SW5030	WATER	041400LCSA23	BS									98	100	96														
SW8260	SW5030	WATER	060700LCSA31	BS									93	87	91														

Analytical Method	Preparation Method	Matrix	Sample ID	Sample Type	SW8081 (SW3510/NONE) = 2,4,5,6-TETRACHLORO-META-XYLENE	SW8081 (SW3510/NONE) = DECACHLOROBIPHENYL	SW8081 (SW3550/NONE) = 2,4,5,6-TETRACHLORO-META-XYLENE	SW8081 (SW3550/NONE) = DECACHLOROBIPHENYL	SW8082 (SW3510/NONE) = 2,4,5,6-TETRACHLORO-META-XYLENE	SW8082 (SW3510/NONE) = DECACHLOROBIPHENYL	SW8082 (SW3550/NONE) = 2,4,5,6-TETRACHLORO-META-XYLENE	SW8082 (SW3550/NONE) = DECACHLOROBIPHENYL	SW8260 (SW5030/NONE) = 1,2-DICHLOROETHANE-D4	SW8260 (SW5030/NONE) = 1-BROMO-4-FLUOROBENZENE (4-BROMOFLUOROBEN	SW8260 (SW5030/NONE) = TOLUENE-D8	SW8270 (SW3510/NONE) = 2,4,6-TRIBROMOPHENOL	SW8270 (SW3510/NONE) = 2-FLUOROBIPHENYL	SW8270 (SW3510/NONE) = 2-FLUOROPHENOL	SW8270 (SW3510/NONE) = NITROBENZENE-D5	SW8270 (SW3510/NONE) = PHENOL-D5	SW8270 (SW3510/NONE) = TERPHENYL-D14	SW8270 (SW3550/NONE) = 2,4,6-TRIBROMOPHENOL	SW8270 (SW3550/NONE) = 2-FLUOROBIPHENYL	SW8270 (SW3550/NONE) = 2-FLUOROPHENOL	SW8270 (SW3550/NONE) = NITROBENZENE-D5	SW8270 (SW3550/NONE) = PHENOL-D5	SW8270 (SW3550/NONE) = TERPHENYL-D14	SW8330 (SW3510/NONE) = 3,4-DINITROTOLUENE	SW8330 (SW3550/NONE) = 3,4-DINITROTOLUENE
SW8260	SW5030	WATER	NDA268EB6DL1	LR									100	101	106													
SW8260	SW5030	WATER	NDA269EB7DL1	LR									99	93	96													
SW8260	SW5030	WATER	041200BLKA32	LB									101	94	99													
SW8260	SW5030	WATER	041200LCSA31	BS									105	98	101													
SW8260	SW5030	WATER	041800BLKA32	LB									97	93	100													
SW8260	SW5030	WATER	041800LCSA31	BS									98	95	97													
SW8260	SW5030	WATER	041900BLKA24	LB									99	94	94													
SW8260	SW5030	WATER	041900LCSA22	BS									96	95	95													
SW8260	SW5030	WATER	042000BLKA32	LB									94	93	95													
SW8260	SW5030	WATER	042000LCSA31	BS									97	94	95													
SW8260	SW5030	WATER	041800BLKA32	LB									97	93	100													
SW8260	SW5030	WATER	041800LCSA31	BS									98	95	97													
SW8260	SW5030	WATER	042000BLKA32	LB									94	93	95													
SW8260	SW5030	WATER	042000LCSA31	BS									97	94	95													
SW8260	SW5030	WATER	042000BLKA32	LB									94	93	95													
SW8260	SW5030	WATER	042000LCSA31	BS									97	94	95													
SW8260	SW5030	WATER	042400BLKA34	LB									100	99	104													
SW8260	SW5030	WATER	042400LCSA32	BS									97	99	101													
SW8260	SW5030	WATER	042600BLKA22	LB									106	92	90													
SW8260	SW5030	WATER	042600LCSA21	BS									96	92	90													
SW8260	SW5030	WATER	042400BLKA34	LB									100	99	104													
SW8260	SW5030	WATER	042400LCSA32	BS									97	99	101													
SW8260	SW5030	WATER	042500BLKA22	LB									101	94	96													
SW8260	SW5030	WATER	042500LCSA21	BS									99	93	96													
SW8260	SW5030	WATER	042600BLKA22	LB									106	92	90													
SW8260	SW5030	WATER	042600LCSA21	BS									96	92	90													
SW8260	SW5030	WATER	042500BLKA22	LB									101	94	96													
SW8260	SW5030	WATER	042500LCSA21	BS									99	93	96													
SW8260	SW5030	WATER	042500BLKA33	LB									93	93	93													
SW8260	SW5030	WATER	042500BLKA33M	BS									101	98	98													
SW8260	SW5030	WATER	042500BLKA33S	BD									96	93	93													
SW8260	SW5030	WATER	042500LCSA31	BS									100	100	99													
SW8260	SW5030	WATER	042600BLKA22	LB									106	92	90													
SW8260	SW5030	WATER	042600LCSA21	BS									96	92	90													
SW8260	SW5030	WATER	042800BLKA22	LB									98	92	90													
SW8260	SW5030	WATER	042800BLKA32	LB									98	95	95													

Analytical Method	Preparation Method	Matrix	Sample ID	Sample Type	SW8081 (SW3510/NONE) = 2,4,5,6-TETRACHLORO-META-XYLENE	SW8081 (SW3510/NONE) = DECACHLOROBIPHENYL	SW8081 (SW3550/NONE) = 2,4,5,6-TETRACHLORO-META-XYLENE	SW8081 (SW3550/NONE) = DECACHLOROBIPHENYL	SW8082 (SW3510/NONE) = 2,4,5,6-TETRACHLORO-META-XYLENE	SW8082 (SW3510/NONE) = DECACHLOROBIPHENYL	SW8082 (SW3550/NONE) = 2,4,5,6-TETRACHLORO-META-XYLENE	SW8082 (SW3550/NONE) = DECACHLOROBIPHENYL	SW8260 (SW5030/NONE) = 1,2-DICHLOROETHANE-D4	SW8260 (SW5030/NONE) = 1-BROMO-4-FLUOROBENZENE (4-BROMOFLUOROBEN	SW8260 (SW5030/NONE) = TOLUENE-D8	SW8270 (SW3510/NONE) = 2,4,6-TRIBROMOPHENOL	SW8270 (SW3510/NONE) = 2-FLUOROBIPHENYL	SW8270 (SW3510/NONE) = 2-FLUOROPHENOL	SW8270 (SW3510/NONE) = NITROBENZENE-D5	SW8270 (SW3510/NONE) = PHENOL-D5	SW8270 (SW3510/NONE) = TERPHENYL-D14	SW8270 (SW3550/NONE) = 2,4,6-TRIBROMOPHENOL	SW8270 (SW3550/NONE) = 2-FLUOROBIPHENYL	SW8270 (SW3550/NONE) = 2-FLUOROPHENOL	SW8270 (SW3550/NONE) = NITROBENZENE-D5	SW8270 (SW3550/NONE) = PHENOL-D5	SW8270 (SW3550/NONE) = TERPHENYL-D14	SW8330 (SW3510/NONE) = 3,4-DINITROTOLUENE	SW8330 (SW3550/NONE) = 3,4-DINITROTOLUENE
SW8260	SW5030	WATER	042800BLKA32M	BS									96	94	96														
SW8260	SW5030	WATER	042800BLKA32S	BD									99	94	98														
SW8260	SW5030	WATER	042800LCSA22	BS									94	92	94														
SW8260	SW5030	WATER	042800LCSA31	BS									95	95	97														
SW8260	SW5030	WATER	050100BLKA22	LB									104	90	98														
SW8260	SW5030	WATER	050100LCSA21	BS									108	90	98														
SW8260	SW5030	WATER	050200BLKA32	LB									110	101	104														
SW8260	SW5030	WATER	050200BLKA32M	BS									98	93	93														
SW8260	SW5030	WATER	050200BLKA32S	BD									100	93	94														
SW8260	SW5030	WATER	050200LCSA32	BS									109	99	105														
SW8260	SW5030	WATER	050200BLKA22	LB									110	88	94														
SW8260	SW5030	WATER	050200BLKA32	LB									110	101	104														
SW8260	SW5030	WATER	050200BLKA32M	BS									98	93	93														
SW8260	SW5030	WATER	050200BLKA32S	BD									100	93	94														
SW8260	SW5030	WATER	050200LCSA21	BS									104	86	94														
SW8260	SW5030	WATER	050200LCSA32	BS									109	99	105														
SW8260	SW5030	WATER	050300BLKA22	LB									114	92	100														
SW8260	SW5030	WATER	050300BLKA32	LB									106	100	104														
SW8260	SW5030	WATER	050300LCSA21	BS									106	90	104														
SW8260	SW5030	WATER	050300LCSA31	BS									105	98	102														
SW8260	SW5030	WG	NDA024	N1									88	102	92														
SW8260	SW5030	WG	NDA025FD1	FD1									100	98	94														
SW8260	SW5030	WG	NDA029	N1									100	96	92														
SW8260	SW5030	WG	NDA029MS	MS									90	96	94														
SW8260	SW5030	WG	NDA029SD	SD									90	96	90														
SW8260	SW5030	WG	NDA017	N1									96	96	92														
SW8260	SW5030	WG	NDA017MS	MS									96	90	90														
SW8260	SW5030	WG	NDA017SD	SD									100	92	90														
SW8260	SW5030	WG	NDA022	N1									98	96	90														
SW8260	SW5030	WG	NDA019	N1									98	92	88														
SW8260	SW5030	WG	NDA020	N1									94	96	90														
SW8260	SW5030	WG	NDA021	N1									112	108	108														
SW8260	SW5030	WG	NDA002	N1									102	98	92														
SW8260	SW5030	WG	NDA002MS	MS									98	92	92														
SW8260	SW5030	WG	NDA002SD	SD									100	88	92														
SW8260	SW5030	WG	NDA003	N1									102	90	90														

Analytical Method	Preparation Method	Matrix	Sample ID	Sample Type	SW8081 (SW3510/NONE) = 2,4,5,6-TETRACHLORO-META-XYLENE	SW8081 (SW3510/NONE) = DECACHLOROBIPHENYL	SW8081 (SW3550/NONE) = 2,4,5,6-TETRACHLORO-META-XYLENE	SW8081 (SW3550/NONE) = DECACHLOROBIPHENYL	SW8082 (SW3510/NONE) = 2,4,5,6-TETRACHLORO-META-XYLENE	SW8082 (SW3510/NONE) = DECACHLOROBIPHENYL	SW8082 (SW3550/NONE) = 2,4,5,6-TETRACHLORO-META-XYLENE	SW8082 (SW3550/NONE) = DECACHLOROBIPHENYL	SW8260 (SW5030/NONE) = 1,2-DICHLOROETHANE-D4	SW8260 (SW5030/NONE) = 1-BROMO-4-FLUOROBENZENE (4-BROMOFLUOROBEN	SW8260 (SW5030/NONE) = TOLUENE-D8	SW8270 (SW3510/NONE) = 2,4,6-TRIBROMOPHENOL	SW8270 (SW3510/NONE) = 2-FLUOROBIPHENYL	SW8270 (SW3510/NONE) = 2-FLUOROPHENOL	SW8270 (SW3510/NONE) = NITROBENZENE-D5	SW8270 (SW3510/NONE) = PHENOL-D5	SW8270 (SW3510/NONE) = TERPHENYL-D14	SW8270 (SW3550/NONE) = 2,4,6-TRIBROMOPHENOL	SW8270 (SW3550/NONE) = 2-FLUOROBIPHENYL	SW8270 (SW3550/NONE) = 2-FLUOROPHENOL	SW8270 (SW3550/NONE) = NITROBENZENE-D5	SW8270 (SW3550/NONE) = PHENOL-D5	SW8270 (SW3550/NONE) = TERPHENYL-D14	SW8330 (SW3510/NONE) = 3,4-DINITROTOLUENE	SW8330 (SW3550/NONE) = 3,4-DINITROTOLUENE
SW8260	SW5030	WG	NDA004	N1									98	92	90														
SW8260	SW5030	WG	NDA003FD1	N1									100	90	90														
SW8260	SW5030	WG	NDA023	N1									102	96	92														
SW8260	SW5030	WG	NDA028	N1									100	90	90														
SW8260	SW5030	WG	NDA001	N1									104	92	98														
SW8260	SW5030	WG	NDA001MS	MS									112	90	100														
SW8260	SW5030	WG	NDA001SD	SD									108	88	96														
SW8260	SW5030	WG	NDA013	N1									104	96	96														
SW8260	SW5030	WG	NDA014	N1									108	90	96														
SW8260	SW5030	WG	NDA015	N1									98	86	94														
SW8260	SW5030	WG	NDA015SD	SD									104	94	92														
SW8260	SW5030	WG	NDA015MS	MS									104	86	92														
SW8260	SW5030	WG	NDA016	N1									108	88	94														
SW8260	SW5030	WG	NDA026	N1									106	86	92														
SW8260	SW5030	WG	NDA005	N1									112	94	96														
SW8260	SW5030	WG	NDA006	N1									114	96	100														
SW8260	SW5030	WG	NDA008	N1									114	90	98														
SW8260	SW5030	WG	NDA009	N1									114	98	102														
SW8260	SW5030	WG	NDA010	N1									108	88	100														
SW8260	SW5030	WG	NDA011	N1									110	92	102														
SW8260	SW5030	WG	NDA011MS	MS									112	92	104														
SW8260	SW5030	WG	NDA011SD	SD									108	88	98														
SW8260	SW5030	WG	NDA012	N1									112	90	100														
SW8260	SW5030	WG	NDA0321FD1	FD1									108	100	107														
SW8260	SW5030	WQ	NDA031EB2	EB2									100	93	97														
SW8260	SW5030	WQ	NDA278TB1	TB1									102	91	96														
SW8260	SW5030	WQ	NDA279TB2	TB2									105	93	97														
SW8260	SW5030	WQ	NDA032EB3	EB3									101	82	86														
SW8260	SW5030	WQ	NDA266EB4	EB4									105	92	98														
SW8260	SW5030	WQ	NDA275AB3	AB3									95	87	89														
SW8260	SW5030	WQ	NDA280TB3	TB3									102	90	98														
SW8260	SW5030	WQ	NDA281TB4	TB4									106	92	98														
SW8260	SW5030	WQ	NDA267EB5	EB5									88	93	85														
SW8260	SW5030	WQ	NDA268EB6	EB6									97	86	93														
SW8260	SW5030	WQ	NDA282TB5	TB5									96	100	90														
SW8260	SW5030	WQ	NDA269EB7	EB7									98	86	88														

Analytical Method	Preparation Method	Matrix	Sample ID	Sample Type	SW8081 (SW3510/NONE) = 2,4,5,6-TETRACHLORO-META-XYLENE	SW8081 (SW3510/NONE) = DECACHLOROBIPHENYL	SW8081 (SW3550/NONE) = 2,4,5,6-TETRACHLORO-META-XYLENE	SW8081 (SW3550/NONE) = DECACHLOROBIPHENYL	SW8082 (SW3510/NONE) = 2,4,5,6-TETRACHLORO-META-XYLENE	SW8082 (SW3510/NONE) = DECACHLOROBIPHENYL	SW8082 (SW3550/NONE) = 2,4,5,6-TETRACHLORO-META-XYLENE	SW8082 (SW3550/NONE) = DECACHLOROBIPHENYL	SW8260 (SW5030/NONE) = 1,2-DICHLOROETHANE-D4	SW8260 (SW5030/NONE) = 1-BROMO-4-FLUOROBENZENE (4-BROMOFLUOROBEN	SW8260 (SW5030/NONE) = TOLUENE-D8	SW8270 (SW3510/NONE) = 2,4,6-TRIBROMOPHENOL	SW8270 (SW3510/NONE) = 2-FLUOROBIPHENYL	SW8270 (SW3510/NONE) = 2-FLUOROPHENOL	SW8270 (SW3510/NONE) = NITROBENZENE-D5	SW8270 (SW3510/NONE) = PHENOL-D5	SW8270 (SW3510/NONE) = TERPHENYL-D14	SW8270 (SW3550/NONE) = 2,4,6-TRIBROMOPHENOL	SW8270 (SW3550/NONE) = 2-FLUOROBIPHENYL	SW8270 (SW3550/NONE) = 2-FLUOROPHENOL	SW8270 (SW3550/NONE) = NITROBENZENE-D5	SW8270 (SW3550/NONE) = PHENOL-D5	SW8270 (SW3550/NONE) = TERPHENYL-D14	SW8330 (SW3510/NONE) = 3,4-DINITROTOLUENE	SW8330 (SW3550/NONE) = 3,4-DINITROTOLUENE
SW8260	SW5030	WQ	NDA283TB6	TB6									102	92	98													
SW8260	SW5030	WQ	NDA270EB8	EB8									107	96	103													
SW8260	SW5030	WQ	NDA284TB7	TB7									93	86	90													
SW8260	SW5030	WQ	NDA271EB9	EB9									105	92	99													
SW8260	SW5030	WQ	NDA276AB4	AB4									105	96	102													
SW8260	SW5030	WQ	NDA285TB8	TB8									103	93	100													
SW8260	SW5030	WQ	NDA286TB9	TB9									105	94	102													
SW8260	SW5030	WQ	NDA272EB1	EB1									95	95	98													
SW8260	SW5030	WQ	NDA304EB1	EB1									104	97	103													
SW8260	SW5030	WQ	NDA287TB1	TB1									96	98	98													
SW8260	SW5030	WQ	NDA041EB1	EB1									95	99	98													
SW8260	SW5030	WQ	NDA288TB2	TB2									98	94	94													
SW8260	SW5030	WQ	NDA263EB1	EB1									100	95	102													
SW8260	SW5030	WQ	NDA289TB3	TB3									100	97	101													
SW8260	SW5030	WQ	NDA308EB1	EB1									99	97	100													
SW8260	SW5030	WQ	NDA290TB4	TB4									104	100	101													
SW8260	SW5030	WQ	NDA291TB5	TB5									100	99	101													
SW8260	SW5030	WQ	NDA292TB6	TB6									99	98	98													
SW8260	SW5030	WQ	NDA305EB1	EB1									102	98	100													
SW8260	SW5030	WQ	NDA306EB2	EB2									99	98	100													
SW8260	SW5030	WQ	NDA293TB7	TB7									100	94	100													
SW8260	SW5030	WQ	NDA310EB2	EB2									109	104	108													
SW8260	SW5030	WQ	NDA033AB1	AB1									103	101	103													
SW8260	SW5030	WQ	NDA294TB8	TB8									100	99	99													
SW8260	SW5030	WQ	NDA309EB1	EB1									97	96	98													
SW8260	SW5030	WQ	NDA311EB1	EB1									100	95	96													
SW8260	SW5030	WQ	NDA312EB2	EB2									94	93	95													
SW8260	SW5030	WQ	NDA030EB1	EB1									100	95	96													
SW8260	SW5030	WQ	NDA295TB9	TB9									101	95	96													
SW8260	SW5030	WQ	NDA313EB1	EB1									101	98	100													
SW8260	SW5030	WQ	NDA314TB1	TB1									102	96	98													
SW8260	SW5030	WQ	NDA034AB2	AB2									98	94	99													
SW8260	SW5030	WQ	NDA315TB1	TB1									99	96	98													
SW8260	SW5030	WQ	NDA316EB1	EB1									102	97	100													
SW8260	SW5030	WQ	NDA317TB1	TB1									101	94	98													
SW8260	SW5030	WQ	NDA318EB1	EB1									99	93	99													

Analytical Method	Preparation Method	Matrix	Sample ID	Sample Type	SW8081 (SW3510/NONE) = 2,4,5,6-TETRACHLORO-META-XYLENE	SW8081 (SW3510/NONE) = DECACHLOROBIPHENYL	SW8081 (SW3550/NONE) = 2,4,5,6-TETRACHLORO-META-XYLENE	SW8081 (SW3550/NONE) = DECACHLOROBIPHENYL	SW8082 (SW3510/NONE) = 2,4,5,6-TETRACHLORO-META-XYLENE	SW8082 (SW3510/NONE) = DECACHLOROBIPHENYL	SW8082 (SW3550/NONE) = 2,4,5,6-TETRACHLORO-META-XYLENE	SW8082 (SW3550/NONE) = DECACHLOROBIPHENYL	SW8260 (SW5030/NONE) = 1,2-DICHLOROETHANE-D4	SW8260 (SW5030/NONE) = 1-BROMO-4-FLUOROBENZENE (4-BROMOFLUOROBEN	SW8260 (SW5030/NONE) = TOLUENE-D8	SW8270 (SW3510/NONE) = 2,4,6-TRIBROMOPHENOL	SW8270 (SW3510/NONE) = 2-FLUOROBIPHENYL	SW8270 (SW3510/NONE) = 2-FLUOROPHENOL	SW8270 (SW3510/NONE) = 2-FLUOROPHENOL	SW8270 (SW3510/NONE) = NITROBENZENE-D5	SW8270 (SW3510/NONE) = PHENOL-D5	SW8270 (SW3510/NONE) = TERPHENYL-D14	SW8270 (SW3550/NONE) = 2,4,6-TRIBROMOPHENOL	SW8270 (SW3550/NONE) = 2-FLUOROBIPHENYL	SW8270 (SW3550/NONE) = 2-FLUOROPHENOL	SW8270 (SW3550/NONE) = NITROBENZENE-D5	SW8270 (SW3550/NONE) = PHENOL-D5	SW8270 (SW3550/NONE) = TERPHENYL-D14	SW8330 (SW3510/NONE) = 3,4-DINITROTOLUENE	SW8330 (SW3550/NONE) = 3,4-DINITROTOLUENE
SW8260	SW5030	WQ	NDA319TB1	TB1									109	100	107															
SW8260	SW5030	WQ	NDA320EB1	EB1									100	96	100															
SW8260	SW5030	WQ	NDA322TB1	TB1									110	99	107															
SW8260	SW5030	WQ	NDA323EB1	EB1									99	94	98															
SW8260	SW5030	WQ	NDA324EB2	EB2									98	92	97															
SW8260	SW5030	WQ	NDA325AB1	AB1									110	102	110															
SW8270	SW3510	SW	NDA035	N1												92	91	66	96	62	92									
SW8270	SW3510	SW	NDA036	N1												89	89	63	94	61	89									
SW8270	SW3510	SW	NDA037	N1												84	90	60	94	59	88									
SW8270	SW3510	SW	NDA037MS	MS												102	96	78	103	71	90									
SW8270	SW3510	SW	NDA037SD	SD												98	93	72	97	65	90									
SW8270	SW3510	SW	NDA038FD1	FD1												90	91	62	96	58	92									
SW8270	SW3510	SW	NDA039	N1												100	85	68	94	63	98									
SW8270	SW3510	SW	NDA040	N1												98	82	69	94	65	94									
SW8270	SW3510	SW	NDA300	N1												88	77	63	89	58	88									
SW8270	SW3510	SW	NDA301	N1												93	80	66	90	64	93									
SW8270	SW3510	WATER	041200BLKA2	LB												109	93	53	98	35	101									
SW8270	SW3510	WATER	041200LCSA2	BS												102	87	50	91	34	94									
SW8270	SW3510	WATER	041500BLKA1	LB												93	80	54	89	39	95									
SW8270	SW3510	WATER	041500LCSA1	BS												126	107	75	117	53	120									
SW8270	SW3510	WATER	041900BLKA2	LB												93	93	65	99	50	104									
SW8270	SW3510	WATER	041900LCSA2A1	BS												101	93	75	98	60	102									
SW8270	SW3510	WATER	042000BLKA29	LB												99	90	57	91	41	100									
SW8270	SW3510	WATER	042000LCSA20	BS												104	93	58	98	40	103									
SW8270	SW3510	WATER	042500BLKA1	LB												78	68	55	80	37	84									
SW8270	SW3510	WATER	042500BLKA1MS	BS												78	68	52	75	38	83									
SW8270	SW3510	WATER	042500BLKA1SD	BD												86	78	59	86	44	91									
SW8270	SW3510	WATER	042500LCSA1	BS												92	79	57	88	43	95									
SW8270	SW3510	WATER	042600BLKA1	LB												92	88	50	87	35	92									
SW8270	SW3510	WATER	042600BLKA1MS	BS												93	91	49	90	32	93									
SW8270	SW3510	WATER	042600BLKA1SD	BD												91	87	55	89	37	89									
SW8270	SW3510	WATER	042600LCSA1	BS												92	87	49	82	37	90									
SW8270	SW3510	WATER	042600BLKA1	LB												92	88	50	87	35	92									
SW8270	SW3510	WATER	042600BLKA1MS	BS												93	91	49	90	32	93									
SW8270	SW3510	WATER	042600BLKA1SD	BD												91	87	55	89	37	89									
SW8270	SW3510	WATER	042600LCSA1	BS												92	87	49	82	37	90									

Analytical Method	Preparation Method	Matrix	Sample ID	Sample Type	SW8081 (SW3510/NONE) = 2,4,5,6-TETRACHLORO-META-XYLENE	SW8081 (SW3510/NONE) = DECACHLOROBIPHENYL	SW8081 (SW3550/NONE) = 2,4,5,6-TETRACHLORO-META-XYLENE	SW8081 (SW3550/NONE) = DECACHLOROBIPHENYL	SW8082 (SW3510/NONE) = 2,4,5,6-TETRACHLORO-META-XYLENE	SW8082 (SW3510/NONE) = DECACHLOROBIPHENYL	SW8082 (SW3550/NONE) = 2,4,5,6-TETRACHLORO-META-XYLENE	SW8082 (SW3550/NONE) = DECACHLOROBIPHENYL	SW8260 (SW5030/NONE) = 1,2-DICHLOROETHANE-D4	SW8260 (SW5030/NONE) = 1-BROMO-4-FLUOROBENZENE (4-BROMOFLUOROBEN	SW8260 (SW5030/NONE) = TOLUENE-D8	SW8270 (SW3510/NONE) = 2,4,6-TRIBROMOPHENOL	SW8270 (SW3510/NONE) = 2-FLUOROBIPHENYL	SW8270 (SW3510/NONE) = 2-FLUOROPHENOL	SW8270 (SW3510/NONE) = NITROBENZENE-D5	SW8270 (SW3510/NONE) = PHENOL-D5	SW8270 (SW3510/NONE) = TERPHENYL-D14	SW8270 (SW3550/NONE) = 2,4,6-TRIBROMOPHENOL	SW8270 (SW3550/NONE) = 2-FLUOROBIPHENYL	SW8270 (SW3550/NONE) = 2-FLUOROPHENOL	SW8270 (SW3550/NONE) = NITROBENZENE-D5	SW8270 (SW3550/NONE) = PHENOL-D5	SW8270 (SW3550/NONE) = TERPHENYL-D14	SW8330 (SW3510/NONE) = 3,4-DINITROTOLUENE	SW8330 (SW3550/NONE) = 3,4-DINITROTOLUENE
SW8270	SW3510	WATER	050200BLKA1	LB																									
SW8270	SW3510	WATER	050200BLKA1MS	BS												65	73	46	76	37	85								
SW8270	SW3510	WATER	050200BLKA1SD	BD												77	79	56	83	42	84								
SW8270	SW3510	WATER	050200LCSA1	BS												84	82	66	81	49	88								
SW8270	SW3510	WATER	050200BLKA2	LB												83	79	64	84	52	93								
SW8270	SW3510	WATER	050200BLKA2MS	BS												61	74	44	77	35	82								
SW8270	SW3510	WATER	050200BLKA2SD	BD												78	75	56	77	41	82								
SW8270	SW3510	WATER	050200LCSA2	BS												80	80	62	84	48	83								
SW8270	SW3510	WATER	050200BLKA2	LB												78	77	60	79	50	83								
SW8270	SW3510	WATER	050200BLKA2MS	BS												61	74	44	77	35	82								
SW8270	SW3510	WATER	050200BLKA2SD	BD												78	75	56	77	41	82								
SW8270	SW3510	WATER	050200LCSA2	BS												80	80	62	84	48	83								
SW8270	SW3510	WATER	050800BLKA1	LB												78	77	60	79	50	83								
SW8270	SW3510	WATER	050800LCSA	BS												87	74	47	76	31	84								
SW8270	SW3510	WATER	050800BLKA1	LB												85	71	43	75	28	81								
SW8270	SW3510	WATER	050800LCSA1	BS												86	73	47	77	31	83								
SW8270	SW3510	WG	NDA024	N1												86	71	42	76	28	79								
SW8270	SW3510	WG	NDA025FD1	FD1												92	82	44	91	28	57								
SW8270	SW3510	WG	NDA029	N1												88	87	30	88	20	85								
SW8270	SW3510	WG	NDA029MS	MS												100	83	60	88	47	75								
SW8270	SW3510	WG	NDA029SD	SD												97	85	47	89	36	78								
SW8270	SW3510	WG	NDA017	N1												100	85	50	90	34	77								
SW8270	SW3510	WG	NDA022	N1												92	91	61	91	42	105								
SW8270	SW3510	WG	NDA019	N1												35	38	27	38	19	49								
SW8270	SW3510	WG	NDA020	N1												63	62	45	68	32	73								
SW8270	SW3510	WG	NDA021	N1												75	70	52	79	38	81								
SW8270	SW3510	WG	NDA002	N1												79	74	51	77	40	86								
SW8270	SW3510	WG	NDA003	N1												76	72	56	81	41	62								
SW8270	SW3510	WG	NDA004	N1												68	68	50	72	39	80								
SW8270	SW3510	WG	NDA003FD1	N1												58	57	41	57	26	59								
SW8270	SW3510	WG	NDA023	N1												48	63	44	69	32	69								
SW8270	SW3510	WG	NDA028	N1												85	72	48	75	33	57								
SW8270	SW3510	WG	NDA001	N1												61	76	45	83	36	80								
SW8270	SW3510	WG	NDA013	N1												72	66	52	75	41	78								
SW8270	SW3510	WG	NDA014	N1												68	60	54	75	40	69								
SW8270	SW3510	WG	NDA015	N1												70	52	47	74	36	86								
																69	72	49	72	37	70								

Analytical Method	Preparation Method	Matrix	Sample ID	Sample Type	SW8081 (SW3510/NONE) = 2,4,5,6-TETRACHLORO-META-XYLENE	SW8081 (SW3510/NONE) = DECACHLOROBIPHENYL	SW8081 (SW3550/NONE) = 2,4,5,6-TETRACHLORO-META-XYLENE	SW8081 (SW3550/NONE) = DECACHLOROBIPHENYL	SW8082 (SW3510/NONE) = 2,4,5,6-TETRACHLORO-META-XYLENE	SW8082 (SW3510/NONE) = DECACHLOROBIPHENYL	SW8082 (SW3550/NONE) = 2,4,5,6-TETRACHLORO-META-XYLENE	SW8082 (SW3550/NONE) = DECACHLOROBIPHENYL	SW8260 (SW5030/NONE) = 1,2-DICHLOROETHANE-D4	SW8260 (SW5030/NONE) = 1-BROMO-4-FLUOROBENZENE (4-BROMOFLUOROBEN	SW8260 (SW5030/NONE) = TOLUENE-D8	SW8270 (SW3510/NONE) = 2,4,6-TRIBROMOPHENOL	SW8270 (SW3510/NONE) = 2-FLUOROBIPHENYL	SW8270 (SW3510/NONE) = 2-FLUOROPHENOL	SW8270 (SW3510/NONE) = NITROBENZENE-D5	SW8270 (SW3510/NONE) = PHENOL-D5	SW8270 (SW3510/NONE) = TERPHENYL-D14	SW8270 (SW3550/NONE) = 2,4,6-TRIBROMOPHENOL	SW8270 (SW3550/NONE) = 2-FLUOROBIPHENYL	SW8270 (SW3550/NONE) = 2-FLUOROPHENOL	SW8270 (SW3550/NONE) = NITROBENZENE-D5	SW8270 (SW3550/NONE) = PHENOL-D5	SW8270 (SW3550/NONE) = TERPHENYL-D14	SW8330 (SW3510/NONE) = 3,4-DINITROTOLUENE	SW8330 (SW3550/NONE) = 3,4-DINITROTOLUENE
SW8270	SW3510	WG	NDA016	N1												73	64	34	63	22	63								
SW8270	SW3510	WG	NDA026	N1												90	71	40	72	26	63								
SW8270	SW3510	WG	NDA005	N1												71	57	42	59	39	55								
SW8270	SW3510	WG	NDA006	N1												83	69	45	71	40	68								
SW8270	SW3510	WG	NDA008	N1												77	63	44	68	40	58								
SW8270	SW3510	WG	NDA009	N1												74	63	48	66	40	60								
SW8270	SW3510	WG	NDA010	N1												81	76	46	80	30	78								
SW8270	SW3510	WG	NDA011	N1												86	72	42	75	28	68								
SW8270	SW3510	WG	NDA011MS	MS												74	64	40	67	26	63								
SW8270	SW3510	WG	NDA011SD	SD												75	63	36	67	27	64								
SW8270	SW3510	WG	NDA012	N1												79	65	33	68	25	68								
SW8270	SW3510	WG	NDA0321FD1	FD1												87	74	39	75	25	83								
SW8270	SW3510	WQ	NDA031EB2	EB2												96	87	57	89	37	91								
SW8270	SW3510	WQ	NDA032EB3	EB3												104	89	54	94	39	97								
SW8270	SW3510	WQ	NDA266EB4	EB4												99	75	49	85	33	91								
SW8270	SW3510	WQ	NDA275AB3	AB3												94	73	45	84	32	89								
SW8270	SW3510	WQ	NDA267EB5	EB5												95	85	54	90	39	94								
SW8270	SW3510	WQ	NDA268EB6	EB6												95	84	52	89	35	94								
SW8270	SW3510	WQ	NDA269EB7	EB7												93	84	52	88	35	89								
SW8270	SW3510	WQ	NDA270EB8	EB8												95	91	54	95	38	96								
SW8270	SW3510	WQ	NDA271EB9	EB9												88	88	55	97	41	97								
SW8270	SW3510	WQ	NDA276AB4	AB4												91	84	57	94	39	94								
SW8270	SW3510	WQ	NDA272EB1	EB1												98	76	59	89	44	96								
SW8270	SW3510	WQ	NDA304EB1	EB1												97	72	59	85	44	90								
SW8270	SW3510	WQ	NDA041EB1	EB1												100	93	69	103	54	108								
SW8270	SW3510	WQ	NDA263EB1	EB1												122	101	79	113	59	123								
SW8270	SW3510	WQ	NDA308EB1	EB1												97	73	56	89	40	86								
SW8270	SW3510	WQ	NDA305EB1	EB1												95	72	56	86	40	85								
SW8270	SW3510	WQ	NDA306EB2	EB2												100	80	61	95	44	89								
SW8270	SW3510	WQ	NDA310EB2	EB2												79	71	50	86	37	96								
SW8270	SW3510	WQ	NDA033AB1	AB1												82	84	42	81	27	77								
SW8270	SW3510	WQ	NDA309EB1	EB1												88	86	49	81	31	90								
SW8270	SW3510	WQ	NDA311EB1	EB1												95	91	52	93	38	94								
SW8270	SW3510	WQ	NDA312EB2	EB2												91	81	46	84	31	93								
SW8270	SW3510	WQ	NDA030EB1	EB1												95	82	57	83	39	98								
SW8270	SW3510	WQ	NDA313EB1	EB1												69	67	48	71	37	81								

Analytical Method	Preparation Method	Matrix	Sample ID	Sample Type	SW8081 (SW3510/NONE) = 2,4,5,6-TETRACHLORO-META-XYLENE	SW8081 (SW3510/NONE) = DECACHLOROBIPHENYL	SW8081 (SW3550/NONE) = 2,4,5,6-TETRACHLORO-META-XYLENE	SW8081 (SW3550/NONE) = DECACHLOROBIPHENYL	SW8082 (SW3510/NONE) = 2,4,5,6-TETRACHLORO-META-XYLENE	SW8082 (SW3510/NONE) = DECACHLOROBIPHENYL	SW8082 (SW3550/NONE) = 2,4,5,6-TETRACHLORO-META-XYLENE	SW8082 (SW3550/NONE) = DECACHLOROBIPHENYL	SW8260 (SW5030/NONE) = 1,2-DICHLOROETHANE-D4	SW8260 (SW5030/NONE) = 1-BROMO-4-FLUOROBENZENE (4-BROMOFLUOROBEN	SW8260 (SW5030/NONE) = TOLUENE-D8	SW8270 (SW3510/NONE) = 2,4,6-TRIBROMOPHENOL	SW8270 (SW3510/NONE) = 2-FLUOROBIPHENYL	SW8270 (SW3510/NONE) = 2-FLUOROPHENOL	SW8270 (SW3510/NONE) = NITROBENZENE-D5	SW8270 (SW3510/NONE) = PHENOL-D5	SW8270 (SW3510/NONE) = TERPHENYL-D14	SW8270 (SW3550/NONE) = 2,4,6-TRIBROMOPHENOL	SW8270 (SW3550/NONE) = 2-FLUOROBIPHENYL	SW8270 (SW3550/NONE) = 2-FLUOROPHENOL	SW8270 (SW3550/NONE) = NITROBENZENE-D5	SW8270 (SW3550/NONE) = PHENOL-D5	SW8270 (SW3550/NONE) = TERPHENYL-D14	SW8330 (SW3510/NONE) = 3,4-DINITROTOLUENE	SW8330 (SW3550/NONE) = 3,4-DINITROTOLUENE
SW8270	SW3510	WQ	NDA034AB2	AB2												65	69	45	75	38	83									
SW8270	SW3510	WQ	NDA316EB1	EB1												59	56	43	64	31	74									
SW8270	SW3510	WQ	NDA318EB1	EB1												66	51	42	74	33	83									
SW8270	SW3510	WQ	NDA320EB1	EB1												78	65	31	60	21	76									
SW8270	SW3510	WQ	NDA323EB1	EB1												83	72	36	70	24	81									
SW8270	SW3510	WQ	NDA324EB2	EB2												79	70	40	72	25	72									
SW8270	SW3510	WQ	NDA325AB1	AB1												84	71	38	72	24	81									
SW8270	SW3550	SB	NDA126	N1																		74	72	65	72	76	81		
SW8270	SW3550	SB	NDA129	N1																		71	71	61	68	67	83		
SW8270	SW3550	SB	NDA130FD1	FD1																		73	72	62	73	75	81		
SW8270	SW3550	SB	NDA132	N1																		80	77	67	76	72	86		
SW8270	SW3550	SB	NDA134	N1																		77	74	63	72	68	83		
SW8270	SW3550	SB	NDA136	N1																		65	67	59	71	71	84		
SW8270	SW3550	SB	NDA138	N1																		76	71	60	68	74	87		
SW8270	SW3550	SB	NDA140	N1																		81	70	61	65	75	92		
SW8270	SW3550	SB	NDA142	N1																		73	71	61	71	71	85		
SW8270	SW3550	SB	NDA144	N1																		79	79	74	83	90	90		
SW8270	SW3550	SB	NDA146	N1																		77	76	66	78	76	86		
SW8270	SW3550	SB	NDA148	N1																		84	90	83	86	89	100		
SW8270	SW3550	SB	NDA151	N1																		72	67	61	68	71	84		
SW8270	SW3550	SB	NDA151MS	MS																		78	75	66	73	74	94		
SW8270	SW3550	SB	NDA151SD	SD																		72	70	62	67	66	88		
SW8270	SW3550	SB	NDA152FD1	FD1																		47	45	38	43	42	60		
SW8270	SW3550	SB	NDA154	N1																		70	65	59	61	62	89		
SW8270	SW3550	SB	NDA156	N1																		65	65	52	60	64	90		
SW8270	SW3550	SB	NDA158	N1																		66	60	53	58	63	87		
SW8270	SW3550	SB	NDA160	N1																		54	43	39	43	51	63		
SW8270	SW3550	SB	NDA162	N1																		67	57	49	56	65	81		
SW8270	SW3550	SB	NDA163FD1	FD1																		70	53	55	55	66	75		
SW8270	SW3550	SB	NDA165	N1																		86	89	76	88	97	109		
SW8270	SW3550	SB	NDA167	N1																		84	78	73	77	90	98		
SW8270	SW3550	SB	NDA169	N1																		89	77	86	77	96	96		
SW8270	SW3550	SB	NDA171	N1																		91	82	76	86	90	98		
SW8270	SW3550	SB	NDA173	N1																		101	97	85	97	96	120		
SW8270	SW3550	SB	NDA175	N1																		94	95	76	83	84	109		
SW8270	SW3550	SB	NDA177	N1																		77	81	63	67	70	97		

Analytical Method	Preparation Method	Matrix	Sample ID	Sample Type	SW8081 (SW3510/NONE) = 2,4,5,6-TETRACHLORO-META-XYLENE	SW8081 (SW3510/NONE) = DECACHLOROBIPHENYL	SW8081 (SW3550/NONE) = 2,4,5,6-TETRACHLORO-META-XYLENE	SW8081 (SW3550/NONE) = DECACHLOROBIPHENYL	SW8082 (SW3510/NONE) = 2,4,5,6-TETRACHLORO-META-XYLENE	SW8082 (SW3510/NONE) = DECACHLOROBIPHENYL	SW8082 (SW3550/NONE) = 2,4,5,6-TETRACHLORO-META-XYLENE	SW8082 (SW3550/NONE) = DECACHLOROBIPHENYL	SW8260 (SW5030/NONE) = 1,2-DICHLOROETHANE-D4	SW8260 (SW5030/NONE) = 1-BROMO-4-FLUOROBENZENE (4-BROMOFLUOROBEN	SW8260 (SW5030/NONE) = TOLUENE-D8	SW8270 (SW3510/NONE) = 2,4,6-TRIBROMOPHENOL	SW8270 (SW3510/NONE) = 2-FLUOROBIPHENYL	SW8270 (SW3510/NONE) = 2-FLUOROPHENOL	SW8270 (SW3510/NONE) = NITROBENZENE-D5	SW8270 (SW3510/NONE) = PHENOL-D5	SW8270 (SW3510/NONE) = TERPHENYL-D14	SW8270 (SW3550/NONE) = 2,4,6-TRIBROMOPHENOL	SW8270 (SW3550/NONE) = 2-FLUOROBIPHENYL	SW8270 (SW3550/NONE) = 2-FLUOROPHENOL	SW8270 (SW3550/NONE) = NITROBENZENE-D5	SW8270 (SW3550/NONE) = PHENOL-D5	SW8270 (SW3550/NONE) = TERPHENYL-D14	SW8330 (SW3510/NONE) = 3,4-DINITROTOLUENE	SW8330 (SW3550/NONE) = 3,4-DINITROTOLUENE
SW8270	SW3550	SB	NDA213	N1																			83	77	63	74	76	87		
SW8270	SW3550	SB	NDA213MS	MS																			82	81	68	75	73	93		
SW8270	SW3550	SB	NDA213SD	SD																			81	80	73	79	77	89		
SW8270	SW3550	SB	NDA214FD1	FD1																			75	71	61	67	72	88		
SW8270	SW3550	SB	NDA215	N1																			79	76	65	79	76	91		
SW8270	SW3550	SB	NDA216	N1																			69	67	54	64	61	74		
SW8270	SW3550	SB	NDA217	N1																			82	81	67	73	72	87		
SW8270	SW3550	SB	NDA218	N1																			80	75	59	73	70	87		
SW8270	SW3550	SB	NDA219	N1																			81	77	71	76	77	84		
SW8270	SW3550	SB	NDA220	N1																			85	80	73	78	80	91		
SW8270	SW3550	SB	NDA221	N1																			82	81	66	77	78	88		
SW8270	SW3550	SB	NDA222	N1																			80	78	66	73	71	93		
SW8270	SW3550	SB	NDA223	N1																			77	74	63	74	71	96		
SW8270	SW3550	SB	NDA224	N1																			73	65	60	66	72	84		
SW8270	SW3550	SB	NDA225	N1																			74	69	63	72	74	87		
SW8270	SW3550	SB	NDA226	N1																			71	64	58	66	69	78		
SW8270	SW3550	SB	NDA226MS	MS																			68	67	62	68	71	72		
SW8270	SW3550	SB	NDA226SD	SD																			71	66	61	67	67	75		
SW8270	SW3550	SB	NDA227FD1	FD1																			64	62	54	61	65	71		
SW8270	SW3550	SB	NDA228	N1																			72	66	58	68	68	79		
SW8270	SW3550	SB	NDA229	N1																			69	61	58	67	70	78		
SW8270	SW3550	SB	NDA230	N1																			81	72	69	72	78	84		
SW8270	SW3550	SB	NDA231	N1																			71	68	67	72	74	84		
SW8270	SW3550	SB	NDA232	N1																			64	60	58	64	68	72		
SW8270	SW3550	SB	NDA233	N1																			73	71	62	68	71	83		
SW8270	SW3550	SB	NDA234	N1																			73	70	61	68	69	83		
SW8270	SW3550	SB	NDA235	N1																			79	70	62	69	70	87		
SW8270	SW3550	SB	NDA236	N1																			80	71	61	72	73	95		
SW8270	SW3550	SB	NDA237FD1	FD1																			71	70	60	64	69	88		
SW8270	SW3550	SB	NDA238	N1																			78	70	63	69	73	88		
SW8270	SW3550	SB	NDA239	N1																			78	71	64	74	74	90		
SW8270	SW3550	SB	NDA240	N1																			80	67	63	67	71	87		
SW8270	SW3550	SB	NDA241	N1																			76	68	61	70	71	84		
SW8270	SW3550	SB	NDA242	N1																			64	58	43	63	58	81		
SW8270	SW3550	SB	NDA243	N1																			73	67	60	70	70	88		
SW8270	SW3550	SB	NDA244	N1																			74	70	63	72	75	93		

Analytical Method	Preparation Method	Matrix	Sample ID	Sample Type	SW8081 (SW3510/NONE) = 2,4,5,6-TETRACHLORO-META-XYLENE	SW8081 (SW3510/NONE) = DECACHLOROBIPHENYL	SW8081 (SW3550/NONE) = 2,4,5,6-TETRACHLORO-META-XYLENE	SW8081 (SW3550/NONE) = DECACHLOROBIPHENYL	SW8082 (SW3510/NONE) = 2,4,5,6-TETRACHLORO-META-XYLENE	SW8082 (SW3510/NONE) = DECACHLOROBIPHENYL	SW8082 (SW3550/NONE) = 2,4,5,6-TETRACHLORO-META-XYLENE	SW8082 (SW3550/NONE) = DECACHLOROBIPHENYL	SW8260 (SW5030/NONE) = 1,2-DICHLOROETHANE-D4	SW8260 (SW5030/NONE) = 1-BROMO-4-FLUOROBENZENE (4-BROMOFLUOROBEN	SW8260 (SW5030/NONE) = TOLUENE-D8	SW8270 (SW3510/NONE) = 2,4,6-TRIBROMOPHENOL	SW8270 (SW3510/NONE) = 2-FLUOROBIPHENYL	SW8270 (SW3510/NONE) = 2-FLUOROPHENOL	SW8270 (SW3510/NONE) = NITROBENZENE-D5	SW8270 (SW3510/NONE) = PHENOL-D5	SW8270 (SW3510/NONE) = TERPHENYL-D14	SW8270 (SW3550/NONE) = 2,4,6-TRIBROMOPHENOL	SW8270 (SW3550/NONE) = 2-FLUOROBIPHENYL	SW8270 (SW3550/NONE) = 2-FLUOROPHENOL	SW8270 (SW3550/NONE) = NITROBENZENE-D5	SW8270 (SW3550/NONE) = PHENOL-D5	SW8270 (SW3550/NONE) = TERPHENYL-D14	SW8330 (SW3510/NONE) = 3,4-DINITROTOLUENE	SW8330 (SW3550/NONE) = 3,4-DINITROTOLUENE
SW8270	SW3550	SB	NDA245	N1																			88	71	77	66	83	101		
SW8270	SW3550	SB	NDA246	N1																			95	71	79	71	86	103		
SW8270	SW3550	SB	NDA246MS	MS																			91	74	73	72	81	99		
SW8270	SW3550	SB	NDA246SD	SD																			91	80	72	75	78	97		
SW8270	SW3550	SB	NDA247FD1	FD1																			88	72	79	76	92	94		
SW8270	SW3550	SB	NDA248	N1																			85	67	75	73	85	95		
SW8270	SW3550	SB	NDA249	N1																			92	76	73	71	83	99		
SW8270	SW3550	SB	NDA252	N1																			75	64	62	60	77	87		
SW8270	SW3550	SB	NDA253	N1																			54	63	48	63	65	85		
SW8270	SW3550	SB	NDA254	N1																			92	71	73	78	83	101		
SW8270	SW3550	SB	NDA255	N1																			95	71	74	75	83	101		
SW8270	SW3550	SB	NDA085	N1																			100	89	91	87	100	115		
SW8270	SW3550	SB	NDA092	N1																			76	66	69	64	74	89		
SW8270	SW3550	SB	NDA093	N1																			88	77	77	72	80	99		
SW8270	SW3550	SB	NDA094	N1																			83	73	71	67	79	95		
SW8270	SW3550	SB	NDA095FD1	FD1																			90	80	86	79	88	98		
SW8270	SW3550	SB	NDA087	N1																			72	66	62	62	70	78		
SW8270	SW3550	SB	NDA089	N1																			80	70	73	71	75	84		
SW8270	SW3550	SB	NDA096	N1																			85	147	78	75	85	95		
SW8270	SW3550	SB	NDA097	N1																			84	76	73	71	76	89		
SW8270	SW3550	SB	NDA099	N1																			83	73	65	70	74	90		
SW8270	SW3550	SB	NDA296	N1																			85	72	78	70	81	80		
SW8270	SW3550	SB	NDA297	N1																			96	82	87	80	92	91		
SW8270	SW3550	SB	NDA298	N1																			82	71	80	72	83	81		
SW8270	SW3550	SB	NDA299	N1																			84	73	82	75	86	84		
SW8270	SW3550	SB	NDA058	N1																			51	47	48	50	57	52		
SW8270	SW3550	SB	NDA060	N1																			52	50	50	51	56	52		
SW8270	SW3550	SB	NDA063	N1																			88	79	70	81	76	92		
SW8270	SW3550	SB	NDA063MS	MS																			89	82	79	85	81	89		
SW8270	SW3550	SB	NDA063SD	SD																			65	66	59	63	65	74		
SW8270	SW3550	SB	NDA064FD1	FD1																			62	64	56	64	63	74		
SW8270	SW3550	SB	NDA066	N1																			94	92	78	88	90	94		
SW8270	SW3550	SB	NDA068	N1																			88	86	74	76	84	84		
SW8270	SW3550	SB	NDA070	N1																			76	71	68	74	71	75		
SW8270	SW3550	SB	NDA073	N1																			76	71	67	74	70	75		
SW8270	SW3550	SB	NDA075	N1																			76	71	66	72	70	72		

Analytical Method	Preparation Method	Matrix	Sample ID	Sample Type	SW8081 (SW3510/NONE) = 2,4,5,6-TETRACHLORO-META-XYLENE	SW8081 (SW3510/NONE) = DECACHLOROBIPHENYL	SW8081 (SW3550/NONE) = 2,4,5,6-TETRACHLORO-META-XYLENE	SW8081 (SW3550/NONE) = DECACHLOROBIPHENYL	SW8082 (SW3510/NONE) = 2,4,5,6-TETRACHLORO-META-XYLENE	SW8082 (SW3510/NONE) = DECACHLOROBIPHENYL	SW8082 (SW3550/NONE) = 2,4,5,6-TETRACHLORO-META-XYLENE	SW8082 (SW3550/NONE) = DECACHLOROBIPHENYL	SW8260 (SW5030/NONE) = 1,2-DICHLOROETHANE-D4	SW8260 (SW5030/NONE) = 1-BROMO-4-FLUOROBENZENE (4-BROMOFLUOROBEN	SW8260 (SW5030/NONE) = TOLUENE-D8	SW8270 (SW3510/NONE) = 2,4,6-TRIBROMOPHENOL	SW8270 (SW3510/NONE) = 2-FLUOROBIPHENYL	SW8270 (SW3510/NONE) = 2-FLUOROPHENOL	SW8270 (SW3510/NONE) = NITROBENZENE-D5	SW8270 (SW3510/NONE) = PHENOL-D5	SW8270 (SW3510/NONE) = TERPHENYL-D14	SW8270 (SW3550/NONE) = 2,4,6-TRIBROMOPHENOL	SW8270 (SW3550/NONE) = 2-FLUOROBIPHENYL	SW8270 (SW3550/NONE) = 2-FLUOROPHENOL	SW8270 (SW3550/NONE) = NITROBENZENE-D5	SW8270 (SW3550/NONE) = PHENOL-D5	SW8270 (SW3550/NONE) = TERPHENYL-D14	SW8330 (SW3510/NONE) = 3,4-DINITROTOLUENE	SW8330 (SW3550/NONE) = 3,4-DINITROTOLUENE
SW8270	SW3550	SB	NDA077	N1																			76	68	68	65	72	71		
SW8270	SW3550	SB	NDA079	N1																			76	69	67	71	73	76		
SW8270	SW3550	SB	NDA081	N1																			2	1	0.7	0	1	0		
SW8270	SW3550	SB	NDA081RE1	LR																			65	63	55	59	60	74		
SW8270	SW3550	SB	NDA083	N1																			2	2	1	2	2	0		
SW8270	SW3550	SB	NDA083RE1	LR																			78	85	81	79	90	88		
SW8270	SW3550	SB	NDA114	N1																			78	67	68	68	73	78		
SW8270	SW3550	SB	NDA116	N1																			62	55	60	55	64	62		
SW8270	SW3550	SB	NDA118	N1																			58	48	58	53	61	60		
SW8270	SW3550	SB	NDA102	N1																			74	63	71	74	78	76		
SW8270	SW3550	SB	NDA105	N1																			90	70	81	83	94	89		
SW8270	SW3550	SB	NDA106FD1	FD1																			84	68	76	84	85	82		
SW8270	SW3550	SB	NDA108	N1																			84	75	73	79	84	79		
SW8270	SW3550	SB	NDA110	N1																			89	81	78	82	88	79		
SW8270	SW3550	SB	NDA112	N1																			90	61	62	75	74	87		
SW8270	SW3550	SD	NDA050	N1																			96	89	82	74	86	106		
SW8270	SW3550	SD	NDA050MS	MS																			90	75	77	77	84	90		
SW8270	SW3550	SD	NDA050SD	SD																			91	85	80	73	84	105		
SW8270	SW3550	SD	NDA051FD1	FD1																			99	80	86	84	88	96		
SW8270	SW3550	SD	NDA052	N1																			72	69	62	60	68	86		
SW8270	SW3550	SD	NDA053	N1																			90	84	80	68	80	106		
SW8270	SW3550	SD	NDA054	N1																			101	97	83	88	91	115		
SW8270	SW3550	SD	NDA055	N1																			91	85	72	80	81	95		
SW8270	SW3550	SD	NDA042	N1																			85	76	77	71	82	87		
SW8270	SW3550	SD	NDA043	N1																			88	71	78	72	82	90		
SW8270	SW3550	SD	NDA044	N1																			61	34	59	54	59	57		
SW8270	SW3550	SD	NDA045	N1																			88	60	77	73	84	75		
SW8270	SW3550	SD	NDA046	N1																			70	37	66	62	73	53		
SW8270	SW3550	SD	NDA302	N1																			83	61	73	66	76	90		
SW8270	SW3550	SD	NDA303	N1																			84	67	75	72	80	93		
SW8270	SW3550	SD	NDA307FD1	FD1																			108	78	86	87	95	107		
SW8270	SW3550	SD	NDA047	N1																			51	48	49	52	54	55		
SW8270	SW3550	SD	NDA048	N1																			61	55	55	59	65	63		
SW8270	SW3550	SD	NDA049	N1																			58	54	54	60	61	60		
SW8270	SW3550	SOIL	040800BLKS1	LB																			102	91	82	85	90	102		
SW8270	SW3550	SOIL	040800BLKS1MS	BS																			85	73	62	72	74	91		

Analytical Method	Preparation Method	Matrix	Sample ID	Sample Type	SW8081 (SW3510/NONE) = 2,4,5,6-TETRACHLORO-META-XYLENE	SW8081 (SW3510/NONE) = DECACHLOROBIPHENYL	SW8081 (SW3550/NONE) = 2,4,5,6-TETRACHLORO-META-XYLENE	SW8081 (SW3550/NONE) = DECACHLOROBIPHENYL	SW8082 (SW3510/NONE) = 2,4,5,6-TETRACHLORO-META-XYLENE	SW8082 (SW3510/NONE) = DECACHLOROBIPHENYL	SW8082 (SW3550/NONE) = 2,4,5,6-TETRACHLORO-META-XYLENE	SW8082 (SW3550/NONE) = DECACHLOROBIPHENYL	SW8260 (SW5030/NONE) = 1,2-DICHLOROETHANE-D4	SW8260 (SW5030/NONE) = 1-BROMO-4-FLUOROBENZENE (4-BROMOFLUOROBEN	SW8260 (SW5030/NONE) = TOLUENE-D8	SW8270 (SW3510/NONE) = 2,4,6-TRIBROMOPHENOL	SW8270 (SW3510/NONE) = 2-FLUOROBIPHENYL	SW8270 (SW3510/NONE) = 2-FLUOROPHENOL	SW8270 (SW3510/NONE) = NITROBENZENE-D5	SW8270 (SW3510/NONE) = PHENOL-D5	SW8270 (SW3510/NONE) = TERPHENYL-D14	SW8270 (SW3550/NONE) = 2,4,6-TRIBROMOPHENOL	SW8270 (SW3550/NONE) = 2-FLUOROBIPHENYL	SW8270 (SW3550/NONE) = 2-FLUOROPHENOL	SW8270 (SW3550/NONE) = NITROBENZENE-D5	SW8270 (SW3550/NONE) = PHENOL-D5	SW8270 (SW3550/NONE) = TERPHENYL-D14	SW8330 (SW3510/NONE) = 3,4-DINITROTOLUENE	SW8330 (SW3550/NONE) = 3,4-DINITROTOLUENE
SW8270	SW3550	SOIL	040800BLKS1SD	BD																			90	82	74	80	80	92		
SW8270	SW3550	SOIL	040800LCSS1	BS																			91	78	70	71	73	96		
SW8270	SW3550	SOIL	041100BLKS1	LB																			51	48	50	52	53	57		
SW8270	SW3550	SOIL	041100BLKS1MS	BS																			53	51	47	54	51	59		
SW8270	SW3550	SOIL	041100BLKS1SD	BD																			81	78	69	76	73	86		
SW8270	SW3550	SOIL	041100LCSS1	BS																			82	73	63	72	71	86		
SW8270	SW3550	SOIL	041100BLKS	LB																			54	52	49	53	57	57		
SW8270	SW3550	SOIL	041100LCSS1	BS																			60	55	49	52	51	65		
SW8270	SW3550	SOIL	041200BLKS1	LB																			67	62	63	66	69	69		
SW8270	SW3550	SOIL	041200BLKS1MS	BS																			85	76	69	73	75	87		
SW8270	SW3550	SOIL	041200BLKS1SD	BD																			78	70	71	70	76	81		
SW8270	SW3550	SOIL	041200LCSS1	BS																			85	77	73	76	80	88		
SW8270	SW3550	SOIL	041500BLKS1	LB																			87	83	74	75	79	90		
SW8270	SW3550	SOIL	041500BLKS1MS	BS																			92	87	76	81	76	103		
SW8270	SW3550	SOIL	041500BLKS1SD	BD																			85	83	71	75	73	87		
SW8270	SW3550	SOIL	041500LCSS1	BS																			73	59	54	56	57	76		
SW8270	SW3550	SOIL	041600BLKS1	LB																			82	75	76	80	81	85		
SW8270	SW3550	SOIL	041600BLKS1MS	BS																			77	68	64	67	69	79		
SW8270	SW3550	SOIL	041600BLKS1SD	BD																			82	76	72	75	76	85		
SW8270	SW3550	SOIL	041600LCSS1	BS																			88	81	77	80	80	87		
SW8270	SW3550	SOIL	041900BLKS1	LB																			76	72	64	67	71	83		
SW8270	SW3550	SOIL	041900LCSS1	BS																			81	78	64	71	69	91		
SW8270	SW3550	SOIL	042100BLKS1	LB																			73	71	70	64	75	85		
SW8270	SW3550	SOIL	042100LCSS1	BS																			82	78	76	71	75	88		
SW8270	SW3550	SOIL	042400BLKS1	LB																			81	77	72	75	84	91		
SW8270	SW3550	SOIL	042400LCSS1	BS																			91	87	82	85	88	98		
SW8270	SW3550	SOIL	042400BLKS1	LB																			72	69	66	64	69	79		
SW8270	SW3550	SOIL	042400LCSS1	BS																			85	74	77	68	77	88		
SW8270	SW3550	SOIL	042100BLKS1	LB																			73	71	70	64	75	85		
SW8270	SW3550	SOIL	042100LCSS1	BS																			82	78	76	71	75	88		
SW8270	SW3550	SOIL	042400BLKS1	LB																			73	68	67	65	73	78		
SW8270	SW3550	SOIL	042400LCSS1	BS																			84	74	79	67	77	85		
SW8270	SW3550	SOIL	042600BLKS1	LB																			59	59	59	62	70	64		
SW8270	SW3550	SOIL	042600LCSS1	BS																			57	54	56	57	62	61		
SW8270	SW3550	SOIL	042700BLKS1	LB																			92	88	80	87	85	105		
SW8270	SW3550	SOIL	042700LCSS1	BS																			86	82	68	78	76	93		

Analytical Method	Preparation Method	Matrix	Sample ID	Sample Type	SW8081 (SW3510/NONE) = 2,4,5,6-TETRACHLORO-META-XYLENE	SW8081 (SW3510/NONE) = DECACHLOROBIPHENYL	SW8081 (SW3550/NONE) = 2,4,5,6-TETRACHLORO-META-XYLENE	SW8081 (SW3550/NONE) = DECACHLOROBIPHENYL	SW8082 (SW3510/NONE) = 2,4,5,6-TETRACHLORO-META-XYLENE	SW8082 (SW3510/NONE) = DECACHLOROBIPHENYL	SW8082 (SW3550/NONE) = 2,4,5,6-TETRACHLORO-META-XYLENE	SW8082 (SW3550/NONE) = DECACHLOROBIPHENYL	SW8260 (SW5030/NONE) = 1,2-DICHLOROETHANE-D4	SW8260 (SW5030/NONE) = 1-BROMO-4-FLUOROBENZENE (4-BROMOFLUOROBEN	SW8260 (SW5030/NONE) = TOLUENE-D8	SW8270 (SW3510/NONE) = 2,4,6-TRIBROMOPHENOL	SW8270 (SW3510/NONE) = 2-FLUOROBIPHENYL	SW8270 (SW3510/NONE) = 2-FLUOROPHENOL	SW8270 (SW3510/NONE) = NITROBENZENE-D5	SW8270 (SW3510/NONE) = PHENOL-D5	SW8270 (SW3510/NONE) = TERPHENYL-D14	SW8270 (SW3550/NONE) = 2,4,6-TRIBROMOPHENOL	SW8270 (SW3550/NONE) = 2-FLUOROBIPHENYL	SW8270 (SW3550/NONE) = 2-FLUOROPHENOL	SW8270 (SW3550/NONE) = NITROBENZENE-D5	SW8270 (SW3550/NONE) = PHENOL-D5	SW8270 (SW3550/NONE) = TERPHENYL-D14	SW8330 (SW3510/NONE) = 3,4-DINITROTOLUENE	SW8330 (SW3550/NONE) = 3,4-DINITROTOLUENE
SW8270	SW3550	SOIL	042800BLKS1	LB																				76	71	69	71	74	76		
SW8270	SW3550	SOIL	042800BLKS1MS	BS																				81	76	75	72	76	81		
SW8270	SW3550	SOIL	042800BLKS1SD	BD																				80	74	73	75	73	83		
SW8270	SW3550	SOIL	042800LCSS1	BS																				77	71	71	69	73	77		
SW8270	SW3550	SOIL	051100BLKS1	LB																				99	92	84	87	93	92		
SW8270	SW3550	SOIL	051100BLKS1MS	BS																				79	73	67	65	70	74		
SW8270	SW3550	SOIL	051100BLKS1SD	BD																				90	81	74	77	81	87		
SW8270	SW3550	SOIL	051100LCSS1	BS																				91	80	76	80	78	93		
SW8270	SW3550	SOIL	042700BLKS1	LB																				58	57	57	56	63	64		
SW8270	SW3550	SOIL	042700BLKS1MS	BS																				58	56	53	51	56	61		
SW8270	SW3550	SOIL	042700BLKS1SD	BD																				59	55	59	52	58	59		
SW8270	SW3550	SOIL	042700LCSS1	BS																				56	54	56	53	60	55		
SW8270	SW3550	SOIL	050100BLKS1	LB																				82	86	82	86	84	96		
SW8270	SW3550	SOIL	050100BLKS1MS	BS																				86	84	84	86	88	95		
SW8270	SW3550	SOIL	050100BLKS1SD	BD																				73	70	73	71	76	79		
SW8270	SW3550	SOIL	050100LCSS1	BS																				77	74	76	80	80	83		
SW8270	SW3550	SS	NDA125	N1																				98	89	76	88	88	99		
SW8270	SW3550	SS	NDA127	N1																				105	100	89	98	102	111		
SW8270	SW3550	SS	NDA127MS	MS																				109	109	95	104	116	112		
SW8270	SW3550	SS	NDA127SD	SD																				77	74	76	71	81	77		
SW8270	SW3550	SS	NDA128FD1	FD1																				81	80	69	83	79	83		
SW8270	SW3550	SS	NDA131	N1																				75	75	63	73	71	80		
SW8270	SW3550	SS	NDA133	N1																				105	99	83	98	96	114		
SW8270	SW3550	SS	NDA135	N1																				98	96	81	92	94	106		
SW8270	SW3550	SS	NDA137	N1																				70	72	67	68	79	81		
SW8270	SW3550	SS	NDA139	N1																				74	69	60	69	71	76		
SW8270	SW3550	SS	NDA141	N1																				74	69	59	68	67	85		
SW8270	SW3550	SS	NDA143	N1																				65	69	56	65	66	79		
SW8270	SW3550	SS	NDA145	N1																				71	73	68	73	79	80		
SW8270	SW3550	SS	NDA147	N1																				63	59	56	58	63	69		
SW8270	SW3550	SS	NDA149	N1																				71	68	63	70	70	75		
SW8270	SW3550	SS	NDA149MS	MS																				79	78	67	75	74	85		
SW8270	SW3550	SS	NDA149SD	SD																				70	69	63	66	65	73		
SW8270	SW3550	SS	NDA150FD1	FD1																				80	78	77	76	84	89		
SW8270	SW3550	SS	NDA153	N1																				90	88	76	74	92	111		
SW8270	SW3550	SS	NDA155	N1																				71	63	62	65	73	87		

Analytical Method	Preparation Method	Matrix	Sample ID	Sample Type	SW8081 (SW3510/NONE) = 2,4,5,6-TETRACHLORO-META-XYLENE	SW8081 (SW3510/NONE) = DECACHLOROBIPHENYL	SW8081 (SW3550/NONE) = 2,4,5,6-TETRACHLORO-META-XYLENE	SW8081 (SW3550/NONE) = DECACHLOROBIPHENYL	SW8082 (SW3510/NONE) = 2,4,5,6-TETRACHLORO-META-XYLENE	SW8082 (SW3510/NONE) = DECACHLOROBIPHENYL	SW8082 (SW3550/NONE) = 2,4,5,6-TETRACHLORO-META-XYLENE	SW8082 (SW3550/NONE) = DECACHLOROBIPHENYL	SW8260 (SW5030/NONE) = 1,2-DICHLOROETHANE-D4	SW8260 (SW5030/NONE) = 1-BROMO-4-FLUOROBENZENE (4-BROMOFLUOROBEN	SW8260 (SW5030/NONE) = TOLUENE-D8	SW8270 (SW3510/NONE) = 2,4,6-TRIBROMOPHENOL	SW8270 (SW3510/NONE) = 2-FLUOROBIPHENYL	SW8270 (SW3510/NONE) = 2-FLUOROPHENOL	SW8270 (SW3510/NONE) = NITROBENZENE-D5	SW8270 (SW3510/NONE) = PHENOL-D5	SW8270 (SW3510/NONE) = TERPHENYL-D14	SW8270 (SW3550/NONE) = 2,4,6-TRIBROMOPHENOL	SW8270 (SW3550/NONE) = 2-FLUOROBIPHENYL	SW8270 (SW3550/NONE) = 2-FLUOROPHENOL	SW8270 (SW3550/NONE) = NITROBENZENE-D5	SW8270 (SW3550/NONE) = PHENOL-D5	SW8270 (SW3550/NONE) = TERPHENYL-D14	SW8330 (SW3510/NONE) = 3,4-DINITROTOLUENE	SW8330 (SW3550/NONE) = 3,4-DINITROTOLUENE
SW8270	SW3550	SS	NDA157	N1																			68	64	57	60	62	82		
SW8270	SW3550	SS	NDA159	N1																			72	75	59	66	68	89		
SW8270	SW3550	SS	NDA161	N1																			72	67	58	61	69	73		
SW8270	SW3550	SS	NDA164	N1																			75	68	67	69	83	88		
SW8270	SW3550	SS	NDA166	N1																			91	76	64	70	77	95		
SW8270	SW3550	SS	NDA168	N1																			107	97	83	84	92	115		
SW8270	SW3550	SS	NDA170	N1																			91	94	78	89	93	125		
SW8270	SW3550	SS	NDA172	N1																			90	84	71	83	81	103		
SW8270	SW3550	SS	NDA174	N1																			81	85	71	79	77	102		
SW8270	SW3550	SS	NDA176	N1																			45	49	46	50	54	56		
SW8270	SW3550	SS	NDA196	N1																			59	56	59	58	63	61		
SW8270	SW3550	SS	NDA197FD1	FD1																			60	58	61	60	66	65		
SW8270	SW3550	SS	NDA198	N1																			77	71	67	73	78	84		
SW8270	SW3550	SS	NDA199	N1																			55	50	49	52	59	59		
SW8270	SW3550	SS	NDA200	N1																			79	74	69	73	79	84		
SW8270	SW3550	SS	NDA178	N1																			87	84	70	79	78	91		
SW8270	SW3550	SS	NDA179	N1																			64	63	51	57	58	70		
SW8270	SW3550	SS	NDA180	N1																			85	79	71	77	81	88		
SW8270	SW3550	SS	NDA181	N1																			82	82	60	76	69	82		
SW8270	SW3550	SS	NDA182	N1																			86	86	74	80	88	97		
SW8270	SW3550	SS	NDA183	N1																			74	73	64	66	72	91		
SW8270	SW3550	SS	NDA183MS	MS																			71	74	65	71	74	89		
SW8270	SW3550	SS	NDA183SD	SD																			67	66	53	58	64	69		
SW8270	SW3550	SS	NDA184FD1	FD1																			86	90	72	79	86	106		
SW8270	SW3550	SS	NDA201	N1																			82	74	64	72	75	111		
SW8270	SW3550	SS	NDA202	N1																			79	77	59	68	75	103		
SW8270	SW3550	SS	NDA203	N1																			94	78	74	65	85	130		
SW8270	SW3550	SS	NDA204	N1																			76	62	54	60	63	73		
SW8270	SW3550	SS	NDA205FD1	FD1																			88	81	73	74	87	115		
SW8270	SW3550	SS	NDA206	N1																			75	75	60	65	71	87		
SW8270	SW3550	SS	NDA207	N1																			42	36	33	32	41	49		
SW8270	SW3550	SS	NDA208	N1																			75	66	49	53	61	83		
SW8270	SW3550	SS	NDA209	N1																			82	65	57	65	71	84		
SW8270	SW3550	SS	NDA210	N1																			54	44	42	40	50	60		
SW8270	SW3550	SS	NDA211	N1																			72	65	54	61	64	74		
SW8270	SW3550	SS	NDA212	N1																			83	60	45	57	68	86		

Analytical Method	Preparation Method	Matrix	Sample ID	Sample Type	SW8081 (SW3510/NONE) = 2,4,5,6-TETRACHLORO-META-XYLENE	SW8081 (SW3510/NONE) = DECACHLOROBIPHENYL	SW8081 (SW3550/NONE) = 2,4,5,6-TETRACHLORO-META-XYLENE	SW8081 (SW3550/NONE) = DECACHLOROBIPHENYL	SW8082 (SW3510/NONE) = 2,4,5,6-TETRACHLORO-META-XYLENE	SW8082 (SW3510/NONE) = DECACHLOROBIPHENYL	SW8082 (SW3550/NONE) = 2,4,5,6-TETRACHLORO-META-XYLENE	SW8082 (SW3550/NONE) = DECACHLOROBIPHENYL	SW8260 (SW5030/NONE) = 1,2-DICHLOROETHANE-D4	SW8260 (SW5030/NONE) = 1-BROMO-4-FLUOROBENZENE (4-BROMOFLUOROBEN	SW8260 (SW5030/NONE) = TOLUENE-D8	SW8270 (SW3510/NONE) = 2,4,6-TRIBROMOPHENOL	SW8270 (SW3510/NONE) = 2-FLUOROBIPHENYL	SW8270 (SW3510/NONE) = 2-FLUOROPHENOL	SW8270 (SW3510/NONE) = NITROBENZENE-D5	SW8270 (SW3510/NONE) = PHENOL-D5	SW8270 (SW3510/NONE) = TERPHENYL-D14	SW8270 (SW3550/NONE) = 2,4,6-TRIBROMOPHENOL	SW8270 (SW3550/NONE) = 2-FLUOROBIPHENYL	SW8270 (SW3550/NONE) = 2-FLUOROPHENOL	SW8270 (SW3550/NONE) = NITROBENZENE-D5	SW8270 (SW3550/NONE) = PHENOL-D5	SW8270 (SW3550/NONE) = TERPHENYL-D14	SW8330 (SW3510/NONE) = 3,4-DINITROTOLUENE	SW8330 (SW3550/NONE) = 3,4-DINITROTOLUENE
SW8270	SW3550	SS	NDA185	N1																			81	71	67	73	78	87		
SW8270	SW3550	SS	NDA186	N1																			90	92	77	87	90	90		
SW8270	SW3550	SS	NDA187	N1																			62	82	59	73	86	103		
SW8270	SW3550	SS	NDA188	N1																			104	88	80	88	99	111		
SW8270	SW3550	SS	NDA189	N1																			101	86	65	84	93	108		
SW8270	SW3550	SS	NDA190	N1																			77	82	56	77	81	96		
SW8270	SW3550	SS	NDA191	N1																			89	90	73	84	90	106		
SW8270	SW3550	SS	NDA192FD1	FD1																			91	85	67	87	85	111		
SW8270	SW3550	SS	NDA193	N1																			75	76	64	69	76	88		
SW8270	SW3550	SS	NDA194	N1																			88	63	70	70	82	101		
SW8270	SW3550	SS	NDA195	N1																			97	87	79	75	87	110		
SW8270	SW3550	SS	NDA084	N1																			90	81	86	79	87	112		
SW8270	SW3550	SS	NDA086	N1																			74	69	66	67	74	87		
SW8270	SW3550	SS	NDA088	N1																			77	71	72	69	78	84		
SW8270	SW3550	SS	NDA088MS	MS																			72	69	65	61	68	76		
SW8270	SW3550	SS	NDA088SD	SD																			73	68	66	63	71	78		
SW8270	SW3550	SS	NDA091	N1																			84	74	74	71	78	80		
SW8270	SW3550	SS	NDA091MS	MS																			85	75	78	73	83	82		
SW8270	SW3550	SS	NDA091SD	SD																			85	77	86	78	90	82		
SW8270	SW3550	SS	NDA057	N1																			58	55	53	60	62	60		
SW8270	SW3550	SS	NDA059	N1																			54	52	52	56	57	56		
SW8270	SW3550	SS	NDA061	N1																			55	52	52	55	61	57		
SW8270	SW3550	SS	NDA061MS	MS																			59	58	59	62	66	61		
SW8270	SW3550	SS	NDA061SD	SD																			54	50	50	54	57	56		
SW8270	SW3550	SS	NDA062FD1	FD1																			56	51	51	57	58	58		
SW8270	SW3550	SS	NDA065	N1																			86	79	73	79	76	88		
SW8270	SW3550	SS	NDA067	N1																			67	69	64	66	66	66		
SW8270	SW3550	SS	NDA069	N1																			71	75	67	70	72	69		
SW8270	SW3550	SS	NDA119	N1																			79	76	66	74	72	77		
SW8270	SW3550	SS	NDA120	N1																			85	79	70	79	77	84		
SW8270	SW3550	SS	NDA121	N1																			73	72	66	70	69	76		
SW8270	SW3550	SS	NDA122	N1																			90	84	77	84	84	82		
SW8270	SW3550	SS	NDA123	N1																			60	57	49	55	57	57		
SW8270	SW3550	SS	NDA124	N1																			96	88	77	90	91	96		
SW8270	SW3550	SS	NDA071	N1																			76	69	71	73	77	75		
SW8270	SW3550	SS	NDA071MS	MS																			81	73	73	76	[illegible]	78		

Analytical Method	Preparation Method	Matrix	Sample ID	Sample Type	SW8081 (SW3510/NONE) = 2,4,5,6-TETRACHLORO-META-XYLENE	SW8081 (SW3510/NONE) = DECACHLOROBIPHENYL	SW8081 (SW3550/NONE) = 2,4,5,6-TETRACHLORO-META-XYLENE	SW8081 (SW3550/NONE) = DECACHLOROBIPHENYL	SW8082 (SW3510/NONE) = 2,4,5,6-TETRACHLORO-META-XYLENE	SW8082 (SW3510/NONE) = DECACHLOROBIPHENYL	SW8082 (SW3550/NONE) = 2,4,5,6-TETRACHLORO-META-XYLENE	SW8082 (SW3550/NONE) = DECACHLOROBIPHENYL	SW8260 (SW5030/NONE) = 1,2-DICHLOROETHANE-D4	SW8260 (SW5030/NONE) = 1-BROMO-4-FLUOROBENZENE (4-BROMOFLUOROBEN	SW8260 (SW5030/NONE) = TOLUENE-D8	SW8270 (SW3510/NONE) = 2,4,6-TRIBROMOPHENOL	SW8270 (SW3510/NONE) = 2-FLUOROBIPHENYL	SW8270 (SW3510/NONE) = 2-FLUOROPHENOL	SW8270 (SW3510/NONE) = NITROBENZENE-D5	SW8270 (SW3510/NONE) = PHENOL-D5	SW8270 (SW3510/NONE) = TERPHENYL-D14	SW8270 (SW3550/NONE) = 2,4,6-TRIBROMOPHENOL	SW8270 (SW3550/NONE) = 2-FLUOROBIPHENYL	SW8270 (SW3550/NONE) = 2-FLUOROPHENOL	SW8270 (SW3550/NONE) = NITROBENZENE-D5	SW8270 (SW3550/NONE) = PHENOL-D5	SW8270 (SW3550/NONE) = TERPHENYL-D14	SW8330 (SW3510/NONE) = 3,4-DINITROTOLUENE	SW8330 (SW3550/NONE) = 3,4-DINITROTOLUENE
SW8270	SW3550	SS	NDA071SD	SD																			80	71	71	71	74	77		
SW8270	SW3550	SS	NDA072FD1	FD1																			80	72	69	75	73	77		
SW8270	SW3550	SS	NDA074	N1																			72	67	63	65	65	71		
SW8270	SW3550	SS	NDA076	N1																			65	60	56	63	59	64		
SW8270	SW3550	SS	NDA078	N1																			74	68	63	69	69	74		
SW8270	SW3550	SS	NDA080	N1																			53	58	52	59	58	57		
SW8270	SW3550	SS	NDA080RE1	LR																			51	56	49	56	58	54		
SW8270	SW3550	SS	NDA082	N1																			0	0	0	0	0	0		
SW8270	SW3550	SS	NDA082RE1	LR																			86	86	83	86	91	98		
SW8270	SW3550	SS	NDA113	N1																			73	69	64	64	70	74		
SW8270	SW3550	SS	NDA115	N1																			54	48	53	48	57	55		
SW8270	SW3550	SS	NDA117	N1																			84	77	74	78	77	84		
SW8270	SW3550	SS	NDA101	N1																			23	20	23	23	25	25		
SW8270	SW3550	SS	NDA103	N1																			79	70	73	74	79	77		
SW8270	SW3550	SS	NDA104FD1	FD1																			94	73	82	86	91	88		
SW8270	SW3550	SS	NDA107	N1																			76	75	72	77	83	73		
SW8270	SW3550	SS	NDA109	N1																			76	68	71	70	79	69		
SW8270	SW3550	SS	NDA111	N1																			64	42	48	52	58	63		
SW8330	SW3510	SW	NDA035	N1																									83	
SW8330	SW3510	SW	NDA036	N1																									80	
SW8330	SW3510	SW	NDA037	N1																									64	
SW8330	SW3510	SW	NDA037MS	MS																									72	
SW8330	SW3510	SW	NDA037SD	SD																									65	
SW8330	SW3510	SW	NDA038FD1	FD1																									71	
SW8330	SW3510	SW	NDA039	N1																									44	
SW8330	SW3510	SW	NDA040	N1																									81	
SW8330	SW3510	SW	NDA300	N1																									63	
SW8330	SW3510	SW	NDA301	N1																									148	
SW8330	SW3510	WATER	041700BLKA	LB																									79	
SW8330	SW3510	WATER	041700LCSA	BS																									89	
SW8330	SW3510	WATER	042500BLKA	LB																									77	
SW8330	SW3510	WATER	042500BLKAMS	BS																									77	
SW8330	SW3510	WATER	042500BLKASD	BD																									87	
SW8330	SW3510	WATER	042500LCSA	BS																									83	
SW8330	SW3510	WATER	042500BLKA	LB																									77	
SW8330	SW3510	WATER	042500BLKAMS	BS																									77	

Analytical Method	Preparation Method	Matrix	Sample ID	Sample Type	SW8081 (SW3510/NONE) = 2,4,5,6-TETRACHLORO-META-XYLENE	SW8081 (SW3510/NONE) = DECACHLOROBIPHENYL	SW8081 (SW3550/NONE) = 2,4,5,6-TETRACHLORO-META-XYLENE	SW8081 (SW3550/NONE) = DECACHLOROBIPHENYL	SW8082 (SW3510/NONE) = 2,4,5,6-TETRACHLORO-META-XYLENE	SW8082 (SW3510/NONE) = DECACHLOROBIPHENYL	SW8082 (SW3550/NONE) = 2,4,5,6-TETRACHLORO-META-XYLENE	SW8082 (SW3550/NONE) = DECACHLOROBIPHENYL	SW8260 (SW5030/NONE) = 1,2-DICHLOROETHANE-D4	SW8260 (SW5030/NONE) = 1-BROMO-4-FLUOROBENZENE (4-BROMOFLUOROBEN	SW8260 (SW5030/NONE) = TOLUENE-D8	SW8270 (SW3510/NONE) = 2,4,6-TRIBROMOPHENOL	SW8270 (SW3510/NONE) = 2-FLUOROBIPHENYL	SW8270 (SW3510/NONE) = 2-FLUOROPHENOL	SW8270 (SW3510/NONE) = NITROBENZENE-D5	SW8270 (SW3510/NONE) = PHENOL-D5	SW8270 (SW3510/NONE) = TERPHENYL-D14	SW8270 (SW3550/NONE) = 2,4,6-TRIBROMOPHENOL	SW8270 (SW3550/NONE) = 2-FLUOROBIPHENYL	SW8270 (SW3550/NONE) = 2-FLUOROPHENOL	SW8270 (SW3550/NONE) = NITROBENZENE-D5	SW8270 (SW3550/NONE) = PHENOL-D5	SW8270 (SW3550/NONE) = TERPHENYL-D14	SW8330 (SW3510/NONE) = 3,4-DINITROTOLUENE	SW8330 (SW3550/NONE) = 3,4-DINITROTOLUENE
SW8330	SW3510	WATER	042500BLKASD	BD																							87	
SW8330	SW3510	WATER	042500LCSA	BS																							83	
SW8330	SW3510	WATER	052300BLKA	LB																							75	
SW8330	SW3510	WATER	052300BLKAMS	BS																							91	
SW8330	SW3510	WATER	052300BLKASD	BD																							91	
SW8330	SW3510	WATER	052300LCSA	BS																							86	
SW8330	SW3510	WATER	050300BLKA	LB																							99	
SW8330	SW3510	WATER	050300BLKALCS	BS																							81	
SW8330	SW3510	WATER	050300BLKAMS	BS																							96	
SW8330	SW3510	WATER	050300BLKASD	BD																							93	
SW8330	SW3510	WATER	050300BLKA	LB																							99	
SW8330	SW3510	WATER	050300BLKALCS	BS																							81	
SW8330	SW3510	WATER	050300BLKAMS	BS																							96	
SW8330	SW3510	WATER	050300BLKASD	BD																							93	
SW8330	SW3510	WATER	050500BLKA	LB																							85	
SW8330	SW3510	WATER	050500LCSA	BS																							100	
SW8330	SW3510	WG	NDA002	N1																							107	
SW8330	SW3510	WG	NDA003	N1																							105	
SW8330	SW3510	WG	NDA004	N1																							103	
SW8330	SW3510	WG	NDA003FD1	N1																							103	
SW8330	SW3510	WG	NDA001	N1																							54	
SW8330	SW3510	WG	NDA005	N1																							21	
SW8330	SW3510	WG	NDA006	N1																							20	
SW8330	SW3510	WG	NDA008	N1																							29	
SW8330	SW3510	WG	NDA009	N1																							29	
SW8330	SW3510	WG	NDA010	N1																							107	
SW8330	SW3510	WG	NDA011	N1																							75	
SW8330	SW3510	WG	NDA011MS	MS																							98	
SW8330	SW3510	WG	NDA011SD	SD																							97	
SW8330	SW3510	WG	NDA012	N1																							44	
SW8330	SW3510	WG	NDA0321FD1	FD1																							18	
SW8330	SW3510	WQ	NDA305EB1	EB1																							90	
SW8330	SW3510	WQ	NDA306EB2	EB2																							189	
SW8330	SW3510	WQ	NDA310EB2	EB2																							95	
SW8330	SW3510	WQ	NDA033AB1	AB1																							88	
SW8330	SW3510	WQ	NDA309EB1	EB1																							96	

Analytical Method	Preparation Method	Matrix	Sample ID	Sample Type	SW8081 (SW3510/NONE) = 2,4,5,6-TETRACHLORO-META-XYLENE	SW8081 (SW3510/NONE) = DECACHLOROBIPHENYL	SW8081 (SW3550/NONE) = 2,4,5,6-TETRACHLORO-META-XYLENE	SW8081 (SW3550/NONE) = DECACHLOROBIPHENYL	SW8082 (SW3510/NONE) = 2,4,5,6-TETRACHLORO-META-XYLENE	SW8082 (SW3510/NONE) = DECACHLOROBIPHENYL	SW8082 (SW3550/NONE) = 2,4,5,6-TETRACHLORO-META-XYLENE	SW8082 (SW3550/NONE) = DECACHLOROBIPHENYL	SW8260 (SW5030/NONE) = 1,2-DICHLOROETHANE-D4	SW8260 (SW5030/NONE) = 1-BROMO-4-FLUOROBENZENE (4-BROMOFLUOROBEN	SW8260 (SW5030/NONE) = TOLUENE-D8	SW8270 (SW3510/NONE) = 2,4,6-TRIBROMOPHENOL	SW8270 (SW3510/NONE) = 2-FLUOROBIPHENYL	SW8270 (SW3510/NONE) = 2-FLUOROPHENOL	SW8270 (SW3510/NONE) = NITROBENZENE-D5	SW8270 (SW3510/NONE) = PHENOL-D5	SW8270 (SW3510/NONE) = TERPHENYL-D14	SW8270 (SW3550/NONE) = 2,4,6-TRIBROMOPHENOL	SW8270 (SW3550/NONE) = 2-FLUOROBIPHENYL	SW8270 (SW3550/NONE) = 2-FLUOROPHENOL	SW8270 (SW3550/NONE) = NITROBENZENE-D5	SW8270 (SW3550/NONE) = PHENOL-D5	SW8270 (SW3550/NONE) = TERPHENYL-D14	SW8330 (SW3510/NONE) = 3,4-DINITROTOLUENE	SW8330 (SW3550/NONE) = 3,4-DINITROTOLUENE
SW8330	SW3510	WQ	NDA311EB1	EB1																							96	
SW8330	SW3510	WQ	NDA030EB1	EB1																							105	
SW8330	SW3510	WQ	NDA034AB2	AB2																							50	
SW8330	SW3510	WQ	NDA316EB1	EB1																							106	
SW8330	SW3510	WQ	NDA318EB1	EB1																							104	
SW8330	SW3510	WQ	NDA323EB1	EB1																							19	
SW8330	SW3510	WQ	NDA324EB2	EB2																							18	
SW8330	SW3510	WQ	NDA325AB1	AB1																							20	
SW8330	SW3550	SB	NDA058	N1																								100
SW8330	SW3550	SB	NDA060	N1																								101
SW8330	SW3550	SB	NDA063	N1																								28
SW8330	SW3550	SB	NDA063MS	MS																								115
SW8330	SW3550	SB	NDA063SD	SD																								116
SW8330	SW3550	SB	NDA064FD1	FD1																								92
SW8330	SW3550	SB	NDA066	N1																								101
SW8330	SW3550	SB	NDA068	N1																								92
SW8330	SW3550	SB	NDA070	N1																								106
SW8330	SW3550	SB	NDA073	N1																								113
SW8330	SW3550	SB	NDA075	N1																								116
SW8330	SW3550	SB	NDA077	N1																								121
SW8330	SW3550	SB	NDA079	N1																								56
SW8330	SW3550	SB	NDA081	N1																								106
SW8330	SW3550	SB	NDA083	N1																								112
SW8330	SW3550	SB	NDA114	N1																								91
SW8330	SW3550	SB	NDA116	N1																								96
SW8330	SW3550	SB	NDA118	N1																								85
SW8330	SW3550	SB	NDA102	N1																								110
SW8330	SW3550	SB	NDA105	N1																								113
SW8330	SW3550	SB	NDA106FD1	FD1																								112
SW8330	SW3550	SB	NDA108	N1																								104
SW8330	SW3550	SB	NDA110	N1																								112
SW8330	SW3550	SB	NDA112	N1																								111
SW8330	SW3550	SD	NDA042	N1																								100
SW8330	SW3550	SD	NDA043	N1																								97
SW8330	SW3550	SD	NDA044	N1																								94
SW8330	SW3550	SD	NDA045	N1																								91

Analytical Method	Preparation Method	Matrix	Sample ID	Sample Type	SW8081 (SW3510/NONE) = 2,4,5,6-TETRACHLORO-META-XYLENE	SW8081 (SW3510/NONE) = DECACHLOROBIPHENYL	SW8081 (SW3550/NONE) = 2,4,5,6-TETRACHLORO-META-XYLENE	SW8081 (SW3550/NONE) = DECACHLOROBIPHENYL	SW8082 (SW3510/NONE) = 2,4,5,6-TETRACHLORO-META-XYLENE	SW8082 (SW3510/NONE) = DECACHLOROBIPHENYL	SW8082 (SW3550/NONE) = 2,4,5,6-TETRACHLORO-META-XYLENE	SW8082 (SW3550/NONE) = DECACHLOROBIPHENYL	SW8260 (SW5030/NONE) = 1,2-DICHLOROETHANE-D4	SW8260 (SW5030/NONE) = 1-BROMO-4-FLUOROBENZENE (4-BROMOFLUOROBEN	SW8260 (SW5030/NONE) = TOLUENE-D8	SW8270 (SW3510/NONE) = 2,4,6-TRIBROMOPHENOL	SW8270 (SW3510/NONE) = 2-FLUOROBIPHENYL	SW8270 (SW3510/NONE) = 2-FLUOROPHENOL	SW8270 (SW3510/NONE) = NITROBENZENE-D5	SW8270 (SW3510/NONE) = PHENOL-D5	SW8270 (SW3510/NONE) = TERPHENYL-D14	SW8270 (SW3550/NONE) = 2,4,6-TRIBROMOPHENOL	SW8270 (SW3550/NONE) = 2-FLUOROBIPHENYL	SW8270 (SW3550/NONE) = 2-FLUOROPHENOL	SW8270 (SW3550/NONE) = NITROBENZENE-D5	SW8270 (SW3550/NONE) = PHENOL-D5	SW8270 (SW3550/NONE) = TERPHENYL-D14	SW8330 (SW3510/NONE) = 3,4-DINITROTOLUENE	SW8330 (SW3550/NONE) = 3,4-DINITROTOLUENE
SW8330	SW3550	SD	NDA046	N1																							88
SW8330	SW3550	SD	NDA302	N1																							86
SW8330	SW3550	SD	NDA303	N1																							93
SW8330	SW3550	SD	NDA307FD1	FD1																							87
SW8330	SW3550	SD	NDA047	N1																							111
SW8330	SW3550	SD	NDA048	N1																							92
SW8330	SW3550	SD	NDA049	N1																							96
SW8330	SW3550	SOIL	042500BLKS	LB																							100
SW8330	SW3550	SOIL	042500BLKSMS	BS																							100
SW8330	SW3550	SOIL	042500BLKSSD	BD																							102
SW8330	SW3550	SOIL	042500LCSS	BS																							97
SW8330	SW3550	SOIL	042500BLKS	LB																							100
SW8330	SW3550	SOIL	042500LCSS	BS																							97
SW8330	SW3550	SOIL	043000BLKS	LB																							117
SW8330	SW3550	SOIL	043000LCSS	BS																							108
SW8330	SW3550	SOIL	042600LCSS	BS																							103
SW8330	SW3550	SOIL	042700BLKS	LB																							107
SW8330	SW3550	SOIL	050200BLKS	LB																							35
SW8330	SW3550	SOIL	050200BLKSMS	BS																							32
SW8330	SW3550	SOIL	050200BLKSSD	BD																							34
SW8330	SW3550	SOIL	050200LCSS	BS																							34
SW8330	SW3550	SOIL	043000BLKS	LB																							117
SW8330	SW3550	SOIL	043000LCSS	BS																							108
SW8330	SW3550	SOIL	042600LCSS	BS																							103
SW8330	SW3550	SOIL	042700BLKS	LB																							107
SW8330	SW3550	SOIL	042700BLKSMS	BS																							107
SW8330	SW3550	SOIL	042700BLKSSD	BD																							99
SW8330	SW3550	SOIL	050400BLKS	LB																							102
SW8330	SW3550	SOIL	050400BLKSMS	BS																							92
SW8330	SW3550	SOIL	050400BLKSSD	BD																							101
SW8330	SW3550	SOIL	050400LCSS	BS																							108
SW8330	SW3550	SS	NDA057	N1																							99
SW8330	SW3550	SS	NDA059	N1																							95
SW8330	SW3550	SS	NDA061	N1																							93
SW8330	SW3550	SS	NDA061MS	MS																							92
SW8330	SW3550	SS	NDA061SD	SD																							91

Analytical Method	Preparation Method	Matrix	Sample ID	Sample Type	SW8081 (SW3510/NONE) = 2,4,5,6-TETRACHLORO-META-XYLENE	SW8081 (SW3510/NONE) = DECACHLOROBIPHENYL	SW8081 (SW3550/NONE) = 2,4,5,6-TETRACHLORO-META-XYLENE	SW8081 (SW3550/NONE) = DECACHLOROBIPHENYL	SW8082 (SW3510/NONE) = 2,4,5,6-TETRACHLORO-META-XYLENE	SW8082 (SW3510/NONE) = DECACHLOROBIPHENYL	SW8082 (SW3550/NONE) = 2,4,5,6-TETRACHLORO-META-XYLENE	SW8082 (SW3550/NONE) = DECACHLOROBIPHENYL	SW8260 (SW5030/NONE) = 1,2-DICHLOROETHANE-D4	SW8260 (SW5030/NONE) = 1-BROMO-4-FLUOROBENZENE (4-BROMOFLUOROBEN	SW8260 (SW5030/NONE) = TOLUENE-D8	SW8270 (SW3510/NONE) = 2,4,6-TRIBROMOPHENOL	SW8270 (SW3510/NONE) = 2-FLUOROBIPHENYL	SW8270 (SW3510/NONE) = 2-FLUOROPHENOL	SW8270 (SW3510/NONE) = NITROBENZENE-D5	SW8270 (SW3510/NONE) = PHENOL-D5	SW8270 (SW3510/NONE) = TERPHENYL-D14	SW8270 (SW3550/NONE) = 2,4,6-TRIBROMOPHENOL	SW8270 (SW3550/NONE) = 2-FLUOROBIPHENYL	SW8270 (SW3550/NONE) = 2-FLUOROPHENOL	SW8270 (SW3550/NONE) = NITROBENZENE-D5	SW8270 (SW3550/NONE) = PHENOL-D5	SW8270 (SW3550/NONE) = TERPHENYL-D14	SW8330 (SW3510/NONE) = 3,4-DINITROTOLUENE	SW8330 (SW3550/NONE) = 3,4-DINITROTOLUENE
SW8330	SW3550	SS	NDA062FD1	FD1																								100
SW8330	SW3550	SS	NDA065	N1																								88
SW8330	SW3550	SS	NDA067	N1																								69
SW8330	SW3550	SS	NDA069	N1																								66
SW8330	SW3550	SS	NDA119	N1																								41
SW8330	SW3550	SS	NDA120	N1																								37
SW8330	SW3550	SS	NDA121	N1																								38
SW8330	SW3550	SS	NDA122	N1																								41
SW8330	SW3550	SS	NDA123	N1																								38
SW8330	SW3550	SS	NDA124	N1																								39
SW8330	SW3550	SS	NDA071	N1																								112
SW8330	SW3550	SS	NDA071MS	MS																								104
SW8330	SW3550	SS	NDA071SD	SD																								103
SW8330	SW3550	SS	NDA072FD1	FD1																								56
SW8330	SW3550	SS	NDA074	N1																								107
SW8330	SW3550	SS	NDA076	N1																								111
SW8330	SW3550	SS	NDA078	N1																								51
SW8330	SW3550	SS	NDA078RE1	LR																								20
SW8330	SW3550	SS	NDA080	N1																								116
SW8330	SW3550	SS	NDA082	N1																								57
SW8330	SW3550	SS	NDA113	N1																								94
SW8330	SW3550	SS	NDA115	N1																								98
SW8330	SW3550	SS	NDA117	N1																								86
SW8330	SW3550	SS	NDA101	N1																								111
SW8330	SW3550	SS	NDA103	N1																								106
SW8330	SW3550	SS	NDA104FD1	FD1																								4.5
SW8330	SW3550	SS	NDA107	N1																								109
SW8330	SW3550	SS	NDA109	N1																								109
SW8330	SW3550	SS	NDA111	N1																								108

Matrix	Analytical Method	Sample ID	Parameter	Lab Result	Lab Qual	MS Lab Result	MSD Lab Result	Units	MS Spike Added	MS %Rec	MSD Spike Added	MSD %Rec	RPD
SB	SW8330	NDA063	1,3,5-TRINITROBENZENE	269	U	12600	11500	ug/kg	11142.5	113.5	10743.3	107.5	5.4%
SB	SW8330	NDA063	1,3-DINITROBENZENE	269	U	13000	12900	ug/kg	11142.5	117.1	10743.3	120.6	2.9%
SB	SW8330	NDA063	2,4,6-TRINITROTOLUENE	269	U	12900	12100	ug/kg	11142.5	116.2	10743.3	113.1	2.7%
SB	SW8330	NDA063	2,4-DINITROTOLUENE	269	U	13200	12200	ug/kg	11142.5	118.9	10743.3	114	4.2%
SB	SW8330	NDA063	2,6-DINITROTOLUENE	269	U	13500	13300	ug/kg	11142.5	121.6	10743.3	124.3	2.2%
SB	SW8330	NDA063	2-NITROTOLUENE	269	U	10300	10400	ug/kg	11142.5	92.8	10743.3	97.2	4.6%
SB	SW8330	NDA063	3-NITROTOLUENE	269	U	10700	10800	ug/kg	11142.5	96.4	10743.3	100.9	4.6%
SB	SW8330	NDA063	4-NITROTOLUENE	269	U	10900	10700	ug/kg	11142.5	98.2	10743.3	100	1.8%
SB	SW8330	NDA063	HEXAHYDRO-1,3,5-TRINITRO-1,3,5,7-TETRAZOCINE	269	U	9970	8820	ug/kg	11142.5	89.8	10743.3	82.4	8.6%
SB	SW8330	NDA063	METHYL-2,4,6-TRINITROPHENYLNITRAMINE	269	U	13700	11100	ug/kg	11142.5	123.4	10743.3	103.7	17.3%
SB	SW8330	NDA063	NITROBENZENE	269	U	11400	12000	ug/kg	11142.5	102.7	10743.3	112.2	8.8%
SB	SW8330	NDA063	CTAHYDRO-1,3,5,7-TETRANITRO-1,3,5,7-TETRAZOCIN	269	U	11900	13900	ug/kg	11142.5	107.2	10743.3	129.9	19.1%
SB	SW8270	NDA063	2,4-DINITROTOLUENE	382	U	1500	1120	ug/kg	1609.9	93.2	1450.1	77.2	18.8%
SB	SW8270	NDA151	2,4-DINITROTOLUENE	431	U	1600	1740	ug/kg	2035.7	78.4	2175.9	79.8	1.8%
SB	SW8270	NDA213	2,4-DINITROTOLUENE	485	U	1660	2130	ug/kg	1872.4	88.8	2426.0	88	0.9%
SB	SW8270	NDA226	2,4-DINITROTOLUENE	631	U	1850	1630	ug/kg	2363.3	78.4	1930.4	84.5	7.5%
SB	SW8270	NDA246	2,4-DINITROTOLUENE	511	U	2020	1570	ug/kg	2176.8	92.7	1677.3	93.5	0.9%
SB	SW8270	NDA063	2-CHLOROPHENOL	382	U	1390	986	ug/kg	1609.9	86.3	1450.1	68	23.7%
SB	SW8270	NDA151	2-CHLOROPHENOL	431	U	1470	1500	ug/kg	2035.7	72.1	2175.9	68.8	4.7%
SB	SW8270	NDA213	2-CHLOROPHENOL	485	U	1410	1890	ug/kg	1872.4	75.4	2426.0	78.1	3.5%
SB	SW8270	NDA226	2-CHLOROPHENOL	631	U	1740	1440	ug/kg	2363.3	73.7	1930.4	74.6	1.2%
SB	SW8270	NDA246	2-CHLOROPHENOL	511	U	1740	1310	ug/kg	2176.8	79.8	1677.3	78	2.3%
SB	SW8270	NDA063	4-CHLORO-3-METHYLPHENOL	382	U	1500	1150	ug/kg	1609.9	93.2	1450.1	79.3	16.1%
SB	SW8270	NDA151	4-CHLORO-3-METHYLPHENOL	431	U	1580	1680	ug/kg	2035.7	77.5	2175.9	77.1	0.5%
SB	SW8270	NDA213	4-CHLORO-3-METHYLPHENOL	485	U	1520	2060	ug/kg	1872.4	81.3	2426.0	85.1	4.6%
SB	SW8270	NDA226	4-CHLORO-3-METHYLPHENOL	631	U	1770	1530	ug/kg	2363.3	75	1930.4	79.3	5.6%
SB	SW8270	NDA246	4-CHLORO-3-METHYLPHENOL	511	U	2040	1580	ug/kg	2176.8	93.6	1677.3	94.1	0.5%
SB	SW8270	NDA063	4-NITROPHENOL	1150	U	1440	1050	ug/kg	1609.9	89.4	1450.1	72.4	21.0%
SB	SW8270	NDA151	4-NITROPHENOL	1280	U	1610	1740	ug/kg	2035.7	78.9	2175.9	79.8	1.1%
SB	SW8270	NDA213	4-NITROPHENOL	1440	U	1700	2160	ug/kg	1872.4	90.9	2426.0	89.3	1.8%
SB	SW8270	NDA226	4-NITROPHENOL	1890	U	1750	1530	ug/kg	2363.3	74.2	1930.4	79.3	6.6%
SB	SW8270	NDA246	4-NITROPHENOL	1530	U	2050	1540	ug/kg	2176.8	94	1677.3	91.7	2.5%
SB	SW8270	NDA063	ACENAPHTHENE	382	U	1450	1140	ug/kg	1609.9	90.1	1450.1	78.6	13.6%
SB	SW8270	NDA151	ACENAPHTHENE	431	U	1400	1470	ug/kg	2035.7	68.6	2175.9	67.4	1.8%
SB	SW8270	NDA213	ACENAPHTHENE	485	U	1430	1790	ug/kg	1872.4	76.5	2426.0	74	3.3%
SB	SW8270	NDA226	ACENAPHTHENE	631	U	1820	1560	ug/kg	2363.3	77.1	1930.4	80.8	4.7%
SB	SW8270	NDA246	ACENAPHTHENE	511	U	1860	1480	ug/kg	2176.8	85.3	1677.3	88.1	3.2%
SB	SW8270	NDA063	N-NITROSODI-n-PROPYLAMINE	382	U	1460	1020	ug/kg	1609.9	90.7	1450.1	70.3	25.3%
SB	SW8270	NDA151	N-NITROSODI-n-PROPYLAMINE	431	U	1580	1660	ug/kg	2035.7	77.5	2175.9	76.2	1.7%
SB	SW8270	NDA213	N-NITROSODI-n-PROPYLAMINE	485	U	1510	2100	ug/kg	1872.4	80.8	2426.0	86.8	7.2%
SB	SW8270	NDA226	N-NITROSODI-n-PROPYLAMINE	631	U	1780	1480	ug/kg	2363.3	75.4	1930.4	76.7	1.7%
SB	SW8270	NDA246	N-NITROSODI-n-PROPYLAMINE	511	U	1820	1330	ug/kg	2176.8	83.5	1677.3	79.2	5.3%
SB	SW8270	NDA063	PENTACHLOROPHENOL	1150	U	1410	949	ug/kg	1609.9	87.6	1450.1	65.5	28.9%
SB	SW8270	NDA151	PENTACHLOROPHENOL	1280	U	1600	1650	ug/kg	2035.7	78.4	2175.9	75.7	3.5%
SB	SW8270	NDA213	PENTACHLOROPHENOL	1440	U	1700	2120	ug/kg	1872.4	90.9	2426.0	87.6	3.7%
SB	SW8270	NDA226	PENTACHLOROPHENOL	1890	U	1810	1530	ug/kg	2363.3	76.7	1930.4	79.3	3.3%
SB	SW8270	NDA246	PENTACHLOROPHENOL	1530	U	2220	1730	ug/kg	2176.8	101.8	1677.3	103	1.2%

Matrix	Analytical Method	Sample ID	Parameter	Lab Result	Lab Qual	MS Lab Result	MSD Lab Result	Units	MS Spike Added	MS %Rec	MSD Spike Added	MSD %Rec	RPD
SB	SW8270	NDA063	PHENOL	382	U	1450	1010	ug/kg	1609.9	90.1	1450.1	69.7	25.5%
SB	SW8270	NDA151	PHENOL	431	U	1310	1560	ug/kg	2035.7	64.2	2175.9	71.6	10.9%
SB	SW8270	NDA213	PHENOL	485	U	1340	1850	ug/kg	1872.4	71.7	2426.0	76.5	6.5%
SB	SW8270	NDA226	PHENOL	631	U	1580	1470	ug/kg	2363.3	67	1930.4	76.2	12.8%
SB	SW8270	NDA246	PHENOL	511	U	1610	1400	ug/kg	2176.8	73.9	1677.3	83.3	12.0%
SB	SW8270	NDA063	PYRENE	382	U	1480	1170	ug/kg	1609.9	91.9	1450.1	80.7	13.0%
SB	SW8270	NDA151	PYRENE	431	U	1600	1650	ug/kg	2035.7	78.4	2175.9	75.7	3.5%
SB	SW8270	NDA213	PYRENE	485	U	1460	1750	ug/kg	1872.4	78.1	2426.0	72.3	7.7%
SB	SW8270	NDA226	PYRENE	631	U	1800	1560	ug/kg	2363.3	76.3	1930.4	80.8	5.7%
SB	SW8270	NDA246	PYRENE	511	U	2060	1580	ug/kg	2176.8	94.5	1677.3	94.1	0.4%
SB	SW8260	NDA063	1,1-DICHLOROETHENE	11	U	22.2	22.9	ug/kg	20.0	97	20.0	104	7.0%
SB	SW8260	NDA151	1,1-DICHLOROETHENE	11	U	18.9	20.4	ug/kg	20.0	101	20.0	101.5	0.5%
SB	SW8260	NDA213	1,1-DICHLOROETHENE	12	U	23.4	23.3	ug/kg	20.0	118	20.0	115.5	2.1%
SB	SW8260	NDA226	1,1-DICHLOROETHENE	11	U	22.7	28	ug/kg	20.0	117	20.0	120.5	2.9%
SB	SW8260	NDA246	1,1-DICHLOROETHENE	10	U	25.5	24.2	ug/kg	20.0	120.5	20.0	119.5	0.8%
SB	SW8260	NDA063	BENZENE	11	U	18.6	19.3	ug/kg	20.0	81.5	20.0	88	7.7%
SB	SW8260	NDA151	BENZENE	11	U	18.5	20.4	ug/kg	20.0	99	20.0	101.5	2.5%
SB	SW8260	NDA213	BENZENE	12	U	21.3	20.1	ug/kg	20.0	107.5	20.0	100	7.2%
SB	SW8260	NDA226	BENZENE	0.1	U	20	24.3	ug/kg	20.1	103	20.1	105	1.9%
SB	SW8260	NDA246	BENZENE	0.1	U	22.8	20.9	ug/kg	20.1	108	20.1	103.5	4.3%
SB	SW8260	NDA063	CHLOROBENZENE	11	U	15.5	16	ug/kg	20.0	68	20.0	73	7.1%
SB	SW8260	NDA151	CHLOROBENZENE	11	U	16.9	17.9	ug/kg	20.0	90.5	20.0	89.5	1.1%
SB	SW8260	NDA213	CHLOROBENZENE	12	U	20.4	18.9	ug/kg	20.0	102.5	20.0	93.5	9.2%
SB	SW8260	NDA226	CHLOROBENZENE	11	U	18.8	22.7	ug/kg	20.0	97	20.0	97.5	0.5%
SB	SW8260	NDA246	CHLOROBENZENE	0.7	J	22.9	20.8	ug/kg	20.0	108	20.0	103	4.7%
SB	SW8260	NDA063	TOLUENE	11	U	18.7	19.5	ug/kg	20.0	82	20.0	89	8.2%
SB	SW8260	NDA151	TOLUENE	0.4	J	18	19.9	ug/kg	20.0	96.5	20.0	99	2.6%
SB	SW8260	NDA213	TOLUENE	1	J	22.3	22.1	ug/kg	20.0	112.5	20.0	109.5	2.7%
SB	SW8260	NDA226	TOLUENE	11	U	19.4	23.5	ug/kg	20.0	100	20.0	101	1.0%
SB	SW8260	NDA246	TOLUENE	10	U	21.5	20.2	ug/kg	20.0	101.5	20.0	100	1.5%
SB	SW8260	NDA063	TRICHLOROETHYLENE (TCE)	11	U	19.5	20.4	ug/kg	20.0	85.5	20.0	93	8.4%
SB	SW8260	NDA151	TRICHLOROETHYLENE (TCE)	11	U	18.7	20.5	ug/kg	20.0	100	20.0	102	2.0%
SB	SW8260	NDA213	TRICHLOROETHYLENE (TCE)	12	U	21.6	20.3	ug/kg	20.0	109	20.0	100.5	8.1%
SB	SW8260	NDA226	TRICHLOROETHYLENE (TCE)	11	U	20.2	24	ug/kg	20.0	104	20.0	103.5	0.5%
SB	SW8260	NDA246	TRICHLOROETHYLENE (TCE)	10	U	22.2	20.9	ug/kg	20.0	105	20.0	103	1.9%
SB	SW8082	NDA063	PCB-1016 (AROCHLOR 1016)	35	U	219	217	ug/kg	322.9	67.8	328.5	66.2	2.4%
SB	SW8082	NDA108	PCB-1016 (AROCHLOR 1016)	44	U	330	353	ug/kg	407.9	80.9	409.2	86.3	6.5%
SB	SW8082	NDA151	PCB-1016 (AROCHLOR 1016)	37	U	251	134	ug/kg	360.2	69.7	363.1	36.9	61.5%
SB	SW8082	NDA213	PCB-1016 (AROCHLOR 1016)	38	U	253	251	ug/kg	353.6	71.5	353.5	70.9	0.8%
SB	SW8082	NDA226	PCB-1016 (AROCHLOR 1016)	39	U	268	286	ug/kg	357.7	74.9	357.7	79.9	6.5%
SB	SW8082	NDA235	PCB-1016 (AROCHLOR 1016)	43	U	363	320	ug/kg	396.3	91.7	395.4	81	12.4%
SB	SW8082	NDA246	PCB-1016 (AROCHLOR 1016)	40	U	280	296	ug/kg	368.0	76.1	365.9	80.9	6.1%
SB	SW8082	NDA063	PCB-1260 (AROCHLOR 1260)	35	U	262	267	ug/kg	322.9	81.1	328.5	81.4	0.4%
SB	SW8082	NDA108	PCB-1260 (AROCHLOR 1260)	44	U	353	366	ug/kg	407.9	86.5	409.2	89.5	3.4%
SB	SW8082	NDA151	PCB-1260 (AROCHLOR 1260)	37	U	274	241	ug/kg	360.2	76.1	363.1	66.4	13.6%
SB	SW8082	NDA213	PCB-1260 (AROCHLOR 1260)	38	U	256	260	ug/kg	353.6	72.3	353.5	73.5	1.6%
SB	SW8082	NDA226	PCB-1260 (AROCHLOR 1260)	[illegible]	U	266	293	ug/kg	357.7	74.3	357.7	81.8	[illegible]%

Matrix	Analytical Method	Sample ID	Parameter	Lab Result	Lab Qual	MS Lab Result	MSD Lab Result	Units	MS Spike Added	MS %Rec	MSD Spike Added	MSD %Rec	RPD
SB	SW8082	NDA235	PCB-1260 (AROCHLOR 1260)	43	U	374	350	ug/kg	396.3	94.4	395.4	88.6	6.3%
SB	SW8082	NDA246	PCB-1260 (AROCHLOR 1260)	40	U	294	302	ug/kg	368.0	79.9	365.9	82.5	3.2%
SB	SW8081	NDA063	ALDRIN	1.8	U	10.7	13.8	ug/kg	16.1	66.5	16.3	84.7	24.1%
SB	SW8081	NDA108	ALDRIN	2.3	U	11.9	16	ug/kg	19.9	59.8	20.4	78.4	26.9%
SB	SW8081	NDA151	ALDRIN	1.9	U	16.6	16.7	ug/kg	17.4	95.4	17.3	96.5	1.1%
SB	SW8081	NDA213	ALDRIN	2	U	13.8	12.9	ug/kg	17.7	78	17.7	72.9	6.8%
SB	SW8081	NDA226	ALDRIN	2	U	18	17.6	ug/kg	17.9	100.6	17.9	98.3	2.3%
SB	SW8081	NDA246	ALDRIN	2.1	U	15.6	15	ug/kg	18.5	84.8	18.5	81.1	4.5%
SB	SW8081	NDA063	DIELDRIN	3.6	U	10.8	13.7	ug/kg	16.1	67.1	16.3	84.1	22.5%
SB	SW8081	NDA108	DIELDRIN	4.4	U	14.1	16.3	ug/kg	19.9	70.9	20.4	79.9	11.9%
SB	SW8081	NDA151	DIELDRIN	3.8	U	17.2	17.4	ug/kg	17.4	98.9	17.3	100.6	1.7%
SB	SW8081	NDA213	DIELDRIN	3.8	U	15.1	14.1	ug/kg	17.7	85.3	17.7	79.7	6.8%
SB	SW8081	NDA226	DIELDRIN	3.9	U	20.3	20.1	ug/kg	17.9	113.4	17.9	112.3	1.0%
SB	SW8081	NDA246	DIELDRIN	4.1	U	15.8	16.2	ug/kg	18.5	85.9	18.5	87.6	2.0%
SB	SW8081	NDA063	ENDRIN	3.6	U	10.9	14.3	ug/kg	16.1	67.7	16.3	87.7	25.7%
SB	SW8081	NDA108	ENDRIN	4.4	U	12.7	15.1	ug/kg	19.9	63.8	20.4	74	14.8%
SB	SW8081	NDA151	ENDRIN	3.8	U	17.8	17.9	ug/kg	17.4	102.3	17.3	103.5	1.2%
SB	SW8081	NDA213	ENDRIN	3.8	U	15.9	14.8	ug/kg	17.7	89.8	17.7	83.6	7.2%
SB	SW8081	NDA226	ENDRIN	3.9	U	18.9	18.6	ug/kg	17.9	105.6	17.9	103.9	1.6%
SB	SW8081	NDA246	ENDRIN	4.1	U	18.1	19	ug/kg	18.5	98.4	18.5	102.7	4.3%
SB	SW8081	NDA063	GAMMA BHC (LINDANE)	1.8	U	9.7	12.7	ug/kg	16.1	60.3	16.3	77.9	25.5%
SB	SW8081	NDA108	GAMMA BHC (LINDANE)	2.3	U	12.2	14.5	ug/kg	19.9	61.3	20.4	71.1	14.8%
SB	SW8081	NDA151	GAMMA BHC (LINDANE)	1.9	U	17.4	17.6	ug/kg	17.4	100	17.3	101.7	1.7%
SB	SW8081	NDA213	GAMMA BHC (LINDANE)	2	U	14.4	13.5	ug/kg	17.7	81.4	17.7	76.3	6.5%
SB	SW8081	NDA226	GAMMA BHC (LINDANE)	2	U	18.6	18	ug/kg	17.9	103.9	17.9	100.6	3.2%
SB	SW8081	NDA246	GAMMA BHC (LINDANE)	2.1	U	13.4	13.3	ug/kg	18.5	72.8	18.5	71.9	1.2%
SB	SW8081	NDA063	HEPTACHLOR	1.8	U	10.6	13.4	ug/kg	16.1	65.8	16.3	82.2	22.2%
SB	SW8081	NDA108	HEPTACHLOR	2.3	U	11.7	14.4	ug/kg	19.9	58.8	20.4	70.6	18.2%
SB	SW8081	NDA151	HEPTACHLOR	1.9	U	19.6	19.8	ug/kg	17.4	112.6	17.3	114.5	1.7%
SB	SW8081	NDA213	HEPTACHLOR	2	U	15.6	14.2	ug/kg	17.7	88.1	17.7	80.2	9.4%
SB	SW8081	NDA226	HEPTACHLOR	2	U	16.8	16.4	ug/kg	17.9	93.9	17.9	91.6	2.5%
SB	SW8081	NDA246	HEPTACHLOR	2.1	U	16.2	15.7	ug/kg	18.5	88	18.5	84.9	3.6%
SB	SW8081	NDA063	p,p'-DDT	3.6	U	12.6	15.3	ug/kg	16.1	78.3	16.3	93.9	18.1%
SB	SW8081	NDA108	p,p'-DDT	1.8	J	13.3	13.8	ug/kg	19.9	66.8	20.4	67.7	1.3%
SB	SW8081	NDA151	p,p'-DDT	3.8	U	19.2	20.2	ug/kg	17.4	110.3	17.3	116.8	5.7%
SB	SW8081	NDA213	p,p'-DDT	3.8	U	15.4	14.1	ug/kg	17.7	87	17.7	79.7	8.8%
SB	SW8081	NDA226	p,p'-DDT	3.9	U	19.1	16.5	ug/kg	17.9	106.7	17.9	92.2	14.6%
SB	SW8081	NDA246	p,p'-DDT	4.1	U	18	18.2	ug/kg	18.5	97.8	18.5	98.4	0.6%
SB	SW7471	NDA063	MERCURY	0.012	U	0.18		mg/kg	0.2	102			
SB	SW7471	NDA151	MERCURY	0.015	U	0.15632		mg/kg	0.2	97.6			
SB	SW7471	NDA213	MERCURY	0.016	U	0.23221		mg/kg	0.2	103.2			
SB	SW7471	NDA226	MERCURY	0.015	U	0.22		mg/kg	0.2	108.4			
SB	SW7471	NDA235	MERCURY	0.012	U	0.17		mg/kg	0.2	98.4			
SB	SW7471	NDA246	MERCURY	0.015	J	0.25		mg/kg	0.2	102.8			
SB	E200.7	NDA063	ANTIMONY	0.15	U	28.4		mg/kg	108.6	26.1			
SB	E200.7	NDA112	ANTIMONY	0.19	U	89		mg/kg	134.1	66.4			
SB	E200.7	NDA151	ANTIMONY	0.16	U	27		mg/kg	114.7	23.7			

Matrix	Analytical Method	Sample ID	Parameter	Lab Result	Lab Qual	MS Lab Result	MSD Lab Result	Units	MS Spike Added	MS %Rec	MSD Spike Added	MSD %Rec	RPD
SB	E200.7	NDA213	ANTIMONY	0.16	U	47.4369		mg/kg	111.6	42.5			
SB	E200.7	NDA226	ANTIMONY	0.17	U	45.4		mg/kg	118.1	38.4			
SB	E200.7	NDA235	ANTIMONY	0.18	U	46.8		mg/kg	131.6	35.6			
SB	E200.7	NDA246	ANTIMONY	0.17	U	43		mg/kg	123.0	35			
SB	E200.7	NDA063	ARSENIC	1.8	J	384		mg/kg	434.3	88			
SB	E200.7	NDA112	ARSENIC	1.2	J	507		mg/kg	536.2	94.3			
SB	E200.7	NDA151	ARSENIC	0.39	U	408		mg/kg	458.7	89			
SB	E200.7	NDA213	ARSENIC	0.38	U	374.296		mg/kg	446.4	83.8			
SB	E200.7	NDA226	ARSENIC	0.4	U	412		mg/kg	472.3	87.2			
SB	E200.7	NDA235	ARSENIC	0.45	U	470		mg/kg	526.3	89.3			
SB	E200.7	NDA246	ARSENIC	0.42	U	425		mg/kg	492.0	86.4			
SB	E200.7	NDA063	BARIUM	504	=	896		mg/kg	434.3	90.3			
SB	E200.7	NDA112	BARIUM	12.6	J	526		mg/kg	536.2	95.8			
SB	E200.7	NDA151	BARIUM	96.7	=	568		mg/kg	458.7	102.7			
SB	E200.7	NDA213	BARIUM	115	=	507.273		mg/kg	446.4	87.9			
SB	E200.7	NDA226	BARIUM	59.5	=	517		mg/kg	472.3	96.9			
SB	E200.7	NDA235	BARIUM	71.2	=	569		mg/kg	526.3	94.6			
SB	E200.7	NDA246	BARIUM	94.1	=	562		mg/kg	492.0	95			
SB	E200.7	NDA063	BERYLLIUM	0.6	J	10.9		mg/kg	10.9	95.1			
SB	E200.7	NDA112	BERYLLIUM	0.04	U	13.1		mg/kg	13.4	97.9			
SB	E200.7	NDA151	BERYLLIUM	0.23	J	11		mg/kg	11.5	94.3			
SB	E200.7	NDA213	BERYLLIUM	0.27	J	10.9091		mg/kg	11.2	95.3			
SB	E200.7	NDA226	BERYLLIUM	0.15	J	11.1		mg/kg	11.8	92.7			
SB	E200.7	NDA235	BERYLLIUM	0.28	J	12.6		mg/kg	13.2	93.6			
SB	E200.7	NDA246	BERYLLIUM	0.19	J	11.6		mg/kg	12.3	92.6			
SB	E200.7	NDA063	CADMIUM	0.022	U	10		mg/kg	10.9	92			
SB	E200.7	NDA112	CADMIUM	0.63	J	13.2		mg/kg	13.4	93.9			
SB	E200.7	NDA151	CADMIUM	0.023	U	10		mg/kg	11.5	90.9			
SB	E200.7	NDA213	CADMIUM	0.022	U	9.48991		mg/kg	11.2	85			
SB	E200.7	NDA226	CADMIUM	0.024	U	10.5		mg/kg	11.8	88.6			
SB	E200.7	NDA235	CADMIUM	0.026	U	11.9		mg/kg	13.2	90.2			
SB	E200.7	NDA246	CADMIUM	0.025	U	10.6		mg/kg	12.3	85.8			
SB	E200.7	NDA063	CHROMIUM, TOTAL	10	=	51		mg/kg	43.4	93.8			
SB	E200.7	NDA112	CHROMIUM, TOTAL	5.9	=	56.7		mg/kg	53.6	94.8			
SB	E200.7	NDA151	CHROMIUM, TOTAL	10	=	78		mg/kg	45.9	148			
SB	E200.7	NDA213	CHROMIUM, TOTAL	33.3	=	60.8842		mg/kg	44.6	61.8			
SB	E200.7	NDA226	CHROMIUM, TOTAL	7.4	=	50.3		mg/kg	47.2	90.7			
SB	E200.7	NDA235	CHROMIUM, TOTAL	8.8	=	58.3		mg/kg	52.6	94.1			
SB	E200.7	NDA246	CHROMIUM, TOTAL	9.9	=	56.7		mg/kg	49.2	95			
SB	E200.7	NDA063	COBALT	5.5	J	105		mg/kg	108.6	91.9			
SB	E200.7	NDA112	COBALT	1.9	J	128		mg/kg	134.1	93.7			
SB	E200.7	NDA151	COBALT	12.8	=	126		mg/kg	114.7	99			
SB	E200.7	NDA213	COBALT	11.4	=	109.874		mg/kg	111.6	88.2			
SB	E200.7	NDA226	COBALT	7.2	J	117		mg/kg	118.1	92.8			
SB	E200.7	NDA235	COBALT	9.1	J	131		mg/kg	131.6	92.8			
SB	E200.7	NDA246	COBALT	10.1	J	123		mg/kg	123.0	91.4			
SB	E200.7	NDA063	COPPER		=	62.2		mg/kg	54.3	96.2			

Matrix	Analytical Method	Sample ID	Parameter	Lab Result	Lab Qual	MS Lab Result	MSD Lab Result	Units	MS Spike Added	MS %Rec	MSD Spike Added	MSD %Rec	RPD
SB	E200.7	NDA112	COPPER	34.4	=	112		mg/kg	67.0	115.5			
SB	E200.7	NDA151	COPPER	22.1	=	78		mg/kg	57.3	98			
SB	E200.7	NDA213	COPPER	28.9	=	83.7559		mg/kg	55.8	98.4			
SB	E200.7	NDA226	COPPER	17.3	=	74.1		mg/kg	59.0	96.3			
SB	E200.7	NDA235	COPPER	32.3	=	92.3		mg/kg	65.8	91.1			
SB	E200.7	NDA246	COPPER	27.8	=	91.4		mg/kg	61.5	103.3			
SB	E200.7	NDA063	LEAD	21.1	=	117		mg/kg	108.6	88.6			
SB	E200.7	NDA112	LEAD	8.8	=	138		mg/kg	134.1	96.3			
SB	E200.7	NDA151	LEAD	3.3	=	115		mg/kg	114.7	97.5			
SB	E200.7	NDA213	LEAD	2.1	=	102.3		mg/kg	111.6	89.8			
SB	E200.7	NDA226	LEAD	1.2	=	111		mg/kg	118.1	92.6			
SB	E200.7	NDA235	LEAD	1.5	=	126		mg/kg	131.6	94.9			
SB	E200.7	NDA246	LEAD	2.1	=	115		mg/kg	123.0	91.5			
SB	E200.7	NDA063	MANGANESE	742	=	465		mg/kg	108.6	-254.8			
SB	E200.7	NDA112	MANGANESE	72	=	206		mg/kg	134.1	99.8			
SB	E200.7	NDA151	MANGANESE	520	=	804		mg/kg	114.7	247.8			
SB	E200.7	NDA213	MANGANESE	698	=	691.694		mg/kg	111.6	-5.8			
SB	E200.7	NDA226	MANGANESE	482	=	652		mg/kg	118.1	144.4			
SB	E200.7	NDA235	MANGANESE	372	=	478		mg/kg	131.6	79.9			
SB	E200.7	NDA246	MANGANESE	510	=	628		mg/kg	123.0	96.1			
SB	E200.7	NDA063	NICKEL	1.8	J	104		mg/kg	108.6	94.5			
SB	E200.7	NDA112	NICKEL	1.8	J	128		mg/kg	134.1	93.8			
SB	E200.7	NDA151	NICKEL	4.6	J	115		mg/kg	114.7	96.6			
SB	E200.7	NDA213	NICKEL	12.2	=	109.289		mg/kg	111.6	87			
SB	E200.7	NDA226	NICKEL	3.3	J	112		mg/kg	118.1	92.3			
SB	E200.7	NDA235	NICKEL	4.4	J	129		mg/kg	131.6	94.4			
SB	E200.7	NDA246	NICKEL	4.9	J	119		mg/kg	123.0	92.5			
SB	E200.7	NDA063	SELENIUM	0.23	U	376		mg/kg	434.3	86.5			
SB	E200.7	NDA112	SELENIUM	0.28	U	501		mg/kg	536.2	93.5			
SB	E200.7	NDA151	SELENIUM	0.69	J	396		mg/kg	458.7	86.2			
SB	E200.7	NDA213	SELENIUM	0.75	J	373.45		mg/kg	446.4	83.5			
SB	E200.7	NDA226	SELENIUM	0.4	J	404		mg/kg	472.3	85.5			
SB	E200.7	NDA235	SELENIUM	0.28	U	466		mg/kg	526.3	88.5			
SB	E200.7	NDA246	SELENIUM	0.46	J	423		mg/kg	492.0	85.8			
SB	E200.7	NDA063	SILVER	0.054	U	10.2		mg/kg	10.9	93.7			
SB	E200.7	NDA112	SILVER	0.067	U	13.5		mg/kg	13.4	101			
SB	E200.7	NDA151	SILVER	0.057	U	11		mg/kg	11.5	94.3			
SB	E200.7	NDA213	SILVER	0.056	U	10.1762		mg/kg	11.2	91.2			
SB	E200.7	NDA226	SILVER	0.059	U	10.8		mg/kg	11.8	91.1			
SB	E200.7	NDA235	SILVER	0.066	U	12.3		mg/kg	13.2	93.7			
SB	E200.7	NDA246	SILVER	0.062	U	11.3		mg/kg	12.3	91.8			
SB	E200.7	NDA063	THALLIUM	0.97	J	417		mg/kg	434.3	95.8			
SB	E200.7	NDA112	THALLIUM	0.36	U	527		mg/kg	536.2	98.3			
SB	E200.7	NDA151	THALLIUM	0.87	J	445		mg/kg	458.7	96.9			
SB	E200.7	NDA213	THALLIUM	1.3	J	413.814		mg/kg	446.4	92.4			
SB	E200.7	NDA226	THALLIUM	0.49	J	448		mg/kg	472.3	94.7			
SB	E200.7	NDA235	THALLIUM	0.92	J	507		mg/kg	526.3	96.2			

Matrix	Analytical Method	Sample ID	Parameter	Lab Result	Lab Qual	MS Lab Result	MSD Lab Result	Units	MS Spike Added	MS %Rec	MSD Spike Added	MSD %Rec	RPD
SB	E200.7	NDA246	THALLIUM	0.99	J	462		mg/kg	492.0	93.7			
SB	E200.7	NDA063	VANADIUM	71.9	=	162		mg/kg	108.6	83.2			
SB	E200.7	NDA112	VANADIUM	19.4	=	153		mg/kg	134.1	99.5			
SB	E200.7	NDA151	VANADIUM	48.4	=	155		mg/kg	114.7	92.5			
SB	E200.7	NDA213	VANADIUM	65.2	=	170.307		mg/kg	111.6	94.2			
SB	E200.7	NDA226	VANADIUM	38	=	148		mg/kg	118.1	93.1			
SB	E200.7	NDA235	VANADIUM	57.1	=	174		mg/kg	131.6	89.1			
SB	E200.7	NDA246	VANADIUM	54.2	=	173		mg/kg	123.0	96.9			
SB	E200.7	NDA063	ZINC	14.8	=	112		mg/kg	108.6	89.7			
SB	E200.7	NDA112	ZINC	23.5	=	156		mg/kg	134.1	99			
SB	E200.7	NDA151	ZINC	30.4	=	143		mg/kg	114.7	98.2			
SB	E200.7	NDA213	ZINC	33.6	=	123.949		mg/kg	111.6	80.9			
SB	E200.7	NDA226	ZINC	19.2	=	129		mg/kg	118.1	93.3			
SB	E200.7	NDA235	ZINC	31.9	=	153		mg/kg	131.6	92.2			
SB	E200.7	NDA246	ZINC	29.6	=	145		mg/kg	123.0	94.1			
SD	SW8270	NDA050	2,4-DINITROTOLUENE	6260	U	3680	3600	ug/kg	4743.0	77.6	4645.3	77.6	0.0%
SD	SW8270	NDA050	2-CHLOROPHENOL	6260	U	3580	3470	ug/kg	4743.0	75.5	4645.3	74.8	0.9%
SD	SW8270	NDA050	4-CHLORO-3-METHYLPHENOL	6260	U	4080	4180	ug/kg	4743.0	86.1	4645.3	90.1	4.5%
SD	SW8270	NDA050	4-NITROPHENOL	18600	U	3570	3030	ug/kg	4743.0	75.3	4645.3	65.3	14.2%
SD	SW8270	NDA050	ACENAPHTHENE	6260	U	3370	3540	ug/kg	4743.0	71.1	4645.3	76.3	7.1%
SD	SW8270	NDA050	N-NITROSODI-n-PROPYLAMINE	6260	U	3990	3860	ug/kg	4743.0	84.2	4645.3	83.2	1.2%
SD	SW8270	NDA050	PENTACHLOROPHENOL	18600	U	3450	3550	ug/kg	4743.0	72.8	4645.3	76.5	5.0%
SD	SW8270	NDA050	PHENOL	6260	U	4280	4290	ug/kg	4743.0	90.3	4645.3	92.5	2.4%
SD	SW8270	NDA050	PYRENE	507	J	4070	4300	ug/kg	4743.0	85.9	4645.3	92.7	7.6%
SD	SW8260	NDA050	1,1-DICHLOROETHENE	2160	U	1660	1810	ug/kg	20.0	84	20.0	88.5	5.2%
SD	SW8260	NDA050	BENZENE	2160	U	1750	1890	ug/kg	20.0	89	20.0	92.5	3.9%
SD	SW8260	NDA050	CHLOROBENZENE	2160	U	1740	1860	ug/kg	20.0	88	20.0	91.5	3.9%
SD	SW8260	NDA050	TOLUENE	2160	U	1770	1890	ug/kg	20.0	90	20.0	92.5	2.7%
SD	SW8260	NDA050	TRICHLOROETHYLENE (TCE)	2160	U	1740	1890	ug/kg	20.0	88.5	20.0	92.5	4.4%
SD	SW8082	NDA050	PCB-1016 (AROCHLOR 1016)	76	U	523	529	ug/kg	698.4	74.9	695.6	76	1.5%
SD	SW8082	NDA050	PCB-1260 (AROCHLOR 1260)	76	U	530	576	ug/kg	698.4	75.9	695.6	82.8	8.7%
SD	SW8081	NDA050	ALDRIN	20	U	24.6	18.2	ug/kg	34.9	70.5	34.8	52.3	29.6%
SD	SW8081	NDA050	DIELDRIN	38	U	28.9	25.3	ug/kg	34.9	82.8	34.8	72.7	13.0%
SD	SW8081	NDA050	ENDRIN	38	U	27.2	24.5	ug/kg	34.9	77.9	34.8	70.4	10.1%
SD	SW8081	NDA050	GAMMA BHC (LINDANE)	20	U	22.1	16.4	ug/kg	34.9	63.3	34.8	47.1	29.3%
SD	SW8081	NDA050	HEPTACHLOR	20	U	23.8	18.2	ug/kg	34.9	68.2	34.8	52.3	26.4%
SD	SW8081	NDA050	p,p'-DDT	13	J	26.5	29.2	ug/kg	34.9	75.9	34.8	83.9	10.0%
SD	SW7471	NDA042	MERCURY	0.18	=	0.26		mg/kg	0.3	28.8			
SD	SW7471	NDA050	MERCURY	0.37	=	0.79		mg/kg	0.4	102.4			
SD	E200.7	NDA042	ANTIMONY	0.72	J	97.4		mg/kg	166.7	58			
SD	E200.7	NDA050	ANTIMONY	2.1	J	88.6		mg/kg	231.0	37.4			
SD	E200.7	NDA042	ARSENIC	2.3	J	633		mg/kg	666.7	94.7			
SD	E200.7	NDA050	ARSENIC	2.9	J	813		mg/kg	923.8	87.7			
SD	E200.7	NDA042	BARIUM	5.1	J	652		mg/kg	666.7	97			
SD	E200.7	NDA050	BARIUM	144	=	1020		mg/kg	923.8	95.3			
SD	E200.7	NDA042	BERYLLIUM	0.082	J	16.3		mg/kg	16.7	97.4			
SD	E200.7	NDA050	BERYLLIUM		J	21.5		mg/kg	23.1	91.1			

Matrix	Analytical Method	Sample ID	Parameter	Lab Result	Lab Qual	MS Lab Result	MSD Lab Result	Units	MS Spike Added	MS %Rec	MSD Spike Added	MSD %Rec	RPD
SD	E200.7	NDA042	CADMIUM	0.033	U	15.4		mg/kg	16.7	92.7			
SD	E200.7	NDA050	CADMIUM	5.9	=	25.1		mg/kg	23.1	83			
SD	E200.7	NDA042	CHROMIUM, TOTAL	32.4	=	94.3		mg/kg	66.7	93			
SD	E200.7	NDA050	CHROMIUM, TOTAL	38.9	=	120		mg/kg	92.4	87.8			
SD	E200.7	NDA042	COBALT	6.2	J	165		mg/kg	166.7	95.2			
SD	E200.7	NDA050	COBALT	18.9	J	227		mg/kg	231.0	90.2			
SD	E200.7	NDA042	COPPER	22.8	=	113		mg/kg	83.3	108.6			
SD	E200.7	NDA050	COPPER	130	=	219		mg/kg	115.5	77.1			
SD	E200.7	NDA042	LEAD	3.1	=	161		mg/kg	166.7	95			
SD	E200.7	NDA050	LEAD	54.1	=	259		mg/kg	231.0	88.5			
SD	E200.7	NDA042	MANGANESE	133	=	301		mg/kg	166.7	100.9			
SD	E200.7	NDA050	MANGANESE	607	=	765		mg/kg	231.0	68.5			
SD	E200.7	NDA042	NICKEL	12.6	J	173		mg/kg	166.7	96.3			
SD	E200.7	NDA050	NICKEL	18.2	J	226		mg/kg	231.0	90			
SD	E200.7	NDA042	SELENIUM	0.35	U	615		mg/kg	666.7	92.3			
SD	E200.7	NDA050	SELENIUM	0.92	J	788		mg/kg	923.8	85.2			
SD	E200.7	NDA042	SILVER	0.083	U	16.6		mg/kg	16.7	99.4			
SD	E200.7	NDA050	SILVER	0.12	U	21.7		mg/kg	23.1	93.9			
SD	E200.7	NDA042	THALLIUM	0.45	U	654		mg/kg	666.7	98.1			
SD	E200.7	NDA050	THALLIUM	0.67	J	867		mg/kg	923.8	93.8			
SD	E200.7	NDA042	VANADIUM	30.5	=	201		mg/kg	166.7	102.5			
SD	E200.7	NDA050	VANADIUM	100	=	305		mg/kg	231.0	88.4			
SD	E200.7	NDA042	ZINC	26.1	=	191		mg/kg	166.7	98.9			
SD	E200.7	NDA050	ZINC	448	=	612		mg/kg	231.0	71.1			
SS	SW8330	NDA061	1,3,5-TRINITROBENZENE	259	U	9790	10100	ug/kg	10140.7	96.9	10352.6	97.1	0.2%
SS	SW8330	NDA071	1,3,5-TRINITROBENZENE	292	U	15500	12800	ug/kg	12591.9	123	10435.5	123.1	0.1%
SS	SW8330	NDA061	1,3-DINITROBENZENE	259	U	9410	9560	ug/kg	10140.7	93.2	10352.6	91.9	1.4%
SS	SW8330	NDA071	1,3-DINITROBENZENE	292	U	13100	10900	ug/kg	12591.9	104	10435.5	104.8	0.8%
SS	SW8330	NDA061	2,4,6-TRINITROTOLUENE	259	U	9600	9720	ug/kg	10140.7	95.1	10352.6	93.5	1.7%
SS	SW8330	NDA071	2,4,6-TRINITROTOLUENE	292	U	13000	11000	ug/kg	12591.9	103.2	10435.5	105.8	2.5%
SS	SW8330	NDA061	2,4-DINITROTOLUENE	259	U	9700	9540	ug/kg	10140.7	96	10352.6	91.7	4.6%
SS	SW8330	NDA071	2,4-DINITROTOLUENE	292	U	13300	11300	ug/kg	12591.9	105.6	10435.5	108.7	2.9%
SS	SW8330	NDA061	2,6-DINITROTOLUENE	259	U	9630	9560	ug/kg	10140.7	95.4	10352.6	91.9	3.7%
SS	SW8330	NDA071	2,6-DINITROTOLUENE	292	U	12400	10400	ug/kg	12591.9	98.4	10435.5	100	1.6%
SS	SW8330	NDA061	2-NITROTOLUENE	259	U	9520	9530	ug/kg	10140.7	94.3	10352.6	91.6	2.9%
SS	SW8330	NDA071	2-NITROTOLUENE	292	U	12800	10800	ug/kg	12591.9	101.6	10435.5	103.9	2.2%
SS	SW8330	NDA061	3-NITROTOLUENE	259	U	9830	9480	ug/kg	10140.7	97.3	10352.6	91.2	6.5%
SS	SW8330	NDA071	3-NITROTOLUENE	292	U	13000	11000	ug/kg	12591.9	103.2	10435.5	105.8	2.5%
SS	SW8330	NDA061	4-NITROTOLUENE	259	U	9900	9690	ug/kg	10140.7	98	10352.6	93.2	5.0%
SS	SW8330	NDA071	4-NITROTOLUENE	292	U	14000	11500	ug/kg	12591.9	111.1	10435.5	110.6	0.5%
SS	SW8330	NDA061	HEXAHYDRO-1,3,5-TRINITRO-1,3,5,7-TETRAZOCINE	259	U	8700	8660	ug/kg	10140.7	86.1	10352.6	83.3	3.3%
SS	SW8330	NDA071	HEXAHYDRO-1,3,5-TRINITRO-1,3,5,7-TETRAZOCINE	292	U	12100	10200	ug/kg	12591.9	96	10435.5	98.1	2.2%
SS	SW8330	NDA061	METHYL-2,4,6-TRINITROPHENYLNITRAMINE	259	U	12000	11800	ug/kg	10140.7	118.8	10352.6	113.5	4.6%
SS	SW8330	NDA071	METHYL-2,4,6-TRINITROPHENYLNITRAMINE	292	U	15500	12800	ug/kg	12591.9	123	10435.5	123.1	0.1%
SS	SW8330	NDA061	NITROBENZENE	259	U	9410	9450	ug/kg	10140.7	93.2	10352.6	90.9	2.5%
SS	SW8330	NDA071	NITROBENZENE	292	U	13200	11000	ug/kg	12591.9	104.8	10435.5	105.8	0.9%
SS	SW8330	NDA061	CTAHYDRO-1,3,5,7-TETRANITRO-1,3,5,7-TETRAZOCIN	259	U	8900	9190	ug/kg	10140.7	88.1	10352.6	88.4	0.3%

Matrix	Analytical Method	Sample ID	Parameter	Lab Result	Lab Qual	MS Lab Result	MSD Lab Result	Units	MS Spike Added	MS %Rec	MSD Spike Added	MSD %Rec	RPD
SS	SW8330	NDA071	CTAHYDRO-1,3,5,7-TETRANITRO-1,3,5,7-TETRAZOCI	292	U	10900	9680	ug/kg	12591.9	86.5	10435.5	93.1	7.3%
SS	SW8270	NDA061	2,4-DINITROTOLUENE	469	U	1500	1190	ug/kg	2216.8	67.6	1925.2	62	8.6%
SS	SW8270	NDA071	2,4-DINITROTOLUENE	554	U	1610	1540	ug/kg	1676.7	95.8	1810.6	85.1	11.8%
SS	SW8270	NDA088	2,4-DINITROTOLUENE	346	U	1090	1100	ug/kg	1384.5	79	1403.3	78.6	0.5%
SS	SW8270	NDA091	2,4-DINITROTOLUENE	367	U	1120	1170	ug/kg	1377.1	81.2	1342.1	87.3	7.2%
SS	SW8270	NDA127	2,4-DINITROTOLUENE	535	U	2740	1700	ug/kg	2328.7	117.6	2029.3	83.7	33.7%
SS	SW8270	NDA149	2,4-DINITROTOLUENE	556	U	1840	1670	ug/kg	2164.3	85.2	2198.0	75.9	11.5%
SS	SW8270	NDA183	2,4-DINITROTOLUENE	589	U	1430	1850	ug/kg	1976.4	72.2	2504.4	74	2.5%
SS	SW8270	NDA061	2-CHLOROPHENOL	469	U	1510	1110	ug/kg	2216.8	68	1925.2	57.8	16.2%
SS	SW8270	NDA071	2-CHLOROPHENOL	554	U	1450	1460	ug/kg	1676.7	86.3	1810.6	80.7	6.7%
SS	SW8270	NDA088	2-CHLOROPHENOL	346	U	1030	1020	ug/kg	1384.5	74.6	1403.3	72.9	2.3%
SS	SW8270	NDA091	2-CHLOROPHENOL	367	U	1190	1260	ug/kg	1377.1	86.2	1342.1	94	8.7%
SS	SW8270	NDA127	2-CHLOROPHENOL	535	U	2400	1600	ug/kg	2328.7	103	2029.3	78.8	26.6%
SS	SW8270	NDA149	2-CHLOROPHENOL	556	U	1600	1460	ug/kg	2164.3	74.1	2198.0	66.4	11.0%
SS	SW8270	NDA183	2-CHLOROPHENOL	589	U	1370	1500	ug/kg	1976.4	69.2	2504.4	60	14.2%
SS	SW8270	NDA061	4-CHLORO-3-METHYLPHENOL	469	U	1480	1160	ug/kg	2216.8	66.7	1925.2	60.4	9.9%
SS	SW8270	NDA071	4-CHLORO-3-METHYLPHENOL	554	U	1440	1430	ug/kg	1676.7	85.7	1810.6	79	8.1%
SS	SW8270	NDA088	4-CHLORO-3-METHYLPHENOL	346	U	1050	1080	ug/kg	1384.5	76.1	1403.3	77.1	1.3%
SS	SW8270	NDA091	4-CHLORO-3-METHYLPHENOL	367	U	1220	1260	ug/kg	1377.1	88.4	1342.1	94	6.1%
SS	SW8270	NDA127	4-CHLORO-3-METHYLPHENOL	535	U	2460	1590	ug/kg	2328.7	105.6	2029.3	78.3	29.7%
SS	SW8270	NDA149	4-CHLORO-3-METHYLPHENOL	556	U	1640	1500	ug/kg	2164.3	75.9	2198.0	68.2	10.7%
SS	SW8270	NDA183	4-CHLORO-3-METHYLPHENOL	589	U	1390	1760	ug/kg	1976.4	70.2	2504.4	70.4	0.3%
SS	SW8270	NDA061	4-NITROPHENOL	1410	U	1420	1160	ug/kg	2216.8	64	1925.2	60.4	5.8%
SS	SW8270	NDA071	4-NITROPHENOL	1660	U	1430	1560	ug/kg	1676.7	85.1	1810.6	86.2	1.3%
SS	SW8270	NDA088	4-NITROPHENOL	1040	U	1110	1170	ug/kg	1384.5	80.4	1403.3	83.6	3.9%
SS	SW8270	NDA091	4-NITROPHENOL	1100	U	1210	1250	ug/kg	1377.1	87.7	1342.1	93.3	6.2%
SS	SW8270	NDA127	4-NITROPHENOL	1590	U	2720	1650	ug/kg	2328.7	116.7	2029.3	81.3	35.8%
SS	SW8270	NDA149	4-NITROPHENOL	1650	U	1780	1540	ug/kg	2164.3	82.4	2198.0	70	16.3%
SS	SW8270	NDA183	4-NITROPHENOL	1770	U	1380	1630	ug/kg	1976.4	69.7	2504.4	65.2	6.7%
SS	SW8270	NDA061	ACENAPHTHENE	469	U	1460	1130	ug/kg	2216.8	65.8	1925.2	58.9	11.1%
SS	SW8270	NDA071	ACENAPHTHENE	554	U	1530	1510	ug/kg	1676.7	91.1	1810.6	83.4	8.8%
SS	SW8270	NDA088	ACENAPHTHENE	346	U	1140	1120	ug/kg	1384.5	82.6	1403.3	80	3.2%
SS	SW8270	NDA091	ACENAPHTHENE	367	U	1190	1210	ug/kg	1377.1	86.2	1342.1	90.3	4.6%
SS	SW8270	NDA127	ACENAPHTHENE	535	U	2290	1440	ug/kg	2328.7	98.3	2029.3	70.9	32.4%
SS	SW8270	NDA149	ACENAPHTHENE	556	U	1510	1410	ug/kg	2164.3	69.9	2198.0	64.1	8.7%
SS	SW8270	NDA183	ACENAPHTHENE	589	U	1470	1830	ug/kg	1976.4	74.2	2504.4	73.2	1.4%
SS	SW8270	NDA061	N-NITROSODI-n-PROPYLAMINE	469	U	1490	1060	ug/kg	2216.8	67.1	1925.2	55.2	19.5%
SS	SW8270	NDA071	N-NITROSODI-n-PROPYLAMINE	554	U	1220	1220	ug/kg	1676.7	72.6	1810.6	67.4	7.4%
SS	SW8270	NDA088	N-NITROSODI-n-PROPYLAMINE	346	U	909	921	ug/kg	1384.5	65.9	1403.3	65.8	0.2%
SS	SW8270	NDA091	N-NITROSODI-n-PROPYLAMINE	367	U	994	1060	ug/kg	1377.1	72	1342.1	79.1	9.4%
SS	SW8270	NDA127	N-NITROSODI-n-PROPYLAMINE	535	U	2580	1750	ug/kg	2328.7	110.7	2029.3	86.2	24.9%
SS	SW8270	NDA149	N-NITROSODI-n-PROPYLAMINE	556	U	1760	1670	ug/kg	2164.3	81.5	2198.0	75.9	7.1%
SS	SW8270	NDA183	N-NITROSODI-n-PROPYLAMINE	589	U	1440	1650	ug/kg	1976.4	72.7	2504.4	66	9.7%
SS	SW8270	NDA061	PENTACHLOROPHENOL	1410	U	1400	1070	ug/kg	2216.8	63.1	1925.2	55.7	12.5%
SS	SW8270	NDA071	PENTACHLOROPHENOL	1660	U	1510	1480	ug/kg	1676.7	89.9	1810.6	81.8	9.4%
SS	SW8270	NDA088	PENTACHLOROPHENOL	1040	U	1050	1120	ug/kg	1384.5	76.1	1403.3	80	5.0%
SS	SW8270	NDA091	PENTACHLOROPHENOL	[illegible]	U	1200	1220	ug/kg	1377.1	87	1342.1	91	[illegible]%

Matrix	Analytical Method	Sample ID	Parameter	Lab Result	Lab Qual	MS Lab Result	MSD Lab Result	Units	MS Spike Added	MS %Rec	MSD Spike Added	MSD %Rec	RPD
SS	SW8270	NDA127	PENTACHLOROPHENOL	1590	U	2550	1580	ug/kg	2328.7	109.4	2029.3	77.8	33.8%
SS	SW8270	NDA149	PENTACHLOROPHENOL	1650	U	1800	1600	ug/kg	2164.3	83.3	2198.0	72.7	13.6%
SS	SW8270	NDA183	PENTACHLOROPHENOL	1770	U	1500	1860	ug/kg	1976.4	75.8	2504.4	74.4	1.9%
SS	SW8270	NDA061	PHENOL	469	U	1420	1150	ug/kg	2216.8	64	1925.2	59.9	6.6%
SS	SW8270	NDA071	PHENOL	554	U	1250	1190	ug/kg	1676.7	74.4	1810.6	65.8	12.3%
SS	SW8270	NDA088	PHENOL	346	U	942	886	ug/kg	1384.5	68.3	1403.3	63.3	7.6%
SS	SW8270	NDA091	PHENOL	367	U	1030	1080	ug/kg	1377.1	74.6	1342.1	80.6	7.7%
SS	SW8270	NDA127	PHENOL	535	U	2460	1560	ug/kg	2328.7	105.6	2029.3	76.9	31.5%
SS	SW8270	NDA149	PHENOL	556	U	1540	1500	ug/kg	2164.3	71.3	2198.0	68.2	4.4%
SS	SW8270	NDA183	PHENOL	589	U	1240	1390	ug/kg	1976.4	62.6	2504.4	55.6	11.8%
SS	SW8270	NDA061	PYRENE	469	U	1510	1170	ug/kg	2216.8	68	1925.2	60.9	11.0%
SS	SW8270	NDA071	PYRENE	554	U	1470	1560	ug/kg	1676.7	87.5	1810.6	86.2	1.5%
SS	SW8270	NDA088	PYRENE	346	U	1140	1170	ug/kg	1384.5	82.6	1403.3	83.6	1.2%
SS	SW8270	NDA091	PYRENE	67	J	1220	1210	ug/kg	1377.1	88.4	1342.1	90.3	2.1%
SS	SW8270	NDA127	PYRENE	535	U	2140	1310	ug/kg	2328.7	91.9	2029.3	64.5	35.0%
SS	SW8270	NDA149	PYRENE	556	U	1570	1380	ug/kg	2164.3	72.7	2198.0	62.7	14.8%
SS	SW8270	NDA183	PYRENE	38	J	1700	1800	ug/kg	1976.4	85.9	2504.4	72	17.6%
SS	SW8260	NDA061	1,1-DICHLOROETHENE	12	U	30.6	31.6	ug/kg	21.8	141	22.1	143	1.4%
SS	SW8260	NDA071	1,1-DICHLOROETHENE	12	U	20.8	21.6	ug/kg	20.0	104.1	20.0	108.1	3.8%
SS	SW8260	NDA088	1,1-DICHLOROETHENE	10	U	25.8	24.1	ug/kg	20.0	121	20.0	120.5	0.4%
SS	SW8260	NDA127	1,1-DICHLOROETHENE	10	U	29.5	35.8	ug/kg	20.0	119	20.0	119	0.0%
SS	SW8260	NDA149	1,1-DICHLOROETHENE	11	U	25	13.5	ug/kg	22.6	110.6	22.7	59.5	60.1%
SS	SW8260	NDA183	1,1-DICHLOROETHENE	12	U	20.1	24	ug/kg	17.6	114.2	20.2	118.8	3.9%
SS	SW8260	NDA061	BENZENE	12	U	24.1	24.9	ug/kg	21.8	111.1	22.1	112.7	1.4%
SS	SW8260	NDA071	BENZENE	12	U	16	16.6	ug/kg	20.0	79.9	20.0	83.3	4.2%
SS	SW8260	NDA088	BENZENE	10	U	19.9	19.8	ug/kg	20.0	93.5	20.0	99	5.7%
SS	SW8260	NDA127	BENZENE	10	U	26.4	32.1	ug/kg	20.0	106.5	20.0	106.5	0.0%
SS	SW8260	NDA149	BENZENE	11	U	22	15.4	ug/kg	22.6	97.4	22.7	67.8	35.8%
SS	SW8260	NDA183	BENZENE	12	U	17.4	20.5	ug/kg	17.6	98.9	20.2	101.5	2.6%
SS	SW8260	NDA061	CHLOROBENZENE	12	U	21.3	22	ug/kg	21.8	98.2	22.1	99.6	1.4%
SS	SW8260	NDA071	CHLOROBENZENE	12	U	12.4	12.7	ug/kg	20.0	62.1	20.0	63.6	2.4%
SS	SW8260	NDA088	CHLOROBENZENE	10	U	16.9	16.9	ug/kg	20.0	79.5	20.0	84.5	6.1%
SS	SW8260	NDA127	CHLOROBENZENE	10	U	23.6	28.7	ug/kg	20.0	95	20.0	95	0.0%
SS	SW8260	NDA149	CHLOROBENZENE	11	U	19.2	15.4	ug/kg	22.6	85	22.7	67.8	22.5%
SS	SW8260	NDA183	CHLOROBENZENE	12	U	15.3	17.8	ug/kg	17.6	86.9	20.2	88.1	1.4%
SS	SW8260	NDA061	TOLUENE	12	U	22.2	23.2	ug/kg	21.8	102.3	22.1	105	2.6%
SS	SW8260	NDA071	TOLUENE	12	U	15.8	16.3	ug/kg	20.0	79.2	20.0	81.8	3.2%
SS	SW8260	NDA088	TOLUENE	10	U	18.8	18.6	ug/kg	20.0	88.5	20.0	93	5.0%
SS	SW8260	NDA127	TOLUENE	10	U	24.9	30.3	ug/kg	20.0	100.5	20.0	100.5	0.0%
SS	SW8260	NDA149	TOLUENE	11	U	20.5	14.4	ug/kg	22.6	90.7	22.7	63.4	35.4%
SS	SW8260	NDA183	TOLUENE	12	U	16.1	19	ug/kg	17.6	91.5	20.2	94.1	2.8%
SS	SW8260	NDA061	TRICHLOROETHYLENE (TCE)	12	U	22.8	24	ug/kg	21.8	105.1	22.1	108.6	3.3%
SS	SW8260	NDA071	TRICHLOROETHYLENE (TCE)	12	U	17.3	17.2	ug/kg	20.0	86.4	20.0	86.6	0.2%
SS	SW8260	NDA088	TRICHLOROETHYLENE (TCE)	10	U	20	19.4	ug/kg	20.0	94	20.0	97	3.1%
SS	SW8260	NDA127	TRICHLOROETHYLENE (TCE)	10	U	25.8	32.1	ug/kg	20.0	104	20.0	106.5	2.4%
SS	SW8260	NDA149	TRICHLOROETHYLENE (TCE)	11	U	21.1	13.7	ug/kg	22.6	93.4	22.7	60.4	42.9%
SS	SW8260	NDA183	TRICHLOROETHYLENE (TCE)	12	U	17	20	ug/kg	17.6	96.6	20.2	99	2.5%

Matrix	Analytical Method	Sample ID	Parameter	Lab Result	Lab Qual	MS Lab Result	MSD Lab Result	Units	MS Spike Added	MS %Rec	MSD Spike Added	MSD %Rec	RPD
SS	SW8082	NDA061	PCB-1016 (AROCHLOR 1016)	34	U	225	230	ug/kg	317.7	70.8	316.2	72.8	2.8%
SS	SW8082	NDA071	PCB-1016 (AROCHLOR 1016)	39	U	192	265	ug/kg	358.9	53.5	364.0	72.8	30.6%
SS	SW8082	NDA127	PCB-1016 (AROCHLOR 1016)	36	U	113	152	ug/kg	340.8	33.1	318.0	47.8	36.3%
SS	SW8082	NDA135	PCB-1016 (AROCHLOR 1016)	40	U	333	356	ug/kg	368.1	90.5	369.2	96.5	6.4%
SS	SW8082	NDA149	PCB-1016 (AROCHLOR 1016)	36	U	118	71.1	ug/kg	329.7	35.8	348.0	20.4	54.8%
SS	SW8082	NDA183	PCB-1016 (AROCHLOR 1016)	37	U	232	272	ug/kg	338.5	68.6	333.2	81.7	17.4%
SS	SW8082	NDA061	PCB-1260 (AROCHLOR 1260)	34	U	251	251	ug/kg	317.7	78.9	316.2	79.4	0.6%
SS	SW8082	NDA071	PCB-1260 (AROCHLOR 1260)	39	U	285	308	ug/kg	358.9	79.4	364.0	84.6	6.3%
SS	SW8082	NDA127	PCB-1260 (AROCHLOR 1260)	36	U	217	245	ug/kg	340.8	63.6	318.0	77	19.1%
SS	SW8082	NDA135	PCB-1260 (AROCHLOR 1260)	40	U	339	356	ug/kg	368.1	92.1	369.2	96.5	4.7%
SS	SW8082	NDA149	PCB-1260 (AROCHLOR 1260)	36	U	176	151	ug/kg	329.7	53.3	348.0	43.4	20.5%
SS	SW8082	NDA183	PCB-1260 (AROCHLOR 1260)	37	U	269	283	ug/kg	338.5	79.6	333.2	85	6.6%
SS	SW8081	NDA061	ALDRIN	1.8	U	17	13.4	ug/kg	15.9	106.9	15.7	85.4	22.4%
SS	SW8081	NDA071	ALDRIN	2	U	9.3	10.5	ug/kg	18.1	51.4	18.1	58	12.1%
SS	SW8081	NDA127	ALDRIN	1.9	U	15.1	13.8	ug/kg	16.6	91	16.5	83.6	8.5%
SS	SW8081	NDA135	ALDRIN	2.1	U	17.9	18.4	ug/kg	18.5	96.8	18.4	100	3.3%
SS	SW8081	NDA149	ALDRIN	1.9	U	16.1	14.8	ug/kg	16.4	98.2	16.4	90.2	8.5%
SS	SW8081	NDA183	ALDRIN	1.9	U	17	13.6	ug/kg	17.1	99.4	16.6	81.9	19.3%
SS	SW8081	NDA061	DIELDRIN	3.5	U	14.8	9	ug/kg	15.9	93.1	15.7	57.3	47.6%
SS	SW8081	NDA071	DIELDRIN	4	U	9.9	10.6	ug/kg	18.1	54.7	18.1	58.6	6.9%
SS	SW8081	NDA127	DIELDRIN	3.6	U	15.6	14.1	ug/kg	16.6	94	16.5	85.5	9.5%
SS	SW8081	NDA135	DIELDRIN	4.1	U	18.5	18.8	ug/kg	18.5	100	18.4	102.2	2.2%
SS	SW8081	NDA149	DIELDRIN	3.6	U	16.6	15.4	ug/kg	16.4	101.2	16.4	93.9	7.5%
SS	SW8081	NDA183	DIELDRIN	3.8	U	16	12.1	ug/kg	17.1	93.6	16.6	72.9	24.9%
SS	SW8081	NDA061	ENDRIN	3.5	U	13.9	9.3	ug/kg	15.9	87.4	15.7	59.2	38.5%
SS	SW8081	NDA071	ENDRIN	4	U	11.4	12	ug/kg	18.1	63	18.1	66.3	5.1%
SS	SW8081	NDA127	ENDRIN	3.6	U	15.8	14.6	ug/kg	16.6	95.2	16.5	88.5	7.3%
SS	SW8081	NDA135	ENDRIN	4.1	U	19.4	19.8	ug/kg	18.5	104.9	18.4	107.6	2.5%
SS	SW8081	NDA149	ENDRIN	3.6	U	17.2	16.1	ug/kg	16.4	104.9	16.4	98.2	6.6%
SS	SW8081	NDA183	ENDRIN	3.8	U	17.6	12.6	ug/kg	17.1	102.9	16.6	75.9	30.2%
SS	SW8081	NDA061	GAMMA BHC (LINDANE)	1.8	U	16.1	11.2	ug/kg	15.9	101.3	15.7	71.3	34.8%
SS	SW8081	NDA071	GAMMA BHC (LINDANE)	2	U	9.7	9.5	ug/kg	18.1	53.6	18.1	52.5	2.1%
SS	SW8081	NDA127	GAMMA BHC (LINDANE)	1.9	U	16.1	14.9	ug/kg	16.6	97	16.5	90.3	7.2%
SS	SW8081	NDA135	GAMMA BHC (LINDANE)	2.1	U	19.7	19.3	ug/kg	18.5	106.5	18.4	104.9	1.5%
SS	SW8081	NDA149	GAMMA BHC (LINDANE)	1.9	U	16.7	15.4	ug/kg	16.4	101.8	16.4	93.9	8.1%
SS	SW8081	NDA183	GAMMA BHC (LINDANE)	1.9	U	16.3	12.2	ug/kg	17.1	95.3	16.6	73.5	25.8%
SS	SW8081	NDA061	HEPTACHLOR	1.8	U	18.4	13.3	ug/kg	15.9	115.7	15.7	84.7	30.9%
SS	SW8081	NDA071	HEPTACHLOR	2	U	9.7	9.6	ug/kg	18.1	53.6	18.1	53	1.1%
SS	SW8081	NDA127	HEPTACHLOR	1.9	U	16.3	16.1	ug/kg	16.6	98.2	16.5	97.6	0.6%
SS	SW8081	NDA135	HEPTACHLOR	2.1	U	19.8	20	ug/kg	18.5	107	18.4	108.7	1.6%
SS	SW8081	NDA149	HEPTACHLOR	1.9	U	18.7	17.6	ug/kg	16.4	114	16.4	107.3	6.1%
SS	SW8081	NDA183	HEPTACHLOR	1.9	U	18.4	14.8	ug/kg	17.1	107.6	16.6	89.2	18.7%
SS	SW8081	NDA061	p,p'-DDT	3.5	U	19	14.7	ug/kg	15.9	119.5	15.7	93.6	24.3%
SS	SW8081	NDA071	p,p'-DDT	4	U	13.8	15	ug/kg	18.1	76.2	18.1	82.9	8.4%
SS	SW8081	NDA127	p,p'-DDT	4.4	=	20.5	19.4	ug/kg	16.6	123.5	16.5	117.6	4.9%
SS	SW8081	NDA135	p,p'-DDT	44	=	101	101	ug/kg	18.5	546	18.4	548.9	0.5%
SS	SW8081	NDA149	p,p'-DDT	[illegible]	U	17.4	16	ug/kg	16.4	106.1	16.4	97.6	[illegible]%

Matrix	Analytical Method	Sample ID	Parameter	Lab Result	Lab Qual	MS Lab Result	MSD Lab Result	Units	MS Spike Added	MS %Rec	MSD Spike Added	MSD %Rec	RPD
SS	SW8081	NDA183	p,p'-DDT	3.8	U	16.5	15.2	ug/kg	17.1	96.5	16.6	91.6	5.2%
SS	SW7471	NDA061	MERCURY	0.015	J	0.19		mg/kg	0.2	87.3			
SS	SW7471	NDA071	MERCURY	0.014	U	0.19		mg/kg	0.2	100			
SS	SW7471	NDA101	MERCURY	0.081	=	0.25		mg/kg	0.2	65.6			
SS	SW7471	NDA113	MERCURY	0.014	U	0.2		mg/kg	0.2	101.2			
SS	SW7471	NDA127	MERCURY	0.019	J	0.16		mg/kg	0.2	95.2			
SS	SW7471	NDA149	MERCURY	0.011	U	0.19708		mg/kg	0.2	94.8			
SS	SW7471	NDA183	MERCURY	0.02	J	0.24		mg/kg	0.2	94			
SS	E200.7	NDA061	ANTIMONY	0.15	U	38.4		mg/kg	105.2	36.6			
SS	E200.7	NDA071	ANTIMONY	0.17	U	52.6		mg/kg	120.8	43.5			
SS	E200.7	NDA113	ANTIMONY	0.74	J	67.7		mg/kg	124.2	53.9			
SS	E200.7	NDA127	ANTIMONY	0.26	J	31		mg/kg	110.1	28.2			
SS	E200.7	NDA149	ANTIMONY	0.36	J	42		mg/kg	108.9	37.9			
SS	E200.7	NDA183	ANTIMONY	0.44	J	56.1		mg/kg	112.9	49.3			
SS	E200.7	NDA061	ARSENIC	0.8	J	379		mg/kg	420.6	89.8			
SS	E200.7	NDA071	ARSENIC	0.81	J	446		mg/kg	483.1	92.1			
SS	E200.7	NDA113	ARSENIC	1	J	456		mg/kg	496.9	91.5			
SS	E200.7	NDA127	ARSENIC	1.1	J	387		mg/kg	440.5	87.7			
SS	E200.7	NDA149	ARSENIC	1.5	J	390		mg/kg	435.7	89.1			
SS	E200.7	NDA183	ARSENIC	0.62	J	404		mg/kg	451.5	89.4			
SS	E200.7	NDA061	BARIUM	150	=	863		mg/kg	420.6	169.3			
SS	E200.7	NDA071	BARIUM	204	=	661		mg/kg	483.1	94.5			
SS	E200.7	NDA113	BARIUM	29.5	J	504		mg/kg	496.9	95.6			
SS	E200.7	NDA127	BARIUM	94.4	=	509		mg/kg	440.5	94.1			
SS	E200.7	NDA149	BARIUM	53.5	=	454		mg/kg	435.7	91.8			
SS	E200.7	NDA183	BARIUM	61.6	=	500		mg/kg	451.5	97			
SS	E200.7	NDA061	BERYLLIUM	0.19	J	10.5		mg/kg	10.5	98.1			
SS	E200.7	NDA071	BERYLLIUM	0.27	J	12.3		mg/kg	12.1	99.7			
SS	E200.7	NDA113	BERYLLIUM	0.12	J	11.5		mg/kg	12.4	91.8			
SS	E200.7	NDA127	BERYLLIUM	0.19	J	11		mg/kg	11.0	94.1			
SS	E200.7	NDA149	BERYLLIUM	0.13	J	10		mg/kg	10.9	94.3			
SS	E200.7	NDA183	BERYLLIUM	0.11	J	10.8		mg/kg	11.3	95			
SS	E200.7	NDA061	CADMIUM	0.021	U	9.6		mg/kg	10.5	91.4			
SS	E200.7	NDA071	CADMIUM	0.024	U	11.7		mg/kg	12.1	97			
SS	E200.7	NDA113	CADMIUM	0.025	U	11.2		mg/kg	12.4	89.8			
SS	E200.7	NDA127	CADMIUM	0.022	U	9.7		mg/kg	11.0	88.1			
SS	E200.7	NDA149	CADMIUM	0.6	J	11		mg/kg	10.9	94.1			
SS	E200.7	NDA183	CADMIUM	0.023	U	10.6		mg/kg	11.3	93.8			
SS	E200.7	NDA061	CHROMIUM, TOTAL	2.3	=	46.1		mg/kg	42.1	104			
SS	E200.7	NDA071	CHROMIUM, TOTAL	2.4	=	50.3		mg/kg	48.3	99.1			
SS	E200.7	NDA113	CHROMIUM, TOTAL	42.9	=	88.5		mg/kg	49.7	91.8			
SS	E200.7	NDA127	CHROMIUM, TOTAL	32.4	=	81		mg/kg	44.1	109.6			
SS	E200.7	NDA149	CHROMIUM, TOTAL	16.1	=	55		mg/kg	43.6	89.7			
SS	E200.7	NDA183	CHROMIUM, TOTAL	9	=	51.3		mg/kg	45.2	93.7			
SS	E200.7	NDA061	COBALT	3.2	J	176		mg/kg	105.2	164.4			
SS	E200.7	NDA071	COBALT	2.5	J	121		mg/kg	120.8	98.4			
SS	E200.7	NDA113	COBALT	12.8	=	127		mg/kg	124.2	92.1			

Matrix	Analytical Method	Sample ID	Parameter	Lab Result	Lab Qual	MS Lab Result	MSD Lab Result	Units	MS Spike Added	MS %Rec	MSD Spike Added	MSD %Rec	RPD
SS	E200.7	NDA127	COBALT	13.3	=	116		mg/kg	110.1	92.8			
SS	E200.7	NDA149	COBALT	7.9	J	107		mg/kg	108.9	91.4			
SS	E200.7	NDA183	COBALT	7.8	J	114		mg/kg	112.9	94.2			
SS	E200.7	NDA061	COPPER	7.3	=	61.5		mg/kg	52.6	103			
SS	E200.7	NDA071	COPPER	8.9	=	69.1		mg/kg	60.4	99.6			
SS	E200.7	NDA113	COPPER	114	=	149		mg/kg	62.1	55.6			
SS	E200.7	NDA127	COPPER	35.4	=	83		mg/kg	55.1	86.5			
SS	E200.7	NDA149	COPPER	47.2	=	103		mg/kg	54.5	101.8			
SS	E200.7	NDA183	COPPER	21.7	=	76.2		mg/kg	56.4	96.4			
SS	E200.7	NDA061	LEAD	11	=	157		mg/kg	105.2	139			
SS	E200.7	NDA071	LEAD	8.6	=	127		mg/kg	120.8	97.8			
SS	E200.7	NDA113	LEAD	36.1	=	143		mg/kg	124.2	85.8			
SS	E200.7	NDA127	LEAD	17.4	=	116		mg/kg	110.1	89.6			
SS	E200.7	NDA149	LEAD	12.7	=	121		mg/kg	108.9	99.1			
SS	E200.7	NDA183	LEAD	9.4	=	116		mg/kg	112.9	94.3			
SS	E200.7	NDA061	MANGANESE	382	=	8230		mg/kg	105.2	7465.2			
SS	E200.7	NDA071	MANGANESE	264	=	383		mg/kg	120.8	99			
SS	E200.7	NDA113	MANGANESE	465	=	532		mg/kg	124.2	54.1			
SS	E200.7	NDA127	MANGANESE	703	=	759		mg/kg	110.1	50.6			
SS	E200.7	NDA149	MANGANESE	374	=	450		mg/kg	108.9	70.1			
SS	E200.7	NDA183	MANGANESE	720	=	804		mg/kg	112.9	74.5			
SS	E200.7	NDA061	NICKEL	0.63	J	102		mg/kg	105.2	96.3			
SS	E200.7	NDA071	NICKEL	0.61	J	120		mg/kg	120.8	99.1			
SS	E200.7	NDA113	NICKEL	20	=	133		mg/kg	124.2	91.2			
SS	E200.7	NDA127	NICKEL	20.5	=	124		mg/kg	110.1	94.3			
SS	E200.7	NDA149	NICKEL	7.6	J	108		mg/kg	108.9	92.3			
SS	E200.7	NDA183	NICKEL	5.1	J	111		mg/kg	112.9	94			
SS	E200.7	NDA061	SELENIUM	0.22	U	371		mg/kg	420.6	88.2			
SS	E200.7	NDA071	SELENIUM	0.25	U	434		mg/kg	483.1	89.9			
SS	E200.7	NDA113	SELENIUM	0.26	U	433		mg/kg	496.9	87.2			
SS	E200.7	NDA127	SELENIUM	0.6	J	375		mg/kg	440.5	85			
SS	E200.7	NDA149	SELENIUM	0.43	J	369		mg/kg	435.7	84.7			
SS	E200.7	NDA183	SELENIUM	0.65	J	400		mg/kg	451.5	88.5			
SS	E200.7	NDA061	SILVER	0.053	U	10.2		mg/kg	10.5	97.1			
SS	E200.7	NDA071	SILVER	0.06	U	11.7		mg/kg	12.1	97.2			
SS	E200.7	NDA113	SILVER	0.41	J	12.3		mg/kg	12.4	95.4			
SS	E200.7	NDA127	SILVER	0.065	J	10		mg/kg	11.0	91.8			
SS	E200.7	NDA149	SILVER	0.054	U	10		mg/kg	10.9	94.8			
SS	E200.7	NDA183	SILVER	0.056	U	10.5		mg/kg	11.3	92.8			
SS	E200.7	NDA061	THALLIUM	0.43	J	402		mg/kg	420.6	95.5			
SS	E200.7	NDA071	THALLIUM	0.59	J	483		mg/kg	483.1	99.9			
SS	E200.7	NDA113	THALLIUM	0.34	U	470		mg/kg	496.9	94.5			
SS	E200.7	NDA127	THALLIUM	1.2	J	419		mg/kg	440.5	94.8			
SS	E200.7	NDA149	THALLIUM	0.77	J	419		mg/kg	435.7	96			
SS	E200.7	NDA183	THALLIUM	0.33	J	436		mg/kg	451.5	96.4			
SS	E200.7	NDA061	VANADIUM	21.3	=	160		mg/kg	105.2	132.2			
SS	[illegible]7	NDA071	VANADIUM	[illegible]	=	152		mg/kg	120.8	102			

Matrix	Analytical Method	Sample ID	Parameter	Lab Result	Lab Qual	MS Lab Result	MSD Lab Result	Units	MS Spike Added	MS %Rec	MSD Spike Added	MSD %Rec	RPD
SS	E200.7	NDA113	VANADIUM	66	=	181		mg/kg	124.2	92.8			
SS	E200.7	NDA127	VANADIUM	54.7	=	152		mg/kg	110.1	88.4			
SS	E200.7	NDA149	VANADIUM	39.1	=	139		mg/kg	108.9	91.7			
SS	E200.7	NDA183	VANADIUM	40.6	=	146		mg/kg	112.9	93.5			
SS	E200.7	NDA061	ZINC	12.8	=	114		mg/kg	105.2	95.9			
SS	E200.7	NDA071	ZINC	12.5	=	127		mg/kg	120.8	94.6			
SS	E200.7	NDA113	ZINC	96.5	=	201		mg/kg	124.2	84.4			
SS	E200.7	NDA127	ZINC	68.4	=	167.103		mg/kg	110.1	89.6			
SS	E200.7	NDA149	ZINC	94	=	195		mg/kg	108.9	92.8			
SS	E200.7	NDA183	ZINC	36.4	=	143		mg/kg	112.9	94.4			
SW	SW8330	NDA037	1,3,5-TRINITROBENZENE	5	U	34.3	31.3	ug/L	40.0	85.8	40.0	78.3	9.1%
SW	SW8330	NDA037	1,3-DINITROBENZENE	5	U	28.7	27	ug/L	40.0	71.8	40.0	67.5	6.2%
SW	SW8330	NDA037	2,4,6-TRINITROTOLUENE	5	U	32.1	29.3	ug/L	40.0	80.3	40.0	73.3	9.1%
SW	SW8330	NDA037	2,4-DINITROTOLUENE	5	U	27.6	25.5	ug/L	40.0	69	40.0	63.8	7.8%
SW	SW8330	NDA037	2,6-DINITROTOLUENE	5	U	28	25.8	ug/L	40.0	70	40.0	64.5	8.2%
SW	SW8330	NDA037	2-NITROTOLUENE	5	U	22.3	18.6	ug/L	40.0	55.8	40.0	46.5	18.2%
SW	SW8330	NDA037	3-NITROTOLUENE	5	U	22.8	19	ug/L	40.0	57	40.0	47.5	18.2%
SW	SW8330	NDA037	4-NITROTOLUENE	5	U	22.8	19.3	ug/L	40.0	57	40.0	48.3	16.5%
SW	SW8330	NDA037	HEXAHYDRO-1,3,5-TRINITRO-1,3,5,7-TETRAZOCINE	5	U	35.2	33.4	ug/L	40.0	88	40.0	83.5	5.2%
SW	SW8330	NDA037	METHYL-2,4,6-TRINITROPHENYLNITRAMINE	5	U	37.1	32.7	ug/L	40.0	92.8	40.0	81.8	12.6%
SW	SW8330	NDA037	NITROBENZENE	5	U	24.2	20.3	ug/L	40.0	60.5	40.0	50.8	17.4%
SW	SW8330	NDA037	CTAHYDRO-1,3,5,7-TETRANITRO-1,3,5,7-TETRAZOCI	5	U	32.4	32.3	ug/L	40.0	81	40.0	80.8	0.2%
SW	SW8270	NDA037	2,4-DINITROTOLUENE	10	U	47.9	42.4	ug/L	44.0	108.9	41.2	102.9	5.7%
SW	SW8270	NDA037	2-CHLOROPHENOL	10	U	44.1	39.3	ug/L	44.0	100.2	41.2	95.4	4.9%
SW	SW8270	NDA037	4-CHLORO-3-METHYLPHENOL	10	U	44	39.8	ug/L	44.0	100	41.2	96.6	3.5%
SW	SW8270	NDA037	4-NITROPHENOL	51	U	25.9	22.8	ug/L	44.0	58.9	41.2	55.3	6.3%
SW	SW8270	NDA037	ACENAPHTHENE	10	U	40.7	36.2	ug/L	44.0	92.5	41.2	87.9	5.1%
SW	SW8270	NDA037	N-NITROSODI-n-PROPYLAMINE	10	U	44.8	39.7	ug/L	44.0	101.8	41.2	96.4	5.4%
SW	SW8270	NDA037	PENTACHLOROPHENOL	51	U	37.1	31.2	ug/L	44.0	84.3	41.2	75.7	10.8%
SW	SW8270	NDA037	PHENOL	10	U	32.7	27.7	ug/L	44.0	74.3	41.2	67.2	10.0%
SW	SW8270	NDA037	PYRENE	10	U	42.2	37.9	ug/L	44.0	95.9	41.2	92	4.2%
SW	SW8260	NDA037	1,1-DICHLOROETHENE	10	U	19.1	18.8	ug/L	20.0	95.5	20.0	94	1.6%
SW	SW8260	NDA037	BENZENE	10	U	18.5	18.6	ug/L	20.0	92.5	20.0	93	0.5%
SW	SW8260	NDA037	CHLOROBENZENE	10	U	17.9	18.2	ug/L	20.0	89.5	20.0	91	1.7%
SW	SW8260	NDA037	TOLUENE	10	U	18.3	18.6	ug/L	20.0	91.5	20.0	93	1.6%
SW	SW8260	NDA037	TRICHLOROETHYLENE (TCE)	10	U	19	19.1	ug/L	20.0	95	20.0	95.5	0.5%
SW	SW8082	NDA037	PCB-1016 (AROCHLOR 1016)	1.1	U	8.6	8	ug/L	10.6	81.1	10.5	76.2	6.2%
SW	SW8082	NDA037	PCB-1260 (AROCHLOR 1260)	1.1	U	8.8	9	ug/L	10.6	83	10.5	85.7	3.2%
SW	SW8081	NDA037	ALDRIN	0.05	U	0.45	0.36	ug/L	0.5	84.9	0.5	69.2	20.4%
SW	SW8081	NDA037	DIELDRIN	0.11	U	0.54	0.48	ug/L	0.5	101.9	0.5	92.3	9.9%
SW	SW8081	NDA037	ENDRIN	0.11	U	0.6	0.54	ug/L	0.5	113.2	0.5	103.9	8.6%
SW	SW8081	NDA037	GAMMA BHC (LINDANE)	0.05	U	0.56	0.46	ug/L	0.5	105.7	0.5	88.5	17.7%
SW	SW8081	NDA037	HEPTACHLOR	0.05	U	0.59	0.47	ug/L	0.5	111.3	0.5	90.4	20.7%
SW	SW8081	NDA037	p,p'-DDT	0.11	U	0.59	0.52	ug/L	0.5	111.3	0.5	100	10.7%
SW	SW7470	NDA037	MERCURY	1.6	=	1.8		ug/L	2.5	8.4			
SW	E200.7	NDA037	ALUMINUM	1680	=	4170		ug/L	2000.0	124.7			
SW	E200.7	NDA037	ANTIMONY	1.4	U	601		ug/L	500.0	120.2			

Matrix	Analytical Method	Sample ID	Parameter	Lab Result	Lab Qual	MS Lab Result	MSD Lab Result	Units	MS Spike Added	MS %Rec	MSD Spike Added	MSD %Rec	RPD
SW	E200.7	NDA037	ARSENIC	3.4	U	2240		ug/L	2000.0	112.2			
SW	E200.7	NDA037	BARIUM	12.3	J	1970		ug/L	2000.0	98.1			
SW	E200.7	NDA037	BERYLLIUM	0.3	U	45.7		ug/L	50.0	91.4			
SW	E200.7	NDA037	CADMIUM	2	J	48.1		ug/L	50.0	92.3			
SW	E200.7	NDA037	CHROMIUM, TOTAL	1.1	J	191		ug/L	200.0	94.9			
SW	E200.7	NDA037	COBALT	1.1	J	484		ug/L	500.0	96.6			
SW	E200.7	NDA037	COPPER	1.9	U	310		ug/L	251.9	123.3			
SW	E200.7	NDA037	IRON	761	=	1870		ug/L	1000.0	110.7			
SW	E200.7	NDA037	LEAD	1.1	U	499		ug/L	500.0	99.8			
SW	E200.7	NDA037	MANGANESE	18.1	=	494		ug/L	500.0	95.1			
SW	E200.7	NDA037	NICKEL	0.8	U	480		ug/L	500.0	95.9			
SW	E200.7	NDA037	SELENIUM	6.4	=	2290		ug/L	2000.0	114.4			
SW	E200.7	NDA037	THALLIUM	2.7	U	2010		ug/L	2000.0	100.5			
SW	E200.7	NDA037	VANADIUM	2.5	J	500		ug/L	500.0	99.4			
WG	SW8330	NDA011	1,3,5-TRINITROBENZENE	5	U	39.7	40.5	ug/L	40.0	99.3	40.0	101.3	2.0%
WG	SW8330	NDA011	1,3-DINITROBENZENE	5	U	37.2	38.6	ug/L	40.0	93	40.0	96.5	3.7%
WG	SW8330	NDA011	2,4,6-TRINITROTOLUENE	5	U	37.2	39.1	ug/L	40.0	93	40.0	97.8	5.0%
WG	SW8330	NDA011	2,4-DINITROTOLUENE	5	U	37.4	38.5	ug/L	40.0	93.5	40.0	96.3	3.0%
WG	SW8330	NDA011	2,6-DINITROTOLUENE	5	U	37.1	38.5	ug/L	40.0	92.8	40.0	96.3	3.7%
WG	SW8330	NDA011	2-NITROTOLUENE	5	U	26.4	31.9	ug/L	40.0	66	40.0	79.8	18.9%
WG	SW8330	NDA011	3-NITROTOLUENE	5	U	26.9	32.8	ug/L	40.0	67.3	40.0	82	19.7%
WG	SW8330	NDA011	4-NITROTOLUENE	5	U	28.2	33.6	ug/L	40.0	70.5	40.0	84	17.5%
WG	SW8330	NDA011	HEXAHYDRO-1,3,5-TRINITRO-1,3,5,7-TETRAZOCINE	5	U	39.2	40.1	ug/L	40.0	98	40.0	100.3	2.3%
WG	SW8330	NDA011	METHYL-2,4,6-TRINITROPHENYLNITRAMINE	5	U	41.2	41.4	ug/L	40.0	103	40.0	103.5	0.5%
WG	SW8330	NDA011	NITROBENZENE	5	U	28.1	33.7	ug/L	40.0	70.3	40.0	84.3	18.1%
WG	SW8330	NDA011	CTAHYDRO-1,3,5,7-TETRANITRO-1,3,5,7-TETRAZOCIN	5	U	41.6	41.4	ug/L	40.0	104	40.0	103.5	0.5%
WG	SW8270	NDA011	2,4-DINITROTOLUENE	5	U	27.7	28.6	ug/L	41.7	66.4	41.7	68.6	3.3%
WG	SW8270	NDA029	2,4-DINITROTOLUENE	5	U	38.6	40	ug/L	42.1	91.7	42.6	93.9	2.4%
WG	SW8270	NDA011	2-CHLOROPHENOL	5	U	24.4	23.3	ug/L	41.7	58.5	41.7	55.9	4.5%
WG	SW8270	NDA029	2-CHLOROPHENOL	5	U	30.8	31.7	ug/L	42.1	73.2	42.6	74.4	1.6%
WG	SW8270	NDA011	4-CHLORO-3-METHYLPHENOL	5	U	26.1	26.5	ug/L	41.7	62.6	41.7	63.6	1.6%
WG	SW8270	NDA029	4-CHLORO-3-METHYLPHENOL	5	U	35.5	36	ug/L	42.1	84.3	42.6	84.5	0.2%
WG	SW8270	NDA011	4-NITROPHENOL	22	U	8.6	8.2	ug/L	41.7	20.6	41.7	19.7	4.5%
WG	SW8270	NDA029	4-NITROPHENOL	21	U	15	15.6	ug/L	42.1	35.6	42.6	36.6	2.8%
WG	SW8270	NDA011	ACENAPHTHENE	5	U	24.8	25.6	ug/L	41.7	59.5	41.7	61.4	3.1%
WG	SW8270	NDA029	ACENAPHTHENE	5	U	36.4	36.8	ug/L	42.1	86.5	42.6	86.4	0.1%
WG	SW8270	NDA011	N-NITROSODI-n-PROPYLAMINE	5	U	25.9	26	ug/L	41.7	62.1	41.7	62.4	0.5%
WG	SW8270	NDA029	N-NITROSODI-n-PROPYLAMINE	5	U	33.1	34.2	ug/L	42.1	78.6	42.6	80.3	2.1%
WG	SW8270	NDA011	PENTACHLOROPHENOL	22	U	21.4	20.8	ug/L	41.7	51.3	41.7	49.9	2.8%
WG	SW8270	NDA029	PENTACHLOROPHENOL	21	U	34	36.8	ug/L	42.1	80.8	42.6	86.4	6.7%
WG	SW8270	NDA011	PHENOL	5	U	11.1	11.7	ug/L	41.7	26.6	41.7	28.1	5.5%
WG	SW8270	NDA029	PHENOL	5	U	15.5	14.9	ug/L	42.1	36.8	42.6	35	5.0%
WG	SW8270	NDA011	PYRENE	5	U	27.7	28.7	ug/L	41.7	66.4	41.7	68.8	3.6%
WG	SW8270	NDA029	PYRENE	5	U	38.1	39.4	ug/L	42.1	90.5	42.6	92.5	2.2%
WG	SW8260	NDA001	1,1,2-TRICHLOROETHANE	1	U	5.5	5.4	ug/L	5.0	110	5.0	108	1.8%
WG	SW8260	NDA002	1,1,2-TRICHLOROETHANE	1	U	5.4	5.3	ug/L	5.0	108	5.0	106	1.9%
WG	SW8260	NDA011	1,1,2-TRICHLOROETHANE	1	U	5.7	5.6	ug/L	5.0	114	5.0	112	1.8%

Matrix	Analytical Method	Sample ID	Parameter	Lab Result	Lab Qual	MS Lab Result	MSD Lab Result	Units	MS Spike Added	MS %Rec	MSD Spike Added	MSD %Rec	RPD
WG	SW8260	NDA015	1,1,2-TRICHLOROETHANE	1	U	5.7	5.5	ug/L	5.0	114	5.0	110	3.6%
WG	SW8260	NDA017	1,1,2-TRICHLOROETHANE	1	U	5.1	5	ug/L	5.0	102	5.0	100	2.0%
WG	SW8260	NDA029	1,1-DICHLOROETHENE	1	U	5.4	5.3	ug/L	5.0	108	5.0	106	1.9%
WG	SW8260	NDA001	1,2-DICHLOROETHANE	1	U	3.8	3.6	ug/L	5.0	76	5.0	72	5.4%
WG	SW8260	NDA002	1,2-DICHLOROETHANE	1	U	3.7	3.8	ug/L	5.0	74	5.0	76	2.7%
WG	SW8260	NDA011	1,2-DICHLOROETHANE	1	U	3.8	3.8	ug/L	5.0	76	5.0	76	0.0%
WG	SW8260	NDA015	1,2-DICHLOROETHANE	1	U	3.9	3.8	ug/L	5.0	78	5.0	76	2.6%
WG	SW8260	NDA017	1,2-DICHLOROETHANE	1	U	3.6	3.7	ug/L	5.0	72	5.0	74	2.7%
WG	SW8260	NDA001	1,2-DICHLOROPROPANE	1	U	5.4	5.2	ug/L	5.0	108	5.0	104	3.8%
WG	SW8260	NDA002	1,2-DICHLOROPROPANE	1	U	5.1	5.1	ug/L	5.0	102	5.0	102	0.0%
WG	SW8260	NDA011	1,2-DICHLOROPROPANE	1	U	5.5	5.4	ug/L	5.0	110	5.0	108	1.8%
WG	SW8260	NDA015	1,2-DICHLOROPROPANE	1	U	5.4	5.4	ug/L	5.0	108	5.0	108	0.0%
WG	SW8260	NDA017	1,2-DICHLOROPROPANE	1	U	5	5.1	ug/L	5.0	100	5.0	102	2.0%
WG	SW8260	NDA001	1,4-DICHLOROBENZENE	1	U	4.8	4.7	ug/L	5.0	96	5.0	94	2.1%
WG	SW8260	NDA002	1,4-DICHLOROBENZENE	1	U	5	4.9	ug/L	5.0	100	5.0	98	2.0%
WG	SW8260	NDA011	1,4-DICHLOROBENZENE	1	U	4.5	4.5	ug/L	5.0	90	5.0	90	0.0%
WG	SW8260	NDA015	1,4-DICHLOROBENZENE	1	U	4.7	4.7	ug/L	5.0	94	5.0	94	0.0%
WG	SW8260	NDA017	1,4-DICHLOROBENZENE	1	U	5	4.9	ug/L	5.0	100	5.0	98	2.0%
WG	SW8260	NDA001	BENZENE	1	U	5.4	5.3	ug/L	5.0	108	5.0	106	1.9%
WG	SW8260	NDA002	BENZENE	1	U	5.3	5.2	ug/L	5.0	106	5.0	104	1.9%
WG	SW8260	NDA011	BENZENE	1	U	5.5	5.4	ug/L	5.0	110	5.0	108	1.8%
WG	SW8260	NDA015	BENZENE	1	U	5.6	5.4	ug/L	5.0	112	5.0	108	3.6%
WG	SW8260	NDA017	BENZENE	1	U	5.2	5	ug/L	5.0	104	5.0	100	3.9%
WG	SW8260	NDA029	BENZENE	1	U	5.1	5	ug/L	5.0	102	5.0	100	2.0%
WG	SW8260	NDA001	BROMOFORM	1	U	3.9	3.8	ug/L	5.0	78	5.0	76	2.6%
WG	SW8260	NDA002	BROMOFORM	1	U	3.7	3.6	ug/L	5.0	74	5.0	72	2.7%
WG	SW8260	NDA011	BROMOFORM	1	U	3.9	3.9	ug/L	5.0	78	5.0	78	0.0%
WG	SW8260	NDA015	BROMOFORM	1	U	4	4	ug/L	5.0	80	5.0	80	0.0%
WG	SW8260	NDA017	BROMOFORM	1	U	3.6	3.6	ug/L	5.0	72	5.0	72	0.0%
WG	SW8260	NDA001	CARBON TETRACHLORIDE	1	U	4.3	4.2	ug/L	5.0	86	5.0	84	2.4%
WG	SW8260	NDA002	CARBON TETRACHLORIDE	1	U	4.2	4	ug/L	5.0	84	5.0	80	4.9%
WG	SW8260	NDA011	CARBON TETRACHLORIDE	1	U	4.5	4.4	ug/L	5.0	90	5.0	88	2.2%
WG	SW8260	NDA015	CARBON TETRACHLORIDE	1	U	4.4	4.3	ug/L	5.0	88	5.0	86	2.3%
WG	SW8260	NDA017	CARBON TETRACHLORIDE	1	U	4.2	4	ug/L	5.0	84	5.0	80	4.9%
WG	SW8260	NDA029	CHLOROBENZENE	1	U	4.9	4.8	ug/L	5.0	98	5.0	96	2.1%
WG	SW8260	NDA001	cis-1,3-DICHLOROPROPENE	1	U	5.1	5	ug/L	5.0	102	5.0	100	2.0%
WG	SW8260	NDA002	cis-1,3-DICHLOROPROPENE	1	U	4.8	4.8	ug/L	5.0	96	5.0	96	0.0%
WG	SW8260	NDA011	cis-1,3-DICHLOROPROPENE	1	U	5.2	5	ug/L	5.0	104	5.0	100	3.9%
WG	SW8260	NDA015	cis-1,3-DICHLOROPROPENE	1	U	5.2	5.1	ug/L	5.0	104	5.0	102	1.9%
WG	SW8260	NDA017	cis-1,3-DICHLOROPROPENE	1	U	4.7	4.7	ug/L	5.0	94	5.0	94	0.0%
WG	SW8260	NDA001	ETHYLENE DIBROMIDE	1	U	4.9	4.8	ug/L	5.0	98	5.0	96	2.1%
WG	SW8260	NDA002	ETHYLENE DIBROMIDE	1	U	5.1	5	ug/L	5.0	102	5.0	100	2.0%
WG	SW8260	NDA011	ETHYLENE DIBROMIDE	1	U	5	4.9	ug/L	5.0	100	5.0	98	2.0%
WG	SW8260	NDA015	ETHYLENE DIBROMIDE	1	U	4.9	5	ug/L	5.0	98	5.0	100	2.0%
WG	SW8260	NDA017	ETHYLENE DIBROMIDE	1	U	4.9	4.9	ug/L	5.0	98	5.0	98	0.0%
WG	SW8260	NDA001	TETRACHLOROETHYLENE(PCE)	1	U	3.6	3.5	ug/L	5.0	72	5.0	70	2.8%
WG	SW8260	NDA002	TETRACHLOROETHYLENE(PCE)	1	U	3.7	3.6	ug/L	5.0	74	5.0	72	2.7%

Matrix	Analytical Method	Sample ID	Parameter	Lab Result	Lab Qual	MS Lab Result	MSD Lab Result	Units	MS Spike Added	MS %Rec	MSD Spike Added	MSD %Rec	RPD
WG	SW8260	NDA011	TETRACHLOROETHYLENE(PCE)	1	U	3.4	3.4	ug/L	5.0	68	5.0	68	0.0%
WG	SW8260	NDA015	TETRACHLOROETHYLENE(PCE)	1	U	3.7	3.4	ug/L	5.0	74	5.0	68	8.5%
WG	SW8260	NDA017	TETRACHLOROETHYLENE(PCE)	1	U	3.6	3.7	ug/L	5.0	72	5.0	74	2.7%
WG	SW8260	NDA029	TOLUENE	1	U	5	4.9	ug/L	5.0	100	5.0	98	2.0%
WG	SW8260	NDA001	TRICHLOROETHYLENE (TCE)	1	U	5.3	5.1	ug/L	5.0	106	5.0	102	3.8%
WG	SW8260	NDA002	TRICHLOROETHYLENE (TCE)	1	U	5.1	5	ug/L	5.0	102	5.0	100	2.0%
WG	SW8260	NDA011	TRICHLOROETHYLENE (TCE)	1	U	5.4	5.1	ug/L	5.0	108	5.0	102	5.7%
WG	SW8260	NDA015	TRICHLOROETHYLENE (TCE)	1	U	5.3	5.2	ug/L	5.0	106	5.0	104	1.9%
WG	SW8260	NDA017	TRICHLOROETHYLENE (TCE)	1	U	5	4.8	ug/L	5.0	100	5.0	96	4.1%
WG	SW8260	NDA029	TRICHLOROETHYLENE (TCE)	1	U	4.9	4.8	ug/L	5.0	98	5.0	96	2.1%
WG	SW8260	NDA001	VINYL CHLORIDE	1	U	5	4.7	ug/L	5.0	100	5.0	94	6.2%
WG	SW8260	NDA002	VINYL CHLORIDE	1	U	5.1	4.8	ug/L	5.0	102	5.0	96	6.1%
WG	SW8260	NDA011	VINYL CHLORIDE	1	U	4.5	4.6	ug/L	5.0	90	5.0	92	2.2%
WG	SW8260	NDA015	VINYL CHLORIDE	1	U	5	4.6	ug/L	5.0	100	5.0	92	8.3%
WG	SW8260	NDA017	VINYL CHLORIDE	1	U	4.5	4.1	ug/L	5.0	90	5.0	82	9.3%
WG	SW8082	NDA011	PCB-1016 (AROCHLOR 1016)	0.22	U	7.4	6.9	ug/L	10.9	67.9	10.5	65.7	3.3%
WG	SW8082	NDA029	PCB-1016 (AROCHLOR 1016)	0.25	U	6.6	6.9	ug/L	10.2	64.7	10.3	67	3.5%
WG	SW8082	NDA011	PCB-1260 (AROCHLOR 1260)	0.22	U	7.9	7.5	ug/L	10.9	72.5	10.5	71.4	1.5%
WG	SW8082	NDA029	PCB-1260 (AROCHLOR 1260)	0.25	U	6.8	6.8	ug/L	10.2	66.7	10.3	66	1.1%
WG	SW8081	NDA011	ALDRIN	0.01	U	0.48	0.51	ug/L	0.5	88.9	0.5	96.2	7.9%
WG	SW8081	NDA029	ALDRIN	0.01	U	0.29	0.26	ug/L	0.5	53.7	0.6	46.4	14.6%
WG	SW8081	NDA011	DIELDRIN	0.02	U	0.52	0.53	ug/L	0.5	96.3	0.5	100	3.8%
WG	SW8081	NDA029	DIELDRIN	0.03	U	0.52	0.45	ug/L	0.5	96.3	0.6	80.4	18.0%
WG	SW8081	NDA011	ENDRIN	0.02	U	0.49	0.49	ug/L	0.5	90.7	0.5	92.5	2.0%
WG	SW8081	NDA029	ENDRIN	0.03	U	0.6	0.54	ug/L	0.5	111.1	0.6	96.4	14.2%
WG	SW8081	NDA011	GAMMA BHC (LINDANE)	0.01	U	0.54	0.56	ug/L	0.5	100	0.5	105.7	5.5%
WG	SW8081	NDA029	GAMMA BHC (LINDANE)	0.01	U	0.61	0.66	ug/L	0.5	113	0.6	117.9	4.2%
WG	SW8081	NDA011	HEPTACHLOR	0.01	U	0.45	0.46	ug/L	0.5	83.3	0.5	86.8	4.1%
WG	SW8081	NDA029	HEPTACHLOR	0.01	U	0.44	0.4	ug/L	0.5	81.5	0.6	71.4	13.2%
WG	SW8081	NDA011	p,p'-DDT	0.02	U	0.48	0.49	ug/L	0.5	88.9	0.5	92.5	4.0%
WG	SW8081	NDA029	p,p'-DDT	0.03	U	0.44	0.37	ug/L	0.5	81.5	0.6	66.1	20.9%
WG	SW7470	NDA001	MERCURY	0.18	U	2.5		ug/L	2.5	100.4			
WG	SW7470	NDA002	MERCURY	0.18	U	2.5		ug/L	2.5	99.6			
WG	SW7470	NDA011	MERCURY	0.18	U	2.5		ug/L	2.5	100.8			
WG	SW7470	NDA015	MERCURY	0.18	U	2.4		ug/L	2.5	95.2			
WG	SW7470	NDA017	MERCURY	0.18	U	2.57		ug/L	2.5	102.8			
WG	SW7470	NDA021	MERCURY	0.18	U	2.7		ug/L	2.5	107.2			
WG	SW7470	NDA022	MERCURY	0.18	U	2.5		ug/L	2.5	101.2			
WG	SW7470	NDA029	MERCURY	0.18	U	2.51		ug/L	2.5	100.4			
WG	SW7470	NDA001	MERCURY, DISSOLVED	0.18	U	2.5		ug/L	2.5	98.4			
WG	SW7470	NDA011	MERCURY, DISSOLVED	0.18	U	2.6		ug/L	2.5	103.6			
WG	SW7470	NDA015	MERCURY, DISSOLVED	0.18	U	2.5		ug/L	2.5	100.8			
WG	SW7470	NDA029	MERCURY, DISSOLVED	0.18	U	2.37		ug/L	2.5	94.8			
WG	E314.0	NDA337	PERCHLORATE	40	U	960		ug/L	1040.0	96			
WG	E314.0	NDA340	PERCHLORATE	0.8	U	19.4		ug/L	20.8	97			
WG	E314.0	NDB010	PERCHLORATE	8	U	179		ug/L	208.0	90			
WG	[illegible]0.7	NDA001	ALUMINUM	[illegible]0	=	5340		ug/L	2000.0	121.9			

Matrix	Analytical Method	Sample ID	Parameter	Lab Result	Lab Qual	MS Lab Result	MSD Lab Result	Units	MS Spike Added	MS %Rec	MSD Spike Added	MSD %Rec	RPD
WG	E200.7	NDA002	ALUMINUM	5420	=	8240		ug/L	2000.0	141.2			
WG	E200.7	NDA011	ALUMINUM	672	=	2530		ug/L	2000.0	93			
WG	E200.7	NDA015	ALUMINUM	8700	=	10600		ug/L	2000.0	93.4			
WG	E200.7	NDA017	ALUMINUM	886	=	2810		ug/L	2000.0	96.3			
WG	E200.7	NDA019	ALUMINUM	291	=	2320		ug/L	2000.0	101.5			
WG	E200.7	NDA022	ALUMINUM	18800	=	20600		ug/L	2000.0	89.4			
WG	E200.7	NDA029	ALUMINUM	24000	=	31400		ug/L	4000.0	185.5			
WG	E200.7	NDA011	ALUMINUM, DISSOLVED	53.1	J	2080		ug/L	2000.0	101.3			
WG	E200.7	NDA029	ALUMINUM, DISSOLVED	1150	=	4870		ug/L	4000.0	92.8			
WG	E200.7	NDA001	ANTIMONY	1.4	U	565		ug/L	500.0	112.9			
WG	E200.7	NDA002	ANTIMONY	1.4	U	552		ug/L	500.0	110.3			
WG	E200.7	NDA011	ANTIMONY	1.4	U	533		ug/L	500.0	106.6			
WG	E200.7	NDA015	ANTIMONY	1.5	J	489		ug/L	500.0	97.5			
WG	E200.7	NDA017	ANTIMONY	1.4	U	519		ug/L	500.0	103.7			
WG	E200.7	NDA019	ANTIMONY	1.4	U	532		ug/L	500.0	106.4			
WG	E200.7	NDA022	ANTIMONY	1.4	U	483		ug/L	500.0	96.5			
WG	E200.7	NDA029	ANTIMONY	1.4	U	955		ug/L	1000.0	95.5			
WG	E200.7	NDA011	ANTIMONY, DISSOLVED	1.4	U	548		ug/L	500.0	109.5			
WG	E200.7	NDA029	ANTIMONY, DISSOLVED	1.4	U	1050		ug/L	1000.0	105			
WG	E200.7	NDA001	ARSENIC	3.4	U	2250		ug/L	2000.0	112.7			
WG	E200.7	NDA002	ARSENIC	3.4	U	2120		ug/L	2000.0	106.1			
WG	E200.7	NDA011	ARSENIC	3.4	U	2080		ug/L	2000.0	103.8			
WG	E200.7	NDA015	ARSENIC	3.4	U	2070		ug/L	2000.0	103.4			
WG	E200.7	NDA017	ARSENIC	3.4	U	1980		ug/L	2000.0	98.8			
WG	E200.7	NDA019	ARSENIC	3.4	U	2030		ug/L	2000.0	101.6			
WG	E200.7	NDA022	ARSENIC	3.4	U	2000		ug/L	2000.0	99.9			
WG	E200.7	NDA029	ARSENIC	3.4	U	3950		ug/L	4000.0	98.6			
WG	E200.7	NDA011	ARSENIC, DISSOLVED	3.4	U	2140		ug/L	2000.0	107.2			
WG	E200.7	NDA029	ARSENIC, DISSOLVED	3.4	U	3940		ug/L	4000.0	98.5			
WG	E200.7	NDA001	BARIUM	486	=	2430		ug/L	2000.0	97.2			
WG	E200.7	NDA002	BARIUM	943	=	2960		ug/L	2000.0	100.7			
WG	E200.7	NDA011	BARIUM	212	=	2100		ug/L	2000.0	94.3			
WG	E200.7	NDA015	BARIUM	174	J	2130		ug/L	2000.0	97.8			
WG	E200.7	NDA017	BARIUM	61.2	J	2010		ug/L	2000.0	97.2			
WG	E200.7	NDA019	BARIUM	72	J	2060		ug/L	2000.0	99.3			
WG	E200.7	NDA022	BARIUM	141	J	2090		ug/L	2000.0	97.5			
WG	E200.7	NDA029	BARIUM	248	=	4270		ug/L	4000.0	100.5			
WG	E200.7	NDA011	BARIUM, DISSOLVED	200	=	2120		ug/L	2000.0	96			
WG	E200.7	NDA029	BARIUM, DISSOLVED	129	J	4120		ug/L	4000.0	99.7			
WG	E200.7	NDA001	BERYLLIUM	0.3	U	48.6		ug/L	50.0	97.1			
WG	E200.7	NDA002	BERYLLIUM	0.3	U	44.7		ug/L	50.0	89.4			
WG	E200.7	NDA011	BERYLLIUM	0.3	U	52		ug/L	50.0	104			
WG	E200.7	NDA015	BERYLLIUM	0.31	J	52.9		ug/L	50.0	105.2			
WG	E200.7	NDA017	BERYLLIUM	0.3	U	51.5		ug/L	50.0	103.1			
WG	E200.7	NDA019	BERYLLIUM	0.3	U	49.4		ug/L	50.0	98.8			
WG	E200.7	NDA022	BERYLLIUM	0.3	U	50.7		ug/L	50.0	101.3			
WG	E200.7	NDA029	BERYLLIUM	0.3	U	100		ug/L	100.0	99.5			

Matrix	Analytical Method	Sample ID	Parameter	Lab Result	Lab Qual	MS Lab Result	MSD Lab Result	Units	MS Spike Added	MS %Rec	MSD Spike Added	MSD %Rec	RPD
WG	E200.7	NDA011	BERYLLIUM, DISSOLVED	0.3	U	53.6		ug/L	50.0	107.3			
WG	E200.7	NDA029	BERYLLIUM, DISSOLVED	0.3	U	99		ug/L	100.0	98.5			
WG	E200.7	NDA001	CADMIUM	2	J	51.2		ug/L	50.0	98.3			
WG	E200.7	NDA002	CADMIUM	4.6	J	50.1		ug/L	50.0	91.1			
WG	E200.7	NDA011	CADMIUM	0.64	J	51.9		ug/L	50.0	102.6			
WG	E200.7	NDA015	CADMIUM	0.2	U	52		ug/L	50.0	103.9			
WG	E200.7	NDA017	CADMIUM	0.2	U	50.4		ug/L	50.0	100.7			
WG	E200.7	NDA019	CADMIUM	0.2	U	50.5		ug/L	50.0	101			
WG	E200.7	NDA022	CADMIUM	0.2	U	49.2		ug/L	50.0	98.4			
WG	E200.7	NDA029	CADMIUM	0.2	U	96		ug/L	100.0	96.3			
WG	E200.7	NDA011	CADMIUM, DISSOLVED	0.8	J	53.9		ug/L	50.0	106.2			
WG	E200.7	NDA029	CADMIUM, DISSOLVED	0.25	J	98		ug/L	100.0	98			
WG	E200.7	NDA011	CHROMIUM, DISSOLVED	1.3	J	212		ug/L	200.0	105.5			
WG	E200.7	NDA029	CHROMIUM, DISSOLVED	3.6	J	397		ug/L	400.0	98.3			
WG	E200.7	NDA001	CHROMIUM, TOTAL	14.7	=	215		ug/L	200.0	100.1			
WG	E200.7	NDA002	CHROMIUM, TOTAL	3.6	J	189		ug/L	200.0	92.7			
WG	E200.7	NDA011	CHROMIUM, TOTAL	4	J	208		ug/L	200.0	101.9			
WG	E200.7	NDA015	CHROMIUM, TOTAL	30.8	=	237		ug/L	200.0	102.9			
WG	E200.7	NDA017	CHROMIUM, TOTAL	8	J	211		ug/L	200.0	101.4			
WG	E200.7	NDA019	CHROMIUM, TOTAL	2.2	J	202		ug/L	200.0	100			
WG	E200.7	NDA022	CHROMIUM, TOTAL	28.4	=	227		ug/L	200.0	99.1			
WG	E200.7	NDA029	CHROMIUM, TOTAL	50.7	=	451		ug/L	400.0	100.1			
WG	E200.7	NDA001	COBALT	0.5	U	505		ug/L	500.0	100.9			
WG	E200.7	NDA002	COBALT	3.5	J	474		ug/L	500.0	94.1			
WG	E200.7	NDA011	COBALT	0.5	U	504		ug/L	500.0	100.8			
WG	E200.7	NDA015	COBALT	5.9	J	517		ug/L	500.0	102.2			
WG	E200.7	NDA017	COBALT	0.93	J	496		ug/L	500.0	99.1			
WG	E200.7	NDA019	COBALT	0.5	U	501		ug/L	500.0	100.2			
WG	E200.7	NDA022	COBALT	15.2	J	511		ug/L	500.0	99.2			
WG	E200.7	NDA029	COBALT	23.6	J	1010		ug/L	1000.0	98.5			
WG	E200.7	NDA011	COBALT, DISSOLVED	0.5	U	521		ug/L	500.0	104.3			
WG	E200.7	NDA029	COBALT, DISSOLVED	1.3	J	980		ug/L	1000.0	97.8			
WG	E200.7	NDA001	COPPER	3.3	J	287		ug/L	250.0	113.6			
WG	E200.7	NDA002	COPPER	10.8	J	301		ug/L	250.0	115.9			
WG	E200.7	NDA011	COPPER	2.6	J	254		ug/L	250.0	100.4			
WG	E200.7	NDA015	COPPER	14.8	J	268		ug/L	250.0	101.5			
WG	E200.7	NDA017	COPPER	4.4	J	259		ug/L	250.0	101.9			
WG	E200.7	NDA019	COPPER	2.9	J	272		ug/L	250.0	107.5			
WG	E200.7	NDA022	COPPER	45.8	=	305		ug/L	250.0	103.8			
WG	E200.7	NDA029	COPPER	85.3	=	608		ug/L	500.0	104.6			
WG	E200.7	NDA011	COPPER, DISSOLVED	1.9	U	258		ug/L	250.0	103.3			
WG	E200.7	NDA029	COPPER, DISSOLVED	5.5	J	513		ug/L	500.0	101.5			
WG	E200.7	NDA001	IRON	1830	=	2930		ug/L	1000.0	110.5			
WG	E200.7	NDA002	IRON	4600	=	5810		ug/L	1000.0	120.9			
WG	E200.7	NDA011	IRON	1460	=	1700		ug/L	1000.0	24.6			
WG	E200.7	NDA015	IRON	10100	=	11200		ug/L	1000.0	118			
WG	E200.7	NDA017	IRON	[illegible]	=	2500		ug/L	1000.0	111.2			

Matrix	Analytical Method	Sample ID	Parameter	Lab Result	Lab Qual	MS Lab Result	MSD Lab Result	Units	MS Spike Added	MS %Rec	MSD Spike Added	MSD %Rec	RPD
WG	E200.7	NDA019	IRON	284	=	1350		ug/L	1000.0	106.3			
WG	E200.7	NDA022	IRON	23900	=	24700		ug/L	1000.0	77			
WG	E200.7	NDA029	IRON	39300	=	46800		ug/L	2000.0	372.6			
WG	E200.7	NDA011	IRON, DISSOLVED	70.5	J	1090		ug/L	1000.0	102.3			
WG	E200.7	NDA029	IRON, DISSOLVED	1810	=	3580		ug/L	2000.0	88.6			
WG	E200.7	NDA001	LEAD	1.8	J	519		ug/L	500.0	103.4			
WG	E200.7	NDA002	LEAD	6.7	=	481		ug/L	500.0	94.8			
WG	E200.7	NDA011	LEAD	1.4	J	518		ug/L	500.0	103.3			
WG	E200.7	NDA015	LEAD	1.7	J	525		ug/L	500.0	104.7			
WG	E200.7	NDA017	LEAD	1.1	U	498		ug/L	500.0	99.6			
WG	E200.7	NDA019	LEAD	1.2	J	494		ug/L	500.0	98.6			
WG	E200.7	NDA022	LEAD	3.4	=	502		ug/L	500.0	99.8			
WG	E200.7	NDA029	LEAD	1.1	U	996		ug/L	1001.1	99.5			
WG	E200.7	NDA011	LEAD, DISSOLVED	1.7	J	538		ug/L	500.0	107.2			
WG	E200.7	NDA029	LEAD, DISSOLVED	1.1	U	1000		ug/L	1000.0	100.1			
WG	E200.7	NDA001	MANGANESE	154	=	644		ug/L	500.0	97.9			
WG	E200.7	NDA002	MANGANESE	1680	=	2160		ug/L	500.0	96.9			
WG	E200.7	NDA011	MANGANESE	73.1	=	554		ug/L	500.0	96.1			
WG	E200.7	NDA015	MANGANESE	458	=	968		ug/L	500.0	102			
WG	E200.7	NDA017	MANGANESE	196	=	705		ug/L	500.0	101.7			
WG	E200.7	NDA019	MANGANESE	28.8	=	520		ug/L	500.0	98.3			
WG	E200.7	NDA022	MANGANESE	819	=	1300		ug/L	500.0	96.4			
WG	E200.7	NDA029	MANGANESE	1500	=	2620		ug/L	1000.0	112.4			
WG	E200.7	NDA011	MANGANESE, DISSOLVED	22	=	534		ug/L	500.0	102.4			
WG	E200.7	NDA029	MANGANESE, DISSOLVED	394	=	1360		ug/L	1000.0	96.8			
WG	E200.7	NDA001	NICKEL	11.8	J	509		ug/L	500.0	99.4			
WG	E200.7	NDA002	NICKEL	3.8	J	463		ug/L	500.0	91.8			
WG	E200.7	NDA011	NICKEL	2.4	J	503		ug/L	500.0	100			
WG	E200.7	NDA015	NICKEL	17.2	J	527		ug/L	500.0	101.9			
WG	E200.7	NDA017	NICKEL	3.9	J	502		ug/L	500.0	99.7			
WG	E200.7	NDA019	NICKEL	2	J	498		ug/L	500.0	99.3			
WG	E200.7	NDA022	NICKEL	14.8	J	512		ug/L	500.0	99.4			
WG	E200.7	NDA029	NICKEL	21.7	J	1000		ug/L	1000.0	97.9			
WG	E200.7	NDA011	NICKEL, DISSOLVED	1.2	J	519		ug/L	500.0	103.5			
WG	E200.7	NDA029	NICKEL, DISSOLVED	1.6	J	976		ug/L	1000.0	97.5			
WG	E200.7	NDA001	SELENIUM	5.4	=	2270		ug/L	2000.0	113.1			
WG	E200.7	NDA002	SELENIUM	4.8	J	2180		ug/L	2000.0	108.5			
WG	E200.7	NDA011	SELENIUM	3.2	J	2090		ug/L	2000.0	104.6			
WG	E200.7	NDA015	SELENIUM	2.1	U	2080		ug/L	2000.0	103.9			
WG	E200.7	NDA017	SELENIUM	2.1	U	2010		ug/L	2000.0	100.6			
WG	E200.7	NDA019	SELENIUM	5.8	=	2100		ug/L	2000.0	104.6			
WG	E200.7	NDA022	SELENIUM	7.2	=	2080		ug/L	2000.0	103.6			
WG	E200.7	NDA029	SELENIUM	2.7	J	4020		ug/L	4000.0	100.4			
WG	E200.7	NDA011	SELENIUM, DISSOLVED	2.1	U	2160		ug/L	2000.0	107.8			
WG	E200.7	NDA029	SELENIUM, DISSOLVED	2.1	U	4010		ug/L	4000.0	100.1			
WG	E200.7	NDA001	SILVER	0.5	U	59.4		ug/L	50.0	118.9			
WG	E200.7	NDA002	SILVER	0.65	J	57.5		ug/L	50.0	113.7			

Matrix	Analytical Method	Sample ID	Parameter	Lab Result	Lab Qual	MS Lab Result	MSD Lab Result	Units	MS Spike Added	MS %Rec	MSD Spike Added	MSD %Rec	RPD
WG	E200.7	NDA011	SILVER	0.5	U	51.4		ug/L	50.0	102.8			
WG	E200.7	NDA015	SILVER	0.5	U	50.7		ug/L	50.0	101.3			
WG	E200.7	NDA017	SILVER	0.5	U	50.4		ug/L	50.0	100.8			
WG	E200.7	NDA019	SILVER	0.5	U	51.5		ug/L	50.0	103			
WG	E200.7	NDA022	SILVER	0.5	U	51		ug/L	50.0	102			
WG	E200.7	NDA029	SILVER	0.5	U	102		ug/L	100.0	102			
WG	E200.7	NDA011	SILVER, DISSOLVED	0.5	U	52.1		ug/L	50.0	104.2			
WG	E200.7	NDA029	SILVER, DISSOLVED	0.5	U	100		ug/L	100.0	100.5			
WG	E200.7	NDA001	THALLIUM	2.7	U	2180		ug/L	2000.0	108.8			
WG	E200.7	NDA002	THALLIUM	2.7	U	2070		ug/L	2000.0	103.6			
WG	E200.7	NDA011	THALLIUM	2.7	U	2130		ug/L	2000.0	106.5			
WG	E200.7	NDA015	THALLIUM	2.7	U	2130		ug/L	2000.0	106.6			
WG	E200.7	NDA017	THALLIUM	2.7	U	2060		ug/L	2000.0	103.2			
WG	E200.7	NDA019	THALLIUM	2.7	U	2110		ug/L	2000.0	105.7			
WG	E200.7	NDA022	THALLIUM	2.7	U	2090		ug/L	2000.0	104.7			
WG	E200.7	NDA029	THALLIUM	2.7	U	4140		ug/L	4000.0	103.5			
WG	E200.7	NDA011	THALLIUM, DISSOLVED	2.7	U	2200		ug/L	2000.0	110			
WG	E200.7	NDA029	THALLIUM, DISSOLVED	2.7	U	4130		ug/L	4000.0	103.2			
WG	E200.7	NDA001	VANADIUM	9.3	J	521		ug/L	500.0	102.4			
WG	E200.7	NDA002	VANADIUM	15.7	J	515		ug/L	500.0	99.9			
WG	E200.7	NDA011	VANADIUM	19.8	J	537		ug/L	500.0	103.4			
WG	E200.7	NDA015	VANADIUM	43.5	J	561		ug/L	500.0	103.5			
WG	E200.7	NDA017	VANADIUM	19.4	J	535		ug/L	500.0	103.2			
WG	E200.7	NDA019	VANADIUM	24.4	J	541		ug/L	500.0	103.3			
WG	E200.7	NDA022	VANADIUM	83.9	=	591		ug/L	500.0	101.4			
WG	E200.7	NDA029	VANADIUM	120	=	1140		ug/L	1000.0	102.1			
WG	E200.7	NDA011	VANADIUM, DISSOLVED	17.6	J	553		ug/L	500.0	107.1			
WG	E200.7	NDA029	VANADIUM, DISSOLVED	15.8	J	1020		ug/L	1000.0	100.4			
WG	E200.7	NDA001	ZINC	38.4	=	632		ug/L	500.0	118.6			
WG	E200.7	NDA002	ZINC	39.5	=	586		ug/L	500.0	109.4			
WG	E200.7	NDA011	ZINC	5.9	J	523		ug/L	500.0	103.4			
WG	E200.7	NDA015	ZINC	30.7	=	564		ug/L	500.0	106.7			
WG	E200.7	NDA017	ZINC	10.2	J	503		ug/L	500.0	98.6			
WG	E200.7	NDA019	ZINC	2.5	U	522		ug/L	500.0	104.3			
WG	E200.7	NDA022	ZINC	50.3	=	563		ug/L	500.0	102.5			
WG	E200.7	NDA029	ZINC	95.3	=	1120		ug/L	1000.0	102.6			
WG	E200.7	NDA011	ZINC, DISSOLVED	6.6	J	537		ug/L	500.0	106			
WG	E200.7	NDA029	ZINC, DISSOLVED	12.2	J	1050		ug/L	1000.0	103.7			

Matrix	Analytical Method	Prep Method	Sample ID	Parameter	Lab Result	Lab Qual	Lab Dup Result	Lab Dup Qual	RL	DL	Units	RPD
SB	SW7471	METHOD	NDA246	MERCURY	0.015	J	0.02	J	0.04	0.01	mg/kg	25.1%
SS	SW7471	METHOD	NDA061	MERCURY	0.015	J	0.02	J	0.04	0.01	mg/kg	7.7%
SS	SW7471	METHOD	NDA127	MERCURY	0.019	J	0.02	J	0.04	0.01	mg/kg	11.1%
SS	SW7471	METHOD	NDA183	MERCURY	0.02	J	0.03	J	0.05	0.01	mg/kg	29.1%
SB	E200.7	SW3050	NDA151	SILVER	0.057	U	0.22	J	2.3	0.05	mg/kg	200.0%
SS	E200.7	SW3050	NDA127	SILVER	0.065	J	0.06	U	2.2	0.05	mg/kg	200.0%
SS	SW7471	METHOD	NDA101	MERCURY	0.081	=	0.09	=	0.06	0.01	mg/kg	7.9%
SD	E200.7	SW3050	NDA042	BERYLLIUM	0.082	J	0.07	J	1.7	0.05	mg/kg	11.9%
SS	E200.7	SW3050	NDA183	BERYLLIUM	0.11	J	0.14	J	1.1	0.03	mg/kg	21.9%
SS	E200.7	SW3050	NDA113	BERYLLIUM	0.12	J	0.14	J	1.2	0.03	mg/kg	16.4%
SS	E200.7	SW3050	NDA149	BERYLLIUM	0.13	J	0.16	J	1.1	0.03	mg/kg	23.4%
SB	E200.7	SW3050	NDA226	BERYLLIUM	0.15	J	0.18	J	1.2	0.03	mg/kg	15.7%
SB	E200.7	SW3050	NDA151	ANTIMONY	0.16	U	0.17	J	13.8	0.16	mg/kg	200.0%
SB	E200.7	SW3050	NDA246	ANTIMONY	0.17	U	0.18	J	14.8	0.17	mg/kg	200.0%
SD	SW7471	METHOD	NDA042	MERCURY	0.18	=	0.17	=	0.06	0.01	mg/kg	3.9%
SB	E200.7	SW3050	NDA246	BERYLLIUM	0.19	J	0.25	J	1.2	0.03	mg/kg	26.1%
SS	E200.7	SW3050	NDA127	BERYLLIUM	0.19	J	0.22	J	1.1	0.03	mg/kg	14.1%
SS	E200.7	SW3050	NDA061	BERYLLIUM	0.19	J	0.19	J	1.1	0.03	mg/kg	1.4%
SB	E200.7	SW3050	NDA151	BERYLLIUM	0.23	J	0.24	J	1.1	0.03	mg/kg	5.0%
SS	E200.7	SW3050	NDA127	ANTIMONY	0.26	J	0.33	J	13.2	0.15	mg/kg	23.5%
SB	E200.7	SW3050	NDA213	BERYLLIUM	0.27	J	0.25	J	1.1	0.03	mg/kg	9.1%
SS	E200.7	SW3050	NDA071	BERYLLIUM	0.27	J	0.27	J	1.2	0.03	mg/kg	1.4%
SB	E200.7	SW3050	NDA235	BERYLLIUM	0.28	J	0.15	J	1.3	0.03	mg/kg	59.9%
SB	E200.7	SW3050	NDA112	SELENIUM	0.28	U	0.31	J	1.3	0.28	mg/kg	200.0%
SS	E200.7	SW3050	NDA183	THALLIUM	0.33	J	0.84	J	2.3	0.3	mg/kg	87.0%
SD	E200.7	SW3050	NDA042	SELENIUM	0.35	U	0.52	J	1.7	0.35	mg/kg	200.0%
SS	E200.7	SW3050	NDA149	ANTIMONY	0.36	J	0.30	J	13.1	0.15	mg/kg	17.2%
SD	SW7471	METHOD	NDA050	MERCURY	0.37	=	0.32	=	0.09	0.03	mg/kg	14.5%
SB	E200.7	SW3050	NDA213	ARSENIC	0.38	U	0.47	J	2.2	0.38	mg/kg	200.0%
SB	E200.7	SW3050	NDA151	ARSENIC	0.39	U	0.46	J	2.3	0.39	mg/kg	200.0%
SD	E200.7	SW3050	NDA050	BERYLLIUM	0.4	J	0.39	J	2.3	0.06	mg/kg	3.5%
SB	E200.7	SW3050	NDA226	SELENIUM	0.4	J	0.24	U	1.2	0.25	mg/kg	200.0%
SS	E200.7	SW3050	NDA113	SILVER	0.41	J	0.37	J	2.5	0.06	mg/kg	10.0%
SB	E200.7	SW3050	NDA246	ARSENIC	0.42	U	0.65	J	2.5	0.42	mg/kg	200.0%
SS	E200.7	SW3050	NDA149	SELENIUM	0.43	J	0.71	J	1.1	0.23	mg/kg	49.5%
SS	E200.7	SW3050	NDA061	THALLIUM	0.43	J	0.39	J	2.1	0.28	mg/kg	10.6%
SS	E200.7	SW3050	NDA183	ANTIMONY	0.44	J	0.45	J	13.5	0.16	mg/kg	2.6%
SB	E200.7	SW3050	NDA246	SELENIUM	0.46	J	0.32	J	1.2	0.26	mg/kg	35.5%
SB	E200.7	SW3050	NDA226	THALLIUM	0.49	J	1.02	J	2.4	0.32	mg/kg	69.8%
SS	E200.7	SW3050	NDA071	THALLIUM	0.59	J	0.79	J	2.4	0.33	mg/kg	28.8%
SB	E200.7	SW3050	NDA063	BERYLLIUM	0.6	J	0.60	J	1.1	0.03	mg/kg	0.5%
SS	E200.7	SW3050	NDA149	CADMIUM	0.6	J	0.65	J	1.1	0.02	mg/kg	8.3%
SS	E200.7	SW3050	NDA127	SELENIUM	0.6	J	0.86	J	1.1	0.23	mg/kg	35.4%
SS	E200.7	SW3050	NDA071	NICKEL	0.61	J	0.58	J	9.7	0.09	mg/kg	4.6%
SS	E200.7	SW3050	NDA183	ARSENIC	0.62	J	0.76	J	2.3	0.38	mg/kg	20.3%
SB	E200.7	SW3050	NDA112	CADMIUM	0.63	J	0.71	J	1.3	0.02	mg/kg	11.8%
SS	E200.7	SW3050	NDA061	NICKEL	0.63	J	0.57	J	8.4	0.08	mg/kg	9.4%
SS	E200.7	SW3050	NDA183	SELENIUM	0.65	J	0.32	J	1.1	0.24	mg/kg	68.2%
SD	E200.7	SW3050	NDA050	THALLIUM	0.67	J	1.42	J	4.6	0.62	mg/kg	71.8%
SB	E200.7	SW3050	NDA151	SELENIUM	0.69	J	0.98	J	1.1	0.24	mg/kg	35.1%
SD	E200.7	SW3050	NDA042	ANTIMONY	0.72	J	0.23	U	20	0.23	mg/kg	200.0%
SS	E200.7	SW3050	NDA113	ANTIMONY	0.74	J	0.87	J	14.9	0.17	mg/kg	16.3%
SB	E200.7	SW3050	NDA213	SELENIUM	0.75	J	0.78	J	1.1	0.23	mg/kg	3.8%
SS	E200.7	SW3050	NDA149	THALLIUM	0.77	J	1.21	J	2.2	0.29	mg/kg	44.7%
SS	E200.7	SW3050	NDA061	ARSENIC	0.8	J	0.87	J	2.1	0.36	mg/kg	8.1%
SS	E200.7	SW3050	NDA071	ARSENIC	0.81	J	0.77	J	2.4	0.41	mg/kg	5.3%
SB	E200.7	SW3050	NDA151	THALLIUM	0.87	J	1.67	J	2.3	0.31	mg/kg	63.1%
SD	E200.7	SW3050	NDA050	SELENIUM	0.92	J	1.80	J	2.3	0.49	mg/kg	64.9%
SB	E200.7	SW3050	NDA235	THALLIUM	0.92	J	0.58	J	2.6	0.36	mg/kg	44.6%
SB	E200.7	SW3050	NDA063	THALLIUM	0.97	J	0.98	J	2.2	0.29	mg/kg	1.1%

Matrix	Analytical Method	Prep Method	Sample ID	Parameter	Lab Result	Lab Qual	Lab Dup Result	Lab Dup Qual	RL	DL	Units	RPD
SB	E200.7	SW3050	NDA246	THALLIUM	0.99	J	0.80	J	2.5	0.33	mg/kg	21.5
SS	E200.7	SW3050	NDA113	ARSENIC	1	J	1.0	J	2.5	0.42	mg/kg	0.7%
SS	E200.7	SW3050	NDA127	ARSENIC	1.1	J	1.4	J	2.2	0.37	mg/kg	22.2%
SB	E200.7	SW3050	NDA112	ARSENIC	1.2	J	1.2	J	2.7	0.46	mg/kg	3.4%
SB	E200.7	SW3050	NDA226	LEAD	1.2	=	1.4	=	0.71	0.13	mg/kg	17.3%
SS	E200.7	SW3050	NDA127	THALLIUM	1.2	J	1.3	J	2.2	0.3	mg/kg	8.4%
SB	E200.7	SW3050	NDA213	THALLIUM	1.3	J	1.4	J	2.2	0.3	mg/kg	7.2%
SS	E200.7	SW3050	NDA149	ARSENIC	1.5	J	4.1	=	2.2	0.37	mg/kg	93.7%
SB	E200.7	SW3050	NDA235	LEAD	1.5	=	1.3	=	0.79	0.14	mg/kg	13.1%
SB	E200.7	SW3050	NDA063	ARSENIC	1.8	J	1.7	J	2.2	0.37	mg/kg	4.1%
SB	E200.7	SW3050	NDA063	NICKEL	1.8	J	1.6	J	8.7	0.08	mg/kg	14.9%
SB	E200.7	SW3050	NDA112	NICKEL	1.8	J	1.8	J	10.7	0.11	mg/kg	1.8%
SB	E200.7	SW3050	NDA112	COBALT	1.9	J	1.8	J	13.4	0.06	mg/kg	4.6%
SD	E200.7	SW3050	NDA050	ANTIMONY	2.1	J	5.8	J	27.7	0.32	mg/kg	93.1%
SB	E200.7	SW3050	NDA213	LEAD	2.1	=	1.6	=	0.67	0.12	mg/kg	25.4%
SB	E200.7	SW3050	NDA246	LEAD	2.1	=	2.7	=	0.74	0.14	mg/kg	23.7%
SD	E200.7	SW3050	NDA042	ARSENIC	2.3	J	2.3	J	3.3	0.57	mg/kg	0.1%
SS	E200.7	SW3050	NDA061	CHROMIUM, TOTAL	2.3	=	2.1	=	2.1	0.05	mg/kg	7.0%
SS	E200.7	SW3050	NDA071	CHROMIUM, TOTAL	2.4	=	2.2	J	2.4	0.06	mg/kg	8.6%
SS	E200.7	SW3050	NDA071	COBALT	2.5	J	2.4	J	12.1	0.06	mg/kg	4.0%
SD	E200.7	SW3050	NDA050	ARSENIC	2.9	J	3.4	J	4.6	0.79	mg/kg	14.8%
SD	E200.7	SW3050	NDA042	LEAD	3.1	=	3.1	=	1	0.18	mg/kg	0.1%
SS	E200.7	SW3050	NDA061	COBALT	3.2	J	3.8	J	10.5	0.05	mg/kg	17.9%
SB	E200.7	SW3050	NDA151	LEAD	3.3	=	3.7	=	0.68	0.13	mg/kg	11.8%
SB	E200.7	SW3050	NDA226	NICKEL	3.3	J	3.6	J	9.4	0.09	mg/kg	8.1%
SB	E200.7	SW3050	NDA235	NICKEL	4.4	J	2.9	J	10.5	0.11	mg/kg	41.9%
SB	E200.7	SW3050	NDA151	NICKEL	4.6	J	6.2	J	9.2	0.09	mg/kg	29.4
SB	E200.7	SW3050	NDA246	NICKEL	4.9	J	6.1	J	9.8	0.09	mg/kg	21.2
SD	E200.7	SW3050	NDA042	BARIUM	5.1	J	5.1	J	66.7	0.01	mg/kg	0.0%
SS	E200.7	SW3050	NDA183	NICKEL	5.1	J	4.7	J	9	0.09	mg/kg	8.1%
SB	E200.7	SW3050	NDA063	COBALT	5.5	J	3.6	J	10.9	0.05	mg/kg	42.7%
SD	E200.7	SW3050	NDA050	CADMIUM	5.9	=	7.5	=	2.3	0.04	mg/kg	23.5%
SB	E200.7	SW3050	NDA112	CHROMIUM, TOTAL	5.9	=	5.9	=	2.7	0.06	mg/kg	0.1%
SD	E200.7	SW3050	NDA042	COBALT	6.2	J	9.8	J	16.7	0.08	mg/kg	44.7%
SB	E200.7	SW3050	NDA226	COBALT	7.2	J	8.4	J	11.8	0.05	mg/kg	15.6%
SS	E200.7	SW3050	NDA061	COPPER	7.3	=	6.8	=	5.3	0.2	mg/kg	7.8%
SB	E200.7	SW3050	NDA226	CHROMIUM, TOTAL	7.4	=	7.0	=	2.4	0.05	mg/kg	5.5%
SS	E200.7	SW3050	NDA149	NICKEL	7.6	J	9.6	=	8.7	0.08	mg/kg	23.4%
SS	E200.7	SW3050	NDA183	COBALT	7.8	J	8.0	J	11.3	0.05	mg/kg	2.6%
SS	E200.7	SW3050	NDA149	COBALT	7.9	J	12.0	=	10.9	0.05	mg/kg	41.1%
SS	E200.7	SW3050	NDA071	LEAD	8.6	=	8.7	=	0.72	0.13	mg/kg	1.0%
SB	E200.7	SW3050	NDA235	CHROMIUM, TOTAL	8.8	=	6.6	=	2.6	0.06	mg/kg	28.7%
SB	E200.7	SW3050	NDA112	LEAD	8.8	=	10.3	=	0.8	0.15	mg/kg	15.6%
SS	E200.7	SW3050	NDA071	COPPER	8.9	=	7.6	=	6	0.23	mg/kg	15.2%
SS	E200.7	SW3050	NDA183	CHROMIUM, TOTAL	9	=	9.3	=	2.3	0.05	mg/kg	3.1%
SB	E200.7	SW3050	NDA235	COBALT	9.1	J	6.7	J	13.2	0.06	mg/kg	30.6%
SS	E200.7	SW3050	NDA183	LEAD	9.4	=	10.8	=	0.68	0.12	mg/kg	14.1%
SB	E200.7	SW3050	NDA246	CHROMIUM, TOTAL	9.9	=	13.1	=	2.5	0.06	mg/kg	28.1%
SB	E200.7	SW3050	NDA151	CHROMIUM, TOTAL	10	=	16	=	2.3	0.05	mg/kg	46.3%
SB	E200.7	SW3050	NDA063	CHROMIUM, TOTAL	10	=	9	=	2.2	0.05	mg/kg	8.1%
SB	E200.7	SW3050	NDA063	COPPER	10	=	10	=	5.4	0.21	mg/kg	3.4%
SB	E200.7	SW3050	NDA246	COBALT	10.1	J	10.1	J	12.3	0.06	mg/kg	0.3%
SS	E200.7	SW3050	NDA061	LEAD	11	=	10.9	=	0.63	0.12	mg/kg	0.7%
SB	E200.7	SW3050	NDA213	COBALT	11.4	=	8.8	J	11.2	0.05	mg/kg	25.4
SB	E200.7	SW3050	NDA213	NICKEL	12.2	=	12.6	=	8.9	0.08	mg/kg	3.6
SS	E200.7	SW3050	NDA071	ZINC	12.5	=	11.1	=	4.8	0.3	mg/kg	12.1%
SB	E200.7	SW3050	NDA112	BARIUM	12.6	J	13.0	J	53.6	0.01	mg/kg	2.9%
SD	E200.7	SW3050	NDA042	NICKEL	12.6	J	19.4	=	13.3	0.13	mg/kg	42.6%
SS	E200.7	SW3050	NDA149	LEAD	12.7	=	12.1	=	0.65	0.12	mg/kg	4.8%
SB	E200.7	SW3050	NDA151	COBALT	12.8	=	14.4	=	11.5	0.05	mg/kg	11.5%

Attachment E - Laboratory Sample Duplicate Precision

Matrix	Analytical Method	Prep Method	Sample ID	Parameter	Lab Result	Lab Qual	Lab Dup Result	Lab Dup Qual	RL	DL	Units	RPD
SS	E200.7	SW3050	NDA113	COBALT	12.8	=	16.0	=	12.4	0.06	mg/kg	22.3%
SS	E200.7	SW3050	NDA061	ZINC	12.8	=	11.3	=	4.2	0.26	mg/kg	12.3%
SS	E200.7	SW3050	NDA127	COBALT	13.3	=	15.0	=	11	0.05	mg/kg	12.2%
SB	E200.7	SW3050	NDA063	ZINC	14.8	=	14.6	=	4.3	0.27	mg/kg	1.1%
SS	E200.7	SW3050	NDA149	CHROMIUM, TOTAL	16.1	=	17.2	=	2.2	0.05	mg/kg	6.8%
SB	E200.7	SW3050	NDA226	COPPER	17.3	=	19.0	=	5.9	0.22	mg/kg	9.2%
SS	E200.7	SW3050	NDA127	LEAD	17.4	=	16.6	=	0.66	0.12	mg/kg	4.5%
SD	E200.7	SW3050	NDA050	NICKEL	18.2	J	19.9	=	18.5	0.18	mg/kg	9.1%
SD	E200.7	SW3050	NDA050	COBALT	18.9	J	20.5	J	23.1	0.12	mg/kg	7.9%
SB	E200.7	SW3050	NDA226	ZINC	19.2	=	21.9	=	4.7	0.3	mg/kg	13.3%
SB	E200.7	SW3050	NDA112	VANADIUM	19.4	=	18.1	=	13.4	0.11	mg/kg	6.9%
SS	E200.7	SW3050	NDA113	NICKEL	20	=	27.3	=	9.9	0.09	mg/kg	30.8%
SS	E200.7	SW3050	NDA127	NICKEL	20.5	=	20.0	=	8.8	0.08	mg/kg	2.4%
SB	E200.7	SW3050	NDA063	LEAD	21.1	=	19.5	=	0.65	0.12	mg/kg	7.8%
SS	E200.7	SW3050	NDA061	VANADIUM	21.3	=	22.0	=	10.5	0.08	mg/kg	3.3%
SS	E200.7	SW3050	NDA183	COPPER	21.7	=	27.3	=	5.6	0.21	mg/kg	22.7%
SB	E200.7	SW3050	NDA151	COPPER	22.1	=	30.3	=	5.7	0.22	mg/kg	31.3%
SD	E200.7	SW3050	NDA042	COPPER	22.8	=	34.5	=	8.3	0.32	mg/kg	40.7%
SB	E200.7	SW3050	NDA112	ZINC	23.5	=	24.4	=	5.4	0.34	mg/kg	3.9%
SD	E200.7	SW3050	NDA042	ZINC	26.1	=	38.5	=	6.7	0.42	mg/kg	38.5%
SB	E200.7	SW3050	NDA246	COPPER	27.8	=	29.4	=	6.2	0.23	mg/kg	5.5%
SB	E200.7	SW3050	NDA213	COPPER	28.9	=	25.9	=	5.6	0.21	mg/kg	10.9%
SS	E200.7	SW3050	NDA071	VANADIUM	29.2	=	33.2	=	12.1	0.09	mg/kg	12.7%
SS	E200.7	SW3050	NDA113	BARIUM	29.5	J	35.3	J	49.7	0.01	mg/kg	18.0%
SB	E200.7	SW3050	NDA246	ZINC	29.6	=	31.6	=	4.9	0.31	mg/kg	6.5%
SB	E200.7	SW3050	NDA151	ZINC	30.4	=	36.4	=	4.6	0.29	mg/kg	18.0%
SD	E200.7	SW3050	NDA042	VANADIUM	30.5	=	45.2	=	16.7	0.13	mg/kg	38.9%
SB	E200.7	SW3050	NDA235	ZINC	31.9	=	19.2	=	5.3	0.33	mg/kg	49.8%
SB	E200.7	SW3050	NDA235	COPPER	32.3	=	19.1	=	6.6	0.25	mg/kg	51.3%
SD	E200.7	SW3050	NDA042	CHROMIUM, TOTAL	32.4	=	36.2	=	3.3	0.08	mg/kg	11.1%
SS	E200.7	SW3050	NDA127	CHROMIUM, TOTAL	32.4	=	34.8	=	2.2	0.05	mg/kg	7.3%
SB	E200.7	SW3050	NDA213	CHROMIUM, TOTAL	33.3	=	33.4	=	2.2	0.05	mg/kg	0.4%
SB	E200.7	SW3050	NDA213	ZINC	33.6	=	31.2	=	4.5	0.28	mg/kg	7.3%
SB	E200.7	SW3050	NDA112	COPPER	34.4	=	44.0	=	6.7	0.25	mg/kg	24.4%
SS	E200.7	SW3050	NDA127	COPPER	35.4	=	42.8	=	5.5	0.21	mg/kg	18.9%
SS	E200.7	SW3050	NDA113	LEAD	36.1	=	33.5	=	0.75	0.14	mg/kg	7.4%
SS	E200.7	SW3050	NDA183	ZINC	36.4	=	37.0	=	4.5	0.28	mg/kg	1.6%
SB	E200.7	SW3050	NDA226	VANADIUM	38	=	41.9	=	11.8	0.09	mg/kg	9.7%
SD	E200.7	SW3050	NDA050	CHROMIUM, TOTAL	38.9	=	43.5	=	4.6	0.12	mg/kg	11.3%
SS	E200.7	SW3050	NDA149	VANADIUM	39.1	=	69.4	=	10.9	0.08	mg/kg	55.9%
SS	E200.7	SW3050	NDA183	VANADIUM	40.6	=	39.5	=	11.3	0.09	mg/kg	2.8%
SS	E200.7	SW3050	NDA113	CHROMIUM, TOTAL	42.9	=	69.2	=	2.5	0.06	mg/kg	46.9%
SS	E200.7	SW3050	NDA149	COPPER	47.2	=	54.7	=	5.4	0.21	mg/kg	14.8%
SB	E200.7	SW3050	NDA151	VANADIUM	48.4	=	65.6	=	11.5	0.09	mg/kg	30.1%
SS	E200.7	SW3050	NDA149	BARIUM	53.5	=	88.4	=	43.6	0.01	mg/kg	49.2%
SD	E200.7	SW3050	NDA050	LEAD	54.1	=	53.2	=	1.4	0.25	mg/kg	1.7%
SB	E200.7	SW3050	NDA246	VANADIUM	54.2	=	55.3	=	12.3	0.09	mg/kg	2.0%
SS	E200.7	SW3050	NDA127	VANADIUM	54.7	=	76.8	=	11	0.08	mg/kg	33.6%
SB	E200.7	SW3050	NDA235	VANADIUM	57.1	=	34.5	=	13.2	0.11	mg/kg	49.3%
SB	E200.7	SW3050	NDA226	BARIUM	59.5	=	71.4	=	47.2	0.01	mg/kg	18.1%
SS	E200.7	SW3050	NDA183	BARIUM	61.6	=	64.4	=	45.1	0.01	mg/kg	4.4%
SB	E200.7	SW3050	NDA246	SODIUM	63	J	100.9	J	1230	14.1	mg/kg	46.2%
SB	E200.7	SW3050	NDA213	VANADIUM	65.2	=	54.9	=	11.2	0.08	mg/kg	17.2%
SS	E200.7	SW3050	NDA113	VANADIUM	66	=	88.6	=	12.4	0.09	mg/kg	29.2%
SS	E200.7	SW3050	NDA127	ZINC	68.4	=	71.9	=	4.4	0.27	mg/kg	5.0%
SB	E200.7	SW3050	NDA235	BARIUM	71.2	=	55.3	=	52.6	0.01	mg/kg	25.1%
SB	E200.7	SW3050	NDA063	VANADIUM	71.9	=	71.5	=	10.9	0.08	mg/kg	0.5%
SB	E200.7	SW3050	NDA112	MANGANESE	72	=	73.8	=	4	0.01	mg/kg	2.4%
SS	E200.7	SW3050	NDA149	ZINC	94	=	81.1	=	4.4	0.27	mg/kg	14.7%
SB	E200.7	SW3050	NDA246	BARIUM	94.1	=	88.7	=	49.2	0.01	mg/kg	5.9%

Matrix	Analytical Method	Prep Method	Sample ID	Parameter	Lab Result	Lab Qual	Lab Dup Result	Lab Dup Qual	RL	DL	Units	RPD
SS	E200.7	SW3050	NDA127	BARIUM	94.4	=	126.6	=	44.1	0.01	mg/kg	29.1%
SS	E200.7	SW3050	NDA113	ZINC	96.5	=	100.7	=	5	0.31	mg/kg	4.3%
SB	E200.7	SW3050	NDA151	BARIUM	96.7	=	106.4	=	45.9	0.01	mg/kg	9.6%
SD	E200.7	SW3050	NDA050	VANADIUM	100	=	109	=	23.1	0.18	mg/kg	8.3%
SS	E200.7	SW3050	NDA183	SODIUM	104	J	73	J	1130	13	mg/kg	35.6%
SS	E200.7	SW3050	NDA127	SODIUM	109	J	98	J	1100	12.7	mg/kg	10.8%
SB	E200.7	SW3050	NDA226	SODIUM	111	J	146	J	1180	13.6	mg/kg	27.5%
SS	E200.7	SW3050	NDA113	COPPER	114	=	104	=	6.2	0.24	mg/kg	9.0%
SB	E200.7	SW3050	NDA213	BARIUM	115	=	90	=	44.6	0.01	mg/kg	24.6%
SB	E200.7	SW3050	NDA235	SODIUM	128	J	186	J	1320	15.1	mg/kg	36.9%
SD	E200.7	SW3050	NDA050	COPPER	130	=	134	=	11.5	0.44	mg/kg	3.3%
SD	E200.7	SW3050	NDA042	MANGANESE	133	=	241	=	5	0.01	mg/kg	57.6%
SS	E200.7	SW3050	NDA061	SODIUM	135	J	120	J	1050	12.1	mg/kg	11.6%
SD	E200.7	SW3050	NDA050	BARIUM	144	=	143	=	92.4	0.02	mg/kg	0.5%
SS	E200.7	SW3050	NDA061	BARIUM	150	=	178	=	42.1	0.01	mg/kg	16.8%
SB	E200.7	SW3050	NDA213	SODIUM	159	J	154	J	1120	12.8	mg/kg	3.3%
SB	E200.7	SW3050	NDA151	SODIUM	165	J	205	J	1150	13.2	mg/kg	21.5%
SS	E200.7	SW3050	NDA071	BARIUM	204	=	221	=	48.3	0.01	mg/kg	8.2%
SS	E200.7	SW3050	NDA149	SODIUM	204	J	238	J	1090	12.5	mg/kg	15.3%
SS	E200.7	SW3050	NDA071	POTASSIUM	243	J	221	J	1210	3.2	mg/kg	9.4%
SS	E200.7	SW3050	NDA071	MANGANESE	264	=	284	=	3.6	0.01	mg/kg	7.4%
SS	E200.7	SW3050	NDA061	POTASSIUM	310	J	276	J	1050	2.8	mg/kg	11.5%
SB	E200.7	SW3050	NDA063	POTASSIUM	357	J	348	J	1090	2.9	mg/kg	2.5%
SB	E200.7	SW3050	NDA235	MANGANESE	372	=	388	=	3.9	0.01	mg/kg	4.2%
SS	E200.7	SW3050	NDA149	MANGANESE	374	=	814	=	3.3	0.01	mg/kg	74.1%
SS	E200.7	SW3050	NDA061	MANGANESE	382	=	669	=	3.2	0.01	mg/kg	54.6%
SD	E200.7	SW3050	NDA050	SODIUM	422	J	507	J	2310	26.6	mg/kg	18.[illegible]
SD	E200.7	SW3050	NDA050	ZINC	448	=	434	=	9.2	0.58	mg/kg	3.1[illegible]
SS	E200.7	SW3050	NDA113	MANGANESE	465	=	644	=	3.7	0.01	mg/kg	32.2%
SB	E200.7	SW3050	NDA226	MANGANESE	482	=	572	=	3.5	0.01	mg/kg	17.1%
SB	E200.7	SW3050	NDA063	BARIUM	504	=	452	=	43.4	0.01	mg/kg	10.9%
SB	E200.7	SW3050	NDA246	MANGANESE	510	=	817	=	3.7	0.01	mg/kg	46.2%
SB	E200.7	SW3050	NDA151	MANGANESE	520	=	694	=	3.4	0.01	mg/kg	28.7%
SS	E200.7	SW3050	NDA061	MAGNESIUM	540	J	501	J	1050	0.95	mg/kg	7.5%
SD	E200.7	SW3050	NDA050	MANGANESE	607	=	642	=	6.9	0.02	mg/kg	5.5%
SB	E200.7	SW3050	NDA213	MANGANESE	698	=	477	=	3.3	0.01	mg/kg	37.7%
SS	E200.7	SW3050	NDA127	MANGANESE	703	=	929	=	3.3	0.01	mg/kg	27.7%
SS	E200.7	SW3050	NDA183	MANGANESE	720	=	741	=	3.4	0.01	mg/kg	2.9%
SB	E200.7	SW3050	NDA063	MANGANESE	742	=	461	=	3.3	0.01	mg/kg	46.8%
SS	E200.7	SW3050	NDA071	CALCIUM	828	J	744	J	1210	1.4	mg/kg	10.8%
SS	E200.7	SW3050	NDA071	MAGNESIUM	848	J	776	J	1210	1.1	mg/kg	8.8%
SS	E200.7	SW3050	NDA071	SODIUM	870	J	810	J	1210	13.9	mg/kg	7.1%
SS	E200.7	SW3050	NDA183	POTASSIUM	921	J	868	J	1130	3	mg/kg	5.9%
SS	E200.7	SW3050	NDA149	POTASSIUM	1000	J	1132	=	1090	2.9	mg/kg	12.4%
SS	E200.7	SW3050	NDA061	CALCIUM	1020	J	959	J	1050	1.2	mg/kg	6.2%
SB	E200.7	SW3050	NDA226	POTASSIUM	1240	=	1286	=	1180	3.1	mg/kg	3.6%
SB	E200.7	SW3050	NDA246	POTASSIUM	1290	=	1234	=	1230	3.3	mg/kg	4.4%
SB	E200.7	SW3050	NDA063	CALCIUM	1310	=	1211	=	1090	1.3	mg/kg	7.8%
SB	E200.7	SW3050	NDA235	POTASSIUM	1320	=	876	J	1320	3.5	mg/kg	40.5%
SB	E200.7	SW3050	NDA063	MAGNESIUM	1340	=	1273	=	1090	0.98	mg/kg	5.2%
SS	E200.7	SW3050	NDA127	POTASSIUM	1410	=	1680	=	1100	2.9	mg/kg	17.5%
SS	E200.7	SW3050	NDA113	POTASSIUM	1460	=	1522	=	1240	3.3	mg/kg	4.2%
SB	E200.7	SW3050	NDA063	SODIUM	1510	=	1438	=	1090	12.5	mg/kg	4.9%
SB	E200.7	SW3050	NDA112	POTASSIUM	1590	=	1624	=	1340	3.6	mg/kg	2.1[illegible]
SB	E200.7	SW3050	NDA151	POTASSIUM	1650	=	2171	=	1150	3.1	mg/kg	27.[illegible]
SB	E200.7	SW3050	NDA213	POTASSIUM	1700	=	1934	=	1120	3	mg/kg	12.9%
SS	E200.7	SW3050	NDA183	MAGNESIUM	1930	=	1795	=	1130	1	mg/kg	7.2%
SD	E200.7	SW3050	NDA042	POTASSIUM	1930	=	2090	=	1670	4.4	mg/kg	8.0%
SB	E200.7	SW3050	NDA226	MAGNESIUM	1970	=	2079	=	1180	1.1	mg/kg	5.4%
SB	E200.7	SW3050	NDA235	CALCIUM	2290	=	1940	=	1320	1.5	mg/kg	16.5%

Attachment E - Laboratory Sample Duplicate Precision

Matrix	Analytical Method	Prep Method	Sample ID	Parameter	Lab Result	Lab Qual	Lab Dup Result	Lab Dup Qual	RL	DL	Units	RPD
SS	E200.7	SW3050	NDA183	CALCIUM	2570	=	2313	=	1130	1.3	mg/kg	10.5%
SD	E200.7	SW3050	NDA050	POTASSIUM	2650	=	3886	=	2310	6.1	mg/kg	37.8%
SB	E200.7	SW3050	NDA151	CALCIUM	2840	=	3883	=	1150	1.3	mg/kg	31.0%
SB	E200.7	SW3050	NDA112	MAGNESIUM	2920	=	3010	=	1340	1.2	mg/kg	3.0%
SB	E200.7	SW3050	NDA151	MAGNESIUM	2930	=	3734	=	1150	1	mg/kg	24.1%
SB	E200.7	SW3050	NDA246	MAGNESIUM	2960	=	2787	=	1230	1.1	mg/kg	6.0%
SB	E200.7	SW3050	NDA213	CALCIUM	3070	=	2788	=	1120	1.3	mg/kg	9.6%
SB	E200.7	SW3050	NDA226	CALCIUM	3230	=	2308	=	1180	1.4	mg/kg	33.3%
SB	E200.7	SW3050	NDA213	MAGNESIUM	3230	=	2819	=	1120	1	mg/kg	13.6%
SS	E200.7	SW3050	NDA113	SODIUM	3250	=	3180	=	1240	14.3	mg/kg	2.2%
SB	E200.7	SW3050	NDA246	CALCIUM	3280	=	3716	=	1230	1.4	mg/kg	12.5%
SB	E200.7	SW3050	NDA235	MAGNESIUM	3690	=	2078	=	1320	1.2	mg/kg	55.9%
SS	E200.7	SW3050	NDA127	CALCIUM	4900	=	5254	=	1100	1.3	mg/kg	7.0%
SS	E200.7	SW3050	NDA061	ALUMINUM	4920	=	4562	=	42.1	2.7	mg/kg	7.5%
SS	E200.7	SW3050	NDA071	ALUMINUM	5080	=	4529	=	48.3	3.1	mg/kg	11.5%
SS	E200.7	SW3050	NDA149	MAGNESIUM	5080	=	5198	=	1090	0.98	mg/kg	2.3%
SB	E200.7	SW3050	NDA112	ALUMINUM	5190	=	5260	=	53.6	3.5	mg/kg	1.3%
SB	E200.7	SW3050	NDA226	ALUMINUM	5500	=	6134	=	47.2	3	mg/kg	10.9%
SS	E200.7	SW3050	NDA183	ALUMINUM	5510	=	5399	=	45.1	2.9	mg/kg	2.0%
SB	E200.7	SW3050	NDA112	IRON	5910	=	5720	=	26.8	1.6	mg/kg	3.3%
SS	E200.7	SW3050	NDA061	IRON	6170	=	5986	=	21	1.3	mg/kg	3.0%
SD	E200.7	SW3050	NDA042	MAGNESIUM	6340	=	10513	=	1670	1.5	mg/kg	49.5%
SS	E200.7	SW3050	NDA127	MAGNESIUM	6440	=	6149	=	1100	0.99	mg/kg	4.6%
SS	E200.7	SW3050	NDA149	ALUMINUM	6900	=	8805	=	43.6	2.8	mg/kg	24.3%
SB	E200.7	SW3050	NDA063	ALUMINUM	7700	=	7084	=	43.4	2.8	mg/kg	8.3%
SB	E200.7	SW3050	NDA151	ALUMINUM	8220	=	13412	=	45.9	3	mg/kg	48.0%
SS	E200.7	SW3050	NDA071	IRON	8330	=	8910	=	24.2	1.5	mg/kg	6.7%
SB	E200.7	SW3050	NDA112	SODIUM	8370	=	8812	=	1340	15.4	mg/kg	5.2%
SD	E200.7	SW3050	NDA042	ALUMINUM	8400	=	11628	=	66.7	4.3	mg/kg	32.2%
SS	E200.7	SW3050	NDA113	MAGNESIUM	9050	=	11998	=	1240	1.1	mg/kg	28.0%
SB	E200.7	SW3050	NDA235	ALUMINUM	9280	=	5027	=	52.6	3.4	mg/kg	59.5%
SB	E200.7	SW3050	NDA246	ALUMINUM	9570	=	10460	=	49.2	3.2	mg/kg	8.9%
SS	E200.7	SW3050	NDA127	ALUMINUM	10000	=	13100	=	44.1	2.8	mg/kg	26.8%
SD	E200.7	SW3050	NDA050	MAGNESIUM	10500	=	11398	=	2310	2.1	mg/kg	8.2%
SD	E200.7	SW3050	NDA042	SODIUM	11100	=	10907	=	1670	19.2	mg/kg	1.8%
SB	E200.7	SW3050	NDA226	IRON	12700	=	13975	=	23.6	1.4	mg/kg	9.6%
SS	E200.7	SW3050	NDA183	IRON	12800	=	12699	=	22.6	1.4	mg/kg	0.8%
SB	E200.7	SW3050	NDA213	ALUMINUM	13000	=	11695	=	44.6	2.9	mg/kg	10.6%
SD	E200.7	SW3050	NDA042	IRON	13100	=	18342	=	33.3	2	mg/kg	33.3%
SS	E200.7	SW3050	NDA113	ALUMINUM	14000	=	16282	=	49.7	3.2	mg/kg	15.1%
SB	E200.7	SW3050	NDA151	IRON	15400	=	23504	=	22.9	1.4	mg/kg	41.7%
SS	E200.7	SW3050	NDA149	IRON	15500	=	23551	=	21.8	1.3	mg/kg	41.2%
SB	E200.7	SW3050	NDA063	IRON	16000	=	14289	=	21.7	1.3	mg/kg	11.3%
SS	E200.7	SW3050	NDA127	IRON	18200	=	25303	=	22	1.3	mg/kg	32.7%
SB	E200.7	SW3050	NDA246	IRON	18700	=	19056	=	24.6	1.5	mg/kg	1.9%
SB	E200.7	SW3050	NDA235	IRON	19700	=	11611	=	26.3	1.6	mg/kg	51.7%
SS	E200.7	SW3050	NDA149	CALCIUM	19800	=	23420	=	1090	1.3	mg/kg	16.7%
SD	E200.7	SW3050	NDA050	ALUMINUM	22300	=	25499	=	92.4	6	mg/kg	13.4%
SB	E200.7	SW3050	NDA213	IRON	22600	=	19642	=	22.3	1.4	mg/kg	14.0%
SS	E200.7	SW3050	NDA113	IRON	22900	=	29921	=	24.8	1.5	mg/kg	26.6%
SD	E200.7	SW3050	NDA050	CALCIUM	25100	=	24179	=	2310	2.7	mg/kg	3.7%
SD	E200.7	SW3050	NDA042	CALCIUM	30100	=	28597	=	1670	2	mg/kg	5.1%
SS	E200.7	SW3050	NDA113	CALCIUM	35400	=	21032	=	1240	1.5	mg/kg	50.9%
SD	E200.7	SW3050	NDA050	IRON	38100	=	41254	=	46.2	2.8	mg/kg	7.9%
SB	E200.7	SW3050	NDA112	CALCIUM	106000	E	125043	=	1340	1.6	mg/kg	16.5%
WG	E200.7	FLDFLT	NDA029	CADMIUM, DISSOLVED	0.25	J	0.20	U	5	0.2	ug/L	200.0%
WG	E200.7	SW3050	NDA019	BERYLLIUM	0.3	U	-0.72	J	5	0.3	ug/L	-200.0%
WG	E200.7	SW3050	NDA002	BERYLLIUM	0.3	U	-1.43	J	5	0.3	ug/L	-200.0%
WG	E200.7	SW3050	NDA001	BERYLLIUM	0.3	U	-0.77	J	5	0.3	ug/L	-200.0%
WG	E200.7	SW3050	NDA015	BERYLLIUM	0.31	J	0.30	U	5	0.3	ug/L	200.0%

Matrix	Analytical Method	Prep Method	Sample ID	Parameter	Lab Result	Lab Qual	Lab Dup Result	Lab Dup Qual	RL	DL	Units	RPD
WG	E200.7	SW3050	NDA001	COBALT	0.5	U	0.88	J	50	0.5	ug/L	200.0%
WG	E200.7	SW3050	NDA011	CADMIUM	0.64	J	0.53	J	5	0.2	ug/L	18.2%
WG	E200.7	SW3050	NDA002	SILVER	0.65	J	0.61	J	10	0.5	ug/L	7.0%
WG	E200.7	FLDFLT	NDA011	CADMIUM, DISSOLVED	0.8	J	0.71	J	5	0.2	ug/L	11.6%
SW	E200.7	SW3050	NDA037	NICKEL	0.8	U	1.22	J	40	0.8	ug/L	200.0%
WG	E200.7	SW3050	NDA017	COBALT	0.93	J	0.89	J	50	0.5	ug/L	4.1%
SW	E200.7	SW3050	NDA037	CHROMIUM, TOTAL	1.1	J	0.5	U	10	0.5	ug/L	200.0%
SW	E200.7	SW3050	NDA037	COBALT	1.1	J	0.5	U	50	0.5	ug/L	200.0%
SW	E200.7	SW3050	NDA037	LEAD	1.1	U	1.5	J	3	1.1	ug/L	200.0%
WG	E200.7	SW3050	NDA017	LEAD	1.1	U	2.1	J	3	1.1	ug/L	200.0%
WG	E200.7	SW3050	NDA019	LEAD	1.2	J	1.6	J	3	1.1	ug/L	26.3%
WG	E200.7	FLDFLT	NDA011	NICKEL, DISSOLVED	1.2	J	1.9	J	40	0.8	ug/L	44.0%
WG	E200.7	FLDFLT	NDA011	CHROMIUM, DISSOLVED	1.3	J	0.9	J	10	0.5	ug/L	40.9%
WG	E200.7	FLDFLT	NDA029	COBALT, DISSOLVED	1.3	J	1.0	J	50	0.5	ug/L	22.9%
WG	E200.7	SW3050	NDA022	ANTIMONY	1.4	U	1.8	J	60	1.4	ug/L	200.0%
WG	E200.7	SW3050	NDA011	LEAD	1.4	J	1.5	J	3	1.1	ug/L	8.9%
WG	E200.7	SW3050	NDA015	ANTIMONY	1.5	J	2.0	J	60	1.4	ug/L	29.2%
SW	SW7470	METHOD	NDA037	MERCURY	1.6	=	1.6	=	0.2	0.18	ug/L	0.0%
WG	E200.7	FLDFLT	NDA029	NICKEL, DISSOLVED	1.6	J	2.0	J	40	0.8	ug/L	24.3%
WG	E200.7	SW3050	NDA015	LEAD	1.7	J	2.8	J	3	1.1	ug/L	47.9%
WG	E200.7	FLDFLT	NDA011	LEAD, DISSOLVED	1.7	J	1.7	J	3	1.1	ug/L	0.7%
WG	E200.7	SW3050	NDA001	LEAD	1.8	J	2.3	J	3	1.1	ug/L	22.9%
SW	E200.7	SW3050	NDA037	COPPER	1.9	U	2.2	J	25	1.9	ug/L	200.0%
SW	E200.7	SW3050	NDA037	CADMIUM	2	J	1.8	J	5	0.2	ug/L	11.0%
WG	E200.7	SW3050	NDA001	CADMIUM	2	J	2.1	J	5	0.2	ug/L	5.1%
WG	E200.7	SW3050	NDA019	NICKEL	2	J	2.3	J	40	0.8	ug/L	12.3%
WG	E200.7	SW3050	NDA015	SELENIUM	2.1	U	2.7	J	5	2.1	ug/L	200
WG	E200.7	FLDFLT	NDA011	SELENIUM, DISSOLVED	2.1	U	2.6	J	5	2.1	ug/L	200.0
WG	E200.7	SW3050	NDA019	CHROMIUM, TOTAL	2.2	J	2.5	J	10	0.5	ug/L	11.9%
WG	E200.7	SW3050	NDA011	NICKEL	2.4	J	2.3	J	40	0.8	ug/L	2.9%
SW	E200.7	SW3050	NDA037	VANADIUM	2.5	J	4.9	J	50	0.8	ug/L	64.0%
WG	E200.7	SW3050	NDA011	COPPER	2.6	J	2.8	J	25	1.9	ug/L	7.8%
WG	E200.7	SW3050	NDA029	SELENIUM	2.7	J	2.1	U	5	2.1	ug/L	200.0%
WG	E200.7	FLDFLT	NDA029	THALLIUM, DISSOLVED	2.7	U	2.8	J	10	2.7	ug/L	200.0%
WG	E200.7	SW3050	NDA019	COPPER	2.9	J	2.4	J	25	1.9	ug/L	20.9%
WG	E200.7	SW3050	NDA011	SELENIUM	3.2	J	2.1	U	5	2.1	ug/L	200.0%
WG	E200.7	SW3050	NDA001	COPPER	3.3	J	4.4	J	25	1.9	ug/L	29.7%
WG	E200.7	SW3050	NDA022	LEAD	3.4	=	2.5	J	3	1.1	ug/L	31.6%
WG	E200.7	SW3050	NDA002	COBALT	3.5	J	3.2	J	50	0.5	ug/L	9.0%
WG	E200.7	FLDFLT	NDA029	CHROMIUM, DISSOLVED	3.6	J	2.7	J	10	0.5	ug/L	28.6%
WG	E200.7	SW3050	NDA002	CHROMIUM, TOTAL	3.6	J	2.5	J	10	0.5	ug/L	36.3%
WG	E200.7	SW3050	NDA002	NICKEL	3.8	J	3.7	J	40	0.8	ug/L	2.6%
WG	E200.7	SW3050	NDA017	NICKEL	3.9	J	3.3	J	40	0.8	ug/L	16.8%
WG	E200.7	SW3050	NDA011	CHROMIUM, TOTAL	4	J	3.9	J	10	0.5	ug/L	2.5%
WG	E200.7	SW3050	NDA017	COPPER	4.4	J	4.3	J	25	1.9	ug/L	2.6%
WG	E200.7	SW3050	NDA002	CADMIUM	4.6	J	4.4	J	5	0.2	ug/L	5.2%
WG	E200.7	SW3050	NDA002	SELENIUM	4.8	J	2.1	U	5	2.1	ug/L	200.0%
WG	E200.7	SW3050	NDA001	SELENIUM	5.4	=	5.8	=	5	2.1	ug/L	7.8%
WG	E200.7	FLDFLT	NDA029	COPPER, DISSOLVED	5.5	J	4.9	J	25	1.9	ug/L	11.5%
WG	E200.7	SW3050	NDA019	SELENIUM	5.8	=	7.7	=	5	2.1	ug/L	28.7%
WG	E200.7	SW3050	NDA015	COBALT	5.9	J	6.4	J	50	0.5	ug/L	7.6%
WG	E200.7	SW3050	NDA011	ZINC	5.9	J	7.7	J	20	2.5	ug/L	26.1%
SW	E200.7	SW3050	NDA037	SELENIUM	6.4	=	2.1	U	5	2.1	ug/L	200.0%
WG	E200.7	FLDFLT	NDA011	ZINC, DISSOLVED	6.6	J	10.3	J	20	2.5	ug/L	43.7
WG	E200.7	SW3050	NDA002	LEAD	6.7	=	7.6	=	3	1.1	ug/L	12.5
WG	E200.7	SW3050	NDA022	SELENIUM	7.2	=	7.4	=	5	2.1	ug/L	3.1%
WG	E200.7	SW3050	NDA017	CHROMIUM, TOTAL	8	J	7.9	J	10	0.5	ug/L	1.4%
WG	E200.7	SW3050	NDA001	VANADIUM	9.3	J	9.8	J	50	0.8	ug/L	4.9%
WG	E200.7	SW3050	NDA017	ZINC	10.2	J	13.2	J	20	2.5	ug/L	25.5%
WG	E200.7	SW3050	NDA002	COPPER	10.8	J	10.2	J	25	1.9	ug/L	5.6%

Attachment E - Laboratory Sample Duplicate Precision

Matrix	Analytical Method	Prep Method	Sample ID	Parameter	Lab Result	Lab Qual	Lab Dup Result	Lab Dup Qual	RL	DL	Units	RPD
WG	E200.7	SW3050	NDA001	NICKEL	11.8	J	12.9	J	40	0.8	ug/L	9.0%
WG	E200.7	FLDFLT	NDA029	ZINC, DISSOLVED	12.2	J	11.2	J	20	2.5	ug/L	8.5%
SW	E200.7	SW3050	NDA037	BARIUM	12.3	J	11.5	J	200	0.1	ug/L	6.4%
WG	E200.7	SW3050	NDA001	CHROMIUM, TOTAL	14.7	=	15.4	=	10	0.5	ug/L	4.9%
WG	E200.7	SW3050	NDA015	COPPER	14.8	J	15.7	J	25	1.9	ug/L	5.7%
WG	E200.7	SW3050	NDA022	NICKEL	14.8	J	15.6	J	40	0.8	ug/L	5.4%
WG	E200.7	SW3050	NDA022	COBALT	15.2	J	15.5	J	50	0.5	ug/L	2.1%
WG	E200.7	SW3050	NDA002	VANADIUM	15.7	J	15.2	J	50	0.8	ug/L	3.5%
WG	E200.7	FLDFLT	NDA029	VANADIUM, DISSOLVED	15.8	J	16.0	J	50	0.8	ug/L	1.3%
WG	E200.7	SW3050	NDA015	NICKEL	17.2	J	18.0	J	40	0.8	ug/L	4.5%
WG	E200.7	FLDFLT	NDA011	VANADIUM, DISSOLVED	17.6	J	16.6	J	50	0.8	ug/L	5.9%
SW	E200.7	SW3050	NDA037	MANGANESE	18.1	=	20.9	=	15	0.1	ug/L	14.6%
WG	E200.7	SW3050	NDA017	VANADIUM	19.4	J	19.2	J	50	0.8	ug/L	1.1%
WG	E200.7	SW3050	NDA011	VANADIUM	19.8	J	17.3	J	50	0.8	ug/L	13.3%
WG	E200.7	SW3050	NDA029	NICKEL	21.7	J	22.0	J	40	0.8	ug/L	1.3%
WG	E200.7	FLDFLT	NDA011	MANGANESE, DISSOLVED	22	=	22.0	=	15	0.1	ug/L	0.2%
WG	E200.7	SW3050	NDA029	COBALT	23.6	J	24.3	J	50	0.5	ug/L	2.8%
WG	E200.7	SW3050	NDA019	VANADIUM	24.4	J	25.8	J	50	0.8	ug/L	5.6%
WG	E200.7	SW3050	NDA022	CHROMIUM, TOTAL	28.4	=	28.9	=	10	0.5	ug/L	1.9%
WG	E200.7	SW3050	NDA019	MANGANESE	28.8	=	29.3	=	15	0.1	ug/L	1.8%
WG	E200.7	SW3050	NDA015	ZINC	30.7	=	31.8	=	20	2.5	ug/L	3.4%
WG	E200.7	SW3050	NDA015	CHROMIUM, TOTAL	30.8	=	30.4	=	10	0.5	ug/L	1.3%
WG	E200.7	SW3050	NDA001	ZINC	38.4	=	43.1	=	20	2.5	ug/L	11.6%
WG	E200.7	SW3050	NDA002	ZINC	39.5	=	36.8	=	20	2.5	ug/L	7.1%
WG	E200.7	SW3050	NDA015	VANADIUM	43.5	J	44.2	J	50	0.8	ug/L	1.7%
WG	E200.7	SW3050	NDA022	COPPER	45.8	=	46.4	=	25	1.9	ug/L	1.2%
WG	E200.7	SW3050	NDA022	ZINC	50.3	=	51.9	=	20	2.5	ug/L	3.1%
WG	E200.7	SW3050	NDA029	CHROMIUM, TOTAL	50.7	=	52.0	=	10	0.5	ug/L	2.5%
WG	E200.7	FLDFLT	NDA011	ALUMINUM, DISSOLVED	53.1	J	25.8	U	200	25.8	ug/L	200.0%
WG	E200.7	SW3050	NDA017	BARIUM	61.2	J	61.3	J	200	0.1	ug/L	0.2%
WG	E200.7	FLDFLT	NDA011	IRON, DISSOLVED	70.5	J	12.2	U	100	12.2	ug/L	200.0%
WG	E200.7	SW3050	NDA019	BARIUM	72	J	74.0	J	200	0.1	ug/L	2.8%
WG	E200.7	SW3050	NDA011	MANGANESE	73.1	=	86.3	=	15	0.1	ug/L	16.6%
WG	E200.7	SW3050	NDA022	VANADIUM	83.9	=	84.8	=	50	0.8	ug/L	1.0%
WG	E200.7	SW3050	NDA029	COPPER	85.3	=	82.4	=	25	1.9	ug/L	3.5%
WG	E200.7	SW3050	NDA029	ZINC	95.3	=	98.2	=	20	2.5	ug/L	3.0%
WG	E200.7	SW3050	NDA029	VANADIUM	120	=	122	=	50	0.8	ug/L	1.3%
WG	E200.7	FLDFLT	NDA029	BARIUM, DISSOLVED	129	J	130	J	200	0.1	ug/L	0.8%
WG	E200.7	SW3050	NDA022	BARIUM	141	J	139	J	200	0.1	ug/L	1.5%
WG	E200.7	SW3050	NDA001	MANGANESE	154	=	158	=	15	0.1	ug/L	2.5%
WG	E200.7	SW3050	NDA015	BARIUM	174	J	175	J	200	0.1	ug/L	0.4%
WG	E200.7	SW3050	NDA017	MANGANESE	196	=	198	=	15	0.1	ug/L	1.0%
WG	E200.7	FLDFLT	NDA011	BARIUM, DISSOLVED	200	=	207	=	200	0.1	ug/L	3.4%
WG	E200.7	SW3050	NDA011	BARIUM	212	=	216	=	200	0.1	ug/L	1.8%
WG	E200.7	SW3050	NDA029	BARIUM	248	=	253	=	200	0.1	ug/L	1.9%
WG	E200.7	SW3050	NDA019	IRON	284	=	280	=	100	12.2	ug/L	1.6%
WG	E200.7	SW3050	NDA019	ALUMINUM	291	=	297	=	200	25.8	ug/L	1.9%
WG	E200.7	FLDFLT	NDA029	MANGANESE, DISSOLVED	394	=	397	=	15	0.1	ug/L	0.7%
WG	E200.7	SW3050	NDA015	MANGANESE	458	=	466	=	15	0.1	ug/L	1.8%
WG	E200.7	SW3050	NDA001	BARIUM	486	=	481	=	200	0.1	ug/L	1.0%
WG	E200.7	SW3050	NDA011	ALUMINUM	672	=	848	=	200	25.8	ug/L	23.1%
SW	E200.7	SW3050	NDA037	IRON	761	=	900	=	100	12.2	ug/L	16.7%
WG	E200.7	SW3050	NDA022	MANGANESE	819	=	834	=	15	0.1	ug/L	1.8%
WG	E200.7	SW3050	NDA017	ALUMINUM	886	=	864	=	200	25.8	ug/L	2.6%
WG	E200.7	SW3050	NDA002	BARIUM	943	=	930	=	200	0.1	ug/L	1.4%
WG	E200.7	FLDFLT	NDA029	ALUMINUM, DISSOLVED	1150	=	1188	=	200	25.8	ug/L	3.2%
WG	E200.7	SW3050	NDA017	IRON	1380	=	1376	=	100	12.2	ug/L	0.3%
WG	E200.7	SW3050	NDA011	IRON	1460	=	1012	=	100	12.2	ug/L	36.2%
WG	E200.7	SW3050	NDA029	MANGANESE	1500	=	1522	=	15	0.1	ug/L	1.5%
SW	E200.7	SW3050	NDA037	ALUMINUM	1680	=	1906	=	200	25.8	ug/L	12.6%

Matrix	Analytical Method	Prep Method	Sample ID	Parameter	Lab Result	Lab Qual	Lab Dup Result	Lab Dup Qual	RL	DL	Units	RPD
WG	E200.7	SW3050	NDA002	MANGANESE	1680	=	1607	=	15	0.1	ug/L	4.4%
WG	E200.7	FLDFLT	NDA029	IRON, DISSOLVED	1810	=	1865	=	100	12.2	ug/L	3.0%
WG	E200.7	SW3050	NDA001	IRON	1830	=	1899	=	100	12.2	ug/L	3.7%
WG	E200.7	SW3050	NDA001	ALUMINUM	2900	=	2813	=	200	25.8	ug/L	3.0%
WG	E200.7	SW3050	NDA017	POTASSIUM	3320	J	3340	J	5000	26.6	ug/L	0.6%
WG	E200.7	SW3050	NDA019	POTASSIUM	3460	J	3517	J	5000	26.6	ug/L	1.6%
WG	E200.7	FLDFLT	NDA011	POTASSIUM, DISSOLVED	3520	J	3589	J	5000	26.6	ug/L	1.9%
WG	E200.7	SW3050	NDA015	POTASSIUM	3530	J	3506	J	5000	26.6	ug/L	0.7%
WG	E200.7	SW3050	NDA011	POTASSIUM	3560	J	3591	J	5000	26.6	ug/L	0.9%
WG	E200.7	SW3050	NDA002	IRON	4600	=	4515	=	100	12.2	ug/L	1.9%
WG	E200.7	FLDFLT	NDA029	POTASSIUM, DISSOLVED	5040	=	5082	=	5000	26.6	ug/L	0.8%
WG	E200.7	SW3050	NDA002	ALUMINUM	5420	=	5314	=	200	25.8	ug/L	2.0%
WG	E200.7	SW3050	NDA022	POTASSIUM	5650	=	5593	=	5000	26.6	ug/L	1.0%
WG	E200.7	SW3050	NDA029	POTASSIUM	6000	=	6130	=	5000	26.6	ug/L	2.1%
WG	E200.7	SW3050	NDA015	ALUMINUM	8700	=	8347	=	200	25.8	ug/L	4.1%
WG	E200.7	SW3050	NDA015	IRON	10100	=	10075	=	100	12.2	ug/L	0.3%
WG	E200.7	SW3050	NDA001	POTASSIUM	14400	=	14140	=	5000	26.6	ug/L	1.8%
WG	E200.7	SW3050	NDA022	ALUMINUM	18800	=	18791	=	200	25.8	ug/L	0.0%
WG	E200.7	SW3050	NDA022	IRON	23900	=	24330	=	100	12.2	ug/L	1.8%
WG	E200.7	SW3050	NDA029	ALUMINUM	24000	=	24387	=	200	25.8	ug/L	1.6%
WG	E200.7	SW3050	NDA019	MAGNESIUM	25800	=	26534	=	5000	9	ug/L	2.8%
WG	E200.7	SW3050	NDA017	MAGNESIUM	27700	=	27930	=	5000	9	ug/L	0.8%
WG	E200.7	SW3050	NDA002	POTASSIUM	30000	=	30522	=	5000	26.6	ug/L	1.7%
WG	E200.7	FLDFLT	NDA029	MAGNESIUM, DISSOLVED	32400	=	32603	=	5000	9	ug/L	0.6%
WG	E200.7	SW3050	NDA015	MAGNESIUM	37800	=	39226	=	5000	9	ug/L	3.7%
WG	E200.7	SW3050	NDA022	MAGNESIUM	38600	=	39360	=	5000	9	ug/L	2.0%
WG	E200.7	SW3050	NDA019	CALCIUM	38900	=	40539	=	5000	11.7	ug/L	4.1%
WG	E200.7	SW3050	NDA029	IRON	39300	=	39872	=	100	12.2	ug/L	1.4%
WG	E200.7	SW3050	NDA017	CALCIUM	43200	=	44149	=	5000	11.7	ug/L	2.2%
WG	E200.7	SW3050	NDA029	MAGNESIUM	45900	=	46773	=	5000	9	ug/L	1.9%
WG	E200.7	SW3050	NDA022	CALCIUM	46500	=	48020	=	5000	11.7	ug/L	3.2%
WG	E200.7	FLDFLT	NDA029	CALCIUM, DISSOLVED	59000	=	59521	=	5000	11.7	ug/L	0.9%
WG	E200.7	SW3050	NDA029	CALCIUM	69900	=	71653	=	5000	11.6	ug/L	2.5%
WG	E200.7	SW3050	NDA015	CALCIUM	78200	=	80640	=	5000	11.7	ug/L	3.1%
WG	E200.7	SW3050	NDA015	SODIUM	92500	=	95288	=	5000	115	ug/L	3.0%
WG	E200.7	SW3050	NDA011	MAGNESIUM	95300	=	96024	=	5000	9	ug/L	0.8%
WG	E200.7	FLDFLT	NDA011	MAGNESIUM, DISSOLVED	99000	=	99799	=	5000	9	ug/L	0.8%
WG	E200.7	SW3050	NDA029	SODIUM	130000	=	132413	=	5000	115	ug/L	1.8%
WG	E200.7	FLDFLT	NDA029	SODIUM, DISSOLVED	132000	=	132872	=	5000	115	ug/L	0.7%
WG	E200.7	SW3050	NDA017	SODIUM	140000	=	140972	=	5000	115	ug/L	0.7%
WG	E200.7	SW3050	NDA011	CALCIUM	194000	=	196056	=	5000	11.7	ug/L	1.1%
WG	E200.7	FLDFLT	NDA011	CALCIUM, DISSOLVED	198000	=	199557	=	5000	11.7	ug/L	0.8%
WG	E200.7	SW3050	NDA019	SODIUM	232000	=	235643	=	5000	115	ug/L	1.6%
WG	E200.7	SW3050	NDA011	SODIUM	239000	=	241198	=	5000	115	ug/L	0.9%
WG	E200.7	FLDFLT	NDA011	SODIUM, DISSOLVED	243000	=	246544	=	5000	115	ug/L	1.4%
WG	E200.7	SW3050	NDA022	SODIUM	250000	=	252624	=	5000	115	ug/L	1.0%
WG	E200.7	SW3050	NDA001	CALCIUM	435000	=	450596	=	5000	11.7	ug/L	3.5%
WG	E200.7	SW3050	NDA001	MAGNESIUM	510000	E	527977	=	5000	9	ug/L	3.5%
WG	E200.7	SW3050	NDA002	MAGNESIUM	697000	E	667137	=	5000	9	ug/L	4.4%
WG	E200.7	SW3050	NDA002	CALCIUM	1020000	E	994741	=	5000	11.7	ug/L	2.5%
WG	E200.7	SW3050	NDA002	SODIUM	1810000	E	1819780	=	5000	115	ug/L	0.5%
WG	E200.7	SW3050	NDA001	SODIUM	3090000	E	3077901	=	5000	115	ug/L	0.4%
SW	E200.7	SW3050	NDA037	SODIUM	6520000	E	6277799	=	5000	115	ug/L	3.8%

Matrix	Analytical Method	Prep Method	Sample ID	Parameter	Lab Result	Lab Qual	Field Dup Lab Result	Field Dup Lab Qual	Units	DL	RL	RPD
SB	SW8260	SW5030	NDA226	1,2-DICHLOROETHANE	0.3	J	0.3	J	UG/KG	0.25	11	0.0%
SS	E200.7	SW3050	NDA149	ARSENIC	1.5	J	1.5	J	MG/KG	0.37	2.2	0.0%
SB	E200.7	SW3050	NDA105	BARIUM	12.9	J	12.9	J	MG/KG	0.01	65.1	0.0%
SB	E200.7	SW3050	NDA226	BERYLLIUM	0.15	J	0.15	J	MG/KG	0.03	1.2	0.0%
SW	E200.7	SW3050	NDA037	CADMIUM	2	J	2	J	UG/L	0.2	5	0.0%
SW	E200.7	SW3050	NDA037	COBALT	1.1	J	1.1	J	UG/L	0.5	50	0.0%
SB	E200.7	SW3050	NDA226	COPPER	17.3	=	17.3	=	MG/KG	0.22	5.9	0.0%
SW	SW8270	SW3510	NDA037	DIETHYL PHTHALATE	0.5	J	0.5	J	UG/L	0.43	10	0.0%
SB	SW8260	SW5030	NDA213	ETHYLBENZENE	0.9	J	0.9	J	UG/KG	0.3	12	0.0%
WG	E200.7	SW3050	NDA029	LEAD	1.1	J	1.1	J	UG/L	1.1	3	0.0%
SB	E200.7	SW3050	NDA151	LEAD	3.3	=	3.3	=	MG/KG	0.13	0.68	0.0%
SB	E200.7	SW3050	NDA226	NICKEL	3.3	J	3.3	J	MG/KG	0.09	9.4	0.0%
SB	SW8260	SW5030	NDA213	O-XYLENE (1,2-DIMETHYLBENZENE)	2	J	2	J	UG/KG	0.27	12	0.0%
SB	E200.7	SW3050	NDA129	POTASSIUM	1160	=	1160	=	MG/KG	3	1130	0.0%
WG	E200.7	SW3050	NDA029	SODIUM	130000	=	130000	=	UG/L	115	5000	0.0%
SB	SW8260	SW5030	NDA151	TOLUENE	0.4	J	0.4	J	UG/KG	0.29	11	0.0%
SB	SW8260	SW5030	NDA213	TOLUENE	1	J	1	J	UG/KG	0.3	12	0.0%
SD	E200.7	SW3050	NDA050	VANADIUM	100	=	100	=	MG/KG	0.18	23.1	0.0%
SB	E200.7	SW3050	NDA151	CALCIUM	2840	=	2850	=	MG/KG	1.3	1150	0.4%
SS	E200.7	SW3050	NDA071	MANGANESE	264	=	265	=	MG/KG	0.01	3.6	0.4%
SB	E200.7	SW3050	NDA129	ALUMINUM	6420	=	6450	=	MG/KG	2.9	45.2	0.5%
SB	E200.7	SW3050	NDA162	CALCIUM	2030	=	2020	=	MG/KG	1.3	1140	0.5%
SB	E200.7	SW3050	NDA226	ALUMINUM	5500	=	5470	=	MG/KG	3	47.2	0.5%
SS	E200.7	SW3050	NDA103DL1	CALCIUM	162000	J	163000	J	MG/KG	8.1	6930	0.6%
SW	E200.7	SW3050	NDA037	IRON	761	J	756	J	UG/L	12.2	100	0.7%
SD	E200.7	SW3050	NDA050	BARIUM	144	=	145	=	MG/KG	0.02	92.4	0.7%
S	E200.7	SW3050	NDA103	CALCIUM	134000	J	135000	J	MG/KG	1.6	1390	0.7%
SS	E200.7	SW3050	NDA103	BARIUM	12.8	J	12.9	J	MG/KG	0.01	55.5	0.8%
WG	E200.7	SW3050	NDA029	CALCIUM	69900	=	69200	=	UG/L	11.6	5000	1.0%
SB	E200.7	SW3050	NDA226	MAGNESIUM	1970	=	1950	=	MG/KG	1.1	1180	1.0%
SS	E200.7	SW3050	NDA183	LEAD	9.4	=	9.5	=	MG/KG	0.12	0.68	1.1%
WG	E200.7	SW3050	NDA011	POTASSIUM	3560	J	3600	J	UG/L	26.6	5000	1.1%
WG	E200.7	FLDFLT	NDA011	SODIUM, DISSOLVED	243000	=	246000	=	UG/L	115	5000	1.2%
SS	E200.7	SW3050	NDA149	VANADIUM	39.1	=	38.6	=	MG/KG	0.08	10.9	1.3%
SW	E200.7	SW3050	NDA037DL1	MAGNESIUM	1460000	=	1440000	=	UG/L	45	25000	1.4%
SS	E200.7	SW3050	NDA127	NICKEL	20.5	=	20.2	=	MG/KG	0.08	8.8	1.5%
SB	E200.7	SW3050	NDA129	IRON	13200	=	13400	=	MG/KG	1.4	22.6	1.5%
SS	E200.7	SW3050	NDA127	CHROMIUM, TOTAL	32.4	=	32.9	=	MG/KG	0.05	2.2	1.5%
WG	E200.7	FLDFLT	NDA029	MANGANESE, DISSOLVED	394	=	388	=	UG/L	0.1	15	1.5%
SS	E200.7	SW3050	NDA183	SELENIUM	0.65	J	0.64	J	MG/KG	0.24	1.1	1.6%
SB	E200.7	SW3050	NDA226	IRON	12700	=	12900	=	MG/KG	1.4	23.6	1.6%
WG	E200.7	SW3050	NDA011	MAGNESIUM	95300	=	93800	=	UG/L	9	5000	1.6%
SB	E200.7	SW3050	NDA226	POTASSIUM	1240	=	1260	=	MG/KG	3.1	1180	1.6%
SB	E200.7	SW3050	NDA105	ALUMINUM	5860	=	5960	=	MG/KG	4.2	65.1	1.7%
SB	E200.7	SW3050	NDA129	CHROMIUM, TOTAL	5.6	=	5.5	=	MG/KG	0.05	2.3	1.8%
SD	E200.7	SW3050	NDA050	IRON	38100	=	37400	=	MG/KG	2.8	46.2	1.9%
SW	E200.7	SW3050	NDA037DL1	CALCIUM	464000	J	455000	J	UG/L	58.5	25000	2.0%
SB	E200.7	SW3050	NDA129	BARIUM	101	=	103	=	MG/KG	0.01	45.2	2.0%
SD	E200.7	SW3050	NDA050	MANGANESE	607	J	595	J	MG/KG	0.02	6.9	2.0%
SB	E200.7	SW3050	NDA246	NICKEL	4.9	J	5	J	MG/KG	0.09	9.8	2.0%
WG	E200.7	SW3050	NDA011	CALCIUM	194000	=	190000	=	UG/L	11.7	5000	2.1%
SS	E200.7	SW3050	NDA204	COPPER	23.5	=	24	=	MG/KG	0.25	6.6	2.1%
SB	E200.7	SW3050	NDA129	VANADIUM	38.1	J	37.3	J	MG/KG	0.09	11.3	2.1%
SD	E200.7	SW3050	NDA050	COBALT	18.9	J	18.5	J	MG/KG	0.12	23.1	2.1%
D	E200.7	SW3050	NDA050	NICKEL	18.2	J	18.6	J	MG/KG	0.18	18.5	2.2%
SD	E200.7	SW3050	NDA050	SODIUM	422	J	432	J	MG/KG	26.6	2310	2.3%
SS	E200.7	SW3050	NDA191	THALLIUM	0.41	J	0.4	J	MG/KG	0.28	2	2.5%
WG	E200.7	SW3050	NDA011	VANADIUM	19.8	J	20.3	J	UG/L	0.8	50	2.5%
SS	E200.7	SW3050	NDA149	COBALT	7.9	J	8.1	J	MG/KG	0.05	10.9	2.5%
WG	E200.7	SW3050	NDA011	SODIUM	239000	=	233000	=	UG/L	115	5000	2.5%

Matrix	Analytical Method	Prep Method	Sample ID	Parameter	Lab Result	Lab Qual	Field Dup Lab Result	Field Dup Lab Qual	Units	DL	RL	R
SB	E200.7	SW3050	NDA105	SODIUM	15400	=	15800	=	MG/KG	18.7	1630	2.6%
SB	E200.7	SW3050	NDA105	POTASSIUM	2670	J	2740	J	MG/KG	4.3	1630	2.6%
SW	E200.7	SW3050	NDA037	MAGNESIUM	1560000	=	1520000	=	UG/L	9	5000	2.6%
SW	E200.7	SW3050	NDA037DL2	SODIUM	11600000	J	1.1E+07	J	UG/L	11500	500000	2.6%
SS	E200.7	SW3050	NDA149	BARIUM	53.5	=	52.1	=	MG/KG	0.01	43.6	2.7%
SS	E200.7	SW3050	NDA149	NICKEL	7.6	J	7.4	J	MG/KG	0.08	8.7	2.7%
SB	E200.7	SW3050	NDA063	SODIUM	1510	J	1470	J	MG/KG	12.5	1090	2.7%
SS	E200.7	SW3050	NDA183	ZINC	36.4	=	35.4	=	MG/KG	0.28	4.5	2.8%
SB	E200.7	SW3050	NDA246	BARIUM	94.1	=	96.8	=	MG/KG	0.01	49.2	2.8%
SS	E200.7	SW3050	NDA183	POTASSIUM	921	J	894	J	MG/KG	3	1130	3.0%
SS	E200.7	SW3050	NDA149	CALCIUM	19800	=	20400	=	MG/KG	1.3	1090	3.0%
WG	E200.7	FLDFLT	NDA011	POTASSIUM, DISSOLVED	3520	J	3630	J	UG/L	26.6	5000	3.1%
SS	E200.7	SW3050	NDA183	IRON	12800	=	12400	=	MG/KG	1.4	22.6	3.2%
SS	E200.7	SW3050	NDA149	MAGNESIUM	5080	=	4920	=	MG/KG	0.98	1090	3.2%
SS	E200.7	SW3050	NDA149	ALUMINUM	6900	=	6680	=	MG/KG	2.8	43.6	3.2%
WG	E200.7	FLDFLT	NDA029	ZINC, DISSOLVED	12.2	J	11.8	J	UG/L	2.5	20	3.3%
SB	E200.7	SW3050	NDA226	VANADIUM	38	=	39.3	=	MG/KG	0.09	11.8	3.4%
SD	E200.7	SW3050	NDA050	CADMIUM	5.9	=	5.7	=	MG/KG	0.04	2.3	3.4%
SB	E200.7	SW3050	NDA246	ZINC	29.6	J	30.7	J	MG/KG	0.31	4.9	3.6%
WG	E200.7	SW3050	NDA011	BARIUM	212	=	220	=	UG/L	0.1	200	3.7%
SS	E200.7	SW3050	NDA071	SODIUM	870	J	838	J	MG/KG	13.9	1210	3.7%
SS	E200.7	SW3050	NDA183	COBALT	7.8	J	7.5	J	MG/KG	0.05	11.3	3.9%
SB	E200.7	SW3050	NDA246	ALUMINUM	9570	J	9200	J	MG/KG	3.2	49.2	3.9%
WG	E200.7	SW3050	NDA029	MAGNESIUM	45900	=	44100	=	UG/L	9	5000	4.0%
SB	E200.7	SW3050	NDA105	MAGNESIUM	3810	=	3660	=	MG/KG	1.5	1630	4.0%
SW	E200.7	SW3050	NDA037DL1	MAGNESIUM	1460000	=	1520000	=	UG/L	45	25000	4.[illegible]
SB	E200.7	SW3050	NDA129	ZINC	26.6	=	27.7	=	MG/KG	0.28	4.5	4.
SB	E200.7	SW3050	NDA129	CALCIUM	1990	=	2080	=	MG/KG	1.3	1130	4.4%
SB	E200.7	SW3050	NDA162	THALLIUM	0.88	J	0.92	J	MG/KG	0.31	2.3	4.4%
SB	E200.7	SW3050	NDA246	VANADIUM	54.2	J	51.8	J	MG/KG	0.09	12.3	4.5%
SD	E200.7	SW3050	NDA050	ALUMINUM	22300	=	21300	=	MG/KG	6	92.4	4.6%
SS	E200.7	SW3050	NDA127	MAGNESIUM	6440	=	6150	=	MG/KG	0.99	1100	4.6%
SB	E200.7	SW3050	NDA226	SODIUM	111	J	106	J	MG/KG	13.6	1180	4.6%
SS	SW8081	SW3550	NDA127	p,p'-DDT	4.4	=	4.2	=	UG/KG	0.43	3.6	4.7%
SS	E200.7	SW3050	NDA149	MANGANESE	374	J	392	J	MG/KG	0.01	3.3	4.7%
SB	E200.7	SW3050	NDA246	POTASSIUM	1290	J	1230	J	MG/KG	3.3	1230	4.8%
SS	E200.7	SW3050	NDA071	LEAD	8.6	=	8.2	=	MG/KG	0.13	0.72	4.8%
WG	E200.7	SW3050	NDA029	POTASSIUM	6000	J	5720	J	UG/L	26.6	5000	4.8%
SB	E200.7	SW3050	NDA236	POTASSIUM	853	J	813	J	MG/KG	3	1140	4.8%
SW	E200.7	SW3050	NDA037	SODIUM	6520000	J	6210000	J	UG/L	115	5000	4.9%
WG	E200.7	FLDFLT	NDA011	CADMIUM, DISSOLVED	0.8	J	0.84	J	UG/L	0.2	5	4.9%
SS	SW8081	SW3550	NDA204	p,p'-DDE	0.8	J	0.84	J	UG/KG	0.44	4.3	4.9%
SD	E200.7	SW3050	NDA050	MAGNESIUM	10500	=	10000	=	MG/KG	2.1	2310	4.9%
SB	E200.7	SW3050	NDA105	COBALT	2.1	J	2	J	MG/KG	0.08	16.3	4.9%
SB	E200.7	SW3050	NDA246	IRON	18700	=	17800	=	MG/KG	1.5	24.6	4.9%
SB	E200.7	SW3050	NDA213	COPPER	28.9	J	27.5	J	MG/KG	0.21	5.6	5.0%
SW	E200.7	SW3050	NDA037	BARIUM	12.3	J	11.7	J	UG/L	0.1	200	5.0%
SD	E200.7	SW3050	NDA050	POTASSIUM	2650	=	2520	=	MG/KG	6.1	2310	5.0%
SB	E200.7	SW3050	NDA236	MAGNESIUM	2830	=	2690	=	MG/KG	1	1140	5.1%
SB	E200.7	SW3050	NDA226	ZINC	19.2	=	20.2	=	MG/KG	0.3	4.7	5.1%
WG	E200.7	FLDFLT	NDA029	POTASSIUM, DISSOLVED	5040	J	4790	J	UG/L	26.6	5000	5.1%
SW	E200.7	SW3050	NDA037	MANGANESE	18.1	J	17.2	J	UG/L	0.1	15	5.1%
SD	E200.7	SW3050	NDA050	BERYLLIUM	0.4	J	0.38	J	MG/KG	0.06	2.3	5.1%
SB	E200.7	SW3050	NDA226	SELENIUM	0.4	J	0.38	J	MG/KG	0.25	1.2	5.1[illegible]
WG	E200.7	FLDFLT	NDA029	SODIUM, DISSOLVED	132000	=	125000	=	UG/L	115	5000	5.[illegible]
SS	E200.7	SW3050	NDA183	VANADIUM	40.6	=	38.4	=	MG/KG	0.09	11.3	5.6%
WG	E200.7	FLDFLT	NDA029	BARIUM, DISSOLVED	129	J	122	J	UG/L	0.1	200	5.6%
SS	E200.7	SW3050	NDA071	CALCIUM	828	J	783	J	MG/KG	1.4	1210	5.6%
SS	E200.7	SW3050	NDA183	COPPER	21.7	=	20.5	=	MG/KG	0.21	5.6	5.7%
WG	E200.7	SW3050	NDA029	BARIUM	248	=	234	=	UG/L	0.1	200	5.8%

Matrix	Analytical Method	Prep Method	Sample ID	Parameter	Lab Result	Lab Qual	Field Dup Lab Result	Field Dup Lab Qual	Units	DL	RL	RPD
WG	E200.7	FLDFLT	NDA011	BARIUM, DISSOLVED	200	J	212	=	UG/L	0.1	200	5.8%
SS	E200.7	SW3050	NDA103	CADMIUM	0.35	J	0.33	J	MG/KG	0.02	1.4	5.9%
WG	E200.7	FLDFLT	NDA029	CALCIUM, DISSOLVED	59000	=	55500	=	UG/L	11.7	5000	6.1%
SB	E200.7	SW3050	NDA129	COPPER	25.2	=	23.7	=	MG/KG	0.22	5.6	6.1%
SS	E200.7	SW3050	NDA191	LEAD	5	=	4.7	=	MG/KG	0.11	0.61	6.2%
SB	E200.7	SW3050	NDA246	MAGNESIUM	2960	J	2780	J	MG/KG	1.1	1230	6.3%
SB	E200.7	SW3050	NDA236	IRON	19500	=	18300	=	MG/KG	1.4	22.8	6.3%
SS	E200.7	SW3050	NDA204	SODIUM	111	J	104	J	MG/KG	15.1	1310	6.5%
SS	E200.7	SW3050	NDA183	ALUMINUM	5510	=	5160	=	MG/KG	2.9	45.1	6.6%
SB	E200.7	SW3050	NDA129	SODIUM	59.5	J	63.6	J	MG/KG	13	1130	6.7%
WG	E200.7	FLDFLT	NDA029	MAGNESIUM, DISSOLVED	32400	=	30300	=	UG/L	9	5000	6.7%
SS	E200.7	SW3050	NDA127	ALUMINUM	10000	=	10700	=	MG/KG	2.8	44.1	6.8%
SS	E200.7	SW3050	NDA191	COPPER	22.9	J	21.4	J	MG/KG	0.19	5.1	6.8%
SS	E200.7	SW3050	NDA191	SODIUM	123	J	132	J	MG/KG	11.8	1020	7.1%
WG	E200.7	FLDFLT	NDA011	MAGNESIUM, DISSOLVED	99000	=	92200	=	UG/L	9	5000	7.1%
SS	E200.7	SW3050	NDA204	BARIUM	43.3	J	46.5	=	MG/KG	0.01	52.5	7.1%
SS	E200.7	SW3050	NDA061	THALLIUM	0.43	J	0.4	J	MG/KG	0.28	2.1	7.2%
SS	E200.7	SW3050	NDA071	POTASSIUM	243	J	226	J	MG/KG	3.2	1210	7.2%
SS	E200.7	SW3050	NDA071	BERYLLIUM	0.27	J	0.25	J	MG/KG	0.03	1.2	7.7%
SS	E200.7	SW3050	NDA204	LEAD	6.5	=	6	=	MG/KG	0.14	0.79	8.0%
SW	E200.7	SW3050	NDA037	MAGNESIUM	1560000	=	1440000	=	UG/L	9	5000	8.0%
SS	E200.7	SW3050	NDA149	BERYLLIUM	0.13	J	0.12	J	MG/KG	0.03	1.1	8.0%
SB	E200.7	SW3050	NDA226	LEAD	1.2	=	1.3	=	MG/KG	0.13	0.71	8.0%
SB	E200.7	SW3050	NDA162	LEAD	1.3	=	1.2	=	MG/KG	0.13	0.68	8.0%
WG	E200.7	FLDFLT	NDA011	NICKEL, DISSOLVED	1.2	J	1.3	J	UG/L	0.8	40	8.0%
[illegible]S	E200.7	SW3050	NDA191	COBALT	7.7	J	7.1	J	MG/KG	0.05	10.2	8.1%
[illegible]D	E200.7	SW3050	NDA050	CHROMIUM, TOTAL	38.9	=	42.2	=	MG/KG	0.12	4.6	8.1%
SS	E200.7	SW3050	NDA191	BARIUM	65.5	=	60.3	=	MG/KG	0.01	41	8.3%
SD	E200.7	SW3050	NDA050	SELENIUM	0.92	J	1	J	MG/KG	0.49	2.3	8.3%
SS	E200.7	SW3050	NDA071	ZINC	12.5	=	11.5	=	MG/KG	0.3	4.8	8.3%
SS	E200.7	SW3050	NDA071	COBALT	2.5	J	2.3	J	MG/KG	0.06	12.1	8.3%
SB	E200.7	SW3050	NDA213	ZINC	33.6	=	30.9	=	MG/KG	0.28	4.5	8.4%
SB	E200.7	SW3050	NDA246	COPPER	27.8	J	30.3	J	MG/KG	0.23	6.2	8.6%
SS	E200.7	SW3050	NDA183	BARIUM	61.6	=	56.5	=	MG/KG	0.01	45.1	8.6%
SS	E200.7	SW3050	NDA127	ARSENIC	1.1	J	1.2	J	MG/KG	0.37	2.2	8.7%
SB	E200.7	SW3050	NDA129	LEAD	1.2	=	1.1	=	MG/KG	0.12	0.68	8.7%
SS	E200.7	SW3050	NDA127	THALLIUM	1.2	J	1.1	J	MG/KG	0.3	2.2	8.7%
SS	E200.7	SW3050	NDA071	BARIUM	204	=	187	=	MG/KG	0.01	48.3	8.7%
SD	E200.7	SW3050	NDA050	ZINC	448	J	490	J	MG/KG	0.58	9.2	9.0%
SS	E200.7	SW3050	NDA103	MANGANESE	128	=	117	=	MG/KG	0.01	4.2	9.0%
SB	E200.7	SW3050	NDA246	LEAD	2.1	=	2.3	=	MG/KG	0.14	0.74	9.1%
SB	E200.7	SW3050	NDA162	CHROMIUM, TOTAL	5.2	J	5.7	J	MG/KG	0.05	2.3	9.2%
SB	E200.7	SW3050	NDA162	VANADIUM	36.9	=	33.6	=	MG/KG	0.09	11.4	9.4%
SS	E200.7	SW3050	NDA183	MANGANESE	720	=	654	=	MG/KG	0.01	3.4	9.6%
SS	E200.7	SW3050	NDA103	MAGNESIUM	4180	=	4610	=	MG/KG	1.2	1390	9.8%
SB	E200.7	SW3050	NDA162	COBALT	7.5	J	6.8	J	MG/KG	0.05	11.4	9.8%
SB	E200.7	SW3050	NDA129	BERYLLIUM	0.21	J	0.19	J	MG/KG	0.03	1.1	10.0%
SB	E200.7	SW3050	NDA162	BERYLLIUM	0.21	J	0.19	J	MG/KG	0.03	1.1	10.0%
SB	E200.7	SW3050	NDA129	MAGNESIUM	2900	=	3210	=	MG/KG	1	1130	10.1%
SD	E200.7	SW3050	NDA050	COPPER	130	=	144	=	MG/KG	0.44	11.5	10.2%
SS	E200.7	SW3050	NDA204	COBALT	6.5	J	7.2	J	MG/KG	0.06	13.1	10.2%
SB	E200.7	SW3050	NDA226	CHROMIUM, TOTAL	7.4	=	8.2	=	MG/KG	0.05	2.4	10.3%
SS	E200.7	SW3050	NDA204	POTASSIUM	878	J	792	J	MG/KG	3.5	1310	10.3%
[illegible]SB	E200.7	SW3050	NDA246	COBALT	10.1	J	9.1	J	MG/KG	0.06	12.3	10.4%
[illegible]B	E200.7	SW3050	NDA226	MANGANESE	482	=	535	=	MG/KG	0.01	3.5	10.4%
SB	E200.7	SW3050	NDA162	ZINC	24.2	=	21.8	=	MG/KG	0.29	4.6	10.4%
SS	E200.7	SW3050	NDA204	NICKEL	5	J	4.5	J	MG/KG	0.1	10.5	10.5%
SB	SW8260	SW5030	NDA213	XYLENES, TOTAL	10	J	9	J	UG/KG	0.27	12	10.5%
SS	E200.7	SW3050	NDA183	CHROMIUM, TOTAL	9	=	8.1	=	MG/KG	0.05	2.3	10.5%
SS	E200.7	SW3050	NDA191	ARSENIC	0.99	J	0.89	J	MG/KG	0.35	2	10.6%

Matrix	Analytical Method	Prep Method	Sample ID	Parameter	Lab Result	Lab Qual	Field Dup Lab Result	Field Dup Lab Qual	Units	DL	RL	[illegible]
WG	E200.7	FLDFLT	NDA011	CALCIUM, DISSOLVED	198000	=	178000	=	UG/L	11.7	5000	10.6%
SW	E200.7	SW3050	NDA037	ALUMINUM	1680	=	1510	=	UG/L	25.8	200	10.7%
SB	E200.7	SW3050	NDA105	VANADIUM	20.7	=	18.6	=	MG/KG	0.13	16.3	10.7%
SB	E200.7	SW3050	NDA162	IRON	12700	=	11400	=	MG/KG	1.4	22.9	10.8%
SB	E200.7	SW3050	NDA162	COPPER	21.4	=	19.2	=	MG/KG	0.22	5.7	10.8%
SS	E200.7	SW3050	NDA149	COPPER	47.2	=	42.3	=	MG/KG	0.21	5.4	10.9%
SS	E200.7	SW3050	NDA127	CALCIUM	4900	=	5470	=	MG/KG	1.3	1100	11.0%
SB	E200.7	SW3050	NDA213	BARIUM	115	J	103	J	MG/KG	0.01	44.6	11.0%
WG	E200.7	FLDFLT	NDA011	MANGANESE, DISSOLVED	22	=	19.7	=	UG/L	0.1	15	11.0%
SS	E200.7	SW3050	NDA191	CALCIUM	3500	J	3910	J	MG/KG	1.2	1020	11.1%
SS	E200.7	SW3050	NDA204	VANADIUM	40	=	35.8	=	MG/KG	0.1	13.1	11.1%
SB	E200.7	SW3050	NDA246	BERYLLIUM	0.19	J	0.17	J	MG/KG	0.03	1.2	11.1%
SB	E200.7	SW3050	NDA129	MANGANESE	447	=	500	=	MG/KG	0.01	3.4	11.2%
SS	E200.7	SW3050	NDA071	VANADIUM	29.2	=	26.1	=	MG/KG	0.09	12.1	11.2%
SB	E200.7	SW3050	NDA162	MAGNESIUM	2440	=	2180	=	MG/KG	1	1140	11.3%
WG	E200.7	SW3050	NDA029	MANGANESE	1500	=	1340	=	UG/L	0.1	15	11.3%
SS	E200.7	SW3050	NDA191	ALUMINUM	6900	J	6160	J	MG/KG	2.6	41	11.3%
SD	E200.7	SW3050	NDA050	CALCIUM	25100	=	22400	=	MG/KG	2.7	2310	11.4%
SS	E200.7	SW3050	NDA127	IRON	18200	=	20400	=	MG/KG	1.3	22	11.4%
SS	E200.7	SW3050	NDA191	ZINC	35.2	J	31.4	J	MG/KG	0.26	4.1	11.4%
SS	E200.7	SW3050	NDA191	MANGANESE	637	=	568	=	MG/KG	0.01	3.1	11.5%
SS	E200.7	SW3050	NDA204	MAGNESIUM	2860	=	2550	=	MG/KG	1.2	1310	11.5%
SB	E200.7	SW3050	NDA246	CALCIUM	3280	J	2920	J	MG/KG	1.4	1230	11.6%
SS	E200.7	SW3050	NDA191	BERYLLIUM	0.1	J	0.089	J	MG/KG	0.03	1	11.6%
SB	E200.7	SW3050	NDA226	COBALT	7.2	J	8.1	J	MG/KG	0.05	11.8	11.8%
SB	E200.7	SW3050	NDA213	BERYLLIUM	0.27	J	0.24	J	MG/KG	0.03	1.1	1[illegible]
SS	E200.7	SW3050	NDA191	POTASSIUM	876	J	778	J	MG/KG	2.7	1020	1
SS	E200.7	SW3050	NDA071	ALUMINUM	5080	=	4510	=	MG/KG	3.1	48.3	11.9%
SB	E200.7	SW3050	NDA129	SELENIUM	0.53	J	0.47	J	MG/KG	0.24	1.1	12.0%
SS	E200.7	SW3050	NDA127	COBALT	13.3	=	15	=	MG/KG	0.05	11	12.0%
SB	E200.7	SW3050	NDA213	VANADIUM	65.2	J	57.8	J	MG/KG	0.08	11.2	12.0%
WG	E200.7	FLDFLT	NDA011	VANADIUM, DISSOLVED	17.6	J	15.6	J	UG/L	0.8	50	12.0%
SS	E200.7	SW3050	NDA071	NICKEL	0.61	J	0.54	J	MG/KG	0.09	9.7	12.2%
SS	E200.7	SW3050	NDA149	POTASSIUM	1000	J	1130	=	MG/KG	2.9	1090	12.2%
SS	E200.7	SW3050	NDA127	ANTIMONY	0.26	J	0.23	J	MG/KG	0.15	13.2	12.2%
SB	E200.7	SW3050	NDA151	SELENIUM	0.69	J	0.78	J	MG/KG	0.24	1.1	12.2%
SB	E200.7	SW3050	NDA246	CHROMIUM, TOTAL	9.9	J	11.2	J	MG/KG	0.06	2.5	12.3%
WG	E200.7	SW3050	NDA029	VANADIUM	120	=	106	=	UG/L	0.8	50	12.4%
SB	E200.7	SW3050	NDA226	CALCIUM	3230	=	2850	=	MG/KG	1.4	1180	12.5%
SB	E200.7	SW3050	NDA213	MAGNESIUM	3230	J	2850	J	MG/KG	1	1120	12.5%
SB	E200.7	SW3050	NDA063	MAGNESIUM	1340	=	1180	=	MG/KG	0.98	1090	12.7%
SB	E200.7	SW3050	NDA129	THALLIUM	0.59	J	0.67	J	MG/KG	0.3	2.3	12.7%
SB	E200.7	SW3050	NDA162	NICKEL	2.5	J	2.2	J	MG/KG	0.09	9.2	12.8%
WG	E200.7	SW3050	NDA029	ALUMINUM	24000	=	21100	=	UG/L	25.8	200	12.9%
SS	E200.7	SW3050	NDA061	ALUMINUM	4920	J	5600	J	MG/KG	2.7	42.1	12.9%
SB	E200.7	SW3050	NDA236	SODIUM	303	J	266	J	MG/KG	13.1	1140	13.0%
SB	E200.7	SW3050	NDA105	CHROMIUM, TOTAL	5.7	=	5	=	MG/KG	0.08	3.3	13.1%
SS	E200.7	SW3050	NDA071	CHROMIUM, TOTAL	2.4	J	2.1	J	MG/KG	0.06	2.4	13.3%
SB	SW8260	SW5030	NDA213	M,P-XYLENE (SUM OF ISOMERS)	8	J	7	J	UG/KG	0.27	12	13.3%
WG	E200.7	SW3050	NDA029	CHROMIUM, TOTAL	50.7	=	44.3	=	UG/L	0.5	10	13.5%
SB	E200.7	SW3050	NDA236	ALUMINUM	8080	=	7060	=	MG/KG	2.9	45.6	13.5%
SS	E200.7	SW3050	NDA191	MAGNESIUM	2570	J	2240	J	MG/KG	0.92	1020	13.7%
WG	E200.7	SW3050	NDA029	NICKEL	21.7	J	18.9	J	UG/L	0.8	40	13.8%
SB	E200.7	SW3050	NDA213	POTASSIUM	1700	J	1480	J	MG/KG	3	1120	13
SB	E200.7	SW3050	NDA162	BARIUM	57	=	49.6	=	MG/KG	0.01	45.8	1[illegible]
SB	E200.7	SW3050	NDA105	NICKEL	2.3	J	2	J	MG/KG	0.13	13	14.0%
SS	E200.7	SW3050	NDA103	VANADIUM	19.9	=	22.9	=	MG/KG	0.11	13.9	14.0%
SS	E200.7	SW3050	NDA103	ALUMINUM	4900	=	5640	=	MG/KG	3.6	55.5	14.0%
WG	E200.7	SW3050	NDA029	COBALT	23.6	J	20.5	J	UG/L	0.5	50	14.1%
SB	E200.7	SW3050	NDA063	BERYLLIUM	0.6	J	0.52	J	MG/KG	0.03	1.1	14.3%

Matrix	Analytical Method	Prep Method	Sample ID	Parameter	Lab Result	Lab Qual	Field Dup Lab Result	Field Dup Lab Qual	Units	DL	RL	RPD
SB	SW8081	SW3550	NDA105	p,p'-DDD	0.84	J	0.97	J	UG/KG	0.36	5.3	14.4%
SS	E200.7	SW3050	NDA071	COPPER	8.9	=	7.7	=	MG/KG	0.23	6	14.5%
WG	E200.7	SW3050	NDA029	IRON	39300	=	34000	=	UG/L	12.2	100	14.5%
SS	E200.7	SW3050	NDA204	MANGANESE	288	=	333	=	MG/KG	0.01	3.9	14.5%
SB	E200.7	SW3050	NDA236	VANADIUM	75.2	=	65	=	MG/KG	0.09	11.4	14.6%
SB	E200.7	SW3050	NDA129	COBALT	8.2	J	9.5	J	MG/KG	0.05	11.3	14.7%
SB	E200.7	SW3050	NDA162	ALUMINUM	6790	=	5860	=	MG/KG	3	45.8	14.7%
SB	E200.7	SW3050	NDA213	IRON	22600	J	19500	J	MG/KG	1.4	22.3	14.7%
SS	E200.7	SW3050	NDA183	NICKEL	5.1	J	4.4	J	MG/KG	0.09	9	14.7%
SB	E200.7	SW3050	NDA162	MANGANESE	394	J	339	J	MG/KG	0.01	3.4	15.0%
SS	E200.7	SW3050	NDA127	SODIUM	109	J	127	J	MG/KG	12.7	1100	15.3%
SB	E200.7	SW3050	NDA213	LEAD	2.1	=	1.8	=	MG/KG	0.12	0.67	15.4%
SS	E200.7	SW3050	NDA071	IRON	8330	=	7130	=	MG/KG	1.5	24.2	15.5%
SS	E200.7	SW3050	NDA204	CHROMIUM, TOTAL	9.7	=	8.3	=	MG/KG	0.06	2.6	15.6%
SB	E200.7	SW3050	NDA226	BARIUM	59.5	=	69.6	=	MG/KG	0.01	47.2	15.6%
SS	E200.7	SW3050	NDA061	CHROMIUM, TOTAL	2.3	=	2.7	=	MG/KG	0.05	2.1	16.0%
SS	E200.7	SW3050	NDA204	IRON	14100	=	12000	=	MG/KG	1.6	26.2	16.1%
SS	E200.7	SW3050	NDA191	CHROMIUM, TOTAL	9.4	J	8	J	MG/KG	0.05	2	16.1%
SS	E200.7	SW3050	NDA061	IRON	6170	J	7250	J	MG/KG	1.3	21	16.1%
SS	E200.7	SW3050	NDA127	MANGANESE	703	=	828	=	MG/KG	0.01	3.3	16.3%
SS	E200.7	SW3050	NDA204	ALUMINUM	6600	=	5600	=	MG/KG	3.4	52.5	16.4%
SS	E200.7	SW3050	NDA127	COPPER	35.4	=	41.8	=	MG/KG	0.21	5.5	16.6%
WG	E200.7	FLDFLT	NDA011	CHROMIUM, DISSOLVED	1.3	J	1.1	J	UG/L	0.5	10	16.7%
SS	E200.7	SW3050	NDA183	BERYLLIUM	0.11	J	0.13	J	MG/KG	0.03	1.1	16.7%
SS	E200.7	SW3050	NDA204	BERYLLIUM	0.13	J	0.11	J	MG/KG	0.03	1.3	16.7%
SB	E200.7	SW3050	NDA129	NICKEL	3.3	J	3.9	J	MG/KG	0.09	9	16.7%
SB	E200.7	SW3050	NDA071	ARSENIC	0.81	J	0.68	J	MG/KG	0.41	2.4	17.4%
SS	E200.7	SW3050	NDA127	VANADIUM	54.7	J	65.2	J	MG/KG	0.08	11	17.5%
SS	E200.7	SW3050	NDA191	VANADIUM	45.9	J	38.5	J	MG/KG	0.08	10.2	17.5%
SB	E200.7	SW3050	NDA246	THALLIUM	0.99	J	0.83	J	MG/KG	0.33	2.5	17.6%
SS	E200.7	SW3050	NDA183	ARSENIC	0.62	J	0.74	J	MG/KG	0.38	2.3	17.6%
SB	E200.7	SW3050	NDA246	SODIUM	63	J	75.3	J	MG/KG	14.1	1230	17.8%
SS	E200.7	SW3050	NDA127	BARIUM	94.4	=	113	=	MG/KG	0.01	44.1	17.9%
SS	E200.7	SW3050	NDA183	MAGNESIUM	1930	=	1610	=	MG/KG	1	1130	18.1%
SB	E200.7	SW3050	NDA213	CALCIUM	3070	J	2560	J	MG/KG	1.3	1120	18.1%
SS	E200.7	SW3050	NDA204	ARSENIC	0.48	J	0.4	J	MG/KG	0.45	2.6	18.2%
SS	E200.7	SW3050	NDA103DL1	CALCIUM	162000	J	135000	J	MG/KG	8.1	6930	18.2%
SB	E200.7	SW3050	NDA063	ARSENIC	1.8	J	1.5	J	MG/KG	0.37	2.2	18.2%
SS	SW8081	SW3550	NDA149	p,p'-DDE	0.77	J	0.64	J	UG/KG	0.37	3.6	18.4%
SS	E200.7	SW3050	NDA204	ZINC	46.6	=	38.6	=	MG/KG	0.33	5.2	18.8%
SS	E200.7	SW3050	NDA103	COBALT	2.4	J	2.9	J	MG/KG	0.06	13.9	18.9%
SS	E200.7	SW3050	NDA191	IRON	15000	=	12400	=	MG/KG	1.3	20.5	19.0%
WG	E200.7	SW3050	NDA029	COPPER	85.3	=	70.5	=	UG/L	1.9	25	19.0%
SS	E200.7	SW3050	NDA103	POTASSIUM	1900	J	2300	J	MG/KG	3.7	1390	19.0%
SS	E200.7	SW3050	NDA127	BERYLLIUM	0.19	J	0.23	J	MG/KG	0.03	1.1	19.0%
SS	E200.7	SW3050	NDA103	IRON	8920	=	10800	=	MG/KG	1.7	27.7	19.1%
SB	E200.7	SW3050	NDA105	LEAD	25.8	=	21.3	=	MG/KG	0.18	0.98	19.1%
SB	E200.7	SW3050	NDA236	ZINC	24.4	J	20.1	J	MG/KG	0.28	4.6	19.3%
WG	E200.7	SW3050	NDA011	LEAD	1.4	J	1.7	J	UG/L	1.1	3	19.4%
SS	E200.7	SW3050	NDA103	CALCIUM	134000	J	163000	J	MG/KG	1.6	1390	19.5%
SB	E200.7	SW3050	NDA105	IRON	7330	=	6020	=	MG/KG	2	32.6	19.6%
SB	E200.7	SW3050	NDA162	POTASSIUM	1230	=	1010	=	MG/KG	3	1140	19.6%
SS	E200.7	SW3050	NDA103	SODIUM	13700	=	16700	=	MG/KG	16	1390	19.7%
SB	E200.7	SW3050	NDA105	ANTIMONY	0.61	J	0.5	J	MG/KG	0.23	19.5	19.8%
SB	E200.7	SW3050	NDA151	VANADIUM	48.4	=	59.1	=	MG/KG	0.09	11.5	19.9%
SS	E200.7	SW3050	NDA191	NICKEL	4.9	J	4	J	MG/KG	0.08	8.2	20.2%
SS	E200.7	SW3050	NDA071	MAGNESIUM	848	J	690	J	MG/KG	1.1	1210	20.5%
SB	E200.7	SW3050	NDA151	COBALT	12.8	=	15.8	=	MG/KG	0.05	11.5	21.0%
SS	E200.7	SW3050	NDA061	POTASSIUM	310	J	383	J	MG/KG	2.8	1050	21.1%
SB	E200.7	SW3050	NDA063	ALUMINUM	7700	=	6200	=	MG/KG	2.8	43.4	21.6%

Matrix	Analytical Method	Prep Method	Sample ID	Parameter	Lab Result	Lab Qual	Field Dup Lab Result	Field Dup Lab Qual	Units	DL	RL	RPD
SD	E200.7	SW3050	NDA050	LEAD	54.1	=	67.4	=	MG/KG	0.25	1.4	21.9%
SB	E200.7	SW3050	NDA151	ZINC	30.4	=	37.9	=	MG/KG	0.29	4.6	22.0%
SB	E200.7	SW3050	NDA063	VANADIUM	71.9	=	57.6	=	MG/KG	0.08	10.9	22.1%
SS	E200.7	SW3050	NDA061	VANADIUM	21.3	J	26.6	J	MG/KG	0.08	10.5	22.1%
SB	E200.7	SW3050	NDA236	THALLIUM	1.2	J	1.5	J	MG/KG	0.31	2.3	22.2%
SS	E200.7	SW3050	NDA183	ANTIMONY	0.44	J	0.35	J	MG/KG	0.16	13.5	22.8%
SS	E200.7	SW3050	NDA061	BERYLLIUM	0.19	J	0.24	J	MG/KG	0.03	1.1	23.3%
SS	E200.7	SW3050	NDA103	ARSENIC	1.9	J	2.4	J	MG/KG	0.47	2.8	23.3%
SS	SW8081	SW3550	NDA103	p,p'-DDE	3.8	J	3	J	UG/KG	0.46	4.5	23.5%
SB	E200.7	SW3050	NDA151	SODIUM	165	J	209	J	MG/KG	13.2	1150	23.5%
SB	E200.7	SW3050	NDA236	CHROMIUM, TOTAL	14.7	=	11.6	=	MG/KG	0.05	2.3	23.6%
WG	E200.7	SW3050	NDA029	ZINC	95.3	=	75.2	=	UG/L	2.5	20	23.6%
SS	E200.7	SW3050	NDA061	MAGNESIUM	540	J	685	J	MG/KG	0.95	1050	23.7%
SB	E200.7	SW3050	NDA151	IRON	15400	=	19600	=	MG/KG	1.4	22.9	24.0%
SD	SW7471	METHOD	NDA050	MERCURY	0.37	=	0.29	=	MG/KG	0.03	0.09	24.2%
SB	E200.7	SW3050	NDA063	THALLIUM	0.97	J	0.76	J	MG/KG	0.29	2.2	24.3%
SS	E200.7	SW3050	NDA127	POTASSIUM	1410	=	1800	=	MG/KG	2.9	1100	24.3%
SS	E200.7	SW3050	NDA103	CHROMIUM, TOTAL	6.4	=	8.2	=	MG/KG	0.06	2.8	24.7%
SB	E200.7	SW3050	NDA236	COPPER	28.2	J	22	J	MG/KG	0.22	5.7	24.7%
SB	E200.7	SW3050	NDA063	CHROMIUM, TOTAL	10	=	7.8	=	MG/KG	0.05	2.2	24.7%
SB	E200.7	SW3050	NDA105DL1	CALCIUM	138000	J	177000	J	MG/KG	9.5	8140	24.8%
SB	E200.7	SW3050	NDA063	POTASSIUM	357	J	278	J	MG/KG	2.9	1090	24.9%
SB	E200.7	SW3050	NDA063	NICKEL	1.8	J	1.4	J	MG/KG	0.08	8.7	25.0%
SS	E200.7	SW3050	NDA149	SODIUM	204	J	263	J	MG/KG	12.5	1090	25.3%
SS	E200.7	SW3050	NDA127	ZINC	68.4	=	88.2	=	MG/KG	0.27	4.4	25.3%
SS	E200.7	SW3050	NDA103	NICKEL	2.4	J	3.1	J	MG/KG	0.11	11.1	25
SS	E200.7	SW3050	NDA149	THALLIUM	0.77	J	1	J	MG/KG	0.29	2.2	26
SB	E200.7	SW3050	NDA151	MAGNESIUM	2930	=	3810	=	MG/KG	1	1150	26.1%
WG	E200.7	SW3050	NDA011	CADMIUM	0.64	J	0.49	J	UG/L	0.2	5	26.5%
SB	E200.7	SW3050	NDA213	ALUMINUM	13000	J	9910	J	MG/KG	2.9	44.6	27.0%
SB	E200.7	SW3050	NDA105	COPPER	15	=	11.4	=	MG/KG	0.31	8.1	27.3%
SW	E200.7	SW3050	NDA037	VANADIUM	2.5	J	3.3	J	UG/L	0.8	50	27.6%
SS	E200.7	SW3050	NDA191	SELENIUM	0.41	J	0.31	J	MG/KG	0.22	1	27.8%
SB	E200.7	SW3050	NDA063	CALCIUM	1310	=	987	J	MG/KG	1.3	1090	28.1%
SB	SW8260	SW5030	NDA151	M,P-XYLENE (SUM OF ISOMERS)	0.4	J	0.3	J	UG/KG	0.2	11	28.6%
WG	E200.7	FLDFLT	NDA029	NICKEL, DISSOLVED	1.6	J	1.2	J	UG/L	0.8	40	28.6%
SB	SW8260	SW5030	NDA151	XYLENES, TOTAL	0.4	J	0.3	J	UG/KG	0.2	11	28.6%
SB	E200.7	SW3050	NDA105	MANGANESE	117	=	87.6	=	MG/KG	0.01	4.9	28.7%
SB	E200.7	SW3050	NDA151	ALUMINUM	8220	=	11000	=	MG/KG	3	45.9	28.9%
SS	E200.7	SW3050	NDA183	CALCIUM	2570	=	1920	=	MG/KG	1.3	1130	29.0%
SS	E200.7	SW3050	NDA127	LEAD	17.4	=	23.3	=	MG/KG	0.12	0.66	29.0%
SD	E200.7	SW3050	NDA050	ARSENIC	2.9	J	3.9	J	MG/KG	0.79	4.6	29.4%
SS	SW7471	METHOD	NDA183	MERCURY	0.02	J	0.027	J	MG/KG	0.01	0.05	29.8%
WG	E200.7	SW3050	NDA011	CHROMIUM, TOTAL	4	J	5.4	J	UG/L	0.5	10	29.8%
SS	E200.7	SW3050	NDA061	NICKEL	0.63	J	0.86	J	MG/KG	0.08	8.4	30.9%
SS	E200.7	SW3050	NDA061	ZINC	12.8	=	17.5	=	MG/KG	0.26	4.2	31.0%
SB	E200.7	SW3050	NDA063	IRON	16000	=	11700	=	MG/KG	1.3	21.7	31.0%
SS	E200.7	SW3050	NDA204	CALCIUM	4690	=	6430	=	MG/KG	1.5	1310	31.3%
SS	E200.7	SW3050	NDA103	COPPER	16.1	=	22.2	=	MG/KG	0.26	6.9	31.9%
SB	E200.7	SW3050	NDA151	COPPER	22.1	=	30.5	=	MG/KG	0.22	5.7	31.9%
SS	E200.7	SW3050	NDA149	ANTIMONY	0.36	J	0.26	J	MG/KG	0.15	13.1	32.3%
SS	E200.7	SW3050	NDA191	ANTIMONY	0.36	J	0.26	J	MG/KG	0.14	12.3	32.3%
SB	E200.7	SW3050	NDA213	COBALT	11.4	J	8.2	J	MG/KG	0.05	11.2	32.7%
SW	E200.7	SW3050	NDA037	SELENIUM	6.4	=	4.6	J	UG/L	2.1	5	32.7%
SB	E200.7	SW3050	NDA213	THALLIUM	1.3	J	0.93	J	MG/KG	0.3	2.2	33
WG	E200.7	FLDFLT	NDA029	VANADIUM, DISSOLVED	15.8	J	11.3	J	UG/L	0.8	50	33.2%
SD	E200.7	SW3050	NDA050	ANTIMONY	2.1	J	1.5	J	MG/KG	0.32	27.7	33.3%
SS	E200.7	SW3050	NDA061	CALCIUM	1020	J	1430	J	MG/KG	1.2	1050	33.5%
SS	SW8081	SW3550	NDA127	p,p'-DDE	2.7	J	3.8	J	UG/KG	0.37	3.6	33.8%
SB	E200.7	SW3050	NDA162	SODIUM	49.2	J	70	J	MG/KG	13.2	1140	34.9%

Matrix	Analytical Method	Prep Method	Sample ID	Parameter	Lab Result	Lab Qual	Field Dup Lab Result	Field Dup Lab Qual	Units	DL	RL	RPD
SS	E200.7	SW3050	NDA103	ZINC	42	=	59.8	=	MG/KG	0.35	5.5	35.0%
SS	SW8260	SW5030	NDA191	M,P-XYLENE (SUM OF ISOMERS)	0.7	J	1	J	UG/KG	0.22	10	35.3%
SB	E200.7	SW3050	NDA151	NICKEL	4.6	J	6.6	J	MG/KG	0.09	9.2	35.7%
SS	E200.7	SW3050	NDA149	IRON	15500	=	22300	=	MG/KG	1.3	21.8	36.0%
SB	E200.7	SW3050	NDA105	ARSENIC	0.76	J	1.1	J	MG/KG	0.55	3.3	36.6%
SB	E200.7	SW3050	NDA105	CALCIUM	122000	J	177000	J	MG/KG	1.9	1630	36.8%
SB	E200.7	SW3050	NDA236	BERYLLIUM	0.45	J	0.31	J	MG/KG	0.03	1.1	36.8%
SB	E200.7	SW3050	NDA246	MANGANESE	510	=	745	=	MG/KG	0.01	3.7	37.5%
SB	E200.7	SW3050	NDA063	ZINC	14.8	=	10.1	=	MG/KG	0.27	4.3	37.8%
SB	E200.7	SW3050	NDA151	POTASSIUM	1650	=	2420	=	MG/KG	3.1	1150	37.8%
SS	E200.7	SW3050	NDA061	LEAD	11	J	16.4	J	MG/KG	0.12	0.63	39.4%
SB	E200.7	SW3050	NDA151	CHROMIUM, TOTAL	10	J	15	J	MG/KG	0.05	2.3	40.0%
SB	SW8260	SW5030	NDA094	2-BUTANONE (MEK)	3	J	2	J	UG/KG	2	12	40.0%
SS	SW8260	SW5030	NDA191	XYLENES, TOTAL	1	J	1.5	J	UG/KG	0.22	10	40.0%
SB	E200.7	SW3050	NDA213	SODIUM	159	J	105	J	MG/KG	12.8	1120	40.9%
SB	E200.7	SW3050	NDA213	MANGANESE	698	J	460	J	MG/KG	0.01	3.3	41.1%
SS	E200.7	SW3050	NDA183	SODIUM	104	J	67.8	J	MG/KG	13	1130	42.1%
WG	E200.7	SW3050	NDA011	IRON	1460	J	2240	J	UG/L	12.2	100	42.2%
SB	E200.7	SW3050	NDA105DL1	CALCIUM	138000	J	212000	J	MG/KG	9.5	8140	42.3%
SS	E200.7	SW3050	NDA061	SODIUM	135	J	208	J	MG/KG	12.1	1050	42.6%
SS	E200.7	SW3050	NDA127	SELENIUM	0.6	J	0.93	J	MG/KG	0.23	1.1	43.1%
WG	E200.7	SW3050	NDA011	NICKEL	2.4	J	3.8	J	UG/L	0.8	40	45.2%
SB	E200.7	SW3050	NDA063	COPPER	10	=	6.3	=	MG/KG	0.21	5.4	45.4%
SB	E200.7	SW3050	NDA236	NICKEL	9.7	=	6.1	J	MG/KG	0.09	9.1	45.6%
SS	E200.7	SW3050	NDA103	LEAD	17.5	=	27.9	=	MG/KG	0.15	0.83	45.8%
S	SW8270	SW3550	NDA183	FLUORANTHENE	51	J	82	J	UG/KG	37	589	46.6%
S	E200.7	SW3050	NDA151	THALLIUM	0.87	J	1.4	J	MG/KG	0.31	2.3	46.7%
SS	E200.7	SW3050	NDA061	COPPER	7.3	=	11.8	=	MG/KG	0.2	5.3	47.1%
SD	SW8270	SW3550	NDA050	NAPHTHALENE	2980	J	1840	J	UG/KG	463	6260	47.3%
SB	E200.7	SW3050	NDA151	BARIUM	96.7	=	157	=	MG/KG	0.01	45.9	47.5%
SB	E200.7	SW3050	NDA236	LEAD	2.6	=	1.6	=	MG/KG	0.13	0.68	47.6%
SB	E200.7	SW3050	NDA151	MANGANESE	520	J	847	J	MG/KG	0.01	3.4	47.8%
SS	SW8270	SW3550	NDA183	PYRENE	38	J	62	J	UG/KG	33	589	48.0%
SB	E200.7	SW3050	NDA151	BERYLLIUM	0.23	J	0.38	J	MG/KG	0.03	1.1	49.2%
SS	E200.7	SW3050	NDA061	COBALT	3.2	J	5.3	J	MG/KG	0.05	10.5	49.4%
SB	E200.7	SW3050	NDA105	CADMIUM	0.33	J	0.55	J	MG/KG	0.03	1.6	50.0%
SS	SW8260	SW5030	NDA191	O-XYLENE (1,2-DIMETHYLBENZENE)	0.3	J	0.5	J	UG/KG	0.22	10	50.0%
SB	E200.7	SW3050	NDA105	ZINC	37.5	=	22.3	=	MG/KG	0.41	6.5	50.8%
SS	E200.7	SW3050	NDA149	SELENIUM	0.43	J	0.73	J	MG/KG	0.23	1.1	51.7%
SB	E200.7	SW3050	NDA063	LEAD	21.1	=	12.2	=	MG/KG	0.12	0.65	53.5%
SW	E200.7	SW3050	NDA037	SODIUM	6520000	J	1.1E+07	J	UG/L	115	5000	53.6%
SB	E200.7	SW3050	NDA105	CALCIUM	122000	J	212000	J	MG/KG	1.9	1630	53.9%
SS	E200.7	SW3050	NDA149	LEAD	12.7	=	22.1	=	MG/KG	0.12	0.65	54.0%
SB	E200.7	SW3050	NDA236	BARIUM	230	=	132	=	MG/KG	0.01	45.6	54.1%
SB	SW8260	SW5030	NDA246	2-BUTANONE (MEK)	7	J	4	J	UG/KG	2	10	54.5%
SB	E200.7	SW3050	NDA236	CALCIUM	2850	=	1590	=	MG/KG	1.3	1140	56.8%
SB	E200.7	SW3050	NDA236	SELENIUM	0.54	J	0.3	J	MG/KG	0.24	1.1	57.1%
SD	SW8270	SW3550	NDA050	2-METHYLNAPHTHALENE	4480	J	2410	J	UG/KG	369	6260	60.1%
WG	E200.7	FLDFLT	NDA011	ZINC, DISSOLVED	6.6	J	12.3	J	UG/L	2.5	20	60.3%
SW	E200.7	SW3050	NDA037DL2	SODIUM	11600000	J	6210000	J	UG/L	11500	500000	60.5%
SB	E200.7	SW3050	NDA236	MANGANESE	1550	=	806	=	MG/KG	0.01	3.4	63.2%
SS	E200.7	SW3050	NDA149	CADMIUM	0.6	J	0.31	J	MG/KG	0.02	1.1	63.7%
SB	E200.7	SW3050	NDA236	COBALT	17.6	=	8.9	J	MG/KG	0.05	11.4	65.7%
WG	E200.7	SW3050	NDA011	ZINC	5.9	J	11.7	J	UG/L	2.5	20	65.9%
B	SW8260	SW5030	NDA105	CARBON DISULFIDE	4	J	2	J	UG/KG	0.52	17	66.7%
SW	E200.7	SW3050	NDA037	CHROMIUM, TOTAL	1.1	J	0.55	J	UG/L	0.5	10	66.7%
SB	E200.7	SW3050	NDA213	NICKEL	12.2	=	6.1	J	MG/KG	0.08	8.9	66.7%
WG	E200.7	FLDFLT	NDA029	COPPER, DISSOLVED	5.5	J	2.7	J	UG/L	1.9	25	68.3%
SD	SW8270	SW3550	NDA050	PHENANTHRENE	1160	J	560	J	UG/KG	363	6260	69.8%
SB	SW8081	SW3550	NDA105	p,p'-DDE	11	J	5.3	J	UG/KG	0.54	5.3	69.9%

Matrix	Analytical Method	Prep Method	Sample ID	Parameter	Lab Result	Lab Qual	Field Dup Lab Result	Field Dup Lab Qual	Units	DL	RL	P
SS	E200.7	SW3050	NDA204	SELENIUM	0.84	J	0.4	J	MG/KG	0.28	1.3	71.0%
WG	E200.7	SW3050	NDA011	COPPER	2.6	J	5.5	J	UG/L	1.9	25	71.6%
SB	E200.7	SW3050	NDA162	SELENIUM	0.58	J	0.27	J	MG/KG	0.24	1.1	72.9%
SD	SW8270	SW3550	NDA050	bis(2-ETHYLHEXYL) PHTHALATE	8850	J	4030	J	UG/KG	469	6260	74.8%
WG	E200.7	SW3050	NDA011	MANGANESE	73.1	=	167	=	UG/L	0.1	15	78.2%
SB	E200.7	SW3050	NDA213	CHROMIUM, TOTAL	33.3	J	14.2	J	MG/KG	0.05	2.2	80.4%
SS	SW8260	SW5030	NDA061	ACETONE	33	J	14	J	UG/KG	12	12	80.9%
SS	SW7471	METHOD	NDA061	MERCURY	0.015	J	0.036	J	MG/KG	0.01	0.04	82.4%
WG	SW8270	SW3510	NDA029	bis(2-ETHYLHEXYL) PHTHALATE	2	J	5	J	UG/L	0.9	5	85.7%
SS	E200.7	SW3050	NDA061	ARSENIC	0.8	J	2	J	MG/KG	0.36	2.1	85.7%
SB	E200.7	SW3050	NDA063	MANGANESE	742	=	293	=	MG/KG	0.01	3.3	86.8%
SD	E200.7	SW3050	NDA050	THALLIUM	0.67	J	1.7	J	MG/KG	0.62	4.6	86.9%
SB	E200.7	SW3050	NDA213	SELENIUM	0.75	J	0.29	J	MG/KG	0.23	1.1	88.5%
WG	E200.7	SW3050	NDA011	ALUMINUM	672	=	1740	=	UG/L	25.8	200	88.6%
WG	SW8270	SW3510	NDA029	DI-n-BUTYL PHTHALATE	0.7	J	2	J	UG/L	0.5	5	96.3%
SD	SW8081	SW3550	NDA050	p,p'-DDE	12	J	4.2	J	UG/KG	3.9	38	96.3%
WG	E200.7	FLDFLT	NDA029	ALUMINUM, DISSOLVED	1150	=	353	=	UG/L	25.8	200	106%
WG	E200.7	FLDFLT	NDA029	CHROMIUM, DISSOLVED	3.6	J	1.1	J	UG/L	0.5	10	106%
WG	E200.7	FLDFLT	NDA029	IRON, DISSOLVED	1810	=	553	=	UG/L	12.2	100	106%
SS	E200.7	SW3050	NDA149	ZINC	94	J	333	J	MG/KG	0.27	4.4	112%
SB	E200.7	SW3050	NDA063	BARIUM	504	J	1980	J	MG/KG	0.01	43.4	119%
SS	E200.7	SW3050	NDA149	CHROMIUM, TOTAL	16.1	J	74.6	J	MG/KG	0.05	2.2	129%
SD	SW8260	SW5030	NDA050	ETHYLBENZENE	451	J	2210	J	UG/KG	61	2160	132%
SB	E200.7	SW3050	NDA063	COBALT	5.5	J	0.21	J	MG/KG	0.05	10.9	185%
SB	SW8260	SW5030	NDA213	1,2-DICHLOROETHANE	0.4	J	10	U	UG/KG	0.29	12	200%
SB	SW8260	SW5030	NDA246	1,2-DICHLOROETHANE	10	U	0.3	J	UG/KG	0.24	10	20
WG	E200.7	FLDFLT	NDA011	ALUMINUM, DISSOLVED	53.1	J	25.8	U	UG/L	25.8	200	2
SB	E200.7	SW3050	NDA129	ANTIMONY	0.16	UJ	0.28	J	MG/KG	0.16	13.6	200%
SS	E200.7	SW3050	NDA103	ANTIMONY	0.19	UJ	0.24	J	MG/KG	0.19	16.6	200%
WG	E200.7	SW3050	NDA011	ANTIMONY	1.4	U	2	J	UG/L	1.4	60	200%
SB	E200.7	SW3050	NDA246	ARSENIC	0.42	U	0.41	J	MG/KG	0.42	2.5	200%
SB	E200.7	SW3050	NDA236	ARSENIC	0.46	J	0.38	U	MG/KG	0.39	2.3	200%
SW	E200.7	SW3050	NDA037	ARSENIC	3.4	U	4.9	J	UG/L	3.4	10	200%
SB	E200.7	SW3050	NDA063	BARIUM	504	J	869	R	MG/KG	0.01	43.4	200%
SB	SW8260	SW5030	NDA105	BENZENE	0.2	J	16	U	UG/KG	0.18	17	200%
SD	SW8260	SW5030	NDA050	BENZENE	2160	UJ	6	J	UG/KG	24	2160	200%
SS	SW8270	SW3550	NDA127	BENZYL BUTYL PHTHALATE	63	J	781	U	UG/KG	28	535	200%
SS	SW8270	SW3550	NDA149	bis(2-ETHYLHEXYL) PHTHALATE	58	J	514	U	UG/KG	42	556	200%
SS	E200.7	SW3050	NDA061	CADMIUM	0.021	U	0.16	J	MG/KG	0.02	1.1	200%
WG	E200.7	FLDFLT	NDA029	CADMIUM, DISSOLVED	0.25	J	0.2	U	UG/L	0.2	5	200%
SB	SW8260	SW5030	NDA246	CARBON DISULFIDE	0.4	J	10	U	UG/KG	0.31	10	200%
SS	SW8260	SW5030	NDA103	CARBON DISULFIDE	2	J	14	U	UG/KG	0.39	13	200%
SD	SW8260	SW5030	NDA050	CARBON DISULFIDE	2160	UJ	7	J	UG/KG	67	2160	200%
SB	SW8260	SW5030	NDA246	CHLOROBENZENE	0.7	J	10	U	UG/KG	0.2	10	200%
SS	SW8270	SW3550	NDA183	CHRYSENE	589	UJ	44	J	UG/KG	34	589	200%
WG	E200.7	SW3050	NDA011	COBALT	0.5	U	1.6	J	UG/L	0.5	50	200%
WG	E200.7	FLDFLT	NDA029	COBALT, DISSOLVED	1.3	J	0.5	U	UG/L	0.5	50	200%
SW	E200.7	SW3050	NDA037	COPPER	1.9	J	1.9	U	UG/L	1.9	25	200%
WG	E200.7	FLDFLT	NDA011	COPPER, DISSOLVED	1.9	U	2.2	J	UG/L	1.9	25	200%
WG	SW8270	SW3510	NDA011	DIETHYL PHTHALATE	5	U	7	=	UG/L	0.5	5	200%
SS	SW8270	SW3550	NDA191	DIETHYL PHTHALATE	39	J	418	UJ	UG/KG	28	338	200%
SB	SW8270	SW3550	NDA094	DIETHYL PHTHALATE	68	J	310	UJ	UG/KG	42	510	200%
SS	SW8270	SW3550	NDA061	DIETHYL PHTHALATE	91	J	523	UJ	UG/KG	38	469	200%
SB	SW8270	SW3550	NDA246	DIETHYL PHTHALATE	511	UJ	37	J	UG/KG	42	511	20
SS	SW8270	SW3550	NDA149	DIMETHYL PHTHALATE	5800	J	514	UJ	UG/KG	36	556	2
SS	SW8270	SW3550	NDA149	DI-n-BUTYL PHTHALATE	40	J	514	U	UG/KG	29	556	200%
SS	SW8270	SW3550	NDA204	DI-n-BUTYL PHTHALATE	109	J	668	UJ	UG/KG	40	753	200%
SB	SW8260	SW5030	NDA105	ETHYLBENZENE	1	J	16	U	UG/KG	0.47	17	200%
SD	SW8260	SW5030	NDA050	ETHYLBENZENE	451	J	1030	R	UG/KG	61	2160	200%
WG	E200.7	FLDFLT	NDA011	IRON, DISSOLVED	70.5	J	12.2	R	UG/L	12.2	100	200%

Matrix	Analytical Method	Prep Method	Sample ID	Parameter	Lab Result	Lab Qual	Field Dup Lab Result	Field Dup Lab Qual	Units	DL	RL	RPD
WG	E200.7	FLDFLT	NDA011	LEAD, DISSOLVED	1.7	J	1.1	U	UG/L	1.1	3	200%
SS	SW8260	SW5030	NDA149	M,P-XYLENE (SUM OF ISOMERS)	0.3	J	11	R	UG/KG	0.2	11	200%
SS	SW8260	SW5030	NDA149	M,P-XYLENE (SUM OF ISOMERS)	0.3	J	964	R	UG/KG	0.2	11	200%
SS	SW8260	SW5030	NDA149	M,P-XYLENE (SUM OF ISOMERS)	0.3	J	12	UJ	UG/KG	0.2	11	200%
SB	SW8260	SW5030	NDA162	M,P-XYLENE (SUM OF ISOMERS)	0.7	J	12	U	UG/KG	0.2	11	200%
SS	SW8260	SW5030	NDA127	M,P-XYLENE (SUM OF ISOMERS)	10	U	0.5	J	UG/KG	0.2	10	200%
SD	SW8260	SW5030	NDA050	M,P-XYLENE (SUM OF ISOMERS)	2160	UJ	22	J	UG/KG	48	2160	200%
SB	SW7471	METHOD	NDA162	MERCURY	0.014	J	0.012	U	MG/KG	0.01	0.03	200%
SB	SW7471	METHOD	NDA246	MERCURY	0.015	J	0.014	U	MG/KG	0.01	0.04	200%
SS	SW7471	METHOD	NDA127	MERCURY	0.019	J	0.017	U	MG/KG	0.01	0.04	200%
SB	SW7471	METHOD	NDA105	MERCURY	0.042	J	0.023	UJ	MG/KG	0.02	0.06	200%
SW	SW7470	METHOD	NDA037	MERCURY	1.6	J	0.18	R	UG/L	0.18	0.2	200%
SS	SW8081	SW3550	NDA149	METHOXYCHLOR	1.2	J	17	UJ	UG/KG	0.32	19	200%
SD	SW8260	SW5030	NDA050	4-METHYL-2-PENTANONE (MIBK)	2160	UJ	63	J	UG/KG	282	2160	200%
SW	E200.7	SW3050	NDA037	NICKEL	0.8	U	1.1	J	UG/L	0.8	40	200%
SB	SW8260	SW5030	NDA162	O-XYLENE (1,2-DIMETHYLBENZENE)	0.3	J	12	U	UG/KG	0.2	11	200%
SB	SW8260	SW5030	NDA105	O-XYLENE (1,2-DIMETHYLBENZENE)	2	J	16	U	UG/KG	0.37	17	200%
SD	SW8260	SW5030	NDA050	O-XYLENE (1,2-DIMETHYLBENZENE)	2160	UJ	11	J	UG/KG	48	2160	200%
SS	SW8081	SW3550	NDA191	p,p'-DDE	3.4	UJ	0.44	J	UG/KG	0.35	3.4	200%
SB	SW8081	SW3550	NDA246	p,p'-DDE	0.47	J	3.8	UJ	UG/KG	0.42	4.1	200%
SS	SW8081	SW3550	NDA204	p,p'-DDT	4.3	U	0.53	J	UG/KG	0.51	4.3	200%
SD	SW8081	SW3550	NDA050	p,p'-DDT	13	J	41	UJ	UG/KG	4.5	38	200%
SW	E200.7	SW3050	NDA037	POTASSIUM	26.6	U	796000	=	UG/L	26.6	5000	200%
SD	SW8270	SW3550	NDA050	PYRENE	507	J	6080	U	UG/KG	350	6260	200%
SS	E200.7	SW3050	NDA061	SELENIUM	0.22	U	0.43	J	MG/KG	0.22	1.1	200%
SB	E200.7	SW3050	NDA063	SELENIUM	0.23	U	0.32	J	MG/KG	0.23	1.1	200%
SB	E200.7	SW3050	NDA246	SELENIUM	0.46	J	0.25	U	MG/KG	0.26	1.2	200%
WG	E200.7	SW3050	NDA029	SELENIUM	2.7	J	2.1	U	UG/L	2.1	5	200%
WG	E200.7	SW3050	NDA011	SELENIUM	3.2	J	2.1	U	UG/L	2.1	5	200%
WG	E200.7	FLDFLT	NDA011	SELENIUM, DISSOLVED	2.1	U	3.7	J	UG/L	2.1	5	200%
SS	E200.7	SW3050	NDA127	SILVER	0.065	J	0.063	U	MG/KG	0.05	2.2	200%
WG	E200.7	FLDFLT	NDA011	SILVER, DISSOLVED	0.5	U	0.66	J	UG/L	0.5	10	200%
SB	SW8260	SW5030	NDA105	TETRACHLOROETHYLENE(PCE)	2	J	16	U	UG/KG	0.9	17	200%
SS	E200.7	SW3050	NDA183	THALLIUM	0.33	J	0.3	U	MG/KG	0.3	2.3	200%
SB	E200.7	SW3050	NDA226	THALLIUM	0.49	J	0.31	U	MG/KG	0.32	2.4	200%
SS	E200.7	SW3050	NDA071	THALLIUM	0.59	J	0.28	U	MG/KG	0.33	2.4	200%
SB	SW8260	SW5030	NDA162	TOLUENE	0.8	J	12	U	UG/KG	0.3	11	200%
SB	SW8260	SW5030	NDA105	TOLUENE	0.9	J	16	U	UG/KG	0.47	17	200%
SD	SW8260	SW5030	NDA050	TOLUENE	2160	UJ	10	J	UG/KG	61	2160	200%
SS	SW8260	SW5030	NDA191	TRICHLOROETHYLENE (TCE)	0.5	J	0.3	U	UG/KG	0.3	10	200%
SS	SW8260	SW5030	NDA127	TRICHLOROETHYLENE (TCE)	10	U	0.8	J	UG/KG	0.27	10	200%
SS	SW8260	SW5030	NDA149	XYLENES, TOTAL	0.3	J	12	UJ	UG/KG	0.2	11	200%
SS	SW8260	SW5030	NDA149	XYLENES, TOTAL	0.3	J	964	R	UG/KG	0.2	11	200%
SS	SW8260	SW5030	NDA149	XYLENES, TOTAL	0.3	J	11	R	UG/KG	0.2	11	200%
SB	SW8260	SW5030	NDA162	XYLENES, TOTAL	1	J	12	U	UG/KG	0.2	11	200%
SS	SW8260	SW5030	NDA127	XYLENES, TOTAL	10	U	0.5	J	UG/KG	0.2	10	200%
SD	SW8260	SW5030	NDA050	XYLENES, TOTAL	2160	UJ	33	=	UG/KG	48	2160	200%

Matrix	Analytical Method	Prep Method	Parameter	Number Analyzed	Number Detected	Min Detected	Max Detected	Min RL	Max RL	Min DL	Max DL	Units
SB	E200.7	SW3050	ALUMINUM	90	90	2080	25900	40.3	65.1	2.6	4.2	mg/kg
SD	E200.7	SW3050	ALUMINUM	17	17	4380	22300	40	190	2.6	12.2	mg/kg
SS	E200.7	SW3050	ALUMINUM	90	90	1820	21400	40.5	57.6	2.6	3.7	mg/kg
SB	E200.7	SW3050	ANTIMONY	90	22	0.16	4.1	12.1	19.5	0.14	0.23	mg/kg
SD	E200.7	SW3050	ANTIMONY	17	9	0.22	97.8	12	56.9	0.14	0.66	mg/kg
SS	E200.7	SW3050	ANTIMONY	90	57	0.15	13.3	12.1	17.3	0.14	0.2	mg/kg
SB	E200.7	SW3050	ARSENIC	90	41	0.39	2.3	2	3.3	0.34	0.55	mg/kg
SD	E200.7	SW3050	ARSENIC	17	15	0.63	555	2	9.5	0.34	1.6	mg/kg
SS	E200.7	SW3050	ARSENIC	90	81	0.36	7.6	2	2.9	0.34	0.49	mg/kg
SB	E200.7	SW3050	BARIUM	89	89	12.6	3170	40.3	434	0.01	0.11	mg/kg
SD	E200.7	SW3050	BARIUM	14	14	5.1	571	40	190	0.01	0.04	mg/kg
SS	E200.7	SW3050	BARIUM	86	86	12.8	313	40.5	57.6	0.01	0.01	mg/kg
SB	E200.7	SW3050	BERYLLIUM	90	87	0.048	1.3	1	1.6	0.03	0.04	mg/kg
SD	E200.7	SW3050	BERYLLIUM	17	17	0.082	14.2	1	4.7	0.03	0.14	mg/kg
SS	E200.7	SW3050	BERYLLIUM	90	87	0.054	0.54	1	1.4	0.03	0.04	mg/kg
SB	E200.7	SW3050	CADMIUM	90	8	0.14	0.63	1	1.6	0.02	0.03	mg/kg
SD	E200.7	SW3050	CADMIUM	17	5	2.5	13.7	1	4.7	0.02	0.09	mg/kg
SS	E200.7	SW3050	CADMIUM	90	26	0.028	3.2	1	1.4	0.02	0.02	mg/kg
SB	E200.7	SW3050	CALCIUM	99	99	611	212000	1010	8140	1.2	9.5	mg/kg
SD	E200.7	SW3050	CALCIUM	17	17	1630	55800	1000	4740	1.2	5.5	mg/kg
SS	E200.7	SW3050	CALCIUM	99	99	708	163000	1010	14000	1.2	16.4	mg/kg
SB	E200.7	SW3050	CHROMIUM, TOTAL	90	90	1.9	129	2	3.3	0.05	0.08	mg/kg
SD	E200.7	SW3050	CHROMIUM, TOTAL	17	17	4.6	67.8	2	9.5	0.05	0.24	mg/kg
SS	E200.7	SW3050	CHROMIUM, TOTAL	90	90	2	91.9	2	2.9	0.05	0.07	mg/kg
SB	E200.7	SW3050	COBALT	90	90	0.21	63.2	10.1	16.3	0.05	0.08	mg/kg
SD	E200.7	SW3050	COBALT	17	17	1.7	142	10	47.4	0.05	0.24	mg/kg
SS	E200.7	SW3050	COBALT	90	90	1.3	30.8	10.1	14.4	0.05	0.07	mg/kg
SB	E200.7	SW3050	COPPER	90	90	2.3	137	5	8.1	0.19	0.31	mg/kg
SD	E200.7	SW3050	COPPER	17	17	9.1	158	5	23.7	0.19	0.9	mg/kg
SS	E200.7	SW3050	COPPER	90	90	1.9	1250	5.1	7.2	0.19	0.27	mg/kg
SB	E200.7	SW3050	IRON	91	91	4470	52100	20.1	44.7	1.2	2.7	mg/kg
SD	E200.7	SW3050	IRON	17	17	5110	38100	20	94.8	1.2	5.8	mg/kg
SS	E200.7	SW3050	IRON	92	92	6170	80000	20.2	135	1.2	8.2	mg/kg
SB	E200.7	SW3050	LEAD	90	87	0.54	332	0.6	0.98	0.11	0.18	mg/kg
SD	E200.7	SW3050	LEAD	17	17	1.5	144	0.6	2.8	0.11	0.52	mg/kg
SS	E200.7	SW3050	LEAD	90	90	1.1	617	0.6	0.86	0.11	0.16	mg/kg
SB	E200.7	SW3050	MAGNESIUM	90	90	382	22700	1010	1630	0.91	1.5	mg/kg
SD	E200.7	SW3050	MAGNESIUM	17	17	2670	11600	1000	4740	0.9	4.3	mg/kg
SS	E200.7	SW3050	MAGNESIUM	90	90	414	14200	1010	1440	0.91	1.3	mg/kg
SB	E200.7	SW3050	MANGANESE	89	89	72	3490	3	6.8	0.01	0.02	mg/kg
SD	E200.7	SW3050	MANGANESE	14	14	30.2	607	3	14.2	0.01	0.04	mg/kg
SS	E200.7	SW3050	MANGANESE	87	87	39.9	2190	3	6.1	0.01	0.02	mg/kg
SB	SW7471	METHOD	MERCURY	90	10	0.014	0.072	0.03	0.07	0.0093	0.02	mg/kg
SD	SW7471	METHOD	MERCURY	17	7	0.016	0.37	0.02	0.17	0.0087	0.05	mg/kg
SS	SW7471	METHOD	MERCURY	91	44	0.014	2.3	0.03	0.57	0.009	0.17	mg/kg

Matrix	Analytical Method	Prep Method	Parameter	Number Analyzed	Number Detected	Min Detected	Max Detected	Min RL	Max RL	Min DL	Max DL	Units
SB	E200.7	SW3050	NICKEL	90	90	0.47	43.7	8.1	13	0.08	0.13	mg/kg
SD	E200.7	SW3050	NICKEL	17	17	1.8	143	8	37.9	0.08	0.38	mg/kg
SS	E200.7	SW3050	NICKEL	90	90	0.48	42.7	8.1	11.5	0.08	0.12	mg/kg
SB	E200.7	SW3050	POTASSIUM	90	90	180	2740	1010	1630	2.7	4.3	mg/kg
SD	E200.7	SW3050	POTASSIUM	17	17	577	6550	1000	4740	2.7	12.6	mg/kg
SS	E200.7	SW3050	POTASSIUM	90	90	226	2740	1010	1440	2.7	3.8	mg/kg
SB	E200.7	SW3050	SELENIUM	90	56	0.25	0.94	1	1.6	0.21	0.34	mg/kg
SD	E200.7	SW3050	SELENIUM	17	13	0.25	544	1	4.7	0.21	1	mg/kg
SS	E200.7	SW3050	SELENIUM	90	62	0.24	0.97	1	1.4	0.21	0.3	mg/kg
SB	E200.7	SW3050	SILVER	90	5	0.097	0.31	2	3.3	0.05	0.08	mg/kg
SD	E200.7	SW3050	SILVER	17	2	0.14	14.5	2	9.5	0.05	0.24	mg/kg
SS	E200.7	SW3050	SILVER	90	16	0.054	0.59	2	2.9	0.05	0.07	mg/kg
SB	E200.7	SW3050	SODIUM	90	88	26.7	16500	1010	1630	11.6	18.7	mg/kg
SD	E200.7	SW3050	SODIUM	17	17	71.7	45700	1000	4740	11.5	54.5	mg/kg
SS	E200.7	SW3050	SODIUM	90	89	46.4	16700	1010	1440	11.6	16.5	mg/kg
SB	E200.7	SW3050	THALLIUM	90	71	0.31	1.9	2	3.3	0.27	0.44	mg/kg
SD	E200.7	SW3050	THALLIUM	17	8	0.32	572	2	9.5	0.27	1.3	mg/kg
SS	E200.7	SW3050	THALLIUM	90	62	0.31	4.3	2	2.9	0.27	0.39	mg/kg
SB	E200.7	SW3050	VANADIUM	90	90	17.7	163	10.1	16.3	0.08	0.13	mg/kg
SD	E200.7	SW3050	VANADIUM	17	17	23.5	174	10	47.4	0.08	0.38	mg/kg
SS	E200.7	SW3050	VANADIUM	90	90	19.7	130	10.1	14.4	0.08	0.12	mg/kg
SB	E200.7	SW3050	ZINC	90	90	6.6	216	4	6.5	0.25	0.41	mg/kg
SD	E200.7	SW3050	ZINC	17	17	12.9	513	4	19	0.25	1.2	mg/kg
SS	E200.7	SW3050	ZINC	90	90	7.8	1130	4	5.8	0.25	0.36	mg/kg
SB	SW8260	SW5030	1,2-DICHLOROETHANE	104	17	0.3	0.4	10	17	0.2	0.4	ug/kg
SS	SW8260	SW5030	1,2-DICHLOROETHANE	94	5	0.3	0.4	10	20	0.2	0.5	ug/kg
SS	SW8330	SW3550	1,3,5-TRINITROBENZENE	29	1	133	133	125	342	10	27	ug/kg
SS	SW8330	SW3550	1,3-DINITROBENZENE	29	1	133	133	125	342	22	60	ug/kg
SS	SW8330	SW3550	2,4,6-TRINITROTOLUENE	29	2	5570	5930	125	342	16	45	ug/kg
SS	SW8330	SW3550	2,4-DINITROTOLUENE	29	1	133	133	125	342	15	41	ug/kg
SS	SW8270	SW3550	2,4-DINITROTOLUENE	94	1	1980	1980	320	4990	22	349	ug/kg
SS	SW8330	SW3550	2,6-DINITROTOLUENE	29	1	133	133	125	342	22	61	ug/kg
SS	SW8270	SW3550	2,6-DINITROTOLUENE	94	1	127	127	320	4990	19	295	ug/kg
SS	SW8260	SW5030	2-HEXANONE	94	3	2	3	10	20	0.94	2	ug/kg
SD	SW8270	SW3550	2-METHYLNAPHTHALENE	17	4	517	4480	463	6960	27	410	ug/kg
SS	SW8270	SW3550	2-METHYLNAPHTHALENE	94	1	311	311	320	4990	19	295	ug/kg
SS	SW8330	SW3550	2-NITROTOLUENE	29	1	133	133	125	342	32	87	ug/kg
SS	SW8330	SW3550	3-NITROTOLUENE	29	1	133	133	125	342	48	131	ug/kg
SS	SW8330	SW3550	4-NITROTOLUENE	29	1	133	133	125	342	32	87	ug/kg
SS	SW8270	SW3550	ACENAPHTHENE	94	1	684	684	320	4990	16	250	ug/kg
SB	SW8270	SW3550	ACENAPHTHYLENE	104	1	98	98	310	4980	31	498	ug/kg
SS	SW8260	SW5030	ACETONE	6	5	14	5070	10	1200	10	1200	ug/kg
SS	SW8081	SW3550	ALPHA-CHLORDANE	90	1	0.61	0.61	0.17	4.8	0.05	1.3	ug/kg
SB	SW8270	SW3550	ANTHRACENE	104	1	20	20	310	4980	17	279	ug/kg
SS	SW8270	SW3550	ANTHRACENE	94	4	17	902	320	4990	17	280	ug/kg

Matrix	Analytical Method	Prep Method	Parameter	Number Analyzed	Number Detected	Min Detected	Max Detected	Min RL	Max RL	Min DL	Max DL	Units
SB	SW8260	SW5030	BENZENE	104	10	0.2	0.4	10	17	0.09	0.18	ug/kg
SD	SW8260	SW5030	BENZENE	17	3	3	6	10	2160	0.1	24	ug/kg
SS	SW8260	SW5030	BENZENE	94	5	0.1	0.3	10	20	0.09	0.22	ug/kg
SB	SW8270	SW3550	BENZO(a)ANTHRACENE	104	3	18	100	310	4980	16	259	ug/kg
SS	SW8270	SW3550	BENZO(a)ANTHRACENE	94	10	23	1870	320	4990	17	260	ug/kg
SB	SW8270	SW3550	BENZO(a)PYRENE	104	4	31	163	310	4980	21	334	ug/kg
SS	SW8270	SW3550	BENZO(a)PYRENE	94	12	33	1510	320	4990	21	334	ug/kg
SB	SW8270	SW3550	BENZO(b)FLUORANTHENE	104	4	25	118	310	4980	18	294	ug/kg
SS	SW8270	SW3550	BENZO(b)FLUORANTHENE	94	13	27	1800	320	4990	19	295	ug/kg
SB	SW8270	SW3550	BENZO(g,h,i)PERYLENE	104	4	40	184	310	4980	19	299	ug/kg
SS	SW8270	SW3550	BENZO(g,h,i)PERYLENE	94	9	38	432	320	4990	19	300	ug/kg
SB	SW8270	SW3550	BENZO(k)FLUORANTHENE	104	4	28	103	310	4980	22	354	ug/kg
SS	SW8270	SW3550	BENZO(k)FLUORANTHENE	94	12	34	1230	320	4990	23	354	ug/kg
SS	SW8270	SW3550	BENZYL BUTYL PHTHALATE	94	4	63	329	320	4990	17	265	ug/kg
SB	SW8270	SW3550	bis(2-ETHYLHEXYL) PHTHALATE	104	3	32	135	310	4980	23	374	ug/kg
SD	SW8270	SW3550	bis(2-ETHYLHEXYL) PHTHALATE	17	4	3880	9370	463	6960	35	522	ug/kg
SS	SW8270	SW3550	bis(2-ETHYLHEXYL) PHTHALATE	94	12	41	1400	320	4990	24	374	ug/kg
SS	SW8270	SW3550	CARBAZOLE	94	2	36	431	320	4990	20	314	ug/kg
SB	SW8260	SW5030	CARBON DISULFIDE	104	16	0.3	10	10	17	0.26	0.52	ug/kg
SD	SW8260	SW5030	CARBON DISULFIDE	17	11	3	22	10	2160	0.29	67	ug/kg
SS	SW8260	SW5030	CARBON DISULFIDE	94	7	0.5	2	10	20	0.26	0.63	ug/kg
SB	SW8260	SW5030	CHLOROBENZENE	104	1	0.7	0.7	10	17	0.17	0.34	ug/kg
SB	SW8270	SW3550	CHRYSENE	104	4	21	125	310	4980	18	284	ug/kg
SS	SW8270	SW3550	CHRYSENE	94	13	35	2000	320	4990	18	285	ug/kg
SB	SW8270	SW3550	DIBENZ(a,h)ANTHRACENE	104	1	35	35	310	4980	20	329	ug/kg
SS	SW8270	SW3550	DIBENZ(a,h)ANTHRACENE	94	3	29	254	320	4990	21	329	ug/kg
SS	SW8270	SW3550	DIBENZOFURAN	94	1	784	784	320	4990	17	260	ug/kg
SD	SW8081	SW3550	DIELDRIN	17	1	4.4	4.4	3.3	41	0.41	5.1	ug/kg
SS	SW8081	SW3550	DIELDRIN	90	2	0.45	0.45	0.34	9.3	0.04	1.1	ug/kg
SB	SW8270	SW3550	DIETHYL PHTHALATE	104	7	37	214	310	4980	25	409	ug/kg
SS	SW8270	SW3550	DIETHYL PHTHALATE	94	6	38	198	320	4990	26	409	ug/kg
SS	SW8270	SW3550	DIMETHYL PHTHALATE	94	1	5800	5800	320	4990	21	324	ug/kg
SB	SW8270	SW3550	DI-n-BUTYL PHTHALATE	104	4	31	42	310	4980	16	264	ug/kg
SS	SW8270	SW3550	DI-n-BUTYL PHTHALATE	94	3	28	109	320	4990	17	265	ug/kg
SB	SW8260	SW5030	ETHYLBENZENE	104	11	0.9	5	10	17	0.2	0.47	ug/kg
SD	SW8260	SW5030	ETHYLBENZENE	17	10	0.3	2210	10	2250	0.26	63	ug/kg
SS	SW8260	SW5030	ETHYLBENZENE	94	9	0.4	4	10	20	0.24	0.6	ug/kg
SB	SW8270	SW3550	FLUORANTHENE	104	4	21	125	310	4980	19	309	ug/kg
SS	SW8270	SW3550	FLUORANTHENE	94	13	41	4060	320	4990	20	309	ug/kg
SS	SW8270	SW3550	FLUORENE	94	1	440	440	320	4990	18	280	ug/kg
SS	SW8330	SW3550	TETRAZOCINE	29	2	12000	12800	125	342	13	36	ug/kg
SB	SW8270	SW3550	INDENO(1,2,3-c,d)PYRENE	104	4	28	144	310	4980	16	259	ug/kg
SS	SW8270	SW3550	INDENO(1,2,3-c,d)PYRENE	94	9	37	653	320	4990	17	260	ug/kg
SB	SW8260	SW5030	M,P-XYLENE (SUM OF ISOMERS)	104	27	0.2	28	10	17	0.18	0.37	ug/kg
SD	SW8260	SW5030	M,P-XYLENE (SUM OF ISOMERS)	17	11	0.3	104	10	2160	0.2	48	ug/kg

Matrix	Analytical Method	Prep Method	Parameter	Number Analyzed	Number Detected	Min Detected	Max Detected	Min RL	Max RL	Min DL	Max DL	Units
SS	SW8260	SW5030	M,P-XYLENE (SUM OF ISOMERS)	94	27	0.3	22	10	20	0.18	0.44	ug/kg
SS	SW8081	SW3550	METHOXYCHLOR	90	1	1.2	1.2	1.7	48	0.03	0.81	ug/kg
SB	SW8260	SW5030	BUTANONE)	15	15	2	7	10	14	1	2	ug/kg
SD	SW8260	SW5030	BUTANONE)	8	8	4	29	11	59	2	10	ug/kg
SS	SW8260	SW5030	BUTANONE)	4	3	2	18	12	14	2	2	ug/kg
SD	SW8260	SW5030	4-METHYL-2-PENTANONE (MIBK)	17	3	10	63	10	2160	1	282	ug/kg
SS	SW8330	SW3550	TRINITROPHENYLNITRAMINE	29	1	133	133	125	342	32	89	ug/kg
SD	SW8270	SW3550	NAPHTHALENE	17	4	284	2980	463	6960	34	515	ug/kg
SS	SW8270	SW3550	NAPHTHALENE	94	1	621	621	320	4990	24	369	ug/kg
SS	SW8330	SW3550	NITROBENZENE	29	1	133	133	125	342	32	87	ug/kg
SS	SW8270	SW3550	N-NITROSODIPHENYLAMINE	94	1	170	170	320	4990	35	549	ug/kg
SS	SW8330	SW3550	1,3,5,7-TETRAZOCINE	29	2	1870	2150	125	342	62	169	ug/kg
SB	SW8260	SW5030	O-XYLENE (1,2-DIMETHYLBENZENE)	104	15	0.3	7	10	17	0.18	0.37	ug/kg
SD	SW8260	SW5030	O-XYLENE (1,2-DIMETHYLBENZENE)	17	10	0.5	29	10	2160	0.2	48	ug/kg
SS	SW8260	SW5030	O-XYLENE (1,2-DIMETHYLBENZENE)	94	12	0.3	5	10	20	0.18	0.44	ug/kg
SB	SW8081	SW3550	p,p'-DDD	90	8	0.32	13	0.34	5.3	0.02	0.37	ug/kg
SS	SW8081	SW3550	p,p'-DDD	90	9	0.43	13	0.34	9.3	0.02	0.64	ug/kg
SB	SW8081	SW3550	p,p'-DDE	90	13	0.47	316	0.34	5.3	0.03	0.54	ug/kg
SD	SW8081	SW3550	p,p'-DDE	17	5	0.8	12	3.3	41	0.34	4.2	ug/kg
SS	SW8081	SW3550	p,p'-DDE	90	43	0.4	74	0.34	39	0.03	4	ug/kg
SB	SW8081	SW3550	p,p'-DDT	90	7	1	38	0.34	5.3	0.04	0.62	ug/kg
SD	SW8081	SW3550	p,p'-DDT	17	1	13	13	3.3	41	0.39	4.8	ug/kg
SS	SW8081	SW3550	p,p'-DDT	90	26	0.47	44	0.34	39	0.04	4.6	ug/kg
SS	SW8082	SW3550	PCB-1260 (AROCHLOR 1260)	90	1	21	21	33	92	13	44	ug/kg
SB	SW8270	SW3550	PHENANTHRENE	104	2	42	85	310	4980	18	289	ug/kg
SD	SW8270	SW3550	PHENANTHRENE	17	4	216	1160	463	6960	27	404	ug/kg
SS	SW8270	SW3550	PHENANTHRENE	94	3	34	4860	320	4990	19	290	ug/kg
SB	SW8270	SW3550	PYRENE	104	4	23	195	310	4980	17	279	ug/kg
SD	SW8270	SW3550	PYRENE	17	2	398	507	463	6960	26	390	ug/kg
SS	SW8270	SW3550	PYRENE	94	15	33	2900	320	4990	18	280	ug/kg
SB	SW8260	SW5030	STYRENE	104	2	0.6	0.6	10	17	0.17	0.34	ug/kg
SS	SW8260	SW5030	STYRENE	94	2	0.2	0.6	10	20	0.17	0.4	ug/kg
SB	SW8260	SW5030	TETRACHLOROETHYLENE(PCE)	104	2	1	2	10	17	0.45	0.9	ug/kg
SB	SW8260	SW5030	TOLUENE	104	25	0.3	8	10	17	0.2	0.47	ug/kg
SD	SW8260	SW5030	TOLUENE	17	10	0.5	19	10	2160	0.26	61	ug/kg
SS	SW8260	SW5030	TOLUENE	94	19	0.3	5	10	20	0.24	0.6	ug/kg
SS	SW8260	SW5030	TRICHLOROETHYLENE (TCE)	94	5	0.3	0.8	10	20	0.2	0.53	ug/kg
SB	SW8260	SW5030	XYLENES, TOTAL	104	27	0.2	35	10	17	0.18	0.37	ug/kg
SD	SW8260	SW5030	XYLENES, TOTAL	17	11	0.3	133	10	2160	0.2	48	ug/kg
SS	SW8260	SW5030	XYLENES, TOTAL	94	30	0.3	26	10	20	0.18	0.44	ug/kg
WG	SW8260	SW5030	1,2-DICHLOROBENZENE	27	2	3	4	1	1	0.2	0.2	ug/L
WG	SW8260	SW5030	1,2-DICHLOROETHANE	28	1	32	32	1	10	0.2	0.2	ug/L
WG	SW8270	SW3510	2-METHYLNAPHTHALENE	28	1	14	14	5	6	0.17	0.2	ug/L
WG	SW8260	SW5030	ACETONE	24	3	10	12	5	5	5	5	ug/L
SW	E200.7	SW3050	ALUMINUM	8	8	1370	2970	200	200	25.8	25.8	ug/L

Matrix	Analytical Method	Prep Method	Parameter	Number Analyzed	Number Detected	Min Detected	Max Detected	Min RL	Max RL	Min DL	Max DL	Units
WG	E200.7	SW3050	ALUMINUM	28	28	152	106000	200	200	25.8	25.8	ug/L
WG	E200.7	FLDFLT	ALUMINUM, DISSOLVED	28	5	27.8	1150	200	200	25.8	25.8	ug/L
WG	E200.7	SW3050	ANTIMONY	28	9	1.5	5.6	60	60	1.4	1.4	ug/L
WG	E200.7	FLDFLT	ANTIMONY, DISSOLVED	28	3	1.8	2.1	60	60	1.4	1.4	ug/L
SW	E200.7	SW3050	ARSENIC	8	4	3.8	5.3	10	10	3.4	3.4	ug/L
WG	E200.7	SW3050	ARSENIC	28	6	3.5	27.2	10	10	3.4	3.4	ug/L
WG	E200.7	FLDFLT	ARSENIC, DISSOLVED	28	5	4.8	13.3	10	10	3.4	3.4	ug/L
SW	E200.7	SW3050	BARIUM	8	8	11.7	15.1	200	200	0.1	0.1	ug/L
WG	E200.7	SW3050	BARIUM	28	28	61.2	943	200	200	0.1	0.1	ug/L
WG	E200.7	FLDFLT	BARIUM, DISSOLVED	28	28	54.7	904	200	200	0.1	0.1	ug/L
WG	SW8260	SW5030	BENZENE	28	2	2	6	1	10	0.1	0.1	ug/L
WG	SW8270	SW3510	BENZYL BUTYL PHTHALATE	28	1	0.4	0.4	5	6	0.2	0.3	ug/L
WG	E200.7	SW3050	BERYLLIUM	28	6	0.31	0.55	5	5	0.3	0.3	ug/L
WG	SW8270	SW3510	bis(2-ETHYLHEXYL) PHTHALATE	28	4	1	5	5	6	0.88	1	ug/L
SW	E200.7	SW3050	CADMIUM	8	8	1.9	2	5	5	0.2	0.2	ug/L
WG	E200.7	SW3050	CADMIUM	28	13	0.21	4.6	5	5	0.2	0.2	ug/L
WG	E200.7	FLDFLT	CADMIUM, DISSOLVED	28	18	0.2	4.3	5	5	0.2	0.2	ug/L
SW	E200.7	SW3050	CALCIUM	8	8	455000	487000	25000	25000	58.5	58.5	ug/L
WG	E200.7	SW3050	CALCIUM	32	32	37500	1090000	5000	25000	11.6	58.5	ug/L
WG	E200.7	FLDFLT	CALCIUM, DISSOLVED	32	32	38400	1050000	5000	25000	11.7	58.5	ug/L
WG	E200.7	FLDFLT	CHROMIUM, DISSOLVED	28	26	0.69	4.7	10	10	0.5	0.5	ug/L
SW	E200.7	SW3050	CHROMIUM, TOTAL	8	6	0.51	1.1	10	10	0.5	0.5	ug/L
WG	E200.7	SW3050	CHROMIUM, TOTAL	28	28	1.3	141	10	10	0.5	0.5	ug/L
SW	E200.7	SW3050	COBALT	8	3	0.71	1.1	50	50	0.5	0.5	ug/L
WG	E200.7	SW3050	COBALT	28	20	0.52	118	50	50	0.5	0.5	ug/L
WG	E200.7	FLDFLT	COBALT, DISSOLVED	28	9	0.55	2.8	50	50	0.5	0.5	ug/L
SW	E200.7	SW3050	COPPER	8	5	1.9	5	25	25	1.9	1.9	ug/L
WG	E200.7	SW3050	COPPER	28	24	2.6	247	25	25	1.9	1.9	ug/L
WG	E200.7	FLDFLT	COPPER, DISSOLVED	28	15	2.2	5.5	25	25	1.9	1.9	ug/L
WG	SW8081	SW3510	DELTA BHC	28	1	0.01	0.01	0.01	0.01	0.0007	0.01	ug/L
WG	SW8081	SW3510	DIELDRIN	28	2	0.01	0.11	0.02	0.03	0.0005	0.02	ug/L
SW	SW8270	SW3510	DIETHYL PHTHALATE	8	4	0.5	0.6	10	11	0.43	0.5	ug/L
WG	SW8270	SW3510	DIETHYL PHTHALATE	28	6	0.6	10	5	6	0.4	0.5	ug/L
WG	SW8270	SW3510	DI-n-BUTYL PHTHALATE	28	2	0.7	2	5	6	0.5	0.6	ug/L
WG	SW8260	SW5030	ETHYLBENZENE	28	1	0.9	0.9	1	10	0.3	0.3	ug/L
WG	SW8270	SW3510	FLUORENE	28	1	0.5	0.5	5	6	0.17	0.2	ug/L
SW	E200.7	SW3050	IRON	8	8	614	1410	100	100	12.2	12.2	ug/L
WG	E200.7	SW3050	IRON	28	28	43	180000	100	100	12.2	12.2	ug/L
WG	E200.7	FLDFLT	IRON, DISSOLVED	23	9	12.2	1810	100	100	12.2	12.2	ug/L
SW	E200.7	SW3050	LEAD	8	4	1.2	14.7	3	3	1.1	1.1	ug/L
WG	E200.7	SW3050	LEAD	28	22	1.1	25.2	3	3	1.1	1.1	ug/L
WG	E200.7	FLDFLT	LEAD, DISSOLVED	28	17	1.1	5.2	3	3	1.1	1.1	ug/L
WG	SW8260	SW5030	M,P-XYLENE (SUM OF ISOMERS)	28	2	0.9	17	1	10	0.2	0.2	ug/L
SW	E200.7	SW3050	MAGNESIUM	16	16	1440000	1560000	5000	25000	9	45	ug/L
WG	E200.7	SW3050	MAGNESIUM	35	35	24800	2210000	5000	25000	9	45	ug/L

Matrix	Analytical Method	Prep Method	Parameter	Number Analyzed	Number Detected	Min Detected	Max Detected	Min RL	Max RL	Min DL	Max DL	Units
WG	E200.7	FLDFLT	MAGNESIUM, DISSOLVED	35	35	23200	2330000	5000	25000	9	45	ug/L
SW	E200.7	SW3050	MANGANESE	8	8	5.3	30.8	15	15	0.1	0.1	ug/L
WG	E200.7	SW3050	MANGANESE	28	28	28.8	14300	15	15	0.1	0.1	ug/L
WG	E200.7	FLDFLT	MANGANESE, DISSOLVED	28	28	11.6	11800	15	15	0.1	0.1	ug/L
SW	SW7470	METHOD	MERCURY	1	1	1.6	1.6	0.2	0.2	0.18	0.18	ug/L
WG	SW7470	METHOD	MERCURY	28	1	0.18	0.18	0.2	0.2	0.18	0.18	ug/L
WG	SW7470	FLDFLT	MERCURY, DISSOLVED	28	1	0.28	0.28	0.2	0.2	0.18	0.18	ug/L
WG	SW8270	SW3510	NAPHTHALENE	28	1	15	15	5	6	0.29	0.4	ug/L
SW	E200.7	SW3050	NICKEL	8	3	0.96	1.1	40	40	0.8	0.8	ug/L
WG	E200.7	SW3050	NICKEL	28	28	0.95	87.7	40	40	0.8	0.8	ug/L
WG	E200.7	FLDFLT	NICKEL, DISSOLVED	28	24	1	12.4	40	40	0.8	0.8	ug/L
WG	SW8260	SW5030	O-XYLENE (1,2-DIMETHYLBENZENE)	28	1	3	3	1	10	0.2	0.2	ug/L
WG	SW8082	SW3510	PCB-1221 (AROCHLOR 1221)	28	1	0.7	0.7	0.4	0.5	0.11	0.14	ug/L
WG	SW8082	SW3510	PCB-1232 (AROCHLOR 1232)	28	1	0.09	0.09	0.2	0.25	0.08	0.1	ug/L
WG	E314.0	NONE	PERCHLORATE	17	2	2.4	20	2.5	120	0.8	40	ug/L
WG	SW8270	SW3510	PHENANTHRENE	28	1	0.6	0.6	5	6	0.2	0.3	ug/L
SW	E200.7	SW3050	POTASSIUM	8	2	412000	796000	5000	5000	26.6	26.6	ug/L
WG	E200.7	SW3050	POTASSIUM	28	24	2320	30000	5000	5000	26.6	26.6	ug/L
WG	E200.7	FLDFLT	POTASSIUM, DISSOLVED	28	24	2000	29800	5000	5000	26.6	26.6	ug/L
SW	E200.7	SW3050	SELENIUM	8	8	2.7	6.4	5	5	2.1	2.1	ug/L
WG	E200.7	SW3050	SELENIUM	28	16	2.6	7.2	5	5	2.1	2.1	ug/L
WG	E200.7	FLDFLT	SELENIUM, DISSOLVED	28	14	2.3	6.8	5	5	2.1	2.1	ug/L
SW	E200.7	SW3050	SILVER	8	1	7.1	7.1	50	50	2.5	2.5	ug/L
WG	E200.7	SW3050	SILVER	28	1	0.65	0.65	10	10	0.5	0.5	ug/L
WG	E200.7	FLDFLT	SILVER, DISSOLVED	28	5	0.53	2.1	10	10	0.5	0.5	ug/L
SW	E200.7	SW3050	SODIUM	16	16	6200000	12100000	5000	500000	115	11500	ug/L
WG	E200.7	SW3050	SODIUM	33	33	92500	16600000	5000	500000	115	11500	ug/L
WG	E200.7	FLDFLT	SODIUM, DISSOLVED	33	33	89600	16800000	5000	500000	115	11500	ug/L
SW	E200.7	SW3050	THALLIUM	8	1	4.9	4.9	10	10	2.7	2.7	ug/L
WG	SW8260	SW5030	TOLUENE	28	1	0.3	0.3	1	10	0.3	0.3	ug/L
SW	E200.7	SW3050	VANADIUM	8	8	2.5	5.8	50	50	0.8	0.8	ug/L
WG	E200.7	SW3050	VANADIUM	28	28	3.7	489	50	50	0.8	0.8	ug/L
WG	E200.7	FLDFLT	VANADIUM, DISSOLVED	28	28	2.1	35.5	50	50	0.8	0.8	ug/L
WG	SW8260	SW5030	XYLENES, TOTAL	28	2	0.9	20	1	10	0.2	0.2	ug/L
WG	E200.7	SW3050	ZINC	28	23	2.8	2950	20	100	2.5	12.5	ug/L
WG	E200.7	FLDFLT	ZINC, DISSOLVED	28	18	3	118	20	100	2.5	12.5	ug/L

Matrix	Sample ID	Sample Type	Parameter	Lab Result	Lab Qual	Final Qual	RL	DL	Units	Comment
SB	NDA249	N1	BARIUM	692	E	R	44.7	0.01	mg/kg	LR
SB	NDA058	N1	BARIUM	702	E	R	44.6	0.01	mg/kg	MS
SB	NDA058DL1	LR	BARIUM	710	=	R	223	0.05	mg/kg	MS
SB	NDA060	N1	BARIUM	177	=	R	44	0.01	mg/kg	MS
SB	NDA064FD1	FD1	BARIUM	869	E	R	43.4	0.01	mg/kg	DL
SB	NDA068	N1	BARIUM	829	E	R	44	0.01	mg/kg	DL
SB	NDA070	N1	BARIUM	892	E	R	42.6	0.01	mg/kg	SD
SD	NDA047	N1	BARIUM	109	=	R	43.7	0.01	mg/kg	MS
SD	NDA048	N1	BARIUM	247	=	R	45.9	0.01	mg/kg	MS
SD	NDA049	N1	BARIUM	61.1	=	R	43.9	0.01	mg/kg	MS
SS	NDA057	N1	BARIUM	219	=	R	49.9	0.01	mg/kg	MS
SS	NDA059	N1	BARIUM	315	=	R	43	0.01	mg/kg	MS
SS	NDA061	N1	BARIUM	150	=	R	42.1	0.01	mg/kg	MS
SS	NDA062FD1	FD1	BARIUM	200	=	R	42.7	0.01	mg/kg	MS
SB	NDA114	N1	CALCIUM	91800	E	R	1300	1.5	mg/kg	LR
SB	NDA116	N1	CALCIUM	99400	E	R	1260	1.5	mg/kg	LR
SB	NDA118	N1	CALCIUM	93700	E	R	1290	1.5	mg/kg	LR
SB	NDA102	N1	CALCIUM	86500	E	R	1570	1.8	mg/kg	LR
SB	NDA105	N1	CALCIUM	122000	E	R	1630	1.9	mg/kg	LR
SB	NDA106FD1	FD1	CALCIUM	177000	E	R	1620	1.9	mg/kg	LR
SB	NDA108	N1	CALCIUM	88400	E	R	1350	1.6	mg/kg	LR
SB	NDA110	N1	CALCIUM	40100	E	R	1330	1.6	mg/kg	LR
SB	NDA112	N1	CALCIUM	106000	E	R	1340	1.6	mg/kg	LR
SS	NDA176	N1	CALCIUM	71200	E	R	1400	1.6	mg/kg	
SS	NDA115	N1	CALCIUM	64900	E	R	1140	1.3	mg/kg	LR
SS	NDA117	N1	CALCIUM	65800	E	R	1260	1.5	mg/kg	LR
SS	NDA101	N1	CALCIUM	90500	E	R	1350	1.6	mg/kg	LR
SS	NDA103	N1	CALCIUM	134000	E	R	1390	1.6	mg/kg	LR
SS	NDA104FD1	FD1	CALCIUM	135000	E	R	1430	1.7	mg/kg	LR
SS	NDA107	N1	CALCIUM	97200	E	R	1250	1.5	mg/kg	LR
SS	NDA109	N1	CALCIUM	70800	E	R	1310	1.5	mg/kg	LR
SS	NDA111	N1	CALCIUM	108000	E	R	1360	1.6	mg/kg	LR
SB	NDA249	N1	IRON	48300	E	R	22.4	1.4	mg/kg	LR
SS	NDA121	N1	IRON	50300	E	R	21.9	1.3	mg/kg	LR
SS	NDA101	N1	IRON	75200	E	R	27	1.6	mg/kg	LR
SB	NDA238	N1	MANGANESE	3090	E	R	3.4	0.01	mg/kg	LR
SB	NDA058	N1	MANGANESE	956	=	R	3.3	0.01	mg/kg	MS
SB	NDA060	N1	MANGANESE	703	=	R	3.3	0.01	mg/kg	MS
SD	NDA047	N1	MANGANESE	1250	=	R	3.3	0.01	mg/kg	MS
SD	NDA048	N1	MANGANESE	2170	=	R	3.4	0.01	mg/kg	MS
SD	NDA049	N1	MANGANESE	617	=	R	3.3	0.01	mg/kg	MS
SS	NDA211	N1	MANGANESE	2030	E	R	3	0.01	mg/kg	LR
SS	NDA057	N1	MANGANESE	337	=	R	3.7	0.01	mg/kg	MS
SS	NDA059	N1	MANGANESE	345	=	R	3.2	0.01	mg/kg	MS
SS	NDA061	N1	MANGANESE	382	=	R	3.2	0.01	mg/kg	MS
SS	NDA062FD1	FD1	MANGANESE	585	=	R	3.2	0.01	mg/kg	MS
SS	NDA176	N1	MERCURY	0.018	U	R	0.06	0.01	mg/kg	LR
SB	NDA165DL1	LR	1,1,1-TRICHLOROETHANE	1180	U	R	1180	37	ug/kg	DL
SB	NDA096DL1	LR	1,1,1-TRICHLOROETHANE	917	U	R	917	28	ug/kg	DL
SB	NDA097DL1	LR	1,1,1-TRICHLOROETHANE	990	U	R	990	31	ug/kg	DL
SB	NDA296DL1	LR	1,1,1-TRICHLOROETHANE	1040	U	R	1040	32	ug/kg	DL
SB	NDA297DL1	LR	1,1,1-TRICHLOROETHANE	1030	U	R	1030	32	ug/kg	DL
SB	NDA298DL1	LR	1,1,1-TRICHLOROETHANE	1090	U	R	1090	34	ug/kg	DL
SB	NDA066DL1	LR	1,1,1-TRICHLOROETHANE	1190	U	R	1190	37	ug/kg	DL
SD	L1	LR	1,1,1-TRICHLOROETHANE	2250	U	R	2250	69	ug/kg	DL
SD	NDA052DL1	LR	1,1,1-TRICHLOROETHANE	2480	U	R	2480	77	ug/kg	DL
SD	NDA053DL1	LR	1,1,1-TRICHLOROETHANE	1520	U	R	1520	47	ug/kg	DL
SD	NDA047DL1	LR	1,1,1-TRICHLOROETHANE	858	U	R	858	27	ug/kg	DL
SD	NDA048DL1	LR	1,1,1-TRICHLOROETHANE	1200	U	R	1200	37	ug/kg	DL
SD	NDA049DL1	LR	1,1,1-TRICHLOROETHANE	1120	U	R	1120	35	ug/kg	DL
SS	NDA131DL1	LR	1,1,1-TRICHLOROETHANE	1200	U	R	1200	37	ug/kg	DL
SS	NDA149DL1	LR	1,1,1-TRICHLOROETHANE	1130	U	R	1130	35	ug/kg	DL
SS	L1	LR	1,1,1-TRICHLOROETHANE	964	U	R	964	30	ug/kg	DL

Matrix	Sample ID	Sample Type	Parameter	Lab Result	Lab Qual	Final Qual	RL	DL	Units	Comment
SS	E1	LR	1,1,1-TRICHLOROETHANE	11	U	R	11	0.3	ug/kg	RE
SS	NDA166DL1	LR	1,1,1-TRICHLOROETHANE	1110	U	R	1110	35	ug/kg	DL
SS	NDA176DL1	LR	1,1,1-TRICHLOROETHANE	1480	U	R	1480	46	ug/kg	DL
SS	NDA196DL1	LR	1,1,1-TRICHLOROETHANE	937	U	R	937	29	ug/kg	DL
SS	L1	LR	1,1,1-TRICHLOROETHANE	1820	U	R	1820	56	ug/kg	DL
SS	NDA198DL1	LR	1,1,1-TRICHLOROETHANE	1160	U	R	1160	36	ug/kg	DL
SS	NDA200DL1	LR	1,1,1-TRICHLOROETHANE	1220	U	R	1220	38	ug/kg	DL
SS	NDA204DL1	LR	1,1,1-TRICHLOROETHANE	1350	U	R	1350	42	ug/kg	DL
SS	L1	LR	1,1,1-TRICHLOROETHANE	1380	U	R	1380	43	ug/kg	DL
SS	NDA206DL1	LR	1,1,1-TRICHLOROETHANE	1430	U	R	1430	44	ug/kg	DL
SS	NDA207DL1	LR	1,1,1-TRICHLOROETHANE	1290	U	R	1290	40	ug/kg	DL
SS	NDA059DL1	LR	1,1,1-TRICHLOROETHANE	1170	U	R	1170	36	ug/kg	DL
SS	NDA065DL1	LR	1,1,1-TRICHLOROETHANE	1220	U	R	1220	38	ug/kg	DL
SS	NDA069DL1	LR	1,1,1-TRICHLOROETHANE	1080	U	R	1080	34	ug/kg	DL
SS	NDA121DL1	LR	1,1,1-TRICHLOROETHANE	1130	U	R	1130	35	ug/kg	DL
SS	NDA123DL1	LR	1,1,1-TRICHLOROETHANE	1200	U	R	1200	37	ug/kg	DL
SS	NDA124DL1	LR	1,1,1-TRICHLOROETHANE	1000	U	R	1000	31	ug/kg	DL
SB	NDA165DL1	LR	1,1,2,2-TETRACHLOROETHANE	1180	U	R	1180	18	ug/kg	DL
SB	NDA096DL1	LR	1,1,2,2-TETRACHLOROETHANE	917	U	R	917	14	ug/kg	DL
SB	NDA097DL1	LR	1,1,2,2-TETRACHLOROETHANE	990	U	R	990	15	ug/kg	DL
SB	NDA296DL1	LR	1,1,2,2-TETRACHLOROETHANE	1040	U	R	1040	16	ug/kg	DL
SB	NDA297DL1	LR	1,1,2,2-TETRACHLOROETHANE	1030	U	R	1030	15	ug/kg	DL
SB	NDA298DL1	LR	1,1,2,2-TETRACHLOROETHANE	1090	U	R	1090	16	ug/kg	DL
SB	NDA066DL1	LR	1,1,2,2-TETRACHLOROETHANE	1190	U	R	1190	18	ug/kg	DL
SD	L1	LR	1,1,2,2-TETRACHLOROETHANE	2250	U	R	2250	34	ug/kg	DL
SD	NDA052DL1	LR	1,1,2,2-TETRACHLOROETHANE	2480	U	R	2480	37	ug/kg	DL
SD	NDA053DL1	LR	1,1,2,2-TETRACHLOROETHANE	1520	U	R	1520	23	ug/kg	DL
SD	NDA047DL1	LR	1,1,2,2-TETRACHLOROETHANE	858	U	R	858	13	ug/kg	DL
SD	NDA048DL1	LR	1,1,2,2-TETRACHLOROETHANE	1200	U	R	1200	18	ug/kg	DL
SD	NDA049DL1	LR	1,1,2,2-TETRACHLOROETHANE	1120	U	R	1120	17	ug/kg	DL
SS	NDA131DL1	LR	1,1,2,2-TETRACHLOROETHANE	1200	U	R	1200	18	ug/kg	DL
SS	NDA149DL1	LR	1,1,2,2-TETRACHLOROETHANE	1130	U	R	1130	17	ug/kg	DL
SS	L1	LR	1,1,2,2-TETRACHLOROETHANE	964	U	R	964	15	ug/kg	DL
SS	E1	LR	1,1,2,2-TETRACHLOROETHANE	11	U	R	11	0.16	ug/kg	RE
SS	NDA166DL1	LR	1,1,2,2-TETRACHLOROETHANE	1110	U	R	1110	17	ug/kg	DL
SS	NDA176DL1	LR	1,1,2,2-TETRACHLOROETHANE	1480	U	R	1480	22	ug/kg	DL
SS	NDA196DL1	LR	1,1,2,2-TETRACHLOROETHANE	937	U	R	937	14	ug/kg	DL
SS	L1	LR	1,1,2,2-TETRACHLOROETHANE	1820	U	R	1820	27	ug/kg	DL
SS	NDA198DL1	LR	1,1,2,2-TETRACHLOROETHANE	1160	U	R	1160	17	ug/kg	DL
SS	NDA200DL1	LR	1,1,2,2-TETRACHLOROETHANE	1220	U	R	1220	18	ug/kg	DL
SS	NDA204DL1	LR	1,1,2,2-TETRACHLOROETHANE	1350	U	R	1350	20	ug/kg	DL
SS	L1	LR	1,1,2,2-TETRACHLOROETHANE	1380	U	R	1380	21	ug/kg	DL
SS	NDA206DL1	LR	1,1,2,2-TETRACHLOROETHANE	1430	U	R	1430	22	ug/kg	DL
SS	NDA207DL1	LR	1,1,2,2-TETRACHLOROETHANE	1290	U	R	1290	19	ug/kg	DL
SS	NDA059DL1	LR	1,1,2,2-TETRACHLOROETHANE	1170	U	R	1170	18	ug/kg	DL
SS	NDA065DL1	LR	1,1,2,2-TETRACHLOROETHANE	1220	U	R	1220	18	ug/kg	DL
SS	NDA069DL1	LR	1,1,2,2-TETRACHLOROETHANE	1080	U	R	1080	16	ug/kg	DL
SS	NDA121DL1	LR	1,1,2,2-TETRACHLOROETHANE	1130	U	R	1130	17	ug/kg	DL
SS	NDA123DL1	LR	1,1,2,2-TETRACHLOROETHANE	1200	U	R	1200	18	ug/kg	DL
SS	NDA124DL1	LR	1,1,2,2-TETRACHLOROETHANE	1000	U	R	1000	15	ug/kg	DL
SB	NDA165DL1	LR	1,1,2-TRICHLOROETHANE	1180	U	R	1180	40	ug/kg	DL
SB	NDA096DL1	LR	1,1,2-TRICHLOROETHANE	917	U	R	917	31	ug/kg	DL
SB	NDA097DL1	LR	1,1,2-TRICHLOROETHANE	990	U	R	990	34	ug/kg	DL
SB	NDA296DL1	LR	1,1,2-TRICHLOROETHANE	1040	U	R	1040	35	ug/kg	DL
SB	NDA297DL1	LR	1,1,2-TRICHLOROETHANE	1030	U	R	1030	35	ug/kg	DL
SB	NDA298DL1	LR	1,1,2-TRICHLOROETHANE	1090	U	R	1090	37	ug/kg	DL
SB	NDA066DL1	LR	1,1,2-TRICHLOROETHANE	1190	U	R	1190	41	ug/kg	DL
SD	L1	LR	1,1,2-TRICHLOROETHANE	2250	U	R	2250	76	ug/kg	DL
SD	NDA052DL1	LR	1,1,2-TRICHLOROETHANE	2480	U	R	2480	84	ug/kg	DL
SD	NDA053DL1	LR	1,1,2-TRICHLOROETHANE	1520	U	R	1520	52	ug/kg	DL
SD	NDA047DL1	LR	1,1,2-TRICHLOROETHANE	858	U	R	858	29	ug/kg	DL
SD	NDA048DL1	LR	1,1,2-TRICHLOROETHANE	1200	U	R	1200	41	ug/kg	DL
SD	NDA049DL1	LR	1,1,2-TRICHLOROETHANE	1120	U	R	1120	38	ug/kg	DL

Matrix	Sample ID	Sample Type	Parameter	Lab Result	Lab Qual	Final Qual	RL	DL	Units	Comment
SS	NDA131DL1	LR	1,1,2-TRICHLOROETHANE	1200	U	R	1200	41	ug/kg	DL
SS	NDA149DL1	LR	1,1,2-TRICHLOROETHANE	1130	U	R	1130	39	ug/kg	DL
SS	L1	LR	1,1,2-TRICHLOROETHANE	964	U	R	964	33	ug/kg	DL
SS	E1	LR	1,1,2-TRICHLOROETHANE	11	U	R	11	0.37	ug/kg	RE
SS	NDA166DL1	LR	1,1,2-TRICHLOROETHANE	1110	U	R	1110	38	ug/kg	DL
SS	NDA176DL1	LR	1,1,2-TRICHLOROETHANE	1480	U	R	1480	50	ug/kg	DL
SS	NDA196DL1	LR	1,1,2-TRICHLOROETHANE	937	U	R	937	32	ug/kg	DL
SS	L1	LR	1,1,2-TRICHLOROETHANE	1820	U	R	1820	62	ug/kg	DL
SS	NDA198DL1	LR	1,1,2-TRICHLOROETHANE	1160	U	R	1160	39	ug/kg	DL
SS	NDA200DL1	LR	1,1,2-TRICHLOROETHANE	1220	U	R	1220	42	ug/kg	DL
SS	NDA204DL1	LR	1,1,2-TRICHLOROETHANE	1350	U	R	1350	46	ug/kg	DL
SS	L1	LR	1,1,2-TRICHLOROETHANE	1380	U	R	1380	47	ug/kg	DL
SS	NDA206DL1	LR	1,1,2-TRICHLOROETHANE	1430	U	R	1430	49	ug/kg	DL
SS	NDA207DL1	LR	1,1,2-TRICHLOROETHANE	1290	U	R	1290	44	ug/kg	DL
SS	NDA059DL1	LR	1,1,2-TRICHLOROETHANE	1170	U	R	1170	40	ug/kg	DL
SS	NDA065DL1	LR	1,1,2-TRICHLOROETHANE	1220	U	R	1220	41	ug/kg	DL
SS	NDA069DL1	LR	1,1,2-TRICHLOROETHANE	1080	U	R	1080	37	ug/kg	DL
SS	NDA121DL1	LR	1,1,2-TRICHLOROETHANE	1130	U	R	1130	38	ug/kg	DL
SS	NDA123DL1	LR	1,1,2-TRICHLOROETHANE	1200	U	R	1200	41	ug/kg	DL
SS	NDA124DL1	LR	1,1,2-TRICHLOROETHANE	1000	U	R	1000	34	ug/kg	DL
SB	NDA165DL1	LR	1,1-DICHLOROETHANE	1180	U	R	1180	46	ug/kg	DL
SB	NDA096DL1	LR	1,1-DICHLOROETHANE	917	U	R	917	36	ug/kg	DL
SB	NDA097DL1	LR	1,1-DICHLOROETHANE	990	U	R	990	39	ug/kg	DL
SB	NDA296DL1	LR	1,1-DICHLOROETHANE	1040	U	R	1040	41	ug/kg	DL
SB	NDA297DL1	LR	1,1-DICHLOROETHANE	1030	U	R	1030	40	ug/kg	DL
SB	NDA298DL1	LR	1,1-DICHLOROETHANE	1090	U	R	1090	42	ug/kg	DL
SB	NDA066DL1	LR	1,1-DICHLOROETHANE	1190	U	R	1190	47	ug/kg	DL
SD	L1	LR	1,1-DICHLOROETHANE	2250	U	R	2250	87	ug/kg	DL
SD	NDA052DL1	LR	1,1-DICHLOROETHANE	2480	U	R	2480	97	ug/kg	DL
SD	NDA053DL1	LR	1,1-DICHLOROETHANE	1520	U	R	1520	59	ug/kg	DL
SD	NDA047DL1	LR	1,1-DICHLOROETHANE	858	U	R	858	34	ug/kg	DL
SD	NDA048DL1	LR	1,1-DICHLOROETHANE	1200	U	R	1200	47	ug/kg	DL
SD	NDA049DL1	LR	1,1-DICHLOROETHANE	1120	U	R	1120	44	ug/kg	DL
SS	NDA131DL1	LR	1,1-DICHLOROETHANE	1200	U	R	1200	47	ug/kg	DL
SS	NDA149DL1	LR	1,1-DICHLOROETHANE	1130	U	R	1130	44	ug/kg	DL
SS	L1	LR	1,1-DICHLOROETHANE	964	U	R	964	38	ug/kg	DL
SS	E1	LR	1,1-DICHLOROETHANE	11	U	R	11	0.43	ug/kg	RE
SS	NDA166DL1	LR	1,1-DICHLOROETHANE	1110	U	R	1110	44	ug/kg	DL
SS	NDA176DL1	LR	1,1-DICHLOROETHANE	1480	U	R	1480	58	ug/kg	DL
SS	NDA196DL1	LR	1,1-DICHLOROETHANE	937	U	R	937	37	ug/kg	DL
SS	L1	LR	1,1-DICHLOROETHANE	1820	U	R	1820	71	ug/kg	DL
SS	NDA198DL1	LR	1,1-DICHLOROETHANE	1160	U	R	1160	45	ug/kg	DL
SS	NDA200DL1	LR	1,1-DICHLOROETHANE	1220	U	R	1220	48	ug/kg	DL
SS	NDA204DL1	LR	1,1-DICHLOROETHANE	1350	U	R	1350	53	ug/kg	DL
SS	L1	LR	1,1-DICHLOROETHANE	1380	U	R	1380	54	ug/kg	DL
SS	NDA206DL1	LR	1,1-DICHLOROETHANE	1430	U	R	1430	56	ug/kg	DL
SS	NDA207DL1	LR	1,1-DICHLOROETHANE	1290	U	R	1290	50	ug/kg	DL
SS	NDA059DL1	LR	1,1-DICHLOROETHANE	1170	U	R	1170	46	ug/kg	DL
SS	NDA065DL1	LR	1,1-DICHLOROETHANE	1220	U	R	1220	48	ug/kg	DL
SS	NDA069DL1	LR	1,1-DICHLOROETHANE	1080	U	R	1080	42	ug/kg	DL
SS	NDA121DL1	LR	1,1-DICHLOROETHANE	1130	U	R	1130	44	ug/kg	DL
SS	NDA123DL1	LR	1,1-DICHLOROETHANE	1200	U	R	1200	47	ug/kg	DL
SS	NDA124DL1	LR	1,1-DICHLOROETHANE	1000	U	R	1000	39	ug/kg	DL
SB	NDA165DL1	LR	1,1-DICHLOROETHENE	1180	U	R	1180	46	ug/kg	DL
SB	NDA096DL1	LR	1,1-DICHLOROETHENE	917	U	R	917	36	ug/kg	DL
SB	NDA097DL1	LR	1,1-DICHLOROETHENE	990	U	R	990	39	ug/kg	DL
SB	NDA296DL1	LR	1,1-DICHLOROETHENE	1040	U	R	1040	41	ug/kg	DL
SB	NDA297DL1	LR	1,1-DICHLOROETHENE	1030	U	R	1030	40	ug/kg	DL
SB	NDA298DL1	LR	1,1-DICHLOROETHENE	1090	U	R	1090	42	ug/kg	DL
SB	NDA066DL1	LR	1,1-DICHLOROETHENE	1190	U	R	1190	47	ug/kg	DL
SD	L1	LR	1,1-DICHLOROETHENE	2250	U	R	2250	87	ug/kg	DL
SD	NDA052DL1	LR	1,1-DICHLOROETHENE	2480	U	R	2480	97	ug/kg	DL
SD	NDA053DL1	LR	1,1-DICHLOROETHENE	1520	U	R	1520	59	ug/kg	DL

Matrix	Sample ID	Sample Type	Parameter	Lab Result	Lab Qual	Final Qual	RL	DL	Units	Comment
SD	NDA047DL1	LR	1,1-DICHLOROETHENE	858	U	R	858	34	ug/kg	DL
SD	NDA048DL1	LR	1,1-DICHLOROETHENE	1200	U	R	1200	47	ug/kg	DL
SD	NDA049DL1	LR	1,1-DICHLOROETHENE	1120	U	R	1120	44	ug/kg	DL
SS	NDA131DL1	LR	1,1-DICHLOROETHENE	1200	U	R	1200	47	ug/kg	DL
SS	NDA149DL1	LR	1,1-DICHLOROETHENE	1130	U	R	1130	44	ug/kg	DL
SS	L1	LR	1,1-DICHLOROETHENE	964	U	R	964	38	ug/kg	DL
SS	E1	LR	1,1-DICHLOROETHENE	11	U	R	11	0.43	ug/kg	RE
SS	NDA166DL1	LR	1,1-DICHLOROETHENE	1110	U	R	1110	44	ug/kg	DL
SS	NDA176DL1	LR	1,1-DICHLOROETHENE	1480	U	R	1480	58	ug/kg	DL
SS	NDA196DL1	LR	1,1-DICHLOROETHENE	937	U	R	937	37	ug/kg	DL
SS	L1	LR	1,1-DICHLOROETHENE	1820	U	R	1820	71	ug/kg	DL
SS	NDA198DL1	LR	1,1-DICHLOROETHENE	1160	U	R	1160	45	ug/kg	DL
SS	NDA200DL1	LR	1,1-DICHLOROETHENE	1220	U	R	1220	48	ug/kg	DL
SS	NDA204DL1	LR	1,1-DICHLOROETHENE	1350	U	R	1350	53	ug/kg	DL
SS	L1	LR	1,1-DICHLOROETHENE	1380	U	R	1380	54	ug/kg	DL
SS	NDA206DL1	LR	1,1-DICHLOROETHENE	1430	U	R	1430	56	ug/kg	DL
SS	NDA207DL1	LR	1,1-DICHLOROETHENE	1290	U	R	1290	50	ug/kg	DL
SS	NDA059DL1	LR	1,1-DICHLOROETHENE	1170	U	R	1170	46	ug/kg	DL
SS	NDA065DL1	LR	1,1-DICHLOROETHENE	1220	U	R	1220	48	ug/kg	DL
SS	NDA069DL1	LR	1,1-DICHLOROETHENE	1080	U	R	1080	42	ug/kg	DL
SS	NDA121DL1	LR	1,1-DICHLOROETHENE	1130	U	R	1130	44	ug/kg	DL
SS	NDA123DL1	LR	1,1-DICHLOROETHENE	1200	U	R	1200	47	ug/kg	DL
SS	NDA124DL1	LR	1,1-DICHLOROETHENE	1000	U	R	1000	39	ug/kg	DL
SB	NDA081	N1	1,2,4-TRICHLOROBENZENE	393	U	R	393	31	ug/kg	RE
SB	NDA083	N1	1,2,4-TRICHLOROBENZENE	424	U	R	424	33	ug/kg	RE
SS	NDA080	N1	1,2,4-TRICHLOROBENZENE	407	U	R	407	32	ug/kg	RE
SS	NDA082	N1	1,2,4-TRICHLOROBENZENE	466	U	R	466	36	ug/kg	RE
SB	NDA081	N1	1,2-DICHLOROBENZENE	393	U	R	393	37	ug/kg	RE
SB	NDA083	N1	1,2-DICHLOROBENZENE	424	U	R	424	40	ug/kg	RE
SS	NDA080	N1	1,2-DICHLOROBENZENE	407	U	R	407	38	ug/kg	RE
SS	NDA082	N1	1,2-DICHLOROBENZENE	466	U	R	466	44	ug/kg	RE
SB	NDA165DL1	LR	1,2-DICHLOROETHANE	1180	U	R	1180	28	ug/kg	DL
SB	NDA096DL1	LR	1,2-DICHLOROETHANE	917	U	R	917	22	ug/kg	DL
SB	NDA097DL1	LR	1,2-DICHLOROETHANE	990	U	R	990	24	ug/kg	DL
SB	NDA296DL1	LR	1,2-DICHLOROETHANE	1040	U	R	1040	25	ug/kg	DL
SB	NDA297DL1	LR	1,2-DICHLOROETHANE	1030	U	R	1030	25	ug/kg	DL
SB	NDA298DL1	LR	1,2-DICHLOROETHANE	1090	U	R	1090	26	ug/kg	DL
SB	NDA066DL1	LR	1,2-DICHLOROETHANE	1190	U	R	1190	29	ug/kg	DL
SD	L1	LR	1,2-DICHLOROETHANE	2250	U	R	2250	54	ug/kg	DL
SD	NDA052DL1	LR	1,2-DICHLOROETHANE	2480	U	R	2480	60	ug/kg	DL
SD	NDA053DL1	LR	1,2-DICHLOROETHANE	1520	U	R	1520	37	ug/kg	DL
SD	NDA047DL1	LR	1,2-DICHLOROETHANE	858	U	R	858	21	ug/kg	DL
SD	NDA048DL1	LR	1,2-DICHLOROETHANE	1200	U	R	1200	29	ug/kg	DL
SD	NDA049DL1	LR	1,2-DICHLOROETHANE	1120	U	R	1120	27	ug/kg	DL
SS	NDA131DL1	LR	1,2-DICHLOROETHANE	1200	U	R	1200	29	ug/kg	DL
SS	NDA149DL1	LR	1,2-DICHLOROETHANE	1130	U	R	1130	27	ug/kg	DL
SS	L1	LR	1,2-DICHLOROETHANE	964	U	R	964	23	ug/kg	DL
SS	E1	LR	1,2-DICHLOROETHANE	11	U	R	11	0.26	ug/kg	RE
SS	NDA166DL1	LR	1,2-DICHLOROETHANE	1110	U	R	1110	27	ug/kg	DL
SS	NDA176DL1	LR	1,2-DICHLOROETHANE	1480	U	R	1480	36	ug/kg	DL
SS	NDA196DL1	LR	1,2-DICHLOROETHANE	937	U	R	937	23	ug/kg	DL
SS	L1	LR	1,2-DICHLOROETHANE	1820	U	R	1820	44	ug/kg	DL
SS	NDA198DL1	LR	1,2-DICHLOROETHANE	1160	U	R	1160	28	ug/kg	DL
SS	NDA200DL1	LR	1,2-DICHLOROETHANE	1220	U	R	1220	29	ug/kg	DL
SS	NDA204DL1	LR	1,2-DICHLOROETHANE	1350	U	R	1350	32	ug/kg	DL
SS	L1	LR	1,2-DICHLOROETHANE	1380	U	R	1380	33	ug/kg	DL
SS	NDA206DL1	LR	1,2-DICHLOROETHANE	1430	U	R	1430	34	ug/kg	DL
SS	NDA207DL1	LR	1,2-DICHLOROETHANE	1290	U	R	1290	31	ug/kg	DL
SS	NDA059DL1	LR	1,2-DICHLOROETHANE	1170	U	R	1170	28	ug/kg	DL
SS	NDA065DL1	LR	1,2-DICHLOROETHANE	1220	U	R	1220	29	ug/kg	DL
SS	NDA069DL1	LR	1,2-DICHLOROETHANE	1080	U	R	1080	26	ug/kg	DL
SS	NDA121DL1	LR	1,2-DICHLOROETHANE	1130	U	R	1130	27	ug/kg	DL
SS	NDA123DL1	LR	1,2-DICHLOROETHANE	1200	U	R	1200	29	ug/kg	DL

Matrix	Sample ID	Sample Type	Parameter	Lab Result	Lab Qual	Final Qual	RL	DL	Units	Comment
SS	NDA124DL1	LR	1,2-DICHLOROETHANE	1000	U	R	1000	24	ug/kg	DL
SB	NDA165DL1	LR	1,2-DICHLOROPROPANE	1180	U	R	1180	17	ug/kg	DL
SB	NDA096DL1	LR	1,2-DICHLOROPROPANE	917	U	R	917	13	ug/kg	DL
SB	NDA097DL1	LR	1,2-DICHLOROPROPANE	990	U	R	990	14	ug/kg	DL
SB	NDA296DL1	LR	1,2-DICHLOROPROPANE	1040	U	R	1040	15	ug/kg	DL
SB	NDA297DL1	LR	1,2-DICHLOROPROPANE	1030	U	R	1030	14	ug/kg	DL
SB	NDA298DL1	LR	1,2-DICHLOROPROPANE	1090	U	R	1090	15	ug/kg	DL
SB	NDA066DL1	LR	1,2-DICHLOROPROPANE	1190	U	R	1190	17	ug/kg	DL
SD	L1	LR	1,2-DICHLOROPROPANE	2250	U	R	2250	31	ug/kg	DL
SD	NDA052DL1	LR	1,2-DICHLOROPROPANE	2480	U	R	2480	35	ug/kg	DL
SD	NDA053DL1	LR	1,2-DICHLOROPROPANE	1520	U	R	1520	21	ug/kg	DL
SD	NDA047DL1	LR	1,2-DICHLOROPROPANE	858	U	R	858	12	ug/kg	DL
SD	NDA048DL1	LR	1,2-DICHLOROPROPANE	1200	U	R	1200	17	ug/kg	DL
SD	NDA049DL1	LR	1,2-DICHLOROPROPANE	1120	U	R	1120	16	ug/kg	DL
SS	NDA131DL1	LR	1,2-DICHLOROPROPANE	1200	U	R	1200	17	ug/kg	DL
SS	NDA149DL1	LR	1,2-DICHLOROPROPANE	1130	U	R	1130	16	ug/kg	DL
SS	L1	LR	1,2-DICHLOROPROPANE	964	U	R	964	14	ug/kg	DL
SS	E1	LR	1,2-DICHLOROPROPANE	11	U	R	11	0.15	ug/kg	RE
SS	NDA166DL1	LR	1,2-DICHLOROPROPANE	1110	U	R	1110	16	ug/kg	DL
SS	NDA176DL1	LR	1,2-DICHLOROPROPANE	1480	U	R	1480	21	ug/kg	DL
SS	NDA196DL1	LR	1,2-DICHLOROPROPANE	937	U	R	937	13	ug/kg	DL
SS	L1	LR	1,2-DICHLOROPROPANE	1820	U	R	1820	25	ug/kg	DL
SS	NDA198DL1	LR	1,2-DICHLOROPROPANE	1160	U	R	1160	16	ug/kg	DL
SS	NDA200DL1	LR	1,2-DICHLOROPROPANE	1220	U	R	1220	17	ug/kg	DL
SS	NDA204DL1	LR	1,2-DICHLOROPROPANE	1350	U	R	1350	19	ug/kg	DL
SS	L1	LR	1,2-DICHLOROPROPANE	1380	U	R	1380	19	ug/kg	DL
SS	NDA206DL1	LR	1,2-DICHLOROPROPANE	1430	U	R	1430	20	ug/kg	DL
SS	NDA207DL1	LR	1,2-DICHLOROPROPANE	1290	U	R	1290	18	ug/kg	DL
SS	NDA059DL1	LR	1,2-DICHLOROPROPANE	1170	U	R	1170	16	ug/kg	DL
SS	NDA065DL1	LR	1,2-DICHLOROPROPANE	1220	U	R	1220	17	ug/kg	DL
SS	NDA069DL1	LR	1,2-DICHLOROPROPANE	1080	U	R	1080	15	ug/kg	DL
SS	NDA121DL1	LR	1,2-DICHLOROPROPANE	1130	U	R	1130	16	ug/kg	DL
SS	NDA123DL1	LR	1,2-DICHLOROPROPANE	1200	U	R	1200	17	ug/kg	DL
SS	NDA124DL1	LR	1,2-DICHLOROPROPANE	1000	U	R	1000	14	ug/kg	DL
SS	NDA078RE1	LR	1,3,5-TRINITROBENZENE	133	U	R	133	11	ug/kg	RE
SS	NDA104FD1	FD1	1,3,5-TRINITROBENZENE	355	U	R	355	28	ug/kg	SS
SB	NDA081	N1	1,3-DICHLOROBENZENE	393	U	R	393	31	ug/kg	RE
SB	NDA083	N1	1,3-DICHLOROBENZENE	424	U	R	424	34	ug/kg	RE
SS	NDA080	N1	1,3-DICHLOROBENZENE	407	U	R	407	33	ug/kg	RE
SS	NDA082	N1	1,3-DICHLOROBENZENE	466	U	R	466	37	ug/kg	RE
SS	NDA078RE1	LR	1,3-DINITROBENZENE	133	U	R	133	23	ug/kg	RE
SS	NDA104FD1	FD1	1,3-DINITROBENZENE	355	U	R	355	62	ug/kg	SS
SB	NDA081	N1	1,4-DICHLOROBENZENE	393	U	R	393	36	ug/kg	RE
SB	NDA083	N1	1,4-DICHLOROBENZENE	424	U	R	424	39	ug/kg	RE
SS	NDA080	N1	1,4-DICHLOROBENZENE	407	U	R	407	37	ug/kg	RE
SS	NDA082	N1	1,4-DICHLOROBENZENE	466	U	R	466	43	ug/kg	RE
SB	NDA081	N1	2,4,5-TRICHLOROPHENOL	1180	U	R	1180	22	ug/kg	RE
SB	NDA083	N1	2,4,5-TRICHLOROPHENOL	1270	U	R	1270	24	ug/kg	RE
SS	NDA080	N1	2,4,5-TRICHLOROPHENOL	1220	U	R	1220	23	ug/kg	RE
SS	NDA082	N1	2,4,5-TRICHLOROPHENOL	1400	U	R	1400	27	ug/kg	RE
SB	NDA081	N1	2,4,6-TRICHLOROPHENOL	393	U	R	393	23	ug/kg	RE
SB	NDA083	N1	2,4,6-TRICHLOROPHENOL	424	U	R	424	25	ug/kg	RE
SS	NDA080	N1	2,4,6-TRICHLOROPHENOL	407	U	R	407	24	ug/kg	RE
SS	NDA082	N1	2,4,6-TRICHLOROPHENOL	466	U	R	466	27	ug/kg	RE
SS	NDA078RE1	LR	2,4,6-TRINITROTOLUENE	5930	=	R	133	18	ug/kg	RE
SS	NDA104FD1	FD1	2,4,6-TRINITROTOLUENE	355	U	R	355	47	ug/kg	SS
SB	NDA081	N1	2,4-DICHLOROPHENOL	393	U	R	393	22	ug/kg	RE
SB	NDA083	N1	2,4-DICHLOROPHENOL	424	U	R	424	24	ug/kg	RE
SS	NDA080	N1	2,4-DICHLOROPHENOL	407	U	R	407	23	ug/kg	RE
SS	NDA082	N1	2,4-DICHLOROPHENOL	466	U	R	466	27	ug/kg	RE
SB	NDA081	N1	2,4-DIMETHYLPHENOL	393	U	R	393	31	ug/kg	RE
SB	NDA083	N1	2,4-DIMETHYLPHENOL	424	U	R	424	33	ug/kg	RE
SS	NDA080	N1	2,4-DIMETHYLPHENOL	407	U	R	407	32	ug/kg	RE

Matrix	Sample ID	Sample Type	Parameter	Lab Result	Lab Qual	Final Qual	RL	DL	Units	Comment
SS	NDA082	N1	2,4-DIMETHYLPHENOL	466	U	R	466	36	ug/kg	RE
SB	NDA081	N1	2,4-DINITROPHENOL	1180	U	R	1180	27	ug/kg	RE
SB	NDA083	N1	2,4-DINITROPHENOL	1270	U	R	1270	29	ug/kg	RE
SS	NDA080	N1	2,4-DINITROPHENOL	1220	U	R	1220	28	ug/kg	RE
SS	NDA082	N1	2,4-DINITROPHENOL	1400	U	R	1400	32	ug/kg	RE
SB	NDA081	N1	2,4-DINITROTOLUENE	393	U	R	393	28	ug/kg	RE
SB	NDA083	N1	2,4-DINITROTOLUENE	424	U	R	424	30	ug/kg	RE
SS	NDA078RE1	LR	2,4-DINITROTOLUENE	133	U	R	133	16	ug/kg	RE
SS	NDA104FD1	FD1	2,4-DINITROTOLUENE	355	U	R	355	43	ug/kg	SS
SS	NDA080	N1	2,4-DINITROTOLUENE	407	U	R	407	28	ug/kg	RE
SS	NDA082	N1	2,4-DINITROTOLUENE	466	U	R	466	33	ug/kg	RE
SB	NDA081	N1	2,6-DINITROTOLUENE	393	U	R	393	23	ug/kg	RE
SB	NDA083	N1	2,6-DINITROTOLUENE	424	U	R	424	25	ug/kg	RE
SS	NDA078RE1	LR	2,6-DINITROTOLUENE	133	U	R	133	24	ug/kg	RE
SS	NDA104FD1	FD1	2,6-DINITROTOLUENE	355	U	R	355	64	ug/kg	SS
SS	NDA080	N1	2,6-DINITROTOLUENE	407	U	R	407	24	ug/kg	RE
SS	NDA082	N1	2,6-DINITROTOLUENE	466	U	R	466	27	ug/kg	RE
SB	NDA081	N1	2-CHLORONAPHTHALENE	393	U	R	393	24	ug/kg	RE
SB	NDA083	N1	2-CHLORONAPHTHALENE	424	U	R	424	26	ug/kg	RE
SS	NDA080	N1	2-CHLORONAPHTHALENE	407	U	R	407	25	ug/kg	RE
SS	NDA082	N1	2-CHLORONAPHTHALENE	466	U	R	466	28	ug/kg	RE
SB	NDA081	N1	2-CHLOROPHENOL	393	U	R	393	26	ug/kg	RE
SB	NDA083	N1	2-CHLOROPHENOL	424	U	R	424	28	ug/kg	RE
SS	NDA080	N1	2-CHLOROPHENOL	407	U	R	407	26	ug/kg	RE
SS	NDA082	N1	2-CHLOROPHENOL	466	U	R	466	30	ug/kg	RE
SB	NDA165DL1	LR	2-HEXANONE	1180	U	R	1180	130	ug/kg	DL
SB	NDA096DL1	LR	2-HEXANONE	917	U	R	917	101	ug/kg	DL
SB	NDA097DL1	LR	2-HEXANONE	990	U	R	990	109	ug/kg	DL
SB	NDA296DL1	LR	2-HEXANONE	1040	U	R	1040	115	ug/kg	DL
SB	NDA297DL1	LR	2-HEXANONE	1030	U	R	1030	112	ug/kg	DL
SB	NDA298DL1	LR	2-HEXANONE	1090	U	R	1090	119	ug/kg	DL
SB	NDA066DL1	LR	2-HEXANONE	1190	U	R	1190	131	ug/kg	DL
SD	L1	LR	2-HEXANONE	2250	U	R	2250	246	ug/kg	DL
SD	NDA052DL1	LR	2-HEXANONE	2480	U	R	2480	273	ug/kg	DL
SD	NDA053DL1	LR	2-HEXANONE	1520	U	R	1520	168	ug/kg	DL
SD	NDA047DL1	LR	2-HEXANONE	858	U	R	858	95	ug/kg	DL
SD	NDA048DL1	LR	2-HEXANONE	1200	U	R	1200	132	ug/kg	DL
SD	NDA049DL1	LR	2-HEXANONE	1120	U	R	1120	123	ug/kg	DL
SS	NDA131DL1	LR	2-HEXANONE	1200	U	R	1200	132	ug/kg	DL
SS	NDA149DL1	LR	2-HEXANONE	1130	U	R	1130	125	ug/kg	DL
SS	L1	LR	2-HEXANONE	964	U	R	964	106	ug/kg	DL
SS	E1	LR	2-HEXANONE	11	U	R	11	1	ug/kg	RE
SS	NDA166DL1	LR	2-HEXANONE	1110	U	R	1110	123	ug/kg	DL
SS	NDA176DL1	LR	2-HEXANONE	1480	U	R	1480	163	ug/kg	DL
SS	NDA196DL1	LR	2-HEXANONE	937	U	R	937	103	ug/kg	DL
SS	L1	LR	2-HEXANONE	1820	U	R	1820	200	ug/kg	DL
SS	NDA198DL1	LR	2-HEXANONE	1160	U	R	1160	127	ug/kg	DL
SS	NDA200DL1	LR	2-HEXANONE	1220	U	R	1220	135	ug/kg	DL
SS	NDA204DL1	LR	2-HEXANONE	1350	U	R	1350	149	ug/kg	DL
SS	L1	LR	2-HEXANONE	1380	U	R	1380	151	ug/kg	DL
SS	NDA206DL1	LR	2-HEXANONE	1430	U	R	1430	158	ug/kg	DL
SS	NDA207DL1	LR	2-HEXANONE	1290	U	R	1290	142	ug/kg	DL
SS	NDA059DL1	LR	2-HEXANONE	1170	U	R	1170	129	ug/kg	DL
SS	NDA065DL1	LR	2-HEXANONE	1220	U	R	1220	134	ug/kg	DL
SS	NDA069DL1	LR	2-HEXANONE	1080	U	R	1080	119	ug/kg	DL
SS	NDA121DL1	LR	2-HEXANONE	1130	U	R	1130	124	ug/kg	DL
SS	NDA123DL1	LR	2-HEXANONE	1200	U	R	1200	132	ug/kg	DL
SS	NDA124DL1	LR	2-HEXANONE	1000	U	R	1000	110	ug/kg	DL
SB	NDA081	N1	2-METHYLNAPHTHALENE	393	U	R	393	23	ug/kg	RE
SB	NDA083	N1	2-METHYLNAPHTHALENE	424	U	R	424	25	ug/kg	RE
SS	NDA080	N1	2-METHYLNAPHTHALENE	407	U	R	407	24	ug/kg	RE
SS	NDA082	N1	2-METHYLNAPHTHALENE	466	U	R	466	27	ug/kg	RE
SB	NDA081	N1	2-METHYLPHENOL (o-CRESOL)	393	U	R	393	29	ug/kg	RE

Matrix	Sample ID	Sample Type	Parameter	Lab Result	Lab Qual	Final Qual	RL	DL	Units	Comment
SB	NDA083	N1	2-METHYLPHENOL (o-CRESOL)	424	U	R	424	31	ug/kg	RE
SS	NDA080	N1	2-METHYLPHENOL (o-CRESOL)	407	U	R	407	30	ug/kg	RE
SS	NDA082	N1	2-METHYLPHENOL (o-CRESOL)	466	U	R	466	34	ug/kg	RE
SB	NDA081	N1	2-NITROANILINE	1180	U	R	1180	20	ug/kg	RE
SB	NDA083	N1	2-NITROANILINE	1270	U	R	1270	21	ug/kg	RE
SS	NDA080	N1	2-NITROANILINE	1220	U	R	1220	20	ug/kg	RE
SS	NDA082	N1	2-NITROANILINE	1400	U	R	1400	23	ug/kg	RE
SB	NDA081	N1	2-NITROPHENOL	393	U	R	393	24	ug/kg	RE
SB	NDA083	N1	2-NITROPHENOL	424	U	R	424	25	ug/kg	RE
SS	NDA080	N1	2-NITROPHENOL	407	U	R	407	24	ug/kg	RE
SS	NDA082	N1	2-NITROPHENOL	466	U	R	466	28	ug/kg	RE
SS	NDA078RE1	LR	2-NITROTOLUENE	133	U	R	133	34	ug/kg	RE
SS	NDA104FD1	FD1	2-NITROTOLUENE	355	U	R	355	91	ug/kg	SS
SB	NDA081	N1	3,3'-DICHLOROBENZIDINE	786	U	R	786	18	ug/kg	RE
SB	NDA083	N1	3,3'-DICHLOROBENZIDINE	847	U	R	847	20	ug/kg	RE
SS	NDA080	N1	3,3'-DICHLOROBENZIDINE	814	U	R	814	19	ug/kg	RE
SS	NDA082	N1	3,3'-DICHLOROBENZIDINE	932	U	R	932	22	ug/kg	RE
SB	NDA081	N1	3-NITROANILINE	1180	U	R	1180	18	ug/kg	RE
SB	NDA083	N1	3-NITROANILINE	1270	U	R	1270	20	ug/kg	RE
SS	NDA080	N1	3-NITROANILINE	1220	U	R	1220	19	ug/kg	RE
SS	NDA082	N1	3-NITROANILINE	1400	U	R	1400	22	ug/kg	RE
SS	NDA078RE1	LR	3-NITROTOLUENE	133	U	R	133	51	ug/kg	RE
SS	NDA104FD1	FD1	3-NITROTOLUENE	355	U	R	355	136	ug/kg	SS
SB	NDA081	N1	4,6-DINITRO-2-METHYLPHENOL	1180	U	R	1180	22	ug/kg	RE
SB	NDA083	N1	4,6-DINITRO-2-METHYLPHENOL	1270	U	R	1270	23	ug/kg	RE
SS	NDA080	N1	4,6-DINITRO-2-METHYLPHENOL	1220	U	R	1220	22	ug/kg	RE
SS	NDA082	N1	4,6-DINITRO-2-METHYLPHENOL	1400	U	R	1400	26	ug/kg	RE
SB	NDA081	N1	4-BROMOPHENYL PHENYL ETHER	393	U	R	393	24	ug/kg	RE
SB	NDA083	N1	4-BROMOPHENYL PHENYL ETHER	424	U	R	424	25	ug/kg	RE
SS	NDA080	N1	4-BROMOPHENYL PHENYL ETHER	407	U	R	407	24	ug/kg	RE
SS	NDA082	N1	4-BROMOPHENYL PHENYL ETHER	466	U	R	466	28	ug/kg	RE
SB	NDA081	N1	4-CHLORO-3-METHYLPHENOL	393	U	R	393	23	ug/kg	RE
SB	NDA083	N1	4-CHLORO-3-METHYLPHENOL	424	U	R	424	25	ug/kg	RE
SS	NDA080	N1	4-CHLORO-3-METHYLPHENOL	407	U	R	407	24	ug/kg	RE
SS	NDA082	N1	4-CHLORO-3-METHYLPHENOL	466	U	R	466	27	ug/kg	RE
SB	NDA081	N1	4-CHLOROANILINE	393	U	R	393	24	ug/kg	RE
SB	NDA083	N1	4-CHLOROANILINE	424	U	R	424	26	ug/kg	RE
SS	NDA080	N1	4-CHLOROANILINE	407	U	R	407	25	ug/kg	RE
SS	NDA082	N1	4-CHLOROANILINE	466	U	R	466	29	ug/kg	RE
SB	NDA081	N1	4-CHLOROPHENYL PHENYL ETHER	393	U	R	393	23	ug/kg	RE
SB	NDA083	N1	4-CHLOROPHENYL PHENYL ETHER	424	U	R	424	25	ug/kg	RE
SS	NDA080	N1	4-CHLOROPHENYL PHENYL ETHER	407	U	R	407	24	ug/kg	RE
SS	NDA082	N1	4-CHLOROPHENYL PHENYL ETHER	466	U	R	466	27	ug/kg	RE
SB	NDA081	N1	4-NITROANILINE	1180	U	R	1180	14	ug/kg	RE
SB	NDA083	N1	4-NITROANILINE	1270	U	R	1270	15	ug/kg	RE
SS	NDA080	N1	4-NITROANILINE	1220	U	R	1220	15	ug/kg	RE
SS	NDA082	N1	4-NITROANILINE	1400	U	R	1400	17	ug/kg	RE
SB	NDA081	N1	4-NITROPHENOL	1180	U	R	1180	20	ug/kg	RE
SB	NDA083	N1	4-NITROPHENOL	1270	U	R	1270	21	ug/kg	RE
SS	NDA080	N1	4-NITROPHENOL	1220	U	R	1220	20	ug/kg	RE
SS	NDA082	N1	4-NITROPHENOL	1400	U	R	1400	23	ug/kg	RE
SS	NDA078RE1	LR	4-NITROTOLUENE	133	U	R	133	34	ug/kg	RE
SS	NDA104FD1	FD1	4-NITROTOLUENE	355	U	R	355	91	ug/kg	SS
SB	NDA081	N1	ACENAPHTHENE	393	U	R	393	20	ug/kg	RE
SB	NDA083	N1	ACENAPHTHENE	424	U	R	424	21	ug/kg	RE
SS	NDA080	N1	ACENAPHTHENE	407	U	R	407	20	ug/kg	RE
SS	NDA082	N1	ACENAPHTHENE	466	U	R	466	23	ug/kg	RE
SB	NDA081	N1	ACENAPHTHYLENE	393	U	R	393	39	ug/kg	RE
SB	NDA083	N1	ACENAPHTHYLENE	424	U	R	424	42	ug/kg	RE
SS	NDA080	N1	ACENAPHTHYLENE	407	U	R	407	41	ug/kg	RE
SS	NDA082	N1	ACENAPHTHYLENE	466	U	R	466	47	ug/kg	RE
SB	NDA126	N1	ACETONE	96	=	R	13	13	ug/kg	BL, IC
SB	NDA129	N1	ACETONE	19	=	R	12	12	ug/kg	BL, IC

Matrix	Sample ID	Sample Type	Parameter	Lab Result	Lab Qual	Final Qual	RL	DL	Units	Comment
SB	NDA130FD1	FD1	ACETONE	23	=	R	12	12	ug/kg	BL, IC
SB	NDA132	N1	ACETONE	27	=	R	10	10	ug/kg	BL, IC
SB	NDA134	N1	ACETONE	14	=	R	10	10	ug/kg	BL, IC
SB	NDA136	N1	ACETONE	19	=	R	11	11	ug/kg	BL, IC
SB	NDA138	N1	ACETONE	23	=	R	10	10	ug/kg	BL, IC
SB	NDA140	N1	ACETONE	15	=	R	10	9	ug/kg	BL, IC
SB	NDA142	N1	ACETONE	13	=	R	10	10	ug/kg	BL, IC
SB	NDA144	N1	ACETONE	12	U	R	12	12	ug/kg	IC
SB	NDA146	N1	ACETONE	11	U	R	11	11	ug/kg	IC
SB	NDA148	N1	ACETONE	49	=	R	10	10	ug/kg	BL, IC
SB	NDA151	N1	ACETONE	59	=	R	11	11	ug/kg	BL, IC
SB	NDA152FD1	FD1	ACETONE	42	=	R	12	12	ug/kg	BL, IC
SB	NDA154	N1	ACETONE	50	=	R	11	11	ug/kg	BL, IC
SB	NDA156	N1	ACETONE	45	=	R	10	10	ug/kg	BL, IC
SB	NDA158	N1	ACETONE	55	=	R	10	10	ug/kg	BL, IC
SB	NDA160	N1	ACETONE	34	=	R	10	9	ug/kg	BL, IC
SB	NDA162	N1	ACETONE	50	=	R	11	11	ug/kg	BL, IC
SB	NDA163FD1	FD1	ACETONE	107	=	R	12	12	ug/kg	BL, IC
SB	NDA165	N1	ACETONE	268	E	R	10	9	ug/kg	LR
SB	NDA167	N1	ACETONE	49	=	R	10	10	ug/kg	CC
SB	NDA169	N1	ACETONE	74	=	R	10	10	ug/kg	CC
SB	NDA171	N1	ACETONE	42	=	R	11	11	ug/kg	CC
SB	NDA173	N1	ACETONE	107	=	R	11	11	ug/kg	CC
SB	NDA175	N1	ACETONE	84	=	R	10	10	ug/kg	CC
SB	NDA177	N1	ACETONE	72	=	R	10	9	ug/kg	CC
SB	NDA213	N1	ACETONE	51	=	R	12	12	ug/kg	CC
SB	NDA214FD1	FD1	ACETONE	47	=	R	10	10	ug/kg	BL, IC
SB	NDA215	N1	ACETONE	11	U	R	11	11	ug/kg	IC
SB	NDA216	N1	ACETONE	13	=	R	10	10	ug/kg	BL, IC
SB	NDA217	N1	ACETONE	16	=	R	12	12	ug/kg	BL, IC
SB	NDA218	N1	ACETONE	11	=	R	10	9	ug/kg	BL, IC
SB	NDA219	N1	ACETONE	45	=	U, R	11	11	ug/kg	BL, IC
SB	NDA220	N1	ACETONE	17	=	R	12	12	ug/kg	BL, IC
SB	NDA221	N1	ACETONE	15	=	R	10	9	ug/kg	BL, IC
SB	NDA222	N1	ACETONE	14	=	R	10	10	ug/kg	BL, IC
SB	NDA223	N1	ACETONE	12	=	R	10	10	ug/kg	BL, IC
SB	NDA224	N1	ACETONE	34	=	R	10	10	ug/kg	CC
SB	NDA225	N1	ACETONE	22	=	R	11	11	ug/kg	CC
SB	NDA226	N1	ACETONE	14	=	R	11	11	ug/kg	CC
SB	NDA227FD1	FD1	ACETONE	23	=	R	10	10	ug/kg	CC
SB	NDA228	N1	ACETONE	13	=	R	11	11	ug/kg	CC
SB	NDA229	N1	ACETONE	13	=	R	12	12	ug/kg	CC
SB	NDA230	N1	ACETONE	25	=	R	10	10	ug/kg	CC
SB	NDA231	N1	ACETONE	31	=	R	10	10	ug/kg	CC
SB	NDA232	N1	ACETONE	22	=	R	10	9	ug/kg	CC
SB	NDA233	N1	ACETONE	21	=	R	10	10	ug/kg	CC
SB	NDA234	N1	ACETONE	22	=	R	10	9	ug/kg	CC
SB	NDA235	N1	ACETONE	21	=	R	12	12	ug/kg	CC
SB	NDA236	N1	ACETONE	20	=	R	10	10	ug/kg	CC
SB	NDA237FD1	FD1	ACETONE	22	=	R	11	11	ug/kg	CC
SB	NDA238	N1	ACETONE	16	=	R	10	10	ug/kg	CC
SB	NDA239	N1	ACETONE	23	=	R	11	11	ug/kg	CC
SB	NDA240	N1	ACETONE	21	=	R	12	12	ug/kg	CC
SB	NDA241	N1	ACETONE	12	=	R	10	10	ug/kg	CC
SB	NDA242	N1	ACETONE	20	=	R	10	10	ug/kg	CC
SB	NDA243	N1	ACETONE	17	=	R	10	10	ug/kg	CC
SB	NDA244	N1	ACETONE	21	=	R	11	11	ug/kg	CC
SB	NDA245	N1	ACETONE	27	=	R	10	9	ug/kg	CC
SB	NDA246	N1	ACETONE	44	=	R	10	10	ug/kg	CC
SB	NDA247FD1	FD1	ACETONE	30	=	R	10	10	ug/kg	CC
SB	NDA248	N1	ACETONE	18	=	R	11	11	ug/kg	CC
SB	NDA249	N1	ACETONE	36	=	R	10	9	ug/kg	CC
SB	NDA252	N1	ACETONE	106	=	R	12	12	ug/kg	CC

Matrix	Sample ID	Sample Type	Parameter	Lab Result	Lab Qual	Final Qual	RL	DL	Units	Comment
SB	NDA253	N1	ACETONE	24	=	R	11	11	ug/kg	CC
SB	NDA254	N1	ACETONE	15	=	R	11	11	ug/kg	CC
SB	NDA255	N1	ACETONE	20	=	R	10	10	ug/kg	CC
SB	NDA085	N1	ACETONE	29	=	R	12	12	ug/kg	CC
SB	NDA092	N1	ACETONE	40	=	R	11	11	ug/kg	CC
SB	NDA093	N1	ACETONE	39	=	R	10	9	ug/kg	CC
SB	NDA094	N1	ACETONE	50	=	R	12	12	ug/kg	CC
SB	NDA095FD1	FD1	ACETONE	41	=	R	10	10	ug/kg	CC, BL
SB	NDA087	N1	ACETONE	91	=	R	10	10	ug/kg	CC
SB	NDA089	N1	ACETONE	10	U	R	10	10	ug/kg	CC
SB	NDA096DL1	LR	ACETONE	1270	=	R	917	917	ug/kg	DL
SB	NDA096	N1	ACETONE	1270	E	R	10	10	ug/kg	DL, CC
SB	NDA097	N1	ACETONE	2100	E	R	10	9	ug/kg	CC, DL
SB	NDA097DL1	LR	ACETONE	2100	=	R	990	990	ug/kg	DL
SB	NDA099	N1	ACETONE	25	=	R	10	10	ug/kg	CC
SB	NDA296	N1	ACETONE	265	E	R	10	10	ug/kg	LR
SB	NDA296DL1	LR	ACETONE	1240	=	R	1040	1040	ug/kg	CC
SB	NDA297	N1	ACETONE	184	E	R	10	10	ug/kg	LR
SB	NDA297DL1	LR	ACETONE	1120	=	R	1030	1020	ug/kg	CC
SB	NDA298	N1	ACETONE	672	E	R	11	11	ug/kg	LR
SB	NDA298DL1	LR	ACETONE	1600	=	R	1090	1090	ug/kg	CC
SB	NDA299	N1	ACETONE	103	=	R	11	11	ug/kg	CC
SB	NDA058	N1	ACETONE	11	=	R	10	9	ug/kg	BL, SS, CC
SB	NDA060	N1	ACETONE	30	=	R	10	10	ug/kg	BL, CC
SB	NDA063	N1	ACETONE	22	=	R	11	11	ug/kg	BL, CC
SB	NDA064FD1	FD1	ACETONE	10	U	R	10	10	ug/kg	CC
SB	NDA066	N1	ACETONE	551	E	R	10	10	ug/kg	LR
SB	NDA066DL1	LR	ACETONE	2020	=	R	1190	1190	ug/kg	CC
SB	NDA068	N1	ACETONE	26	=	R	11	11	ug/kg	BL, CC
SB	NDA070	N1	ACETONE	16	=	R	10	9	ug/kg	CC, BL
SB	NDA073	N1	ACETONE	12	=	R	10	10	ug/kg	CC, BL
SB	NDA075	N1	ACETONE	13	=	R	10	10	ug/kg	CC, BL
SB	NDA077	N1	ACETONE	18	=	R	10	10	ug/kg	CC, BL
SB	NDA079	N1	ACETONE	11	=	R	10	10	ug/kg	CC, BL
SB	NDA081	N1	ACETONE	10	U	R	10	10	ug/kg	CC
SB	NDA083	N1	ACETONE	12	=	R	10	9	ug/kg	CC, BL
SB	NDA114	N1	ACETONE	13	=	R	11	11	ug/kg	CC, BL
SB	NDA116	N1	ACETONE	26	=	R	11	11	ug/kg	CC, BL
SB	NDA118	N1	ACETONE	67	=	R	12	12	ug/kg	CC, BL
SB	NDA102	N1	ACETONE	25	=	R	14	14	ug/kg	CC, BL
SB	NDA105	N1	ACETONE	22	=	R	17	17	ug/kg	BL, CC
SB	NDA106FD1	FD1	ACETONE	21	=	R	16	16	ug/kg	BL, CC
SB	NDA108	N1	ACETONE	18	=	R	13	13	ug/kg	BL, CC
SB	NDA110	N1	ACETONE	11	U	R	11	11	ug/kg	CC
SB	NDA112	N1	ACETONE	12	=	R	11	11	ug/kg	BL, CC
SD	NDA050	N1	ACETONE	2160	U	R	2160	2160	ug/kg	CC
SD	NDA051FD1	FD1	ACETONE	296	=	R	23	23	ug/kg	CC
SD	L1	LR	ACETONE	2250	U	R	2250	2240	ug/kg	DL
SD	NDA052	N1	ACETONE	540	E	R	20	20	ug/kg	CC
SD	NDA052DL1	LR	ACETONE	2480	U	R	2480	2480	ug/kg	DL
SD	NDA053	N1	ACETONE	139	=	R	14	14	ug/kg	CC
SD	NDA053DL1	LR	ACETONE	1520	U	R	1520	1520	ug/kg	DL
SD	NDA054	N1	ACETONE	25	=	R	15	15	ug/kg	BL, IC
SD	NDA055	N1	ACETONE	16	=	R	10	10	ug/kg	BL, IC
SD	NDA042	N1	ACETONE	37	=	R	12	12	ug/kg	CC
SD	NDA043	N1	ACETONE	36	=	R	11	11	ug/kg	CC
SD	NDA044	N1	ACETONE	140	=	R	59	59	ug/kg	CC
SD	NDA045	N1	ACETONE	70	=	R	36	36	ug/kg	CC
SD	NDA046	N1	ACETONE	97	=	R	43	43	ug/kg	CC
SD	NDA302	N1	ACETONE	41	=	R	26	26	ug/kg	CC, BL
SD	NDA303	N1	ACETONE	100	=	R	47	47	ug/kg	BL, CC
SD	NDA307FD1	FD1	ACETONE	145	=	R	56	56	ug/kg	CC, BL
SD	NDA047	N1	ACETONE	12500	E	R	10	10	ug/kg	LR

Matrix	Sample ID	Sample Type	Parameter	Lab Result	Lab Qual	Final Qual	RL	DL	Units	Comment
SD	NDA047DL1	LR	ACETONE	2190	=	R	862	862	ug/kg	CC
SD	NDA048	N1	ACETONE	21800	E	R	13	13	ug/kg	LR
SD	NDA048DL1	LR	ACETONE	15000	=	R	1200	1200	ug/kg	CC
SD	NDA049	N1	ACETONE	10000	E	R	11	11	ug/kg	LR
SD	NDA049DL1	LR	ACETONE	1790	=	R	1120	1120	ug/kg	CC
SS	NDA125	N1	ACETONE	25	=	R	18	18	ug/kg	BL, IC
SS	NDA127	N1	ACETONE	16	=	R	10	10	ug/kg	BL, IC
SS	NDA128FD1	FD1	ACETONE	19	=	R	17	17	ug/kg	BL, IC
SS	NDA131	N1	ACETONE	577	E	R	12	12	ug/kg	LR
SS	NDA131DL1	LR	ACETONE	1200	U	R	1200	1200	ug/kg	IC
SS	NDA133	N1	ACETONE	16	U	R	16	16	ug/kg	IC
SS	NDA135	N1	ACETONE	14	U	R	14	14	ug/kg	IC
SS	NDA137	N1	ACETONE	11	U	R	11	11	ug/kg	IC
SS	NDA139	N1	ACETONE	11	U	R	11	11	ug/kg	IC
SS	NDA141	N1	ACETONE	14	U	R	14	14	ug/kg	IC
SS	NDA143	N1	ACETONE	10	J	R	10	9	ug/kg	BL, IC
SS	NDA145	N1	ACETONE	51	=	R	13	13	ug/kg	BL, IC
SS	NDA147	N1	ACETONE	133	=	R	11	11	ug/kg	BL, IC
SS	NDA149	N1	ACETONE	175	E	R	11	11	ug/kg	LR
SS	NDA149DL1	LR	ACETONE	1130	U	R	1130	1130	ug/kg	IC
SS	NDA150FD1	FD1	ACETONE	169	E	R	12	12	ug/kg	LR
SS	L1	LR	ACETONE	964	U	R	964	964	ug/kg	IC
SS	E1	LR	ACETONE	110	=	R	11	11	ug/kg	RE
SS	NDA153	N1	ACETONE	86	=	R	12	12	ug/kg	BL, IC
SS	NDA155	N1	ACETONE	70	=	R	11	11	ug/kg	BL ,IC
SS	NDA157	N1	ACETONE	32	=	R	11	11	ug/kg	BL, IC
SS	NDA159	N1	ACETONE	46	=	R	14	14	ug/kg	BL, IC
SS	NDA161	N1	ACETONE	39	=	R	11	11	ug/kg	BL, IC
SS	NDA164	N1	ACETONE	40	=	R	13	13	ug/kg	CC
SS	NDA166	N1	ACETONE	205	E	R	11	11	ug/kg	CC
SS	NDA166DL1	LR	ACETONE	1110	U	R	1110	1110	ug/kg	DL
SS	NDA168	N1	ACETONE	73	=	R	20	20	ug/kg	CC
SS	NDA170	N1	ACETONE	57	=	R	16	16	ug/kg	CC
SS	NDA172	N1	ACETONE	41	=	R	10	10	ug/kg	CC
SS	NDA174	N1	ACETONE	60	=	R	10	10	ug/kg	CC
SS	NDA176	N1	ACETONE	277	E	R	14	14	ug/kg	CC
SS	NDA176DL1	LR	ACETONE	1480	U	R	1480	1480	ug/kg	DL
SS	NDA196	N1	ACETONE	1460	E	R	10	9	ug/kg	LR
SS	NDA196DL1	LR	ACETONE	1480	=	R	937	937	ug/kg	CC
SS	NDA197FD1	FD1	ACETONE	1860	E	R	12	12	ug/kg	LR
SS	L1	LR	ACETONE	2140	=	R	1820	1820	ug/kg	CC
SS	NDA198	N1	ACETONE	9590	E	R	11	11	ug/kg	LR
SS	NDA198DL1	LR	ACETONE	5620	=	R	1160	1160	ug/kg	CC
SS	NDA199	N1	ACETONE	125	=	R	14	14	ug/kg	CC
SS	NDA200	N1	ACETONE	738	E	R	12	12	ug/kg	LR
SS	NDA200DL1	LR	ACETONE	2220	=	R	1220	1220	ug/kg	CC
SS	NDA178	N1	ACETONE	26	=	R	10	10	ug/kg	CC
SS	NDA179	N1	ACETONE	29	=	R	11	11	ug/kg	CC
SS	NDA180	N1	ACETONE	22	=	R	11	11	ug/kg	CC
SS	NDA181	N1	ACETONE	31	=	R	11	11	ug/kg	CC
SS	NDA182	N1	ACETONE	17	=	R	14	14	ug/kg	CC
SS	NDA183	N1	ACETONE	27	=	R	12	11	ug/kg	CC
SS	NDA184FD1	FD1	ACETONE	32	=	R	11	11	ug/kg	CC
SS	NDA201	N1	ACETONE	62	=	R	19	19	ug/kg	CC
SS	NDA202	N1	ACETONE	146	=	R	14	14	ug/kg	CC
SS	NDA203	N1	ACETONE	38	=	R	11	11	ug/kg	CC
SS	NDA204	N1	ACETONE	445	E	R	14	14	ug/kg	LR
SS	NDA204DL1	LR	ACETONE	2340	=	R	1350	1350	ug/kg	CC
SS	NDA205FD1	FD1	ACETONE	419	E	R	12	12	ug/kg	LR
SS	L1	LR	ACETONE	1880	=	R	1380	1380	ug/kg	CC
SS	NDA206	N1	ACETONE	4550	E	R	11	11	ug/kg	LR
SS	NDA206DL1	LR	ACETONE	1680	=	R	1430	1430	ug/kg	CC
SS	NDA207	N1	ACETONE	1280	E	R	12	12	ug/kg	LR

Matrix	Sample ID	Sample Type	Parameter	Lab Result	Lab Qual	Final Qual	RL	DL	Units	Comment
SS	NDA207DL1	LR	ACETONE	1800	=	R	1290	1290	ug/kg	CC
SS	NDA208	N1	ACETONE	17	=	R	10	10	ug/kg	CC
SS	NDA209	N1	ACETONE	98	=	R	16	16	ug/kg	CC
SS	NDA210	N1	ACETONE	43	=	R	11	11	ug/kg	CC
SS	NDA211	N1	ACETONE	46	=	R	11	11	ug/kg	CC
SS	NDA212	N1	ACETONE	14	U	R	14	14	ug/kg	CC
SS	NDA185	N1	ACETONE	18	=	R	12	12	ug/kg	CC
SS	NDA186	N1	ACETONE	10	U	R	10	10	ug/kg	CC
SS	NDA187	N1	ACETONE	10	U	R	10	10	ug/kg	CC
SS	NDA188	N1	ACETONE	16	=	R	13	13	ug/kg	CC
SS	NDA189	N1	ACETONE	11	=	R	10	10	ug/kg	CC
SS	NDA190	N1	ACETONE	12	=	R	11	11	ug/kg	CC
SS	NDA191	N1	ACETONE	16	=	R	10	10	ug/kg	CC
SS	NDA192FD1	FD1	ACETONE	15	=	R	11	11	ug/kg	CC
SS	NDA193	N1	ACETONE	10	U	R	10	10	ug/kg	CC
SS	NDA194	N1	ACETONE	11	=	R	11	11	ug/kg	CC
SS	NDA195	N1	ACETONE	11	=	R	10	9	ug/kg	CC
SS	NDA084	N1	ACETONE	36	=	R	13	13	ug/kg	CC
SS	NDA086	N1	ACETONE	20	=	R	11	11	ug/kg	CC
SS	NDA088	N1	ACETONE	13	=	R	10	10	ug/kg	CC
SS	NDA091	N1	ACETONE	74	=	R	11	11	ug/kg	CC
SS	NDA059	N1	ACETONE	663	E	R	11	11	ug/kg	LR
SS	NDA059DL1	LR	ACETONE	1840	=	R	1170	1170	ug/kg	CC
SS	NDA065	N1	ACETONE	718	E	R	12	12	ug/kg	LR
SS	NDA065DL1	LR	ACETONE	1630	=	R	1220	1220	ug/kg	CC
SS	NDA067	N1	ACETONE	15	=	R	12	12	ug/kg	BL, CC
SS	NDA069	N1	ACETONE	382	E	R	11	11	ug/kg	LR
SS	NDA069DL1	LR	ACETONE	1600	=	R	1080	1080	ug/kg	CC
SS	NDA119	N1	ACETONE	149	=	R	12	12	ug/kg	CC, BL
SS	NDA120	N1	ACETONE	23	=	R	16	16	ug/kg	BL, CC
SS	NDA121	N1	ACETONE	487	E	R	10	10	ug/kg	BL, LR
SS	NDA121DL1	LR	ACETONE	1350	=	R	1130	1130	ug/kg	CC
SS	NDA122	N1	ACETONE	12	=	R	12	12	ug/kg	CC, BL
SS	NDA123	N1	ACETONE	1130	E	R	13	13	ug/kg	LR
SS	NDA124	N1	ACETONE	4300	E	R	11	11	ug/kg	LR
SS	NDA072FD1	FD1	ACETONE	41	=	R	11	11	ug/kg	CC, BL
SS	NDA074	N1	ACETONE	60	=	R	10	9	ug/kg	CC, BL
SS	NDA076	N1	ACETONE	10	U	R	10	10	ug/kg	CC
SS	NDA078	N1	ACETONE	14	=	R	11	11	ug/kg	CC, BL
SS	NDA080	N1	ACETONE	10	U	R	10	10	ug/kg	CC
SS	NDA082	N1	ACETONE	13	U	R	13	13	ug/kg	CC
SS	NDA113	N1	ACETONE	10	U	R	10	10	ug/kg	CC
SS	NDA115	N1	ACETONE	20	=	R	10	10	ug/kg	CC, BL
SS	NDA117	N1	ACETONE	11	=	R	10	10	ug/kg	CC, BL
SS	NDA101	N1	ACETONE	20	=	R	14	14	ug/kg	CC, BL
SS	NDA103	N1	ACETONE	25	=	R	13	13	ug/kg	BL, CC
SS	NDA104FD1	FD1	ACETONE	14	U	R	14	14	ug/kg	CC
SS	NDA107	N1	ACETONE	12	U	R	12	12	ug/kg	CC
SS	NDA109	N1	ACETONE	11	U	R	11	11	ug/kg	CC
SS	NDA111	N1	ACETONE	12	U	R	12	12	ug/kg	CC
SB	NDA114DL1	LR	ALDRIN	44	U	R	44	12	ug/kg	DL
SS	NDA125DL1	LR	ALDRIN	20	U	R	20	5.53	ug/kg	DL
SS	NDA137DL1	LR	ALDRIN	3.6	U	R	3.6	1	ug/kg	DL
SS	NDA113DL1	LR	ALDRIN	4.2	U	R	4.2	1.2	ug/kg	DL
SB	NDA114DL1	LR	ALPHA BHC	44	U	R	44	13	ug/kg	DL
SS	NDA125DL1	LR	ALPHA BHC	20	U	R	20	5.78	ug/kg	DL
SS	NDA137DL1	LR	ALPHA BHC	3.6	U	R	3.6	1.04	ug/kg	DL
SS	NDA113DL1	LR	ALPHA BHC	4.2	U	R	4.2	1.2	ug/kg	DL
SB	NDA114DL1	LR	ALPHA ENDOSULFAN (I)	44	U	R	44	12	ug/kg	DL
SS	NDA125DL1	LR	ALPHA ENDOSULFAN (I)	20	U	R	20	5.53	ug/kg	DL
SS	NDA137DL1	LR	ALPHA ENDOSULFAN (I)	3.6	U	R	3.6	1	ug/kg	DL
SS	NDA113DL1	LR	ALPHA ENDOSULFAN (I)	4.2	U	R	4.2	1.2	ug/kg	DL
SB	NDA114DL1	LR	ALPHA-CHLORDANE	44	U	R	44	12	ug/kg	DL

Matrix	Sample ID	Sample Type	Parameter	Lab Result	Lab Qual	Final Qual	RL	DL	Units	Comment
SS	NDA125DL1	LR	ALPHA-CHLORDANE	20	U	R	20	5.63	ug/kg	DL
SS	NDA137DL1	LR	ALPHA-CHLORDANE	3.6	U	R	3.6	1.02	ug/kg	DL
SS	NDA113DL1	LR	ALPHA-CHLORDANE	4.2	U	R	4.2	1.2	ug/kg	DL
SB	NDA081	N1	ANTHRACENE	393	U	R	393	22	ug/kg	RE
SB	NDA083	N1	ANTHRACENE	424	U	R	424	24	ug/kg	RE
SS	NDA080	N1	ANTHRACENE	407	U	R	407	23	ug/kg	RE
SS	NDA082	N1	ANTHRACENE	466	U	R	466	26	ug/kg	RE
SB	NDA165DL1	LR	BENZENE	1180	U	R	1180	13	ug/kg	DL
SB	NDA096DL1	LR	BENZENE	917	U	R	917	10	ug/kg	DL
SB	NDA097DL1	LR	BENZENE	990	U	R	990	11	ug/kg	DL
SB	NDA296DL1	LR	BENZENE	1040	U	R	1040	11	ug/kg	DL
SB	NDA297DL1	LR	BENZENE	1030	U	R	1030	11	ug/kg	DL
SB	NDA298DL1	LR	BENZENE	1090	U	R	1090	12	ug/kg	DL
SB	NDA066DL1	LR	BENZENE	1190	U	R	1190	13	ug/kg	DL
SD	L1	LR	BENZENE	2250	U	R	2250	25	ug/kg	DL
SD	NDA052DL1	LR	BENZENE	2480	U	R	2480	27	ug/kg	DL
SD	NDA053DL1	LR	BENZENE	1520	U	R	1520	17	ug/kg	DL
SD	NDA047DL1	LR	BENZENE	858	U	R	858	9	ug/kg	DL
SD	NDA048DL1	LR	BENZENE	1200	U	R	1200	13	ug/kg	DL
SD	NDA049DL1	LR	BENZENE	1120	U	R	1120	12	ug/kg	DL
SS	NDA131DL1	LR	BENZENE	1200	U	R	1200	13	ug/kg	DL
SS	NDA149DL1	LR	BENZENE	1130	U	R	1130	12	ug/kg	DL
SS	L1	LR	BENZENE	964	U	R	964	11	ug/kg	DL
SS	E1	LR	BENZENE	11	U	R	11	0.12	ug/kg	RE
SS	NDA166DL1	LR	BENZENE	1110	U	R	1110	12	ug/kg	DL
SS	NDA176DL1	LR	BENZENE	1480	U	R	1480	16	ug/kg	DL
SS	NDA196DL1	LR	BENZENE	937	U	R	937	10	ug/kg	DL
SS	L1	LR	BENZENE	1820	U	R	1820	20	ug/kg	DL
SS	NDA198DL1	LR	BENZENE	1160	U	R	1160	13	ug/kg	DL
SS	NDA200DL1	LR	BENZENE	1220	U	R	1220	13	ug/kg	DL
SS	NDA204DL1	LR	BENZENE	1350	U	R	1350	15	ug/kg	DL
SS	L1	LR	BENZENE	1380	U	R	1380	15	ug/kg	DL
SS	NDA206DL1	LR	BENZENE	1430	U	R	1430	16	ug/kg	DL
SS	NDA207DL1	LR	BENZENE	1290	U	R	1290	14	ug/kg	DL
SS	NDA059DL1	LR	BENZENE	1170	U	R	1170	13	ug/kg	DL
SS	NDA065DL1	LR	BENZENE	1220	U	R	1220	13	ug/kg	DL
SS	NDA069DL1	LR	BENZENE	1080	U	R	1080	12	ug/kg	DL
SS	NDA121DL1	LR	BENZENE	1130	U	R	1130	12	ug/kg	DL
SS	NDA123DL1	LR	BENZENE	1200	U	R	1200	13	ug/kg	DL
SS	NDA124DL1	LR	BENZENE	1000	U	R	1000	11	ug/kg	DL
SB	NDA081	N1	BENZO(a)ANTHRACENE	393	U	R	393	20	ug/kg	RE
SB	NDA083	N1	BENZO(a)ANTHRACENE	424	U	R	424	22	ug/kg	RE
SS	NDA080	N1	BENZO(a)ANTHRACENE	407	U	R	407	21	ug/kg	RE
SS	NDA082	N1	BENZO(a)ANTHRACENE	466	U	R	466	24	ug/kg	RE
SB	NDA081	N1	BENZO(a)PYRENE	393	U	R	393	26	ug/kg	RE
SB	NDA083	N1	BENZO(a)PYRENE	424	U	R	424	28	ug/kg	RE
SS	NDA080	N1	BENZO(a)PYRENE	407	U	R	407	27	ug/kg	RE
SS	NDA082	N1	BENZO(a)PYRENE	466	U	R	466	31	ug/kg	RE
SB	NDA081	N1	BENZO(b)FLUORANTHENE	393	U	R	393	23	ug/kg	RE
SB	NDA083	N1	BENZO(b)FLUORANTHENE	424	U	R	424	25	ug/kg	RE
SS	NDA080	N1	BENZO(b)FLUORANTHENE	407	U	R	407	24	ug/kg	RE
SS	NDA082	N1	BENZO(b)FLUORANTHENE	466	U	R	466	27	ug/kg	RE
SB	NDA081	N1	BENZO(g,h,i)PERYLENE	393	U	R	393	24	ug/kg	RE
SB	NDA083	N1	BENZO(g,h,i)PERYLENE	424	U	R	424	25	ug/kg	RE
SS	NDA080	N1	BENZO(g,h,i)PERYLENE	407	U	R	407	24	ug/kg	RE
SS	NDA082	N1	BENZO(g,h,i)PERYLENE	466	U	R	466	28	ug/kg	RE
SB	NDA081	N1	BENZO(k)FLUORANTHENE	393	U	R	393	28	ug/kg	RE
SB	NDA083	N1	BENZO(k)FLUORANTHENE	424	U	R	424	30	ug/kg	RE
SS	NDA080	N1	BENZO(k)FLUORANTHENE	407	U	R	407	29	ug/kg	RE
SS	NDA082	N1	BENZO(k)FLUORANTHENE	466	U	R	466	33	ug/kg	RE
SB	NDA081	N1	BENZYL BUTYL PHTHALATE	393	U	R	393	21	ug/kg	RE
SB	NDA083	N1	BENZYL BUTYL PHTHALATE	424	U	R	424	22	ug/kg	RE
SS	NDA080	N1	BENZYL BUTYL PHTHALATE	407	U	R	407	22	ug/kg	RE

Matrix	Sample ID	Sample Type	Parameter	Lab Result	Lab Qual	Final Qual	RL	DL	Units	Comment
SS	NDA082	N1	BENZYL BUTYL PHTHALATE	466	U	R	466	25	ug/kg	RE
SB	NDA114DL1	LR	BETA BHC	44	U	R	44	12	ug/kg	DL
SS	NDA125DL1	LR	BETA BHC	20	U	R	20	5.3	ug/kg	DL
SS	NDA137DL1	LR	BETA BHC	3.6	U	R	3.6	0.96	ug/kg	DL
SS	NDA113DL1	LR	BETA BHC	4.2	U	R	4.2	1.1	ug/kg	DL
SB	NDA114DL1	LR	BETA ENDOSULFAN (II)	86	U	R	86	7.8	ug/kg	DL
SS	NDA125DL1	LR	BETA ENDOSULFAN (II)	39	U	R	39	3.5	ug/kg	DL
SS	NDA137DL1	LR	BETA ENDOSULFAN (II)	7.1	U	R	7.1	0.64	ug/kg	DL
SS	NDA113DL1	LR	BETA ENDOSULFAN (II)	8.2	U	R	8.2	0.74	ug/kg	DL
SB	NDA081	N1	bis(2-CHLOROETHOXY) METHANE	393	U	R	393	29	ug/kg	RE
SB	NDA083	N1	bis(2-CHLOROETHOXY) METHANE	424	U	R	424	31	ug/kg	RE
SS	NDA080	N1	bis(2-CHLOROETHOXY) METHANE	407	U	R	407	30	ug/kg	RE
SS	NDA082	N1	bis(2-CHLOROETHOXY) METHANE	466	U	R	466	34	ug/kg	RE
SB	NDA081	N1	bis(2-CHLOROETHYL) ETHER	393	U	R	393	27	ug/kg	RE
SB	NDA083	N1	bis(2-CHLOROETHYL) ETHER	424	U	R	424	29	ug/kg	RE
SS	NDA080	N1	bis(2-CHLOROETHYL) ETHER	407	U	R	407	28	ug/kg	RE
SS	NDA082	N1	bis(2-CHLOROETHYL) ETHER	466	U	R	466	32	ug/kg	RE
SB	NDA081	N1	bis(2-CHLOROISOPROPYL) ETHER	393	U	R	393	29	ug/kg	RE
SB	NDA083	N1	bis(2-CHLOROISOPROPYL) ETHER	424	U	R	424	31	ug/kg	RE
SS	NDA080	N1	bis(2-CHLOROISOPROPYL) ETHER	407	U	R	407	30	ug/kg	RE
SS	NDA082	N1	bis(2-CHLOROISOPROPYL) ETHER	466	U	R	466	34	ug/kg	RE
SB	NDA081	N1	bis(2-ETHYLHEXYL) PHTHALATE	393	U	R	393	29	ug/kg	RE
SB	NDA083	N1	bis(2-ETHYLHEXYL) PHTHALATE	424	U	R	424	32	ug/kg	RE
SS	NDA080	N1	bis(2-ETHYLHEXYL) PHTHALATE	407	U	R	407	31	ug/kg	RE
SS	NDA082	N1	bis(2-ETHYLHEXYL) PHTHALATE	466	U	R	466	35	ug/kg	RE
SB	NDA165DL1	LR	BROMODICHLOROMETHANE	1180	U	R	1180	24	ug/kg	DL
SB	NDA096DL1	LR	BROMODICHLOROMETHANE	917	U	R	917	18	ug/kg	DL
SB	NDA097DL1	LR	BROMODICHLOROMETHANE	990	U	R	990	20	ug/kg	DL
SB	NDA296DL1	LR	BROMODICHLOROMETHANE	1040	U	R	1040	21	ug/kg	DL
SB	NDA297DL1	LR	BROMODICHLOROMETHANE	1030	U	R	1030	20	ug/kg	DL
SB	NDA298DL1	LR	BROMODICHLOROMETHANE	1090	U	R	1090	22	ug/kg	DL
SB	NDA066DL1	LR	BROMODICHLOROMETHANE	1190	U	R	1190	24	ug/kg	DL
SD	L1	LR	BROMODICHLOROMETHANE	2250	U	R	2250	45	ug/kg	DL
SD	NDA052DL1	LR	BROMODICHLOROMETHANE	2480	U	R	2480	50	ug/kg	DL
SD	NDA053DL1	LR	BROMODICHLOROMETHANE	1520	U	R	1520	30	ug/kg	DL
SD	NDA047DL1	LR	BROMODICHLOROMETHANE	858	U	R	858	17	ug/kg	DL
SD	NDA048DL1	LR	BROMODICHLOROMETHANE	1200	U	R	1200	24	ug/kg	DL
SD	NDA049DL1	LR	BROMODICHLOROMETHANE	1120	U	R	1120	22	ug/kg	DL
SS	NDA131DL1	LR	BROMODICHLOROMETHANE	1200	U	R	1200	24	ug/kg	DL
SS	NDA149DL1	LR	BROMODICHLOROMETHANE	1130	U	R	1130	23	ug/kg	DL
SS	L1	LR	BROMODICHLOROMETHANE	964	U	R	964	19	ug/kg	DL
SS	E1	LR	BROMODICHLOROMETHANE	11	U	R	11	0.2	ug/kg	RE
SS	NDA166DL1	LR	BROMODICHLOROMETHANE	1110	U	R	1110	22	ug/kg	DL
SS	NDA176DL1	LR	BROMODICHLOROMETHANE	1480	U	R	1480	30	ug/kg	DL
SS	NDA196DL1	LR	BROMODICHLOROMETHANE	937	U	R	937	19	ug/kg	DL
SS	L1	LR	BROMODICHLOROMETHANE	1820	U	R	1820	36	ug/kg	DL
SS	NDA198DL1	LR	BROMODICHLOROMETHANE	1160	U	R	1160	23	ug/kg	DL
SS	NDA200DL1	LR	BROMODICHLOROMETHANE	1220	U	R	1220	24	ug/kg	DL
SS	NDA204DL1	LR	BROMODICHLOROMETHANE	1350	U	R	1350	27	ug/kg	DL
SS	L1	LR	BROMODICHLOROMETHANE	1380	U	R	1380	28	ug/kg	DL
SS	NDA206DL1	LR	BROMODICHLOROMETHANE	1430	U	R	1430	29	ug/kg	DL
SS	NDA207DL1	LR	BROMODICHLOROMETHANE	1290	U	R	1290	26	ug/kg	DL
SS	NDA059DL1	LR	BROMODICHLOROMETHANE	1170	U	R	1170	23	ug/kg	DL
SS	NDA065DL1	LR	BROMODICHLOROMETHANE	1220	U	R	1220	24	ug/kg	DL
SS	NDA069DL1	LR	BROMODICHLOROMETHANE	1080	U	R	1080	22	ug/kg	DL
SS	NDA121DL1	LR	BROMODICHLOROMETHANE	1130	U	R	1130	23	ug/kg	DL
SS	NDA123DL1	LR	BROMODICHLOROMETHANE	1200	U	R	1200	24	ug/kg	DL
SS	NDA124DL1	LR	BROMODICHLOROMETHANE	1000	U	R	1000	20	ug/kg	DL
SB	NDA165DL1	LR	BROMOFORM	1180	U	R	1180	30	ug/kg	DL
SB	NDA096DL1	LR	BROMOFORM	917	U	R	917	23	ug/kg	DL
SB	NDA097DL1	LR	BROMOFORM	990	U	R	990	25	ug/kg	DL
SB	NDA296DL1	LR	BROMOFORM	1040	U	R	1040	26	ug/kg	DL
SB	NDA297DL1	LR	BROMOFORM	1030	U	R	1030	26	ug/kg	DL

Matrix	Sample ID	Sample Type	Parameter	Lab Result	Lab Qual	Final Qual	RL	DL	Units	Comment
SB	NDA298DL1	LR	BROMOFORM	1090	U	R	1090	27	ug/kg	DL
SB	NDA066DL1	LR	BROMOFORM	1190	U	R	1190	30	ug/kg	DL
SD	L1	LR	BROMOFORM	2250	U	R	2250	56	ug/kg	DL
SD	NDA052DL1	LR	BROMOFORM	2480	U	R	2480	62	ug/kg	DL
SD	NDA053DL1	LR	BROMOFORM	1520	U	R	1520	38	ug/kg	DL
SD	NDA047DL1	LR	BROMOFORM	858	U	R	858	22	ug/kg	DL
SD	NDA048DL1	LR	BROMOFORM	1200	U	R	1200	30	ug/kg	DL
SD	NDA049DL1	LR	BROMOFORM	1120	U	R	1120	28	ug/kg	DL
SS	NDA131DL1	LR	BROMOFORM	1200	U	R	1200	30	ug/kg	DL
SS	NDA149DL1	LR	BROMOFORM	1130	U	R	1130	28	ug/kg	DL
SS	L1	LR	BROMOFORM	964	U	R	964	24	ug/kg	DL
SS	E1	LR	BROMOFORM	11	U	R	11	0.27	ug/kg	RE
SS	NDA166DL1	LR	BROMOFORM	1110	U	R	1110	28	ug/kg	DL
SS	NDA176DL1	LR	BROMOFORM	1480	U	R	1480	37	ug/kg	DL
SS	NDA196DL1	LR	BROMOFORM	937	U	R	937	23	ug/kg	DL
SS	L1	LR	BROMOFORM	1820	U	R	1820	46	ug/kg	DL
SS	NDA198DL1	LR	BROMOFORM	1160	U	R	1160	29	ug/kg	DL
SS	NDA200DL1	LR	BROMOFORM	1220	U	R	1220	31	ug/kg	DL
SS	NDA204DL1	LR	BROMOFORM	1350	U	R	1350	34	ug/kg	DL
SS	L1	LR	BROMOFORM	1380	U	R	1380	34	ug/kg	DL
SS	NDA206DL1	LR	BROMOFORM	1430	U	R	1430	36	ug/kg	DL
SS	NDA207DL1	LR	BROMOFORM	1290	U	R	1290	32	ug/kg	DL
SS	NDA059DL1	LR	BROMOFORM	1170	U	R	1170	29	ug/kg	DL
SS	NDA065DL1	LR	BROMOFORM	1220	U	R	1220	30	ug/kg	DL
SS	NDA069DL1	LR	BROMOFORM	1080	U	R	1080	27	ug/kg	DL
SS	NDA121DL1	LR	BROMOFORM	1130	U	R	1130	28	ug/kg	DL
SS	NDA123DL1	LR	BROMOFORM	1200	U	R	1200	30	ug/kg	DL
SS	NDA124DL1	LR	BROMOFORM	1000	U	R	1000	25	ug/kg	DL
SB	NDA165DL1	LR	BROMOMETHANE	1180	U	R	1180	53	ug/kg	DL
SB	NDA096DL1	LR	BROMOMETHANE	917	U	R	917	41	ug/kg	DL
SB	NDA097DL1	LR	BROMOMETHANE	990	U	R	990	45	ug/kg	DL
SB	NDA296DL1	LR	BROMOMETHANE	1040	U	R	1040	47	ug/kg	DL
SB	NDA297DL1	LR	BROMOMETHANE	1030	U	R	1030	46	ug/kg	DL
SB	NDA298DL1	LR	BROMOMETHANE	1090	U	R	1090	49	ug/kg	DL
SB	NDA066DL1	LR	BROMOMETHANE	1190	U	R	1190	54	ug/kg	DL
SD	L1	LR	BROMOMETHANE	2250	U	R	2250	101	ug/kg	DL
SD	NDA052DL1	LR	BROMOMETHANE	2480	U	R	2480	112	ug/kg	DL
SD	NDA053DL1	LR	BROMOMETHANE	1520	U	R	1520	69	ug/kg	DL
SD	NDA047DL1	LR	BROMOMETHANE	858	U	R	858	39	ug/kg	DL
SD	NDA048DL1	LR	BROMOMETHANE	1200	U	R	1200	54	ug/kg	DL
SD	NDA049DL1	LR	BROMOMETHANE	1120	U	R	1120	50	ug/kg	DL
SS	NDA131DL1	LR	BROMOMETHANE	1200	U	R	1200	54	ug/kg	DL
SS	NDA149DL1	LR	BROMOMETHANE	1130	U	R	1130	51	ug/kg	DL
SS	L1	LR	BROMOMETHANE	964	U	R	964	44	ug/kg	DL
SS	E1	LR	BROMOMETHANE	11	U	R	11	0.5	ug/kg	RE
SS	NDA166DL1	LR	BROMOMETHANE	1110	U	R	1110	50	ug/kg	DL
SS	NDA176DL1	LR	BROMOMETHANE	1480	U	R	1480	67	ug/kg	DL
SS	NDA196DL1	LR	BROMOMETHANE	937	U	R	937	42	ug/kg	DL
SS	L1	LR	BROMOMETHANE	1820	U	R	1820	82	ug/kg	DL
SS	NDA198DL1	LR	BROMOMETHANE	1160	U	R	1160	52	ug/kg	DL
SS	NDA200DL1	LR	BROMOMETHANE	1220	U	R	1220	55	ug/kg	DL
SS	NDA204DL1	LR	BROMOMETHANE	1350	U	R	1350	61	ug/kg	DL
SS	L1	LR	BROMOMETHANE	1380	U	R	1380	62	ug/kg	DL
SS	NDA206DL1	LR	BROMOMETHANE	1430	U	R	1430	65	ug/kg	DL
SS	NDA207DL1	LR	BROMOMETHANE	1290	U	R	1290	58	ug/kg	DL
SS	NDA059DL1	LR	BROMOMETHANE	1170	U	R	1170	53	ug/kg	DL
SS	NDA065DL1	LR	BROMOMETHANE	1220	U	R	1220	55	ug/kg	DL
SS	NDA069DL1	LR	BROMOMETHANE	1080	U	R	1080	49	ug/kg	DL
SS	NDA121DL1	LR	BROMOMETHANE	1130	U	R	1130	51	ug/kg	DL
SS	NDA123DL1	LR	BROMOMETHANE	1200	U	R	1200	54	ug/kg	DL
SS	NDA124DL1	LR	BROMOMETHANE	1000	U	R	1000	45	ug/kg	DL
SB	NDA081	N1	CARBAZOLE	393	U	R	393	25	ug/kg	RE
SB	NDA083	N1	CARBAZOLE	424	U	R	424	27	ug/kg	RE

Matrix	Sample ID	Sample Type	Parameter	Lab Result	Lab Qual	Final Qual	RL	DL	Units	Comment
SS	NDA080	N1	CARBAZOLE	407	U	R	407	26	ug/kg	RE
SS	NDA082	N1	CARBAZOLE	466	U	R	466	29	ug/kg	RE
SB	NDA165DL1	LR	CARBON DISULFIDE	1180	U	R	1180	37	ug/kg	DL
SB	NDA096DL1	LR	CARBON DISULFIDE	917	U	R	917	28	ug/kg	DL
SB	NDA097DL1	LR	CARBON DISULFIDE	990	U	R	990	31	ug/kg	DL
SB	NDA296DL1	LR	CARBON DISULFIDE	1040	U	R	1040	32	ug/kg	DL
SB	NDA297DL1	LR	CARBON DISULFIDE	1030	U	R	1030	32	ug/kg	DL
SB	NDA298DL1	LR	CARBON DISULFIDE	1090	U	R	1090	34	ug/kg	DL
SB	NDA066DL1	LR	CARBON DISULFIDE	1190	U	R	1190	37	ug/kg	DL
SD	L1	LR	CARBON DISULFIDE	2250	U	R	2250	69	ug/kg	DL
SD	NDA052DL1	LR	CARBON DISULFIDE	2480	U	R	2480	77	ug/kg	DL
SD	NDA053DL1	LR	CARBON DISULFIDE	1520	U	R	1520	47	ug/kg	DL
SD	NDA047DL1	LR	CARBON DISULFIDE	858	U	R	858	27	ug/kg	DL
SD	NDA048DL1	LR	CARBON DISULFIDE	1200	U	R	1200	37	ug/kg	DL
SD	NDA049DL1	LR	CARBON DISULFIDE	1120	U	R	1120	35	ug/kg	DL
SS	NDA131DL1	LR	CARBON DISULFIDE	1200	U	R	1200	37	ug/kg	DL
SS	NDA149DL1	LR	CARBON DISULFIDE	1130	U	R	1130	35	ug/kg	DL
SS	L1	LR	CARBON DISULFIDE	964	U	R	964	30	ug/kg	DL
SS	E1	LR	CARBON DISULFIDE	11	U	R	11	0.3	ug/kg	RE
SS	NDA166DL1	LR	CARBON DISULFIDE	1110	U	R	1110	35	ug/kg	DL
SS	NDA176DL1	LR	CARBON DISULFIDE	1480	U	R	1480	46	ug/kg	DL
SS	NDA196DL1	LR	CARBON DISULFIDE	937	U	R	937	29	ug/kg	DL
SS	L1	LR	CARBON DISULFIDE	1820	U	R	1820	56	ug/kg	DL
SS	NDA198DL1	LR	CARBON DISULFIDE	1160	U	R	1160	36	ug/kg	DL
SS	NDA200DL1	LR	CARBON DISULFIDE	1220	U	R	1220	38	ug/kg	DL
SS	NDA204DL1	LR	CARBON DISULFIDE	1350	U	R	1350	42	ug/kg	DL
SS	L1	LR	CARBON DISULFIDE	1380	U	R	1380	43	ug/kg	DL
SS	NDA206DL1	LR	CARBON DISULFIDE	1430	U	R	1430	44	ug/kg	DL
SS	NDA207DL1	LR	CARBON DISULFIDE	1290	U	R	1290	40	ug/kg	DL
SS	NDA059DL1	LR	CARBON DISULFIDE	1170	U	R	1170	36	ug/kg	DL
SS	NDA065DL1	LR	CARBON DISULFIDE	1220	U	R	1220	38	ug/kg	DL
SS	NDA069DL1	LR	CARBON DISULFIDE	1080	U	R	1080	34	ug/kg	DL
SS	NDA121DL1	LR	CARBON DISULFIDE	1130	U	R	1130	35	ug/kg	DL
SS	NDA123DL1	LR	CARBON DISULFIDE	1200	U	R	1200	37	ug/kg	DL
SS	NDA124DL1	LR	CARBON DISULFIDE	1000	U	R	1000	31	ug/kg	DL
SB	NDA165DL1	LR	CARBON TETRACHLORIDE	1180	U	R	1180	45	ug/kg	DL
SB	NDA096DL1	LR	CARBON TETRACHLORIDE	917	U	R	917	35	ug/kg	DL
SB	NDA097DL1	LR	CARBON TETRACHLORIDE	990	U	R	990	38	ug/kg	DL
SB	NDA296DL1	LR	CARBON TETRACHLORIDE	1040	U	R	1040	40	ug/kg	DL
SB	NDA297DL1	LR	CARBON TETRACHLORIDE	1030	U	R	1030	39	ug/kg	DL
SB	NDA298DL1	LR	CARBON TETRACHLORIDE	1090	U	R	1090	41	ug/kg	DL
SB	NDA066DL1	LR	CARBON TETRACHLORIDE	1190	U	R	1190	45	ug/kg	DL
SD	L1	LR	CARBON TETRACHLORIDE	2250	U	R	2250	85	ug/kg	DL
SD	NDA052DL1	LR	CARBON TETRACHLORIDE	2480	U	R	2480	94	ug/kg	DL
SD	NDA053DL1	LR	CARBON TETRACHLORIDE	1520	U	R	1520	58	ug/kg	DL
SD	NDA047DL1	LR	CARBON TETRACHLORIDE	858	U	R	858	33	ug/kg	DL
SD	NDA048DL1	LR	CARBON TETRACHLORIDE	1200	U	R	1200	46	ug/kg	DL
SD	NDA049DL1	LR	CARBON TETRACHLORIDE	1120	U	R	1120	43	ug/kg	DL
SS	NDA131DL1	LR	CARBON TETRACHLORIDE	1200	U	R	1200	46	ug/kg	DL
SS	NDA149DL1	LR	CARBON TETRACHLORIDE	1130	U	R	1130	43	ug/kg	DL
SS	L1	LR	CARBON TETRACHLORIDE	964	U	R	964	37	ug/kg	DL
SS	E1	LR	CARBON TETRACHLORIDE	11	U	R	11	0.4	ug/kg	RE
SS	NDA166DL1	LR	CARBON TETRACHLORIDE	1110	U	R	1110	43	ug/kg	DL
SS	NDA176DL1	LR	CARBON TETRACHLORIDE	1480	U	R	1480	56	ug/kg	DL
SS	NDA196DL1	LR	CARBON TETRACHLORIDE	937	U	R	937	36	ug/kg	DL
SS	L1	LR	CARBON TETRACHLORIDE	1820	U	R	1820	69	ug/kg	DL
SS	NDA198DL1	LR	CARBON TETRACHLORIDE	1160	U	R	1160	44	ug/kg	DL
SS	NDA200DL1	LR	CARBON TETRACHLORIDE	1220	U	R	1220	47	ug/kg	DL
SS	NDA204DL1	LR	CARBON TETRACHLORIDE	1350	U	R	1350	51	ug/kg	DL
SS	L1	LR	CARBON TETRACHLORIDE	1380	U	R	1380	52	ug/kg	DL
SS	NDA206DL1	LR	CARBON TETRACHLORIDE	1430	U	R	1430	54	ug/kg	DL
SS	NDA207DL1	LR	CARBON TETRACHLORIDE	1290	U	R	1290	49	ug/kg	DL
SS	NDA059DL1	LR	CARBON TETRACHLORIDE	1170	U	R	1170	45	ug/kg	DL

Matrix	Sample ID	Sample Type	Parameter	Lab Result	Lab Qual	Final Qual	RL	DL	Units	Comment
SS	NDA065DL1	LR	CARBON TETRACHLORIDE	1220	U	R	1220	46	ug/kg	DL
SS	NDA069DL1	LR	CARBON TETRACHLORIDE	1080	U	R	1080	41	ug/kg	DL
SS	NDA121DL1	LR	CARBON TETRACHLORIDE	1130	U	R	1130	43	ug/kg	DL
SS	NDA123DL1	LR	CARBON TETRACHLORIDE	1200	U	R	1200	46	ug/kg	DL
SS	NDA124DL1	LR	CARBON TETRACHLORIDE	1000	U	R	1000	38	ug/kg	DL
SB	NDA165DL1	LR	CHLOROBENZENE	1180	U	R	1180	24	ug/kg	DL
SB	NDA096DL1	LR	CHLOROBENZENE	917	U	R	917	18	ug/kg	DL
SB	NDA097DL1	LR	CHLOROBENZENE	990	U	R	990	20	ug/kg	DL
SB	NDA296DL1	LR	CHLOROBENZENE	1040	U	R	1040	21	ug/kg	DL
SB	NDA297DL1	LR	CHLOROBENZENE	1030	U	R	1030	20	ug/kg	DL
SB	NDA298DL1	LR	CHLOROBENZENE	1090	U	R	1090	22	ug/kg	DL
SB	NDA066DL1	LR	CHLOROBENZENE	1190	U	R	1190	24	ug/kg	DL
SD	L1	LR	CHLOROBENZENE	2250	U	R	2250	45	ug/kg	DL
SD	NDA052DL1	LR	CHLOROBENZENE	2480	U	R	2480	50	ug/kg	DL
SD	NDA053DL1	LR	CHLOROBENZENE	1520	U	R	1520	30	ug/kg	DL
SD	NDA047DL1	LR	CHLOROBENZENE	858	U	R	858	17	ug/kg	DL
SD	NDA048DL1	LR	CHLOROBENZENE	1200	U	R	1200	24	ug/kg	DL
SD	NDA049DL1	LR	CHLOROBENZENE	1120	U	R	1120	22	ug/kg	DL
SS	NDA131DL1	LR	CHLOROBENZENE	1200	U	R	1200	24	ug/kg	DL
SS	NDA149DL1	LR	CHLOROBENZENE	1130	U	R	1130	23	ug/kg	DL
SS	L1	LR	CHLOROBENZENE	964	U	R	964	19	ug/kg	DL
SS	E1	LR	CHLOROBENZENE	11	U	R	11	0.2	ug/kg	RE
SS	NDA166DL1	LR	CHLOROBENZENE	1110	U	R	1110	22	ug/kg	DL
SS	NDA176DL1	LR	CHLOROBENZENE	1480	U	R	1480	30	ug/kg	DL
SS	NDA196DL1	LR	CHLOROBENZENE	937	U	R	937	19	ug/kg	DL
SS	L1	LR	CHLOROBENZENE	1820	U	R	1820	36	ug/kg	DL
SS	NDA198DL1	LR	CHLOROBENZENE	1160	U	R	1160	23	ug/kg	DL
SS	NDA200DL1	LR	CHLOROBENZENE	1220	U	R	1220	24	ug/kg	DL
SS	NDA204DL1	LR	CHLOROBENZENE	1350	U	R	1350	27	ug/kg	DL
SS	L1	LR	CHLOROBENZENE	1380	U	R	1380	28	ug/kg	DL
SS	NDA206DL1	LR	CHLOROBENZENE	1430	U	R	1430	29	ug/kg	DL
SS	NDA207DL1	LR	CHLOROBENZENE	1290	U	R	1290	26	ug/kg	DL
SS	NDA059DL1	LR	CHLOROBENZENE	1170	U	R	1170	23	ug/kg	DL
SS	NDA065DL1	LR	CHLOROBENZENE	1220	U	R	1220	24	ug/kg	DL
SS	NDA069DL1	LR	CHLOROBENZENE	1080	U	R	1080	22	ug/kg	DL
SS	NDA121DL1	LR	CHLOROBENZENE	1130	U	R	1130	23	ug/kg	DL
SS	NDA123DL1	LR	CHLOROBENZENE	1200	U	R	1200	24	ug/kg	DL
SS	NDA124DL1	LR	CHLOROBENZENE	1000	U	R	1000	20	ug/kg	DL
SB	NDA165DL1	LR	CHLOROETHANE	1180	U	R	1180	65	ug/kg	DL
SB	NDA213	N1	CHLOROETHANE	12	U	R	12	0.7	ug/kg	CC
SB	NDA096DL1	LR	CHLOROETHANE	917	U	R	917	50	ug/kg	DL
SB	NDA097DL1	LR	CHLOROETHANE	990	U	R	990	54	ug/kg	DL
SB	NDA296DL1	LR	CHLOROETHANE	1040	U	R	1040	57	ug/kg	DL
SB	NDA297DL1	LR	CHLOROETHANE	1030	U	R	1030	56	ug/kg	DL
SB	NDA298DL1	LR	CHLOROETHANE	1090	U	R	1090	60	ug/kg	DL
SB	NDA066DL1	LR	CHLOROETHANE	1190	U	R	1190	66	ug/kg	DL
SD	L1	LR	CHLOROETHANE	2250	U	R	2250	123	ug/kg	DL
SD	NDA052DL1	LR	CHLOROETHANE	2480	U	R	2480	137	ug/kg	DL
SD	NDA053DL1	LR	CHLOROETHANE	1520	U	R	1520	84	ug/kg	DL
SD	NDA047DL1	LR	CHLOROETHANE	858	U	R	858	47	ug/kg	DL
SD	NDA048DL1	LR	CHLOROETHANE	1200	U	R	1200	66	ug/kg	DL
SD	NDA049DL1	LR	CHLOROETHANE	1120	U	R	1120	62	ug/kg	DL
SS	NDA131DL1	LR	CHLOROETHANE	1200	U	R	1200	66	ug/kg	DL
SS	NDA149DL1	LR	CHLOROETHANE	1130	U	R	1130	62	ug/kg	DL
SS	L1	LR	CHLOROETHANE	964	U	R	964	53	ug/kg	DL
SS	E1	LR	CHLOROETHANE	11	U	R	11	0.6	ug/kg	RE
SS	NDA166DL1	LR	CHLOROETHANE	1110	U	R	1110	62	ug/kg	DL
SS	NDA176DL1	LR	CHLOROETHANE	1480	U	R	1480	82	ug/kg	DL
SS	NDA196DL1	LR	CHLOROETHANE	937	U	R	937	52	ug/kg	DL
SS	L1	LR	CHLOROETHANE	1820	U	R	1820	100	ug/kg	DL
SS	NDA198DL1	LR	CHLOROETHANE	1160	U	R	1160	64	ug/kg	DL
SS	NDA200DL1	LR	CHLOROETHANE	1220	U	R	1220	67	ug/kg	DL
SS	NDA204DL1	LR	CHLOROETHANE	1350	U	R	1350	74	ug/kg	DL

Matrix	Sample ID	Sample Type	Parameter	Lab Result	Lab Qual	Final Qual	RL	DL	Units	Comment
SS	L1	LR	CHLOROETHANE	1380	U	R	1380	76	ug/kg	DL
SS	NDA206DL1	LR	CHLOROETHANE	1430	U	R	1430	79	ug/kg	DL
SS	NDA207DL1	LR	CHLOROETHANE	1290	U	R	1290	71	ug/kg	DL
SS	NDA059DL1	LR	CHLOROETHANE	1170	U	R	1170	64	ug/kg	DL
SS	NDA065DL1	LR	CHLOROETHANE	1220	U	R	1220	67	ug/kg	DL
SS	NDA069DL1	LR	CHLOROETHANE	1080	U	R	1080	59	ug/kg	DL
SS	NDA121DL1	LR	CHLOROETHANE	1130	U	R	1130	62	ug/kg	DL
SS	NDA123DL1	LR	CHLOROETHANE	1200	U	R	1200	66	ug/kg	DL
SS	NDA124DL1	LR	CHLOROETHANE	1000	U	R	1000	55	ug/kg	DL
SB	NDA165DL1	LR	CHLOROFORM	1180	U	R	1180	118	ug/kg	DL
SB	NDA096DL1	LR	CHLOROFORM	917	U	R	917	92	ug/kg	DL
SB	NDA097DL1	LR	CHLOROFORM	990	U	R	990	99	ug/kg	DL
SB	NDA296DL1	LR	CHLOROFORM	1040	U	R	1040	104	ug/kg	DL
SB	NDA297DL1	LR	CHLOROFORM	1030	U	R	1030	102	ug/kg	DL
SB	NDA298DL1	LR	CHLOROFORM	1090	U	R	1090	109	ug/kg	DL
SB	NDA066DL1	LR	CHLOROFORM	1190	U	R	1190	119	ug/kg	DL
SD	L1	LR	CHLOROFORM	2250	U	R	2250	224	ug/kg	DL
SD	NDA052DL1	LR	CHLOROFORM	2480	U	R	2480	249	ug/kg	DL
SD	NDA053DL1	LR	CHLOROFORM	1520	U	R	1520	152	ug/kg	DL
SD	NDA047DL1	LR	CHLOROFORM	858	U	R	858	86	ug/kg	DL
SD	NDA048DL1	LR	CHLOROFORM	1200	U	R	1200	120	ug/kg	DL
SD	NDA049DL1	LR	CHLOROFORM	1120	U	R	1120	112	ug/kg	DL
SS	NDA131DL1	LR	CHLOROFORM	1200	U	R	1200	120	ug/kg	DL
SS	NDA149DL1	LR	CHLOROFORM	1130	U	R	1130	113	ug/kg	DL
SS	L1	LR	CHLOROFORM	964	U	R	964	97	ug/kg	DL
SS	E1	LR	CHLOROFORM	11	U	R	11	1	ug/kg	RE
SS	NDA166DL1	LR	CHLOROFORM	1110	U	R	1110	112	ug/kg	DL
SS	NDA176DL1	LR	CHLOROFORM	1480	U	R	1480	148	ug/kg	DL
SS	NDA196DL1	LR	CHLOROFORM	937	U	R	937	94	ug/kg	DL
SS	L1	LR	CHLOROFORM	1820	U	R	1820	182	ug/kg	DL
SS	NDA198DL1	LR	CHLOROFORM	1160	U	R	1160	116	ug/kg	DL
SS	NDA200DL1	LR	CHLOROFORM	1220	U	R	1220	122	ug/kg	DL
SS	NDA204DL1	LR	CHLOROFORM	1350	U	R	1350	135	ug/kg	DL
SS	L1	LR	CHLOROFORM	1380	U	R	1380	138	ug/kg	DL
SS	NDA206DL1	LR	CHLOROFORM	1430	U	R	1430	143	ug/kg	DL
SS	NDA207DL1	LR	CHLOROFORM	1290	U	R	1290	129	ug/kg	DL
SS	NDA059DL1	LR	CHLOROFORM	1170	U	R	1170	117	ug/kg	DL
SS	NDA065DL1	LR	CHLOROFORM	1220	U	R	1220	122	ug/kg	DL
SS	NDA069DL1	LR	CHLOROFORM	1080	U	R	1080	108	ug/kg	DL
SS	NDA121DL1	LR	CHLOROFORM	1130	U	R	1130	113	ug/kg	DL
SS	NDA123DL1	LR	CHLOROFORM	1200	U	R	1200	120	ug/kg	DL
SS	NDA124DL1	LR	CHLOROFORM	1000	U	R	1000	100	ug/kg	DL
SB	NDA165DL1	LR	CHLOROMETHANE	1180	U	R	1180	93	ug/kg	DL
SB	NDA096DL1	LR	CHLOROMETHANE	917	U	R	917	72	ug/kg	DL
SB	NDA097DL1	LR	CHLOROMETHANE	990	U	R	990	78	ug/kg	DL
SB	NDA296DL1	LR	CHLOROMETHANE	1040	U	R	1040	82	ug/kg	DL
SB	NDA297DL1	LR	CHLOROMETHANE	1030	U	R	1030	81	ug/kg	DL
SB	NDA298DL1	LR	CHLOROMETHANE	1090	U	R	1090	86	ug/kg	DL
SB	NDA066DL1	LR	CHLOROMETHANE	1190	U	R	1190	94	ug/kg	DL
SD	L1	LR	CHLOROMETHANE	2250	U	R	2250	177	ug/kg	DL
SD	NDA052DL1	LR	CHLOROMETHANE	2480	U	R	2480	196	ug/kg	DL
SD	NDA053DL1	LR	CHLOROMETHANE	1520	U	R	1520	120	ug/kg	DL
SD	NDA047DL1	LR	CHLOROMETHANE	858	U	R	858	68	ug/kg	DL
SD	NDA048DL1	LR	CHLOROMETHANE	1200	U	R	1200	95	ug/kg	DL
SD	NDA049DL1	LR	CHLOROMETHANE	1120	U	R	1120	88	ug/kg	DL
SS	NDA131DL1	LR	CHLOROMETHANE	1200	U	R	1200	95	ug/kg	DL
SS	NDA149DL1	LR	CHLOROMETHANE	1130	U	R	1130	89	ug/kg	DL
SS	L1	LR	CHLOROMETHANE	964	U	R	964	76	ug/kg	DL
SS	E1	LR	CHLOROMETHANE	11	U	R	11	0.9	ug/kg	RE
SS	NDA166DL1	LR	CHLOROMETHANE	1110	U	R	1110	88	ug/kg	DL
SS	NDA176DL1	LR	CHLOROMETHANE	1480	U	R	1480	117	ug/kg	DL
SS	NDA196DL1	LR	CHLOROMETHANE	937	U	R	937	74	ug/kg	DL
SS	L1	LR	CHLOROMETHANE	1820	U	R	1820	144	ug/kg	DL

Matrix	Sample ID	Sample Type	Parameter	Lab Result	Lab Qual	Final Qual	RL	DL	Units	Comment
SS	NDA198DL1	LR	CHLOROMETHANE	1160	U	R	1160	91	ug/kg	DL
SS	NDA200DL1	LR	CHLOROMETHANE	1220	U	R	1220	97	ug/kg	DL
SS	NDA204DL1	LR	CHLOROMETHANE	1350	U	R	1350	107	ug/kg	DL
SS	L1	LR	CHLOROMETHANE	1380	U	R	1380	109	ug/kg	DL
SS	NDA206DL1	LR	CHLOROMETHANE	1430	U	R	1430	113	ug/kg	DL
SS	NDA207DL1	LR	CHLOROMETHANE	1290	U	R	1290	102	ug/kg	DL
SS	NDA059DL1	LR	CHLOROMETHANE	1170	U	R	1170	93	ug/kg	DL
SS	NDA065DL1	LR	CHLOROMETHANE	1220	U	R	1220	96	ug/kg	DL
SS	NDA069DL1	LR	CHLOROMETHANE	1080	U	R	1080	85	ug/kg	DL
SS	NDA121DL1	LR	CHLOROMETHANE	1130	U	R	1130	89	ug/kg	DL
SS	NDA123DL1	LR	CHLOROMETHANE	1200	U	R	1200	95	ug/kg	DL
SS	NDA124DL1	LR	CHLOROMETHANE	1000	U	R	1000	79	ug/kg	DL
SB	NDA081	N1	CHRYSENE	393	U	R	393	22	ug/kg	RE
SB	NDA083	N1	CHRYSENE	424	U	R	424	24	ug/kg	RE
SS	NDA080	N1	CHRYSENE	407	U	R	407	23	ug/kg	RE
SS	NDA082	N1	CHRYSENE	466	U	R	466	27	ug/kg	RE
SB	NDA165DL1	LR	cis-1,3-DICHLOROPROPENE	1180	U	R	1180	33	ug/kg	DL
SB	NDA096DL1	LR	cis-1,3-DICHLOROPROPENE	917	U	R	917	26	ug/kg	DL
SB	NDA097DL1	LR	cis-1,3-DICHLOROPROPENE	990	U	R	990	28	ug/kg	DL
SB	NDA296DL1	LR	cis-1,3-DICHLOROPROPENE	1040	U	R	1040	29	ug/kg	DL
SB	NDA297DL1	LR	cis-1,3-DICHLOROPROPENE	1030	U	R	1030	29	ug/kg	DL
SB	NDA298DL1	LR	cis-1,3-DICHLOROPROPENE	1090	U	R	1090	30	ug/kg	DL
SB	NDA066DL1	LR	cis-1,3-DICHLOROPROPENE	1190	U	R	1190	33	ug/kg	DL
SD	L1	LR	cis-1,3-DICHLOROPROPENE	2250	U	R	2250	63	ug/kg	DL
SD	NDA052DL1	LR	cis-1,3-DICHLOROPROPENE	2480	U	R	2480	70	ug/kg	DL
SD	NDA053DL1	LR	cis-1,3-DICHLOROPROPENE	1520	U	R	1520	43	ug/kg	DL
SD	NDA047DL1	LR	cis-1,3-DICHLOROPROPENE	858	U	R	858	24	ug/kg	DL
SD	NDA048DL1	LR	cis-1,3-DICHLOROPROPENE	1200	U	R	1200	34	ug/kg	DL
SD	NDA049DL1	LR	cis-1,3-DICHLOROPROPENE	1120	U	R	1120	31	ug/kg	DL
SS	NDA131DL1	LR	cis-1,3-DICHLOROPROPENE	1200	U	R	1200	34	ug/kg	DL
SS	NDA149DL1	LR	cis-1,3-DICHLOROPROPENE	1130	U	R	1130	32	ug/kg	DL
SS	L1	LR	cis-1,3-DICHLOROPROPENE	964	U	R	964	27	ug/kg	DL
SS	E1	LR	cis-1,3-DICHLOROPROPENE	11	U	R	11	0.31	ug/kg	RE
SS	NDA166DL1	LR	cis-1,3-DICHLOROPROPENE	1110	U	R	1110	31	ug/kg	DL
SS	NDA176DL1	LR	cis-1,3-DICHLOROPROPENE	1480	U	R	1480	42	ug/kg	DL
SS	NDA196DL1	LR	cis-1,3-DICHLOROPROPENE	937	U	R	937	26	ug/kg	DL
SS	L1	LR	cis-1,3-DICHLOROPROPENE	1820	U	R	1820	51	ug/kg	DL
SS	NDA198DL1	LR	cis-1,3-DICHLOROPROPENE	1160	U	R	1160	32	ug/kg	DL
SS	NDA200DL1	LR	cis-1,3-DICHLOROPROPENE	1220	U	R	1220	34	ug/kg	DL
SS	NDA204DL1	LR	cis-1,3-DICHLOROPROPENE	1350	U	R	1350	38	ug/kg	DL
SS	L1	LR	cis-1,3-DICHLOROPROPENE	1380	U	R	1380	39	ug/kg	DL
SS	NDA206DL1	LR	cis-1,3-DICHLOROPROPENE	1430	U	R	1430	40	ug/kg	DL
SS	NDA207DL1	LR	cis-1,3-DICHLOROPROPENE	1290	U	R	1290	36	ug/kg	DL
SS	NDA059DL1	LR	cis-1,3-DICHLOROPROPENE	1170	U	R	1170	33	ug/kg	DL
SS	NDA065DL1	LR	cis-1,3-DICHLOROPROPENE	1220	U	R	1220	34	ug/kg	DL
SS	NDA069DL1	LR	cis-1,3-DICHLOROPROPENE	1080	U	R	1080	30	ug/kg	DL
SS	NDA121DL1	LR	cis-1,3-DICHLOROPROPENE	1130	U	R	1130	32	ug/kg	DL
SS	NDA123DL1	LR	cis-1,3-DICHLOROPROPENE	1200	U	R	1200	34	ug/kg	DL
SS	NDA124DL1	LR	cis-1,3-DICHLOROPROPENE	1000	U	R	1000	28	ug/kg	DL
SB	NDA081	N1	CRESOLS, m & p	393	U	R	393	26	ug/kg	RE
SB	NDA083	N1	CRESOLS, m & p	424	U	R	424	28	ug/kg	RE
SS	NDA080	N1	CRESOLS, m & p	407	U	R	407	26	ug/kg	RE
SS	NDA082	N1	CRESOLS, m & p	466	U	R	466	30	ug/kg	RE
SB	NDA114DL1	LR	DELTA BHC	44	U	R	44	11	ug/kg	DL
SS	NDA125DL1	LR	DELTA BHC	20	U	R	20	5.2	ug/kg	DL
SS	NDA137DL1	LR	DELTA BHC	3.6	U	R	3.6	0.93	ug/kg	DL
SS	NDA113DL1	LR	DELTA BHC	4.2	U	R	4.2	1.1	ug/kg	DL
SB	NDA081	N1	DIBENZ(a,h)ANTHRACENE	393	U	R	393	26	ug/kg	RE
SB	NDA083	N1	DIBENZ(a,h)ANTHRACENE	424	U	R	424	28	ug/kg	RE
SS	NDA080	N1	DIBENZ(a,h)ANTHRACENE	407	U	R	407	27	ug/kg	RE
SS	NDA082	N1	DIBENZ(a,h)ANTHRACENE	466	U	R	466	31	ug/kg	RE
SB	NDA081	N1	DIBENZOFURAN	393	U	R	393	20	ug/kg	RE
SB	NDA083	N1	DIBENZOFURAN	424	U	R	424	22	ug/kg	RE

Matrix	Sample ID	Sample Type	Parameter	Lab Result	Lab Qual	Final Qual	RL	DL	Units	Comment
SS	NDA080	N1	DIBENZOFURAN	407	U	R	407	21	ug/kg	RE
SS	NDA082	N1	DIBENZOFURAN	466	U	R	466	24	ug/kg	RE
SB	NDA165DL1	LR	DIBROMOCHLOROMETHANE	1180	U	R	1180	26	ug/kg	DL
SB	NDA096DL1	LR	DIBROMOCHLOROMETHANE	917	U	R	917	20	ug/kg	DL
SB	NDA097DL1	LR	DIBROMOCHLOROMETHANE	990	U	R	990	22	ug/kg	DL
SB	NDA296DL1	LR	DIBROMOCHLOROMETHANE	1040	U	R	1040	23	ug/kg	DL
SB	NDA297DL1	LR	DIBROMOCHLOROMETHANE	1030	U	R	1030	22	ug/kg	DL
SB	NDA298DL1	LR	DIBROMOCHLOROMETHANE	1090	U	R	1090	24	ug/kg	DL
SB	NDA066DL1	LR	DIBROMOCHLOROMETHANE	1190	U	R	1190	26	ug/kg	DL
SD	L1	LR	DIBROMOCHLOROMETHANE	2250	U	R	2250	49	ug/kg	DL
SD	NDA052DL1	LR	DIBROMOCHLOROMETHANE	2480	U	R	2480	55	ug/kg	DL
SD	NDA053DL1	LR	DIBROMOCHLOROMETHANE	1520	U	R	1520	34	ug/kg	DL
SD	NDA047DL1	LR	DIBROMOCHLOROMETHANE	858	U	R	858	19	ug/kg	DL
SD	NDA048DL1	LR	DIBROMOCHLOROMETHANE	1200	U	R	1200	26	ug/kg	DL
SD	NDA049DL1	LR	DIBROMOCHLOROMETHANE	1120	U	R	1120	25	ug/kg	DL
SS	NDA131DL1	LR	DIBROMOCHLOROMETHANE	1200	U	R	1200	26	ug/kg	DL
SS	NDA149DL1	LR	DIBROMOCHLOROMETHANE	1130	U	R	1130	25	ug/kg	DL
SS	L1	LR	DIBROMOCHLOROMETHANE	964	U	R	964	21	ug/kg	DL
SS	E1	LR	DIBROMOCHLOROMETHANE	11	U	R	11	0.2	ug/kg	RE
SS	NDA166DL1	LR	DIBROMOCHLOROMETHANE	1110	U	R	1110	25	ug/kg	DL
SS	NDA176DL1	LR	DIBROMOCHLOROMETHANE	1480	U	R	1480	33	ug/kg	DL
SS	NDA196DL1	LR	DIBROMOCHLOROMETHANE	937	U	R	937	21	ug/kg	DL
SS	L1	LR	DIBROMOCHLOROMETHANE	1820	U	R	1820	40	ug/kg	DL
SS	NDA198DL1	LR	DIBROMOCHLOROMETHANE	1160	U	R	1160	25	ug/kg	DL
SS	NDA200DL1	LR	DIBROMOCHLOROMETHANE	1220	U	R	1220	27	ug/kg	DL
SS	NDA204DL1	LR	DIBROMOCHLOROMETHANE	1350	U	R	1350	30	ug/kg	DL
SS	L1	LR	DIBROMOCHLOROMETHANE	1380	U	R	1380	30	ug/kg	DL
SS	NDA206DL1	LR	DIBROMOCHLOROMETHANE	1430	U	R	1430	32	ug/kg	DL
SS	NDA207DL1	LR	DIBROMOCHLOROMETHANE	1290	U	R	1290	28	ug/kg	DL
SS	NDA059DL1	LR	DIBROMOCHLOROMETHANE	1170	U	R	1170	26	ug/kg	DL
SS	NDA065DL1	LR	DIBROMOCHLOROMETHANE	1220	U	R	1220	27	ug/kg	DL
SS	NDA069DL1	LR	DIBROMOCHLOROMETHANE	1080	U	R	1080	24	ug/kg	DL
SS	NDA121DL1	LR	DIBROMOCHLOROMETHANE	1130	U	R	1130	25	ug/kg	DL
SS	NDA123DL1	LR	DIBROMOCHLOROMETHANE	1200	U	R	1200	26	ug/kg	DL
SS	NDA124DL1	LR	DIBROMOCHLOROMETHANE	1000	U	R	1000	22	ug/kg	DL
SB	NDA114DL1	LR	DIELDRIN	86	U	R	86	11	ug/kg	DL
SS	NDA125DL1	LR	DIELDRIN	39	U	R	39	4.8	ug/kg	DL
SS	NDA137DL1	LR	DIELDRIN	7.1	U	R	7.1	0.87	ug/kg	DL
SS	NDA113DL1	LR	DIELDRIN	8.2	U	R	8.2	1	ug/kg	DL
SB	NDA081	N1	DIETHYL PHTHALATE	393	U	R	393	32	ug/kg	RE
SB	NDA083	N1	DIETHYL PHTHALATE	424	U	R	424	35	ug/kg	RE
SS	NDA080	N1	DIETHYL PHTHALATE	407	U	R	407	33	ug/kg	RE
SS	NDA082	N1	DIETHYL PHTHALATE	466	U	R	466	38	ug/kg	RE
SB	NDA081	N1	DIMETHYL PHTHALATE	393	U	R	393	26	ug/kg	RE
SB	NDA083	N1	DIMETHYL PHTHALATE	424	U	R	424	28	ug/kg	RE
SS	NDA080	N1	DIMETHYL PHTHALATE	407	U	R	407	26	ug/kg	RE
SS	NDA082	N1	DIMETHYL PHTHALATE	466	U	R	466	30	ug/kg	RE
SB	NDA081	N1	DI-n-BUTYL PHTHALATE	393	U	R	393	21	ug/kg	RE
SB	NDA083	N1	DI-n-BUTYL PHTHALATE	424	U	R	424	22	ug/kg	RE
SS	NDA080	N1	DI-n-BUTYL PHTHALATE	407	U	R	407	22	ug/kg	RE
SS	NDA082	N1	DI-n-BUTYL PHTHALATE	466	U	R	466	25	ug/kg	RE
SB	NDA081	N1	DI-n-OCTYLPHTHALATE	393	U	R	393	29	ug/kg	RE
SB	NDA083	N1	DI-n-OCTYLPHTHALATE	424	U	R	424	32	ug/kg	RE
SS	NDA080	N1	DI-n-OCTYLPHTHALATE	407	U	R	407	31	ug/kg	RE
SS	NDA082	N1	DI-n-OCTYLPHTHALATE	466	U	R	466	35	ug/kg	RE
SB	NDA114DL1	LR	ENDOSULFAN SULFATE	86	U	R	86	10	ug/kg	DL
SS	NDA125DL1	LR	ENDOSULFAN SULFATE	39	U	R	39	4.6	ug/kg	DL
SS	NDA137DL1	LR	ENDOSULFAN SULFATE	7.1	U	R	7.1	0.83	ug/kg	DL
SS	NDA113DL1	LR	ENDOSULFAN SULFATE	8.2	U	R	8.2	0.96	ug/kg	DL
SB	NDA114DL1	LR	ENDRIN	86	U	R	86	10	ug/kg	DL
SS	NDA125DL1	LR	ENDRIN	39	U	R	39	4.7	ug/kg	DL
SS	NDA137DL1	LR	ENDRIN	7.1	U	R	7.1	0.85	ug/kg	DL
SS	NDA113DL1	LR	ENDRIN	8.2	U	R	8.2	0.98	ug/kg	DL

Matrix	Sample ID	Sample Type	Parameter	Lab Result	Lab Qual	Final Qual	RL	DL	Units	Comment
SB	NDA114DL1	LR	ENDRIN ALDEHYDE	86	U	R	86	6	ug/kg	DL
SS	NDA125DL1	LR	ENDRIN ALDEHYDE	39	U	R	39	2.71	ug/kg	DL
SS	NDA137DL1	LR	ENDRIN ALDEHYDE	7.1	U	R	7.1	0.49	ug/kg	DL
SS	NDA113DL1	LR	ENDRIN ALDEHYDE	8.2	U	R	8.2	0.57	ug/kg	DL
SB	NDA114DL1	LR	ENDRIN KETONE	86	U	R	86	5.7	ug/kg	DL
SS	NDA125DL1	LR	ENDRIN KETONE	39	U	R	39	2.6	ug/kg	DL
SS	NDA137DL1	LR	ENDRIN KETONE	7.1	U	R	7.1	0.47	ug/kg	DL
SS	NDA113DL1	LR	ENDRIN KETONE	8.2	U	R	8.2	0.54	ug/kg	DL
SB	NDA165DL1	LR	ETHYLBENZENE	1180	U	R	1180	33	ug/kg	DL
SB	NDA096DL1	LR	ETHYLBENZENE	32	J	R	917	26	ug/kg	DL
SB	NDA097DL1	LR	ETHYLBENZENE	990	U	R	990	28	ug/kg	DL
SB	NDA296DL1	LR	ETHYLBENZENE	1040	U	R	1040	29	ug/kg	DL
SB	NDA297DL1	LR	ETHYLBENZENE	1030	U	R	1030	29	ug/kg	DL
SB	NDA298DL1	LR	ETHYLBENZENE	1090	U	R	1090	30	ug/kg	DL
SB	NDA066DL1	LR	ETHYLBENZENE	1190	U	R	1190	33	ug/kg	DL
SD	NDA051FD1	FD1	ETHYLBENZENE	1030	E	R	23	0.6	ug/kg	DL
SD	NDA052DL1	LR	ETHYLBENZENE	111	J	R	2480	70	ug/kg	DL
SD	NDA053	N1	ETHYLBENZENE	155	E	R	14	0.38	ug/kg	DL
SD	NDA047DL1	LR	ETHYLBENZENE	858	U	R	858	24	ug/kg	DL
SD	NDA048DL1	LR	ETHYLBENZENE	1200	U	R	1200	34	ug/kg	DL
SD	NDA049DL1	LR	ETHYLBENZENE	1120	U	R	1120	31	ug/kg	DL
SS	NDA131DL1	LR	ETHYLBENZENE	1200	U	R	1200	34	ug/kg	DL
SS	NDA149DL1	LR	ETHYLBENZENE	1130	U	R	1130	32	ug/kg	DL
SS	L1	LR	ETHYLBENZENE	964	U	R	964	27	ug/kg	DL
SS	E1	LR	ETHYLBENZENE	11	U	R	11	0.31	ug/kg	RE
SS	NDA166DL1	LR	ETHYLBENZENE	1110	U	R	1110	31	ug/kg	DL
SS	NDA176DL1	LR	ETHYLBENZENE	1480	U	R	1480	42	ug/kg	DL
SS	NDA196DL1	LR	ETHYLBENZENE	937	U	R	937	26	ug/kg	DL
SS	L1	LR	ETHYLBENZENE	1820	U	R	1820	51	ug/kg	DL
SS	NDA198DL1	LR	ETHYLBENZENE	1160	U	R	1160	32	ug/kg	DL
SS	NDA200DL1	LR	ETHYLBENZENE	1220	U	R	1220	34	ug/kg	DL
SS	NDA204DL1	LR	ETHYLBENZENE	1350	U	R	1350	38	ug/kg	DL
SS	L1	LR	ETHYLBENZENE	1380	U	R	1380	39	ug/kg	DL
SS	NDA206DL1	LR	ETHYLBENZENE	1430	U	R	1430	40	ug/kg	DL
SS	NDA207DL1	LR	ETHYLBENZENE	1290	U	R	1290	36	ug/kg	DL
SS	NDA059DL1	LR	ETHYLBENZENE	1170	U	R	1170	33	ug/kg	DL
SS	NDA065DL1	LR	ETHYLBENZENE	1220	U	R	1220	34	ug/kg	DL
SS	NDA069DL1	LR	ETHYLBENZENE	1080	U	R	1080	30	ug/kg	DL
SS	NDA121DL1	LR	ETHYLBENZENE	1130	U	R	1130	32	ug/kg	DL
SS	NDA123DL1	LR	ETHYLBENZENE	1200	U	R	1200	34	ug/kg	DL
SS	NDA124DL1	LR	ETHYLBENZENE	1000	U	R	1000	28	ug/kg	DL
SB	NDA081	N1	FLUORANTHENE	393	U	R	393	24	ug/kg	RE
SB	NDA083	N1	FLUORANTHENE	424	U	R	424	26	ug/kg	RE
SS	NDA080	N1	FLUORANTHENE	407	U	R	407	25	ug/kg	RE
SS	NDA082	N1	FLUORANTHENE	466	U	R	466	29	ug/kg	RE
SB	NDA081	N1	FLUORENE	393	U	R	393	22	ug/kg	RE
SB	NDA083	N1	FLUORENE	424	U	R	424	24	ug/kg	RE
SS	NDA080	N1	FLUORENE	407	U	R	407	23	ug/kg	RE
SS	NDA082	N1	FLUORENE	466	U	R	466	26	ug/kg	RE
SB	NDA114DL1	LR	GAMMA BHC (LINDANE)	44	U	R	44	12	ug/kg	DL
SS	NDA125DL1	LR	GAMMA BHC (LINDANE)	20	U	R	20	5.5	ug/kg	DL
SS	NDA137DL1	LR	GAMMA BHC (LINDANE)	3.6	U	R	3.6	1	ug/kg	DL
SS	NDA113DL1	LR	GAMMA BHC (LINDANE)	4.2	U	R	4.2	1.2	ug/kg	DL
SB	NDA114DL1	LR	GAMMA-CHLORDANE	44	U	R	44	13	ug/kg	DL
SS	NDA125DL1	LR	GAMMA-CHLORDANE	20	U	R	20	5.88	ug/kg	DL
SS	NDA137DL1	LR	GAMMA-CHLORDANE	3.6	U	R	3.6	1.06	ug/kg	DL
SS	NDA113DL1	LR	GAMMA-CHLORDANE	4.2	U	R	4.2	1.2	ug/kg	DL
SB	NDA114DL1	LR	HEPTACHLOR	44	U	R	44	16	ug/kg	DL
SS	NDA125DL1	LR	HEPTACHLOR	20	U	R	20	7.31	ug/kg	DL
SS	NDA137DL1	LR	HEPTACHLOR	3.6	U	R	3.6	1.32	ug/kg	DL
SS	NDA113DL1	LR	HEPTACHLOR	4.2	U	R	4.2	1.5	ug/kg	DL
SB	NDA114DL1	LR	HEPTACHLOR EPOXIDE	44	U	R	44	16	ug/kg	DL
SS	NDA125DL1	LR	HEPTACHLOR EPOXIDE	20	U	R	20	7.1	ug/kg	DL

Matrix	Sample ID	Sample Type	Parameter	Lab Result	Lab Qual	Final Qual	RL	DL	Units	Comment
SS	NDA137DL1	LR	HEPTACHLOR EPOXIDE	3.6	U	R	3.6	1.3	ug/kg	DL
SS	NDA113DL1	LR	HEPTACHLOR EPOXIDE	4.2	U	R	4.2	1.5	ug/kg	DL
SB	NDA081	N1	HEXACHLOROBENZENE	393	U	R	393	26	ug/kg	RE
SB	NDA083	N1	HEXACHLOROBENZENE	424	U	R	424	28	ug/kg	RE
SS	NDA080	N1	HEXACHLOROBENZENE	407	U	R	407	26	ug/kg	RE
SS	NDA082	N1	HEXACHLOROBENZENE	466	U	R	466	30	ug/kg	RE
SB	NDA081	N1	HEXACHLOROBUTADIENE	393	U	R	393	33	ug/kg	RE
SB	NDA083	N1	HEXACHLOROBUTADIENE	424	U	R	424	35	ug/kg	RE
SS	NDA080	N1	HEXACHLOROBUTADIENE	407	U	R	407	34	ug/kg	RE
SS	NDA082	N1	HEXACHLOROBUTADIENE	466	U	R	466	39	ug/kg	RE
SB	NDA081	N1	HEXACHLOROCYCLOPENTADIENE	393	U	R	393	29	ug/kg	RE
SB	NDA083	N1	HEXACHLOROCYCLOPENTADIENE	424	U	R	424	31	ug/kg	RE
SS	NDA080	N1	HEXACHLOROCYCLOPENTADIENE	407	U	R	407	30	ug/kg	RE
SS	NDA082	N1	HEXACHLOROCYCLOPENTADIENE	466	U	R	466	34	ug/kg	RE
SB	NDA081	N1	HEXACHLOROETHANE	393	U	R	393	36	ug/kg	RE
SB	NDA083	N1	HEXACHLOROETHANE	424	U	R	424	39	ug/kg	RE
SS	NDA080	N1	HEXACHLOROETHANE	407	U	R	407	37	ug/kg	RE
SS	NDA082	N1	HEXACHLOROETHANE	466	U	R	466	42	ug/kg	RE
SS	NDA078RE1	LR	TETRAZOCINE	12000	=	R	133	14	ug/kg	RE
SS	NDA104FD1	FD1	TETRAZOCINE	355	U	R	355	37	ug/kg	SS
SB	NDA081	N1	INDENO(1,2,3-c,d)PYRENE	393	U	R	393	20	ug/kg	RE
SB	NDA083	N1	INDENO(1,2,3-c,d)PYRENE	424	U	R	424	22	ug/kg	RE
SS	NDA080	N1	INDENO(1,2,3-c,d)PYRENE	407	U	R	407	21	ug/kg	RE
SS	NDA082	N1	INDENO(1,2,3-c,d)PYRENE	466	U	R	466	24	ug/kg	RE
SB	NDA081	N1	ISOPHORONE	393	U	R	393	14	ug/kg	RE
SB	NDA083	N1	ISOPHORONE	424	U	R	424	15	ug/kg	RE
SS	NDA080	N1	ISOPHORONE	407	U	R	407	15	ug/kg	RE
SS	NDA082	N1	ISOPHORONE	466	U	R	466	17	ug/kg	RE
SB	NDA165DL1	LR	M,P-XYLENE (SUM)	1180	U	R	1180	26	ug/kg	DL
SB	NDA096DL1	LR	M,P-XYLENE (SUM)	121	J	R	917	20	ug/kg	DL
SB	NDA097DL1	LR	M,P-XYLENE (SUM)	71	J	R	990	22	ug/kg	DL
SB	NDA296DL1	LR	M,P-XYLENE (SUM)	1040	U	R	1040	23	ug/kg	DL
SB	NDA297DL1	LR	M,P-XYLENE (SUM)	1030	U	R	1030	22	ug/kg	DL
SB	NDA298DL1	LR	M,P-XYLENE (SUM)	1090	U	R	1090	24	ug/kg	DL
SB	NDA066DL1	LR	M,P-XYLENE (SUM)	1190	U	R	1190	26	ug/kg	DL
SD	L1	LR	M,P-XYLENE (SUM)	2250	U	R	2250	49	ug/kg	DL
SD	NDA052DL1	LR	M,P-XYLENE (SUM)	2480	U	R	2480	55	ug/kg	DL
SD	NDA053DL1	LR	M,P-XYLENE (SUM)	1520	U	R	1520	34	ug/kg	DL
SD	NDA047DL1	LR	M,P-XYLENE (SUM)	858	U	R	858	19	ug/kg	DL
SD	NDA048DL1	LR	M,P-XYLENE (SUM)	1200	U	R	1200	26	ug/kg	DL
SD	NDA049DL1	LR	M,P-XYLENE (SUM)	1120	U	R	1120	25	ug/kg	DL
SS	NDA131DL1	LR	M,P-XYLENE (SUM)	1200	U	R	1200	26	ug/kg	DL
SS	NDA149DL1	LR	M,P-XYLENE (SUM)	1130	U	R	1130	25	ug/kg	DL
SS	L1	LR	M,P-XYLENE (SUM)	964	U	R	964	21	ug/kg	DL
SS	E1	LR	M,P-XYLENE (SUM)	11	U	R	11	0.2	ug/kg	RE
SS	NDA166DL1	LR	M,P-XYLENE (SUM)	1110	U	R	1110	25	ug/kg	DL
SS	NDA176DL1	LR	M,P-XYLENE (SUM)	1480	U	R	1480	33	ug/kg	DL
SS	NDA196DL1	LR	M,P-XYLENE (SUM)	937	U	R	937	21	ug/kg	DL
SS	L1	LR	M,P-XYLENE (SUM)	1820	U	R	1820	40	ug/kg	DL
SS	NDA198DL1	LR	M,P-XYLENE (SUM)	1160	U	R	1160	25	ug/kg	DL
SS	NDA200DL1	LR	M,P-XYLENE (SUM)	1220	U	R	1220	27	ug/kg	DL
SS	NDA204DL1	LR	M,P-XYLENE (SUM)	1350	U	R	1350	30	ug/kg	DL
SS	L1	LR	M,P-XYLENE (SUM)	1380	U	R	1380	30	ug/kg	DL
SS	NDA206DL1	LR	M,P-XYLENE (SUM)	1430	U	R	1430	32	ug/kg	DL
SS	NDA207DL1	LR	M,P-XYLENE (SUM)	1290	U	R	1290	28	ug/kg	DL
SS	NDA059DL1	LR	M,P-XYLENE (SUM)	1170	U	R	1170	26	ug/kg	DL
SS	NDA065DL1	LR	M,P-XYLENE (SUM)	1220	U	R	1220	27	ug/kg	DL
SS	NDA069DL1	LR	M,P-XYLENE (SUM)	1080	U	R	1080	24	ug/kg	DL
SS	NDA121DL1	LR	M,P-XYLENE (SUM)	1130	U	R	1130	25	ug/kg	DL
SS	NDA123DL1	LR	M,P-XYLENE (SUM)	1200	U	R	1200	26	ug/kg	DL
SS	NDA124DL1	LR	M,P-XYLENE (SUM)	1000	U	R	1000	22	ug/kg	DL
SB	NDA114DL1	LR	METHOXYCHLOR	440	U	R	440	7.5	ug/kg	DL
SS	NDA125DL1	LR	METHOXYCHLOR	200	U	R	200	3.42	ug/kg	DL

Matrix	Sample ID	Sample Type	Parameter	Lab Result	Lab Qual	Final Qual	RL	DL	Units	Comment
SS	NDA137DL1	LR	METHOXYCHLOR	36	U	R	36	0.62	ug/kg	DL
SS	NDA113DL1	LR	METHOXYCHLOR	42	U	R	42	0.72	ug/kg	DL
SB	NDA126	N1	2-BUTANONE (MEK)	13	U	R	13	2	ug/kg	IC
SB	NDA129	N1	2-BUTANONE (MEK)	12	U	R	12	2	ug/kg	IC
SB	NDA130FD1	FD1	2-BUTANONE (MEK)	12	U	R	12	2	ug/kg	IC
SB	NDA132	N1	2-BUTANONE (MEK)	10	U	R	10	2	ug/kg	IC
SB	NDA134	N1	2-BUTANONE (MEK)	10	U	R	10	2	ug/kg	IC
SB	NDA136	N1	2-BUTANONE (MEK)	11	U	R	11	2	ug/kg	IC
SB	NDA138	N1	2-BUTANONE (MEK)	10	U	R	10	2	ug/kg	IC
SB	NDA140	N1	2-BUTANONE (MEK)	10	U	R	10	2	ug/kg	IC
SB	NDA142	N1	2-BUTANONE (MEK)	10	U	R	10	2	ug/kg	IC
SB	NDA144	N1	2-BUTANONE (MEK)	12	U	R	12	2	ug/kg	IC
SB	NDA146	N1	2-BUTANONE (MEK)	11	U	R	11	2	ug/kg	IC
SB	NDA148	N1	2-BUTANONE (MEK)	10	U	R	10	2	ug/kg	IC
SB	NDA151	N1	2-BUTANONE (MEK)	11	U	R	11	2	ug/kg	IC
SB	NDA152FD1	FD1	2-BUTANONE (MEK)	12	U	R	12	2	ug/kg	IC
SB	NDA154	N1	2-BUTANONE (MEK)	11	U	R	11	2	ug/kg	IC
SB	NDA156	N1	2-BUTANONE (MEK)	10	U	R	10	2	ug/kg	IC
SB	NDA158	N1	2-BUTANONE (MEK)	10	U	R	10	2	ug/kg	IC
SB	NDA160	N1	2-BUTANONE (MEK)	10	U	R	10	2	ug/kg	IC
SB	NDA162	N1	2-BUTANONE (MEK)	11	U	R	11	2	ug/kg	IC
SB	NDA163FD1	FD1	2-BUTANONE (MEK)	12	U	R	12	2	ug/kg	IC
SB	NDA165	N1	2-BUTANONE (MEK)	10	U	R	10	2	ug/kg	CC
SB	NDA165DL1	LR	2-BUTANONE (MEK)	1180	U	R	1180	201	ug/kg	DL
SB	NDA167	N1	2-BUTANONE (MEK)	10	U	R	10	2	ug/kg	CC
SB	NDA169	N1	2-BUTANONE (MEK)	10	U	R	10	2	ug/kg	CC
SB	NDA171	N1	2-BUTANONE (MEK)	11	U	R	11	2	ug/kg	CC
SB	NDA173	N1	2-BUTANONE (MEK)	11	U	R	11	2	ug/kg	CC
SB	NDA175	N1	2-BUTANONE (MEK)	10	U	R	10	2	ug/kg	CC
SB	NDA177	N1	2-BUTANONE (MEK)	10	U	R	10	2	ug/kg	CC
SB	NDA213	N1	2-BUTANONE (MEK)	12	U	R	12	2	ug/kg	CC
SB	NDA214FD1	FD1	2-BUTANONE (MEK)	10	U	R	10	2	ug/kg	IC
SB	NDA215	N1	2-BUTANONE (MEK)	11	U	R	11	2	ug/kg	IC
SB	NDA216	N1	2-BUTANONE (MEK)	10	U	R	10	2	ug/kg	IC
SB	NDA217	N1	2-BUTANONE (MEK)	12	U	R	12	2	ug/kg	IC
SB	NDA218	N1	2-BUTANONE (MEK)	10	U	R	10	2	ug/kg	IC
SB	NDA219	N1	2-BUTANONE (MEK)	11	U	R	11	2	ug/kg	IC
SB	NDA220	N1	2-BUTANONE (MEK)	12	U	R	12	2	ug/kg	IC
SB	NDA221	N1	2-BUTANONE (MEK)	10	U	R	10	2	ug/kg	IC
SB	NDA222	N1	2-BUTANONE (MEK)	10	U	R	10	2	ug/kg	IC
SB	NDA223	N1	2-BUTANONE (MEK)	10	U	R	10	2	ug/kg	IC
SB	NDA224	N1	2-BUTANONE (MEK)	10	U	R	10	2	ug/kg	CC
SB	NDA225	N1	2-BUTANONE (MEK)	11	U	R	11	2	ug/kg	CC
SB	NDA226	N1	2-BUTANONE (MEK)	11	U	R	11	2	ug/kg	CC
SB	NDA227FD1	FD1	2-BUTANONE (MEK)	10	U	R	10	2	ug/kg	CC
SB	NDA228	N1	2-BUTANONE (MEK)	11	U	R	11	2	ug/kg	CC
SB	NDA229	N1	2-BUTANONE (MEK)	12	U	R	12	2	ug/kg	CC
SB	NDA230	N1	2-BUTANONE (MEK)	10	U	R	10	2	ug/kg	CC
SB	NDA231	N1	2-BUTANONE (MEK)	10	U	R	10	2	ug/kg	CC
SB	NDA232	N1	2-BUTANONE (MEK)	10	U	R	10	1	ug/kg	CC
SB	NDA233	N1	2-BUTANONE (MEK)	10	U	R	10	2	ug/kg	CC
SB	NDA234	N1	2-BUTANONE (MEK)	10	U	R	10	2	ug/kg	CC
SB	NDA235	N1	2-BUTANONE (MEK)	12	U	R	12	2	ug/kg	CC
SB	NDA236	N1	2-BUTANONE (MEK)	10	U	R	10	2	ug/kg	CC
SB	NDA237FD1	FD1	2-BUTANONE (MEK)	11	U	R	11	2	ug/kg	CC
SB	NDA238	N1	2-BUTANONE (MEK)	10	U	R	10	2	ug/kg	CC
SB	NDA239	N1	2-BUTANONE (MEK)	11	U	R	11	2	ug/kg	CC
SB	NDA240	N1	2-BUTANONE (MEK)	12	U	R	12	2	ug/kg	CC
SB	NDA241	N1	2-BUTANONE (MEK)	10	U	R	10	2	ug/kg	CC
SB	NDA242	N1	2-BUTANONE (MEK)	10	U	R	10	2	ug/kg	CC
SB	NDA243	N1	2-BUTANONE (MEK)	10	U	R	10	2	ug/kg	CC
SB	NDA244	N1	2-BUTANONE (MEK)	11	U	R	11	2	ug/kg	CC
SB	NDA248	N1	2-BUTANONE (MEK)	11	U	R	11	2	ug/kg	CC

Matrix	Sample ID	Sample Type	Parameter	Lab Result	Lab Qual	Final Qual	RL	DL	Units	Comment
SB	NDA253	N1	2-BUTANONE (MEK)	11	U	R	11	2	ug/kg	CC
SB	NDA254	N1	2-BUTANONE (MEK)	11	U	R	11	2	ug/kg	CC
SB	NDA255	N1	2-BUTANONE (MEK)	10	U	R	10	2	ug/kg	CC
SB	NDA087	N1	2-BUTANONE (MEK)	10	U	R	10	2	ug/kg	CC
SB	NDA089	N1	2-BUTANONE (MEK)	10	U	R	10	2	ug/kg	CC
SB	NDA096DL1	LR	2-BUTANONE (MEK)	917	U	R	917	156	ug/kg	DL
SB	NDA097DL1	LR	2-BUTANONE (MEK)	990	U	R	990	168	ug/kg	DL
SB	NDA099	N1	2-BUTANONE (MEK)	10	U	R	10	2	ug/kg	CC
SB	NDA296	N1	2-BUTANONE (MEK)	10	U	R	10	2	ug/kg	CC
SB	NDA296DL1	LR	2-BUTANONE (MEK)	1040	U	R	1040	177	ug/kg	DL
SB	NDA297DL1	LR	2-BUTANONE (MEK)	1030	U	R	1030	174	ug/kg	DL
SB	NDA298	N1	2-BUTANONE (MEK)	11	U	R	11	2	ug/kg	CC
SB	NDA298DL1	LR	2-BUTANONE (MEK)	1090	U	R	1090	185	ug/kg	DL
SB	NDA299	N1	2-BUTANONE (MEK)	11	U	R	11	2	ug/kg	CC
SB	NDA058	N1	2-BUTANONE (MEK)	10	U	R	10	1	ug/kg	CC
SB	NDA063	N1	2-BUTANONE (MEK)	11	U	R	11	2	ug/kg	CC
SB	NDA064FD1	FD1	2-BUTANONE (MEK)	10	U	R	10	2	ug/kg	CC
SB	NDA066	N1	2-BUTANONE (MEK)	10	U	R	10	2	ug/kg	CC
SB	NDA066DL1	LR	2-BUTANONE (MEK)	1190	U	R	1190	203	ug/kg	DL
SB	NDA068	N1	2-BUTANONE (MEK)	11	U	R	11	2	ug/kg	CC
SB	NDA070	N1	2-BUTANONE (MEK)	10	U	R	10	1	ug/kg	CC
SB	NDA073	N1	2-BUTANONE (MEK)	10	U	R	10	2	ug/kg	CC
SB	NDA075	N1	2-BUTANONE (MEK)	10	U	R	10	2	ug/kg	CC
SB	NDA077	N1	2-BUTANONE (MEK)	10	U	R	10	2	ug/kg	CC
SB	NDA079	N1	2-BUTANONE (MEK)	10	U	R	10	2	ug/kg	CC
SB	NDA081	N1	2-BUTANONE (MEK)	10	U	R	10	2	ug/kg	CC
SB	NDA083	N1	2-BUTANONE (MEK)	10	U	R	10	2	ug/kg	CC
SB	NDA114	N1	2-BUTANONE (MEK)	11	U	R	11	2	ug/kg	CC
SB	NDA116	N1	2-BUTANONE (MEK)	11	U	R	11	2	ug/kg	CC
SB	NDA118	N1	2-BUTANONE (MEK)	12	U	R	12	2	ug/kg	CC
SB	NDA105	N1	2-BUTANONE (MEK)	17	U	R	17	3	ug/kg	CC
SB	NDA106FD1	FD1	2-BUTANONE (MEK)	16	U	R	16	3	ug/kg	CC
SB	NDA108	N1	2-BUTANONE (MEK)	13	U	R	13	2	ug/kg	CC
SB	NDA110	N1	2-BUTANONE (MEK)	11	U	R	11	2	ug/kg	CC
SB	NDA112	N1	2-BUTANONE (MEK)	11	U	R	11	2	ug/kg	CC
SD	NDA050	N1	2-BUTANONE (MEK)	2160	U	R	2160	369	ug/kg	CC
SD	NDA051FD1	FD1	2-BUTANONE (MEK)	23	U	R	23	4	ug/kg	CC
SD	L1	LR	2-BUTANONE (MEK)	2250	U	R	2250	381	ug/kg	DL
SD	NDA052DL1	LR	2-BUTANONE (MEK)	2480	U	R	2480	422	ug/kg	DL
SD	NDA053DL1	LR	2-BUTANONE (MEK)	1520	U	R	1520	259	ug/kg	DL
SD	NDA054	N1	2-BUTANONE (MEK)	15	U	R	15	3	ug/kg	IC
SD	NDA055	N1	2-BUTANONE (MEK)	10	U	R	10	2	ug/kg	IC
SD	NDA045	N1	2-BUTANONE (MEK)	36	U	R	36	6	ug/kg	CC
SD	NDA302	N1	2-BUTANONE (MEK)	26	U	R	26	4	ug/kg	CC
SD	NDA047	N1	2-BUTANONE (MEK)	10	U	R	10	2	ug/kg	CC
SD	NDA047DL1	LR	2-BUTANONE (MEK)	858	U	R	858	147	ug/kg	DL
SD	NDA048	N1	2-BUTANONE (MEK)	13	U	R	13	2	ug/kg	CC
SD	NDA048DL1	LR	2-BUTANONE (MEK)	1200	U	R	1200	205	ug/kg	DL
SD	NDA049	N1	2-BUTANONE (MEK)	11	U	R	11	2	ug/kg	CC
SD	NDA049DL1	LR	2-BUTANONE (MEK)	1120	U	R	1120	190	ug/kg	DL
SS	NDA125	N1	2-BUTANONE (MEK)	18	U	R	18	3	ug/kg	IC
SS	NDA127	N1	2-BUTANONE (MEK)	10	U	R	10	2	ug/kg	IC
SS	NDA128FD1	FD1	2-BUTANONE (MEK)	17	U	R	17	3	ug/kg	IC
SS	NDA131	N1	2-BUTANONE (MEK)	12	U	R	12	2	ug/kg	IC
SS	NDA131DL1	LR	2-BUTANONE (MEK)	1200	U	R	1200	204	ug/kg	DL
SS	NDA133	N1	2-BUTANONE (MEK)	16	U	R	16	3	ug/kg	IC
SS	NDA135	N1	2-BUTANONE (MEK)	14	U	R	14	2	ug/kg	IC
SS	NDA137	N1	2-BUTANONE (MEK)	11	U	R	11	2	ug/kg	IC
SS	NDA139	N1	2-BUTANONE (MEK)	11	U	R	11	2	ug/kg	IC
SS	NDA141	N1	2-BUTANONE (MEK)	14	U	R	14	2	ug/kg	IC
SS	NDA143	N1	2-BUTANONE (MEK)	10	U	R	10	2	ug/kg	IC
SS	NDA145	N1	2-BUTANONE (MEK)	13	U	R	13	2	ug/kg	IC
SS	NDA147	N1	2-BUTANONE (MEK)	11	U	R	11	2	ug/kg	IC

Matrix	Sample ID	Sample Type	Parameter	Lab Result	Lab Qual	Final Qual	RL	DL	Units	Comment
SS	NDA149	N1	2-BUTANONE (MEK)	11	U	R	11	2	ug/kg	IC
SS	NDA149DL1	LR	2-BUTANONE (MEK)	1130	U	R	1130	193	ug/kg	DL
SS	NDA150FD1	FD1	2-BUTANONE (MEK)	12	U	R	12	2	ug/kg	IC
SS	L1	LR	2-BUTANONE (MEK)	964	U	R	964	165	ug/kg	DL
SS	E1	LR	2-BUTANONE (MEK)	11	U	R	11	2	ug/kg	RE
SS	NDA153	N1	2-BUTANONE (MEK)	12	U	R	12	2	ug/kg	IC
SS	NDA155	N1	2-BUTANONE (MEK)	11	U	R	11	2	ug/kg	IC
SS	NDA157	N1	2-BUTANONE (MEK)	11	U	R	11	2	ug/kg	IC
SS	NDA159	N1	2-BUTANONE (MEK)	14	U	R	14	2	ug/kg	IC
SS	NDA161	N1	2-BUTANONE (MEK)	11	U	R	11	2	ug/kg	IC
SS	NDA164	N1	2-BUTANONE (MEK)	13	U	R	13	2	ug/kg	CC
SS	NDA166	N1	2-BUTANONE (MEK)	11	U	R	11	2	ug/kg	CC
SS	NDA166DL1	LR	2-BUTANONE (MEK)	1110	U	R	1110	190	ug/kg	DL
SS	NDA168	N1	2-BUTANONE (MEK)	20	U	R	20	3	ug/kg	CC
SS	NDA170	N1	2-BUTANONE (MEK)	16	U	R	16	3	ug/kg	CC
SS	NDA172	N1	2-BUTANONE (MEK)	10	U	R	10	2	ug/kg	CC
SS	NDA174	N1	2-BUTANONE (MEK)	10	U	R	10	2	ug/kg	CC
SS	NDA176DL1	LR	2-BUTANONE (MEK)	1480	U	R	1480	252	ug/kg	DL
SS	NDA196	N1	2-BUTANONE (MEK)	10	U	R	10	2	ug/kg	CC
SS	NDA196DL1	LR	2-BUTANONE (MEK)	937	U	R	937	159	ug/kg	DL
SS	NDA197FD1	FD1	2-BUTANONE (MEK)	12	U	R	12	2	ug/kg	CC
SS	L1	LR	2-BUTANONE (MEK)	1820	U	R	1820	309	ug/kg	DL
SS	NDA198	N1	2-BUTANONE (MEK)	11	U	R	11	2	ug/kg	CC
SS	NDA198DL1	LR	2-BUTANONE (MEK)	1160	U	R	1160	196	ug/kg	DL
SS	NDA199	N1	2-BUTANONE (MEK)	14	U	R	14	2	ug/kg	CC
SS	NDA200	N1	2-BUTANONE (MEK)	12	U	R	12	2	ug/kg	CC
SS	NDA200DL1	LR	2-BUTANONE (MEK)	1220	U	R	1220	208	ug/kg	DL
SS	NDA178	N1	2-BUTANONE (MEK)	10	U	R	10	2	ug/kg	CC
SS	NDA179	N1	2-BUTANONE (MEK)	11	U	R	11	2	ug/kg	CC
SS	NDA180	N1	2-BUTANONE (MEK)	11	U	R	11	2	ug/kg	CC
SS	NDA181	N1	2-BUTANONE (MEK)	11	U	R	11	2	ug/kg	CC
SS	NDA182	N1	2-BUTANONE (MEK)	14	U	R	14	2	ug/kg	CC
SS	NDA183	N1	2-BUTANONE (MEK)	12	U	R	12	2	ug/kg	CC
SS	NDA184FD1	FD1	2-BUTANONE (MEK)	11	U	R	11	2	ug/kg	CC
SS	NDA201	N1	2-BUTANONE (MEK)	19	U	R	19	3	ug/kg	CC
SS	NDA202	N1	2-BUTANONE (MEK)	14	U	R	14	2	ug/kg	CC
SS	NDA203	N1	2-BUTANONE (MEK)	11	U	R	11	2	ug/kg	CC
SS	NDA204	N1	2-BUTANONE (MEK)	14	U	R	14	2	ug/kg	CC
SS	NDA204DL1	LR	2-BUTANONE (MEK)	1350	U	R	1350	230	ug/kg	DL
SS	NDA205FD1	FD1	2-BUTANONE (MEK)	12	U	R	12	2	ug/kg	CC
SS	L1	LR	2-BUTANONE (MEK)	1380	U	R	1380	234	ug/kg	DL
SS	NDA206	N1	2-BUTANONE (MEK)	11	U	R	11	2	ug/kg	CC
SS	NDA206DL1	LR	2-BUTANONE (MEK)	1430	U	R	1430	244	ug/kg	DL
SS	NDA207	N1	2-BUTANONE (MEK)	12	U	R	12	2	ug/kg	CC
SS	NDA207DL1	LR	2-BUTANONE (MEK)	1290	U	R	1290	220	ug/kg	DL
SS	NDA208	N1	2-BUTANONE (MEK)	10	U	R	10	2	ug/kg	CC
SS	NDA209	N1	2-BUTANONE (MEK)	16	U	R	16	3	ug/kg	CC
SS	NDA210	N1	2-BUTANONE (MEK)	11	U	R	11	2	ug/kg	CC
SS	NDA211	N1	2-BUTANONE (MEK)	11	U	R	11	2	ug/kg	CC
SS	NDA212	N1	2-BUTANONE (MEK)	14	U	R	14	2	ug/kg	CC
SS	NDA185	N1	2-BUTANONE (MEK)	12	U	R	12	2	ug/kg	CC
SS	NDA186	N1	2-BUTANONE (MEK)	10	U	R	10	2	ug/kg	CC
SS	NDA187	N1	2-BUTANONE (MEK)	10	U	R	10	2	ug/kg	CC
SS	NDA188	N1	2-BUTANONE (MEK)	13	U	R	13	2	ug/kg	CC
SS	NDA189	N1	2-BUTANONE (MEK)	10	U	R	10	2	ug/kg	CC
SS	NDA190	N1	2-BUTANONE (MEK)	11	U	R	11	2	ug/kg	CC
SS	NDA191	N1	2-BUTANONE (MEK)	10	U	R	10	2	ug/kg	CC
SS	NDA192FD1	FD1	2-BUTANONE (MEK)	11	U	R	11	2	ug/kg	CC
SS	NDA193	N1	2-BUTANONE (MEK)	10	U	R	10	2	ug/kg	CC
SS	NDA194	N1	2-BUTANONE (MEK)	11	U	R	11	2	ug/kg	CC
SS	NDA195	N1	2-BUTANONE (MEK)	10	U	R	10	1	ug/kg	CC
SS	NDA086	N1	2-BUTANONE (MEK)	11	U	R	11	2	ug/kg	CC
SS	NDA088	N1	2-BUTANONE (MEK)	10	U	R	10	2	ug/kg	CC

Matrix	Sample ID	Sample Type	Parameter	Lab Result	Lab Qual	Final Qual	RL	DL	Units	Comment
SS	NDA091	N1	2-BUTANONE (MEK)	11	U	R	11	2	ug/kg	CC
SS	NDA057	N1	2-BUTANONE (MEK)	10	U	R	10	2	ug/kg	CC
SS	NDA059	N1	2-BUTANONE (MEK)	11	U	R	11	2	ug/kg	CC
SS	NDA059DL1	LR	2-BUTANONE (MEK)	1170	U	R	1170	199	ug/kg	DL
SS	NDA061	N1	2-BUTANONE (MEK)	12	U	R	12	2	ug/kg	CC
SS	NDA062FD1	FD1	2-BUTANONE (MEK)	12	U	R	12	2	ug/kg	CC
SS	NDA065	N1	2-BUTANONE (MEK)	12	U	R	12	2	ug/kg	CC
SS	NDA065DL1	LR	2-BUTANONE (MEK)	1220	U	R	1220	207	ug/kg	DL
SS	NDA067	N1	2-BUTANONE (MEK)	12	U	R	12	2	ug/kg	CC
SS	NDA069	N1	2-BUTANONE (MEK)	11	U	R	11	2	ug/kg	CC
SS	NDA069DL1	LR	2-BUTANONE (MEK)	1080	U	R	1080	184	ug/kg	DL
SS	NDA119	N1	2-BUTANONE (MEK)	12	U	R	12	2	ug/kg	CC
SS	NDA120	N1	2-BUTANONE (MEK)	16	U	R	16	3	ug/kg	CC
SS	NDA121	N1	2-BUTANONE (MEK)	10	U	R	10	2	ug/kg	CC
SS	NDA121DL1	LR	2-BUTANONE (MEK)	1130	U	R	1130	192	ug/kg	DL
SS	NDA122	N1	2-BUTANONE (MEK)	12	U	R	12	2	ug/kg	CC
SS	NDA123	N1	2-BUTANONE (MEK)	13	U	R	13	2	ug/kg	CC
SS	NDA123DL1	LR	2-BUTANONE (MEK)	1200	U	R	1200	204	ug/kg	DL
SS	NDA124	N1	2-BUTANONE (MEK)	11	U	R	11	2	ug/kg	CC
SS	NDA124DL1	LR	2-BUTANONE (MEK)	1000	U	R	1000	170	ug/kg	DL
SS	NDA072FD1	FD1	2-BUTANONE (MEK)	11	U	R	11	2	ug/kg	CC
SS	NDA074	N1	2-BUTANONE (MEK)	10	U	R	10	2	ug/kg	CC
SS	NDA076	N1	2-BUTANONE (MEK)	10	U	R	10	2	ug/kg	CC
SS	NDA078	N1	2-BUTANONE (MEK)	11	U	R	11	2	ug/kg	CC
SS	NDA080	N1	2-BUTANONE (MEK)	10	U	R	10	2	ug/kg	CC
SS	NDA082	N1	2-BUTANONE (MEK)	13	U	R	13	2	ug/kg	CC
SS	NDA113	N1	2-BUTANONE (MEK)	10	U	R	10	2	ug/kg	CC
SS	NDA115	N1	2-BUTANONE (MEK)	10	U	R	10	2	ug/kg	CC
SS	NDA117	N1	2-BUTANONE (MEK)	10	U	R	10	2	ug/kg	CC
SS	NDA103	N1	2-BUTANONE (MEK)	13	U	R	13	2	ug/kg	CC
SS	NDA104FD1	FD1	2-BUTANONE (MEK)	14	U	R	14	2	ug/kg	CC
SS	NDA107	N1	2-BUTANONE (MEK)	12	U	R	12	2	ug/kg	CC
SS	NDA109	N1	2-BUTANONE (MEK)	11	U	R	11	2	ug/kg	CC
SS	NDA111	N1	2-BUTANONE (MEK)	12	U	R	12	2	ug/kg	CC
SB	NDA165DL1	LR	4-METHYL-2-PENTANONE (MIBK)	1180	U	R	1180	153	ug/kg	DL
SB	NDA096DL1	LR	4-METHYL-2-PENTANONE (MIBK)	917	U	R	917	119	ug/kg	DL
SB	NDA097DL1	LR	4-METHYL-2-PENTANONE (MIBK)	990	U	R	990	129	ug/kg	DL
SB	NDA296DL1	LR	4-METHYL-2-PENTANONE (MIBK)	1040	U	R	1040	135	ug/kg	DL
SB	NDA297DL1	LR	4-METHYL-2-PENTANONE (MIBK)	1030	U	R	1030	133	ug/kg	DL
SB	NDA298DL1	LR	4-METHYL-2-PENTANONE (MIBK)	1090	U	R	1090	141	ug/kg	DL
SB	NDA066DL1	LR	4-METHYL-2-PENTANONE (MIBK)	1190	U	R	1190	155	ug/kg	DL
SD	L1	LR	4-METHYL-2-PENTANONE (MIBK)	2250	U	R	2250	291	ug/kg	DL
SD	NDA052DL1	LR	4-METHYL-2-PENTANONE (MIBK)	2480	U	R	2480	323	ug/kg	DL
SD	NDA053DL1	LR	4-METHYL-2-PENTANONE (MIBK)	1520	U	R	1520	198	ug/kg	DL
SD	NDA047DL1	LR	4-METHYL-2-PENTANONE (MIBK)	858	U	R	858	112	ug/kg	DL
SD	NDA048DL1	LR	4-METHYL-2-PENTANONE (MIBK)	1200	U	R	1200	157	ug/kg	DL
SD	NDA049DL1	LR	4-METHYL-2-PENTANONE (MIBK)	1120	U	R	1120	146	ug/kg	DL
SS	NDA131DL1	LR	4-METHYL-2-PENTANONE (MIBK)	1200	U	R	1200	156	ug/kg	DL
SS	NDA149DL1	LR	4-METHYL-2-PENTANONE (MIBK)	1130	U	R	1130	147	ug/kg	DL
SS	L1	LR	4-METHYL-2-PENTANONE (MIBK)	964	U	R	964	126	ug/kg	DL
SS	E1	LR	4-METHYL-2-PENTANONE (MIBK)	11	U	R	11	1	ug/kg	RE
SS	NDA166DL1	LR	4-METHYL-2-PENTANONE (MIBK)	1110	U	R	1110	145	ug/kg	DL
SS	NDA176DL1	LR	4-METHYL-2-PENTANONE (MIBK)	1480	U	R	1480	193	ug/kg	DL
SS	NDA196DL1	LR	4-METHYL-2-PENTANONE (MIBK)	937	U	R	937	122	ug/kg	DL
SS	L1	LR	4-METHYL-2-PENTANONE (MIBK)	1820	U	R	1820	237	ug/kg	DL
SS	NDA198DL1	LR	4-METHYL-2-PENTANONE (MIBK)	1160	U	R	1160	150	ug/kg	DL
SS	NDA200DL1	LR	4-METHYL-2-PENTANONE (MIBK)	1220	U	R	1220	159	ug/kg	DL
SS	NDA204DL1	LR	4-METHYL-2-PENTANONE (MIBK)	1350	U	R	1350	176	ug/kg	DL
SS	L1	LR	4-METHYL-2-PENTANONE (MIBK)	1380	U	R	1380	179	ug/kg	DL
SS	NDA206DL1	LR	4-METHYL-2-PENTANONE (MIBK)	1430	U	R	1430	186	ug/kg	DL
SS	NDA207DL1	LR	4-METHYL-2-PENTANONE (MIBK)	1290	U	R	1290	168	ug/kg	DL
SS	NDA059DL1	LR	4-METHYL-2-PENTANONE (MIBK)	1170	U	R	1170	152	ug/kg	DL
SS	NDA065DL1	LR	4-METHYL-2-PENTANONE (MIBK)	1220	U	R	1220	158	ug/kg	DL

Matrix	Sample ID	Sample Type	Parameter	Lab Result	Lab Qual	Final Qual	RL	DL	Units	Comment
SS	NDA069DL1	LR	4-METHYL-2-PENTANONE (MIBK)	1080	U	R	1080	141	ug/kg	DL
SS	NDA121DL1	LR	4-METHYL-2-PENTANONE (MIBK)	1130	U	R	1130	147	ug/kg	DL
SS	NDA123DL1	LR	4-METHYL-2-PENTANONE (MIBK)	1200	U	R	1200	156	ug/kg	DL
SS	NDA124DL1	LR	4-METHYL-2-PENTANONE (MIBK)	1000	U	R	1000	130	ug/kg	DL
SS	NDA078RE1	LR	TRINITROPHENYLNITRAMINE	133	U	R	133	35	ug/kg	RE
SS	NDA104FD1	FD1	TRINITROPHENYLNITRAMINE	355	U	R	355	92	ug/kg	SS
SB	NDA165DL1	LR	METHYLENE CHLORIDE	1180	U	R	1180	236	ug/kg	DL
SB	NDA096DL1	LR	METHYLENE CHLORIDE	917	U	R	917	183	ug/kg	DL
SB	NDA097DL1	LR	METHYLENE CHLORIDE	990	U	R	990	198	ug/kg	DL
SB	NDA296DL1	LR	METHYLENE CHLORIDE	1040	U	R	1040	208	ug/kg	DL
SB	NDA297DL1	LR	METHYLENE CHLORIDE	1030	U	R	1030	204	ug/kg	DL
SB	NDA298DL1	LR	METHYLENE CHLORIDE	1090	U	R	1090	217	ug/kg	DL
SB	NDA066DL1	LR	METHYLENE CHLORIDE	1190	U	R	1190	239	ug/kg	DL
SD	L1	LR	METHYLENE CHLORIDE	2250	U	R	2250	448	ug/kg	DL
SD	NDA052DL1	LR	METHYLENE CHLORIDE	2480	U	R	2480	497	ug/kg	DL
SD	NDA053DL1	LR	METHYLENE CHLORIDE	1520	U	R	1520	305	ug/kg	DL
SD	NDA047DL1	LR	METHYLENE CHLORIDE	858	U	R	858	172	ug/kg	DL
SD	NDA048DL1	LR	METHYLENE CHLORIDE	1200	U	R	1200	241	ug/kg	DL
SD	NDA049DL1	LR	METHYLENE CHLORIDE	1120	U	R	1120	224	ug/kg	DL
SS	NDA131DL1	LR	METHYLENE CHLORIDE	1200	U	R	1200	240	ug/kg	DL
SS	NDA149DL1	LR	METHYLENE CHLORIDE	1130	U	R	1130	227	ug/kg	DL
SS	L1	LR	METHYLENE CHLORIDE	964	U	R	964	194	ug/kg	DL
SS	E1	LR	METHYLENE CHLORIDE	11	U	R	11	2	ug/kg	RE
SS	NDA166DL1	LR	METHYLENE CHLORIDE	1110	U	R	1110	224	ug/kg	DL
SS	NDA176DL1	LR	METHYLENE CHLORIDE	1480	U	R	1480	297	ug/kg	DL
SS	NDA196DL1	LR	METHYLENE CHLORIDE	937	U	R	937	188	ug/kg	DL
SS	L1	LR	METHYLENE CHLORIDE	1820	U	R	1820	364	ug/kg	DL
SS	NDA198DL1	LR	METHYLENE CHLORIDE	1160	U	R	1160	231	ug/kg	DL
SS	NDA200DL1	LR	METHYLENE CHLORIDE	1220	U	R	1220	245	ug/kg	DL
SS	NDA204DL1	LR	METHYLENE CHLORIDE	1350	U	R	1350	270	ug/kg	DL
SS	L1	LR	METHYLENE CHLORIDE	1380	U	R	1380	275	ug/kg	DL
SS	NDA206DL1	LR	METHYLENE CHLORIDE	1430	U	R	1430	287	ug/kg	DL
SS	NDA207DL1	LR	METHYLENE CHLORIDE	1290	U	R	1290	259	ug/kg	DL
SS	NDA059DL1	LR	METHYLENE CHLORIDE	1170	U	R	1170	234	ug/kg	DL
SS	NDA065DL1	LR	METHYLENE CHLORIDE	1220	U	R	1220	244	ug/kg	DL
SS	NDA069DL1	LR	METHYLENE CHLORIDE	1080	U	R	1080	216	ug/kg	DL
SS	NDA121DL1	LR	METHYLENE CHLORIDE	1130	U	R	1130	226	ug/kg	DL
SS	NDA123DL1	LR	METHYLENE CHLORIDE	1200	U	R	1200	240	ug/kg	DL
SS	NDA124DL1	LR	METHYLENE CHLORIDE	1000	U	R	1000	200	ug/kg	DL
SB	NDA081	N1	NAPHTHALENE	393	U	R	393	29	ug/kg	RE
SB	NDA083	N1	NAPHTHALENE	424	U	R	424	31	ug/kg	RE
SS	NDA080	N1	NAPHTHALENE	407	U	R	407	30	ug/kg	RE
SS	NDA082	N1	NAPHTHALENE	466	U	R	466	34	ug/kg	RE
SB	NDA081	N1	NITROBENZENE	393	U	R	393	30	ug/kg	RE
SB	NDA083	N1	NITROBENZENE	424	U	R	424	33	ug/kg	RE
SS	NDA078RE1	LR	NITROBENZENE	133	U	R	133	34	ug/kg	RE
SS	NDA104FD1	FD1	NITROBENZENE	355	U	R	355	91	ug/kg	SS
SS	NDA080	N1	NITROBENZENE	407	U	R	407	31	ug/kg	RE
SS	NDA082	N1	NITROBENZENE	466	U	R	466	36	ug/kg	RE
SB	NDA081	N1	N-NITROSODI-n-PROPYLAMINE	393	U	R	393	28	ug/kg	RE
SB	NDA083	N1	N-NITROSODI-n-PROPYLAMINE	424	U	R	424	30	ug/kg	RE
SS	NDA080	N1	N-NITROSODI-n-PROPYLAMINE	407	U	R	407	29	ug/kg	RE
SS	NDA082	N1	N-NITROSODI-n-PROPYLAMINE	466	U	R	466	33	ug/kg	RE
SB	NDA081	N1	N-NITROSODIPHENYLAMINE	393	U	R	393	43	ug/kg	RE
SB	NDA083	N1	N-NITROSODIPHENYLAMINE	424	U	R	424	47	ug/kg	RE
SS	NDA080	N1	N-NITROSODIPHENYLAMINE	407	U	R	407	45	ug/kg	RE
SS	NDA082	N1	N-NITROSODIPHENYLAMINE	466	U	R	466	51	ug/kg	RE
SS	NDA078RE1	LR	TETRAZOCINE	1870	=	R	133	66	ug/kg	RE
SS	NDA104FD1	FD1	TETRAZOCINE	355	U	R	355	176	ug/kg	SS
SB	NDA165DL1	LR	O-XYLENE (1,2-DIMETHYLBENZENE)	1180	U	R	1180	26	ug/kg	DL
SB	NDA096DL1	LR	O-XYLENE (1,2-DIMETHYLBENZENE)	917	U	R	917	20	ug/kg	DL
SB	NDA097DL1	LR	O-XYLENE (1,2-DIMETHYLBENZENE)	990	U	R	990	22	ug/kg	DL
SB	NDA296DL1	LR	O-XYLENE (1,2-DIMETHYLBENZENE)	1040	U	R	1040	23	ug/kg	DL

Matrix	Sample ID	Sample Type	Parameter	Lab Result	Lab Qual	Final Qual	RL	DL	Units	Comment
SB	NDA297DL1	LR	O-XYLENE (1,2-DIMETHYLBENZENE)	1030	U	R	1030	22	ug/kg	DL
SB	NDA298DL1	LR	O-XYLENE (1,2-DIMETHYLBENZENE)	1090	U	R	1090	24	ug/kg	DL
SB	NDA066DL1	LR	O-XYLENE (1,2-DIMETHYLBENZENE)	1190	U	R	1190	26	ug/kg	DL
SD	L1	LR	O-XYLENE (1,2-DIMETHYLBENZENE)	2250	U	R	2250	49	ug/kg	DL
SD	NDA052DL1	LR	O-XYLENE (1,2-DIMETHYLBENZENE)	2480	U	R	2480	55	ug/kg	DL
SD	NDA053DL1	LR	O-XYLENE (1,2-DIMETHYLBENZENE)	1520	U	R	1520	34	ug/kg	DL
SD	NDA047DL1	LR	O-XYLENE (1,2-DIMETHYLBENZENE)	858	U	R	858	19	ug/kg	DL
SD	NDA048DL1	LR	O-XYLENE (1,2-DIMETHYLBENZENE)	1200	U	R	1200	26	ug/kg	DL
SD	NDA049DL1	LR	O-XYLENE (1,2-DIMETHYLBENZENE)	1120	U	R	1120	25	ug/kg	DL
SS	NDA131DL1	LR	O-XYLENE (1,2-DIMETHYLBENZENE)	1200	U	R	1200	26	ug/kg	DL
SS	NDA149DL1	LR	O-XYLENE (1,2-DIMETHYLBENZENE)	1130	U	R	1130	25	ug/kg	DL
SS	L1	LR	O-XYLENE (1,2-DIMETHYLBENZENE)	964	U	R	964	21	ug/kg	DL
SS	E1	LR	O-XYLENE (1,2-DIMETHYLBENZENE)	11	U	R	11	0.2	ug/kg	RE
SS	NDA166DL1	LR	O-XYLENE (1,2-DIMETHYLBENZENE)	1110	U	R	1110	25	ug/kg	DL
SS	NDA176DL1	LR	O-XYLENE (1,2-DIMETHYLBENZENE)	1480	U	R	1480	33	ug/kg	DL
SS	NDA196DL1	LR	O-XYLENE (1,2-DIMETHYLBENZENE)	937	U	R	937	21	ug/kg	DL
SS	L1	LR	O-XYLENE (1,2-DIMETHYLBENZENE)	1820	U	R	1820	40	ug/kg	DL
SS	NDA198DL1	LR	O-XYLENE (1,2-DIMETHYLBENZENE)	1160	U	R	1160	25	ug/kg	DL
SS	NDA200DL1	LR	O-XYLENE (1,2-DIMETHYLBENZENE)	1220	U	R	1220	27	ug/kg	DL
SS	NDA204DL1	LR	O-XYLENE (1,2-DIMETHYLBENZENE)	1350	U	R	1350	30	ug/kg	DL
SS	L1	LR	O-XYLENE (1,2-DIMETHYLBENZENE)	1380	U	R	1380	30	ug/kg	DL
SS	NDA206DL1	LR	O-XYLENE (1,2-DIMETHYLBENZENE)	1430	U	R	1430	32	ug/kg	DL
SS	NDA207DL1	LR	O-XYLENE (1,2-DIMETHYLBENZENE)	1290	U	R	1290	28	ug/kg	DL
SS	NDA059DL1	LR	O-XYLENE (1,2-DIMETHYLBENZENE)	1170	U	R	1170	26	ug/kg	DL
SS	NDA065DL1	LR	O-XYLENE (1,2-DIMETHYLBENZENE)	1220	U	R	1220	27	ug/kg	DL
SS	NDA069DL1	LR	O-XYLENE (1,2-DIMETHYLBENZENE)	1080	U	R	1080	24	ug/kg	DL
SS	NDA121DL1	LR	O-XYLENE (1,2-DIMETHYLBENZENE)	1130	U	R	1130	25	ug/kg	DL
SS	NDA123DL1	LR	O-XYLENE (1,2-DIMETHYLBENZENE)	1200	U	R	1200	26	ug/kg	DL
SS	NDA124DL1	LR	O-XYLENE (1,2-DIMETHYLBENZENE)	1000	U	R	1000	22	ug/kg	DL
SB	NDA114DL1	LR	p,p'-DDD	8.2	J	R	86	6	ug/kg	DL
SS	NDA125DL1	LR	p,p'-DDD	39	U	R	39	2.71	ug/kg	DL
SS	NDA137DL1	LR	p,p'-DDD	7.1	U	R	7.1	0.49	ug/kg	DL
SS	NDA113DL1	LR	p,p'-DDD	2.8	J	R	8.2	0.57	ug/kg	DL
SB	NDA114DL1	LR	p,p'-DDE	316	=	R	86	8.8	ug/kg	DL
SS	NDA125	N1	p,p'-DDE	323	E	R	3.9	0.4	ug/kg	LR
SS	NDA137DL1	LR	p,p'-DDE	48	=	R	7.1	0.72	ug/kg	DL
SS	NDA113DL1	LR	p,p'-DDE	75	=	R	8.2	0.83	ug/kg	DL
SB	NDA114DL1	LR	p,p'-DDT	15	J	R	86	10	ug/kg	DL
SS	NDA125	N1	p,p'-DDT	140	E	R	3.9	0.46	ug/kg	LR
SS	NDA137DL1	LR	p,p'-DDT	28	=	R	7.1	0.83	ug/kg	DL
SS	NDA113DL1	LR	p,p'-DDT	22	=	R	8.2	0.96	ug/kg	DL
SB	NDA081	N1	PENTACHLOROPHENOL	1180	U	R	1180	22	ug/kg	RE
SB	NDA083	N1	PENTACHLOROPHENOL	1270	U	R	1270	23	ug/kg	RE
SS	NDA080	N1	PENTACHLOROPHENOL	1220	U	R	1220	22	ug/kg	RE
SS	NDA082	N1	PENTACHLOROPHENOL	1400	U	R	1400	26	ug/kg	RE
SB	NDA081	N1	PHENANTHRENE	393	U	R	393	23	ug/kg	RE
SB	NDA083	N1	PHENANTHRENE	424	U	R	424	25	ug/kg	RE
SS	NDA080	N1	PHENANTHRENE	407	U	R	407	24	ug/kg	RE
SS	NDA082	N1	PHENANTHRENE	466	U	R	466	27	ug/kg	RE
SB	NDA081	N1	PHENOL	393	U	R	393	25	ug/kg	RE
SB	NDA083	N1	PHENOL	424	U	R	424	27	ug/kg	RE
SS	NDA080	N1	PHENOL	407	U	R	407	26	ug/kg	RE
SS	NDA082	N1	PHENOL	466	U	R	466	30	ug/kg	RE
SB	NDA081	N1	PYRENE	393	U	R	393	22	ug/kg	RE
SB	NDA083	N1	PYRENE	424	U	R	424	24	ug/kg	RE
SS	NDA080	N1	PYRENE	407	U	R	407	23	ug/kg	RE
SS	NDA082	N1	PYRENE	466	U	R	466	26	ug/kg	RE
SB	NDA165DL1	LR	STYRENE	1180	U	R	1180	24	ug/kg	DL
SB	NDA096DL1	LR	STYRENE	917	U	R	917	18	ug/kg	DL
SB	NDA097DL1	LR	STYRENE	990	U	R	990	20	ug/kg	DL
SB	NDA296DL1	LR	STYRENE	1040	U	R	1040	21	ug/kg	DL
SB	NDA297DL1	LR	STYRENE	1030	U	R	1030	20	ug/kg	DL
SB	NDA298DL1	LR	STYRENE	1090	U	R	1090	22	ug/kg	DL

Matrix	Sample ID	Sample Type	Parameter	Lab Result	Lab Qual	Final Qual	RL	DL	Units	Comment
SB	NDA066DL1	LR	STYRENE	1190	U	R	1190	24	ug/kg	DL
SD	L1	LR	STYRENE	2250	U	R	2250	45	ug/kg	DL
SD	NDA052DL1	LR	STYRENE	2480	U	R	2480	50	ug/kg	DL
SD	NDA053DL1	LR	STYRENE	1520	U	R	1520	30	ug/kg	DL
SD	NDA047DL1	LR	STYRENE	858	U	R	858	17	ug/kg	DL
SD	NDA048DL1	LR	STYRENE	1200	U	R	1200	24	ug/kg	DL
SD	NDA049DL1	LR	STYRENE	1120	U	R	1120	22	ug/kg	DL
SS	NDA131DL1	LR	STYRENE	1200	U	R	1200	24	ug/kg	DL
SS	NDA149DL1	LR	STYRENE	1130	U	R	1130	23	ug/kg	DL
SS	L1	LR	STYRENE	964	U	R	964	19	ug/kg	DL
SS	E1	LR	STYRENE	11	U	R	11	0.2	ug/kg	RE
SS	NDA166DL1	LR	STYRENE	1110	U	R	1110	22	ug/kg	DL
SS	NDA176DL1	LR	STYRENE	1480	U	R	1480	30	ug/kg	DL
SS	NDA196DL1	LR	STYRENE	937	U	R	937	19	ug/kg	DL
SS	L1	LR	STYRENE	1820	U	R	1820	36	ug/kg	DL
SS	NDA198DL1	LR	STYRENE	1160	U	R	1160	23	ug/kg	DL
SS	NDA200DL1	LR	STYRENE	1220	U	R	1220	24	ug/kg	DL
SS	NDA204DL1	LR	STYRENE	1350	U	R	1350	27	ug/kg	DL
SS	L1	LR	STYRENE	1380	U	R	1380	28	ug/kg	DL
SS	NDA206DL1	LR	STYRENE	1430	U	R	1430	29	ug/kg	DL
SS	NDA207DL1	LR	STYRENE	1290	U	R	1290	26	ug/kg	DL
SS	NDA059DL1	LR	STYRENE	1170	U	R	1170	23	ug/kg	DL
SS	NDA065DL1	LR	STYRENE	1220	U	R	1220	24	ug/kg	DL
SS	NDA069DL1	LR	STYRENE	1080	U	R	1080	22	ug/kg	DL
SS	NDA121DL1	LR	STYRENE	1130	U	R	1130	23	ug/kg	DL
SS	NDA123DL1	LR	STYRENE	1200	U	R	1200	24	ug/kg	DL
SS	NDA124DL1	LR	STYRENE	1000	U	R	1000	20	ug/kg	DL
SB	NDA165DL1	LR	TETRACHLOROETHYLENE(PCE)	1180	U	R	1180	63	ug/kg	DL
SB	NDA096DL1	LR	TETRACHLOROETHYLENE(PCE)	917	U	R	917	49	ug/kg	DL
SB	NDA097DL1	LR	TETRACHLOROETHYLENE(PCE)	990	U	R	990	52	ug/kg	DL
SB	NDA296DL1	LR	TETRACHLOROETHYLENE(PCE)	1040	U	R	1040	55	ug/kg	DL
SB	NDA297DL1	LR	TETRACHLOROETHYLENE(PCE)	1030	U	R	1030	54	ug/kg	DL
SB	NDA298DL1	LR	TETRACHLOROETHYLENE(PCE)	1090	U	R	1090	58	ug/kg	DL
SB	NDA066DL1	LR	TETRACHLOROETHYLENE(PCE)	1190	U	R	1190	63	ug/kg	DL
SD	L1	LR	TETRACHLOROETHYLENE(PCE)	2250	U	R	2250	119	ug/kg	DL
SD	NDA052DL1	LR	TETRACHLOROETHYLENE(PCE)	2480	U	R	2480	132	ug/kg	DL
SD	NDA053DL1	LR	TETRACHLOROETHYLENE(PCE)	1520	U	R	1520	81	ug/kg	DL
SD	NDA047DL1	LR	TETRACHLOROETHYLENE(PCE)	858	U	R	858	46	ug/kg	DL
SD	NDA048DL1	LR	TETRACHLOROETHYLENE(PCE)	1200	U	R	1200	64	ug/kg	DL
SD	NDA049DL1	LR	TETRACHLOROETHYLENE(PCE)	1120	U	R	1120	59	ug/kg	DL
SS	NDA131DL1	LR	TETRACHLOROETHYLENE(PCE)	1200	U	R	1200	64	ug/kg	DL
SS	NDA149DL1	LR	TETRACHLOROETHYLENE(PCE)	1130	U	R	1130	60	ug/kg	DL
SS	L1	LR	TETRACHLOROETHYLENE(PCE)	964	U	R	964	51	ug/kg	DL
SS	E1	LR	TETRACHLOROETHYLENE(PCE)	11	U	R	11	0.58	ug/kg	RE
SS	NDA166DL1	LR	TETRACHLOROETHYLENE(PCE)	1110	U	R	1110	59	ug/kg	DL
SS	NDA176DL1	LR	TETRACHLOROETHYLENE(PCE)	1480	U	R	1480	79	ug/kg	DL
SS	NDA196DL1	LR	TETRACHLOROETHYLENE(PCE)	937	U	R	937	50	ug/kg	DL
SS	L1	LR	TETRACHLOROETHYLENE(PCE)	1820	U	R	1820	96	ug/kg	DL
SS	NDA198DL1	LR	TETRACHLOROETHYLENE(PCE)	1160	U	R	1160	61	ug/kg	DL
SS	NDA200DL1	LR	TETRACHLOROETHYLENE(PCE)	1220	U	R	1220	65	ug/kg	DL
SS	NDA204DL1	LR	TETRACHLOROETHYLENE(PCE)	1350	U	R	1350	72	ug/kg	DL
SS	L1	LR	TETRACHLOROETHYLENE(PCE)	1380	U	R	1380	73	ug/kg	DL
SS	NDA206DL1	LR	TETRACHLOROETHYLENE(PCE)	1430	U	R	1430	76	ug/kg	DL
SS	NDA207DL1	LR	TETRACHLOROETHYLENE(PCE)	1290	U	R	1290	69	ug/kg	DL
SS	NDA059DL1	LR	TETRACHLOROETHYLENE(PCE)	1170	U	R	1170	62	ug/kg	DL
SS	NDA065DL1	LR	TETRACHLOROETHYLENE(PCE)	1220	U	R	1220	65	ug/kg	DL
SS	NDA069DL1	LR	TETRACHLOROETHYLENE(PCE)	1080	U	R	1080	57	ug/kg	DL
SS	NDA121DL1	LR	TETRACHLOROETHYLENE(PCE)	1130	U	R	1130	60	ug/kg	DL
SS	NDA123DL1	LR	TETRACHLOROETHYLENE(PCE)	1200	U	R	1200	64	ug/kg	DL
SS	NDA124DL1	LR	TETRACHLOROETHYLENE(PCE)	1000	U	R	1000	53	ug/kg	DL
SB	NDA165DL1	LR	TOLUENE	1180	U	R	1180	33	ug/kg	DL
SB	NDA096DL1	LR	TOLUENE	917	U	R	917	26	ug/kg	DL
SB	NDA097DL1	LR	TOLUENE	990	U	R	990	28	ug/kg	DL

Matrix	Sample ID	Sample Type	Parameter	Lab Result	Lab Qual	Final Qual	RL	DL	Units	Comment
SB	NDA296DL1	LR	TOLUENE	1040	U	R	1040	29	ug/kg	DL
SB	NDA297DL1	LR	TOLUENE	1030	U	R	1030	29	ug/kg	DL
SB	NDA298DL1	LR	TOLUENE	1090	U	R	1090	30	ug/kg	DL
SB	NDA066DL1	LR	TOLUENE	1190	U	R	1190	33	ug/kg	DL
SD	L1	LR	TOLUENE	2250	U	R	2250	63	ug/kg	DL
SD	NDA052DL1	LR	TOLUENE	2480	U	R	2480	70	ug/kg	DL
SD	NDA053DL1	LR	TOLUENE	1520	U	R	1520	43	ug/kg	DL
SD	NDA047DL1	LR	TOLUENE	858	U	R	858	24	ug/kg	DL
SD	NDA048DL1	LR	TOLUENE	1200	U	R	1200	34	ug/kg	DL
SD	NDA049DL1	LR	TOLUENE	1120	U	R	1120	31	ug/kg	DL
SS	NDA131DL1	LR	TOLUENE	1200	U	R	1200	34	ug/kg	DL
SS	NDA149DL1	LR	TOLUENE	1130	U	R	1130	32	ug/kg	DL
SS	L1	LR	TOLUENE	964	U	R	964	27	ug/kg	DL
SS	E1	LR	TOLUENE	11	U	R	11	0.31	ug/kg	RE
SS	NDA166DL1	LR	TOLUENE	1110	U	R	1110	31	ug/kg	DL
SS	NDA176DL1	LR	TOLUENE	1480	U	R	1480	42	ug/kg	DL
SS	NDA196DL1	LR	TOLUENE	937	U	R	937	26	ug/kg	DL
SS	L1	LR	TOLUENE	1820	U	R	1820	51	ug/kg	DL
SS	NDA198DL1	LR	TOLUENE	1160	U	R	1160	32	ug/kg	DL
SS	NDA200DL1	LR	TOLUENE	1220	U	R	1220	34	ug/kg	DL
SS	NDA204DL1	LR	TOLUENE	1350	U	R	1350	38	ug/kg	DL
SS	L1	LR	TOLUENE	1380	U	R	1380	39	ug/kg	DL
SS	NDA206DL1	LR	TOLUENE	1430	U	R	1430	40	ug/kg	DL
SS	NDA207DL1	LR	TOLUENE	1290	U	R	1290	36	ug/kg	DL
SS	NDA059DL1	LR	TOLUENE	1170	U	R	1170	33	ug/kg	DL
SS	NDA065DL1	LR	TOLUENE	1220	U	R	1220	34	ug/kg	DL
SS	NDA069DL1	LR	TOLUENE	1080	U	R	1080	30	ug/kg	DL
SS	NDA121DL1	LR	TOLUENE	1130	U	R	1130	32	ug/kg	DL
SS	NDA123DL1	LR	TOLUENE	1200	U	R	1200	34	ug/kg	DL
SS	NDA124DL1	LR	TOLUENE	1000	U	R	1000	28	ug/kg	DL
SB	NDA114DL1	LR	TOXAPHENE	4400	U	R	4400	408	ug/kg	DL
SS	NDA125DL1	LR	TOXAPHENE	2000	U	R	2000	185	ug/kg	DL
SS	NDA137DL1	LR	TOXAPHENE	361	U	R	361	33	ug/kg	DL
SS	NDA113DL1	LR	TOXAPHENE	418	U	R	418	39	ug/kg	DL
SB	NDA165DL1	LR	trans-1,3-DICHLOROPROPENE	1180	U	R	1180	32	ug/kg	DL
SB	NDA096DL1	LR	trans-1,3-DICHLOROPROPENE	917	U	R	917	25	ug/kg	DL
SB	NDA097DL1	LR	trans-1,3-DICHLOROPROPENE	990	U	R	990	27	ug/kg	DL
SB	NDA296DL1	LR	trans-1,3-DICHLOROPROPENE	1040	U	R	1040	28	ug/kg	DL
SB	NDA297DL1	LR	trans-1,3-DICHLOROPROPENE	1030	U	R	1030	28	ug/kg	DL
SB	NDA298DL1	LR	trans-1,3-DICHLOROPROPENE	1090	U	R	1090	29	ug/kg	DL
SB	NDA066DL1	LR	trans-1,3-DICHLOROPROPENE	1190	U	R	1190	32	ug/kg	DL
SD	L1	LR	trans-1,3-DICHLOROPROPENE	2250	U	R	2250	60	ug/kg	DL
SD	NDA052DL1	LR	trans-1,3-DICHLOROPROPENE	2480	U	R	2480	67	ug/kg	DL
SD	NDA053DL1	LR	trans-1,3-DICHLOROPROPENE	1520	U	R	1520	41	ug/kg	DL
SD	NDA047DL1	LR	trans-1,3-DICHLOROPROPENE	858	U	R	858	23	ug/kg	DL
SD	NDA048DL1	LR	trans-1,3-DICHLOROPROPENE	1200	U	R	1200	33	ug/kg	DL
SD	NDA049DL1	LR	trans-1,3-DICHLOROPROPENE	1120	U	R	1120	30	ug/kg	DL
SS	NDA131DL1	LR	trans-1,3-DICHLOROPROPENE	1200	U	R	1200	32	ug/kg	DL
SS	NDA149DL1	LR	trans-1,3-DICHLOROPROPENE	1130	U	R	1130	31	ug/kg	DL
SS	L1	LR	trans-1,3-DICHLOROPROPENE	964	U	R	964	26	ug/kg	DL
SS	E1	LR	trans-1,3-DICHLOROPROPENE	11	U	R	11	0.3	ug/kg	RE
SS	NDA166DL1	LR	trans-1,3-DICHLOROPROPENE	1110	U	R	1110	30	ug/kg	DL
SS	NDA176DL1	LR	trans-1,3-DICHLOROPROPENE	1480	U	R	1480	40	ug/kg	DL
SS	NDA196DL1	LR	trans-1,3-DICHLOROPROPENE	937	U	R	937	25	ug/kg	DL
SS	L1	LR	trans-1,3-DICHLOROPROPENE	1820	U	R	1820	49	ug/kg	DL
SS	NDA198DL1	LR	trans-1,3-DICHLOROPROPENE	1160	U	R	1160	31	ug/kg	DL
SS	NDA200DL1	LR	trans-1,3-DICHLOROPROPENE	1220	U	R	1220	33	ug/kg	DL
SS	NDA204DL1	LR	trans-1,3-DICHLOROPROPENE	1350	U	R	1350	37	ug/kg	DL
SS	L1	LR	trans-1,3-DICHLOROPROPENE	1380	U	R	1380	37	ug/kg	DL
SS	NDA206DL1	LR	trans-1,3-DICHLOROPROPENE	1430	U	R	1430	39	ug/kg	DL
SS	NDA207DL1	LR	trans-1,3-DICHLOROPROPENE	1290	U	R	1290	35	ug/kg	DL
SS	NDA059DL1	LR	trans-1,3-DICHLOROPROPENE	1170	U	R	1170	32	ug/kg	DL
SS	NDA065DL1	LR	trans-1,3-DICHLOROPROPENE	1220	U	R	1220	33	ug/kg	DL

Matrix	Sample ID	Sample Type	Parameter	Lab Result	Lab Qual	Final Qual	RL	DL	Units	Comment
SS	NDA069DL1	LR	trans-1,3-DICHLOROPROPENE	1080	U	R	1080	29	ug/kg	DL
SS	NDA121DL1	LR	trans-1,3-DICHLOROPROPENE	1130	U	R	1130	30	ug/kg	DL
SS	NDA123DL1	LR	trans-1,3-DICHLOROPROPENE	1200	U	R	1200	32	ug/kg	DL
SS	NDA124DL1	LR	trans-1,3-DICHLOROPROPENE	1000	U	R	1000	27	ug/kg	DL
SB	NDA165DL1	LR	TRICHLOROETHYLENE (TCE)	1180	U	R	1180	31	ug/kg	DL
SB	NDA096DL1	LR	TRICHLOROETHYLENE (TCE)	917	U	R	917	24	ug/kg	DL
SB	NDA097DL1	LR	TRICHLOROETHYLENE (TCE)	990	U	R	990	26	ug/kg	DL
SB	NDA296DL1	LR	TRICHLOROETHYLENE (TCE)	1040	U	R	1040	27	ug/kg	DL
SB	NDA297DL1	LR	TRICHLOROETHYLENE (TCE)	1030	U	R	1030	27	ug/kg	DL
SB	NDA298DL1	LR	TRICHLOROETHYLENE (TCE)	1090	U	R	1090	28	ug/kg	DL
SB	NDA066DL1	LR	TRICHLOROETHYLENE (TCE)	1190	U	R	1190	31	ug/kg	DL
SD	L1	LR	TRICHLOROETHYLENE (TCE)	2250	U	R	2250	58	ug/kg	DL
SD	NDA052DL1	LR	TRICHLOROETHYLENE (TCE)	2480	U	R	2480	65	ug/kg	DL
SD	NDA053DL1	LR	TRICHLOROETHYLENE (TCE)	1520	U	R	1520	40	ug/kg	DL
SD	NDA047DL1	LR	TRICHLOROETHYLENE (TCE)	858	U	R	858	22	ug/kg	DL
SD	NDA048DL1	LR	TRICHLOROETHYLENE (TCE)	1200	U	R	1200	31	ug/kg	DL
SD	NDA049DL1	LR	TRICHLOROETHYLENE (TCE)	1120	U	R	1120	29	ug/kg	DL
SS	NDA131DL1	LR	TRICHLOROETHYLENE (TCE)	1200	U	R	1200	31	ug/kg	DL
SS	NDA149DL1	LR	TRICHLOROETHYLENE (TCE)	1130	U	R	1130	29	ug/kg	DL
SS	L1	LR	TRICHLOROETHYLENE (TCE)	964	U	R	964	25	ug/kg	DL
SS	E1	LR	TRICHLOROETHYLENE (TCE)	0.3	J	R	11	0.28	ug/kg	RE
SS	NDA166DL1	LR	TRICHLOROETHYLENE (TCE)	1110	U	R	1110	29	ug/kg	DL
SS	NDA176DL1	LR	TRICHLOROETHYLENE (TCE)	1480	U	R	1480	39	ug/kg	DL
SS	NDA196DL1	LR	TRICHLOROETHYLENE (TCE)	937	U	R	937	24	ug/kg	DL
SS	L1	LR	TRICHLOROETHYLENE (TCE)	1820	U	R	1820	47	ug/kg	DL
SS	NDA198DL1	LR	TRICHLOROETHYLENE (TCE)	1160	U	R	1160	30	ug/kg	DL
SS	NDA200DL1	LR	TRICHLOROETHYLENE (TCE)	1220	U	R	1220	32	ug/kg	DL
SS	NDA204DL1	LR	TRICHLOROETHYLENE (TCE)	1350	U	R	1350	35	ug/kg	DL
SS	L1	LR	TRICHLOROETHYLENE (TCE)	1380	U	R	1380	36	ug/kg	DL
SS	NDA206DL1	LR	TRICHLOROETHYLENE (TCE)	1430	U	R	1430	37	ug/kg	DL
SS	NDA207DL1	LR	TRICHLOROETHYLENE (TCE)	1290	U	R	1290	34	ug/kg	DL
SS	NDA059DL1	LR	TRICHLOROETHYLENE (TCE)	1170	U	R	1170	30	ug/kg	DL
SS	NDA065DL1	LR	TRICHLOROETHYLENE (TCE)	1220	U	R	1220	32	ug/kg	DL
SS	NDA069DL1	LR	TRICHLOROETHYLENE (TCE)	1080	U	R	1080	28	ug/kg	DL
SS	NDA121DL1	LR	TRICHLOROETHYLENE (TCE)	1130	U	R	1130	29	ug/kg	DL
SS	NDA123DL1	LR	TRICHLOROETHYLENE (TCE)	1200	U	R	1200	31	ug/kg	DL
SS	NDA124DL1	LR	TRICHLOROETHYLENE (TCE)	1000	U	R	1000	26	ug/kg	DL
SB	NDA165DL1	LR	VINYL CHLORIDE	1180	U	R	1180	57	ug/kg	DL
SB	NDA096DL1	LR	VINYL CHLORIDE	917	U	R	917	44	ug/kg	DL
SB	NDA097DL1	LR	VINYL CHLORIDE	990	U	R	990	48	ug/kg	DL
SB	NDA296DL1	LR	VINYL CHLORIDE	1040	U	R	1040	50	ug/kg	DL
SB	NDA297DL1	LR	VINYL CHLORIDE	1030	U	R	1030	49	ug/kg	DL
SB	NDA298DL1	LR	VINYL CHLORIDE	1090	U	R	1090	52	ug/kg	DL
SB	NDA066DL1	LR	VINYL CHLORIDE	1190	U	R	1190	57	ug/kg	DL
SD	L1	LR	VINYL CHLORIDE	2250	U	R	2250	107	ug/kg	DL
SD	NDA052DL1	LR	VINYL CHLORIDE	2480	U	R	2480	119	ug/kg	DL
SD	NDA053DL1	LR	VINYL CHLORIDE	1520	U	R	1520	73	ug/kg	DL
SD	NDA047DL1	LR	VINYL CHLORIDE	858	U	R	858	41	ug/kg	DL
SD	NDA048DL1	LR	VINYL CHLORIDE	1200	U	R	1200	58	ug/kg	DL
SD	NDA049DL1	LR	VINYL CHLORIDE	1120	U	R	1120	54	ug/kg	DL
SS	NDA131DL1	LR	VINYL CHLORIDE	1200	U	R	1200	58	ug/kg	DL
SS	NDA149DL1	LR	VINYL CHLORIDE	1130	U	R	1130	54	ug/kg	DL
SS	L1	LR	VINYL CHLORIDE	964	U	R	964	46	ug/kg	DL
SS	E1	LR	VINYL CHLORIDE	11	U	R	11	0.53	ug/kg	RE
SS	NDA166DL1	LR	VINYL CHLORIDE	1110	U	R	1110	54	ug/kg	DL
SS	NDA176DL1	LR	VINYL CHLORIDE	1480	U	R	1480	71	ug/kg	DL
SS	NDA196DL1	LR	VINYL CHLORIDE	937	U	R	937	45	ug/kg	DL
SS	L1	LR	VINYL CHLORIDE	1820	U	R	1820	87	ug/kg	DL
SS	NDA198DL1	LR	VINYL CHLORIDE	1160	U	R	1160	55	ug/kg	DL
SS	NDA200DL1	LR	VINYL CHLORIDE	1220	U	R	1220	59	ug/kg	DL
SS	NDA204DL1	LR	VINYL CHLORIDE	1350	U	R	1350	65	ug/kg	DL
SS	L1	LR	VINYL CHLORIDE	1380	U	R	1380	66	ug/kg	DL
SS	NDA206DL1	LR	VINYL CHLORIDE	1430	U	R	1430	69	ug/kg	DL

Matrix	Sample ID	Sample Type	Parameter	Lab Result	Lab Qual	Final Qual	RL	DL	Units	Comment
SS	NDA207DL1	LR	VINYL CHLORIDE	1290	U	R	1290	62	ug/kg	DL
SS	NDA059DL1	LR	VINYL CHLORIDE	1170	U	R	1170	56	ug/kg	DL
SS	NDA065DL1	LR	VINYL CHLORIDE	1220	U	R	1220	58	ug/kg	DL
SS	NDA069DL1	LR	VINYL CHLORIDE	1080	U	R	1080	52	ug/kg	DL
SS	NDA121DL1	LR	VINYL CHLORIDE	1130	U	R	1130	54	ug/kg	DL
SS	NDA123DL1	LR	VINYL CHLORIDE	1200	U	R	1200	58	ug/kg	DL
SS	NDA124DL1	LR	VINYL CHLORIDE	1000	U	R	1000	48	ug/kg	DL
SB	NDA165DL1	LR	XYLENES, TOTAL	1180	U	R	1180	26	ug/kg	DL
SB	NDA096DL1	LR	XYLENES, TOTAL	121	J	R	917	20	ug/kg	DL
SB	NDA097DL1	LR	XYLENES, TOTAL	71	J	R	990	22	ug/kg	DL
SB	NDA296DL1	LR	XYLENES, TOTAL	1040	U	R	1040	23	ug/kg	DL
SB	NDA297DL1	LR	XYLENES, TOTAL	1030	U	R	1030	22	ug/kg	DL
SB	NDA298DL1	LR	XYLENES, TOTAL	1090	U	R	1090	24	ug/kg	DL
SB	NDA066DL1	LR	XYLENES, TOTAL	1190	U	R	1190	26	ug/kg	DL
SD	L1	LR	XYLENES, TOTAL	2250	U	R	2250	49	ug/kg	DL
SD	NDA052DL1	LR	XYLENES, TOTAL	2480	U	R	2480	55	ug/kg	DL
SD	NDA053DL1	LR	XYLENES, TOTAL	1520	U	R	1520	34	ug/kg	DL
SD	NDA047DL1	LR	XYLENES, TOTAL	858	U	R	858	19	ug/kg	DL
SD	NDA048DL1	LR	XYLENES, TOTAL	1200	U	R	1200	26	ug/kg	DL
SD	NDA049DL1	LR	XYLENES, TOTAL	1120	U	R	1120	25	ug/kg	DL
SS	NDA131DL1	LR	XYLENES, TOTAL	1200	U	R	1200	26	ug/kg	DL
SS	NDA149DL1	LR	XYLENES, TOTAL	1130	U	R	1130	25	ug/kg	DL
SS	L1	LR	XYLENES, TOTAL	964	U	R	964	21	ug/kg	DL
SS	E1	LR	XYLENES, TOTAL	11	U	R	11	0.2	ug/kg	RE
SS	NDA166DL1	LR	XYLENES, TOTAL	1110	U	R	1110	25	ug/kg	DL
SS	NDA176DL1	LR	XYLENES, TOTAL	1480	U	R	1480	33	ug/kg	DL
SS	NDA196DL1	LR	XYLENES, TOTAL	937	U	R	937	21	ug/kg	DL
SS	L1	LR	XYLENES, TOTAL	1820	U	R	1820	40	ug/kg	DL
SS	NDA198DL1	LR	XYLENES, TOTAL	1160	U	R	1160	25	ug/kg	DL
SS	NDA200DL1	LR	XYLENES, TOTAL	1220	U	R	1220	27	ug/kg	DL
SS	NDA204DL1	LR	XYLENES, TOTAL	1350	U	R	1350	30	ug/kg	DL
SS	L1	LR	XYLENES, TOTAL	1380	U	R	1380	30	ug/kg	DL
SS	NDA206DL1	LR	XYLENES, TOTAL	1430	U	R	1430	32	ug/kg	DL
SS	NDA207DL1	LR	XYLENES, TOTAL	1290	U	R	1290	28	ug/kg	DL
SS	NDA059DL1	LR	XYLENES, TOTAL	1170	U	R	1170	26	ug/kg	DL
SS	NDA065DL1	LR	XYLENES, TOTAL	1220	U	R	1220	27	ug/kg	DL
SS	NDA069DL1	LR	XYLENES, TOTAL	1080	U	R	1080	24	ug/kg	DL
SS	NDA121DL1	LR	XYLENES, TOTAL	1130	U	R	1130	25	ug/kg	DL
SS	NDA123DL1	LR	XYLENES, TOTAL	1200	U	R	1200	26	ug/kg	DL
SS	NDA124DL1	LR	XYLENES, TOTAL	1000	U	R	1000	22	ug/kg	DL
SW	NDA035	N1	ACETONE	10	U	R	10	10	ug/L	CC
SW	NDA036	N1	ACETONE	10	U	R	10	10	ug/L	CC
SW	NDA037	N1	ACETONE	10	U	R	10	10	ug/L	CC
SW	NDA038FD1	FD1	ACETONE	10	U	R	10	10	ug/L	CC
SW	NDA039	N1	ACETONE	10	U	R	10	10	ug/L	CC
SW	NDA040	N1	ACETONE	10	U	R	10	10	ug/L	CC
SW	NDA300	N1	ACETONE	10	U	R	10	10	ug/L	CC
SW	NDA301	N1	ACETONE	10	U	R	10	10	ug/L	CC
WG	NDA024	N1	ACETONE	5	U	R	5	5	ug/L	IC
WG	NDA025FD1	FD1	ACETONE	5	U	R	5	5	ug/L	IC

APPENDIX L

Background Soil and Groundwater Data

Background Soil and Groundwater Data from Hydrogeologic Investigation

PARAMETER	Soil 2xAverage	Soil Units	GW 2x Average	GW Units	Sample Date	Average Concentration Soil MG/KG	Groundwater MG/L
SILVER	ND	MG/KG	NS	MG/L		ND	
ALUMINUM	NS	MG/KG	NS	MG/L			
ARSENIC	2.0758	MG/KG	0.0086	MG/L	aug'99	1.0379	0.0043
BARIUM	167.1666	MG/KG	0.28	MG/L	aug'99	83.5833	0.14
BERYLLIUM	0.5828	MG/KG	0.00022	MG/L	aug'99	0.2914	0.00011
CALCIUM	5300	MG/KG	NS	MG/L		2650	
CADMIUM	0.3526	MG/KG	0.004	MG/L	aug'99	0.1763	0.002
COBALT	39.4056	MG/KG	0.02	MG/L	aug'99	19.7028	0.01
CHROMIUM, TOTAL	45.9222	MG/KG	0.02	MG/L	aug'99	22.9611	0.01
COPPER	147.7778	MG/KG	0.04	MG/L	aug'99	73.8889	0.02
IRON	9360	MG/KG	NS	MG/L		4680	
MERCURY	0.0388	MG/KG	ND	MG/L	aug'99	0.0194	ND
POTASSIUM	NS	MG/KG	NS	MG/L			
MAGNESIUM	2360	MG/KG	NS	MG/L		1180	
MANGANESE	2516.769596	MG/KG	NS	MG/L		1258.384798	
SODIUM	NS	MG/KG	NS	MG/L			
NICKEL	32.1834	MG/KG	0.02	MG/L	aug'99	16.0917	0.01
LEAD	4.1878	MG/KG	ND	MG/L	aug'99	2.0939	ND
ANTIMONY	1.7594	MG/KG	ND	MG/L	aug'99	0.8797	ND
SELENIUM	1.8458	MG/KG	0.02	MG/L	aug'99	0.9229	0.01
THALLIUM	ND	MG/KG	ND	MG/L	aug'99	ND	ND
VANADIUM	169.8888	MG/KG	0.04	MG/L	aug'99	84.9444	0.02
ZINC	132.1112	MG/KG	0.14	MG/L	aug'99	66.0556	0.07

ND = not detected
NS = not sampled

ANALYTICAL SUMMARY OF INORGANIC CONSTITUENTS
GROUNDWATER
VIEQUES ISLAND

SAMPLE ID	NAVY-1-GW	NAVY-3-GW	NAVY-4-GW	NAVY-5-GW	NAVY-6-GW	NAVY-7-GW	NAVY-8-GW	RCRA-1-GW	RCRA-2-GW	RCRA-2-GWD	RCRA-3-GW	RCRA-4-GW
LOG NUMBER	S915651-1	S915608-12	S915651-3	S915556B-29	S915556B-30	S915651-2	S915608-11	S915556B-6	S915556B-7	S915556B-8	S915556B-9	S915608-8
SAMPLE DATE	08/20/99	08/19/99	08/20/99	08/18/99	08/18/99	08/20/99	08/19/99	08/18/99	08/18/99	08/18/99	08/18/99	08/19/99
TOTAL METALS (mg/l)												
Antimony	0.02 U	0.02 U	0.02 U	0.02 U	0.02 U	0.02 U	0.02 U	0.02 U	0.02 U	0.02 U	0.02 U	0.02 U
Arsenic	0.01 U	0.01 U	0.01 U	0.01 U	0.01 U	0.01 U	0.0043 B	0.01 U	0.01 U	0.01 U	0.01 U	0.01 U
Barium	0.054	0.02	0.058	0.1	0.039	0.5	0.36	0.018	0.033	0.03	0.32	0.14
Beryllium	0.004 U	0.004 U	0.004 U	0.004 U	0.004 U	0.004 U	0.00011 B	0.004 U	0.004 U	0.004 U	0.004 U	0.004 U
Cadmium	0.005 U	0.005 U	0.005 U	0.005 U	0.005 U	0.005 U	0.002 B	0.005 U	0.005 U	0.005 U	0.005 U	0.005 U
Chromium	0.0041 B	0.0047 B	0.012	0.0044 B	0.00089 B	0.0032 B	0.054	0.01 U	0.01 U	0.01 U	0.01 U	0.0014 B
Cobalt	0.0057 B	0.01 U	0.01 U	0.01 U	0.01 U	0.01 U	0.024	0.01 U	0.01 U	0.01 U	0.01 U	0.01 U
Copper	0.024	0.014 B	0.0025 B	0.0062 B	0.0039 B	0.0039 B	0.2	0.0013 B	0.0014 B	0.0011 B	0.0011 B	0.0032 B
Lead	0.005 U	0.005 U	0.005 U	0.005 U	0.005 U	0.005 U	0.005 U	0.005 U	0.005 U	0.005 U	0.005 U	0.005 U
Mercury	0.0002 UN	0.0002 UN	0.0002 UN	0.0002 U	0.0002 U	0.0002 UN	0.0002 UN	0.0002 U	0.0002 U	0.0002 U	0.0002 U	0.0002 UN
Nickel	0.0073 B	0.0098 B	0.0011 B	0.015 B	0.0026 B	0.0013 B	0.033 B	0.04 U	0.04 U	0.04 U	0.04 U	0.0019 B
Selenium	0.0034 B	0.01 U	0.01 U	0.0063 B	0.01 U	0.01 U	0.0051 B	0.01 U	0.01 U	0.0057 B	0.01 U	0.01 U
Silver	0.01 U	0.01 U	0.01 U	0.01 U	0.01 U	0.01 U	0.01 U	0.01 U	0.01 U	0.01 U	0.01 U	0.01 U
Thallium	0.002 UN	0.002 UWM	0.002 UN	0.002 UW	0.002 U	0.002 UWN	*0.01 U	0.002 UW	0.002 UW	0.002 UW	0.002 U	0.002 U
Tin	0.0019 B	0.01 U	0.01 U	0.0028 B	0.01 U	0.01 U	0.0075 B	0.01 U	0.01 U	0.01 U	0.01 U	0.01 U
Vanadium	0.021	0.02	0.011	0.01 U	0.0075 B	0.0074 B	0.14	0.0022 B	0.012	0.012	0.0037 B	0.0075 B
Zinc	0.027	0.015 B	0.021	0.013 B	0.018 B	0.028	0.46	0.031	0.026	0.022	0.16 B	0.078

NOTES: B = Not detected substantially above the level reported in laboratory or field blanks.
U = Not detected. The associated number indicates approximate sample concentration necessary to be detected.
W = Post digestion spike for furnance AA analysis is out of control limits (85-115%),
while sample absorbance is less than 50% of spike absorbance.
N = Tentative identification. Consider present. Special methods may be needed to confirm its presence or absence in future sampling efforts.
M = Duplicate injection precision not met.
* = ICP detection level

mg/l = milligrams per liter

B = Not detected substantially above the level reported in laboratory or field blanks.
U = Not detected. The associated number indicates approximate sample concentration necessary to be detected.
W = Post digestion spike for furnance AA analysis is out of control limits (85-115%),
while sample absorbance is less than 50% of spike absorbance.
N = Tentative identification. Consider present. Special methods may be needed to confirm its presence or absence in future samplin

mg/l = milligrams per liter

ANALYTICAL SUMMARY OF INORGANIC CONSTITUENTS
SURFACE SOIL
VIEQUES

SUMMARY OF RESULTS - SS - AUGUST 1999 - EMA, VIEQUES, PUERTO RICO

SAMPLE ID	NAVY-1-SS	NAVY-3-SS	NAVY-3-SSD	NAVY-4-SS	NAVY-5-SS	NAVY-6-SS	NAVY-7-SS	NAVY-8-SS	RCRA-1-SS	RCRA-2-SS	RCRA-3-SS	RCRA-4-SS	SS-01	SS-02	SS-03	SS-04	SS-05	SS-06
SAMPLE DATE	08/16/99	08/16/99	08/16/99	08/17/99	08/16/99	08/16/99	08/17/99	08/17/99	08/16/99	08/16/99	08/16/99	08/16/99	08/18/99	08/18/99	08/18/99	08/18/99	08/18/99	08/18/99
TOTAL METALS (mg/kg dw)																		
Antimony	0.63 BN	0.68 BN	0.99 BN	0.76 BN	2.2 UN	0.75 BN	0.6 BN	0.46 BN	0.73 BN	0.91 BN	1.1 BN	0.61 BN	0.86 BN	0.48 BN	0.53 BN	0.77 BN	0.44 BN	0.57 BN
Arsenic	0.54 B	2.5	2.3	3.5	1.1	0.98 U	1.3 U	0.74 B	0.95 B	1.8	1.2	0.51 B	2	1.2	1.4	0.86 B	0.63 B	0.52 B
Barium	44	110	100	140	160	63	71	99	83	110	140	140	130	56	77	63	96	76
Beryllium	0.29 B	0.24 B	0.23 B	0.35 B	0.26 B	0.19 B	0.14 B	0.23 B	0.36 B	0.31 B	0.23 B	0.25 B	0.33 B	0.33 B	0.32 B	0.33 B	0.37 B	0.31 B
Cadmium	0.52 U	0.55 U	0.5 U	0.53 U	0.55 U	0.49 U	0.63 U	0.53 U	0.48 U	0.54 U	0.57 U	0.53 U	0.049 B	0.52 U	0.52 U	0.54 U	0.53 U	0.52 U
Chromium	13	24	22	23	9	3	3.1	5.2	17	15	7	5.1	21 N	34 N	29 N	50 N	43	81 N
Cobalt	17	20	18	21	10	4.8	3.7	6.5	20	20	11	8.3	19	21	23	27	24	31
Copper	21	120	93	42	36	39	15	23	36	70	35	28	75 N	84 N	59 N	110 N	52	86 N
Lead	2.3	1.1	1.2	2.1	1.5	4.1	2.2	3.3	1.4	1.1	1.9	3.1	6.9	3	3.5	1.9	2.6	1.6
Mercury	0.017 B	0.0055 U	0.0046 U	0.0081 B	0.0065 B	0.018 B	0.0053 U	0.011 B	0.014 B	0.011 B	0.013 B	0.013 B	0.035	0.045	0.11	0.016 B	0.024	0.016 B
Nickel	10	14	14	13	6.9	1.5 B	1.8 B	3.4 B	12	11	4.3 B	3.2 B	18	21	21	37	27	54
Selenium	1 U	1.1 U	1 U	1.1 U	1.1 U	0.98 U	1.3 U	1.1 U	0.96 U	1.1 U	1.1 U	1.1 U	0.95 U	2.1	1 U	1.1 U	0.61 B	1 U
Silver	1 U	1.1 U	1 U	1.1 U	1.1 U	0.98 U	1.3 U	1.1 U	0.96 U	1.1 U	1.1 U	1.1 U	0.95 U	1 U	1 U	1.1 U	1.1 U	1 U
Thallium	1 U	1.1 U	1 U	1.1 U	1.1 U	0.98 U	1.3 U	1.1 U	0.96 U	1.1 U	1.1 U	1.1 U	0.95 U	1 U	1 U	1.1 U	1.1 U	1 U
Tin	2.1 B	2.2 B	2.8 B	2.1 B	1.9 B	2.4 B	2.6 B	2.5 B	2.8 B	2.9 B	2.6 B	2.3 B	1.8 B	2.6 B	2.9 B	2.5 B	2.6 B	2.5 B
Vanadium	62	110	89	89	71	36	26	43	120	100	54	43	61	83	75	85	71	97
Zinc	51	51	43	19	17	22	11	19	38	33	23	20	190	190	100	64	67	59

02022CB102

ANALYTICAL SUMMARY OF INORGANIC CONSTITUENTS
SURFACE SOIL
VIEQUES

SUMMARY OF RESULTS - SS - AUGUST 1999 - EMA, VIEQUES, PUERTO RICO

SAMPLE ID	SS-06D	SS-07	SS-08	SS-09	SS-10	SS-11	SS-12	SS-13	SS-14	SS-15	SS-16	SS-16-FD	SS-17	SS-18	SS-19	SS-20	SS-20-FD	SS-21
SAMPLE DATE	08/18/99	08/18/99	08/18/99	08/18/99	08/18/99	08/18/99	08/18/99	08/18/99	08/18/99	08/18/99	08/18/99	08/18/99	08/18/99	08/18/99	08/18/99	08/18/99	08/18/99	08/18/99
TOTAL METALS (mg/kg dw)																		
Antimony	2.1 UN	1.9 UN	0.61 BN	0.65 BN	0.61 BN	0.61 BN	1.9 UN	0.74 BN	0.74 BN	0.44 BN	0.75 BN	2.2 UN	0.92 BN	0.47 BN	0.54 BN	0.76 BN	0.72 BN	0.94 BN
Arsenic	1.1 U	0.95 U	0.74 B	1	0.39 B	0.73 B	0.82 B	1 U	0.86 B	0.69 B	0.53 B	0.51 B	0.55 B	0.62 B	0.57 B	1.1 U	0.34 B	1.1 U
Barium	83	47	36	36	30	31	68	60	59	160	93	90	60	100	60	99	92	47
Beryllium	0.31 B	0.29 B	0.34 B	0.29 B	0.3 B	0.3 B	0.28 B	0.31 B	0.35 B	0.38 B	0.4 B	0.35 B	0.25 B	0.28 B	0.22 B	0.29 B	0.28 B	0.2 B
Cadmium	0.53 U	0.47 U	0.52 U	0.47 U	0.52 U	0.47 U	0.47 U	0.52 U	0.1 B	0.38 B	0.72 U	0.54 U	0.56 U	0.49 U	0.52 U	0.54 U	0.48 U	0.57 U
Chromium	84 N	34	21	27	18	9.8	18	14	23 N	16 N	17 N	16 N	13 N	24 N	26 N	12 N	9.4 N	40 N
Cobalt	30	30	15	19	24	18	20	24	25	46	26	20	18	20	18	17	15	19
Copper	67 N	610	140	35	17	24	43	50	56 N	130 N	46 N	58 N	67 N	66 N	70 N	51 N	44 N	62 N
Lead	1.8	1.1	2.2	2.7	1.3	1.9	2.2	2.9	2.7	2.5	1.7	1.6	1	1.2	0.83	1.1	1	0.85
Mercury	0.013 B	0.008 B	0.005 B	0.01 B	0.018 B	0.017 B	0.064	0.015 B	0.018 B	0.0094 B	0.011 B	0.013 B	0.013 B	0.017 B	0.0052 U	0.013 B	0.011 B	0.009 B
Nickel	52	40	13	16	14	8.5	12	11	18	16	13	11	9	12	15	8.2	6.5	31
Selenium	1.1 U	0.95 U	1 B	0.94 U	0.78 B	0.54 B	0.95 U	1 U	0.89 B	1.1 U	1.4 U	1.1 U	1.1 U	0.98 U	0.54 B	1.1 U	0.97 U	1.1 U
Silver	1.1 U	0.95 U	1 U	0.94 U	1 U	0.94 U	0.95 U	1 U	1.1 U	1.1 U	1.4 U	1.1 U	1.1 U	0.98 U	1 U	1.1 U	0.97 U	1.1 U
Thallium	1.1 U	0.95 U	1 U	0.94 U	1 U	0.94 U	0.95 U	1 U	1.1 U	1.1 U	1.4 U	1.1 U	1.1 U	0.98 U	1 U	1.1 U	0.97 U	1.1 U
Tin	3 B	2 B	1.8 B	2 B	2.5 B	2.4 B	2.6 B	2 B	3.2 B	2.7 B	3.1 B	2.7 B	3.5 B	2.8 B	2.6 B	3.2 B	2.7 B	2.7 B
Vanadium	93	96	110	73	68	67	90	81	100	110	130	120	110	120	97	97	91	90
	57	70	70	85	61	55	79	96	130	200	93	94	67	37	39	47	45	36