N00158.AR.000383
NASJRB WILLOW GROVE
5090.3a

SAMPLING AND ANALYSIS PLAN PHASE II REMEDIAL INVESTIGATION SITE 12 SOUTH LANDFILL NASJRB WILLOW GROVE PA

10/01/2011

TETRA TECH NUS

Sampling and Analysis Plan

Phase II Remedial Investigation

Site 12 - South Landfill

Naval Air Station
Joint Reserve Base (NAS JRB)
Willow Grove, Pennsylvania

Naval Facilities Engineering Command
Mid-Atlantic

Contract Number N62470-08-D-1001
Contract Task Order WE05

October 2011

TETRA TECH

SAP Worksheet No. 1 -- Title and Approval Page

(UFP-QAPP Manual Section 2.1)

FINAL
SAMPLING AND ANALYSIS PLAN
(Field Sampling Plan and Quality Assurance Project Plan)
October 2011

Phase II Remedial Investigation
Site 12 - South Landfill
Naval Air Station Joint Reserve Base
Willow Grove, Pennsylvania

Prepared for:
Naval Facilities Engineering Command Mid-Atlantic
9742 Maryland Avenue
Norfolk, Virginia 23511-3095

Prepared by:
Tetra Tech NUS, Inc.
234 Mall Boulevard, Suite 260
King of Prussia, PA 19406-2954
610-491-9688

Prepared under:
Comprehensive Long-term Environmental Action Navy
Contract No. N62470-08-D-1001
Contract Task Order WE05

Review Signatures:

Tom Johnston, PhD/ CLEAN QAM/ Date
Tetra Tech NUS, Inc.

Andy Frebowitz/ Project Manager/ Date
Tetra Tech NUS, Inc.

Approval Signatures:

Jeff Dale/ Remedial Project Manager/ Date
NAVFAC Mid-Atlantic

Lisa Cunningham/ Remedial Project Manager/ Date
USEPA Region 3

Margaret Pollich/ Project Officer/ Date
Pennsylvania Department of Environmental Protection

SAP Worksheet No. 1 – Title and Approval Page
(UFP-QAPP Manual Section 2.1)

DRAFT
SAMPLING AND ANALYSIS PLAN
(Field Sampling Plan and Quality Assurance Project Plan)
April 2011

Phase II Remedial Investigation
Site 12 - South Landfill
Naval Air Station Joint Reserve Base
Willow Grove, Pennsylvania

Prepared for:
Naval Facilities Engineering Command Mid-Atlantic
9742 Maryland Avenue
Norfolk, Virginia 23511-3095

Prepared by:
Tetra Tech NUS, Inc.
234 Mall Boulevard, Suite 260
King of Prussia, PA 19406-2954
610-491-9688

Prepared under:
Comprehensive Long-term Environmental Action Navy
Contract No. N62470-08-D-1001
Contract Task Order WE05

Review Signatures:

T.E. Johnston 4-15-2011
Tom Johnston, PhD/ CLEAN QAM/ Date
Tetra Tech NUS, Inc.

Russ Turner 4/15/2011
Russell Turner, P.E./ Project Manager/ Date
Tetra Tech NUS, Inc.

Approval Signatures:

Kenneth Bowers 4/15/11
Kenneth Bowers/ Quality Assurance Officer/ Date
NAVFAC Mid-Atlantic

Jeff M Dale 4/13/2011
Jeff Dale/ Remedial Project Manager/ Date
NAVFAC Mid-Atlantic

Lisa Cunningham/ Remedial Project Manager/ Date
USEPA Region 3

Tim Sheehan/ Project Manager/ Date
Pennsylvania Department of Environmental Protection

This page intentionally left blank.

EXECUTIVE SUMMARY

Tetra Tech NUS, Inc. (Tetra Tech) has prepared this Sampling and Analysis Plan (SAP) for the Phase II Remedial Investigation (RI) at Site 12 – South Landfill (Site 12) at the Naval Air Station Joint Reserve Base (NAS JRB) Willow Grove, Pennsylvania under Contract Task Order (CTO) No. WE05, Contract N62470-08-D-1001, Comprehensive Long-term Environmental Action-Navy (CLEAN). The data collected during this investigation combined with data from previous investigations will be used to determine the nature and extent of contamination and to evaluate risks to human health and the environment.

Site 12 – South Landfill, is located southwest of Runway 10/28 in the southern portion of the Base, immediately northeast of Site 2 – Antenna Field Landfill (**Figure 10-2**). Site 12 was used as a disposal area for general refuse, paint waste, sewage sludge, and solvents from 1948 to 1960. Landfill activities reportedly consisted of trench excavation with subsequent burning and burial of waste material within the trenches. **Figure 10-1** shows the location of the NAS JRB Willow Grove facility and Site 12 - South Landfill. Site 12 was identified during aerial photograph review as an area of disturbed ground approximately 12 acres in total; however subsequent investigations identified approximately 9 distinct waste/debris burial trenches comprising a 1.5 acre subset of the total area.

A portion of Site 12 was previously investigated, as part of Site 2, during the Preliminary Assessment (PA), Site Inspection (SI), and RI. These investigations focused mainly on the area identified as Site 2 - Antenna Field Landfill.

The Phase I RI field work was completed in January 2010. The work consisted of the excavation of 15 test pits and the collection of 40 surface soil samples, 31 subsurface soil samples, 7 surface water samples, and 8 sediment samples. The surface and subsurface soil samples were biased towards areas that contained buried waste, based on the results of an electromagnetic (EM) geophysical survey completed in April 2008. Tetra Tech submitted the Draft Phase I Remedial Investigation Data Report to the Project Team members in June 2010. Contaminants exceeding Project Screening Levels (PSLs) consisted of semivolatile organic compounds (SVOCs), pesticides, and metals in surface soil; SVOCs, pesticides, dioxins, and metals in subsurface soil; SVOCs, pesticides, and metals in surface water; and volatile organic compounds (VOCs), SVOCs, pesticides, and metals in sediment. Test pit sample analyses and visual observations confirmed the presence of buried waste and associated soil contamination at the locations of EM anomalies. Test pitting confirmed that the suspected disposal areas identified by electromagnetic survey were in fact well defined pits containing waste and debris.

Based on the investigations completed and the Conceptual Site Model (CSM) presented in the Phase I RI SAP, the Project Team decided that additional surface and subsurface soil samples and monitoring well groundwater samples are needed, and no additional sediment or surface water samples are needed. The additional soil data are needed to further delineate the nature and extent of target analytes that exceeded risk-based benchmarks in the Phase I investigation associated with the site and to conduct a Human Health Risk Assessment (HHRA) and an Ecological Risk Assessment (ERA).

Previous soil samples were biased towards areas containing buried waste, as indicated by the results of the EM survey. Now that contaminant sources have been identified and confirmed to be associated with the EM anomalous areas, additional samples are needed in areas where EM anomalies are not present to support risk assessments with non-biased data. This data will also be used to determine if the debris disposal activities impacted soil between the EM anomalous areas and will refine the identification and screening of remedial alternatives such as targeted removal or capping. The EM survey did not completely delineate the extent of two linear anomalies in the southeastern portion of the site, so additional test pits will be investigated in this area. Monitoring wells are needed at Site 12 to determine if contaminants are migrating from the site via groundwater at concentrations that pose a risk to potential users of the groundwater.

During this Site 12 Phase II RI, field activities will also include soil sample collection from both Site 12 and Site 3 for total, hexavalent, and trivalent chromium analysis to support risk calculations associated with chromium and actual or potential remedial action decisions regarding the removal of chromium-impacted soil. Currently, the chromium data for Site 3 was conservatively assumed to contain only the hexavalent form of chromium to avoid the potential underestimation of risk due to chromium, but new data are

needed to quantify the site-specific ratio of hexavalent chromium to trivalent chromium at both Site 12 and Site 3, which will then be used to refine the risk calculations at Site 12 and to revise the established Remediation Goal (RG) for chromium at Site 3.

The SAP contained herein was generated for, and complies with applicable Uniform Federal Policy for Quality Assurance Project Plans (UFP-QAPP), and United States Environmental Protection Agency (USEPA) Region 3 requirements, regulations, guidance, and technical standards, as appropriate.

This SAP outlines the organization, project management, objectives, planned activities, measurement, data acquisition, assessment, oversight, and data review procedures associated with the planned investigation at Site 12. Protocols for sample collection, handling, and storage, chain-of-custody, laboratory and field analyses, data validation, and reporting are also addressed in this SAP. The investigation procedures utilized will comply with Tetra Tech Standard Operating Procedures (SOPs), which are included in **Appendix A**. The Laboratory SOPs that will be followed for this project are identified in **SAP Worksheet No. 23**. The field work and sampling are scheduled to begin in November 2011. A complete schedule is detailed in **SAP Worksheet No. 16**.

Field activities conducted under this SAP shall meet the requirements of a NAS JRB Willow Grove Site-Specific Health and Safety Plan.

SAP Worksheets

SAP Worksheet No. 1 -- Title and Approval Page 1
SAP Worksheet No. 2 -- SAP Identifying Information 10
SAP Worksheet No. 3 -- Distribution List 11
SAP Worksheet No. 4 -- Project Personnel Sign-Off Sheet 13
SAP Worksheet No. 5 -- Project Organizational Chart 15
SAP Worksheet No. 6 -- Communication Pathways 16
SAP Worksheet No. 7 -- Personnel Responsibilities and Qualifications Table 18
SAP Worksheet No. 8 -- Special Personnel Training Requirements Table 20
SAP Worksheet No. 9 -- Project Scoping Session Participants Sheet 21
SAP Worksheet No. 10 -- Conceptual Site Model 23
SAP Worksheet No. 11 -- Project Quality Objectives/Systematic Planning Process Statements 32
SAP Worksheet No. 12 -- Measurement Performance Criteria Table – Field Quality Control Samples 37
SAP Worksheet No. 13 -- Secondary Data Criteria and Limitations Table 38
SAP Worksheet No. 14 -- Summary of Project Tasks 39
SAP Worksheet No. 15 -- Reference Limits and Evaluation Table 47
SAP Worksheet No. 16 -- Project Schedule / Timeline Table 75
SAP Worksheet No. 17 -- Sampling Design and Rationale 76
SAP Worksheet No. 18 -- Sampling Locations and Methods/SOP Requirements Table 82
SAP Worksheet No. 19 -- Analytical SOP Requirements Table 98
SAP Worksheet No. 20 -- Field Quality Control Sample Summary Table 100
SAP Worksheet No. 21 -- Project Sampling SOP References Table 101
SAP Worksheet No. 22 -- Field Equipment Calibration, Maintenance, Testing, and Inspection Table 103
SAP Worksheet No. 23 -- Analytical SOP References Table 104
SAP Worksheet No. 24 -- Analytical Instrument Calibration Table 108
SAP Worksheet No. 25 -- Analytical Instrument & Equipment Maintenance, Testing, & Inspection Table 117
SAP Worksheet No. 26 -- Sample Handling System 119
SAP Worksheet No. 27 -- Sample Custody Requirements Table 120
SAP Worksheet No. 28 -- Laboratory QC Samples Table 122
SAP Worksheet No. 29 -- Project Documents and Records Table 138
SAP Worksheet No. 30 -- Analytical Services Table 140
SAP Worksheet No. 31 -- Planned Project Assessments Table 141
SAP Worksheet No. 32 -- Assessment Findings and Corrective Action Responses Table 142
SAP Worksheet No. 33 -- QA Management Reports Table 143
SAP Worksheet No. 34 -- Verification (Step I) Process Table 144
SAP Worksheet No. 35 -- Validation (Steps IIa and IIb) Process Table 146
SAP Worksheet No. 36 -- Analytical Data Validation (Steps IIa and IIb) Summary Table 148
SAP Worksheet No. 37 -- Usability Assessment 149

REFERENCES

APPENDICES

A - TETRA TECH STANDARD OPERATING PROCEDURES AND FIELD FORMS
B - LABORATORY ACCREDITATIONS
C - DQO MEETING MINUTES
D - PROJECT SCREENING LEVEL BACKUP DOCUMENTATION

List of Figures

NUMBER

10-1 Location of IR Sites
10-2 Site 2 - Antenna Field Landfill, Site 12 - South Landfill
10-3 Surface Soil Sample Results above Screening Criteria, Site 12 - South Landfill
10-4 Subsurface Soil Sample Results above Screening Criteria, Site 12 - South Landfill
10-5 Surface Water/Sediment Sample Results above Screening Criteria, Site 12 - South Landfill
10-6 Conceptual Site Model Schematic, Human Receptors, Site 12 - South Landfill
10-7 Conceptual Site Model Schematic, Ecological Receptors, Site 12 - South Landfill
10-8 Human Conceptual Exposure Model Diagram, Site 12 - South Landfill
10-9 Ecological Conceptual Exposure Model Diagram, Site 12 - South Landfill
17-1 Proposed Phase II RI Sample Location Map, Site 12 - South Landfill
17-2 Chromium (Total) Concentrations, Subsurface Soil, Site 12 - South Landfill
17-3 Chromium (Total) Concentrations, Site 3 - 9th Street Landfill

Acronyms and Abbreviations

°C	Degrees Celsius
%	Percent
%D	Percent Difference or Percent Drift
%R	Percent Recovery
ACT-POC	Activity Point of Contact
amu	Atomic Mass Unit
AR	Administrative Record
BFB	Bromofluorobenzene
bgs	Below Ground Surface
BRAC	Base Realignment and Closure
CAS	Chemical Abstracts Service
CCB	Continuing Calibration Blank
CCC	Calibration Check Compound
CCV	Continuing Calibration Verification
CERCLA	Comprehensive Environmental Response, Compensation, and Liability Act of 1980
CFA	Cape Fear Analytical, LLC
CFR	Code of Federal Regulations
Chemtech	Chemtech Consulting Group, Inc.
CLEAN	Comprehensive Long-term Environmental Action Navy
CompuChem	CompuChem Environmental Corporation
COPC	Constituent of Potential Concern
CPSM	Column Performance Check Solution
CSM	Conceptual Site Model
CTO	Contract Task Order
CVAA	Cold Vapor Atomic Absorption
DAF	Dilution Attenuation Factor
DL	Detection Limit
DO	Dissolved Oxygen
DoD	Department of Defense
DPT	Direct Push Technology
DQI	Data Quality Indicator
DQO	Data Quality Objective
DVM	Data Validation Manager
Eco-SSL	Ecological Soil Screening Level
EDD	Electronic Data Deliverable
EDL	Estimated Detection Limit
ELAP	Environmental Laboratory Accreditation Program
EM	Electromagnetic
EPC	Exposure Point Concentration
ERA	Ecological Risk Assessment
FOL	Field Operations Leader
FTMR	Field Task Modification Request
FS	Feasibility Study
g	Gram
GC	Gas Chromatograph
GC/ECD	Gas Chromatograph/Electron Capture Detector
GC/MS	Gas Chromatograph/Mass Spectrometer
HASP	Health and Safety Plan
HCl	Hydrochloric Acid
HDPE	High Density Polyethylene
HI	Hazard Index
HHRA	Human Health Risk Assessment
HNO_3	Nitric Acid
HRGC	High Resolution Gas Chromatography
HRMS	High Resolution Mass Spectrometry
HSM	Health and Safety Manager

Acronyms and Abbreviations (Continued)

IAS	Initial Assessment Study
IC	Ion Chromatograph
ICAL	Initial Calibration
ICB	Initial Calibration Blank
ICP-AES	Inductively Coupled Plasma-Atomic Emission Spectroscopy
ICP-MS	Inductively Coupled Plasma-Mass Spectroscopy
ICS	Interference Check Standard
ICV	Initial Calibration Verification
ID	Inside Diameter
IDW	Investigation-Derived Waste
ILCR	Incremental Lifetime Cancer Risk
IS	Internal Standard
L	Liter
LCS	Laboratory Control Sample
LCSD	Laboratory Control Sample Duplicate
LOD	Limit of Detection
LOQ	Limit of Quantitation
MCL	Maximum Contaminant Level
MD	Matrix Duplicate
mg/kg	Milligrams per Kilogram
mL	Milliliter
MPC	Measurement Performance Criterion
MS	Matrix Spike
MSC	Medium Specific Concentration
MSD	Matrix Spike Duplicate
MTG-MSC	Migration-to-Groundwater Medium Specific Concentration
mV	Millivolt
NA	Not Applicable
NaOH	Sodium Hydroxide
NAS JRB	Naval Air Station Joint Reserve Base
NAVFAC	Naval Facilities Engineering Command
NC	No Criteria
NE	Northeast
NELAP	National Environmental Laboratory Accreditation Program
NFA	No Further Action
NIRIS	Naval Installation Restoration Information Solution
NOAA	National Oceanic and Atmospheric Administration
NSF	National Sanitary Foundation
NTU	Nephelometric Turbidity Unit
ORNL	Oak Ridge National Laboratory
ORP	Oxidation-Reduction Potential
OSHA	Occupational Safety and Health Administration
oz	Ounce
PA	Preliminary Assessment
PADEP	Pennsylvania Department of Environmental Protection
PAH	Polycyclic Aromatic Hydrocarbon
PCB	Polychlorinated Biphenyl
PDF	Portable Document Format
P.E.	Professional Engineer
P.G.	Professional Geologist
PhD	Doctor of Philosophy
PID	Photoionization Detector
PM	Project Manager
PMO	Program Management Office
POC	Point of Contact

Acronyms and Abbreviations (Continued)

PPE	Personal Protective Equipment
ppm	Parts per Million
PQLG	Practical Quantitation Limit Goal
PQO	Project Quality Objective
PSL	Project Screening Level
PVC	Polyvinyl Chloride
PWC-DET	Public Works Center Detachment
QA	Quality Assurance
QAM	Quality Assurance Manager
QAO	Quality Assurance Officer
QC	Quality Control
QSM	Quality Systems Manual
r	Linear Regression Correlation Coefficient
r^2	Non-Linear Coefficient of Determination
RBSSL	Risk-Based Soil Screening Level
RES-MSC	Residential Soil Medium Specific Concentration
RF	Response Factor
RG	Remediation Goal
RGW-MSC	Residential Groundwater Medium Specific Concentration
RI	Remedial Investigation
RPD	Relative Percent Difference
RPM	Remedial Project Manager
R-RSL	Regional Screening Level, Residential Direct Contact
RRT	Relative Retention Time
RSD	Relative Standard Deviation
RSL	Regional Screening Level
RT	Retention Time
S/N	Signal to Noise
SAP	Sampling and Analysis Plan
SDG	Sample Delivery Group
SI	Site Inspection
SIM	Selected Ion Monitoring
SOP	Standard Operating Procedure
SPCC	System Performance Check Compound
SQL	Structured Query Language
SQuiRT	Screening Quick Reference Table
SSA	Soil Screening Area
SSO	Site Safety Officer
SVOC	Semivolatile Organic Compound
TAL	Target Analyte List
TA-Pitt	TestAmerica, Inc. - Pittsburgh
TBD	To Be Determined
TCL	Target Compound List
TEF	Toxicity Equivalency Factor
TEQ	Toxicity Equivalent
Tetra Tech	Tetra Tech NUS, Inc.
TOC	Total Organic Carbon
T-RSL	Regional Screening Level, Tapwater
UCL	Upper Confidence Limit
UFP-QAPP	Uniform Federal Policy for Quality Assurance Project Plan
µg/kg	Micrograms per Kilogram
µg/L	Micrograms per Liter
USEPA	United States Environmental Protection Agency
VOC	Volatile Organic Compound

SAP Worksheet No. 2 -- SAP Identifying Information

(UFP-QAPP Manual Section 2.2.4)

Site Name/Number:	Naval Air Station Joint Reserve Base (NAS JRB) Willow Grove, Site 12 - South Landfill
Operable Units:	Not Applicable (NA)
Contractor Name:	Tetra Tech NUS, Inc. (Tetra Tech)
Contract Number:	N62470-08-D-1001
Contract Title:	Comprehensive Long-term Environmental Action Navy (CLEAN)
Work Assignment Number:	Contract Task Order (CTO) WE05

1. This Sampling and Analysis Plan (SAP) was prepared in accordance with the requirements of the United States Environmental Protection Agency (USEPA) *Uniform Federal Policy for Quality Assurance Plans (UFP-QAPP)* (USEPA, 2005a) and *EPA Guidance for Quality Assurance Project Plans*, EPA QA/G-5, QAMS (USEPA, 2002a).

2. Identify regulatory program: Comprehensive Environmental Response, Compensation, and Liability Act of 1980 (CERCLA).

3. This SAP is a project-specific SAP.

4. List dates of scoping sessions that were held:

Scoping Session	Date
Data Quality Objectives (DQO) Meeting	October 13, 2010

5. List dates and titles of any SAP documents written for previous site work that are relevant to the current investigation.

Title	Date
Draft Phase I Remedial Investigation Data Report	June 2010

6. List organizational partners (stakeholders) and connection with lead organization:

USEPA (regulatory oversight), Pennsylvania Department of Environmental Protection (PADEP) (regulatory oversight), Naval Facilities Engineering Command (NAVFAC) Base Realignment and Closure (BRAC) Program Management Office (PMO) Northeast (NE) (property owner), Tetra Tech (Navy contractor).

7. Lead organization: NAVFAC Mid-Atlantic

8. If any required SAP elements or required information are not applicable to the project or are provided elsewhere, then note the omitted SAP elements and provide an explanation for their exclusion below:

NA, as there are no exclusions.

SAP Worksheet No. 3 -- Distribution List

(UFP-QAPP Manual Section 2.3.1)

Name of SAP Recipients	Title/Role	Organization	Telephone Number	E-mail Address or Mailing Address
Jeff Dale	Navy Remedial Project Manager (RPM)/ Manages Project Activities for the Navy	NAVFAC Mid-Atlantic	215-897-4914	jeffrey.m.dale@navy.mil
Bob Lewandowski	BRAC Environmental Coordinator/ NAS JRB Willow Grove Point of Contact (POC)	NAVFAC Mid-Atlantic	215-897-4908	robert.f.lewandowski@navy.mil
Dave Barclift	Technical Staff	NAVFAC Mid-Atlantic	215-897-4913	david.barclift@navy.mil
Harold Dusen	Environmental Director Activity Point of Contact (ACT-POC)	NAS JRB Willow Grove	215-443-6937	harold.dusen@navy.mil
Bill Heil	Facility Contact	NAVFAC Mid-Atlantic	215-443-6938	bill.heil@navy.mil
Lt. Commander Suzanne Montgomery	Public Works Center Detachment (PWC-DET) Coordinator	PWC-DET	215-443-2229	suzanne.montgomery@navy.mil
Bonnie Capito (copy of final cover letter only)	Librarian and Records Manager/ Navy Administrative Record (AR)	NAVFAC Atlantic	757-322-4785	bonnie.capito@navy.mil
Kenneth Bowers (electronic upload)	NAVFAC Quality Assurance Officer (QAO)/ Government Chemist	NAVFAC Mid-Atlantic	757-322-8341	kenneth.a.bowers@navy.mil
Lisa Cunningham	USEPA RPM/ Regulator Input	USEPA Region 3	215-814-3363	cunningham.lisa@epa.gov
Margaret Pollich	PADEP Project Officer/ Regulator Input	PADEP	484-250-5731	mpollich@pa.gov
Andy Frebowitz	Project Manager (PM)/ Manages Project Activities	Tetra Tech	610-382-1170	andy.frebowitz@tetratech.com
Don Whalen	Field Operations Leader (FOL) / Site Safety Officer (SSO)/ Manages Field Operation and Site Safety Issues	Tetra Tech	610-382-1536	don.whalen@tetratech.com

Name of SAP Recipients	Title/Role	Organization	Telephone Number	E-mail Address or Mailing Address
Tom Johnston, PhD (electronic copy only)	CLEAN Quality Assurance Manager (QAM)/ Manages Corporate Quality Assurance (QA) Program and Implementation	Tetra Tech	412-921-8615	tom.johnston@tetratech.com
Matt Soltis [Health and Safety Plan (HASP) only]	Health and Safety Manager (HSM)/ Manages Corporate Health and Safety Program	Tetra Tech	412-921-8912	matt.soltis@tetratech.com
Mark Traxler (electronic copy only)	Project Chemist / Provides Coordination with Laboratory	Tetra Tech	610-382-1171	mark.traxler@tetratech.com
Joe Samchuck (electronic copy only)	Data Validation Manager (DVM)/ Manages Data Validation	Tetra Tech	421-921-8510	joseph.samchuck@tetratech.com
Kurt Hummler (electronic copy only)	Laboratory PM/ Representative for Laboratory and Analytical Issues	Chemtech Consulting Group, Inc. (Chemtech)	908-728-3143	khummler@chemtech.net
Chris Cornwell (electronic copy only)	Laboratory PM/ Representative for Laboratory and Analytical Issues	Cape Fear Analytical, LLC (CFA)	910-795-0422	chris.cornwell@cfanalytical.com
Dave Dunlap (electronic copy only)	Laboratory PM/ Representative for Laboratory and Analytical Issues	TestAmerica, Inc. – Pittsburgh (TA-Pitt)	412-963-7058	dave.dunlap@testamerica.com
To Be Determined (TBD) (electronic copy only)	Subcontractor PM/ Provides Well Installation Services	TBD	TBD	TBD
TBD (electronic copy only)	Subcontractor PM/ Provides Test Pit Excavating Services	TBD	TBD	TBD
Dennis W. Sklar (electronic copy only)	Surveyor/ Provides Surveyor Services	Dennis W. Sklar	215-268-7988	TBD

SAP Worksheet No. 4 -- Project Personnel Sign-Off Sheet

(UFP-QAPP Manual Section 2.3.2)

Certification that project personnel have read the text will be obtained by one of the following methods as applicable:

1. In the case of regulatory agency personnel with oversight authority, approval letters or e-mails will constitute verification that applicable sections of the SAP have been reviewed. Copies of regulatory agency approval letters / e-mails will be retained in the project files and are listed in **Worksheet No. 29** as project records.

2. E-mails will be sent to the Navy, Tetra Tech, and subcontractor project personnel who will be requested to verify by e-mail that they have read the applicable SAP / sections and the date on which they were reviewed. Copies of the verification e-mail will be included in the project files and is identified in **Worksheet No. 29**.

   A copy of the signed **Worksheet No. 4** will be retained in the project files and is identified as a project document in **Worksheet No. 29**.

Name [1]	Organization/Title/Role	Telephone Number	Signature/E-Mail Receipt	SAP Section Reviewed	Date SAP Read
Navy and Regulator Project Team Personnel					
Jeff Dale	NAVFAC/ RPM/ Manages Project Activities for the Navy	215-897-4914	See **Worksheet No. 1** for signature	All	
Bob Lewandowski	NAVFAC BRAC Environmental Coordinator/ Site POC	215-897-4908		All	
Margaret Pollich	State/ Project Officer/ Provides Regulator Input	484-250-5731	See **Worksheet No. 1** for signature	All	
Lisa Cunningham	USEPA Region 3/ RPM/ Provides Regulator Input	215-814-3363	See **Worksheet No. 1** for signature	All	
Tetra Tech Project Team Personnel					
Andy Frebowitz	Tetra Tech/ PM/ Manages Project Activities	610-382-1170	See **Worksheet No. 1** for signature	All	
Don Whalen	Tetra Tech/ FOL/SSO/ Manages Field Operation and Site Safety Issues	610-382-1536		All	
Tom Johnston, PhD	Tetra Tech/ QAM/ Manages NAVFAC Contract QA Program and Implementation	412-921-8615	See **Worksheet No. 1** for signature	All	

Name [1]	Organization/Title/Role	Telephone Number	Signature/E-Mail Receipt	SAP Section Reviewed	Date SAP Read
Matt Soltis	Tetra Tech/ HSM/ Manages Corporate Health and Safety Program	412-921-8912	See HASP for signature	HASP only	
Mark Traxler	Tetra Tech/ Project Chemist/ Provides Coordination with Laboratory	610-382-1171		All	
Joe Samchuck	Tetra Tech/ DVM/ Manages Data Validation	412-921-8510		**Worksheet Nos. 12, 14, 15, 19, 20, 23-28, 30**, and **34-37**	
Subcontractor Personnel					
Kurt Hummler	Chemtech/ Laboratory PM/ Representative for Laboratory and Analytical Issues	908-728-3143		**Worksheet Nos. 6, 12, 14, 15, 19, 20, 23-28, 30,** and **34-36**	
Chris Cornwell	CFA/ Laboratory PM/ Representative for Laboratory and Analytical Issues	910-795-0422		**Worksheet Nos. 6, 12, 14, 15, 19, 20, 23-28, 30**, and **34-36**	
Dave Dunlap	TA-Pitt/ Laboratory PM/ Representative for Laboratory and Analytical Issues	412-963-7058		**Worksheet Nos. 6, 12, 14, 15, 19, 20, 23-28, 30**, and **34-36**	
TBD	TBD/ Subcontractor PM/ Provides Well Installation Drilling Services	TBD		**Worksheet Nos. 6, 10, 11, 14,** and **17**	
TBD	TBD/ Subcontractor PM/ Provides Test Pit Excavating Services	TBD		**Worksheet Nos. 6, 10, 11, 14,** and **17**	
Dennis W. Sklar	Dennis W. Sklar/ Surveyor/ Provides Surveyor Services	215-268-7988		**Worksheet Nos. 14** and **17**	

[1] Persons listed on this worksheet will be responsible for distributing the SAP to the appropriate people within their organization.

SAP Worksheet No. 5 -- Project Organizational Chart

(UFP-QAPP Manual Section 2.4.1)

Lines of Authority ——— Lines of Communication

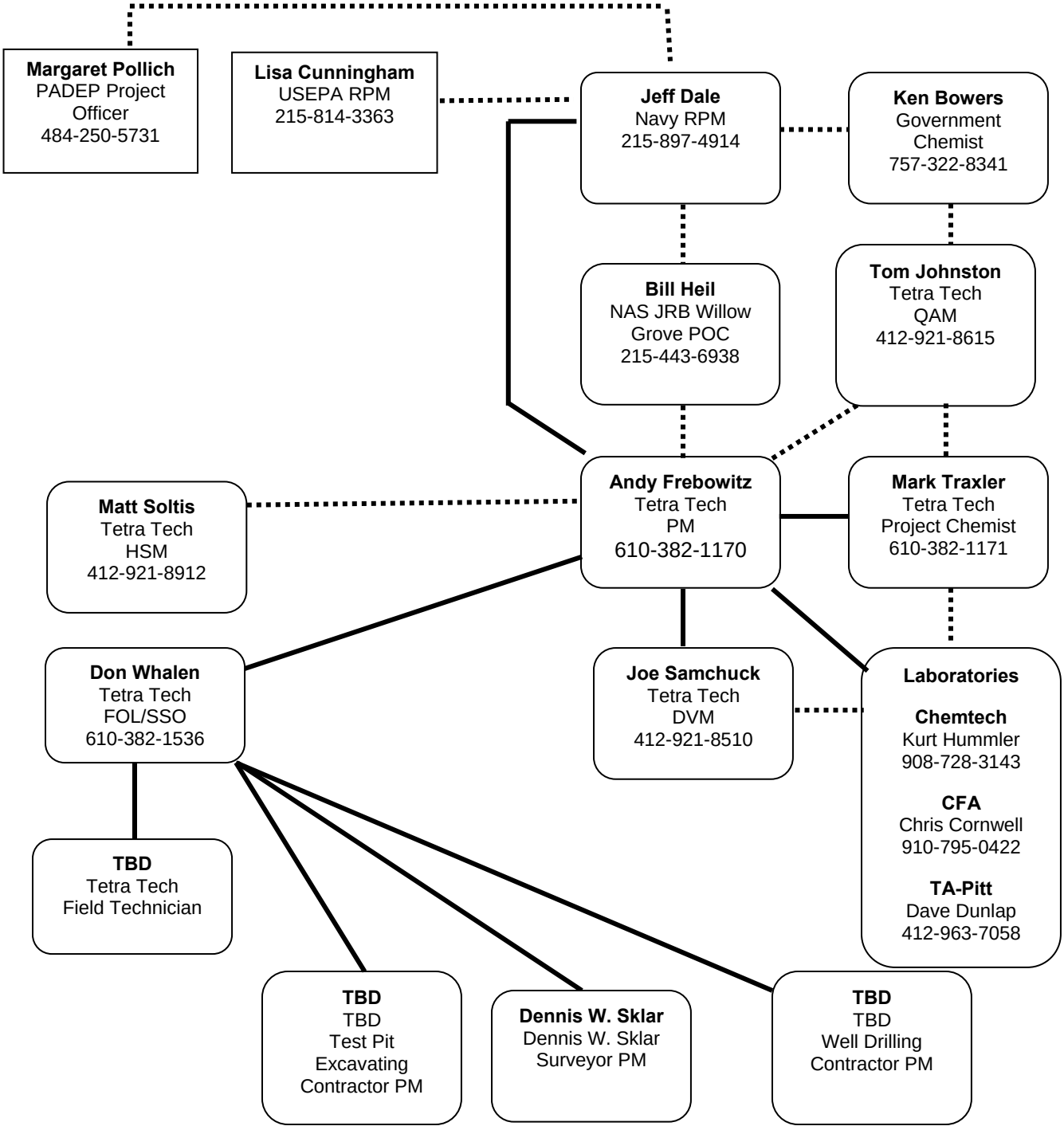

SAP Worksheet No. 6 -- Communication Pathways

(UFP-QAPP Manual Section 2.4.2)

Communication Driver	Responsible Affiliation	Name	Phone Number and/or E-Mail	Procedure
SAP Amendments	Tetra Tech FOL/SSO Tetra Tech PM Navy RPM	Don Whalen Andy Frebowitz Jeff Dale	610-382-1536 610-382-1170 215-897-4914	Tetra Tech FOL will verbally inform Tetra Tech PM within 24 hours of realizing a need for an amendment. Tetra Tech PM will document the proposed changes via a Field Task Modification Request (FTMR) form within five days and send the Navy RPM a concurrence letter within seven days of identifying the need for change. SAP amendments will be submitted by Tetra Tech PM to the NAVFAC RPM and Mid-Atlantic BRAC PMO for review and approval. Tetra Tech PM will send scope changes to Project Team via e-mail within one business day.
Changes in field work schedule	Tetra Tech PM Navy RPM	Andy Frebowitz Jeff Dale	610-382-1170 215-897-4914	Tetra Tech PM will verbally inform the NAS JRB Environmental Coordinator on the day that a schedule change is known and will document via schedule impact letter within one business day of when the impact is realized.
Issues in the field that result in changes in scope of field work	Tetra Tech FOL/SSO Tetra Tech PM Navy RPM	Don Whalen Andy Frebowitz Jeff Dale	610-382-1536 610-382-1170 215-897-4914	Tetra Tech FOL will inform Tetra Tech PM within one business day of when an issue is discovered. Tetra Tech PM will inform NAS JRB Environmental Coordinator by close of the next working day. NAS JRB Environmental Coordinator will issue scope change if warranted. The scope change is to be implemented before further work is executed. Tetra Tech PM will document the changes within two days of identifying the need for change on a FTMR form and obtain required approvals within five days of initiating the form.

Communication Driver	Responsible Affiliation	Name	Phone Number and/or E-Mail	Procedure
Recommendations to stop work and initiate work upon corrective action	Tetra Tech FOL/SSO Tetra Tech PM Tetra Tech QAM Tetra Tech Project Chemist Tetra Tech HSM Navy RPM	Don Whalen Andy Frebowitz Tom Johnston Mark Traxler Matt Soltis Jeff Dale	610-382-1536 610-382-1170 412-921-8615 610-382-1171 412-921-8912 215-897-4914	If Tetra Tech is the responsible party for a stop work command, the Tetra Tech FOL will inform onsite personnel, subcontractor(s), NAS JRB Environmental Coordinator, and the identified Project Team members within one hour (verbally or by e-mail) of recognizing the need to stop work. If a subcontractor is the responsible party, the subcontractor PM must inform the Tetra Tech FOL within 15 minutes of recognizing the need to stop work, and the Tetra Tech FOL will then follow the procedure listed above.
Field data quality issues	Tetra Tech FOL/SSO Tetra Tech PM	Don Whalen Andy Frebowitz	610-382-1536 610-382-1170	Tetra Tech FOL will inform Tetra Tech PM verbally or by e-mail on the same day that a field data quality issue is discovered.
Analytical data quality issues	Chemtech Laboratory PM CFA Laboratory PM TA-Pitt Laboratory PM Tetra Tech Project Chemist Tetra Tech DVM Tetra Tech PM Navy RPM	Kurt Hummler Chris Cornwell Dave Dunlap Mark Traxler Joseph Samchuck Andy Frebowitz Jeff Dale	908-728-3143 910-795-0422 412-963-7058 610-382-1171 412-921-8510 610-382-1170 215-897-4914	The Laboratory PM will notify (verbally or via e-mail) the Tetra Tech Project Chemist within one business day of when an issue related to laboratory data is discovered. The Tetra Tech Project Chemist will notify (verbally or via e-mail) the data validation staff and the Tetra Tech PM within one business day. The Tetra Tech DVM or Project Chemist notifies the Tetra Tech PM verbally or via e-mail within 48 hours of validation completion that a non-routine and significant laboratory quality deficiency has been detected that could affect this project and/or other projects. The Tetra Tech PM verbally advises the Navy RPM within 24 hours of notification from the Tetra Tech Project Chemist or DVM. The Navy RPM takes corrective action that is appropriate for the identified deficiency. Examples of significant laboratory deficiencies include data reported that has a corresponding failed tune or initial calibration verification. Corrective actions may include a consult with the Navy Chemist.

SAP Worksheet No. 7 -- Personnel Responsibilities and Qualifications Table

(UFP-QAPP Manual Section 2.4.3)

Name [1]	Title/Role	Organizational Affiliation	Responsibilities
Jeff Dale	Navy RPM/ Manages project	NAVFAC Mid-Atlantic	Oversees project, scoping, data review, and evaluation and reviews the SAP.
Bob Lewandowski	Environmental Coordinator/ Manages daily site activities related to this project	NAS JRB Willow Grove	Oversees site activities, participate in scoping, data review, and evaluation.
Margaret Pollich	State Project Officer/ Provides Regulator Input	PADEP	Participates in scoping, data review, evaluation, and approves the SAP.
Lisa Cunningham	USEPA RPM/ Provides Regulator Input	USEPA Region 3	Participates in scoping, data review, evaluation, and approves the SAP.
Andy Frebowitz	PM/ Decision Maker for Tetra Tech, Manages project on a daily basis	Tetra Tech	Oversees project, including financial, schedule, and technical day to day management of the project.
Don Whalen	FOL/Manages field operations SSO/Oversees site activities to ensure safety requirements are met	Tetra Tech	As FOL, supervises, coordinates, and performs field sampling activities. As SSO, responsible for on-site project specific health and safety training and monitoring site conditions. Details of these responsibilities are presented in the HASP.
Tom Johnston	QAM/ Oversees program and project QA activities	Tetra Tech	Ensures quality aspects of the CLEAN program are implemented, documented, and maintained.
Matt Soltis	HSM/ Oversees health and safety activities	Tetra Tech	Oversees the Tetra Tech CLEAN Program Health and Safety Program.

Name [1]	Title/Role	Organizational Affiliation	Responsibilities
Mark Traxler	Project Chemist/ Conducts data validation and reporting	Tetra Tech	Participates in project scoping, prepares laboratory scopes of work, and coordinates laboratory-related functions with laboratory. Oversees data quality reviews and QA of data validation deliverables.
Joseph Samchuck	DVM/ Oversees data validation activities	Tetra Tech	Manages data validation activities within Tetra Tech, including ensuring QA of data validation deliverables, providing technical advice on data usability, and coordinating and maintaining the data validation review schedule.
Kurt Hummler	Laboratory PM/ Representative for laboratory and analytical issues	Chemtech	Coordinates analyses with lab chemists, ensures that scope of work is followed, provides QA of data packages, and communicates with Tetra Tech staff.
Chris Cornwell	Laboratory PM/ Representative for laboratory and analytical issues	CFA	Coordinates analyses with lab chemists, ensures that scope of work is followed, provides QA of data packages, and communicates with Tetra Tech staff.
Dave Dunlap	Laboratory PM/ Representative for laboratory and analytical issues	TA-Pitt	Coordinates analyses with lab chemists, ensures that scope of work is followed, provides QA of data packages, and communicates with Tetra Tech staff.
TBD	Well Drilling Subcontractor PM	TBD	Drills boreholes for well construction under supervision of the Tetra Tech FOL.
TBD	Test Pit Excavating Subcontractor PM	TBD	Excavates test pits under supervision of the Tetra Tech FOL. May also conduct DPT borings.
Dennis W. Sklar	Surveyor	Dennis W. Sklar	Determines horizontal coordinates and vertical elevations for sampling locations and well locations.

[1] In some cases, one person may be designated responsibilities for more than one position. For example, the FOL may also be responsible for SSO duties. This action will be performed only as credentials, experience, and availability permits.

SAP Worksheet No. 8 -- Special Personnel Training Requirements Table

(UFP-QAPP Manual Section 2.4.4)

Each site worker will be required to have completed a 40-hour course (and 8-hour refresher, if applicable) in Health and Safety Training as described under Occupational Safety and Health Administration (OSHA) 29 Code of Federal Regulations (CFR) 1910.120(b)(4). Safety requirements are addressed in greater detail in the site-specific HASP (Tetra Tech, 2008).

SAP Worksheet No. 9 -- Project Scoping Session Participants Sheet

(UFP-QAPP Manual Section 2.5.1)

Project Name: NAS JRB Willow Grove Site 12 Projected Date(s) of Sampling: February 2011 Project Manager: Russell Turner	Site Name: Site 12 - South Landfill, NAS JRB Willow Grove Site Location: Willow Grove, Pennsylvania

Date of Session: October 13 and 26, 2010
Scoping Session Purpose: Develop project quality objectives for Phase II activities

Name	Title	Affiliation	Phone #	E-mail Address	Project Role
Russell Turner	PM	Tetra Tech	610-382-1534	russ.turner@tetratech.com	Management
Lisa Cunningham	RPM	USEPA	215-814-3363	lisa.cunningham@epa.gov	RPM
Bruce Rundell	Hydrogeologist	USEPA	215-814-3317	rundell.bruce@epa.gov	Hydrogeologist
Linda Watson	Human Health Risk Assessor	USEPA	215-814-3116	linda.watson@epa.gov	Human Health Risk Assessment
Tim Sheehan	PM	PADEP	484-250-5726	tsheehan@pa.gov	PADEP PM
Jessica Kasmari	Geologist	PADEP	484-250-5724	jkasmari@pa.gov	Technical Staff
Bill Heil	Facility Contact	NAS JRB Willow Grove	215-443-6938	bill.heil@navy.mil	Facility POC
Jeff Dale	Navy RPM	Navy BRAC PMO NE	215-897-4914	jeffrey.dale@navy.mil	NAVFAC RPM
Bob Lewandowski	BRAC Environmental Coordinator	Navy BRAC PMO NE	215-897-4908	robert.f.lewandowski@navy.mil	BRAC Environmental Coordinator
Dave Barclift	Technical Manager	NAVFAC Mid-Atlantic	215-897-4913	david.barclift@navy.mil	Risk Assessment
Donald Whalen	Geologist	Tetra Tech	610-382-1536	don.whalen@tetratech.com	Geologist

Comments/Decisions: See meeting minutes in **Appendix C**.

Action Items: Tetra Tech assigned task to prepare preliminary draft UFP-SAP.

Consensus Decisions: See meeting minutes in **Appendix C**. The meeting participants developed project quality objectives (PQOs) using EPA's seven-step DQO process. The participants agreed that the following work would be performed: the completion of 2 test pits to finish the delineation of electromagnetic (EM) anomalies Nos. 2 and 3; 25 shallow soil borings at locations outside of the EM anomalies to generate non-biased data for risk assessment support; and 29 shallow soil borings for step out samples based on Phase I exceedances of media-specific risk-based screening benchmarks. In addition, eight new monitoring wells would be installed and sampled to determine if any target analytes have migrated from the landfill into the underlying groundwater at Site 12.

Based on a Project Team consensus, Site 12 groundwater samples will be analyzed for the full suite of analytical groups including PCBs (and dioxins/furans at two locations), and existing Site 2 groundwater samples will be analyzed for VOCs only based on the last round of Site 2 groundwater data.

In a follow-up meeting (of the same participants) on October 26, the Navy requested that hexavalent chromium and trivalent chromium speciation of the total chromium results be analyzed for select samples at Site 12 and at Site 3, a similar landfill that had been investigated based on EM anomalies in a manner similar to Site 12.

The purpose for determining the site-specific ratios of hexavalent to trivalent chromium results for surface and subsurface soil at Site 12 is to support more accurate risk assessments, since the risk screening for chromium to this point has conservatively assumed all chromium to be in the form of hexavalent

chromium (a less prevalent, but more toxic form of chromium). The results will be used to calculate site-specific chromium species-related risks in a Human Health Risk Assessment (HHRA) and an Ecological Risk Assessment (ERA) that will be developed as part of the RI. The HHRA and the ERA will be developed in accordance with current USEPA Risk Assessment Guidance (USEPA, 1989) and Ecological Risk Assessment Guidance (USEPA, 1997); and Navy Human Health Risk Assessment Guidance (Navy, 2008) and Ecological Risk Assessment Guidance (Navy, 1999) guidelines. The ERA will include Steps 1 through 3a (first baseline ecological risk assessment step) of the Navy ERA tiered approach.

At both Site 12 and Site 3, average hexavalent chromium and average total chromium concentrations, as represented by the 95-percent Upper Confidence Limit (UCL) of the mean of the data points collected for each target analyte at each site, will be determined. The 95-percent UCL will be determined using USEPA's ProUCL software (Version 4.00.06, or most current) and will be used to represent the reasonable maximum concentrations of hexavalent chromium and total chromium that are present across each site. The 95-percent UCL concentration value for hexavalent chromium will be divided by the 95-percent UCL total chromium concentration value for the same samples to represent the proportion of total chromium concentration attributable to hexavalent chromium. For samples that are not analyzed for hexavalent chromium, this ratio will be used to convert the total chromium concentration to hexavalent concentration. The site-specific ratios will be determined as follows:

$$\text{Ratio} = \frac{\text{95-percent UCL of the average of the hexavalent chromium concentrations}}{\text{95-percent UCL of the average of the total chromium concentrations}}$$

The difference between the hexavalent chromium and the total chromium concentrations in each sample will be assumed to be in the less toxic trivalent form. This information will be used directly to determine risks associated with chromium in soil in the Site 12 HHRA and ERA and will be supplied to remediation engineers to be used at Site 3 to compute a revised remediation goal (RG) for chromium in soil.

It is assumed that a minimum of 8 to 10 hexavalent chromium samples from each site will have detectable levels of hexavalent chromium. However, a minimum of 4 to 5 detections are typically necessary to generate statistically valid UCL data using the ProUCL software. If there are no detections for hexavalent chromium, then the total chromium results can be concluded to be in the trivalent form alone. If a valid 95-percent UCL cannot be calculated for hexavalent chromium at either site, the Project Team will convene to determine by consensus the appropriate method to quantify the site-specific ratios of hexavalent chromium to trivalent chromium.

SAP Worksheet No. 10 -- Conceptual Site Model

(UFP-QAPP Manual Section 2.5.2)

10.1 SITE LOCATION

NAS JRB Willow Grove (the Base) is located in Horsham Township, Montgomery County in southeastern Pennsylvania, approximately 20 miles north of the city of Philadelphia (**Figure 10-1**). Site 12 - South Landfill, is located southwest of Runway 10/28 in the southern portion of the Base, immediately northeast of Site 2 – Antenna Field Landfill (**Figure 10-2**). A drainage ditch separates Site 12 from Site 2.

10.2 SITE HISTORY

Site 12 consists of what is believed to be the historical landfill that was previously investigated under the designation “Site 2”. Site 2 investigations failed to find significant buried waste. Reportedly, Site 12 was used as a disposal area for general refuse, paint waste, sewage sludge, and solvents from 1948 to 1960. Landfill activities reportedly consisted of trench excavation with subsequent burning and burial of waste material within the trenches.

10.3 PHYSICAL SETTING

Details regarding the physical setting of Site 12 are presented in the Site 12 Phase I SAP (Tetra Tech, November 2009).

10.4 PREVIOUS ENVIRONMENTAL INVESTIGATIONS

Previous investigations at Site 12, including the Preliminary Assessment (PA)/ Initial Assessment Study (IAS), Site Inspection (SI), and Remedial Investigation (RI) for Site 2, a Soil Characterization and Drum Removal Investigation, a Confirmation Soil Investigation, and a Geophysical Survey at Site 12 are detailed in the Site 12 Phase I SAP (Tetra Tech, November 2009). More recent Site 2 groundwater investigations and the results of the Site 12 Phase I RI activities are detailed below.

10.4.1 Site 2 Groundwater Confirmation Sampling

There are five monitoring wells in the immediate vicinity of Site 12 that were installed as part of the Site 2 RI: 02MW02S, in the northern portion of Site 12; 02MW04S and 02MW04I, southwest of Site 12, near Building 118; and 02MW03SI and 02MW03I, immediately south of Site 12 (02MW03S is damaged and unusable). Groundwater samples collected from these wells as part of the Site 2 RI did not indicate the presence of groundwater contamination. Site 2 groundwater samples were collected and analyzed for Target Compound List (TCL) volatile organic compounds (VOCs), TCL semivolatile organic compounds (SVOCs) (including low level polycyclic aromatic hydrocarbons [PAHs]), TCL Pesticides, TCL polychlorinated biphenyls (PCBs), and Target Analyte List (TAL) metals and cyanide during the Site 2 RI in 1997. As determined during the Site 2 RI, groundwater beneath Site 12 flows to the southwest.

In May 2009, the monitoring wells at Site 2, which is immediately topographically downgradient of the Site 12 landfill, were sampled in response to USEPA’s concerns about the age of the groundwater sampling data presented in the RI. The samples were analyzed for TCL VOCs, TCL SVOCs (including low level PAHs), and total and dissolved TAL metals (Tetra Tech, June 2009).

Trichloroethene was detected in monitoring well 02MW03I at a concentration of 1.6 micrograms per liter (µg/L) (below the USEPA Maximum Contaminant Level [MCL] of 5 µg/L), and in monitoring well 02MW03SI at a concentration of 3.9 µg/L (below the MCL).

Methylene chloride was reported in six of seven monitoring wells in 1997 at low concentrations ranging from 6B µg/L (B indicates the compound is considered to be an artifact of blank contamination, and should not be considered present) to 14B µg/L. Methylene chloride was also reported in the May 2009 investigation in seven of seven monitoring wells. At six of those seven wells, methylene chloride was reported at low concentrations (ranging from 2.4 to 9.2 µg/L). At one monitoring well (02MW04S), methylene chloride was reported at a concentration of 94 µg/L.

All SVOCs (including PAHs) and metals results were less than the MCLs, and generally lower than previous site data.

10.4.2 Site 12 Phase I RI

The Site 12 Phase I RI consisted of the collection of 40 surface soil samples, 31 subsurface soil samples, 7 surface water samples, and 8 sediment samples in January 2010. The surface and subsurface soil samples were biased towards areas that contained buried waste. Fifteen test pits were excavated at locations of EM anomalies to delineate disposal areas and to collect samples for chemical analysis. The Draft Phase I Remedial Investigation Data Report was distributed to the Project Team in June 2010 (Tetra Tech, June 2010). Sample locations and data that are summarized herein are identified in the figures and tables of that report, so only summary figures that identify samples that exceeded PSLs will be provided in this section of the SAP.

When concentrations of a target analyte were found to exceed risk-based benchmarks of an environmental medium during the Phase I RI (as defined by the Phase I RI SAP), then the target analyte was identified as a Project Screening Level (PSL) exceedance in that medium. Target analytes that have PSL exceedances are then identified as Constituents of Potential Concern (COPCs) for use in the risk screening process. Target analytes exceeding PSLs consisted of SVOCs, pesticides, and metals in surface soil; VOCs, SVOCs, pesticides, dioxins, and metals in subsurface soil; SVOCs, pesticides, and metals in surface water; and VOCs, SVOCs, pesticides, and metals in sediment. The test pits sample analyses and visual observations confirmed the presence of buried waste and associated soil contamination at the locations of EM anomalies. The report concluded that data gaps exist in defining the nature and extent of surface and subsurface soil contamination. The report also recommended the installation of monitoring wells to determine if the soil contamination has migrated to the site groundwater.

The Draft Phase I Remedial Investigation Data Report contains sections that address the types of samples collected, the field results and observations, the analytical results, and recommendations and conclusions. Portions of the report are presented below. Refer directly to the report for more complete details, including tabular and graphical presentations of this data.

Soil Borings and Test Pits

Five shallow soil borings were completed using a hand auger in January 2010. Ten surface soil samples were collected from the five soil borings. Two surface soil samples were collected from each boring: one from 0 to 6 inches below ground surface (bgs) and one from 6 inches to 24 inches bgs. The samples were submitted to CompuChem Environmental Corporation (CompuChem) for VOCs, SVOCs (including low level PAHs), pesticides, PCBs, metals, and cyanide. **Figure 10-3** shows surface soil sample results that exceeded PSLs.

The test pit investigation was performed from January 4 to 12, 2010 and consisted of the excavation of 15 test pits and the collection of 61 soil samples. The test pits were between 40 feet and 70 feet long, approximately 4 feet wide, and between 6 to 10 feet deep (the depth to bedrock). Sixty-one soil samples (30 surface soil and 31 subsurface soil) samples were collected from test pits and submitted to CompuChem for VOCs, SVOCs (including low level PAHs), pesticides, PCBs, metals, and cyanide analyses. Five soil samples collected from test pits were submitted to Columbia Analytical Services, Inc located in Houston, Texas for dioxins/furans analysis. The dioxins/furans samples were collected from areas that showed evidence of charred (burned) waste and therefore represent a significant dioxins/furans contamination potential. **Figure 10-3** shows surface soil sample results that exceeded PSLs. **Figure 10-4** shows the subsurface soil sample results that exceeded PSLs.

Surface soils consisted predominantly of clayey to sandy silt. None of the 0-to-0.5-foot soil sample intervals exhibited stained soils or obvious signs of contamination. Evidence of waste, such as glass and metal fragments, was encountered in the 0.5-to-2-foot sample interval in six test pits. There were no PID readings above background levels recorded at any of the locations.

All of the test pits, except 12TP04, encountered buried waste. In each test pit, the limits of the buried waste coincided well with the limits of the corresponding mapped EM anomaly. All test pits encountered bedrock. Perched groundwater was typically found within areas of buried debris.

In general, soil samples from the soil borings collected from outside of EM anomalies did not demonstrate target analyte concentrations above the PSLs, while soil samples from waste materials located within the test pits demonstrated several target analyte concentrations above the PSLs in numerous locations. The number and magnitude of the PSL exceedances indicate the potential for unacceptable risks to human health and ecological receptors, especially within the landfill areas as identified by the EM study. Metals and PAHs displayed significantly elevated concentrations in soils throughout the site. Surface water and sediment have also been impacted to a lesser extent by PAHs and metals.

Surface Water and Sediment

A large area of the Base property drains toward the south through ephemeral, intermittent, and perennial drainage ways into Pennypack Creek. The extreme southern portion of the Base, including part of the runway area upgradient of Site 12, the South Landfill, the Antenna Field Landfill, and a portion of the Fire Training Area, lies within the Pennypack Creek drainage basin. Seven surface water and eight sediment samples were collected from January 14 to 21, 2010. The surface water samples were collocated with the sediment samples (one location, 12SD06, was dry and a water sample could not be collected there). Sediment samples were collected from a depth of approximately 0 to 6 inches bgs. The surface water and sediment samples were submitted to CompuChem for VOCs, SVOCs (including low level PAHs), pesticides, PCBs, metals, and cyanide analyses. The sediment samples were also analyzed for total organic carbon (TOC). **Figure 10-5** shows the surface water and sediment sample results that exceeded PSLs.

The surface water at all sampling locations was clear. The stream was 5 to 10 feet wide and 6 to 12 inches deep. The groundwater quality parameters of pH, specific conductivity, turbidity, temperature, oxidation-reduction potential (ORP), and dissolved oxygen (DO) were obtained in the field for each sample. The sediment consisted mainly of silty sand at all sample locations.

ANALYTICAL RESULTS

Surface Soil

Human Health Risk Screening – Comparison to Risk-Based Benchmarks

The analytical results for surface soil were compared to Oak Ridge National Laboratory (ORNL) Regional Screening Levels (RSLs) (adjusted for a Hazard Index [HI] of 0.1) and PADEP Medium Specific Concentrations (MSCs) (PADEP, July 2010) for residential and non-residential soil. PAHs, pesticides, and metals were identified at concentrations above these benchmarks in various samples.

PAHs exceeded benchmarks in all but five surface soil samples. The following compounds exceeded benchmarks: benzo(a)anthracene, benzo(a)pyrene, benzo(b)fluoranthene, benzo(k)fluoranthene, chrysene, and dibenz(a,h)anthracene. The highest concentrations were detected in the surface soil samples from test pit 12TP11. Dieldrin exceeded the benchmark in two samples. Metals exceeded benchmarks in all of the surface soil samples. The following metals exceeded benchmarks in most or all of the surface soil samples: aluminum, arsenic, chromium, cobalt, iron, manganese, and vanadium. Other metals that exceeded benchmarks are antimony, cadmium, and copper.

The analytical results for surface soil were also compared to their respective ORNL soil-to-groundwater risk-based soil screening levels (RBSSLs) and PADEP soil-to-groundwater MSCs for residential and nonresidential soil. RBSSLs were obtained from the latest ORNL RSL Table (USEPA, June 2011) and are based upon simplified modeling equations documented in the USEPA Soil Screening Guidance: Technical Background Document (USEPA, 1996). The RBSSLs reflect a highly conservative dilution attenuation factor (DAF) of 1. SVOCs, pesticides, and metals were identified at concentrations above these risk-based benchmarks.

Ecological Risk Screening – Comparison to Risk-Based Benchmarks

The analytical results for surface soil were compared to the lowest USEPA Ecological Soil Screening Level (Eco-SSLs) for each chemical. For chemicals that do not have an Eco-SSL, the lowest value from the National Oceanic and Atmospheric Administration (NOAA) Screening Quick Reference Tables (SQuiRTs) was used. SVOCs, pesticides, and metals were identified at concentrations above these benchmarks.

Total PAHs exceeded its ecological benchmark in 29 of the 40 surface soil samples collected: 17 from a depth of 0 to 6 inches bgs and 12 from a depth of 6 inches to 24 inches bgs. The highest total PAH concentration was detected in sample 12TP11-0.502-02. Individual PAHs exceeded benchmarks in 16 surface soil samples.

Pesticides exceeded ecological benchmarks in 16 surface soil samples. The pesticides that exceeded benchmarks were dieldrin, endrin, endrin aldehyde, 4,4'-DDE, 4,4'-DDT, and total DDT.

Metals exceeded ecological benchmarks in all of the surface soil samples. Aluminum, iron, and vanadium exceeded benchmarks in all of the samples. Other metals that exceeded benchmarks were antimony, cadmium, chromium, copper, lead, mercury, selenium, silver, thallium, and zinc.

Subsurface Soil

Human Health Risk Screening – Comparison to Risk-Based Benchmarks

The analytical results for subsurface soil were compared to RSLs (adjusted for a HI of 0.1) and MSCs for residential and non-residential soil. SVOCs, pesticides, dioxins, and metals were detected at concentrations above these benchmarks.

There were no VOCs detected at concentrations exceeding benchmarks. Sample 12TP04-0405-03, collected from soil exhibiting a petroleum odor, contained several VOCs at concentrations less than benchmarks, including ethylbenzene, isopropylbenzene, methyl cyclohexane, and total xylenes. Other samples contained low levels of VOCs.

PAHs were detected at concentrations exceeding benchmarks in ten test pits. The highest concentrations were detected in duplicate sample pair 12TP09-0304-03/03D. Compounds with notably high concentrations were benzo(a)anthracene, benzo(a)pyrene, benzo(b)fluoranthene,, benzo(k)fluoranthene, dibenz(a,h)anthracene, and indeno(1,2,3-cd)pyrene, which exceeded their respective PSLs by an order of magnitude or more. Dieldrin was the only pesticide that exceeded benchmarks, and only in one sample, 12TP11-0304-03. Dioxins exceeded benchmarks in all five of the samples analyzed for dioxins/furans. The highest dioxin toxicity equivalent (TEQ) concentration was detected in sample 12TP02-0405-03.

Metals exceeded benchmarks in all of the subsurface samples. The following metals exceeded benchmarks in most or all of the subsurface soil samples: aluminum, arsenic, chromium, cobalt, iron, manganese, and vanadium. Other metals that exceeded benchmarks were antimony, cadmium, copper, lead, and zinc. Most of the PSL exceedances for each of the metals, except arsenic, also exceeded average background concentrations (determined during the 1998 Phase II RI for NAS JRB Willow Grove). Arsenic concentrations exceeded the average background arsenic concentration for 9 of the 29 samples showing PSL exceedances.

The analytical results for subsurface soil were also compared to their respective ORNL soil-to-groundwater RBSSLs and PADEP soil-to-groundwater MSCs for residential and non-residential soil. The RBSSLs are based on a highly conservative DAF of 1. VOCs, SVOCs, pesticides, metals, and dioxins were identified at concentrations above these screening levels.

Ecological Risk Screening – Comparison to Risk-Based Benchmarks

The analytical results for the six subsurface soil samples collected from depths between 2 feet and 4 feet bgs were compared to USEPA Eco-SSLs. For chemicals that do not have an Eco-SSL, NOAA SQuiRTs were used. SVOCs, pesticides, and metals were identified at concentrations above these benchmarks.

SVOCs exceeded ecological benchmarks in four samples. The highest concentrations were detected in the duplicate sample pair 12TP09-0304-03/03D. PAHs that exceeded benchmarks include benz(a)anthracene, benzo(a)pyrene, benzo(k)fluoranthene, and pyrene. Pesticides exceeded ecological benchmarks in two samples. Endrin exceeded its benchmark in sample 12TP08-0304-03, and dieldrin exceeded its benchmark in sample 12TP11-0304-03.

Metals exceeded ecological benchmarks in all of the samples. Aluminum, iron, manganese, vanadium, and zinc exceeded benchmarks in all of the samples. Other metals that exceeded benchmarks were antimony, arsenic, barium, cadmium, chromium, cobalt, copper, lead, mercury, nickel, selenium, silver, and thallium.

Surface Water

The analytical results for surface water were compared to USEPA Region 3 Freshwater Surface Water Screening Benchmarks (USEPA, 2006a). SVOCs, pesticides, and metals were identified at concentrations above these benchmarks.

PAHs exceeded benchmarks in surface water samples 12SW02, 12SW07, and 12SW08. Sample 12SW02 was collected downstream from the confluence of the storm water outfall with the intermittent stream. Samples 12SW07 and 12SW08 were collected from the drainage ditch that borders Site 12 to the southwest. The highest concentrations were detected in sample 12SW07, which contained anthracene, benz(a)anthracene, benzo(a)pyrene, fluoranthene, phenanthrene, and pyrene.

The highest metals concentrations and the greatest number of benchmark exceedances were detected in the unfiltered sample from location 12SW07, which was the sample with the highest turbidity (greater than 2,000 Nephelometric Turbidity Units [NTU]). This sample contained 14 metals above the benchmarks, including aluminum, arsenic, barium, cadmium, chromium, lead, manganese, mercury, vanadium, and zinc. The filtered sample 12SW07 contained five exceedances: aluminum, barium, iron, manganese, and selenium. The unfiltered sample from location 12SW08, which had a turbidity of 27 NTU, contained four benchmark exceedances: aluminum, barium, iron, and lead. The filtered sample contained only one benchmark exceedance, barium. In the remaining five surface water samples, which had turbidities less than 10 NTU and did not require filtering, there were four metals that exceeded benchmarks: barium, iron, lead, and manganese. Cyanide exceeded its benchmark in three samples.

Sediment

The analytical results for sediment were compared to USEPA Region 3 Freshwater Sediment Screening Benchmarks (USEPA, 2006b). VOCs, SVOCs, pesticides, and metals were identified at concentrations above these benchmarks.

The VOC carbon disulfide exceeded its freshwater sediment benchmark in two samples: 12SD01 and 12SD03/03D. PAHs exceeded benchmarks in all sediment samples, except 12SD05. The highest concentrations of PAHs were detected in samples 12SD03, the sample from the storm water outfall, and the two samples downstream from the outfall, 12SD01 and 12SD02. Pesticides exceeded benchmarks in all sediment samples, except 12SD04 and 12SD05. Pesticides that exceeded benchmarks include 4,4-DDT, alpha chlordane, and dieldrin. Metals exceeded benchmarks in all sediment samples, except 12SD07. The following metals exceeded benchmarks in one or more samples: antimony, cadmium, copper, iron, lead, manganese, and nickel.

RECOMMENDATIONS AND CONCLUSIONS

The number and magnitude of the PSL exceedances indicate the potential for unacceptable risks to human health and ecological receptors. Metals and PAHs displayed significantly elevated concentrations in soils throughout the site. Surface water and sediment have also been impacted by PAHs and metals. Therefore, an HHRA and an ERA must be conducted to determine if a feasibility study (FS) of potential remedial action is needed. To support the risk assessments, the nature and extent of contamination must be determined.

Data gaps exist for both soil and groundwater contamination delineation. Since the soil sampling program was biased towards areas displaying geophysical anomalies, data gaps exist between anomalies and near anomalies on the site periphery. Although the existing (Site 2) monitoring wells do not indicate the presence of groundwater contamination, these wells are not optimally placed to monitor groundwater potentially impacted by Site 12.

Data gaps from the Phase I RI, as identified in the Draft Phase I Remedial Investigation Data Report (Tetra Tech, June 2010), are described below.

Surface Soil

Most chemicals detected in surface soil were not found at high concentrations, and existing samples appear to be adequate to characterize the nature and extent of contamination. For some chemical/sample combinations, however, the extent of contamination appears to be uncertain and/or has not been adequately determined. These are discussed below.

SB01: PAH concentrations were elevated in SB01, but there are no samples near SB01 toward the northwest, west, south, and southeast, so the extent of PAH contamination is unclear.

SB02: The 0-6” sample from this location had the maximum concentration of lead. There are no samples nearby in any direction, so to the extent of lead contamination has not been determined.

TP02 and TP03: The 6”-24” sample at TP03 and (to a lesser extent) the 0-6” sample at TP02 were high in PAHs. These two samples are in the same EM anomaly area, with no samples to the north, east, and south. Thus, the extent of PAH contamination in these directions is unclear.

TP05: The 6”-24” sample at TP05 was high in cadmium and copper, while the 0-6” sample was high in lead content. There are no samples nearby to the north, east, and west, so the extent of contamination by these metals is unclear.

TP08: PAH concentrations were high at both depths. There are no samples to the northeast.

TP11 and TP12: Lead concentrations were high in these two samples, which are located in the same EM anomaly area toward the far eastern corner of the site. In addition, PAHs were elevated in the 6”-24” sample of TP11, and dieldrin was elevated in sample TP 11 at 0-6”. There are no samples to the south and southwest of these two samples, and there are no samples to the northeast of TP12, so the extent of contamination is unclear for these chemicals.

TP13: PAHs were elevated in the 6”-24” sample at this location, although total PAHs in the 0-6” sample were much lower. There are no samples to the west, north, or east of TP13, so the extent of PAH contamination is unclear.

TP15: DDT was elevated in the 0-6” sample at this location, and PAHs were also elevated. There are no samples to the north, west, or southwest of TP15, so the extent of PAH and DDT contamination is unclear.

Subsurface Soil

Additional subsurface soil sampling is recommended in the southeastern area of the site, where the EM survey failed to delineate the southeastern extent of linear EM anomalies Nos. 2 and 3. Two test pits are proposed to delineate the extent of buried waste and to provide a means for the collection of subsurface soil samples at these locations.

Sediment

Concentrations of PAHs tended to be greatest at locations SD01, SD02, and SD03. Some pesticides were also elevated in these samples, but to a lesser extent than PAHs. As shown on the sample location map, these three samples are in the same general vicinity, with SD02 and SD03 being upstream of SD01. SD01 is the most downstream sample. The extent of contamination downstream is discussed in depth in the RI report for Site 2, which concluded that there was no significant risk to human or ecological populations. No additional sediment samples are proposed.

Surface Water

Sample SW07 tended to have the highest concentrations of contaminants. This might have been due to turbidity. However, the surface water data appear to be adequate in determining the extent of contamination. No additional surface water samples are proposed.

Groundwater

Groundwater samples were not collected during the Phase I RI as agreed to in the Phase I RI scoping meeting. The Navy suggested in previous meetings and discussions with the USEPA Hydrogeologist that monitoring wells and groundwater sampling would be considered at the time of planning for Phase II remedial investigations at Site 12.

VOCs were generally not found in soil, sediment, or surface water samples at concentrations above risk-based benchmarks (RSLs and MSCs). However, VOCs, SVOCs, pesticides, and dioxins were found in subsurface soil at concentrations exceeding ORNL RBSSLs, indicating a potential impact to groundwater. Since there are currently no monitoring wells directly downgradient from the Site 12 soil contamination, it is recommended that three additional monitoring well clusters be installed along the southwestern boundary of Site 12. These wells would fill the gap that exists between well clusters 02MW03 and 03MW04. Each monitoring well cluster would consist of an overburden and shallow bedrock monitoring well.

In the October 13, 2010 DQO Meeting, the Project Team agreed to analyze Site 12 groundwater samples for VOCs, SVOCs (including low level PAHs), pesticides, PCBs, and metals. In addition, two shallow groundwater samples downgradient from 12TP02 will be analyzed for dioxins/furans. Also, five Site 2 groundwater samples will be analyzed for VOCs only.

Additional Investigation Area Coverage

In addition to samples suggested by the analysis above to aid in defining the nature and extent of contamination resulting from past waste disposal practices at Site 12 based on findings to date, the Navy requested additional soil sampling in the area of the southwest corner of the defined site boundary where dense vegetation was encountered, and in the area south of test pit TP07. The Navy also requested that a representative portion of the Phase II soil samples include chromium speciation analyses (for total, hexavalent, and trivalent chromium), and that the sample locations that demonstrated the highest total chromium concentrations during the Phase I RI be re-sampled nearby and analyzed for total, hexavalent, and trivalent chromium.

Soil samples that will be analyzed for hexavalent chromium will also be analyzed for pH and ORP to identify the relative oxidative/reductive properties of each soil matrix (as determined using the Eh/pH Phase Diagram on Figure 2 of SW-846 Method 3060A) because reducing conditions can convert hexavalent chromium to trivalent chromium, which may yield biased low hexavalent chromium results

when matrix spikes are added to soil due to a reduction of the spiked hexavalent chromium from reducing material within the soil matrix. Further details regarding the potential interconversion of hexavalent chromium and trivalent chromium are included in SW-846 Methods 3060A and 6800. The rationale for the chromium speciation is presented in Section 10.4.3.

10.4.3 Site 3 RI

Site 3, the Ninth Street Landfill, is approximately 3,000 feet northwest of Site 12. The landfill was active from 1960 to 1967 and was similar to Site 12 in both the types of wastes accepted and the mode of operation (burning and trenching). The Site 3 RI included the collection 25 subsurface soil samples from 18 test pits in October 2007 in a manner similar to the approach used at Site 12. The RI Report for Site 3 (Tetra Tech, May 2010) conservatively assumed that the chromium detected in the site soils was present in its most toxic form, hexavalent chromium, since site-specific chromium speciation data were not available. This assumption results in a highly conservative RG for chromium at 4 mg/kg, which is below the site-wide background level of 15 mg/kg. Chromium speciation data will enable the Project Team to revise the RG for chromium based on actual site conditions and an appropriate site-specific ratio of hexavalent chromium to trivalent chromium.

10.5 CONCEPTUAL SITE MODEL

Contaminant Sources

The source of contamination at Site 12 is buried waste associated with historical landfill operations. Phase I of the RI investigation confirmed the presence of contaminants in surface and subsurface soil, surface water, and sediment at concentrations that exceed PSLs. Test pits have confirmed the presence of buried waste material in areas of EM anomalies. The depth to bedrock ranges from 6 feet to 10 feet bgs. Site investigations to date indicate that the principal classes of contaminants in site soils are PAHs, other SVOCs, pesticides, and metals.

Based on a review of the Phase I RI data, the Conceptual Site Model (CSM) for Site 12 has been revised to incorporate this new information. The EM anomalies were confirmed to contain waste materials, including charred waste. Areas outside the EM anomalies did not contain any observable waste and the concentrations of target analytes were generally below the PSLs in these areas.

Sediment and surface water samples were generally below the PSLs, so these media were determined to be acceptable and have been removed from the list of environmental media of concern at Site 12. The extent of surface water and sediment contamination at the site was adequately delineated during the Phase I RI activities. No further investigation of surface water or sediments is planned.

A CSM schematic for human receptors is provided on **Figure 10-6**. A CSM schematic for ecological receptors is provided on **Figure 10-7**.

Potential Contaminant Migration Pathways

Contaminant migration pathways from the source areas include wind erosion, overland runoff, and infiltration. Contaminated fugitive dust can be generated during ground-disturbing activities, such as construction or excavation. Contaminants could then be dispersed in the surrounding environment and transported to downwind locations where they could repartition to surface soil, surface water, or sediment through gravitational settling, precipitation, and deposition. Vegetation at Site 12 serves to minimize the airborne contaminant transport pathway. Precipitation runoff can carry contaminants via overland runoff to the drainage swale on the southwest boundary of the site. This drainage swale runs between Site 2 and Site 12.

Infiltrating precipitation can cause contamination to move into subsurface soil and groundwater. Chemicals (e.g., PAHs) with a stronger tendency to adsorb to organic matter in soil are expected to migrate at a slower rate than VOCs. Upon entering the water column, a chemical is carried with the flow of groundwater to downgradient locations. Contaminants can be deposited subsequently in sediment or surface water, although sediment and surface water are not a concern for this phase of the investigation

since sufficient data has been collected previously, as described in the Draft Phase I Remedial Investigation Data Report.

Exposure Pathways

Human Health Risk

Soil and groundwater at the site may be contacted by human receptors engaged in activities associated with either current (currently restricted to maintenance activities like cutting grass or brush) or future (potential unrestricted land use after Base Closure) exposure scenarios. The exposure pathways for soil consist of ingestion, dermal absorption, and inhalation of fugitive dust or ambient air contaminants; and for groundwater, ingestion and dermal absorption.

Potential human exposure pathways are illustrated on **Figure 10-8**.

Ecological Risk

Terrestrial animals at Site 12 can be exposed to soil contaminants through the ingestion of contaminated food items. In addition, animals can incidentally ingest soil while grooming fur, preening feathers, digging, grazing close to the soil, or feeding on items that are covered with soil (such as roots and tubers). Exposure to contaminants in the soil via dermal contact can occur. Terrestrial vegetation can be exposed to contaminants through direct aerial deposition and root translocation. Aerial deposition, however, is presently minimal due to the presence of dense vegetation on Site 12. Terrestrial receptors can also come into contact with contaminants in surface water by using it for drinking, although this exposure route generally represents a negligible portion of total exposure for most receptors. Aquatic and semi-aquatic organisms can be exposed to contaminants through consumption of contaminated food items.

Potential ecological exposure pathways are illustrated on **Figure 10-9**.

Potential Receptors

Human Receptors

Anticipated exposure scenarios include residential, industrial, construction worker, and limited recreational situations. With the anticipated closure of the Base under the BRAC process, future land use is expected to remain similar to the current industrial and recreational land usage.

Ecological Receptors

The vegetated areas at Site 12 provide habitat for a variety of terrestrial receptors, although these habitats are isolated to a great extent by surrounding developed areas. Terrestrial receptors at the site consist of mammals such as rabbits, raccoons, squirrels, and various rodents (including woodchucks), deer, and foxes. Reptiles and amphibians may utilize some portions of the site, particularly the drainage swale. The vegetated areas provide forage (seeds, insects, worms, etc.) for a variety of bird species. Arboreal birds utilize the woods and shrub thickets. Avian raptors are expected to utilize all habitats at the site. The drainage swale may provide a habitat for certain benthic macroinvertebrates and amphibians.

SAP Worksheet No. 11 -- Project Quality Objectives/Systematic Planning Process Statements

(UFP-QAPP Manual Section 2.6.1)

The following text describes the development of PQOs using EPA's DQO/Systematic Planning Process.

11.1 PROBLEM STATEMENT

Problem #1:

Past sampling and analyses have detected the presence of site-related chemicals in Site 12 soil at concentrations that are potentially hazardous to human and ecological receptors. To complete the delineation of contamination in soil and groundwater and to conduct ecological and human health risk assessments for Site 12, the following data gaps must be filled:

- Soil COPC concentrations outside of the trenches containing buried wastes/debris at Site 12. These are locations between trenches, and at the periphery of the Site surrounding the trenches;
- Groundwater COPC concentrations across Site 12; and
- Data to identify the nature of waste materials in EM anomalies Nos. 2 and 3 and the southern extent of EM anomalies Nos. 2 and 3 (and therefore Site 12) which was not completed in Phase 1.

Upon filling these data gaps and estimating the proportion of total chromium that is attributable to hexavalent chromium (see Problem #2), risk assessments can be completed to determine whether risks to human health and the environment are unacceptable at Site 12 and if so, whether actions to evaluate options for reducing the unacceptable risks are warranted.

Problem #2:

At Sites 3 and 12, past sampling and analyses have shown that total chromium concentrations are potentially unacceptable if the total chromium is assumed to represent hexavalent chromium only. Environmental conditions, however, typically result in total chromium being partitioned into two forms: hexavalent and trivalent chromium, with a predominance of trivalent chromium. Trivalent chromium is much less toxic than hexavalent chromium. Therefore, any risk assessment or environmental cleanup based on an assumption that total chromium concentrations equate to hexavalent chromium concentrations may be too conservative and may result in an unnecessary expenditure of resources to correct a problem that appears to be larger than it really is. Therefore, data are needed that will allow the Project Team to more accurately estimate actual hexavalent and trivalent chromium concentrations at Site 3 (for cleanup) and at Site 12 (for risk assessment).

11.2 INFORMATION INPUTS

Based on the historical site information, the CSM, and the results of the Phase I RI, data gaps must be investigated under this Phase II RI SAP to resolve the problems described in Section 11.1.

The following physical and chemical data are required (target analytes are identified on **Worksheet No. 15**):

1. Chemical data (for Site 12 only, except where noted):
    a. Surface and subsurface soil chemical concentrations to determine the nature and extent of VOCs, SVOCs (including low level PAHs), pesticides, PCBs, metals (including total, hexavalent, and trivalent chromium at certain locations at Sites 3 and 12), and cyanide, and to support an HHRA and an ERA. The target analyte(s) for step-out soil sample locations used to delineate known contamination are limited to only those analytical fractions or individual analytes that include COPC(s) that exceeded a PSL during the Phase I investigation, as identified for each sample in **Worksheet No. 18**. Test pitting and soil boring will be necessary for collecting samples of soil.

b. Soil pH data from surface soil to support an ERA.
c. For Sites 3 and 12, soil pH and soil ORP data to document the oxidative or reductive nature of the soil matrix and support an evaluation of chromium chemical speciation. These data will be used qualitatively to verify whether computed hexavalent chromium proportions appear to be valid since the predominant form of chromium depends on these parameters.
d. Subsurface soil dioxins/furans concentrations to determine the nature and extent of dioxins/furans specifically from areas where there is evidence of burning and to support an HHRA.
e. Groundwater concentrations for VOCs, SVOCs (including low level PAHs), pesticides, PCBs, metals, cyanide, and dioxins/furans (except for the existing Site 2 monitoring wells, where only VOCs are required) to support a determination of the nature and extent of contamination in groundwater and to support an HHRA.

The selected target analytes (see **Worksheet No. 15**) represent analytes potentially associated with historical Site 12 operations and they include the target analytes required to establish the proportion of total chromium that is attributable to hexavalent chromium at Sites 3 and 12. Applicable sampling methods and analytical groups that are required at each sample location are presented in **Worksheet No. 18**, and the analytical methods are presented in **Worksheet No. 19**.

2. Groundwater quality data: Field parameters of pH, specific conductivity, turbidity, temperature, ORP, and DO must be collected. One synoptic round of water level measurements and total well depth soundings must be conducted at the site from all new and existing monitoring wells prior to sampling to provide information regarding groundwater flow patterns and gradients. These data will ensure representativeness of the groundwater samples collected and assist with site characterization and the nature and extent of contamination.

3. Subsurface soil screening: Subsurface soil vapor screening data (using a photoionization detector [PID]) are needed to identify any potentially elevated levels of VOCs and to determine sample locations in test pits. Visual screening of test pit contents and soil boring cuttings will also be used to determine the presence of waste materials that may contribute to contamination.

4. Dissolved metals data: If groundwater exhibits turbidity greater than 10 NTU, then dissolved metals data must be collected to support site-specific human health risk calculations.

5. Survey data: Survey coordinate data will be collected and documented in order to accurately map the sampling locations.

Project Screening Levels

This Site 12 RI requires target analyte data that can be used to characterize the site and conduct an HHRA and an ERA. To determine COPCs, laboratory results must first be compared to media-specific HHRA and ERA PSLs as part of the risk screening process. Surface and subsurface soil and groundwater PSLs were set at the lowest matrix-specific, risk-based or regulatory human health and ecological screening criteria appropriate for the site. The complete list of applicable PSLs for the selected analytes is presented in **Worksheet No. 15**.

To conduct comparisons of site data to PSLs, the selected laboratory must be able to achieve Limits of Quantitation (LOQs) that are low enough to measure constituent concentrations below the PSLs.

Analytical data reported by the laboratory use the following reporting conventions: All concentrations less than the Detection Limit (DL) will be considered nondetects; between the DL and LOQ will be reported with a “J” qualifier; and concentrations less than the DL (i.e., non-detects) will be reported as the Limit of Detection (LOD) value with a "U" qualifier.

PSLs have been included in **Worksheet No. 15** to ensure laboratory sensitivity is sufficient. ERA PSLs were selected by choosing the lowest value among USEPA Eco-SSLs for plant, invertebrate, mammalian and avian values and this was selected as the ecological benchmark. Eco-SSLs were used preferentially

as soil benchmarks; however, Eco-SSLs are currently available for only a few analytes. NOAA SQuiRTs (NOAA, 2008) were used for benchmarks for analytes that do not have an Eco-SSL.

For soil, average concentrations, as represented by the 95-percent UCL of the mean, will be determined, specific to the human receptor which it represents. The 95-percent UCL will be determined using USEPA's ProUCL software and will be used to represent the Exposure Point Concentration (EPC) for soil. Surface soil and combined surface and subsurface soil concentrations will be computed for the HHRA. For groundwater, maximum detected concentrations will be used to represent EPCs, unless the Project Team determines that a particular value is a statistical outlier or otherwise misrepresents the site with respect to groundwater impact.

Several target analytes have PSLs that fall between the LOD and the LOQ. "J" flagged data will be accepted to achieve project goals; however, greater scrutiny will be applied in these cases. Additionally, the inability to quantify select analytes to PSL levels with confidence will be addressed in the risk assessment uncertainty analysis.

Per the Project Team meeting held on October 13, 2010, and consistent with the USEPA Risk Assessment Guidance for Superfund, Part A (USEPA, 1989), an evaluation of non-detects greater than the PSL will be presented in the uncertainty section of the risk assessment in the RI Report.

11.3 STUDY AREA BOUNDARIES

At the discretion of the Project Team to ensure adequate coverage of the entire area identified within the Site 12 boundary and to support the risk assessment calculations of EPCs with unbiased data, soil chemical data must be collected during Phase II from areas that are outside the waste-impacted EM anomaly areas that were identified in the Draft Phase I Remedial Investigation Data Report (Tetra Tech, June 2010).

1. The horizontal boundary of the landfill for the study is defined as the outer, three-dimensional perimeter of the area where possible landfill operations took place, based upon information from previous investigations (**Figure 10-2**), plus any areas southeast of EM anomalies Nos. 2 and 3 (**Figure 10-3**) that are identified through test pits to contain waste. The population of interest (identified as the landfill) is all soils associated with the landfill operations that contain visible buried waste and associated chemical contamination. To complete the delineation of this boundary, chemical and visual observation data must be collected from within and from without any buried waste and contaminated soil area.

2. The depth of interest for test pits is from the ground surface to approximately 6 to 10 feet bgs, which is the approximate depth of bedrock. A 10-foot depth is also consistent with the maximum soil depth typically used to evaluate human health risks. The depth of interest for the soil borings outside of the EM anomalies is the ground surface to 4 feet bgs, as determined by the Project Team during the DQO Meeting for Phase I.

3. For human health risk, surface soil is defined as the interval from 0 to 2 feet bgs and subsurface soil is defined as the soil interval from 2 feet bgs to the waste depth plus 1 foot, or to bedrock, whichever is shallower. For ecological risk, surface soil is defined as the interval from 0 to 6 inches bgs. For this reason, the 6 to 24 inch depth samples are described as "shallow subsurface" to distinguish them from other subsurface samples and to allow risk assessors to properly address the soils from the different depths. The HHRA will use soil data from the 0 to 6 inch bgs interval and the 6 inch to 2 feet bgs interval to calculate risks to human health associated with surface soil exposure and soil data from below 2 feet bgs to calculate risks to human health associated with subsurface soil. Consistent with the ERA recently conducted for Site 3, the ERA for Site 12 will combine soil data from the 0 to 6 inch bgs interval, 0 to 24 inch bgs interval, and 6 to 24 inch bgs interval so that all samples from $\leq$ 24 inch bgs will be considered as "surface soil". The ERA will use this dataset to evaluate risks to soil invertebrates, plants, and wildlife. The ERA will use soil data from the 2 to 4 feet bgs interval to evaluate risks to burrowing mammals.

4. The groundwater population of interest is groundwater that may have been contaminated by releases from the landfill. This is generally groundwater located hydraulically downgradient of the areas identified with EM anomalies. Hydraulically upgradient groundwater is also of interest to help delineate contamination. If unacceptable levels of contaminants are detected in any monitoring wells at Site 12, the upgradient groundwater monitoring well will provide a reference population for naturally occurring metals in any future investigations. Depth to groundwater is expected to be less than 20 feet bgs based on the water levels data at adjacent Site 2.

5. HHRA and ERA exposure units: Exposure units for soil extend from ground surface to 10 feet bgs or bedrock (whichever is shallower) for the HHRA, and from ground surface to a maximum of 4 feet bgs for the ERA, as agreed upon by the Project Team. The groundwater exposure unit is defined to be the most contaminated part of a groundwater contaminant plume, if groundwater contamination is detected.

6. Temporal boundaries are not a concern as all target analyte concentrations are anticipated to be relatively unchanged (stable) over the course of time needed to complete the environmental investigations. Phase II field activities are scheduled for early 2011.

11.4 ANALYTIC APPROACH

For the purpose of this SAP, the extent of contamination in groundwater and soil is determined by comparing the detected concentration of a target analyte against the PSL for that target analyte in the environmental media in which it was detected. The extent of contamination is defined as the outer boundary circumscribing the Site 12 source area(s). This outer boundary is a line connecting the midpoints between sample locations that contain a target analyte detected at a concentration below the PSL and sample locations that contain a target analyte detected at a concentration above the PSL.

The decision rules for Phase II of the study are as follows:

Decision Rule #1 (Applies to Site 12)

- If the Project Team determines based on Phase I and Phase II data that the nature and extent of contamination have been adequately delineated, then proceed with the HHRA and the ERA; otherwise, convene the Project Team to determine a need for additional data collection. For groundwater data, if an MCL is exceeded at any unbounded well location, the Project Team will decide if deeper bedrock wells are warranted. The tendency to collect more data will increase as spatial patterns indicate that an unacceptable risk exists outside of the investigated areas. At a minimum, this evaluation shall consider the following factors:
    - Frequency of detection for each chemical;
    - Frequency and magnitude of PSL exceedance of each chemical;
    - Background concentrations of chemicals exceeding PSLs;
    - Magnitude of concentrations within, and on the perimeter of, the investigated areas; and
    - Identity of COPCs and their estimated contribution to unacceptable levels of risk.

Decision Rule #2 (Applies to Sites 3 and 12)

- If the Project Team concludes that the proportion of total chromium attributable to hexavalent chromium has been adequately established for Sites 3 and 12 in accordance with the approach documented in **Worksheet No. 9** and the laboratory did not encounter hexavalent chromium analysis problems such as low spike recovery due to highly oxidative or reductive soil conditions (as documented by measured pH and ORP values), then use this proportion to convert total chromium concentrations to hexavalent chromium concentrations in samples not analyzed directly for hexavalent chromium, proceed with the Site 12 HHRA and the ERA, and provide the computed proportion to Site 3 remedial engineers. If this proportion is not adequately determined for either Site 3 or Site 12, then convene the Project Team to determine the appropriate path forward for estimating hexavalent chromium concentrations.

Decision Rule #3 (Applies to Site 12)

- If risks based on the EPCs computed as described in Section 11.2 for any medium represent an unacceptable human health risk within the exposure unit, then proceed to an FS for that exposure unit; otherwise, recommend No Further Action (NFA) from a human health perspective. Unacceptable human health risk is defined for this project as an incremental lifetime cancer risk (ILCR) estimate exceeding $1x10^{-4}$ or a non-cancer risk (i.e., hazard index [HI]) exceeding 1 (on a target-organ/effect specific basis).

Decision Rule #4 (Applies to Site 12)

- If after completing an ERA through Step 3a of the Navy ERA tiered approach the risks are acceptable, recommend NFA from an ecological risk perspective. Otherwise, define data needs for establishing site-specific preliminary ecological remediation goals.

11.5 PERFORMANCE OR ACCEPTANCE CRITERIA

The Site 12 RI has been designed to rely on a phased approach of step-wise discovery and directed investigations based on biased sampling agreed upon by the Project Team. Test pit, monitoring well groundwater, soil boring, surface water, and sediment sample locations in Phase I and Phase II were selected (to determine the nature and extent of contamination) from areas most likely to be contaminated, as well as from presumably clean areas outside of impacted areas, based on the previous step in the investigation (e.g., the April 2008 EM survey) and the field observations.

By Project Team consensus, additional samples will be collected during Phase II from areas identified during the Phase I RI that exhibited exceedances of PSLs to further delineate the nature and extent of COPCs. Also, samples will be collected from areas outside the Site 12 areas not yet demonstrated to be contaminated or uncontaminated to demonstrate RI completeness and to support the HHRA and ERA calculations.

If all data have been collected as planned and no data points are missing or rejected for quality reasons, the investigation completeness will be considered satisfactory. If any data gaps are identified, including missing or rejected data, the Project Team will assess whether a claim of having obtained project objectives is reasonable. This assessment will depend on the number and type of potential data gaps; therefore, a more detailed strategy cannot be presented at this time. Project Team stakeholders will be involved in rendering the final conclusion by consensus regarding adequacy of the data.

11.6 PLANS FOR OBTAINING THE DATA

The plans for obtaining data along with the sampling designs and rationales are described in detail on **Worksheet No. 17**.

SAP Worksheet No. 12 -- Measurement Performance Criteria Table – Field Quality Control Samples

(UFP-QAPP Manual Section 2.6.2)

Quality Control (QC) Sample	Analytical Group	Frequency	Data Quality Indicators (DQIs)	Measurement Performance Criteria (MPCs)	QC Sample Assesses Error for Sampling (S), Analytical (A) or Both (S&A)
Trip Blank	VOCs	One per cooler of VOC samples shipped to laboratory.	Bias/ Contamination	No analytes ≥ ½ LOQ, except common laboratory contaminants, which must be < LOQ.	S & A
Equipment Rinsate Blank	All analytical groups	One per 20 samples per matrix per sampling equipment[1].	Bias/ Contamination	No analytes ≥ ½ LOQ, except common laboratory contaminants, which must be < LOQ.	S & A
Filtered Rinsate Blank	Dissolved Metals (if necessary due to high turbidity)	One per filter brand[2].	Bias/ Contamination	No analytes ≥ ½ LOQ, except common laboratory contaminants, which must be < LOQ.	S & A
Field Duplicate	All analytical groups	One per 10 field samples.	Precision	Values > 5X LOQ: Relative Percent Difference (RPD) must be ≤30 (aqueous)[3,4] ; ≤50 (solids)[3,4].	S & A
Cooler Temperature Indicator	All analytical groups	One per cooler.	Representativeness	Temperature must be less than 6 degrees Celsius (<6 °C).	S

1 – Equipment rinsate blanks will be collected if non-dedicated submersible pumps or other equipment are used.
2 – A filtered rinsate blank will be collected if filtered samples (e.g., Dissolved Metals) are collected.
3 – If duplicate values for non-metals are < 5x LOQ, absolute difference should be < 2x LOQ.
4 – If duplicate values for metals are < 5x LOQ, absolute difference should be < 4x LOQ.

SAP Worksheet No. 13 -- Secondary Data Criteria and Limitations Table

(UFP-QAPP Manual Section 2.7)

Secondary Data	Data Source (originating organization, report title and date)	Data Generator(s) (originating organization, data types, data generation / collection dates)	How Data Will Be Used	Limitations on Data Use
Aerial Photographs	Aerial Photographic Site Analysis, Willow Grove Naval Air Station, Willow Grove, Pennsylvania	USEPA, Characterization Research Division, June 1995	Data will be used to generate approximate landfill location on topographic or geographical information system maps at Site 12.	None.
April 2008 EM Survey Data	Geophysical Survey Results, NAS JRB Willow Grove Site	Advanced Geological Services, April 2008	Data will be used to select proposed test pit locations at Site 12.	None.
RI Phase I Analytical Data	RI Report for Sites 1, 2, 3, and 5, Naval Air Station Willow Grove, Pennsylvania	Halliburton NUS Environmental Corporation, February 1993	Data from what is now identified as Site 12 will be used to calculate environmental risks.	None, the data were fully validated.
RI Phase II Analytical Data	Draft Phase II RI Report for NAS JRB Willow Grove	Brown and Root Environmental, 1997	Data from what is now identified as Site 12 will be used to calculate environmental risks.	None, the data were fully validated.
Soil Screening Area (SSA) 12 Soil Investigation Analytical Data	SSA 12 Soil Investigation Letter Report	Tetra Tech, NUS, Inc., April 2008	Data from what is now identified as Site 12 will be used to calculate environmental risks.	None, the data were fully validated.
Site 2 Groundwater Monitoring Data	Site 2 Groundwater Monitoring Report	Tetra Tech, NUS, Inc., June 2009	Data will be used to calculate environmental risks.	None, the data were fully validated.
Site 12 Phase I RI	Site 12 Phase I RI Data Report	Tetra Tech, NUS, Inc., June 2010	Data will be used to calculate environmental risks.	None, the data were fully validated.
Site 3 RI	Site 3 RI Report	Tetra Tech, NUS, Inc., May 2010	Data will be used to revise environmental risks associated with chromium.	None, the data were fully validated.

SAP Worksheet No. 14 -- Summary of Project Tasks

(UFP-QAPP Manual Section 2.8.1)

14.1 FIELD INVESTIGATION TASK PLAN

The field tasks are summarized below. A short description of these tasks is also provided.

- Mobilization/Demobilization
- Site-Specific Health and Safety Training
- Utility Clearance
- Monitoring Equipment Calibration
- Test Pit Trenching and Sampling
- Surface and Subsurface Soil Boring Sampling
- Groundwater Monitoring Well Installation
- Groundwater Monitoring Well Development
- Groundwater Level Measurements
- Groundwater Sampling
- Investigation-Derived Waste (IDW) Management
- Surveying
- Field Decontamination Procedures
- Field Documentation Procedures
- Sample Custody and Shipment Tasks
- Quality Control Tasks

Mobilization/Demobilization

Mobilization shall consist of the delivery of all equipment, materials, and supplies to the site, the complete assembly in satisfactory working order of all such equipment at the site, and the satisfactory storage at the site of all such materials and supplies. Tetra Tech will coordinate with the Base to identify locations for the storage of equipment and supplies. Site-specific Health and Safety Training to all Tetra Tech subcontractors will be provided as part of the site mobilization.

Demobilization shall consist of the prompt and timely removal of all equipment, materials, and supplies from the site following completion of the work. Demobilization includes the cleanup and removal of IDW generated during the conduct of the investigation.

Site-Specific Health and Safety Training

All field personnel will have appropriate training to conduct the field activities to which they are assigned. Each site worker will be required to have completed the OSHA 40-hour course (and 8-hour refresher, if applicable) in Health and Safety Training. Safety requirements are addressed in greater detail in the site-specific HASP.

Utility Clearance

Prior to the commencement of any intrusive activities, Tetra Tech will coordinate with the Base to identify and mark-out utilities that may be present within the proposed excavation areas. Subsurface utilities will also be cleared by the excavation subcontractor by notifying the Pennsylvania One-Call utility clearing service. See Tetra Tech Standard Operating Procedure (SOP) **HS-1.0** (**Appendix A**) for further information on utility clearance.

Monitoring Equipment Calibration

These procedures are described in **Worksheet No. 22**.

Test Pit Excavation and Sampling

Test pits will be used to delineate the extent of buried waste in linear EM anomalies Nos. 2 and 3 (see **Figure 10-3**) in the southeastern part of the site. Two test pits will be excavated as identified in **Worksheet No. 17** in the locations of anomalies that were not fully delineated by the EM survey due to the presence of heavy vegetation. These test pits will be used to delineate the nature and extent of any waste materials and any contamination resulting from the EM anomalies areas.

Each test pit will be approximately 20 feet to 50 feet in length, approximately 3 feet wide (the width of the backhoe bucket), and approximately 6 to 10 feet deep (the anticipated maximum depth to bedrock). The exact length of each test pit will be determined in the field based upon the Tetra Tech Geologist's observations of the subsurface conditions encountered at each location. Each test pit will extend at least 20 feet across the anticipated lateral extent of each anomaly and will stop after 3 feet of soil with no waste debris is observed in each direction. All excavated materials will be used as backfill at the conclusion of the excavation activities at each location, unless grossly contaminated material is encountered, as described in the IDW Management section. If potentially hazardous material is encountered, such as drums or liquid waste, work will halt and the Navy facility contact will be notified. Wastes will be segregated and disposed as described in the IDW Management section below. Each test pit will be excavated and backfilled during the same day to prevent leaving an open excavation overnight. Under no circumstances will anyone be allowed to enter a test pit during the excavation activities. Health and Safety procedures and protocols for test pit excavation identified in the HASP will be strictly enforced.

Test pit samples will be obtained from excavated material directly from the backhoe bucket. The soil will be described by the Tetra Tech Geologist and will be screened for evidence of contamination visually and with a PID. Any signs of potential contamination (such as soil staining or PID readings above five parts per million [5 ppm]) will be noted to document observations and assist in the sample selection process. Soil sampling procedures for test pits are discussed in **Tetra Tech SOP SA-1.3**, soil logging procedures are documented in **Tetra Tech SOP GH-1.5**, and the use of the PID is discussed in the manufacturer's instructions. Field SOPs are included in **Appendix A**.

For soil samples scheduled for VOCs analysis, VOC samples will be obtained in the field with sampling equipment supplied by the laboratory. SW-846 Method 5035 preparation will begin in the field using preservative-containing vials from the lab. Soil samples analyzed for VOCs will be collected using TerraCore samplers and will be field preserved using deionized water (two 40-milliliter [mL] vials) and methanol (one 40-mL vial). VOC samples from test pits will be collected from at least six inches below the surface of the soil in the bucket to prevent loss of VOCs. Analysis through SW-846 Method 8260B will be completed in the laboratory. Field and laboratory QC samples will be collected as specified in **Worksheet No. 20**.

Test pits will also be used to collect subsurface soil samples at Site 12 and at Site 3 for total, hexavalent, and trivalent chromium analyses at locations where soil borings are not possible due to the presence of buried waste materials. The samples will be collected from the immediate vicinity of previously collected samples where total chromium concentrations were elevated and from additional sample locations chosen to provide representative coverage of the site. The chromium speciation samples will be collected from the same depths as the corresponding previous total chromium samples, but moved approximately three feet away from the original test pit path to avoid collecting new samples from within the original test pit, where the original material has been disturbed.

Surface and Subsurface Soil Boring Sampling

Soil samples will be collected from three depths at each soil boring location: 0 to 6 inches, 6 inches to 24 inches, and 3 to 4 feet. The 0 to 6 inches bgs surface soil samples will be collected by filling the sample jars using either a decontaminated stainless steel trowel or a dedicated disposable trowel. The 6 to 24 inch bgs shallow subsurface soil samples and 3 to 4 feet subsurface soil samples will be collected either by hand, using a stainless steel hand auger and stainless steel or disposable trowel, or by using direct push technology (DPT), as determined to be the most efficient procedure by the Tetra Tech Geologist.

The soil will be described by the Tetra Tech Geologist and will be screened for evidence of contamination with a PID and the readings will be documented in accordance with **SOP GH-1.5** (**Appendix A**). Soil pH will be measured at each location using a field test kit. Any qualitative signs of potential contamination (such as soil staining or PID reading above 5 ppm) will be noted to support test pitting documentation and waste sample location selection which will be done at EM anomalies.

Soil borings will also be used to collect subsurface soil samples at Site 3 for total, hexavalent, and trivalent chromium analyses at sample locations where buried waste is not present. These samples will be collected from the immediate vicinity of previously collected samples where total chromium concentrations were elevated in a previous RI for Site 3. The samples will be collected from the same depths as the previous RI samples, which are the depths identified in a Site 3 results table in **Worksheet No. 17** and as shown in **Worksheet No. 18**.

Soil sampling procedures are discussed in **Tetra Tech SOP SA-1.3**, DPT is discussed in **Tetra Tech SOP SA-2.5**, soil logging procedures are documented in **Tetra Tech SOP GH-1.5**, and the use of the PID is discussed in manufacturer's instructions. These SOPs are included in **Appendix A**.

For soil samples scheduled for VOCs analysis, VOC samples will be obtained in the field with sampling equipment supplied by the laboratory. Details regarding field sample preparation and laboratory analysis of these samples are described in the Test Pit Trenching and Sampling section.

Groundwater Monitoring Well Installation and Development

The groundwater well installation and development procedure discussed in **Tetra Tech SOP GH-2.8** (**Appendix A**) will be followed.

Groundwater Monitoring Well Installation

Four monitoring well clusters will be installed as identified in **Worksheet No. 17**. These wells are located to provide data to determine if contaminants are migrating from the waste to the underlying groundwater. Each well cluster will consist of an overburden well and a shallow bedrock well. The shallow bedrock wells will be installed to monitor the first groundwater encountered in the bedrock. During the Phase I test pit excavations, bedrock was encountered at depths ranging from 6 to 10 feet bgs. Perched groundwater was encountered in areas of buried waste and minor amounts of perched groundwater were encountered on top of the bedrock in areas with no waste.

The bedrock monitoring wells will be drilled by an air-rotary or air-percussion drilling rig. A ten-inch-diameter borehole will be drilled from the ground surface to a depth of 5 to 10 feet into bedrock, and a 6-inch-diameter steel surface casing will be set. This casing will also serve as the outer protective casing for the completed well. A nominal 6-inch diameter borehole will be drilled in the bedrock until the target depth (approximately 35 feet) for the borehole is reached. The Tetra Tech Geologist will log the drill cuttings and record all pertinent drilling information. Borehole logging procedures are discussed in **Tetra Tech SOP GH-1.5** (**Appendix A**).

The overburden wells will be installed on top of the bedrock using a 4-1/4" inside diameter hollow stem auger. Continuous soil samples will be acquired from the ground surface to the total depth of each boring (approximately 10 feet) using standard split spoon samplers.

Upon completion of borehole and surface casing installation for the bedrock monitoring well, the driller will demobilize for the planned geophysical logging period of approximately up to two weeks. All bedrock boreholes will be geophysically logged, while the driller is demobilized, in order to identify subsurface lithology, fractured intervals, water entry or exit zones, and vertical flow direction and quantity. The bedrock monitoring well will be constructed to monitor groundwater from the most significant water-bearing zone in the borehole, as identified by the observations of the Tetra Tech Geologist and the interpretation of the geophysical logs.

The well screen shall consist of 2-inch inside diameter (ID), threaded, flush joint, National Sanitary Foundation (NSF)-certified, Schedule 40, factory slotted polyvinyl chloride (PVC) well screen with an attached bottom cap. The slot size shall be 0.010-inch (10 slot) for the overburden wells and 0.02-inch for the bedrock wells. The riser shall consist of 2-inch ID, threaded, flush joint, NSF-certified, Schedule 40 water well casing. The riser shall stick up approximately 2 feet above ground surface. The standard screen length for the wells is 10 feet unless otherwise specified by the Tetra Tech Geologist.

A filter sand pack composed of appropriately-sized sand (Morie No. 1 or equivalent for the overburden wells and Morie No. 2 for the bedrock wells) will be installed to a height of 1 foot above the top of the well screen. The depth to the top of the filter pack shall be measured by the subcontractor and Tetra Tech during and after installation to ensure that the filter pack is installed as specified. All equipment used to obtain these measurements shall be decontaminated before and after each use.

For the bedrock wells, the annular space from the top of the sand pack to the bottom of the surface casing will be sealed with bentonite, and the annular space inside the surface casing will be sealed with a bentonite/cement grout. For the overburden wells, the annular space from the top of the sand pack to the ground surface will be backfilled with bentonite. The depths of all backfill materials will be constantly monitored during the well installation process to ensure that bridging does not occur. The bentonite pellets shall be activated by potable water and allowed to hydrate per the manufacturer's recommendations (or a minimum of 30 minutes) before the addition of a bentonite/cement grout. All bentonite/cement grout used shall be emplaced by tremie pipe to the bottom of the interval to be grouted. The grout shall be permitted to cure a minimum of 24 hours before well development.

Monitoring well drilling and installation procedures are discussed in **Tetra Tech SOPs GH-1.3** and **GH-2.8**, respectively (**Appendix A**).

Groundwater Monitoring Well Development

At least 24 hours after the annular grout has been emplaced, the monitoring wells shall be developed either with a submersible pump by pumping and/or overpumping or by bailing until the discharge water is clear and free of sediment to the satisfaction of the Tetra Tech Geologist or for a maximum of 4 hours per well. Turbidity will be monitored with a nephelometer. Development will be conducted in accordance with **SOP GH-2.8** (**Appendix A**).

Groundwater Level Measurements

One synoptic round of water level measurements and total well depth soundings will be conducted at the site from all new and existing monitoring wells prior to sampling to provide information regarding groundwater flow patterns and gradients following **Tetra Tech SOP GH-1.2** (**Appendix A**). All water level measurements will be taken within an 8-hour period using an electronic water level meter, and no sooner than 24 hours after a significant precipitation event to minimize the precipitation effects on the data set. Water level elevations will be recorded to within 0.01-foot accuracy from a marked reference point on the well riser pipe. Water levels will be recorded on a Tetra Tech water level form. The water level meter will be decontaminated prior to use and between each monitoring well. The water level data will be used to construct water level contour maps in accordance with **Tetra Tech SOP GH-2.5** (**Appendix A**).

Groundwater Sampling

All new and existing monitoring wells will be purged prior to sampling. All screened monitoring wells with a screen length of 10 feet or less will be purged and sampled using the low-flow sampling techniques in accordance with the USEPA Region 3 "Recommended Procedure for Low-Flow Purging and Sampling of Groundwater Monitoring Wells", Bulletin No. QAD023, October 15, 1997 (**Appendix A**). The monitoring wells will be purged and sampled using a submersible pump with an adjustable flow rate. In each well, the pump will be positioned within the well screen interval at the depth of the water-producing fracture. This depth will be identified using the available boring logs and geophysical logs. The pumping rate will be set at between 0.1 to 0.4 liters/minute. The purge water discharge will be monitored for pH, specific

conductivity, temperature, turbidity, ORP, and DO. When the levels of these parameters stabilize, and a minimum of two saturated screen volumes have been removed from the well, the purging is complete and sampling can begin. Parameter stabilization is defined as three successive readings (taken at least 5 minutes apart) within 0.1 unit for pH, 3% for conductivity, 10% for temperature, turbidity and DO, and 10 millivolts (mV) for ORP. If possible, the stabilized turbidity reading should be less than 10 NTUs. The pumping rate will be controlled and the well's water level will be constantly monitored to assure that the static water level is not drawn down into or below the screen. The vertical location of the pump, the required minimum purge volume, and the calculations for parameter stabilization will be recorded on the groundwater sample log sheet.

Monitoring wells that have a screen length greater than 10 feet will be sampled by purging three to five well volumes prior to sample collection. The pump will be positioned at the top of the well screen interval. Water quality indicator parameters will be recorded for every half well volume. Monitoring well sampling procedures are discussed in **SOP SA-1.1** (**Appendix A**).

The sample aliquot for VOC analysis will be collected last by slowly pulling the Teflon™ tubing out of the well to minimize agitation of the water in the monitoring well and then transferring the contents of the tubing to a VOC vial. After collection, the samples will be placed in a cooler, chilled with ice, and shipped under chain-of-custody protocol to Chemtech for analysis.

Worksheets No. 17 and **18** specify the groundwater sample locations and analytes for this investigation. **Worksheet No. 23** specifies the analytical methods to be used.

Investigation Derived Waste Management

It is not anticipated that solid or semi-solid IDW (i.e., soil, sediment, etc.) will be generated during this field activity during the test pit and soil boring excavation. Soils will be replaced into the test pit or soil boring where the soils where excavated. If gross contamination is encountered (for example, any non-soil, contaminated material, such as free petroleum product, or soil with high [greater than 100 ppm PID readings]), then excavation will cease. Any grossly contaminated material that is brought to the surface will not be returned to the test pit, but will be segregated from the excavated soils and placed on a plastic liner. Any grossly contaminated material will be securely staged until arrangements can be made for proper off-site disposal.

Monitoring well purge and development water will be discharged to the ground surface and allowed to infiltrate. The water will not be allowed to flow offsite or into surface water bodies.

Used personal protective equipment (PPE) will be bagged and disposed of as regular trash in an appropriate facility waste container.

Equipment decontamination fluids will be generated during test pit and soil boring activities. The backhoe will be cleaned by a high-pressure steam washer before initial operations and after each test pit. The hand auger will be decontaminated before initial operations and after each soil boring. Decontamination water will be discharged to the ground surface over the corresponding backfilled test pit or soil boring.

Surveying

A Pennsylvania licensed surveyor will be subcontracted by Tetra Tech to survey the horizontal location and dimensions of each test pit excavation, each soil boring, and each monitoring well location. The horizontal measurements shall use the North America Datum of 1983 (NAD83) and be accurate to within 0.1 foot. The monitoring well vertical elevations shall use the North America Vertical Datum 1988 (NAVD88) and be accurate to within 0.01 foot. Each of the locations will be surveyed relative to the coordinates of established site benchmarks.

Field Decontamination Procedures

Sample containers will be provided certified-clean (I-Chem 300, or equivalent) from the analytical laboratories. Decontamination of sampling equipment (e.g., non-disposable hand trowels, hand augers) will be conducted prior to and between sampling at each location. At each site, an abbreviated decontamination procedure consisting of a soapy water (laboratory-grade detergent) rinse followed by tap water rinse and a deionized water rinse will be performed. However, if free petroleum product is encountered, a more elaborate decontamination of equipment will be conducted in accordance with **Tetra Tech SOP SA-7.1** (**Appendix A**).

Decontamination of the excavator bucket will be performed over the completed, backfilled test pit using a high pressure spray washer with water supplied by the Base. Decontamination of the hand auger will be performed over the completed, backfilled soil boring. All decontamination water will be allowed to infiltrate the test pit or soil boring. In the event that free petroleum product is encountered, the excavator bucket or hand auger wash water will be captured and containerized for sampling and appropriate disposal according to analysis results.

All downhole drilling equipment, including drill rods and augers, will be decontaminated prior to beginning work and between all boreholes using a high pressure steam wash. The water to be used for steam cleaning will be from a potable source.

Groundwater sampling pumps will be decontaminated according to procedures described in **SOP SA-7.1** (**Appendix A**).

Field Documentation Procedures

Field documentation will be performed in accordance with **SOP SA-6.3** (**Appendix A**).

A summary of all field activities will be properly recorded in a bound logbook with consecutively numbered pages that cannot be removed. Logbooks will be assigned to field personnel and will be stored in a secured area when not in use.

At a minimum, the following information will be recorded in the site logbook:

- Name of the person to whom the logbook is assigned.
- Project name.
- Project start date.
- Names and responsibilities of on-site project personnel including subcontractor personnel.
- Arrival/departure of site visitors.
- Arrival/departure of equipment.
- Sampling activities and sample log sheet references.
- Description of subcontractor activities.
- Sample pick-up information, including chain-of-custody numbers, air bill numbers, carrier, time, and date.
- Description of borehole or monitoring well installation activities and operations.
- Health and safety issues.
- Description of photographs including date, time, photographer, roll and picture number, location, and compass direction of photograph.

All entries will be written in ink and no erasures will be made. If an incorrect entry is made, striking a single line through the incorrect information will make the correction; the person making the correction will initial and date the change.

Sample Custody and Shipment Tasks

Sample custody and shipment tasks are defined in **Tetra Tech SOP CT-05** (**Appendix A**) and are discussed in **Worksheet No. 27**.

Quality Control Tasks

QA/QC samples will be collected at frequencies listed in **Worksheet No. 12**.

14.2 ADDITIONAL PROJECT-RELATED TASKS

Additional project-related tasks include:

- Analytical tasks
- Data generation procedures
- Data management
- Assessment and oversight
- Data review
- Project reports

Analytical Tasks

Chemtech, CFA, and TA-Pitt are current Department of Defense (DoD) Environmental Laboratory Accreditation Program (ELAP) accredited and Pennsylvania National Environmental Laboratory Accreditation Program (NELAP) accredited laboratories. A copy of the laboratory accreditations for Chemtech, CFA, and TA-Pitt can be found in **Appendix B**. Analyses will be performed in accordance with the analytical methods identified in **Worksheet No. 19**. Chemtech, CFA, and TA-Pitt will perform chemical analysis following laboratory-specific SOPs (**Worksheet Nos. 19** and **23**) developed based on the analytical methods listed in **Worksheet Nos. 19** and **30**. All laboratory SOPs have been reviewed by the Tetra Tech Project Chemist and were found to be suitable for this project.

All solid results will be reported by the laboratory on a dry-weight basis. Results of percent moisture will be reported in each analytical data package and electronic data deliverable (EDD). This information will also be captured in the project database that will eventually be uploaded to the Naval Installation Restoration Information Solution (NIRIS). Percent moisture information will also be included in the Phase II RI Report.

The analytical data packages provided by Chemtech, CFA, and TA-Pitt will be in a Contract Laboratory Program-like format and will be fully validatable and contain raw data, summary forms for all sample and laboratory method blank data, and summary forms containing all method-specific QC information (results, recoveries, RPDs, relative standard deviations, and/or percent differences, etc.).

Data Generation Procedures

- Project documentation and records include the following:
  - Field sample collection and field measurement records as described in **Worksheet Nos. 27** and **29**.
  - Data assessment documents and records as listed in **Worksheet No. 29**.
- Data recording formats are described in **Worksheet No. 27**.

Data Management - Data management tasks, including the data handling, tracking, storage, archiving, retrieval, and security processes, are addressed in **Worksheet No. 29**.

Assessment and Oversight - Refer to **Worksheet No. 32** for assessment findings and corrective actions and to **Worksheet No. 33** for QA Management Reports.

Data Review - Data verification is described in **Worksheet No. 34**, data validation is described in **Worksheet Nos. 35** and **36**, and the usability assessment is described in **Worksheet No. 37**.

Project Reports - Draft and final versions of project reports will be prepared and submitted to the Navy and PADEP for review. The reports will include the following sections:

- Executive Summary - will include a brief description of the work conducted and the findings.

- Introduction and Background - will include a description of the history of operations and activities at the site and a summary of any previous investigations and removal actions.

- Description of Field Investigations - will include a summary of the work performed in accordance with the approved SAP, any approved SAP addenda, and any field modifications as documented by the Tetra Tech FOL. This section will include maps showing the sampling locations and tables summarizing the data collected.

- Data Quality - will include a summary of quantitative analytical performance indicators such as completeness, precision, bias, and sensitivity and qualitative indicators such as representativeness and comparability. This section will also include a reconciliation of project data with the DQOs and identification of deviations from this SAP.

  A data usability assessment will be used to identify significant deviations in analytical performance that could affect the ability to meet project objectives. The elements of this review are presented in **Worksheet No. 37**.

- Nature and Extent of Contamination - will include a discussion of the contamination detected in each medium sampled in relation to the CSM of the site. This section will note the removals previously conducted (if applicable), contamination addressed, and any additional contaminants found during this field effort. Detected contaminant concentrations will be tabulated for each medium and depicted on maps.

- Contaminant Fate and Transport - will include a description of the contaminants detected and their behavior in soil, bedrock, groundwater, surface water, and sediment, particularly with emphasis on the future migration of these contaminants to any possible exposure areas.

- Summary and Conclusions - includes a summary of the findings, conclusions as to whether delineation of contamination is adequate, and recommendations for further investigations, if needed.

The final version of the report will submitted in hardcopy and electronic format to the project stakeholders.

SAP Worksheet No. 15 -- Reference Limits and Evaluation Table

(UFP-QAPP Manual Section 2.8.1)

PSLs for human health and ecological risk assessment that are designed to determine whether or not additional investigation is needed are presented in Section 11.2. Matrix–specific screening levels used to ensure that laboratory analyses are sensitive enough to support COPC selection and, ultimately the risk assessments, are presented in the tables below.

Matrix: Soil
Analytical Group: VOCs

Analyte	CAS Number	PSL (mg/kg)		PSL Reference[1]		PQLG (mg/kg)	Chemtech		
		HHRA	ERA	HHRA	ERA		LOQ (mg/kg)	LOD (mg/kg)	DL (mg/kg)
1,1,1-Trichloroethane	71-55-6	7.2	29.8	MTG-MSC	NOAA	2.4	0.005	0.0025	0.00088
1,1,2,2-Tetrachloroethane	**79-34-5**	**0.00052**	0.127	**RBSSL**	NOAA	**0.00017**	**0.005**	**0.0025**	**0.00046**
1,1,2-trichloro-1,2,2-trifluoroethane (Freon 113)	76-13-1	3,000	NC	RBSSL	None	1,000	0.005	0.0025	0.00133
1,1,2-Trichloroethane	**79-00-5**	**0.0016**	28.6	**RBSSL**	NOAA	**0.00053**	**0.005**	**0.0025**	**0.00090**
1,1-Dichloroethane	75-34-3	0.014	20.1	RBSSL	NOAA	0.0047	0.005	0.0025	0.00094
1,1-Dichloroethene	75-35-4	0.19	8.28	MTG-MSC	NOAA	0.063	0.005	0.0025	0.00147
1,2,3-Trichlorobenzene	87-61-6	1.7	NC	RBSSL	None	0.57	0.005	0.0025	0.00050
1,2,4-Trichlorobenzene	120-82-1	0.14	11.1	RBSSL	NOAA	0.047	0.005	0.0025	0.00070
1,2-Dibromo-3-chloropropane (DBCP)	**96-12-8**	**0.0000028**	0.0352	**RBSSL**	NOAA	**0.00000093**	**0.005**	**0.0025**	**0.00087**
1,2-Dibromoethane (EDB)	**106-93-4**	**0.000036**	1.23	**RBSSL**	NOAA	**0.000012**	**0.005**	**0.0025**	**0.00064**
1,2-Dichlorobenzene	95-50-1	7.2	2.96	RBSSL	NOAA	1.0	0.005	0.0025	0.00062
1,2-Dichloroethane	**107-06-2**	**0.00084**	21.2	**RBSSL**	NOAA	**0.00028**	**0.005**	**0.0025**	**0.00064**
1,2-Dichloropropane	**78-87-5**	**0.0026**	32.7	**RBSSL**	NOAA	**0.00087**	**0.005**	**0.0025**	**0.00026**
1,3-Dichlorobenzene	541-73-1	61	37.7	MTG-MSC	NOAA	13	0.005	0.0025	0.00037

Analyte	CAS Number	PSL (mg/kg)		PSL Reference[1]		PQLG (mg/kg)	Chemtech		
		HHRA	ERA	HHRA	ERA		LOQ (mg/kg)	LOD (mg/kg)	DL (mg/kg)
1,4-Dichlorobenzene	106-46-7	0.0082	0.546	RBSSL	NOAA	0.0027	0.005	0.0025	0.00041
2-Butanone (MEK)	78-93-3	30	89.6	RBSSL	NOAA	10	0.025	0.0125	0.00311
2-Hexanone	591-78-6	0.22	12.6	RBSSL	NOAA	0.073	0.025	0.0125	0.00392
4-Methyl-2-pentanone (MIBK)	108-10-1	9.0	443	RBSSL	NOAA	3.0	0.025	0.0125	0.00292
Acetone	67-64-1	90	2.5	RBSSL	NOAA	0.83	0.025	0.0125	0.00302
Benzene	**71-43-2**	**0.0042**	0.255	**RBSSL**	NOAA	**0.0014**	**0.005**	**0.0025**	**0.00038**
Bromodichloromethane	**75-27-4**	**0.00064**	0.54	**RBSSL**	**NOAA**	**0.00021**	**0.005**	**0.0025**	**0.00062**
Bromoform	75-25-2	0.046	15.9	RBSSL	NOAA	0.015	0.005	0.0025	0.00074
Bromomethane	74-83-9	0.044	0.235	RBSSL	NOAA	0.015	0.005	0.0025	0.00245
Carbon disulfide	75-15-0	6.2	0.0941	RBSSL	NOAA	0.031	0.005	0.0025	0.00106
Carbon tetrachloride	**56-23-5**	**0.0034**	2.98	**RBSSL**	NOAA	**0.0011**	**0.005**	**0.0025**	**0.00099**
Chlorobenzene	108-90-7	1.2	13.1	RBSSL	NOAA	0.40	0.005	0.0025	0.00050
Chloroethane	75-00-3	5	0.65	MTG-MSC	NOAA	0.22	0.005	0.0025	0.00140
Chloroform	**67-66-3**	**0.0011**	1.19	**RBSSL**	NOAA	**0.00037**	**0.005**	**0.0025**	**0.00074**
Chloromethane	74-87-3	0.98	10.4	RBSSL	NOAA	0.33	0.005	0.0025	0.00086
cis-1,2-Dichloroethene	156-59-2	0.42	0.784	RBSSL	NOAA	0.14	0.005	0.0025	0.00089
cis-1,3-Dichloropropene	**10061-01-5**	**0.0030**	0.398	**RBSSL**	NOAA	**0.0010**	**0.005**	**0.0025**	**0.00072**
Dibromochloromethane	**124-48-1**	**0.00078**	NC	**RBSSL**	None	**0.00026**	**0.005**	**0.0025**	**0.00054**
Dichlorodifluoromethane	75-71-8	6.2	39.5	RBSSL	NOAA	2.0	0.005	0.0025	0.00065
Ethylbenzene	100-41-4	0.034	5.16	RBSSL	NOAA	0.011	0.005	0.0025	0.00062
Isopropylbenzene (Cumene)	98-82-8	22	NC	RBSSL	None	7.3	0.005	0.0025	0.00048
m,p-Xylenes	179601-23-1	4.0	10	RBSSL	NOAA	1.3	0.010	0.0050	0.00072
Methylene chloride	75-09-2	0.024	4.05	RBSSL	NOAA	0.0080	0.005	0.0025	0.00142

Analyte	CAS Number	PSL (mg/kg)		PSL Reference[1]		PQLG (mg/kg)	Chemtech		
		HHRA	ERA	HHRA	ERA		LOQ (mg/kg)	LOD (mg/kg)	DL (mg/kg)
Methyl-tert-butyl ether (MTBE)	1634-04-4	0.056	NC	RBSSL	None	0.019	0.005	0.0025	0.00096
o-Xylene	95-47-6	4.0	10	RBSSL	NOAA	1.3	0.005	0.0025	0.00068
Styrene	100-42-5	24	4.69	MTG-MSC	NOAA	1.6	0.005	0.0025	0.00045
Tetrachloroethene	**127-18-4**	**0.00098**	9.92	**RBSSL**	NOAA	**0.00033**	**0.005**	**0.0025**	**0.00101**
Toluene	108-88-3	32	5.45	RBSSL	NOAA	1.8	0.005	0.0025	0.00064
trans-1,2-Dichloroethene	156-60-5	0.62	0.784	RBSSL	NOAA	0.21	0.005	0.0025	0.00069
trans-1,3-Dichloropropene	**10061-02-6**	**0.0030**	0.398	**RBSSL**	NOAA	**0.0010**	**0.005**	**0.0025**	**0.00079**
Trichloroethene	79-01-6	0.014	12.4	RBSSL	NOAA	0.0047	0.005	0.0025	0.00086
Trichlorofluoromethane	75-69-4	17	16.4	RBSSL	NOAA	5.5	0.005	0.0025	0.00132
Vinyl chloride	**75-01-4**	**0.00011**	0.646	**RBSSL**	NOAA	**0.000037**	**0.005**	**0.0025**	**0.00123**
Xylenes (total)	1330-20-7	4.0	10	RBSSL	NOAA	1.3	0.005	0.005	0.00500

CAS – Chemical Abstracts Service
mg/kg – milligrams per kilogram
PQLG – Project Quantitation Limit Goal
NC – No Criteria

[1] The PSL references for surface and subsurface soil are: RBSSL - ORNL Risk-Based Soil Screening Level, Migration to Groundwater, Dilution Attenuation Factor (DAF) = 20 (June, 2011); R-RSL - ORNL Regional Screening Level for Soil, Residential Direct Contact, adjusted to 1/10 of value for noncarcinogens (June, 2011); Eco-SSL – USEPA Ecological Soil Screening Levels (2005-2008); RES-MSC – PADEP Medium-Specific Concentrations, Residential Use (July, 2010); MTG-MSC – PADEP Medium Specific Concentrations, Migration to Groundwater (July, 2010); NOAA – Lowest appropriate value from the National Oceanic and Atmospheric Administration (NOAA) Screening Quick Reference Tables (SQuiRTs) (November, 2008). Refer to **Appendix D** for further explanation and justification of PSLs.

Bolded rows indicate that the PSL is between the laboratory LOQ and LOD. The Project Team has agreed to accept this data for decision making if results below the LOQ are "J" qualified and the results are discussed in the uncertainties section of the Risk Assessment.

Shaded and Bolded rows indicate the PSL is less than the LOD; therefore, the Project Team has agreed to report non-detected results at the LOD and any limitations on data use that result from having detection limits that are greater than PSLs will be described in the Phase II RFI Report.

Matrix: Soil
Analytical Group: SVOCs (including low level PAHs)

Analyte	CAS Number	PSL (mg/kg)		PSL Reference[1]		PQLG (mg/kg)	Chemtech		
		HHRA	ERA	HHRA	ERA		LOQ (mg/kg)	LOD (mg/kg)	DL (mg/kg)
2,2'-Oxybis(1-chloropropane)	**108-60-1**	**0.0024**	19.9	**RBSSL**	NOAA	**0.00080**	**0.33**	**0.17**	**0.0138**
2,4,5-Trichlorophenol	95-95-4	280	14.1	RBSSL	NOAA	4.7	0.33	0.17	0.0234
2,4,6-Trichlorophenol	88-06-2	0.46	9.94	RBSSL	NOAA	0.15	0.33	0.17	0.0102
2,4-Dichlorophenol	120-83-2	1.0	87.5	MTG-MSC	NOAA	0.33	0.33	0.17	0.0127
2,4-Dimethylphenol	**105-67-9**	17	**0.01**	RBSSL	**NOAA**	**0.0033**	**0.33**	**0.17**	**0.0189**
2,4-Dinitrophenol	**51-28-5**	0.83	**0.0609**	MTG-MSC	**NOAA**	**0.020**	**0.33**	**0.17**	**0.0339**
2,4-Dinitrotoluene	**121-14-2**	**0.0058**	**1.28**	**RBSSL**	**NOAA**	**0.0019**	**0.33**	**0.17**	**0.0101**
2,6-Dinitrotoluene	**606-20-2**	1.0	**0.0328**	RBSSL	**NOAA**	**0.011**	**0.33**	**0.17**	**0.0136**
2-Chloronaphthalene	**91-58-7**	300	**0.0122**	RBSSL	**NOAA**	**0.0041**	**0.33**	**0.17**	**0.0076**
2-Chlorophenol	**95-57-8**	2.0	**0.243**	MTG-MSC	**NOAA**	**0.081**	**0.33**	**0.17**	**0.0176**
2-Methylphenol (o-Cresol)	95-48-7	30	40.4	RBSSL	NOAA	10	0.33	0.17	0.0181
2-Nitroaniline	88-74-4	3.0	74.1	RBSSL	NOAA	1.0	0.33	0.17	0.0148
2-Nitrophenol	88-75-5	1.6	1.6	RBSSL	NOAA	0.53	0.33	0.17	0.0161
3,3'-Dichlorobenzidine	**91-94-1**	**0.020**	0.646	**RBSSL**	NOAA	**0.0067**	**0.33**	**0.17**	**0.0214**
3-Methylphenol (m-Cresol)[2]	108-39-4	30	3.49	RBSSL	NOAA	1.2	0.33	0.17	0.0173
3-Nitroaniline	**99-09-2**	**0.17**	3.16	**MTG-MSC**	NOAA	**0.057**	**0.33**	**0.17**	**0.0214**
4,6-Dinitro-2-methylphenol	**534-52-1**	**0.10**	**0.144**	**RBSSL**	**NOAA**	**0.033**	**0.33**	**0.17**	**0.0191**
4-Bromophenyl phenyl ether	101-55-3	NC	NC	None	None	---	0.33	0.17	0.0065
4-Chloro-3-methylphenol	59-50-7	86	7.95	RBSSL	NOAA	2.7	0.33	0.17	0.0148
4-Chloroanaline	**106-47-8**	**0.0028**	1.1	**RBSSL**	NOAA	**0.00093**	**0.33**	**0.17**	**0.0235**
4-Chlorophenyl phenyl ether	7005-72-3	NC	NC	None	None	---	0.33	0.17	0.0181

Analyte	CAS Number	PSL (mg/kg)		PSL Reference[1]		PQLG (mg/kg)	Chemtech		
		HHRA	ERA	HHRA	ERA		LOQ (mg/kg)	LOD (mg/kg)	DL (mg/kg)
4-Methylphenol (p-Cresol)[2]	106-44-5	3.0	163	RBSSL	NOAA	1.0	0.33	0.17	0.0173
4-Nitroaniline	**100-01-6**	**0.028**	21.9	**RBSSL**	NOAA	**0.0093**	**0.33**	**0.17**	**0.434**
4-Nitrophenol	100-02-7	4.1	5.12	MTG-MSC	NOAA	1.4	0.33	0.17	0.0619
Bis(2-chloroethoxy)methane	**111-91-1**	0.50	**0.302**	RBSSL	**NOAA**	**0.10**	**0.33**	**0.17**	**0.0192**
Bis(2-chloroethyl)ether	**111-44-4**	**0.000062**	23.7	**RBSSL**	NOAA	**0.000021**	**0.33**	**0.17**	**0.0160**
Bis(2-ethylhexyl)phthalate	117-81-7	22	0.925	RBSSL	NOAA	0.31	0.33	0.17	0.0118
Butyl benzyl phthalate	**85-68-7**	10	**0.239**	RBSSL	**NOAA**	**0.080**	**0.33**	**0.17**	**0.0160**
Carbazole	86-74-8	21	NC	MTG-MSC	None	7.0	0.33	0.17	0.0073
Dibenzofuran	132-64-9	7.8	NC	R-RSL	None	2.6	0.33	0.17	0.0130
Diethyl phthalate	84-66-2	240	24.8	RBSSL	NOAA	8.3	0.33	0.17	0.0052
Dimethyl phthalate	131-11-3	240	734	RBSSL	NOAA	80	0.33	0.17	0.0090
Di-n-butyl phthalate	**84-74-2**	184	**0.15**	RBSSL	**NOAA**	**0.050**	**0.33**	**0.17**	**0.0262**
Di-n-octyl phthalate	117-84-0	8,800	709	RES-MSC	NOAA	240	0.33	0.17	0.0038
Hexachlorobenzene	**118-74-1**	**0.011**	**0.199**	**RBSSL**	**NOAA**	**0.0037**	**0.33**	**0.17**	**0.0136**
Hexachlorobutadiene	**87-68-3**	**0.034**	**0.0398**	**RBSSL**	**NOAA**	**0.011**	**0.33**	**0.17**	**0.0121**
Hexachlorocyclopentadiene	77-47-4	14	0.755	RBSSL	NOAA	0.25	0.33	0.17	0.0081
Hexachloroethane	**67-72-1**	**0.058**	0.596	**RBSSL**	NOAA	**0.019**	**0.33**	**0.17**	**0.0149**
Isophorone	78-59-1	0.46	139	RBSSL	NOAA	0.15	0.33	0.17	0.0110
Nitrobenzene	**98-95-3**	**0.0016**	1.31	**RBSSL**	NOAA	**0.00053**	**0.33**	**0.17**	**0.0126**
N-Nitrosodi-n-propylamine	**621-64-7**	**0.00014**	0.544	**RBSSL**	NOAA	**0.000047**	**0.33**	**0.17**	**0.0168**
N-Nitrosodiphenylamine	86-30-6	1.5	0.545	RBSSL	NOAA	0.18	0.33	0.17	0.0080
Pentachlorophenol	**87-86-5**	**0.034**	2.1	**RBSSL**	Eco-SSL	**0.011**	**0.33**	**0.17**	**0.0228**
Phenol	108-95-2	33	120	MTG-MSC	NOAA	11	0.33	0.17	0.0077

Analyte	CAS Number	PSL (mg/kg)		PSL Reference[1]		PQLG (mg/kg)	Chemtech		
		HHRA	ERA	HHRA	ERA		LOQ (mg/kg)	LOD (mg/kg)	DL (mg/kg)
PAHs[3]									
2-Methylnaphthalene	91-57-6	15	29	RBSSL	Eco-SSL	5.0	0.0033	0.0017	0.0004
Acenaphthene	83-32-9	340	29	R-RSL	Eco-SSL	9.7	0.0033	0.0017	0.0004
Acenaphthylene	208-96-8	340	29	R-RSL	Eco-SSL	9.7	0.0033	0.0017	0.0004
Anthracene	120-12-7	350	29	MTG-MSC	Eco-SSL	9.7	0.0033	0.0017	0.0004
Benzo(a)anthracene	56-55-3	0.15	1.1	R-RSL	Eco-SSL	0.050	0.0033	0.0017	0.0004
Benzo(a)pyrene	50-32-8	0.015	1.1	R-RSL	Eco-SSL	0.0050	0.0033	0.0017	0.0004
Benzo(b)fluoranthene	205-99-2	0.15	1.1	R-RSL	Eco-SSL	0.050	0.0033	0.0017	0.0004
Benzo(g,h,i)perylene	191-24-2	170	1.1	R-RSL	Eco-SSL	0.37	0.0033	0.0017	0.0004
Benzo(k)fluoranthene	207-08-9	1.5	1.1	R-RSL	Eco-SSL	0.37	0.0033	0.0017	0.0004
Chrysene	218-01-9	15	1.1	R-RSL	Eco-SSL	0.37	0.0033	0.0017	0.0004
Dibenzo(a,h)anthracene	53-70-3	0.015	1.1	R-RSL	Eco-SSL	0.0050	0.0033	0.0017	0.0004
Fluoranthene	206-44-0	230	29	R-RSL	Eco-SSL	9.7	0.0033	0.0017	0.0004
Fluorene	86-73-7	230	29	R-RSL	Eco-SSL	9.7	0.0033	0.0017	0.0004
Indeno(1,2,3-c,d)pyrene	193-39-5	0.15	1.1	R-RSL	Eco-SSL	0.050	0.0033	0.0017	0.0004
Naphthalene	91-20-3	0.0094	29	RBSSL	Eco-SSL	0.0031	0.0033	0.0017	0.0004
Phenanthrene	85-01-8	170	29	R-RSL	Eco-SSL	9.7	0.0033	0.0017	0.0004
Pyrene	129-00-0	170	1.1	R-RSL	Eco-SSL	0.37	0.0033	0.0017	0.0004

[1] The PSL references for surface and subsurface soil are: RBSSL - ORNL Risk-Based Soil Screening Level, Migration to Groundwater, Dilution Attenuation Factor (DAF) = 20 (June, 2011); R-RSL - ORNL Regional Screening Level for Soil, Residential Direct Contact, adjusted to 1/10 of value for noncarcinogens (June, 2011); Eco-SSL – USEPA Ecological Soil Screening Levels (2005-2008); RES-MSC – PADEP Medium-Specific Concentrations, Residential Use (July, 2010); MTG-MSC – PADEP Medium Specific Concentrations, Migration to Groundwater (July, 2010); NOAA – Lowest appropriate value from the National Oceanic and Atmospheric Administration (NOAA) Screening Quick Reference Tables (SQuiRTs) (November, 2008). Refer to **Appendix D** for further explanation and justification of PSLs.

[2] 3-Methylphenol and 4-methylphenol will be reported as 3,4-methylphenol.

[3] The low level PAHs will be analyzed by SW-846 Method 8270D Selected Ion Monitoring (SIM) to obtain lower detection limits.

Bolded rows indicate that the PSL is between the laboratory LOQ and LOD. The Project Team has agreed to accept this data for decision making if results below the LOQ are "J" qualified and the results are discussed in the uncertainties section of the Risk Assessment.

Shaded and Bolded rows indicate the PSL is less than the LOD; therefore, the Project Team has agreed to report non-detected results at the LOD and any limitations on data use that result from having detection limits that are greater than PSLs will be described in the Phase II RFI Report.

Matrix: Soil
Analytical Group: Pesticides

Analyte	CAS Number	PSL (mg/kg)		PSL Reference[1]		PQLG (mg/kg)	Chemtech		
		HHRA	ERA	HHRA	ERA		LOQ (mg/kg)	LOD (mg/kg)	DL (mg/kg)
4,4'-DDE	72-55-9	0.92	0.021	R-RSL	Eco-SSL	0.0070	0.0017	0.00085	0.00020
4,4'-DDD	72-54-8	1.3	0.021	RBSSL	Eco-SSL	0.0070	0.0017	0.00085	0.00017
4,4'-DDT	50-29-3	1.3	0.021	RBSSL	Eco-SSL	0.0070	0.0017	0.00085	0.00014
Aldrin	309-00-2	0.013	0.00332	RBSSL	NOAA	0.0011	0.0017	0.00085	0.00010
alpha-BHC	**319-84-6**	**0.0012**	0.0994	**RBSSL**	NOAA	**0.00040**	**0.0017**	**0.00085**	**0.00013**
alpha-Chlordane	5103-71-9	0.26	0.224	RBSSL	NOAA	0.075	0.0017	0.00085	0.00014
beta-BHC	319-85-7	0.044	0.00398	RBSSL	NOAA	0.0013	0.0017	0.00085	0.00018
delta-BHC	**319-86-8**	**0.0012**	9.94	**RBSSL**	NOAA	**0.00040**	**0.0017**	**0.00085**	**0.00010**
Dieldrin	60-57-1	0.0034	0.0049	RBSSL	Eco-SSL	0.0011	0.0017	0.00085	0.00013
Endosulfan I	959-98-8	37	0.119	R-RSL	NOAA	0.040	0.0017	0.00085	0.00015
Endosulfan II	33213-65-9	37	0.119	R-RSL	NOAA	0.040	0.0017	0.00085	0.00014
Endosulfan sulfate	1031-07-8	37	0.0358	R-RSL	NOAA	0.012	0.0017	0.00085	0.00015
Endrin	72-20-8	8.8	0.0101	RBSSL	NOAA	0.0034	0.0017	0.00085	0.00018
Endrin aldehyde	7421-93-4	1.8	0.0105	R-RSL	NOAA	0.0035	0.0017	0.00085	0.00015
Endrin ketone	53494-70-5	1.8	0.0105	R-RSL	NOAA	0.0035	0.0017	0.00085	0.00013
gamma-BHC (Lindane)	58-89-9	0.072	0.005	RBSSL	NOAA	0.0017	0.0017	0.00085	0.00015
gamma-Chlordane	5103-74-2	0.26	0.224	RBSSL	NOAA	0.075	0.0017	0.00085	0.00013
Heptachlor	76-44-8	0.024	0.00598	RBSSL	NOAA	0.0020	0.0017	0.00085	0.00014
Heptachlor epoxide	1024-57-3	0.003	0.152	RBSSL	NOAA	0.0010	0.0017	0.00085	0.00016
Methoxychlor	72-43-5	31	0.0199	R-RSL	NOAA	0.0066	0.0017	0.00085	0.00017
Toxaphene	8001-35-2	0.19	0.119	RBSSL	NOAA	0.040	0.017	0.0085	0.00340

[1] The PSL references for surface and subsurface soil are: RBSSL - ORNL Risk-Based Soil Screening Level, Migration to Groundwater, Dilution Attenuation Factor (DAF) = 20 (June, 2011); R-RSL - ORNL Regional Screening Level for Soil, Residential Direct Contact, adjusted to 1/10 of value for noncarcinogens (June, 2011); Eco-SSL – USEPA Ecological Soil Screening Levels (2005-2008); RES-MSC – PADEP Medium-Specific Concentrations, Residential Use (July, 2010); MTG-MSC – PADEP Medium Specific Concentrations, Migration to Groundwater (July, 2010); NOAA – Lowest appropriate value from the National Oceanic and Atmospheric Administration (NOAA) Screening Quick Reference Tables (SQuiRTs) (November, 2008). Refer to **Appendix D** for further explanation and justification of PSLs.

Bolded rows indicate that the PSL is between the laboratory LOQ and LOD. The Project Team has agreed to accept this data for decision making if results below the LOQ are "J" qualified and the results are discussed in the uncertainties section of the Risk Assessment.

Shaded and Bolded rows indicate the PSL is less than the LOD; therefore, the Project Team has agreed to report non-detected results at the LOD and any limitations on data use that result from having detection limits that are greater than PSLs will be described in the Phase II RFI Report.

Matrix: Soil
Analytical Group: PCBs

Analyte	CAS Number	PSL (mg/kg)		PSL Reference[1]		PQLG (mg/kg)	Chemtech		
		HHRA	ERA	HHRA	ERA		LOQ (mg/kg)	LOD (mg/kg)	DL (mg/kg)
Aroclor-1016	**12674-11-2**	0.39	**0.000332**	R-RSL	**NOAA**	**0.00011**	**0.017**	**0.0085**	**0.003470**
Aroclor-1221	**11104-28-2**	**0.0024**	**0.000332**	**RBSSL**	**NOAA**	**0.00011**	**0.017**	**0.0085**	**0.003400**
Aroclor-1232	**11141-16-5**	**0.0024**	**0.000332**	**RBSSL**	**NOAA**	**0.00011**	**0.017**	**0.0085**	**0.007470**
Aroclor-1242	**53469-21-9**	0.11	**0.000332**	RBSSL	**NOAA**	**0.00011**	**0.017**	**0.0085**	**0.003400**
Aroclor-1248	**12672-29-6**	0.10	**0.000332**	RBSSL	**NOAA**	**0.00011**	**0.017**	**0.0085**	**0.006590**
Aroclor-1254	**11097-69-1**	0.11	**0.000332**	R-RSL	**NOAA**	**0.00011**	**0.017**	**0.0085**	**0.001495**
Aroclor-1260	**11096-82-5**	0.22	**0.000332**	R-RSL	**NOAA**	**0.00011**	**0.017**	**0.0085**	**0.004110**
Total PCBs	1336-36-3	NC	NC	None	None	----	---	---	---

[1] The PSL references for surface and subsurface soil are: RBSSL - ORNL Risk-Based Soil Screening Level, Migration to Groundwater, Dilution Attenuation Factor (DAF) = 20 (June, 2011); R-RSL - ORNL Regional Screening Level for Soil, Residential Direct Contact, adjusted to 1/10 of value for noncarcinogens (June, 2011); Eco-SSL – USEPA Ecological Soil Screening Levels (2005-2008); RES-MSC – PADEP Medium-Specific Concentrations, Residential Use (July, 2010); MTG-MSC – PADEP Medium Specific Concentrations, Migration to Groundwater (July, 2010); NOAA – Lowest appropriate value from the National Oceanic and Atmospheric Administration (NOAA) Screening Quick Reference Tables (SQuiRTs) (November, 2008). Refer to **Appendix D** for further explanation and justification of PSLs.

Bolded rows indicate that the PSL is between the laboratory LOQ and LOD. The Project Team has agreed to accept this data for decision making if results below the LOQ are "J" qualified and the results are discussed in the uncertainties section of the Risk Assessment.

Shaded and Bolded rows indicate the PSL is less than the LOD; therefore, the Project Team has agreed to report non-detected results at the LOD and any limitations on data use that result from having detection limits that are greater than PSLs will be described in the Phase II RFI Report.

Matrix: Soil
Analytical Group: Metals and Cyanide

Analyte	CAS Number	PSL (mg/kg)		PSL Reference[1]		PQLG (mg/kg)	Chemtech		
		HHRA	ERA	HHRA	ERA		LOQ (mg/kg)	LOD (mg/kg)	DL (mg/kg)
Aluminum	7429-90-5	7,700	NC	R-RSL	None	2,900	2	1	0.677
Antimony	7440-36-0	3.1	0.27	R-RSL	Eco-SSL	0.090	0.2	0.1	0.026
Arsenic	**7440-38-2**	**0.026**	18	**RBSSL**	Eco-SSL	**0.0087**	**0.1**	**0.05**	**0.022**
Barium	7440-39-3	1,500	330	R-RSL	Eco-SSL	110	1	0.5	0.008
Beryllium	7440-41-7	16	21	R-RSL	Eco-SSL	5.3	0.1	0.05	0.007
Cadmium	7440-43-9	7	0.36	R-RSL	Eco-SSL	0.12	0.1	0.05	0.009
Calcium	7440-70-2	NC	NC	None	None	---	50	25	0.635
Chromium (total)	7440-47-3	0.29	26	R-RSL	Eco-SSL	0.097	0.2	0.10	0.011
Chromium (total)[2]	**7440-47-3**	**0.29**	26	**R-RSL**	Eco-SSL	**0.097**	**0.5[2]**	**0.2[2]**	**0.085[2]**
Chromium (hexavalent)[3]	18540-29-9	0.29	0.4	R-RSL	NOAA	0.097	0.1	0.1	0.1
Chromium (trivalent)[4]	16065-83-1	12,000	NC	R-RSL	None	4,000	0.5	0.2	0.1
Cobalt	7440-48-4	2.3	13	R-RSL	Eco-SSL	0.77	0.1	0.05	0.006
Copper	7440-50-8	310	28	R-RSL	Eco-SSL	9.3	0.2	0.10	0.006
Iron	7439-89-6	5,500	NC	R-RSL	None	1,800	20	10	0.926
Lead	7439-92-1	280	11	RBSSL	Eco-SSL	3.7	0.1	0.05	0.004
Magnesium	7439-95-4	NC	NC	None	None	---	50	25	0.693
Manganese	7439-96-5	180	220	R-RSL	Eco-SSL	60	0.1	0.05	0.006
Mercury[5]	7439-97-6	2.3	0.10	R-RSL	NOAA	0.033	0.01	0.005	0.002
Nickel	7440-02-0	150	38	R-RSL	Eco-SSL	13	0.1	0.05	0.009
Potassium	7440-09-7	NC	NC	None	None	---	50	25	0.901
Selenium	7782-49-2	19	0.52	RBSSL	Eco-SSL	0.17			

Analyte	CAS Number	PSL (mg/kg)		PSL Reference[1]		PQLG (mg/kg)	Chemtech		
		HHRA	ERA	HHRA	ERA		LOQ (mg/kg)	LOD (mg/kg)	DL (mg/kg)
Silver	7440-22-4	32	4.2	RBSSL	Eco-SSL	1.4	0.1	0.05	0.007
Sodium	7440-23-5	NC	NC	None	None	---	50	25	1.225
Thallium	**7440-28-0**	**0.078**	**0.0569**	**R-RSL**	**NOAA**	**0.019**	**0.1**	**0.05**	**0.005**
Vanadium	7440-62-2	39	7.8	R-RSL	Eco-SSL	2.6	0.5	0.25	0.013
Zinc	7440-66-6	2,300	46	R-RSL	Eco-SSL	15	0.2	0.10	0.011
Cyanide[6]	57-12-5	148	1.33	RBSSL	NOAA	0.44	0.5	0.25	0.033

[1] The PSL references for surface and subsurface soil are: RBSSL - ORNL Risk-Based Soil Screening Level, Migration to Groundwater, Dilution Attenuation Factor (DAF) = 20 (June, 2011); R-RSL - ORNL Regional Screening Level for Soil, Residential Direct Contact, adjusted to 1/10 of value for noncarcinogens (June, 2011); Eco-SSL – USEPA Ecological Soil Screening Levels (2005-2008); RES-MSC – PADEP Medium-Specific Concentrations, Residential Use (July, 2010); MTG-MSC – PADEP Medium Specific Concentrations, Migration to Groundwater (July, 2010); NOAA – Lowest appropriate value from the National Oceanic and Atmospheric Administration (NOAA) Screening Quick Reference Tables (SQuiRTs) (November, 2008). Refer to **Appendix D** for further explanation and justification of PSLs.

Metals analysis will be performed by SW-846 Method 6020A, except for the following target parameters:
[2] Total chromium analysis will be performed by TA-Pitt on certain samples by SW-846 Method 6010C, as identified in **Worksheet No. 18**.
[3] Hexavalent chromium analysis will be performed by SW-846 Method 3060A/ 6800 by TA-Pitt to obtain lower detection limits.
[4] Trivalent chromium analysis will be performed by calculation (difference between total chromium and hexavalent chromium) by TA-Pitt.
[5] Mercury analysis will be performed by SW-846 Method 7471B.
[6] Cyanide analysis will be performed by SW-846 Method 9012B.

Bolded rows indicate that the PSL is between the laboratory LOQ and LOD. The Project Team has agreed to accept this data for decision making if results below the LOQ are "J" qualified and the results are discussed in the uncertainties section of the Risk Assessment.

Shaded and Bolded rows indicate the PSL is less than the LOD; therefore, the Project Team has agreed to report non-detected results at the LOD and any limitations on data use that result from having detection limits that are greater than PSLs will be described in the Phase II RFI Report.

Matrix: Soil
Analytical Group: Dioxins/Furans

Analyte	CAS Number	PSL (µg/kg)		PSL Reference[1]		PQLG (ug/kg)	CFA		
		HHRA	ERA	HHRA	ERA		LOQ (µg/kg)	LOD (µg/kg)	EDL[2] (µg/kg)
1,2,3,4,6,7,8,9-OCDD	**3268-87-9**	15	**1.99E-04**	R-RSL	**NOAA**	**6.6E-05**	**0.01**	**6.67E-03**	**2.86E-04**
1,2,3,4,6,7,8,9-OCDF	39001-02-0	15	0.0386	R-RSL	NOAA	0.013	**0.01**	**6.67E-03**	**3.14E-04**
1,2,3,4,6,7,8-HpCDD	**35822-46-9**	0.45	**1.99E-04**	R-RSL	**NOAA**	**6.6E-05**	**0.005**	**3.33E-03**	**1.18E-04**
1,2,3,4,6,7,8-HpCDF	67562-39-4	0.45	0.0386	R-RSL	NOAA	0.013	0.005	3.33E-03	1.45E-04
1,2,3,4,7,8,9-HpCDF	55673-89-7	0.45	0.0386	R-RSL	NOAA	0.013	0.005	3.33E-03	2.05E-04
1,2,3,4,7,8-HxCDD	**39227-28-6**	0.045	**1.99E-04**	R-RSL	**NOAA**	**6.6E-05**	**0.005**	**3.33E-03**	**1.93E-04**
1,2,3,4,7,8-HxCDF	70648-26-9	0.045	0.0386	R-RSL	NOAA	0.013	0.005	3.33E-03	2.02E-04
1,2,3,6,7,8-HxCDD	**57653-85-7**	0.045	**1.99E-04**	R-RSL	**NOAA**	**6.6E-05**	**0.005**	**3.33E-03**	**1.75E-04**
1,2,3,6,7,8-HxCDF	57117-44-9	0.045	0.0386	R-RSL	NOAA	0.013	0.005	3.33E-03	2.02E-04
1,2,3,7,8,9-HxCDD	**19408-74-3**	0.045	**1.99E-04**	R-RSL	**NOAA**	**6.6E-05**	**0.005**	**3.33E-03**	**1.41E-04**
1,2,3,7,8,9-HxCDF	72918-21-9	0.045	0.0386	R-RSL	NOAA	0.013	0.005	3.33E-03	1.10E-04
1,2,3,7,8-PeCDD	**40321-76-4**	0.0045	**1.99E-04**	R-RSL	**NOAA**	**6.6E-05**	**0.005**	**3.33E-03**	**1.03E-04**
1,2,3,7,8-PeCDF	57117-41-6	0.15	0.0386	R-RSL	NOAA	0.013	0.005	3.33E-03	2.00E-04
2,3,4,6,7,8-HxCDF	60851-34-5	0.045	0.0386	R-RSL	NOAA	0.013	0.005	3.33E-03	1.23E-04
2,3,4,7,8-PeCDF	57117-31-4	0.015	0.0386	R-RSL	NOAA	0.005	0.005	3.33E-03	2.61E-04
2,3,7,8-TCDD	**1746-01-6**	0.0045	**1.99E-04**	R-RSL	**NOAA**	**6.6E-05**	**0.001**	**6.67E-04**	**5.2E-05**
2,3,7,8-TCDF	51207-31-9	0.045	0.0386	R-RSL	NOAA	0.012	0.001	6.67E-04	1.04E-04
Total HpCDD	37871-00-4	NC	NC	None	None	---	---	---	---
Total HpCDF	38998-75-3	NC	NC	None	None	---	---	---	---
Total HxCDD	34465-46-8	NC	NC	None	None	---	---	---	---
Total HxCDF	55684-94-1	NC	NC	None	None	---	---	---	---

Analyte	CAS Number	PSL (µg/kg)		PSL Reference[1]		PQLG (ug/kg)	CFA		
		HHRA	ERA	HHRA	ERA		LOQ (µg/kg)	LOD (µg/kg)	EDL[2] (µg/kg)
Total PeCDD	36088-22-9	NC	NC	None	None	---	---	---	---
Total PeCDF	30402-15-4	NC	NC	None	None	---	---	---	---
Total TCDD	41903-57-5	NC	NC	None	None	---	---	---	---
Total TCDF	55722-27-5	NC	NC	None	None	---	---	---	---

µg/kg – micrograms per kilogram

[1] The PSL references for surface and subsurface soil are: RBSSL - ORNL Risk-Based Soil Screening Level, Migration to Groundwater, Dilution Attenuation Factor (DAF) = 20 (June, 2011); R-RSL - ORNL Regional Screening Level for Soil, Residential Direct Contact, adjusted to 1/10 of value for noncarcinogens (June, 2011); Eco-SSL – USEPA Ecological Soil Screening Levels (2005-2008); RES-MSC – PADEP Medium-Specific Concentrations, Residential Use (July, 2010); MTG-MSC – PADEP Medium Specific Concentrations, Migration to Groundwater (July, 2010); NOAA – Lowest appropriate value from the National Oceanic and Atmospheric Administration (NOAA) Screening Quick Reference Tables (SQuiRTs) (November, 2008). Refer to **Appendix D** for further explanation and justification of PSLs.

[2] EDL = Estimated Detection Limit. Detection limits for dioxins and furans are reported as the Average EDL in accordance with the method.

Congeners that do not have individual PSLs are included to obtain total OCDD/OCDF values and to calculate Toxicity Equivalency Factors (TEFs).

Bolded rows indicate that the PSL is between the laboratory LOQ and LOD. The Project Team has agreed to accept this data for decision making if results below the LOQ are "J" qualified and the results are discussed in the uncertainties section of the Risk Assessment.

Shaded and Bolded rows indicate the PSL is less than the LOD; therefore, the Project Team has agreed to report non-detected results at the LOD and any limitations on data use that result from having detection limits that are greater than PSLs will be described in the Phase II RFI Report.

Matrix: Groundwater
Analytical Group: VOCs

Analyte	CAS Number	PSL (µg/L)	PSL Reference[1]	PQLG (µg/L)	Chemtech		
		HHRA	HHRA		LOQ (µg/L)	LOD (µg/L)	DL (µg/L)
1,1,1-Trichloroethane	71-55-6	200	MCL	67	1	0.5	0.40
1,1,2,2-Tetrachloroethane	**79-34-5**	**0.067**	**T-RSL**	**0.022**	**1**	**0.5**	**0.31**
1,1,2-trichloro-1,2,2-trifluoroethane (Freon 113)	76-13-1	140	VAPOR	47	1	0.5	0.45
1,1,2-Trichloroethane	**79-00-5**	**0.042**	**T-RSL**	**0.014**	**1**	**0.5**	**0.38**
1,1-Dichloroethane	75-34-3	2.4	T-RSL	0.80	1	0.5	0.36
1,1-Dichloroethene	75-35-4	7	MCL	2.3	1	0.5	0.47
1,2,3-Trichlorobenzene	87-61-6	2.9	T-RSL	0.97	1	0.5	0.20
1,2,4-Trichlorobenzene	**120-82-1**	**0.41**	**T-RSL**	**0.14**	**1**	**0.5**	**0.20**
1,2-Dibromo-3-chloropropane (DBCP)	**96-12-8**	**0.00032**	**T-RSL**	**0.00011**	**1**	**0.5**	**0.46**
1,2-Dibromoethane (EDB)	**106-93-4**	**0.0065**	**T-RSL**	**0.0022**	**1**	**0.5**	**0.41**
1,2-Dichlorobenzene	95-50-1	37	T-RSL	12	1	0.5	0.45
1,2-Dichloroethane	**107-06-2**	**0.15**	**T-RSL**	**0.050**	**1**	**0.5**	**0.48**
1,2-Dichloropropane	**78-87-5**	**0.39**	**T-RSL**	**0.13**	**1**	**0.5**	**0.46**
1,3-Dichlorobenzene	541-73-1	600	RGW-MSC	200	1	0.5	0.43
1,4-Dichlorobenzene	**106-46-7**	**0.43**	**T-RSL**	**0.14**	**1**	**0.5**	**0.32**
2-Butanone (MEK)	78-93-3	6.4	RGW-MSC	2.1	5	2.5	1.32
2-Hexanone	**591-78-6**	**4.7**	**T-RSL**	**1.6**	**5**	**2.5**	**1.94**
4-Methyl-2-pentanone (MIBK)	108-10-1	200	T-RSL	67	5	2.5	2.10
Acetone	67-64-1	2,200	T-RSL	730	5	2.5	0.50

Analyte	CAS Number	PSL (µg/L)	PSL Reference[1]	PQLG (µg/L)	Chemtech		
		HHRA	HHRA		LOQ (µg/L)	LOD (µg/L)	DL (µg/L)
Benzene	**71-43-2**	**0.41**	**T-RSL**	**0.14**	**1**	**0.5**	**0.32**
Bromodichloromethane	**75-27-4**	**0.12**	**T-RSL**	**0.040**	**1**	**0.5**	**0.36**
Bromoform	75-25-2	8.5	T-RSL	2.8	1	0.5	0.47
Bromomethane	**74-83-9**	**0.87**	**T-RSL**	**0.29**	**1**	**0.5**	**0.20**
Carbon disulfide	75-15-0	100	T-RSL	33	1	0.5	0.20
Carbon tetrachloride	**56-23-5**	**0.37**	**VAPOR**	**0.12**	**1**	**0.5**	**0.20**
Chlorobenzene	108-90-7	9.1	T-RSL	3.0	1	0.5	0.49
Chloroethane	75-00-3	230	RGW-MSC	77	1	0.5	0.20
Chloroform	**67-66-3**	**0.19**	**T-RSL**	**0.063**	**1**	**0.5**	**0.34**
Chloromethane	74-87-3	19	T-RSL	6.3	1	0.5	0.20
cis-1,2-Dichloroethene	156-59-2	7.3	T-RSL	2.4	1	0.5	0.35
cis-1,3-Dichloropropene	10061-01-5	4	T-RSL	1.3	1	0.5	0.31
Dibromochloromethane	**124-48-1**	**0.15**	**T-RSL**	**0.050**	**1**	**0.5**	**0.20**
Dichlorodifluoromethane	75-71-8	1.5	VAPOR	0.50	1	0.5	0.20
Ethylbenzene	100-41-4	1.5	T-RSL	0.50	1	0.5	0.20
Isopropylbenzene (Cumene)	98-82-8	68	T-RSL	23	1	0.5	0.45
m,p-Xylenes	179601-23-1	20	T-RSL	6.7	2	1	0.95
Methylene chloride	75-09-2	4.8	T-RSL	1.6	1	0.5	0.41
Methyl-tert-butyl ether (MTBE)	1634-04-4	12	T-RSL	4.0	1	0.5	0.35
o-Xylene	95-47-6	20	T-RSL	6.7	1	0.5	0.43
Styrene	100-42-5	100	MCL	33	1	0.5	0.36
Tetrachloroethene	**127-18-4**	**0.11**	**T-RSL**	**0.037**	**1**	**0.5**	**0.27**
Toluene	108-88-3	230	T-RSL	77	1	0.5	0.37

Analyte	CAS Number	PSL (µg/L)	PSL Reference[1]	PQLG (µg/L)	Chemtech		
		HHRA	HHRA		LOQ (µg/L)	LOD (µg/L)	DL (µg/L)
trans-1,2-Dichloroethene	156-60-5	11	T-RSL	3.7	1	0.5	0.41
trans-1,3-Dichloropropene	10061-02-6	4.0	T-RSL	1.3	1	0.5	0.29
Trichloroethene	79-01-6	2.0	T-RSL	0.67	1	0.5	0.28
Trichlorofluoromethane	75-69-4	18	VAPOR	6.0	1	0.5	0.35
Vinyl chloride	**75-01-4**	**0.016**	**T-RSL**	**0.0053**	**1**	**0.5**	**0.34**
Xylenes (total)	1330-20-7	20	T-RSL	6.7	3.0	1.5	1.38

[1] The PSL references for groundwater are: T-RSL - ORNL Regional Screening Level for Soil, Tapwater, adjusted to 1/10 of value for noncarcinogens (June, 2011); MCL – USEPA Maximum Contaminant Level (December, 2009); VAPOR – USEPA vapor screening values calculated from 2002 Vapor guidance and 2010 toxicity factors (November, 2002c; June, 2011); RGW-MSC – PADEP Medium-Specific Concentrations, Residential Groundwater (July, 2010). Refer to **Appendix D** for further explanation and justification of PSLs.

Bolded rows indicate that the PSL is between the laboratory LOQ and LOD. The Project Team has agreed to accept this data for decision making if results below the LOQ are "J" qualified and the results are discussed in the uncertainties section of the Risk Assessment.

Shaded and Bolded rows indicate the PSL is less than the LOD; therefore, the Project Team has agreed to report non-detected results at the LOD and any limitations on data use that result from having detection limits that are greater than PSLs will be described in the Phase II RFI Report.

Matrix: Groundwater
Analytical Group: SVOCs (including low level PAHs)

Analyte	CAS Number	PSL (µg/L)	PSL Reference[1]	PQLG (µg/L)	Chemtech		
		HHRA	HHRA		LOQ (µg/L)	LOD (µg/L)	DL (µg/L)
2,2'-Oxybis(1-chloropropane)	**108-60-1**	**0.32**	**T-RSL**	**0.11**	**10.0**	**5.0**	**0.17**
2,4,5-Trichlorophenol	95-95-4	370	T-RSL	120	10.0	5.0	0.40
2,4,6-Trichlorophenol	**88-06-2**	**3.7**	**T-RSL**	**1.2**	**10.0**	**5.0**	**0.56**
2,4-Dichlorophenol	120-83-2	11	T-RSL	3.7	10.0	5.0	0.66
2,4-Dimethylphenol	105-67-9	73	T-RSL	24	10.0	5.0	0.71
2,4-Dinitrophenol	**51-28-5**	**7.3**	**T-RSL**	**2.4**	**10.0**	**5.0**	**2.10**
2,4-Dinitrotoluene	**121-14-2**	**0.22**	**T-RSL**	**0.074**	**10.0**	**5.0**	**1.03**
2,6-Dinitrotoluene	**606-20-2**	**3.7**	**T-RSL**	**1.2**	**10.0**	**5.0**	**0.32**
2-Chloronaphthalene	91-58-7	290	T-RSL	97	10.0	5.0	0.16
2-Chlorophenol	95-57-8	18	T-RSL	6.0	10.0	5.0	0.54
2-Methylphenol (o-Cresol)	95-48-7	180	T-RSL	60	10.0	5.0	0.24
2-Nitroaniline	88-74-4	37	T-RSL	12	10.0	5.0	0.49
2-Nitrophenol	**88-75-5**	**7.3**	**T-RSL**	**2.4**	**10.0**	**5.0**	**0.52**
3,3'-Dichlorobenzidine	**91-94-1**	**0.15**	**T-RSL**	**0.050**	**10.0**	**5.0**	**2.00**
3-Methylphenol (m-Cresol)[2]	108-39-4	180	T-RSL	60	10.0	5.0	0.38
3-Nitroaniline	99-09-2	11	RGW-MSC	3.7	10.0	5.0	1.09
4,6-Dinitro-2-methylphenol	**534-52-1**	**0.29**	**T-RSL**	**0.097**	**10.0**	**5.0**	**0.74**
4-Bromophenyl phenyl ether	101-55-3	NC	None	---	10.0	5.0	0.23
4-Chloro-3-methylphenol	59-50-7	180	RGW-MSC	60	10.0	5.0	0.40
4-Chloroanaline	**106-47-8**	**0.34**	**T-RSL**	**0.11**	**10.0**	**5.0**	**2.86**
4-Chlorophenyl phenyl ether	7005-72-3	NC	None	---	10.0	5.0	0.21

Analyte	CAS Number	PSL (µg/L)	PSL Reference[1]	PQLG (µg/L)	Chemtech		
		HHRA	HHRA		LOQ (µg/L)	LOD (µg/L)	DL (µg/L)
4-Methylphenol (p-Cresol)[2]	106-44-5	18	T-RSL	6.0	10.0	5.0	0.38
4-Nitroaniline	**100-01-6**	**3.4**	**T-RSL**	**1.1**	**10.0**	**5.0**	**1.36**
4-Nitrophenol	100-02-7	60	RGW-MSC	20	10.0	5.0	2.00
Bis(2-chloroethoxy)methane	111-91-1	11	T-RSL	3.7	10.0	5.0	0.55
Bis(2-chloroethyl)ether	**111-44-4**	**0.012**	**T-RSL**	**0.040**	**10.0**	**5.0**	**0.55**
Bis(2-ethylhexyl)phthalate	**117-81-7**	**4.8**	**T-RSL**	**1.6**	**10.0**	**5.0**	**0.16**
Butyl benzyl phthalate	85-68-7	35	T-RSL	12	10.0	5.0	0.19
Carbazole	86-74-8	33	RGW-MSC	11	10.0	5.0	0.22
Dibenzofuran	**132-64-9**	**3.7**	**T-RSL**	**1.2**	**10.0**	**5.0**	**0.24**
Diethyl phthalate	84-66-2	2,900	T-RSL	970	10.0	5.0	0.38
Dimethyl phthalate	131-11-3	2,900	T-RSL	970	10.0	5.0	0.22
Di-n-butyl phthalate	84-74-2	370	T-RSL	120	10.0	5.0	2.00
Di-n-octyl phthalate	117-84-0	1,500	RGW-MSC	500	10.0	5.0	0.51
Hexachlorobenzene	**118-74-1**	**0.042**	**T-RSL**	**0.014**	**10.0**	**5.0**	**0.18**
Hexachlorobutadiene	**87-68-3**	**0.86**	**T-RSL**	**0.29**	**10.0**	**5.0**	**0.25**
Hexachlorocyclopentadiene	**77-47-4**	**0.019**	**VAPOR**	**0.0063**	**10.0**	**5.0**	**0.24**
Hexachloroethane	**67-72-1**	**1**	**RGW-MSC**	**0.33**	**10.0**	**5.0**	**0.25**
Isophorone	78-59-1	71	T-RSL	24	10.0	5.0	0.30
Nitrobenzene	**98-95-3**	**0.12**	**T-RSL**	**0.040**	**10.0**	**5.0**	**0.68**
N-Nitrosodi-n-propylamine	**621-64-7**	**0.0096**	**T-RSL**	**0.0032**	**10.0**	**5.0**	**0.20**
N-Nitrosodiphenylamine	86-30-6	14	T-RSL	4.7	10.0	5.0	0.60
Pentachlorophenol	**87-86-5**	**0.17**	**T-RSL**	**0.057**	**10.0**	**5.0**	**1.72**
Phenol	108-95-2	1,100	T-RSL	370	10.0	5.0	0.21

Analyte	CAS Number	PSL (µg/L)	PSL Reference[1]	PQLG (µg/L)	Chemtech		
		HHRA	HHRA		LOQ (µg/L)	LOD (µg/L)	DL (µg/L)
PAHs[2]							
2-Methylnaphthalene	91-57-6	15	T-RSL	5.0	0.1	0.05	0.02
Acenaphthene	83-32-9	220	T-RSL	73	0.1	0.05	0.02
Acenaphthylene	208-96-8	220	T-RSL	73	0.1	0.05	0.02
Anthracene	120-12-7	66	RGW-MSC	22	0.1	0.05	0.02
Benzo(a)anthracene	**56-55-3**	**0.029**	**T-RSL**	**0.0097**	**0.1**	**0.05**	**0.02**
Benzo(a)pyrene	**50-32-8**	**0.0029**	**T-RSL**	**0.00097**	**0.1**	**0.05**	**0.02**
Benzo(b)fluoranthene	**205-99-2**	**0.029**	**T-RSL**	**0.0097**	**0.1**	**0.05**	**0.02**
Benzo(g,h,i)perylene	191-24-2	0.26	RGW-MSC	0.087	0.1	0.05	0.02
Benzo(k)fluoranthene	207-08-9	0.29	T-RSL	0.097	0.1	0.05	0.02
Chrysene	218-01-9	1.9	RGW-MSC	0.67	0.1	0.05	0.02
Dibenzo(a,h)anthracene	**53-70-3**	**0.0029**	**T-RSL**	**0.00097**	**0.1**	**0.05**	**0.02**
Fluoranthene	206-44-0	150	T-RSL	50	0.1	0.05	0.02
Fluorene	86-73-7	150	T-RSL	50	0.1	0.05	0.02
Indeno(1,2,3-c,d)pyrene	**193-39-5**	**0.029**	**T-RSL**	**0.0097**	**0.1**	**0.05**	**0.02**
Naphthalene	91-20-3	0.14	T-RSL	0.047	0.1	0.05	0.02
Phenanthrene	85-01-8	110	T-RSL	37	0.1	0.05	0.02
Pyrene	129-00-0	110	T-RSL	37	0.1	0.05	0.02

[1] The PSL references for groundwater are: T-RSL - ORNL Regional Screening Level for Soil, Tapwater, adjusted to 1/10 of value for noncarcinogens (June, 2011); MCL – USEPA Maximum Contaminant Level (December, 2009); VAPOR – USEPA vapor screening values calculated from 2002 Vapor guidance and 2010 toxicity factors (November, 2002c; June, 2011); RGW-MSC – PADEP Medium-Specific Concentrations, Residential Groundwater (July, 2010). Refer to **Appendix D** for further explanation and justification of PSLs.

[2] 3-Methylphenol and 4-methylphenol will be reported as 3,4-methylphenol.
[3] The low level PAHs will be analyzed by SW-846 Method 8270D SIM to obtain lower detection limits.

Bolded rows indicate that the PSL is between the laboratory LOQ and LOD. The Project Team has agreed to accept this data for decision making if results below the LOQ are "J" qualified and the results are discussed in the uncertainties section of the Risk Assessment.

Shaded and Bolded rows indicate the PSL is less than the LOD; therefore, the Project Team has agreed to report non-detected results at the LOD and any limitations on data use that result from having detection limits that are greater than PSLs will be described in the Phase II RFI Report.

Matrix: Groundwater
Analytical Group: Pesticides

Analyte	CAS Number	PSL (µg/L)	PSL Reference[1]	PQLG (µg/L)	Chemtech		
		HHRA	HHRA		LOQ (µg/L)	LOD (µg/L)	DL (µg/L)
4,4'-DDE	72-55-9	0.20	T-RSL	0.067	0.05	0.025	0.004
4,4'-DDD	72-54-8	0.28	T-RSL	0.093	0.05	0.025	0.0071
4,4'-DDT	50-29-3	0.20	T-RSL	0.067	0.05	0.025	0.0059
Aldrin	**309-00-2**	**0.0040**	**T-RSL**	**0.0013**	**0.05**	**0.025**	**0.0062**
alpha-BHC	**319-84-6**	**0.011**	**T-RSL**	**0.0037**	**0.05**	**0.025**	**0.0051**
alpha-Chlordane	5103-71-9	0.19	T-RSL	0.063	0.05	0.025	0.0049
beta-BHC	**319-85-7**	**0.037**	**T-RSL**	**0.012**	**0.05**	**0.025**	**0.0086**
delta-BHC	**319-86-8**	**0.011**	**T-RSL**	**0.0037**	**0.05**	**0.025**	**0.0056**
Dieldrin	**60-57-1**	**0.0042**	**T-RSL**	**0.0014**	**0.05**	**0.025**	**0.0047**
Endosulfan I	959-98-8	22	T-RSL	7.3	0.05	0.025	0.0061
Endosulfan II	33213-65-9	22	T-RSL	7.3	0.05	0.025	0.0055
Endosulfan sulfate	1031-07-8	22	T-RSL	7.3	0.05	0.025	0.006
Endrin	72-20-8	1.1	T-RSL	0.37	0.05	0.025	0.0058
Endrin aldehyde	7421-93-4	1.1	T-RSL	0.37	0.05	0.025	0.0045
Endrin ketone	53494-70-5	1.1	T-RSL	0.37	0.05	0.025	0.0057
gamma-BHC (Lindane)	58-89-9	0.061	T-RSL	0.020	0.05	0.025	0.0055
gamma-Chlordane	5103-74-2	0.19	T-RSL	0.063	0.05	0.025	0.005
Heptachlor	**76-44-8**	**0.015**	**T-RSL**	**0.0050**	**0.05**	**0.025**	**0.0069**
Heptachlor epoxide	**1024-57-3**	**0.0074**	**T-RSL**	**0.0025**	**0.05**	**0.025**	**0.0067**
Methoxychlor	72-43-5	18	T-RSL	6.0	0.05	0.025	0.0042
Toxaphene	**8001-35-2**	**0.061**	**T-RSL**	**0.020**	**0.5**	**0.25**	**0.1**

[1] The PSL references for groundwater are: T-RSL - ORNL Regional Screening Level for Soil, Tapwater, adjusted to 1/10 of value for noncarcinogens (June, 2011); MCL – USEPA Maximum Contaminant Level (December, 2009); VAPOR – USEPA vapor screening values calculated from 2002 Vapor guidance and 2010 toxicity factors (November, 2002c; June, 2011); RGW-MSC – PADEP Medium-Specific Concentrations, Residential Groundwater (July, 2010). Refer to **Appendix D** for further explanation and justification of PSLs.

Bolded rows indicate that the PSL is between the laboratory LOQ and LOD. The Project Team has agreed to accept this data for decision making if results below the LOQ are "J" qualified and the results are discussed in the uncertainties section of the Risk Assessment.

Shaded and Bolded rows indicate the PSL is less than the LOD; therefore, the Project Team has agreed to report non-detected results at the LOD and any limitations on data use that result from having detection limits that are greater than PSLs will be described in the Phase II RFI Report.

Matrix: Groundwater
Analytical Group: PCBs

Analyte	CAS Number	PSL (µg/L)	PSL Reference[1]	PQLG (µg/L)	Chemtech		
		HHRA	HHRA		LOQ (µg/L)	LOD (µg/L)	DL (µg/L)
Aroclor-1016	12674-11-2	0.96	T-RSL	0.32	0.5	0.25	0.096
Aroclor-1221	**11104-28-2**	**0.0068**	**T-RSL**	**0.0023**	**0.5**	**0.25**	**0.190**
Aroclor-1232	**11141-16-5**	**0.0068**	**T-RSL**	**0.0023**	**0.5**	**0.25**	**0.150**
Aroclor-1242	**53469-21-9**	**0.034**	**T-RSL**	**0.011**	**0.5**	**0.25**	**0.089**
Aroclor-1248	**12672-29-6**	**0.034**	**T-RSL**	**0.011**	**0.5**	**0.25**	**0.240**
Aroclor-1254	**11097-69-1**	**0.034**	**T-RSL**	**0.011**	**0.5**	**0.25**	**0.044**
Aroclor-1260	**11096-82-5**	**0.034**	**T-RSL**	**0.011**	**0.5**	**0.25**	**0.081**
Total PCBs	1336-36-3	NC	None	---	---	---	---

[1] The PSL references for groundwater are: T-RSL - ORNL Regional Screening Level for Soil, Tapwater, adjusted to 1/10 of value for noncarcinogens (June, 2011); MCL – USEPA Maximum Contaminant Level (December, 2009); VAPOR – USEPA vapor screening values calculated from 2002 Vapor guidance and 2010 toxicity factors (November, 2002c; June, 2011); RGW-MSC – PADEP Medium-Specific Concentrations, Residential Groundwater (July, 2010). Refer to **Appendix D** for further explanation and justification of PSLs.

Bolded rows indicate that the PSL is between the laboratory LOQ and LOD. The Project Team has agreed to accept this data for decision making if results below the LOQ are "J" qualified and the results are discussed in the uncertainties section of the Risk Assessment.

Shaded and Bolded rows indicate the PSL is less than the LOD; therefore, the Project Team has agreed to report non-detected results at the LOD and any limitations on data use that result from having detection limits that are greater than PSLs will be described in the Phase II RFI Report.

Matrix: Groundwater
Analytical Group: Metals (Total and Dissolved) and Cyanide

Analyte	CAS Number	PSL (µg/L)	PSL Reference[1]	PQLG (µg/L)	Chemtech		
		HHRA	HHRA		LOQ (µg/L)	LOD (µg/L)	DL (µg/L)
Aluminum	7429-90-5	3,700	T-RSL	1,200	20	10	4.97
Antimony	**7440-36-0**	**1.5**	**T-RSL**	**0.50**	**2**	**1**	**0.14**
Arsenic	**7440-38-2**	**0.045**	**T-RSL**	**0.015**	**1**	**0.5**	**0.18**
Barium	7440-39-3	730	T-RSL	240	10	5	0.1
Beryllium	7440-41-7	4	MCL	1.3	1	0.5	0.09
Cadmium	7440-43-9	1.8	T-RSL	0.60	1	0.5	0.13
Calcium	7440-70-2	NC	None	---	200	100	9.06
Chromium (total)	7440-47-3	100	MCL	33	2	1	0.04
Chromium (hexavalent)[2]	**18540-29-9**	**0.043**	**T-RSL**	**0.014**	**10.0**	**5.0**	**2.0**
Cobalt	7440-48-4	1.1	T-RSL	0.37	1	0.5	0.05
Copper	7440-50-8	150	T-RSL	50	2	1	0.04
Iron	7439-89-6	2,600	T-RSL	870	200	100	10.28
Lead	7439-92-1	5	RGW-MSC	5.0	1	0.5	0.04
Magnesium	7439-95-4	NC	None	---	200	100	4.95
Manganese	7439-96-5	88	T-RSL	29	1	0.5	0.05
Mercury	7439-97-6	1.1	T-RSL	0.37	0.200	0.1	0.09
Nickel	7440-02-0	73	T-RSL	24	1	0.5	0.06
Potassium	7440-09-7	NC	None	---	200	100	12.22
Selenium	7782-49-2	18	T-RSL	6.0	5	2.5	0.7
Silver	7440-22-4	18	T-RSL	6.0	1	0.5	0.03
Sodium	7440-23-5	NC	None	---	200	100	5.32

Analyte	CAS Number	PSL (µg/L)	PSL Reference[1]	PQLG (µg/L)	Chemtech		
		HHRA	HHRA		LOQ (µg/L)	LOD (µg/L)	DL (µg/L)
Thallium	**7440-28-0**	**0.037**	**T-RSL**	**0.012**	**1**	**0.5**	**0.02**
Vanadium	7440-62-2	18	T-RSL	6.0	5	2.5	0.15
Zinc	7440-66-6	1,100	T-RSL	370	2	1	0.09
Cyanide	57-12-5	73	T-RSL	24	10.0	5.0	4.571

[1] The PSL references for groundwater are: T-RSL - ORNL Regional Screening Level for Soil, Tapwater, adjusted to 1/10 of value for noncarcinogens (June, 2011); MCL – USEPA Maximum Contaminant Level (December, 2009); VAPOR – USEPA vapor screening values calculated from 2002 Vapor guidance and 2010 toxicity factors (November, 2002c; June, 2011); RGW-MSC – PADEP Medium-Specific Concentrations, Residential Groundwater (July, 2010). Refer to **Appendix D** for further explanation and justification of PSLs.

[2] Analysis of Hexavalent Chromium will be performed by TA-Pitt by SW-846 Method 7196A.

Bolded rows indicate that the PSL is between the laboratory LOQ and LOD. The Project Team has agreed to accept this data for decision making if results below the LOQ are "J" qualified and the results are discussed in the uncertainties section of the Risk Assessment.

Shaded and Bolded rows indicate the PSL is less than the LOD; therefore, the Project Team has agreed to report non-detected results at the LOD and any limitations on data use that result from having detection limits that are greater than PSLs will be described in the Phase II RFI Report.

Matrix: Groundwater
Analytical Group: Dioxins/Furans

Analyte	CAS Number	PSL (µg/L)	PSL Reference[1]	PQLG (ug/L)	CFA		
		HHRA	HHRA		LOQ (µg/L)	LOD (µg/L)	EDL[2] (µg/L)
1,2,3,4,6,7,8,9-OCDD	3268-87-9	1.7E-03	T-RSL	5.7E-04	1.0E-04	6.67E-05	8.39E-06
1,2,3,4,6,7,8,9-OCDF	39001-02-0	1.7E-03	T-RSL	5.7E-04	1.0E-04	6.67E-05	5.27E-06
1,2,3,4,6,7,8-HpCDD	35822-46-9	5.2E-05	T-RSL	1.7E-05	5.0E-05	3.33E-05	9.69E-07
1,2,3,4,6,7,8-HpCDF	67562-39-4	5.2E-05	T-RSL	1.7E-05	5.0E-05	3.33E-05	1.77E-06
1,2,3,4,7,8,9-HpCDF	55673-89-7	5.2E-05	T-RSL	1.7E-05	5.0E-05	3.33E-05	1.08E-06
1,2,3,4,7,8-HxCDD	**39227-28-6**	**5.2E-06**	**T-RSL**	**1.7E-06**	**5.0E-05**	**3.33E-05**	**1.48E-06**
1,2,3,4,7,8-HxCDF	**70648-26-9**	**5.2E-06**	**T-RSL**	**1.7E-06**	**5.0E-05**	**3.33E-05**	**7.14E-07**
1,2,3,6,7,8-HxCDD	**57653-85-7**	**5.2E-06**	**T-RSL**	**1.7E-06**	**5.0E-05**	**3.33E-05**	**7.74E-07**
1,2,3,6,7,8-HxCDF	**57117-44-9**	**5.2E-06**	**T-RSL**	**1.7E-06**	**5.0E-05**	**3.33E-05**	**9.54E-07**
1,2,3,7,8,9-HxCDD	**19408-74-3**	**5.2E-06**	**T-RSL**	**1.7E-06**	**5.0E-05**	**3.33E-05**	**1.44E-06**
1,2,3,7,8,9-HxCDF	**72918-21-9**	**5.2E-06**	**T-RSL**	**1.7E-06**	**5.0E-05**	**3.33E-05**	**7.56E-07**
1,2,3,7,8-PeCDD	**40321-76-4**	**5.2E-07**	**T-RSL**	**1.7E-07**	**5.0E-05**	**3.33E-05**	**1.54E-06**
1,2,3,7,8-PeCDF	**57117-41-6**	**1.7E-05**	**T-RSL**	**5.7E-06**	**5.0E-05**	**3.33E-05**	**9.82E-07**
2,3,4,6,7,8-HxCDF	**60851-34-5**	**4.5E-06**	**T-RSL**	**1.5E-06**	**5.0E-05**	**3.33E-05**	**9.50E-07**
2,3,4,8-PeCDF	**57117-31-4**	**1.7E-06**	**T-RSL**	**5.7E-07**	**5.0E-05**	**3.33E-05**	**1.01E-06**
2,3,7,8-TCDD	**1746-01-6**	**5.2E-07**	**T-RSL**	**1.7E-07**	**1.0E-05**	**6.67E-06**	**4.98E-07**
2,3,7,8-TCDF	**51207-31-9**	**5.2E-06**	**T-RSL**	**1.7E-06**	**1.0E-05**	**6.67E-06**	**4.09E-07**
Total HpCDD	37871-00-4	NC	None	---	---	---	---
Total HpCDF	38998-75-3	NC	None	---	---	---	---
Total HxCDD	34465-46-8	NC	None	---	---	---	---
Total HxCDF	55684-94-1	NC	None	---	---	---	---

Analyte	CAS Number	PSL (µg/L)	PSL Reference[1]	PQLG (ug/L)	CFA		
		HHRA	HHRA		LOQ (µg/L)	LOD (µg/L)	EDL[2] (µg/L)
Total PeCDD	36088-22-9	NC	None	---	---	---	---
Total PeCDF	30402-15-4	NC	None	---	---	---	---
Total TCDD	41903-57-5	NC	None	---	---	---	---
Total TCDF	55722-27-5	NC	None	---	---	---	---

[1] The PSL references for groundwater are: T-RSL - ORNL Regional Screening Level for Soil, Tapwater, adjusted to 1/10 of value for noncarcinogens (June, 2011); MCL – USEPA Maximum Contaminant Level (December, 2009); VAPOR – USEPA vapor screening values calculated from 2002 Vapor guidance and 2010 toxicity factors (November, 2002c; June, 2011); RGW-MSC – PADEP Medium-Specific Concentrations, Residential Groundwater (July, 2010). Refer to **Appendix D** for further explanation and justification of PSLs.

[2] EDL = Estimated Detection Limit. Detection limits for dioxins and furans are reported as the Average EDL in accordance with the method.

Congeners that do not have individual PSLs are included to obtain total OCDD/OCDF values and to calculate TEFs.

Bolded rows indicate that the PSL is between the laboratory LOQ and LOD. The Project Team has agreed to accept this data for decision making if results below the LOQ are "J" qualified and the results are discussed in the uncertainties section of the Risk Assessment.

Shaded and Bolded rows indicate the PSL is less than the LOD; therefore, the Project Team has agreed to report non-detected results at the LOD and any limitations on data use that result from having detection limits that are greater than PSLs will be described in the Phase II RFI Report.

SAP Worksheet No. 16 -- Project Schedule / Timeline Table

(UFP-QAPP Manual Section 2.8.2)

Activities	Organization	Dates (MM/DD/YYYY)		Deliverable	Deliverable Due Date
		Anticipated Date(s) of Initiation	Anticipated Date of Completion		
Test Pits and Soil Sampling, and Groundwater Sampling	Tetra Tech	11/15/2011	2/1/2012	Phase II Remedial Investigation Report, Site 12 - South Landfill	4/1/2012 (draft) 6/1/2012 (final)

SAP Worksheet No. 17 -- Sampling Design and Rationale

(UFP-QAPP Manual Section 3.1.1)

There are 40 surface soil samples and 31 subsurface soil samples from the Phase I work. The surface soil samples were collected from 20 surface soil locations and the subsurface soil samples were collected from 15 test pit locations. As shown on **Figure 17-1**, the Phase I soil sample locations were selected with a bias to correspond with areas likely to contain buried waste, based upon the results of the April 2008 EM survey. Additional soil samples are needed in areas without EM anomalies to provide adequate site coverage for the completion of risk assessments.

For the Phase II RI, 2 additional test pit locations were chosen to complete the investigation of EM anomalies. Twenty-five additional soil boring locations were chosen to provide representative coverage of the site and to determine if areas not showing EM anomalies contain contamination that poses a risk to current or future receptors. Eight locations at Site 12 and 20 locations at Site 3 were chosen from areas that demonstrated elevated levels of total chromium in previous investigations and from other areas to provide site coverage to speciate chromium to determine site-specific ratios of hexavalent to trivalent chromium to support chromium risk calculations. Twenty-nine additional step-out soil boring locations were chosen to complete the delineation of the nature and extent of target analytes that demonstrated exceedances of PSLs in the Phase I RI. The planned soil sample locations are presented on **Figure 17-1**. The soil boring and test pit locations were chosen using a judgemental sampling design.

Groundwater samples were not collected during the Phase I RI. Monitoring wells and groundwater sampling are needed to determine if contaminants have migrated from the site via groundwater at concentrations that pose a risk to potential users of the groundwater. The planned groundwater sample locations are presented on **Figure 17-1**.

Phase II sampling includes an evaluation of:

- Surface and subsurface soil data from two additional test pits in areas that were not investigated during Phase I.
- Surface and subsurface soil data from “step-out” locations to define the nature and extent of impact at the site.
- Additional surface and subsurface soil data from uncontaminated locations to support the HHRA and the ERA.
- Additional surface and subsurface soil data from uncontaminated locations, Phase II test pits, and from near the Phase I test pits that exhibited the highest levels of total chromium to support the HHRA and the ERA specifically with regard to chromium speciation.
- Hydraulically upgradient and downgradient groundwater data to define the nature and extent of impact to groundwater at the site and to support the HHRA.

The rationale for selecting the aforementioned sampling designs and locations is described further herein.

Test Pits

Results of the EM survey indicated that linear EM anomalies Nos. 2 and 3 (see **Figure 10-3**) may extend further to the southeast, outside the EM survey area that was investigated during Phase I. Although test pitting previously conducted in this general area as part of the Site 2 investigation found no evidence of historical landfill disposal, to investigate the potential for buried waste in these two areas, a test pit will be excavated southeast of the end of each anomaly.

These Phase II RI test pits will be investigated, sampled, and analyzed following the process that was identified in the Phase I RI report (available from the Tetra Tech PM). Visual subsurface soil observations is sufficient to identify buried wastes, to help establish the extent of contamination and the landfill perimeter, and to document the types of materials encountered, if any.

The two test pits will be excavated beyond the mapped southeastern ends of linear EM anomalies Nos. 2 and 3. If waste is encountered in the test pit at either anomaly, then a second test pit will be excavated at that anomaly 25 feet southeast from the first test pit, as identified on **Figure 17-1**. This step-out

procedure will be repeated until waste is no longer encountered to define the extent of waste material in this area, or until site topography or trees and other surface obstructions impede the ability to perform test pitting, or a maximum of three step-out test pits.

The soil samples from each test pit will consist of the following: one surface soil sample from 0 to 6 inches bgs; one shallow subsurface sample from 6 to 24 inches bgs; one sample from greater than 2 feet bgs; and one sample from the bottom of the test pit, below any waste encountered. If no waste is encountered in a test pit, the bottom sample will not be collected. The soil samples will be biased towards areas of suspected contamination based on visual observations and elevated PID readings. These samples will be analyzed for all target parameters of concern, except dioxins/furans. In addition, one subsurface soil sample from the test pits will also be analyzed for dioxins/furans, if charred waste is encountered, to evaluate the potential impact from historical burning activities. This analysis will be performed only if charred waste is encountered.

In each test pit, one subsurface soil sample will be collected from an area of potential contamination based on direct (visual or olfactory) evidence of contamination, or on the highest PID screening response. The Tetra Tech Geologist will attempt to identify potentially significant waste samples (based on field conditions ad screening) for submittal to the laboratory. The test pit subsurface soil samples will be collected from areas known or suspected to contain buried waste, and will be biased towards areas where exposed waste or staining is found to be present. The intent will be to sample those areas that are likely to be the most contaminated. The analytical results will be used to confirm the material encountered at that location within each test pit associated with the EM-anomalous area.

The second subsurface soil sample from each test pit will be collected from the “bottom” of the test pit excavation, from the first “clean” interval below any waste encountered. If no waste or evidence of contamination is observed in a test pit, then no bottom subsurface soil sample will be collected.

Two surface soil samples, two shallow subsurface soil samples, and four subsurface soil samples will be collected from the two test pits and analyzed for VOCs, SVOCs (including low level PAHs), pesticides, PCBs, metals (including hexavalent chromium and trivalent chromium), and cyanide.

In addition to the analytical suite of tests identified above, one of the test pit subsurface samples will also be analyzed for dioxins/furans, if charred waste materials are encountered. The dioxins/furans sample will be collected from the area that shows the greatest evidence of charred waste. Concentrations are expected to be low to medium. If no ash or charred waste areas are encountered in either of the test pits, no dioxins/furans sample will be collected.

Soil Borings for Risk Assessment Support

Twenty-five shallow soil borings will be completed in areas that are not expected to contain waste because they did not exhibit anomalies in the EM survey (**Figure 17-1**). Soil samples will be collected from three depths at each soil boring location: 0 to 6 inches bgs, 6 inches to 24 inches bgs, and 3 to 4 feet bgs. The 0 to 6 inches bgs surface soil samples will be collected by filling the sample jars using either a decontaminated stainless steel trowel or a dedicated disposable trowel. The 6 to 24 inch bgs shallow subsurface soil samples and 3 to 4 feet subsurface soil samples will be collected either by DPT or by using a stainless steel hand auger and stainless steel or disposable trowel. The soil will be described by the Tetra Tech Geologist and will be screened for evidence of contamination with a PID. Soil pH will be measured at each location using a field test kit. Any qualitative signs of potential contamination (such as soil staining or PID readings above 5 ppm) will be noted.

Soil sampling procedures are discussed in **Tetra Tech SOP SA-1.3**, soil logging procedures are documented in **Tetra Tech SOP GH-1.5**, and the use of the PID is discussed in manufacturer’s instructions. These SOPs are included in **Appendix A**.

These samples are being collected to represent areas within Site 12 that are outside of the major EM anomalies areas, since historical aerial photographs indicate disturbances around Site 12 that are not associated with the EM anomalies. These soil boring locations will be from areas that are not expected to be impacted and will be marked in the field in agreement among Tetra Tech, the Navy, and regulatory

agencies, based upon the EM geophysical survey and the Confirmation Soil Investigation. Twenty-five surface soil samples, 25 shallow subsurface soil samples, and 25 subsurface soil samples will be collected and analyzed for VOCs, SVOCs (including low level PAHs), pesticides, PCBs, metals, and cyanide. Additionally, 9 subsurface soil samples will be collected and analyzed for hexavalent chromium and trivalent chromium (one of every three soil borings).

Site 12 Chromium Speciation Soil Samples

During the Phase II RI, determine the average site-specific ratio of hexavalent chromium to trivalent chromium in subsurface soil at those Site 12 locations that were identified in Phase I as containing the highest levels of chromium; and determine the average site-specific ratio of hexavalent chromium to trivalent chromium in subsurface soil at Site 12 locations that do not exhibit waste and are therefore more likely to be uncontaminated from the landfill waste This information will be used to calculate risks based on hexavalent chromium and trivalent chromium data in the HHRA and ERA, rather than conservatively assuming that the total chromium results are attributable to hexavalent chromium alone.

For Site 12 chromium speciation soil sampling, eight test pit sampling locations were chosen based on previous soil sampling results for total chromium, as identified on **Figure 17-2**. The sample locations were chosen to coincide with locations where total chromium concentrations were the most elevated as identified in the Phase I report. Eight subsurface soil samples will be collected from test pits at Site 12 for total, hexavalent, and trivalent chromium analyses. The samples will be collected from the immediate vicinity of previously collected samples that displayed the most elevated total chromium concentrations in the Phase I report. The subsurface samples will be collected by test pit excavation immediately adjacent to the previous test pit to avoid potential disturbance or mixing of soil from the Phase I test pit. **Table 17-1** lists the original sample designations and the new sample identification number. This information is also provided in **Worksheet No. 18**.

Table 17-1
Site 12 Chromium Speciation Soil Samples

Original Sample	New Sample	Original Sample Depth (feet bgs)	Original Chromium Concentration (mg/kg)
12TP02-0405-03	12TP02-0405-CS	4 - 5	182L
12TP03-0506-04	12TP03-0506-CS	5 - 6	192L
12TP08-0304-03	12TP08-0304-CS	3 - 4	55
12TP09-0304-03	12TP09-0304-CS	3 - 4	58.1
12TP10-0405-03	12TP10-0405-CS	4 - 5	46.6
12TP12-0203-03	12TP12-0203-CS	2 - 3	65.4
12TP14-0405-03	12TP14-0405-CS	4 - 5	70.1
12TP15-0304-03	12TP15-0304-CS	3 - 4	56.7

L - estimated value, result biased low

In addition, all 8 initial Phase II test pit samples (from 2 test pits at 4 locations/depths per test pit), and 27 of the 75 soil boring samples (from 9 soil borings at 3 depths per soil boring, or approximately every third soil boring) will be submitted to CompuChem for total, hexavalent, and trivalent chromium analyses. The Project Team determined that this number of samples will be sufficient to support the risk assessment calculations for each species of chromium in the various types of soil samples (surface and subsurface samples from test pits and soil borings).

Site 3 Chromium Speciation Soil Samples

Determine the average site-specific ratio of hexavalent chromium to trivalent chromium in subsurface soil at the Site 3 locations that were identified in the Site 3 RI as containing the highest levels of chromium.

For Site 3 chromium speciation soil sampling, 20 sampling locations were chosen based on previous soil sampling results for total chromium, as identified on **Figure 17-3**. The sample locations were chosen to coincide with locations where total chromium concentrations were elevated as identified in previous investigations. Additional locations were chosen to provide representative site coverage.

Twenty subsurface soil samples will be collected at Site 3 for total, hexavalent, and trivalent chromium analyses. The samples will be collected from the immediate vicinity of previously collected samples that displayed elevated total chromium concentrations and from additional locations chosen to provide representative site coverage. The samples located in areas not containing buried waste will be collected by soil boring using DPT. The remaining subsurface samples will be collected by test pit excavation. **Table 17-2** lists the original sample designations and the new sample identification number. This information is also provided in **Worksheet No. 18**.

Table 17-2
Site 3 Chromium Speciation Soil Samples

Original Sample	New Sample	Original Sample Depth (feet bgs)	Original Chromium Concentration (mg/kg)
03SB02	03SB27-1.52.5-01	1.5-2.5	24.9
03SB04	03SB28-1.52.5-01	1.5-2.5	23.7
03TP04	03SB29-022.5-01	2-2.5	20.6
03TP06-02	03TP31-0708-01	7-8	53.4K
03TP06-03	03TP32-0809-01	8-9	83.7K
03TP06-04	03TP33-0607-01	6-7	108K
03TP07-01	03SB30-0304-01	3-4	16.4
03TP08-01	03TP34-0405-01	4-5	133K
03TP09-01	03SB31-0506-01	5-6	18K
03TP10-01	03SB32-0405-01	4-5	25.5K
03TP11-01	03SB33-0304-01	3-4	18.6K
03TP12-01	03SB34-0405-01	4-5	21.5K
03TP19-02	03TP35-0304-01	3-4	148J
03TP20-01	03TP36-0708-01	7-8	56.3J
03TP23-01	03TP37-0304-01	3-4	21.9J
03TP24-01	03TP38-0304-01	3-4	84.9J
03TP25-02	03TP39-0607-01	6-7	28.9J
03TP27-01	03TP40-0304-01	3-4	255J
03TP27-02	03TP41-0304-01	3-4	137J
03TP30-01	03TP42-0506-01	5-6	348J

J - estimated value
K - estimated value, result biased high

Soil Borings for Step-Out Samples Based on Phase I PSL Exceedances

Twenty-nine shallow soil borings will be completed in areas that were identified from Phase I samples as exceeding PSLs for one or more target analytes, and additional step-out samples were recommended in the Phase I RI Report to determine the boundaries of the soil that exceed PSLs in areas where additional soil results are not available nearby to determine the extent of the exceedances, as identified on **Figure 17-1**. These step-out samples will be collected approximately 25 feet away from the original Phase I soil boring or test pit sample location, in the direction(s) identified in the Recommendations section of the report, at the same depth as the sample that was indicated as having the highest concentration of analyte(s) that exceeded the PSL(s). **Table 17-3** is provided to identify each Phase II sample location and depth, the original sample location and depth, the direction(s) that where step-out samples are recommended, and the analyte(s) that will be analyzed. Based on the Phase II sample results, up to one additional step-out sample per location may be collected under this SAP and analyzed for any target analytes that continue to exceed a PSL.

Table 17-3
Site 12 Step-Out Soil Samples

Phase I Original Sample Location (and Depth, in feet bgs)	Phase II Sample Location(s)[1]	Phase II Step-Out Direction(s)	Phase II Sample Depth (feet bgs)	PSL Exceedance(s)
SB01 (0.5-2.0)	SB31 to SB34	NW, W, S, SE	0.5-2.0	PAHs
SB02 (0.0-0.5)	SB35 to SB38	E, S, W, N	0.0-0.5	Lead
TP02 (0.0-0.5)	SB39 to SB41	N, E, S	0.0-0.5	PAHs
TP03 (0.5-2.0)	SB42 to SB44	N, E, S	0.5-2.0	PAHs
TP05 (0.5-2.0)	SB45 to SB47	E, W, N	0.5-2.0	Cadmium and Copper
TP08 (0.5-2.0)	SB48	NE	0.5-2.0	PAHs
TP11 (0.5-2.0)	SB49 to SB50	S, SW	0.5-2.0	PAHs and Lead
TP12 (0.5-2.0)	SB51 to SB53	S, SW, NE	0.5-2.0	PAHs and Lead
TP13 (0.5-2.0)	SB54 to SB56	E, W, N	0.5-2.0	PAHs
TP15 (0.0-0.5)	SB57 to SB59	SW, W, N	0.0-0.5	PAHs, Pesticides

[1] Phase II sample locations are centered on the Phase I original soil boring sample location, stepped out in the general direction(s) identified in the following column, where N = north, W = west, S = south, and E = east.

Groundwater Sampling

Four monitoring well clusters will be installed at the locations shown on **Figure 17-1**. These wells are located to provide data to determine if contaminants are migrating from the waste to the underlying groundwater. Each well cluster will consist of an overburden well and a shallow bedrock well. The shallow bedrock wells will be installed to monitor the first groundwater encountered in the bedrock. During the Phase I test pit excavations, bedrock was encountered at depths ranging from 6 to 10 feet bgs. Perched groundwater was encountered in areas of buried waste and minor amounts of perched groundwater were encountered on top of the bedrock in areas with no waste.

Since the existing (Site 2) monitoring wells appropriately bound Site 12, they will be included in the groundwater sampling for this investigation. One groundwater sample will be collected from each of the seven existing monitoring wells (2MW01S, 2MW01I, 2MW02S, 2MW03SI, 2MW03I, 2MW04S, and 2MW04I) and from each of the eight new Site 12 monitoring wells (12MW01O, 12MW01S, 12MW02O, 12MW02S, 12MW03O, 12MW03S, 12MW04O, and 12MW04S).

Groundwater samples collected from the existing (Site 2) monitoring wells will be analyzed for VOCs only. These wells have been sampled in 1991 and 1997 as part of the Site 2 RI, which concluded that the site did not pose an unacceptable risk to human health. The wells were again sampled in May 2009 at the request of USEPA, to confirm the previous RI sample results. The 2009 results were similar to the RI data, with the exception of an elevated concentration of one VOC, methylene chloride (94 µg/L), in well 02MW04S (see Section 10.4.2).

Groundwater samples collected from the eight new monitoring wells will be analyzed for VOCs, SVOCs (including low level PAHs), pesticides, PCBs, metals, and cyanide. If a groundwater sample has a turbidity >10 NTUs, then a filtered sample will also be collected and analyzed for dissolved metals. Groundwater samples collected from two new monitoring wells downgradient from 12TP02 (12MW01O and 12MW01S) will also be analyzed for dioxins/furans.

Field Quality Control Samples

Field quality control samples will be collected as part of the investigation, including field duplicates, trip blanks, equipment rinsate blanks, and field blanks. **Worksheet No. 20** presents the field QC sample summary. Also, additional sample volume will be collected as necessary for the laboratory QC analysis of matrix spike and matrix spike duplicate (MS/MSD) analyses (VOCs, SVOCs [including low level PAHs], pesticides, PCBs, and cyanide) or matrix spike and matrix duplicate (MS/MD) analyses (total and dissolved metals, and hexavalent chromium).

SAP Worksheet No. 18 -- Sampling Locations and Methods/SOP Requirements Table

(UFP-QAPP Manual Section 3.1.1)

Sampling Location	ID Number	Matrix	Depth (feet bgs)	Analytical Group	Number of Samples (identify field duplicates)	Sampling SOP Reference[1]
Test Pits						
Site 12 Test Pit 16	12TP16-000.5-01	Soil	0 - 0.5	VOCs	1	SA-1.3, CT-04, SA-6.1, SA-6.3
				SVOCs/Low Level PAHs	1	
				Pesticides/PCBs	1	
				Metals/Cyanide	1	
				Hexavalent Chromium	1	
	12TP16-0.502-02	Soil	0.5 - 2	VOCs	1	
				SVOCs/Low Level PAHs	1	
				Pesticides/PCBs	1	
				Metals/Cyanide	1	
				Hexavalent Chromium	1	
	12TP16-XXXX[3]-03 and 12TP-DUP-01[2]	Soil	TBD	VOCs	2	
				SVOCs/Low Level PAHs	2	
				Pesticides/PCBs	2	
				Dioxins/Furans[4]	TBD	
				Metals/Cyanide	2	
				Hexavalent Chromium	2	
	12TP16-XXXX[3]-04	Soil	TBD	VOCs	1	
				SVOCs/Low Level PAHs	1	
				Pesticides/PCBs	1	
				Metals/Cyanide	1	
				Hexavalent Chromium	1	
Site 12 Test Pit 17	12TP17-000.5-01	Soil	0 - 0.5	VOCs	1	SA-1.3, CT-04, SA-6.1, SA-6.3
				SVOCs/Low Level PAHs	1	
				Pesticides/PCBs	1	
				Metals/Cyanide	1	
				Hexavalent Chromium	1	
	12TP17-0.502-02	Soil	0.5 - 2	VOCs	1	
				SVOCs/Low Level PAHs	1	
				Pesticides/PCBs	1	
				Metals/Cyanide	1	
				Hexavalent Chromium	1	

Sampling Location	ID Number	Matrix	Depth (feet bgs)	Analytical Group	Number of Samples (identify field duplicates)	Sampling SOP Reference[1]
	12TP17-XXXX[3]-03	Soil	TBD	VOCs	1	
				SVOCs/Low Level PAHs	1	
				Pesticides/PCBs	1	
				Dioxins/Furans[4]	TBD	
				Metals/Cyanide	1	
				Hexavalent Chromium	1	
	12TP17-XXXX[3]-04	Soil	TBD	VOCs	1	
				SVOCs/Low Level PAHs	1	
				Pesticides/PCBs	1	
				Metals/Cyanide	1	
				Hexavalent Chromium	1	
Soil Borings						
Site 12 Soil Boring 06	12SB06-000.5-01 and 12SB-DUP-01[2]	Soil	0 - 0.5	VOCs	2	SA-1.3, CT-04, SA-6.1, SA-6.3
				SVOCs/Low Level PAHs	2	
				Pesticides/PCBs	2	
				Metals/Cyanide	2	
				Hexavalent Chromium	2	
	12SB06-0.502-02	Soil	0.5 - 2	VOCs	1	
				SVOCs/Low Level PAHs	1	
				Pesticides/PCBs	1	
				Metals/Cyanide	1	
				Hexavalent Chromium	1	
	12SB06-0304-03	Soil	3 - 4	VOCs	1	
				SVOCs/Low Level PAHs	1	
				Pesticides/PCBs	1	
				Metals/Cyanide	1	
				Hexavalent Chromium	1	
Site 12 Soil Boring 07	12SB07-000.5-01	Soil	0 - 0.5	VOCs	1	SA-1.3, CT-04, SA-6.1, SA-6.3
				SVOCs/Low Level PAHs	1	
				Pesticides/PCBs	1	
				Metals/Cyanide	1	

Sampling Location	ID Number	Matrix	Depth (feet bgs)	Analytical Group	Number of Samples (identify field duplicates)	Sampling SOP Reference[1]
	12SB07-0.502-02	Soil	0.5 - 2	VOCs	1	
				SVOCs/Low Level PAHs	1	
				Pesticides/PCBs	1	
				Metals/Cyanide	1	
	12SB07-0304-03	Soil	3 - 4	VOCs	1	
				SVOCs/Low Level PAHs	1	
				Pesticides/PCBs	1	
				Metals/Cyanide	1	
Site 12 Soil Boring 08	12SB08-000.5-01	Soil	0 - 0.5	VOCs	1	SA-1.3, CT-04, SA-6.1, SA-6.3
				SVOCs/Low Level PAHs	1	
				Pesticides/PCBs	1	
				Metals/Cyanide	1	
	12SB08-0.502-02	Soil	0.5 - 2	VOCs	1	
				SVOCs/Low Level PAHs	1	
				Pesticides/PCBs	1	
				Metals/Cyanide	1	
	12SB08-0304-03	Soil	3 - 4	VOCs	1	
				SVOCs/Low Level PAHs	1	
				Pesticides/PCBs	1	
				Metals/Cyanide	1	
				Metals/Cyanide	1	
Site 12 Soil Boring 09	12SB09-000.5-01	Soil	0 - 0.5	VOCs	1	SA-1.3, CT-04, SA-6.1, SA-6.3
				SVOCs/Low Level PAHs	1	
				Pesticides/PCBs	1	
				Metals/Cyanide	1	
				Hexavalent Chromium	1	
	12SB09-0.502-02 and 12SB-DUP-02[2]	Soil	0.5 - 2	VOCs	2	
				SVOCs/Low Level PAHs	2	
				Pesticides/PCBs	2	
				Metals/Cyanide	2	
				Hexavalent Chromium	2	

Sampling Location	ID Number	Matrix	Depth (feet bgs)	Analytical Group	Number of Samples (identify field duplicates)	Sampling SOP Reference[1]
	12SB09-0304-03	Soil	3 - 4	VOCs	1	
				SVOCs/Low Level PAHs	1	
				Pesticides/PCBs	1	
				Metals/Cyanide	1	
				Hexavalent Chromium	1	
Site 12 Soil Boring 10	12SB10-000.5-01	Soil	0 - 0.5	VOCs	1	SA-1.3, CT-04, SA-6.1, SA-6.3
				SVOCs/Low Level PAHs	1	
				Pesticides/PCBs	1	
				Metals/Cyanide	1	
	12SB10-0.502-02	Soil	0.5 - 2	VOCs	1	
				SVOCs/Low Level PAHs	1	
				Pesticides/PCBs	1	
				Metals/Cyanide	1	
	12SB10-0304-03	Soil	3 - 4	VOCs	1	
				SVOCs/Low Level PAHs	1	
				Pesticides/PCBs	1	
				Metals/Cyanide	1	
Site 12 Soil Boring 11	12SB11-000.5-01	Soil	0 - 0.5	VOCs	1	SA-1.3, CT-04, SA-6.1, SA-6.3
				SVOCs/Low Level PAHs	1	
				Pesticides/PCBs	1	
				Metals/Cyanide	1	
	12SB11-0.502-02	Soil	0.5 - 2	VOCs	1	
				SVOCs/Low Level PAHs	1	
				Pesticides/PCBs	1	
				Metals/Cyanide	1	
	12SB11-0304-03	Soil	3 - 4	VOCs	1	
				SVOCs/Low Level PAHs	1	
				Pesticides/PCBs	1	
				Metals/Cyanide	1	
Site 12 Soil Boring 12	12SB12-000.5-01	Soil	0 - 0.5	VOCs	1	SA-1.3, CT-04, SA-6.1, SA-6.3
				SVOCs/Low Level PAHs	1	
				Pesticides/PCBs	1	
				Metals/Cyanide	1	
				Hexavalent Chromium	1	

Sampling Location	ID Number	Matrix	Depth (feet bgs)	Analytical Group	Number of Samples (identify field duplicates)	Sampling SOP Reference[1]
	12SB12-0.502-02	Soil	0.5 - 2	VOCs	1	
				SVOCs/Low Level PAHs	1	
				Pesticides/PCBs	1	
				Metals/Cyanide	1	
				Hexavalent Chromium	1	
	12SB12-0304-03 and 12SB-DUP-03[2]	Soil	3 - 4	VOCs	2	
				SVOCs/Low Level PAHs	2	
				Pesticides/PCBs	2	
				Metals/Cyanide	2	
				Hexavalent Chromium	2	
Site 12 Soil Boring 13	12SB13-000.5-01	Soil	0 - 0.5	VOCs	1	SA-1.3, CT-04, SA-6.1, SA-6.3
				SVOCs/Low Level PAHs	1	
				Pesticides/PCBs	1	
				Metals/Cyanide	1	
	12SB13-0.502-02	Soil	0.5 - 2	VOCs	1	
				SVOCs/Low Level PAHs	1	
				Pesticides/PCBs	1	
				Metals/Cyanide	1	
	12SB13-0304-03	Soil	3 - 4	VOCs	1	
				SVOCs/Low Level PAHs	1	
				Pesticides/PCBs	1	
				Metals/Cyanide	1	
Site 12 Soil Boring 14	12SB14-000.5-01	Soil	0 - 0.5	VOCs	1	SA-1.3, CT-04, SA-6.1, SA-6.3
				SVOCs/Low Level PAHs	1	
				Pesticides/PCBs	1	
				Metals/Cyanide	1	
	12SB14-0.502-02	Soil	0.5 - 2	VOCs	1	
				SVOCs/Low Level PAHs	1	
				Pesticides/PCBs	1	
				Metals/Cyanide	1	
	12SB14-0304-03	Soil	3 - 4	VOCs	1	
				SVOCs/Low Level PAHs	1	
				Pesticides/PCBs	1	
				Metals/Cyanide	1	

Sampling Location	ID Number	Matrix	Depth (feet bgs)	Analytical Group	Number of Samples (identify field duplicates)	Sampling SOP Reference[1]
Site 12 Soil Boring 15	12SB15-000.5-01	Soil	0 - 0.5	VOCs	1	SA-1.3, CT-04, SA-6.1, SA-6.3
				SVOCs/Low Level PAHs	1	
				Pesticides/PCBs	1	
				Metals/Cyanide	1	
				Hexavalent Chromium	1	
	12SB15-0.502-02	Soil	0.5 - 2	VOCs	1	
				SVOCs/Low Level PAHs	1	
				Pesticides/PCBs	1	
				Metals/Cyanide	1	
				Hexavalent Chromium	1	
	12SB15-0304-03	Soil	3 - 4	VOCs	1	
				SVOCs/Low Level PAHs	1	
				Pesticides/PCBs	1	
				Metals/Cyanide	1	
				Hexavalent Chromium	1	
Site 12 Soil Boring 16	12SB16-000.5-01 and 12SB-DUP-04[2]	Soil	0 - 0.5	VOCs	2	SA-1.3, CT-04, SA-6.1, SA-6.3
				SVOCs/Low Level PAHs	2	
				Pesticides/PCBs	2	
				Metals/Cyanide	2	
	12SB16-0.502-02	Soil	0.5 - 2	VOCs	1	
				SVOCs/Low Level PAHs	1	
				Pesticides/PCBs	1	
				Metals/Cyanide	1	
	12SB16-0304-03	Soil	3 - 4	VOCs	1	
				SVOCs/Low Level PAHs	1	
				Pesticides/PCBs	1	
				Metals/Cyanide	1	
Site 12 Soil Boring 17	12SB17-000.5-01	Soil	0 - 0.5	VOCs	1	SA-1.3, CT-04, SA-6.1, SA-6.3
				SVOCs/Low Level PAHs	1	
				Pesticides/PCBs	1	
				Metals/Cyanide	1	
	12SB17-0.502-02	Soil	0.5 - 2	VOCs	1	
				SVOCs/Low Level PAHs	1	
				Pesticides/PCBs	1	
				Metals/Cyanide	1	

Sampling Location	ID Number	Matrix	Depth (feet bgs)	Analytical Group	Number of Samples (identify field duplicates)	Sampling SOP Reference[1]
	12SB17-0304-03	Soil	3 - 4	VOCs	1	
				SVOCs/Low Level PAHs	1	
				Pesticides/PCBs	1	
				Metals/Cyanide	1	
Site 12 Soil Boring 18	12SB18-000.5-01	Soil	0 - 0.5	VOCs	1	SA-1.3, CT-04, SA-6.1, SA-6.3
				SVOCs/Low Level PAHs	1	
				Pesticides/PCBs	1	
				Metals/Cyanide	1	
				Hexavalent Chromium	1	
	12SB18-0.502-02	Soil	0.5 - 2	VOCs	1	
				SVOCs/Low Level PAHs	1	
				Pesticides/PCBs	1	
				Metals/Cyanide	1	
				Hexavalent Chromium	1	
	12SB18-0304-03	Soil	3 - 4	VOCs	1	
				SVOCs/Low Level PAHs	1	
				Pesticides/PCBs	1	
				Metals/Cyanide	1	
				Hexavalent Chromium	1	
Site 12 Soil Boring 19	12SB19-000.5-01	Soil	0 - 0.5	VOCs	1	SA-1.3, CT-04, SA-6.1, SA-6.3
				SVOCs/Low Level PAHs	1	
				Pesticides/PCBs	1	
				Metals/Cyanide	1	
	12SB19-0.502-02 and 12SB-DUP-05[2]	Soil	0.5 - 2	VOCs	2	
				SVOCs/Low Level PAHs	2	
				Pesticides/PCBs	2	
				Metals/Cyanide	2	
	12SB19-0304-03	Soil	3 - 4	VOCs	1	
				SVOCs/Low Level PAHs	1	
				Pesticides/PCBs	1	
				Metals/Cyanide	1	

Sampling Location	ID Number	Matrix	Depth (feet bgs)	Analytical Group	Number of Samples (identify field duplicates)	Sampling SOP Reference[1]
Site 12 Soil Boring 20	12SB20-000.5-01	Soil	0 - 0.5	VOCs	1	SA-1.3, CT-04, SA-6.1, SA-6.3
				SVOCs/Low Level PAHs	1	
				Pesticides/PCBs	1	
				Metals/Cyanide	1	
	12SB20-0.502-02	Soil	0.5 - 2	VOCs	1	
				SVOCs/Low Level PAHs	1	
				Pesticides/PCBs	1	
				Metals/Cyanide	1	
	12SB20-0304-03	Soil	3 - 4	VOCs	1	
				SVOCs/Low Level PAHs	1	
				Pesticides/PCBs	1	
				Metals/Cyanide	1	
Site 12 Soil Boring 21	12SB21-000.5-01	Soil	0 - 0.5	VOCs	1	SA-1.3, CT-04, SA-6.1, SA-6.3
				SVOCs/Low Level PAHs	1	
				Pesticides/PCBs	1	
				Metals/Cyanide	1	
				Hexavalent Chromium	1	
	12SB21-0.502-02	Soil	0.5 - 2	VOCs	1	
				SVOCs/Low Level PAHs	1	
				Pesticides/PCBs	1	
				Metals/Cyanide	1	
				Hexavalent Chromium	1	
	12SB21-0304-03	Soil	3 - 4	VOCs	1	
				SVOCs/Low Level PAHs	1	
				Pesticides/PCBs	1	
				Metals/Cyanide	1	
				Hexavalent Chromium	1	
Site 12 Soil Boring 22	12SB22-000.5-01	Soil	0 - 0.5	VOCs	1	SA-1.3, CT-04, SA-6.1, SA-6.3
				SVOCs/Low Level PAHs	1	
				Pesticides/PCBs	1	
				Metals/Cyanide	1	
	12SB22-0.502-02	Soil	0.5 - 2	VOCs	1	
				SVOCs/Low Level PAHs	1	
				Pesticides/PCBs	1	
				Metals/Cyanide	1	

Sampling Location	ID Number	Matrix	Depth (feet bgs)	Analytical Group	Number of Samples (identify field duplicates)	Sampling SOP Reference[1]
	12SB22-0304-03 and 12SB-DUP-06[2]	Soil	3 - 4	VOCs	2	
				SVOCs/Low Level PAHs	2	
				Pesticides/PCBs	2	
				Metals/Cyanide	2	
Site 12 Soil Boring 23	12SB23-000.5-01	Soil	0 - 0.5	VOCs	1	SA-1.3, CT-04, SA-6.1, SA-6.3
				SVOCs/Low Level PAHs	1	
				Pesticides/PCBs	1	
				Metals/Cyanide	1	
	12SB23-0.502-02	Soil	0.5 - 2	VOCs	1	
				SVOCs/Low Level PAHs	1	
				Pesticides/PCBs	1	
				Metals/Cyanide	1	
	12SB23-0304-03	Soil	3 - 4	VOCs	1	
				SVOCs/Low Level PAHs	1	
				Pesticides/PCBs	1	
				Metals/Cyanide	1	
Site 12 Soil Boring 24	12SB24-000.5-01	Soil	0 - 0.5	VOCs	1	SA-1.3, CT-04, SA-6.1, SA-6.3
				SVOCs/Low Level PAHs	1	
				Pesticides/PCBs	1	
				Metals/Cyanide	1	
				Hexavalent Chromium	1	
	12SB24-0.502-02	Soil	0.5 - 2	VOCs	1	
				SVOCs/Low Level PAHs	1	
				Pesticides/PCBs	1	
				Metals/Cyanide	1	
				Hexavalent Chromium	1	
	12SB24-0304-03	Soil	3 - 4	VOCs	1	
				SVOCs/Low Level PAHs	1	
				Pesticides/PCBs	1	
				Metals/Cyanide	1	
				Hexavalent Chromium	1	
Site 12 Soil Boring 25	12SB25-000.5-01	Soil	0 - 0.5	VOCs	1	SA-1.3, CT-04, SA-6.1, SA-6.3
				SVOCs/Low Level PAHs	1	
				Pesticides/PCBs	1	
				Metals/Cyanide	1	

Sampling Location	ID Number	Matrix	Depth (feet bgs)	Analytical Group	Number of Samples (identify field duplicates)	Sampling SOP Reference[1]
	12SB25-0.502-02	Soil	0.5 - 2	VOCs	1	
				SVOCs/Low Level PAHs	1	
				Pesticides/PCBs	1	
				Metals/Cyanide	1	
	12SB25-0304-03	Soil	3 - 4	VOCs	1	
				SVOCs/Low Level PAHs	1	
				Pesticides/PCBs	1	
				Metals/Cyanide	1	
Site 12 Soil Boring 26	12SB26-000.5-01 and 12SB-DUP-07[2]	Soil	0 - 0.5	VOCs	2	SA-1.3, CT-04, SA-6.1, SA-6.3
				SVOCs/Low Level PAHs	2	
				Pesticides/PCBs	2	
				Metals/Cyanide	2	
	12SB26-0.502-02	Soil	0.5 - 2	VOCs	1	
				SVOCs/Low Level PAHs	1	
				Pesticides/PCBs	1	
				Metals/Cyanide	1	
	12SB26-0304-03	Soil	3 - 4	VOCs	1	
				SVOCs/Low Level PAHs	1	
				Pesticides/PCBs	1	
				Metals/Cyanide	1	
Site 12 Soil Boring 27	12SB27-000.5-01	Soil	0 - 0.5	VOCs	1	SA-1.3, CT-04, SA-6.1, SA-6.3
				SVOCs/Low Level PAHs	1	
				Pesticides/PCBs	1	
				Metals/Cyanide	1	
				Hexavalent Chromium	1	
	12SB27-0.502-02	Soil	0.5 - 2	VOCs	1	
				SVOCs/Low Level PAHs	1	
				Pesticides/PCBs	1	
				Metals/Cyanide	1	
				Hexavalent Chromium	1	
	12SB27-0304-03	Soil	3 - 4	VOCs	1	
				SVOCs/Low Level PAHs	1	
				Pesticides/PCBs	1	
				Metals/Cyanide	1	
				Hexavalent Chromium	1	

Sampling Location	ID Number	Matrix	Depth (feet bgs)	Analytical Group	Number of Samples (identify field duplicates)	Sampling SOP Reference[1]
Site 12 Soil Boring 28	12SB28-000.5-01	Soil	0 - 0.5	VOCs	1	SA-1.3, CT-04, SA-6.1, SA-6.3
				SVOCs/Low Level PAHs	1	
				Pesticides/PCBs	1	
				Metals/Cyanide	1	
	12SB28-0.502-02	Soil	0.5 - 2	VOCs	1	
				SVOCs/Low Level PAHs	1	
				Pesticides/PCBs	1	
				Metals/Cyanide	1	
	12SB28-0304-03	Soil	3 - 4	VOCs	1	
				SVOCs/Low Level PAHs	1	
				Pesticides/PCBs	1	
				Metals/Cyanide	1	
Site 12 Soil Boring 29	12SB29-000.5-01	Soil	0 - 0.5	VOCs	1	SA-1.3, CT-04, SA-6.1, SA-6.3
				SVOCs/Low Level PAHs	1	
				Pesticides/PCBs	1	
				Metals/Cyanide	1	
	12SB29-0.502-02 and 12SB-DUP-08[2]	Soil	0.5 - 2	VOCs	2	
				SVOCs/Low Level PAHs	2	
				Pesticides/PCBs	2	
				Metals/Cyanide	2	
	12SB29-0304-03	Soil	3 - 4	VOCs	1	
				SVOCs/Low Level PAHs	1	
				Pesticides/PCBs	1	
				Metals/Cyanide	1	
Site 12 Soil Boring 30	12SB30-000.5-01	Soil	0 - 0.5	VOCs	1	SA-1.3, CT-04, SA-6.1, SA-6.3
				SVOCs/Low Level PAHs	1	
				Pesticides/PCBs	1	
				Metals/Cyanide	1	
				Hexavalent Chromium	1	
	12SB30-0.502-02	Soil	0.5 - 2	VOCs	1	
				SVOCs/Low Level PAHs	1	
				Pesticides/PCBs	1	
				Metals/Cyanide	1	
				Hexavalent Chromium	1	

Sampling Location	ID Number	Matrix	Depth (feet bgs)	Analytical Group	Number of Samples (identify field duplicates)	Sampling SOP Reference[1]
	12SB30-0304-03	Soil	3 - 4	VOCs	1	
				SVOCs/Low Level PAHs	1	
				Pesticides/PCBs	1	
				Metals/Cyanide	1	
				Hexavalent Chromium	1	
Site 12 Chromium Speciation						
Site 12 Test Pit 02 Chromium Speciation	12TP02-0405-CS and 12TP-DUP-XX[2]	Soil	4 - 5	Total Chromium and Hexavalent Chromium	2	SA-1.3, CT-04, SA-6.1, SA-6.3
Site 12 Test Pit 03 Chromium Speciation	12TP03-0506-CS	Soil	5 - 6	Total Chromium and Hexavalent Chromium	1	SA-1.3, CT-04, SA-6.1, SA-6.3
Site 12 Test Pit 08 Chromium Speciation	12TP08-0304-CS	Soil	3 - 4	Total Chromium and Hexavalent Chromium	1	SA-1.3, CT-04, SA-6.1, SA-6.3
Site 12 Test Pit 09 Chromium Speciation	12TP09-0304-CS	Soil	3 - 4	Total Chromium and Hexavalent Chromium	1	SA-1.3, CT-04, SA-6.1, SA-6.3
Site 12 Test Pit 10 Chromium Speciation	12TP10-0405-CS	Soil	4 - 5	Total Chromium and Hexavalent Chromium	1	SA-1.3, CT-04, SA-6.1, SA-6.3
Site 12 Test Pit 12 Chromium Speciation	12TP12-0203-CS	Soil	2 - 3	Total Chromium and Hexavalent Chromium	1	SA-1.3, CT-04, SA-6.1, SA-6.3
Site 12 Test Pit 14 Chromium Speciation	12TP14-0405-CS	Soil	4 - 5	Total Chromium and Hexavalent Chromium	1	SA-1.3, CT-04, SA-6.1, SA-6.3
Site 12 Test Pit 15 Chromium Speciation	12TP15-0304-CS	Soil	3 - 4	Total Chromium and Hexavalent Chromium	1	SA-1.3, CT-04, SA-6.1, SA-6.3
Site 3 Chromium Speciation						
Site 3 Soil Boring 02 Chromium Speciation	03SB27-1.52.5 -01 and 03SB-DUP-XX	Soil	1.5 - 2.5	Total Chromium and Hexavalent Chromium	2	SA-1.3, CT-04, SA-6.1, SA-6.3
Site 3 Soil Boring 04 Chromium Speciation	03SB28-1.52.5-01	Soil	1.5– 2.5	Total Chromium and Hexavalent Chromium	1	SA-1.3, CT-04, SA-6.1, SA-6.3
Site 3 Test Pit 04 Chromium Speciation	03SB29-022.5-01	Soil	2 - 2.5	Total Chromium and Hexavalent Chromium	1	SA-1.3, CT-04, SA-6.1, SA-6.3
Site 3 Test Pit 06 Chromium Speciation	03TP31-0708-01	Soil	7 - 8	Total Chromium and Hexavalent Chromium	1	SA-1.3, CT-04, SA-6.1, SA-6.3
Site 3 Test Pit 06 Chromium Speciation	03TP32-0809-01	Soil	8 - 9	Total Chromium and Hexavalent Chromium	1	SA-1.3, CT-04, SA-6.1, SA-6.3
Site 3 Test Pit 06 Chromium Speciation	03TP33-0607-01	Soil	6 - 7	Total Chromium and Hexavalent Chromium	1	SA-1.3, CT-04, SA-6.1, SA-6.3
Site 3 Test Pit 07 Chromium Speciation	03SB30-0304-01	Soil	3 - 4	Total Chromium and Hexavalent Chromium	1	SA-1.3, CT-04, SA-6.1, SA-6.3

Sampling Location	ID Number	Matrix	Depth (feet bgs)	Analytical Group	Number of Samples (identify field duplicates)	Sampling SOP Reference[1]
Site 3 Test Pit 08 Chromium Speciation	03TP34-0405-01	Soil	4 - 5	Total Chromium and Hexavalent Chromium	1	SA-1.3, CT-04, SA-6.1, SA-6.3
Site 3 Test Pit 09 Chromium Speciation	03SB31-0506-01	Soil	5 - 6	Total Chromium and Hexavalent Chromium	1	SA-1.3, CT-04, SA-6.1, SA-6.3
Site 3 Test Pit 10 Chromium Speciation	03SB32-0405-01	Soil	4 - 5	Total Chromium and Hexavalent Chromium	1	SA-1.3, CT-04, SA-6.1, SA-6.3
Site 3 Test Pit 11 Chromium Speciation	03SB33-0304-01 and 03SB-DUP-XX	Soil	3 - 4	Total Chromium and Hexavalent Chromium	2	SA-1.3, CT-04, SA-6.1, SA-6.3
Site 3 Test Pit 12 Chromium Speciation	03SB34-0405-01	Soil	4 - 5	Total Chromium and Hexavalent Chromium	1	SA-1.3, CT-04, SA-6.1, SA-6.3
Site 3 Test Pit 19 Chromium Speciation	03TP35-0304-01	Soil	3 - 4	Total Chromium and Hexavalent Chromium	1	SA-1.3, CT-04, SA-6.1, SA-6.3
Site 3 Test Pit 20 Chromium Speciation	03TP36-0708-01	Soil	7 - 8	Total Chromium and Hexavalent Chromium	1	SA-1.3, CT-04, SA-6.1, SA-6.3
Site 3 Test Pit 23 Chromium Speciation	03TP37-0304-01	Soil	3 - 4	Total Chromium and Hexavalent Chromium	1	SA-1.3, CT-04, SA-6.1, SA-6.3
Site 3 Test Pit 24 Chromium Speciation	03TP38-0304-01	Soil	3 - 4	Total Chromium and Hexavalent Chromium	1	SA-1.3, CT-04, SA-6.1, SA-6.3
Site 3 Test Pit 25 Chromium Speciation	03TP39-0607-01	Soil	6 - 7	Total Chromium and Hexavalent Chromium	1	1.3, CT-04, SA-6.1, SA-6.3
Site 3 Test Pit 27 Chromium Speciation	03TP40-0304-01	Soil	3 - 4	Total Chromium and Hexavalent Chromium	1	SA-1.3, CT-04, SA-6.1, SA-6.3
Site 3 Test Pit 27 Chromium Speciation	03TP41-0304-01	Soil	3 - 4	Total Chromium and Hexavalent Chromium	1	SA-1.3, CT-04, SA-6.1, SA-6.3
Site 3 Test Pit 30 Chromium Speciation	03TP42-0506-01	Soil	5 - 6	Total Chromium and Hexavalent Chromium	1	SA-1.3, CT-04, SA-6.1, SA-6.3
Step-Outs						
Site 12 Soil Boring 01 Step-Out 1NW	12SB31-0.502-02 and 12SB-DUP-09[2]	Soil	0.5 - 2	Low Level PAHs	2	SA-1.3, CT-04, SA-6.1, SA-6.3
Site 12 Soil Boring 01 Step-Out 1W	12SB32-0.502-02	Soil	0.5 - 2	Low Level PAHs	1	SA-1.3, CT-04, SA-6.1, SA-6.3
Site 12 Soil Boring 01 Step-Out 1S	12SB33-0.502-02	Soil	0.5 - 2	Low Level PAHs	1	SA-1.3, CT-04, SA-6.1, SA-6.3
Site 12 Soil Boring 01 Step-Out 1SE	12SB34-0.502-02	Soil	0.5 - 2	Low Level PAHs	1	SA-1.3, CT-04, SA-6.1, SA-6.3
Site 12 Soil Boring 02 Step-Out 1E	12SB35-000.5-01 and 12SB-DUP-10[2]	Soil	0 - 0.5	Metals (Lead only)	2	SA-1.3, CT-04, SA-6.1, SA-6.3
Site 12 Soil Boring 02 Step-Out 1S	12SB36-000.5-01	Soil	0 - 0.5	Metals (Lead only)	1	SA-1.3, CT-04, SA-6.1, SA-6.3

Sampling Location	ID Number	Matrix	Depth (feet bgs)	Analytical Group	Number of Samples (identify field duplicates)	Sampling SOP Reference[1]
Site 12 Soil Boring 02 Step-Out 1W	12SB37-000.5-01	Soil	0 - 0.5	Metals (Lead only)	1	SA-1.3, CT-04, SA-6.1, SA-6.3
Site 12 Soil Boring 02 Step-Out 1N	12SB38-000.5-01	Soil	0 - 0.5	Metals (Lead only)	1	SA-1.3, CT-04, SA-6.1, SA-6.3
Site 12 Test Pit 02 Step-Out 1N	12SB39-000.5-01	Soil	0 - 0.5	Low Level PAHs	1	SA-1.3, CT-04, SA-6.1, SA-6.3
Site 12 Test Pit 02 Step-Out 1E	12SB40-000.5-01	Soil	0 - 0.5	Low Level PAHs	1	SA-1.3, CT-04, SA-6.1, SA-6.3
Site 12 Test Pit 02 Step-Out 1S	12SB41-000.5-01	Soil	0 - 0.5	Low Level PAHs	1	SA-1.3, CT-04, SA-6.1, SA-6.3
Site 12 Test Pit 03 Step-Out 1N	12SB42-0.502-02	Soil	0.5 - 2	Low Level PAHs	1	SA-1.3, CT-04, SA-6.1, SA-6.3
Site 12 Test Pit 03 Step-Out 1E	12SB43-0.502-02	Soil	0.5 - 2	Low Level PAHs	1	SA-1.3, CT-04, SA-6.1, SA-6.3
Site 12 Test Pit 03 Step-Out 1S	12SB44-0.502-02	Soil	0.5 - 2	Low Level PAHs	1	SA-1.3, CT-04, SA-6.1, SA-6.3
Site 12 Test Pit 05 Step-Out 1E	12SB45-0.502-02 and 12SB-DUP-11[2]	Soil	0.5 - 2	Metals (Cadmium and Copper only)	2	SA-1.3, CT-04, SA-6.1, SA-6.3
Site 12 Test Pit 05 Step-Out 1W	12SB46-0.502-02	Soil	0.5 - 2	Metals (Cadmium and Copper only)	1	SA-1.3, CT-04, SA-6.1, SA-6.3
Site 12 Test Pit 05 Step-Out 1N	12SB47-0.502-02	Soil	0.5 - 2	Metals (Cadmium and Copper only)	1	SA-1.3, CT-04, SA-6.1, SA-6.3
Site 12 Test Pit 08 Step-Out 1NE	12SB48-0.502-02 and 12SB-DUP-12[2]	Soil	0.5 - 2	Low Level PAHs	2	SA-1.3, CT-04, SA-6.1, SA-6.3
Site 12 Test Pit 11 Step-Out 1S	12SB49-0.502-02	Soil	0.5 - 2	Metals (Lead only), Low-Level PAHs	1	SA-1.3, CT-04, SA-6.1, SA-6.3
Site 12 Test Pit 11 Step-Out 1SW	12SB50-0.502-02	Soil	0.5 - 2	Metals (Lead only), Low-Level PAHs	1	SA-1.3, CT-04, SA-6.1, SA-6.3
Site 12 Test Pit 12 Step-Out 1S	12SB51-0.502-02	Soil	0.5 - 2	Metals (Lead only), Low-Level PAHs	1	SA-1.3, CT-04, SA-6.1, SA-6.3
Site 12 Test Pit 12 Step-Out 1SW	12SB52-0.502-02	Soil	0.5 - 2	Metals (Lead only), Low-Level PAHs	1	SA-1.3, CT-04, SA-6.1, SA-6.3
Site 12 Test Pit 12 Step-Out 1NE	12SB53-0.502-02	Soil	0.5 - 2	Metals (Lead only), Low-Level PAHs	1	SA-1.3, CT-04, SA-6.1, SA-6.3
Site 12 Test Pit 13 Step-Out 1E	12SB54-0.502-02	Soil	0.5 - 2	Low Level PAHs	1	SA-1.3, CT-04, SA-6.1, SA-6.3
Site 12 Test Pit 13 Step-Out 1W	12SB55-0.502-02	Soil	0.5 - 2	Low Level PAHs	1	SA-1.3, CT-04, SA-6.1, SA-6.3
Site 12 Test Pit 13 Step-Out 1N	12SB56-0.502-02	Soil	0.5 - 2	Low Level PAHs	1	SA-1.3, CT-04, SA-6.1, SA-6.3

Sampling Location	ID Number	Matrix	Depth (feet bgs)	Analytical Group	Number of Samples (identify field duplicates)	Sampling SOP Reference[1]
Site 12 Test Pit 15 Step-Out 1SW	12SB57-000.5-01 and 12SB-DUP-13[2]	Soil	0 - 0.5	Low Level PAHs, Pesticides	2	SA-1.3, CT-04, SA-6.1, SA-6.3
Site 12 Test Pit 15 Step-Out 1W	12SB58-000.5-01	Soil	0 - 0.5	Low Level PAHs, Pesticides	1	SA-1.3, CT-04, SA-6.1, SA-6.3
Site 12 Test Pit 15 Step-Out 1N	12SB59-000.5-01	Soil	0 - 0.5	Low Level PAHs, Pesticides	1	SA-1.3, CT-04, SA-6.1, SA-6.3
Monitoring Wells						
12MW01O	12MW01O-YYYYMMDD	Groundwater	TBD	VOCs	1	SA-1.1, QAD023
				SVOCs/Low Level PAHs	1	
				Pesticides/PCBs	1	
				Dioxins/Furans	1	
				Metals/Cyanide	1	
12MW01S	12MW01S-YYYYMMDD	Groundwater	TBD	VOCs	1	SA-1.1, QAD023
				SVOCs/Low Level PAHs	1	
				Pesticides/PCBs	1	
				Dioxins/Furans	1	
				Metals/Cyanide	1	
12MW02O	12MW02O-YYYYMMDD and 12GW-DUP-01[2]	Groundwater	TBD	VOCs	2	SA-1.1, QAD023
				SVOCs/Low Level PAHs	2	
				Pesticides/PCBs	2	
				Metals/Cyanide	2	
12MW02S	12MW02S-YYYYMMDD	Groundwater	TBD	VOCs	1	SA-1.1, QAD023
				SVOCs/Low Level PAHs	1	
				Pesticides/PCBs	1	
				Metals/Cyanide	1	
12MW03O	12MW03O-YYYYMMDD	Groundwater	TBD	VOCs	1	SA-1.1, QAD023
				SVOCs/Low Level PAHs	1	
				Pesticides/PCBs	1	
				Metals/Cyanide	1	
12MW03S	12MW03S-YYYYMMDD	Groundwater	TBD	VOCs	1	SA-1.1, QAD023
				SVOCs/Low Level PAHs	1	
				Pesticides/PCBs	1	
				Metals/Cyanide	1	

Sampling Location	ID Number	Matrix	Depth (feet bgs)	Analytical Group	Number of Samples (identify field duplicates)	Sampling SOP Reference[1]
12MW04O	12MW04O-YYYYMMDD	Groundwater	TBD	VOCs	1	SA-1.1, QAD023
				SVOCs/Low Level PAHs	1	
				Pesticides/PCBs	1	
				Metals/Cyanide	1	
12MW04S	12MW04S-YYYYMMDD	Groundwater	TBD	VOCs	1	SA-1.1, QAD023
				SVOCs/Low Level PAHs	1	
				Pesticides/PCBs	1	
				Metals/Cyanide	1	
2MW01S	2MW01S-YYYYMMDD and 12GW-DUP-02[2]	Groundwater	5 – 20	VOCs	2	SA-1.1, QAD023
2MW01I	12MW01I-YYYYMMDD	Groundwater	70 – 80	VOCs	1	SA-1.1, QAD023
2MW02S	2MW02S-YYYYMMDD	Groundwater	5 – 25	VOCs	1	SA-1.1, QAD023
2MW03SI	2MW03SI-YYYYMMDD	Groundwater	40 - 55	VOCs	1	SA-1.1, QAD023
2MW03I	2MW03I-YYYYMMDD	Groundwater	140 – 150	VOCs	1	SA-1.1, QAD023
2MW04S	2MW04S-YYYYMMDD	Groundwater	34 - 44	VOCs	1	SA-1.1, QAD023
2MW04I	2MW04I-YYYYMMDD	Groundwater	105 - 115	VOCs	1	SA-1.1, QAD023

[1] SOP or worksheet that describes the sample collection procedures (**Worksheet No. 21**).
[2] Field duplicate locations may change in the field at the discretion of the Tetra Tech Geologist based on visual and olfactory observations and PID readings. The intent will be to target those locations that exhibit the greatest degree of visual and/or organic vapor to increase the likelihood of generating meaningful data.
[3] XXXX represents depth of the sample. Depth will be determined in the field. For example, if sample is collected from 5 to 6 feet, the depth will be recorded as 0506.
[4] One test pit soil location will be chosen in Phase II for Dioxins/Furans analysis to coincide with the presence of charred waste material, if encountered. If no charred waste materials are identified, no sample will be selected and submitted for Dioxins/Furans analysis for soil.
For all samples that require hexavalent chromium, total chromium is also required; the trivalent chromium in each sample will be calculated as the difference between the hexavalent chromium concentration and the total chromium concentration.

SAP Worksheet No. 19 -- Analytical SOP Requirements Table

(UFP-QAPP Manual Section 3.1.1)

Matrix	Analytical Group	Analytical and Preparation Method / SOP Reference[1]	Containers (number, size, and type)	Sample Volume (units)	Preservation Requirements (chemical, temperature, light protected)	Maximum Holding Time (preparation / analysis)
Soil	VOCs	SW-846 5035/8260B Chemtech M8260B/C-SWGCMSVOA-18	3 - 5 gram (g) TerraCores sampling receptacle with soil transferred to 3 – 40 milliliter (mL) clear glass vials; 1 – 2 ounce (oz) wide-mouth glass jar for percent moisture	5 g	Two vials containing sodium bisulfate in water and one vial containing methanol; no headspace; Cool to <6 °C; lab will freeze methanol to < -10 °C	14 days to analysis
	SVOCs and Low Level PAHs	SW-846 3541/8270D (and 8270D SIM) Chemtech M3541-ASE Extraction-04, M8270C/D-BNA-16	1 – 8 oz wide-mouth glass jar	30 g (each)	Cool to <6 °C	14 days to extraction; 40 days analysis
	Pesticides and PCBs	SW-846 3541/8081A/8082 Chemtech M3541-ASE Extraction-04, 8081A-B-Pesticide-13, M8082/8082A-PCB-11				
	Dioxins/Furans	SW-846 3540C/8290A CFA CF-OA-E-001, CF-OA-E-002	1 – 8 oz wide-mouth amber glass jar with Teflon®-lined lid	30 g	Cool to <6 °C	30 days to extraction; 45 days to analysis
	Metals	SW-846 3050B/6020A Chemtech M3050B-Digestion-13, M6020/6020A-Metals ICPMS-13	1 – 8 oz wide-mouth glass jar (for each laboratory)	1 to 2 g / 1 g for hexavalent chromium / 0.3 g for mercury / 5 g cyanide	Cool to <6 °C	180 days to analysis
	Mercury	SW-846 7471B Chemtech M7471A/B-Mercury-11				28 days to analysis
	Total Chromium	SW-846 3050B/6010C TA-Pitt PT-IP-002, PT-MT-001				180 days to analysis
	Hexavalent Chromium	SW-846 3060A/6800 TA-Pitt PT-WC-015, PT-MT-009				30 days to extraction; 7 days from extraction to analysis

Matrix	Analytical Group	Analytical and Preparation Method / SOP Reference[1]	Containers (number, size, and type)	Sample Volume (units)	Preservation Requirements (chemical, temperature, light protected)	Maximum Holding Time (preparation / analysis)
	Cyanide	SW-846 9012B Chemtech M9012A-B-Total, Amenable and Reactive Cyanide-13				14 days to analysis
Ground-water and aqueous field QC samples	VOCs	SW-846 8260B Chemtech M8260B/C-SWGCMSVOA-18	3 – 40 mL clear glass vials with Teflon®-lined septa	25 mL	Hydrochloric acid (HCl) to pH < 2; Cool to <6 °C	14 days to analysis
	SVOCs and Low Level PAHs	SW-846 3510C/8270D (and 8270D SIM) Chemtech M8270C/D-BNA-16	4 – 1 liter (L) amber glass bottles	1,000 mL (each)	Cool to <6 °C	7 days for preparation; 40 days to analysis
	Pesticides and PCBs	SW-846 3550B/8081A/8082 Chemtech 3510C,3580A-Extraction SVOC-11, 8081A-B-Pesticide-13, M8082/8082A-PCB-11				
	Dioxins/Furans	SW-846 3520C/8290A CFA CF-OA-E-001, CF-OA-E-002	2 – 1L amber glass bottles	1,000 mL	Cool to <6 °C	30 days to extraction; 45 days to analysis
	Metals (Total and Dissolved)	SW-846 3050B/6020A Chemtech M6020/6020A-Metals ICPMS-13	1 – 1L high density polyethylene (HDPE) bottle (1 for total, 1 for dissolved if necessary)	50 mL / 30 mL mercury	Nitric acid (HNO_3) to pH < 2; Cool to <6 °C	180 days to analysis
	Mercury (Total and Dissolved)	SW-846 7470A Chemtech M7470A-Mercury-12				28 days to analysis
	Hexavalent Chromium	SW-846 7196A TA-Pitt PT-WC-015	One 500 - mL plastic bottle	50 mL	Cool to < 6 °C; no headspace	24 hours to analysis
	Cyanide	SW-846 9012B Chemtech M9012A-B-Total, Amenable and Reactive Cyanide-13	1 – 250 mL HDPE bottle	50 mL	Sodium hydroxide (NaOH) to pH > 12; Cool to <6 °C	14 days to analysis

SAP Worksheet No. 20 -- Field Quality Control Sample Summary Table

(UFP-QAPP Manual Section 3.1.1)

Matrix	Analytical Group	No. of Sampling Locations	No. of Field Duplicates	No. of MS/MSDs[1]	No. of Field Blanks	No. of Equip. Blanks	No. of VOA Trip Blanks	Total No. of Samples to Lab
Soil	VOCs	83	9	5/5	1	5	10	108
Soil	SVOCs/PAHs	83	9	5/5	1	5	NA	98
Soil	PAHs Only	22	3	2/2	0	2	NA	27
Soil	Pesticides/PCBs	83	9	5/5	1	5	NA	98
Soil	Pesticides Only	3	1	1/1	0	0	NA	4
Soil	Dioxin/Furans	1 maximum	0	0/0	0	0	NA	1
Soil	Metals	83	9	5/5	1	5	NA	98
Soil	Hexavalent (and Trivalent) [2] Chromium	35	4	2/2	0	2	NA	41
Soil	Hexavalent (and Trivalent) [2] Chromium / Total Chromium Only	28	3	2/2	0	2	NA	35
Soil	Metals (Lead Only)	5	1	1/1	0	0	NA	6
Soil	Metals (Cadmium and Copper Only)	3	1	1/1	0	0	NA	4
Soil	Cyanide	83	9	5/5	1	5	NA	98
Groundwater	VOCs	15	2	1/1	0	0	3	20
Groundwater	SVOCs/PAHs	8	1	1/1	0	0	NA	9
Groundwater	Pesticides/PCBs	8	1	1/1	0	0	NA	9
Groundwater	Dioxin/Furans	2	1	1/1	0	0	NA	3
Groundwater	Total Metals	8	1	1/1	0	0	NA	9
Groundwater	Dissolved Metals	0 minimum; 8 maximum	1	1/1	0	1*	NA	10 maximum
Groundwater	Cyanide	8	1	1/1	0	0	NA	9

[1] Although the MS/MSD is not typically considered a field QC, it is included here because location determination is often established in the field. The MS/MSD are not included in the Total No. of Samples sent to the Lab. For Total and Dissolved Metals, an MD will be collected in place of an MSD.

[2] Trivalent chromium will be calculated as the difference between the total chromium and the hexavalent chromium results.

* - The equipment blank for the Dissolved Metals, if collected, will be obtained by passing rinse water through a 0.45-micron filter.

SAP Worksheet No. 21 -- Project Sampling SOP References Table

(UFP-QAPP Manual Section 3.1.2)

Reference Number	Title, Revision Date and / or Number	Originating Organization of Sampling SOP	Equipment Type	Modified for Project Work? (Y/N)	Comments
CT-04	Sample Nomenclature (Revision 2, March 2009)	Tetra Tech	NA	Y	Although test pit samples will be soils, the abbreviation "TP" will be used in place of "SB". Contained in **Appendix A**.
CT-05	Database Records and Quality Assurance (Revision 2, January 29, 2001)	Tetra Tech	NA	N	Contained in **Appendix A**.
GH-1.2	Evaluation of Existing Monitoring Wells and Water Level Measurement (Revision 2, September, 2003)	Tetra Tech	Electronic water level indicator	N	Contained in **Appendix A**.
GH-1.3	Soil and Rock Drilling Methods (Revision 1, June, 1999)	Tetra Tech	Drilling or DPT rig, accessories, and general field supplies	N	Contained in **Appendix A.**
GH-1.5	Borehole and Sample Logging (Revision 1, June, 1999)	Tetra Tech	General field supplies	N	Contained in **Appendix A**.
GH-2.5	Groundwater Contour Maps and Flow Determinations (Revision 1, June, 1999)	Tetra Tech	NA	N	Contained in **Appendix A**.
GH-2.8	Groundwater Monitoring Well Installation (Revision 3, September, 2003)	Tetra Tech	Health and safety equipment, well drilling and installation equipment, hydrogeologic equipment, drive point installation tools	N	Contained in **Appendix A**.
HS-1.0	Utility Locating and Excavation Clearance (Revision 2, December 2003)	Tetra Tech	NA	N	Contained in **Appendix A**.
QAD023	Recommended Procedure for Low-Flow Purging and Sampling of Groundwater Monitoring Wells (June, 1997)	USEPA Region 3	Submersible pump, multiparameter meter, turbidimeter	Y	Contained in **Appendix A**. See **Worksheet No. 14** for project-specific procedures.
SA-1.1	Groundwater Sample Acquisition and Onsite Water Quality Testing (Revision 7, April 2008)	Tetra Tech	Multi-parameter water quality meter, such as a Horiba U-22	N	Contained in **Appendix A**.

Reference Number	Title, Revision Date and / or Number	Originating Organization of Sampling SOP	Equipment Type	Modified for Project Work? (Y/N)	Comments
SA-1.3	Soil Sampling (Revision 9, April 2008)	Tetra Tech	Sampling Procedures, Methods	N	Contained in **Appendix A**.
SA-2.5	Direct Push Technology (Geoprobe®/Hydropunch™) (Revision 3, September, 2003)	Tetra Tech	DPT Rig, accessories, and supplies	N	Contained in **Appendix A**.
SA-6.1	Non-Radiological Sample Handling (Revision 3, February 2004)	Tetra Tech	Sample Bottle ware, Packaging Material, Shipping Materials	N	Contained in **Appendix A**.
SA-6.3	Field Documentation (Revision 3, March 2009)	Tetra Tech	Field Logbook, Field Sample Forms, Boring Logs	N	Contained in **Appendix A**.
SA-7.1	Decontamination of Field Equipment (Revision 6, January 2009)	Tetra Tech	Decontamination Equipment (scrub brushes, phosphate free detergent, de-ionized water)	Y	Decontamination of sampling equipment is not anticipated. However, if required, nitric acid is removed from the decontamination procedure. Isopropyl Alcohol to be used, if field conditions warrant. Contained in **Appendix A**.

SAP Worksheet No. 22 -- Field Equipment Calibration, Maintenance, Testing, and Inspection Table

(UFP-QAPP Manual Section 3.1.2.4)

Field Equipment	Activity[1]	Frequency	Acceptance Criteria	Corrective Action	Responsible Person	SOP Reference[2]	Comments
PID	Calibration and Visual Inspection	Daily	Manufacturer's Guidance	Replace	Tetra Tech FOL or designee	Manufacturer's Guidance	To be used to determine the Test Pit depth that is most impacted for biased sample collection.
Backhoe / Excavating Machinery	Inspection	Daily	Equipment Inspection Sheet Criteria	Replace	Tetra Tech FOL or designee	SA-1.3	None.
Disposable Hand Trowel	Inspection	Per Use	NA	Replace	Tetra Tech FOL or designee	SA-1.3	None.
Electric Water Level Indicator and Oil/Water Interface Probe	Visual Inspection Field checks as per manufacturer	Daily Once upon receiving from vendor	0.01 foot accuracy	Operator correction or replacement	Tetra Tech FOL or designee	GH-1.2, Manufacturer's Guidance Manual	None.
Water Quality Meter (YSI Series 600 or equivalent)	Visual Inspection Calibration/ Verification	Daily Beginning and end of day	Manufacturer's guidance	Operator correction or replacement	Tetra Tech FOL or designee	GH-2.8, GW-001, SA-1.1, SA-1.2, Manufacturer's Guidance Manual	None.
Turbidity Meter (LaMotte 2020 or equivalent)	Visual Inspection Calibration/ Verification	Daily Beginning and end of day	Manufacturer's guidance; calibrations must bracket expected values; Initial Calibration Verification (ICV) must be <10 NTU.	Operator correction or replacement	Tetra Tech FOL or designee	GH-2.8, GW-001, SA-1.1, SA-1.2, Manufacturer's Guidance Manual	To be used to determine the need to collect Dissolved Metals samples (if >10 NTU).
Submersible Pump	Visual Inspection	Daily	Equipment Inspection Sheet Criteria	Replace	Tetra Tech FOL or designee	Manufacturer's Guidance	None.

[1] Activities may include: calibration, verification, testing, maintenance, and/or inspection.
[2] Specify the appropriate reference letter or number from the Project Sampling SOP References table (**Worksheet No. 21**).

SAP Worksheet No. 23 -- Analytical SOP References Table

(UFP-QAPP Manual Section 3.2.1)

Lab SOP Number	Title, Revision Date, and / or Number	Definitive or Screening Data	Matrix and Analytical Group	Instrument	Organization Performing Analysis	Variance to DOD QSM? (Y/ N)	Modified for Project Work? (Y/N)
M8260B/C-SWGCMSVOA-18	Volatile Organic Compounds by GC/MS – SW 846 Method 8260B/C (Revision 18, 02/15/2011)	Definitive	Soil, groundwater and aqueous field QC samples – VOCs	Gas Chromatograph/ Mass Spectrometer (GC/MS)	Chemtech	N	N
8081A-B-Pesticide-13	Determination of Pesticides in Aqueous, Soil, Sludge, or Solid Samples by SW-846 Method 8081 A/B (Revision 13, 09/30/09)	Definitive	Soil, groundwater, and aqueous field QC samples – Pesticides	GC/ Electron Capture Detector (GC/ECD)	Chemtech	N	N
M8082/8082A-PCB-11	Determination of Polychlorinated Biphenyls (PCBs) by Capillary Gas Chromatography, Electron Capture Detector (Revision 11, 9/30/2009)	Definitive	Soil, groundwater, and aqueous field QC samples – PCBs	GC/ECD	Chemtech	N	N
M3510C,3580A-Extraction SVOC-11	Extractions Preparation for Semivolatile Organic Compounds (Revision 11, 09/30/09)	Definitive	Groundwater and aqueous field QC samples – SVOCs (including low level PAHs)	NA/ Preparation	Chemtech	NA	N
M3541-ASE-Extraction-04	Automated Soxhlet Extraction Procedure by Method SW 3541 Modified (Revision 4, 9/30/2009)	Definitive	Soil samples – SVOCs (including low level PAHs)	NA/ Preparation	Chemtech	NA	N
M8270C/D-BNA-16	Determination of Extractable Semi-Volatile Organic Compounds by SW-846 Method 8270C/D (Revision 16, 12/25/2010)	Definitive	Soil, groundwater, and aqueous field QC samples – SVOCs (including low level PAHs)	GC/MS	Chemtech	N	N

Lab SOP Number	Title, Revision Date, and / or Number	Definitive or Screening Data	Matrix and Analytical Group	Instrument	Organization Performing Analysis	Variance to DOD QSM? (Y/ N)	Modified for Project Work? (Y/N)
M3010A-Digestion-10	Acid Digestion of Aqueous Samples and Extracts for the Analysis of Total Metals by ICP Spectroscopy (Revision 10, 05/23/11)	Definitive	Groundwater and aqueous field QC samples – Metals	NA/ Preparation	Chemtech	NA	N
M3050B-Digestion-13	Acid Digestion of Sediments, Sludges, and Soils for Total Metals Analysis by ICP Spectroscopy (Revision 13, 05/23/2011)	Definitive	Soil samples – Metals	NA/ Preparation	Chemtech	N	N
M6020/6020A -Metals ICPMS-13	Trace Elemental Analysis by Inductively Coupled Plasma-Mass Spectrometry Method (Revision 13, 05/23/11)	Definitive	Soil, groundwater, and aqueous field QC samples – Metals	Inductively Coupled Plasma - Mass Spectroscopy (ICP-MS)	Chemtech	N	N
M7470A-Mercury-12	Mercury Analysis in Liquid Waste by Cold Vapor Technique (Revision 12, 07/25/11)	Definitive	Groundwater and aqueous field QC samples – Mercury	Cold Vapor Atomic Absorption (CVAA)	Chemtech	N	N
M7471A/B-Mercury-11	Mercury Analysis in Soil and Sediments by Cold Vapor Technique (Revision 11, 05/23/11)	Definitive	Soil samples – Mercury	CVAA	Chemtech	N	N
M9012A-B-Total, Amenable and Reactive Cyanide-13	Determination of Total Cyanide by SW-846 Method 9012A/B (Revision 13, 05/23/10)	Definitive	Groundwater and aqueous field QC samples – Cyanide	Spectrophoto-meter	Chemtech	N	N
CFA CF-OA-E-001	Standard Operating Procedure for Dioxin/ Furan/ PCB Congener Sample Processing (Revision 2, February 2010)	Definitive	Soil and Groundwater – Dioxins/Furans	NA/ Extraction	CFA	NA	N

Lab SOP Number	Title, Revision Date, and / or Number	Definitive or Screening Data	Matrix and Analytical Group	Instrument	Organization Performing Analysis	Variance to DOD QSM? (Y/ N)	Modified for Project Work? (Y/N)
CF-OA-E-002	Standard Operating Procedure for the Analysis of Polychlorinated Dibenzo-p-Dioxins and Polychlorinated Dibenzofurans (PCDDs/PCDFs) by High-Resolution Gas Chromatography/ High-Resolution Mass Spectometry (HRGC/HRMS) (EPA SW-846 Method 8290A, EPA Method 1613B, EPA SW-846 Method 0023A) (Revision 4, December 2009)	Definitive	Soil and Groundwater – Dioxins/Furans	HRGC/ HRMS	CFA	N	N
PT-HS-001	Waste Collection, Accumulation and Storage (Revision 5, 08/05/09)	NA	NA	NA/ Disposal	TA-Pitt	NA	N
PT-IP-002	Acid Digestion of Soils, SW-846 Method 3050B (Revision 8, 04/28/09)	Definitive	Soil – Total Chromium Digestion	NA/ Digestion	TA-Pitt	NA	N
PT-IP-003	Acid Digestion of Aqueous Samples by SW-846 Methods 3005A, 3010A and EPA Methods 200.7 and 200.8 (Revision 10, 06/23/10)	Definitive	Aqueous – Total Chromium Digestion	NA/ Digestion	TA-Pitt	NA	N
PT-MT-001	Inductively Coupled Plasma-Atomic Emission Spectroscopy, Spectrometric Method for Trace Element Analyses, SW-846 Method 6010B, 6010C, and EPA Method 200.7 (Revision 11, 07/27/09)	Definitive	Soil – Total Chromium	Inductively Coupled Plasma-Atomic Emission Spectroscopy (ICP-AES)	TA-Pitt	N	N

Lab SOP Number	Title, Revision Date, and / or Number	Definitive or Screening Data	Matrix and Analytical Group	Instrument	Organization Performing Analysis	Variance to DOD QSM? (Y/ N)	Modified for Project Work? (Y/N)
PT-MT-009	Speciated Isotope Dilution Mass Spectometry, USEPA Method 6800 (Revision 1, 11/25/09)	Definitive	Soil – Hexavalent Chromium (and Trivalent Chromium by Calculation)	ICP-MS fitted with Xi interface, Ion Chromatograph (IC) separation unit	TA-Pitt	NA	N
PT-QA-029	DoD QSM Version 4.1 Requirements (Revision 2, 01/22/10)	NA	NA	NA/ QA/QC	TA-Pitt	NA	N
PT-WC-015	Chromium, Hexavalent (Colorimetric) by SM3500-Cr-B, SW-846 3060A/7196A (Revision 13, 01/18/10)	Definitive	Groundwater and aqueous field QC samples – Hexavalent Chromium	Spectrophoto-meter	TA-Pitt	N	N
PT-WC-015	Chromium, Hexavalent (Colorimetric) by SM3500-Cr-B, SW-846 3060A/7196A (Revision 13, 01/18/10) Note: This SOP also addresses SW-846 Method 3060A for alkaline digestion of soil.	Definitive	Soil – Hexavalent Chromium Extraction	Spectrophoto-meter	TA-Pitt	N	N

SAP Worksheet No. 24 -- Analytical Instrument Calibration Table

(UFP-QAPP Manual Section 3.2.2)

Instrument	Calibration Procedure	Frequency of Calibration	Acceptance Criteria	Corrective Action	Person Responsible for Corrective Action	SOP Reference[1]
GC/MS VOCs	Tune Verification –Bromofluoro-benzene (BFB)	Prior to Initial Calibration (ICAL) and at the beginning of each 12-hour analytical sequence.	The tune verification must meet the ion abundance criteria required by the method. No samples may be accepted without a valid tune.	Repeat tune check. If problem persists, re-tune the instrument using either manual or auto-tune procedures. If this fails to correct the problem, clean the source.	Analyst, Supervisor	M8260B/C-SWGCMSVOA-18
	ICAL – A minimum of a 5-point calibration curve is analyzed	After major maintenance; upon second consecutive failure of a Continuing Calibration Verification (CCV) standard.	System Performance Check Compounds (SPCCs) average Response Factors (RFs) 1,1,2,2-tetrachloroethane and chlorobenzene must be ≥0.30; chloromethane, 1,1-dichloroethane and bromoform ≥0.10; Percent Relative Standard Deviation (%RSD) for RFs must be ≤30% for Calibration Check Compounds (CCCs); and: (Option 1): %RSD must be ≤20% for each target analyte. If not met (Option 2): Linear regression correlation coefficient (r) must be >0.99. If not met (Option 3): Non-linear coefficient of determination (r^2) must be >0.99 (at least six standards).	Repeat calibration, if criterion is not met.	Analyst, Supervisor	
	ICV - second source	Once after each ICAL, prior to beginning a sample run.	The percent recovery (%R) for all target analytes must be within 80-120% of true value.	Investigate problem and verify ICV. Rerun ICV. If that fails, correct the problem and reanalyze ICAL.	Analyst, Supervisor	
	Retention Time (RT) Window Position Establishment	Once per ICAL for each target analyte and surrogate.	Position shall be set using the midpoint standard of the ICAL curve when ICAL is performed. On days when ICAL is not performed, the initial CCV is used.	NA.	Analyst, Supervisor	
	Evaluation of Relative Retention Times (RRTs)	With each sample.	RRT of each target analyte must be within ± 0.06 RRT units.	Correct problem, then rerun ICAL.	Analyst, Supervisor	

Instrument	Calibration Procedure	Frequency of Calibration	Acceptance Criteria	Corrective Action	Person Responsible for Corrective Action	SOP Reference[1]
	CCV	Daily before analysis and every 12 hours after the analysis of the tuning standard.	All analytes must be ≤20 Percent Difference or Percent Drift (%D). SPCC RFs must be ≥ 0.10 & 0.30 (compounds as listed above in ICAL acceptance criteria cell).	Investigate cause and repeat injection. Repeat ICAL and reanalyze all samples analyzed since the last successful CCV.	Analyst, Supervisor	
GC/MS SVOCs (including Low Level PAHs)	Tuning	Prior to ICAL and at the beginning of each 12 hour analytical sequence.	Must meet the ion abundance criteria required by the method. No samples may be accepted without a valid tune.	Manual tuning; cleaning or replacement of the ion source or filament.	Analyst, Supervisor	M8270C/D-BNA-16
	Breakdown Check (DDT only)	At the beginning of each 12-hour analytical sequence.	The degradation must be ≤ 20% for DDT to verify inertness of the injection port.	Correct the problem then repeat breakdown check. No samples shall be run until degradation is ≤20% for DDT.	Analyst, Supervisor	
	ICAL – A minimum of a 5-point calibration curve is analyzed	After major maintenance; upon second consecutive failure of CCV standard.	Average RF for SPCCs must be $\geq$0.050; %RSD for RFs for CCCs must be < 15% for all compounds. If not met: Option 1) r must be ≥ 0.995. Option 2) r^2 must be ≥ 0.99 (6 points for second order).	Repeat calibration, if criterion is not met.	Analyst, Supervisor	
	ICV - Second source	Once after each ICAL, prior to beginning a sample run.	%R of each analyte must be within 75-125% of true value.	Investigate problem and verify second source standard. Reanalyze ICAL.	Analyst, Supervisor	
	RT Window Position Establishment	Once per ICAL for each target analyte and surrogate.	Position shall be set using the midpoint standard of the ICAL curve when ICAL is performed. On days when ICAL is not performed, the initial CCV is used.	NA.	Analyst, Supervisor	
	Evaluation of RRTs	With each sample.	RRT of each target analyte must be within ± 0.06 RRT units.	Correct problem, then rerun ICAL.	Analyst, Supervisor	
	CCV	Daily before analysis and every 12 hours after the analysis of the tuning standard.	%D for all target compounds must be $\leq$ 20%; SPCC RFs must be $\geq$0.050.	Investigate cause and repeat injection. Repeat ICAL and reanalyze all samples analyzed since last successful CCV.	Analyst, Supervisor	

Instrument	Calibration Procedure	Frequency of Calibration	Acceptance Criteria	Corrective Action	Person Responsible for Corrective Action	SOP Reference[1]
GC/ECD Pesticides	Breakdown Check	At the beginning of each 12-hour period, prior to analysis of samples.	Degradation must be ≤15% of the total for both DDT and Endrin.	Column maintenance; injection port maintenance.	Analyst, Supervisor	M8081A-B-Pesticide-13
	ICAL – A minimum of a 5-point calibration curve is analyzed	After major instrument maintenance; upon failure of second consecutive CCV.	%RSD must be ≤20% for all target analytes. If not met (Option 2): r must be ≥ 0.995.	Repeat calibration, if criterion is not met.	Analyst, Supervisor	
	ICV - Second source	Once after each ICAL, prior to beginning a sample run.	The %R of all target analytes must be within 85-115% of true value.	Investigate problem and verify second source standard. Reanalyze ICAL.	Analyst, Supervisor	
	CCV	After each 10 field samples and at the end of the analytical sequence.	The %D of all target analytes must be ≤15%.	Investigate cause and repeat injection. Repeat ICAL and reanalyze all samples analyzed since last successful CCV.	Analyst, Supervisor	
GC/ECD PCBs	ICAL – A minimum of a 5-point calibration curve is analyzed for Aroclor 1660 (1016/1260 mixture)	After major instrument maintenance; upon failure of second consecutive CCV.	%RSD must be ≤20% for all target analytes. If not met (Option 2): r must be ≥ 0.995. Mid-point calibration of other Aroclors.	Repeat calibration, if criterion is not met.	Analyst, Supervisor	M8082/A-PCB-11
	ICV - Second source	Once after each ICAL, prior to beginning a sample run.	The %R of all target analytes must be within 80-120% of true value.	Investigate problem and verify second source standard. Reanalyze ICAL.	Analyst, Supervisor	
	CCV	After each 10 field samples and at the end of the analytical sequence.	The %D of all target analytes must be ≤15%.	Investigate cause and repeat injection. Repeat ICAL and reanalyze all samples analyzed since last successful CCV.	Analyst, Supervisor	
ICP-MS Metals	Tuning	Prior to ICAL.	Mass calibration must be ≤ 0.1 atomic mass units (amu) from the true value. Resolution must be within 0.9 amu. For stability, RSD must be ≤ 5% for five replicate analyses.	Retune and/or clean or replace source, then reanalyze tuning solutions. No samples may be accepted without a valid tune.	Analyst, Supervisor	M6020/6020A-Metals ICPMS-13

Instrument	Calibration Procedure	Frequency of Calibration	Acceptance Criteria	Corrective Action	Person Responsible for Corrective Action	SOP Reference[1]
	ICAL – A minimum of a 1-point calibration curve is analyzed	Daily ICAL prior to sample analysis.	When calibration is performed using multi-level standards, r must be ≥ 0.998.	Investigate and perform necessary equipment maintenance. Check calibration standards. Recalibrate.	Analyst, Supervisor	
	ICV - Second source	Once after each ICAL, prior to beginning a sample run.	The %R of all target analytes must be within 90-110 % of the true value.	Investigate and perform necessary equipment maintenance, verify standard and repeat. Recalibrate.	Analyst, Supervisor	
	Initial Calibration Blank (ICB)	Before beginning a sample sequence.	No analytes detected > LOD.	Correct the problem, then re-prepare and reanalyze.	Analyst, Supervisor	
	CCV	After each 10 field samples and at the end of the analytical sequence.	The %R of all target analytes must be within 90-110 % of the true value.	Investigate and perform necessary equipment maintenance. Recalibrate and reanalyze any samples not bracketed by passing CCVs.	Analyst, Supervisor	
	Continuing Calibration Blank (CCB)	After the initial CCV, after every 10 samples, and at the end of the sequence.	No analyte detected > LOD.	Investigate the source of contamination, reanalyze, reanalyze any samples not bracketed by passing CCBs.	Analyst, Supervisor	
	Low-Level Check Standard	Daily after ICAL and before samples.	The %R of all target analytes must be within 80-120 % of the true value.	Investigate and perform necessary equipment maintenance. Recalibrate and reanalyze all affected samples.	Analyst, Supervisor	
	ICS - ICSA & ICSB	At the beginning of an analytical run.	The absolute value of ICS A recoveries must be < LOD and ICS B %Rs must be within 80-120 % of the true value.	Investigate and perform necessary equipment maintenance. Recalibrate and reanalyze all affected samples.	Analyst, Supervisor	
CVAA Mercury	ICAL – A minimum of a 5-point calibration curve is analyzed	Daily ICAL prior to sample analysis.	r must be ≥0.995.	Investigate and perform necessary equipment maintenance. Check calibration standards. Recalibrate.	Analyst, Supervisor	M7471A/B-Mercury-11

Instrument	Calibration Procedure	Frequency of Calibration	Acceptance Criteria	Corrective Action	Person Responsible for Corrective Action	SOP Reference[1]
	ICV - Second source	Once after each ICAL, prior to beginning a sample run.	The %R of mercury must be within 90-110 % of the true value.	Investigate and perform necessary equipment maintenance, verify standard and repeat. Recalibrate.	Analyst, Supervisor	
	ICB	Before beginning a sample sequence.	No mercury detected > LOD.	Correct the problem, then re-prepare and reanalyze.	Analyst, Supervisor	
	CCV	After each 10 field samples and at the end of the analytical sequence.	The %R of mercury must be within 90-110 % of the true value.	Repeat CCV and all samples preceding a CCV failure. Recalibrate if the problem persists.	Analyst, Supervisor	
	CCB	After the initial CCV, after every 10 samples, and at the end of the sequence.	No mercury detected > LOD.	Repeat CCB and all samples preceding a CCB failure. Evaluate system for sources of contamination and correct the problem before proceeding with sample analysis.	Analyst, Supervisor	
Spectrophoto-meter Cyanide	ICAL – A minimum of a 6-point calibration curve is analyzed	Daily prior to sample analysis.	r must be ≥0.995.	Investigate and perform necessary equipment maintenance. Check calibration standards. Recalibrate.	Analyst, Supervisor	M9012A-B-Total, Amenable and Reactive Cyanide-13
	ICV - Second source	Once after each ICAL, prior to beginning a sample run.	The %R of analyte must be within 85-115 % of the true value.	Investigate and perform necessary equipment maintenance, verify standard and repeat. Recalibrate.	Analyst, Supervisor	
	Low-Level Check Standard	At the beginning and end of the analytical sequence.	The %R of analyte must be within 90-110 % of the true value.	Reanalyze; recalibrate, if reanalysis fails.	Analyst, Supervisor	
	CCV	After each 10 field samples and at the end of the analytical sequence.	The %R of analyte must be within 90-110 % of the true value.	Investigate and perform necessary equipment maintenance. Recalibrate and reanalyze any samples not bracketed by passing CCVs.	Analyst, Supervisor	

Instrument	Calibration Procedure	Frequency of Calibration	Acceptance Criteria	Corrective Action	Person Responsible for Corrective Action	SOP Reference[1]
ICP-AES Total Chromium	ICAL – A minimum of a 1-point calibration is analyzed	The instrument is calibrated at the beginning of each day or if the QC is out of criteria.	The instrument is calibrated by a one-point calibration per manufacturer's guidelines. Analytes run at their calibration levels must fall within 90 to 110% of the true values.	Recalibrate and/or perform the necessary equipment maintenance. Check the calibration standards. Reanalyze the affected data.	Analyst, Supervisor	PT-MT-001, PT-QA-029
	ICV - Second source	Analyze a standard at the beginning of the sequence.	The %R of all target analytes must be within 90-110 % of the true value.	Recalibrate and/or perform the necessary equipment maintenance. Check the calibration standards. Reanalyze the affected data.	Analyst, Supervisor	
	ICB	Before beginning a sample sequence, following ICV.	No analytes detected > LOD.	Terminate analysis; correct the problem; recalibrate.	Analyst, Supervisor	
	CCV	After each 10 field samples and at the end of the analytical sequence.	The %R of all target analytes must be within 90-110 % of the true value.	Recalibrate and/or perform the necessary equipment maintenance. Check the calibration standards. Reanalyze the affected data.	Analyst, Supervisor	
	CCB	Immediately following each CCV and at the end of the sequence.	No analyte detected ≥ LOD.	Correct the problem, then reprepare and reanalyze calibration blank and previous 10 samples.	Analyst, Supervisor	
	Low-Level Check Standard	Daily after ICAL and before samples.	The %R of all target analytes must be within 80-120 % of the true value.	Correct the problem and reanalyze the standard.	Analyst, Supervisor	
	Interference Check Standards (ICS - ICSA & ICSB)	At the beginning of an analytical run after ICAL and before samples.	The absolute value of ICS A recoveries for all non-spiked analytes must be < LOD, except for trace impurities; and ICS B %Rs must be within 80-120 % of the true value.	Terminate analysis, locate and correct problem, reanalyze ICS, reanalyze all affected samples.	Analyst, Supervisor	
Spectrophoto-meter Hexavalent Chromium	ICAL – A minimum of a 6-point calibration is analyzed	Daily ICAL prior to sample analysis.	r must be ≥ 0.995.	Recalibrate and/or perform the necessary equipment maintenance. Check the calibration standards. Reanalyze the affected data.	Analyst, Supervisor	PT-WC-015

Instrument	Calibration Procedure	Frequency of Calibration	Acceptance Criteria	Corrective Action	Person Responsible for Corrective Action	SOP Reference[1]
	ICV - Second source	Once after each ICAL, prior to beginning a sample run.	The %R of analyte must be within 90-110 % of the true value.	Recalibrate and/or perform the necessary equipment maintenance. Check the calibration standard. Reprepare and reanalyze the affected data.	Analyst, Supervisor	
	CCV	Analyze a standard at the beginning and end of the sequence and after every 15 samples.	The %R of analyte must be within 90-110 % of the true value.	Recalibrate and/or perform the necessary equipment maintenance. Check the calibration standard. Reprepare and reanalyze the affected data.	Analyst, Supervisor	
	CCB	After the initial CCV, after every 10 samples, and at the end of the sequence.	No analyte detected ≥ ½ LOQ.	Investigate the source of contamination, reanalyze, reanalyze any samples not bracketed by passing CCBs.	Analyst, Supervisor	
IC-ICP-MS Hexavalent Chromium	Tune Check/ Mass Bias	Tune at beginning. Mass bias standard run at the beginning and end of analysis or every four hours, whichever is more frequent.	Resolution of peaks must be < 0.9 amu at 10% peak height for the six tuning elements (Be, Ce, Co, In, Mg and Pb). Mass calibration must be within ± 0.1 amu from the actual value of the six tuning elements. A daily performance check must be performed using the six tuning elements and these elements must have RSDs below 5%. Isotopic abundance certified standard is used to measure the mass bias factors.	Retune if needed and then analyze mass bias as needed as per SOP.	Analyst, Supervisor	PT-MT-009, PT-QA-029
	RT Windows	Determined on each day of analysis by using a Mass Bias Determination Standard.	Sample analyses should be within ± 20 seconds of the mass bias RT window.	If an individual determination falls outside of the mass bias RT window, instrument performance will be evaluated and the sample will be reanalyzed.	Analyst, Supervisor	
	ICAL – A minimum of a 1-point calibration curve is analyzed	Daily ICAL prior to sample analysis.	When calibration is performed using multi-level standards, r must be ≥ 0.998.	Investigate and perform necessary equipment maintenance. Check calibration standards. Recalibrate.	Analyst, Supervisor	

Instrument	Calibration Procedure	Frequency of Calibration	Acceptance Criteria	Corrective Action	Person Responsible for Corrective Action	SOP Reference[1]
	ICV	Once after each ICAL, prior to beginning a sample run.	The %R of all target analytes must be within 90-110 % of the true value.	Investigate and perform necessary equipment maintenance, verify standard and repeat. Recalibrate.	Analyst, Supervisor	
	ICB	Before beginning a sample sequence.	No analytes detected > LOD.	Correct the problem, then re-prepare and reanalyze.	Analyst, Supervisor	
	CCV	After each 10 field samples and at the end of the analytical sequence.	The %R of all target analytes must be within 90-110 % of the true value.	Investigate and perform necessary equipment maintenance. Recalibrate and reanalyze any samples not bracketed by passing CCVs.	Analyst, Supervisor	
	CCB	Immediately following each CCV and at the end of the sequence.	No analyte detected > LOD.	Investigate the source of contamination, reanalyze, reanalyze any samples not bracketed by passing CCBs.	Analyst, Supervisor	
	Low-Level Check Standard	Daily after ICAL and before samples.	The %R of all target analytes must be within 80-120 % of the true value.	Investigate and perform necessary equipment maintenance. Recalibrate and reanalyze all affected samples.	Analyst, Supervisor	
	ICS - ICSA & ICSB	At the beginning of an analytical run after ICAL and before samples.	The absolute value of ICS A recoveries must be < LOD and ICS B %Rs must be within 80-120 % of the true value.	Investigate and perform necessary equipment maintenance. Recalibrate and reanalyze all affected samples.	Analyst, Supervisor	
GC/HRMS Dioxins/ Furans	Tune / Mass Resolution Check	At the beginning and the end of each 12-hour period of analysis.	Static resolving power must be ≥ 10,000 (10% valley) for identified masses per method and lock-mass ion between lowest and highest masses for each descriptor and level of reference must be ≤ 10% full-scale deflection.	Retune instrument and verify. Assess data for impact. If end resolution is less than 10,000, narrate or re-inject, as necessary.	Analyst, Department Manager	CF-OA-E-002

Instrument	Calibration Procedure	Frequency of Calibration	Acceptance Criteria	Corrective Action	Person Responsible for Corrective Action	SOP Reference[1]
	GC Column Performance Check Solution (CPSM)	Prior to ICAL or CCV.	Peak separation between 2,3,7,8-TCDD and other TCDD isomers must result in a valley of ≤ 25% per method; and identification of all first and last eluters of the eight homologue retention time windows and documentation by labeling (F/L) on the chromatogram; and absolute retention times for switching from one homologous series to the next ≥ 10 seconds for all components of the mixture.	1) Readjust windows. 2) Evaluate system. 3) Perform maintenance. 4) Reanalyze CPSM. 5) No corrective action is necessary if 2,3,7,8-TCDD is not detected and the % valley is greater than 25%.	Analyst, Department Manager	
	ICAL – a minimum of a 5-point calibration is prepared for all target analytes	Prior to sample analysis, as needed by the failure of CCV, and when a new lot is used as a standard source.	Ion abundance ratios must be within limits specified in SOP; and signal to noise ratio (S/N) must be ≥ 10:1 for all target analyte ions; and RSD must be ≤ 20% for RFs for all 17 unlabeled standards and 9 labeled ISs.	Correct problem, then repeat ICAL. No samples may be run until ICAL has passed.	Analyst, Department Manager	
	CCV	At the beginning of each 12-hour period, and at the end of each analytical sequence.	Ion abundance ratios must be in accordance with SOP; and RF (unlabeled standards) must be ≤ 20%D of average RF from ICAL; and RF (labeled standards) must be ≤ 30%D of average RF from ICAL.	Correct problem, repeat CCV. If CCV fails, repeat ICAL and reanalyze all samples analyzed since last successful CCV End of Run CCV: If RF (unlabeled standards) >20%D and ≤25%D and/or RF (labeled standards) >30%D and ≤35%D of the average RF from ICAL, then use mean RF from bracketing CCVs to quantitate impacted samples instead of the ICAL mean RF value. If bracketing CCVs differ by more than 25% RPD (unlabeled) or 35% RPD (labeled), then run a new ICAL within 2 hours, and re-quantitate samples. Otherwise, reanalyze samples with positive detections.	Analyst, Department Manager	

[1] Specify the appropriate reference letter or number from the Analytical SOP References table (**Worksheet No. 23**).

SAP Worksheet No. 25 -- Analytical Instrument & Equipment Maintenance, Testing, & Inspection Table

(UFP-QAPP Manual Section 3.2.3)

Instrument / Equipment	Maintenance Activity	Testing Activity	Inspection Activity	Frequency	Acceptance Criteria	Corrective Action	Responsible Person	SOP Reference[1]
GC/MS	Replace/clean ion source; clean injector; replace liner; replace/clip capillary column. Flush/replace tubing on purge and trap devise; replace trap.	VOCs	Ion source, injector liner, column, column flow, purge lines, purge flow, trap	Prior to ICAL and as necessary.	Acceptable ICAL and CCV.	Correct the problem and repeat ICAL or CCV.	Analyst, Supervisor	M8260B-C-SWGCMSVOA-18
GC/MS	Replace/clean ion source; clean injector; replace liner; replace/clip capillary column. Flush/replace tubing on purge and trap devise; replace trap.	SVOCs, including Low Level PAHs	Ion source, injector liner, column, column flow, purge lines, purge flow, trap	Prior to ICAL and as necessary.	Acceptable ICAL and CCV.	Correct the problem and repeat ICAL or CCV.	Analyst, Supervisor	M8270C-D-BNA-16
GC/ECD	ECD maintenance; replace/clip capillary column.	Pesticides	ECD, injector, injector liner, column, adjust column flow	Prior to ICAL and as necessary.	Acceptable ICAL and CCV.	Correct the problem and repeat ICAL or CCV.	Analyst, Supervisor	M8081A-B-Pesticide-13
GC/ECD	ECD maintenance; replace/clip capillary column.	PCBs	ECD, injector, injector liner, column, adjust column flow	Prior to ICAL and as necessary.	Acceptable ICAL and CCV.	Correct the problem and repeat ICAL or CCV.	Analyst, Supervisor	M8082/A-PCB-11
ICP-MS	Clean plasma torch; clean filters; clean spray and nebulizer chambers; replace pump tubing.	Metals	Torch, filters, nebulizer chamber, pump, pump tubing	Prior to ICAL and as necessary.	Acceptable ICAL and CCV.	Correct the problem and repeat ICAL or CCV.	Analyst, Supervisor	M6020-6020A-Metals ICPMS-13
CVAA	Clean/replace dehydrator tubing and sample mixing coil tubing; replace sample probe; replace pump tubing; clean optical cell.	Mercury	Tubing, sample probe, optical cell	Prior to ICAL and as necessary.	Acceptable ICAL and CCV.	Correct the problem and repeat ICAL or CCV.	Analyst, Supervisor	M7470A-Mercury-12, M7471A-B-Mercury-11
Spectrophoto-meter	Flush/replace tubing.	Cyanide	Tubing	Prior to ICAL and as necessary.	Acceptable ICAL and CCV.	Correct the problem and repeat ICAL or CCV.	Analyst, Supervisor	M9012A-B-Total, Amenable and Reactive Cyanide-13

Instrument / Equipment	Maintenance Activity	Testing Activity	Inspection Activity	Frequency	Acceptance Criteria	Corrective Action	Responsible Person	SOP Reference[1]
ICP-AES	Clean torch assembly and spray chamber when discolored or when degradation in data quality is observed. Clean nebulizer, and check argon supply. Replace peristaltic pump tubing as needed.	Total Chromium	Torch, filters, nebulizer chamber, pump, pump tubing.	Prior to ICAL and as necessary.	Acceptable ICAL and CCV.	Correct the problem and repeat ICAL or CCV.	Analyst, Supervisor	PT-MT-001
IC-ICP-MS	Follow ICP-MS maintenance. Check sample waste container level. Check quartz torch condition. Measure quartz torch for proper alignment. Check oil level of roughing pumps. Check peristaltic pump: proper roller pressure, sample introduction tubing, correct pump rotation, and condition of drain tubing. Check condition of sampler and skimmer cones. Check and drain oil mist eliminator on roughing pumps.	Hexa-valent Chromium	Inspect waste container, quartz torch, pump, sampler and skimmer cones.	Prior to ICAL and as necessary.	Acceptable ICAL and CCV.	Correct the problem and repeat ICAL or CCV.	Analyst, Supervisor	PT-MT-009
Spectrophoto-meter	Rinse cuvet thoroughly with water before initial use and between sample readings.	Hexa-valent Chromium	Visually inspect cuvet for scratches/etching and replace as needed.	Prior to ICAL and as necessary.	Acceptable ICAL and CCV.	Correct the problem and repeat ICAL or CCV.	Analyst, Supervisor	PT-WC-015
GC/HRMS	Parameter Setup	Dioxins/ Furans	Physical check.	Initially; prior to daily calibration check.	Correct Parameters.	Reset if incorrect.	Analyst, Department Manager	CF-OA-E-002
	Tune Check		Conformance to instrument tuning.	Initially; prior to daily calibration check.	Compliance to ion abundance criteria.	Correct the problem and repeat tune check.		

[1] Specify the appropriate reference letter or number from the Analytical SOP References table (**Worksheet No. 23**).

SAP Worksheet No. 26 -- Sample Handling System

(UFP-QAPP Manual Appendix A)

SAMPLE COLLECTION, PACKAGING, AND SHIPMENT
Sample Collection (Personnel/Organization): FOL or designee / Tetra Tech
Sample Packaging (Personnel/Organization): FOL or designee / Tetra Tech
Coordination of Shipment (Personnel/Organization): FOL or designee / Tetra Tech
Type of Shipment/Carrier: Overnight courier service (Federal Express)
SAMPLE RECEIPT AND ANALYSIS
Sample Receipt (Personnel/Organization): Sample Custodians / Chemtech, CFA, and TA-Pitt
Sample Custody and Storage (Personnel/Organization): Sample Custodians / Chemtech, CFA, and TA-Pitt
Sample Preparation (Personnel/Organization): Preparation laboratory staff / Chemtech, CFA, and TA-Pitt
Sample Determinative Analysis (Personnel/Organization): GC/MS, GC/ECD, ICP-AES, ICP-MS, CVAA, Spectrophotometer / Chemtech; HRGC/HRMS, CFA ; ICP-AES, IC-ICP-MS / TA-Pitt
SAMPLE ARCHIVING
Field Sample Storage (No. of days from sample collection): 30 days from submittal of final report
Sample Extract/Digestate Storage (No. of days from extraction/digestion): 30 days from submittal of final report
Biological Sample Storage (No. of days from sample collection): Not Applicable
SAMPLE DISPOSAL
Personnel/Organization: Sample Custodians / Chemtech, CFA, and TA-Pitt
Number of Days from Analysis: 30 days from submittal of final report

SAP Worksheet No. 27 -- Sample Custody Requirements Table

(UFP-QAPP Manual Section 3.3.3)

Field Sample Custody Procedures

The laboratories will provide pre-preserved sample containers for sample collection. Following sample collection into the appropriate bottle ware, all samples will be immediately placed on ice in a cooler. Glass sample containers will be enclosed in bubble-wrap in order to protect the bottle ware during shipment. The cooler will be secured using strapping tape along with a signed custody seal. Sample coolers will be delivered to a local courier location for priority overnight delivery to the selected laboratory for analysis. Samples will be preserved as appropriate based on the analytical method. Samples will be maintained at <6 °C until delivery to the laboratories. Proper custody procedures will be followed throughout all phases of sample collection and handling.

Chain-of-custody protocols will be used throughout sample handling to establish the evidentiary integrity of samples. These protocols will be used to demonstrate that the samples were handled and transferred in a manner that would eliminate possible tampering. Samples for the laboratory will be packaged and shipped in accordance with **Tetra Tech SOP SA-6.1** (**Appendix A**).

Chain-of-Custody Procedures

After collection, each sample will be maintained in the sampler's custody until formally transferred to another party (e.g., Federal Express). For all samples collected, chain-of-custody forms will document the date and time of sample collection, the sampler's name, and the names of all others who subsequently held custody of the sample. Specifications for chemical analyses will also be documented on the chain-of-custody form. **Tetra Tech SOP SA-6.3** provides further details on the chain-of-custody procedure (**Appendix A**). Chain-of-custody requirements are also documented with instructions contained in each shipment from the laboratories.

Laboratory Sample Custody Procedures

Chain-of-custody requirements are also documented with instructions contained in each shipment from the laboratory.

Sample Designation System

Each sample collected for analysis will be assigned a unique sample tracking number. This number will consist of a two-segment alphanumeric code that identifies the site, the sample type (sample medium or QC sample designation), the sample location, and the sample depth indicator. **Tetra Tech SOP CT-04** addresses sample nomenclature (**Appendix A**). The alphanumeric coding system to be used is as follows:

Site Identifier:

12 = Site 12

Sample Medium:

TP = Test Pit Sample
SS = Surface Soil Sample
SB = Subsurface Soil Sample
SD = Sediment Sample
SW = Surface Water Sample
GW = Groundwater Sample

Quality Assurance/Quality Control (QA/QC) Sample Designation:

TB = Trip Blank
FB = Field Blank
RB = Equipment Rinsate Blank (if necessary)
DUP = Field Duplicate

Sample Location:

Each test pit and soil boring will be assigned a two digit consecutive number in the order of installation, with the exception of the soil boring step-out samples, which have been pre-assigned specific numbers as identified in **Worksheet No. 18**. Sample locations within a given test pit will be assigned a two digit consecutive number in the order of collection.

For test pit/subsurface soil samples, the soil sample depth will be indicated by a four digit number. The first two digits will represent the upper limit of the sample depth interval (rounded to the nearest foot) and the bottom two digits will represent the lower limit of the depth interval.

QC Sample Number:

All QC samples will be assigned a sequential sample number. The field duplicate, MS, and MD/MSD samples will be collected from the same station. For example, the first trip blank will be assigned the tracking number 12TB-01.

The field duplicate will be given the same type of sample designation as the samples so that it will be "blind" to the laboratory. The sampling time recorded on the chain-of-custody form, labels and tags for the duplicate samples will be 0000. Notes detailing the sample number, time, date, and type will be recorded on the routine sample log sheets and will document the location of the duplicate sample (sample log sheets are not provided to the laboratory).

All pertinent information regarding sample identification will be recorded in the field logbooks and on sample log sheets where appropriate.

SAP Worksheet No. 28 -- Laboratory QC Samples Table

(UFP-QAPP Manual Section 3.4)

Matrix	Soil, groundwater, and aqueous field QC samples
Analytical Group	VOCs
Analytical Method/ SOP Reference	SW-846 8260B Chemtech M8260B/C-SWGCMSVOA-18

QC Sample	Frequency/Number	Method/SOP QC Acceptance Limits	Corrective Action	Person(s) Responsible for Corrective Action	Data Quality Indicator	Measurement Performance Criteria
Method Blank	One per batch of 20 samples or less per matrix.	All target analytes must be ≤½ LOQ, except common lab contaminants, which must be < LOQ.	Investigate source of contamination. Rerun method blank prior to analysis of samples if possible. Evaluate the samples and associated QC. If blank results are above LOQ, report sample results which are < LOQ or > 10X the blank concentration. Reanalyze blank and samples >LOQ and < 10X the blank.	Analyst, Supervisor	Bias / Contamination	Same as QC Acceptance Limits.
Surrogates	All field and QC samples. Four per sample- Dibromofluoromethane 1,2-Dichloroethane-d_4 Toluene-d_8 4-Bromofluorobenzene	%Rs must meet the DoD Quality Systems Manual (QSM) Version 4.2 limits as per Appendix G of the DoD QSM.	Re-analyze the sample; if the second injection is acceptable, report only the second set of data. If the second injection also fails, report both sets of data.	Analyst, Supervisor	Accuracy / Bias	Same as QC Acceptance Limits.
Internal Standards (IS)	Every field sample, standard, and QC sample. Four per sample- Pentafluorobenzene 1,4-Difluorobenzene Chlorobenzene-d_5 1,4-Dichlorobenzene-d_4	Retention times for IS must be within ± 30 seconds and the responses within -50% to +100% of ICAL mid-point standard.	Re-analyze affected samples; if the reanalysis is acceptable, report only the second set of data. If the reanalysis also fails, report both sets of data.	Analyst, Supervisor	Accuracy / Bias	Same as QC Acceptance Limits.

Matrix	Soil, groundwater, and aqueous field QC samples
Analytical Group	VOCs
Analytical Method/ SOP Reference	SW-846 8260B Chemtech M8260B/C-SWGCMSVOA-18

QC Sample	Frequency/Number	Method/SOP QC Acceptance Limits	Corrective Action	Person(s) Responsible for Corrective Action	Data Quality Indicator	Measurement Performance Criteria
Laboratory Control Sample (LCS) Laboratory Control Sample Duplicate (LCSD) (Not Required)	One per batch of 20 samples or less per matrix.	%Rs must meet the DoD QSM Version 4.2 limits as per Appendix G of the DoD QSM. RPD between LCS and LCSD must be ≤ 30%, if analyzed.	Re-analyze to verify that it is an instrument problem; if after reanalysis, the LCS fails again or there is insufficient volume to reanalyze samples, flag all data with a Q. Mention the problem and action taken in the case narrative.	Analyst, Supervisor	Accuracy / Bias Precision also, if LCSD is analyzed	Same as QC Acceptance Limits.
MS/MSD	One per batch of 20 or fewer samples per matrix.	%Rs should meet the DoD QSM Version 4.2 limits as per Appendix G of the DoD QSM. RPD between MS and MSD should be ≤30%.	Corrective action will not be taken for samples when recoveries are outside limits and surrogate and LCS criteria are met unless RPD indicate obvious extraction/ analysis difficulties, then reprepare MS/MSD.	Analyst, Supervisor	Accuracy / Bias Precision	Same as QC Acceptance Limits.
Results between the DL and LOQ	NA.	Apply “J” qualifier to results detected between DL and LOQ.	None.	Analyst, Supervisor	Accuracy	Same as QC Acceptance Limits.

Matrix	Soil, groundwater, and aqueous field QC samples
Analytical Group	SVOCs (and Low Level PAHs)
Analytical Method/ SOP Reference	SW-846 8270D (and SIM) Chemtech M8270C/D-BNA-16

QC Sample	Frequency/Number	Method/SOP QC Acceptance Limits	Corrective Action	Person(s) Responsible for Corrective Action	Data Quality Indicator	Measurement Performance Criteria
Method Blank	One per batch of 20 or fewer samples per matrix.	No analytes ≥½ LOQ, except common lab contaminants, which must be < LOQ.	Investigate source of contamination. Rerun method blank prior to analysis of samples if possible. Evaluate the samples and associated QC. If blank results are above LOQ, report sample results which are < LOQ or > 10X the blank concentration. Reanalyze blank and samples >LOQ and < 10X the blank.	Analyst, Supervisor	Bias / Contamination	Same as QC Acceptance Limits.
Surrogates	All field and QC samples. Eight per sample: 2-Fluorphenol Phenol-d_5 Nitrobenzene-d_5 2-Fluorobiphenyl 2,4,6-Tribromophenol Terphenyl-d_{14} 2-Chlorophenol-d_4 1,2-Dichlorobenzene-d_4	%Rs must meet the DoD QSM Version 4.2 limits as per Appendix G of the DoD QSM.	If a sample falls outside QC limits from each group, re-extract and reanalyze the sample to confirm matrix interference or laboratory error; if the second injection is acceptable, report only the second set of data. If the second injection also fails, report both sets of data.	Analyst, Supervisor	Accuracy / Bias	Same as QC Acceptance Limits.
IS	Every field sample, standard, and QC sample. Six per sample – 1,4-Dichlorobenzene-d_4 Acenaphthene-d_{10} Phenanthrene-d_{10} 2-Fluorobiphenyl Chrysene-d_{12} Perylene-d_{12}	Retention times for IS must be within ± 30 seconds and the response areas must be within -50% to +100% of ICAL mid-point standard.	Re-analyze affected samples; if the reanalysis is acceptable, report only the second set of data. If the reanalysis also fails, report both sets of data.	Analyst, Supervisor	Accuracy / Bias	Same as QC Acceptance Limits.

Matrix	Soil, groundwater, and aqueous field QC samples
Analytical Group	SVOCs (and Low Level PAHs)
Analytical Method/ SOP Reference	SW-846 8270D (and SIM) Chemtech M8270C/D-BNA-16

QC Sample	Frequency/Number	Method/SOP QC Acceptance Limits	Corrective Action	Person(s) Responsible for Corrective Action	Data Quality Indicator	Measurement Performance Criteria
LCS	One per batch of 20 or fewer samples per matrix.	%Rs must meet the DoD QSM Version 4.2 limits as per Appendix G of the DoD QSM.	Re-analyze to verify that it is an instrument problem; if after reanalysis, the LCS fails again or there is insufficient volume to reanalyze samples, flag all data with a Q. Mention the problem and action taken in the case narrative.	Analyst, Supervisor	Accuracy / Bias	Same as QC Acceptance Limits.
MS/MSD	One per batch of 20 or fewer samples per matrix.	%Rs should meet the DoD QSM Version 4.2 limits as per Appendix G of the DoD QSM. RPD between MS and MSD should be ≤30%.	Corrective action will not be taken for samples when recoveries are outside limits and surrogate and LCS criteria are met unless RPDs indicate obvious extraction/ analysis difficulties, then reprepare MS/MSD.	Analyst, Supervisor	Accuracy / Bias Precision	Same as QC Acceptance Limits.
Results between the DL and LOQ	NA.	Apply “J” qualifier to results detected between DL and LOQ.	None.	Analyst, Supervisor	Accuracy	Same as QC Acceptance Limits.

Matrix	Soil, groundwater, and aqueous field QC samples
Analytical Group	Pesticides
Analytical Method/ SOP Reference	SW-846 8081A Chemtech M8081A-B-Pesticide-13

QC Sample	Frequency/Number	Method/SOP QC Acceptance Limits	Corrective Action	Person(s) Responsible for Corrective Action	Data Quality Indicator	Measurement Performance Criteria
Method Blank	One per batch of 20 or fewer samples per matrix.	No analytes ≥½ LOQ.	Investigate source of contamination. Rerun method blank prior to analysis of samples if possible. Evaluate the samples and associated QC: if blank results are above LOQ, report sample results which are < LOQ or > 10X the blank concentration. Reanalyze blank and samples >LOQ and < 10X the blank.	Analyst, Supervisor	Bias / Contamination	Same as QC Acceptance Limits.
Surrogates	All field and QC samples. Two per sample- Decachlorobiphenyl Tetra-chloro-meta-xylene	%Rs must meet the DoD QSM Version 4.2 limits as per Appendix G of the DoD QSM.	No corrective action if only one surrogate is out. Re-extract the sample if both surrogates fail the recovery criteria.	Analyst, Supervisor	Accuracy / Bias	Same as QC Acceptance Limits.
LCS	One per batch of 20 or fewer samples per matrix.	%Rs must meet the DoD QSM Version 4.2 limits as per Appendix G of the DoD QSM.	If LCS and MS/MSD are out of control limits, re-analyze to verify that it is an instrument problem. If they still do not meet control limits, re-extract the samples.	Analyst, Supervisor	Accuracy / Bias	Same as QC Acceptance Limits.
MS/MSD	One per batch of 20 or fewer samples per matrix.	%Rs should meet the DoD QSM Version 4.2 limits as per Appendix G of the DoD QSM. RPD between MS and MSD should be ≤30%.	Corrective action will not be taken for samples when recoveries are outside limits and surrogate and LCS criteria are met, unless RPDs indicate obvious extraction/analysis difficulties, then reprepare MS/MSD. Indicate obvious extraction/analysis issues.	Analyst, Supervisor	Accuracy / Bias Precision	Same as QC Acceptance Limits.
Second Column Confirmation	All positive results must be confirmed. Results are reported from the primary column.	Results between primary and second column - RPD must be ≤ 40%.	Apply "J" flag if RPD > 40% from primary column result. Q flag if sample is not confirmed.	Analyst, Supervisor	Accuracy / Bias Precision	Same as QC Acceptance Limits.

Matrix	Soil, groundwater, and aqueous field QC samples
Analytical Group	Pesticides
Analytical Method/ SOP Reference	SW-846 8081A Chemtech M8081A-B-Pesticide-13

QC Sample	Frequency/Number	Method/SOP QC Acceptance Limits	Corrective Action	Person(s) Responsible for Corrective Action	Data Quality Indicator	Measurement Performance Criteria
Results between the DL and LOQ	NA.	Apply "J" qualifier to results detected between DL and LOQ.	None.	Analyst, Supervisor	Accuracy	Same as QC Acceptance Limits.

Matrix	Soil, groundwater, and aqueous field QC samples
Analytical Group	PCBs
Analytical Method/ SOP Reference	SW-846 8082 Chemtech M8082/8082A-PCB-11

QC Sample	Frequency/Number	Method/SOP QC Acceptance Limits	Corrective Action	Person(s) Responsible for Corrective Action	Data Quality Indicator	Measurement Performance Criteria
Method Blank	One per batch of 20 or fewer samples per matrix.	No analytes ≥½ LOQ.	Investigate source of contamination. Rerun method blank prior to analysis of samples if possible. Evaluate the samples and associated QC: if blank results are above LOQ, report sample results which are < LOQ or > 10X the blank concentration. Reanalyze blank and samples >LOQ and < 10X the blank.	Analyst, Supervisor	Bias / Contamination	Same as QC Acceptance Limits.
Surrogates	All field and QC samples. Two per sample- Decachlorobiphenyl Tetra-chloro-meta-xylene	%Rs must meet the DoD QSM Version 4.2 limits as per Appendix G of the DoD QSM.	No corrective action if only one surrogate is out. Re-extract the sample if both surrogates fail the recovery criteria.	Analyst, Supervisor	Accuracy / Bias	Same as QC Acceptance Limits.
LCS	One per batch of 20 or fewer samples per matrix.	%Rs must meet the DoD QSM Version 4.2 limits as per Appendix G of the DoD QSM.	If LCS and MS/MSD are out of control limits, re-analyze to verify that it is an instrument problem. If they still do not meet control limits, re-extract the samples.	Analyst, Supervisor	Accuracy / Bias	Same as QC Acceptance Limits.
MS/MSD	One per batch of 20 or fewer samples per matrix. Spike with Aroclor 1016/1260 mix for PCBs.	%Rs should meet the DoD QSM Version 4.2 limits as per Appendix G of the DoD QSM. RPD between MS and MSD should be ≤30%.	Corrective action will not be taken for samples when recoveries are outside limits and surrogate and LCS criteria are met, unless RPDs indicate obvious extraction/analysis difficulties, then reprepare MS/MSD. Indicate obvious extraction/analysis issues.	Analyst, Supervisor	Accuracy / Bias Precision	Same as QC Acceptance Limits.
Second Column Confirmation	All positive results must be confirmed. Results are reported from the primary column.	Results between primary and second column - RPD must be ≤ 40%.	Apply "J" flag if RPD > 40% from primary column result. Q flag if sample is not confirmed.	Analyst, Supervisor	Accuracy / Bias Precision	Same as QC Acceptance Limits.

Matrix	Soil, groundwater, and aqueous field QC samples
Analytical Group	PCBs
Analytical Method/ SOP Reference	SW-846 8082 Chemtech M8082/8082A-PCB-11

QC Sample	Frequency/Number	Method/SOP QC Acceptance Limits	Corrective Action	Person(s) Responsible for Corrective Action	Data Quality Indicator	Measurement Performance Criteria
Results between the DL and LOQ	NA.	Apply "J" qualifier to results detected between DL and LOQ.	None.	Analyst, Supervisor	Accuracy	Same as QC Acceptance Limits.

Matrix	Soil, groundwater, and aqueous field QC samples
Analytical Group	Metals
Analytical Method/ SOP Reference	SW-846 6020A Chemtech M6020-6020A-Metals ICPMS-13

QC Sample	Frequency/Number	Method/SOP QC Acceptance Limits	Corrective Action	Person(s) Responsible for Corrective Action	Data Quality Indicator	Measurement Performance Criteria
Method Blank	One per batch of 20 or fewer samples per matrix.	No analytes ≥½ LOQ.	Investigate source of contamination. Rerun method blank prior to analysis of samples if possible. Evaluate the samples and associated QC: if blank results are above LOQ, report sample results which are < LOQ or > 10X the blank concentration. Reanalyze blank and samples >LOQ and < 10X the blank.	Analyst, Supervisor	Bias / Contamination	Same as QC Acceptance Limits.
LCS	One per batch of 20 or fewer samples per matrix.	%Rs must be 80-120%.	Reanalyze LCS; if the limits are still not met after two consecutive analyses, re-prepare and re-analyze all samples in that batch.	Analyst, Supervisor	Accuracy / Bias	Same as QC Acceptance Limits.
MS/MSD	One per batch of 20 or fewer samples per matrix.	The %R should be within 80-120%, if sample < 4x spike added. RPD between MS and MSD should be ≤20%.	Perform post-spike addition. Perform method of standard addition spiking on a failing matrix spike if the failure is due to matrix interference.	Analyst, Supervisor	Accuracy / Bias Precision	Same as QC Acceptance Limits.
Duplicate Sample	One per batch of 20 or fewer samples per matrix (if MSD is not included).	RPD between duplicate samples should be ≤20%, if both results are >5x LOQ.	Evaluate sample homogeneity and flag as necessary.	Analyst, Supervisor	Precision	Same as QC Acceptance Limits.
ICP Serial Dilution	One per batch of 20 or fewer samples per matrix.	The 5-fold dilution result must agree within ± 10%D of the original sample result.	Flag result or dilute and reanalyze sample to eliminate interference. Applicable when the concentration is >50x the LOQ. If the %D is >10%, then perform post-digestion spike solution.	Analyst, Supervisor	Accuracy / Bias Precision	Same as QC Acceptance Limits.

Matrix	Soil, groundwater, and aqueous field QC samples
Analytical Group	Metals
Analytical Method/ SOP Reference	SW-846 6020A Chemtech M6020-6020A-Metals ICPMS-13

QC Sample	Frequency/Number	Method/SOP QC Acceptance Limits	Corrective Action	Person(s) Responsible for Corrective Action	Data Quality Indicator	Measurement Performance Criteria
Post-Digestion Spike	When serial dilution test fails or when all analyte concentrations are <50 x LOD.	The %R must be within 75-125% of expected value to verify the absence of an interference. Spike addition should produce a concentration of 10-100x LOQ.	Flag results for affected analytes for all associated samples with "J."	Analyst, Supervisor	Accuracy / Bias	Same as QC Acceptance Limits.
IS	Every sample.	IS intensity must recover within 70-130% of intensity of the IS in the original calibration blank.	Reanalyze sample at two-fold dilution with addition of appropriate amounts of IS; repeat until the IS intensities recover above 70%.	Analyst, Supervisor	Precision	Same as QC Acceptance Limits.
Results between the DL and LOQ	NA.	Apply "J" qualifier to results detected between DL and LOQ.	None.	Analyst, Supervisor	Accuracy	Same as QC Acceptance Limits.

Matrix	Soil, groundwater, and aqueous field QC samples
Analytical Group	Mercury
Analytical Method/ SOP Reference	SW-846 7470A/7471B Chemtech M7470A-Mercury-12, M7471A-B-Mercury-11

QC Sample	Frequency/Number	Method/SOP QC Acceptance Limits	Corrective Action	Person(s) Responsible for Corrective Action	Data Quality Indicator	Measurement Performance Criteria
Method Blank	One per batch of 20 or fewer samples per matrix.	No analyte ≥ LOQ.	Repeat analysis. Evaluate systems for contamination sources and repeat the batch as necessary.	Analyst, Supervisor	Bias / Contamination	Same as QC Acceptance Limits.
LCS	One per batch of 20 or fewer samples per matrix.	%Rs must be within 80-120%.	Rerun sample; if %R is not within control limits again, re-digest and reanalyze samples associated with the LCS.	Analyst, Supervisor	Accuracy / Bias	Same as QC Acceptance Limits.
MS/MSD	One per batch of 20 or fewer samples per matrix.	%Rs should be within 75-125% for aqueous (7470A) and 80-120% for solids (7471B), if sample < 4x spike added. RPD between MS and MSD should be ≤20%.	Rerun sample; if %R is not within control limits again, re-digest and reanalyze samples.	Analyst, Supervisor	Accuracy / Bias Precision	Same as QC Acceptance Limits.
Duplicate Sample	One per batch of 20 or fewer samples per matrix (if MSD is not included).	RPD between duplicate samples should be ≤20%, if both results are >5x LOQ.	Evaluate sample homogeneity and flag as necessary.	Analyst, Supervisor	Precision	Same as QC Acceptance Limits.
Results between the DL and LOQ	NA.	Apply “J” qualifier to results detected between DL and LOQ.	None.	Analyst, Supervisor	Accuracy	Same as QC Acceptance Limits.

Matrix	Soil, groundwater, and aqueous field QC samples
Analytical Group	Cyanide
Analytical Method/ SOP Reference	SW-846 9012B Chemtech M9012A-B-Total, Amenable and Reactive Cyanide-13

QC Sample	Frequency/Number	Method/SOP QC Acceptance Limits	Corrective Action	Person(s) Responsible for Corrective Action	Data Quality Indicator	Measurement Performance Criteria
Method Blank	One per batch of 20 or fewer samples per matrix.	No analyte ≥½ LOQ.	Determine the source and eliminate interferences. Reanalyze samples as necessary.	Analyst, Supervisor	Bias / Contamination	Same as QC Acceptance Limits.
LCS	One per batch of 20 or fewer samples per matrix.	%Rs must be within 85-115%.	Re-prepare and reanalyze LCS and samples associated with the LCS.	Analyst, Supervisor	Accuracy / Bias	Same as QC Acceptance Limits.
MS/MSD	One per batch of 20 or fewer samples per matrix.	%Rs should be within 75-125%, if sample < 4x spike added. RPD between MS and MSD should be ≤20%.	Perform a post digestion (distillation) spike for cyanide when spike recovery falls outside control limits and the sample does not exceed four times the spike added.	Analyst, Supervisor	Accuracy / Bias Precision	Same as QC Acceptance Limits.
Duplicate Sample	One per batch of 20 or fewer samples per matrix.	RPD between duplicate samples should be ≤20%, if both results are >5x LOQ; or within ± the LOQ, if the concentration is < 5x LOQ.	Evaluate sample homogeneity and flag as necessary.	Analyst, Supervisor	Precision	Same as QC Acceptance Limits.
Results between the DL and LOQ	NA.	Apply “J” qualifier to results detected between DL and LOQ.	None.	Analyst, Supervisor	Accuracy	Same as QC Acceptance Limits.

Matrix	Soil and aqueous field QC samples
Analytical Group	Total Chromium
Analytical Method/ SOP Reference	SW-846 6010C TA-Pitt PT-MT-001 / PT-QA-029

QC Sample	Frequency/Number	Method/SOP QC Acceptance Limits	Corrective Action	Person(s) Responsible for Corrective Action	Data Quality Indicator	Measurement Performance Criteria
Method Blank	One per batch of 20 or fewer samples per matrix.	No analytes ≥½ LOQ, except common lab contaminants, which must be < LOQ.	Investigate the source of the contamination. Redigest and reanalyze all associated samples if the sample concentration ≥ the RL and <10x the blank concentration.	Analyst, Supervisor	Bias / Contamination	Same as QC Acceptance Limits.
LCS	One per batch of 20 or fewer samples per matrix.	%Rs must meet the DoD QSM Version 4.1 limits as per Appendix G of the DoD QSM.	Investigate source of problem. Re-digest and reanalyze all associated samples.	Analyst, Supervisor	Accuracy / Bias	Same as QC Acceptance Limits.
MS	One per batch of 20 or fewer samples per matrix.	The %R should be within 75-125%, if sample < 4x spike added.	Flag results.	Analyst, Supervisor	Accuracy / Bias	Same as QC Acceptance Limits.
Duplicate Sample	One per batch of 20 or fewer samples per matrix.	RPD between duplicate samples should be ≤20%, if both results are >5x LOQ.	Flag results.	Analyst, Supervisor	Precision	Same as QC Acceptance Limits.
ICP Serial Dilution	One per batch of 20 or fewer samples per matrix.	If original sample result is at least 50x the instrument detection limit, the 5-fold dilution result must agree within ± 10%D of the original sample result.	Flag result or dilute and reanalyzed sample to eliminate interference.	Analyst, Supervisor	Accuracy / Bias Precision	Same as QC Acceptance Limits.
Post-Digestion Spike	When serial dilution test fails or when all analyte concentrations are <50 x LOD.	The %R must be within 75-125% of expected value to verify the absence of an interference. Spike addition should produce a concentration of 10-100x LOQ.	Qualify associated data.	Analyst, Supervisor	Accuracy / Bias	Same as QC Acceptance Limits.
Results between the DL and LOQ	NA.	Apply "J" qualifier to results detected between DL and LOQ.	None.	Analyst, Supervisor	Accuracy	Same as QC Acceptance Limits.

Matrix	Soil samples
Analytical Group	Hexavalent Chromium
Analytical Method/ SOP Reference	SW-846 3060A/6800 TA-Pitt PT-MT-009/ PT-QA-029

QC Sample	Frequency/Number	Method/SOP QC Acceptance Limits	Corrective Action	Person(s) Responsible for Corrective Action	Data Quality Indicator	Measurement Performance Criteria
Method Blank	One per batch of 20 or fewer samples per matrix.	No analytes ≥ LOQ.	Investigate the source of the contamination. Redigest and reanalyze all associated samples if the sample concentration [illegible]	Analyst, Supervisor	Bias Contamination	Same as QC Acceptance Limits.
LCS	One per batch of 20 or fewer samples per matrix.	The %R must be within 80-120%.	Investigate source of problem. Re-digest and reanalyze all associated samples.	Analyst, Supervisor	Accuracy / Bias	Same as QC Acceptance Limits.
MS	One per batch of 20 or fewer samples per matrix.	The %R should be within 80-120%, if sample < 4x spike added.	Prepare post digestion spike for analytes outside limits.	Analyst, Supervisor	Accuracy / Bias	Same as QC Acceptance Limits.
Duplicate Sample	One per batch of 20 or fewer samples per matrix.	RPD between duplicate samples should be ≤20%, if both results are >5x LOQ.	Flag results.	Analyst, Supervisor	Precision	Same as QC Acceptance Limits.
ICP Serial Dilution	One per batch of 20 or fewer samples per matrix.	The 5-fold dilution result must agree within ± 10%D of the original sample result.	Flag result or dilute and reanalyzed sample to eliminate interference.	Analyst, Supervisor	Accuracy / Bias Precision	Same as QC Acceptance Limits.
Results between the DL and LOQ	NA.	Apply "J" qualifier to results detected between DL and LOQ.	None.	Analyst, Supervisor	Accuracy	Same as QC Acceptance Limits.

Matrix	Aqueous field QC samples
Analytical Group	Hexavalent Chromium
Analytical Method/ SOP Reference	SW-846 7196A TA-Pitt PT-WC-015

QC Sample	Frequency/Number	Method/SOP QC Acceptance Limits	Corrective Action	Person(s) Responsible for Corrective Action	Data Quality Indicator	Measurement Performance Criteria
Method Blank	One per batch of 20 or fewer samples per matrix.	No analyte ≥½ LOQ.	Correct the problem. If sufficient sample remains, reprepare and reanalyze LCS and all associated samples in the batch: however, if reanalysis cannot be performed, qualify the data and narrate the issue.	Analyst, Supervisor	Bias Contamination	Same as QC Acceptance Limits.
LCS/LCSD (if MS/MSD not analyzed)	One per batch of 20 or fewer samples per matrix.	The %R must be within 85-115%. RPD between LCS/ LCSD should be ≤20%.	Correct the problem. If sufficient sample remains, reprepare and reanalyze LCS and all associated samples in the batch: however, if reanalysis cannot be performed, qualify the data and narrate the issue.	Analyst, Supervisor	Accuracy / Bias Precision (if LCSD is analyzed)	Same as QC Acceptance Limits.
MS/MSD	One per batch of 10 or fewer samples per aqueous matrix.	The %R should be within 85-115%, if sample < 4x spike added. RPD between MS/MSD should be ≤20%.	If MS/MSD fail, correct problem and rehomogenize, redigest and reanalyze samples. If that fails, evaluate against the LCS results. If corrective action fails, then apply flag to the analyte in all samples in the associated preparatory batch.	Analyst, Supervisor	Accuracy / Bias Precision	Same as QC Acceptance Limits.
Duplicate Sample (if MSD not analyzed)	One per batch of 10 or fewer samples per aqueous matrix.	RPD between duplicate samples should be ≤20%, if both results are ≥4x LOQ.	Flag results.	Analyst, Supervisor	Precision	Same as QC Acceptance Limits.
Results between the DL and LOQ	NA.	Apply “J” qualifier to results detected between DL and LOQ.	None.	Analyst, Supervisor	Accuracy	Same as QC Acceptance Limits.

Matrix	Soil and groundwater
Analytical Group	Dioxins/Furans
Analytical Method/ SOP Reference	SW-846 8290A CFA CF-OA-E-002

QC Sample	Frequency/Number	Method/SOP QC Acceptance Limits	Corrective Action	Person(s) Responsible for Corrective Action	Data Quality Indicator	Measurement Performance Criteria
Method Blank	One per batch of 20 or fewer samples per matrix.	All target analytes must be ≤ LOQ.	Correct problem. If required, re-prepare and reanalyze method blank and all samples processed with the contaminated blank. "Totals" are not considered "target analytes" – no corrective action or flagging is necessary for "totals".	Analyst, Department Manager	Bias / Contamination	Same as QC Acceptance Limits.
IS	Every field sample, standard and QC sample	The %R for each IS must be within 25-150%, per method.	Correct problem, then re-prepare and reanalyze the samples with failed IS.	Analyst, Department Manager	Accuracy	Same as QC Acceptance Limits.
LCS	One per preparatory batch of 20 or fewer samples of similar matrix	%Rs must meet the DoD QSM Version 4.1 limits as per Appendix G of the DoD QSM.	Correct problem, then re-prepare and reanalyze the LCS and all samples in the associated preparatory batch for failed target analytes, if sufficient sample material is available.	Analyst, Department Manager	Accuracy	Same as QC Acceptance Limits.
MS/MSD	One per preparatory batch of 20 or fewer samples of similar matrix	%Rs must meet the DoD QSM Version 4.1 limits as per Appendix G of the DoD QSM. The RPD between MS and MSD should be ≤ 30%.	Identify problem; if not related to matrix interference, re-extract and reanalyze MS/MSD and all associated batch samples in accordance with DoD QSM requirements.	Analyst, Department Manager	Accuracy / Bias Precision	Same as QC Acceptance Limits.
Duplicate Sample (if no MSD or LCSD)	One per batch of 20 or fewer samples per matrix.	RPD between the original sample and duplicate must be ≤25%.	Evaluate parent samples. If necessary, re-extract sample and duplicate sample. Comment in case narrative.	Analyst, Department Manager	Precision	Same as QC Acceptance Limits.
Results between EDL and LOQ	Each sample.	Quantitated value < lower end of linear calibration range and > EDL.	Report values and flag results. Flag associated results with 'J' on Form Is.	Analyst, Department Manager	Accuracy	Same as QC Acceptance Limits.

Method acceptance criteria for accuracy results are interim guidelines. Actual acceptance criteria are updated based on the requirements of SW-846 Method 8000B and each laboratory's QC requirements as defined in their Laboratory QA Manual, and are provided to the Tetra Tech Project Chemist by the Laboratory PM for use in data validation.

SAP Worksheet No. 29 -- Project Documents and Records Table

(UFP-QAPP Manual Section 3.5.1)

Document	Where Maintained
Field Documents Field Logbook (and sampling notes) Field Sample Forms (e.g. boring logs, sample log sheets, drilling logs, etc.) Chain-of-Custody Records Sample Shipment Air Bills Sampling Instrument Calibration Logs Photographs FTMR Forms This SAP Field Sampling SOPs Health and Safety Plan	Field documents will be maintained in the project file located in the Tetra Tech King of Prussia, Pennsylvania office.
Laboratory Documents Sample Receipt, Custody, and Tracking Record Equipment Calibration Logs Analysis Run Logs Corrective Action Forms Reported Results for Standards, QC Checks, and QC Samples Raw Data Data Completeness Checklist	Laboratory documents will be included in the hardcopy and Portable Document Format (PDF) deliverables from the laboratory. Laboratory data deliverables will be maintained in the Tetra Tech King of Prussia, Pennsylvania project file and in long-term data package storage at a third-party professional document storage firm. Electronic data results will be maintained in a database on a password protected Structured Query Language (SQL) server.
Assessment Findings All versions of the SAP All letter and e-mail correspondence with regulatory agencies, including approvals and comments Data Validation Memoranda (includes tabulated data summary forms)	All assessment documents will be maintained in the Tetra Tech King of Prussia, Pennsylvania project file.
Reports Phase II Remedial Investigation Report, Site 12 – South Landfill	All versions of the Phase II Remedial Investigation Report, Site 12 – South Landfill and all support documents (e.g., Data Validation Reports) will be stored in hardcopy in the Tetra Tech King of Prussia, Pennsylvania project file and electronically in the server library.

Data Handling and Management - After the RI is completed, the field sampling log sheets will be organized by date and medium and filed in the project files. The field logbooks for this project will be used only for this site and will also be categorized and maintained in the project files after the completion of the field program. Project personnel completing concurrent field sampling activities may maintain multiple field logbooks. When possible, logbooks will be segregated by sampling activity. The field logbooks will be titled based on date and activity. The data handling procedures to be followed by Chemtech, CFA, and TA-Pitt will meet the requirements of the technical specifications. The electronic data results will be automatically downloaded into the Tetra Tech database in accordance with the proprietary Tetra Tech processes.

Data Tracking and Control - The Tetra Tech PM (or designee) is responsible for the overall tracking and control of data generated for the project.

- **Data Tracking**. Data are tracked from generation to archiving in the Tetra Tech project-specific files. The Tetra Tech Project Chemist (or designee) is responsible for tracking the samples collected and shipped to Chemtech, CFA, and TA-Pitt. Upon receipt of the data packages from Chemtech, CFA, and TA-Pitt, the Tetra Tech Project Chemist will oversee the data validation effort, which includes verifying that the data packages are complete and that results for all samples have been delivered by Chemtech, CFA, and TA-Pitt.

- **Data Storage, Archiving, and Retrieval**. The data packages received from Chemtech, CFA, and TA-Pitt are tracked in the data validation logbook. After the data are validated, the data packages are entered into the Tetra Tech Navy CLEAN file system and archived in secure files. The field records including field logbooks, sample log sheets, chain-of-custody records, and field calibration logs will be submitted by the Tetra Tech FOL to be entered into the Navy CLEAN file system prior to archiving in secure project files. The project files are audited for accuracy and completeness. At the completion of the Navy contract, the records will be stored by Tetra Tech.

- **Data Security**. Access to Tetra Tech project files is restricted to designated personnel only. Records can only be borrowed temporarily from the project file using a sign-out system. The Tetra Tech Data Manager maintains the electronic data files, and access to the data files is restricted to qualified personnel only. File and data backup procedures are routinely performed.

SAP Worksheet No. 30 -- Analytical Services Table

(UFP-QAPP Manual Section 3.5.2.3)

Matrix	Analytical Group	Sample Locations/ ID Number	Analytical Method	Data Package Turnaround Time	Laboratory / Organization (name and address, contact person and telephone number)	Backup Laboratory / Organization (name and address, contact person and telephone number)
Soil	VOCs	See **Worksheet No. 18**	SW-846 8260B	21 days	Chemtech Consulting Group, Inc. 284 Sheffield Street Mountainside, NJ 07092 Kurt Hummler 908-728-3143	NA
	SVOCs		SW-846 8270D			
	Low Level PAHs		SW-846 8270D SIM			
	Pesticides		SW-846 8081A			
	PCBs		SW-846 8082			
	Metals		SW-846 6020A			
	Mercury		SW-846 7471B			
	Cyanide		SW-846 9012B			
Soil and Aqueous Field QC Samples	Total Chromium	See **Worksheet No. 18**	SW-846 6010C (Soil)	21 days	TestAmerica, Inc. 301 Alpha Drive Pittsburgh, PA 15238 Dave Dunlap 412-963-7058	NA
	Hexavalent Chromium		SW-846 6800 (Soil) SW-846 7196A (Aqueous)			
	Trivalent Chromium		By Calculation (Soil)			
Soil and Groundwater	Dioxins/ Furans	See **Worksheet No. 18**	SW-846 8290A	21 days	Cape Fear Analytical, LLC 3306 Kitty Hawk Road Suite 120 Wilmington, NC 28405 Chris Cornwell 910-795-0422	NA
Groundwater and Aqueous Field QC Samples	VOCs	See **Worksheet No. 18**	SW-846 8260B	21 days	Chemtech – see above	NA
	SVOCs		SW-846 8270D			
	Low Level PAHs		SW-846 8270D SIM			
	Pesticides		SW-846 8081A			
	PCBs		SW-846 8082			
	Metals		SW-846 6020A			
	Mercury		SW-846 7470A			
	Cyanide		SW-846 9012B			

SAP Worksheet No. 31 -- Planned Project Assessments Table

(UFP-QAPP Manual Section 4.1.1)

Assessment Type	**Frequency**	**Internal or External**	**Organization Performing Assessment**	**Person(s) Responsible for Performing Assessment** (title and organizational affiliation)	**Person(s) Responsible for Responding to Assessment Findings** (title and organizational affiliation)	**Person(s) Responsible for Identifying and Implementing Corrective Actions** (title and organizational affiliation)	**Person(s) Responsible for Monitoring Effectiveness of Corrective Action** (title and organizational affiliation)
Laboratory Systems Audit[1]	Every two years	External	DoD ELAP Accrediting Body	DoD ELAP Accrediting Body Auditor	Laboratory QA Manager or Laboratory Manager, Chemtech, CFA, and TA-Pitt	Laboratory QA Manager or Laboratory Manager, Chemtech, CFA, and TA-Pitt	Laboratory QA Manager or Laboratory Manager, Chemtech, CFA, and TA-Pitt

Notes:

[1] Chemtech, CFA, and TA-Pitt are DoD ELAP and PADEP NELAP accredited for all analytical groups and target analytes required for this project. The DoD ELAP and PADEP NELAP accreditation documentation is included in **Appendix B**.

SAP Worksheet No. 32 -- Assessment Findings and Corrective Action Responses Table

(UFP-QAPP Manual Section 4.1.2)

Assessment Type	**Nature of Deficiencies Documentation**	**Individual(s) Notified of Findings** (name, title, organization)	**Timeframe of Notification**	**Nature of Corrective Action Response Documentation**	**Individual(s) Receiving Corrective Action Response** (name, title, organization)	**Timeframe for Response**
Laboratory Systems Audit	Written audit report	Laboratory QA Manager, Chemtech, CFA, and TA-Pitt	Specified by DOD ELAP Accrediting Body	Letter	DOD ELAP Accrediting Body	Specified by DOD ELAP Accrediting Body

SAP Worksheet No. 33 -- QA Management Reports Table

(UFP QAPP Manual Section 4.2)

Type of Report	Frequency (daily, weekly monthly, quarterly, annually, etc.)	Projected Delivery Date(s)	Person(s) Responsible for Report Preparation (title and organizational affiliation)	Report Recipient(s) (title and organizational affiliation)
Data validation report	Per Sample Delivery Group (SDG)	Within two weeks after receiving the data from the laboratory	DVM or designee, Tetra Tech	PM and project file, Tetra Tech
Major analysis problem identification (internal Tetra Tech memorandum)	When persistent analysis problems are detected by Tetra Tech that may impact data usability	Immediately upon detection of problem (on the same day)	CLEAN QAM, Tetra Tech	PM, CLEAN QAM, Program Manager, and project file, Tetra Tech
Project monthly progress report	Monthly for duration of the project	Monthly	PM, Tetra Tech	Navy RPM, Navy; CLEAN QAM, Program Manager, and project file, Tetra Tech
Laboratory QA report	When significant plan deviations results from unanticipated circumstances	Immediately upon detection of problem (on the same day)	Laboratory PM, Chemtech, CFA, and TA-Pitt	PM and project file, Tetra Tech

SAP Worksheet No. 34 -- Verification (Step I) Process Table

(UFP-QAPP Manual Section 5.2.1)

Verification Input	Description	Internal / External	Responsible for Verification (name, organization)
Chain-of-Custody Forms	The Tetra Tech FOL or designee will review and sign the chain-of-custody form to verify that all samples listed are included in the shipment to the laboratory and the sample information is accurate. The forms will be signed by the sampler and a copy will be retained for the project file, the Tetra Tech PM, and the Tetra Tech Data Validators.	Internal	Sampler and FOL, Tetra Tech
	The Laboratory Sample Custodian will review the sample shipment for completeness, integrity, and sign accepting the shipment. The Tetra Tech Data Validators will check that the chain-of-custody form was signed and dated by the Tetra Tech FOL or designee relinquishing the samples and also by the Laboratory Sample Custodian receiving the samples for analyses.	Internal/ External	1 - Laboratory Sample Custodian, Chemtech, CFA, and TA-Pitt 2 - Data Validators, Tetra Tech
SAP Sample Tables/ Chain-of-Custody Forms	Verify that all proposed samples listed in the SAP tables have been collected.	Internal	FOL or designee, Tetra Tech
Sample Log Sheets	Verify that information recorded in the log sheets is accurate and complete.	Internal	FOL or designee, Tetra Tech
SAP/ Field Logs/ Analytical Data Packages	Ensure that all sampling SOPs were followed. Verify that deviations have been documented and MPCs have been achieved. Particular attention should be given to verify that samples were correctly identified, that sampling location coordinates are accurate, and that documentation establishes an unbroken trail of documented chain-of-custody from sample collection to report generation. Verify that the correct sampling and analytical methods/SOPs were applied. Verify that the sampling plan was implemented and carried out as written and that any deviations are documented.	Internal	PM or designee, Tetra Tech
SAP/ Analytical SOPs/ Analytical Data Packages	Ensure that all laboratory SOPs were followed. Verify that the correct analytical methods/SOPs were applied.	Internal	Laboratory QAM, Chemtech, CFA, and TA-Pitt
SAP/ Laboratory SOPs/ Raw Data/ Applicable Control Limits Tables	Establish that all method QC samples were analyzed and in control as listed in the analytical SOPs. If method QA is not in control, the Laboratory QAM will contact the Tetra Tech PM verbally or via e-mail for guidance prior to report preparation.	Internal	Laboratory QAM, Chemtech, CFA, and TA-Pitt

Verification Input	Description	Internal / External	Responsible for Verification (name, organization)
SAP/ Chain-of-Custody Forms	Check that field QC samples listed in **Worksheet No. 20** were collected as required.	Internal	FOL or designee, Tetra Tech
Electronic Data Deliverables (EDDs)/ Analytical Data Packages	Each EDD will be verified against the chain-of-custody and hard copy data package for accuracy and completeness. Laboratory analytical results will be verified and compared to the electronic analytical results for accuracy. Sample results will be evaluated for laboratory contamination and will be qualified for false positives using the laboratory method/preparation blank summaries. Positive results reported between the DL and the LOQ will be qualified as estimated. Extraneous laboratory qualifiers will be removed from the validation qualifier.	External	Data Validators, Tetra Tech
Analytical Data Packages	All analytical data packages will be verified internally for completeness by the laboratory performing the work. The Laboratory QAM will sign the case narrative for each data package.	Internal	Laboratory QAM, Chemtech, CFA, and TA-Pitt
	Each data package will be verified for completeness by the Tetra Tech Data Validator. Missing information will be requested by the Tetra Tech Data Validator from the Laboratory PM.	External	Data Validators, Tetra Tech

Notes:

Verification includes field data verification and laboratory data verification. Verification inputs as per **Worksheet No. 34** will be checked.

SAP Worksheet No. 35 -- Validation (Steps IIa and IIb) Process Table

(UFP-QAPP Manual Section 5.2.2) (Figure 37 UFP-QAPP Manual) (Table 9 UFP-QAPP Manual)

Step IIa / IIb	Validation Input	Description	Responsible for Validation (name, organization)
IIa	SAP/ Sample Log Sheets	Ensure that sample locations are correct and in accordance with the SAP proposed locations. Document any discrepancies in the final report.	PM, FOL, or designee, Tetra Tech
IIa	Chain-of-Custody Forms	Ensure that the custody and integrity of the samples was maintained from collection to analysis and the custody records are complete and any deviations are recorded. Review that the samples were shipped and store at the required temperature and sample pH for chemically-preserved samples meet the requirements listed in **Worksheet No. 19**. Ensure that the analyses were performed within the holding times listed in **Worksheet No. 19**.	Project Chemist or Data Validators, Tetra Tech
IIa/IIb	SAP/ Laboratory Data Packages/ EDDs	Ensure that the laboratory QC samples listed in **Worksheet No. 28** were analyzed and that the MPCs listed in **Worksheet No. 12** were met for all field samples and QC analyses. Check that specified field QC samples were collected and analyzed and that the analytical QC criteria set up for this project were met.	Project Chemist or Data Validators, Tetra Tech
		Check the field sampling precision by calculating the RPD for field duplicate samples. Check the laboratory precision by reviewing the RPD or percent difference values from laboratory duplicate analyses; MS/MSDs; and LCS/LCSD, if available. Ensure compliance with the methods and project MPCs accuracy goals listed in **Worksheet No. 12**.	
		Check that the laboratory recorded the temperature at sample receipt and the pH of the chemically preserved samples to ensure sample integrity from sample collection to analysis.	
		Review the chain-of-custody forms generated in the field to ensure that the required analytical samples have been collected, appropriate sample identifications have been used, and correct analytical methods have been applied. The Tetra Tech Data Validator will verify that elements of the data package required for validation are present, and if not, the laboratory will be contacted and the missing information will be requested. Validation will be performed as per **Worksheet No. 36**. Check that all data have been transferred correctly and completely to the final SQL database.	

Step IIa / IIb	Validation Input	Description	Responsible for Validation (name, organization)
IIb	SAP/ Laboratory Data Packages/ EDDs	Ensure that the project LOQs listed in **Worksheet No. 15** were achieved.	Project Chemist or Data Validators, Tetra Tech
		Discuss the impact on reported DLs due to matrix interferences or sample dilutions performed because of the high concentration of one or more other contaminants, on the other target compounds reported as non-detected. Document this usability issue and inform the Tetra Tech PM. Review and add PSLs to the laboratory EDDs. Flag samples and notify the Tetra Tech PM of samples that exceed PSLs listed in **Worksheet No. 15**.	
		Ensure that all QC samples specified in the SAP were collected and analyzed and that the associated results were within prescribed SAP acceptance limits. Ensure that QC samples and standards prescribed in analytical SOPs were analyzed and within the prescribed control limits. If any significant QC deviations occur, the Laboratory QAM shall have contacted the Tetra Tech PM.	
		Summarize deviations from methods, procedures, or contracts in the Data Validation Report. Determine the impact of any deviation from sampling or analytical methods and SOPs requirements and matrix interferences effect on the analytical results. Qualify data results based on method or QC deviation and explain all the data qualifications. Print a copy of the project database qualified data depicting data qualifiers and data qualifiers codes that summarize the reason for data qualifications. Determine if the data met the MPCs and determine the impact of any deviations on the technical usability of the data.	

SAP Worksheet No. 36 -- Analytical Data Validation (Steps IIa and IIb) Summary Table

(UFP-QAPP Manual Section 5.2.2.1)

Step IIa / IIb	Matrix	Analytical Group	Validation Criteria	Data Validator (title and organizational affiliation)
IIa and IIb	Soil, Groundwater	VOCs, SVOCs (including Low Level PAHs), Pesticides, and PCBs	A full (Level IV) data validation will be performed using criteria for SW-846 Methods 8260B, 8270D and 8270D-modified, 8081A, and 8082 listed in **Worksheets Nos. 12, 15, 24, 25**, and **28**, and the current DoD QSM. If not included in the aforementioned, the logic outlined in the Region 3 Modifications to the National Functional Guidelines for Organic Data Review (USEPA, 1994) should be used to apply qualifiers to data.	Data Validator, Tetra Tech
IIa and IIb	Soil, Groundwater	Metals (including Mercury and Hexavalent Chromium) and Cyanide	A full (Level IV) data validation will be performed using criteria for SW-846 Methods 6020A, 6800, 7196A, 7470A, 7471B, and 9012B listed in **Worksheets Nos. 12, 15, 24, 25**, and **28**, and the current DoD QSM. If not included in the aforementioned, the logic outlined in the Region 3 Modifications to the Laboratory Data Validation Functional Guidelines for Evaluating Inorganic Analyses (USEPA, 1993) should be used to apply qualifiers to data.	Data Validator, Tetra Tech
IIa and IIb	Soil	Dioxins/Furans	A full (Level IV) data validation will be performed using criteria for SW-846 Method 8290A listed in **Worksheets Nos. 12, 15, 24, 25**, and **28**, and the current DoD QSM. If not included in the aforementioned, the logic outlined in the Region 3 Draft Dioxin/Furan Data Validation Guidance (USEPA, 1999) and USEPA National Functional Guidelines for Dioxins/Furans (USEPA, 2005) should be used to apply qualifiers to data.	Data Validator, Tetra Tech

SAP Worksheet No. 37 -- Usability Assessment

(UFP-QAPP Manual Section 5.2.3)

Data Usability Assessment

The usability of the data generated during the project directly affects whether project objectives can be achieved. The following characteristics will be evaluated at a minimum. The results of these evaluations will be included in the project report. The characteristics will be evaluated for multiple concentration levels if the evaluator determines that this is necessary. To the extent required by the type of data being reviewed, the assessors will consult with other technically competent individuals to render sound technical assessments of these DQI characteristics:

Completeness

- For each matrix that was scheduled to be sampled, the Tetra Tech FOL acting on behalf of the Project Team will prepare a table listing planned samples/analyses to collected samples/analyses. If deviations from the scheduled sample collection or analyses are identified, the Tetra Tech PM and Project Risk Assessor will determine whether the deviations compromise the ability to meet project objectives. If they do, the Tetra Tech PM will consult with the Navy RPM and other project team members, as necessary (determined by the Navy RPM), to develop appropriate corrective actions.

Precision

- The Tetra Tech Project Chemist acting on behalf of the Project Team will determine whether precision goals for field duplicates and laboratory duplicates were met. This will be accomplished by comparing duplicate results to precision goals identified in **Worksheets Nos. 12** and **28**. This will also include a comparison of field and laboratory precision with the expectation that laboratory duplicate results will be no less precise than field duplicate results. If the goals are not met, or data have been flagged as estimated (J qualifier), limitations on the use of the data will be described in the project report.

Accuracy

- The Tetra Tech Project Chemist acting on behalf of the Project Team will determine whether the accuracy/bias goals were met for project data. This will be accomplished by comparing percent recoveries of LCS, LCSD, MS, MSD, and surrogate compounds to accuracy goals identified in **Worksheet No. 28**. This assessment will include an evaluation of field and laboratory contamination; instrument calibration variability; and analyte recoveries for surrogates, matrix spike, and laboratory control samples. If the goals are not met, limitations on the use of the data will be described in the project report. Bias of the qualified results and a description of the impact of identified non-compliances on a specific data package or on the overall project data will be described in the project report.

Representativeness

- A Project Scientist identified by the Tetra Tech PM and acting on behalf of the Project Team will determine whether the data are adequately representative of intended populations, both spatially and temporally. This will be accomplished by verifying that samples were collected and processed for analysis in accordance with the SAP, by reviewing spatial and temporal data variations, and by comparing these characteristics to expectations. The usability report will describe the representativeness of the data for each matrix and analytical fraction. This will not require quantitative comparisons unless professional judgement of the Project Scientist indicates that a quantitative analysis is required.

Comparability

- The Tetra Tech Project Chemist acting on behalf of the Project Team will determine whether the data generated under this project are sufficiently comparable to historical site data generated by different methods and for samples collected using different procedures and under different site conditions. This will be accomplished by comparing overall precision and bias among data sets for each matrix and analytical fraction. This will not require quantitative comparisons unless professional judgement of the Tetra Tech Project Chemist indicates that such quantitative analysis is required.

Sensitivity

- The Tetra Tech Project Chemist acting on behalf of the Project Team will determine whether project sensitivity goals listed in **Worksheet No. 15** were achieved. The overall sensitivity and quantitation limits from multiple data sets for each matrix and analysis will be compared. If sensitivity goals are not achieved, the limitations on the data will be described. The Tetra Tech Project Chemist will enlist the help of the Tetra Tech Risk Assessor to evaluate deviations from planned sensitivity goals.

Project Assumptions and Data Outliers

- The Tetra Tech PM and designated team members will evaluate whether project assumptions are valid. This will typically be a qualitative evaluation but may be supported by quantitative evaluations. The type of evaluation depends on the assumption being tested. Quantitative assumptions include assumptions related to data distributions (e.g., Normal versus log-normal) and estimates of data variability. Potential outliers will be removed if a review of the associated indicates that the results have an assignable cause the renders them inconsistent with the rest of the data. During this evaluation, the team will consider whether outliers could be indications of unanticipated site conditions. Consideration will be given to whether outliers represent an unanticipated site condition.

Describe the evaluative procedures used to assess overall measurement error associated with the project:

After completion of the data validation, the data and data quality will be reviewed to determine whether sufficient data of acceptable quality are available for decision making. In addition to the evaluations described above, a series of inspections and statistical analyses will be performed to estimate these characteristics. The statistical evaluations will include simple summary statistics for target analytes, such as maximum concentration, minimum concentration, number of samples exhibiting non-detected results, number of samples exhibiting positive results, and the proportion of samples with detected and non-detected results. The project team members identified by the Tetra Tech PM will assess whether the data collectively support the attainment of project objectives. They will consider whether any missing or rejected data have compromised the ability to make decisions or to make the decisions with the desired level of confidence. The data will be evaluated to determine whether missing or rejected data can be compensated by other data. Although rejected data will generally not be used, there may be reason to use them in a weight of evidence argument, especially when they supplement data that have not been rejected. If rejected data are used, their use will be supported by technically defensible rationales.

For mathematical manipulations, non-detected values will be represented by a concentration equal to one-half the sample-specific reporting limit. Duplicate results (original and duplicate) will not be averaged for the purpose of representing the range of concentrations. However, the average of the original and duplicate samples will be used to represent the concentration at a particular sampled location.

Identify the personnel responsible for performing the usability assessment:

The Tetra Tech PM, Project Chemist, FOL, and Project Scientist will be responsible for conducting the listed data usability assessments. The data usability assessment will be reviewed with the Navy RPM, the USEPA RPM, and the PADEP PM. If deficiencies affecting the attainment of project objectives are identified, the review will take place either in a face to face meeting or a teleconference depending on the extent of identified deficiencies. If no significant deficiencies are identified, the data usability assessment will simply be documented in the project report and reviewed during the normal document review cycle.

Describe the documentation that will be generated during usability assessment and how usability assessment results will be presented so that they identify trends, relationships (correlations), and anomalies:

The data will be presented in tabular format, including data qualifications such as estimation (J, UJ) or rejection (R). Written documentation will support the non-compliance estimated or rejected data results. The project report will identify and describe the data usability limitations and suggest re-sampling or other corrective actions, if necessary.

REFERENCES

Brown and Root Environmental, 1997. Draft Phase II RI Report for NAS JRB Willow Grove.

Buchman, M. F., 2008. *NOAA Screening Quick Reference Tables.* NOAA OR&R Report 08-1, Seattle, WA, Office of Response and Restoration Division, National Oceanic and Atmospheric Administration, 34 pages. http://response.restoration.noaa.gov/cpr/sediment/squirt/squirt.html

DON (Department of the Navy), 1999. *Navy Policy for Conducting Ecological Risk Assessments.* Office of the Chief of Naval Operations, Washington, DC. April.

DON, 2008. *U. S. Navy Human Health Risk Assessment Guidance.* December.

Halliburton NUS, 1993. RI Report for Sites 1, 2, 3, and 5, Naval Air Station Willow Grove, Pennsylvania. February.

OSHA (Occupational Safety and Health Administration) General Industry Standards, Chapter 29, Code of Federal Regulations (CFR) 1910.120.

PADEP (Pennsylvania Department of Environmental Protection), 2010. 25 Pa. Code, Chapter 250. July.

Tetra Tech (Tetra Tech NUS, Inc.), 2008. SSA 12 Soil Investigation Letter Report. April.

Tetra Tech, 2009. Site 2 Groundwater Monitoring Report. June.

Tetra Tech, 2009. Phase I Remedial Investigation Sampling and Analysis Plan. November.

Tetra Tech, 2010. Site 3 Remedial Investigation Report. May.

Tetra Tech, 2010. Phase I Remedial Investigation Data Report. June.

USDoD (United States Department of Defense), 2009. *Department of Defense Quality Systems Manual for Environmental Laboratories*. Version 4.1. April.

USDoD (United States Department of Defense), 2010. *Department of Defense Quality Systems Manual for Environmental Laboratories*. Version 4.2. October.

USEPA (United States Environmental Protection Agency), 1989. *Risk Assessment Guidance for Superfund: Volume I, Human Health Evaluation Manual (Part A)*. EPA 540/1-89/002. Office of Emergency and Remedial Response, Washington, DC. December.

USEPA, 1993. Region 3 Modifications to the Laboratory Data Validation Functional Guidelines for Evaluating Inorganics Analyses. April.

USEPA, 1994. Region 3 Modifications to National Functional Guidelines for Organic Data Review. September.

USEPA, 1995. Aerial Photographic Site Analysis, Willow Grove Naval Air Station, Willow Grove, Pennsylvania. June.

USEPA, 1996. *Soil Screening Guidance: Technical Background Document*. EPA/540/R-95/128. Office of Solid Waste and Emergency Response, Washington, DC. May.

USEPA, 1997. *Ecological Risk Assessment Guidance for Superfund: Process for Designing and Conducting Ecological Risk Assessments*, Office of Solid Waste and Emergency Response, EPA 540-R-97-006. June.

USEPA, 1999. Draft Region 3 Dioxin/Furan Data Validation Guidance. March.

REFERENCES (Continued)

USEPA, 2002a. *Guidance for Quality Assurance Project Plans (EPA QA/G-5)*. EPA/240/R-02/009. Office of Environmental Information, Washington, DC. December.

USEPA, 2002b. *Guidance on Choosing a Sampling Design for Environmental Data Collection for Use in Developing a Quality Assurance Project Plan (EPA QA/G-5S)*. EPA/240/R-02/005. Office of Environmental Information, Washington, DC. December.

USEPA, 2002c. *Draft Guidance for Evaluating the Vapor Intrusion to Indoor Air Pathway from Groundwater and Soils.* EPA530-F-02-052. Office of Solid Waste and Emergency Response, Washington, DC. November.

USEPA, 2005a. *Uniform Federal Policy for Quality Assurance Plans (UFP-QAPP), Evaluating, Assessing, and Documenting Environmental Data Collection and Use Programs (Final Version 1)*, EPA-505-B-04-900A. March.

USEPA, 2005b. *Resource Conservation and Recovery Act Corrective Action Ecological Screening Levels, USEPA Region 5*. August. http://www.epa.gov/reg5rcra/ca/edql.htm

USEPA, 2006a. *Region 3 Freshwater Surface Water Screening Benchmarks*. July. http://www.epa.gov/reg3hwmd/risk/eco/index.htm

USEPA, 2006b. *Region 3 Freshwater Sediment Screening Benchmarks*. August. http://www.epa.gov/reg3hwmd/risk/eco/index.htm

USEPA, 2006c. *Guidance on Systematic Planning Using the Data Quality Objectives Process. EPA QA/G-4.* EPA/240/B-06/001. Office of Environmental Information, Washington DC. February.

USEPA, 2008a. Multi-year documents with Ecological Soil Screening Levels for individual chemicals. http://www.epa.gov/ecotox/ecossl/

USEPA, 2008. *Test Methods for Evaluating Solid Waste; Physical/Chemical Methods (SW-846), 3rd Edition, up to and Including Update IV*. Office of Solid Waste and Emergency Response, Washington, DC. February.

USEPA, 2009. *National Primary Drinking Water Regulations, Maximum Contaminant Levels*. EPA-816-F-09-0004. May. http://www.epa.gov/safewater/consumer/pdf/mcl.pdf

USEPA, 2010. *Regions 3, 6, and 9 Regional Screening Levels for Chemical Contaminants at Superfund Sites. RSL Table Update*. November. http://epa-prgs.ornl.gov/chemicals/index.shtml

USEPA, 2010. *ProUCL Version 4.00.05 User Guide (Draft)*. EPA/600/R-07/038. Office of Research and Development, Washington, DC. May.

FIGURES

112G02014\1002\112G02014BM02.DWG 01/04/11 MKB

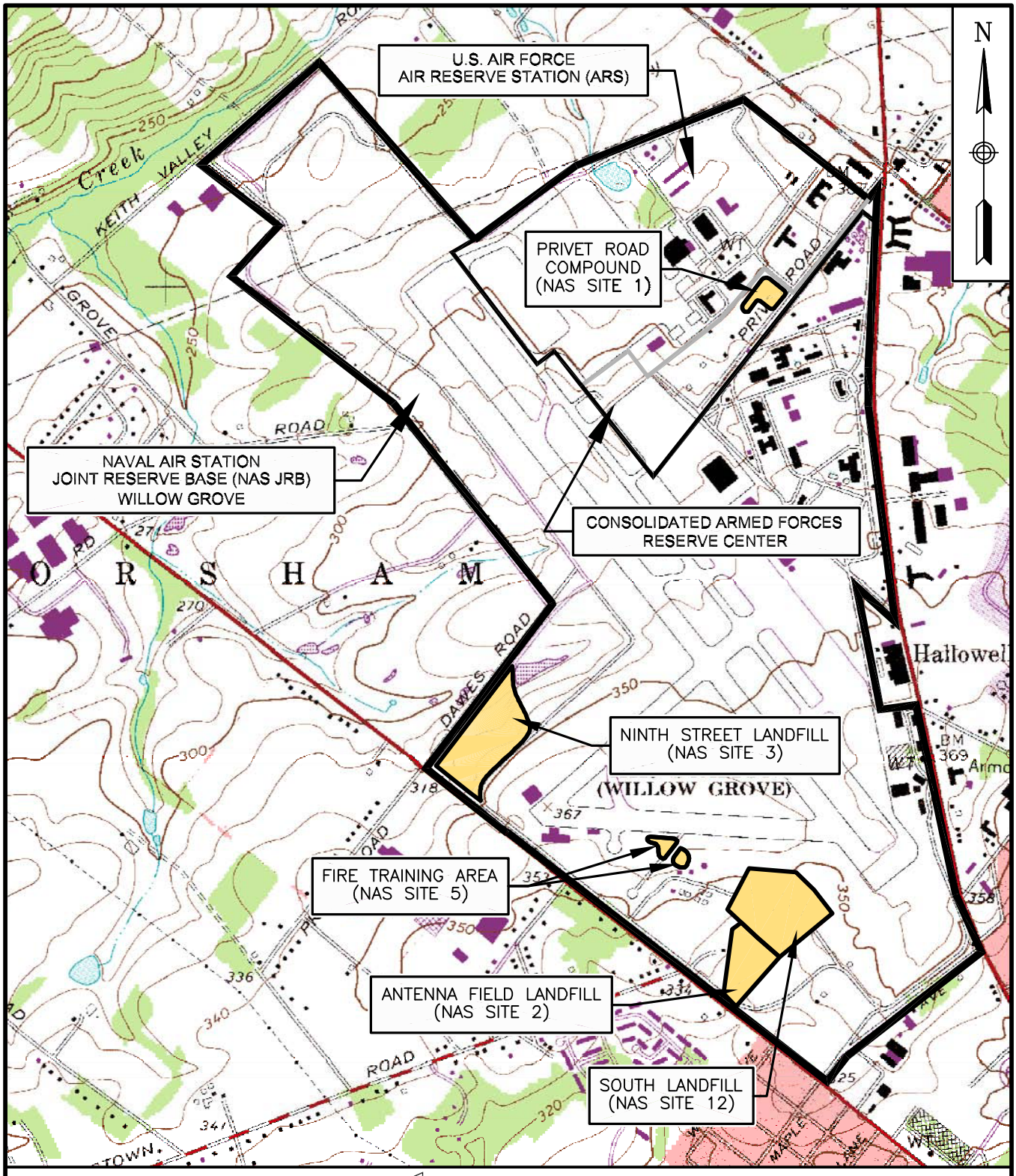

BASE MAP IS A PORTION OF THE AMBLER, PA U.S.G.S. 7.5 MINUTE QUADRANGLE MAP, DATED 1963, PHOTOREVISED IN 1983.

QUADRANGLE LOCATION

0 1500 3000

SCALE IN FEET

TETRA TECHNUS, INC.

LOCATION OF IR SITES
NAS JRB WILLOW GROVE
WILLOW GROVE, PENNSYLVANIA

SCALE	AS NOTED
FILE	112G02014BM02
REV	0
DATE	01/04/11
FIGURE NUMBER	FIGURE 10 - 1

112G02014\0205\112G02014GM08.DWG 01/17/11 MKB

N

MARINE
RESERVE COMPOUND

RUNWAY 10/28

33

02MW02

SITE 12

87

MAGAZINE

02MW04S 02MW04I

118

118
TRAILER

SITE 2

02MW03 02MW03I
02MW03SI

HORSHAM ROAD

NORRISTOWN ROAD

02MW01S
02MW01 02MW01I

63

133

114

LEGEND

GROUNDWATER SAMPLE LOCATION

SITE 2 BOUNDARY

SITE 12 BOUNDARY

0 180 360

SCALE IN FEET

TETRA TECH NUS, INC.

SITE 2 – ANTENNA FIELD LANDFILL
SITE 12 – SOUTH LANDFILL
NAS JRB WILLOW GROVE
WILLOW GROVE, PENNSYLVANIA

FILE	SCALE
112G02014GM08	AS NOTED
FIGURE NUMBER	REV / DATE
FIGURE 10–2	0 / 01/17/11

112G02014\0205\112G02014GM09-1.DWG 01/17/11 MKB

12TP15-02 0.5' - 2'

INORGANICS	1/12/10 mg/kg
Aluminum	12700
Arsenic	5.4 J
Chromium	13.4
Cobalt	6 J
Iron	15500 J
Manganese	663 J
Vanadium	22.3
SEMIVOLATILES	ug/kg
Benz(a)anthracene	1200
Benzo(a)pyrene	1100
Benzo(b)fluoranthene	1500
Dibenz(a,h)anthracene	230

12TP15-01 0 - 0.5'

INORGANICS	1/12/10 mg/kg
Aluminum	14000
Arsenic	5.6 J
Chromium	15.2
Cobalt	7.3 J
Iron	17100 J
Manganese	774 J
Vanadium	23.6
SEMIVOLATILES	ug/kg
Benz(a)anthracene	3400
Benzo(a)pyrene	3800
Benzo(k)fluoranthene	5400 J
Benzo(b)fluoranthene	3700
Dibenz(a,h)anthracene	950

12TP09-01 0 - 0.5'

INORGANICS	1/8/10 mg/kg
Aluminum	13000
Arsenic	3.7 K
Chromium	16.1
Cobalt	7.2 J
Iron	14200
Manganese	401
Vanadium	23.6
SEMIVOLATILES	ug/kg
Benz(a)anthracene	310
Benzo(a)pyrene	340
Benzo(b)fluoranthene	300
Dibenz(a,h)anthracene	66 J

12TP09-02 0.5' - 2'

INORGANICS	1/8/10 mg/kg
Aluminum	20700
Arsenic	3.8 K
Chromium	35.6
Cobalt	7.8 J
Iron	18400
Manganese	401
Vanadium	31.7
SEMIVOLATILES	ug/kg
Benz(a)anthracene	1000
Benzo(a)pyrene	900
Benzo(b)fluoranthene	740
Dibenz(a,h)anthracene	180 J

12TP08-01 0 - 0.5'

INORGANICS	1/7/10 mg/kg
Aluminum	8960
Arsenic	29.8
Chromium	12
Cobalt	4.3 J
Iron	37100
Manganese	237
Vanadium	26.3
SEMIVOLATILES	ug/kg
Benz(a)anthracene	5800
Benzo(a)pyrene	5200
Benzo(b)fluoranthene	4900
Benzo(k)fluoranthene	6000 J
Dibenz(a,h)anthracene	950 J

12TP08-02 0.5' - 2'

INORGANICS	1/7/10 mg/kg
Aluminum	13900
Arsenic	9.6
Chromium	18.6
Cobalt	5.6 J
Iron	19200
Manganese	399
Vanadium	19.5
SEMIVOLATILES	ug/kg
Benz(a)anthracene	7600
Benzo(a)pyrene	6800
Benzo(b)fluoranthene	5600
Benzo(k)fluoranthene	8600 J
Dibenz(a,h)anthracene	1300 J

12TP10-02 0.5' - 2'

INORGANICS	1/8/10 mg/kg
Aluminum	20300
Arsenic	8.1 K
Chromium	27.7
Cobalt	9.7 J
Iron	28100
Manganese	283
Vanadium	44.9
SEMIVOLATILES	ug/kg
Benzo(a)pyrene	18

12TP10-01 0 - 0.5'

INORGANICS	1/8/10 mg/kg
Aluminum	15800
Arsenic	5.2 K
Chromium	21.2
Cobalt	7 J
Iron	20900
Manganese	293
Vanadium	35.1
SEMIVOLATILES	ug/kg
Benzo(a)pyrene	17

12TP14-01 0 - 0.5'

	1/12/10
Arsenic	5.2
Chromium	14.9
Cobalt	5.7
Iron	12100 L
Manganese	316
Vanadium	21.1
SEMIVOLATILES	ug/kg
Benz(a)anthracene	530 J
Benzo(a)pyrene	440
Benzo(b)fluoranthene	470
Dibenz(a,h)anthracene	82 J

12TP14-02 0.5' - 2'

INORGANICS	1/12/10 mg/kg
Chromium	17.8
Cobalt	4.9
Iron	15200 L
Manganese	180
Vanadium	19.8
SEMIVOLATILES	ug/kg
Benzo(a)pyrene	65
Dibenz(a,h)anthracene	16 J

12TP07-01 0 - 0.5'

INORGANICS	1/7/10 mg/kg
Aluminum	18500
Arsenic	6.4 K
Chromium	26.3
Cobalt	7.8 J
Iron	26500
Manganese	326
Vanadium	41.3
SEMIVOLATILES	ug/kg
Benzo(a)pyrene	37

12TP07-02 0.5' - 2'

INORGANICS	1/7/10 mg/kg
Aluminum	15000
Arsenic	5.8 K
Chromium	22.5
Cobalt	7.1 J
Iron	18100
Manganese	455
Vanadium	26.4
SEMIVOLATILES	ug/kg
Benzo(a)pyrene	53

12SB05-02 0.5' - 2'

INORGANICS	1/14/10 mg/kg
Aluminum	19100
Arsenic	6.8
Chromium	24.5
Cobalt	8.3
Iron	25500 L
Manganese	312
Vanadium	39.1

12SB05-01 0 - 0.5'

INORGANICS	1/14/10 mg/kg
Aluminum	13300
Arsenic	9.1
Chromium	17.3
Cobalt	7.7
Iron	17000 L
Manganese	475
Vanadium	28.9
SEMIVOLATILES	ug/kg
Benzo(a)pyrene	88
Dibenz(a,h)anthracene	16

12TP01-02 0.5' - 2'

INORGANICS	1/13/10 mg/kg
Aluminum	12800
Arsenic	3.9
Chromium	14.5
Cobalt	8.4
Iron	16600 L
Manganese	615
Vanadium	25.2
SEMIVOLATILES	ug/kg
Benz(a)anthracene	1000
Benzo(a)pyrene	840
Benzo(b)fluoranthene	840
Dibenz(a,h)anthracene	98 J

12TP01-01 0 - 0.5'

INORGANICS	1/13/10 mg/kg
Aluminum	13600
Arsenic	4.6
Chromium	15.8
Cobalt	7
Iron	13800 L
Manganese	575
Vanadium	25.3
SEMIVOLATILES	ug/kg
Benz(a)anthracene	210
Benzo(a)pyrene	200
Benzo(b)fluoranthene	260
Dibenz(a,h)anthracene	27

12TP04-01 0 - 0.5'

INORGANICS	1/5/10 mg/kg
Aluminum	17700
Arsenic	8.1 L
Chromium	20.2 L
Cobalt	7.3
Iron	15600
Manganese	679
Vanadium	30.5
SEMIVOLATILES	ug/kg
Benz(a)anthracene	210
Benzo(a)pyrene	270
Benzo(b)fluoranthene	360

12TP04-02 0.5' - 2'

INORGANICS	1/5/10 mg/kg
Aluminum	17800
Arsenic	5.1 L
Chromium	22.2 L
Cobalt	8
Iron	20300
Manganese	445
Vanadium	33.3

12TP06-01 0 - 0.5'

INORGANICS	1/6/10 mg/kg
Aluminum	17300
Arsenic	7.2 L
Chromium	20.1 L
Cobalt	7.4
Iron	16800
Manganese	764
Vanadium	32.2
SEMIVOLATILES	ug/kg
Benz(a)anthracene	190
Benzo(a)pyrene	300
Benzo(b)fluoranthene	280
Dibenz(a,h)anthracene	42

12TP06-02 0.5' - 2'

INORGANICS	1/6/10 mg/kg
Aluminum	17200
Arsenic	3.5 L
Chromium	18.3 L
Cobalt	7.1
Iron	18100
Manganese	428
Vanadium	27.5
SEMIVOLATILES	ug/kg
Benzo(a)pyrene	68

12SB01-01 0 - 0.5'

INORGANICS	1/13/10 mg/kg
Aluminum	15800
Arsenic	5.4
Chromium	21.6
Cobalt	7.8
Iron	15400 L
Manganese	659
Vanadium	29.2
SEMIVOLATILES	ug/kg
Benzo(a)pyrene	2100
Benzo(b)fluoranthene	3100
Benzo(k)fluoranthene	2100
Dibenz(a,h)anthracene	410

12SB01-02 0.5' - 2'

INORGANICS	1/13/10 mg/kg
Aluminum	16400
Arsenic	6.1
Chromium	18.4
Cobalt	7
Iron	14500 L
Manganese	693
Vanadium	27.4
SEMIVOLATILES	ug/kg
Benzo(a)pyrene	4700
Benzo(b)fluoranthene	5200
Benzo(k)fluoranthene	2400
Dibenz(a,h)anthracene	820

12TP03-02 0.5' - 2' 0.5' - 2'

INORGANICS	1/5/10 mg/kg	1/5/10 mg/kg
Aluminum	14700	14800
Arsenic	1.6 L	1.9 L
Chromium	18.4 L	16.3 L
Cobalt	10.1	10.4
Iron	21300	17700
Manganese	604	655
Vanadium	26.7	24.2
SEMIVOLATILES	ug/kg	ug/kg
Benz(a)anthracene	2000	2400
Benzo(a)pyrene	1700	2100
Benzo(b)fluoranthene	1700	2200
Benzo(k)fluoranthene	1900	2700
Dibenz(a,h)anthracene	250 J	240

12TP03-01 0 - 0.5'

INORGANICS	1/5/10 mg/kg
Aluminum	12600
Arsenic	2.6 L
Chromium	19.3 L
Cobalt	9.2
Iron	18700
Manganese	442
Vanadium	27.4
SEMIVOLATILES	ug/kg
Benz(a)anthracene	1600
Benzo(a)pyrene	1400
Benzo(b)fluoranthene	1700
Dibenz(a,h)anthracene	260

12TP02-01 0 - 0.5'

INORGANICS	1/4/10 mg/kg
Aluminum	17800
Arsenic	3.3 L
Chromium	30 L
Cobalt	9.2
Iron	20300
Manganese	420
Vanadium	37.4
SEMIVOLATILES	ug/kg
Benz(a)anthracene	1200
Benzo(a)pyrene	1200
Benzo(b)fluoranthene	1200
Dibenz(a,h)anthracene	200 J

12TP02-02 0.5' - 2'

INORGANICS	1/4/10 mg/kg
Aluminum	14700
Arsenic	2.2 L
Chromium	18.6 L
Cobalt	12
Iron	20200
Manganese	876
Vanadium	26.3
SEMIVOLATILES	ug/kg
Benz(a)anthracene	270
Benzo(a)pyrene	230
Benzo(b)fluoranthene	250
Dibenz(a,h)anthracene	31 J

12SB02-01 0 - 0.5'

INORGANICS	1/12/10 mg/kg
Aluminum	12100
Arsenic	6.8
Chromium	16
Cobalt	6.5
Iron	13700 L
Manganese	452
Vanadium	25.5
SEMIVOLATILES	ug/kg
Benzo(a)pyrene	190
Benzo(b)fluoranthene	230
Dibenz(a,h)anthracene	29

12SB02-02 0.5' - 2'

INORGANICS	1/12/10 mg/kg	Duplicate mg/kg
Aluminum	12300	12900
Arsenic	4.7	4.1
Chromium	16.9	16.9
Cobalt	7.8	6.5
Iron	14800 L	14200 L
Manganese	799	677
Vanadium	25.4	24.7

12TP05-02 0.5' - 2'

INORGANICS	1/6/10 mg/kg
Aluminum	16500
Arsenic	5.1 K
Cadmium	8.7 K
Chromium	27.5
Cobalt	6.4 J
Iron	18800
Manganese	357
Vanadium	30.3
SEMIVOLATILES	ug/kg
Benz(a)anthracene	410
Benzo(a)pyrene	500
Benzo(b)fluoranthene	460
Dibenz(a,h)anthracene	47

12TP05-01 0 - 0.5'

INORGANICS	1/6/10 mg/kg
Aluminum	14000
Arsenic	6.5 K
Chromium	20.7
Cobalt	7.3 J
Iron	18400
Manganese	469
Vanadium	29.7
SEMIVOLATILES	ug/kg
Benz(a)anthracene	1100
Benzo(a)pyrene	1300
Benzo(b)fluoranthene	1500
Benzo(k)fluoranthene	1700 J
Dibenz(a,h)anthracene	210

12SB03-01 0 - 0.5'

INORGANICS	1/11/10 mg/kg
Aluminum	16400
Arsenic	4.6 J
Chromium	22.3
Cobalt	7.3 J
Iron	20600 J
Manganese	303 J
Vanadium	34.8
SEMIVOLATILES	ug/kg
Benzo(a)pyrene	120
Benzo(b)fluoranthene	160
Dibenz(a,h)anthracene	18

12SB03-02 0.5' - 2'

INORGANICS	1/11/10 mg/kg
Aluminum	18200
Arsenic	5.2 J
Chromium	21.1
Cobalt	6.9 J
Iron	19400 J
Manganese	336 J
Vanadium	32

12TP13-01 0 - 0.5'

INORGANICS	1/11/10 mg/kg
Aluminum	12700
Arsenic	4.4 J
Iron	15500 J
Manganese	431 J
Vanadium	27.1
SEMIVOLATILES	ug/kg
Benz(a)anthracene	580
Benzo(a)pyrene	620
Benzo(b)fluoranthene	640
Dibenz(a,h)anthracene	160 J

12TP13-02 0.5' - 2'

INORGANICS	1/11/10 mg/kg
Aluminum	8780
Arsenic	3.7 J
Chromium	13.2
Cobalt	6.9 J
Vanadium	18.9
SEMIVOLATILES	ug/kg
Benz(a)anthracene	3400
Benzo(a)pyrene	2600
Benzo(b)fluoranthene	2100
Benzo(k)fluoranthene	2900
Dibenz(a,h)anthracene	730 J

12TP12-02 0.5' - 2'

INORGANICS	1/11/10 mg/kg
Aluminum	15800
Antimony	3.9 J
Arsenic	6.6 J
Chromium	27
Cobalt	9.9 J
Iron	32400 J
Manganese	412 J
Vanadium	32.9
SEMIVOLATILES	ug/kg
Benz(a)anthracene	660
Benzo(a)pyrene	640
Benzo(b)fluoranthene	650
Dibenz(a,h)anthracene	130 J

12TP12-01 0 - 0.5'

INORGANICS	1/11/10 mg/kg
Aluminum	16400
Antimony	3.2 J
Arsenic	6.6 J
Chromium	23.5
Cobalt	8.3 J
Copper	458
Iron	29700 J
Manganese	491 J
Vanadium	23
SEMIVOLATILES	ug/kg
Benz(a)anthracene	490
Benzo(a)pyrene	500
Benzo(b)fluoranthene	510
Dibenz(a,h)anthracene	87 J

12SB04-02 0.5' - 2'

INORGANICS	1/11/10 mg/kg
Aluminum	17300
Arsenic	5 J
Chromium	24.1
Cobalt	6.9 J
Iron	24200 J
Manganese	375 J
Vanadium	41.5

12SB04-01 0 - 0.5'

INORGANICS	1/11/10 mg/kg
Aluminum	12300
Arsenic	4.6 J
Chromium	15.9
Cobalt	7.3 J
Iron	14100 J
Manganese	598 J
Vanadium	24.8
SEMIVOLATILES	ug/kg
Benzo(a)pyrene	55

12TP11-01 0 - 0.5'

INORGANICS	1/11/10 mg/kg
Aluminum	12900
Chromium	18.5
Iron	17100 J
Manganese	746 J
Vanadium	26.7
PESTICIDES/PCBS	ug/kg
Dieldrin	480
SEMIVOLATILES	ug/kg
Benz(a)anthracene	7300
Benzo(a)pyrene	7000
Benzo(b)fluoranthene	6300
Benzo(k)fluoranthene	10000
Dibenz(a,h)anthracene	2200

12TP11-02 0.5' - 2'

INORGANICS	1/11/10 mg/kg
Aluminum	17800
Arsenic	5.8 J
Chromium	25.5
Cobalt	6.9 J
Iron	15500 J
Manganese	1020 J
Vanadium	25.1
PESTICIDES/PCBS	ug/kg
Dieldrin	84 J
SEMIVOLATILES	ug/kg
Benz(a)anthracene	21000 J
Benzo(a)pyrene	21000 J
Benzo(b)fluoranthene	19000 J
Benzo(k)fluoranthene	30000
Chrysene	22000 J
Dibenz(a,h)anthracene	12000

Vegetation
Veg.
Road
Debris
Well
Scattered Debris
MAGAZINE
BUILDING 118
A
B
C
D
E
1
2

LEGEND

- ⊗ SURFACE SOIL LOCATION
- J ESTIMATED VALUE
- K POSITIVE RESULT BIASED HIGH
- L POSITIVE RESULT BIASED LOW
- mg/kg MILLIGRAMS PER KILOGRAM
- ug/kg MICROGRAMS PER KILOGRAM
- SITE 12 BOUNDARY
- OUTLINE OF EM ANOMALOUS AREA
- EM LINEAR ANOMALY

0 100 200
SCALE IN FEET

N

TETRA TECH NUS, INC.

SURFACE SOIL SAMPLE RESULTS ABOVE SCREENING CRITERIA SITE 12 – SOUTH LANDFILL NAS JRB WILLOW GROVE WILLOW GROVE, PENNSYLVANIA

FILE	SCALE
112G02014GM09-1	AS NOTED
FIGURE NUMBER	REV / DATE
FIGURE 10-3	0 / 01/17/11

112G02014\0205\112G02014GM09-2.DWG 01/17/11 MKB

12TP15-03 3' - 4'

INORGANICS	01/12/10 mg/kg
Aluminum	29400
Antimony	22.7 L
Arsenic	24.3 J
Cadmium	40.1 J
Chromium	56.7
Cobalt	9.3 J
Copper	463
Iron	21100 J
Lead	7900 J
Manganese	1090 J
Vanadium	35.3
Zinc	5400
SEMIVOLATILES	ug/kg
Benzo(a)pyrene	150
Benzo(b)fluoranthene	600
Dibenz(a,h)anthracene	74
Indeno(1,2,3-cd)pyrene	330

12TP09-04 5' - 6'

INORGANICS	01/08/10 mg/kg
Aluminum	16700
Arsenic	1.7 K
Chromium	17.3
Cobalt	5.3 J
Iron	18000
Vanadium	25.6

12TP09-03 3' - 4'

INORGANICS	01/08/10 mg/kg	Duplicate mg/kg
Aluminum	28300	23700
Antimony	12.8 J	12.1 J
Arsenic	16.6 K	12.9 K
Cadmium	40.2	46.8 K
Chromium	58.1	75.5
Cobalt	10.6 J	9.1 J
Copper	1110 K	1170 K
Iron	55600	50900
Lead	872 J	
Manganese	795	910
Vanadium	32.1	34
Zinc	4560 J	
SEMIVOLATILES	ug/kg	ug/kg
Benz(a)anthracene	22000 J	7900 J
Benzo(a)pyrene	16000 J	6800 J
Benzo(b)fluoranthene	15000	7100
Benzo(k)fluoranthene	18000 J	8100 J
Chrysene	24000 J	
Dibenz(a,h)anthracene	4100 J	1900
Indeno(1,2,3-cd)pyrene	10000	5000
Naphthalene	5800	

12TP08-03 3' - 4'

INORGANICS	01/07/10 mg/kg
Aluminum	21100
Arsenic	24 K
Cadmium	120
Chromium	55
Cobalt	13.9 J
Copper	412 K
Iron	81600
Lead	435 J
Manganese	946
Vanadium	30.1
Zinc	2680
SEMIVOLATILES	ug/kg
Benz(a)anthracene	1700
Benzo(a)pyrene	1400
Benzo(b)fluoranthene	1400
Benzo(k)fluoranthene	1800 J
Dibenz(a,h)anthracene	250
Indeno(1,2,3-cd)pyrene	540
DIOXIN/FURAN	ng/kg
TEQ	27

12TP14-03 4' - 5'

INORGANICS	01/12/10 mg/kg
Aluminum	18400
Arsenic	6.2
Chromium	70.1
Cobalt	7.4
Iron	18400 L
Manganese	466
Vanadium	33.2
SEMIVOLATILES	ug/kg
Benz(a)anthracene	370
Benzo(a)pyrene	400
Benzo(b)fluoranthene	400
Dibenz(a,h)anthracene	71
Indeno(1,2,3-cd)pyrene	350

12TP12-03 2' - 3'

INORGANICS	01/11/10 mg/kg
Aluminum	12100
Arsenic	92.2 J
Cadmium	28.7 J
Chromium	65.4
Cobalt	9.7 J
Copper	661
Iron	57600 J
Lead	1400 J
Manganese	727 J
Vanadium	23.2
Zinc	2950
SEMIVOLATILES	ug/kg
Benz(a)anthracene	700
Benzo(a)pyrene	800
Benzo(b)fluoranthene	880
Dibenz(a,h)anthracene	250
Indeno(1,2,3-cd)pyrene	600

12TP14-04 6' - 7'

INORGANICS	01/12/10 mg/kg
Aluminum	13800
Arsenic	1.1 L
Chromium	9
Cobalt	16.6
Iron	11000 L
Manganese	921
Vanadium	15.8

12TP13-04 8' - 9'

INORGANICS	01/11/10 mg/kg
Aluminum	11000
Arsenic	1.6 J
Chromium	17.3
Cobalt	6 J
Iron	20600 J
Vanadium	22.4

12TP15-04 4' - 5'

INORGANICS	01/12/10 mg/kg
Aluminum	18000
Arsenic	5.1 J
Chromium	22.5
Cobalt	11.8
Iron	25700 J
Manganese	739
Vanadium	43.8

12TP13-03 5' - 6'

INORGANICS	01/11/10 mg/kg
Aluminum	16400
Arsenic	4.2 J
Chromium	23
Cobalt	6.2 J
Iron	18700 J
Manganese	590 J
Vanadium	35.3

12TP10-04 8' - 9'

INORGANICS	01/08/10 mg/kg
Aluminum	11100
Arsenic	0.77 J
Chromium	7.1
Cobalt	8.9 J
Iron	9870 J
Manganese	1030 J
Vanadium	13.1

12TP10-03 4' - 5'

INORGANICS	01/08/10 mg/kg
Aluminum	17400
Antimony	24.4 J
Arsenic	12.6 K
Cadmium	18.4 K
Chromium	46.6
Cobalt	17.7 J
Copper	561 K
Iron	93000
Lead	2180 J
Manganese	1200
Vanadium	26
Zinc	2330
SEMIVOLATILES	ug/kg
Benz(a)anthracene	5100
Benzo(a)pyrene	3600
Benzo(b)fluoranthene	3000
Benzo(k)fluoranthene	3900 J
Dibenz(a,h)anthracene	700 J
Indeno(1,2,3-cd)pyrene	2700

12TP07-03 6' - 7'

INORGANICS	01/07/10 mg/kg
Aluminum	13400
Arsenic	1.7 K
Chromium	17.2
Cobalt	5.2 J
Iron	12900
Manganese	275
Vanadium	20.1

12TP05-04 9' - 10'

INORGANICS	01/10/26 mg/kg
Aluminum	17200
Chromium	18
Cobalt	10.3 J
Iron	18200
Vanadium	18.4

12TP04-03 4' - 5'

INORGANICS	01/20/10 mg/kg
Aluminum	23800
Arsenic	3.5 L
Chromium	25.7 L
Cobalt	16.3
Iron	28700
Manganese	320
Vanadium	39.4

12TP05-03 2' - 4' | 2' - 4'

INORGANICS	01/10/26 mg/kg	01/10/26 mg/kg
Aluminum	17800	16200
Arsenic	4.4 K	3.5 K
Chromium	21.2	20.2
Cobalt	13.8 J	6.4 J
Iron	22500	19300
Manganese	390	236
Vanadium	39.4	35.4

12TP12-04 5' - 6'

INORGANICS	01/11/10 mg/kg
Aluminum	15600
Arsenic	3.2 J
Chromium	14.8
Cobalt	11.3 J
Iron	33600 J
Manganese	491 J
Vanadium	28.6

12TP11-04 5' - 6'

INORGANICS	01/11/10 mg/kg
Aluminum	11900
Arsenic	1 J
Chromium	14.3
Cobalt	2.5 J
Iron	10700 J
Vanadium	26.1

12TP11-03 3' - 4'

INORGANICS	01/11/10 mg/kg
Aluminum	16600
Arsenic	8.9
Chromium	23.6
Cobalt	8.1 J
Iron	20900
Manganese	499
Vanadium	30.6
PESTICIDES/PCBS	ug/kg
Dieldrin	44
SEMIVOLATILES	ug/kg
Benz(a)anthracene	520
Benzo(a)pyrene	820
Benzo(b)fluoranthene	1200
Dibenz(a,h)anthracene	140 J
Indeno(1,2,3-cd)pyrene	430

12TP03-20 8' - 9'

INORGANICS	01/20/10 mg/kg
Aluminum	11900
Arsenic	2.2 L
Chromium	13.4 L
Cobalt	12.6
Iron	15700
Manganese	1690
Vanadium	22.4
SEMIVOLATILES	ug/kg
Benz(a)anthracene	1100
Benzo(a)pyrene	850
Benzo(b)fluoranthene	870
Dibenz(a,h)anthracene	110 J
Indeno(1,2,3-cd)pyrene	560

12TP06-04 9' - 10'

INORGANICS	01/10/26 mg/kg
Aluminum	16100
Arsenic	1.4 L
Chromium	23.1 L
Cobalt	9.1
Iron	26900
Vanadium	28

12TP04-04 6' - 7'

INORGANICS	01/20/10 mg/kg
Aluminum	14400
Arsenic	2.1 L
Chromium	16.2 L
Cobalt	14.2
Iron	18200
Manganese	958
Vanadium	23.2

12TP02-04 9' - 10'

INORGANICS	01/04/10 mg/kg
Aluminum	14600
Arsenic	1.8 L
Chromium	11.2 L
Cobalt	8.8
Iron	13100
Manganese	1130
Vanadium	16.4
SEMIVOLATILES	ug/kg
Benzo(a)pyrene	33

12TP06-03 5' - 6'

INORGANICS	01/10/26 mg/kg	Duplicate mg/kg
Aluminum	20200	
Arsenic	6.5 L	
Chromium	26.7 L	
Cobalt	9.2	
Iron	23900	
Manganese	620	
Vanadium	40.6	
SEMIVOLATILES	ug/kg	ug/kg
Benz(a)anthracene	2500	
Benzo(a)pyrene	2100	
Benzo(b)fluoranthene	2800	
Benzo(k)fluoranthene	2200	
Dibenz(a,h)anthracene	340	
Indeno(1,2,3-cd)pyrene	880	
DIOXIN/FURAN	ng/kg	ng/kg
TEQ	7.26	4.61

12TP01-04 7' - 8'

INORGANICS	01/04/10 mg/kg
Aluminum	26000
Arsenic	2.5 L
Chromium	16.5 L
Cobalt	16.9
Iron	17100
Manganese	3740
Vanadium	23.4

12TP01-03 5' - 6'

INORGANICS	01/04/10 mg/kg
Aluminum	18500
Arsenic	5.3 L
Chromium	22.8 L
Cobalt	10
Iron	33800
Manganese	959
Vanadium	32.5
SEMIVOLATILES	ug/kg
2-Methylnaphthalene	35000 J
Naphthalene	13000 J

12TP02-03 4' - 5'

INORGANICS	01/04/10 mg/kg
Aluminum	22600
Antimony	13.1 J
Arsenic	13.1 L
Cadmium	41.8
Chromium	182 L
Cobalt	23.1
Copper	1980
Iron	59300
Lead	3500 J
Manganese	1370
Vanadium	28.5
Zinc	4240 J
SEMIVOLATILES	ug/kg
Benz(a)anthracene	260
Benzo(a)pyrene	230 J
Benzo(b)fluoranthene	370
DIOXIN/FURAN	ng/kg
1,2,3,4,7,8-HxCDD	277 J
1,2,3,6,7,8-HxCDD	293 J
1,2,3,7,8,9-HxCDD	964 J
TEQ	603

12TP03-04 5' - 6'

INORGANICS	01/20/10 mg/kg
Aluminum	12500
Antimony	3.4 J
Arsenic	108 L
Cadmium	7.8 K
Chromium	192 L
Cobalt	8.4
Copper	639
Iron	33800
Lead	5540 J
Manganese	411
Vanadium	34.8
SEMIVOLATILES	ug/kg
Benz(a)anthracene	1300
Benzo(a)pyrene	2200
Benzo(b)fluoranthene	2800
Benzo(k)fluoranthene	1800
Dibenz(a,h)anthracene	330
Indeno(1,2,3-cd)pyrene	900
DIOXIN/FURAN	ng/kg
TEQ	40.4

12TP03-03 6' - 7'

INORGANICS	01/20/10 mg/kg
Aluminum	13500
Arsenic	5.1 L
Chromium	17.4 L
Cobalt	8.7
Iron	18000
Manganese	426
Vanadium	58.8
SEMIVOLATILES	ug/kg
Benz(a)anthracene	1900
Benzo(a)pyrene	2200
Benzo(b)fluoranthene	2800
Benzo(k)fluoranthene	3000
Dibenz(a,h)anthracene	530 J
Indeno(1,2,3-cd)pyrene	1200

Road
Vegetation
Scattered Debris
MAGAZINE
BUILDING 118
118

LEGEND

- SUBSURFACE SOIL SAMPLE LOCATION
- J ESTIMATED VALUE
- K POSITIVE RESULT BIASED HIGH
- L POSITIVE RESULT BIASED LOW
- mg/kg MILLIGRAMS PER KILOGRAM
- ug/kg MICROGRAMS PER KILOGRAM
- SITE 12 BOUNDARY
- OUTLINE OF EM ANOMALOUS AREA
- EM LINEAR ANOMALY

0 100 200
SCALE IN FEET

TETRA TECH NUS, INC.

SUBSURFACE SOIL SAMPLE RESULTS ABOVE SCREENING CRITERIA SITE 12 – SOUTH LANDFILL NAS JRB WILLOW GROVE WILLOW GROVE, PENNSYLVANIA

FILE	SCALE
112G02014GM09-2	AS NOTED
FIGURE NUMBER	REV / DATE
FIGURE 10-4	0 / 01/17/11

112G02014\0205\112G02014GM09-3.DWG 01/17/11 MKB

12SD03-D

	1/10/2610	Duplicate
INORGANICS	mg/kg	mg/kg
Iron		20200 L
Manganese	942 L	947 L
SEMIVOLATILES	ug/kg	ug/kg
Acenaphthene	85 J	200 J
Acenaphthylene	63 J	150 J
Anthracene	360 J	900
Benz(a)anthracene	1700 J	3500 J
Benzo(a)pyrene	1900 J	3500 J
Benzo(b)fluoranthene	2100 J	4800 J
Benzo(g,h,i)perylene	1000	1400
Benzo(k)fluoranthene	2100	3200
Chrysene	2200 J	4200 J
Dibenz(a,h)anthracene	450	750
Fluoranthene	5000 J	10000 J
Fluorene	160 J	340 J
Indeno(1,2,3-cd)pyrene	1200	1900
Phenanthrene	2800 J	5800 J
Pyrene	4100 J	8600 J
Total PAHs	25218	49240
VOLATILES	ug/kg	ug/kg
Carbon Disulfide	28 J	1.9 J
PESTICIDES	ug/kg	ug/kg
4,4'-DDE		6.1 L
Total DDT		7.5
Alpha-Chlordane	4.8 J	6.4 J
Beta-BHC		16 J
Dieldrin	5.2 J	8.4 L
Endrin Aldehyde	2.3 J	
Gamma-Chlordane	5.6 J	3.7 J

12SD08

	1/10/2610
INORGANICS	mg/kg
Antimony	2.2 J
Lead	40.3
SEMIVOLATILES	ug/kg
Acenaphthylene	81 J
Anthracene	210 J
Benz(a)anthracene	960
Benzo(a)pyrene	990
Benzo(b)fluoranthene	1100
Benzo(g,h,i)perylene	350
Benzo(k)fluoranthene	1100
Chrysene	1000
Dibenz(a,h)anthracene	190 J
Fluoranthene	2400
Indeno(1,2,3-cd)pyrene	480
Phenanthrene	720
Pyrene	2000
Total PAHs	11628
PESTICIDES	ug/kg
4,4'-DDE	6.5 J
Total DDT	10.6
Dieldrin	39

12SW08

	01/21/10	Duplicate
TOTAL INORGANICS	ug/L	ug/L
Aluminum	2700	
Barium	49.9 J	
Iron	2760	
Lead	10.6	
DISSOLVED INORGANICS	ug/L	ug/L
Barium	20.5	20.9
SEMIVOLATILES	ug/L	ug/L
Benz(a)anthracene	0.045 J	
Benzo(a)pyrene	0.049 J	
Fluoranthene	0.1 J	
Phenanthrene	0.04	
Pyrene	0.079 J	
PESTICIDES	ug/L	ug/L
Heptachlor Epoxide	0.0079 J	

12SW04

	01/20/10
TOTAL INORGANICS	ug/L
Barium	68 J

12SD04

	1/10/2610
INORGANICS	mg/kg
Lead	90
SEMIVOLATILES	ug/kg
Benzo(b)fluoranthene	37

12SD06

	1/10/2610
INORGANICS	mg/kg
Lead	54.7
Manganese	463 L
SEMIVOLATILES	ug/kg
Benz(a)anthracene	130
Benzo(a)pyrene	160
Benzo(b)fluoranthene	200
Pyrene	250
Total PAHs	1777
PESTICIDES	ug/kg
4,4'-DDE	5.2 J
4,4'-DDT	5.2 J
Total DDT	10.4
Dieldrin	17

MAGAZINE

12SW03

	01/20/10
TOTAL INORGANICS	ug/L
Barium	173 J
Iron	889
Manganese	1660 J
Cyanide	6.8 L

12SW05

	01/21/10
TOTAL INORGANICS	ug/L
Barium	84.9 J
Lead	3.6
Cyanide	6 L
SEMIVOLATILES	ug/L
Fluoranthene	0.22

12SD05

	1/10/2610
INORGANICS	mg/kg
Lead	72

12SW07

	01/21/10
TOTAL INORGANICS	ug/L
Aluminum	31800
Arsenic	10.6
Barium	434 J
Beryllium	3.1
Cadmium	1.1
Chromium	37.8
Cobalt	32.6
Copper	57.4
Iron	44700
Lead	88
Manganese	1990 J
Mercury	0.2
Vanadium	88.8
Zinc	253
DISSOLVED INORGANICS	ug/L
Aluminum	270
Barium	51.2
Iron	370
Manganese	845
Selenium	4.5 J
SEMIVOLATILES	ug/L
Anthracene	0.22
Benz(a)anthracene	1.3
Benzo(a)pyrene	1.5
Fluoranthene	2.9
Phenanthrene	0.78
Pyrene	2.3
PESTICIDES	ug/L
4,4'-DDD	0.015 J
4,4'-DDT	0.019 J
TOTAL DDT	0.205
Alpha-Chlordane	0.208 J
Dieldrin	1.6
Endosulfan I	0.063 J
Methoxychlor	0.28 J

12SD07

	1/10/2610
SEMIVOLATILES	ug/kg
Acenaphthylene	23
Benz(a)anthracene	260
Benzo(a)pyrene	250
Benzo(b)fluoranthene	280
Chrysene	220
Dibenz(a,h)anthracene	38
Fluoranthene	530 J
Indeno(1,2,3-cd)pyrene	200
Pyrene	400 J
Total PAHs	2751.1
Dieldrin	55
Endrin Ketone	2.4 J

12SW02

	01/18/10	Duplicate 01/18/10
TOTAL INORGANICS	ug/L	ug/L
Barium	115 J	117 J
Iron	656	665
Manganese	990 J	1010 J
Cyanide	48.8 J	
SEMIVOLATILES	ug/L	ug/L
Anthracene	0.045 J	0.041 J
Benz(a)anthracene	0.043 J	0.047 J
Benzo(a)pyrene	0.12 J	0.12 J
Fluoranthene	0.078 J	0.084 J
Pyrene	0.098 J	0.11 J

12SD02

	1/15/2010
INORGANICS	mg/kg
Cadmium	2.1
Copper	44.7
Iron	24000 L
Lead	45.8
Manganese	17400 L
Nickel	28.4
SEMIVOLATILES	ug/kg
Anthracene	460 J
Benz(a)anthracene	2500
Benzo(a)pyrene	3000
Benzo(b)fluoranthene	3000
Benzo(g,h,i)perylene	1300 J
Benzo(k)fluoranthene	3500 J
Bis(2-ethylhexyl)phthalate	460 J
Chrysene	3600
Dibenz(a,h)anthracene	700 J
Fluoranthene	8100
Indeno(1,2,3-cd)pyrene	1700
Phenanthrene	3700
Pyrene	6300
Total PAHs	37860
PESTICIDES	ug/kg
Alpha-Chlordane	12 J
Endrin Aldehyde	7.5 J
Endrin Ketone	17 J
Gamma-Chlordane	16 J

12SD01

	1/14/2010
SEMIVOLATILES	ug/kg
Anthracene	570 J
Benz(a)anthracene	2100
Benzo(a)pyrene	2200
Benzo(b)fluoranthene	2100
Benzo(g,h,i)perylene	990 J
Benzo(k)fluoranthene	2800 J
Bis(2-ethylhexyl)phthalate	230 J
Chrysene	2800
Dibenz(a,h)anthracene	540 J
Fluoranthene	7000
Fluorene	170 J
Indeno(1,2,3-cd)pyrene	1300
Phenanthrene	3300
Pyrene	5000
Total PAHs	30870
VOLATILES	ug/kg
Carbon Disulfide	5.4 J
PESTICIDES	ug/kg
Total DDT	7.2
Alpha-Chlordane	8.4 J
Dieldrin	23 J
Endrin Ketone	14 J
Gamma-Chlordane	7.9 J
Heptachlor Epoxide	4.5 J

12SW01

	01/14/10
TOTAL INORGANICS	ug/L
Barium	193 J
Iron	565
Manganese	2100 J

BUILDING 118

N

LEGEND

- △ SURFACE WATER SAMPLE LOCATION
- ○ SEDIMENT SAMPLE LOCATION
- J ESTIMATED VALUE
- K POSITIVE RESULT BIASED HIGH
- L POSITIVE RESULT BIASED LOW
- mg/kg MILLIGRAMS PER KILOGRAM
- ug/kg MICROGRAMS PER KILOGRAM
- ug/L MICROGRAMS PER LITER
- SITE 12 BOUNDARY

0 100 200

SCALE IN FEET

TETRA TECH NUS, INC.

SURFACE WATER/SEDIMENT SAMPLE RESULTS ABOVE SCREENING CRITERIA SITE 12 – SOUTH LANDFILL NAS JRB WILLOW GROVE WILLOW GROVE, PENNSYLVANIA

FILE	SCALE
112G02014GM09-3	AS NOTED
FIGURE NUMBER	REV / DATE
FIGURE 10-5	0 / 01/17/11

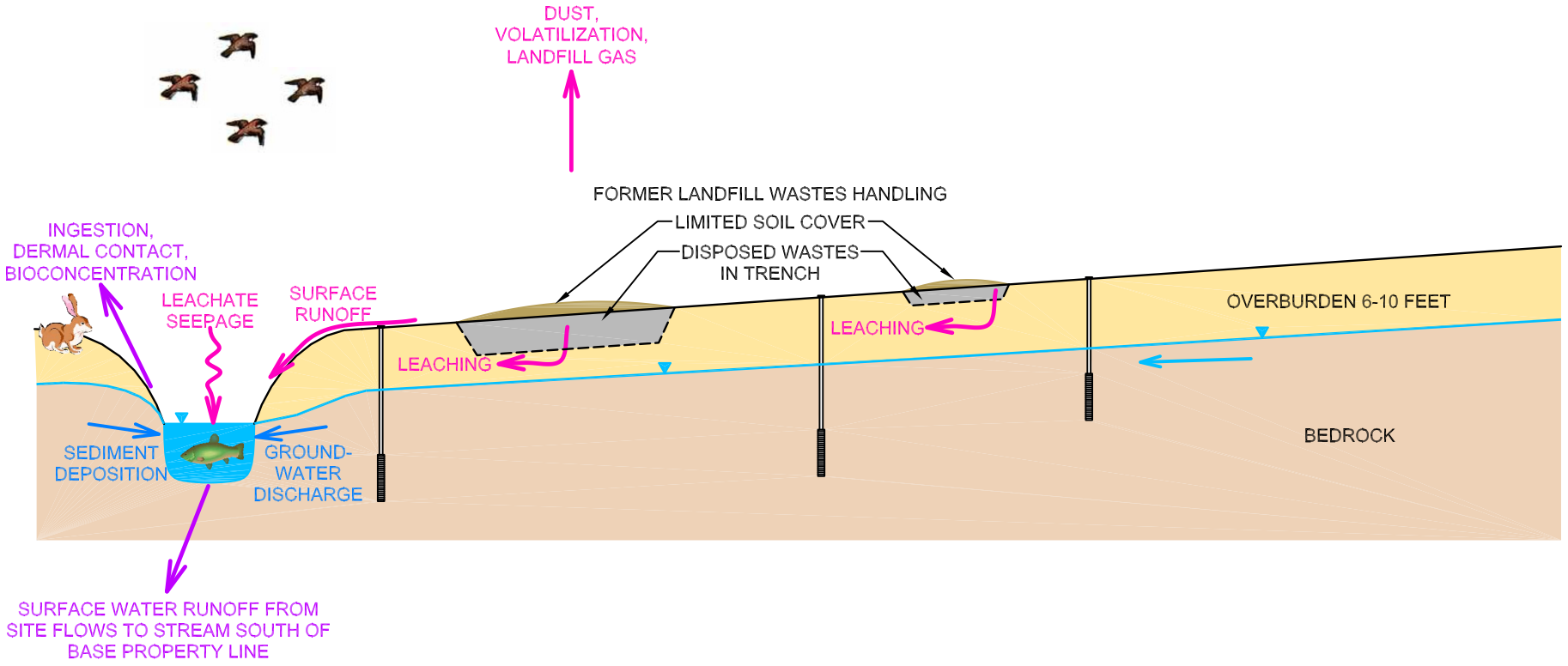

LEGEND

- GROUNDWATER LEVEL
- GROUNDWATER FLOW DIRECTION
- RELEASE MECHANISM
- EXPOSURE ROUTE

TETRA TECH NUS, INC.

CONCEPTUAL SITE MODEL SCHEMATIC
HUMAN RECEPTORS
SITE 12 – SOUTH LANDFILL
NAS JRB WILLOW GROVE
WILLOW GROVE, PENNSYLVANIA

SCALE	AS NOTED
FILE	112G02014CM02
REV	0
DATE	01/17/11
FIGURE NUMBER	FIGURE 10–6

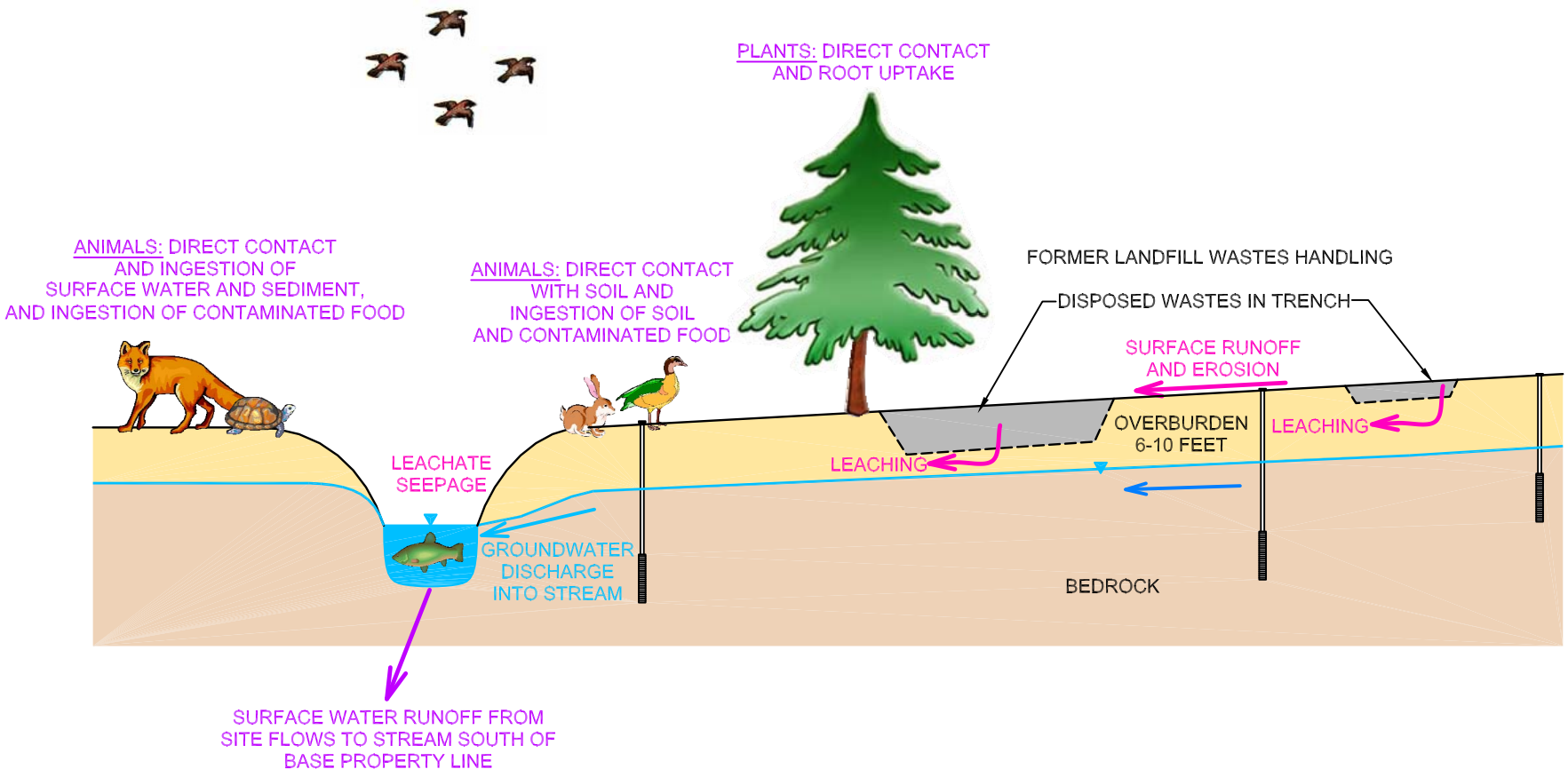

LEGEND

- GROUNDWATER LEVEL
- GROUNDWATER FLOW DIRECTION
- RELEASE MECHANISM
- EXPOSURE ROUTE

TETRA TECH NUS, INC.

CONCEPTUAL SITE MODEL SCHEMATIC
ECOLOGICAL RECEPTORS
SITE 12 – SOUTH LANDFILL
NAS JRB WILLOW GROVE
WILLOW GROVE, PENNSYLVANIA

SCALE	AS NOTED
FILE	112G02014CM03
REV	0
DATE	01/17/11
FIGURE NUMBER	FIGURE 10–7

FIGURE 10–8
HUMAN CONCEPTUAL EXPOSURE MODEL DIAGRAM
SITE 12 – SOUTH LANDFILL
NAS JRB WILLOW GROVE
WILLOW GROVE, PENNSYLVANIA

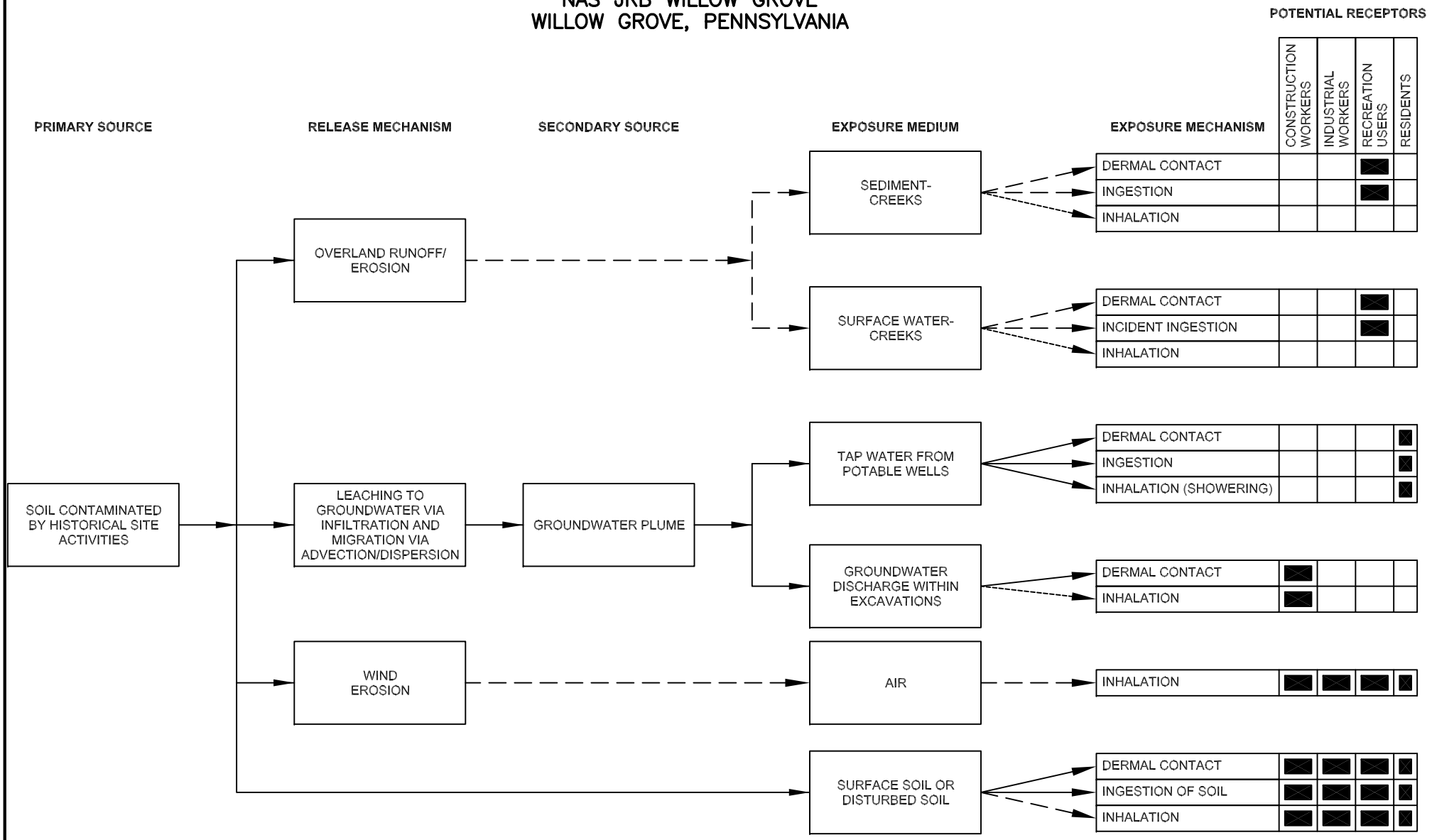

ANTICIPATED SIGNIFICANT EXPOSURE PATHWAY BASED ON EXPECTED QUANTITATIVE RISK ANALYSIS
ANTICIPATED LOW SIGNIFICANCE EXPOSURE PATHWAY BASED ON EXPECTED QUANTITATIVE DATA OR RISK ANALYSIS
ANTICIPATED INSIGNIFICANT PATHWAY BASED ON EXPECTED LOW LEVELS IN EXPOSURE MEDIUM AND DISPERSION/ATTENUATION BEFORE REACHING EXPOSURE POINT
BLANK SPACE INDICATES INCOMPLETE EXPOSURE PATHWAY OR NOT APPLICABLE POTENTIAL EXPOSURE

FIGURE 10–9
ECOLOGICAL CONCEPTUAL EXPOSURE MODEL DIAGRAM
SITE 12 – SOUTH LANDFILL
NAS JRB WILLOW GROVE
WILLOW GROVE, PENNSYLVANIA

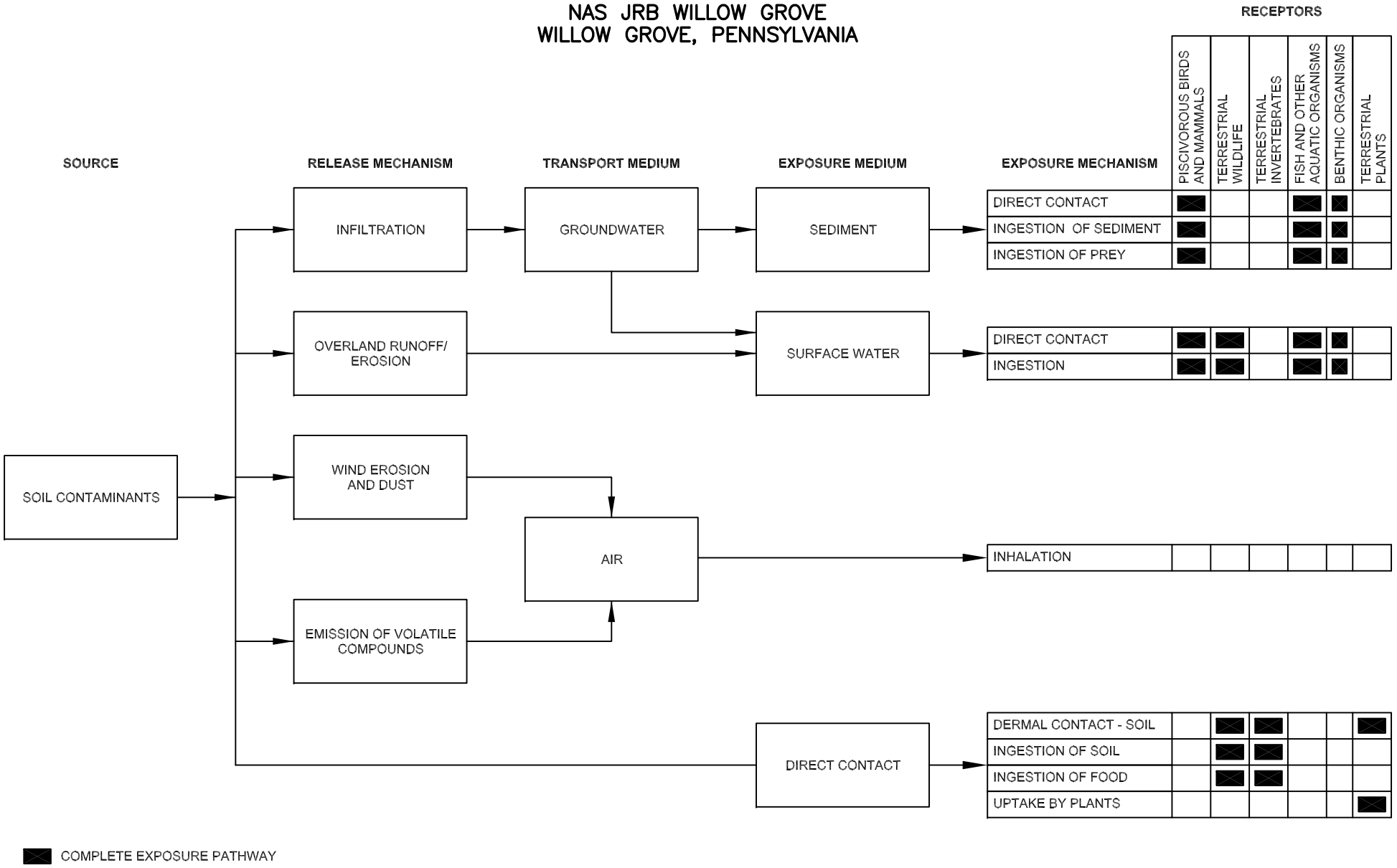

112G02014\02051\112G02014GM05.DWG 12/21/10 MKB

N

02MW02S

MAGAZINE

BUILDING 118

02MW04I
02MW04S

02MW03S

02MW03I
02MW03SI

PAH, Pest
PAH, Pest
PAH, Pest
PAH
Cd, Cu
Cd, Cu
Cd, Cu
PAH
PAH
PAH
PAH, Pb
PAH, Pb
PAH, Pb
PAH, Pb
PAH, Pb
PAH
PAH
PAH
PAH
PAH
PAH
PAH
PAH
PAH
Pb
Pb
Pb

LEGEND

- SOIL SAMPLE LOCATION (PROPOSED) (25)
- MONITORING WELL LOCATION (EXISTING)
- MONITORING WELL LOCATION (PROPOSED) (4)
- STEP-OUT SOIL SAMPLE LOCATION (PROPOSED)
- *Cd* CADMIUM
- *Cu* COPPER
- *PAH* POLYCYCLIC AROMATIC HYDROCARBONS
- *Pb* LEAD
- *Pest* PESTICIDES
- TEST PIT LOCATION (PROPOSED) (2)
- SITE 12 BOUNDARY
- OUTLINE OF EM ANOMALOUS AREA
- EM LINEAR ANOMALY

0 100 200
SCALE IN FEET

TETRA TECH NUS, INC.

PROPOSED PHASE II RI SAMPLE LOCATION MAP SITE 12 – SOUTH LANDFILL NAS JRB WILLOW GROVE WILLOW GROVE, PENNSYLVANIA

FILE	SCALE
112G02014GM05	AS NOTED
FIGURE NUMBER	REV / DATE
FIGURE 17–1	0 / 12/21/10

112G02014_0205_112G02014GM06.DWG 12/21/10 MKB

N

Road
Vegetation
Vegetation
Road
Veg.
Veg.
Road
Vegetation
Vegetation
Veg.
Debris
Debris
Transformer
Well
MAGAZINE

12TP09-04 (5'-6')
1/9/10 mg/kg
Chromium 17.3

12TP09-03 (3'-4')
1/8/10 mg/kg Dup
Chromium 58.1 75.5

12TP15-03 (3'-4')
1/12/10 mg/kg
Chromium 56.7

12TP08-03 (3'-4')
1/7/10 mg/kg
Chromium 55

12TP15-04 (4'-5')
1/12/10 mg/kg
Chromium 22.5

12TP14-04 (6'-7')
1/12/10 mg/kg
Chromium 9

12TP14-03 (4'-5')
1/12/10 mg/kg
Chromium 70.1

12TP10-03 (4'-5')
1/8/10 mg/kg
Chromium 46.6

12TP10-04 (8'-9')
1/8/10 mg/kg
Chromium 22.5

12TP05-04 (9'-10')
1/10/10 mg/kg
Chromium 18

12TP05-03 (2'-4')
1/10/06 mg/kg Dup
Chromium 21.2 20.2

12TP07-03 (6'-7')
1/7/10 mg/kg
Chromium 17.2

12TP06-03 (5'-6')
1/10/06 mg/kg Dup
Chromium 26.7 L

12TP04-03 (4'-5')
1/20/10 mg/kg
Chromium 25.7 L

12TP04-04 (6'-7')
1/20/10 mg/kg
Chromium 16.2 L

12TP03-05 (8'-9')
1/20/10 mg/kg
Chromium 13.4 L

12TP06-04 (9'-10')
1/10/10 mg/kg
Chromium 23.1 L

12TP03-04 (5'-6')
1/20/10 mg/kg
Chromium 192 L

12TP03-03 (6'-7')
1/20/10 mg/kg
Chromium 17.4 L

12TP01-04 (7'-8')
1/04/10 mg/kg
Chromium 16.5 L

12TP02-03 (4'-5')
1/04/10 mg/kg
Chromium 182 L

12TP01-03 (5'-6')
1/04/10 mg/kg
Chromium 22.8 L

12TP02-04 (9'-10')
1/04/10 mg/kg
Chromium 11.2 L

12TP13-04 (8'-9')
1/11/10 mg/kg
Chromium 17.3

12TP13-03 (5'-6')
1/11/10 mg/kg
Chromium 23

12TP12-04 (5'-6')
1/11/10 mg/kg
Chromium 14.8

12TP12-03 (2'-3')
1/13/09 mg/kg
Chromium 65.4

12TP11-04 (5'-6')
1/11/10 mg/kg
Chromium 14.3

12TP11-03 (3'-4')
1/11/10 mg/kg
Chromium 23.6

A B C D E

1 2 3 4 5 6

LEGEND

- SUBSURFACE SOIL SAMPLE LOCATION
- PROPOSED HEXAVALENT CHROMIUM SAMPLING LOCATION (SURFACE AND SUBSURFACE SAMPLES)
- *L* POSITIVE RESULT BIASED LOW
- mg/kg MILLIGRAMS PER KILOGRAM
- SITE 12 BOUNDARY
- OUTLINE OF EM ANOMALOUS AREA
- EM LINEAR ANOMALY

0 80 160
SCALE IN FEET

TETRA TECH NUS, INC.

CHROMIUM (TOTAL) CONCENTRATIONS SUBSURFACE SOIL SITE 12 – SOUTH LANDFILL NAS JRB WILLOW GROVE WILLOW GROVE, PENNSYLVANIA

FILE	SCALE
112G02014GM06	AS NOTED
FIGURE NUMBER	REV / DATE
FIGURE 17–2	0 / 12/21/10

112G02014\0205\112G02014GM07.DWG 12/21/10 MKB

GOLF COURSE

03TP27-01 (3'-4')

1/15/09	mg/kg	Dup
Chromium	295 J	215 J

03TP28-01 (2'-3')

1/15/09	mg/kg
Chromium	41.9 J

03TP08-01 (4'-5')

5/2/07	mg/kg
Chromium	133 K

03TP08-02 (3'-4')

5/2/07	mg/kg
Chromium	4.2 K

03TP07-01 (3'-4')

5/2/07	mg/kg
Chromium	16.4 K

03TP08-03 (2'-3')

5/2/07	mg/kg
Chromium	49.5 K

03SB04

9/6/91	mg/kg
Chromium	23.7

03TP03

9/11/91	mg/kg
Chromium	18.4

03TP13-01 (2'-3')

5/4/07	mg/kg
Chromium	6.9 K

03TP14-01 (2'-3')

5/4/07	mg/kg
Chromium	18.1 K

03TP29-01 (3'-4')

1/14/09	mg/kg
Chromium	16 J

03SB02

9/6/91	mg/kg
Chromium	24.9

03TP12-02 (3'-4')

5/4/07	mg/kg
Chromium	14.2 K

03TP11-01 (3'-4')

5/4/07	mg/kg
Chromium	18.6 K

03TP12-01 (4'-5')

5/4/07	mg/kg
Chromium	21.5 K

03TP10-02 (3'-4')

5/3/07	mg/kg
Chromium	5.7 K

03TP27-02 (3'-4')

1/15/09	mg/kg
Chromium	137 J

03TP07-02 (2'-3')

5/2/07	mg/kg
Chromium	7.7 K

03TP20-01 (7'-8')

1/12/09	mg/kg
Chromium	56.3 J

03TP26-01 (5'-6')

1/14/09	mg/kg
Chromium	68.5

03TP02

	1	2
9/10/91	mg/kg	mg/kg
Chromium	32	30.5

03TP11-02 (4'-5')

5/4/07	mg/kg
Chromium	18.7 K

03TP10-01 (4'-5')

5/3/07	mg/kg
Chromium	22.5 K

03TP18-01 (2'-3')

5/8/07	mg/kg	Dup
Chromium	14.7 J	25.2 J

03TP04

	1	2	3	4
9/10/91	mg/kg	mg/kg	mg/kg	mg/kg
Chromium		18.8	20.6	13.7

03TP05-01 (5'-6')

4/30/07	mg/kg
Chromium	10.8

03TP25-02 (6'-7')

1/13/09	mg/kg	Dup
Chromium	24.3 J	33.5 J

03TP09-02 (5'-6')

5/3/07	mg/kg
Chromium	6.3 K

03TP09-01 (5'-6')

5/3/07	mg/kg
Chromium	18 K

03TP05-02 (9'-10')

4/30/07	mg/kg	Dup
Chromium	78.2 J	30 J

03TP17-01 (3'-4')

5/7/07	mg/kg
Chromium	10.8

03TP19-01 (6'-7')

1/12/09	mg/kg
Chromium	71.4 J

03TP25-01 (5'-6')

1/13/09	mg/kg
Chromium	16.2 J

03TP19-02 (3'-4')

1/12/09	mg/kg
Chromium	148 J

03TP06-04 (6'-7')

5/1/07	mg/kg
Chromium	108 K

03TP06-03 (8'-9')

5/1/07	mg/kg	Dup
Chromium	83.7 K	

03TP06-02 (7'-8')

5/1/07	mg/kg
Chromium	53.4 K

03TP06-01 (3'-4')

5/1/07	mg/kg
Chromium	9.4 K

03TP24-01 (3'-4')

1/13/09	mg/kg
Chromium	84.9 J

03TP30-01 (5'-6')

1/14/09	mg/kg	Dup
Chromium	348 J	

03TP15-01 (4'-5')

5/7/07	mg/kg
Chromium	8.1

03TP23-01 (3'-4')

1/13/09	mg/kg
Chromium	21.9 J

03TP01 (3'-4')

9/9/91	mg/kg
Chromium	24.5

Unknown Anomaly 1

Unknown Anomaly 2

Baseball Field

Stairs

Stations

Vegetation

Depression

Surface Debris

Wire Rope

Paintball Area

Concrete Block

Picnic Table

9TH STREET

03SB25

03SB26

03SB01

03SB05

03SB03

W04SI

A

C

R

TP21B

TP21A

TP22

TP23

TP25

TP26

TP29

03TP1601

340

345

350

355

360

330

335

N

LEGEND

- SUBSURFACE SOIL SAMPLE LOCATION
- LANDFILL DELINEATION SUBSURFACE SOIL SAMPLE LOCATION
- PROPOSED HEXAVALENT CHROMIUM SAMPLING LOCATION (SURFACE AND SUBSURFACE SAMPLES)
- TEST PIT LOCATION
- OUTLINE OF EM ANOMALOUS AREA
- *J* ESTIMATED VALUE
- *K* POSITIVE RESULT BIASED HIGH
- mg/kg MILLIGRAMS PER KILOGRAM

0 80 160

SCALE IN FEET

TETRA TECH NUS, INC.

CHROMIUM (TOTAL) CONCENTRATIONS
SITE 3 – 9TH STREET LANDFILL
NAS JRB WILLOW GROVE
WILLOW GROVE, PENNSYLVANIA

FILE	SCALE
112G02014GM07	AS NOTED
FIGURE NUMBER	REV / DATE
FIGURE 17–3	0 / 12/21/10

APPENDIX A

TETRA TECH STANDARD OPERATING PROCEDURES AND FIELD FORMS

CT-04	Sample Nomenclature
CT-05	Database Records and Quality Assurance
GH-1.2	Water Level Measurements
GH-1.3	Soil and Rock Drilling Methods
GH-1.5	Borehole and Sample Logging
GH-2.5	Groundwater Contour Maps and Flow Determinations
GH-2.8	Groundwater Monitoring Well Installation
HS-1.0	Utility Locating and Excavation Clearance
QAD023	EPA Region III Low Flow GW Sampling Guidelines
SA-1.1	Groundwater Sample Acquisition
SA-1.3	Soil Sampling
SA-2.5	Direct Push Technology
SA-6.1	Non-Radiological Sample Handling
SA-6.3	Field Documentation
SA-7.1	Decontamination of Field Equipment

TETRA TECH NUS, INC.	STANDARD OPERATING PROCEDURES	Number CT-04	Page 1 of 7
		Effective Date 03/09/09	Revision 2
		Applicability Tetra Tech NUS, Inc.	
		Prepared Earth Sciences Department	
Subject SAMPLE NOMENCLATURE		Approved Tom Johnston	

TABLE OF CONTENTS

SECTION		PAGE
1.0	**PURPOSE**	**2**
2.0	**SCOPE**	**2**
3.0	**GLOSSARY**	**2**
4.0	**RESPONSIBILITIES AND PERSONNEL QUALIFICATIONS**	**2**
5.0	**PROCEDURES**	**3**
5.1	INTRODUCTION	3
5.2	SAMPLE IDENTIFICATION FIELD REQUIREMENTS	3
5.3	EXAMPLE SAMPLE FIELD DESIGNATIONS	4
5.4	EXAMPLES OF SAMPLE NOMENCLATURE	5
5.5	FIELD QA/QC SAMPLE NOMENCLATURE	6
5.6	EXAMPLES OF FIELD QA/QC SAMPLE NOMENCLATURE	6
6.0	**DEVIATIONS**	**7**

1.0 PURPOSE

The purpose of this Standard Operating Procedure (SOP) is to specify a consistent sample nomenclature system that will facilitate subsequent data management in a cost-effective manner. The sample nomenclature system has been devised such that the following objectives can be attained:

- Sorting of data by matrix
- Sorting of data by depth
- Maintenance of consistency (field, laboratory, and database sample numbers)
- Accommodation of all project-specific requirements
- Accommodation of laboratory sample number length constraints (maximum of 20 characters)

2.0 SCOPE

The methods described in this SOP shall be used consistently for all projects requiring electronic data. Other contract- or project-specific sample nomenclature requirements may also be applicable.

3.0 GLOSSARY

None.

4.0 RESPONSIBILITIES AND PERSONNEL QUALIFICATIONS

Program Manager - It shall be the responsibility of the Project Manager (or designee) to inform contract-specific Project Managers (PMs) of the existence and requirements of this SOP.

Project Manager - It shall be the responsibility of the PM to determine the applicability of this SOP based on: (1) program-specific requirements and (2) project size and objectives. It shall be the responsibility of the PM (or designee) to ensure that sample nomenclature requirements are thoroughly specified in the relevant project planning document (e.g., sampling and analysis plan) and are consistent with this SOP if relevant. It shall be the responsibility of the PM to ensure that the FOL is familiar with the sample nomenclature system.

Field Operations Leader (FOL) - It shall be the responsibility of the FOL to ensure that all field technicians or sampling personnel are thoroughly familiar with this SOP and the project-specific sample nomenclature system. It shall be the responsibility of the FOL to ensure that the sample nomenclature system is used during all project-specific sampling efforts.

General personnel qualifications for sample nomenclature activities in the field include the following:

- Occupational Safety and Health Administration (OSHA) 40-hour and applicable refresher training.
- Capability of performing field work under the expected physical and environmental (i.e., weather) conditions.
- Familiarity with appropriate procedures for field documentation, handling, packaging, and shipping.

5.0 PROCEDURES

5.1 INTRODUCTION

The sample identification (ID) system can consist of as few as eight but not more than 20 distinct alpha-numeric characters. The sample ID will be provided to the laboratory on the sample labels and chain-of-custody forms. The basic sample ID provided to the laboratory has three segments and shall be as follows, where "A" indicates "alpha," and "N" indicates "numeric":

A or N 3 or 4 Characters	AAA 2 or 3 Characters	A or N 3 to 6 Characters
Site Identifier	Sample Type	Sample Location

Additional segments may be added as needed. For example:

(1) Soil and sediment sample ID

A or N 3 or 4 Characters	AAA 2 or 3 Characters	A or N 3 to 6 Characters	NNNN 4 Characters
Site identifier	Sample type	Sample location	Sample depth

(2) Aqueous (groundwater or surface water) sample ID

A or N 3 or 4 Characters	AAA 2 or 3 Characters	A or N 3 to 6 Characters	NN 2 Characters	-A 1 Character
Site identifier	Sample type	Sample location	Round number	Filtered sample only

(3) Biota sample ID

A or N 3 or 4 Characters	AAA 2 or 3 Characters	A or N 3 to 6 Characters	AA 2 Characters	NNN 3 Characters
Site identifier	Sample type	Sample location	Species identifier	Sample group number

5.2 SAMPLE IDENTIFICATION FIELD REQUIREMENTS

The various fields in the sample ID include but are not limited to the following:

- Site identifier
- Sample type
- Sample location
- Sample depth
- Sampling round number
- Filtered
- Species identifier
- Sample group number

The site identifier must be a three- or four-character field (numeric characters, alpha characters, or a mixture of alpha and numeric characters may be used). A site number is necessary because many facilities/sites have multiple individual sites, Solid Waste Management Units (SWMUs), Operable Units (OUs), etc. Several examples are presented in Section 5.3 of this SOP.

The sample type must be a two- or three-character alpha field. Suggested codes are provided in Section 5.3 of this SOP.

The sample location must be at least a three-character field but may have up to six characters (alpha, numeric, or a mixture). The six characters may be useful in identifying a monitoring well to be sampled or describing a grid location.

The sample depth field is used to note the depth below ground surface (bgs) at which a soil or sediment sample is collected. The first two numbers of the four-number code specify the top interval, and the third and fourth specify the bottom interval in feet bgs of the sample. If the sample depth is equal to or greater than 100, then only the top interval would be represented and the sampling depth would be truncated to three characters. The depths will be noted in whole numbers only; further detail, if needed, will be recorded on the sample log sheet or boring log, in the logbook, etc.

A two-digit round number will be used to track the number of aqueous samples collected from a particular aqueous sample location. The first sample collected from a location will be assigned the round identifier 01, the second 02, etc. This applies to both existing and proposed monitoring wells and surface water locations.

Aqueous samples that are field filtered (dissolved analysis) will be identified with an "-F" in the last field segment. No entry in this segment signifies an unfiltered (total) sample.

The species identifier must be a two-character alpha field. Several suggested codes are provided in Section 5.3 of this SOP.

The three-digit sample group number will be used to track the number of biota sample groups (a particular group size may be determined by sample technique, media type, the number of individual caught, weight issues, time, etc.) by species and location. The first sample group of a particular species collected from a given location will be assigned the sample group number 001, and the second sample group of the same species collected from the same location will be assigned the sample group number 002.

5.3 EXAMPLE SAMPLE FIELD DESIGNATIONS

Examples of each of the fields are as follows:

Site identifier - Examples of site numbers/designations are as follows:

A01 - Area of Concern (AOC) 1
125 - SWMU 125
000 - Base- or facility-wide sample (e.g., upgradient well)
BBG - Base background

The examples cited are only suggestions. Each PM (or designee) must designate appropriate (and consistent) site designations for their individual project.

Sample type - Examples of sample types are as follows:

AH - Ash Sample

AS - Air Sample
BM - Building Material Sample
BSB - Biota Sample Full Body
BSF - Biota Sample Fillet
CP - Composite Sample
CS - Chip Sample
DS - Drum Sample
DU - Dust Sample
FP - Free Product
IDW - Investigation-Derived Waste Sample
LT - Leachate Sample
MW - Monitoring Well Groundwater Sample
OF - Outfall Sample
RW - Residential Well Sample
SB - Soil Boring Sample
SD - Sediment Sample
SC - Scrape Sample
SG - Soil Gas Sample
SL - Sludge Sample
SP - Seep Sample
SS - Surface Soil Sample
ST - Storm Sewer Water Sample
SW - Surface Water Sample
TP - Test Pit Sample
TW - Temporary Well Sample
WC - Well Construction Material Sample
WP - Wipe Sample
WS - Waste/Solid Sample
WW - Wastewater Sample

Sample location - Examples of the location field are as follows:

001 - Monitoring well 1
N32E92 - Grid location 32 North and 92 East
D096 - Investigation-derived waste drum number 96

Species identifier - Examples of species identifier are as follows:

BC - Blue Crab
GB - Blue Gill
CO - Corn
SB - Soybean

5.4 EXAMPLES OF SAMPLE NOMENCLATURE

The first round monitoring well groundwater sample collected from existing monitoring well 001 at SWMU 16 for a filtered sample would be designated as 016MW00101-F.

The second round monitoring well groundwater sample collected from existing monitoring well C20P2 at Site 23 for an unfiltered sample would be designated as 023MWC20P202.

The second surface water sample collected from point 01 at SWMU 130 for an unfiltered sample would be designated as 130SW00102.

A surface soil sample collected from grid location 32 North and 92 East at Site 32 at the 0- to 2-foot interval would be designated as 032SSN32E920002.

A subsurface soil sample from soil boring 03 at SWMU 32 at an interval of 4 to 5 feet bgs would be designated as 032SB0030405.

A sediment sample collected at SWMU 19 from 0 to 6 inches at location 14 would be designated as 019SD0140001. The sample data sheet would reflect the precise depth at which this sample was collected.

During biota sampling for full-body analysis, the first time a minnow trap was checked at grid location A25 of SWMU 1415, three small blue gills were captured, collected, and designated with the sample ID of 1415BSBA25BG001. The second time blue gill were collected at the same location (grid location A25 at SWMU 1415), the sample ID would be 1415BSBA25BG002.

Note: No dash (-) or spacing is used between the segments with the exception of the filtered segment. The "F" used for a filtered aqueous sample is preceded by a dash (-F).

5.5 FIELD QA/QC SAMPLE NOMENCLATURE

Field Quality Assurance (QA)/Quality Control (QC) samples are designated using a different coding system. The QC code will consist of a three- to four-segment alpha-numeric code that identifies the sample QC type, the date the sample was collected, and the number of this type of QC sample collected on that date.

AA	NNNNNN	NN	-F
QC type	Date	Sequence number (per day)	Filtered (aqueous only, if needed)

The QC types are identified as:

TB = Trip Blank
RB = Rinsate Blank (Equipment Blank)
FD = Field Duplicate
AB = Ambient Conditions Blank
WB = Source Water Blank

The sampling time recorded on the chain-of-custody form, labels, and tags for duplicate samples will be 0000 so that the samples are "blind" to the laboratory. Notes detailing the sample number, time, date, and type will be recorded on the routine sample log sheets and will document the location of the duplicate sample (sample log sheets are not provided to the laboratory). Documentation for all other QC types (TB, RB, AB, and WB) will be recorded on the QC Sample Log Sheet (see SOP SA-6.3, Field Documentation).

5.6 EXAMPLES OF FIELD QA/QC SAMPLE NOMENCLATURE

The first duplicate of the day for a filtered groundwater sample collected on June 3, 2000, would be designated as FD06030001-F.

The third duplicate of the day taken of a subsurface soil sample collected on November 17, 2003, would be designated as FD11170303.

The first trip blank associated with samples collected on October 12, 2000, would be designated as TB10120001.

The only rinsate blank collected on November 17, 2001, would be designated as RB11170101.

6.0 DEVIATIONS

Any deviation from this SOP must be addressed in detail in the site-specific planning documents.

TETRA TECH NUS, INC.	STANDARD OPERATING PROCEDURES	Number CT-05	Page 1 of 7
		Effective Date 01/29/01	Revision 2
		Applicability Tetra Tech NUS, Inc.	
		Prepared Management Information Systems Department	
Subject DATABASE RECORDS AND QUALITY ASSURANCE		Approved D. Senovich	

TABLE OF CONTENTS

SECTION **PAGE**

1.0 PURPOSE **2**

2.0 SCOPE **2**

3.0 GLOSSARY **2**

4.0 RESPONSIBILITIES **2**

5.0 PROCEDURES **4**

5.1 INTRODUCTION 4
5.2 FILE ESTABLISHMENT 4
5.3 ELECTRONIC DELIVERABLES 4
5.4 SAMPLE TRACKING FORMS 5
5.5 CHAIN-OF-CUSTODY FORMS 5
5.6 DATA VALIDATION LETTERS 5
5.7 HISTORICAL DATA 5

6.0 RECORDS **6**

ATTACHMENTS

A MIS REQUEST FORM **7**

1.0 PURPOSE

The purpose of this document is to specify a consistent procedure for the quality assurance review of electronic and hard copy databases. This SOP outlines the requirements for establishment of a Database Record File, Quality Assurance review procedures, and documentation of the Quality Assurance Review Process.

2.0 SCOPE

The methods described in this Standard Operating Procedure (SOP) shall be used consistently for all projects managed by Tetra Tech NUS (TtNUS).

3.0 GLOSSARY

Chain-of-Custody Form - A Chain-of-Custody Form is a printed form that accompanies a sample or a group of samples from the time of sample collection to the laboratory. The Chain-of-Custody Form is retained with the samples during transfer of samples from one custodian to another. The Chain-of-Custody Form is a controlled document that becomes part of the permanent project file. Chain-of-Custody and field documentation requirements are addressed in SOP SA-6.1.

Electronic Database - A database provided on a compact laser disk (CD). Such electronic databases will generally be prepared using public domain software such as DBase, RBase, Oracle, Visual FoxPro, Microsoft Access, Paradox, etc.

Hardcopy Database - A printed copy of a database prepared using the software discussed under the definition of an electronic database.

Form I - A printed copy of the analytical results for each sample.

Sample Tracking Summary - A printed record of sample information including the date the samples were collected, the number of samples collected, the sample matrix, the laboratory to which the samples were shipped, the associated analytical requirements for the samples, the date the analytical data were received from the laboratory, and the date that validation of the sample data was completed.

4.0 RESPONSIBILITIES

Database Records Custodian - It shall be the responsibility of the Database Records Custodian to update and file the Sample Tracking Summaries for all active projects on a weekly basis. It shall be the responsibility of the Database Records Custodian to ensure that the most recent copies of the Sample Tracking Summaries are placed in the Database Records file. It shall be the responsibility of the Database Records Custodian to ensure that a copy of all validation deliverables is provided to the Project Manager (for placement in the project file). It shall be the responsibility of the Database Records Custodian to ensure that photocopies of all validation deliverables and historical data and reports (as applicable) are placed in the Database Records file.

Data Validation Coordinator - It shall be the responsibility of the Data Validation Coordinator (or designee) to ensure that the Sample Tracking Summaries are maintained by the Database Records Custodian. It shall be the responsibility of the Data Validation Coordinator (or designee) to ensure that photocopies of all data validation deliverables are placed in the applicable Database Records file by the Database Records Custodian.

Earth Sciences Department Manager - It shall be the responsibility of the Earth Sciences Department Manager (or equivalent) to ensure that all field personnel are familiar with the requirements of this Standard Operating Procedure (specifically Section 5.5).

FOL - It shall be the responsibility of the FOL (FOL) of each project to ensure that all field technicians or sampling personnel are thoroughly familiar with this SOP, specifically regarding provision of the Chain-of-Custody Forms to the Database Records Custodian. Other responsibilities of the FOL are described in Sections 5.4 and 5.5.

Management Information Systems (MIS) Manager - It shall be the responsibility of the MIS Manager to ensure that copies of original electronic deliverables (CDs) are placed in both the project files and the Database Records File. It shall be the responsibility of the MIS Manager (or designee) to verify the completeness of the database (presence of all samples) in both electronic and hardcopy form in the Database Records File. It shall be the responsibility of the MIS Manager to ensure that Quality Assurance Reviews are completed and are attested to by Quality Assurance Reviewers. It shall be the responsibility of the MIS Manager to ensure that records of the Quality Assurance review process are placed in the Database Records File. It shall be the responsibility of the MIS Manager to ensure that both electronic and hardcopy forms of the final database are placed in both the project and the Database Record File. It shall be the responsibility of the MIS Manager to ensure that data validation qualifiers are entered in the database.

Furthermore, it shall be the responsibility of the MIS Manager to participate in project planning at the request of the Project Manager, specifically with respect to the generation of level of effort and schedule estimates. To support the project planning effort, the MIS Manager shall provide a copy of the MIS Request From included as Attachment A to the project manager. It shall be the responsibility of the MIS Manager to generate level of effort and budget estimates at the time database support is requested if a budget does not exist at the time of the request. The MIS Request Form shall be provided to the Project Manager at the time of any such requests. It shall be the responsibility of the MIS Manager to notify the Project Manager of any anticipated level of effort overruns or schedule noncompliances as soon as such problems arise along with full justification for any deviations from the budget estimates (provided they were generated by the MIS Manager). It shall be the responsibility of the MIS Manager to document any changes to the scope of work dictated by the Project Manager, along with an estimate of the impact of the change on the level of effort and the schedule.

Program/Department Managers - It shall be the responsibility of the Department and/or Program Managers (or designees) to inform their respective department's Project Managers of the existence and requirements of this SOP.

Project Manager - It shall be the responsibility of each Project Manager to determine the applicability of this SOP based on: (1) program-specific requirements, and (2) project size and objectives. It shall be the responsibility of the Project Manager (or designee) to ensure that the FOL is familiar with the requirements regarding Chain-of-Custody Form provision to the Database Records Custodian. It shall be the responsibility of the Project Manager (or designee) to determine which, if any, historical data are relevant and to ensure that such data (including all relevant information such as originating entity, sample locations, sampling dates, etc.) are provided to the Database Records Custodian for inclusion in the Database Records File. It shall be the responsibility of the Project Manager to obtain project planning input regarding the level of effort and schedule from the MIS Manager. It shall be the responsibility of the Project Manager to complete the database checklist (Attachment A) to support the level of effort and schedule estimate and to facilitate database preparation and subroutine execution.

Risk Assessment Department Manager - It shall be the responsibility of the Risk Assessment Department Manager to monitor compliance with this Standard Operating Procedure, to modify this SOP as necessary, and to take corrective action if necessary. Monitoring of the process shall be completed on a quarterly basis.

Quality Assurance Reviewers - It shall be the responsibility of the Quality Assurance Reviewers to verify the completeness of the sample results via review of the Chain-of-Custody Forms and Sample Tracking Summaries. It shall be the responsibility of the Quality Assurance Reviewers to ensure the correctness of the database via direct comparison of the hardcopy printout of the database and the hardcopy summaries of the original analytical data (e.g., Form Is provided in data validation deliverables). Correctness includes the presence of all relevant sample information (all sample information fields), agreement of the laboratory and database analytical results, and the presence of data validation qualifiers.

Quality Manager - It shall be the responsibility of the Quality Manager to monitor compliance with this Standard Operating Procedure via routine audits.

5.0 PROCEDURES

5.1 Introduction

Verification of the accuracy and completeness of an electronic database can only be accomplished via comparison of a hardcopy of the database with hardcopy of all relevant sample information. The primary purposes of this SOP are to ensure that 1) all necessary hardcopy information is readily available to Quality Assurance Reviewers; 2) ensure that the Quality Assurance review is completed in a consistent and comprehensive manner, and; 3) ensure that documentation of the Quality Assurance review process is maintained in the project file.

5.2 File Establishment

A Database Record file shall be established for a specific project at the discretion of the Project Manager. Initiation of the filing procedure will commence upon receipt of the first set of Chain-of-Custody documents from a FOL or sampling technician. The Database Record Custodian shall establish a project-specific file for placement in the Database Record File. Each file in the Database Record File shall consist of standard components placed in the file as the project progresses. Each file shall be clearly labeled with the project number, which shall be placed on the front of the file drawer and on each and every hanging file folder relevant to the project. The following constitute the minimum components of a completed file:

- Electronic Deliverables
- Sample Tracking Forms
- Chain-of-Custody Forms
- Data Validation Letters
- Quality Assurance Records

5.3 Electronic Deliverables

The format of electronic deliverables shall be specified in the laboratory procurement specification and shall be provided by the laboratory. The integrity of all original electronic data deliverables shall be maintained. This shall be accomplished via the generation of copies of each electronic deliverable provided by the laboratory. The original electronic deliverable shall be provided to the project manager for inclusion in the project file. A copy of the original electronic deliverable shall be placed in the Database Record File. The second copy shall be maintained by the MIS Manager (or designee) to be used as a working copy.

5.4 Sample Tracking Forms

Updated versions of the sample tracking form for each relevant project shall be maintained by the Database Record Custodian. The Sample Tracking Forms shall be updated any time additional Chain-of-Custody Forms are received from a FOL or sampling technician, or at any time that data are received from a laboratory, or at any time that validation of a given data package (sample delivery group) is completed. The Data Validation Coordinator shall inform the Database Record Custodian of the receipt of any data packages from the laboratory and of completion of validation of a given data package to facilitate updating of the Sample Tracking Form. The Database Record Custodian shall place a revised copy of the Sample Tracking Form in the Database Record File anytime it has been updated. Copies of the updated Sample Tracking Form shall also be provided to the project manager to apprise the project manager of sample package receipt, completion of validation, etc.

5.5 Chain-of-Custody Forms

The Chain-of-Custody Forms for all sampling efforts will be used as the basis for (1) updating the Sample Tracking Form, and (2) confirming that all required samples and associated analyses have been completed. It shall be the responsibility of the FOL (or sample technician) to provide a photocopy of all Chain-of-Custody Forms to the Database Record Custodian immediately upon completion of a sampling effort. The Database Record Custodian shall then place the copies of the Chain-of-Custody Form(s) in the Database Record File. Upon receipt of a sample data package from an analytical laboratory, the Data Validation Coordinator shall provide a copy of the laboratory Chain-of-Custody Form to the Database Record Custodian. The Database Record Custodian shall use this copy to update the Sample Tracking Summary and shall place the copy of the laboratory-provided Chain-of-Custody Form in the Database Record File. The photocopy of the laboratory-provided Chain-of Custody Form shall be stapled to the previously filed field copy. Upon receipt of all analytical data, two copies of the Chain-of-Custody will therefore be in the file. Review of the Chain-of-Custody Forms will therefore be a simple mechanism to determine if all data have been received. Chain-of-Custody is addressed in SOP SA-6.1.

5.6 Data Validation Letters

All data validation deliverables (or raw data summaries if validation is not conducted) shall be provided for inclusion in both the Database Record File and the project file. If USEPA regional- or client-specific requirements are such that Form Is (or similar analytical results) need not be provided with the validation deliverable, copies of such results must be appended to the deliverable. It is preferable, although not essential that the validation qualifiers be hand-written directly on the data summary forms. The data validation deliverables (and attendant analytical summaries) will provide the basis for direct comparison of the database printout and the raw data and qualifiers.

5.7 Historical Data

At the direction of the Project Manager, historical data may also be included in a project-specific analytical database. In the event that historical data are germane to the project, hardcopy of the historical data must be included in the Database Record File. Historical data may be maintained in the form of final reports or as raw data. The information contained in the historical data file must be sufficient to identify its origin, its collection date, the sample location, the matrix, and any and all other pertinent information. All available analytical data, Chain-of-Custody Forms, boring logs, well construction logs, sample location maps, shall be photocopied by the Project Manager (or designee) and placed in one or more 3-ring binders. All information shall be organized chronologically by matrix. It shall be the responsibility of the Project Manager (or designee) to ensure that all inconsistencies between analytical data, Chain-of-Custody Forms, boring logs, sample log sheets, and field logbooks are identified and corrected. The Project Manager (or designee) shall decide which nomenclature is appropriate and edit, initial and date all relevant forms. Data entry may only be performed on information that has undergone the aforementioned

editing process, thereby having a direct correlation between hardcopy information and what will become the electronic database.

6.0 RECORDS

Records regarding database preparation and quality assurance review include all those identified in the previous section. Upon completion of the database task, records from the file will be forwarded to the Project Manager for inclusion in the project file, or will be placed in bankers boxes (or equivalent) for storage. The final records for storage shall include the following minimum information on placards placed on both the top and end of the storage box:

Database Record File
PROJECT NUMBER: ____
SITE NAME: _____
DATE FILED: __/__/__
SUMMARY OF CONTENTS ENCLOSED
BOX _ OF _

Project- or program-specific record keeping requirements shall take precedence over the record keeping requirements of this SOP.

ATTACHMENT A

MIS REQUEST FORM

Tetra Tech NUS, Inc.

Project Name: | Request Date:
CTO: | Date Data Available for Production:
Project Manager: | Request in Support of:
Requestor: | Database Lead:
Program/Client: | GIS Lead:
State/EPA Region: | Statistics Lead:
Risk Lead:
Site Name(s) (Area, OU, etc.):
Sampling Date(s):
Matrix: ☐ GW ☐ SO ☐ SD ☐ SW ☐ Other:

Labels: ☐ Labels needed for an upcoming sampling event _____ Total # of Samples
_____ Estimated Hours — Additional Instructions:
_____ Due Date
_____ Complete ETS Charge No.
_____ FOL

Data Entry:
☐ Chemical data needs to be entered from hardcopy _____ Estimated # of Samples
☐ Chemical data needs to be formated electronically
☐ Field analytical data needs to be entered from hardcopy
☐ Geologic data needs to be entered from hardcopy
☐ Hydrology data needs to be entered from hardcopy
_____ Estimated Hours — Additional Instructions:
_____ Due Date
_____ Complete ETS Charge No.

Tables:
☐ Full Data Printout
☐ Summary of Positive Hits
☐ Occurance and Distribution ☐ with criteria
☐ Sampling Analytical Summary
☐ Other:
_____ Estimated Hours — Additional Instructions:
_____ Due Date
_____ Complete ETS Charge No.

GIS:
☐ General Facility Location
☐ Site Location
☐ Potentiometric Contours/Groundwater Flow
☐ Sample Location Proposed
☐ Sample Location Existing
☐ Tag Map Single Round
☐ Tag Map Multiple Round
☐ Isoconcentrations
☐ Chart Map
☐ 3D Visualization
☐ EGIS CD
☐ Other:
_____ Estimated Hours — Additional Instructions:
_____ Due Date
_____ Complete ETS Charge No.

Statistics: ☐ Yes
_____ Estimated Hours — Additional Instructions:
_____ Due Date
_____ Complete ETS Charge No.

Geostatistics: ☐ Yes
_____ Estimated Hours — Additional Instructions:
_____ Due Date
_____ Complete ETS Charge No.

TETRA TECH NUS, INC.	STANDARD OPERATING PROCEDURES	Number GH-1.2	Page 1 of 9
		Effective Date 09/03	Revision 2
		Applicability Tetra Tech NUS, Inc.	
		Prepared Earth Sciences Department	
Subject EVALUATION OF EXISTING MONITORING WELLS AND WATER LEVEL MEASUREMENT		Approved D. Senovich	

TABLE OF CONTENTS

SECTION **PAGE**

1.0 PURPOSE **2**

2.0 SCOPE **2**

3.0 GLOSSARY **2**

4.0 RESPONSIBILITIES **2**

5.0 PROCEDURES **2**

5.1 PRELIMINARY EVALUATION 3
5.2 FIELD INSPECTION 3
5.3 WATER LEVEL (HYDRAULIC HEAD) MEASUREMENTS 4
5.3.1 General 4
5.3.2 Water Level Measuring Techniques 5
5.3.3 Methods 5
5.3.4 Water Level Measuring Devices 6
5.3.5 Data Recording 6
5.3.6 Specific Quality Control Procedures for Water Level Measuring Devices 7
5.4 EQUIPMENT DECONTAMINATION 7
5.5 HEALTH AND SAFETY CONSIDERATIONS 7

6.0 RECORDS **7**

ATTACHMENTS

A MONITOIRNG WELL INSPECTON SHEET 8
B GROUNDWATER LEVEL MEASUREMENT SHEET 9

1.0 PURPOSE

The purpose of this procedure is to provide reference information regarding the proper methods for evaluating the physical condition and project utility of existing monitoring wells and determining water levels.

2.0 SCOPE

The procedures described herein are applicable to all existing monitoring wells and, for the most part, are independent of construction materials and methods.

3.0 GLOSSARY

Hydraulic Head - The height to which water will rise in a well.

Water Table - A surface in an unconfined aquifer where groundwater pressure is equal to atmospheric pressure (i.e., the pressure head is zero).

4.0 RESPONSIBILITIES

Site Geologist/Hydrogeologist - Has overall responsibility for the evaluation of existing wells, obtaining water level measurements and developing groundwater contour maps. The site geologist/hydrogeologist (in concurrence with the Project Manager) shall specify the reference point from which water levels are measured (usually a specific point on the upper edge of the inner well casing), the number and location of data points which shall be used for constructing a contour map, and how many complete sets of water levels are required to adequately define groundwater flow directions (e.g., if there are seasonal variations).

Field Personnel - Must have a basic familiarity with the equipment and procedures involved in obtaining water levels and must be aware of any project-specific requirements or objectives.

5.0 PROCEDURES

Accurate, valid and useful groundwater monitoring requires that four important conditions be met:

- Proper characterization of site hydrogeology.
- Proper design of the groundwater monitoring program, including adequate numbers of wells installed at appropriate locations and depths.
- Satisfactory methods of groundwater sampling and analysis to meet the project data quality objectives (DQOs).
- The assurance that specific monitoring well samples are representative of water quality conditions in the monitored interval.

To insure that these conditions are met, adequate descriptions of subsurface geology, well construction methods and well testing results must be available. The following steps will help to insure that the required data are available to permit an evaluation of the utility of existing monitoring wells for collecting additional samples.

5.1 Preliminary Evaluation

A necessary first step in evaluating existing monitoring well data is the study and review of the original work plan for monitoring well installation (if available). This helps to familiarize the site geologist/hydrogeologist with site-specific condition, and will promote an understanding of the original purpose of the monitoring wells.

The next step of the evaluation should involve a review of all available information concerning borehole drilling and well construction. This will allow interpretation of groundwater flow conditions and area geology, and will help to establish consistency between hydraulic properties of the well and physical features of the well or formation. The physical features which should be identified and detailed, if available, include:

- The well identification number, permit number and location by referenced coordinates, the distance from prominent site features, or the location of the well on a map.
- The installation dates, drilling methods, well development methods, past sampling dates, and drilling contractors.
- The depth to bedrock -- where rock cores were not taken, auger refusal, drive casing refusal or penetration test results (blow counts for split-barrel sampling) may be used to estimate bedrock interface.
- The soil profile and stratigraphy.
- The borehole depth and diameter.
- The elevation of the top of the protective casing, the top of the well riser, and the ground surface.
- The total depth of the well.
- The type of well materials, screen type, slot size, and length, and the elevation/depths of the screen, interval, and/or monitored interval.
- The elevation/depths of the tops and bottom of the filter pack and well seals and the type and size.

5.2 Field Inspection

During the onsite inspection of existing monitoring wells, features to be noted include:

- The condition of the protective casing, cap and lock.
- The condition of the cement seal surrounding the protective casing.
- The presence of depressions or standing water around the casing.
- The presence of and condition of dedicated sampling equipment.
- The presence of a survey mark on the inner well casing.

If the protective casing, cap and lock have been damaged or the cement collar appears deteriorated, or if there are any depressions around the well casing capable of holding water, surface water may have infiltrated into the well. This may invalidate previous sampling results unless the time when leakage started can be precisely determined.

The routine physical inspection must be followed by a more detailed investigation to identify other potential routes of contamination or sampling equipment malfunction. Any of these occurrences may invalidate

previously-collected water quality data. If the monitoring well is to be used in the future, considerations shown in the steps described above should be rectified to rehabilitate the well.

After disconnecting any wires, cables or electrical sources, remove the lock and open the cap. Check for the presence of organic vapors with a photoionization detector (PID) or flame-ionization detector (FID) to determine the appropriate worker safety level. The following information should be noted:

- Cap function.
- Physical characteristics and composition of the inner casing or riser, including inner diameter and annular space.
- Presence of grout between the riser and outer protective casing and the existence of drain holes in the protective casing.
- Presence of a riser cap, method of attachment to casing, and venting of the riser.
- Presence of dedicated sampling equipment; if possible, remove such equipment and inspect size, materials of construction and condition.

The final step of the field inspection is to confirm previous hydraulic or physical property data and to obtain data not previously available. This includes the determination of static water levels, total well depth and well obstruction. This may be accomplished using a weighted tape measure which can also be used to check for sediment (the weight will advance slowly if sediment is present, and the presence of sediment on the weight upon removal should be noted). If sediment is present and/or the well has not been sampled in 12 or more months, it should be redeveloped before sampling.

Lastly, as a final step, the location, condition and expected water quality of the wells should be reviewed in light of their usefulness for the intended purpose of the investigation.

See Attachment A, Monitoring Well Inspection Sheet.

5.3 Water Level (Hydraulic Head) Measurements

5.3.1 General

Groundwater level measurements can be made in monitoring wells, private or public water wells, piezometers, open boreholes, or test pits (after stabilization). Groundwater measurements should generally not be made in boreholes with drilling rods or auger flights present. If groundwater sampling activities are to occur, groundwater level measurements shall take place prior to well purging or sampling.

All groundwater level measurements shall be made to the nearest 0.01 foot, and recorded in the site geologist/hydrogeologist's field notebook or on the Groundwater Level Measurement Sheet (Attachment B), along with the date and time of the reading. The total depth of the well shall be measured and recorded, if not already known. Weather changes that occur over the period of time during which water levels are being taken, such as precipitation and barometric pressure changes, should be noted.

In measuring groundwater levels, there shall be a clearly-established reference point of known elevation, which is normally identified by a mark on the upper edge of the inner well casing. To be useful, the reference point should be tied in with an established USGS benchmark or other properly surveyed elevation datum. An arbitrary datum could be used for an isolated group of wells, if necessary.

Cascading water within a borehole or steel well casings can cause false readings with some types of sounding devices (chalked line, electrical). Oil layers may also cause problems in determining the true water level in a well. Special devices (interface probes) are available for measuring the thickness of oil layers and true depth to groundwater, if required.

Water level readings shall be taken regularly, as required by the site geologist/hydrogeologist. Monitoring wells or open-cased boreholes that are subject to tidal fluctuations should be read in conjunction with a tidal chart (or preferably in conjunction with readings of a tide staff or tide level recorder installed in the adjacent water body); the frequency of such readings shall be established by the site hydrogeologist. All water level measurements at a site used to develop a groundwater contour map shall be made in the shortest practical time to minimize affects due to weather changes.

5.3.2 Water Level Measuring Techniques

There are several methods for determining standing or changing water levels in boreholes and monitoring wells. Certain methods have particular advantages and disadvantages depending upon well conditions. A general description of these methods is presented, along with a listing of various advantages and disadvantages of each technique. An effective technique shall be selected for the particular site conditions by the site geologist/hydrogeologist.

In most instances, preparation of accurate potentiometric surface maps require that static water level measurements be obtained to a precision of 0.01 feet. To obtain such measurements in individual accessible wells, electrical water level indicator methods have been found to be best, and thus should be utilized. Other, less precise methods, such as the popper or bell sound, or bailer line methods, should be avoided. When a large number of (or continuous) readings are required, time-consuming individual readings are not usually feasible. In such cases, it is best to use a pressure transducer.

5.3.3 Methods

Water levels can be measured by several different techniques, but the same steps shall be followed in each case. The proper sequence is as follows:

1. Check operation of recording equipment above ground. Prior to opening the well, don personal protective equipment, as required. Never remove an air-tight lock (such as a J-plug) with your face over the well. Pressure changes within the well may explosively force the cap off once loosened.

2. Record all information specified below in the geologist/hydrogeologist's field notebook or on the Groundwater Level Measurement Sheet (Attachment B):

    - Well number.
    - Water level (to the nearest 0.01 foot). Water levels shall be taken from the surveyed reference mark on the top edge of the inner well casing. If the J-plug was on the well very tightly, it may take several minutes for the water level to stabilize.
    - Time and day of the measurement.
    - Thickness of free product if present.

Water level measuring devices with permanently marked intervals shall be used. The devices shall be free of kinks or folds which will affect the ability of the equipment to hang straight in the well pipe.

5.3.4 Water Level Measuring Devices

Electric Water Level Indicators

These are the most commonly used devices and consist of a spool of small-diameter cable and a weighted probe attached to the end. When the probe comes in contact with the water, an electrical circuit is closed and a meter, light, and/or buzzer attached to the spool will signal the contact.

There are a number of commercial electric sounders available, none of which is entirely reliable under all conditions likely to occur in a contaminated monitoring well. In conditions where there is oil on the water, groundwater with high specific conductance, water cascading into the well, steel well casing, or a turbulent water surface in the well, measuring with an electric sounder may be difficult.

For accurate readings, the probe shall be lowered slowly into the well adjacent to the survey mark on the inner well casing. The electric tape is read (to the nearest 0.01 ft.) at the measuring point and recorded where contact with the water surface was indicated.

Popper or Bell Sounder

A bell- or cup-shaped weight that is hollow on the bottom is attached to a measuring tape and lowered into the well. A "plopping" or "popping" sound is made when the weight strikes the surface of the water. An accurate reading can be determined by lifting and lowering the weight in short strokes, and reading the tape when the weight strikes the water. This method is not sufficiently accurate to obtain water levels to 0.01 feet, and thus is more appropriate for obtaining only approximate water levels quickly.

Pressure Transducer

Pressure transducers can be lowered into a well or borehole to measure the pressure of water and therefore the water elevation above the transducer. The transducer is wired into a recorder at the surface to record changes in water level with time. The recorder digitizes the information and can provide a printout or transfer the information to a computer for evaluation (using a well drawdown/recovery model). The pressure transducer should be initially calibrated with another water level measurement technique to ensure accuracy. This technique is very useful for hydraulic conductivity testing in highly permeable material where repeated, accurate water level measurements are required in a very short period of time. A sensitive transducer element is required to measure water levels to 0.01 foot accuracy.

Borehole Geophysics

Approximate water levels can be determined during geophysical logging of the borehole (although this is not the primary purpose for geophysical logging and such logging is not cost effective if used only for this purpose). Several logging techniques will indicate water level. Commonly-used logs which will indicate saturated/unsaturated conditions include the spontaneous potential (SP) log and the neutron log.

5.3.5 Data Recording

Water level measurements, time, data, and weather conditions shall be recorded in the geologist/hydrogeologist's field notebook or on the Groundwater Level Measurement Sheet. All water level measurements shall be measured from a known reference point. The reference point is generally a marked point on the upper edge of the inner well casing that has been surveyed for an elevation. The exact reference point shall be marked with permanent ink on the casing since the top of the casing may not be entirely level. It is important to note changes in weather conditions because changes in the barometric pressure may affect the water level within the well.

5.3.6 Specific Quality Control Procedures for Water Level Measuring Devices

All groundwater level measurement devices must be cleaned before and after each use to prevent cross contamination of wells. Manufacturer's instructions for cleaning the device shall be strictly followed. Some devices used to measure groundwater levels may need to be calibrated. These devices shall be calibrated to 0.01 foot accuracy and any adjustments/corrections shall be recorded in the field logbook/notebook. After the corrections/adjustments are made to the measuring device and entered in the field logbook/notebook, the corrected readings shall be entered onto the Groundwater Level Measurement Sheet (Attachment B). Elevations will be entered on the sheet when they become available.

5.4 Equipment Decontamination

Equipment used for water level measurements provide a mechanism for potentially cross contaminating wells. Therefore, all portions of a device which project down the well casing must be decontaminated prior to advancing to the next well. Decontamination procedures vary based on the project objectives but must be defined prior to conducting any field activities including the collection of water level data. Consult the project planning documents and SA-7.1 Decontamination of Field Equipment.

5.5 Health and Safety Considerations

Groundwater contaminated by volatile organic compounds may release toxic vapors into the air space inside the well pipe. The release of this air when the well is initially opened is a health/safety hazard which must be considered. Initial monitoring of the well headspace and breathing zone concentrations using a PID or FID shall be performed to determine required levels of protection. Under certain conditions, air-tight well caps may explosively fly off the well when the pressure is relieved. Never stand directly over a well when uncapping it.

6.0 RECORDS

A record of all field procedures, tests and observations must be recorded in the site logbook or designated field notebook. Entries in the log/notebook should include the individuals participating in the field effort, and the date and time. The use of annotated sketches may help to supplement the evaluation.

ATTACHMENT A
MONITORING WELL INSPECTION SHEET

Monitoring Well Inspection Sheet

Project Name: _____ Date: _____

Location: _____ Time: _____

Tidally Influenced: Y / N Personnel: _____

Field Measurements				
Well ID	PID Reading PPM	Depth to Water *	Total Depth *	Flush Mt./ Stick-up

Well Construction Details (Taken from construction logs)		
Total Depth *	Ground Elev.	Top/Btm Screen *

Check List:

Riser Pipe Material:
Riser Notched for Surveyors:
Well ID Tag In-place:
Well security:
Photo taken:

Condition of Well:

Protective Case:
Riser:
Well Pad:
Other:

Presence/Evidence of:

Standing Water Around Well:
Existing Sampling Equipment:
Sediment build-up in Well Btm:

Comments:

** = Measurements are from the top of the inner case to the nearest 0.01'*

ATTACHMENT B
GROUNDWATER LEVEL MESUREMENT SHEET

Tetra Tech NUS, Inc.

GROUNDWATER LEVEL MEASUREMENT SHEET

Project Name: _____ **Project No.:** _____
Location: _____ **Personnel:** _____
Weather Conditions: _____ **Measuring Device:** _____
Tidally Influenced: Yes ___ No ___ **Remarks:** _____

Well or Piezometer Number	Date	Time	Elevation of Reference Point (feet)*	Water Level Indicator Reading (feet)*	Thickness of Free Product (feet)*	Comments

* All measurements to the nearest 0.01 foot, from surveyed mark (unless noted)

Page ___ of ___

TETRA TECH NUS, INC.	STANDARD OPERATING PROCEDURES	Number GH-1.3	Page 1 of 26
		Effective Date 06/99	Revision 1
		Applicability Tetra Tech NUS, Inc.	
		Prepared Earth Sciences Department	
Subject SOIL AND ROCK DRILLING METHODS		Approved D. Senovich	

TABLE OF CONTENTS

SECTION		PAGE
1.0	**PURPOSE**	**3**
2.0	**SCOPE**	**3**
3.0	**GLOSSARY**	**3**
4.0	**RESPONSIBILITIES**	**3**
5.0	**PROCEDURES**	**4**
5.1	GENERAL	4
5.2	DRILLING METHODS	4
5.2.1	Continuous-Flight Hollow-Stem Auger Drilling	5
~~5.2.2~~	~~Continuous-Flight Solid-Stem Auger Drilling~~	~~6~~
5.2.3	Rotary Drilling	7
~~5.2.4~~	~~Rotosonic Drilling~~	~~9~~
~~5.2.5~~	~~Reverse-Circulation Rotary Drilling~~	~~9~~
~~5.2.6~~	~~Drill-through Casing Driver~~	~~10~~
~~5.2.7~~	~~Cable Tool Drilling~~	~~11~~
~~5.2.8~~	~~Jet Drilling (Washing)~~	~~12~~
5.2.9	Drilling with a Hand Auger	13
~~5.2.10~~	~~Rock Drilling and Coring~~	~~13~~
5.2.11	Drilling & Support Vehicles	14
5.2.12	Equipment Sizes	15
5.2.13	Estimated Drilling Progress	16
5.3	PREVENTION OF CROSS-CONTAMINATION	16
5.4	CLEANOUT OF CASING PRIOR TO SAMPLING	17
5.5	MATERIALS OF CONSTRUCTION	18
5.6	SUBSURFACE SOIL SAMPLES	19
~~5.7~~	~~ROCK SAMPLING (CORING) (ASTM D2113-83)~~	~~19~~
~~5.7.1~~	~~Diamond Core Drilling~~	~~23~~
~~5.7.2~~	~~Rock Sample Preparation and Documentation~~	~~23~~
6.0	**REFERENCES**	**24**

ATTACHMENT

A	DRILLING EQUIPMENT SIZES	25

FIGURE

NUMBER **PAGE**

~~1 STANDARD SIZES OF CORE BARRELS AND CASING ..... 20~~

Dw 1/10/11

1.0 PURPOSE

The purpose of this procedure is to describe the methods and equipment necessary to perform soil and rock borings and identify the equipment, sequence of events, and appropriate methods necessary to obtain soil, both surface and subsurface, and rock samples during field sampling activities.

2.0 SCOPE

This guideline addresses most of the accepted and standard drilling techniques, their benefits, and drawbacks. It should be used generally to determine what type of drilling techniques would be most successful depending on site-specific geologic conditions and the type of sampling required.

The sampling methods described within this procedure are applicable to collecting surface and subsurface soil samples, and obtaining rock core samples for lithologic and hydrogeologic evaluation, excavation/foundation design, remedial alternative design and related civil engineering purposes.

3.0 GLOSSARY

Rock Coring - A method in which a continuous solid cylindrical sample of rock or compact rock-like soil is obtained by the use of a double tube core barrel that is equipped with an appropriate diamond-studded drill bit which is advanced with a hydraulic rotary drilling machine.

Wire-Line Coring - As an alternative to conventional coring, this technique is valuable in deep hole drilling, since this method eliminates trips in and out of the hole with the coring equipment. With this technique, the core barrel becomes an integral part of the drill rod string. The drill rod serves as both a coring device and casing.

4.0 RESPONSIBILITIES

Project Manager - In consultation with the project geologist, the Project Manager is responsible for evaluating the drilling requirements for the site and specifying drilling techniques that will be successful given the study objectives and the known or suspected geologic conditions at the site. The Project Manager also determines the disposal methods for products generated by drilling, such as drill cuttings and well development water, as well as any specialized supplies or logistical support required for the drilling operations.

Field Operations Leader (FOL) - The FOL is responsible for the overall supervision and scheduling of drilling activities, and is strongly supported by the project geologist.

Project Geologist - The project geologist is responsible for ensuring that standard and approved drilling procedures are followed. The geologist will generate a detailed boring log for each test hole. This log shall include a description of materials, samples, method of sampling, blow counts, and other pertinent drilling and testing information that may be obtained during drilling (see SOPs SA-6.3 and GH-1.5). Often this position for inspecting the drilling operations may be filled by other geotechnical personnel, such as soils and foundation engineers, civil engineers, etc.

Determination of the exact location for borings is the responsibility of the site geologist. The final location for drilling must be properly documented on the boring log. The general area in which the borings are to be located will be shown on a site map included in the Work Plan and/or Sampling and Analysis Plan.

Drilling Subcontractor - Operates under the supervision of the FOL. Responsible for obtaining all drilling permits and clearances, and supplying all services (including labor), equipment and material required to perform the drilling, testing, and well installation program, as well as maintenance and quality control of such required equipment except as stated in signed and approved subcontracts.

The driller must report any major technical or analytical problems encountered in the field to the FOL within 24 hours of determination, and must provide advance written notification of any changes in field procedures, describing and justifying such changes. No such changes shall be made unless requested and authorized in writing by the FOL (with the concurrence of the Project Manager). Depending on the subcontract, the Project Manager may need to obtain written authorization from appropriate administrative personnel before approving any changes.

The drilling subcontractor is responsible for following decontamination procedures specified in the project plan documents. Upon completion of the work, the driller is responsible for demobilizing all equipment, cleaning up any materials deposited on site during drilling operations, and properly backfilling any open borings.

5.0 PROCEDURES

5.1 General

The purpose of drilling boreholes is:

- To determine the type, thickness, and certain physical and chemical properties of the soil, water and rock strata which underlie the site.
- To install monitoring wells or piezometers.

All drilling and sampling equipment will be cleaned between samples and borings using appropriate decontamination procedures as outlined in SOP SA-7.1. Unless otherwise specified, it is generally advisable to drill borings at "clean" locations first, and at the most contaminated locations last, to reduce the risk of spreading contamination between locations. All borings must be logged by the site geologist as they proceed (see SOPs SA-6.3 and GH-1.5). Situations where logging would not be required would include installation of multiple well points within a small area, or a "second attempt" boring adjacent to a boring that could not be continued through resistant material. In the latter case, the boring log can be resumed 5 feet above the depth at which the initial boring was abandoned, although the site geologist should still confirm that the stratigraphy at the redrilled location conforms essentially with that encountered at the original location. If significant differences are seen, each hole should be logged separately.

5.2 Drilling Methods

The selected drilling methods described below apply to drilling in subsurface materials, including, but not limited to, sand, gravel, clay, silt, cobbles, boulders, rock and man-made fill. Drilling methods should be selected after studying the site geology and terrain, the waste conditions at the site, and reviewing the purpose of drilling and the overall subsurface investigation program proposed for the site. The full range of different drilling methods applicable to the proposed program should be identified with final selection based on relative cost, availability, time constraints, and how well each method meets the sampling and testing requirements of the individual drilling program.

5.2.1 Continuous-Flight Hollow-Stem Auger Drilling

This method of drilling consists of rotating augers with a hollow stem into the ground. Cuttings are brought to the surface by the rotating action of the auger. This method is relatively quick and inexpensive. Advantages of this type of drilling include:

- Samples can be obtained without pulling the augers out of the hole. However, this is a poor method for obtaining grab samples from thin, discrete formations because of mixing of soils which occurs as the material is brought to the surface. Sampling of such formations requires the use of split-barrel or thin-wall tube samplers advanced through the hollow core of the auger.
- No drilling fluids are required.
- A well can be installed inside the auger stem and backfilled as the augers are withdrawn.

Disadvantages and limitations of this method of drilling include:

- Augering can only be done in unconsolidated materials.

- The inside diameter of hollow stem augers used for well installation should be at least 4 inches greater than the well casing. Use of such large-diameter hollow-stem augers is more expensive than the use of small-diameter augers in boreholes not used for well installation. Furthermore, the density of unconsolidated materials and depths become more of a limiting factor. More friction is produced with the larger diameter auger and subsequently greater torque is needed to advance the boring.

- The maximum effective depth for drilling is 150 feet or less, depending on site conditions and the size of augers used.

- In augering through clean sand formations below the water table, the sand will tend to flow into the hollow stem when the plug is removed for soil sampling or well installation. If the condition of "running" or "flowing" sands is persistent at a site, an alternative method of drilling is recommended, in particular for wells or boreholes deeper than 25 feet.

Hollow-stem auger drilling is the preferred method of drilling. Most alternative methods require the introduction of water or mud downhole (air rotary is the exception) to maintain the open borehole. With these other methods, great care must be taken to ensure that the method does not interfere with the collection of a representative sample (which may be the prime objective of the borehole construction). With this in mind, the preferred order of choice of drilling method after hollow-stem augering (HSA) is:

- Cable tool
- Casing drive (air)
- Air rotary
- Mud rotary
- Rotosonic
- Drive and wash
- Jetting

However, the use of any method will also depend on efficiency and cost-effectiveness. In many cases, mud rotary is the only feasible alternative to hollow-stem augering. Thus, mud rotary drilling is generally acceptable as a first substitute for HSA.

The procedures for sampling soils through holes drilled by hollow-stem auger shall conform with the applicable ASTM Standards: D1587-83 and D1586-84. The guidelines established in SOP SA-1.3 shall

also be followed. The hollow-stem auger may be advanced by any power-operated drilling machine having sufficient torque and ram range to rotate and force the auger to the desired depth. The machine must, however, be equipped with the accessory equipment needed to perform required sampling, or rock coring.

The hollow-stem auger may be used without the plug when boring for geotechnical examination or for well installation. However, when drilling below the water table, specially designed plugs which allow passage of formation water but not solid material shall be used (see Reference 1 of this guideline). This drilling configuration method also prevents blow back and plugging of the auger when the plug is removed for sampling.

Alternately, it may be necessary to keep the hollow stem full of water, at least to the level of the water table, to prevent blowback and plugging of the auger. If water is added to the hole, it must be sampled and analyzed to determine if it is free from contaminants prior to use. In addition, the amount of water introduced, the amount recovered upon attainment of depth, and the amount of water extracted during well development must be carefully logged in order to ensure that a representative sample of the formation water can be obtained. Well development should occur as soon after well completion as practicable (see SOP GH-2.8 for well development procedures). If gravelly or hard material is encountered which prevents advancing the auger to the desired depth, augering should be halted and either driven casing or hydraulic rotary methods should be attempted. If the depth to the bedrock/soil interface and bedrock lithology must be determined, then a 5-foot confirmatory core run should be conducted (see Section 5.2.9).

At the option of the Field Operations Leader (in communication with the Project Manager), when resistant materials prevent the advancement of the auger, a new boring can be attempted. The original boring must be properly backfilled and the new boring started a short distance away at a location determined by the site geologist. If multiple water bearing strata were encountered, the original boring must be grouted. In some formations, it may be prudent to also grout borings which penetrate only the water table aquifer, since loose soil backfill in the boring may still provide a preferred pathway for surface liquids to reach the water table. Backfilling requirements may also be driven by state or local regulations.

5.2.2 Continuous-Flight Solid-Stem Auger Drilling

DW 1/10/11

This drilling method is similar to hollow-stem augering. Practical application of this method is severely restricted compared to use of hollow-stem augers. Split-barrel (split-spoon) sampling cannot be performed without pulling the augers out, which may allow the hole to collapse. The continuous-flight solid-stem auger drilling method is therefore very time consuming and is not cost effective. Also, augers would have to be withdrawn before installing a monitoring well, which again, may allow the hole to collapse. Furthermore, geologic logging by examining the soils brought to the surface is unreliable, and depth to water may be difficult to determine while drilling.

There would be very few situations where use of a solid-stem auger would be preferable to other drilling methods. The only practical applications of this method would be to drill boreholes for well installation where no lithologic information is desired and the soils are such that the borehole can be expected to remain open after the augers are withdrawn. Alternatively, this technique can be used to find depth to bedrock in an area when no other information is required from drilling.

5.2.3 Rotary Drilling

Direct rotary drilling includes air-rotary and fluid-rotary drilling. For air or fluid-rotary drilling, the rotary drill may be advanced to the desired depth by any power-operated drilling machine having sufficient torque

and ram range to rotate and force the bit to the desired depth. The drilling machine must, however, be equipped with any accessory equipment needed to perform required sampling, or coring. Prior to sampling, any settled drill cuttings in the borehole must be removed.

Air-rotary drilling is a method of drilling where the drill rig simultaneously turns and exerts a downward pressure on the drilling rods and bit while circulating compressed air down the inside of the drill rods, around the bit, and out the annulus of the borehole. Air circulation serves to both cool the bit and remove the cuttings from the borehole. Advantages of this method include:

- The drilling rate is high (even in rock).
- The cost per foot of drilling is relatively low.
- Air-rotary rigs are common in most areas.
- No drilling fluid is required (except when water is injected to keep down dust).
- The borehole diameter is large, to allow room for proper well installation procedures.

Disadvantages to using this method include:

- Formations must be logged from the cuttings that are blown to the surface and thus the depths of materials logged are approximate.
- Air blown into the formation during drilling may "bind" the formation and impede well development and natural groundwater flow.
- In-situ samples cannot be taken, unless the hole is cased.
- Casing must generally be used in unconsolidated materials.
- Air-rotary drill rigs are large and heavy.
- Large amounts of Investigation Derived Waste (IDW) may be generated which may require containerization, sampling, and off-site disposal.

A variation of the typical air-rotary drill bit is a down hole hammer which hammers the drill bit down as it drills. This makes drilling in hard rock faster. Air-rotary drills can also be adapted to use for rock coring although they are generally slower than other types of core drills. A major application of the air-rotary drilling method would be to drill holes in rock for well installation.

Fluid-Rotary drilling operates in a similar manner to air-rotary drilling except that a drilling fluid ("mud") or clean water is used in place of air to cool the drill bit and remove cuttings. There are a variety of fluids that can be used with this drilling method, including bentonite slurry and synthetic slurries. If a drilling fluid other than water/cuttings is used, it must be a natural clay (i.e., bentonite) and a "background" sample of the fluid should be taken for analysis of possible organic or inorganic contaminants.

Advantages to the fluid-rotary drilling method include:

- The ability to drill in many types of formations.
- Relatively quick and inexpensive.
- Split-barrel (split-spoon) or thin-wall (Shelby) tube samples can be obtained without removing drill rods if the appropriate size drill rods and bits (i.e., fish-tail or drag bit) are used.

- In some borings temporary casing may not be needed as the drilling fluids may keep the borehole open.

- Drill rigs are readily available in most areas.

Disadvantages to this method include:

- Formation logging is not as accurate as with hollow-stem auger method if split-barrel (split-spoon) samples are not taken (i.e., the depths of materials logged from cuttings delivered to the surface are approximate).

- Drilling fluids reduce permeability of the formation adjacent to the boring to some degree, and require more extensive well development than "dry" techniques (augering, air-rotary).

- No information on depth to water is obtainable while drilling.

- Fluids are needed for drilling, and there is some question about the effects of the drilling fluids on subsequent water samples obtained. For this reason as well, extensive well development may be required.

- In very porous materials (i.e., rubble fill, boulders, coarse gravel) drilling fluids may be continuously lost into the formation. This requires either constant replenishment of the drilling fluid, or the use of casing through this formation.

- Drill rigs are large and heavy, and must be supported with supplied water.

- Groundwater samples can be potentially diluted with drilling fluid.

The procedures for performing direct rotary soil investigations and sampling shall conform with the applicable ASTM standards: D2113-83, D1587-83, and D1586-84.

Soil samples shall be taken as specified by project plan documents, or more frequently, if requested by the project geologist. Any required sampling shall be performed by rotation, pressing, or driving in accordance with the standard or approved method governing use of the particular sampling tool.

When field conditions prevent the advancement of the hole to the desired depth, a new boring may be drilled at the request of the Field Operations Leader. The original boring shall be backfilled using methods and materials appropriate for the given site and a new boring started a short distance away at a location determined by the project geologist.

5.2.4 Rotosonic Drilling

The Rotosonic drilling method employs a high frequency vibrational and low speed rotational motion coupled with down pressure to advance the cutting edge of a drill string. This produces a uniform borehole while providing a continuous, undisturbed core sample of both unconsolidated and most bedrock formations. Rotosonic drilling advances a 4-inch diameter to 12-inch diameter core barrel for sampling and can advance up to a 12-inch diameter outer casing for the construction of standard and telescoped monitoring wells. During drilling, the core barrel is advanced ahead of the outer barrel in increments as determined by the site geologist and depending upon type of material, degree of subsurface contamination and sampling objectives.

The outer casing can be advanced at the same time as the inner drill string and core barrel, or advanced down over the inner drill rods and core barrel, or after the core barrel has moved ahead to collect the undisturbed sample and has been pulled out of the borehole. The outer casing can be advanced dry in most cases, or can be advanced with water or air depending upon the formations being drilled, the depth and diameter of the hole, or requirements of the project.

Advantages of this method include:

- Sampling and well installation are faster as compared to other drilling methods.
- Continuous sampling, with larger sample volume as compared to split-spoon sampling.
- The ability to drill through difficult formations such as cobbles or boulders, hard till and bedrock.
- Reduction of IDW by an average of 70 to 80 percent.
- Well installations are quick and controlled by elimination of potential bridging of annular materials during well installation, due to the ability to vibrate the outer casing during removal.

Disadvantages include:

- The cost for Rotosonic drilling as compared to other methods are generally higher. However, the net result can be a significant savings considering reduced IDW and shortened project duration.
- Rotosonic drill rigs are large and need ample room to drill, however, Rotosonic units can be placed on the ground or placed on an ATV.
- There are a limited number of Rotosonic drilling contractors at the present time.

5.2.5 Reverse Circulation Rotary Drilling

The common reverse-circulation rig is a water or mud-rotary rig with a large-diameter drill pipe which circulates the drilling water down the annulus and up the inside of the drill pipe (reverse flow direction from direct mud-rotary). This type of rig is used for the construction of large-capacity production water wells and is not suited for small, water quality sampling wells because of the use of drilling muds and the large-diameter hole which is created. A few special reverse-circulation rotary rigs are made with double-wall drill pipe. The drilling water or air is circulated down the annulus between the drill pipes and up inside the inner pipe.

Advantages of the latter method include:

- The formation water is not contaminated by the drilling water.
- Formation samples can be obtained, from known depths.
- When drilling with air, immediate information is available regarding the water-bearing properties of formations penetrated.
- Collapsing of the hole in unconsolidated formations is not as great a problem as when drilling with the normal air-rotary rig.

Disadvantages include:

- Double-wall, reverse-circulation drill rigs are rare and expensive to operate.
- Placing cement grout around the outside of the well casing above a well screen often is difficult, especially when the screen and casing are placed down through the inner drill pipe before the drill pipe is pulled out.

5.2.6 Drill-through Casing Driver

The driven-casing method consists of alternately driving casing (fitted with a sharp, hardened casing shoe) into the ground using a hammer lifted and dropped by the drill rig (or an air-hammer) and cleaning out the casing using a rotary chopping bit and air or water to flush out the materials. The casing is driven down in stages (usually 5 feet per stage); a continuous record is kept of the blows per foot in driving the casing (see SOP GH-1.5). The casing is normally advanced by a 300-pound hammer falling freely through a height of 30 inches. Simultaneous washing and driving of the casing is not recommended. If this procedure is used, the elevations within which wash water is used and in which the casing is driven must be clearly recorded.

The driven casing method is used in unconsolidated formations only. When the boring is to be used for later well installation, the driven casing used should be at least 4 inches larger in diameter than the well casing to be installed. Advantages to this method of drilling include:

- Split-barrel (split-spoon) sampling can be conducted while drilling.
- Well installation is easily accomplished.
- Drill rigs used are relatively small and mobile.
- The use of casing minimizes flow into the hole from upper water-bearing layers; therefore, multiple aquifers can be penetrated and sampled for rough field determinations of some water quality parameters.

Some of the disadvantages include:

- This method can only be used in unconsolidated formations.
- The method is slower than other methods (average drilling progress is 30 to 50 feet per day).
- Maximum depth of the borehole varies with the size of the drill rig and casing diameter used, and the nature of the formations drilled.
- The cost per hour or per foot of drilling may be substantially higher than other drilling methods.
- It is difficult and time consuming to pull back the casing if it has been driven very deep (deeper than 50 feet in many formations).

5.2.7 Cable Tool Drilling

A cable tool rig uses a heavy, solid-steel, chisel-type drill bit ("tool") suspended on a steel cable, which when raised and dropped, chisels or pounds a hole through the soils and rock. Drilling progress may be

expedited by the use of "slip-jars" which serve as a cable-activated down hole percussion device to hammer the bit ahead.

When drilling through the unsaturated zone, some water must be added to the hole. The cuttings are suspended in the water and then bailed out periodically. Below the water table, after sufficient ground water enters the borehole to replace the water removed by bailing, no further water needs to be added. When soft caving formations are encountered, it is usually necessary to drive casing as the hole is advanced to prevent collapse of the hole. Often the drilling can be only a few feet below the bottom of the casing. Because the drill bit is lowered through the casing, the hole created by the bit is smaller than the casing. Therefore, the casing (with a sharp, hardened casing shoe on the bottom) must be driven into the hole (see Section 5.2.5 of this guideline).

Advantages of the cable-tool method include the following:

- Information regarding water-bearing zones is readily available during the drilling. Even relative permeabilities and rough water quality data from different zones penetrated can be obtained by skilled operators.
- The cable-tool rig can operate satisfactorily in all formations, but is best suited for caving, boulder, cobble or coarse gravel type formations (e.g., glacial till) or formations with large cavities above the water table (such as limestones).
- When casing is used, the casing seals formation water out of the hole, preventing down hole contamination and allowing sampling of deeper aquifers for field-measurable water quality parameters.
- Split-barrel (split-spoon) or thin-wall (Shelby) tube samples can be collected through the casing.

Disadvantages include:

- Drilling is slow compared with rotary rigs.
- The necessity of driving the casing in unconsolidated formations requires that the casing be pulled back if exposure of selected water-bearing zones is desired. This process complicates the well completion process and often increases costs. There is also a chance that the casing may become stuck in the hole.
- The relatively large diameters required (minimum of 4-inch casing) plus the cost of steel casing result in higher costs compared to rotary drilling methods where casing is not required (e.g., such use of a hollow-stem auger).
- Cable-tool rigs have largely been replaced by rotary rigs. In some parts of the U.S., availability may be difficult.

5.2.8 Jet Drilling (Washing)

Jet drilling, which should be used only for piezometer or vadose zone sampler installation, consists of pumping water or drilling mud down through a small diameter (1/2- to 2-inch) standard pipe (steel or PVC). The pipe may be fitted with a chisel bit or a special jetting screen. Formation materials dislodged by the bit and jetting action of the water are brought to the surface through the annulus around the pipe. As the pipe is jetted deeper, additional lengths of pipe may be added at the surface.

Jet percussion is a variation of the jetting method, in which the casing is driven with a drive weight. Normally, this method is used to place 2-inch-diameter casing in shallow, unconsolidated sand formations, but this method has also been used to install 3- to 4-inch-diameter casings to a depth of 200 feet.

Jetting is acceptable in very soft formations, usually for shallow sampling, and when introduction of drilling water to the formation is acceptable. Such conditions would occur during rough stratigraphic investigation or installation of piezometers for water level measurement. Advantages of this method include:

- Jetting is fast and inexpensive.
- Because of the small amount of equipment required, jetting can be accomplished in locations where access by a normal drilling rig would be very difficult. For example, it would be possible to jet down a well point in the center of a lagoon at a fraction of the cost of using a drill rig.
- Jetting numerous well points just into a shallow water table is an inexpensive method for determining the water table contours, hence flow direction.

Disadvantages include the following:

- A large amount of foreign water or drilling mud is introduced above and into the formation to be sampled.
- Jetting is usually done in very soft formations which are subject to caving. Because of this caving, it is often not possible to place a grout seal above the screen to assure that water in the well is only from the screened interval.
- The diameter of the casing is usually limited to 2 inches.
- Jetting is only possible in very soft formations that do not contain boulders or coarse gravel, and the depth limitation is shallow (about 30 feet without jet percussion equipment).
- Large quantities of water are often needed.

5.2.9 Drilling with a Hand Auger

This method is applicable wherever the formation, total depth of sampling, and the site and groundwater conditions are such as to allow hand auger drilling. Hand augering can also be considered at locations where drill rig access is not possible. All hand auger borings will be performed according to ASTM D1452-80.

Samples should be taken continuously unless otherwise specified by the project plan documents. Any required sampling is performed by rotation, pressing, or driving in accordance with the standard or approved method governing use of the particular sampling tool. Typical equipment used for sampling and advancing shallow "hand auger" holes are Iwan samplers (which are rotated) or post hole diggers (which are operated like tongs). These techniques are slow but effective where larger pieces of equipment do not have access, and where very shallow holes are desired (less than 15 feet). Surficial soils must be composed of relatively soft and non-cemented formations to allow penetration by the auger.

5.2.10 Rock Drilling and Coring

When soil borings cannot be continued using augers or rotary methods due to the hardness of the soil or when rock or large boulders are encountered, drilling and sampling can be performed using a diamond bit corer in accordance with ASTM D2113.

Drilling is done by rotating and applying downward pressure to the drill rods and drill bit. The drill bit is a circular, hollow, diamond-studded bit attached to the outer core barrel in a double-tube core barrel. The use of single-tube core barrels is not recommended, as the rotation of the barrel erodes the sample and limits its use for detailed geological evaluation. Water or air is circulated down through the drill rods and annular space between the core barrel tubes to cool the bit and remove the cuttings. The bit cuts a core out of the rock which rises into an inner barrel mounted inside the outer barrel. The inner core barrel and rock core are removed by lowering a wire line with a coupling into the drill rods, latching onto the inner barrel and withdrawing the inner barrel. A less efficient variation of this method utilizes a core barrel that cannot be removed without pulling all of the drill rods. This variation is practical only if less than 50 feet of core is required.

Core borings are made through the casing used for the soil borings. The casing must be driven and sealed into the rock formation to prevent seepage from the overburden into the hole to be cored (see Section 5.3 of this guideline). A double-tube core barrel with a diamond bit and reaming shell or equivalent should be used to recover rock cores of a size specified in the project plans. The most common core barrel diameters are listed in Attachment A.

Soft or decomposed rock should be sampled with a driven split-barrel whenever possible or cored with a Denison or Pitcher sampler.

When coring rock, including shale and claystone, the speed of the drill and the drilling pressure, amount and pressure of water, and length of run can be varied to give the maximum recovery from the rock being drilled. Should any rock formation be so soft or broken that the pieces continually fall into the hole causing unsatisfactory coring, the hole should be reamed and a flush-joint casing installed to a point below the broken formation. The size of the flush-joint casing must permit securing the core size specified. When soft or broken rock is anticipated, the length of core runs should be reduced to less than 5 feet to avoid core loss and minimize core disturbance.

Advantages of core drilling include:

- Undisturbed rock cores can be recovered for examination and/or testing.
- In formations in which the cored hole will remain open without casing, water from the rock fractures may be recovered from the well without the installation of a well screen and gravel pack.
- Formation logging is extremely accurate.
- Drill rigs are relatively small and mobile.

Disadvantages include:

- Water or air is needed for drilling.
- Coring is slower than rotary drilling (and more expensive).
- Depth to water cannot accurately be determined if water is used for drilling.
- The size of the borehole is limited.

This drilling method is useful if accurate determinations of rock lithology are desired or if open wells are to be installed into bedrock. To install larger diameter wells in coreholes, the hole must be reamed out to the proper size after boring, using air or mud rotary drilling methods.

5.2.11 Drilling & Support Vehicles

DW 1/10/11

In addition to the drilling method required to accomplish the objectives of the field program, the type of vehicle carrying the drill rig and/or support equipment and its suitability for the site terrain, will often be an additional deciding factor in planning the drilling program. The types of vehicles available are extensive, and depend upon the particular drilling subcontractor's fleet. Most large drilling subcontractors will have a wide variety of vehicle and drill types suited for most drilling assignments in their particular region, while smaller drilling subcontractors will usually have a fleet of much more limited diversity. The weight, size, and means of locomotion (tires, tracks, etc.) of the drill rig must be selected to be compatible with the site terrain to assure adequate mobility between borehole locations. Such considerations also apply to necessary support vehicles used to transport water and/or drilling materials to the drill rigs at the borehole locations. When the drill rigs or support vehicles do not have adequate mobility to easily traverse the site, provisions must be made for assisting equipment, such as bulldozers, winches, timber planking, etc., to maintain adequate progress during the drilling program.

Some of the typical vehicles which are usually available for drill rigs and support equipment are:

- Totally portable drilling/sampling equipment, where all necessary components (tripods, samplers, hammers, catheads, etc.) may be hand carried to the borehole site. Drilling/sampling methods used with such equipment include:
  - Hand augers and lightweight motorized augers.
  - Retractable plug samplers--driven by hand (hammer).
  - Motorized cathead - a lightweight aluminum tripod with a small gas-engine cathead mounted on one leg, used to install small-diameter cased borings. This rig is sometimes called a "monkey on a stick."
- Skid-mounted drilling equipment containing a rotary drill or engine-driven cathead (to lift hammers and drill string), a pump, and a dismounted tripod. The skid is pushed, dragged, or winched (using the cathead drum) between boring locations.
- Small truck-mounted drilling equipment using a Jeep, stake body or other light truck (4 to 6 wheels), upon which are mounted the drill and/or a cathead, a pump, and a tripod or small drilling derrick. On some rigs, the drill and/or a cathead are driven by a power take-off from the truck, instead of by a separate engine.
- Track-mounted drilling equipment is similar to truck-mounted rigs, except that the vehicle used has wide bulldozer tracks for traversing soft ground. Sometimes a continuous-track "all terrain vehicle" is also modified for this purpose. Some types of tracked drill rigs are called "bombardier" or "weasel" rigs.
- Heavy truck-mounted drilling equipment is mounted on tandem or dual tandem trucks to transport the drill, derrick, winches, and pumps or compressors. The drill may be provided with a separate engine or may use a power take-off from the truck engine. Large augers, hydraulic rotary and reverse circulation rotary drilling equipment are usually mounted on such heavy duty trucks. For soft-ground sites, the drilling equipment is sometimes mounted on vehicles having low pressure, very wide diameter tires and capable of floating; these vehicles are called "swamp buggy" rigs.

- Marine drilling equipment is mounted on various floating equipment for drilling borings in lakes, estuaries and other bodies of water. The floating equipment varies, and is often manufactured or customized by the drilling subcontractor to suit specific drilling requirements. Typically, the range of flotation vehicles include:

  - Barrel-float rigs - a drill rig mounted on a timber platform buoyed by empty 55-gallon drums or similar flotation units.

  - Barge-mounted drill rigs.

- Jack-up platforms - drilling equipment mounted on a floating platform having retractable legs to support the unit on the sea or lake bed when the platform is jacked up out of the water.

- Drill ships - for deep ocean drilling.

In addition to the mobility for the drilling equipment, similar consideration must be given for equipment to support the drilling operations. Such vehicles or floating equipment are needed to transport drill water, drilling supplies and equipment, samples, drilling personnel, etc. to and/or from various boring locations.

5.2.12 Equipment Sizes

In planning subsurface exploration programs, care must be taken in specifying the various drilling components, so that they will fit properly in the boring or well.

For drilling open boreholes using rotary drilling equipment, tri-cone drill bits are employed with air, water or drilling mud to remove cuttings and cool the bit. Tri-cone bits are slightly smaller than the holes they drill (i.e., 5-7/8-inch or 7-7/8-inch bits will nominally drill 6-inch and 8-inch holes, respectively).

For obtaining split-barrel samples of a formation, samplers are commonly manufactured in sizes ranging from 2 inches to 3-1/2 inches in outside diameter. However, the most commonly used size is the 2-inch O.D., 1-3/8-inch I.D. split-barrel sampler. When this sampler is used and driven by a 140-pound (± 2-pound) hammer dropping 30 inches (± 1 inch), the procedure is called a Standard Penetration Test, and the blows per foot required to advance the sampler into the formation can be correlated to the formation's density or strength.

In planning the drilling of boreholes using hollow-stem augers or casing, in which thin-wall tube samples or diamond core drilling will be performed, refer to the various sizes and clearances provided in Attachment A of this guideline. Sizes selected must be stated in the project plan documents.

5.2.13 Estimated Drilling Progress

To estimate the anticipated rates of drilling progress for a site, the following must be considered:

- The speed of the drilling method employed.

- Applicable site conditions (e.g., terrain, mobility between borings, difficult drilling conditions in bouldery soils, rubble fill or broken rock, etc.).

- Project-imposed restrictions (e.g., drilling while wearing personal protective equipment, decontamination of drilling equipment, etc.).

Based on recent experience in drilling average soil conditions (no boulders) and taking samples at 5-foot intervals, for moderate depth (30 feet to 50 feet) boreholes (not including installation or development of wells), the following daily rates of total drilling progress may be anticipated for the following drilling methods:

Drilling Method	Average Daily Progress (linear feet)
Hollow-stem augers	75'
Solid-stem augers	50'
Mud-Rotary Drilling	100' (cuttings samples)
Rotosonic Drilling	100'-160' (continuous core)
Reverse-Circulation Rotary	100' (cuttings samples)
Skid-Rig with driven casing	30'
Rotary with driven casing	50'
Cable Tool	30'
Hand Auger	Varies
Continuous Rock Coring	50'

5.3 Prevention of Cross-Contamination

A telescoping or multiple casing technique minimizes the potential for the migration of contaminated groundwater to lower strata below a confining layer. The telescoping technique consists of drilling to a confining layer utilizing a spun casing method with a diamond cutting or augering shoe (a method similar to the rock coring method described in Section 5.2.10, except that larger casing is used) or by using a driven-casing method (see Section 5.2.6 of this guideline) and installing a specified diameter steel well casing. The operation consists of three separate steps. Initially, a drilling casing (usually of 8-inch diameter) is installed followed by installation of the well casing (6-inch-diameter is common for 2-inch wells). This well casing is driven into the confining layer to ensure a tight seal at the bottom of the hole. The well casing is sealed at the bottom with a bentonite-cement slurry. The remaining depth of the boring is drilled utilizing a narrower diameter spun or driven casing technique within the outer well casing. A smaller diameter well casing with an appropriate length of slotted screen on the lower end, is installed to the surface.

Clean sand is placed in the annulus around and to a point of about 2 feet above the screen prior to withdrawal of the drilling casing. The annular space above the screen and to a point 2 feet above the bottom of the outer well casing is sealed with a tremied cement-bentonite slurry which is pressure-grouted or displacement-grouted into the hole. The remaining casing annulus is backfilled with clean material and grouted at the surface, or it is grouted all the way to the surface.

5.4 Cleanout of Casing Prior to Sampling

The boring hole must be completely cleaned of disturbed soil, segregated coarse material and clay adhering to the inside walls of the casing. The cleaning must extend to the bottom edge of the casing and, if possible, a short distance further (1 or 2 inches) to bypass disturbed soil resulting from the advancement of the casing. Loss of wash water during cleaning should be recorded.

For disturbed samples both above and below the water table and where introduction of relatively large volumes of wash water is permissible, the cleaning operation is usually performed by washing the material out of the casing with water; however, the cleaning should never be accomplished with a strong, downward-directed jet which will disturb the underlying soil. When clean out has reached the bottom of the casing or slightly below (as specified above), the string of tools should be lifted one foot off the bottom with the water still flowing, until the wash water coming out of the casing is clear of granular soil particles. In formations where the cuttings contain gravel and other larger particles, it is often useful to repeatedly raise and lower the drill rods and wash bit while washing out the hole, to surge these large particles upward out of the hole. As a time saver, the drilling contractor may be permitted to use a split-barrel (split-spoon) sampler with the ball check valve removed as the clean-out tool, provided the material below the spoon is not disturbed and the shoe of the spoon is not damaged. However, because the ball check valve has been removed, in some formations it may be necessary to install a flap valve or spring sample retainer in the split-spoon bit, to prevent the sample from falling out as the sampler is withdrawn from the hole. The use of jet-type chopping bits is discouraged except where large boulders and cobbles or hard-cemented soils are encountered. If water markedly softens the soils above the water table, clean out should be performed dry with an auger.

For undisturbed samples below the water table, or where wash water must be minimized, clean out is usually accomplished with an appropriate diameter clean out auger. This auger has cutting blades at the bottom to carry loose material up into the auger, and up-turned water jets just above the cutting blades to carry the removed soil to the surface. In this manner, there is a minimum of disturbance at the top of the material to be sampled. If any gravel material washes down into the casing and cannot be removed by the clean out auger, a split-barrel sample can be taken to remove it; bailers and sandpumps should not be used. For undisturbed samples above the groundwater table, all operations must be performed in a dry manner.

If all of the cuttings created by drilling through the overlying formations are not cleaned from the borehole prior to sampling, some of the problems which may be encountered during sampling include:

- When sampling is attempted through the cuttings remaining in the borehole, all or part of the sampler may become filled with the cuttings. This limits the amount of sample from the underlying formation which can enter and be retained in the sampler, and also raises questions as to the validity of the sample.

- If the cuttings remaining in the borehole contain coarse gravel and/or other large particles, these may block the bit of the sampler and prevent any materials from the underlying formation from entering the sampler when the sampler is advanced.

- In cased borings, should sampling be attempted through cuttings which remain in the lower portion of the casing, these cuttings could cause the sampler to become bound into the casing, such that it becomes very difficult to either advance or retract the sampler.

- When sampler blow counts are used to estimate the density or strength of the formation being sampled, the presence of cuttings in the borehole will usually give erroneously high sample blow counts.

To confirm that all cuttings have been removed from the borehole prior to attempting sampling, it is important that the site geologist measure the "stickup" of the drill string. This is accomplished by measuring the assembled length of all drill rods and bits or samplers (the drill string) as they are lowered to the bottom of the hole, below some convenient reference point of the drill string, then measuring the height of this reference point above the ground surface. The difference of these measurements is the

depth of the drill string (lower end of the bit or sampler) below the ground surface, which must then be compared with the depth of sampling required (installed depth of casing or depth of borehole drilled). If the length of drill string below grade is more than the drilled or casing depth, the borehole has been cleaned too deeply, and this deeper depth of sampling must be recorded on the log. If the length of drill string below grade is less than the drilled or casing depth, the difference represents the thickness of cuttings which remain in the borehole. In most cases, an inch or two of cuttings may be left in the borehole with little or no problem. However, if more than a few inches of cuttings are encountered, the borehole must be recleaned prior to attempting sampling.

5.5 Materials of Construction

The effects of monitoring well construction materials on specific chemical analytical parameters are described and/or referenced in SOP GH-2.8. However, there are several materials used during drilling, particularly drilling fluids and lubricants, which must be used with care to avoid compromising the representativeness of soil and ground water samples.

The use of synthetic or organic polymer slurries is not permitted at any location where soil samples for chemical analysis are to be collected. These slurry materials could be used for installation of long-term monitoring wells, but the early time data in time series collection of ground water data may then be suspect. If synthetic or organic polymer muds are proposed for use at a given site, a complete written justification including methods and procedures for their use must be provided by the site geologist and approved by the Project Manager. The specific slurry composition and the concentration of suspected contaminants for each site must be known.

For many drilling operations, potable water is an adequate lubricant for drill stem and drilling tool connections. However, there are instances, such as drilling in tight clayey formations or in loose gravels, when threaded couplings must be lubricated to avoid binding. In these instances, to be determined in the field by the judgment of the site geologist and noted in the site logbook, and only after approval by the Project Manager, a vegetable oil or silicone-based lubricant should be used. Petroleum based greases, etc. will not be permitted. Samples of lubricants used must be provided and analyzed for chemical parameters appropriate to the given site.

5.6 Subsurface Soil Samples

Subsurface soil samples are used to characterize subsurface stratigraphy. This characterization can indicate the potential for migration of chemical contaminants in the subsurface. In addition, definition of the actual migration of contaminants can be obtained through chemical analysis of the soil samples. Where the remedial activities may include in-situ treatment or excavation and removal of the contaminated soil, the depth and areal extent of contamination must be known as accurately as possible.

Engineering and physical properties of soil may also be of interest should site construction activities be planned. Soil types, grain size distribution, shear strength, compressibility, permeability, plasticity, unit weight, and moisture content are some of the physical characteristics that may be determined for soil samples.

Penetration tests are also described in this procedure. The tests can be used to estimate various physical and engineering parameters such as relative density, unconfined compressive strength, and consolidation characteristics of soils.

Surface protocols for various soil sampling techniques are discussed in SOP SA-1.3. Continuous-core soil sampling and rock coring are discussed below. The procedures described here are representative of

a larger number of possible drilling and sampling techniques. The choice of techniques is based on a large number of variables such as cost, local geology, etc. The final choice of methods must be made with the assistance of drilling subcontractors familiar with the local geologic conditions. Alternative techniques must be based upon the underlying principles of quality assurance implicit in the following procedures.

The CME continuous sample tube system provides a method of sampling soil continuously during hollow-stem augering. The 5-foot sample barrel fits within the lead auger of a hollow-auger column. The sampling system can be used with a wide range of I.D. hollow-stem augers (from 3-1/4-inch to 8-1/4-inch I.D.). This method has been used to sample many different materials such as glacial drift, hard clays and shales, mine tailings, etc. This method is particularly used when SPT samples are not required and a large volume of material is needed. Also, this method is useful when a visual description of the subsurface lithology is required. Rotosonic drilling methods also provide a continuous soil sample.

5.7 Rock Sampling (Coring) (ASTM D2113-83)

Rock coring enables a detailed assessment of borehole conditions to be made, showing precisely all lithologic changes and characteristics. Because coring is an expensive drilling method, it is commonly used for shallow studies of 500 feet or less, or for specific intervals in the drill hole that require detailed logging and/or analyzing. Rock coring can, however, proceed for thousands of feet continuously, depending on the size of the drill rig, and yields better quality data than air-rotary drilling, although at a substantially reduced drilling rate. Rate of drilling varies widely, depending on the characteristics of lithologies encountered, drilling methods, depth of drilling, and condition of drilling equipment. Average output in a 10-hour day ranges from 40 to over 200 feet. Down hole geophysical logging or television camera monitoring is sometimes used to complement the data generated by coring.

Borehole diameter can be drilled to various sizes, depending on the information needed. Standard sizes of core barrels (showing core diameter) and casing are shown in Figure 1.

Core drilling is used when formations are too hard to be sampled by soil sampling methods and a continuous solid sample is desired. Usually, soil samples are used for overburden, and coring begins in sound bedrock. Casing is set into bedrock before coring begins to prevent loose material from entering the borehole, to prevent loss of drilling fluid, and to prevent cross-contamination of aquifers.

Drilling through bedrock is initiated by using a diamond-tipped core bit threaded to a drill rod (outer core barrel) with a rate of drilling determined by the downward pressure, rotation speed of drill rods, drilling fluid pressure in the borehole, and the characteristics of the rock (mineralogy, cementation, weathering).

FIGURE 1

STANDARD SIZES OF CORE BARRELS AND CASING

Coring Bit Size	Nominal*		Set Size*	
	O.D.	I.D.	O.D.	I.D.
RWT	1 5/32	3/4	1.160	0.735
EWT	1 1/2	29/32	1.470	0.905
EX, EXL, EWG, EWM	1 1/2	13/16	1.470	0.845
AWT	1 7/8	1 9/32	1.875	1.281
AX, AXL, AWG, AWM	1 7/8	1 3/16	1.875	1.185
BWT	2 3/8	1 3/4	2.345	1.750
BX, BXL, BWG, BWM	2 3/8	1 5/8	2.345	1.655
NWT	3	2 5/16	2.965	2.313
NX, NXL, NWG, NWM	3	2 1/8	2.965	2.155
HWT	3 29/32	3 3/16	3.889	3.187
HWG	3 29/32	3	3.889	3.000
2 3/4 x 3 7/8	3 7/8	2 3/4	3.840	2.690
4 x 5 1/2	5 1/2	4	5.435	3.970
6 x 7 3/4	7 3/4	6	7.655	5.970
AX Wire line ___|___/	1 7/8	1	1.875	1.000
BX Wire line ___|___/	2 3/8	1 7/16	2.345	1.437
NX Wire line ___|___/	3	1 15/16	2.965	1.937

* All dimensions are in inches; to convert to millimeters, multiply by 25.4.

___|___/ Wire line dimensions and designations may vary according to manufacturer.

FIGURE 1
STANDARD SIZES OF CORE BARRELS AND CASING
PAGE TWO

Size Designations		Casing O.D., Inches	Casing Coupling		Casing bit O.D., Inches	Core barrel bit O.D., Inches*	Drill rod O.D., Inches	Approximate Core Diameter	
Casing; Casing coupling; Casing bits; Core barrel bits	Rod; rod couplings		O.D., Inches	I.D., Inches				Normal, Inches	Thinwall, Inches
RX	RW	1.437	1.437	1.188	1.485	1.160	1.094	—	0.735
EX	E	1.812	1.812	1.500	1.875	1.470	1.313	0.845	0.905
AX	A	2.250	2.250	1.906	2.345	1.875	1.625	1.185	1.281
BX	B	2.875	2.875	2.375	2.965	2.345	1.906	1.655	1.750
NX	N	3.500	3.500	3.000	3.615	2.965	2.375	2.155	2.313
HX	HW	4.500	4.500	3.938	4.625	3.890	3.500	3.000	3.187
RW	RW	1.437	Flush Joint	No Coupling	1.485	1.160	1.094	—	0.735
EW	EW	1.812			1.875	1.470	1.375	0.845	0.905
AW	AW	2.250			2.345	1.875	1.750	1.185	1.281
BW	BW	2.875			2.965	2.345	2.125	1.655	1.750
NW	NW	3.500			3.615	2.965	2.625	2.155	2.313
HW	HW	4.500			4.625	3.890	3.500	3.000	3.187
PW	---	5.500			5.650	—	—	—	—
SW	—	6.625			6.790	—	—	—	—
UW	—	7.625			7.800	—	—	—	—
ZW	—	8.625			8.810	—	—	—	—
—	AX __|__\	—	—	—	—	1.875	1.750	1.000	—
—	BX __|__\	—	—	—	—	2.345	2.250	1.437	—
—	NX __|__\	—	—	—	—	2.965	2.813	1.937	—

* All dimensions are in inches; to convert to millimeters, multiply by 25.4.

__\|__/ Wire line dimensions and designations may vary according to manufacturer.

NOMINAL DIMENSIONS FOR DRILL CASINGS AND ACCESSORIES. (DIAMOND CORE DRILL MANUFACTURERS ASSOCIATION). 288-D-2889

5.7.1 Diamond Core Drilling

A penetration of typically less than 6 inches per 50 blows using a 140-lb. hammer dropping 30 inches with a 2-inch split-barrel sampler shall be considered an indication that soil sampling methods may not be applicable and that coring may be necessary to obtain samples.

When formations are encountered that are too hard to be sampled by soil sampling methods, the following diamond core drilling procedure may be used:

- Firmly seat a casing into the bedrock or the hard material to prevent loose materials from entering the hole and to prevent the loss of drilling fluid return. Level the surface of the rock or hard material when necessary by the use of a fishtail or other bits. If the drill hole can be retained open without the casing and if cross-contamination of aquifers in the unconsolidated materials is unlikely, leveling may be omitted.

- Begin the core drilling using a double-tube swivel-core barrel of the desired size. After drilling no more than 10 feet (3 m), remove the core barrel from the hole and take out the core. If the core blocks the flow of the drilling fluid during drilling, remove the core barrel immediately. In soft materials, a large starting size may be specified for the coring tools; where local experience indicates satisfactory core recovery or where hard, sound materials are anticipated, a smaller size or the single-tube type may be specified and longer runs may be drilled. NX/NW size coring equipment is the most commonly used size.

- When soft materials are encountered that produce less than 50 percent recovery, stop the core drilling. If soil samples are desired, secure such samples in accordance with the procedures described in ASTM Method D 1586 (Split-barrel Sampling) or in Method D 1587 (Thin-Walled Tube Sampling); sample soils per SOP SA-1.3. Resume diamond core drilling when refusal materials are again encountered.

- Since rock structures and the occurrence of seams, fissures, cavities, and broken areas are among the most important items to be detected and described, take special care to obtain and record these features. If such broken zones or cavities prevent further advance of the boring, one of the following three steps shall be taken: (1) cement the hole; (2) ream and case; or (3) case and advance with the next smaller size core barrel, as conditions warrant.

- In soft, seamy, or otherwise unsound rock, where core recovery may be difficult, M-design core barrels may be used. In hard, sound rock where a high percentage of core recovery is anticipated, the single-tube core barrel may be employed.

5.7.2 Rock Sample Preparation and Documentation

Once the rock coring has been completed and the core recovered, the rock core shall be carefully removed from the barrel, placed in a core tray (previously labeled "top" and "bottom" to avoid confusion), classified, and measured for percentage of recovery as well as the rock quality designation (RQD). Each core shall be described, classified, and logged using a uniform system as presented in SOP GH-1.5. If moisture content will be determined or if it is desirable to prevent drying (e.g., to prevent shrinkage of clay formations) or oxidation of the core, the core shall be wrapped in plastic sleeves immediately after logging. Each plastic sleeve shall be labeled with indelible ink. The boring number, run number, and the footage represented in each sleeve shall be included, as well as designating the top and bottom of the core run.

After sampling, rock cores shall be placed in the sequence of recovery in well-constructed wooden boxes provided by the drilling contractor. Rock cores from two different borings shall not be placed in the same core box unless accepted by the Project Geologist. The core boxes shall be constructed to accommodate at least 20 linear feet of core in rows of approximately 5 feet each and shall be constructed with hinged tops secured with screws, and a latch (usually a hook and eye) to keep the top securely fastened down. Wood partitions shall be placed at the end of each core run and between rows.

The depth from the surface of the boring to the top and bottom of the drill run and run number shall be marked on the wooden partitions with indelible ink. A wooden partition (wooden block) shall be placed at the end of each run with the depth of the bottom of the run written on the block. These blocks will serve to separate successive core runs and indicate depth intervals for each run. The order of placing cores shall be the same in all core boxes. Rock core shall be placed in the box so that, when the box is open, with the inside of the lid facing the observer, the top of the cored interval contained within the box is in the upper left corner of the box, and the bottom of the cored interval is in the lower right corner of the box. The top and bottom of each core obtained and its true depth shall be clearly and permanently marked on each box. The width of each row must be compatible with the core diameter to prevent lateral movement of the core in the box. Similarly, an empty space in a row shall be filled with an appropriate filler material or spacers to prevent longitudinal movement of the core in the box.

The inside and outside of the core-box lid shall be marked by indelible ink to show all pertinent data on the box's contents. At a minimum, the following information shall be included:

- Project name.
- Project number.
- Boring number.
- Run numbers.
- Footage (depths).
- Recovery.
- RQD (%).
- Box number and total number of boxes for that boring (Example: Box 5 of 7).

For easy retrieval when core boxes are stacked, the sides and ends of the box shall also be labeled and include project number, boring number, top and bottom depths of core and box number.

Prior to final closing of the core box, a photograph of the recovered core and the labeling on the inside cover shall be taken. If moisture content is not critical, the core shall be wetted and wiped clean for the photograph. (This will help to show true colors and bedding features in the cores).

6.0 REFERENCES

Acker Drill Co., 1958. Basic Procedures of Soil Sampling. Acker Drill Co., Scranton, Pennsylvania.

American Institute of Steel Construction, 1978. Manual of Steel Construction, 7th Edition. American Institute of Steel Construction, New York, New York.

American Society for Testing and Materials, 1987. ASTM Standards D1587-83, D1586-84, and D1452-80. ASTM Annual Book of Standards, ASTM, Philadelphia, Pennsylvania, Vol. 4.08.

American Society for Testing and Materials, 1989. Standard Practice for Diamond Core Drilling for Site Investigation. ASTM Method D2113-83 (reapproved 1987), Annual Book of Standards, ASTM, Philadelphia, Pennsylvania.

Barcelona, M. J., J. P. Gibb and R. A. Miller, 1983. A Guide to the Selection of Material for Monitoring Well Construction and Ground Water Sampling. ISWS Contract Report 327, Illinois State Water Survey, Champaign, Illinois.

BOART Longyear Co., Sonic Drilling. Environmental Drilling Division, Andova, Minnesota.

Central Mine Equipment Company, Drilling Equipment, St. Louis, Missouri.

Dept. of the Navy, Naval Facilities Engineering Command, 1982. Soil Mechanics Design Manual 7.1.

Driscoll, Fletcher G., 1986. Groundwater and Wells, 2nd Edition. Johnson Division, St. Paul, Minnesota.

Procedure GH-1.5 - Borehole and Sample Logging.

Scalf, M. R., J. F. McNabb, W. J. Dunlap, R. L. Crosby and J. Fryberger, 1981. Manual of Ground-Water Sampling Procedures. NWWA/EPA Series. Kerr Environmental Research Laboratory, Office of Research and Development, U.S. EPA, Ada, Oklahoma.

U.S. Department of the Interior, 1974, Earth Manual, A Water Resources Technical Publication, 810 pages.

U.S. EPA, 1980. Procedure Manual for Ground Water Monitoring at Solid Waste Disposal Facilities. SW-611. Office of Solid Waste, U.S. EPA, Cincinnati, Ohio.

W. L. Acker III, 1974. Basic Procedures for Soil Sampling and Core Drilling. Acker Drill Co., Inc., Scranton, Pennsylvania.

ATTACHMENT A

DRILLING EQUIPMENT SIZES

Drilling Component	Designation or Hole Size (Inches)	O.D. (Inches)	I.D. (Inches)	Coupling I.D. (Inches)
Hollow-stem augers (Ref. 7)	6 1/4	5	2 1/4	
	6 3/4	5 3/4	2 3/4	—
	7 1/4	6 1/4	3 1/4	—
	13 1/4	12	6	—
Thin Wall Tube Samplers (Ref. 7)	—	2	1 7/8	—
	—	2 1/2	2 3/8	—
	—	3	2 7/8	—
	—	3 1/2	3 3/8	—
	—	4 1/2	4 3/8	—
	—	5	4 3/4	—
Drill Rods (Ref. 7)	RW	1 3/32	23/32	13/32
	EW	1 3/8	15/16	7/16
	AW	1 3/4	1 1/4	5/8
	BW	2 1/8	1 3/4	3/4
	NW	2 5/8	2 1/4	1 3/8
	HW	3 1/2	3 1/16	2 3/8
	E	1 5/16	7/8	7/16
	A	1 5/8	1 1/8	9/16
	B	1 7/8	1 1/4	5/8
	N	2 3/8	2	1
				Wall Thickness (Inches)
Driven External Coupled Extra Strong Steel* Casing (Ref. 8)	2 1/2	2.875	2.323	0.276
	3	3.5	2.9	0.300
	3 1/2	4.0	3.364	0.318
	4	4.5	3.826	0.337
	5	5.63	4.813	0.375
	6	6.625	5.761	0.432
	8	8.625	7.625	0.500
	10	10.750	9.750	0.500
	12	12.750	11.750	0.500

* Add twice the casing wall thickness to casing O.D. to obtain the approximate O.D. of the external pipe couplings.

ATTACHMENT A
DRILLING EQUIPMENT SIZES
PAGE TWO

Drilling Component	Designation or Hole Size (Inches)	O.D. (Inches)	I.D. (Inches)	Coupling I.D. (Inches)
Flush Coupled Casing (Ref. 7)	RX	1 7/16	1 3/16	1 3/16
	EX	1 13/16	1 5/8	1 1/2
	AX	2 1/4	2	1 29/32
	BX	2 7/8	2 9/16	2 3/8
	NX	3 1/2	3 3/16	3
	HX	4 1/2	4 1/8	3 15/16
Flush Joint Casing (Ref. 7)	RW	1 7/16	1 3/16	
	EW	1 13/16	1 1/2	
	AW	2 1/4	1 29/32	
	BW	2 7/8	2 3/8	
	NW	3 1/2	3	
	HW	4 1/2	4	
	PW	5 1/2	5	
	SW	6 5/8	6	
	UW	7 5/8	7	
	ZW	8 5/8	8	
Diamond Core Barrels (Ref. 7)	EWM	1 1/2	7/8**	
	AWM	1 7/8	1 1/8**	
	BWM	2 3/8	1 5/8**	
	NWM	3	2 1/8	
	HWG	3 7/8	3	
	2 3/4 x 3 7/8	3 7/8	2 11/16	
	4 x 5 1/2	5 1/2	3 15/16	
	6 x 7 3/4	7 3/4	5 15/16	
	AQ (wireline)	1 57/64	1 1/16**	
	BQ (wireline)	2 23/64	1 7/16**	
	NQ (wireline)	2 63/64	1 7/8	
	HQ (wireline)	3 25/32	2 1/2	

** Because of the fragile nature of the core and the difficulty to identify rock details, use of small-diameter core (1 3/8") is not recommended.

TABLE OF CONTENTS

SECTION		PAGE
1.0	**PURPOSE**	**3**
2.0	**SCOPE**	**3**
3.0	**GLOSSARY**	**3**
4.0	**RESPONSIBILITIES**	**3**
5.0	**PROCEDURES**	**3**
5.1	MATERIALS NEEDED	3
5.2	CLASSIFICATION OF SOILS	3
5.2.1	USCS Classification	6
5.2.2	Color	6
5.2.3	Relative Density and Consistency	6
5.2.4	Weight Percentages	7
5.2.5	Moisture	10
5.2.6	Stratification	10
5.2.7	Texture/Fabric/Bedding	10
5.2.8	Summary of Soil Classification	10
5.3	CLASSIFICATION OF ROCKS	13
5.3.1	Rock Type	13
5.3.2	Color	16
5.3.3	Bedding Thickness	16
5.3.4	Hardness	16
5.3.5	Fracturing	16
5.3.6	Weathering	17
5.3.7	Other Characteristics	17
5.3.8	Additional Terms Used in the Description of Rock	18
5.4	ABBREVIATIONS	19
5.5	BORING LOGS AND DOCUMENTATION	19
5.5.1	Soil Classification	19
5.5.2	Rock Classification	23
5.5.3	Classification of Soil and Rock from Drill Cuttings	24
5.6	REVIEW	24
6.0	**REFERENCES**	**24**
7.0	**RECORDS**	**25**

TABLE OF CONTENTS (Continued)

FIGURES

NUMBERS		PAGE
1	BORING LOG (EXAMPLE)	4
2	CONSISTENCY FOR COHESIVE SOILS	8
3	BEDDING THICKNESS CLASSIFICATION	10
4	GRAIN SIZE CLASSIFICATION FOR ROCKS	12
5	COMPLETED BORING LOG (EXAMPLE)	17

1.0 PURPOSE

The purpose of this document is to establish standard procedures and technical guidance on borehole and sample logging.

2.0 SCOPE

These procedures provide descriptions of the standard techniques for borehole and sample logging. These techniques shall be used for each boring logged to provide consistent descriptions of subsurface lithology. While experience is the only method to develop confidence and accuracy in the description of soil and rock, the field geologist/engineer can do a good job of classification by careful, thoughtful observation and by being consistent throughout the classification procedure.

3.0 GLOSSARY

None.

4.0 RESPONSIBILITIES

Site Geologist. Responsible for supervising all boring activities and assuring that each borehole is completely logged. If more than one rig is being used on site, the Site Geologist must make sure that each field geologist is properly trained in logging procedures. A brief review or training session may be necessary prior to the start up of the field program and/or upon completion of the first boring.

5.0 PROCEDURES

The classification of soil and rocks is one of the most important jobs of the field geologist/engineer. To maintain a consistent flow of information, it is imperative that the field geologist/engineer understand and accurately use the field classification system described in this SOP. This identification is based on visual examination and manual tests.

5.1 Materials Needed

When logging soil and rock samples, the geologist or engineer may be equipped with the following:

- Rock hammer
- Knife
- Camera
- Dilute hydrochloric acid (HCl)
- Ruler (marked in tenths and hundredths of feet)
- Hand Lens

5.2 Classification of Soils

All data shall be written directly on the boring log (Figure 1) or in a field notebook if more space is needed. Details on filling out the boring log are discussed in Section 5.5.

FIGURE 1

BORING LOG (EXAMPLE)

BORING LOG

Page ___ of ___

PROJECT NAME: _____ BORING NUMBER: _____
PROJECT NUMBER: _____ DATE: _____
DRILLING COMPANY: _____ GEOLOGIST: _____
DRILLING RIG: _____ DRILLER: _____

Sample No. and Type or RQD	Depth (Ft.) or Run No.	Blows / 6" or RQD (%)	Sample Recovery / Sample Length	Lithology Change (Depth/Ft.) or Screened Interval	MATERIAL DESCRIPTION: Soil Density/ Consistency or Rock Hardness	MATERIAL DESCRIPTION: Color	MATERIAL DESCRIPTION: Material Classification	USCS *	Remarks	PID/FID Reading (ppm): Sample	PID/FID Reading (ppm): Sampler BZ	PID/FID Reading (ppm): Borehole**	PID/FID Reading (ppm): Driller BZ**

* When rock coring, enter rock brokeness.

** Include monitor reading in 5 foot intervals @ borehole. Increase reading frequency if elevated response read.

Drilling Area Background (ppm): ____

Remarks: _____

Converted to Well: Yes _____ No _____ Well I.D. #: _____

FIGURE 1 (CONTINUED)

5.2.1 USCS Classification

Soils are to be classified according to the Unified Soil Classification System (USCS). This method of classification is detailed in Figure 1 (Continued).
This method of classification identifies soil types on the basis of grain size and cohesiveness.

Fine-grained soils, or fines, are smaller than the No. 200 sieve and are of two types: silt (M) and clay (C). Some classification systems define size ranges for these soil particles, but for field classification purposes, they are identified by their respective behaviors. Organic material (O) is a common component of soil but has no size range; it is recognized by its composition. The careful study of the USCS will aid in developing the competence and consistency necessary for the classification of soils.

Coarse-grained soils shall be divided into rock fragments, sand, or gravel. The terms sand and gravel not only refer to the size of the soil particles but also to their depositional history. To insure accuracy in description, the term rock fragments shall be used to indicate angular granular materials resulting from the breakup of rock. The sharp edges typically observed indicate little or no transport from their source area, and therefore the term provides additional information in reconstructing the depositional environment of the soils encountered. When the term "rock fragments" is used it shall be followed by a size designation such as "(1/4 inchΦ-1/2 inchΦ)" or "coarse-sand size" either immediately after the entry or in the remarks column. The USCS classification would not be affected by this variation in terms.

5.2.2 Color

Soil colors shall be described utilizing a single color descriptor preceded, when necessary, by a modifier to denote variations in shade or color mixtures. A soil could therefore be referred to as "gray" or "light gray" or "blue-gray." Since color can be utilized in correlating units between sampling locations, it is important for color descriptions to be consistent from one boring to another.

Colors must be described while the sample is still moist. Soil samples shall be broken or split vertically to describe colors. Samplers tend to smear the sample surface creating color variations between the sample interior and exterior.

The term "mottled" shall be used to indicate soils irregularly marked with spots of different colors. Mottling in soils usually indicates poor aeration and lack of good drainage.

Soil Color Charts shall not be used unless specified by the project manager.

5.2.3 Relative Density and Consistency

To classify the relative density and/or consistency of a soil, the geologist is to first identify the soil type. Granular soils contain predominantly sands and gravels. They are noncohesive (particles do not adhere well when compressed). Finer-grained soils (silts and clays) are cohesive (particles will adhere together when compressed).

The density of noncohesive, granular soils is classified according to standard penetration resistances obtained from split-barrel sampling performed according to the methods detailed in Standard Operating Procedures GH-1.3 and SA-1.3. Those designations are:

Designation	Standard Penetration Resistance (Blows per Foot)
Very loose	0 to 4
Loose	5 to 10
Medium dense	11 to 30
Dense	31 to 50
Very dense	Over 50

Standard penetration resistance is the number of blows required to drive a split-barrel sampler with a 2-inch outside diameter 12 inches into the material using a 140-pound hammer falling freely through 30 inches. The sampler is driven through an 18-inch sample interval, and the number of blows is recorded for each 6-inch increment. The density designation of granular soils is obtained by adding the number of blows required to penetrate the last 12 inches of each sample interval. It is important to note that if gravel or rock fragments are broken by the sampler or if rock fragments are lodged in the tip, the resulting blow count will be erroneously high, reflecting a higher density than actually exists. This shall be noted on the log and referenced to the sample number. Granular soils are given the USCS classifications GW, GP, GM, SW, SP, SM, GC, or SC (see Figure 1).

The consistency of cohesive soils is determined by performing field tests and identifying the consistency as shown in Figure 2.

Cohesive soils are given the USCS classifications ML, MH, CL, CH, OL, or OH (see Figure 1).

The consistency of cohesive soils is determined either by blow counts, a pocket penetrometer (values listed in the table as Unconfined Compressive Strength), or by hand by determining the resistance to penetration by the thumb. The pocket penetrometer and thumb determination methods are conducted on a selected sample of the soil, preferably the lowest 0.5 foot of the sample in the split-barrel sampler. The sample shall be broken in half and the thumb or penetrometer pushed into the end of the sample to determine the consistency. Do not determine consistency by attempting to penetrate a rock fragment. If the sample is decomposed rock, it is classified as a soft decomposed rock rather than a hard soil. Consistency shall not be determined solely by blow counts. One of the other methods shall be used in conjunction with it. The designations used to describe the consistency of cohesive soils are shown in Figure 2.

5.2.4 Weight Percentages

In nature, soils are comprised of particles of varying size and shape, and are combinations of the various grain types. The following terms are useful in the description of soil:

Terms of Identifying Proportion of the Component	Defining Range of Percentages by Weight
Trace	0 - 10 percent
Some	11 - 30 percent
Adjective form of the soil type (e.g., "sandy")	31 - 50 percent

FIGURE 2

CONSISTENCY FOR COHESIVE SOILS

Consistency	Standard Penetration Resistance (Blows per Foot)	Unconfined Compressive Strength (Tons/Sq. Foot by pocket penetration)	Field Identification
Very soft	0 to 2	Less than 0.25	Easily penetrated several inches by fist
Soft	2 to 4	0.25 to 0.50	Easily penetrated several inches by thumb
Medium stiff	4 to 8	0.50 to 1.0	Can be penetrated several inches by thumb with moderate effort
Stiff	8 to 15	1.0 to 2.0	Readily indented by thumb but penetrated only with great effort
Very stiff	15 to 30	2.0 to 4.0	Readily indented by thumbnail
Hard	Over 30	More than 4.0	Indented with difficulty by thumbnail

Examples:

- Silty fine sand: 50 to 69 percent fine sand, 31 to 50 percent silt.
- Medium to coarse sand, some silt: 70 to 80 percent medium to coarse sand, 11 to 30 percent silt.
- Fine sandy silt, trace clay: 50 to 68 percent silt, 31 to 49 percent fine sand, 1 to 10 percent clay.
- Clayey silt, some coarse sand: 70 to 89 percent clayey silt, 11 to 30 percent coarse sand.

5.2.5 Moisture

Moisture content is estimated in the field according to four categories: dry, moist, wet, and saturated. In dry soil, there appears to be little or no water. Saturated samples obviously have all the water they can hold. Moist and wet classifications are somewhat subjective and often are determined by the individual's judgment. A suggested parameter for this would be calling a soil wet if rolling it in the hand or on a porous surface liberates water, i.e., dirties or muddies the surface. Whatever method is adopted for describing moisture, it is important that the method used by an individual remains consistent throughout an entire drilling job.

Laboratory tests for water content shall be performed if the natural water content is important.

5.2.6 Stratification

Stratification can only be determined after the sample barrel is opened. The stratification or bedding thickness for soil and rock is depending on grain size and composition. The classification to be used for stratification description is shown in Figure 3.

5.2.7 Texture/Fabric/Bedding

The texture/fabric/bedding of the soil shall be described. Texture is described as the relative angularity of the particles: rounded, subrounded, subangular, and angular. Fabric shall be noted as to whether the particles are flat or bulky and whether there is a particular relation between particles (i.e., all the flat particles are parallel or there is some cementation). The bedding or structure shall also be noted (e.g., stratified, lensed, nonstratified, heterogeneous varved).

5.2.8 Summary of Soil Classification

In summary, soils shall be classified in a similar manner by each geologist/engineer at a project site. The hierarchy of classification is as follows:

- Density and/or consistency
- Color
- Plasticity (Optional)
- Soil types
- Moisture content
- Stratification
- Texture, fabric, bedding
- Other distinguishing features

FIGURE 3

BEDDING THICKNESS CLASSIFICATION

Thickness (metric)	Thickness (Approximate English Equivalent)	Classification
> 1.0 meter	> 3.3'	Massive
30 cm - 1 meter	1.0' - 3.3'	Thick Bedded
10 cm - 30 cm	4" - 1.0'	Medium Bedded
3 cm - 10 cm	1" - 4"	Thin Bedded
1 cm - 3 cm	2/5" - 1"	Very Thin Bedded
3 mm - 1 cm	1/8" - 2/5"	Laminated
1 mm - 3 mm	1/32" - 1/8"	Thinly Laminated
< 1 mm	<1/32"	Micro Laminated

(Weir, 1973 and Ingram, 1954)

5.3 Classification of Rocks

Rocks are grouped into three main divisions: sedimentary, igneous and metamorphic. Sedimentary rocks are by far the predominant type exposed at the earth's surface. The following basic names are applied to the types of rocks found in sedimentary sequences:

- Sandstone - Made up predominantly of granular materials ranging between 1/16 to 2 mm in diameter.
- Siltstone - Made up of granular materials less than 1/16 to 1/256 mm in diameter. Fractures irregularly. Medium thick to thick bedded.
- Claystone - Very fine-grained rock made up of clay and silt-size materials. Fractures irregularly. Very smooth to touch. Generally has irregularly spaced pitting on surface of drilled cores.
- Shale - A fissile very fine-grained rock. Fractures along bedding planes.
- Limestone - Rock made up predominantly of calcite ($CaCO_3$). Effervesces strongly upon the application of dilute hydrochloric acid.
- Coal - Rock consisting mainly of organic remains.
- Others - Numerous other sedimentary rock types are present in lesser amounts in the stratigraphic record. The local abundance of any of these rock types is dependent upon the depositional history of the area. Conglomerate, halite, gypsum, dolomite, anhydrite, lignite, etc. are some of the rock types found in lesser amounts.

In classifying a sedimentary rock the following hierarchy shall be noted:

- Rock type
- Color
- Bedding thickness
- Hardness
- Fracturing
- Weathering
- Other characteristics

5.3.1 Rock Type

As described above, there are numerous types of sedimentary rocks. In most cases, a rock will be a combination of several grain types, therefore, a modifier such as a sandy siltstone, or a silty sandstone can be used. The modifier indicates that a significant portion of the rock type is composed of the modifier. Other modifiers can include carbonaceous, calcareous, siliceous, etc.

Grain size is the basis for the classification of clastic sedimentary rocks. Figure 4 is the Udden-Wentworth classification that will be assigned to sedimentary rocks. The individual boundaries are slightly different than the USCS subdivision for soil classification. For field determination of grain sizes, a scale can be used for the coarse grained rocks. For example, the division between siltstone and claystone may not be measurable in the field. The boundary shall be determined by use of a hand lens. If the grains cannot be seen with the naked eye but are distinguishable with a hand lens, the rock is a siltstone. If the grains are not distinguishable with a hand lens, the rock is a claystone.

FIGURE 4

GRAIN SIZE CLASSIFICATION FOR ROCKS

Particle Name	Grain Size Diameter
Cobbles	> 64 mm
Pebbles	4 - 64 mm
Granules	2 - 4 mm
Very Coarse Sand	1 - 2 mm
Coarse Sand	0.5 - 1 mm
Medium Sand	0.25 - 0.5 mm
Fine Sand	0.125 - 0.25 mm
Very Fine Sand	0.0625 - 0.125 mm
Silt	0.0039 - 0.0625 mm

After Wentworth, 1922

5.3.2 Color

The color of a rock can be determined in a similar manner as for soil samples. Rock core samples shall be classified while wet, when possible, and air cored samples shall be scraped clean of cuttings prior to color classifications.

Rock color charts shall not be used unless specified by the Project Manager.

5.3.3 Bedding Thickness

The bedding thickness designations applied to soil classification (see Figure 3) will also be used for rock classification.

5.3.4 Hardness

The hardness of a rock is a function of the compaction, cementation, and mineralogical composition of the rock. A relative scale for sedimentary rock hardness is as follows:

- Soft - Weathered, considerable erosion of core, easily gouged by screwdriver, scratched by fingernail. Soft rock crushes or deforms under pressure of a pressed hammer. This term is always used for the hardness of the saprolite (decomposed rock which occupies the zone between the lowest soil horizon and firm bedrock).

- Medium soft - Slight erosion of core, slightly gouged by screwdriver, or breaks with crumbly edges from single hammer blow.

- Medium hard - No core erosion, easily scratched by screwdriver, or breaks with sharp edges from single hammer blow.

- Hard - Requires several hammer blows to break and has sharp conchoidal breaks. Cannot be scratched with screwdriver.

Note the difference in usage here of the works "scratch" and "gouge." A scratch shall be considered a slight depression in the rock (do not mistake the scraping off of rock flour from drilling with a scratch in the rock itself), while a gouge is much deeper.

5.3.5 Fracturing

The degree of fracturing or brokenness of a rock is described by measuring the fractures or joint spacing. After eliminating drilling breaks, the average spacing is calculated and the fracturing is described by the following terms:

- Very broken (V. BR.) - Less than 2-inch spacing between fractures
- Broken (BR.) - 2-inch to 1-foot spacing between fractures
- Blocky (BL.) - 1- to 3-foot spacing between fractures
- Massive (M.) - 3 to 10-foot spacing between fractures

The structural integrity of the rock can be approximated by calculating the Rock Quality Designation (RQD) of cores recovered. The RQD is determined by adding the total lengths of all pieces exceeding 4 inches and dividing by the total length of the coring run, to obtain a percentage.

Method of Calculating RQD
(After Deere, 1964)

$$RQD\ \% = r/l \times 100$$

r = Total length of all pieces of the lithologic unit being measured, which are greater than 4 inches length, and have resulted from natural breaks. Natural breaks include slickensides, joints, compaction slicks, bedding plane partings (not caused by drilling), friable zones, etc.

l = Total length of the coring run.

5.3.6 Weathering

The degree of weathering is a significant parameter that is important in determining weathering profiles and is also useful in engineering designs. The following terms can be applied to distinguish the degree of weathering:

- Fresh - Rock shows little or no weathering effect. Fractures or joints have little or no staining and rock has a bright appearance.
- Slight - Rock has some staining which may penetrate several centimeters into the rock. Clay filling of joints may occur. Feldspar grains may show some alteration.
- Moderate - Most of the rock, with exception of quartz grains, is stained. Rock is weakened due to weathering and can be easily broken with hammer.
- Severe - All rock including quartz grains is stained. Some of the rock is weathered to the extent of becoming a soil. Rock is very weak.

5.3.7 Other Characteristics

The following items shall be included in the rock description:

- Description of contact between two rock units. These can be sharp or gradational.
- Stratification (parallel, cross stratified).
- Description of any filled cavities or vugs.
- Cementation (calcareous, siliceous, hematitic).
- Description of any joints or open fractures.
- Observation of the presence of fossils.
- Notation of joints with depth, approximate angle to horizontal, any mineral filling or coating, and degree of weathering.

All information shown on the boring logs shall be neat to the point where it can be reproduced on a copy machine for report presentation. The data shall be kept current to provide control of the drilling program and to indicate various areas requiring special consideration and sampling.

5.3.8 Additional Terms Used in the Description of Rock

The following terms are used to further identify rocks:

- Seam - Thin (12 inches or less), probably continuous layer.
- Some - Indicates significant (15 to 40 percent) amounts of the accessory material. For example, rock composed of seams of sandstone (70 percent) and shale (30 percent) would be "sandstone -- some shale seams."
- Few - Indicates insignificant (0 to 15 percent) amounts of the accessory material. For example, rock composed of seam of sandstone (90 percent) and shale (10 percent) would be "sandstone -- few shale seams."
- Interbedded - Used to indicate thin or very thin alternating seams of material occurring in approximately equal amounts. For example, rock composed of thin alternating seams of sandstone (50 percent) and shale (50 percent) would be "interbedded sandstone and shale."
- Interlayered - Used to indicate thick alternating seams of material occurring in approximately equal amounts.

The preceding sections describe the classification of sedimentary rocks. The following are some basic names that are applied to igneous rocks:

- Basalt - A fine-grained extrusive rock composed primarily of calcic plagioclase and pyroxene.
- Rhyolite - A fine-grained volcanic rock containing abundant quartz and orthoclase. The fine-grained equivalent of a granite.
- Granite - A coarse-grained plutonic rock consisting essentially of alkali feldspar and quartz.
- Diorite - A coarse-grained plutonic rock consisting essentially of sodic plagioclase and hornblende.
- Gabbro - A coarse-grained plutonic rock consisting of calcic plagioclase and clinopyroxene. Loosely used for any coarse-grained dark igneous rock.

The following are some basic names that are applied to metamorphic rocks:

- Slate - A very fine-grained foliated rock possessing a well developed slaty cleavage. Contains predominantly chlorite, mica, quartz, and sericite.
- Phyllite - A fine-grained foliated rock that splits into thin flaky sheets with a silky sheen on cleavage surface.
- Schist - A medium to coarse-grained foliated rock with subparallel arrangement of the micaceous minerals which dominate its composition.
- Gneiss - A coarse-grained foliated rock with bands rich in granular and platy minerals.
- Quartzite - A fine- to coarse-grained nonfoliated rock breaking across grains, consisting essentially of quartz sand with silica cement.

5.4 Abbreviations

Abbreviations may be used in the description of a rock or soil. However, they shall be kept at a minimum. Following are some of the abbreviations that may be used:

C	-	Coarse	Lt	-	Light	Yl	-	Yellow
Med	-	Medium	BR	-	Broken	Or	-	Orange
F	-	Fine	BL	-	Blocky	SS	-	Sandstone
V	-	Very	M	-	Massive	Sh	-	Shale
Sl	-	Slight	Br	-	Brown	LS	-	Limestone
Occ	-	Occasional	Bl	-	Black	Fgr	-	Fine-grained
Tr	-	Trace						

5.5 Boring Logs and Documentation

This section describes in more detail the procedures to be used in completing boring logs in the field. Information obtained from the preceding sections shall be used to complete the logs. A sample boring log has been provided as Figure 5.

The field geologist/engineer shall use this example as a guide in completing each boring log. Each boring log shall be fully described by the geologist/engineer as the boring is being drilled. Every sheet contains space for 25 feet of log. Information regarding classification details is provided either on the back of the boring log or on a separate sheet, for field use.

5.5.1 Soil Classification

- Identify site name, boring number, job number, etc. Elevations and water level data to be entered when surveyed data is available.

- Enter sample number (from SPT) under appropriate column. Enter depth sample was taken from (1 block = 1 foot). Fractional footages, i.e., change of lithology at 13.7 feet, shall be lined off at the proportional location between the 13- and 14-foot marks. Enter blow counts (Standard Penetration Resistance) diagonally (as shown). Standard penetration resistance is covered in Section 5.2.3.

- Determine sample recovery/sample length as shown. Measure the total length of sample recovered from the split-spoon sampler, including material in the drive shoe. Do not include cuttings or wash material that may be in the upper portion of the sample tube.

- Indicate any change in lithology by drawing a line at the appropriate depth. For example, if clayey silt was encountered from 0 to 5.5 feet and shale from 5.5 to 6.0 feet, a line shall be drawn at this increment. This information is helpful in the construction of cross-sections. As an alternative, symbols may be used to identify each change in lithology.

- The density of granular soils is obtained by adding the number of blows for the last two increments. Refer to Density of Granular Soils Chart on back of log sheet. For consistency of cohesive soils refer also to the back of log sheet - Consistency of Cohesive Soils. Enter this information under the appropriate column. Refer to Section 5.2.3.

FIGURE 5
COMPLETED BORING LOG (EXAMPLE)

BORING LOG

Page 1 of 1

PROJECT NAME: NSB - SITE
PROJECT NUMBER: 9594
DRILLING COMPANY: SOILTEST CO.
DRILLING RIG: CME-55
BORING NUMBER: SB/MW 1
DATE: 3/8/96
GEOLOGIST: SJ CONTI
DRILLER: R. ROCK

Sample No. and Type or RQD	Depth (Ft.) or Run No.	Blows / 6" or RQD (%)	Sample Recovery / Sample Length	Lithology Change (Depth/Ft.) or Screened Interval	MATERIAL DESCRIPTION: Soil Density/ Consistency or Rock Hardness	Color	Material Classification	USCS*	Remarks	PID/FID Reading (ppm): Sample	Sampler BZ	Borehole**	Driller BZ**
S-1	0.0	7/6	1.5/2.0		M DENSE	BRN	SILTY SAND - SOME	SM	MOIST SL. ORG. ODOR	5	0	0	0
C 0800	2.0	9/10				TO BLK	ROCK FR.; TR BRICKS (FILL)		FILL TO 4'±				
	4.0			4.0									
S-2 C		5/7	2.9/2.0		M DENSE	BRN	SILTY SAND - TR FINE GRAVEL	SM	MOIST - W ODOR	10	0	-	-
0810	6.0	9/8							NAT. MATL. TOOK SAMPLE				
	•			7' ∇					SB01-0406 FOR ANALYSIS				
	8.0			8.0									
S-3 C		6/8	1.9/2.0		DENSE	TAN BRN	FINE TO COARSE SAND TR F. GRAVEL	SW	WET	0	0	0	0
0820	10.0	17/16							HIT WATER = 7'±				
	12.0			12.0									
S-4 C		7/6	1.6/2.0		STIFF	GRAY	SILTY CLAY	CL	MOIST → WET	0	.5	-	-
0830	14.0	5/8											
	15.0			15.0					AUGER REF @ 15'				
				LITHIE 16	M HARD	BRN	SILTSTONE	VER	WEATHERED LO ♯ JNTS @ 15.5				
9/5	①		4.0/5.0						WATER STAINS @ 16.5, 17.1, 17.5	0	0	0	0
				19'					LOSING SOME				
	20.0				HARD	GRAY	SANDSTONE - SOME SILTSTONE	BR	DRILL H20 @ 17'±				
									SET TEMP 6" CAS TO 15.5				
4.8/5.0	②		5.0/5.0						SET 2" @ PVC SCREEN 16-25	0	0	0	0
									SAND 14-25				
	25.0			25					PELLETS 12-14				

* When rock coring, enter rock brokeness.
** Include monitor reading in 6 foot intervals @ borehole. Increase reading frequency if elevated response read.

• 1-20%
1-80%

Drilling Area Background (ppm): 0

Remarks: CME-55 RIG, 4¼" ID HSA - 9" OD±
2" SPLIT SPOONS - 140 LB HAMMER - 30" DROP
NX CORE IN BEDROCK RUN ① = 25 min. RUN ② = 15 min

Converted to Well: Yes ✓ No ____ Well I.D. #: MW-1

- Enter color of the material in the appropriate column.
- Describe material using the USCS. Limit this column for sample description only. The predominant material is described last. If the primary soil is silt but has fines (clay) - use clayey silt. Limit soil descriptors to the following:
  - Trace: 0 - 10 percent
  - Some: 11 - 30 percent
  - And/Or: 31 - 50 percent
- Also indicate under Material Classification if the material is fill or natural soils. Indicate roots, organic material, etc.
- Enter USCS symbol - use chart on back of boring log as a guide. If the soils fall into one of two basic groups, a borderline symbol may be used with the two symbols separated by a slash. For example ML/CL or SM/SP.
- The following information shall be entered under the "Remarks" column and shall include, but is not limited by, the following:
  - Moisture - estimate moisture content using the following terms - dry, moist, wet and saturated. These terms are determined by the individual. Whatever method is used to determine moisture, be consistent throughout the log.
  - Angularity - describe angularity of coarse grained particles using the terms angular, subangular, subrounded, or rounded. Refer to ASTM D 2488 or Earth Manual for criteria for these terms.
  - Particle shape - flat, elongated, or flat and elongated.
  - Maximum particle size or dimension.
  - Water level observations.
  - Reaction with HCl - none, weak, or strong.
- Additional comments:
  - Indicate presence of mica, caving of hole, when water was encountered, difficulty in drilling, loss or gain of water.
  - Indicate odor and Photoionization Detector (PID) or Flame Ionization Detector (FID) reading if applicable.
  - Indicate any change in lithology by drawing a line through the lithology change column and indicate the depth. This will help when cross-sections are subsequently constructed.
  - At the bottom of the page indicate type of rig, drilling method, hammer size and drop, and any other useful information (i.e., borehole size, casing set, changes in drilling method).

- Vertical lines shall be drawn (as shown in Figure 5) in columns 6 to 8 from the bottom of each sample to the top of the next sample to indicate consistency of material from sample to sample, if the material is consistent. Horizontal lines shall be drawn if there is a change in lithology, then vertical lines drawn to that point.

- Indicate screened interval of well, as needed, in the lithology column. Show top and bottom of screen. Other details of well construction are provided on the well construction forms.

5.5.2 Rock Classification

- Indicate depth at which coring began by drawing a line at the appropriate depth. Indicate core run depths by drawing coring run lines (as shown) under the first and fourth columns on the log sheet. Indicate RQD, core run number, RQD percent, and core recovery under the appropriate columns.

- Indicate lithology change by drawing a line at the appropriate depth as explained in Section 5.5.1.

- Rock hardness is entered under designated column using terms as described on the back of the log or as explained earlier in this section.

- Enter color as determined while the core sample is wet; if the sample is cored by air, the core shall be scraped clean prior to describing color.

- Enter rock type based on sedimentary, igneous or metamorphic. For sedimentary rocks use terms as described in Section 5.3. Again, be consistent in classification. Use modifiers and additional terms as needed. For igneous and metamorphic rock types use terms as described in Sections 5.3.8.

- Enter brokenness of rock or degree of fracturing under the appropriate column using symbols VBR, BR, BL, or M as explained in Section 5.3.5 and as noted on the back of the Boring Log.

- The following information shall be entered under the remarks column. Items shall include but are not limited to the following:

  - Indicate depths of joints, fractures and breaks and also approximate to horizontal angle (such as high, low), i.e., 70° angle from horizontal, high angle.
  - Indicate calcareous zones, description of any cavities or vugs.
  - Indicate any loss or gain of drill water.
  - Indicate drop of drill tools or change in color of drill water.

- Remarks at the bottom of Boring Log shall include:

  - Type and size of core obtained.
  - Depth casing was set.
  - Type of rig used.

- As a final check the boring log shall include the following:

  - Vertical lines shall be drawn as explained for soil classification to indicate consistency of bedrock material.

  - If applicable, indicate screened interval in the lithology column. Show top and bottom of screen. Other details of well construction are provided on the well construction forms.

5.5.3 Classification of Soil and Rock from Drill Cuttings

The previous sections describe procedures for classifying soil and rock samples when cores are obtained. However, some drilling methods (air/mud rotary) may require classification and borehole logging based on identifying drill cuttings removed from the borehole. Such cuttings provide only general information on subsurface lithology. Some procedures that shall be followed when logging cuttings are:

- Obtain cutting samples at approximately 5-foot intervals, sieve the cuttings (if mud rotary drilling) to obtain a cleaner sample, place the sample into a small sample bottle or "zip lock" bag for future reference, and label the jar or bag (i.e. hole number, depth, date, etc.). Cuttings shall be closely examined to determine general lithology.
- Note any change in color of drilling fluid or cuttings, to estimate changes in lithology.
- Note drop or chattering of drilling tools or a change in the rate of drilling, to determine fracture locations or lithologic changes.
- Observe loss or gain of drilling fluids or air (if air rotary methods are used), to identify potential fracture zones.
- Record this and any other useful information onto the boring log as provided in Figure 1.

This logging provides a general description of subsurface lithology and adequate information can be obtained through careful observation of the drilling process. It is recommended that split-barrel and rock core sampling methods be used at selected boring locations during the field investigation to provide detailed information to supplement the less detailed data generated through borings drilled using air/mud rotary methods.

5.6 Review

Upon completion of the borings logs, copies shall be made and reviewed. Items to be reviewed include:

- Checking for consistency of all logs.
- Checking for conformance to the guideline.
- Checking to see that all information is entered in their respective columns and spaces.

6.0 REFERENCES

Unified Soil Classification System (USCS).

ASTM D2488, 1985.

Earth Manual, U.S. Department of the Interior, 1974.

7.0 RECORDS

Originals of the boring logs shall be retained in the project files.

TETRA TECH NUS, INC.	STANDARD OPERATING PROCEDURES	Number GH-2.5	Page 1 of 9
		Effective Date 06/99	Revision 1
		Applicability Tetra Tech NUS, Inc.	
		Prepared Earth Sciences Department	
Subject GROUNDWATER CONTOUR MAPS AND FLOW DETERMINATIONS		Approved D. Senovich	

TABLE OF CONTENTS

SECTION **PAGE**

1.0 PURPOSE **2**

2.0 SCOPE **2**

3.0 GLOSSARY **2**

4.0 RESPONSIBILITIES **3**

5.0 PROCEDURES **3**

5.1 POTENTIOMETRIC SURFACE MAPPING 3
5.1.1 Selection of Wells 3
5.1.2 Water Level Measurements 3
5.1.3 Construction of Equipotential Lines 4
5.1.4 Determination of Groundwater-Flow Direction 4
5.2 GROUNDWATER FLOW CONSIDERATIONS 5
5.3 DETERMINATION OF FLOW RATE 5

6.0 REFERENCES **7**

ATTACHMENTS

A GENERALIZED POROSITY AND HYDRAULIC CONDUCTIVITY VALUES FOR GEOLOGIC MATERIALS 9

1.0 PURPOSE

The purpose of this procedure is to provide a basic understanding of developing contour maps and the approaches used to identify and quantify the direction and rate of groundwater flow and contaminant plume movement.

2.0 SCOPE

This procedure provides only a general overview of the field techniques, mathematical and physical relationships and data handling procedures used for determining groundwater flow direction and rate. The references identified herein can provide a more complete explanation of particular methods cited, as well as a more comprehensive discussion on the interpretation of hydrogeologic data.

3.0 GLOSSARY

Aquifer - A geologic formation capable of transmitting usable quantities of groundwater to a well or other discharge point.

Aquitard - A geologic formation which retards the flow of groundwater due to its low permeability.

Confined Aquifer - An aquifer that is overlain and underlain by zones of lower permeability (aquitards). If the aquifer is "artesian," the potentiometric head of the aquifer at a given point is higher than the top of the zone comprising the aquifer at that point.

Equipotential Line - A line connecting points of equal elevation of the water table or potentiometric surface. Equipotential lines on the water table are also called water table contour lines.

Flow Line - A flow line indicates the direction of groundwater movement within the saturated zone. Flow lines are drawn perpendicular to equipotential lines.

Flow Net - A diagram of groundwater flow showing flow lines and equipotential lines.

Hydraulic Conductivity (K) - A quantitative measure of the ability of porous material to transmit water. Volume of water that will flow through a unit cross sectional area of porous material per unit time under a head gradient. Hydraulic conductivity is dependent upon properties of the medium and fluid.

Hydraulic Gradient (i) - The rate of change of hydraulic head per unit distance of flow at a given point and in the downgradient direction.

Hydraulic Head - The height to which water will rise inside a well casing, equal to the elevation head plus the pressure head. In a well screened across the water table, hydraulic head equals the elevation head, as the pressure head equals 0. In wells screened below the water table in an unconfined aquifer or screened at any interval within a confined aquifer, the head is the sum of the elevation of the aquifer (the elevation head) and the fluid pressure of the water confined in the aquifer (the pressure head).

Potentiometric (piezometric) Surface - A hypothetical surface that coincides with the static level of the water in an aquifer (i.e., the maximum elevation to which water will rise in a well or piezometer penetrating the aquifer). The term "potentiometric surface" is usually applied to confined aquifers, although the water table is the potentiometric surface of an unconfined aquifer.

Unconfined Aquifer - An aquifer in which the water table forms the upper boundary.

Water Table - The surface in the groundwater system at which the fluid pressure is equal to atmospheric pressure (i.e., the net pressure head is zero) and below which all strata are saturated with water.

4.0 RESPONSIBILITIES

Project Hydrogeologist - The project hydrogeologist has overall responsibility for obtaining water level measurements and developing groundwater contour maps. The hydrogeologist (with the concurrence of the Project Manager) shall specify the reference point from which water levels are measured (usually a specific point on the upper edge of the inner well casing), the number of data points needed and which wells shall be used for a contour map, and how many complete sets of water levels are required to adequately define groundwater flow directions (e.g., if there are seasonal variations).

Field Personnel - All supporting field personnel must have a basic familiarity with the equipment and procedures involved in obtaining water levels, and must be aware of any project-specific requirements.

5.0 PROCEDURES

5.1 Potentiometric Surface Mapping

5.1.1 Selection of Wells

All wells used to prepare a flow net in a plan or map view should represent the same hydrogeologic unit, be it aquifer or aquitard. All water level measurements used shall be collected on the same day, preferably within 2-3 hours. This is especially important when working in an area where groundwater levels are tidally influenced or influenced by pumping.

The recorded water levels, monitoring-well construction data, site geology, and topographic setting must be reviewed to ascertain that the wells are completed in the same hydrogeologic unit and to determine if strong vertical hydraulic gradients may be present. Such conditions will be manifested by a pronounced correlation between well depth and water level, or by a difference in water level between two wells located near each other but set to different depths or having different screen lengths. Professional judgment of the hydrogeologist is important in this determination. If vertical gradients are significant, the data to be used must be limited vertically, and only wells finished in a chosen vertical zone of the hydrogeologic unit can be used.

At least three wells must be used to provide an estimation of the direction of groundwater flow; information from many more wells are needed to provide an accurate contour map. Generally, shallow systems require data from more wells than deep systems for accurate contour mapping. Potentiometric surface mapping for shallow flow systems also requires water level measurements from nearby surface water bodies.

5.1.2 Water Level Measurements

After selection of the wells to be used for mapping, the next step in determining the direction of groundwater flow is to obtain water level elevations from the selected points. In addition, any other readily available wells/surface water bodies should be measured to ensure that sufficient data are available for interpretation purposes.

Elevations are obtained from measurements of the depth to water in a monitoring well or piezometer taken from the top of the well casing (see SOP GH-1.2) and then referencing the elevation of the casing to a chosen and consistent datum point, usually mean sea level. Subtracting the depth to water from the casing elevation provides the elevation of the potentiometric surface. Elevations of points and areas of groundwater discharge or recharge such as springs, seeps, streams, rivers, and lakes also need to be determined, typically through staff gauge measurements. Comparison of these elevations, which represent hydraulic heads, will reveal the direction of flow because groundwater flows from areas of high head to areas of low head.

5.1.3 Construction of Equipotential Lines

Graphical methods available for depicting the flow of groundwater include the use of equipotential lines and flow lines to construct potentiometric surface maps and vertical flow nets. If the hydrogeologic system consists of a water table aquifer and one or more confined aquifers, separate contour maps should be prepared for each aquifer system. Water table maps should be developed using water level measurements obtained from monitoring wells screened at the unsaturated-saturated interface. Water level measurements collected from monitoring wells screened in the deeper portions of an unconfined aquifer should generally be contoured as a separate potentiometric surface map. Surface water discharge or recharge features are contoured in the water table system. Vertical flow nets should be constructed using a cross section aligned parallel to the direction of groundwater flow. All water level measurements along this cross section, both deep and shallow, are used in developing equipotential lines and flow lines for the flow net.

To construct equipotential lines, water level elevations in the chosen wells are plotted on a site map. Other hydrogeologic features associated with the zone of interest -- such as seeps, wetlands, and surface-water bodies -- should also be plotted along with their elevations.

The data should then be contoured, using mathematically valid and generally accepted techniques. Linear interpolation is the most commonly used technique. However, quadratic interpolation or any technique of trend-surface analysis or data smoothing is acceptable. Computer-generated contour maps may be useful rough mapping of large data sets; however, final, detailed mapping must always be performed by hand by an experienced hydrogeologist. Contour lines shall be drawn as smooth, continuous lines which never cross one another.

Inspect the contour map, noting known features, such as pumping wells and site topography. The contour lines must be adjusted utilizing the professional judgment of the hydrogeologist in accordance with these features. Closed contours should be avoided unless a known groundwater sink (i.e., pumping well) or mound exists. Groundwater mounding is common under landfills and lagoons; if the data imply this, the feature must be evident in the contour plot.

5.1.4 Determination of Groundwater-Flow Direction

Flow lines shall be drawn so that they are perpendicular to equipotential lines. Flow lines will begin at high head elevations and end at low head elevations. Closed highs will be the source of additional flow lines. Closed depressions (i.e., wells) will be the termination of some flow lines. Care must be used in areas with significant vertical gradients to avoid erroneous conclusions concerning gradients and flow directions.

5.2 Groundwater Flow Considerations

Groundwater movement is an integral part of the hydrologic cycle. Recharge to the shallow groundwater environment generally occurs by infiltration of precipitation through an upper unsaturated soil zone. Movement is downward under the force of gravity until the water reaches the saturated zone of the water table aquifer. Once water is part of the water table aquifer, movement is controlled by differences in hydraulic head, with movement from areas of high head to areas of low head. Areas of low head include natural discharge areas such as springs, lakes, rivers, and, ultimately, the ocean. These features can be considered as outcrops of the water table. Points of low head also are created by pumping wells.

Local head differences and consequent vertical flow patterns within an aquifer can be detected by well clusters. A well cluster consists of several adjacent wells, generally installed within a few feet of each other, and screened at different depths. Variations in water levels in these closely spaced wells indicates the vertical component of groundwater flow within an aquifer, provided that the wells are all screened within the same aquifer.

The number, location, and extent of geologic units and their properties with regard to aquifer or aquitard characteristics must be understood to properly interpret water level data gathered from the monitoring system. This firm understanding of the hydrogeologic system must be developed through a program of borings, wells, and interpretation of subsurface geology. The adequacy of the positions and depths of borings/wells used to define relevant subsurface hydrogeologic conditions must also be assessed. The location of surface water discharge or recharge points must be considered. Surface water features influence the system, as flow is most likely toward them (if they are discharge points) or away from them (if they are recharge points). Man-made discharge or recharge features such as pumping or injection wells, ditches, and trenches can also affect the flow of groundwater.

5.3 Determination of Flow Rate

Darcy's Law states that the quantity of water flowing through a geologic material is dependent upon the permeability of the material, the hydraulic gradient, and the cross sectional area through which the water flows. This relation is expressed in the equation:

$$Q = KiA$$

where:

Q	=	volume of water flowing through the cross sectional area of the formation (L^3/T).
K	=	hydraulic conductivity (L/T).
i	=	hydraulic gradient (L/L, i.e., dimensionless).
A	=	cross sectional area of formation being considered (L^2).

The relation is similar to one used in stream flow measurements where:

$$Q = VA$$

where:

Q	=	discharge from the cross sectional area of a stream or pipe (L^3/T).
V	=	average velocity of flowing water (L/T).
A	=	cross sectional area through which water flows (L^2).

The velocity of water movement in a geologic formation depends on the specific formation properties and the head differences across the formation. This relation is defined in the equation:

$$V = \frac{Ki}{n}$$

where:

V = average linear velocity of groundwater through the formation (L/T)
K = hydraulic conductivity (L/T)
i = hydraulic gradient (dimensionless)
n = porosity (expressed as a fraction).

Values of porosity for several geologic materials are given in Attachment A. More accurate and specific values of porosity can be obtained by laboratory analysis of a formation sample or from an unconfined aquifer pumping test.

Hydraulic conductivity is related to the permeability of the formation and depends on the size and interconnection of the pore spaces. In isotropic and homogeneous formations, the hydraulic conductivity will be the same vertically and horizontally. In anisotropic formations, horizontal and vertical conductivity can be markedly different and the vertical hydraulic conductivity can be up to several orders of magnitude lower than the horizontal hydraulic conductivity. Typically, most formations are anisotropic with horizontal hydraulic conductivities at least several times as high as the vertical hydraulic conductivities.

Generally, hydraulic conductivities are high for sands, gravels, and limestone containing large solution cavities and low for silts, clays, and tightly fractured rock. Attachment A gives values of hydraulic conductivity for several geologic materials. More accurate values can be obtained during field testing of aquifers or from laboratory measurements on undisturbed cores. Results from field testing usually provide higher (and more representative) hydraulic conductivities than laboratory testing because full-scale field testing includes the effects of the formational macrostructure (i.e., secondary permeability due to jointing or fractures) which is not reflected in the testing of a small sample in the laboratory.

The hydraulic gradient, i, is determined from field measurements of hydraulic head obtained from water level measuring points. Do not measure gradient from well to well; measure across equipotential lines that are drawn based on the well (and other) data. Once a potentiometric surface map has been generated using the hydraulic head data, the hydraulic gradient can be calculated using the following formula:

$$i = \frac{dh}{dl}$$

where:

dh = change in head (L)
dl = distance between equipotential lines (L)

The hydraulic gradient along any flow line can be calculated from a potentiometric surface map by dividing the change in head by the length of the flow line, typically beginning and ending at equipotential lines. The longer the distance over which the head change is measured, the more representative the gradient is of overall conditions.

When chemical solutes are traveling in groundwater, as in cases of groundwater contamination, the calculated groundwater velocity may predict migration rates in excess of what is actually observed. The difference in chemical versus water velocities may be due to attenuation or biodegradation of the chemical species in the aquifer. Attenuation is most often caused by adsorption of the chemical contaminant onto the formation grains or matrix. The result is that the chemical does not appear at the downgradient sampling point as quickly as the velocity calculation predicts. An equation to correct for this attenuation is:

$$V_c = V_w / (1 + K_d P_b / n)$$

where:

V_c = velocity of the chemical solute flow (L/T)
V_w = velocity of groundwater flow (L/T)
P_b = formation mass bulk density (M/L^3)
n = formation porosity (expressed as a fraction)
K_d = distribution coefficient = (L^3/M)

The K_d is equal to the mass of solute per unit mass of solid phase divided by the concentration of solute in solution. The term in the denominator is known as the retardation factor.

Density and/or viscosity differences between water and contaminants can also cause velocity determination errors. Light hydrocarbons such as gasoline are less dense than water and consequently float on the water table. These contaminants can migrate along the water table surface at rates faster or slower than the rate of groundwater movement, depending on specific conditions, and may also volatilize into unsaturated soil pore spaces. Oils are more viscous than water and will typically migrate more slowly due to the viscosity difference. Contaminants denser than water such as heavy hydrocarbons (e.g., coal tar) or chlorinated compounds (e.g., TCE, PCE) tend to sink to the bottom of an aquifer if present in concentrations exceeding their solubility limit (these chemicals are often referred to as dense, nonaqueous phase liquids, or DNAPLs if present as a separate-phase liquid). Here, the contamination may move at faster or slower rates than the overlying groundwater or may actually move in a direction opposite to that of the groundwater, depending on the geologic characteristics of the aquifer base and direction of dip of the underlying aquitard.

Other factors involving the physicochemical interaction between the chemical and the groundwater, such as dilution (mixing contaminated water or chemicals with additional quantities of groundwater) and dispersion (molecular diffusion of the chemical throughout the groundwater regime), can also affect the observed rates of travel of contaminants in groundwater. In addition to such physicochemical characteristics, all of the aquifer and aquitard properties and groundwater flow characteristics described above must be known so that adequate and accurate estimations of the extent and rate of groundwater contaminant migration can be developed.

6.0 REFERENCES

Cedergren, H. R., 1977. Seepage, Drainage and Flow Nets (Second edition). John Wiley and Sons, New York.

Fetter, C. W., 1980. Applied Hydrogeology. Merrill, Columbus, Ohio, 488 pp.

Davis, S. N. and R. J. DeWiest, 1966. Hydrogeology. John Wiley and Sons, New York.

Freeze, R. A. and J. A. Cherry, 1979. Ground Water. Prentice-Hall, Inc., Englewood Cliffs, New Jersey.

Johnson Division, UOP, Inc., 1975. Ground Water and Wells. Johnson Division, UOP, Inc., Saint Paul, Minnesota.

ATTACHMENT A

GENERALIZED POROSITY AND HYDRAULIC CONDUCTIVITY VALUES FOR GEOLOGIC MATERIALS

Material	Porosity Range (%)	Hydraulic Conductivity Range	
		cm/sec	ft/day
Gravel	30-40	10^{-1} to 10^{-2}	280 to 2.8 x 10^{5}
Coarse sand (clean)	30-40	10^{-1} to 1	280 to 2,800
Medium sand (clean)	35-45	10^{-2} to 10^{-1}	28 to 280
Fine sand (clean)	40-50	5 x 10^{-4} to 10^{-2}	1.4 to 28
Silty sand	25-40	10^{-5} to 10^{-2}	0.03 to 280
Glacial Till	Variable	10^{-10} to 10^{-4}	3 x 10^{-7} to 0.3
Unweathered Clay/Shale	45-55 (clay)	10^{-7} to 10^{-4}	3 x 10^{-4} to 0.3 (horizontal)
		10^{-10} to 10^{-6}	3 x 10^{-7} to 3 x 10^{-3} (vertical)
Karst Limestone	—	10^{-4} to 10^{-1}	0.3 to 2,800
Fractured Igneous/Metamorphic Rocks	—	10^{-6} to 10^{-1}	3 x 10^{-3} to 280
Sandstone	5-30	10^{-8} to 10^{-4}	3 x 10^{-5} to 0.3

Source: References 1 and 2

TETRA TECH NUS, INC.	STANDARD OPERATING PROCEDURES	Number GH-2.8	Page 1 of 12
		Effective Date 09/03	Revision 3
		Applicability Tetra Tech NUS, Inc.	
		Prepared Earth Sciences Department	
Subject GROUNDWATER MONITORING WELL INSTALLATION		Approved D. Senovich	

TABLE OF CONTENTS

SECTION		PAGE
1.0	**PURPOSE**	**2**
2.0	**SCOPE**	**2**
3.0	**GLOSSARY**	**2**
4.0	**RESPONSIBILITIES**	**2**
5.0	**PROCEDURES**	**3**
5.1	EQUIPMENT/ITEMS NEEDED	3
5.2	WELL DESIGN	3
5.2.1	Well Depth, Diameter, and Monitored Interval	3
5.2.2	Riser Pipe and Screen Materials	5
5.2.3	Annular Materials	6
5.2.4	Protective Casing	6
5.3	MONITORING WELL INSTALLATION	7
5.3.1	Monitoring Wells in Unconsolidated Sediments	7
5.3.2	Confining Layer Monitoring Wells	7
5.3.3	Bedrock Monitoring Wells	8
~~5.3.4~~	~~Drive Points~~	~~8~~
~~5.3.5~~	~~Innovative Monitoring Well Installation Techniques~~	~~8~~
5.4	WELL DEVELOPMENT METHODS	8
5.4.1	Overpumping and Backwashing	8
5.4.2	Surging with a Surge Plunger	9
~~5.4.3~~	~~Compressed Air~~	~~9~~
~~5.4.4~~	~~High Velocity Jetting~~	~~9~~
6.0	**RECORDS**	**9**
7.0	**REFERENCES**	**10**

ATTACHMENTS

A	RELATIVE COMPATIBILITY OF RIGID WELL-CASING MATERIAL (PERCENT) / RELATIVE COMPATIBILITY OF SEMI-RIGID OR ELASTOMERIC MATERIALS (PERCENT)	11
B	COMPARISON OF STAINLESS STEEL AND PVC FOR MONITORING WELL CONSTRUCTION	12

1.0 PURPOSE

This procedure provides general guidance and information pertaining to proper monitoring well design, installation, and development.

2.0 SCOPE

This procedure is applicable to the construction of monitoring wells. The methods described herein may be modified by project-specific requirements for monitoring well construction. In addition, many regulatory agencies have specific regulations pertaining to monitoring well construction and permitting. These requirements must be determined during the project planning phases of the investigation, and any required permits must be obtained before field work begins. Innovative monitoring well installation techniques, which typically are not used, will be discussed only generally in this procedure.

3.0 GLOSSARY

Monitoring Well - A well which is screened, cased, and sealed which is capable of providing a groundwater level and groundwater sample representative of the zone being monitored. Some monitoring wells may be constructed as open boreholes.

Piezometer - A pipe or tube inserted into the water bearing zone, typically open to water flow at the bottom and to the atmosphere at the top, and used to measure water level elevations. Piezometers may range in size from 1/2-inch-diameter plastic tubes to well points or monitoring wells.

Potentiometric Surface - The surface representative of the level to which water will rise in a well cased to the screened aquifer.

Well Point (Drive Point) - A screened or perforated tube (Typically 1-1/4 or 2 inches in diameter) with a solid, conical, hardened point at one end, which is attached to a riser pipe and driven into the ground with a sledge hammer, drop weight, or mechanical vibrator. Well points may be used for groundwater injection and recovery, as piezometers (i.e., to measure water levels) or to provide groundwater samples for water quality data.

4.0 RESPONSIBILITIES

Driller - The driller provides adequate and operable equipment, sufficient quantities of materials, and an experienced and efficient labor force capable of performing all phases of proper monitoring well installation and construction. The driller may also be responsible for obtaining, in advance, any required permits for monitoring well installation and construction.

Field Geologist - The field geologist supervises and documents well installation and construction performed by the driller, and insures that well construction is adequate to provide representative groundwater data from the monitored interval. Geotechnical engineers, field technicians, or other suitable trained personnel may also serve in this capacity.

5.0 PROCEDURES

5.1 Equipment/Items Needed

Below is a list of items that may be needed when installing a monitoring well or piezometer:

- Health and safety equipment (hard hats, safety glasses, etc.) as required by the Site Safety Officer.
- Well drilling and installation equipment with associated materials (typically supplied by the driller).
- Hydrogeologic equipment (weighted engineer's tape, water level indicator, retractable engineers rule, electronic calculator, clipboard, mirror and flashlight - for observing downhole activities, paint and ink marker for marking monitoring wells, sample jars, well installation forms, and a field notebook).
- Drive point installation tools (sledge hammer, drop hammer, or mechanical vibrator; tripod, pipe wrenches, drive points, riser pipe, and end caps).

5.2 Well Design

The objectives and intended use for each monitoring well must be clearly defined before the monitoring system is designed. Within the monitoring system, different monitoring wells may serve different purposes and, therefore, require different types of construction. During all phases of the well design, attention must be given to clearly documenting the basis for design decisions, the details of well construction, and the materials used. The objectives for installing the monitoring wells may include:

- Determining groundwater flow directions and velocities.
- Sampling or monitoring for trace contaminants.
- Determining aquifer characteristics (e.g., hydraulic conductivity).

Siting of monitoring wells shall be performed after a preliminary estimation of the groundwater flow direction. In most cases, groundwater flow directions and potential well locations can be determined by an experienced hydrogeologist through the review of geologic data and the site terrain. In addition, data from production wells or other monitoring wells in the area may be used to determine the groundwater flow direction. If these methods cannot be used, piezometers, which are relatively inexpensive to install, may have to be installed in a preliminary investigative phase to determine groundwater flow direction.

5.2.1 Well Depth, Diameter, and Monitored Interval

The well depth, diameter, and monitored interval must be tailored to the specific monitoring needs of each investigation. Specification of these items generally depends on the purpose of the monitoring system and the characteristics of the hydrogeologic system being monitored. Wells of different depth, diameter, and monitored interval can be employed in the same groundwater monitoring system. For instance, varying the monitored interval in several wells, at the same location (cluster wells) can help to determine the vertical gradient and the depths at which contaminants are present. Conversely, a fully penetrating well is usually not used to quantify or vertically locate a contaminant plume, since groundwater samples collected in wells that are screened over the full thickness of the water-bearing zone will be representative of average conditions across the entire monitored interval. However, fully penetrating wells can be used to establish the existence of contamination in the water-bearing zone. The well diameter desired depends upon the hydraulic characteristics of the water-bearing zone, sampling requirements, drilling method and cost.

The decision concerning the monitored interval and well depth is based on the following (and possibly other) information:

- The vertical location of the contaminant source in relation to the water-bearing zone.
- The depth, thickness and uniformity of the water-bearing zone.
- The anticipated depth, thickness, and characteristics (e.g., density relative to water) of the contaminant plume.
- Fluctuation in groundwater levels (due to pumping, tidal influences, or natural recharge/discharge events).
- The presence and location of contaminants encountered during drilling.
- Whether the purpose of the installation is for determining existence or non-existence of contamination or if a particular stratigraphic zone is being investigated.
- The analysis of borehole geophysical logs.

In most situations where groundwater flow lines are horizontal, depending on the purpose of the well and the site conditions, monitored intervals are 20 feet or less. Shorter screen lengths (5 feet or less) are usually required where flow lines are not horizontal, (i.e., if the wells are to be used for accurate measurement of the potentiometric head at a specific point).

Many factors influence the diameter of a monitoring well. The diameter of the monitoring well depends on the application. In determining well diameter, the following needs must be considered:

- Adequate water volume for sampling.
- Drilling methodology.
- Type of sampling device to be used.
- Costs.

Standard monitoring well diameters are 2, 4, 6, or 8 inches. Drive points are typically 1-1/4 or 2 inches in diameter. For monitoring programs which require screened monitoring wells, either a 2-inch or 4-inch-diameter well is preferred. Typically, well diameters greater than 4 inches are used in monitoring programs in which open-hole bedrock monitoring wells are used. With smaller diameter wells, the volume of stagnant water in the well is minimized, and well construction costs are reduced; however, the sampling devices that can be used are limited.

In specifying well diameter, sampling requirements must be considered (up to a total of 4 gallons of water may be required for a single sample to account for full organic and inorganic analyses, and split samples), particularly if the monitored formation is known to be a low-yielding formation. The unit volume of water contained within a monitoring well is dependent on the well diameter as follows:

Casing Inside Diameter (Inch)	Standing Water Length to Obtain 1 Gallon Water (Feet)
2	6.13
4	1.53
6	0.68

If a well recharges quickly after purging, then well diameter may not be an important factor regarding sample volume requirements.

Pumping tests for determining aquifer characteristics may require larger diameter wells (for installation of high capacity pumps); however, in small-diameter wells in-situ permeability tests can be performed during drilling or after well installation is completed.

5.2.2 Riser Pipe and Screen Materials

Well materials are specified by diameter, type of material, and thickness of pipe. Well screens require an additional specification of slot size. Thickness of pipe is referred to as "Schedule" for polyvinyl chloride (PVC) casing and is usually Schedule 40 (thinner wall) or 80 (thicker wall). Steel pipe thickness is often referred to as "Strength". Standard Strength is usually adequate for monitoring well purposes. With larger diameter pipe, the wall thickness must be greater to maintain adequate strength. The required thickness is also dependent on the method of installation; risers for drive points require greater strength than wells installed inside drilled borings.

The selection of well screen and riser materials depends on the method of drilling, the type of subsurface materials the well penetrates, the type of contamination expected, and natural water quality and depth. Cost and the level of accuracy required are also important. The materials generally available are Teflon, stainless steel, PVC galvanized steel, and carbon steel. Each has advantages and limitations (see Attachment A of this guideline for an extensive presentation on this topic). The two most commonly used materials are PVC and stainless steel. Properties of these two materials are compared in Attachment B. Stainless steel is a good choice where trace metals or organic sampling is required; however, costs are high. Teflon materials are extremely expensive, but are relatively inert and provide the least opportunity for water contamination due to well materials. PVC has many advantages, including low cost, excellent availability, light weight, ease of manipulation, and widespread acceptance. The crushing strength of PVC may limit the depth of installation, but the use of Schedule 80 materials may overcome some of the problems associated with depth. However, the smaller inside diameter of Schedule 80 pipe may be an important factor when considering the size of bailers or pumps required for sampling or testing. Due to this problem, the minimum well pipe size recommended for Schedule 80 wells is 4-inch I.D.

Screens and risers may have to be decontaminated before use because oil-based preservatives and oil used during thread cutting and screen manufacturing may contaminate samples. Metal pipe may corrode and release metal ions or chemically react with organic constituents, but this is considered a minor issue. Galvanized steel is not recommended where samples may be collected for metals analyses, as zinc and cadmium levels in groundwater samples may become elevated from leaching of the zinc coating.

Threaded, flush-joint casing is most often preferred for monitoring well applications. PVC, Teflon, and steel can all be obtained with threaded joints. Welded-joint steel casing is also acceptable. Glued PVC may release organic contaminants into the well, and therefore, should not be used if the well is to be sampled for organic constituents.

When the water-bearing zone is in consolidated bedrock, such as limestone or fractured granite, a well screen is often not necessary (the well is simply an open hole in bedrock). Unconsolidated materials, such as sands, clay, and silts require a screen. A screen slot size of 0.010 or 0.020 inch is generally used when a screen is necessary, and the annular borehole space around the screened interval is artificially packed with an appropriately sized sand, selected based on formation grain size. The slot size controls the quantity of water entering the well and prevents entry of natural materials or sand pack. The screen shall pass no more than 10 percent of the pack material, or in-situ aquifer material. The site geologist shall specify the combination of screen slot size and sand pack which will be compatible with the water-bearing zone, to maximize groundwater inflow and minimize head losses and movement of fines into the wells. For example, as a standard procedure, a Morie No. 1 or No. 10 to No. 20 U.S. Standard Sieve size filter pack is typically appropriate for a 0.020-inch slot screen; however, a No. 20 to No. 40 U.S. Standard Sieve size filter pack is typically appropriate for a 0.010-inch slot screen.

5.2.3 Annular Materials

Materials placed in the annular space between the borehole and riser pipe and screen include a sand pack when necessary, a bentonite seal, and cement-bentonite grout. The sand pack is usually a medium- to coarse-grained poorly graded, silica sand and should relate to the grain size of the aquifer sediments. The quantity of sand placed in the annular space is dependent upon the length of the screened interval, but should always extend at least 1 foot above the top of the screen. At least 1 to 3 feet of bentonite pellets or equivalent shall be placed above the sand pack. Cement-bentonite grout (or equivalent) is then placed to extent from the top of the bentonite pellets to the ground surface.

On occasion, and with the concurrence of the involved regulatory agencies, monitoring wells may be packed naturally (i.e., no artificial sand pack installed). In this case, the natural formation material is allowed to collapse around the well screen after the well is installed. This method has been used where the formation material itself is a relatively uniform grain size, or when artificial sand packing is not possible due to borehole collapse.

Bentonite expands by absorbing water and provides a seal between the screened interval and the overlying portion of the annular space and formation. Cement-bentonite grout is placed on top of the bentonite pellets, extending to the surface. The grout effectively seals the remaining borehole annulus and eliminates the possibility for surface infiltration reaching the screened interval. Grouting also replaces material removed during drilling and prevents hole collapse and subsidence around the well. A tremie pipe should be used to introduce grout from the bottom upward, to prevent bridging, and to provide a better seal. In shallow boreholes that don't collapse, it may be more practical to pour the grout from the surface without a tremie pipe.

Grout is a general term which has several different connotations. For all practical purposes within the monitoring well installation industry, grout refers to the solidified material which is installed and occupies the annular space above the bentonite pellet seal. Grout, most of the time, is made up of one or two assemblages of material, (e.g., cement and/or bentonite). A cement-bentonite grout, which is the most common type of grout used in monitoring well completions, normally is a mixture of cement, bentonite, and water at a ratio of one 90-pound bag of Portland Type I cement, plus 3 to 5 pounds of granular or flake-type bentonite, and 6-7 gallons of water. A neat cement consists of one ninety-pound bag of Portland Type I cement and 6-7 gallons of water. A bentonite slurry (bentonite and water mixed to a thick but pumpable mixture) is sometimes used instead of grout for deep well installations where placement of bentonite pellets is difficult. Bentonite chips are also occasionally used for annular backfill in place of grout.

In certain cases, the borehole may be drilled to a depth greater than the anticipated well installation depth. For these cases, the well shall be backfilled to the desired depth with bentonite pellets/chips or sand. A short (1- to 2-foot) section of capped riser pipe sump is sometimes installed immediately below the screen, as a silt reservoir, when significant post-development silting is anticipated. This will ensure that the entire screen surface remains unobstructed.

5.2.4 Protective Casing

When the well is completed and grouted to the surface, a protective steel casing is typically placed over the top of the well. This casing generally has a hinged cap and can be locked to prevent vandalism. The protective casing has a larger diameter than the well and is set into the wet cement grout over the well upon completion. In addition, one hole is drilled just above the cement collar through the protective casing which acts as a weep hole for the flow of water which may enter the annulus during well development, purging, or sampling.

A protective casing which is level with the ground surface (flush-mounted) is used in roadway or parking lot applications where the top of a monitoring well must be below the pavement. The top of the riser pipe is placed 4 to 5 inches below the pavement, and a locking protective casing is cemented in place to 3 inches below the pavement. A large diameter, manhole-type protective collar is set into the wet cement around the well with the top set level with or slightly above the pavement. An appropriately-sized id is placed over the protective sleeve. The cement should be slightly mounded to direct pooled water away from the well head.

5.3 Monitoring Well Installation

Pertinent data regarding monitoring well installation shall be recorded on log sheets as depicted and discussed in SOP SA-6.3. Attachments to this referenced SOP illustrate terms and physical construction of various types of monitoring wells.

5.3.1 Monitoring Wells in Unconsolidated Sediments

After the borehole is drilled to the desired depth, well installation can begin. The procedure for well installation will partially be dictated by the stability of the formation in which the well is being placed. If the borehole collapses immediately after the drilling tools are withdrawn, then a temporary casing must be installed and well installation will proceed through the center of the temporary casing, and continue as the temporary casing is withdrawn from the borehole. In the case of hollow-stem auger drilling, the augers will act to stabilize the borehole during well installation.

Before the screen and riser pipe are lowered into the borehole, all pipe and screen sections should be measured with an engineer's rule to ensure proper placement. When measuring sections, the threads on one end of the pipe or screen must be excluded while measuring, since the pipe and screen sections are screwed flush together.

After the screen and riser pipe are lowered through the temporary casing, the sand pack can be installed. A weighted tape measure must be used during the installation procedure to carefully monitor installation progress. The sand is slowly poured into the annulus between the riser pipe and temporary casing, as the casing is withdrawn. Sand should always be kept within the temporary casing during withdrawal in order to ensure an adequate sand pack. However, if too much sand is within the temporary casing (greater than 1 foot above the bottom of the casing) bridging between the temporary casing and riser pipe may occur. Centralizers may be used at the geologist's discretion, one above and one below the screen, to assure enough annular space for sand pack placement.

After the sand pack is installed to the desired depth (at least 1 foot above the top of the screen), then the bentonite pellet seal (or equivalent), can be installed in the same manner as the sand pack. At least 1 to 3 feet of bentonite pellets should be installed above the sand pack. Pellets should be added slowly and their fall monitored closely to ensure that bridging does not occur.

The cement-bentonite grout is then mixed and tremied into the annulus as the temporary casing or augers are withdrawn. Finally, the protective casing can be installed as detailed in Section 5.2.4.

5.3.2 Confining Layer Monitoring Wells

When drilling and installing a well in a confined aquifer, proper well installation techniques must be applied to avoid cross contamination between aquifers. Under most conditions, this can be accomplished by installing double-cased wells. This is accomplished by drilling a large-diameter boring through the upper aquifer, 1 to 5 feet into the underlying confining layer, and setting and pressure grouting or tremie grouting a large-diameter casing into the confining layer. The grout material must fill the space between the native material and the outer casing. A smaller diameter boring is then continued through the confining layer for

installation of the monitoring well as detailed for overburden monitoring wells. Sufficient time (determined by the field geologist), must be allowed for setting of the grout prior to drilling through the confined layer.

5.3.3 Bedrock Monitoring Wells

When installing bedrock monitoring wells, a large diameter boring is drilled through the overburden and approximately 5 –10 feet into bedrock. A casing (typically steel) is installed and either pressure grouted or tremie grouted in place. After the grout has cured, a smaller diameter boring is continued into bedrock to the desired depth. If the boring does not collapse, the well can be left open, and a screen is not necessary. If the boring collapses, then a screen is required and can be installed as detailed for overburden monitoring wells. If a screen is to be used, then the casing which is installed through the overburden and into the bedrock does not require grouting and can be removed when the final well installation is completed.

5.3.4 Drive Points

Drive points can be installed with either a sledge hammer, drop hammer, or a mechanical vibrator. The screen section is threaded and tightened onto the riser pipe with pipe wrenches. The drive point is simply pounded into the subsurface to the desired depth. If a heavy drop hammer is used, then a tripod and pulley setup is required to lift the hammer. Drive points typically cannot be manually driven to depths exceeding 10 feet.

Direct push sampling/monitoring point installation methods, using a direct push rig or drilling rig, are described in SOP SA-2.5.

5.3.5 Innovative Monitoring Well Installation Techniques

Certain innovative sampling devices have proven advantageous. These devices are essentially screened samplers installed in a borehole with only small-diameter tubes extending to the surface. This reduces drilling costs, decreases the volume of stagnant water, and provides a sampling system that minimizes cross-contamination from sampling equipment. Four manufacturers of these samplers include Timco Manufacturing Company, Inc., of Prairie du Sac, Wisconsin, BARCAD Systems, Inc., of Concord, Massachusetts, Westbay Instruments Ltd. of Vancouver, British Columbia, Canada and the University of Waterloo at Waterloo, Ontario, Canada.. Each manufacturer offers various construction materials.

5.4 Well Development Methods

The purpose of well development is to stabilize and increase the permeability of the gravel pack around the well screen, and to restore the permeability of the formation which may have been reduced by drilling operations. Wells are typically developed until all fine material and drilling water is removed from the well. Sequential measurements of pH, conductivity, turbidity, and temperature taken during development may yield information (stabilized values) regarding whether sufficient development has been performed. The selection of the well development method shall be made by the field geologist and is based on the drilling methods, well construction and installation details, and the characteristics of the formation that the well is screened in. The primary methods of well development are summarized below. A more detailed discussion may be found in Driscoll (1986).

5.4.1 Overpumping and Backwashing

Wells may be developed by alternatively drawing the water level down at a high rate (by pumping or bailing) and then reversing the flow direction (backwashing) so that water is passing from the well into the formation. This back and forth movement of water through the well screen and gravel pack serves to

remove fines from the formation immediately adjacent to the well, while preventing bridging (wedging) of sand grains. Backwashing can be accomplished by several methods, including pouring water into the well and then bailing, starting and stopping a pump intermittently to change water levels, or forcing water into the well under pressure through a water-tight fitting ("rawhiding"). Care should be taken when backwashing not to apply too much pressure, which could damage or destroy the well screen.

5.4.2 Surging with a Surge Plunger

A surge plunger (also called a surge block) is approximately the same diameter as the well casing and is aggressively moved up and down within the well to agitate the water, causing it to move in and out of the screens. This movement of water pulls fine materials into the well, where they may be removed by any of several methods, and prevents bridging of sand particles in the gravel pack. There are two basic types of surge plungers; solid and valved surge plungers. In formations with low yields, a valved surge plunger may be preferred, as solid plungers tend to force water out of the well at a greater rate than it will flow back in. Valved plungers are designed to produce a greater inflow than outflow of water during surging.

5.4.3 Compressed Air

Compressed air can be used to develop a well by either of two methods: backwashing or surging. Backwashing is done by forcing water out through the screens, using increasing air pressure inside a sealed well, then releasing the pressurized air to allow the water to flow back into the well. Care should be taken when using this method so that the water level does not drop below the top of the screen, thus introducing air into the formation and reducing well yield. Surging, or the "open well" method, consists of alternately releasing large volumes of air suddenly into an open well below the water level to produce a strong surge by virtue of the resistance of water head, friction, and inertia. Pumping of the well is subsequently done using the air lift method.

DW 1/10/11

5.4.4 High Velocity Jetting

In the high velocity jetting method, water is forced at high velocities from a plunger-type device and through the well screen to loosen fine particles from the sand pack and surrounding formation. The jetting tool is slowly rotated and raised and lowered along the length of the well screen to develop the entire screened area. Jetting using a hose lowered into the well may also be effective. The fines washed into the screen during this process can then be bailed or pumped from the well.

6.0 RECORDS

A critical part of monitoring well installation is recording of all significant details and events in the site logbook or field notebook. The geologist must record the exact depths of significant hydrogeological features, screen placement, gravel pack placement, and bentonite placement.

A Monitoring Well Sheet (see Attachments to SOP SA-6.3) shall be completed, ensuring the uniform recording of data for each installation and rapid identification of missing information. Well depth, length, materials of construction, length and openings of screen, length and type of riser, and depth and type of all backfill materials shall be recorded. Additional information shall include location, installation date, problems encountered, water levels before and after well installation, cross-reference to the geologic boring log, and methods used during the installation and development process. Documentation is very important to prevent problems involving questionable sample validity. Somewhat different information will need to be recorded, depending on whether the well is completed in overburden (single- or double-cased), as a cased well in bedrock, or as an open hole in bedrock.

The quantities of sand, bentonite, and grout placed in the well are also important. The geologist shall calculate the annular space volume and have an idea of the quantity of material needed to fill the annular

space. Volumes of backfill significantly higher than the calculated volume may indicate a problem such as a large cavity, while a smaller backfill volume may indicate a cave-in or bridging of the backfill materials. Any problems with rig operation or down-time shall be recorded and may affect the driller's final fee.

7.0 REFERENCES

Scalf, M. R., J. F. McNabb, W. J. Dunlap, R. L. Cosby, and J. Fryberger, 1981. Manual of Groundwater Sampling Procedures. R. S. Kerr Environmental Research Laboratory, Office of Research and Development, U.S. EPA, Ada, Oklahoma.

Barcelona, M. J., P. P. Gibb and R. A. Miller, 1983. A Guide to the selection of Materials for Monitoring Well Construction and Groundwater Sampling. ISWS Contract Report 327, Illinois State Water Survey, Champaign, Illinois.

U.S. EPA, 1980. Procedures Manual for Groundwater Monitoring of Solid Waste Disposal Facilities. Publication SW-611, Office of Solid Waste, U.S. EPA, Washington, D.C.

Driscoll, Fletcher G., 1986. Groundwater and Wells. Johnson Division, St. Paul, Minnesota, 1989.

ATTACHMENT A

RELATIVE COMPATIBILITY OF RIGID WELL CASING MATERIAL (PERCENT)

Potentially-Deteriorating Substance	Type of Casing Material						
	PVC 1	Galvanized Steel	Carbon Steel	Lo-carbon Steel	Stainless Steel 304	Stainless Steel 316	Teflon*
Buffered Weak Acid	100	56	51	59	97	100	100
Weak Acid	98	59	43	47	96	100	100
Mineral Acid/ High Solids Content	100	48	57	60	80	82	100
Aqueous/Organic Mixtures	64	69	73	73	98	100	100
Percent Overall Rating	91	58	56	59	93	96	100

Preliminary Ranking of Rigid Materials:

1 Teflon®
2 Stainless Steel 316
3. Stainless Steel 304
4 PVC 1
5 Lo-Carbon Steel
6 Galvanized Steel
7 Carbon Steel

* Trademark of DuPont

RELATIVE COMPATIBILITY OF SEMI-RIGID OR ELASTOMERIC MATERIALS (PERCENT)

Potentially-Deteriorating Substance	Type of Casing Material								
	PVC Flexible	PP	PE Conv.	PE Linear	PMM	Viton®*	Silicone	Neoprene	Teflon®*
Buffered Weak Acid	97	97	100	97	90	92	87	85	100
Weak Acid	92	90	94	96	78	78	75	75	100
Mineral Acid/ High Solids Content	100	100	100	100	95	100	78	82	100
Aqueous/Organic Mixtures	62	71	40	60	49	78	49	44	100
Percent Overall Rating	88	90	84	88	78	87	72	72	100

Preliminary Ranking of Semi-Rigid or Elastomeric Materials:

1 Teflon®
2 Polypropylene (PP)
3. PVC Flexible/PE Linear
4 Viton®
5 PE Conventional
6 Plexiglas/Lucite (PMM)
7 Silicone/Neoprene

* Trademark of DuPont

Source: Barcelona et al., 1983

ATTACHMENT B

COMPARISON OF STAINLESS STEEL AND PVC FOR MONITORING WELL CONSTRUCTION

Characteristic	Stainless Steel	PVC
Strength	Use in deep wells to prevent compression and closing of screen/riser.	Use when shear and compressive strength are not critical.
Weight	Relatively heavier.	Light-weight; floats in water.
Cost	Relatively expensive.	Relatively inexpensive.
Corrosivity	Deteriorates more rapidly in corrosive water.	Non-corrosive -- may deteriorate in presence of ketones, aromatics, alkyl sulfides, or some chlorinated hydrocarbons.
Ease of Use	Difficult to adjust size or length in the field.	Easy to handle and work with in the field.
Preparation for Use	Should be steam cleaned if organics will be subsequently sampled.	Never use glue fittings -- pipes should be threaded or pressure fitted. Should be steam cleaned when used for monitoring wells.
Interaction with Contaminants*	May sorb organic or inorganic substances when oxidized.	May sorb or release organic substances.

* See also Attachment A.

TETRA TECH NUS, INC.	STANDARD OPERATING PROCEDURES	Number HS-1.0	Page 1 of 15
		Effective Date 12/03	Revision 2
		Applicability Tetra Tech NUS, Inc.	
		Prepared Health & Safety	
Subject UTILITY LOCATING AND EXCAVATION CLEARANCE		Approved D. Senovich	

TABLE OF CONTENTS

SECTION **PAGE**

1.0 PURPOSE **2**

2.0 SCOPE **2**

3.0 GLOSSARY **2**

4.0 RESPONSIBILITIES **3**

5.0 PROCEDURES **3**

5.1 BURIED UTILITIES 3
5.2 OVERHEAD POWER LINES 5

6.0 UNDERGROUND LOCATING TECHNIQUES **5**

6.1 GEOPHYSICAL METHODS 5
6.2 PASSIVE DETECTION SURVEYS 6
6.3 INTRUSIVE DETECTION SURVEYS 6

7.0 INTRUSIVE ACTIVITIES SUMMARY **7**

8.0 REFERENCES **8**

ATTACHMENTS

1 Listing of Underground Utility Clearance Resources 9
2 Frost Line Penetration Depths by Geographic Location 11
3 Utility Clearance Form 12
4 OSHA Letter of Interpretation 13

1.0 PURPOSE

Utilities such as electric service lines, natural or propane gas lines, water and sewage lines, telecommunications, and steam lines are very often in the immediate vicinity of work locations. Contact with underground or overhead utilities can have serious consequences including employee injury/fatality, property and equipment damage, substantial financial impacts, and loss of utility service to users.

The purpose of this procedure is to provide minimum requirements and technical guidelines regarding the appropriate procedures to be followed when performing subsurface and overhead utility locating services. It is the policy of Tetra Tech NUS, Inc. (TtNUS) to provide a safe and healthful work environment for the protection of our employees. The purpose of this Standard Operating Procedure (SOP) is to aid in achieving the objectives of this policy, to present the acceptable procedures pertaining to utility locating and excavation clearance activities, and to present requirements and restrictions relevant to these types of activities. This SOP must be reviewed by any employee potentially involved with underground or overhead utility locating and avoidance activities.

2.0 SCOPE

This procedure applies to all TtNUS field activities where there may be potential contact with underground or overhead utilities. This procedure provides a description of the principles of operation, instrumentation, applicability, and implementability of typical methods used to determine the presence and avoidance of contact with utility services. This procedure is intended to assist with work planning and scheduling, resource planning, field implementation, and subcontractor procurement. Utility locating and excavation clearance requires site-specific information prior to the initiation of any such activities on a specific project. This SOP is not intended to provide a detailed description of methodology and instrument operation. Specialized expertise during both planning and execution of several of the methods presented may also be required.

3.0 GLOSSARY

Electromagnetic Induction (EMI) Survey - A geophysical exploration method whereby electromagnetic fields are induced in the ground and the resultant secondary electromagnetic fields are detected as a measure of ground conductivity.

Magnetometer – A device used for precise and sensitive measurements of magnetic fields.

Magnetic Survey – A geophysical survey method that depends on detection of magnetic anomalies caused by the presence of buried ferromagnetic objects.

Metal Detection – A geophysical survey method that is based on electromagnetic coupling caused by underground conductive objects.

Vertical Gradiometer – A magnetometer equipped with two sensors that are vertically separated by a fixed distance. It is best suited to map near surface features and is less susceptible to deep geologic features.

Ground Penetrating Radar – Ground Penetrating Radar (GPR) involves specialized radar equipment whereby a signal is sent into the ground via a transmitter. Some portion of the signal will be reflected from the subsurface material, which is then recorded with a receiver and electronically converted into a graphic picture.

4.0 RESPONSIBILITIES

Project Manager (PM)/Task Order Manager (TOM) - Responsible for ensuring that all field activities are conducted in accordance with this procedure.

Site Manager (SM)/Field Operations Leader (FOL) - Responsible for the onsite verification that all field activities are performed in compliance with approved SOPs or as otherwise directed by the approved project plan(s).

Site Health & Safety Officer (SHSO) – Responsible to provide technical assistance and verify full compliance with this SOP. The SHSO is also responsible for reporting any deficiencies to the Corporate Health and Safety Manager (HSM) and to the PM/TOM.

Health & Safety Manager (HSM) – Responsible for preparing, implementing, and modifying corporate health and safety policy and this SOP.

Site Personnel – Responsible for performing their work activities in accordance with this SOP and the TtNUS Health and Safety Policy.

5.0 PROCEDURES

This procedure addresses the requirements and technical procedures that must be performed to minimize the potential for contact with underground and overhead utility services. These procedures are addressed individually from a buried and overhead standpoint.

5.1 Buried Utilities

Buried utilities present a heightened concern because their location is not typically obvious by visual observation, and it is common that their presence and/or location is unknown or incorrectly known on client properties. This procedure must be followed prior to beginning any subsurface probing or excavation that might potentially be in the vicinity of underground utility services. In addition, the Utility Clearance Form (Attachment 3) must be completed for every location or cluster of locations where intrusive activities will occur.

Where the positive identification and de-energizing of underground utilities cannot be obtained and confirmed using the following steps, the PM/TOM is responsible for arranging for the procurement of a qualified, experienced, utility locating subcontractor who will accomplish the utility location and demarcation duties specified herein.

1. A comprehensive review must be made of any available property maps, blue lines, or as-builts prior to site activities. Interviews with local personnel familiar with the area should be performed to provide additional information concerning the location of potential underground utilities. Information regarding utility locations shall be added to project maps upon completion of this exercise.

2., A visual site inspection must be performed to compare the site plan information to actual field conditions. Any findings must be documented and the site plan/maps revised. The area(s) of proposed excavation or other subsurface activities must be marked at the site in white paint or pin flags to identify those locations of the proposed intrusive activities. The site inspection should focus on locating surface indications of potential underground utilities. Items of interest include the presence of nearby area lights, telephone service, drainage grates, fire hydrants, electrical service vaults/panels, asphalt/concrete scares and patches, and topographical depressions. Note the location of any emergency shut off switches. Any additional information regarding utility

locations shall be added to project maps upon completion of this exercise and returned to the PM/TOM.

3. If the planned work is to be conducted on private property (e.g., military installations, manufacturing facilities, etc.) the FOL must identify and contact appropriate facility personnel (e.g., public works or facility engineering) before any intrusive work begins to inquire about (and comply with) property owner requirements. It is important to note that private property owners may require several days to several weeks advance notice prior to locating utilities.

4. If the work location is on public property, the state agency that performs utility clearances must be notified (see Attachment 1). State "one-call" services must be notified prior to commencing fieldwork per their requirements. Most one-call services require, by law, 48- to 72-hour advance notice prior to beginning any excavation. Such services typically assign a "ticket" number to the particular site. This ticket number must be recorded for future reference and is valid for a specific period of time, but may be extended by contacting the service again. The utility service will notify utility representatives who then mark their respective lines within the specified time frame. It should be noted that most military installations own their own utilities but may lease service and maintenance from area providers. Given this situation, "one call" systems may still be required to provide location services on military installations.

5. Utilities must be identified and their locations plainly marked using pin flags, spray paint, or other accepted means. The location of all utilities must be noted on a field sketch for future inclusion on project maps. Utility locations are to be identified using the following industry-standard color code scheme, unless the property owner or utility locator service uses a different color code:

white	excavation/subsurface investigation location
red	electrical
yellow	gas, oil, steam
orange	telephone, communications
blue	water, irrigation, slurry
green	sewer, drain

6. Where utility locations are not confirmed with a high degree of confidence through drawings, schematics, location services, etc., the work area must be thoroughly investigated prior to beginning the excavation. In these situations, utilities must be identified using safe and effective methods such as passive and intrusive surveys, or the use of non-conductive hand tools. Also, in situations where such hand tools are used, they should always be used in conjunction with suitable detection equipment, such as the items described in Section 6.0 of this SOP. Each method has advantages and disadvantages including complexity, applicability, and price. It also should be noted that in some states, initial excavation is required by hand to a specified depth.

7. At each location where trenching or excavating will occur using a backhoe or other heavy equipment, and where utility identifications and locations cannot be confirmed prior to groundbreaking, the soil must be probed using a device such as a tile probe which is made of non-conductive material such as fiberglass. If these efforts are not successful in clearing the excavation area of suspect utilities, hand shoveling must be performed for the perimeter of the intended excavation.

8. All utilities uncovered or undermined during excavation must be structurally supported to prevent potential damage. Unless necessary as an emergency corrective measure, TtNUS shall not make any repairs or modifications to existing utility lines without prior permission of the utility owner, property owner, and Corporate HSM. All repairs require that the line be locked-out/tagged-out prior to work.

5.2 Overhead Power Lines

If it is necessary to work within the minimum clearance distance of an overhead power line, the overhead line must be de-energized and grounded, or re-routed by the utility company or a registered electrician. If protective measures such as guarding, isolating, or insulating are provided, these precautions must be adequate to prevent employees from contacting such lines directly with any part of their body or indirectly though conductive materials, tools, or equipment.

The following table provides the required minimum clearances for working in proximity to overhead power lines.

Nominal Voltage	Minimum Clearance
0 -50 kV	10 feet, or one mast length; whichever is greater
50+ kV	10 feet plus 4 inches for every 10 kV over 50 kV or 1.5 mast lengths; whichever is greater

6.0 UNDERGROUND LOCATING TECHNIQUES

A variety of supplemental utility locating approaches are available and can be applied when additional assurance is needed. The selection of the appropriate method(s) to employ is site-specific and should be tailored to the anticipated conditions, site and project constraints, and personnel capabilities.

6.1 Geophysical Methods

Geophysical methods include electromagnetic induction, magnetics, and ground penetrating radar. Additional details concerning the design and implementation of electromagnetic induction, magnetics, and ground penetrating radar surveys can be found in one or more of the TtNUS SOPs included in the References (Section 8.0).

Electromagnetic Induction

Electromagnetic Induction (EMI) line locators operate either by locating a background signal or by locating a signal introduced into the utility line using a transmitter. A utility line acts like a radio antenna, producing electrons, which can be picked up with a radiofrequency receiver. Electrical current carrying conductors have a 60HZ signal associated with them. This signal occurs in all power lines regardless of voltage. Utilities in close proximity to power lines or used as grounds may also have a 60HZ signal, which can be picked up with an EM receiver. A typical example of this type of geophysical equipment is an EM-61.

EMI locators specifically designed for utility locating use a special signal that is either indirectly induced onto a utility line by placing the transmitter above the line or directly induced using an induction clamp. The clamp induces a signal on the specific utility and is the preferred method of tracing since there is little chance of the resulting signals being interfered with. A good example of this type of equipment is the Schonstedt® MAC-51B locator. The MAC-51B performs inductively traced surveys, simple magnetic locating, and traced nonmetallic surveys.

When access can be gained inside a conduit to be traced, a flexible insulated trace wire can be used. This is very useful for non-metallic conduits but is limited by the availability of gaining access inside the pipe.

Magnetics

Magnetic locators operate by detecting the relative amounts of buried ferrous metal. They are incapable of locating or identifying nonferrous utility lines but can be very useful for locating underground storage tanks (UST's), steel utility lines, and buried electrical lines. A typical example of this type of equipment is the Schonstedt® GA-52Cx locator. The GA-52Cx is capable of locating 4-inch steel pipe up to 8 feet deep.

Non-ferrous lines are often located by using a typical plumbing tool (snake) fed through the line. A signal is then introduced to the snake that is then traced.

Ground Penetrating Radar

Ground Penetrating Radar (GPR) involves specialized radar equipment whereby a signal is sent into the ground via a transmitter. Some portion of the signal will be reflected from the subsurface material, which is then recorded with a receiver and electronically converted into a graphic picture. In general, an object which is harder than the surrounding soil will reflect a stronger signal. Utilities, tunnels, UST's, and footings will reflect a stronger signal than the surrounding soil. Although this surface detection method may determine the location of a utility, this method does not specifically identify utilities (i.e., water vs. gas, electrical vs. telephone); hence, verification may be necessary using other methods. This method is somewhat limited when used in areas with clay soil types or with a high water table.

6.2 Passive Detection Surveys

Acoustic Surveys

Acoustic location methods are generally most applicable to waterlines or gas lines. A highly sensitive Acoustic Receiver listens for background sounds of water flowing (at joints, leaks, etc.) or to sounds introduced into the water main using a transducer. Acoustics may also be applicable to determine the location of plastic gas lines.

Thermal Imaging

Thermal (i.e., infrared) imaging is a passive method for detecting the heat emitted by an object. Electronics in the infrared camera convert subtle heat differentials into a visual image on the viewfinder or a monitor. The operator does not look for an exact temperature; rather they look for heat anomalies (either elevated or suppressed temperatures) characteristic of a potential utility line.

The thermal fingerprint of underground utilities results from differences in temperature between the atmosphere and the fluid present in a pipe or the heat generated by electrical resistance. In addition, infrared scanners may be capable of detecting differences in the compaction, temperature and moisture content of underground utility trenches. High-performance thermal imagery can detect temperature differences to hundredths of a degree.

6.3 Intrusive Detection Surveys

Vacuum Excavation

Vacuum excavation is used to physically expose utility services. The process involves removing the surface material over approximately a 1' x 1' area at the site location. The air-vacuum process proceeds with the simultaneous action of compressed air-jets to loosen soil and vacuum extraction of the resulting

debris. This process ensures the integrity of the utility line during the excavation process, as no hammers, blades, or heavy mechanical equipment comes into contact with the utility line, eliminating the risk of damage to utilities. The process continues until the utility is uncovered. Vacuum excavation can be used at the proposed site location to excavate below the "utility window" which is usually 8 feet.

Hand Excavation

When the identification and location of underground utilities cannot be positively confirmed through document reviews and/or other methods, borings and excavations may be cleared via the use of non-conductive hand tools. This should always be done in conjunction with the use of detection equipment. This would be required for all locations where there is a potential to impact buried utilities. The minimum hand-excavation depth that must be reached is to be determined considering the geographical location of the work site. This approach recognizes that the placement of buried utilities is influenced by frost line depths that vary by geographical region. Attachment 2 presents frost line depths for the regions of the contiguous United States. At a minimum, hand excavation depths must be at least to the frost line depth (see Attachment 2) plus two (2) feet, but never less than 4 feet below ground surface (bgs). For hand excavation, the hole created must be reamed large enough to be at least the diameter of the drill rig auger or bit prior to drilling. For soil gas surveys, the survey probe shall be placed as close as possible to the cleared hand excavation. It is important to note that a post-hole digger must not be used in this type of hand excavation activity.

Tile Probe Surveys

For some soil types, site conditions, and excavation requirements, non-conductive tile probes may be used. A tile probe is a "T"-handled rod of varying lengths that can be pushed into the soil to determine if any obstructions exist at that location. Tile probes constructed of fiberglass or other nonconductive material are readily-available from numerous vendors. Tile probes must be performed to the same depth requirements as previously specified. As with other types of hand excavating activities, the use of a non-conductive tile probe, should always be in conjunction with suitable utility locating detection equipment.

7.0 INTRUSIVE ACTIVITIES SUMMARY

The following list summarizes the activities that must be performed prior to beginning subsurface activities:

1. Map and mark all subsurface locations and excavation boundaries using white paint or markers specified by the client or property owner.

2. Notify the property owner and/or client that the locations are marked. At this point, drawings of locations or excavation boundaries shall be provided to the property owner and/or client so they may initiate (if applicable) utility clearance.

   Note: Drawings with confirmed locations should be provided to the property owner and/or client as soon as possible to reduce potential time delays.

3. Notify "One Call" service. If possible, arrange for an appointment to show the One Call representative the surface locations or excavation boundaries in person. This will provide a better location designation to the utilities they represent. You should have additional drawings should you need to provide plot plans to the One Call service.

4. Implement supplemental utility detection techniques as necessary and appropriate to conform utility locations or the absence thereof.

5. Complete Attachment 3, Utility Clearance Form. This form should be completed for each excavation location. In situations where multiple subsurface locations exist within the close proximity of one another, one form may be used for multiple locations provided those locations are noted on the Utility Clearance Form. Upon completion, the Utility Clearance Form and revised/annotated utility location map becomes part of the project file.

8.0 REFERENCES

OSHA Letter of Interpretation, Mr. Joseph Caldwell, Attachment 4
OSHA 29 CFR 1926(b)(2)
OSHA 29 CFR 1926(b)(3)
TtNUS Utility Locating and Clearance Policy
TtNUS SOP GH-3.1; Resistivity and Electromagnetic Induction
TtNUS SOP GH-3.2; Magnetic and Metal Detection Surveys
TtNUS SOP GH-3.4; Ground-penetrating Radar Surveys

ATTACHMENT 1
LISTING OF UNDERGROUND UTILITY CLEARANCE RESOURCES

American Public Works Association
2345 Grand Boulevard, Suite 500, Kansas City, MO 64108-2625
Phone (816) 472-6100 • Fax (816) 472-1610
Web www.apwa.net • E-mail apwa@apwa.net

ONE-CALL SYSTEMS INTERNATIONAL CONDENSED DIRECTORY

Alabama
Alabama One-Call
1-800-292-8525

Alaska
Locate Call Center of Alaska, Inc.
1-800-478-3121

Arizona
Arizona Blue Stake
1-800-782-5348

Arkansas
Arkansas One Call System, Inc.
1-800-482-8998

California
Underground Service Alert North
1-800-227-2600
Underground Service Alert of Southern California
1-800-227-2600

Colorado
Utility Notification Center of Colorado
1-800-922-1987

Connecticut
Call Before You Dig
1-800-922-4455

Delaware
Miss Utility of Delmarva
1-800-282-8555

Florida
Sunshine State One-Call of Florida, Inc.
1-800-432-4770

Georgia
Underground Protection Center, Inc.
1-800-282-7411

Hawaii
Underground Service Alert North
1-800-227-2600

Idaho
Dig Line Inc.
1-800-342-1585
Kootenai County One-Call
1-800-428-4950
Shoshone - Benewah One-Call
1-800-398-3285

Illinois
JULIE, Inc.
1-800-892-0123
Digger (Chicago Utility Alert Network)
312-744-7000

Indiana
Indiana Underground Plant Protection Service
1-800-382-5544

Iowa
Iowa One-Call
1-800-292-8989

Kansas
Kansas One-Call System, Inc.
1-800-344-7233

Kentucky
Kentucky Underground Protection Inc.
1-800-752-6007

Louisiana
Louisiana One Call System, Inc.
1-800-272-3020

Maine
Dig Safe System, Inc.
1-888-344-7233

Maryland
Miss Utility
1-800-257-7777
Miss Utility of Delmarva
1-800-282-8555

Massachusetts
Dig Safe System, Inc.
1-888-344-7233

Michigan
Miss Dig System, Inc.
1-800-482-7171

Minnesota
Gopher State One Call
1-800-252-1166

Mississippi
Mississippi One-Call System, Inc
1-800-227-6477

Missouri
Missouri One-Call System, Inc.
1-800-344-7483

Montana
Utilities Underground Protection Center
1-800-424-5555
Montana One Call Center
1-800-551-8344

Nebraska
Diggers Hotline of Nebraska
1-800-331-5666

Nevada
Underground Service Alert North
1-800-227-2600

New Hampshire
Dig Safe System, Inc.
1-888-344-7233

New Jersey
New Jersey One Call
1-800-272-1000

New Mexico
New Mexico One Call System, Inc.
1-800-321-2537
Las Cruces- Dona Ana Blue Stakes
1-888-526-0400

New York
Dig Safely New York
1-800-962-7962
New York City- Long Island One Call Center
1-800-272-4480

North Carolina
The North Carolina One-Call Center, Inc.
1-800-632-4949

North Dakota
North Dakota One-Call
1-800-795-0555

Ohio
Ohio Utilities Protection Service
1-800-362-2764
Oil & Gas Producers Underground Protect'n Svc
1-800-925-0988

Oklahoma
Call Okie
1-800-522-6543

Oregon
Oregon Utility Notification Center/One Call Concepts
1-800-332-2344

Pennsylvania
Pennsylvania One Call System, Inc.
1-800-242-1776

Rhode Island
Dig Safe System, Inc.
1-888-344-7233

South Carolina
Palmetto Utility Protection Service Inc.
1-888-721-7877

South Dakota
South Dakota One Call
1-800-781-7474

Tennessee
Tennessee One-Call System, Inc.
1-800-351-1111

ATTACHMENT 1 (Continued)

Texas
Texas One Call System
1-800-245-4545
Texas Excavation Safety System, Inc.
1-800-344-8377
Lone Star Notification Center
1-800-669-8344

Utah
Blue Stakes of Utah
1-800-662-4111

Vermont
Dig Safe System, Inc.
1-888-344-7233

Virginia
Miss Utility of Virginia
1-800-552-7001
Miss Utility (Northern Virginia)
1-800-257-7777

Washington
Utilities Underground Location Center
1-800-424-5555
Northwest Utility Notification Center
1-800-553-4344
Inland Empire Utility Coordinating Council
509-458-6000

West Virginia
Miss Utility of West Virginia, Inc.
1-800-245-4848

Wisconsin
Diggers Hotline, Inc.
1-800-242-8511

Wyoming
Wyoming One-Call System, Inc.
1-800-348-1030
Call Before You Dig of Wyoming
1-800-849-2476

District of Columbia
Miss Utility
1-800-257-7777

Alberta
Alberta One-Call Corporation
1-800-242-3447

British Columbia
BC One Call
1-800-474-6886

Ontario
Ontario One-Call System
1-800-400-2255

Quebec
Info-Excavation
1-800-663-9228

ATTACHMENT 2

FROST LINE PENETRATION DEPTHS BY GEOGRAPHIC LOCATION

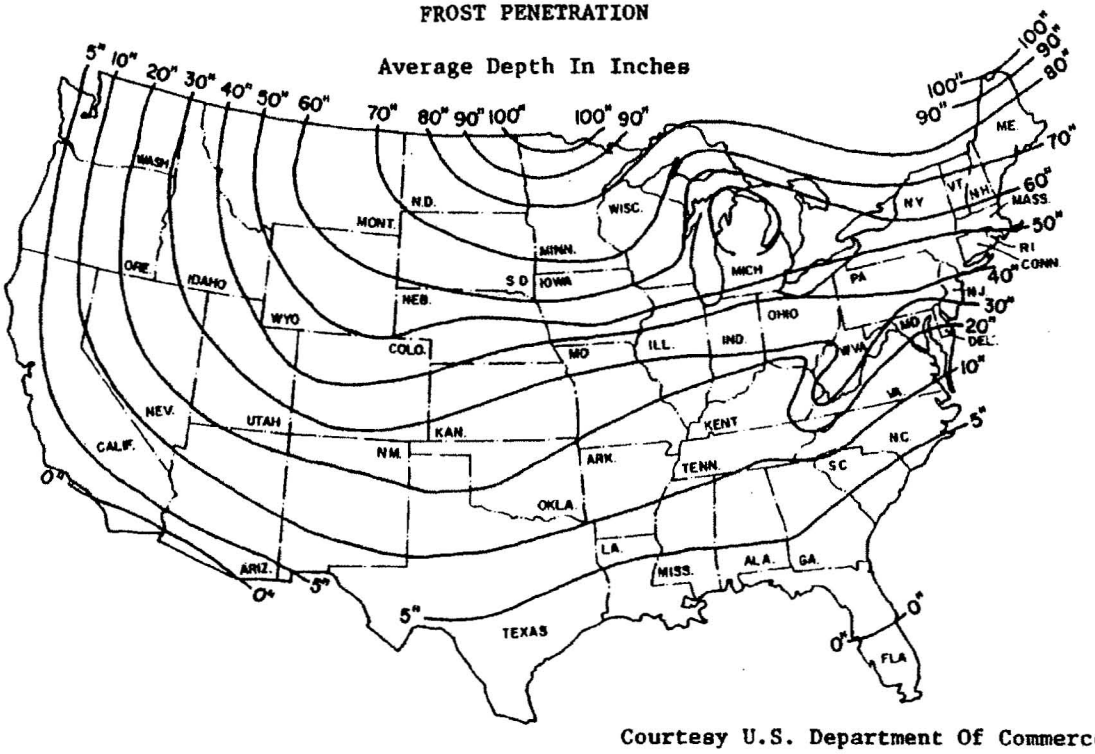

Courtesy U.S. Department Of Commerce

ATTACHMENT 3
UTILITY CLEARANCE FORM

Client: _____ Project Name: _____

Project No.: _____ Completed By: _____

Location Name: _____ Work Date: _____

Excavation Method/Overhead Equipment: _____

			Circle One
1.	Underground Utilities		
	a)	Review of existing maps?	yes no N/A
	b)	Interview local personnel?	yes no N/A
	c)	Site visit and inspection?	yes no N/A
	d)	Excavation areas marked in the field?	yes no N/A
	e)	Utilities located in the field?	yes no N/A
	f)	Located utilities marked/added to site maps?	yes no N/A
	g)	Client contact notified Name _____ Telephone: _____ Date: _____	yes no N/A
	g)	State One-Call agency called? Caller: _____ Ticket Number: _____ Date: _____	yes no N/A
	h)	Geophysical survey performed? Survey performed by: _____ Method: _____ Date: _____	yes no N/A
	i)	Hand excavation performed (with concurrent use of utility detection device)? Completed by: _____ Total depth: _____ feet Date: _____	yes no N/A
	j)	Trench/excavation probed? Probing completed by: _____ Depth/frequency: _____ Date: _____	yes no N/A

			Present Absent
2.	Overhead Utilities		
	a)	Determination of nominal voltage	yes no N/A
	b)	Marked on site maps	yes no N/A
	c)	Necessary to lockout/insulate/re-route	yes no N/A
	d)	Document procedures used to lockout/insulate/re-route	yes no N/A
	e)	Minimum acceptable clearance (SOP Section 5.2): _____	

3. Notes:

_____

_____

_____

Approval:

_____ _____

Site Manager/Field Operations Leader Date

c: PM/Project File
Program File

ATTACHMENT 4
OSHA LETTER OF INTERPRETATION

Mr. Joseph Caldwell
Consultant
Governmental Liaison
Pipeline Safety Regulations
211 Wilson Boulevard
Suite 700
Arlington, Virginia 22201

Re: Use of hydro-vacuum or non-conductive hand tools to locate underground utilities.

Dear Mr. Caldwell:

In a letter dated July 7, 2003, we responded to your inquiry of September 18, 2002, regarding the use of hydro-vacuum equipment to locate underground utilities by excavation. After our letter to you was posted on the OSHA website, we received numerous inquiries that make it apparent that aspects of our July 7 letter are being misunderstood. In addition, a number of industry stakeholders, including the National Utility Contractors Association (NUCA), have provided new information regarding equipment that is available for this work.

To clarify these issues, we are withdrawing our July 7 letter and issuing this replacement response to your inquiry.

Question: *Section 1926.651 contains several requirements that relate to the safety of employees engaged in excavation work. Specifically, paragraphs (b)(2) and (b)(3) relate in part to the safety of the means used to locate underground utility installations that, if damaged during an uncovering operation, could pose serious hazards to employees.*

Under these provisions, what constitutes an acceptable method of uncovering underground utility lines, and further, would the use of hydro-vacuum excavation be acceptable under the standard?

Answer

Background

Two sections of 29 CFR 1926 Subpart P (Excavations), 1926.651(Specific excavation requirements), govern methods for uncovering underground utility installations. Specifically, paragraph (b)(2) states:

> When utility companies or owners cannot respond to a request to locate underground utility installations within 24 hours * * * or cannot establish the exact location of these installations, the employer may proceed, provided the employer does so with caution, and provided detection equipment or other acceptable means to locate utility installations are used. (emphasis added).

Paragraph (b)(3) provides:

ATTACHMENT 4 (Continued)

> When excavation operations approach the estimated location of underground installations, the exact location of the installations shall be determined by safe and acceptable means. (emphasis added).

Therefore, "acceptable means" must be used where the location of the underground utilities have not been identified by the utility companies and detection equipment is not used.

Subpart P does not contain a definition of either "other acceptable means" or "safe and acceptable means." The preambles to both the proposed rule and the final rule discussed the rationale behind the wording at issue. For example, the preamble to the proposed rule, 52 Fed. Reg. 12301 (April 15, 1987), noted that a 1972 version of this standard contained language that specified "careful probing or hand digging" as the means to uncover utilities. The preamble then noted that an amendment to the 1972 standard later deleted that language "to allow other, *equally effective means* of locating such installations." The preamble continued that in the 1987 proposed rule, OSHA again proposed using language in section (b)(3) that would provide another example of an acceptable method of uncovering utilities that could be used *where the utilities have not been marked and detection equipment is not being used* – "probing with hand-held tools." This method was rejected in the final version of 29 CFR 1926. As OSHA explained in the preamble to the final rule, 54 Fed. Reg. 45916 (October 31, 1989):

> OSHA received two comments * * * and input from ACCSH [OSHA's Advisory Committee on Construction Safety and Health] * * * on this provision. All commenters recommended dropping 'such as probing with hand-held tools' from the proposed provision, because this could create a hazard to employees by damaging the installation or its insulation.

In other words, the commenters objected to the use of hand tools being used unless detection equipment was used in conjunction with them. OSHA then concluded its discussion relative to this provision by agreeing with the commentators and ultimately not including any examples of "acceptable means" in the final provision.

Non-conductive hand tools are permitted

This raises the question of whether the standard permits the use of hand tools alone -- without also using detection equipment. NUCA and other industry stakeholders have recently informed us that non-conductive hand tools that are appropriate to be used to locate underground utilities are now commonly available.

Such tools, such as a "shooter" (which has a non-conductive handle and a snub nose) and non-conductive or insulated probes were not discussed in the rulemaking. Since they were not considered at that time, they were not part of the class of equipment that was thought to be unsafe for this purpose. Therefore, we conclude that the use of these types of hand tools, when used with appropriate caution, is an "acceptable means" for locating underground utilities.

ATTACHMENT 4 (Continued)

Hydro-vacuum excavation

It is our understanding that some hydro-vacuum excavation equipment can be adjusted to use a minimum amount of water and suction pressure. When appropriately adjusted so that the equipment will not damage underground utilities (especially utilities that are particularly vulnerable to damage, such as electrical lines), use of such equipment would be considered a "acceptable means" of locating underground utilities. However, if the equipment cannot be sufficiently adjusted, then this method would not be acceptable under the standard.

Other technologies

We are not suggesting that these are the only devices that would be "acceptable means" under the standard. Industry stakeholders have informed us that there are other types of special excavation equipment designed for safely locating utilities as well.

We apologize for any confusion our July 7 letter may have caused. If you have further concerns or questions, please feel free to contact us again by fax at: U.S. Department of Labor, OSHA, Directorate of Construction, Office of Construction Standards and Compliance Assistance, fax # 202-693-1689. You can also contact us by mail at the above office, Room N3468, 200 Constitution Avenue, N.W., Washington, D.C. 20210, although there will be a delay in our receiving correspondence by mail.

Sincerely,

Russell B. Swanson, Director
Directorate of Construction

NOTE: OSHA requirements are set by statute, standards and regulations. Our interpretation letters explain these requirements and how they apply to particular circumstances, but they cannot create additional employer obligations. This letter constitutes OSHA=s interpretation of the requirements discussed. Note that our enforcement guidance may be affected by changes to OSHA rules. Also, from time to time we update our guidance in response to new information. To keep apprised of such developments, you can consult OSHA's website at http://www.osha.gov.

Bulletin No. QAD023 October 15, 1997

RECOMMENDED PROCEDURE FOR LOW-FLOW PURGING AND SAMPLING OF GROUNDWATER MONITORING WELLS

1.0 OBJECTIVE AND APPLICATION

This directive provides a procedure for collection of ground-water samples in small-diameter wells with short-screened intervals using low-flow purging and sampling. While these procedures pertain to the Superfund program in Region III, they were based on recommendations presented in the EPA Ground Water Issue paper entitled "Low-Flow (Minimal Drawdown) Ground-Water Sampling Procedures". The low-flow purging and sampling method is not appropriate for use in all hydrogeologic regimes, and particular groundwater monitoring well designs may make the method unsuitable (e.g. open hole and long screen monitoring wells in bedrock and stratified sand and clay where the water bearing zones have not been characterized). Therefore, please confer with a Region III hydrogeologist or geologist before using these procedures at a site.

2.0 BACKGROUND

Past scientific research (Barcelona et al., 1983; Nielson and Yeates, 1985) and EPA guidance have discussed sampling devices in terms of their compatibility with contaminants being sampled, and well construction, depth, and diameter. Although some sampling devices have been used in order to provide more representative groundwater samples in certain situations, most of these incorporate high-volume withdrawal techniques (i.e., in excess of the "natural" recharge rate of groundwater flow through the well screen) for both purging and sampling.

Research conducted by Puls et al. (1992), Puls and Powell (1992), and Powell and Puls (1993) has shown that high-volume purging and sampling cause significant turbidity and suspended particulate artifacts that can result in biased-high metals results. Additionally, purging can cause pressure changes and bailing can cause aeration that can strip VOCs from the sample (Pennino, 1988). The use of low-flow pumping devices (preferably dedicated) for purging and sampling minimizes both the disturbance of water in well casing and the potential for mobilization of colloidal material (Barcelona et al., 1994). Low-flow purging with maintenance of water level in the well and stabilization of indicator parameters (especially turbidity) allows collection of groundwater samples that are more representative of conditions without filtering (U.S. EPA, 1993; Backhus et al., 1993). In many cases, use of a low-flow pump to purge and sample monitoring wells decreases sampling time, reduces the need to handle large volumes of purge water and lowers the cost associated with its disposal, and allows collection of samples for inorganic analyses without filtering. This procedure is designed to be used in conjunction with groundwater sampling and analyses for the most common types of groundwater contaminants (volatile and semi-volatile organic compounds, pesticides, PCBs and inorganic compounds).

3.0 EQUIPMENT

- Adjustable rate, positive displacement pumps (e.g. low flow-rate submersible centrifugal or bladder pumps constructed of stainless steel or Teflon). Low flow-rate electrical submersible pumps are recommended because (1) they are not subject to cyclical flow/arrest and consequent potential for mobilizing fine-grained material, and (2) they may be less prone to operator error, thereby reducing potential error resulting from application by different personnel. The pump should be easily adjustable and capable of operating reliably at lower flow rates. Peristaltic pumps may be used only for inorganic sample collection. Bailers are inappropriate for use in this procedure.

- Tubing: Tubing used in purging and sampling each well must be dedicated to the individual well. Once properly located, moving the pump in the well should be avoided. Consequently, the same tubing should be used for purging and sampling. Teflon or Teflon-lined polyethylene tubing must be used to collect samples for organic analysis. For samples collected for inorganic analysis, Teflon or Teflon lined polyethylene, PVC, Tygon or polyethylene tubing may be used. The tubing wall thickness should be maximized (3/8 to ½ inch) and the tubing length should be minimized (i.e. do not have excess tubing outside of the well).

- Polyethylene sheeting and sampling gloves.

- Water level measuring device, 0.01 feet accuracy, (electronic preferred for tracking water level drawdown during all pumping operations).

- Flow measurement supplies (e.g. graduated cylinder and stop watch).

- Interface probe, if needed.

- Power source (e.g. generator, located downwind; nitrogen tank, etc). The generator should not be oversized for the pump.

- In-line flow-through cell containing purge criteria parameter monitoring instruments for pH, turbidity, specific conductance, temperature, Eh and dissolved oxygen (DO). The in-line device should be bypassed or disconnected during sample collection.

- Photoionization detector (PID), or equivalent.

- Nylon stay-ties.

- Decontamination supplies.

- Logbook(s).

- Sample Bottles. It is recommended that preservatives are added to sample bottles prior to field activities to reduce potential error or introduction of contaminants.

- Sample preservation supplies (as required by the analytical method; see previous bullet).
- Sample tags or labels, chain of custody.
- Well construction data, location map, field data from last sampling event.
- Approved Field Sampling Plan/QA Project Plan.

4.0 PRELIMINARY SITE ACTIVITIES

1) Check the condition of the monitoring well for damage and evidence of tampering, and record pertinent observations.

2) In order to maintain a clean work area, lay out a sheet of polyethylene to place sampling and monitoring equipment.

3) Remove well cap and measure VOCs at the rim of the well with a PID or FID instrument and record the reading in the field logbook.

4) If the well casing does not have a reference point (usually a V-cut or indelible mark in the well casing) make one.

5) Measure and record the depth to water (to 0.01 feet) in all wells to be sampled before any purging begins. Care should be taken to minimize disturbance to the water column and to any particulate attached to the sides or at the bottom of the well. Consequently, in order to avoid disturbing any accumulated sediment and to prevent mixing of stagnant water with water in the screened interval, the total depth of a well should be measured well in advance (one to two weeks) of purging and sampling or after sampling is completed. Obtain depth to bottom of well information from the well construction log and calculate standing water volume as: depth of water column times cross-sectional area of the well.

6) For wells where an Light Non-aqueous Phase Liquid (LNAPL) has been detected, a stilling tube should be inserted into the well prior to purging. Refer to Section 7.2.4 of EPA (1992) for the procedure to follow. If the wells are constructed so that DNAPLs could accumulate, their detection and /or sampling should occur, at a minimum, a week before groundwater purging and sampling. Measurement and sampling of potential DNAPL should be conducted as a separate event to minimize disturbance of any sediments which have accumulated in the bottom of the well. A double check valve, bottom loading bailer is recommended for sampling. Light non-aqueous phase liquid (LNAPL) measurement may be conducted (with an interface probe), with care to avoid disturbance of the water column within the well.

5.0 PURGING AND SAMPLING PROCEDURES

The following describes the procedure for the low-flow purging and sampling method. Equipment calibration, logbook documentation, sample bottle filling and preservation, and

shipping will be conducted in accordance with the site-specific Quality Assurance Project Plan (QAPjP). Personal protective equipment will be donned in accordance with the requirements of the site-specific Health and Safety Plan. Wells should be sampled in the order of least contaminated to most contaminated.

1) Attach and secure the polyethylene tubing to the low-flow pump. As the pump is slowly lowered into the well, secure the safety drop cable, tubing, and electrical lines to each other using nylon stay-ties.

2) Pump, safety cable, tubing and electrical lines should be lowered slowly into the well to a depth corresponding to the center of the saturated screen section of the well, or at a location determined to either be a preferential flow path or zone where contamination is present. The pump intake should be kept above the bottom of the well to prevent mobilization of any sediment or DNAPL present in the bottom of the well. It is recommended that the pump be placed in the well 12 to (preferably) 48 hours prior to purging/sampling to minimize the effects of turbidity and mixing in the well from introducing the pump.

3) Measure the water level again with the pump in the well before starting the pump. Start pumping water from the well at a rate of 100 to 400 milliliters per minute (mL/min). Avoid surging. Observe air bubbles displaced from discharge tube to assess progress of steady pumping until water arrives at the surface. The pumping rate should cause little or no water level drawdown in the well (less than 0.2 ft) and the water level should stabilize. Water level measurements should be made continuously. Precautions should be taken to avoid pump suction loss or air entrainment. Pumping rates should, if needed, be reduced to the minimum capabilities of the pump to avoid pumping the well dry and ensure stabilization of indicator parameters. If the recharge rate of the well is very low, purging should be interrupted so as not to cause the drawdown within the well to advance below the pump intake but the operator should attempt to maintain a steady flow rate with the pump to the extent practicable. In these low-yielding wells, where 100 mL/min exceeds the entrance rate of groundwater into the well, it is important to avoid dewatering the well screen interval. In these cases, the pump should remain in place and the water level should be allowed to recover repeatedly until there is sufficient volume in the well to permit collection of samples. An alternative means of sample collection may be necessary under these conditions.

4) While purging the well, monitoring of in-line water quality indicator parameters should include turbidity, specific conductance, pH, dissolved oxygen (DO) and redox potential (Eh) which must be collected every three to five minutes until all of the parameters have stabilized. Stabilization is achieved when three successive readings are within $\pm$0.1 for pH, $\pm$3% for conductivity, $\pm$10mv for redox potential (Eh), and $\pm$10% for turbidity and DO. A minimum subset of these parameters that can be used to determine stabilization during purging in this procedure are pH, specific conductivity and turbidity or DO. Turbidity and DO are typically the last parameters to stabilize. If the parameters have stabilized, but the turbidity is not in the range of 5-10 NTU, then follow step 6.

5) Once stabilization has been documented, VOC and gas sensitive (e.g. Fe^{+2}, CH_4, H_2S/HS)

parameter samples should be immediately collected first and directly into pre-preserved sample containers. All sample containers should be filled by allowing the pump discharge to flow gently down the inside of the container with minimal turbulence.

Samples requiring pH adjustment should have their pH checked to assure that the proper pH has been obtained. For VOC samples, this will require that a test sample be collected to determine the amount of preservative required to be added to the sample containers prior to sampling.

6) If the turbidity measurements do not approach the range of that of natural groundwater (10 NTU), both filtered and unfiltered samples should be collected for metals analysis. Filtered metal samples are to be collected with an in-line filter. A high capacity, in-line 0.45 micron particulate filter must be pre-rinsed according to the manufacturer's recommendations, or with approximately 1 liter of groundwater following purging and prior to sampling. After the sample is filtered it must be preserved immediately.

7) As each sample is collected, the sample should be labeled as defined in the QAPjP. All samples should be placed into a cooler with proper temperature control as outlined in the QAPjP.

After collection of the samples, the tubing from the pump should be properly discarded or dedicated to the well for re-sampling (by hanging the tubing inside the well).

8) Measure and record well total depth.

9) Secure the well (close and lock it up).

6.0 REFERENCES

Backhus, D.A., J.N. Ryan, D.M. Groher, J.K. MacFarlane, and P. M. Gschwend. 1993. Sampling Colloids and Colloid-Associated Contaminants in Ground Water. Ground Water. V. 31, pp. 466-479.

Barcelona, M.J., and R.A. Miller. 1983. A Guide to the Selection of Materials for Monitoring Well Construction and Ground Water Sampling. Illinois State Water Survey Contract. Report 327: 78.

Barcelona, M.J., H.A. Wehrmann, and M.D. Varljen. 1994. Reproducible Well Purging Procedures and VOC Stabilization Criteria for Ground-Water Sampling. Ground Water. V. 32, pp. 12-22.

Herzog, B.L., S.J. Chou, J.R. Valkenburg, and R.A. Griffin. 1988. Changes in Volatile Organic Chemical Concentrations After Purging Slowly Recovering Wells. Ground Water Monitoring Review. V. 8, pp. 93-99.

McAlary, T.A. and J.F. Barker. 1987. Volatilization Losses of Organics During Ground Water Sampling from Low Permeability Materials. Ground Water Monitoring Review. V. 7, pp. 63-

Nielson, D.M., and G.L. Yeates. 1985. A Comparison of Sampling Mechanisms Available for Small-Diameter Ground Water Monitoring Wells. Ground Water Monitoring Review. V. 5, pp. 83-89.

Pennino, J.D. 1988. There's No Such Thing as a Representative Ground Water Sample. Ground Water Monitoring Review. V 8, pp. 4-9.

Powell, R.M. and R.W. Puls. 1993. Passive Sampling of Ground-Water Monitoring Wells without Purging: Multilevel Well Chemistry and Tracer Disappearance. Journal Contaminant Hydrology. V.12, pp. 51-77.

Puls, R.W. and M.J. Barcelona. 1996. US EPA Ground Water Issue--Low-Flow (Minimal Drawdown) Ground-Water Sampling Procedures. EPA/540/S-95/504.

Puls, R.W. and C.J. Paul. 1995. Low-Flow Purging and Sampling of Ground Water Monitoring Wells with Dedicated Systems. Ground Water Monitoring Review. V. 15, pp. 116-123.

Puls, R.W. and R.M. Powell. 1992. Acquisition of Representative Ground Water Quality Samples for Metals. Ground Water Monitoring Review. V. 12, pp. 167-176.

Puls, R.W., D.A. Clark, B. Bledsoe, R.M. Powell, and C.J. Paul. 1992. Metals in Ground Water: Sampling Artifacts and Reproducibility. Hazardous Waste and Hazardous Materials. V. 9, pp. 149-162.

U.S. Environmental Protection Agency. 1992. RCRA Ground-Water Monitoring: Draft Technical Guidance. EPA/530-R-93-001.

U.S. Environmental Protection Agency. Ground-Water Sampling-A Workshop Summary, Dallas, Texas, November 30 - December 2, 1993. EPA/600/R-94/205.

TETRA TECH	STANDARD OPERATING PROCEDURES	Number SA-1.1	Page 1 of 34
		Effective Date 04/07/2008	Revision 7
		Applicability Tetra Tech NUS, Inc.	
		Prepared Earth Sciences Department	
Subject GROUNDWATER SAMPLE ACQUISITION AND ONSITE WATER QUALITY TESTING		Approved Tom Johnston T E Johnston	

TABLE OF CONTENTS

SECTION **PAGE**

1.0 PURPOSE **2**

2.0 SCOPE **2**

3.0 GLOSSARY **2**

4.0 RESPONSIBILITIES AND PERSONNEL QUALIFICATIONS **3**

5.0 HEALTH AND SAFETY **4**

6.0 PROCEDURES **5**

6.1 General 5
6.2 Sampling, Monitoring, and Evacuation Equipment 7
6.3 Calculations of Well Volume 8
6.4 Evacuation of Static Water – Purging 9
6.4.1 General 9
6.4.2 Evacuation Devices 9
6.5 Onsite Water Quality Testing 12
6.5.1 Measurement of pH 13
6.5.2 Measurement of Specific Conductance 15
6.5.3 Measurement of Temperature 16
6.5.4 Measurement of Dissolved Oxygen 17
6.5.5 Measurement of Oxidation-Reduction Potential 19
6.5.6 Measurement of Salinity 20
6.5.7 Measurement of Turbidity 21
6.6 Sampling 22
6.6.1 Sampling Plan 22
6.6.2 Sampling Methods as Related to Low-Flow Sampling 23
6.7 Low-Flow Purging and Sampling 25
6.7.1 Scope and Application 25
6.7.2 Equipment 25
6.7.3 Purging and Sampling Procedure 26

7.0 REFERENCES **28**

ATTACHMENTS

A PURGING EQUIPMENT SELECTION 29
B GROUNDWATER SAMPLE LOG SHEET 32
C EQUIPMENT CALIBRATION LOG 33
D LOW FLOW PURGE DATA SHEET 34

1.0 PURPOSE

This Standard Operating Procedure (SOP) describes the process to be used for purging groundwater monitoring wells prior to sampling, for collecting groundwater samples, and for measuring groundwater quality parameters.

2.0 SCOPE

This document provides information on proper sampling equipment, onsite water quality testing, safety measures to ensure the safety of the field technician(s), and techniques for groundwater sampling. All personnel are encouraged to review the information contained herein to facilitate planning of the field sampling effort. The techniques described shall be followed whenever applicable, noting that site-specific conditions or project-specific plans may require modifications to methodology.

3.0 GLOSSARY

Conductivity – Conductivity is a numerical expression of the ability of an aqueous solution to carry an electric current. This ability depends on the presence of ions and their total concentration, mobility, valence, and relative concentrations and on temperature. Conductivity is highly dependent on temperature and should be reported at a particular temperature, i.e., 20.2 microSiemens per centimeter (mS/cm) at 14°C.

Dissolved Oxygen (DO) – DO levels in natural and wastewater depend on the physical, chemical, and biochemical activities in the water sample.

Groundwater Sample – A quantity of water removed from the ground, usually via a monitoring well that may or may not be lined with a well casing.

Oxidation-Reduction Potential (ORP) - A measure of the activity ratio of oxidizing and reducing species as determined by the electromotive force developed by a noble metal electrode immersed in water, as referenced against a reference electrode. A reference electrode commonly used in the field is the silver/silver chloride electrode, which has a voltage offset of about 210 mV from the standard hydrogen electrode (SHE). To convert field ORP measurements to equivalent SHE values, approximately 210 mV must be added to the ORP values obtained using the silver/silver chloride electrode. The actual offset depends on the concentration of the potassium chloride (KCl) in the field reference electrode and the temperature. Offsets typically range from 199 (saturated KCl) to 205 (3.5 Molar KCl) to 222 mV (1 Molar KCl) at 25°C and are greater at lower temperatures.

pH - The negative logarithm (base 10) of the hydrogen ion activity. The hydrogen ion activity is related to the hydrogen ion concentration, and, in a relatively weak solution, the two are nearly equal. Thus, for all practical purposes, pH is a measure of the hydrogen ion concentration.

pH Paper - Indicator paper that turns different colors depending on the pH of the solution to which it is exposed. Comparison with color standards supplied by the manufacturer will then give an indication of the solution's pH.

Representativeness – A qualitative description of the degree to which an individual sample accurately reflects population characteristics or parameter variations at a sampling point. It is therefore an important characteristic not only of assessment and quantification of environmental threats posed by the site, but also for providing information for engineering design and construction. Proper sample location selection and proper sample collection methods are important to ensure that a truly representative sample has been collected.

Salinity – The measurement of dissolved salts in a given mass of solution. Note: most field meters determined salinity automatically from conductivity and temperature. The value will be displayed in either parts per thousand (ppt) or percent (e.g., 35 ppt equals 3.5 percent). The parts per thousand symbol ($^0/_{00}$) is not the same as the percent symbol (%).

Turbidity – Turbidity in water is caused by suspended matter such as clay, silt, and fine organic and inorganic matter. Turbidity is an expression of the optical property that causes light to be scattered and absorbed rather than transmitted in a straight line through the sample.

4.0 RESPONSIBILITIES AND PERSONNEL QUALIFICATIONS

Project Manager - The Project Manager is responsible for determining the sampling objectives, initial sampling locations, and field procedures used in the collection of groundwater samples. Additionally, in consultation with other project personnel (geologist, hydrogeologist, etc.), the Project Manager identifies sampling locations.

Site Safety Officer (SSO) - The SSO (or a qualified designee) is responsible for providing the technical support necessary to implement the project Health and Safety Plan (HASP). This includes but is not be limited to performing air quality monitoring during sampling, boring and excavation activities, and ensuring that workers and offsite (downwind) individuals are not exposed to hazardous levels of airborne contaminants. The SSO or SSO designee may also be required to advise the FOL on other safety-related matters regarding sampling, such as mitigative measures to address potential hazards from hazardous objects or conditions.

Project Geologist/Sampler - The project geologist/sampler is responsible for the proper acquisition of samples in accordance with this SOP or other project-specific documents. In addition, this individual is responsible for the completion of all required paperwork (e.g., sample log sheets, field notebook, boring logs, container labels, custody seals, and chain-of-custody forms) associated with the collection of those samples.

Project Hydrogeologist – This individual is responsible for selecting and detailing the specific groundwater sampling techniques, onsite water quality testing (type, frequency, and location), equipment to be used, and providing detailed input in this regard to the project planning documents. The project hydrogeologist is also responsible for properly briefing and overseeing the performance of site sampling personnel.

Field Operations Leader (FOL) – This individual is primarily responsible for the execution of the planning document containing the Sampling and Analysis Plan (SAP). This is accomplished through management of a field sampling team for the proper acquisition of samples. He or she is responsible for the supervision of onsite analyses; ensuring proper instrument calibration, care, and maintenance; sample collection and handling; the completion and accuracy of all field documentation; and making sure that custody of all samples obtained is maintained according to proper procedures. When appropriate and as directed by the FOL, such responsibilities may be performed by other qualified personnel (e.g., field technicians) where credentials and time permit. The FOL is ultimately responsible for adherence to Occupational Safety and Health Administration (OSHA) regulations during these operations through self acquisition or through the management of a field team of samplers.
General personnel qualifications for groundwater sample collection and onsite water quality testing include the following:

- Occupational Safety and Health Administration (OSHA) 40-hour and applicable refresher training.
- Capability of performing field work under the expected physical and environmental (i.e., weather) conditions.

- Familiarity with appropriate procedures for sample documentation, handling, packaging, and shipping.

5.0 HEALTH AND SAFETY

Specific safety and health precautions are identified throughout this SOP. In addition to those precautions, the following general hazards may be incurred during sampling activities:

- Knee injuries from kneeling on hard surfaces
- Slips, trips, and falls
- Cuts and lacerations
- Traffic hazards associated with sampling in parking areas and roadways and along highways.

Methods of avoiding these hazards are provided below.

Knee injuries – Many monitoring wells are installed as flush mounts. Personnel are required to kneel to open these wells and to take groundwater level measurements, etc. This could result in knee injuries from kneeling on stones/foreign objects and general damage due to stress on the joints. To combat this hazard:

- Clear any foreign objects from the work area.
- Wear hard-sided knee pads.

Slips, Trips, and Falls – These hazards exist while traversing varying terrains carrying equipment to sample wells. To minimize these hazards:

- Pre-survey well locations. Eliminate, barricade, or otherwise mark physical hazards leading to the locations.
- Carry small loads that do not restrict the field of vision.
- Travel the safest and clearest route (not necessarily the shortest).

Cuts and Lacerations – To prevent cuts and lacerations associated with groundwater sampling, the following provisions are required:

- Always cut away from yourself and others when cutting tubing or rope. This will prevent injury to yourself and others if the knife slips.
- Do not place items to be cut in your hand or on your knee.
- Change blades as necessary to maintain a sharp cutting edge. Many accidents result from struggling with dull cutting attachments.
- Whenever practical, wear cut-resistant gloves (e.g., leather or heavy cotton work gloves) at least on the hand not using the knife.
- Keep cutting surfaces clean and smooth.
- Secure items to be cut -- do not hold them against the opposing hand, a leg, or other body part.

- When transporting glassware, keep it in a hard-sided container such as a cooler so that if there is a fall, you will be less likely to get cut by broken glass.

- DO NOT throw broken glass or glass ampoules into garbage bags. Place broken glass and glass ampoules in hard-sided containers such as a cardboard box or directly into a dumpster. DO NOT reach into garbage bags to retrieve any item accidentally thrown away. Empty the contents onto a flat surface to avoid punctures and lacerations from reaching where you cannot see.

Vehicular and Foot Traffic Hazards – When sampling along the roadway or near traffic patterns, follow the following precautions:

- Motorists may be distracted by onsite activities – ASSUME THEY DO NOT SEE YOU OR MEMBERS OF YOUR FIELD CREW.

- DO NOT place obstructions (such as vehicles) along the sides of the road that may cause site personnel to move into the flow of traffic to avoid your activities or equipment or that will create a blind spot.

- **Provide a required free space of travel.** Maintain at least 6 feet of space between you and moving traffic. Where this is not possible, use flaggers and/or signs to warn oncoming traffic of activities near or within the travel lanes.

- Face Traffic. Whenever feasible, if you must move within the 6 feet of the required free space or into traffic, attempt to face moving traffic at all times. Always leave yourself an escape route.

- Wear high-visibility vests to increase visual recognition by motorists.

- Do not rely on the vehicle operator's visibility, judgment, or ability. Make eye contact with the driver. Carefully and deliberately use hand signals so they will not startle or confuse motorists or be mistaken for a flagger's direction before moving into traffic.

- Your movements may startle a motorist and cause an accident, so move deliberately. Do not make sudden movements that might confuse a motorist.

6.0 PROCEDURES

6.1 General

For information derived from a groundwater sample to be useful and accurate, the sample must be representative of the particular zone being sampled. The physical, chemical, and bacteriological integrity of the sample must be maintained from the time of sampling to the time of analysis to keep any changes in water quality parameters to a minimum.

> ***CAUTION***
>
> A closed well may generate and accumulate gases due to biological degradation, evolution of volatile chemicals from groundwater into the air, or other chemical actions. These gases may also be artificially generated, such as in the case of air sparging or extraction wells, which may take several days to depressurize. See Section 6.6.2 for safety measures to be employed to protect sampling personnel.

Methods for withdrawing samples from completed wells include the use of pumps, compressed air or nitrogen, bailers, and various types of samplers. The primary considerations in obtaining a representative sample of groundwater are to avoid collection of stagnant (standing) water in the well and to avoid physical or chemical alteration of the water sample due to external influences of the sampling technique(s). In a non-pumping well, there will be little or no vertical mixing of water in the well pipe or casing, and stratification will occur. The well water in the screened section will mix with groundwater due to normal flow patterns, but the well water above the screened section will remain isolated and become stagnant. Concentration gradients resulting from mixing and dispersion processes, layers of variable geologic permeability, and the presence of separate-phase product (e.g., floating hydrocarbons) may cause stratification. Excessive pumping or improper sampling methods can dilute or increase contaminant concentrations in the collected sample compared to what is representative of the integrated water column as it naturally occurs at that point, resulting in the collection of a non-representative sample. To safeguard against collecting non-representative samples, the following approach shall be followed prior to sample acquisition:

> ***CAUTION***
> Mechanical agitation of well water may cause off-gas generation of volatile contaminants, creating an inhalation exposure to the sampler(s). Where avoiding an inhalation exposure is not possible and mechanical agitation is possible, pump into closed-top containers to control potential air emissions.

1. If possible, position yourself (and the sampling equipment) upwind of the well head.

2. Purge the monitoring well to be sampled prior to obtaining any samples from it. Evacuation of three to five well volumes is recommended prior to sampling, unless low-flow purging and sampling methods are utilized as described in Section 6.7 (Consult the site-specific SAP for exact purging parameters). In a high-yielding groundwater formation and where there is no stagnant water in the well above the screened section, extensive evacuation prior to sample withdrawal is not as critical as it is in a low-yielding well or in wells containing stagnant water.

3. For wells with low yields that are purged dry during sampling, evacuate the well and allow it to recover to 75 percent of full capacity prior to sample acquisition. If the recovery rate is fairly rapid (generally 300 mL per minute or greater), attempt to continue evacuation until the number of well volumes specified in the SAP is achieved. If this cannot be accomplished, allow recovery to 75 percent of capacity and begin sampling.

> ***CAUTION***
> For moderate to high-yielding monitoring wells, an evacuation rate that does not cause excessive turbulence in the well should be selected. There is no absolute safeguard against contaminating the sample with stagnant water; hence, special techniques are required for purging to minimize the potential for sample contamination (see below).

4. For moderate to high-yielding monitoring wells, use one of the following purge techniques:

   - Place a submersible pump or the intake line of a surface pump or bailer just below the water surface when removing the stagnant water.

   - While purging and as the water level decreases, lower the pump or intake line as the water level drops in the well. Three to five volumes of water shall be removed to provide reasonable assurance that all stagnant water has been evacuated. After this is accomplished, a bailer or other approved device may be used to collect the sample for analysis.

- Unless otherwise directed, place the intake line of the sampling pump (or the submersible pump itself) near the center of the screened section, and pump approximately one casing volume of water from the well at a low purge rate equal to the well's recovery rate (low-flow sampling).

6.2 Sampling, Monitoring, and Evacuation Equipment

Sample containers shall conform to the guidelines in SOP SA-6.1.

The following equipment shall be on hand when sampling groundwater wells (reference SOPs SA-6.1 and SA-7.1):

- Sample packaging and shipping equipment – Coolers for sample shipping and cooling, chemical preservatives, appropriate sampling containers and filler materials, ice, labels, and chain-of-custody documents.
- Field tools and instrumentation
  - Multi-parameter water quality meter with an in-line sample chamber capable of measuring ORP, pH, temperature, DO, specific conductance, turbidity, and salinity, or individual meters (as applicable)
  - pH Paper
  - Camera and film (if appropriate)
  - Appropriate keys (for locked wells)
  - Water level indicator and/or oil-water interface probe if separate-phase product is expected
- Pumps
  - Shallow-well pumps: Centrifugal, bladder, suction, or peristaltic pumps with drop lines and air-lift apparatus (compressor and tubing) where applicable.
  - Deep-well pumps: Submersible pump and electrical power-generating unit, or bladder pumps where applicable.
- Other sampling equipment – Bailers, graduated cylinder, stopwatch, and inert line with tripod-pulley assembly (if necessary).
- Pails – Plastic, graduated.
- Clean paper or cotton towels for cleaning equipment.
- Buckets with lids for collecting purge water.
- Decontamination solutions – Deionized water, potable water, phosphate-free laboratory-grade detergent, and analytical-grade solvent (e.g., pesticide-grade isopropanol), as required.

Ideally, sample withdrawal equipment shall be completely inert, economical, easily cleaned, cleaned prior to use, reusable, able to operate at remote sites in the absence of power sources, and capable of delivering variable rates for well purging and sample collection.

6.3 Calculations of Well Volume

To ensure that the proper volume of water has been removed from the well prior to sampling, it is first necessary to know the volume of standing water in the well pipe (including well screen where applicable). This volume can be easily calculated by the following method. Calculations shall be entered in the site logbook or field notebook or on a sample log sheet form or equivalent electronic form(s) (see SOP SA-6.3):

1. Obtain all available information on well construction (location, casing, screen, etc.).

2. Determine well or inner casing diameter.

3. Measure and record static water level (depth below ground level or top of casing reference point).

4. Determine depth of well by sounding using a clean, decontaminated, weighted tape measure or water level indicator.

5. Calculate number of linear feet of static water (total depth or length of well pipe minus the depth to static water level).

6. Calculate one static well volume in gallons $V = (0.163)(T)(r^2)$

   where: V = Static volume of well in gallons.
   T = Linear feet of water in the well.
   r = Inside radius of well casing in inches.
   0.163 = Conversion factor (compensates for conversion of casing radius from inches to feet and cubic feet to gallons and pi.

7. Per evacuation volumes discussed above, determine the minimum amount to be evacuated before sampling.

Measuring devices may become contaminated when gathering the above information if they are submerged in contaminated water. Decontamination of the tape or water level indicator must be conducted between measurements in different wells as follows:

1. Saturate a paper towel or clean cotton towel with deionized water.

2. As the measuring device is extracted, wipe the tape, changing the cleaning surface frequently.

3. After it is extracted, rinse the probe or tape using a spray bottle of deionized water over a bucket or similar collection container.

Based on the contaminant (oily, etc), it may be necessary to use a soap and water wash and rinse to remove contaminants. Isopropanol can be used on the probe/tape. However, it is recommended that the use of solvents on the tape be minimized because they could degrade the protective covering or possibly remove the scale designations. If isopropanol (or some other solvent) is used, assure that the manufacturer/supplier Material Safety Data Sheet (MSDS) is obtained, kept on site at a readily available location with other MSDSs, and reviewed by personnel prior to the first usage of the solvent. Also, add the substance to the site-specific Hazardous Chemical Inventory list (see Section 5 of the TtNUS Health and Safety Guidance Manual [HSGM], Hazard Communication Program and OSHA Standard 29 CFR 1910.1200).

6.4 Evacuation of Static Water – Purging

6.4.1 General

The amount to be purged from each well will be determined prior to sample collection. This amount will depend on the intent of the monitoring program and the hydrogeologic conditions. Programs to determine overall quality of water resources may require long pumping periods to obtain a sample that is representative of a large volume of the aquifer. The pumped volume may be specified prior to sampling so that the sample can be a composite of a known volume of the aquifer. Alternately, the well can be pumped until parameters such as temperature, specific conductance, pH, and turbidity (as applicable) have stabilized. Onsite measurements of these parameters shall be recorded in the site logbook or field notebook or on standardized data sheets or an equivalent electronic form(s).

6.4.2 Evacuation Devices

The following discussion is limited to those devices commonly used at hazardous waste sites. Attachment A provides guidance on the proper evacuation device to use for given sampling situations. All of these techniques involve equipment that is portable and readily available.

Bailers

Bailers are the simplest evacuation devices used and have many advantages. They generally consist of a length of tubing equipped with a base plate and ball check-valve at the bottom. Bailers are comprised of stainless steel and plastic. They come in a variety of sizes, but the two most often used are 2 inches and 4 inches in diameter. An inert non-absorbent line such as polyethylene rope is used to lower and then raise the bailer to retrieve the sample. As the bailer is lowered into the water column, the ball is pushed up allowing the tube to be filled. When the bailer is pulled upward, the ball seats in the base plate preventing water from escaping.

Advantages of bailers include the following:

- There are few limitations on size and materials used.
- No external power source is needed.
- Bailers are inexpensive and can be dedicated and hung in a well to reduce the chances of cross-contamination.
- Bailers are relatively easy to decontaminate.

Limitations on the use of bailers include the following:

- It is time consuming to remove stagnant water using a bailer.
- Splashing the bailer into the water or transfer of sample may cause aeration.
- The use of a bailer does not permit constant in-line monitoring of groundwater parameters.
- Use of bailers is physically demanding, especially in warm temperatures at personal protection equipment (PPE) levels above Level D.

Safety concerns using a bailer include the following:

- Muscle stress and strain, especially when using 4-inch bailers and when pulling from excessively deep wells.
- Entanglement, possible hand/finger injuries, and rope burns during a sudden release of the bailer back down the well.
- Direct contact with contaminants of concern and sample preservatives when discharging the bailer contents because there is not a high level of control during a direct pour, and splashing and indirect contact with contaminants/preservatives could occur.

Control measures for these hazards are provided in Section 6.6.2.

Suction Pumps

There are many different types of inexpensive suction pumps including centrifugal, diaphragm, and peristaltic pumps. Centrifugal and diaphragm pumps can be used for well evacuation at a fast pumping rate and for sampling at a low pumping rate. The peristaltic pump is a low-volume pump that uses rollers to squeeze flexible tubing to create suction. This tubing can be dedicated to a well to prevent cross-contamination from well to well. Suction pumps are all portable, inexpensive, and readily available. However, because they are based on suction, their use is restricted to areas with water levels within 20 to 25 feet of the ground surface. A significant limitation is that the vacuum created by these pumps can cause loss of dissolved gases and volatile organics. Another limitation of these pumps is that they require a secondary energy source to drive them. Electrically driven pumps may require portable generators as energy sources. Air diaphragm pumps require air compressors and/or compressed gas cylinders to drive them. The advantage of the peristaltic pump is that it will operate from a portable battery source. Safety measures associated with these pumps are provided below.

Air-Lift and Gas-Lift Samplers

This group of pump samplers uses gas pressure either in the annulus of the well or in a venturi to force groundwater up a sampling tube. These pumps are also relatively inexpensive. Air- or gas-lift samplers are more suitable for well development than for sampling because the samples may be aerated as a result of pump action. Aeration can cause pH changes and subsequent trace metal precipitation or loss of volatile organics.

Submersible Pumps

Submersible pumps take in water and push the sample up a sample tube to the surface. The power sources for these samplers may be compressed gas or electricity. Operation principles vary, and displacement of the sample can be by an inflatable bladder, sliding piston, gas bubble, or impeller. Pumps are available for 2-inch-diameter wells and larger. These pumps can lift water from considerable depths (several hundred feet).

Limitations of this class of pumps include the following:

- They may have low delivery rates.
- Many models are expensive.

- Compressed gas or electric power is needed.
- Sediment in water may cause clogging of the valves or eroding of the impellers with some of these pumps.
- Decontamination of internal components can be difficult and time consuming.

Compressed Gases

Safety concerns using compressed gases as an energy source in these pumps are numerous. The nitrogen gas or compressed air is provided in a compressed gas cylinder at a pressure of approximately 2,000 psi. If damaged, these cylinders can become dangerous projectiles. Additionally, a sudden release of a cylinder's contents can involve considerable force that could cause significant damage to the eyes and/or skin. Protective measures include the following:

- Always wear safety impact glasses when handling compressed gases.
- Always administer compressed gases through an appropriate pressure-reducing regulator.
- When clearing the cylinder connection port, open the cylinder valve only enough to clear foreign debris. During this process, always position the cylinder valve so that it faces away from you and others.
- If the cylinder is designed to accept a valve protection cap, always keep that protection cap in place, except the cylinder is connected for use.
- When using the cylinder, lay the cylinder on its side to avoid the potential of it falling and knocking the valve off (and becoming a missile).
- DO NOT use the compressed nitrogen or air to clean clothing or to spray off the skin. Small cuts in the protective layer of the skin may permit the gas to enter into the bloodstream, presenting the potential danger of an embolism.

See the project-specific HASP for additional direction concerning cylinder safe handling procedures pertaining to the safe handling, transportation, and storage of compressed gas cylinders.

Electrical Shock

Even in situations where portable batteries are used, the potential for electrical shock exists. This potential risk is increased in groundwater sampling activities because of the presence of groundwater near the batteries. This potential is also increased in (prohibited) situations where jury-rigging of electrical connections is performed. Other potential hazards occur when field samplers open the hood of a running car to access the battery as a power source. To control these hazards:

- If you are unfamiliar with electrical devices, do not experiment, get help, and get the proper equipment necessary to power your device.
- Use the proper portable power inverters for cigarette lighter connections to minimize the need to access the battery under the hood of your vehicle.
- Use of electrical generators may pose a number of hazards including noise, those associated with fueling, and indirect sample influence.

To minimize or eliminate electrical generator hazards:

- Inspect the generator before use. Ensure that the generator and any extension cords are rated for the intended operation and have a Ground Fault Circuit Interrupter (GFCI) in line to control potential electrical shock.
- Fuel the generator before purging and sampling to avoid loss of power during sampling.
- Fuel engines only when they are turned OFF and have cooled sufficiently to prevent a fire hazard.
- Place the generator and any fuel source at least 50 feet from the well to be sampled to avoid indirect influence to the sample from fuel vapors or emission gases.

Lifting Hazards

This hazard may be experienced when moving containers of purge water, equipment, cylinders, etc. To control these potential hazards:

- Do not fill purge buckets to more than 80 percent of their capacity.
- Obtain a gas cylinder of sufficient size to complete the designated task but not too large to handle. K-size cylinders weigh approximately 135 pounds and are difficult to handle. M-size cylinders weigh approximately 50 pounds and are easier to handle and move.
- When necessary, get help lifting and moving gas cylinders and other heavy objects. Minimize twisting and turning while lifting. If it is necessary to move these cylinders or generators over significant distance, use mechanical means (carts, etc.).
- Use proper lifting techniques as described in Section 4.4 of the HSGM.

6.5 Onsite Water Quality Testing

This section describes the procedures and equipment required to measure the following parameters of an aqueous sample in the field:

- pH
- Specific conductance
- Temperature
- DO
- ORP
- Turbidity
- Salinity

This section is applicable for use in an onsite groundwater quality monitoring program to be conducted at a hazardous or nonhazardous waste site. The procedures and equipment described are applicable to groundwater samples and are not, in general, subject to solution interferences from color, turbidity, or colloidal material or other suspended matter.

This section provides general information for measuring the parameters listed above with instruments and techniques in common use. Because instruments from different manufacturers may vary, review of the manufacturer's literature pertaining to the use of a specific instrument is required before use. Most meters

used to measure field parameters require calibration on a daily basis. Refer to SOP SA-6.3 for an example equipment calibration log.

6.5.1 Measurement of pH

6.5.1.1 General

Measurement of pH is one of the most important and frequently used tests in water chemistry. Practically every phase of water supply and wastewater treatment such as acid-base neutralization, water softening, and corrosion control is pH dependent. Likewise, the pH of leachate can be correlated with other chemical analyses to determine the probable source of contamination. It is therefore important that reasonably accurate pH measurements be taken and recorded on the groundwater sample log sheet (Attachment B) or equivalent electronic form.

Two methods are given for pH measurement: the pH meter and pH indicator paper. Indicator paper is used when only an approximation of the pH is required or when pH meter readings need to be verified, and the pH meter is used when a more accurate measurement is needed. The response of a pH meter can be affected by high levels of colloidal or suspended solids, but the effect is generally of little significance. Consequently, specific methods to overcome this interference are not described. The response of pH paper is unaffected by solution interferences from color, turbidity, or colloidal or suspended materials unless extremely high levels capable of coating or masking the paper are encountered. In such cases, use of a pH meter is recommended.

6.5.1.2 Principles of Equipment Operation

Use of pH papers for pH measurement relies on a chemical reaction caused by the acidity or alkalinity of the solution created by the addition of the water sample reacting with the indicator compound on the paper. Various types of pH papers are available, including litmus (for general acidity or alkalinity determination) and specific, or narrower range, pH range paper.

Use of a pH meter relies on the same principle as other ion-specific electrodes. Measurement relies on establishment of a potential difference across a glass or other type of membrane in response to (in this instance, hydrogen) ion activity (which is usually similar to concentration) across that membrane. The membrane is conductive to ionic species and, in combination with a standard or reference electrode, a potential difference proportional to the ion concentration is generated and measured.

6.5.1.3 Equipment

The following equipment is to be used for obtaining pH measurements:

- A stand-alone portable pH meter or combination meter equipped with an in-line sample chamber (e.g., YSI 600 series and Horiba U-22).
- Combination electrode with polymer body to fit the above meter. Alternately, a pH electrode and a reference electrode can be used if the pH meter is equipped with suitable electrode inputs.
- Buffer solutions, as specified by the manufacturer. If the buffer solutions are considered hazardous per 29 Code of Federal Regulations (CFR) 1910.1200 (Hazard Communication) or the volumes used are greater than consumer commodity levels, the SSO shall obtain MSDSs from the manufacturer for the specific buffer solutions (see Section 4 of the HSGM regarding the Hazard Communication Program)

- pH indicator paper to cover the pH range 2 through 12.
- Manufacturer's operation manual. All personnel must be familiar with the equipment operation to ensure that the integrity of samples is preserved and that the equipment is operated safely.

6.5.1.4 Measurement Techniques for Field Determination of pH

pH Meter

The following procedure shall be used for measuring pH with a pH meter (meter standardization is according to manufacturer's instructions):

1. Inspect the instrument and batteries prior to initiation of the field effort.
2. Check the integrity of the buffer solutions used for field calibration. Buffer solutions need to be changed often as a result of degradation upon exposure to the atmosphere.
3. If applicable, make sure all electrolyte solutions within the electrode(s) are at their proper levels and that no air bubbles are present within the electrode(s).
4. Calibrate the meter and electrode(s) on a daily use basis (or as recommended by manufacturer) following manufacturer's instructions. Record calibration data on a water quality meter calibration log sheet (Attachment C) or equivalent electronic form.
5. Immerse the electrode(s) in the sample. Stabilization may take several seconds to minutes. If the pH continues to drift, the sample temperature may not be stable, a physical reaction (e.g., degassing) may be taking place in the sample, or the meter or electrode may be malfunctioning. The failure of the measurements to stabilize must be clearly noted in the logbook or equivalent electronic form.
6. Read and record the pH of the sample. pH shall be recorded to the nearest 0.01 pH standard unit. Also record the sample temperature (unless otherwise specified in the SAP, record temperatures to the nearest whole degree Fahrenheit or 0.5 degree Celsius).
7. Rinse the electrode(s) with deionized water.
8. Store the electrode(s) in an accordance with manufacturer's instructions when not in use.

Any visual observation of conditions that may interfere with pH measurement, such as oily materials or turbidity, shall be noted and avoided as much as possible.

pH Paper

Use of pH paper is very simple and requires no sample preparation, standardization, etc. pH paper is available in several ranges, including wide-range (indicating approximately pH 1 to 12), mid-range (approximately pH 0 to 6, 6 to 9, 8 to 14) and narrow-range (many available, with ranges as narrow as 1.5 pH units). The appropriate range of pH paper shall be selected. If the pH is unknown the investigation shall start with wide-range paper and proceed with successively narrower range paper until the sample pH is determined. To measure the pH with pH paper:

1. Collect a small portion of sample into a clean container.

2. Dip the pH paper into this small portion of sample.

3. Compare the color of the paper to the color chart that is provided with the pH paper and read the corresponding pH from the chart.

4. Record the pH value from the chart on the sampling log sheet.

5. Discard the used pH paper as trash.

6. Discard the small volume of sample that was used for the pH measurement with the other investigative derived waste.

6.5.2 Measurement of Specific Conductance

6.5.2.1 General

Conductance provides a measure of dissolved ionic species in water and can be used to identify the direction and extent of migration of contaminants in groundwater or surface water. It can also be used as a measure of subsurface biodegradation or to indicate alternate sources of groundwater contamination.

Conductivity is a numerical expression of the ability of a water sample to carry an electric current. This value depends on the total concentration of ionized substances dissolved in the water and the temperature at which the measurement is made. The mobility of each of the various dissolved ions, their valences, and their actual and relative concentrations affect conductivity.

It is important to obtain a specific conductance measurement soon after taking a sample because temperature changes, precipitation reactions, and absorption of carbon dioxide from the air all affect specific conductance. Most conductivity meters in use today display specific conductance in units of mS/cm, which is the conductivity normalized to a temperature of 25°C. These are the required units to be recorded on the groundwater sample log field form or equivalent electronic form.

6.5.2.2 Principles of Equipment Operation

An aqueous system containing ions will conduct an electric current. In a direct-current field, the positive ions migrate toward the negative electrode, and the negatively charged ions migrate toward the positive electrode. Most inorganic acids, bases, and salts such as hydrochloric acid, sodium carbonate, and sodium chloride, respectively, are relatively good conductors. Conversely, organic compounds such as sucrose or benzene, which do not dissociate in aqueous solution, conduct a current very poorly if at all.

A conductance cell and a Wheatstone Bridge (for the measurement of potential difference) may be used for measurement of electrical resistance. The ratio of current applied to voltage across the cell may also be used as a measure of conductance. The core element of the apparatus is the conductivity cell containing the solution of interest. Depending on the ionic strength of the aqueous solution to be tested, a potential difference is developed across the cell, which can be converted directly or indirectly (depending on instrument type) to a measurement of specific conductance.

6.5.2.3 Equipment

The following equipment is needed for taking specific conductance measurements:

- Stand-alone portable conductivity meter or combination meter equipped with an in-line sample chamber (e.g., YSI 600 series and Horiba U-22).
- Calibration solution, as specified by the manufacturer.
- Manufacturer's operation manual.

A variety of conductivity meters are available that may also be used to monitor salinity and temperature. Probe types and cable lengths vary, so equipment must be obtained to meet the specific requirements of the sampling program.

6.5.2.4 Measurement Techniques for Specific Conductance

The steps involved in taking specific conductance measurements are as follows (calibration shall be conducted according to manufacturer's instructions):

1. Check batteries and calibrate instrument before going into the field.
2. Calibrate on a daily use basis (or as recommended by manufacturer), according to the manufacturer's instructions and record all pertinent information on a water quality meter calibration log sheet or equivalent electronic form. Potassium chloride solutions with a specific conductance closest to the values expected in the field shall be used for calibration.
3. Rinse the cell with one or more portions of the sample to be tested or with deionized water and shake excess water from the cell.
4. Immerse the electrode in the sample and measure the conductivity.
5. Read and record the results in a field logbook or on a sample log sheet or equivalent electronic form.
6. Rinse the electrode with deionized water.

If the specific conductance measurements become erratic, recalibrate the instrument and see the manufacturer's instructions for troubleshooting assistance.

6.5.3 Measurement of Temperature

6.5.3.1 General

In combination with other parameters, temperature can be a useful indicator of the likelihood of biological action in a water sample. It can also be used to trace the flow direction of contaminated groundwater. Temperature measurements shall be taken in situ, or as quickly as possible in the field because collected water samples may rapidly equilibrate with the temperature of their surroundings.

6.5.3.2 Equipment

Temperature measurements may be taken with alcohol-toluene, mercury-filled, dial-type thermometers or combination meters equipped with an in-line sample chamber (e.g., YSI 600 series and Horiba U-22). In addition, various meters such as specific conductance or DO meters that have temperature measurement capabilities may also be used. Using such instrumentation along with suitable probes and cables, in-situ measurements of temperature at great depths can be performed.

6.5.3.3 Measurement Techniques for Water Temperature

If a thermometer is used to determine the temperature for a water sample, use the following procedure:

1. Immerse the thermometer in the sample until temperature equilibrium is obtained (1 to 3 minutes). To avoid the possibility of cross-contamination, the thermometer shall not be inserted into samples that will undergo subsequent chemical analysis.

2. Record values in a field logbook or on a sample log sheet or equivalent electronic form.

If a temperature meter or probe is used:

1. Calibrate the instrument according to manufacturer's recommendations prior to use.

2. Immerse the meter/probe in the sample until temperature equilibrium is obtained (1 to 3 minutes). To avoid the possibility of cross-contamination, the meter/probe shall not be inserted into samples that will undergo subsequent chemical analysis.

3. Record values in a field logbook or on a sample log sheet or equivalent electronic form.

6.5.4 Measurement of Dissolved Oxygen

6.5.4.1 General

DO levels in natural water and wastewater depend on the physical, chemical and biochemical activities in the water body. In addition, the growth of many aquatic organisms and the rate of corrosivity are dependent on DO concentrations. Thus, analysis for DO is a key test in water pollution and waste treatment process control. If at all possible, DO measurements shall be taken in situ because concentrations may show a large change in a short time if the sample is not adequately preserved.

The monitoring method discussed herein is limited to the use of DO meters. Chemical methods of analysis (i.e., Winkler methods) are available but require more equipment and greater sample manipulation. Furthermore, DO meters using a membrane electrode are suitable for highly polluted waters because the probe is completely submersible and is not susceptible to interference caused by color, turbidity, or colloidal material or suspended matter.

6.5.4.2 Principles of Equipment Operation

DO probes are normally electrochemical cells that have two solid metal electrodes of different nobility immersed in an electrolyte. The electrolyte is retained by an oxygen-permeable membrane. The metal of highest nobility (the cathode) is positioned at the membrane. When a suitable potential exists between

the two metals, reduction of oxygen to hydroxide ion (OH^-) occurs at the cathode surface. An electrical current is developed that is directly proportional to the rate of arrival of oxygen molecules at the cathode. This rate is proportional to the oxygen concentration in the water being measured.

Because the current produced in the probe is directly proportional to the rate of arrival of oxygen at the cathode, it is important that a fresh supply of sample always be in contact with the membrane. Otherwise, the oxygen in the aqueous layer along the membrane is quickly depleted and false low readings are obtained. It is therefore necessary to stir the sample (or the probe) constantly to maintain fresh solution near the membrane interface. Stirring, however, shall not be so vigorous that additional oxygen is introduced through the air-water interface at the sample surface. To avoid this possibility, some probes are equipped with stirrers to agitate the solution near the probe, leaving the surface of the solution undisturbed.

DO probes are relatively unaffected by interferences. Interferences that can occur are reactions with oxidizing gases such as chlorine or with gases such as hydrogen sulfide that are not easily depolarized from the indicating electrode. If a gaseous interference is suspected, it shall be noted in the field logbook and checked if possible. Temperature variations can also cause interference because probes exhibit temperature sensitivity. Automatic temperature compensation is normally provided by the manufacturer. This compensation can counteract some of the temperature effects but not all of them.

6.5.4.3 Equipment

The following equipment is needed to measure DO concentrations:

- A stand-alone portable DO meter or combination meter equipped with an in-line sample chamber (e.g., YSI 600 series and Horiba U-22).
- Sufficient cable to allow the probe to contact the sample.
- Manufacturer's operation manual.

6.5.4.4 Measurement Techniques for Dissolved Oxygen Determination

DO probes differ as to instructions for use. Follow the manufacturer's instructions to obtain an accurate reading. The following general steps shall be used to measure DO concentrations:

1. Check the DO meter batteries before going to the field.
2. Condition the probe in a water sample for as long a period as practical before use in the field. Long periods of dry storage followed by short periods of use in the field may result in inaccurate readings.
3. Calibrate the instrument in the field according to manufacturer's recommendations or in a freshly air-saturated water sample of known temperature.
4. Record all pertinent information on a water quality meter calibration log sheet or equivalent electronic form.
5. Rinse the probe with deionized water.
6. Immerse the probe in the sample. Be sure to provide for sufficient flow past the membrane by stirring the sample. Probes without stirrers placed in wells may be moved up and down to achieve the required mixing.

7. Record the DO content and temperature of the sample in a field logbook or on a sample log sheet or equivalent electronic form.

8. Rinse the probe with deionized water.

9. Recalibrate the probe when the membrane is replaced, or as needed. Follow the manufacturer's instructions.

Note that in-situ placement of the probe is preferable because sample handling is not involved. This however may not always be practical.

Special care shall be taken during sample collection to avoid turbulence that can lead to increased oxygen solubilization and positive test interferences.

6.5.5 Measurement of Oxidation-Reduction Potential

6.5.5.1 General

ORP provides a measure of the tendency of organic or inorganic chemicals to exist in an oxidized state. The ORP parameter therefore provides evidence of the likelihood of anaerobic degradation of biodegradable organics or the ratio of activities of reduced to oxidized species in the sample.

6.5.5.2 Principles of Equipment Operation

When an inert metal electrode, such as platinum, is immersed in a solution, a potential is developed at that electrode depending on the ions present in the solution. If a reference electrode is placed in the same solution, an ORP electrode pair is established. This electrode pair allows the potential difference between the two electrodes to be measured and is dependent on the concentration of the ions in solution. By this measurement, the ability to oxidize or reduce species in solution may be determined. Supplemental measurements, such as DO, may be correlated with ORP to provide knowledge of the quality of the solution, water, or wastewater.

6.5.5.3 Equipment

The following equipment is needed for measuring the ORP of a solution:

- A combination meter with an in-line sample chamber (e.g., YSI 600 series and Horiba U-22).
- Reference solution as specified by the manufacturer.
- Manufacturer's operation manual.

6.5.5.4 Measurement Techniques for Oxidation-Reduction Potential

The following procedure is used for measuring ORP:

1. Check the equipment using the manufacturer's recommended reference solution and check its batteries before going to the field.

2. Thoroughly rinse the electrode with deionized water.

3. If the probe does not respond properly to the recommended reference solution, verify the sensitivity of the electrodes by noting the change in millivolts when the pH of a test solution is altered. The ORP will increase when the pH of a test solution decreases, and the ORP will decrease when the test solution pH is increased. Place the sample in a clean container and agitate the sample. Insert the electrodes and note that the ORP drops sharply when the caustic is added (i.e., pH increases) thus indicating that the electrodes are sensitive and operating properly. If the ORP increases sharply when the caustic is added, the polarity is reversed and must be corrected in accordance with the manufacturer's instructions or the probe should be replaced.

4. Record all pertinent information on a water quality meter calibration log sheet or equivalent electronic form.

6.5.6 Measurement of Salinity

6.5.6.1 General

Salinity is a unitless property of industrial and natural waters. It is the measurement of dissolved salts in a given mass of solution. Most field meters determine salinity automatically from conductivity and temperature. The displayed value will be displayed in either parts per thousand (ppt) or percent (e.g., 35 ppt equals 3.5 percent).

6.5.6.2 Principles of Equipment Operation

Salinity is determined automatically from the meter's conductivity and temperature readings according to algorithms (such as are found in Standard Methods for the Examination of Water and Wastewater). Depending on the meter, the results are displayed in either ppt or percent. The salinity measurements are carried out in reference to the conductivity of standard seawater (corrected to salinity = 35 ppt).

6.5.6.3 Equipment

The following equipment is needed for salinity measurements:

- A multi-parameter water quality meter capable of measuring conductivity and temperature and converting them to salinity (e.g., Horiba U-22 or YSI 600 series).
- Calibration solution as specified by the manufacturer.
- Manufacturer's operation manual.

6.5.6.4 Measurement Techniques for Salinity

The steps involved in taking salinity measurements are as follows (standardization shall be conducted according to manufacturer's instructions):

1. Check the expiration date of the solutions used for field calibration and replace them if they are expired.

2. Check batteries and calibrate the meter before going into the field.

3. Calibrate on a daily use basis, according to the manufacturer's instructions and record all pertinent information on a water quality meter calibration log sheet or equivalent electronic form.

4. Rinse the cell with the sample to be tested. This is typically accomplished as the probe is placed in line during the collection of the purge water up to the time of sample acquisition.

5. Immerse the multi-probe in the sample and measure the salinity. Read and record the results in a field logbook or on a sample log sheet or equivalent electronic form.

6. Rinse the probes with deionized water.

6.5.7 Measurement of Turbidity

6.5.7.1 General

Turbidity is an expression of the optical property that causes light to be scattered and absorbed rather than transmitted in a straight line through the sample. Turbidity in water is caused by suspended matter such as clay, silt, or other finely divided organic and inorganic matter and microscopic organisms including plankton.

It is important to obtain a turbidity reading immediately after taking a sample because irreversible changes in turbidity may occur if the sample is stored too long.

6.5.7.2 Principles of Equipment Operation

Turbidity is measured by the Nephelometric Method, which is based on a comparison of the intensity of light scattered by the sample under defined conditions with the intensity of light scattered by a standard reference suspension under the same conditions. The higher the scattered light intensity, the higher the turbidity.

Formazin polymer is used as the reference turbidity standard suspension because of its ease of preparation combined with a higher reproducibility of its light-scattering properties than clay or turbid natural water. The turbidity of a specified concentration of formazin suspension is defined as 40 nephelometric units. This same suspension has an approximate turbidity of 40 Jackson units when measured on the candle turbidimeter. Therefore, nephelometric turbidity units (NTUs) based on the formazin preparation will approximate units derived from the candle turbidimeter but will not be identical to them.

6.5.7.3 Equipment

The following equipment is needed for turbidity measurements:

- A turbidity meter (e.g., LaMotte 2020) that calibrates easily using test cells with standards of 0.0, 1.0, and 10 NTUs, or a combination meter equipped with an in-line sample chamber (e.g., YSI 600 series and Horiba U-22).

- Calibration solution and sample tubes, as specified by the manufacturer.

- Manufacturer's operation manual.

6.5.7.4 Measurement Techniques for Turbidity

The steps involved in taking turbidity measurements utilizing an electrode (e) or light meter (l) are listed below (standardization shall be done according to manufacturer's instructions):

1. Check the expiration date of the solutions used for field calibration and replace them if they are expired.
2. Check batteries and calibrate the instrument before going into the field.
3. Calibrate on a daily basis according to the manufacturer's instructions, and record all pertinent information on a turbidity meter calibration log sheet (Attachment C) or equivalent electronic form.
4. When using the YSI and/or Horiba U-22, rinse the electrode with one or more portions of the sample to be tested or with deionized water.
5. When using the Lamotte 2020, fill the light meter's glass test cell with approximately 5 mL of sample, screw on the cap, wipe off glass to remove all residue that could intercept the instrument's light beam, place the test cell in the light meter, and close the lid.
6. Immerse the electrode in the sample and measure the turbidity.
7. The reading must be taken immediately because suspended solids will settle over time resulting in a lower, inaccurate turbidity reading.
8. Read and record the results in a field logbook or on a sample log sheet or equivalent electronic form. Include a physical description of the sample, including color, qualitative estimate of turbidity, etc.
9. Rinse the electrode or test cell with deionized water.

6.6 Sampling

6.6.1 Sampling Plan

The sampling approach consisting of the following shall be developed as part of the project planning documents approved prior to beginning work in the field:

- Background and objectives of sampling.
- Brief description of area and waste characterization.
- Identification of sampling locations, with map or sketch, and applicable well construction data (well size, depth, screened interval, reference elevation).
- Intended number, sequence, volumes, and types of samples. If the relative degree of contamination between wells is insignificant, a sampling sequence that facilitates sampling logistics may be followed. Where some wells are known or strongly suspected of being highly contaminated, these shall be sampled last to reduce the risk of cross-contamination between wells. In situations where the well is not well-characterized and the nature or extent of airborne contamination is unknown, it is recommended that head space analysis using a photoionization detector (PID) or flame ionization detector (FID) is performed to rate the wells, sampling from least contaminated to most contaminated.

Refer to the project-specific HASP for appropriate information and direction on air monitoring requirements.

- Sample preservation requirements.
- Work schedule.
- List of team members.
- List of observers and contacts.
- Other information, such as the necessity for a warrant or permission of entry, requirements for split samples, access problems, location of keys, etc.
- The FOL shall ensure that the sampling method(s) to be employed is accurately represented in the HASP, indicating the types of sampling to be employed and the hazards. If the methods are not accurately represented, the FOL should rectify this with the HASP author.
- The FOL shall ensure that sampling teams understand the sampling approach that they are to follow. Where sampling teams are made up of personnel from multiple locations, personal sampling experiences may vary. Therefore the FOL shall review project-specific requirements, SOPs, and protocol to be followed. The FOL will conduct periodic surveys to ensure that these methods are being completed per his/her direction.

6.6.2 Sampling Methods as Related to Low-Flow Sampling

The collection of a groundwater sample consists of the following steps:

1. Ensure the safety of the sample location. Take a few minutes to evaluate the area for physical hazards (trip hazards, uneven ground, overhanging branches, etc.) and natural hazards (snakes, bees, spiders, etc.) that may exist in the area or that may have constructed nests in the well head. Snakes often like to sun themselves on concrete well pads. Follow provisions in the project-specific HASP and/or HSGM for addressing natural hazards.
2. As indicated earlier, some monitoring wells have the potential to contain pressurized headspace (e.g., through the generation of gases form contaminated groundwater, due to biological processes, degradation of contaminants, or simply based on location such as near a landfill or in areas that intersect lithological abnormalities) or through intentional artificial means such as those associated with air sparging systems. Injection or extraction wells may be artificially pressurized and may remain so for several days after the system has been turned off. This presents a hazard to people opening these wells. The Field Sampling Technician shall employ the following practices to minimize these hazards:
    - Wear safety glasses to protect the eyes. If site-specific observations and conditions indicate that the wells may be pressurized, wear a full-face shield over the safety impact eye protection.
    - DO NOT place your face or any other part of your body over the well when opening because this may place you in a strike zone.
    - Open the well cover at arms length, then step away and allow the well to off gas and stabilize.

    Follow directions provided in the project-specific HASP, Work Plan and/or Sampling Plan pertaining to the use of volatile chemical detection equipment (PID or FID) within the breathing zone of the sampler

during sampling to determine the need to retreat from the work area and/or for the use of respiratory protection (as specified in the HASP).

3. When proper respiratory protection has been donned, sound the well for total depth and water level (using clean equipment) and record these data on a groundwater sampling log sheet or equivalent electronic form; then calculate the fluid volume in the well pipe (as previously described in this SOP). It is imperative that downhole equipment be adequately decontaminated between wells to prevent cross-contamination. Just as sampling occurs from the least contaminated to the most contaminated, it is also recommended that groundwater level measurements be taken in this manner.

4. Calculate volume of well water to be removed as described in Section 6.3.

5. Select the appropriate purging equipment (see Attachment A to this SOP) or as designated within your Work Plan/Sampling Plan. If an electric submersible pump with packer is chosen, go to Step 10.

6. Lower the purging equipment or intake into the well to a short distance below the water level or mid-screen as indicated in project-specific documentation and begin water removal. Remember that some contaminants are "bottom dwellers," and in these cases, project-specific direction may specify placing the intake just above (1 to 2 feet) the well bottom. Secure the pump intake at the well and secure the effluent at the collection container and begin pumping. The pumping rate will be determined based on the decrease in the water level (see Section 6.7) or as directed in your project-specific documents or this SOP. Purge water is generally collected in a 5-gallon bucket or similar open- or closed-top container. To minimize the potential for spills and back injuries, do not fill 5-gallon buckets beyond approximately 80 percent of their capacity. Dispose of purge water was as indicated in the planning document(s). Where necessary, slow the pumping rate or lower the pump intake as required to maintain submergence.

7. Estimate the approximate rate of discharge frequently and record it on the Low Flow Purge Data Sheet (see Attachment D). Estimate flow rate by noting the amount of discharge in a bucket or graduated cylinder per unit time using a watch with a second hand or a stopwatch.

8. Observe the peristaltic pump tubing intake for degassing "bubbles." If bubbles are abundant and the intake is fully submerged, this pump is not suitable for collecting samples for volatile organics.

9. Purge a minimum of three to five casing volumes before sampling (or as directed by the site-specific SAP). In low-permeability strata (i.e., if the well is pumped to dryness), one volume will suffice. Allow the well to recover to 75 percent of initial water level before sampling. Do not overfill purge containers because this increases the potential for spills and lifting injuries.

10. If sampling using a submersible pump, lower the pump intake to mid-screen (or the middle of the open section in uncased wells) and collect the sample. If sampling with a bailer, lower the bailer to just below the water surface.

11. For pump and packer assemblies only: Lower the assembly into the well so that the packer is positioned just above the screen or open section. Inflate the packer. Purge a volume equal to at least twice the screened interval (or unscreened open section volume below the packer) before sampling. Packers shall always be tested in a casing section above ground to determine proper inflation pressures for good sealing.

12. If the recovery time of the well is very slow (e.g., 24 hours or greater), sample collection can be delayed until the following day. If the well has been purged early in the morning, sufficient water may be standing in the well by the day's end to permit sample collection. If the well is incapable of producing a sufficient volume of sample at any time, take the largest quantity available and record this

occurrence in the site logbook or equivalent electronic form. When this occurs, contact the analytical laboratory to alert them that a reduced sample volume(s) will be submitted for analysis.

13. Fill sample containers and preserve and label them as described in SOP SA-6.1. Many sample bottles will contain preservative when they are shipped to the field. In those cases, do not add preservative.

14. Replace the well cap and lock it as appropriate. Make sure the well is readily identifiable as the source of the sample.

15. Process sample containers as described in SOP SA-6.1.

16. Decontaminate equipment as described in SOP SA-7.1.

6.7 Low-Flow Purging and Sampling

6.7.1 Scope and Application

Low-flow purging and sampling techniques may be required for groundwater sampling activities. The purpose of low-flow purging and sampling is to collect groundwater samples that contain "representative" amounts of mobile organic and inorganic constituents in the vicinity of the selected open well interval, at or near natural flow conditions. This minimum-stress procedure emphasizes negligible water level drawdown and low pumping rates to collect samples with minimal alterations in water chemistry. This procedure is designed primarily to be used in wells with a casing diameter of 1 inch or more and a saturated screen length, or open interval, of 10 feet or less. Samples obtained are suitable for analyses of common types of groundwater contaminants (volatile and semivolatile organic compounds, pesticides, polychlorinated biphenyls [PCBs], metals and other inorganic ions [cyanide, chloride, sulfate, etc.]). This low-flow procedure is not designed for collection of non-aqueous phase liquid samples from wells containing light or dense non-aqueous phase liquids (LNAPLs or DNAPLs).

This procedure is flexible for various well construction types and groundwater yields. The goal of the procedure is to obtain a turbidity level of less than 10 NTUs and to achieve a water level drawdown of less than 0.3 foot during purging and sampling. If these goals cannot be achieved, sample collection can take place provided that the remaining criteria in this procedure are met.

6.7.2 Equipment

The following equipment is required (as applicable) for low-flow purging and sampling:

- Adjustable rate submersible pump (e.g., centrifugal or bladder pump constructed of stainless steel or Teflon).

- Disposable clear plastic bottom-filling bailers to be used to check for and obtain samples of LNAPLs or DNAPLs.

- Tubing – Teflon, Teflon-lined polyethylene, polyethylene, polyvinyl chloride (PVC), Tygon, or stainless steel tubing can be used to collect samples for analysis, depending on the analyses to be performed and regulatory requirements.

- Water level measuring device with 0.01-foot accuracy (electronic devices are preferred for tracking water level drawdown during all pumping operations).

- Interface probe.
- Flow measurement supplies.
- Power source (generator, nitrogen tank, etc.). If a gasoline generator is used, it must be located downwind and at a safe distance from the well so that the exhaust fumes do not contaminate the samples.
- Indicator parameter monitoring instruments – pH, turbidity, specific conductance, and temperature. Use of a flow-through cell is recommended. Optional indicators - ORP, salinity, and DO. A flow-through cell (also referred to as an in-line sample chamber) is required.
- Standards to perform field calibration of instruments.
- Decontamination supplies.
- Logbook(s) and other forms (see Attachments B through D) or equivalent electronic form(s).
- Sample bottles.
- Sample preservation supplies (as required by the analytical methods).
- Sample tags and/or labels.
- Well construction data, location map, field data from last sampling event (if available).
- Field Sampling Plan.
- PID or FID instrument for measuring volatile organic compounds (VOCs) per the HASP.

6.7.3 Purging and Sampling Procedure

1. Open the monitoring well as stated earlier and step away. Prepare sampling equipment while allowing 3 to 5 minutes to allow the water level to reach equilibrium. In situations where VOCs are the primary contaminants of concern, air monitoring of the samplers' breathing zone areas may be required by the HASP (typically with a PID or FID).

2 Measure the water level immediately prior to placing the pump in the well and record the water level on the Low-Flow Purge Data Form or equivalent electronic form immediately prior to placing the pump or tubing into the well.

3. Lower the measuring device further into the well to collect the total depth measurement. Again wait 3 to 5 minutes to allow the well to equilibrate to the initial water level prior to placing the pump or pump intake in the well.

4. Record the total well depth on the Low-Flow Purge Data Form or equivalent electronic form immediately prior to placing the pump or tubing into the well

5. Lower the pump or tubing slowly into the well so that the pump intake is located at the center of the saturated screen length of the well. If possible, keep the pump intake at least 2 feet above the bottom of the well to minimize mobilization of sediment that may be present in the bottom of the well. Collection of turbidity-free water samples may be difficult if there is 3 feet or less of standing water in the well.

6. Start with the initial pump rate set at approximately 0.1 liter per minute. Use a graduated cylinder and stopwatch to measure the pumping rate. Adjust the pumping rates as necessary to prevent drawdown from exceeding 0.3 foot during purging. If no drawdown is noted, the pump rate may be increased (to a maximum of 0.4 liter per minute) to expedite the purging and sampling event. The pump rate will be reduced if turbidity is greater than 10 NTUs after all other field parameters have stabilized. If groundwater is drawn down below the top of the well screen, purging shall cease or the well shall be pumped to dryness and then allowed to recover before purging continues. Well recovery to 75 percent is necessary prior to sampling. Slow-recovering wells should be identified and purged at the beginning of the workday to maximize field work efficiency. If possible, samples should be collected from these wells within the same workday and no later than 24 hours after the end of purging.

7. Measure the water level in the well every 5 to 10 minutes using the water level meter. Record the well water level on the Low Flow Purge Data Form (Attachment D) or equivalent electronic form.
8. Record on the Low Flow Purge Data Form every 5 to 10 minutes the water quality parameters (pH, specific conductance, temperature, turbidity, ORP, DO, and salinity or as specified by the approved site-specific planning document) measured by the water quality meter and turbidity meter. If the cell needs to be cleaned during purging operations, continue pumping (allow the pump to discharge into a container) and disconnect the cell. Rinse the cell with distilled/deionized water. After cleaning is completed, reconnect the flow-through cell and continue purging. Document the cell cleaning on the Low-Flow Purge Data Form or equivalent electronic form.

9. Estimate the flow rate by noting the amount of discharge in a graduated cylinder per unit time using a watch with a second hand. Remeasure the flow rate any time the pump rate is adjusted and periodically during purging. This will determine if a reduction in rate has occurred due to possible battery depletion.

10. During purging, check for the presence of bubbles in the flow-through cell. The presence of bubbles is an indication that connections are not tight. If bubbles are observed, check for loose connections and tighten, repair, or replace them as necessary to achieve a tight connection.

11. Wait until stabilization is achieved, or a minimum of two saturated screen volumes have been removed and three consecutive readings, taken at 5 to 10 minute intervals, are within the following limits, then begin sampling:

    0.1 DW 1/10/11

    - pH ±~~0.2~~ standard units
    - Specific conductance ±~~10%~~ 3% DW 1/10/11
    - Temperature ±10%
    - Turbidity less than 10 NTUs
    - DO ±10%

12. If the above conditions have not been met after the well has been purged for 4 hours, purging will be considered complete and sampling can begin. Record the final well stabilization parameters from the Low-Flow Purge Data Form onto the Groundwater Sample Log Form or equivalent electronic form.

NOTE: VOC samples are preferably collected first, directly into pre-preserved sample containers. Fill all sample containers by allowing the pump discharge to flow gently down the inside of the container with minimal turbulence.

13. If the water column in the pump tubing collapses (water does not completely fill the tubing) before exiting the tubing, use one of the following procedures to collect VOC samples:

- Collect samples for non-VOC analyses first, then increase the flow rate incrementally until the water column completely fills the tubing, collect the sample for VOCs, and record the new flow rate.

- Reduce the diameter of the existing tubing until the water column fills the tubing either by adding a connector (Teflon or stainless steel) or clamp, which should reduce the flow rate by constricting the end of the tubing. Proceed with sample collection.

- Insert a narrow-diameter Teflon tube into the pump's tubing so that the end of the tubing is in the water column and the other end of the tubing protrudes beyond the pump's tubing, then collect the sample from the narrow diameter tubing.

- Prepare samples for shipping as per SOP SA-6.1.

7.0 REFERENCES

American Public Health Association, 1989. Standard Methods for the Examination of Water and Wastewater, 17th Edition, APHA, Washington, D.C.

Barcelona, M. J., J. P. Gibb and R. A. Miller, 1983. A Guide to the Selection of Materials for Monitoring Well Construction and Groundwater Sampling. ISWS Contract Report 327, Illinois State Water Survey, Champaign, Illinois.

Johnson Division, UOP, Inc. 1975. Ground Water and Wells, A Reference Book for the Water Well Industry. Johnson Division, UOP, Inc., Saint Paul, Minnesota.

Nielsen, D. M. and G. L. Yeates, 1985. A Comparison of Sampling Mechanisms Available for Small-Diameter Ground Water Monitoring Wells. Ground Water Monitoring Review 5:83-98.

Scalf, M. R., J. F. McNabb, W. J. Dunlap, R. L. Crosby and J. Fryberger, 1981. Manual of Ground Water Sampling Procedures. R. S. Kerr Environmental Research Laboratory, Office of Research and Development, U.S. EPA, Ada, Oklahoma.

U.S. EPA, 1979. Methods for Chemical Analysis of Water and Wastes. EPA-600/4-79-020.

U.S. EPA, 1980. Procedures Manual for Ground Water Monitoring at Solid Waste Disposal Facilities. Office of Solid Waste, United States Environmental Protection Agency, Washington, D.C.

U.S. EPA, 1994. Groundwater Sampling Procedure - Low Flow Purge and Sampling (Draft Final). U.S. Environmental Protection Agency, Region I.

U.S. Geological Survey, 1984. National Handbook of Recommended Methods for Water Data Acquisition, Chapter 5: Chemical and Physical Quality of Water and Sediment. U.S. Department of the Interior, Reston, Virginia.

ATTACHMENT A

PURGING EQUIPMENT SELECTION

Diameter Casing		Bailer	Peristaltic Pump	Vacuum Pump	Air-lift	Diaphragm "Trash" Pump	Submersible Diaphragm Pump	Submersible Electric Pump	Submersible Electric Pump w/Packer
1.25-Inch	Water level <25 feet	X	X	X	X	X			
	Water Level >25 feet	X			X				
2-Inch	Water level <25 feet	X	X	X	X	X	X		
	Water Level >25 feet	X			X		X		
4-Inch	Water level <25 feet	X	X	X	X	X	X	X	X
	Water Level >25 feet	X			X		X	X	X
6-Inch	Water level <25 feet				X	X		X	X
	Water Level >25 feet				X			X	X
8-Inch	Water level <25 feet				X	X		X	X
	Water Level >25 feet				X			X	X

ATTACHMENT A

PURGING EQUIPMENT SELECTION

PAGE 2

Manufacturer	Model Name/Number	Principle of Operation	Maximum Outside Diameter/Length (Inches)	Construction Materials (w/Lines and Tubing)	Lift Range (ft)	Delivery Rates or Volumes	1982 Price (Dollars)	Comments
BarCad Systems, Inc.	BarCad Sampler	Dedicated; gas drive (positive displacement)	1.5/16	PE, brass, nylon, aluminum oxide	0-150 with std. tubing	1 liter for each 10-15 feet of submergence	$220-350	Requires compressed gas; custom sizes and materials available; acts as piezometer.
Cole-Parmer Inst. Co.	Master Flex 7570 Portable Sampling Pump	Portable; peristaltic (suction)	<1.0/NA	(not submersible) Tygon®, silicone Viton®	0-30	670 mL/min with 7015-20 pump head	$500-600	AC/DC; variable speed control available; other models may have different flow rates.
ECO Pump Corp.	SAMPLifier	Portable; venturi	<1.5 or <2.0/NA	PP, PE, PVC, SS, Teflon®, Tefzel®	0-100	0-500 mL/min depending on lift	$400-700	AC, DC, or gasoline-driven motors available; must be primed.
Geltek Corp.	Bailer 219-4	Portable; grab (positive displacement)	1.66/38	Teflon®	No limit	1,075 mL	$120-135	Other sizes available.
GeoEngineering, Inc.	GEO-MONITOR	Dedicated; gas drive (positive displacement)	1.5/16	PE, PP, PVC, Viton®	Probably 0-150	Approximately 1 liter for each 10 feet of submergence	$185	Acts as piezometer; requires compressed gas.
Industrial and Environmental Analysts, Inc. (IEA)	Aquarius	Portable; bladder (positive displacement)	1.75/43	SS, Teflon®, Viton®	0-250	0-2,800 mL/min	$1,500-3,000	Requires compressed gas; other models available; AC, DC, manual operation possible.
IEA	Syringe Sampler	Portable; grab (positive displacement)	1.75/43	SS, Teflon®	No limit	850 mL sample volume	$1,100	Requires vacuum and/or pressure from hand pump.
Instrument Specialties Co. (ISCO)	Model 2600 Well Sampler	Portable; bladder (positive displacement)	1.75/50	PC, silicone, Teflon®, PP, PE, Detrin®, acetal	0-150	0-7,500 mL/min	$990	Requires compressed gas (40 psi minimum).
Keck Geophysical Instruments, Inc.	SP-81 Submersible Sampling Pump	Portable; helical rotor (positive displacement)	1.75/25	SS, Teflon®, PP, EPDM, Viton®	0-160	0-4,500 mL/min	$3,500	DC operated.
Leonard Mold and Die Works, Inc.	GeoFilter Small Diameter Well Pump (#0500)	Portable; bladder (positive displacement)	1.75/38	SS, Teflon®, PC, Neoprene®	0-400	0-3,500 mL/min	$1,400-1,500	Requires compressed gas (55 psi minimum); pneumatic or AC/DC control module.
Oil Recovery Systems, Inc.	Surface Sampler	Portable; grab (positive displacement)	1.75/12	acrylic, Detrin®	No limit	Approximately 250 mL	$125-160	Other materials and models available; for measuring thickness of "floating" contaminants.
Q.E.D. Environmental Systems, Inc.	Well Wizard® Monitoring System (P-100)	Dedicated; bladder (positive displacement)	1.66/36	PVC	0-230	0-2,000 mL/min	$300-400	Requires compressed gas; piezometric level indicator; other materials available.

ATTACHMENT A

PURGING EQUIPMENT SELECTION

PAGE 3

Manufacturer	Model Name/Number	Principle of Operation	Maximum Outside Diameter/Length (Inches)	Construction Materials (w/Lines and Tubing)	Lift Range (ft)	Delivery Rates or Volumes	1982 Price (Dollars)	Comments
Randolph Austin Co.	Model 500 Vari-Flow Pump	Portable; peristaltic (suction)	<0.5/NA	(Not submersible) Rubber, Tygon®, or Neoprene®	0-30	See comments	$1,200-1,300	Flow rate dependent on motor and tubing selected; AC operated; other models available.
Robert Bennett Co.	Model 180	Portable; piston (positive displacement)	1.8/22	SS, Teflon®, Delrin® PP, Viton®, acrylic, PE	0-500	0-1,800 mL/min	$2,600-2,700	Requires compressed gas; water level indicator and flow meter; custom models available.
Slope Indicator Co. (SINCO)	Model 514124 Pneumatic Water Sampler	Portable; gas drive (positive displacement)	1.9/18	PVC, nylon	0-1,100	250 mL/flushing cycle	$250-350	Requires compressed gas; SS available; piezometer model available; dedicated model available.
Solinst Canada Ltd.	5W Water Sampler	Portable; grab (positive displacement)	1.9/27	PVC, brass, nylon, Neoprene®	0-330	500 mL	$1,300-1,800	Requires compressed gas; custom models available.
TIMCO Mfg. Co., Inc.	Std. Bailer	Portable; grab (positive displacement)	1.66/Custom	PVC, PP	No limit	250 mL/ft of bailer	$20-60	Other sizes, materials, models available; optional bottom-emptying device available; no solvents used.
TIMCO	Air or Gas Lift Sampler	Portable; gas drive (positive displacement)	1.66/30	PVC, Tygon®, Teflon®	0-150	350 mL/flushing cycle	$100-200	Requires compressed gas; other sizes, materials, models available; no solvents used.
Tole Devices Co.	Sampling Pump	Portable; bladder (positive displacement)	1.38/48	SS, silicone, Delrin®, Tygon®	0-125	0-4,000 mL/min	$800-1,000	Compressed gas required; DC control module; custom built.

Construction Material Abbreviations:

PE	Polyethylene
PP	Polypropylene
PVC	Polyvinyl chloride
SS	Stainless steel
PC	Polycarbonate
EPDM	Ethylene-propylene diene (synthetic rubber)

Other Abbreviations:

NA	Not applicable
AC	Alternating current
DC	Direct current

NOTE: Other manufacturers market pumping devices which could be used for groundwater sampling, though not expressly designed for this purpose. The list is not meant to be all-inclusive and listing does not constitute endorsement for use. Information in the table is from sales literature and/or personal communication. No skimmer, scavenger-type, or high-capacity pumps are included.

Source: Barcelona et al., 1983.

ATTACHMENT B
GROUNDWATER SAMPLE LOG SHEET

Tetra Tech NUS, Inc.

GROUNDWATER SAMPLE LOG SHEET

Page ___ of ___

Project Site Name: _____
Project No.: _____

[ ] Domestic Well Data
[x] Monitoring Well Data
[ ] Other Well Type: _____
[ ] QA Sample Type: _____

Sample ID No.: _____
Sample Location: _____
Sampled By: _____
C.O.C. No.: _____
Type of Sample:
[X] Low Concentration
[ ] High Concentration

SAMPLING DATA:

Date: / Time:	Color Visual	pH Standard	S.C. mS/cm	Temp. Degrees C	Turbidity NTU	DO mg/l	ORP mV	Other NA
Method:								

PURGE DATA:

Date:	Volume	pH	S.C.	Temp. (C)	Turbidity	DO	ORP	Other
Method:								
Monitor Reading (ppm):			SEE LOW FLOW PURGE DATA SHEET					
Well Casing Diameter & Material								
Type:								
Total Well Depth (TD):								
Static Water Level (WL):								
One Casing Volume(gal/L):								
Start Purge (hrs):								
End Purge (hrs):								
Total Purge Time (min):								
Total Vol. Purged (gal/L):								

SAMPLE COLLECTION INFORMATION:

Analysis	Preservative	Container Requirements	Collected

OBSERVATIONS / NOTES:

Circle if Applicable:

MS/MSD	Duplicate ID No.:	Signature(s):

ATTACHMENT C
EQUIPMENT CALIBRATION LOG

Tetra Tech NUS, Inc.

EQUIPMENT CALIBRATION LOG

PROJECT NAME : _____ INSTRUMENT NAME/MODEL: _____

SITE NAME: _____ MANUFACTURER: _____

PROJECT No.: _____ SERIAL NUMBER: _____

Date of Calibration	Instrument I.D. Number	Person Performing Calibration	Instrument Settings		Instrument Readings		Calibration Standard (Lot No.)	Remarks and Comments
			Pre-calibration	Post-calibration	Pre-calibration	Post-calibration		

ATTACHMENT D
LOW FLOW PURGE DATA SHEET

LOW FLOW PURGE DATA SHEET

PROJECT SITE NAME: ______________________ **WELL ID.:** ______________________

PROJECT NUMBER: ______________________ **DATE:** ______________________

Time (Hrs.)	Water Level (Ft. below TOC)	Flow (mL/Min.)	pH (S.U.)	S. Cond. (mS/cm)	Turb. (NTU)	DO (mg/L)	Temp. (Celcius)	ORP mV	Salinity % or ppt	Comments

SIGNATURE(S): ______________________ **PAGE___OF___**

TETRA TECH	STANDARD OPERATING PROCEDURES	Number SA-1.3	Page 1 of 31
		Effective Date 04/072008	Revision 9
		Applicability Tetra Tech NUS, Inc.	
		Prepared Earth Sciences Department	
Subject SOIL SAMPLING		Approved Tom Johnston T E Johnston	

TABLE OF CONTENTS

SECTION		PAGE
1.0	**PURPOSE**	**2**
2.0	**SCOPE**	**2**
3.0	**GLOSSARY**	**2**
4.0	**RESPONSIBILITIES AND PERSONNEL QUALIFICATIONS**	**3**
5.0	**HEALTH AND SAFETY**	**4**
6.0	**PROCEDURES**	**5**
6.1	Overview	6
6.2	Soil Sample Collection	6
6.2.1	Procedure for Preserving and Collecting Soil Samples for Volatile Organic Compound Analysis	6
6.2.2	Procedure for Collecting Soil Samples for Non-Volatile Analyses	9
~~6.2.3~~	~~Procedure for Collecting Undisturbed Soil Samples~~	~~10~~
6.3	Surface Soil Sampling	13
6.4	Near-Surface Soil Sampling	14
6.5	Subsurface Soil Sampling With a Hand Auger	15
6.6	Subsurface Soil Sampling with a Split-Barrel Sampler	17
6.7	Subsurface Soil Sampling Using Direct-Push Technology	18
6.8	Excavation and Sampling of Test Pits and Trenches	18
6.8.1	Applicability	18
6.8.2	Test Pit and Trench Excavation	19
6.8.3	Sampling in Test Pits and Trenches	21
6.8.4	Backfilling of Trenches and Test Pits	25
6.9	Records	25
7.0	**REFERENCES**	**26**

ATTACHMENTS

A	**SOIL & SEDIMENT SAMPLE LOG SHEET**	**28**
B	**SPLIT-SPOON SAMPLER**	**29**
C	**TEST PIT LOG**	**30**
D	**REMOTE SAMPLE HOLDER FOR TEST PIT/TRENCH SAMPLING**	**31**

1.0 PURPOSE

This Standard Operating Procedure (SOP) describes the procedures to be used to collect surface, near-surface, and subsurface soil samples. Additionally, it describes the methods for sampling of test pits and trenches to determine subsurface soil and rock conditions and for recovery of small-volume or bulk samples from pits.

2.0 SCOPE

This document applies to the collection of surface, near-surface, and subsurface soil samples exposed through hand digging, hand augering, drilling, or machine excavating at hazardous substance sites for laboratory testing, onsite visual examination, and onsite testing.

3.0 GLOSSARY

Composite Sample - A composite sample is a combination of more than one grab sample from various locations and/or depths and times that is homogenized and treated as one sample. This type of sample is usually collected when determination of an average waste concentration for a specific area is required. Composite samples shall not be collected for volatile organics analysis.

Confined Space - As stipulated in 29 Code of Federal Regulations (CFR) 1910.146, a confined space means a space that: (1) is large enough and so configured that an employee can bodily enter and perform assigned work; (2) has limited or restricted means for entry or exit (e.g., tanks, vessels, silos, storage bins, hoppers, vaults, pits, and excavations); and (3) is not designed for continuous employee occupancy. TtNUS considers all confined space as permit-required confined spaces.

Grab Sample - One sample collected at one location and at one specific time.

Hand Auger - A sampling device used to extract soil from the ground.

Representativeness – A qualitative description of the degree to which an individual sample accurately reflects population characteristics or parameter variations at a sampling point. It is therefore an important characteristic not only of assessment and quantification of environmental threats posed by the site, but also for providing information for engineering design and construction. Proper sample location selection and proper sample collection methods are important to ensure that a truly representative sample has been collected.

Sample for Non-Volatile Analyses - Includes all chemical parameters other than volatile organics (e.g., semivolatiles, pesticides/PCBs, metals, etc.) and those engineering parameters that do not require undisturbed soil for their analysis.

Split-Barrel Sampler - A steel tube, split in half lengthwise, with the halves held together by threaded collars at either end of the tube. Also called a split-spoon sampler, this device can be driven into resistant materials using a drive weight mounted in the drilling string. A standard split-barrel sampler is typically available in two common lengths, providing either 20-inch or 26-inch longitudinal clearance for obtaining 18-inch or 24-inch-long samples, respectively. These split-barrel samplers commonly range in size from 2 to 3.5 inches OD. The larger sizes are commonly used when a larger volume of sample material is required (see Attachment B).

Test Pit and Trench - Open, shallow excavations, typically rectangular (if a test pit) or longitudinal (if a trench), excavated to determine shallow subsurface conditions for engineering, geological, and soil chemistry exploration and/or sampling purposes. These pits are excavated manually or by machine (e.g., backhoe, clamshell, trencher, excavator, or bulldozer).

Thin-Walled Tube Sampler - A thin-walled metal tube (also called a Shelby tube) used to recover relatively undisturbed soil samples. These tubes are available in various sizes, ranging from 2 to 5 inches outside diameter (OD) and from 18 to 54 inches in length.

4.0 RESPONSIBILITIES AND PERSONNEL QUALIFICATIONS

Project Manager - The Project Manager is responsible for determining the sampling objectives, selecting proposed sampling locations, and selecting field procedures used in the collection of soil samples. Additionally, in consultation with other project personnel (geologist, hydrogeologist, etc.), the Project Manager establishes the need for test pits or trenches and determines their approximate locations and dimensions.

Site Safety Officer (SSO) - The SSO (or a qualified designee) is responsible for providing the technical support necessary to implement the project Health and Safety Plan. This will include (but not be limited to) performing air quality monitoring during sampling, boring, and excavation activities and to ensure that workers and offsite (downwind) individuals are not exposed to hazardous levels of airborne contaminants. The SSO/designee may also be required to advise the FOL on other safety-related matters regarding boring, excavation, and sampling, such as mitigative measures to address potential hazards from unstable trench walls, puncturing of drums or other hazardous objects, etc.

Field Operations Leader (FOL) - This individual is primarily responsible for the execution of the planning document containing the Sampling and Analysis Plan (SAP). This is accomplished through management of a field sampling team for the proper acquisition of samples. He or she is responsible for the supervision of onsite analyses; ensuring proper instrument calibration, care, and maintenance; sample collection and handling; the completion and accuracy of all field documentation; and making sure that custody of all samples obtained is maintained according to proper procedures. When appropriate and as directed by the FOL, such responsibilities may be performed by other qualified personnel (e.g., field technicians) where credentials and time permit. The FOL is responsible for finalizing the locations for collection of surface, near-surface, and subsurface (hand and machine borings, test pits/trenches) soil samples. He/she is ultimately responsible for the sampling and backfilling of boreholes, test pits, and trenches and for adherence to Occupational Safety and Health Administration (OSHA) regulations during these operations through self acquisition or through the management of a field team of samplers.

Project Geologist/Sampler - The project geologist/sampler is responsible for the proper acquisition of samples in accordance with this SOP and/or other project-specific documents. In addition, this individual is responsible for the completion of all required paperwork (e.g., sample log sheets, field notebook, boring logs, test pit logs, container labels, custody seals, and chain-of-custody forms) associated with the collection of those samples.

Competent Person - A Competent Person, as defined in 29 CFR 1929.650 of Subpart P - Excavations, means one who is capable of identifying existing and predictable hazards in the surroundings, or working conditions that are unsanitary, hazardous, or dangerous to employees, and who has authorization to take prompt corrective measures to eliminate them.

General personnel qualifications for groundwater sample collection and onsite water quality testing include the following:

- Occupational Safety and Health Administration (OSHA) 40-hour and applicable refresher training.
- Capability of performing field work under the expected physical and environmental (i.e., weather) conditions.

- Familiarity with appropriate procedures for sample documentation, handling, packaging, and shipping.

5.0 HEALTH AND SAFETY

Health and safety precautions are identified for individual sample collection procedures throughout this SOP. In addition to those precautions, the following general hazards may be incurred during sampling activities:

- Knee injuries from kneeling on hard or uneven surfaces
- Slips, trips, and falls
- Cuts and lacerations
- Traffic hazards associated with sampling in parking areas, along roadways and highways.

Methods of avoiding these hazards are provided below.

Knee injuries – If kneeling is required during soil sampling, this could result in knee injuries from stones/foreign objects and general damage due to stress on the joints. To minimize this hazard:

- Clear any foreign objects from the work area.
- Wear hard-sided knee pads.
- Stretch ligaments, tendons and muscles before, during and after. Take breaks as frequently as necessary.
- Report pre-existing conditions to the SSO if you feel this activity will aggravate an existing condition.

Slips, Trips, and Falls – These hazards exist while traversing varying terrains carrying equipment to sample locations. To minimize these hazards:

- Pre-survey sampling locations. Eliminate, barricade, or otherwise mark physical hazards leading to the locations.
- Carry small loads that do not restrict the field of vision.
- Travel the safest and clearest route (not necessarily the shortest).

Cuts and Lacerations - To prevent cuts and lacerations associated with soil sampling, the following provisions are required:

- Always cut away from yourself and others when cutting tubing or rope. This will prevent injury to yourself and others if the knife slips.
- Do not place items to be cut in your hand or on your knee.
- Change blades as necessary to maintain a sharp cutting edge. Many accidents result from struggling with dull cutting attachments.

- Whenever practical, wear cut-resistant gloves (e.g., leather or heavy cotton work gloves) at least on the hand not using the knife.
- Keep cutting surfaces clean and smooth.
- Secure items to be cut – do not hold them against the opposing hand, a leg, or other body part.
- When transporting glassware, keep it in a hard-sided container such as a cooler so that if there is a fall, you will be less likely to get cut by broken glass.
- DO NOT throw broken sample jars or glass ampoules into garbage bags. Place broken glass and glass ampoules in hard-sided containers such as a cardboard box or directly into a dumpster. DO NOT reach into garbage bags to retrieve any item accidentally thrown away. Empty the contents onto a flat surface to avoid punctures and lacerations from reaching where you cannot see.

Vehicular and Foot Traffic Hazards – When sampling along the roadway or near traffic patterns, follow the following precautions:

- Motorists may be distracted by onsite activities – ASSUME THEY DO NOT SEE YOU OR MEMBERS OF YOUR FIELD CREW.
- DO NOT place obstructions (such as vehicles) along the sides of the road that may cause site personnel to move into the flow of traffic to avoid your activities or equipment or that will create a blind spot.
- **Provide a required free space of travel**. Maintain at least 6 feet of space between you and moving traffic. Where this is not possible, use flaggers and/or signs to warn oncoming traffic of activities near or within the travel lanes.
- Face Traffic. Whenever feasible, if you must move within the 6 feet of the required free space or into traffic, attempt to face moving traffic at all times. Always leave yourself an escape route.
- Wear high-visibility vests to increase visual recognition by motorists.
- Do not rely on the vehicle operator's visibility, judgment, or ability. Make eye contact with the driver. Carefully and deliberately use hand signals so they will not startle or confuse motorists or be mistaken for a flagger's direction before moving into traffic.
- Your movements may startle a motorist and cause an accident, so move deliberately. Do not make sudden movements that might confuse a motorist.

6.0 PROCEDURES

The following procedures address surface and subsurface sampling.

CAUTION

Each situation must be evaluated individually to determine the applicability and necessity for obtaining a utility clearance ticket/dig permit. Common sense dictates, prior to digging or boring with power equipment, no matter what the depth, or digging by hand in a manner that could damage unprotected underground utilities, that a dig permit is required. See SOP HS-1.0, Utility Locating and Excavation Clearance, for additional clarification. If you do not know or are unsure as to whether a ticket is necessary – **Get the Ticket**.

6.1 Overview

Soil sampling is an important adjunct to groundwater monitoring. Sampling of the soil horizons above the groundwater table can detect contaminants before they migrate to the water table, and can establish the amount of contamination absorbed or adsorbed on aquifer solids that have the potential of contributing to groundwater contamination.

Soil types can vary considerably on a hazardous waste site. These variations, along with vegetation, can affect the rate of contaminant migration through the soil. It is important, therefore, that a detailed record be maintained during sampling operations, particularly noting sampling locations, depths, and such characteristics as grain size, color, and odor. Subsurface conditions are often stable on a daily basis and may demonstrate only slight seasonal variation especially with respect to temperature, available oxygen and light penetration. Changes in any of these conditions can radically alter the rate of chemical reactions or the associated microbiological community, thus further altering specific site conditions. Certain vegetation species can create degradation products that can alter contaminant concentrations in soil. This is why vegetation types and extent of degradation of this foliage must be recorded. To prevent degradation, samples must be kept at their at-depth temperature or lower, protected from direct light, sealed tightly in approved glass containers, and be analyzed as soon as possible after collection. In addition, to the extent possible, vegetation should be removed from the sample.

The physical properties of the soil, its grain size, cohesiveness, associated moisture, and such factors as depth to bedrock and water table, will limit the depth from which samples can be collected and the method required to collect them. It is the intent of this document to present the most commonly employed soil sampling methods used at hazardous waste sites.

6.2 Soil Sample Collection

6.2.1 Procedure for Preserving and Collecting Soil Samples for Volatile Organic Compound Analysis

Samples collected using traditional methods such as collection in a jar with no preservation have been known to yield non-representative samples due to loss of volatile organic compounds (VOCs). To prevent such losses, preservation of samples with methanol or sodium bisulfate may be used to minimize volatilization and biodegradation. This preservation may be performed either in the field or laboratory, depending on the sampling methodology employed. Because of the large number of sampling methods and associated equipment required, careful coordination between field and laboratory personnel is needed.

Soil samples to be preserved by the laboratory are currently being collected using Method SW-846, 5035. For samples preserved in the field, laboratories are currently performing low-level analyses (sodium bisulfate preservation) and high- to medium-level analyses (methanol preservation) depending on the needs of the end user.

The following procedures outline the necessary steps for collecting soil samples to be preserved at the laboratory, and for collecting soil samples to be preserved in the field with methanol or sodium bisulfate.

6.2.1.1 Soil Samples to be Preserved at the Laboratory

Soil samples collected for volatile organic analysis that are to be preserved at the laboratory shall be obtained using a hermetically sealed sample vial such as an EnCore™ sampler. Each sample shall be

obtained using a reusable sampling handle (T-handle) that can be provided with the EnCore™ sampler when requested and purchased. Collect the sample in the following manner for each EnCore™ sampler:

1. Scene Safety - Evaluate the area where sampling will occur. Ensure that the area is safe from physical, chemical, and natural hazards. Clear or barricade those hazards that have been identified.

2. Wear the appropriate personal protective equipment (PPE). This will include, at a minimum, safety glasses and nitrile surgeon's gloves. If you must kneel on the ground or place equipment on the surface being sampled, cover the ground surface with plastic to minimize surface contamination of your equipment and clothing. Wear knee pads to protect your knees from kneeling on hard or uneven surfaces.

3. Load the Encore™ sampler into the T-handle with the plunger fully depressed.

4. Expose the area to be sampled using a hand trowel or similar device to remove surface debris.

5. Press the T-handle against the freshly exposed soil surface, forcing soil into the sampler. The plunger will be forced upward as the cavity fills with soil.

6. When the sampler is full, rotate the plunger and lock it into place. If the plunger does not lock, the sampler is not full. This method ensures there is no headspace. Soft soil may require several plunges or forcing soil against a hard surface such as a sample trowel to ensure that headspace is eliminated.

7. Use a paper towel to remove soil from the side of the sampler so a tight seal can be made between the sample cap and the rubber O-ring.

8. With soil slightly piled above the rim of the sampler, force the cap on until the catches hook the side of the sampler.

9. Remove any surface soil from the outside of the sampler and place in the foil bag provided with the sampler. Good work hygiene practices and diligent decontamination procedures prevents the spread of contamination even on the outside of the containers.

10. Label the bag with appropriate information in accordance with SOP SA-6.3.

11. Place the full sampler inside a lined cooler with ice and cool to 4 °C ± 2 °C. Make sure any required trip blanks and temperature blanks are also in the cooler. Secure custody of the cooler in accordance with SOP SA-6.3.

12. Typically, collect three Encore™ samplers at each location. Consult the SAP or laboratory to determine the required number of Encore™ samplers to be collected.

13. The T-handle shall be decontaminated before moving to the next interval or location using a soap and water wash and rinse, and where applicable, the selected solvent as defined in the project planning documents.

Using this type of sampling device eliminates the need for field preservation and the shipping restrictions associated with preservatives. A complete set of instructions is included with each Encore™ sampler.

After the Encore™samples are collected, they should be placed on ice immediately and delivered to the laboratory within 48 hours (following the chain-of-custody and documentation procedures outlined in SOP SA-6.1). Samples must be preserved by the laboratory within 48 hours of sample collection.

6.2.1.2 Soil Samples to be Preserved in the Field

Soil samples preserved in the field may be prepared for analyses using both the low-level (sodium bisulfate preservation) and high- to medium-level (methanol preservation) methods.

Safety Reminder

When using chemicals in the field to preserve samples, the FOL and/or SSO must ensure that Materials Safety Data Sheets (MSDSs) have been provided with the chemicals to be used. They also must ensure that these chemicals have been added to the Chemical Inventory List contained within Section 5.0, Hazard Communication, of your Health and Safety Guidance Manual (HSGM). Lastly, but most importantly, the FOL and/or SSO must review the hazards with personnel using these chemicals and ensure that provisions are available for recommended PPE and emergency measures (e.g., eyewash, etc.).

Methanol Preservation (High to Medium Level):

Bottles may be pre-spiked with methanol in the laboratory or prepared in the field. Soil samples to be preserved in the field with methanol shall utilize 40 to 60 mL glass vials with septum-lined lids. Each sample bottle shall be filled with 25 mL of demonstrated analyte-free purge-and-trap grade methanol. The preferred method for adding methanol to the sample bottle is by removing the lid and using a pipette or scaled syringe to add the methanol directly to the bottle.

CAUTION

NEVER attempt to pipette by mouth

In situations where personnel are required to spike the septum using a hypodermic needle, the following provisions for handling sharps must be in place:

- Training of personnel regarding methods for handling of sharps
- Hard-sided containers for the disposal of sharps
- Provisions for treatment in cases where persons have received a puncture wound

Soil shall be collected with the use of a decontaminated (or disposable), small-diameter coring device such as a disposable tube/plunger-type syringe with the tip cut off. The outside diameter of the coring device must be smaller than the inside diameter of the sample bottle neck.

A small electronic balance or manual scale will be necessary for measuring the volume of soil to be added to the methanol-preserved sample bottle. Calibration of the scale shall be performed prior to use and intermittently throughout the day according to the manufacturer's requirements.

The sample should be collected as follows:

1. Weigh the unused syringe and plunger to the nearest 0.01 gram.
2. Pull the plunger back and insert the syringe into the soil to be sampled.
3. Collect 8 to 12 grams of soil by pushing the syringe barrel into the soil.
4. Weigh the sample and adjust until obtaining the required amount of sample.

5. Record the sample weight to the nearest 0.01 gram in the field logbook and/or on the sample log sheet.

6. Extrude the weighed soil sample into the methanol-preserved sample bottle taking care not to contact the sample container with the syringe.

7. If dirty, wipe soil particles from the threads of the bottle and cap. Cap the bottle tightly.

8. After capping the bottle, swirl the sample (do not shake) in the methanol and break up the soil such that all of the soil is covered with methanol.

9. Place the sample on ice immediately and prepare for shipment to the laboratory as described in SOP SA-6.1.

Sodium Bisulfate Preservation (Low Level):

> ***CAUTION***
> Care should be taken when adding the soil to the sodium bisulfate solution. A chemical reaction of soil containing carbonates (limestone) may cause the sample to effervesce or the vial to possibly explode. To avoid this hazard or hazards of this type, a small sample aliquot should be subjected to the sample preservative. If it effervesces in an open air environment, utilize an alternative method such as Encore™ or 2-ounce jar.

Bottles may be prepared in the laboratory or in the field with sodium bisulfate solution. Samples to be preserved in the field using the sodium bisulfate method are to be prepared and collected as follows:

1. Add 1 gram of sodium bisulfate to 5 mL of laboratory-grade deionized water in a 40 to 60 mL glass vial with septum-lined lid.

2. Collect the soil sample and record the sample weight to the nearest 0.01 gram in the field logbook or on the sample log sheet as described for methanol preservation

3. Add the weighed sample to the sample vial.

4. Collect duplicate samples using the methanol preservation method on a one-for-one sample basis because it is necessary for the laboratory to perform both low-level and medium-level analyses.

5. Place the samples on ice immediately and prepare for shipment to the laboratory as described in SOP SA-6.1.

> ***NOTE***
> If lower detection limits are necessary, an option to field preserving with sodium bisulfate may be to collect EnCore™ samplers at a given sample location. Consult the planning documents to determine whether this is required. If it is, collect samples in accordance with the Encore™ sampling procedure above and then send all samplers to the laboratory to perform the required preservation and analyses.

6.2.2 Procedure for Collecting Soil Samples for Non-Volatile Analyses

Samples collected for non-volatile analyses may be collected as either grab or composite samples as follows:

1. With a stainless steel trowel or other approved tool, transfer a portion of soil to be sampled to a stainless steel bowl or disposable inert plastic tray.

2. Remove roots, vegetation, sticks, and stones larger than the size of a green pea.

3. Thoroughly mix the soil in the bowl or tray to obtain as uniform a texture and color as practicable. The soil type, moisture content, amount of vegetation, and other factors may affect the amount of time required to obtain a properly mixed sample. In some cases, it may be impossible to obtain a uniform sample appearance. Use the field logbook to describe any significant difficulties encountered in obtaining a uniform mixture.

4. Transfer the mixed soil to the appropriate sample containers and close the containers.

5. Label the sample containers in accordance with SOP SA-6.3.

6. Place the containers in a cooler of ice as soon after collection as possible.

7. Prepare the sample shipment and ship the samples in accordance with SOP SA-6.1.

NOTE
Cooling may not be required for some samples depending on the scheduled analyses. Consult the planning documents if in doubt regarding correct sample preservation conditions. When in doubt – Cool to 4 °C.

NOTE
Head space is permitted in soil sample containers for non-volatile analyses to allow for sample expansion.

6.2.3 Procedure for Collecting Undisturbed Soil Samples

DW 1/10/11

NOTE
Use of thin-walled undisturbed tube samplers is restricted by the consistency of the soil to be sampled. Often, very loose and/or wet samples cannot be retrieved by the samplers, and soil with a consistency in excess of very stiff cannot be penetrated by the sampler. Devices such as Dennison or Pitcher core samplers can be used to obtain undisturbed samples of stiff soil. Using these devices normally increases sampling costs, and therefore their use should be weighed against the need for acquiring an undisturbed sample. These devices are not discussed in this SOP because they are not commonly used.

When it is necessary to acquire undisturbed samples of soil for purposes of engineering parameter analysis (e.g., permeability), a thin-walled, seamless tube sampler (Shelby tube) shall be employed using the following collection procedure:

1. In preparation for sampling utilizing a drill rig, field personnel must complete the following activities:

   - Ensure that all subsurface drilling activities are preceded by a utility clearance for the area to be investigated. This includes activities described in SOP HS-1.0, Utility Location and Excavation Clearance, as well as any location-specific procedures that may apply.

REMEMBER

If you are digging near a marked utility (within the diameter of an underground utility that has been marked plus 18 inches), you must first locate the utility through vacuum extraction or hand digging to ensure that your activities will not damage the utility.

- Complete an Equipment Inspection Checklist for the drill rig or direct-push technology (DPT) rig. This checklist will be provided in the HASP.
- Review the Safe Work Permit prior to conducting the activity.
- Review the activity to be conducted.

2. Remove all surface debris (e.g., vegetation, roots, twigs, etc.) from the specific sampling location and drill and/or clean out the borehole to the desired sampling depth. Be careful to minimize potential disturbance of the material to be sampled. In saturated material, withdraw the drill bit slowly to prevent loosening of the soil around the borehole and to maintain the water level in the hole at or above groundwater level.

CAUTION

The use of bottom-discharge bits or jetting through an open-tube sampler to clean out the borehole shall not be allowed. Only the use of side-discharge bits is permitted.

3. Determine whether a stationary piston-type sampler is required to limit sample disturbance and aid in retaining the sample. Either the hydraulically operated or control rod activated-type of stationary piston sampler may be used.

4. Prior to inserting the tube sampler into the borehole, check to ensure that the sampler head contains a check valve. The check valve is necessary to keep water in the rods from pushing the sample out the tube sampler during sample withdrawal. In addition, the check valve maintains a positive suction within the tube to help retain the sample.

5. A stainless steel tube sampler is typically used to minimize chemical reaction between the sample and the sampling tube.

6. With the sampling tube resting on the bottom of the hole and the water level in the boring at groundwater level or above, push the tube into the soil with a continuous and rapid motion, without impacting or twisting. If the soil is too hard to penetrate by pushing alone, careful hammering may be used by minimizing drop distance (tapping) of the hammer. Before pulling the tube, turn it at least one revolution to shear the sample off at the bottom. In no case shall the tube be pushed farther than the length provided for the soil sample. Allow about 3 inches in the tube for cuttings and sludge.

7. Upon removal of the sampling tube from the hole, measure the length of sample in the tube and also the length penetrated.

8. Remove disturbed material in the upper end of the tube and measure the length of sample again.

9. After removing at least 1 inch of soil from the lower end, place enough packing material (clean inert material such as paper or cloth) tightly in each end of the Shelby tube and then pour melted wax into each end to make at least a ½-inch wax plug and then add more packing material to fill the voids at both ends.

10. Place plastic caps on the ends, tape the caps in place, and dip the ends in wax to prevent loss of soil.

11. Affix label(s) to the tube as required and record sample number, depth, penetration, and recovery length on the label.

12. Mark the "up" direction on the side and upper end of the tube with indelible ink.

13. Complete a chain-of-custody form (see SOP SA-6.3) and other required forms (including Attachment A of this SOP).

14. Ship samples protected with suitable resilient packing material to reduce shock, vibration, and disturbance.

CAUTION

To preserve sample integrity do not allow tubes to freeze, and store the samples vertically with the same orientation they had in the ground, (i.e., top of sample is up) in a cool place out of the sun at all times.

CAUTION

A primary concern in the preparation of the wax plugs is the potential for the heat source and melted wax to cause a fire and/or burns. Follow the directions below to prevent injury or fire.

Electrical Heating

Using hot plates to melt the wax is acceptable. In an outdoor setting, make sure a Ground Fault Circuit Interrupter (GFCI) is employed within the electrical circuit. If a portable generator is used, ensure that the generator is an adequate distance from the sampling operation (at least 50 feet). Ensure that the extension cord is rated for the intended load and for outdoor use and is free from recognizable damage. Ensure flammable preservatives are not employed or stored near the hot plate. Although a Hot Work Permit is not required, scene safety evaluation by site personnel of the above elements is. As always, if a fire potential exists, the provisions for extinguishing must be immediately accessible as well as any provisions for first aid measures.

Open Flame

If an open flame is used, the following provisions are necessary:

- Complete a Hot Work Permit and any local permit required for elevated temperature applications. The Hot Work Permit, provided in your HASP, will aid the FOL and/or the SSO in ensuring that fire protection provisions (extinguishers, fire watches, etc.) are in place as well as ensuring that local requirements have been addressed.

- Ensure that water is available to address any wax splashes or contact. If possible, immerse the contacted area. Where this is not possible, run water over the area and apply cold compresses. The need for medical attention or first aid shall be determined on site under the direction of the SSO.

6.3 Surface Soil Sampling

The simplest, most direct method of collecting surface soil samples for subsequent analysis is by use of a stainless steel shovel, hand auger, soil corer, or stainless steel or disposable plastic trowel.

> ***NOTE***
> Multiple depth intervals are used to describe surface soil. Sometimes surface soil is defined as soil from 0 to 2 inches below ground surface (bgs), and sometimes it is defined as soil from other depths such as 0 to 2 feet bgs. Ensure that the definition of surface soil depth is clear before collecting surface soil samples.
>
> For the purposes of instruction, the terms "surface soil" and "near-surface soil" are used in this SOP as follows:
>
> - Surface soil - 0 to 6 inches bgs
> - Near-surface soil - 6 to 18 inches bgs
>
> If these intervals are defined differently in the planning documents, substitute the appropriate depth ranges.

In general, the following equipment is necessary for obtaining surface soil samples:

- Stainless steel or pre-cleaned disposable trowel.
- Stainless steel hand auger, soil corer, or shovel.
- Real-time air monitoring instrument (e.g., PID, FID) as directed in project planning document.
- Required PPE.
  - Nitrile surgeon's or latex gloves may be used, layered as necessary.
  - Safety glasses
  - Other – Items identified on the Safe Work Permit may be required based on location-specific requirements such as hearing protection, steel-toed work boots, and a hard hat when working near a drill rig. These provisions will be listed in the HASP or directed by the FOL and/or SSO.

> ***Safety Reminder***
> The use of latex products may elicit an allergic reaction in some people. Should this occur, remove the latex gloves, treat for an allergic reaction, and seek medical attention as necessary.

- Required paperwork (see SOP SA-6.3 and Attachment A of this SOP)
- Required decontamination equipment
- Required sample container(s)
- Wooden stakes or pin flags

- Sealable polyethylene bags (e.g., Ziploc® baggies)
- Heavy duty cooler
- Ice
- Chain-of-custody records and custody seals

When acquiring surface soil samples, use the following procedure:

1. Place padding or use knee pads when kneeling near the sample location. If necessary, place plastic sheeting to provide a clean surface for sample equipment to avoid possible cross- contamination.
2. Carefully remove vegetation, roots, twigs, litter, etc. to expose an adequate soil surface area to accommodate sample volume requirements.
3. Using a precleaned syringe or EnCore™ samplers, follow the procedure in Section 6.2.1 for collecting surface soil samples for volatile analysis. Surface soil samples for volatile organic analysis should be collected deeper than 6 inches bgs because shallower material has usually lost most of the volatiles through evaporation. Ensure that the appropriate surface soil depth is being analyzed in accordance with the planning document.
4. Using decontaminated sampling tools, thoroughly mix in place a sufficient amount of soil to fill the remaining sample containers. See Section 6.5 of this procedure for hand auger instruction, as needed.
5. Transfer the sample into those containers utilizing a stainless steel trowel.
6. Cap and securely tighten all sample containers.
7. Affix a sample label to each container. Be sure to fill out each label carefully and clearly, addressing all the categories described in SOP SA-6.3.
8. Proceed with the handling and processing of each sample container as described in SOP SA-6.2.
9. Site restoration – Whenever removing sample materials, always restore the surface. It is our intent to leave the area better than we found it. Do NOT create trip hazards in areas when pedestrian traffic may exist.

6.4 Near-Surface Soil Sampling

Collection of samples from near the surface (depth of 6 to 18 inches) can be accomplished with tools such as shovels, hand auger, soil corers, and stainless steel or pre-cleaned disposable trowels and the equipment listed under Section 6.5 of this procedure.

To obtain near-surface soil samples, the following protocol shall be used:

1. With a clean shovel, make a series of vertical cuts in the soil to the depth required to form a square approximately 1 foot by 1 foot.
2. Lever out the formed plug and scrape the bottom of the freshly dug hole with a decontaminated stainless steel or pre-cleaned disposable trowel to remove any loose soil.

3. Follow steps 1 through 9 of Section 6.3.

6.5 Subsurface Soil Sampling With a Hand Auger

A hand augering system generally consists of a variety of stainless steel bucket bits (approximately 6.5 inches long and 2, 2.75, 3.25, and 4 inches in diameter), series of extension rods (available in 2-, 3-, 4- and 5-inch lengths), and a T-handle connected to extension rods and to the auger bucket. A larger-diameter bucket bit is commonly used to bore a hole to the desired sampling depth and then it is withdrawn. The larger-diameter bit is then replaced with a smaller-diameter bit, lowered down the hole, and slowly turned into the soil to the completion depth (approximately 6 inches). The apparatus is then withdrawn and the soil sample collected.

The hand auger can be used in a wide variety of soil conditions. It can be used to sample soil either from the surface, or to depths in excess of 12 feet. However, the presence of subsurface rocks and landfill material and collapse of the borehole normally limit sampling depth.

To accomplish soil sampling using a hand augering system, the following equipment is required:

- Complete hand auger assembly (variety of bucket bit sizes)
- Stainless steel mixing bowls
- The equipment listed in Section 6.3
- Miscellaneous hand tools as required to assemble and disassemble the hand auger units

CAUTION

Potential hazards associated with hand augering include:

- Muscle strain and sprain due to over twisting and/or over compromising yourself.
- Equipment failure due to excessive stress on the T-handle or rods through twisting. Failure of any of these components will result in a sudden release and potential injury due to that failure.

As in all situations, any intrusive activities that could damage underground utilities shall be proceeded by a Dig/Excavation permit/ticket. Call the Utility Locating service in the area or your Project Health and Safety Officer for more information. When in doubt – **Get the Ticket!**

To obtain soil samples using a hand auger, use the following procedure:

1. Wearing designated PPE, attach a properly decontaminated bucket bit to a clean extension rod and attach the T-handle to the extension rod.
2. Clear the area to be sampled of any surface debris (vegetation, twigs, rocks, litter, etc.).
3. Twist the bucket into the ground while pushing vertically downward on the auger. The cutting shoes fill the bucket as it is advanced into the ground.
4. As the auger bucket fills with soil, periodically remove any unneeded soil.

5. Add rod extensions as necessary to extend the reach of the auger. Also, note (in a field notebook, boring log, and/or on a standardized data sheet) any changes in the color, texture or odor of the soil as a function of depth. The project-specific planning document (SAP, HASP, etc.) describe requirements for scanning the soil with a real-time air monitoring instrument (e.g., PID, FID, etc.) and recording the measurements.

6. After reaching the desired depth (e.g., the top of the interval to be sampled), slowly and carefully withdraw the apparatus from the borehole to prevent or minimize movement of soil from shallower intervals to the bottom of the hole.

7. Remove the soiled bucket bit from the rod extension and replace it with another properly decontaminated bucket bit. The bucket bit used for sampling is to be smaller in diameter than the bucket bit employed to initiate the borehole.

8. Carefully lower the apparatus down the borehole. Care must be taken to avoid scraping the borehole sides.

9. Slowly turn the apparatus until the bucket bit is advanced approximately 6 inches.

10. Discard the top of the core (approximately 1 inch), which represents any loose material collected by the bucket bit before penetrating the sample material.

11. Using a precleaned syringe or EnCore™ samplers, follow the procedure in Section 6.2.1 for collecting a soil sample for volatile compound analysis directly from the bucket bit.
12. Utilizing a properly decontaminated stainless steel trowel or dedicated disposable trowel, remove the remaining sample material from the bucket bit and place into a properly decontaminated stainless steel mixing bowl.

13. Homogenize the sample material as thoroughly as practicable then fill the remaining sample containers. Refer to Section 6.2.2.

14. Follow steps 4 through 7 listed in Section 6.3.

6.5.1 Sampling Using Stainless Steel Soil Corers

A soil corer is a stainless steel tube equipped with a cutting shoe and sample window in the side. The soil corer is advanced into the soil by applying downward pressure (body weight). The soil is unloaded by then forcing a ram towards the cutting shoe, which results in the discharge of the soil core through a window in the sleeve.

Use, application, and sample protocol is the same as for hand augering provided above, but without necessarily rotating the corer while advancing it.

SAFETY REMINDER

Hand augering and soil corer sampling can be physically demanding based on the type of geology and subsurface encumbrances encountered. Soil coring has some added hazards such the corer collapsing under your weight. To reduce the potential for muscle strain and damage, the following measures will be incorporated:

- Stretch and limber your muscles before heavy exertion. This hazard becomes more predominant in the early morning hours (prior to muscles becoming limber) and later in the day (as a result of fatigue).

- Job rotation – Share the duties so that repetitive actions do not result in fatigue and injury.
- Increase break frequencies as needed, especially as ambient conditions of heat and/or cold stress may dictate.
- Do not force the hand tools or use cheater pipes or similar devices to bypass an obstruction. Move to another location near the sampling point. Exerting additional forces on the sampling devices can result in damage and/or failure that could potentially injure someone in the immediate vicinity.
- Do not over compromise yourself when applying force to the soil corer or hand auger. If there is a sudden release, it could result in a fall or muscle injury due to strain.

6.6 Subsurface Soil Sampling with a Split-Barrel Sampler

A split-barrel (split-spoon) sampler consists of a heavy carbon steel or stainless steel sampling tube that can be split into two equal halves to reveal the soil sample (see Attachment B). A drive head is attached to the upper end of the tube and serves as a point of attachment for the drill rod. A removable tapered nosepiece/drive shoe attaches to the lower end of the tube and facilitates cutting. A basket-like sample retainer can be fitted to the lower end of the split tube to hold loose, dry soil samples in the tube when the sampler is removed from the drill hole. This split-barrel sampler is made to be attached to a drill rod and forced into the ground by means of a 140-pound or larger casing driver.

Safety Reminder

It is intended through the Equipment Inspection for Drill Rigs form provided in the HASP that the hammer and hemp rope, where applicable, associated with this activity will be inspected (no physical damage is obvious), properly attached to the hammer (suitable knots or sufficient mechanical devices), and is in overall good condition.

Split-barrel samplers are used to collect soil samples from a wide variety of soil types and from depths greater than those attainable with other soil sampling equipment.

The following equipment is used for obtaining split-barrel samples:

- Drilling equipment (provided by subcontractor).
- Split-barrel samplers (2-inch OD, 1-3/8-inch ID, either 20 inches or 26 inches long); Larger OD samplers are available if a larger volume of sample is needed.
- Drive weight assembly, 140-pound weight, driving head, and guide permitting free fall of 30 inches.
- Stainless steel mixing bowls.
- Equipment listed in Section 6.3.

The following steps shall be followed to obtain split-barrel samples (Steps 1 through 4 are typically performed by the drilling subcontractor):

1. Attach the split-barrel sampler to the sampling rods.

2. Lower the sampler into the borehole inside the hollow stem auger bits.

3. Advance the split-barrel sampler by hammering the length (typically 18 or 24 inches) of the split-barrel sampler into the soil using 140-pound or larger hammer.

4. When the desired depth is achieved, extract the drill rods and sampler from the augers and/or borehole.

5. Detach the sampler from the drill rods.

6. Place the sampler securely in a vise so it can be opened using pipe wrenches.

> ***CAUTION***
> Pipe wrenches are used to separate the split spoon into several components. The driller's helper should not apply excessive force through the use of cheater pipes or push or pull in the direction where, if the wrench slips, hands or fingers will be trapped against an immovable object.

7. Remove the drive head and nosepiece with the wrenches, and open the sampler to reveal the soil sample.

8. Immediately scan the sample core with a real-time air monitoring instrument (e.g., FID, PID, etc.) (as project-specific planning documents dictate). Carefully separate (or cut) the soil core, with a decontaminated stainless steel knife or trowel, at about 6-inch intervals while scanning the center of the core for elevated readings. Also scan stained soil, soil lenses, and anomalies (if present), and record readings.

9. If elevated vapor readings were observed, collect the sample scheduled for volatile analysis from the center of the core where elevated readings occurred. If no elevated readings where encountered, the sample material should be collected from the core's center (this area represents the least disturbed area with minimal atmospheric contact) (refer to Section 6.2.1).

10. Using the same trowel, remove remaining sample material from the split-barrel sampler (except for the small portion of disturbed soil usually found at the top of the core sample) and place the soil into a decontaminated stainless steel mixing bowl.

11. Homogenize the sample material as thoroughly as practicable then fill the remaining sample containers (refer to Section 6.2.2).

12. Follow steps 4 through 7 in Section 6.3.

6.7 Subsurface Soil Sampling Using Direct-Push Technology

Subsurface soil samples can be collected to depths of 40+ feet using DPT. DPT equipment, responsibilities, and procedures are described in SOP SA-2.5.

6.8 Excavation and Sampling of Test Pits and Trenches

6.8.1 Applicability

This subsection presents routine test pit or trench excavation techniques and specialized techniques that are applicable under certain conditions.

> ***CAUTION***
>
> During the excavation of trenches or pits at hazardous waste sites, several health and safety concerns arise from the method of excavation. No personnel shall enter any test pit or excavation over 4 feet deep except as a last resort, and then only under direct supervision of a Competent Person (as defined in 29 CFR 1929.650 of Subpart P - Excavations). Whenever possible, all required chemical and lithological samples should be collected using the excavator bucket or other remote sampling apparatus. If entrance is required, all test pits or excavations must be stabilized by bracing the pit sides using specifically designed wooden, steel, or aluminum support structures or through sloping and benching. Personnel entering the excavation may be exposed to toxic or explosive gases and oxygen-deficient environments; therefore, monitoring will be conducted by the Competent Person to determine if it is safe to enter. Any entry into a trench greater than 4 feet deep will constitute a Confined Space Entry and must be conducted in conformance with OSHA standard 29 CFR 1910.146. In all cases involving entry, substantial air monitoring, before entry, appropriate respiratory gear and protective clothing determination, and rescue provisions are mandatory. There must be at least three people present at the immediate site before entry by one of the field team members. This minimum number of people will increase based on the potential hazards or complexity of the work to be performed. The reader shall refer to OSHA regulations 29 CFR 1926.650, 29 CFR 1910.120, 29 CFR 1910.134, and 29 CFR 1910.146. High-hazard entries such as this will be supported by members of the Health Sciences Group professionally trained in these activities.

Excavations are generally not practical where a depth of more than about 15 to 20-feet is desired, and they are usually limited to a few feet below the water table. In some cases, a pumping system may be required to control water levels within the pit, providing that pumped water can be adequately stored or disposed. If soil data at depths greater than 15-feet are required, the data are usually obtained through test borings instead of test pits.

In addition, hazardous wastes may be brought to the surface by excavation equipment. This material, whether removed from the site or returned to the subsurface, must be properly handled according to any and all applicable federal, state, and local regulations.

6.8.2 Test Pit and Trench Excavation

Test pits or trench excavations are constructed with the intent that they will provide an open view of subsurface lithology and/or disposal conditions that a boring will not provide. These procedures describe the methods for excavating and logging test pits and trenches installed to determine subsurface soil and rock conditions. Test pit operations shall be logged and documented (see Attachment C).

Test pits and trenches may be excavated by hand or power equipment to permit detailed descriptions of the nature and contamination of the in-situ materials. The size of the excavation will depend primarily on the following:

- The purpose and extent of the exploration

- The space required for efficient excavation
- The chemicals of concern
- The economics and efficiency of available equipment

Test pits normally have a cross section that is 4 to 10 feet square; test trenches are usually 3 to 6 feet wide and may be extended for any length required to reveal conditions along a specific line. The following table provides guidelines for design consideration based on equipment efficiencies.

Equipment	Typical Widths, in Feet
Trenching machine	0.25 to 1.0
Backhoe/Track Hoe	2 to 6

The lateral limits of excavation of trenches and the position of test pits shall be carefully marked on area base maps. If precise positioning is required to indicate the location of highly hazardous materials, nearby utilities, or dangerous conditions, the limits of the excavation shall be surveyed. Also, if precise determination of the depth of buried materials is needed for design or environmental assessment purposes, the elevation of the ground surface at the test pit or trench location shall also be determined by survey. If the test pit/trench will not be surveyed immediately, it shall be backfilled and its position identified with stakes placed in the ground at the margin of the excavation for later surveying.

The construction of test pits and trenches shall be planned and designed in advance as much as possible. However, the following field conditions may necessitate revisions to the initial plans:

- Subsurface utilities
- Surface and subsurface encumbrances
- Vehicle and pedestrian traffic patterns
- Purpose for excavation (e.g., the excavation of potential ordnance items)

The final depth and construction method shall be collectively determined by the FOL and designated Competent Person. The actual layout of each test pit, temporary staging area, and spoils pile may further be predicated based on site conditions and wind direction at the time the test pit is excavated. Prior to excavation, the area may be surveyed by magnetometer or metal detector or other passive methods specified in SOP HS1.0, Utility Location and Excavation Clearance, to identify the presence of underground utilities or drums. Where possible, the excavator should be positioned upwind and preferably within an enclosed cab.

No personnel shall enter any test pit or excavation except as a last resort, and then only under direct supervision of a Competent Person. If entrance is required, OSHA requirements must be met (e.g., walls must be braced with wooden or steel braces, ladders must be placed for every 25 feet of lateral travel and extended 3 feet above ground surface). A temporary guard rail or vehicle stop must be placed along the surface of the hole before entry in situations where the excavation may be approached by traffic. Spoils will be stockpiled no closer than 2 feet from the sidewall of the excavation. The excavation equipment operator shall be careful not to undercut sidewalls and will, where necessary, bench back to increase stability. The top cover, when considered clean, will be placed separately from the subsurface materials to permit clean cover. It is emphasized that the project data needs should be structured such that required samples can be collected without requiring entrance into the excavation. For example,

samples of leachate, groundwater, or sidewall soil can be collected with telescoping poles or similar equipment.

Dewatering and watering may be required to ensure the stability of the side walls, to prevent the bottom of the pit from heaving, and to keep the excavation stable. This is an important consideration for excavations in cohesionless material below the groundwater table and for excavations left open greater than a day. Liquids removed as a result of dewatering operations must be handled as potentially contaminated materials. Procedures for the collection and disposal of such materials should be discussed in the site-specific project plans.

Where possible excavations and test pits shall be opened and closed within the same working day. Where this is not possible, the following engineering controls shall be put in place to control access:

- Trench covers/street plates
- Fences encompassing the entire excavation intended to control access
- Warning signs warning personnel of the hazards
- Amber flashing lights to demarcate boundaries of the excavation at night

Excavations left open will have emergency means to exit should someone accidentally enter.

6.8.3 Sampling in Test Pits and Trenches

6.8.3.1 General

Log test pits and trenches as they are excavated in accordance with the Test Pit Log presented in Attachment C. These records include plan and profile sketches of the test pit/trench showing materials encountered, their depth and distribution in the pit/trench, and sample locations. These records also include safety and sample screening information.

Entry of test pits by personnel is extremely dangerous, shall be avoided unless absolutely necessary, and can occur only after all applicable health and safety and OSHA requirements have been met as stated above. These provisions will be reiterated as appropriate in the project-specific HASP.

The final depth and type of samples obtained from each test pit will be determined at the time the test pit is excavated. Sufficient samples are usually obtained and analyzed to quantify contaminant distribution as a function of depth for each test pit. Additional samples of each waste phase and any fluids encountered in each test pit may also be collected.

In some cases, samples of soil may be extracted from the test pit for reasons other than waste sampling and chemical analysis, for instance, to obtain geotechnical information. Such information includes soil types, stratigraphy, strength, etc., and could therefore entail the collection of disturbed (grab or bulk) or relatively undisturbed (hand-carved or pushed/driven) samples that can be tested for geotechnical properties. The purposes of such explorations are very similar to those of shallow exploratory or test borings, but often test pits offer a faster, more cost-effective method of sampling than installing borings.

6.8.3.2 Sampling Equipment

The following equipment is needed for obtaining samples for chemical or geotechnical analysis from test pits and trenches:

- Backhoe or other excavating machinery.
- Shovels, picks, hand augers, and stainless steel trowels/disposable trowels.
- Sample container - bucket with locking lid for large samples; appropriate bottle ware for chemical or geotechnical analysis samples.
- Polyethylene bags for enclosing sample containers; buckets.
- Remote sampler consisting of 10-foot sections of steel conduit (1-inch-diameter), hose clamps, and right angle adapter for conduit (see Attachment D).

6.8.3.3 Sampling Methods

The methods discussed in this section refer to test pit sampling from grade level. If test pit entry is required, see Section 6.8.3.4.

- Excavate the trench or pit in several 0.5- to 1.0-foot depth increments. Where soil types support the use of a sand bar cutting plate, use of this device is recommended to avoid potentially snagging utilities with the excavator teeth. It is recommended that soil probes or similar devices be employed where buried items or utilities may be encountered. This permits the trench floor to be probed prior to the next cut.
- After each increment:
  - the operator shall wait while the sampler inspects the test pit from grade level
  - the sampler shall probe the next interval where this is considered necessary. Practical depth increments for lithological evaluations may range from 2 to 4 feet i or where lithological changes are noted.
- The backhoe operator, who will have the best view of the test pit, shall immediately cease digging if:
  - Any fluid phase, including groundwater seepage, is encountered in the test pit
  - Any drums, other potential waste containers, obstructions, or utility lines are encountered
  - Distinct changes of material being excavated are encountered

This action is necessary to permit proper sampling of the test pit and to prevent a breach of safety protocol. Depending on the conditions encountered, it may be required to excavate more slowly and carefully with the backhoe.

For obtaining test pit samples from grade level, the following procedure shall be followed:

- Use the backhoe to remove loose material from the excavation walls and floor to the greatest extent possible.
- Secure the walls of the pit, if necessary. (There is seldom any need to enter a pit or trench that would justify the expense of shoring the walls. All observations and samples should be taken from the ground surface.)

- Samples of the test pit material are to be obtained either directly from the backhoe bucket or from the material after it has been deposited on the ground, as follows:

  a. The sampler or FOL shall direct the backhoe operator to remove material from the selected depth or location within the test pit/trench.

  b. The backhoe operator shall bring the bucket over to a designated location on the sidewall a sufficient distance from the pit (at least 5 feet) to allow the sampler to work around the bucket.

  c. After the bucket has been set on the ground, the backhoe operator shall either disengage the controls or shut the machine down.

  d. When signaled by the operator that it is safe to do, the sampler will approach the bucket.

  e. The soil shall be monitored with a photoionization or flame ionization detector (PID or FID) as directed in the project -specific planning documents.

  f. The sampler shall collect the sample from the center of the bucket or pile in accordance with surface soil sampling procedures of Section 6.3 or 6.4, as applicable. Collecting samples from the center of a pile or bucket eliminates cross-contamination from the bucket or other depth intervals.

- If a composite sample is desired, several depths or locations within the pit/trench will be selected, and the bucket will be filled from each area. It is preferable to send individual sample bottles filled from each bucket to the laboratory for compositing under the more controlled laboratory conditions. However, if compositing in the field is required, each sample container shall be filled from materials that have been transferred into a mixing bucket and homogenized. Note that homogenization/compositing is not applicable for samples to be subjected to volatile organic analysis.

> ***CAUTION***
>
> Care must be exercised when using the remote sampler described in the next step because of potential instability of trench walls. In situations where someone must move closer than 2 feet to the excavation edge, a board or platform should be used to displace the sampler's weight to minimize the chance of collapse of the excavation edge. Fall protection should also be employed when working near the edges or trenches greater than 6 feet deep. An immediate means to extract people who have fallen into the trench will be immediately available. These means may include ladders or rope anchor points.

- Using the remote sampler shown in Attachment D, samples can be taken at the desired depth from the sidewall or bottom of the pit as follows:

  a. Scrape the face of the pit/trench using a long-handled shovel or hoe to remove the smeared zone that has contacted the backhoe bucket.

  b. Collect the sample directly into the sample jar, by scraping with the jar edge, eliminating the need for sample handling equipment and minimizing the likelihood of cross-contamination.

  c. Cap the sample jar, remove it from the remote sampler assembly, and package the sample for shipment in accordance with SOP SA-6.3.

- Complete documentation as described in SOP SA-6.3 and Attachment C of this SOP.

6.8.3.4 In-Pit Sampling

Under rare conditions, personnel may be required to enter the test pit/trench. This is necessary only when soil conditions preclude obtaining suitable samples from the backhoe bucket (e.g., excessive mixing of soil or wastes within the test pit/trench) or when samples from relatively small discrete zones within the test pit are required. This approach may also be necessary to sample any seepage occurring at discrete levels or zones in the test pit that are not accessible with remote samplers.

In general, personnel shall sample and log pits and trenches from the ground surface, except as provided for by the following criteria:

- There are no practical alternative means of obtaining such data.
- The SSO and Competent Person determine that such action can be accomplished without breaching site safety protocol. This determination will be based on actual monitoring of the pit/trench after it is dug (including, at a minimum, measurements of oxygen concentration, flammable gases, and toxic compounds, in that order). Action levels will be provided in project-specific planning documents.
- A company-designated Competent Person determines that the pit/trench is stable trough soil classification evaluation/inspections or is made stable (by cutting/grading the sidewalls or using shoring) prior to entrance of any personnel. OSHA requirements shall be strictly observed.

If these conditions are satisfied, only one person may enter the pit/trench. On potentially hazardous waste sites, this individual shall be dressed in selected PPE as required by the conditions in the pit. He/she shall be affixed to a harness and lifeline and continuously monitored while in the pit.

A second and possible third individual shall be fully dressed in protective clothing including a self-contained breathing device and on standby during all pit entry operations to support self rescue or assisted self rescue. The individual entering the pit shall remain therein for as brief a period as practical, commensurate with performance of his/her work. After removing the smeared zone, samples shall be obtained with a decontaminated trowel or spoon.

6.8.3.5 Geotechnical Sampling

In addition to the equipment described in Section 6.8.3.2, the following equipment is needed for geotechnical sampling:

- Soil sampling equipment, similar to that used in shallow drilled boring (i.e., thin-walled tube samplers), that can be pushed or driven into the floor of the test pit.
- Suitable driving (e,g., sledge hammer) or pushing (e.g., backhoe bucket) equipment used to advance the sampler into the soil.
- Knives, spatulas, and other suitable devices for trimming hand-carved samples.
- Suitable containers (bags, jars, tubes, boxes, etc.), labels, wax, etc. for holding and safely transporting collected soil samples.
- Geotechnical equipment (pocket penetrometer, torvane, etc.) for field testing collected soil samples for classification and strength properties.

Disturbed grab or bulk geotechnical soil samples may be collected for most soil in the same manner as comparable soil samples for chemical analysis. These collected samples may be stored in jars or plastic-lined sacks (larger samples), which will preserve their moisture content. Smaller samples of this type are usually tested for their index properties to aid in soil identification and classification: larger bulk samples are usually required to perform compaction tests.

Relatively undisturbed samples are usually extracted in cohesive soil using thin-walled tube samplers, and such samples are then tested in a geotechnical laboratory for their strength, permeability, and/or compressibility. The techniques for extracting and preserving such samples are similar to those used in performing Shelby tube sampling in borings, except that the sampler is advanced by hand or backhoe, rather than by a drill rig. Also, the sampler may be extracted from the test pit by excavation around the tube when it is difficult to pull it out of the ground. If this excavation requires entry of the test pit, the requirements described in Section 6.8.3.4 shall be followed. The thin-walled tube sampler shall be pushed or driven vertically into the floor or steps excavated in the test pit at the desired sampling elevations. Extracting tube samples horizontally from the walls of the test pit is not appropriate because the sample will not have the correct orientation.

A sledge hammer or backhoe may be used to drive or push the tube into the ground. Place a piece of wood over the top of the sampler or sampling tube to prevent damage during driving/pushing of the sample. Pushing the sampler with a constant thrust is always preferable to driving it with repeated blows, thus minimizing disturbance to the sample. When using a sledge hammer, it is recommended that the sampler be stabilized using a rope/strap wrench or pipe wrench to remove the person's hands holding the sampler from the strike zone. If the sample cannot be extracted by rotating it at least two revolutions (to shear off the sample at the bottom), hook the sampler to the excavator or backhoe and extract. This means an alternative head will be used as a connection point or that multiple choke hitches will be applied to extract the sampler. If this fails and the excavator can dig deeper without potentially impacting subsurface utilities, excavate the sampler. If this fails or if the excavator cannot be used due to subsurface utilities, hand-excavate to remove the soil from around the sides of the sampler. If hand-excavation requires entry into the test pit, the requirements in Section 6.8.3.4 must be followed. Prepare the sample as described in Steps 9 through 13 in Section 6.2.3, and label, pack and transport the sample in the required manner, as described in SOPs SA-6.3 and SA-6.1.

6.8.4 Backfilling of Trenches and Test Pits

All test pits and excavations must be either backfilled, covered, or otherwise protected at the end of each day. No excavations shall remain open during non-working hours unless adequately covered or otherwise protected.

Before backfilling, the onsite crew may photograph, if required by the project-specific work plan, all significant features exposed by the test pit and trench and shall include in the photograph a scale to show dimensions. Photographs of test pits shall be marked to include site number, test pit number, depth, description of feature, and date of photograph. In addition, a geologic description of each photograph shall be entered in the site logbook. All photographs shall be indexed and maintained as part of the project file for future reference.

After inspection, backfill material shall be returned to the pit under the direction of the FOL. Backfill should be returned to the trench or test pit in 6-inch to 1-foot lifts and compacted with the bucket. Remote controlled tampers or rollers may be lowered into the trench and operated from top side. This procedure will continue to the grade surface. It is recommended that the trench be tracked or rolled in. During excavation, clean soil from the top 2 feet may have been separated to be used to cover the last segments. Where these materials are not clean, it is recommended that clean fill be used for the top cover.

If a low-permeability layer is penetrated (resulting in groundwater flow from an upper contaminated flow zone into a lower uncontaminated flow zone), backfill material must represent original conditions or be impermeable. Backfill could consist of a soil-bentonite mix prepared in a proportion specified by the FOL (representing a permeability equal to or less than original conditions). Backfill can be covered by "clean" soil and graded to the original land contour. Revegetation of the disturbed area may also be required.

6.9 Records

The appropriate sample log sheet (see Attachment A of this SOP) must be completed by the site geologist/sampler for all samples collected. All soil sampling locations should be documented by tying in the location of two or more nearby permanent landmarks (building, telephone pole, fence, etc.) or obtaining GPS coordinates; and shall be noted on the appropriate sample log sheet, site map, or field notebook. Surveying may also be necessary, depending on the project requirements.

Test pit logs (see Attachment C of this SOP) shall contain a sketch of pit conditions. If the project-specific work plan requires photographs, at least one photograph with a scale for comparison shall be taken of each pit. Included in the photograph shall be a card showing the test pit number. Boreholes, test pits, and trenches shall be logged by the field geologist in accordance with SOP GH-1.5.

Other data to be recorded in the field logbook include the following:

- Name and location of job
- Date of boring and excavation
- Approximate surface elevation
- Total depth of boring and excavation
- Dimensions of pit
- Method of sample acquisition
- Type and size of samples
- Soil and rock descriptions
- Photographs if required
- Groundwater levels
- PID/FID/LEL/O_2 meter readings
- Other pertinent information, such as waste material encountered

In addition, site-specific documentation to be maintained by the SSO and/or Competent Person will be required including:

- Calibration logs
- Excavation inspection checklists

- Soil type classification

7.0 REFERENCES

American Society for Testing and Materials, 1987. ASTM Standards D1587-83 and D1586-84. ASTM Annual Book of Standards. ASTM. Philadelphia, Pennsylvania. Volume 4.08.

NUS Corporation, 1986. Hazardous Material Handling Training Manual.

NUS Corporation and CH2M Hill, August, 1987. Compendium of Field Operation Methods. Prepared for the U.S. EPA.

OSHA, Excavation, Trenching and Shoring 29 CFR 1926.650-653.

OSHA, Confined Space Entry 29 CFR 1910.146.

USEPA, November 2001. Environmental Investigations Standard Operating Procedures and Quality Assurance Manual.

ATTACHMENT A
SOIL & SEDIMENT SAMPLE LOG SHEET

Tetra Tech NUS, Inc.

SOIL & SEDIMENT SAMPLE LOG SHEET

Page ___ of ___

Project Site Name: _____
Project No.: _____

[] Surface Soil
[] Subsurface Soil
[] Sediment
[] Other: _____
[] QA Sample Type: _____

Sample ID No.: _____
Sample Location: _____
Sampled By: _____
C.O.C. No.: _____

Type of Sample:
[] Low Concentration
[] High Concentration

GRAB SAMPLE DATA:

Date: / Time: / Method: / Monitor Reading (ppm):	Depth	Color	Description (Sand, Silt, Clay, Moisture, etc.)

COMPOSITE SAMPLE DATA:

Date: / Method: / Monitor Readings (Range in ppm):	Time	Depth	Color	Description (Sand, Silt, Clay, Moisture, etc.)

SAMPLE COLLECTION INFORMATION:

Analysis	Container Requirements	Collected	Other

OBSERVATIONS / NOTES:	MAP:

Circle if Applicable:

MS/MSD	Duplicate ID No.:

Signature(s):

ATTACHMENT B
SPLIT-SPOON SAMPLER

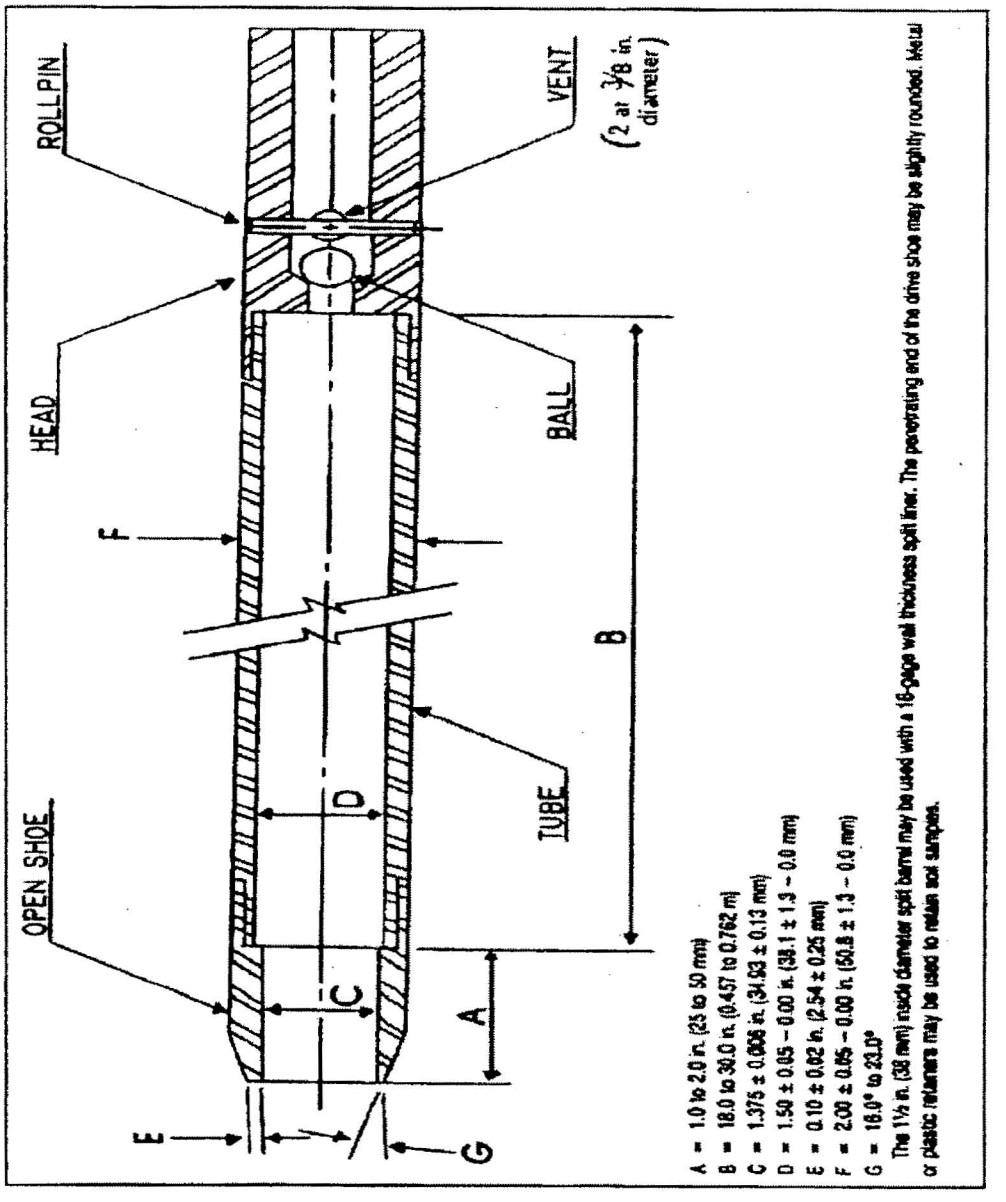

ATTACHMENT C
TEST PIT LOG

TEST PIT LOG Page ___ of ___

Tetra Tech NUS, Inc.

PROJECT NAME: _____ TEST PIT No.: _____
PROJECT NUMBER: _____ DATE: _____
LOCATION: _____ GEOLOGIST: _____

Depth (Ft.)	Lithology Change (Depth/Ft.)	MATERIAL DESCRIPTION: Soil/Waste Characteristics (lithology, density, color, etc.)	USCS	Remarks	PID/FID READING: Source (ppm)	PID/FID READING: BZ (ppm)

TEST PIT CROSS SECTION AND / OR PLAN VIEW

REMARKS: _____

PHOTO LOG: _____

ATTACHMENT D
REMOTE SAMPLE HOLDER FOR TEST PIT/TRENCH SAMPLING

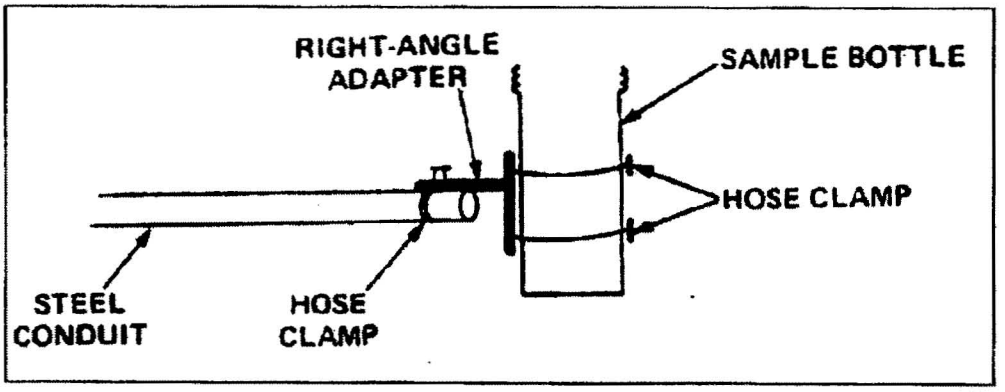

TETRA TECH NUS, INC.	STANDARD OPERATING PROCEDURES	Number SA-2.5	Page 1 of 6
		Effective Date 09/03	Revision 3
		Applicability Tetra Tech NUS, Inc.	
		Prepared Earth Sciences Department	
Subject DIRECT PUSH TECHNOLOGY (GEOPROBE®/HYDROPUNCH™)		Approved D. Senovich	

TABLE OF CONTENTS

SECTION **PAGE**

1.0 PURPOSE 2

2.0 SCOPE 2

3.0 GLOSSARY 2

4.0 RESPONSIBILITIES 2

5.0 SOIL SAMPLING PROCEDURES 3

5.1 GENERAL 3
5.2 SAMPLING EQUIPMENT 3
5.3 DPT SAMPLING METHODOLOGY 3

~~**6.0 GROUNDWATER SAMPLING PROCEDURES** ..... 4~~

~~6.1 GENERAL ..... 4~~
~~6.2 SAMPLING EQUIPMENT ..... 4~~
~~6.3 DPT TEMPORARY WELL POINT INSTALLATION AND SAMPLING METHODOLOGY ..... 5~~

7.0 RECORDS 5

ATTACHMENTS

1 SAFE WORK PERMIT 6

1.0 PURPOSE

The purpose of this procedure is to provide general reference information on Direct Push Technology (DPT). DPT is designed to collect soil, groundwater, and soil gas samples without using conventional drilling techniques. The advantage of using DPT over conventional drilling includes the generation of little or no drill cuttings, sampling in locations with difficult accessibility, reduced overhead clearance requirements, no fluid introduction during probing, and typical lower costs per sample than with conventional techniques. Disadvantages include a maximum penetration depth of approximately 15 to 40 feet in dense soils (although it may be as much as 60 to 80 feet in certain types of geological environments), reduced capability of obtaining accurate water-level measurements, and the inability to install permanent groundwater monitoring wells. The methods and equipment described herein are for collection of surface and subsurface soil samples and groundwater samples. Soil gas sampling is discussed in SOP SA-2.4.

2.0 SCOPE

This procedure provides information on proper sampling equipment and techniques for DPT. Review of the information contained herein will facilitate planning of the field sampling effort by describing standard sampling techniques. The techniques described shall be followed whenever applicable, noting that site-specific conditions or project-specific plans may require adjustments in methodology.

3.0 GLOSSARY

Direct Push Technology (DPT) - DPT refers to sampling tools and sensors that are driven directly into the ground without the use of conventional drilling equipment. DPT typically utilizes hydraulic pressure and/or percussion hammers to advance the sampling tools. A primary advantage of DPT over conventional drilling techniques is that DPT results in the generation of little or no investigation derived waste.

Geoprobe® - Geoprobe® is a manufacturer of a hydraulically-powered, percussion/probing machines utilizing DPT to collect subsurface environmental samples. Geoprobe® relies on a relatively small amount of static weight (vehicle) combined with percussion as the energy for advancement of a tool string. The Geoprobe® equipment can be mounted in a multitude of vehicles for access to all types of environmental sites.

HydroPunch™ - HydroPunch™ is a manufacturer of stainless steel and Teflon® sampling tools that are capable of collecting representative groundwater and/or soil samples without requiring the installation of a groundwater monitoring well or conventional soil boring. HydroPunch™ is an example of DPT sampling equipment.

Flame Ionization Detector (FID) - A portable instrument for the measurement of many combustible organic compounds and a few inorganic compounds in air at parts-per million levels. The basis for the detection is the ionization of gaseous species utilizing a flame as the energizing source.

Photo Ionization Detector (PID) - A portable instrument for the measurement of many combustible organic compounds and a few inorganic compounds in air at parts-per million levels. The basis for the detection is the ionization of gaseous species utilizing ultraviolet radiation as the energizing source.

4.0 RESPONSIBILITIES

Project Manager - The Project Manager is responsible for selecting and/or reviewing the appropriate DPT drilling procedure required to support the project objectives.

Field Operations Leader (FOL)- The FOL is primarily responsible for performing the DPT in accordance with the project-specific plan.

5.0 SOIL SAMPLING PROCEDURES

5.1 General

The common methodology for the investigation of the vadose zone is soil boring drilling and soil sampling. However, drilling soil borings can be very expensive. Generally the advantage of DPT for subsurface soil sampling is the reduced cost of disposal of drilling cuttings and shorter sampling times.

5.2 Sampling Equipment

Equipment needed for conducting DPT drilling for subsurface soil sampling includes, but is not limited to, the following:

- Geoprobe® Sampling Kit
- Cut-resistant gloves
- 4-foot x 1.5-inch diameter macrocore sampler
- Probe sampling adapters
- Roto-hammer with 1.5-inch bit
- Disposable acetate liners for soil macrocore sampler
- Cast aluminum or steel drive points
- Geoprobe® AT-660 Series Large Bore Soil Sampler, or equivalent
- Standard decontamination equipment and solutions

For health and safety equipment and procedures, follow the direction provided in the Safe Work Permit in Attachment 1, or the more detailed directions provided in the project's Health and Safety Plan.

5.3 DPT Sampling Methodology

There are several methods for the collection of soil samples using DPT drilling. The most common method is discussed in the following section. Variations of the following method may be conducted upon approval of the Project Manager in accordance with the project-specific plan.

- Macrocore samplers fitted with detachable aluminum or steel drive points are driven into the ground using hydraulic pressure. If there is concrete or pavement over a sampling location, a Roto-hammer is used to drill a minimum 1.5-inch diameter hole through the surface material. A Roto-hammer may also be used if very dense soils are encountered.

- The sampler is advanced continuously in 4-foot intervals or less if desired. No soil cuttings are generated because the soil which is not collected in the sampler is displaced within the formation.

- The sampler is retracted from the hole, and the 4-foot continuous sample is removed from the outer coring tube. The sample is contained within an inner acetate liner.

- Attach the metal trough from the Geoprobe® Sampling Kit firmly to the tail gate of a vehicle. If a vehicle with a tail gate is not available, secure the trough on another suitable surface.

- Place the acetate liner containing the soils in the trough.

- While wearing cut-resistant gloves (constructed of leather or other suitable material), cut the acetate liner through its entire length using the double-bladed knife that accompanies the Geoprobe® Sampling Kit. Then remove the strip of acetate from the trough to gain access to the collected soils. Do not attempt to cut the acetate liner while holding it in your hand.

- Field screen the sample with an FID or PID, and observe/examine the sample (according to SOP GH-1.3). If appropriate, transfer the sample to sample bottles for laboratory analysis. If additional volume is required, push an additional boring adjacent to the first and composite/mix the same interval. Field compositing is usually not acceptable for sample requiring volatile organics analysis.

- Once sampling has been completed, the hole is backfilled with bentonite chips or bentonite cement grout, depending upon project requirements. Asphalt or concrete patch is used to cap holes through paved or concrete areas. All holes should be finished smooth to existing grade.

- In the event the direct push van/truck cannot be driven to a remote location or a sampling location with difficult accessibility, sampling probes may be advanced and sampled manually or with air/electric operated equipment (e.g., jack hammer).

- Sampling equipment is decontaminated prior to collecting the next sample.

6.0 GROUNDWATER SAMPLING PROCEDURES

6.1 General

The most common methodology for the investigation of groundwater is the installation and sampling of permanent monitoring wells. If only groundwater screening is required, the installation and sampling of temporary well points may be performed. The advantage of temporary well point installation using DPT is reduced cost due to no or minimal disposal of drilling cuttings and well construction materials, and shorter installation/times sampling.

Two disadvantages of DPT drilling for well point installation are:

- In aquifers with low yields, well points may have to be sampled without purging or development.
- If volume requirements are high, this method can be time consuming for low yield aquifers.

6.2 Sampling Equipment

Equipment needed for temporary well installation and sampling using DPT includes, but is not limited, to the following:

- 2-foot x 1-inch diameter mill-slotted (0.005 to 0.02-inch) well point
- Connecting rods
- Roto-hammer with 1.5-inch bit
- Mechanical jack
- 1/4-inch OD polyethylene tubing
- 3/8-inch OD polyethylene tubing
- Peristaltic pump
- Standard decontamination equipment and solutions

6.3 DPT Temporary Well Point Installation and Sampling Methodology

There are several methods for the installation and sampling of temporary well points using DPT. The most common methodology is discussed below. Variations of the following method may be conducted upon approval of the Project Manager in accordance with the project specific plan.

- A 2-foot x 1-inch diameter mill-slotted (0.005 to 0.02-inch) well point attached to connecting rods is driven into the ground to the desired depth using a rotary electric hammer or other direct push drill rig. If there is concrete or pavement over a sampling location, a Roto-hammer or electric coring machine is used to drill a hole through the surface material.

- The well point will be allowed to equilibrate for at least 15 minutes, after which a measurement of the static water level will be taken. The initial measurement of the water level will be used to assess the amount of water which is present in the well point and to determine the amount of silt and sand infiltration that may have occurred.

- The well point will be developed using a peristaltic pump and polyethylene tubing to remove silt and sand which may have entered the well point. The well point is developed by inserting polyethylene tubing to the bottom of the well point and lifting and lowering the tubing slightly while the pump is operating. The pump will be operated at a maximum rate of approximately 2 liters per minute. After removal of sediment from the bottom of the well point, the well point will be vigorously pumped at maximum capacity until discharge water is visibly clear and no further sediments are being generated. Measurements of pH, specific conductance, temperature, and turbidity shall be recorded every 5 to 10 minutes during the purging process. After two consistent readings of pH, specific conductance, temperature and turbidity (±10 percent), the well may be sampled.

- A sample will be collected using the peristaltic pump set at the same or reduced speed as during well development. Samples (with the exception of the samples to be analyzed for volatile organic compounds, VOCs) will be collected directly from the pump discharge. Sample containers for VOCs will be filled by (first shutting off the pump) crimping the discharge end of the sample tubing when filled, removing the inlet end of the sample tubing from the well, suspending the inlet tubing above the vial, and allowing water to fill each vial by gravity flow.

- Once the groundwater sample has been collected, the connecting rods and well point will be removed from the hole with the direct push rig hydraulics. The hole will be backfilled with bentonite chips or bentonite cement grout, depending upon project requirements. Asphalt or concrete patch will be used to cap holes through paved or concrete areas. All holes will be finished smooth to existing grade.

- In the event the direct push van/truck cannot be driven to a remote location or sampling location with difficult accessibility, sampling probes may be advanced and sampled manually or with air/electric-operated equipment (e.g., jack hammer).

- Decontaminate the equipment before moving to the next location.

7.0 RECORDS

A record of all field procedures, tests, and observations must be recorded in the field logbook, boring logs, and sample log sheets, as needed. Entries should include all pertinent data regarding the investigation. The use of sketches and field landmarks will help to supplement the investigation and evaluation.

ATTACHMENT 1
SAFE WORK PERMIT FOR DPT OPERATIONS

Permit No. _____ Date: _____ Time: From _____ to _____

SECTION I: General Job Scope

I. Work limited to the following (description, area, equipment used): **Monitoring well drilling and installation through direct push technology**

II. Required Monitoring Instruments: _____

III. Field Crew: _____

IV. On-site Inspection conducted ☐ Yes ☐ No Initials of Inspector _____ _____
TtNUS

SECTION II: General Safety Requirements (To be filled in by permit issuer)

V. Protective equipment required
Level D ☒ Level B ☐
Level C ☐ Level A ☐
Detailed on Reverse

Respiratory equipment required

Full face APR	☐	Escape Pack	☐
Half face APR	☐	SCBA	☐
SKA-PAC SAR	☐	Bottle Trailer	☐
Skid Rig	☐	None	☒

Level D Minimum Requirements: Sleeved shirt and long pants, safety footwear, and work gloves. Safety glasses, hard hats, and hearing protection will be worn when working near or sampling in the vicinity of the DPT rig.

Modifications/Exceptions.

VI. Chemicals of Concern _____ Action Level(s) _____ Response Measures _____

VII. Additional Safety Equipment/Procedures

Hard-hat	☒ Yes	☐ No	Hearing Protection (Plugs/Muffs)	☒ Yes	☐ No
Safety Glasses	☒ Yes	☐ No	Safety belt/harness	☐ Yes	☒ No
Chemical/splash goggles	☐ Yes	☒ No	Radio	☐ Yes	☒ No
Splash Shield	☐ Yes	☒ No	Barricades	☒ Yes	☐ No
Splash suits/coveralls	☐ Yes	☐ No	Gloves (Type - _____)	☐ Yes	☐ No
Steel toe Work shoes or boots	☒ Yes	☐ No	Work/warming regimen	☐ Yes	☐ No

Modifications/Exceptions: Reflective vests for high traffic areas.

VIII. Procedure review with permit acceptors

	Yes	NA		Yes	NA
Safety shower/eyewash (Location & Use)	☐	☒	Emergency alarms	☐	☐
Daily tail gate meetings	☒	☐	Evacuation routes	☐	☐
Contractor tools/equipment/PPE inspected	☐	☐	Assembly points	☐	☐

IX. Site Preparation

Utility Clearances obtained for areas of subsurface investigation	☐ Yes	☐ No
Physical hazards removed or blockaded	☐ Yes	☐ No
Site control boundaries demarcated/signage	☐ Yes	☐ No

X. Equipment Preparation

	Yes	NA
Equipment drained/depressurized	☐	☒
Equipment purged/cleaned	☐	☒
Isolation checklist completed	☐	☒
Electrical lockout required/field switch tested	☐	☒
Blinds/misalignments/blocks & bleeds in place	☐	☒
Hazardous materials on walls/behind liners considered	☐	☒

XI. Additional Permits required (Hot work, confined space entry). ☐ Yes ☐ No
If yes, complete permit required or contact Health Sciences, Pittsburgh Office

XII. Special instructions, precautions:

_____

_____

Permit Issued by: _____ Permit Accepted by: _____

TETRA TECH NUS, INC.	STANDARD OPERATING PROCEDURES	Number SA-6.1	Page 1 of 11
		Effective Date 02/04	Revision 3
		Applicability Tetra Tech NUS, Inc.	
		Prepared Earth Sciences Department	
Subject NON-RADIOLOGICAL SAMPLE HANDLING		Approved D. Senovich	

TABLE OF CONTENTS

SECTION		PAGE
1.0	**PURPOSE**	**2**
2.0	**SCOPE**	**2**
3.0	**GLOSSARY**	**2**
4.0	**RESPONSIBILITIES**	**3**
5.0	**PROCEDURES**	**3**
5.1	SAMPLE CONTAINERS	3
5.2	SAMPLE PRESERVATION	3
5.2.1	Overview	4
~~5.2.2~~	~~Preparation and Addition of Reagents~~	~~4~~
5.3	FIELD FILTRATION	5
5.4	SAMPLE PACKAGING AND SHIPPING	6
5.4.1	Environmental Samples	6
6.0	**REFERENCES**	**7**

ATTACHMENTS

A	GENERAL SAMPLE CONTAINER AND PRESERVATION REQUIREMENTS	8
B	ADDITIONAL REQUIRED CONTAINERS, PRESERVATION TECHNIQUES, AND HOLDING TIMES	9

1.0 PURPOSE

The purpose of this Standard Operating Procedure (SOP) is to provide information on sample preservation, packaging, and shipping procedures to be used in handling environmental samples submitted for chemical constituent, biological, or geotechnical analysis. Sample chain-of-custody procedures and other aspects of field documentation are addressed in SOP SA-6.3. Sample identification is addressed in SOP CT-04.

2.0 SCOPE

This procedure describes the appropriate containers to be used for samples depending on the analyses to be performed, and the steps necessary to preserve the samples when shipped off site for chemical analysis.

3.0 GLOSSARY

Hazardous Material - A substance or material which has been determined by the Secretary of Transportation to be capable of posing an unreasonable risk to health, safety, and property when transported in commerce, and which has been so designated. Under 49 CFR, the term includes hazardous substances, hazardous wastes, marine pollutants, and elevated temperature materials, as well as materials designated as hazardous under the provisions of §172.101 and §172.102 and materials that meet the defining criteria for hazard classes and divisions in Part 173. With slight modifications, IATA has adopted DOT "hazardous materials" as IATA "Dangerous Goods."

Hazardous Waste - Any substance listed in 40 CFR, Subpart D (§261.30 et seq.), or otherwise characterized as ignitable, corrosive, reactive, or toxic (as defined by Toxicity Characteristic Leaching Procedure, TCLP, analysis) as specified under 40 CFR, Subpart C (§261.20 et seq.), that would be subject to manifest requirements specified in 40 CFR 262. Such substances are defined and regulated by EPA.

Marking - A descriptive name, identification number, instructions, cautions, weight, specification or UN marks, or combination thereof required on outer packaging of hazardous materials.

n.o.i - Not otherwise indicated (may be used interchangeably with n.o.s.).

n.o.s. - Not otherwise specified.

Packaging - A receptacle and any other components or materials necessary for compliance with the minimum packaging requirements of 49 CFR 174, including containers (other than freight containers or overpacks), portable tanks, cargo tanks, tank cars, and multi-unit tank-car tanks to perform a containment function in conformance with the minimum packaging requirements of 49 CFR 173.24(a) & (b).

Placard - Color-coded, pictorial sign which depicts the hazard class symbol and name and which is placed on the side of a vehicle transporting certain hazardous materials.

Common Preservatives:

- Hydrochloric Acid - HCl
- Sulfuric Acid - H_2SO_4
- Nitric Acid - HNO_3
- Sodium Hydroxide - NaOH

Other Preservatives

- Zinc Acetate
- Sodium Thiosulfate - $Na_2S_2O_3$

Normality (N) - Concentration of a solution expressed as equivalent per liter, an equivalent being the amount of a substance containing 1 gram-atom of replaceable hydrogen or its equivalent.

Reportable Quantity (RQ) - For the purposes of this SOP, means the quantity specified in column 3 of the Appendix to DOT 49 CFR §172.101 for any material identified in column 1 of the appendix. A spill greater than the amount specified must be reported to the National Response Center.

Sample - A sample is physical evidence collected from a facility or the environment, which is representative of conditions at the location and time of collection.

4.0 RESPONSIBILITIES

Field Operations Leader - Directly responsible for the bottling, preservation, labeling, packaging, shipping, and custody of samples up to and including release to the shipper.

Field Samplers - Responsible for initiating the Chain-of-Custody Record (per SOP SA-6.3), implementing the packaging and shipping requirements, and maintaining custody of samples until they are relinquished to another custodian or to the shipper.

5.0 PROCEDURES

Sample identification, labeling, documentation, and chain-of-custody are addressed by SOP SA-6.3.

5.1 Sample Containers

Different types of chemicals react differently with sample containers made of various materials. For example, trace metals adsorb more strongly to glass than to plastic, whereas many organic chemicals may dissolve various types of plastic containers. Attachments A and B show proper containers (as well as other information) per 40 CFR 136. In general, the sample container shall allow approximately 5-10 percent air space ("ullage") to allow for expansion/vaporization if the sample warms during transport. However, for collection of volatile organic compounds, head space shall be omitted. The analytical laboratory will generally provide certified-clean containers for samples to be analyzed for chemical constituents. Shelby tubes or other sample containers are generally provided by the driller for samples requiring geotechnical analysis. Sufficient lead time shall be allowed for a delivery of sample container orders. Therefore, it is critical to use the correct container to maintain the integrity of the sample prior to analysis.

Once opened, the container must be used at once for storage of a particular sample. Unused but opened containers are to be considered contaminated and must be discarded. Because of the potential for introduction of contamination, they cannot be reclosed and saved for later use. Likewise, any unused containers which appear contaminated upon receipt, or which are found to have loose caps or a missing Teflon liner (if required for the container), shall be discarded.

5.2 Sample Preservation

Many water and soil samples are unstable and therefore require preservation to prevent changes in either the concentration or the physical condition of the constituent(s) requiring analysis. Although complete and irreversible preservation of samples is not possible, preservation does retard the chemical and biological

changes that inevitably take place after the sample is collected. Preservation techniques are usually limited to pH control, chemical addition(s), and refrigeration/ freezing (certain biological samples only).

5.2.1 Overview

The preservation techniques to be used for various analytes are listed in Attachments A and B. Reagents required for sample preservation will either be added to the sample containers by the laboratory prior to their shipment to the field or be added in the field (in a clean environment). Only high purity reagents shall be used for preservation. In general, aqueous samples of low-concentration organics (or soil samples of low- or medium-concentration organics) are cooled to 4°C. Medium-concentration aqueous samples, high-hazard organic samples, and some gas samples are typically not preserved. Low-concentration aqueous samples for metals are acidified with HNO_3, whereas medium-concentration and high-hazard aqueous metal samples are not preserved. Low- or medium-concentration soil samples for metals are cooled to 4°C, whereas high-hazard samples are not cooled.

The following subsections describe the procedures for preparing and adding chemical preservatives. Attachments A and B indicate the specific analytes which require these preservatives.

The FOL is responsible for ensuring that an accurate Chemical Inventory is created and maintained for all hazardous chemicals brought to the work site (see Section 5 of the TtNUS Health and Safety Guidance Manual). Furthermore, the FOL must ensure that a corresponding Material Safety Data Sheet (MSDS) is collected for every substance entered on the site Chemical Inventory, and that all persons using/handling/ disposing of these substances review the appropriate MSDS for substances they will work with. The Chemical Inventory and the MSDSs must be maintained at each work site in a location and manner where they are readily-accessible to all personnel.

5.2.2 Preparation and Addition of Reagents

Addition of the following acids or bases may be specified for sample preservation; these reagents shall be analytical reagent (AR) grade or purer and shall be diluted to the required concentration with deionized water before field sampling commences. To avoid uncontrolled reactions, be sure to Add Acid to water (not vice versa). A dilutions guide is provided below.

Acid/Base	Dilution	Concentration	Estimated Amount Required for Preservation
Hydrochloric Acid (HCl)	1 part concentrated HCl: 1 part double-distilled, deionized water	6N	5-10 mL
Sulfuric Acid (H_2SO_4)	1 part concentrated H_2SO_4: 1 part double-distilled, deionized water	18N	2 - 5 mL
Nitric Acid (HNO_3)	Undiluted concentrated HNO_3	16N	2 - 5 mL
Sodium Hydroxide (NaOH)	400 grams solid NaOH dissolved in 870 mL double-distilled, deionized water; yields 1 liter of solution	10N	2 mL

The amounts required for preservation shown in the above table assumes proper preparation of the preservative and addition of the preservative to one liter of aqueous sample. This assumes that the sample is initially at pH 7, is poorly buffered, and does not contain particulate matter; as these conditions vary, more preservative may be required. Consequently, the final sample pH must be checked using narrow-range pH paper, as described in the generalized procedure detailed below:

- Pour off 5-10 mL of sample into a dedicated, clean container. Use some of this sample to check the initial sample pH using wide range (0-14) pH paper. Never dip the pH paper into the sample; always apply a drop of sample to the pH paper using a clean stirring rod or pipette.

- Add about one-half of the estimated preservative required to the original sample bottle. Cap and invert gently several times to mix. Check pH (as described above) using medium range pH paper (pH 0-6 or pH 7.5-14, as applicable).

- Cap sample bottle and seal securely.

Additional considerations are discussed below:

- To test if ascorbic acid must be used to remove oxidizing agents present in the sample before it can be properly preserved, place a drop of sample on KI-starch paper. A blue color indicates the need for ascorbic acid addition.

  If required, add a few crystals of ascorbic acid to the sample and retest with the KI-starch paper. Repeat until a drop of sample produces no color on the KI-starch paper. Then add an additional 0.6 grams of ascorbic acid per each liter of sample volume.

  Continue with proper base preservation of the sample as described above.

- Samples for sulfide analysis must be treated by the addition of 4 drops (0.2 mL) of 2N zinc acetate solution per 100 ml of sample.

  The 2N zinc acetate solution is made by dissolving 220 grams of zinc acetate in 870 mL of double-distilled, deionized water to make 1 liter of solution.

  The sample pH is then raised to 9 using the NaOH preservative.

- Sodium thiosulfate must be added to remove residual chlorine from a sample. To test the sample for residual chlorine use a field test kit specially made for this purpose.

  If residual chlorine is present, add 0.08 grams of sodium thiosulfate per liter of sample to remove the residual chlorine.

  Continue with proper acidification of the sample as described above.

For biological samples, 10% buffered formalin or isopropanol may also be required for preservation. Questions regarding preservation requirements should be resolved through communication with the laboratory before sampling begins.

5.3 Field Filtration

At times, field-filtration may be required to provide for the analysis of dissolved chemical constituents. Field-filtration must be performed prior to the preservation of samples as described above. General procedures for field filtration are described below:

- The sample shall be filtered through a non-metallic, 0.45-micron membrane filter, immediately after collection. The filtration system shall consist of dedicated filter canister, dedicated tubing, and a peristaltic pump with pressure or vacuum pumping squeeze action (since the sample is filtered by mechanical peristalsis, the sample travels only through the tubing).

- To perform filtration, thread the tubing through the peristaltic pump head. Attach the filter canister to the discharge end of the silicon tubing (note flow direction arrow); attach the aqueous sample container to the intake end of the silicon tubing. Turn the peristaltic pump on and perform filtration. Run approximately 100 ml of sample through the filter and discard prior to sample collection.

- Continue by preserving the filtrate (contained in the filter canister), as applicable and generally described above.

5.4 Sample Packaging and Shipping

Only employees who have successfully completed the TtNUS "Shipping Hazardous Materials" training course are authorized to package and ship hazardous substances. These trained individuals are responsible for performing shipping duties in accordance with this training.

Samples collected for shipment from a site shall be classified as either environmental or hazardous material samples. Samples from drums containing materials other than Investigative Derived Waste (IDW) and samples obtained from waste piles or bulk storage tanks are generally shipped as hazardous materials. A distinction must be made between the two types of samples in order to:

- Determine appropriate procedures for transportation of samples (if there is any doubt, a sample shall be considered hazardous and shipped accordingly.)

- Protect the health and safety of transport and laboratory personnel receiving the samples (special precautions are used by the shipper and at laboratories when hazardous materials are received.)

Detailed procedures for packaging environmental samples are outlined in the remainder of this section.

5.4.1 Environmental Samples

Environmental samples are packaged as follows:

- Place properly identified sample container, with lid securely fastened, in a plastic bag (e.g. Ziploc baggie), and seal the bag.

- Place sample in a cooler constructed of sturdy material which has been lined with a large, plastic bag (e.g. "garbage" bag). Drain plugs on coolers must be taped shut.

- Pack with enough cushioning materials such as bubble wrap (shoulders of bottles must be iced if required) to minimize the possibility of the container breaking.

- If cooling is required (see Attachments A and B), place ice around sample container shoulders, and on top of packing material (minimum of 8 pounds of ice for a medium-size cooler).

- Seal (i.e., tape or tie top in knot) large liner bag.

- The original (top, signed copy) of the COC form shall be placed inside a large Ziploc-type bag and taped inside the lid of the shipping cooler. If multiple coolers are sent but are included on one COC form, the COC form should be sent with the cooler containing the vials for VOC analysis. The COC form should then state how many coolers are included with that shipment.

- Close and seal outside of cooler as described in SOP SA-6.3. Signed custody seals must be used.

Coolers must be marked as containing "Environmental Samples." The appropriate side of the container must be marked "This End Up" and arrows placed appropriately. No DOT marking or labeling is required; there are no DOT restrictions on mode of transportation.

6.0 REFERENCES

American Public Health Association, 1981. Standard Methods for the Examination of Water and Wastewater, 15th Edition. APHA, Washington, D.C.

International Air Transport Association (latest issue). Dangerous Goods Regulations, Montreal, Quebec, Canada.

U.S. Department of Transportation (latest issue). Hazardous Materials Regulations, 49 CFR 171-177.

U.S. EPA, 1984. "Guidelines Establishing Test Procedures for the Analysis of Pollutants under Clean Water Act." Federal Register, Volume 49 (209), October 26, 1984, p. 43234.

U.S. EPA, 1979. Methods for Chemical Analysis of Water and Wastes. EPA-600/4-79-020, U.S. EPA-EMSL, Cincinnati, Ohio.

ATTACHMENT A

GENERAL SAMPLE CONTAINER AND PRESERVATION REQUIREMENTS

Sample Type and Concentration			Container[1]	Sample Size	Preservation[2]	Holding Time[2]
WATER						
Organics (GC&GC/MS)	VOC	Low	Borosilicate glass	2 x 40 mL	Cool to 4°C HCl to ≤ 2	14 days[9]
	Extractables SVOCs and pesticide/PCBs)	(Low	Amber glass	2x2 L or 4x1 L	Cool to 4°C	7 days to extraction; 40 days after extraction
	Extractables SVOCs and pesticide/PCBs)	(Medium	Amber glass	2x2 L or 4x1 L	None	7 days to extraction; 40 days after extraction
Inorganics	Metals	Low	High-density polyethylene	1 L	HNO_3 to pH ≤2	6 months (Hg-28 days)
		Medium	Wide-mouth glass	16 oz.	None	6 months
	Cyanide	Low	High-density polyethylene	1 L	NaOH to pH>12	14 days
	Cyanide	Medium	Wide-mouth glass	16 oz.	None	14 days
Organic/ Inorganic	High Hazard		Wide-mouth glass	8 oz.	None	14 days
SOIL						
Organics (GC&GC/MS)	VOC		EnCore Sampler	(3) 5 g Samplers	Cool to 4°C	48 hours to lab preservation
	Extractables SVOCs and pesticides/PCBs)	(Low	Wide-mouth glass	8 oz.	Cool to 4°C	14 days to extraction; 40 days after extraction
	Extractables SVOCs and pesticides/PCBs)	(Medium	Wide-mouth glass	8 oz.	Cool to 4°C	14 days to extraction; 40 days after extraction
Inorganics	Low/Medium		Wide-mouth glass	8 oz.	Cool to 4°C	6 months (Hg - 28 days) Cyanide (14 days)
Organic/Inorganic	High Hazard		Wide-mouth glass	8 oz.	None	NA
Dioxin/Furan	All		Wide-mouth glass	4 oz.	None	35 days until extraction; 40 days after extraction
TCLP	All		Wide-mouth glass	8 oz.	None	7 days until preparation; analysis as per fraction
AIR						
Volatile Organics	Low/Medium		Charcoal tube -- 7 cm long, 6 mm OD, 4 mm ID	100 L air	Cool to 4°C	5 days recommended

1 All glass containers should have Teflon cap liners or septa.
2 See Attachment E. Preservation and maximum holding time allowances per 40 CFR 136.

ATTACHMENT B

ADDITIONAL REQUIRED CONTAINERS, PRESERVATION TECHNIQUES, AND HOLDING TIMES

Parameter Number/Name	Container[1]	Preservation[2][3]	Maximum Holding Time[4]
INORGANIC TESTS:			
Acidity	P, G	Cool, 4°C	14 days
Alkalinity	P, G	Cool, 4°C	14 days
Ammonia - Nitrogen	P, G	Cool, 4°C; H_2SO_4 to pH 2	28 days
Biochemical Oxygen Demand (BOD)	P, G	Cool, 4°C	48 hours
Bromide	P, G	None required	28 days
Chemical Oxygen Demand (COD)	P, G	Cool, 4°C; H_2SO_4 to pH 2	28 days
Chloride	P, G	None required	28 days
Chlorine, Total Residual	P, G	None required	Analyze immediately
Color	P, G	Cool, 4°C	48 hours
Cyanide, Total and Amenable to Chlorination	P, G	Cool, 4°C; NaOH to pH 12; 0.6 g ascorbic acid[5]	14 days[6]
Fluoride	P	None required	28 days
Hardness	P, G	HNO_3 to pH 2; H_2SO_4 to pH 2	6 months
Total Kjeldahl and Organic Nitrogen	P, G	Cool, 4°C; H_2SO_4 to pH 2	28 days
Nitrate - Nitrogen	P, G	None required	48 hours
Nitrate-Nitrite - Nitrogen	P, G	Cool, 4°C; H_2SO_4 to pH 2	28 days
Nitrite - Nitrogen	P, G	Cool, 4°C	48 hours
Oil & Grease	G	Cool, 4°C; H_2SO_4 to pH 2	28 days
Total Organic Carbon (TOC)	P, G	Cool, 4°C; HCl or H_2SO_4 to pH 2	28 days
Orthophosphate	P, G	Filter immediately; Cool, 4°C	48 hours
Oxygen, Dissolved-Probe	G Bottle & top	None required	Analyze immediately
Oxygen, Dissolved-Winkler	G Bottle & top	Fix on site and store in dark	8 hours
Phenols	G	Cool, 4°C; H_2SO_4 to pH 2	28 days
Phosphorus, Total	P, G	Cool, 4°C; H_2SO_4 to pH 2	28 days
Residue, Total	P, G	Cool, 4°C	7 days
Residue, Filterable (TDS)	P, G	Cool, 4°C	7 days
Residue, Nonfilterable (TSS)	P, G	Cool, 4°C	7 days
Residue, Settleable	P, G	Cool, 4°C	48 hours
Residue, Volatile (Ash Content)	P, G	Cool, 4°C	7 days
Silica	P	Cool, 4°C	28 days
Specific Conductance	P, G	Cool, 4°C	28 days
Sulfate	P, G	Cool, 4°C	28 days

ATTACHMENT B
ADDITIONAL REQUIRED CONTAINERS, PRESERVATION TECHNIQUES, AND HOLDING TIMES
PAGE TWO

Parameter Number/Name	Container[1]	Preservation[2][3]	Maximum Holding Time[4]
INORGANIC TESTS (Cont'd):			
Sulfide	P, G	Cool, 4°C; add zinc acetate plus sodium hydroxide to pH 9	7 days
Sulfite	P, G	None required	Analyze immediately
Turbidity	P, G	Cool, 4°C	48 hours
METALS:[7]			
Chromium VI (Hexachrome)	P, G	Cool, 4°C	24 hours
Mercury (Hg)	P, G	HNO_3 to pH 2	28 days
Metals, except Chromium VI and Mercury	P, G	HNO_3 to pH 2	6 months
ORGANIC TESTS:[8]			
Purgeable Halocarbons	G, Teflon-lined septum	Cool, 4°C; 0.008% $Na_2S_2O_3$[5]	14 days
Purgeable Aromatic Hydrocarbons	G, Teflon-lined septum	Cool, 4°C; 0.008% $Na_2S_2O_3$[5] HCl to pH 2[9]	14 days
Acrolein and Acrylonitrile	G, Teflon-lined septum	Cool, 4°C; 0.008% $Na_2S_2O_3$[5] adjust pH to 4-5[10]	14 days
Phenols[11]	G, Teflon-lined cap	Cool, 4°C; 0.008% $Na_2S_2O_3$[5]	7 days until extraction; 40 days after extraction
Benzidines[11],[12]	G, Teflon-lined cap	Cool, 4°C; 0.008% $Na_2S_2O_3$[5]	7 days until extraction[13]
Phthalate esters[11]	G, Teflon-lined cap	Cool, 4°C	7 days until extraction; 40 days after extraction
Nitrosamines[11],[14]	G, Teflon-lined cap	Cool, 4°C; store in dark; 0.008% $Na_2S_2O_3$[5]	7 days until extraction; 40 days after extraction
PCBs[11]	G, Teflon-lined cap	Cool, 4°C	7 days until extraction; 40 days after extraction
Nitroaromatics & Isophorone[11]	G, Teflon-lined cap	Cool, 4°C; 0.008% $Na_2S_2O_3$[5]; store in dark	7 days until extraction; 40 days after extraction
Polynuclear Aromatic Hydrocarbons (PAHs)[11],[14]	G, Teflon-lined cap	Cool, 4°C; 0.008% $Na_2S_2O_3$[5]; store in dark	7 days until extraction; 40 days after extraction
Haloethers[11]	G, Teflon-lined cap	Cool, 4°C; 0.008% $Na_2S_2O_3$[5]	7 days until extraction; 40 days after extraction
Dioxin/Furan (TCDD/TCDF)[11]	G, Teflon-lined cap	Cool, 4°C; 0.008% $Na_2S_2O_3$[5]	7 days until extraction; 40 days after extraction

ATTACHMENT B
ADDITIONAL REQUIRED CONTAINERS, PRESERVATION TECHNIQUES, AND HOLDING TIMES
PAGE THREE

(1) Polyethylene (P): generally 500 ml or Glass (G): generally 1L.
(2) Sample preservation should be performed immediately upon sample collection. For composite chemical samples each aliquot should be preserved at the time of collection. When use of an automated sampler makes it impossible to preserve each aliquot, then chemical samples may be preserved by maintaining at 4°C until compositing and sample splitting is completed.
(3) When any sample is to be shipped by common carrier or sent through the United States Mail, it must comply with the Department of Transportation Hazardous Materials Regulations (49 CFR Part 172).
(4) Samples should be analyzed as soon as possible after collection. The times listed are the maximum times that samples may be held before analysis and still be considered valid. Samples may be held for longer periods only if the permittee, or monitoring laboratory, has data on file to show that the specific types of samples under study are stable for the longer periods, and has received a variance from the Regional Administrator.
(5) Should only be used in the presence of residual chlorine.
(6) Maximum holding time is 24 hours when sulfide is present. Optionally, all samples may be tested with lead acetate paper before pH adjustments are made to determine if sulfide is present. If sulfide is present, it can be removed by the addition of cadmium nitrate powder until a negative spot test is obtained. The sample is filtered and then NaOH is added to pH 12.
(7) Samples should be filtered immediately on site before adding preservative for dissolved metals.
(8) Guidance applies to samples to be analyzed by GC, LC, or GC/MS for specific compounds.
(9) Sample receiving no pH adjustment must be analyzed within 7 days of sampling.
(10) The pH adjustment is not required if acrolein will not be measured. Samples for acrolein receiving no pH adjustment must be analyzed within 3 days of sampling.
(11) When the extractable analytes of concern fall within a single chemical category, the specified preservative and maximum holding times should be observed for optimum safeguard of sample integrity. When the analytes of concern fall within two or more chemical categories, the sample may be preserved by cooling to 4°C, reducing residual chlorine with 0.008% sodium thiosulfate, storing in the dark, and adjusting the pH to 6-9; samples preserved in this manner may be held for 7 days before extraction and for 40 days after extraction. Exceptions to this optional preservation and holding time procedure are noted in footnote 5 (re: the requirement for thiosulfate reduction of residual chlorine) and footnotes 12, 13 (re: the analysis of benzidine).
(12) If 1,2-diphenylthydrazine is likely to be present, adjust the pH of the sample to 4.0 ± 0.2 to prevent rearrangement to benzidine.
(13) Extracts may be stored up to 7 days before analysis if storage is conducted under an inert (oxidant-free) atmosphere.
(14) For the analysis of diphenylnitrosamine, add 0.008% $Na_2S_2O_3$ and adjust pH to 7-10 with NaOH within 24 hours of sampling.
(15) The pH adjustment may be performed upon receipt at the laboratory and may be omitted if the samples are extracted within 72 hours of collection. For the analysis of aldrin, add 0.008% $Na_2S_2O_3$.

TETRA TECH NUS, INC.	STANDARD OPERATING PROCEDURES	Number SA-6.3	Page 1 of 12
		Effective Date 03/09/09	Revision 3
		Applicability Tetra Tech NUS, Inc.	
		Prepared Earth Sciences Department	
Subject FIELD DOCUMENTATION		Approved Tom Johnston	

TABLE OF CONTENTS

SECTION **PAGE**

1.0 PURPOSE 2

2.0 SCOPE 2

3.0 GLOSSARY 2

4.0 RESPONSIBILITIES AND PERSONNEL QUALIFICATIONS 2

5.0 PROCEDURES 2

5.1 SITE LOGBOOK 2
5.1.1 General 2
5.1.2 Photographs 3
5.2 FIELD NOTEBOOKS 3
5.3 FIELD FORMS 4
5.3.1 Sample Collection, Labeling, Shipment, Request for Analysis, and Field Test Results. 4
5.3.2 Hydrogeological and Geotechnical Forms 5
5.3.3 Equipment Calibration and Maintenance Form 6
5.4 FIELD REPORTS 6
5.4.1 Daily Activities Report 7
5.4.2 Weekly Status Reports 7

6.0 LISTING OF FIELD FORMS ON THE TtNUS INTRANET SITE 7

ATTACHMENTS

A TYPICAL SITE LOGBOOK ENTRY 9
B SAMPLE LABEL 10
C CHAIN-OF-CUSTODY RECORD FORM 11
D CHAIN-OF-CUSTODY SEAL 12

1.0 PURPOSE

The purpose of this Standard Operating Procedure (SOP) is to identify and designate the field data record forms, logs, and reports generally initiated and maintained for documenting Tetra Tech NUS, Inc. (TtNUS) field activities.

2.0 SCOPE

Documents presented within this SOP (or equivalents) shall be used for all TtNUS field activities, as applicable. Other or additional documents may be required by specific client contracts or project planning documents.

3.0 GLOSSARY

None.

4.0 RESPONSIBILITIES AND PERSONNEL QUALIFICATIONS

Project Manager (PM) - The PM is responsible for obtaining hardbound controlled-distribution logbooks (from the appropriate source), as needed. In addition, the Project Manager is responsible for placing all field documentation used in site activities (i.e., records, field reports, sample data sheets, field notebooks, and the site logbook) in the project's central file upon the completion of field work.

Field Operations Leader (FOL) - The FOL is responsible for ensuring that the site logbook, notebooks, and all appropriate and current forms and field reports included in this SOP (and any additional forms required by the contract) are correctly used, accurately filled out, and completed in the required time frame.

General personnel qualifications for field documentation activities include the following:

- Occupational Safety and Health Administration (OSHA) 40-hour and applicable refresher training.
- Capability of performing field work under the expected physical and environmental (i.e., weather) conditions.
- Familiarity with appropriate procedures for documentation, handling, packaging, and shipping.

5.0 PROCEDURES

5.1 SITE LOGBOOK

5.1.1 General

The site logbook is a hard-bound, paginated, controlled-distribution record book in which all major on-site activities are documented. At a minimum, record or reference the following activities/events (daily) in the site logbook:

- All field personnel present
- Arrival/departure times and names of site visitors
- Times and dates of health and safety training
- Arrival/departure times of equipment
- Times and dates of equipment calibration

- Start and/or completion of borehole, trench, monitoring well installation activities, etc.
- Daily on-site activities
- Sample pickup information
- Health and safety issues (level of protection, personal protective equipment [PPE], etc.)
- Weather conditions

Maintain a site logbook for each project and initiate it at the start of the first on-site activity (e.g., site visit or initial reconnaissance survey). Make entries every day that on-site activities take place involving TtNUS or subcontractor personnel. Upon completion of the fieldwork, provide the site logbook to the PM or designee for inclusion in the project's central file.

Record the following information on the cover of each site logbook:

- Project name
- TtNUS project number
- Sequential book number
- Start date
- End date

Information recorded daily in the site logbook need not be duplicated in other field notebooks (see Section 5.2) but must summarize the contents of these other notebooks and refer to specific page locations in these notebooks for detailed information (where applicable). An example of a typical site logbook entry is shown in Attachment A.

If measurements are made at any location, either record the measurements and equipment used in the site logbook or reference the field notebook in which the measurements are recorded (see Attachment A).

Make all logbook, notebook, and log sheet entries in indelible ink (black pen is preferred). No erasures are permitted. If an incorrect entry is made, cross out the entry with a single strike mark, initial, and date it. At the completion of entries by any individual, the logbook pages used must be signed and dated by the person making the entries. The site logbook must also be signed by the FOL at the end of each day.

5.1.2 Photographs

Sequentially number movies, slides, or photographs taken of a site or any monitoring location to correspond to logbook/notebook entries. Enter the name of the photographer, date, time, site location, site description, and weather conditions in the logbook/notebook as the photographs are taken. A series entry may be used for rapid-sequence photographs. The photographer is not required to record the aperture settings and shutter speeds for photographs taken within the normal automatic exposure range. However, special lenses, films, filters, and other image-enhancement techniques must be noted in the logbook/notebook. If possible, such techniques shall be avoided because they can adversely affect the accuracy of photographs. Chain-of-custody procedures depend on the subject matter, type of camera (digital or film), and the processing it requires. Follow chain-of-custody procedures for film used for aerial photography, confidential information, or criminal investigation. After processed, consecutively number the slides of photographic prints and label them according to the logbook/notebook descriptions. Docket the site photographs and associated negatives and/or digitally saved images to compact disks into the project's central file.

5.2 FIELD NOTEBOOKS

Key field team personnel may maintain a separate dedicated field notebook to document the pertinent field activities conducted directly under their supervision. For example, on large projects with multiple investigative sites and varying operating conditions, the Health and Safety Officer may elect to maintain a

separate field notebook. Where several drill rigs are in operation simultaneously, each site geologist assigned to oversee a rig must maintain a field notebook.

5.3 FIELD FORMS

All TtNUS field forms (see list in Section 6.0 of this SOP) can be found on the company's intranet site (http://intranet.ttnus.com) under Field Log Sheets. Forms may be altered or revised for project-specific needs, subject to client approval. Care must be taken to ensure that all essential information can be documented. Guidelines for completing these forms can be found in the related sampling SOPs.

5.3.1 Sample Collection, Labeling, Shipment, Request for Analysis, and Field Test Results

5.3.1.1 Sample Log Sheet

Sample log sheets are used to record specified types of data while sampling. The data recorded on these sheets are useful in describing the sample as well as pointing out any problems, difficulties, or irregularities encountered during sampling. Complete a sample log sheet for each sample obtained, including field quality control (QC) samples.

5.3.1.2 Sample Label

A typical sample label is illustrated in Attachment B. Complete the required information on the adhesive labels and apply them to every sample container. Obtain sample labels from the appropriate program/project source, request that they be electronically generated in house, or request them the laboratory subcontractor.

5.3.1.3 Chain-of-Custody Record

The chain-of-custody record is a multi-part form that is initiated as samples are acquired and accompanies a sample (or group of samples) as they are transferred from person to person. This form must be used as follows for any samples collected for chemical or geotechnical analysis whether the analyses are performed on site or off site:

- Retain one carbonless copy of the completed chain-of custody form in the field.
- Send one copy is sent to the PM (or designee)
- Send the original to the laboratory with the associated samples. Place the original (top, signed copy) of the chain-of custody form inside a large Ziploc®-type bag taped inside the lid of the shipping cooler. If multiple coolers are sent but are included on one chain-of custody form, send the form with the cooler containing vials for volatile organic compound (VOC) analysis or the cooler with the air bill attached. Indicate on the air bill how many coolers are included with that shipment.

An example of a chain-of-custody form is provided as Attachment C. After the samples are received at the laboratory, the sample cooler and contents are checked and any problems are noted on the enclosed chain-of custody form (any discrepancies between the sample labels and chain-of custody form and any other problems that are noted are resolved through communication between the laboratory point-of-contact and the TtNUS PM). The chain-of custody form is signed and copied. The laboratory will retain the copy, and the original becomes part of the samples' corresponding analytical data package.

5.3.1.4 Chain-of-Custody Seal

Attachment D is an example of a custody seal. The custody seal is an adhesive-backed label that is part of a chain-of-custody process and is used to prevent tampering with samples after they have been collected in the field and sealed in coolers for transport to the laboratory. Sign and date custody seals

and affix them across the lid and body of each cooler (front and back) containing environmental samples (see SOP SA-6.1). Obtain custody seals from the laboratory (if available) or purchase them from a supplier.

5.3.1.5 Geochemical Parameters Log Sheets

Complete Field Analytical Log Sheets to record geochemical and/or natural attenuation field test results.

5.3.2 Hydrogeological and Geotechnical Forms

5.3.2.1 Groundwater Level Measurement Sheet

Complete a Groundwater Level Measurement Sheet for each round of water level measurements made at a site.

5.3.2.2 Data Sheet for Pumping Test

During the performance of a pumping test (or an in-situ hydraulic conductivity test), a large amount of data must be recorded, often within a short time period. Use a Pumping Test Data Sheet to facilitate this task by standardizing the data collection format for the pumping well and observation wells, and allowing the time interval for collection to be established in advance.

5.3.2.3 Packer Test Report Form

Complete a Packer Test Report Form for each well at which a packer test is conducted.

5.3.2.4 Boring Log

Complete a Summary Log of Boring, or Boring Log for each soil boring performed to document the materials encountered, operation and driving of casing, and locations/depths of samples collected. In addition, if volatile organics are monitored on cores, samples, cuttings from the borehole, or breathing zone, (using a photoionization detector [PID] or flame ionization detector [FID]), enter these readings on the boring log at the appropriate depth. When they become available, enter the laboratory sample number, concentrations of key contaminants, or other pertinent information in the "Remarks" column. This feature allows direct comparison of contaminant concentrations with soil characteristics.

5.3.2.5 Monitoring Well Construction Details Form

Complete a Monitoring Well Construction Details Form for every monitoring well, piezometer, or temporary well point installed. This form contains specific information on length and type of well riser pipe and screen, backfill, filter pack, annular seal and grout characteristics, and surface seal characteristics. This information is important in evaluating the performance of the monitoring well, particularly in areas where water levels show temporal variation or where there are multiple (immiscible) phases of contaminants. Depending on the type of monitoring well (in overburden or bedrock, stick-up or flush mount), different forms are used.

5.3.2.6 Test Pit Log

When a test pit or trench is constructed for investigative or sampling purposes, a Test Pit Log must be filled out by the responsible field geologist or sampling technician.

5.3.2.7 Miscellaneous Monitoring Well Forms

Miscellaneous monitoring well forms that may be required on a project-specific basis include the Monitoring Well Materials Certificate of Conformance and Monitoring Well Development Record. Use a Monitoring Well Materials Certificate of Conformance to document all materials utilized during each monitoring well installation. Use a Monitoring Well Development Record to document all well development activities.

5.3.2.8 Miscellaneous Field Forms – Quality Assurance and Checklists

Miscellaneous field forms/checklists forms that may be required on a project-specific basis include the following:

- Container Sample and Inspection Sheet – use this form when a container (drum, tank, etc.) is sampled and/or inspected.
- QA Sample Log Sheet – use this form when a QA sample such as an equipment rinsate blank, source blank, etc. is collected.
- Field Task Modification Request (FTMR) – use this form to document deviations from the project planning documents. The FOL is responsible for initiating the FTMRs. Maintain copies of all FTMRs with the on-site planning documents, and place originals in the final evidence file.
- Field Project Daily Activities Checklist and Field Project Pre-Mobilization Checklist – used these during both the planning and field effort to ensure that all necessary tasks are planned for and completed. These two forms are not requirements but are useful tools for most field work.

5.3.3 Equipment Calibration and Maintenance Form

The calibration or standardization of monitoring, measuring, or test equipment is necessary to ensure the proper operation and response of the equipment, to document the accuracy, precision, or sensitivity of the measurements, and determine if correction should be applied to the readings. Some items of equipment require frequent calibration, others infrequent. Some are calibrated by the manufacturer, others by the user.

Each instrument requiring calibration has its own Equipment Calibration Log, which documents that the manufacturer's instructions were followed for calibration of the equipment, including frequency and type of standard or calibration device. Maintain an Equipment Calibration Log for each electronic measuring device used in the field; make entries for each day the equipment is used or in accordance with manufacturer recommendations.

5.4 FIELD REPORTS

The primary means of recording on-site activities is the site logbook. Other field notebooks may also be maintained. These logbooks and notebooks (and supporting forms) contain detailed information required for data interpretation or documentation but are not easily used for tracking and reporting of progress. Furthermore, the field logbook/notebooks remain on site for extended periods of time and are thus not accessible for timely review by project management. Other reports useful for tracking and reporting the progress of field activities are described below.

5.4.1 Daily Activities Report

To provide timely oversight of on-site contractors, complete and submit Daily Activities Reports (DARs) as described below.

5.4.1.1 Description

The DAR documents the activities and progress for each day's field work. Complete this report on a daily basis whenever there are drilling, test pitting, well construction, or other related activities occurring that involve subcontractor personnel. These sheets summarize the work performed and form the basis of payment to subcontractors. The DAR form can be found on the TtNUS intranet site.

5.4.1.2 Responsibilities

It is the responsibility of the rig geologist to complete the DAR and obtain the driller's signature acknowledging that the times and quantities of material entered are correct.

5.4.1.3 Submittal and Approval

At the end of the shift, the rig geologist must submit the DAR to the FOL for review and filing. The Daily Activities Report is not a formal report and thus requires no further approval. The DARs are retained by the FOL for use in preparing the site logbook and in preparing weekly status reports for submission to the PM.

5.4.2 Weekly Status Reports

To facilitate timely review by project management, photocopies of logbook/notebook entries may be made for internal use.

In addition to those described herein, other summary reports may also be contractually required.

All TtNUS field forms can be found on the company's intranet site at http://intranet.ttnus.com under Field Log Sheets.

6.0 LISTING OF FIELD FORMS ON THE TtNUS INTRANET SITE

- Boring Log
- Container Sample and Inspection Sheet
- Daily Activities Checklist
- Daily Activities Record
- Equipment Calibration Log
- Field Task Modification Request
- Field Analytical Log sheet - Geochemical Parameters
- Groundwater Level Measurement Sheet
- Groundwater Sample Log Sheet
- Hydraulic Conductivity Test Data Sheet
- Low Flow Purge Data Sheet
- Bedrock Monitoring Well Construction (Stick Up)
- Bedrock Monitoring Well Construction Flush Mount
- Bedrock Monitoring Well Construction Open Hole
- Confining Layer Monitoring Well Construction
- Monitoring Well Development Record

- Monitoring Well Materials Certificate of Conformance
- Overburden Monitoring Well Construction Flush Mount
- Overburden Monitoring Well Construction Stick Up
- Packer Test Report Form
- Pumping Test Data Sheet
- QA Sample Log Sheet
- Soil/Sediment Sample Log Sheet
- Surface Water Sample Log Sheet
- Test Pit Log
- Field Project Pre-Mobilization Checklist

ATTACHMENT A
TYPICAL SITE LOGBOOK ENTRY

START TIME: _____ DATE: _____

SITE LEADER: _____
PERSONNEL:

TtNUS	DRILLER	SITE VISITORS
_____	_____	_____
_____	_____	_____
_____	_____	_____

WEATHER: Clear, 68°F, 2-5 mph wind from SE

ACTIVITIES:

1. Steam jenney and fire hoses were set up.
2. Drilling activities at well ____ resumes. Rig geologist was _____. See Geologist's Notebook, No. 1, page 29-30, for details of drilling activity. Sample No. 123-21-S4 collected; see sample logbook, page 42. Drilling activities completed at 11:50 and a 4-inch stainless steel well installed. See Geologist's Notebook, No. 1, page 31, and well construction details for well _____.
3. Drilling rig No. 2 steam-cleaned at decontamination pit. Then set up at location of well _____.
4. Well _____ drilled. Rig geologist was _____. See Geologist's Notebook, No. 2, page ____ for details of drilling activities. Sample numbers 123-22-S1, 123-22-S2, and 123-22-S3 collected; see sample logbook, pages 43, 44, and 45.
5. Well _____ was developed. Seven 55-gallon drums were filled in the flushing stage. The well was then pumped using the pitcher pump for 1 hour. At the end of the hour, water pumped from well was "sand free."
6. EPA remedial project manger arrives on site at 14:25 hours.
7. Large dump truck arrives at 14:45 and is steam-cleaned. Backhoe and dump truck set up over test pit _____.
8. Test pit _____ dug with cuttings placed in dump truck. Rig geologist was _____. See Geologist's Notebook, No. 1, page 32, for details of test pit activities. Test pit subsequently filled. No samples taken for chemical analysis. Due to shallow groundwater table, filling in of test pit ___ resulted in a very soft and wet area. A mound was developed and the area roped off.
9. Express carrier picked up samples (see Sample Logbook, pages 42 through 45) at 17:50 hours. Site activities terminated at 18:22 hours. All personnel off site, gate locked.

_____

Field Operations Leader

ATTACHMENT B
SAMPLE LABEL

Tetra Tech NUS, Inc. 661 Andersen Drive Pittsburgh, 15220 (412)921-7090	**Project:** **Site:** **Location:**	
Sample No:		**Matrix:**
Date:	**Time:**	**Preserve:**
Analysis:		
Sampled by:	**Laboratory:**	

ATTACHMENT C
CHAIN-OF-CUSTODY RECORD FORM

TETRA TECH NUS, INC. CHAIN OF CUSTODY | NUMBER 3413 | PAGE ___ OF ___

PROJECT NO:	FACILITY:	PROJECT MANAGER	PHONE NUMBER	LABORATORY NAME AND CONTACT:
SAMPLERS (SIGNATURE)		FIELD OPERATIONS LEADER	PHONE NUMBER	ADDRESS
		CARRIER/WAYBILL NUMBER		CITY, STATE

STANDARD TAT ☐
RUSH TAT ☐
☐ 24 hr. ☐ 48 hr. ☐ 72 hr. ☐ 7 day ☐ 14 day

DATE YEAR ____	TIME	SAMPLE ID	LOCATION ID	TOP DEPTH (FT)	BOTTOM DEPTH (FT)	MATRIX (GW, SO, SW, SD, QC, ETC.)	COLLECTION METHOD GRAP (G) COMP (C)	No. OF CONTAINERS	CONTAINER TYPE PLASTIC (P) or GLASS (G) / PRESERVATIVE USED / TYPE OF ANALYSIS	COMMENTS

1. RELINQUISHED BY	DATE	TIME	1. RECEIVED BY	DATE	TIME
2. RELINQUISHED BY	DATE	TIME	2. RECEIVED BY	DATE	TIME
3. RELINQUISHED BY	DATE	TIME	3. RECEIVED BY	DATE	TIME
COMMENTS					

DISTRIBUTION: WHITE (ACCOMPANIES SAMPLE) YELLOW (FIELD COPY) PINK (FILE COPY) 4/02R

FORM NO. TINUS-001

ATTACHMENT D
CHAIN-OF-CUSTODY SEAL

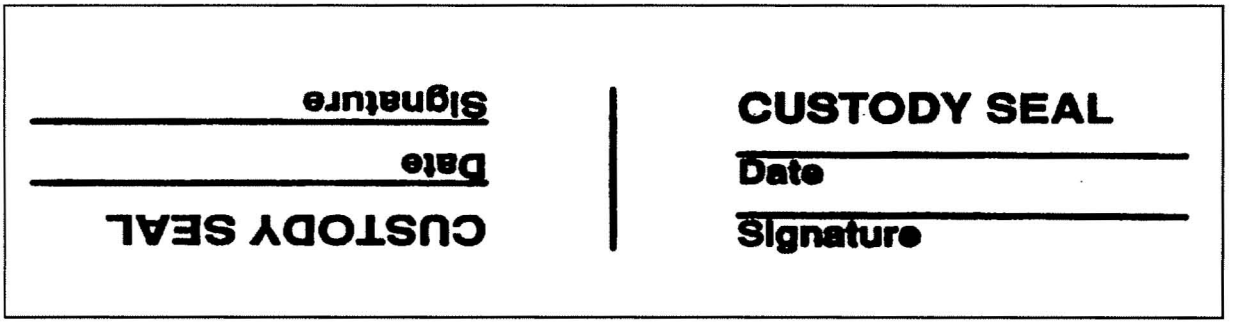

TETRA TECH	STANDARD OPERATING PROCEDURES	Number SA-7.1	Page 1 of 16
		Effective Date 01/28/2009	Revision 6
		Applicability Tetra Tech NUS, Inc.	
		Prepared Earth Sciences Department	
Subject DECONTAMINATION OF FIELD EQUIPMENT		Approved Tom Johnston	

TABLE OF CONTENTS

SECTION **PAGE**

1.0 PURPOSE **2**

2.0 SCOPE AND APPLICABILITY **2**

3.0 GLOSSARY **2**

4.0 RESPONSIBILITIES AND PERSONNEL QUALIFICATIONS **3**

5.0 HEALTH AND SAFETY **3**

6.0 EQUIPMENT LIST **3**

7.0 PROCEDURES **4**

7.1 Decontamination Pad Design/Construction Considerations **5**
7.1.1 Temporary Decontamination Pads 5
7.1.2 Decontamination Activities at Drill Rigs/DPT Units 7
7.1.3 Decontamination Activities at Remote Sample Locations 7
7.2 Equipment Decontamination Procedures **7**
7.2.1 Monitoring Well Sampling Equipment 7
7.2.2 Downhole Drilling Equipment 9
7.2.3 Soil/Sediment Sampling Equipment 11
7.3 Contact Waste/Materials **11**
7.3.1 Investigation-Derived Wastes - Decontamination Wash Waters and Sediments 12
7.4 Decontamination Evaluation **13**

ATTACHMENTS

A INVESTIGATION-DERIVED WASTE LABEL 15

1.0 PURPOSE

Decontamination is the process of removing and/or neutralizing site contaminants that have contacted and/or accumulated on equipment. The purpose of this Standard Operating Procedure (SOP) is to protect site personnel, the general public, and the environment while preserving or maintaining sample integrity. It is further intended through this procedure to describe the steps necessary for proper decontamination of drilling equipment, earth-moving equipment , chemical sampling equipment and field operation and analytical equipment.

2.0 SCOPE AND APPLICABILITY

This procedure applies to all equipment used to provide access to/acquire environmental samples that may have become contaminated through direct contact with contaminated media including air, water, and soil. This equipment includes drilling and heavy equipment and chemical sampling and field analytical equipment. Where technologically and economically feasible, single-use sealed disposable equipment will be employed to minimize the potential for cross-contamination. This SOP also provides general reference information on the control of contaminated materials.

Decontamination methods and equipment requirements may differ from one project to another. General equipment items are specified in Section 6.0, but project-specific equipment must be obtained to address the project-specific decontamination procedures presented in Section 7.0 and applicable subsections.

3.0 GLOSSARY

Alconox/Liquinox - A brand of phosphate-free laboratory-grade detergent.

Decontamination Solution - A solution selected/identified in the Health and Safety Plan or Project-Specific Quality Assurance Plan. The solution is selected and employed as directed by the project chemist/health and safety professional.

Deionized Water (DI) - Tap water that has been treated by passing through a standard deionizing resin column. This water may also pass through additional filtering media to attain various levels of analyte-free status. The DI water should meet College of American Pathologists (CAP) and National Committee for Clinical Laboratory Standards (NCCLS) specifications for reagent-grade Type I water.

Potable Water - Tap water from any municipal water treatment system. Use of an untreated potable water supply is not an acceptable substitute for tap water.

Pressure Washing - Process employing a high-pressure pump and nozzle configuration to create a high-pressure spray of potable water. High-pressure spray is employed to remove solids from equipment.

Solvent – A liquid in which solid chemicals or other liquids are dissolved. The solvent of choice is pesticide-grade isopropanol. Use of other solvents (methanol, acetone, or hexane) may be required for particular projects or for a particular purpose (e.g., removal of concentrated waste) and must be justified in the project planning documents. For example, it may be necessary to use hexane when analyzing for trace levels of pesticides, PCBs, or fuels. In addition, because many of these solvents are not miscible in water, the equipment should be air dried prior to use. Solvents should not be used on PVC equipment or well construction materials.

Steam Pressure Washing - A cleaning method employing a high-pressure spray of heated potable water to remove various organic/inorganic chemicals from equipment.

4.0 RESPONSIBILITIES AND PERSONNEL QUALIFICATIONS

Project Manager - Responsible for ensuring that all field activities are conducted in accordance with approved project plan(s) requirements.

Decontamination Personnel - Individuals assigned the task of decontamination. It is the responsibility of these individuals to understand the use and application of the decontamination process and solutions as well as the monitoring of that process to ensure that it is working properly. This is accomplished through visual evaluation, monitoring instrument scanning of decontaminated items, and/or through the collection of rinsate blanks to verify contaminant removal.

Field Operations Leader (FOL) - Responsible for the implementation of project-specific planning documents. This includes on-site verification that all field activities are performed in compliance with approved SOPs or as otherwise dictated by the approved project plan(s). The FOL is also responsible for the completion and accuracy of all field documentation.

Site Safety Officer (SSO) - Exercises shared responsibility with the FOL concerning decontamination effectiveness. All equipment arriving on site (as part of the equipment inspection), leaving the site, and moving between locations is required to go through a decontamination evaluation. This is accomplished through visual examination and/or instrument screening to determine the effectiveness of the decontamination process. Improper or incomplete decontamination is sufficient to restrict equipment from entering the site, exiting the site, or moving to a new location on the site until the objectives are successfully completed.

General personnel qualifications for decontamination activities include the following:

- Occupational Safety and Health Administration (OSHA) 40-hour and applicable refresher training.
- Capability of performing field work under the expected physical and environmental (i.e., weather) conditions.
- Familiarity with appropriate decontamination procedures.

5.0 HEALTH AND SAFETY

In addition to the health and safety issues and reminders specified in subsections of this SOP, the following considerations and requirements must be observed as SOPs for field equipment decontamination activities:

- If any solvents or hazardous chemicals (e.g., isopropyl alcohol) are to be used in equipment decontamination activities, the FOL must first obtain the manufacturer's/supplier's Material Safety Data Sheet (MSDS) and assure that it is reviewed by all users (prior to its use), added to the site Hazardous Chemical Inventory, and maintained on site as part of the project Hazard Communication Program.
- Review and observe specific health and safety requirements (e.g., personal protective equipment [PPE]) specified in the project-specific health and safety plan for this activity.

6.0 EQUIPMENT LIST

- Wood for decontamination pad construction, when applicable (see Section 7.1).

- Tools for constructing decontamination pad frame, when applicable (see Section 7.1).
- Visqueen sheeting or comparable material to cover decontamination pad frame, when applicable (see Section 7.1).
- Wash/drying racks for auger flights and drill/drive rods, when applicable (see Section 7.2).
- PPE as specified in the project health and safety plan.
- Soap and water for washing and rinsing.
- Deionized water for final rinsing.
- Solvents (e.g., pesticide-grade isopropanol) for rinsing (see applicable portions of Section 7.2).
- Tubs, buckets, etc. for containerizing rinse water (see applicable portions of Section 7.2).
- Sample bottles for collecting rinsate blanks (see Section 7.2).
- Calibrated photoionization detector (PID) or flame ionization detector (FID) to monitor decontaminated equipment for organic vapors generated through the existence of residual contamination or the presence of decontamination solvent remaining after the piece was rinsed.
- Aluminum foil or clear clean plastic bag for covering cleaned equipment (see applicable portions of Section 7.2).
- Paper towels or cloths for wiping.
- Brushes, scrapers, or other hand tools useful for removing solid materials from equipment.
- Clear plastic wrap for covering or wrapping large decontaminated equipment items (see Section 7.2.2).
- Drum-moving equipment for moving filled waste drums (optional) (see Section 7.3).
- Drum labels for waste drums (see Attachment A).

7.0 PROCEDURES

The process of decontamination is accomplished through the removal of contaminants, neutralization of contaminants, or isolation of contaminants. To accomplish this activity, preparation is required including site preparation, equipment selection, and evaluation of the decontamination requirements and processes. Site contaminant types, concentrations, and media types are primary drivers in the selection of the types of decontamination and where it will be conducted. For purposes of this SOP, discussion is limited to decontamination procedures for general environmental investigations.

Decontamination processes will be performed at the location(s) specified in project-specific planning documents. Typical decontamination locations include the following:

- Temporary decontamination pads/facilities
- Sample locations
- Centralized decontamination pad/facilities

- Combination of some or all of the above

The following discussion includes general considerations for the decontamination process. Specific construction and implementation procedures will be as specified in the project-specific planning documents and/or may be as dictated by site-specific conditions as long as the intent of the requirements in the planning documents is met. This intent is to contain any residual fluids and solids generated through the decontamination process.

7.1 Decontamination Pad Design/Construction Considerations

7.1.1 Temporary Decontamination Pads

Temporary decontamination pads may be constructed at satellite locations within the site area in support of temporary work areas. These structures are generally constructed to support the decontamination of heavy equipment such as drill rigs and earth-moving equipment but can be employed for smaller articles.

The purpose of the decontamination pad is to contain wash waters and potentially contaminated soil generated during decontamination procedures. Therefore, construction of these pads should take into account the following considerations:

- Site location – The decontamination site selected should be far enough from the work site to maximize decontamination effectiveness while minimizing travel distance. The location of the decontamination site shall be selected to provide, in the judgment of the FOL or FOL designee, compliance with as many of the following characteristics as practicable:

  - Well removed from pedestrian/vehicle thoroughfares.
  - Avoidance of areas where control/custody cannot be maintained.
  - Avoidance of areas where potential releases of contaminated media or decontamination fluids may be compounded through access to storm water transport systems, streams, or other potentially sensitive areas.
  - Avoidance of potentially contaminated areas.
  - Avoidance of areas too close to the ongoing operation, where cross-contamination may occur.

  The selected decontamination site should include the following, where possible:

  - Areas where potable water and electricity are provided.

> ***Safety Reminder***
>
> When utilizing electrical power sources, either hard-wired or portable-generated sources, ensure that:
>
> - All power is routed through a Ground Fault Circuit Interrupter (GFCI).
>
> - All power cords are in good condition (no physical damage), rated for the intended energy load, and designated for outdoor use.
>
> In situations where accomplishing these elements is not possible, it will be necessary to implement a site electrical grounding program.

- Areas where support activities such as removing decontamination waters soil and sediment are possible without entering an active exclusion zone.

- Areas that offer sufficient size to carry out the specific decontamination sequence.

- Decontamination pad (decon pad) – The decon pad shall be constructed to meet the following characteristics:

  - Size – The size of the pad should be sufficient to accept the equipment to be decontaminated as well as permitting free movement around the equipment by the personnel conducting the decontamination. The size should permit these movements utilizing pressure/steam washer wands and hoses and minimizing splash due to work in close quarters.

  - Slope – An adequate slope will be constructed to permit the collection of water and potentially contaminated soil within a trough or sump constructed at one end. The collection point for wash waters should be of adequate distance that the decontamination workers do not have to walk through the wash waters while completing their tasks. Because the pad will be sloped, place a light coating of sand over the plastic to minimize potential slips and falls. See the text about liners below.

  - Sidewalls – The sidewalls shall be at least 6 inches in height (or as high as possible if 6 inches is not achievable) to provide adequate containment for wash waters and soil. If splash represents a potential problem, splash guards should be constructed to control overspray. Sidewalls may be constructed of wood, inflatables, sand bags, etc. to permit containment. Splash guards are typically wood frames with Visqueen coverings to control overspray.

  - Liner – Depending on the types of equipment and decontamination method to be used, the liner should be of sufficient thickness to provide a puncture-resistant barrier between the decontamination operation and the unprotected environment. Care should be taken to examine the surface area prior to placing the liner to remove sharp articles (sticks, stones, debris) that could puncture the liner. Liners are intended to form an impermeable barrier. The thickness may vary from a minimum recommended thickness of 10 mil to 30 mil. The desired thickness may be achieved through layering materials of lighter construction. It should be noted that various materials (rubber, polyethylene sheeting) become slippery when wet. To minimize this potential hazard associated with a sloped liner, a light coating of sand shall be applied to provide traction as necessary.

  - Wash/drying racks – Auger flights, drill/drive rods, and similar equipment require racks positioned off of the ground to permit these articles to be washed, drained, and dried while secured from falling during this process.

For decontamination of direct-push technology (DPT) equipment, the pad may be as simple as a mortar tub containing buckets of soapy water for washing and an empty bucket to capture rinse waters. Decontamination may be conducted at the rear of the rig to permit rapid tool exchange.

- Maintenance – Maintain the decontamination area by:

  - Periodically clearing the work area of standing water, soil, and debris, and coiling hoses to aid in eliminating slip, trip, and fall hazards. In addition, these articles will reduce potential backsplash and cross-contamination.

- Regularly changing the decontamination fluids to ensure proper cleaning and prevent cross-contamination.

- PPE – Periodically evaluate the condition of, and maintain the decontamination equipment, including regular cleaning of face shields and safety glasses. This is critical to ensuring the safety of decontamination personnel and the integrity of the decontamination process, and it will ensure that equipment is functioning properly.

7.1.2 Decontamination Activities at Drill Rigs/DPT Units

During subsurface sampling activities including drilling and DPT activities, decontamination of drive rods, Macro Core Samplers, split spoons, etc. is typically conducted at an area adjacent to the operation. Decontamination is generally accomplished using a soap/water wash and rinse utilizing buckets and brushes. This area requires sufficient preparation to accomplish the decontamination objectives.

Buckets shall be placed within mortar tubs or similar secondary containment tubs to prevent splash and spills from reaching unprotected environmental media. Drying racks shall be employed as directed for temporary pads to permit parts to dry and be evaluated prior to use/reuse. Methodology regarding this activity is provided in Section 7.2.

7.1.3 Decontamination Activities at Remote Sample Locations

When sampling at remote locations, sampling equipment such as trowels and pumps/tubing should be evacuated of potentially contaminated media to the extent possible. This equipment should be wrapped in plastic for transport to the temporary/centralized decontamination location for final cleaning and disposition. Flushing and cleaning of single-use equipment such as disposable trowels, tubing, and surgeon's gloves may allow disposal of this equipment after visible soil and water remnants have been removed.

7.2 Equipment Decontamination Procedures

The following represents procedures to be employed for the decontamination of equipment that may have contacted and/or accumulated contamination through site investigation activities.

7.2.1 Monitoring Well Sampling Equipment

7.2.1.1 Groundwater sampling equipment – This includes pumps inserted into monitoring wells such as bladder pumps, Whale pumps, and Redi-Flo pumps and reusable bailers, etc.

1. Evacuate to the extent possible, any purge water within the pump/bailer.

2. Scrub using soap and water and/or steam clean the outside of the pump/bailer and, if applicable, the pump tubing.

3. Insert the pump and tubing/bailer into a clean container of soapy water. Pump/run a sufficient amount of soapy water through the pump/bailer to flush out any residual well water. After the pump is flushed, circulate soapy water through the pump to ensure that the internal components are thoroughly flushed.

4. Remove the pump and tubing/bailer from the container

5. Rinse external pump components using tap water.

6. Insert the pump and tubing/bailer into a clean container of tap water. Pump/run a sufficient amount of tap water through the pump/bailer to evacuate all of the soapy water (until clear).

> ***CAUTION***
> Do not rinse PE, PVC, and associated tubing with solvents –
> Use the procedures defined in the project-specific planning documents. If they are not defined, contact the FOL for guidance. The solvent rinse described in Step 7 may be omitted if groundwater does not contain oil, grease, PAHs, PCBs, or other hard to remove organic materials.

7. If groundwater contains or is suspected to contain oil, grease, PAHs, PCBs, or other hard to remove organic materials, rinse the equipment to be cleaned with pesticide-grade isopropanol.

8. Pass deionized water through the hose to flush out the tap water and solvent residue as applicable.

9. Drain residual deionized water to the extent possible.

10. Allow components of the equipment to air dry.

11. For bladder pumps, disassemble the pump and wash the internal components with soap and water, then rinse with tap water, isopropanol, and deionized water and allow to dry. After the parts are dry, conduct a visual inspection and a monitoring instrument scan to ensure that potential contaminants and all decontamination solvent have been removed. Collect a rinsate blank in accordance with the project-specific planning documents to ensure that the decontamination process is functioning as intended. The typical frequency of collection for rinsate blanks is 1 per 20 field samples. In addition, wipe samples or field tests such as UV light may be used.

12. Wrap pump/bailer in aluminum foil or a clear clean plastic bag for storage.

> ***SAFETY REMINDER***
> Remember when handling powered equipment to disconnect the power source and render the equipment to a zero energy state (both potential and kinetic) before opening valves, disconnecting lines, etc.

7.2.1.2 Electronic Water Level Indicators/Sounders/Tapes

During water level measurements, rinsing the extracted tape and probe with deionized water and wiping the surface of the extracted tape between locations is acceptable. However, periodic full decontamination should be conducted as follows:

1. Wash with soap and water
2. Rinse with tap water
3. Rinse with deionized water

> ***NOTE***
> In situations where oil, grease, free product, other hard to remove materials are encountered, probes and exposed tapes should be washed in hot soapy water. If probes or tapes cannot be satisfactorily decontaminated (they are still stained, discolored, etc.), they should be removed from service.

7.2.1.3 Miscellaneous Equipment

Miscellaneous equipment including analytical equipment (water quality testing equipment) shall be cleaned per manufacturers' instructions. This generally includes wiping the sensor housing and rinsing with tap and deionized water.

Coolers/shipping containers employed to ship samples are received from the laboratory in a variety of conditions including marginal to extremely poor. Coolers shall be evaluated prior to use for the following:

- Structural integrity – Coolers missing handles or having breaks in the outer housing should be removed and not used. Notify the laboratory that the risk of shipping samples in the cooler(s) provided is too great and request a replacement unit.

- Cleanliness – As per protocol, only volatile organic samples are accompanied by a trip blank. If a cooler's cleanliness is in question (visibly dirty/stained) or if there are noticeable odors, the cooler should be decontaminated prior to use as follows:

  1. Wash with soap and water
  2. Rinse with tap water
  3. Dry

If these measures fail to clean the cooler to an acceptable level, remove the unit from use as a shipping container and ask the cooler provider (e.g., the analytical laboratory) to provide a replacement unit.

7.2.2 Downhole Drilling Equipment

This includes any portion of the drill rig that is over the borehole, including auger flights, drill stems, rods, and associated tooling that would extend over the borehole. The following procedure is to be employed prior to initiating the drilling/sampling activity, then between locations:

> ***CAUTION***
> Exercise care when using scrapers to remove soil and debris from downhole drilling equipment. Inadvertent slips of scrapers have resulted in cuts, scrapes, and injured knuckles, so use scrapers carefully when removing soil from these items.

1. Remove loose soil using shovels, scrapers, etc.

2. Through a combination of scrubbing using soap and water and/or steam cleaning or pressure washing, remove visible dirt/soil from the equipment being decontaminated.

> ***CAUTION***
> In Step 3, do not rinse PE, PVC, and associated tubing with solvents. The appropriate procedures should be defined within the project-specific planning documents. If they are not defined, contact the FOL for guidance. The solvent rinse described in Step 4 may be omitted if groundwater does not contain oil, grease, PAHs, PCBs, or other hard to remove organic materials.

3. Rinse the equipment with tap water, where applicable (steam cleaning and pressure washing incorporate rinsing as part of the process).

4. If the equipment has directly or indirectly contacted contaminated sample media and is known or suspected of being contaminated with oil, grease, PAHs, PCBs, or other hard to remove organic materials, rinse equipment with pesticide-grade isopropanol

5. To the extent possible, allow components to air dry.

6. If the decontaminated equipment is to be used immediately after decontamination, screen it with a calibrated photoionization detector (PID)/flame ionization detector (FID) to ensure that all contaminants and possible decontamination solvents (if they were used) have been adequately removed.

7. Wrap or cover equipment in clear plastic until it is time to be used.

SAFETY REMINDER

Even when equipment is disconnected from power sources, dangers such as the following may persist:

Falls - An auger flight standing on its end may fall and injure someone. Secure all loose articles to prevent heavy articles from falling onto people or equipment.

Burns - Steam cleaner water is heated to more than 212 °F and exhibits thermal energy that can cause burns. Prevent contact of skin with hot water or surfaces.

High water pressure - Pressure washer discharge can have 2,000 to 4,000 psi of water pressure. Water under this amount of pressure can rupture skin and other human tissues. Water at 4,000 psi exiting a 0° tip can be dangerous because of its relatively high cutting power. The exit velocity and cutting power of the water are reduced when exiting a 40° fan tip, but damage to soft tissues is still possible.

In general, follow the rules below to avoid injury, equipment damage, or incomplete decontamination:

1. Read the operating manual and follow the manufacturers' recommended safety practices before operating pressure washers and steam cleaners.

2. Never point the pressure washer or steam cleaner at another person or use to clean your boots or other parts of your body. Water lacerations and burns may appear to be minor at first but can be life threatening. Do not attempt to hold small parts in your hand while washing them with high-temperature or high-pressure water.

3. Always wear PPE as specified in the HASP such as:

   - Hard hat, safety glasses, splash shield, impermeable apron or splash suit, and hearing protection. Remember that excessive noise is a hazard when operating gas-powered engines and electrically driven pressure washers. PPE will be identified in your project specific planning documents.

4. Inspect each device before use. An inspection checklist will be provided in the project-specific planning documents. If it is a rented device, safety measures are typically provided by the vendor. In all cases, if you are not familiar with the operation of a pressure washer/steam cleaner, do not operate it until you obtain and thoroughly review operating instructions and recommended safety practices.

5. Do not modify equipment unless the manufacturer has approved the modifications.

7.2.3 Soil/Sediment Sampling Equipment

This section applies to soil sampling equipment including but not limited to hand augers, stainless steel trowels/spoons, bowls, dredges, scoops, split spoons, Macro Core samplers, etc.

1. Remove all loose soil from the equipment through manual means.
2. Through a combination of scrubbing using soap and water and/or steam cleaning or pressure washing, remove visible dirt/soil from the equipment.
3. Rinse the equipment with tap water.

> ***CAUTION***
> Do not rinse PE, PVC, and associated tubing with solvents. The appropriate procedures should be defined within the project-specific planning documents. If they are not defined, contact the FOL for guidance. The solvent rinse described in Step 4 may be omitted if groundwater does not contain oil, grease, PAHs, PCBs, or other hard to remove organic materials.

4. If the equipment is contaminated or suspected to be contaminated with oil, grease, PAHs, PCBs, or other hard to remove organic materials, rinse the equipment with pesticide-grade isopropanol.
5. Rinse the equipment with deionized water.
6. To the extent possible, allow components to air dry.
7. If the equipment is to be used immediately after decontamination, screen it with a calibrated PID/FID to ensure that all solvents (if they were used) and trace contaminants have been adequately removed.
8. After the equipment has dried, wrap it in aluminum foil for storage until use.

Dredges employed in sediment sampling are typically decontaminated as follows:

- Remove the sediment sample from the sampling device
- If sufficient associated surface water is available at the sampling site, place the dredge in the water and flush to remove visible sediment.
- Extract the dredge and wash it in soap and water per the project-specific planning documents.

> ***CAUTION***
> When handling dredges, the primary safety concern is trapping fingers or extremities in the larger dredge samplers within the jaws or pinch points of the mechanical jaws. Keep hands, fingers, and extremities away from these pinch and compression points. Either handle the device by the rope or preferably lock the jaws in place to control the potential for closing during maintenance and/or cleaning.

7.3 Contact Waste/Materials

During the course of field investigations, disposable/single-use equipment becomes contaminated. These items include tubing, trowels, PPE (gloves, overboots, splash suits, etc.), and broken sample containers.

With the exception of the broken glass, single-use articles should be cleaned (washed and rinsed) of visible materials and disposed as normal refuse. The exception to this rule is that extremely soiled materials that cannot be cleaned shall be containerized for disposal in accordance with applicable federal, state, and local regulations.

7.3.1 Investigation-Derived Wastes - Decontamination Wash Waters and Sediments

> ***NOTE***
> Requirements for waste storage may differ from one facility to the next. Facility-specific directions for waste storage areas will be provided in project-specific documents, or separate direction will be provided by the Project Manager.

1. Assume that all investigation-derived waste (IDW) generated from decontamination activities contains the hazardous chemicals associated with the site unless there are analytical or other data to the contrary. Waste solution volumes could vary from a few gallons to several hundred gallons in cases where large equipment required cleaning.

2. Where possible, use filtering systems to extend the use of water within a closed system wash unit to recycle water and to reduce possible waste amounts.

> ***NOTE***
> Containerized waste rinse solutions are best stored in 55-gallon drums (or equivalent containers) that can be sealed until ultimate disposal at an approved facility.

3. Label waste storage containers appropriately labeled (see Attachment A).

4. Ensure that the IDW storage area is configured to meet the following specifications to permit access to the containers and to conduct spill/leak monitoring, sampling, and extraction when the disposal route is determined:

   - Enclose areas accessible by the general public using construction fencing and signs.
   - Stored materials in 55-gallon drums on pallets with four (or fewer) drums per pallet.
   - Maintain the retaining bolt and label on the outside of storage containers where readily visible.
   - Provide at least 4 feet of room between each row of pallets to allow access to containers for sampling, drum removal, and spill response.
   - As directed in project-specific planning documents, maintain an IDW Inventory List and provide the list to the site Point of Contact at the termination of each shift.
   - Maintain spill response equipment at the IDW storage area in case it is required for immediate access.

- Where possible, use equipment for moving containers. Where not possible, obtain help to manipulate containers.

CAUTION

Each container of water can weigh up to 490 pounds. Each 55-gallon drum of wet soil can weigh more than 750 pounds. Fill drums and temporary containers to 80 percent capacity to minimize spill and handling difficulties. Use drum carts to move filled drums.

See safe lifting techniques provided in Section 4.4 of the Tetra Tech NUS, Inc. Health and Safety Guidance Manual.

When placing drums, keep your fingers out of pinch and smash points such as between the drums. In some cases such as well development and/or purge water, you can place the drums to be filled on the pallet and transport materials in smaller easier to handle containers.

7.4 Decontamination Evaluation

Upon decontamination of equipment, determine the effectiveness of the decontamination process in the following manner:

- Visual evaluation – A visual evaluation will be conducted to ensure the removal of particulate matter. This shall be done to ensure that the washing/rinsing process is working as intended.

- Instrument Screening – A properly calibrated PID/FID should be used to evaluate the presence of site contaminants and solvents used in the cleaning process. The air intake of the instrument shall be passed over the article to be evaluated. Avoid placing the instrument probe into residual waters. A PID/FID reading greater than the daily established background level requires a repeat of the decontamination process, followed by rescreening with the PID/FID. This sequence must be repeated until no instrument readings greater than the daily established background level are observed. It should be noted that the instrument scan is only viable if the contaminants are detectable within the instrument's capabilities.

NOTE

When required by project-specific planning documents, collection of rinsate blanks (see next step) shall be completed without exception unless approval to not collect these samples is obtained from the Project Manager.

- Collection of Rinsate Blanks – It is recommended that rinsate samples be collected to:

  - Evaluate the decontamination procedure representing different equipment applications (pumps versus drilling equipment) and different decontamination applications.

  - Single-use disposable equipment – The number of samples should represent different types of equipment as well as different lot numbers of single-use articles.

  - The collection and the frequency of collection of rinsate samples are as follows unless specified differently in the project-specific planning documents:

    - Per decontamination method
    - Per disposable article/batch number of disposable articles

NOTE

It is recommended that an initial rinsate sample be collected early in the project to ensure that the decontamination process is functioning properly and to avoid using a contaminated batch of single-use articles. It is recommended that a follow-up sample be collected later during the execution of the project to ensure that those conditions do not change.

Rinsate samples collection may be driven by types of and/or levels of contaminant. Difficult to remove contaminants, oils/greases, some PAHs/PCBs, etc. may also support the collection of additional rinsates due to the obvious challenges to the decontamination process. This is a field consideration to be determined by the FOL.

Attachment A
iDW Label

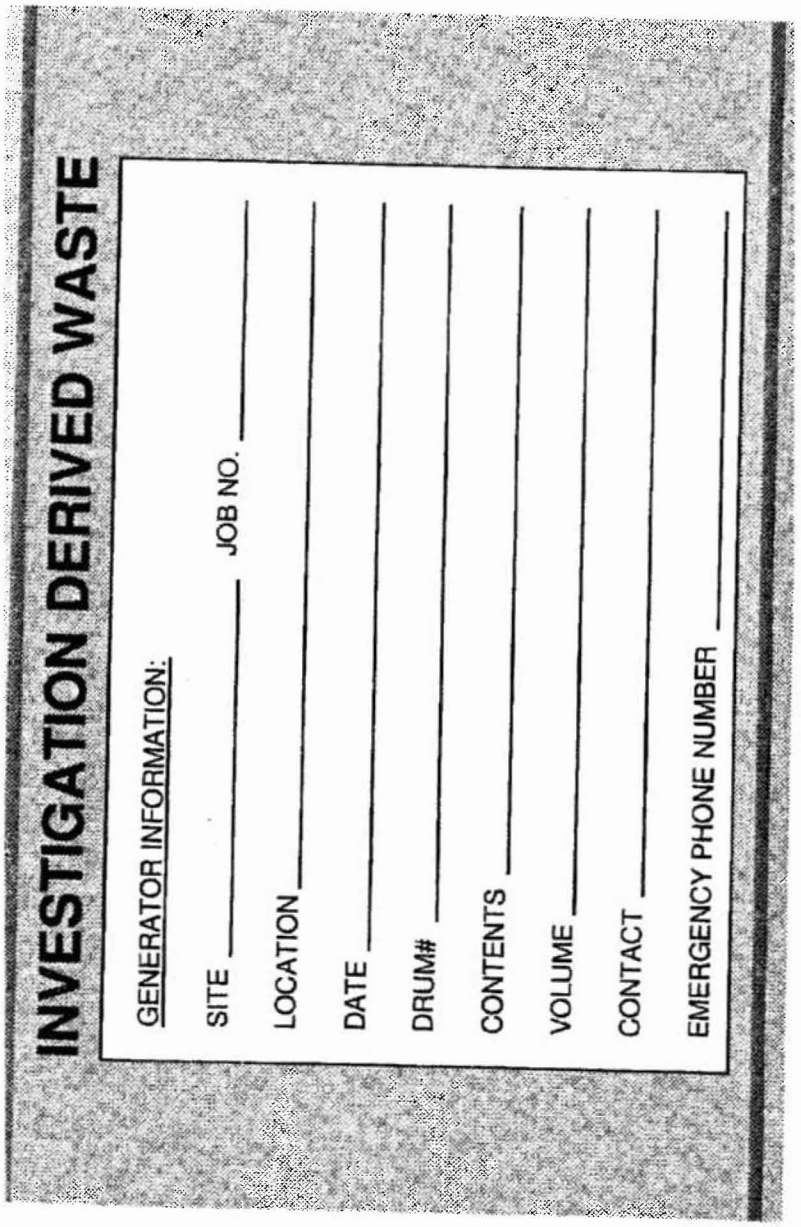

WELL NO.: _____

Tetra Tech NUS, Inc.

OVERBURDEN
MONITORING WELL SHEET
STICK-UP

PROJECT _____	LOCATION _____	DRILLER _____
PROJECT NO. _____	BORING _____	DRILLING METHOD _____
DATE BEGUN _____	DATE COMPLETED _____	
FIELD GEOLOGIST _____		DEVELOPMENT METHOD _____
GROUND ELEVATION _____	DATUM _____	

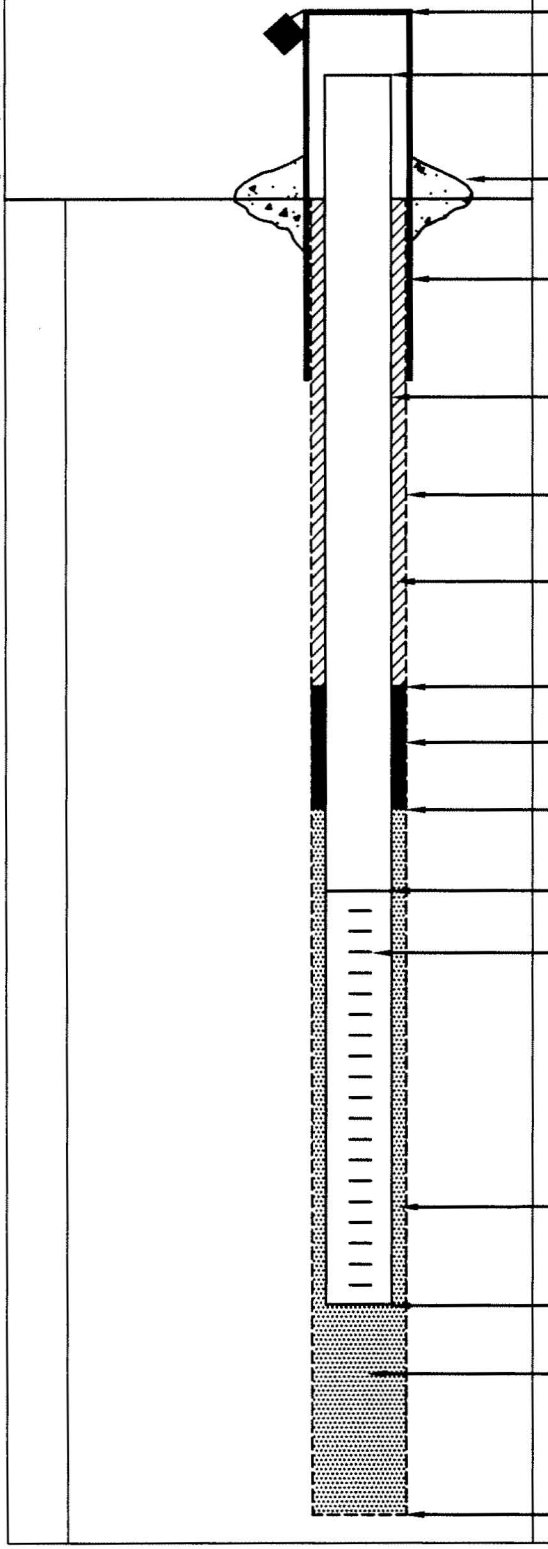

ELEVATION/HEIGHT OF TOP OF SURFACE CASING: ____/____

ELEVATION/HEIGHT OF TOP OF RISER PIPE: ____/____

TYPE OF SURFACE SEAL: _____

I.D. OF SURFACE CASING: _____
TYPE OF SURFACE CASING: _____

RISER PIPE I.D.: _____
TYPE OF RISER PIPE: _____

BOREHOLE DIAMETER: _____

TYPE OF BACKFILL: _____

ELEVATION/DEPTH TOP OF SEAL: ____/____

TYPE OF SEAL: _____

DEPTH TOP OF SAND PACK: _____

ELEVATION/DEPTH TOP OF SCREEN: ____/____

TYPE OF SCREEN: _____

SLOT SIZE x LENGTH: _____

I.D. OF SCREEN: _____

TYPE OF SAND PACK: _____

ELEVATION/DEPTH BOTTOM OF SCREEN: ____/____

ELEVATION/DEPTH BOTTOM OF SAND PACK: ____/____
BACKFILL MATERIAL BELOW SAND: _____

ELEVATION/DEPTH OF HOLE: ____/____

ACAD:FORM_MWSU.dwg 07/20/99 INL

WELL NO.: _____

Tetra Tech NUS, Inc.

BEDROCK
MONITORING WELL SHEET
WELL INSTALLED IN BEDROCK

PROJECT _____	LOCATION _____	DRILLER _____
PROJECT NO. _____	BORING _____	DRILLING METHOD _____
DATE BEGUN _____	DATE COMPLETED _____	
FIELD GEOLOGIST _____		DEVELOPMENT METHOD _____
GROUND ELEVATION _____	DATUM _____	

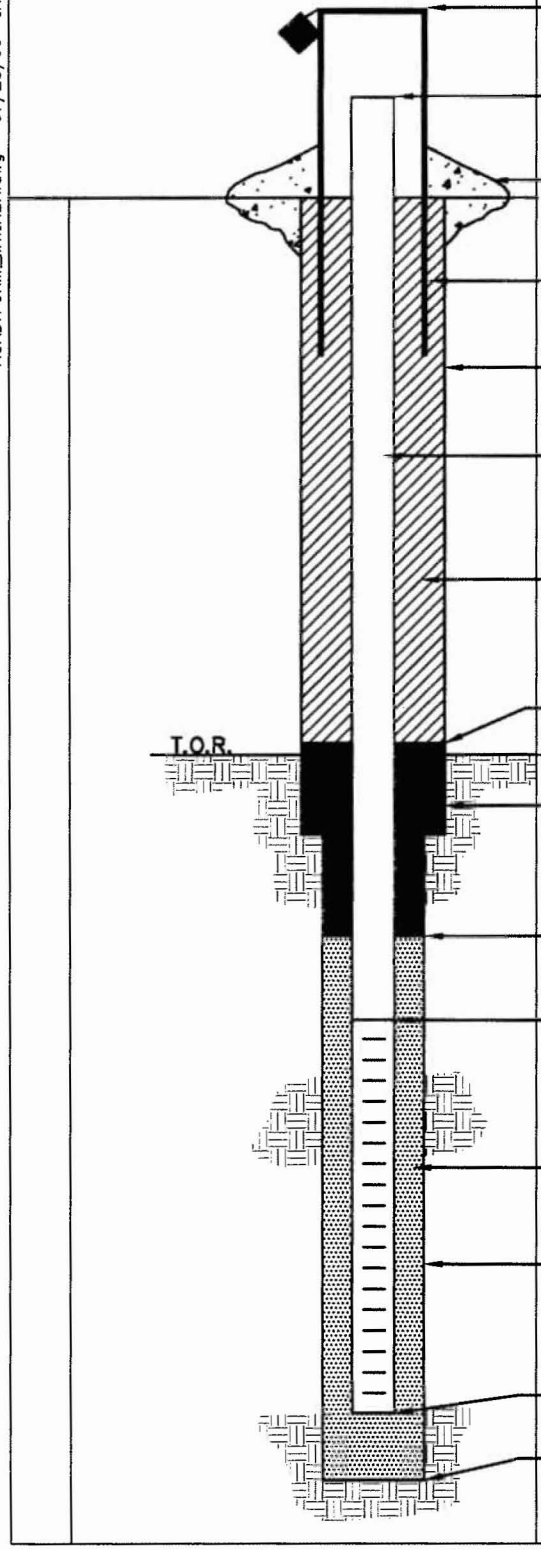

ELEVATION/HEIGHT OF TOP OF SURFACE CASING: ____/____

ELEVATION/HEIGHT TOP OF RISER: ____/____

TYPE OF SURFACE SEAL: _____

I.D. OF SURFACE CASING: _____

DIAMETER OF HOLE: _____

RISER PIPE I.D.: _____

TYPE OF RISER PIPE: _____

TYPE OF BACKFILL: _____

ELEVATION/DEPTH TOP OF SEAL: ____/____

ELEVATION/DEPTH TOP OF BEDROCK: ____/____

TYPE OF SEAL: _____

ELEVATION/DEPTH TOP OF SAND: ____/____

ELEVATION/DEPTH TOP OF SCREEN: ____/____

TYPE OF SCREEN: _____

SLOT SIZE x LENGTH: _____

I.D. SCREEN: _____

TYPE OF SAND PACK: _____

DIAMETER OF HOLE IN BEDROCK: _____

CORE/REAM: _____

ELEVATION/DEPTH BOTTOM SCREEN: ____/____

ELEVATION/DEPTH BOTTOM OF SAND: ____/____

ELEVATION/DEPTH BOTTOM OF HOLE: ____/____

BACKFILL MATERIAL BELOW SAND: _____

ACAD:FORM_MWINBR.dwg 07/20/99 INL

MONITORING WELL MATERIALS
CERTIFICATE OF CONFORMANCE

Well Designation:_____
Site Name: _____
Date Installed: _____
Project Name: _____

Site Geologist: _____
Drilling Company: _____
Driller:_____
Project Number: _____

Material	Brand/Description	Source/Supplier	Sample Collected ?
Well Casing			
Well Screen			
End Cap			
Drilling Fluid			
Drilling Fluid Additives			
Backfill Material			
Annular Filter Pack			
Bentonite Seal			
Annular Grout			
Surface Cement			
Protective Casing			
Paint			
Rod Lubricant			
Compressor Oil			

To the best of my knowledge, I certify that the above described materials were used during installation of this monitoring well.

Signature of Site Geologist:_____

Tetra Tech NUS, Inc.

DAILY ACTIVITIES RECORD

PROJECT NAME: _____ **PROJECT NUMBER:** _____

CLIENT: _____ **LOCATION:** _____

DATE: _____ **ARRIVAL TIME:** _____

Tt NUS PERSONNEL: _____ **DEPARTURE TIME:** _____

CONTRACTOR: _____ **DRILLER:** _____

ITEM	QUANTITY ESTIMATE	QUANTITY TODAY	PREVIOUS TOTAL QUANTITY	CUMULATIVE QUANTITY TO DATE

COMMENTS: _____

_____

_____

_____

APPROVED BY:

_____ _____

Tt NUS REPRESENTATIVE DRILLER

DATE: _____

APPENDIX B

LABORATORY ACCREDITATIONS

Scope of Accreditation
For
CHEMTECH

284 Sheffield Street
Mountainside, NJ 07092
Divyajit Mehta
908-789-8900

In recognition of a successful assessment to ISO/IEC 17025:2005 and the requirements of the DoD Environmental Laboratory Accreditation Program (DoD ELAP) as detailed in the DoD Quality Systems Manual for Environmental Laboratories (DoD QSM v4.2) based on the National Environmental Laboratory Accreditation Conference Chapter 5 Quality Systems Standard (NELAC Voted Revision June 5, 2003), accreditation is granted to CHEMTECH to perform the following tests:

Accreditation granted through: **October 20, 2012**

Testing – Environmental

Non-Potable Water		
Technology	**Method**	**Analyte**
GC/ECD	EPA 8081A,B	4,4`-DDD
GC/ECD	EPA 8081A,B	4,4`-DDE
GC/ECD	EPA 8081A,B	4,4`-DDT
GC/ECD	EPA 8081A,B	Aldrin
GC/ECD	EPA 8081A,B	alpha-BHC (alpha-Hexachlorocyclohexane)
GC/ECD	EPA 8081A,B	alpha Chlordane
GC/ECD	EPA 8081A,B	beta-BHC (beta-Hexachlorocyclohexane)
GC/ECD	EPA 8081A,B	Chlordane (tech.)
GC/ECD	EPA 8081A,B	delta-BHC
GC/ECD	EPA 8081A,B	Dieldrin
GC/ECD	EPA 8081A,B	Endosulfan I
GC/ECD	EPA 8081A,B	Endosulfan II
GC/ECD	EPA 8081A,B	Endosulfan sulfate
GC/ECD	EPA 8081A,B	Endrin aldehyde
GC/ECD	EPA 8081A,B	Endrin ketone
GC/ECD	EPA 8081A,B	Endrin
GC/ECD	EPA 8081A,B	gamma-BHC (Lindane gamma-Hexachlorocyclohexane)

Non-Potable Water		
Technology	**Method**	**Analyte**
GC/ECD	EPA 8081A,B	gamma Chlordane
GC/ECD	EPA 8081A,B	Heptachlor epoxide
GC/ECD	EPA 8081A,B	Heptachlor
GC/ECD	EPA 8081A,B	Methoxychlor
GC/ECD	EPA 8081A,B	Toxaphene (Chlorinated camphene)
GC/ECD	EPA 8082/8082A	Aroclor-1016 (PCB-1016)
GC/ECD	EPA 8082/8082A	Aroclor-1221 (PCB-1221)
GC/ECD	EPA 8082/8082A	Aroclor-1232 (PCB-1232)
GC/ECD	EPA 8082/8082A	Aroclor-1242 (PCB-1242)
GC/ECD	EPA 8082/8082A	Aroclor-1248 (PCB-1248)
GC/ECD	EPA 8082/8082A	Aroclor-1254 (PCB-1254)
GC/ECD	EPA 8082/8082A	Aroclor-1260 (PCB-1260)
GC/ECD	EPA 8151A	2,4,5-T
GC/ECD	EPA 8151A	2,4-D
GC/ECD	EPA 8151A	Dalapon
GC/ECD	EPA 8151A	Dicamba
GC/ECD	EPA 8151A	Dinoseb
GC/ECD	EPA 8151A	Picloram
GC/ECD	EPA 8151A	Silvex (2,4,5-TP)
GC/FID	EPA 8015B/D	Diesel range organics (DRO)
GC/FID	EPA 8015B/D	Gasoline range organics (GRO)
GC/MS	EPA 8260B,C	1,1,1,2-Tetrachloroethane
GC/MS	EPA 8260B,C	1,1,1-Trichloroethane
GC/MS	EPA 8260B,C	1,1,2,2-Tetrachloroethane
GC/MS	EPA 8260B,C	1,1,2-Trichloroethane
GC/MS	EPA 8260B,C	1,1-Dichloroethane
GC/MS	EPA 8260B,C	1,1-Dichloroethylene
GC/MS	EPA 8260B,C	1,1-Dichloropropene
GC/MS	EPA 8260B,C	1,2,3-Trichlorobenzene
GC/MS	EPA 8260B,C	1,2,3-Trichloropropane
GC/MS	EPA 8260B,C	1,2,4-Trichlorobenzene

Non-Potable Water		
Technology	**Method**	**Analyte**
GC/MS	EPA 8260B,C	1,2,4-Trimethylbenzene
GC/MS	EPA 8260B,C	1,2-Dibromo-3-chloropropane (DBCP)
GC/MS	EPA 8260B,C	1,2-Dibromoethane (EDB Ethylene dibromide)
GC/MS	EPA 8260B,C	1,2-Dichlorobenzene
GC/MS	EPA 8260B,C	1,2-Dichloroethane
GC/MS	EPA 8260B,C	1,2-Dichloropropane
GC/MS	EPA 8260B,C	1,3,5-Trimethylbenzene
GC/MS	EPA 8260B,C	1,3-Dichlorobenzene
GC/MS	EPA 8260B,C	1,3-Dichloropropane
GC/MS	EPA 8260B,C	1,4-Dichlorobenzene
GC/MS	EPA 8260B,C	2,2-Dichloropropane
GC/MS	EPA 8260B,C	2-Butanone (Methyl ethyl ketone MEK)
GC/MS	EPA 8260B,C	2-Chloroethyl vinyl ether
GC/MS	EPA 8260B,C	2-Chlorotoluene
GC/MS	EPA 8260B,C	2-Hexanone
GC/MS	EPA 8260B,C	4-Chlorotoluene
GC/MS	EPA 8260B,C	4-Methyl-2-pentanone (MIBK)
GC/MS	EPA 8260B,C	Acetone
GC/MS	EPA 8260B,C	Acrolein (Propenal)
GC/MS	EPA 8260B,C	Acrylonitrile
GC/MS	EPA 8260B,C	1,1,2-Trichlorotrifluoroethane
GC/MS	EPA 8260B,C	Allyl chloride (3-Chloropropene)
GC/MS	EPA 8260B,C	Benzene
GC/MS	EPA 8260B,C	Bromobenzene
GC/MS	EPA 8260B,C	Bromochloromethane
GC/MS	EPA 8260B,C	Bromodichloromethane
GC/MS	EPA 8260B,C	Bromoform
GC/MS	EPA 8260B,C	Carbon disulfide
GC/MS	EPA 8260B,C	Carbon tetrachloride
GC/MS	EPA 8260B,C	Chlorobenzene
GC/MS	EPA 8260B,C	Chloroethane

Non-Potable Water		
Technology	**Method**	**Analyte**
GC/MS	EPA 8260B,C	Chloroform
GC/MS	EPA 8260B,C	cis-1,2-Dichloroethylene
GC/MS	EPA 8260B,C	cis-1,3-Dichloropropene
GC/MS	EPA 8260B,C	Dibromochloromethane
GC/MS	EPA 8260B,C	Dibromomethane
GC/MS	EPA 8260B,C	Dichlorodifluoromethane
GC/MS	EPA 8260B,C	Ethyl acetate
GC/MS	EPA 8260B,C	Ethyl methacrylate
GC/MS	EPA 8260B,C	Ethylbenzene
GC/MS	EPA 8260B,C	Hexachlorobutadiene
GC/MS	EPA 8260B,C	Isopropylbenzene
GC/MS	EPA 8260B,C	m+p-Xylenes
GC/MS	EPA 8260B,C	Methacrylonitrile
GC/MS	EPA 8260B,C	Methyl bromide (Bromomethane)
GC/MS	EPA 8260B,C	Methyl chloride (Chloromethane)
GC/MS	EPA 8260B,C	Methyl tert-butyl ether (MTBE)
GC/MS	EPA 8260B,C	Methylene chloride
GC/MS	EPA 8260B,C	Naphthalene
GC/MS	EPA 8260B,C	n-Butylbenzene
GC/MS	EPA 8260B,C	n-Propylbenzene
GC/MS	EPA 8260B,C	o-Xylene
GC/MS	EPA 8260B,C	p-Dioxane
GC/MS	EPA 8260B,C	p-Isopropyltoluene
GC/MS	EPA 8260B,C	sec-Butylbenzene
GC/MS	EPA 8260B,C	Styrene
GS/MS	EPA 8260B,C	Tert-butyl alcohol
GC/MS	EPA 8260B,C	tert-Butylbenzene
GC/MS	EPA 8260B,C	Tetrachloroethylene (Perchloroethylene)
GC/MS	EPA 8260B,C	Toluene
GC/MS	EPA 8260B,C	trans-1,2-Dichloroethylene
GC/MS	EPA 8260B,C	trans-1,3-Dichloropropylene

Non-Potable Water		
Technology	**Method**	**Analyte**
GC/MS	EPA 8260B,C	trans-1,4-Dichloro-2-butene
GC/MS	EPA 8260B,C	Trichloroethene (Trichloroethylene)
GC/MS	EPA 8260B,C	Trichlorofluoromethane
GC/MS	EPA 8260B,C	Vinyl acetate
GC/MS	EPA 8260B,C	Vinyl chloride
GC/MS	EPA 8260B,C	Xylene (total)
GC/MS	EPA 8270C,D	1,2,4,5-Tetrachlorobenzene
GC/MS	EPA 8270C,D	1,2,4-Trichlorobenzene
GC/MS	EPA 8270C,D	1,2-Dichlorobenzene
GC/MS	EPA 8270C,D	1,2-Diphenylhydrazine
GC/MS	EPA 8270C,D	1,3-Dichlorobenzene
GC/MS	EPA 8270C,D	1,4-Dichlorobenzene
GC/MS	EPA 8270C,D	2,3,4,6-Tetrachlorophenol
GC/MS	EPA 8270C,D	2,4,5-Trichlorophenol
GC/MS	EPA 8270C,D	2,4,6-Trichlorophenol
GC/MS	EPA 8270C,D	2,4-Dichlorophenol
GC/MS	EPA 8270C,D	2,4-Dimethylphenol
GC/MS	EPA 8270C,D	2,4-Dinitrophenol
GC/MS	EPA 8270C,D	2,4-Dinitrotoluene (2,4-DNT)
GC/MS	EPA 8270C,D	2,6-Dinitrotoluene (2,6-DNT)
GC/MS	EPA 8270C,D	2-Chloronaphthalene
GC/MS	EPA 8270C,D	2-Chlorophenol
GC/MS	EPA 8270C,D	2-Methyl-4,6-dinitrophenol
GC/MS	EPA 8270C,D	2-Methylnaphthalene
GC/MS	EPA 8270C,D	2-Methylphenol (o-Cresol)
GC/MS	EPA 8270C,D	2-Nitroaniline
GC/MS	EPA 8270C,D	2-Nitrophenol
GC/MS	EPA 8270C,D	3,3`-Dichlorobenzidine
GC/MS	EPA 8270C,D	3+4-Methylphenol
GC/MS	EPA 8270C,D	3-Nitroaniline
GC/MS	EPA 8270C,D	4-Bromophenyl phenyl ether

Non-Potable Water		
Technology	**Method**	**Analyte**
GC/MS	EPA 8270C,D	4-Chloro-3-methylphenol
GC/MS	EPA 8270C,D	4-Chloroaniline
GC/MS	EPA 8270C,D	4-Chlorophenyl phenylether
GC/MS	EPA 8270C,D	4-Nitroaniline
GC/MS	EPA 8270C,D	4-Nitrophenol
GC/MS	EPA 8270C,D	Acenaphthene
GC/MS	EPA 8270C,D	Acenaphthylene
GC/MS	EPA 8270C,D	Acetophenone
GC/MS	EPA 8270C,D	Aniline
GC/MS	EPA 8270C,D	Anthracene
GC/MS	EPA 8270C,D	Benzidine
GC/MS	EPA 8270C,D	Benzo(a)anthracene
GC/MS	EPA 8270C,D	Benzo(a)pyrene
GC/MS	EPA 8270C,D	Benzo(b)fluoranthene
GC/MS	EPA 8270C,D	Benzo(g,h,i)perylene
GC/MS	EPA 8270C,D	Benzo(k)fluoranthene
GC/MS	EPA 8270C,D	Benzoic acid
GC/MS	EPA 8270C,D	Benzyl alcohol
GC/MS	EPA 8270C,D	bis(2-Chloroethoxy)methane
GC/MS	EPA 8270C,D	bis(2-Chloroethyl) ether
GC/MS	EPA 8270C,D	bis(2-Chloroisopropyl) ether (2,2`-Oxybis(1-chloropropane))
GC/MS	EPA 8270C,D	bis(2-Ethylhexyl) phthalate (DEHP)
GC/MS	EPA 8270C,D	Butyl benzyl phthalate
GC/MS	EPA 8270C,D	Carbazole
GC/MS	EPA 8270C,D	Chrysene
GC/MS	EPA 8270C,D	Dibenz(a,h)anthracene
GC/MS	EPA 8270C,D	Dibenzofuran
GC/MS	EPA 8270C,D	Diethyl phthalate
GC/MS	EPA 8270C,D	Dimethyl phthalate
GC/MS	EPA 8270C,D	Di-n-butyl phthalate
GC/MS	EPA 8270C,D	Di-n-octyl phthalate

Non-Potable Water		
Technology	**Method**	**Analyte**
GC/MS	EPA 8270C,D	Diphenylamine
GC/MS	EPA 8270C,D	Fluoranthene
GC/MS	EPA 8270C,D	Fluorene
GC/MS	EPA 8270C,D	Hexachlorobenzene
GC/MS	EPA 8270C,D	Hexachlorobutadiene
GC/MS	EPA 8270C,D	Hexachlorocyclopentadiene
GC/MS	EPA 8270C,D	Hexachloroethane
GC/MS	EPA 8270C,D	Indeno(1,2,3-cd)pyrene
GC/MS	EPA 8270C,D	Isophorone
GC/MS	EPA 8270C,D	Naphthalene
GC/MS	EPA 8270C,D	Nitrobenzene
GC/MS	EPA 8270C,D	n-Nitrosodimethylamine
GC/MS	EPA 8270C,D	n-Nitrosodi-n-propylamine
GC/MS	EPA 8270C,D	n-Nitrosodiphenylamine
GC/MS	EPA 8270C,D	Pentachlorophenol
GC/MS	EPA 8270C,D	Phenanthrene
GC/MS	EPA 8270C,D	Phenol
GC/MS	EPA 8270C,D	Pyrene
GC/MS	EPA 8270C,D	Pyridine
HPLC	EPA 8330/8330A	1,3,5-Trinitrobenzene
HPLC	EPA 8330/8330A	1,3-Dinitrobenzene
HPLC	EPA 8330/8330A	2,4,6-Trinitrotoluene
HPLC	EPA 8330/8330A	2,4-Dinitrotoluene
HPLC	EPA 8330/8330A	2,6-Dinitrotoluene
HPLC	EPA 8330/8330A	2-Amino-4,6-Dinitrotoluene
HPLC	EPA 8330/8330A	2-Nitrotoluene
HPLC	EPA 8330/8330A	3-Nitrotoluene
HPLC	EPA 8330/8330A	4-Amino-2,6-Dinitrotoluene
HPLC	EPA 8330/8330A	4-Nitrotoluene
HPLC	EPA 8330/8330A	HMX
HPLC	EPA 8330/8330A	Nitrobenzene

Non-Potable Water		
Technology	**Method**	**Analyte**
HPLC	EPA 8330/8330A	RDX
HPLC	EPA 8330/8330A	Tetryl
Gravimetric	EPA 1664A	Oil & Grease
Gravimetric	EPA 1664A	Total Petroleum Hydrocarbons (TPH)
Gravimetric	EPA 9071B	Oil & Grease
IC	EPA 9056/9056A	Bromide
IC	EPA 9056/9056A	Chloride
IC	EPA 9056/9056A	Fluoride
IC	EPA 9056/9056A	Nitrate
IC	EPA 9056/9056A	Nitrite
IC	EPA 9056/9056A	O-phosphate
IC	EPA 9056/9056A	Sulfate
CVAA	EPA 7470A	Mercury
ICP	EPA 6010B,C	Aluminum
ICP	EPA 6010B,C	Antimony
ICP	EPA 6010B,C	Arsenic
ICP	EPA 6010B,C	Barium
ICP	EPA 6010B,C	Beryllium
ICP	EPA 6010B,C	Boron
ICP	EPA 6010B,C	Cadmium
ICP	EPA 6010B,C	Calcium
ICP	EPA 6010B,C	Chromium
ICP	EPA 6010B,C	Cobalt
ICP	EPA 6010B,C	Copper
ICP	EPA 6010B,C	Iron
ICP	EPA 6010B,C	Lead
ICP	EPA 6010B,C	Magnesium
ICP	EPA 6010B,C	Manganese
ICP	EPA 6010B,C	Molybdenum
ICP	EPA 6010B,C	Nickel
ICP	EPA 6010B,C	Potassium

Non-Potable Water		
Technology	**Method**	**Analyte**
ICP	EPA 6010B,C	Selenium
ICP	EPA 6010B,C	Silicon
ICP	EPA 6010B,C	Silver
ICP	EPA 6010B,C	Sodium
ICP	EPA 6010B,C	Thallium
ICP	EPA 6010B,C	Tin
ICP	EPA 6010B,C	Titanium
ICP	EPA 6010B,C	Vanadium
ICP	EPA 6010B,C	Zinc
ICP-MS	EPA 6020/6020A	Aluminum
ICP-MS	EPA 6020/6020A	Antimony
ICP-MS	EPA 6020/6020A	Arsenic
ICP-MS	EPA 6020/6020A	Barium
ICP-MS	EPA 6020/6020A	Beryllium
ICP-MS	EPA 6020/6020A	Boron
ICP-MS	EPA 6020/6020A	Cadmium
ICP-MS	EPA 6020/6020A	Calcium
ICP-MS	EPA 6020/6020A	Chromium
ICP-MS	EPA 6020/6020A	Cobalt
ICP-MS	EPA 6020/6020A	Copper
ICP-MS	EPA 6020/6020A	Iron
ICP-MS	EPA 6020/6020A	Lead
ICP-MS	EPA 6020/6020A	Magnesium
ICP-MS	EPA 6020/6020A	Manganese
ICP-MS	EPA 6020/6020A	Molybdenum
ICP-MS	EPA 6020/6020A	Nickel
ICP-MS	EPA 6020/6020A	Potassium
ICP-MS	EPA 6020/6020A	Selenium
ICP-MS	EPA 6020/6020A	Silicon
ICP-MS	EPA 6020/6020A	Silver
ICP-MS	EPA 6020/6020A	Sodium

Non-Potable Water		
Technology	**Method**	**Analyte**
ICP-MS	EPA 6020/6020A	Thallium
ICP-MS	EPA 6020/6020A	Tin
ICP-MS	EPA 6020/6020A	Titanium
ICP-MS	EPA 6020/6020A	Vanadium
ICP-MS	EPA 6020/6020A	Zinc
Preparation	**Method**	**Type**
ISE	EPA 9040C	Corrosivity (pH)
ISE	EPA 9040C	pH
pH Paper	EPA 9041A	pH
ISE	EPA 9050A	Conductivity
Physical	EPA 1010A	Ignitability
Titrimetric	EPA 9034	Sulfide
Probe21	EPA 9040C	pH
TOC	EPA 9060/9060A	Total organic carbon
Turbidimetric	EPA 9038	Sulfate
Preparation	EPA 3060A	Chromium VI
UV/VIS	EPA 7196A	Chromium VI
Distillation	EPA 9010C	Total cyanide
UV/VIS	EPA 9012B	Total cyanide
Distillation	EPA 9013	Total cyanide
UV/VIS	EPA 9065	Total phenolics
Organic Preparation	3510C	Separatory Funnel
Organic Preparation	3541	Automated Soxhlet Extraction
Clean Up	3620C	Florisil Cleanup
Clean Up	3630C	Silica Gel Cleanup
Clean Up	3640A	Gel-Permeation Cleanup
Clean Up	3660	Sulfur Cleanup
Inorganic Preparation	3050B	Hotblock
Inorganic Preparation	3010A	Hotblock
Volatile Organic Preparation	5030B	Purge and Trap
Distillation	9030B	Sulfide
Extraction/Titrimetric	9031	Sulfide

Solid and Chemical Waste		
Technology	**Method**	**Analyte**
GC/ECD	EPA 8081A,B	4,4`-DDD
GC/ECD	EPA 8081A,B	4,4`-DDE
GC/ECD	EPA 8081A,B	4,4`-DDT
GC/ECD	EPA 8081A,B	Aldrin
GC/ECD	EPA 8081A,B	alpha-BHC (alpha-Hexachlorocyclohexane)
GC/ECD	EPA 8081A,B	alpha Chlordane
GC/ECD	EPA 8081A,B	beta-BHC (beta-Hexachlorocyclohexane)
GC/ECD	EPA 8081A,B	Chlordane (tech.)
GC/ECD	EPA 8081A,B	delta-BHC
GC/ECD	EPA 8081A,B	Dieldrin
GC/ECD	EPA 8081A,B	Endosulfan I
GC/ECD	EPA 8081A,B	Endosulfan II
GC/ECD	EPA 8081A,B	Endosulfan sulfate
GC/ECD	EPA 8081A,B	Endrin aldehyde
GC/ECD	EPA 8081A,B	Endrin ketone
GC/ECD	EPA 8081A,B	Endrin
GC/ECD	EPA 8081A,B	gamma-BHC (Lindane gamma-Hexachlorocyclohexane)
GC/ECD	EPA 8081A,B	gamma Chlordane
GC/ECD	EPA 8081A,B	Heptachlor epoxide
GC/ECD	EPA 8081A,B	Heptachlor
GC/ECD	EPA 8081A,B	Methoxychlor
GC/ECD	EPA 8081A,B	Toxaphene (Chlorinated camphene)
GC/ECD	EPA 8082/8082A	Aroclor-1016 (PCB-1016)
GC/ECD	EPA 8082/8082A	Aroclor-1221 (PCB-1221)
GC/ECD	EPA 8082/8082A	Aroclor-1232 (PCB-1232)
GC/ECD	EPA 8082/8082A	Aroclor-1242 (PCB-1242)
GC/ECD	EPA 8082/8082A	Aroclor-1248 (PCB-1248)
GC/ECD	EPA 8082/8082A	Aroclor-1254 (PCB-1254)
GC/ECD	EPA 8082/8082A	Aroclor-1260 (PCB-1260)
GC/ECD	EPA 8151A	2,4,5-T

Solid and Chemical Waste		
Technology	**Method**	**Analyte**
GC/ECD	EPA 8151A	2,4-D
GC/ECD	EPA 8151A	Dalapon
GC/ECD	EPA 8151A	Dicamba
GC/ECD	EPA 8151A	Dinoseb
GC/ECD	EPA 8151A	Picloram
GC/ECD	EPA 8151A	Silvex (2,4,5-TP)
GC/FID	EPA 8015B/D	Diesel range organics (DRO)
GC/MS	EPA 8015B/D	GRO
GC/MS	EPA 8260B,C	1,1,1,2-Tetrachloroethane
GC/MS	EPA 8260B,C	1,1,1-Trichloroethane
GC/MS	EPA 8260B,C	1,1,2,2-Tetrachloroethane
GC/MS	EPA 8260B,C	1,1,2-Trichloroethane
GC/MS	EPA 8260B,C	1,1,2-Trichlorotrifluoroethane
GC/MS	EPA 8260B,C	1,1-Dichloroethane
GC/MS	EPA 8260B,C	1,1-Dichloroethylene
GC/MS	EPA 8260B,C	1,1-Dichloropropene
GC/MS	EPA 8260B,C	1,2,3-Trichlorobenzene
GC/MS	EPA 8260B,C	1,2,3-Trichloropropane
GC/MS	EPA 8260B,C	1,2,4-Trichlorobenzene
GC/MS	EPA 8260B,C	1,2,4-Trimethylbenzene
GC/MS	EPA 8260B,C	1,2-Dibromo-3-chloropropane (DBCP)
GC/MS	EPA 8260B,C	1,2-Dibromoethane (EDB Ethylene dibromide)
GC/MS	EPA 8260B,C	1,2-Dichlorobenzene
GC/MS	EPA 8260B,C	1,2-Dichloroethane
GC/MS	EPA 8260B,C	1,2-Dichloropropane
GC/MS	EPA 8260B,C	1,3,5-Trimethylbenzene
GC/MS	EPA 8260B,C	1,3-Dichlorobenzene
GC/MS	EPA 8260B,C	1,3-Dichloropropane
GC/MS	EPA 8260B,C	1,4-Dichlorobenzene
GC/MS	EPA 8260B,C	2,2-Dichloropropane

Solid and Chemical Waste		
Technology	**Method**	**Analyte**
GC/MS	EPA 8260B,C	2-Butanone (Methyl ethyl ketone MEK)
GC/MS	EPA 8260B,C	2-Chloroethyl vinyl ether
GC/MS	EPA 8260B,C	2-Chlorotoluene
GC/MS	EPA 8260B,C	2-Hexanone
GC/MS	EPA 8260B,C	4-Chlorotoluene
GC/MS	EPA 8260B,C	4-Methyl-2-pentanone (MIBK)
GC/MS	EPA 8260B,C	Acetone
GC/MS	EPA 8260B,C	Acrolein (Propenal)
GC/MS	EPA 8260B,C	Acrylonitrile
GC/MS	EPA 8260B,C	Allyl chloride (3-Chloropropene)
GC/MS	EPA 8260B,C	Benzene
GC/MS	EPA 8260B,C	Bromobenzene
GC/MS	EPA 8260B,C	Bromochloromethane
GC/MS	EPA 8260B,C	Bromodichloromethane
GC/MS	EPA 8260B,C	Bromoform
GC/MS	EPA 8260B,C	Carbon disulfide
GC/MS	EPA 8260B,C	Carbon tetrachloride
GC/MS	EPA 8260B,C	Chlorobenzene
GC/MS	EPA 8260B,C	Chloroethane
GC/MS	EPA 8260B,C	Chloroform
GC/MS	EPA 8260B,C	Methylcyclohexane
GC/MS	EPA 8260B,C	m+p-xylene
GC/MS	EPA 8260B,C	o-xylene
GC/MS	EPA 8260B,C	cis-1,2-Dichloroethylene
GC/MS	EPA 8260B,C	cis-1,3-Dichloropropene
GC/MS	EPA 8260B,C	Dibromochloromethane
GC/MS	EPA 8260B,C	Dibromomethane
GC/MS	EPA 8260B,C	Dichlorodifluoromethane
GC/MS	EPA 8260B,C	Ethyl methacrylate
GC/MS	EPA 8260B,C	Ethylbenzene

Solid and Chemical Waste		
Technology	**Method**	**Analyte**
GC/MS	EPA 8260B,C	Hexachlorobutadiene
GC/MS	EPA 8260B,C	Isopropylbenzene
GC/MS	EPA 8260B,C	Methacrylonitrile
GC/MS	EPA 8260B,C	Methyl bromide (Bromomethane)
GC/MS	EPA 8260B,C	Methyl chloride (Chloromethane)
GC/MS	EPA 8260B,C	Methyl tert-butyl ether (MTBE)
GC/MS	EPA 8260B,C	Methylene chloride
GC/MS	EPA 8260B,C	Naphthalene
GC/MS	EPA 8260B,C	n-Butylbenzene
GC/MS	EPA 8260B,C	n-Propylbenzene
GC/MS	EPA 8260B,C	p-Dioxane
GC/MS	EPA 8260B,C	p-Isopropyltoluene
GC/MS	EPA 8260B,C	sec-Butylbenzene
GC/MS	EPA 8260B,C	Styrene
GC/MS	EPA 8260B,C	tert-butyl alcohol
GC/MS	EPA 8260B,C	tert-Butylbenzene
GC/MS	EPA 8260B,C	Tetrachloroethylene (Perchloroethylene)
GC/MS	EPA 8260B,C	Toluene
GC/MS	EPA 8260B,C	trans-1,2-Dichloroethylene
GC/MS	EPA 8260B,C	trans-1,3-Dichloropropylene
GC/MS	EPA 8260B,C	trans-1,4-Dichloro-2-butene
GC/MS	EPA 8260B,C	Trichloroethene (Trichloroethylene)
GC/MS	EPA 8260B,C	Trichlorofluoromethane
GC/MS	EPA 8260B,C	Vinyl acetate
GC/MS	EPA 8260B,C	Vinyl chloride
GC/MS	EPA 8260B,C	Xylene (total)
GC/MS	EPA 8270C,D	1,2,4,5-Tetrachlorobenzene
GC/MS	EPA 8270C,D	1,2,4-Trichlorobenzene
GC/MS	EPA 8270C,D	1,2-Dichlorobenzene
GC/MS	EPA 8270C,D	1,2-Diphenylhydrazine

Solid and Chemical Waste		
Technology	**Method**	**Analyte**
GC/MS	EPA 8270C,D	1,3-Dichlorobenzene
GC/MS	EPA 8270C,D	1,4-Dichlorobenzene
GC/MS	EPA 8270C,D	2,3,4,6-Tetrachlorophenol
GC/MS	EPA 8270C,D	2,4,5-Trichlorophenol
GC/MS	EPA 8270C,D	2,4,6-Trichlorophenol
GC/MS	EPA 8270C,D	2,4-Dichlorophenol
GC/MS	EPA 8270C,D	2,4-Dimethylphenol
GC/MS	EPA 8270C,D	2,4-Dinitrophenol
GC/MS	EPA 8270C,D	2,4-Dinitrotoluene (2,4-DNT)
GC/MS	EPA 8270C,D	2,6-Dinitrotoluene (2,6-DNT)
GC/MS	EPA 8270C,D	2-Chloronaphthalene
GC/MS	EPA 8270C,D	2-Chlorophenol
GC/MS	EPA 8270C,D	2-Methyl-4,6-dinitrophenol
GC/MS	EPA 8270C,D	2-Methylnaphthalene
GC/MS	EPA 8270C,D	2-Methylphenol (o-Cresol)
GC/MS	EPA 8270C,D	2-Nitroaniline
GC/MS	EPA 8270C,D	2-Nitrophenol
GC/MS	EPA 8270C,D	3,3`-Dichlorobenzidine
GC/MS	EPA 8270C,D	3+4-Methylphenol
GC/MS	EPA 8270C,D	3-Nitroaniline
GC/MS	EPA 8270C,D	4-Bromophenyl phenyl ether
GC/MS	EPA 8270C,D	4-Chloro-3-methylphenol
GC/MS	EPA 8270C,D	4-Chloroaniline
GC/MS	EPA 8270C,D	4-Chlorophenyl phenylether
GC/MS	EPA 8270C,D	4-Nitroaniline
GC/MS	EPA 8270C,D	4-Nitrophenol
GC/MS	EPA 8270C,D	Acenaphthene
GC/MS	EPA 8270C,D	Acenaphthylene
GC/MS	EPA 8270C,D	Acetophenone
GC/MS	EPA 8270C,D	Aniline

Solid and Chemical Waste		
Technology	**Method**	**Analyte**
GC/MS	EPA 8270C,D	Anthracene
GC/MS	EPA 8270C,D	Aramite
GC/MS	EPA 8270C,D	Benzidine
GC/MS	EPA 8270C,D	Benzo(a)anthracene
GC/MS	EPA 8270C,D	Benzo(a)pyrene
GC/MS	EPA 8270C,D	Benzo(b)fluoranthene
GC/MS	EPA 8270C,D	Benzo(g,h,i)perylene
GC/MS	EPA 8270C,D	Benzo(k)fluoranthene
GC/MS	EPA 8270C,D	Benzoic acid
GC/MS	EPA 8270C,D	Benzyl alcohol
GC/MS	EPA 8270C,D	bis(2-Chloroethoxy)methane
GC/MS	EPA 8270C,D	bis(2-Chloroethyl) ether
GC/MS	EPA 8270C,D	bis(2-Chloroisopropyl) ether (2,2`-Oxybis(1-chloropropane))
GC/MS	EPA 8270C,D	bis(2-Ethylhexyl) phthalate (DEHP)
GC/MS	EPA 8270C,D	Butyl benzyl phthalate
GC/MS	EPA 8270C,D	Carbazole
GC/MS	EPA 8270C,D	Chrysene
GC/MS	EPA 8270C,D	Dibenz(a,h)anthracene
GC/MS	EPA 8270C,D	Dibenzofuran
GC/MS	EPA 8270C,D	Diethyl phthalate
GC/MS	EPA 8270C,D	Dimethyl phthalate
GC/MS	EPA 8270C,D	Di-n-butyl phthalate
GC/MS	EPA 8270C,D	Di-n-octyl phthalate
GC/MS	EPA 8270C,D	Diphenylamine
GC/MS	EPA 8270C,D	Fluoranthene
GC/MS	EPA 8270C,D	Fluorene
GC/MS	EPA 8270C,D	Hexachlorobenzene
GC/MS	EPA 8270C,D	Hexachlorobutadiene
GC/MS	EPA 8270C,D	Hexachlorocyclopentadiene
GC/MS	EPA 8270C,D	Hexachloroethane

Solid and Chemical Waste		
Technology	**Method**	**Analyte**
GC/MS	EPA 8270C,D	Indeno(1,2,3-cd)pyrene
GC/MS	EPA 8270C,D	Isophorone
GC/MS	EPA 8270C,D	Naphthalene
GC/MS	EPA 8270C,D	Nitrobenzene
GC/MS	EPA 8270C,D	n-Nitrosodimethylamine
GC/MS	EPA 8270C,D	n-Nitroso-di-n-butylamine
GC/MS	EPA 8270C,D	n-Nitrosodi-n-propylamine
GC/MS	EPA 8270C,D	n-Nitrosodiphenylamine
GC/MS	EPA 8270C,D	Pentachlorophenol
GC/MS	EPA 8270C,D	Phenanthrene
GC/MS	EPA 8270C,D	Phenol
GC/MS	EPA 8270C,D	Pyrene
GC/MS	EPA 8270C,D	Pyridine
Gravimetric	EPA 1664A	Oil & Grease
Gravimetric	EPA 1664A	Total Petroleum Hydrocarbons (TPH)
HPLC	EPA 8330/8330A	1,3,5-Trinitrobenzene
HPLC	EPA 8330/8330A	1,3-Dinitrobenzene
HPLC	EPA 8330/8330A	2,4,6-Trinitrotoluene
HPLC	EPA 8330/8330A	2,4-Dinitrotoluene
HPLC	EPA 8330/8330A	2,6-Dinitrotoluene
HPLC	EPA 8330/8330A	2-Amino-4,6-Dinitrotoluene
HPLC	EPA 8330/8330A	2-Nitrotoluene
HPLC	EPA 8330/8330A	3-Nitrotoluene
HPLC	EPA 8330/8330A	4-Amino-2,6-Dinitrotoluene
HPLC	EPA 8330/8330A	4-Nitrotoluene
HPLC	EPA 8330/8330A	HMX
HPLC	EPA 8330/8330A	Nitrobenzene
HPLC	EPA 8330/8330A	RDX
HPLC	EPA 8330/8330A	Tetryl
Colorimetric	EPA 9012B	Total cyanide

Solid and Chemical Waste		
Technology	**Method**	**Analyte**
CVAA	EPA 7471A,B	Mercury
Gravimetric	EPA 9071B	Oil & Grease
IC	EPA 9056/9056A	Nitrite
IC	EPA 9056/9056A	Nitrate
IC	EPA 9056/9056A	Bromide
IC	EPA 9056/9056A	Chloride
IC	EPA 9056/9056A	Fluoride
IC	EPA 9056/9056A	O-phosphate
ICP	EPA 6010B,C	Aluminum
ICP	EPA 6010B,C	Antimony
ICP	EPA 6010B,C	Arsenic
ICP	EPA 6010B,C	Barium
ICP	EPA 6010B,C	Beryllium
ICP	EPA 6010B,C	Boron
ICP	EPA 6010B,C	Cadmium
ICP	EPA 6010B,C	Calcium
ICP	EPA 6010B,C	Chromium
ICP	EPA 6010B,C	Cobalt
ICP	EPA 6010B,C	Copper
ICP	EPA 6010B,C	Iron
ICP	EPA 6010B,C	Lead
ICP	EPA 6010B,C	Magnesium
ICP	EPA 6010B,C	Manganese
ICP	EPA 6010B,C	Molybdenum
ICP	EPA 6010B,C	Nickel
ICP	EPA 6010B,C	Potassium
ICP	EPA 6010B,C	Selenium
ICP	EPA 6010B,C	Silicon
ICP	EPA 6010B,C	Silver
ICP	EPA 6010B,C	Sodium

Solid and Chemical Waste		
Technology	**Method**	**Analyte**
ICP	EPA 6010B,C	Thallium
ICP	EPA 6010B,C	Tin
ICP	EPA 6010B,C	Titanium
ICP	EPA 6010B,C	Vanadium
ICP	EPA 6010B,C	Zinc
ICP-MS	EPA 6020/6020A	Aluminum
ICP-MS	EPA 6020/6020A	Antimony
ICP-MS	EPA 6020/6020A	Arsenic
ICP-MS	EPA 6020/6020A	Barium
ICP-MS	EPA 6020/6020A	Beryllium
ICP-MS	EPA 6020/6020A	Boron
ICP-MS	EPA 6020/6020A	Cadmium
ICP-MS	EPA 6020/6020A	Calcium
ICP-MS	EPA 6020/6020A	Chromium
ICP-MS	EPA 6020/6020A	Cobalt
ICP-MS	EPA 6020/6020A	Copper
ICP-MS	EPA 6020/6020A	Iron
ICP-MS	EPA 6020/6020A	Lead
ICP-MS	EPA 6020/6020A	Magnesium
ICP-MS	EPA 6020/6020A	Manganese
ICP-MS	EPA 6020/6020A	Molybdenum
ICP-MS	EPA 6020/6020A	Nickel
ICP-MS	EPA 6020/6020A	Potassium
ICP-MS	EPA 6020/6020A	Selenium
ICP-MS	EPA 6020/6020A	Silicon
ICP-MS	EPA 6020/6020A	Silver
ICP-MS	EPA 6020/6020A	Sodium
ICP-MS	EPA 6020/6020A	Thallium
ICP-MS	EPA 6020/6020A	Tin
ICP-MS	EPA 6020/6020A	Titanium

Solid and Chemical Waste		
Technology	**Method**	**Analyte**
ICP-MS	EPA 6020/6020A	Vanadium
ICP-MS	EPA 6020/6020A	Zinc
Preparation	**Method**	**Type**
pH Paper	EPA 9041A	pH
Probe	EPA 9045C	pH
ISE	EPA 9040C	pH/Corrosivity
TOC	EPA 9060/9060A	Total organic carbon
Physical	EPA 1010A	Ignitability
Titrimetric	EPA 9034	Sulfide
Turbidimetric	EPA 9038	Sulfate
Physical	EPA 9095A,B	Paint Filter Liquids Test
Preparation	EPA 3060A	Chromium VI
UV/VIS	EPA 7196A	Chromium VI
Distillation	EPA 9010C	Total cyanide
UV/VIS	EPA 9012B	Total cyanide
Distillation	EPA 9013	Total cyanide
UV/VIS	EPA 9065	Total phenolics
Preparation	EPA 1311	Toxicity Characteristic Leaching Procedure
Preparation	EPA 1312	SPLP
Organic Preparation	3541	Automated Soxhlet Extraction
Clean Up	3620C	Florisil Cleanup
Clean Up	3630C	Silica Gel Cleanup
Clean Up	3640A	Gel-Permeation Cleanup
Clean Up	3660	Sulfur Cleanup
Inorganics Preparation	3050B	Hotblock
Volatile Organics Preparation	5035A	Closed System Purge and Trap
Organic Preparation	3580A	Waste dilution
Distillation	9030B	Sulfide
Extraction/Titrimetric	9031	Sulfide

Air		
Technology	**Method**	**Analyte**
GC/MS	TO-15	1,1,1-Trichloroethane
GC/MS	TO-15	1,1,2,2-Tetrachloroethane
GC/MS	TO-15	1,1,2-Trichloroethane
GC/MS	TO-15	1,1,2-Trichlorotrifluoroethane
GC/MS	TO-15	1,1-Dichloroethane
GC/MS	TO-15	1,1-Dichloroethene
GC/MS	TO-15	1,2,4-Trichlorobenzene
GC/MS	TO-15	1,2,4-Trimethylbenzene
GC/MS	TO-15	1,2-Dibromoethane
GC/MS	TO-15	1,2-Dichlorobenzene
GC/MS	TO-15	1,2-Dichloroethane
GC/MS	TO-15	1,2-Dichloropropane
GC/MS	TO-15	1,3,5-Trimethylbenzene
GC/MS	TO-15	1,3-Butadiene
GC/MS	TO-15	1,3-Dichlorobenzene
GC/MS	TO-15	1,4-Dichlorobenzene
GC/MS	TO-15	1,4-Dioxane
GC/MS	TO-15	2,2,4-Trimethylpentane
GC/MS	TO-15	2-Butanone
GC/MS	TO-15	2-Chlorotoluene
GC/MS	TO-15	2-Hexanone
GC/MS	TO-15	4-Ethyltoluene
GC/MS	TO-15	4-Methyl-2-Pentanone
GC/MS	TO-15	Acetone
GC/MS	TO-15	Allyl Chloride
GC/MS	TO-15	Benzene
GC/MS	TO-15	Benzyl Chloride
GC/MS	TO-15	Bromodichloromethane
GC/MS	TO-15	Bromoethene
GC/MS	TO-15	Bromoform
GC/MS	TO-15	Bromomethane

Air		
Technology	**Method**	**Analyte**
GC/MS	TO-15	Carbon Disulfide
GC/MS	TO-15	Carbon Tetrachloride
GC/MS	TO-15	Chlorobenzene
GC/MS	TO-15	Chloroethane
GC/MS	TO-15	Chloroform
GC/MS	TO-15	Chloromethane
GC/MS	TO-15	cis-1,2-Dichloroethene
GC/MS	TO-15	cis-1,3-Dichloropropene
GC/MS	TO-15	Cyclohexane
GC/MS	TO-15	Dibromochloromethane
GC/MS	TO-15	Dichlorodifluoromethane
GC/MS	TO-15	Dichlorotetrafluoroethane
GC/MS	TO-15	Ethanol
GC/MS	TO-15	Ethyl Acetate
GC/MS	TO-15	Ethyl Benzene
GC/MS	TO-15	Heptane
GC/MS	TO-15	Hexachloro-1,3-Butadiene
GC/MS	TO-15	Hexane
GC/MS	TO-15	Isopropyl Alcohol
GC/MS	TO-15	m/p-Xylene
GC/MS	TO-15	Methyl methacrylate
GC/MS	TO-15	Methyl tert-Butyl Ether
GC/MS	TO-15	Methylene Chloride
GC/MS	TO-15	Naphthalene
GC/MS	TO-15	o-Xylene
GC/MS	TO-15	Propene
GC/MS	TO-15	Styrene
GC/MS	TO-15	t-1,3-Dichloropropene
GC/MS	TO-15	tert-butyl alcohol
GC/MS	TO-15	Tetrachloroethene
GC/MS	TO-15	Tetrahydrofuran

Air		
Technology	**Method**	**Analyte**
GC/MS	TO-15	Toluene
GC/MS	TO-15	trans-1,2-Dichloroethene
GC/MS	TO-15	Trichloroethene
GC/MS	TO-15	Trichlorofluoromethane
GC/MS	TO-15	Vinyl Acetate
GC/MS	TO-15	Vinyl Chloride

Notes:

1) This laboratory offers commercial testing service.

Approved by: _____ Date: June 22, 2011

R. Douglas Leonard
Chief Technical Officer

Issued: 10/20/09 Revised: 10/28/09 Revised: 08/02/10 Revised: 8/11/10 Revised: 10/5/10 Revised: 11/11/10 Revised: 6/22/11

CERTIFICATE OF ACCREDITATION

ANSI-ASQ National Accreditation Board/ACLASS
500 Montgomery Street, Suite 625, Alexandria, VA 22314, 877-344-3044

This is to certify that

TestAmerica - Pittsburgh
301 Alpha Drive
Pittsburgh, PA 15238

has been assessed by ACLASS
and meets the requirements of

DoD-ELAP

while demonstrating technical competence in the field(s) of

TESTING

Refer to the accompanying Scope(s) of Accreditation for information regarding the types of tests to which this accreditation applies.

ADE-1442
Certificate Number

ACLASS Approval

Certificate Valid: 03/12/2010-03/12/2012
Version No. 005 Issued: 01/05/2011

SCOPE OF DoD-ELAP ACCREDITATION

TestAmerica - Pittsburgh

301 Alpha Drive, Pittsburgh PA 15238
Nasreen K. DeRubeis Phone: 412-963-7058

TESTING

Valid to: March 12, 2012 Certificate Number: ADE - 1442

I. Environmental

MATRIX	SPECIFIC TEST or ANALYTE GROUP	SPECIFICATION OR STANDARD METHOD (all EPA unless specified)	* KEY EQUIPMENT OR TECHNOLOGY USED
Water and Solids	Metals	6010B / C	ICP-AES
Water and Solids	Metals	6020 / 6020A	ICP-MS
Solids	Mercury	7471A/B	CVAA
Water	Mercury	7470A	CVAA
Water and Solids	Hexavalent Chromium with Alkaline Digestion	7196A	Spectrophotometer
Solids	Cyanide Extraction from Solids	9013	
Water	Total Cyanide	9012A / B 9010B / C	
Water and Solids	Anions	9056A	IC
Solids	Hexane Extractable Material, HEM (Oil and Grease)	9071B	Gravimetric
Water	Hexane Extractable Material	9070A 1664A	Gravimetric
Water / Solids	Organochlorine Pesticides	8081A / B	GC
Water / Solids	Organo-Phosphorus Compounds	8141A / B	GC

MATRIX	SPECIFIC TEST or ANALYTE GROUP	SPECIFICATION OR STANDARD METHOD (all EPA unless specified)	* KEY EQUIPMENT OR TECHNOLOGY USED
Water, Solids, and Oil	PCBs	8082 / 8082A	GC
Water and Solids	Chlorinated Herbicides	8151A	GC
Water and Solids	Volatiles	8260B	GC/MS
Water and Solids	Semi-Volatiles	8270C / D	GC/MS
Water	Total Organic Carbon	9060/9060A	TOC Analyzer
Water	EDB and DBCP	8011	GC
Water and Solids	PAHs	8310	HPLC
Solids	Total Organic Carbon	Lloyd Kahn	TOC Analyzer
Water and Solids	Sulfide	9030B / 9034	Titration
Water	pH	9040B / C	pH Meter
Solids	pH	9045C / D	pH Meter
Water-Organic Liquids	Flashpoint	1020B / ASTM- D3278-96	Setaflash closed tester
Water –Organic Liquids	Flashpoint	1010A / ASTM- D93-08	Pensky-Martens Closed Flash Tester.
Solids	Percent Moisture	SM 2540G	Balance
Water	Acid Digestion	3005A	FLAA / ICP
Water	Acid Digestion	3010A	FLAA / ICP
Solids	Acid Digestion	3050B	
Solids	Alkaline Digestion	3060A	
Water	Purge-and-Trap	5030B	
Solids	Closed-system Purge-and-Trap	5035	
Solids	Waste Dilution	3580A / 3585	

500 Montgomery St. Suite 625 | Alexandria, VA 22314 | 703-836-0025 | www.aclasscorp.com

MATRIX	SPECIFIC TEST or ANALYTE GROUP	SPECIFICATION OR STANDARD METHOD (all EPA unless specified)	* KEY EQUIPMENT OR TECHNOLOGY USED
Solids	Automated Soxhlet Extraction	3541	
Water	Liquid-Liquid Extraction	3510C	
Water	Continuous Liquid-Liquid Extraction	3520C	
Solids	Ultrasonic Extraction	3550C	
Water and Solids	Sulfur Cleanup	3660B	
Water and Solids	Gel Permeation Cleanup	3640A	
Water and Solids	TCLP Toxicity Leaching	1311	
Water and Solids	Chromium Speciation	6800	

Notes:

1. ** = As Applicable*
2. *This scope is part of and must be included with the Certificate of Accreditation No. ADE-1442*

Vice President

500 Montgomery St. Suite 625 | Alexandria, VA 22314 | 703-836-0025 | www.aclasscorp.com

Accredited Analytes/Methods (by matrix)

TestAmerica - Pittsburgh

Pittsburg, PA

NELAC Code	Analyte	Matrix							
		Aqueous				Solid			
	Trace Metals								
1000	Aluminum	6010B/C	6020/A			6010B/C	6020A		
1005	Antimony	6010B/C	6020/A			6010B/C	6020A		
1010	Arsenic	6010B/C	6020/A			6010B/C	6020A		
1015	Barium	6010B/C	6020/A			6010B/C	6020A		
1020	Beryllium	6010B/C	6020/A			6010B/C	6020A		
1025	Boron	6010B/C	6020/A			6010B/C	6020A		
1030	Cadmium	6010B/C	6020/A			6010B/C	6020A		
1035	Calcium	6010B/C	6020/A			6010B/C	6020A		
1040	Chromium, total	6010B/C	6020/A			6010B/C	6020A		
1045	Chromium VI			7196A				7196A	
---	Chromium Speciation			6800				6800	
1050	Cobalt	6010B/C	6020/A			6010B/C	6020A		
1055	Copper	6010B/C	6020/A			6010B/C	6020A		
1070	Iron	6010B/C	6020/A			6010B/C	6020A		
1075	Lead	6010B/C	6020/A			6010B/C	6020A		
1085	Magnesium	6010B/C	6020/A			6010B/C	6020A		
1090	Manganese	6010B/C	6020/A			6010B/C	6020A		
1095	Mercury			7470A				7471A/B	
1100	Molybdenum	6010B/C	6020/A			6010B/C	6020A		
1105	Nickel	6010B/C	6020/A			6010B/C	6020A		
1125	Potassium	6010B/C	6020/A			6010B/C	6020A		
1140	Selenium	6010B/C	6020/A			6010B/C	6020A		
1990	Silicon	6010B/C	6020/A			6010B/C	6020A		
1462	Silica	6010B/C	6020/A			6010B/C	6020/A		
1150	Silver	6010B/C	6020/A			6010B/C	6020A		
1155	Sodium	6010B/C	6020/A			6010B/C	6020A		
1165	Strontium	6010B/C	6020/A			6010B/C	6020A		
1165	Thallium	6010B/C	6020/A			6010B/C	6020A		
1175	Tin	6010B/C	6020/A			6010B/C	6020A		
1180	Titanium	6010B/C	6020/A			6010B/C	6020A		
1185	Vanadium	6010B/C	6020/A			6010B/C	6020A		
1190	Zinc	6010B/C	6020/A			6010B/C	6020A		
	Misc Analytes								
1900	pH	9040C	9040B			9045D	9045C		
1645	Total Cyanide	9012A/B	9010B/C			9012A/B	9013		
2040	Total Organic Carbon	9060/A				Lloyd Kahn			
2005	Sulfide	9030B/9034				9030B/9034			
---	Flashpoint	1020B	ASTM D3278-96	1010A	ASTM D93-08	1020B	ASTM D3278-96	1010A	ASTM D93-08
3850	Percent Moisture					SM 2540G			
1540	Bromide	9056A				9056A			
1575	Chloride	9056A				9056A			
1730	Fluoride	9056A				9056A			
1810	Nitrate as N	9056A				9056A			
1840	Nitrite as N	9056A				9056A			
1820	Nitrate + Nitrite as N	9056A				9056A			
1870	ortho-phosphorus	9056A				9056A			
2000	Sulfate	9056A				9056A			
	Petroleum Hydrocarbons								
1935	Oil & Grease	1664A	9070A			9071B			
1860	Hexane Extractable Material (HEM)	1664A	9070A			9071B			
	VOCs								
4315	Acetone	8260B				8260B			
4375	Benzene	8260B				8260B			
4385	Bromobenzene	8260B				8260B			
4390	Bromochloromethane	8260B				8260B			
4395	Bromodichloromethane	8260B				8260B			
4400	Bromoform	8260B				8260B			
4950	Bromomethane	8260B				8260B			
4410	2-Butanone (MEK)	8260B				8260B			
4435	n-Butylbenzene	8260B				8260B			
4440	sec-Butylbenzene	8260B				8260B			
4445	tert-Butylbenzene	8260B				8260B			
4450	Carbon disulfide	8260B				8260B			
4455	Carbon Tetrachloride	8260B				8260B			
4475	Chlorobenzene	8260B				8260B			
4575	Chlorodibromomethane	8260B				8260B			
4485	Chloroethane	8260B				8260B			
4505	Chloroform	8260B				8260B			
4960	Chloromethane	8260B				8260B			
4535	2-Chlorotoluene	8260B				8260B			
4540	4-Chlorotoluene	8260B				8260B			
4555	Cyclohexane	8260B				8260B			
4570	1,2-Dibromo-3-chloropropane (DBCP)	8260B	8011			8260B			
4585	1,2-Dibromoethane (EDB)	8260B	8011			8260B			
4595	Dibromomethane	8260B				8260B			

Accredited Analytes/Methods (by matrix)

TestAmerica - Pittsburgh

Pittsburg, PA

NELAC Code	Analyte	Matrix							
		Aqueous				Solid			
4610	1,2-Dichlorobenzene	8260B				8260B			
4615	1,3-Dichlorobenzene	8260B				8260B			
4620	1,4-Dichlorobenzene	8260B				8260B			
4625	Dichlorodifluoromethane	8260B				8260B			
4630	1,1-Dichloroethane	8260B				8260B			
4635	1,2-Dichloroethane	8260B				8260B			
4640	1,1-Dichloroethene	8260B				8260B			
4645	*cis* -1,2-Dichloroethene	8260B				8260B			
---	Dichloroethene (total)	8260B				8260B			
4700	trans-1,2-Dichloroethene	8260B				8260B			
4975	Dichloromethane (Methylene Chloride)	8260B				8260B			
4655	1,2-Dichloropropane	8260B				8260B			
4660	1,3-Dichloropropane	8260B				8260B			
4665	2,2-Dichloropropane	8260B				8260B			
4670	1,1-Dichloropropene	8260B				8260B			
4680	cis-1,3-Dichloropropene	8260B				8260B			
4685	*trans* -1,3-Dichloropropene	8260B				8260B			
4765	Ethylbenzene	8260B				8260B			
4835	Hexachlorobutadiene	8260B				8260B			
4860	2-Hexanone	8260B				8260B			
4900	Isopropylbenzene	8260B				8260B			
4910	4-Isopropyltoluene	8260B				8260B			
4940	Methyl Acetate	8260B				8260B			
4965	Methylcyclohexane	8260B				8260B			
4995	4-Methyl-2-pentanone (MIBK)	8260B				8260B			
5000	Methyl-tert-butylether (MTBE)	8260B				8260B			
5005	Naphthalene	8260B				8260B			
5090	n-Propylbenzene	8260B				8260B			
5100	Styrene	8260B				8260B			
5105	1,1,1,2-Tetrachloroethane	8260B				8260B			
5110	1,1,2,2-Tetrachloroethane	8260B				8260B			
5115	Tetrachloroethene	8260B				8260B			
5140	Toluene	8260B				8260B			
5150	1,2,3-Trichlorobenzene	8260B				8260B			
5155	1,2,4-Trichlorobenzene	8260B				8260B			
5160	1,1,1-Trichloroethane	8260B				8260B			
5165	1,1,2-Trichloroethane	8260B				8260B			
5170	Trichloroethene	8260B				8260B			
5175	Trichlorofluoromethane (Freon 11)	8260B				8260B			
5180	1,2,3-Trichloropropane	8260B				8260B			
---	1,1,2-Trichloro-1,2,2-trifluoroethane	8260B				8260B			
5210	1,2,4-Trimethylbenzene	8260B				8260B			
5215	1,3,5-Trimethylbenzene	8260B				8260B			
5235	Vinyl chloride	8260B				8260B			
5250	o-Xylene	8260B				8260B			
5240	m+p-Xylene	8260B				8260B			
5260	Xylenes, total	8260B				8260B			
	SVOCs - Base/Neutrals/Acids								
5500	Acenaphthene	8270C/D				8270C/D			
5505	Acenaphthylene	8270C/D				8270C/D			
5510	Acetophenone	8270C/D				8270C/D			
5545	Aniline	8270C/D				8270C/D			
5555	Anthracene	8270C/D				8270C/D			
7065	Atrazine	8270C/D				8270C/D			
5570	Benzaldehyde	8270C/D				8270C/D			
5575	Benzo(a)anthracene	8270C/D				8270C/D			
5585	Benzo(b)fluoranthene	8270C/D				8270C/D			
5600	Benzo(k)fluoranthene	8270C/D				8270C/D			
5590	Benzo(g,h,i)perylene	8270C/D				8270C/D			
5580	Benzo(a)pyrene	8270C/D				8270C/D			
5595	Benzidine	8270C/D				8270C/D			
5610	Benzoic acid	8270C/D				8270C/D			
5630	Benzyl alcohol	8270C/D				8270C/D			
5640	1,1'-Biphenyl	8270C/D				8270C/D			
5660	4-Bromophenyl-phenylether	8270C/D				8270C/D			
5670	Butyl benzyl phthalate	8270C/D				8270C/D			
7180	Caprolactam	8270C/D				8270C/D			
5680	Carbazole	8270C/D				8270C/D			
5745	4-Chloroaniline	8270C/D				8270C/D			
5760	bis(2-Chloroethoxy)methane	8270C/D				8270C/D			
5765	bis(2-Chloroethyl)ether	8270C/D				8270C/D			
5780	bis(2-Chloroiospropyl) ether	8270C/D				8270C/D			
5700	4-Chloro-3-methylphenol	8270C/D				8270C/D			
5795	2-Chloronaphthalene	8270C/D				8270C/D			
5825	4-Chlorophenyl-phenylether	8270C/D				8270C/D			
5800	2-Chlorophenol	8270C/D				8270C/D			
5855	Chrysene	8270C/D				8270C/D			
5895	Dibenzo(a,h)anthracene	8270C/D				8270C/D			
5905	Dibenzofuran	8270C/D				8270C/D			
5925	Di-n-butylphthalate	8270C/D				8270C/D			

Accredited Analytes/Methods (by matrix)

TestAmerica - Pittsburgh

Pittsburg, PA

NELAC Code	Analyte	Matrix							
		Aqueous				Solid			
4610	1,2-Dichlorobenzene	8270C/D				8270C/D			
4615	1,3-Dichlorobenzene	8270C/D				8270C/D			
4620	1,4-Dichlorobenzene	8270C/D				8270C/D			
5945	3,3'-Dichlorobenzidine	8270C/D				8270C/D			
6000	2,4-Dichlorophenol	8270C/D				8270C/D			
6005	2,6-Dichlorophenol	8270C/D				8270C/D			
6070	Diethyl phthalate	8270C/D				8270C/D			
6130	2,4-Dimethylphenol	8270C/D				8270C/D			
6135	Dimethylphthalate	8270C/D				8270C/D			
6175	2,4-Dinitrophenol	8270C/D				8270C/D			
6185	2,4-Dinitrotoluene	8270C/D				8270C/D			
6190	2,6-Dinitrotoluene	8270C/D				8270C/D			
6200	Di-n-octylphthalate	8270C/D				8270C/D			
4740	p-Dioxane	8270C/D				8270C/D			
---	1,2-Diphenyl hydrazine	8270C/D				8270C/D			
6255	bis(2-ethylhexyl) phthalate	8270C/D				8270C/D			
6265	Fluoranthene	8270C/D				8270C/D			
6270	Fluorene	8270C/D				8270C/D			
6275	Hexachlorobenzene	8270C/D				8270C/D			
4835	Hexachlorobutadiene	8270C/D				8270C/D			
6285	Hexachlorocyclopentadiene	8270C/D				8270C/D			
4840	Hexachloroethane	8270C/D				8270C/D			
6315	Indeno(1,2,3, cd)pyrene	8270C/D				8270C/D			
6320	Isophorone	8270C/D				8270C/D			
6360	2-Methyl-4,6-Dinitrophenol	8270C/D				8270C/D			
6380	1-Methylnaphthalene	8270C/D				8270C/D			
6385	2-Methylnaphthalene	8270C/D				8270C/D			
6400	2-Methylphenol	8270C/D				8270C/D			
6410	4-Methylphenol (and/or 3-Methylphenol)	8270C/D				8270C/D			
5005	Naphthalene	8270C/D				8270C/D			
6460	2-Nitroaniline	8270C/D				8270C/D			
6465	3-Nitroaniline	8270C/D				8270C/D			
6470	4-Nitroaniline	8270C/D				8270C/D			
5015	Nitrobenzene	8270C/D				8270C/D			
6490	2-Nitrophenol	8270C/D				8270C/D			
6500	4-Nitrophenol	8270C/D				8270C/D			
6530	N-Nitrosodimethylamine	8270C/D				8270C/D			
6535	N-Nitrosodiphenylamine	8270C/D				8270C/D			
6545	N-Nitroso-di-n-propylamine	8270C/D				8270C/D			
6565	N-Nitrosopyrrolidine	8270C/D				8270C/D			
4659	2,2-Oxybis(1-chloropropane)	8270C/D				8270C/D			
6605	Pentachlorophenol	8270C/D				8270C/D			
6615	Phenanthrene	8270C/D				8270C/D			
6625	Phenol	8270C/D				8270C/D			
6665	Pyrene	8270C/D				8270C/D			
5095	Pyridine	8270C/D				8270C/D			
6735	2,3,4,6-Tetrachlorophenol	8270C/D				8270C/D			
	2,3,5,6-Tetrachlorophenol	8270C/D				8270C/D			
5155	1,2,4-Trichlorobenzene	8270C/D				8270C/D			
6835	2,4,5-Trichlorophenol	8270C/D				8270C/D			
6840	2,4,6-Trichlorophenol	8270C/D				8270C/D			
	Pesticides								
7025	Aldrin	8081B	8081A			8081B	8081A		
7110	alpha-BHC	8081B	8081A			8081B	8081A		
7115	beta-BHC	8081B	8081A			8081B	8081A		
7105	delta-BHC	8081B	8081A			8081B	8081A		
7120	gamma-BHC (Lindane)	8081B	8081A			8081B	8081A		
7240	alpha-Chlordane	8081B	8081A			8081B	8081A		
7245	gamma-Chlordane	8081B	8081A			8081B	8081A		
7250	Chlordane (total)	8081B	8081A			8081B	8081A		
7355	DDD (4,4)	8081B	8081A			8081B	8081A		
7360	DDE (4,4)	8081B	8081A			8081B	8081A		
7365	DDT (4,4)	8081B	8081A			8081B	8081A		
7470	Dieldrin	8081B	8081A			8081B	8081A		
7510	Endosulfan I	8081B	8081A			8081B	8081A		
7515	Endosulfan II	8081B	8081A			8081B	8081A		
7520	Endosulfan sulfate	8081B	8081A			8081B	8081A		
7540	Endrin	8081B	8081A			8081B	8081A		
7530	Endrin aldehyde	8081B	8081A			8081B	8081A		
7535	Endrin ketone	8081B	8081A			8081B	8081A		
7685	Heptachlor	8081B	8081A			8081B	8081A		
7690	Heptachlor Epoxide (beta)	8081B	8081A			8081B	8081A		
7810	Methoxychlor	8081B	8081A			8081B	8081A		
8250	Toxaphene (total)	8081B	8081A			8081B	8081A		
	Organophoshorus Pesticides								
7075	Azinphos-methyl (Guthion)	8141A	8141B			8141A	8141B		
7125	Bolstar	8141A	8141B			8141A	8141B		
7300	Chlorpyrifos	8141A	8141B			8141A	8141B		
7315	Coumaphos	8141A	8141B			8141A	8141B		

Accredited Analytes/Methods (by matrix)									
TestAmerica - Pittsburgh									
Pittsburg, PA									
NELAC Code	Analyte	Matrix							
		Aqueous				Solid			
7475	Dimethoate	8141A	8141B			8141A	8141B		
7390	Demeton O & S	8141A	8141B			8141A	8141B		
7410	Diazinon	8141A	8141B			8141A	8141B		
8610	Dichlorvos	8141A	8141B			8141A	8141B		
8625	Disulfoton	8141A	8141B			8141A	8141B		
7555	EPN	8141A	8141B			8141A	8141B		
7570	Ethoprop	8141A	8141B			8141A	8141B		
7600	Fensulfothion	8141A	8141B			8141A	8141B		
7605	Fenthion	8141A	8141B			8141A	8141B		
995	Famphur	8141A	8141B			8141A	8141B		
1132	Malathion	8141A	8141B			8141A	8141B		
7850	Mevinphos	8141A	8141B			8141A	8141B		
7955	Parathion, ethyl	8141A	8141B			8141A	8141B		
7825	Parathion, methyl	8141A	8141B			8141A	8141B		
7985	Phorate	8141A	8141B			8141A	8141B		
8110	Ronnel	8141A	8141B			8141A	8141B		
8200	Stirophos	8141A	8141B			8141A	8141B		
8155	Sulfotepp	8141A	8141B			8141A	8141B		
8290	O,O,O-Triethyl phosphorothioate	8141A	8141B			8141A	8141B		
8235	Thionazin	8141A	8141B			8141A	8141B		
8245	Tokuthion (Protothiofos)	8141A	8141B			8141A	8141B		
8275	Trichlornate	8141A	8141B			8141A	8141B		
	Herbicides								
8655	2,4,5-T	8151A				8151A			
8650	2,4,5-TP (Silvex)	8151A				8151A			
8545	2,4-D	8151A				8151A			
8560	2,4-DB	8151A				8151A			
8555	Dalapon	8151A				8151A			
8595	Dicamba	8151A				8151A			
8605	Dichloroprop (2,4-DP)	8151A				8151A			
8620	Dinoseb	8151A				8151A			
7775	MCPA	8151A				8151A			
7780	MCPP	8151A				8151A			
6605	Pentachlorophenol	8151A				8151A			
	PCBs								
8880	Aroclor 1016	8082A	8082			8082A	8082		
8885	Aroclor 1221	8082A	8082			8082A	8082		
8890	Aroclor 1232	8082A	8082			8082A	8082		
8895	Aroclor 1242	8082A	8082			8082A	8082		
8900	Aroclor 1248	8082A	8082			8082A	8082		
8905	Aroclor 1254	8082A	8082			8082A	8082		
8910	Aroclor 1260	8082A	8082			8082A	8082		
8912	Aroclor 1262	8082A	8082			8082A	8082		
8913	Aroclor 1268	8082A	8082			8082A	8082		
---	Aroclor 1016/1260	8082A	8082			8082A	8082		
	PAHs								
5500	Acenaphthene	8310				8310			
5505	Acenaphthylene	8310				8310			
5555	Anthracene	8310				8310			
5575	Benzo(a)anthracene	8310				8310			
5585	Benzo(b)fluoranthene	8310				8310			
5600	Benzo(k)fluoranthene	8310				8310			
5590	Benzo(g,h,i)perylene	8310				8310			
5580	Benzo(a)pyrene	8310				8310			
5855	Chrysene	8310				8310			
5895	Dibenz(a,h)anthracene	8310				8310			
6265	Fluoranthene	8310				8310			
6270	Fluorene	8310				8310			
6315	Indeno(1,2,3-cd)pyrene	8310				8310			
5005	Naphthalene	8310				8310			
6615	Phenanthrene	8310				8310			
6665	Pyrene	8310				8310			

American Association for Laboratory Accreditation

World Class Accreditation

SCOPE OF ACCREDITATION TO ISO/IEC 17025:2005

CAPE FEAR ANALYTICAL, LLC
3306 Kitty Hawk Road, Suite 120
Wilmington, NC 28405
W. Michael Larkins Phone: 910-795-0421
mlarkins@cfanalytical.com

ENVIRONMENTAL

Valid To: May 31, 2012 Certificate Number: 3014.01

In recognition of the successful completion of the A2LA evaluation process, (including an assessment of the laboratory's compliance with ISO IEC 17025:2005, the 2003 NELAC Chapter 5 Standard, and the requirements of the DoD Environmental Laboratory Accreditation Program (DoD ELAP) as detailed in the DoD Quality Systems Manual for Environmental Laboratories (DoD QSM v4.1)) accreditation is granted to this laboratory to perform recognized EPA methods using the following testing technologies and in the analyte categories identified below:

Testing Technologies

High Resolution Gas Chromatography / Mass Spectrometry

Parameter/Analyte	Potable Water	Nonpotable Water	Solid Hazardous Waste
2,3,7,8-Tetrachlorodibenzo-p-dioxin	EPA 1613B	EPA 1613B/8290A	EPA 1613B/8290A
1,2,3,7,8-Pentachlorodibenzo-p-dioxin	----------	EPA 1613B/8290A	EPA 1613B/8290A
1,2,3,4,7,8-Hexachlorodibenzo-p-dioxin	----------	EPA 1613B/8290A	EPA 1613B/8290A
1,2,3,6,7,8-Hexachlorodibenzo-p-dioxin	----------	EPA 1613B/8290A	EPA 1613B/8290A
1,2,3,7,8,9-Hexachlorodibenzo-p-dioxin	----------	EPA 1613B/8290A	EPA 1613B/8290A
1,2,3,4,6,7,8-Heptachlorodibenzo-p-dioxin	----------	EPA 1613B/8290A	EPA 1613B/8290A
1,2,3,4,5,6,7,8-Octachlorodibenzo-p-dioxin	----------	EPA 1613B/8290A	EPA 1613B/8290A
2,3,7,8-Tetrachlorodibenzofuran	----------	EPA 1613B/8290A	EPA 1613B/8290A
1,2,3,7,8-Pentachlorodibenzofuran	----------	EPA 1613B/8290A	EPA 1613B/8290A
2,3,4,7,8-Pentachlorodibenzofuran	----------	EPA 1613B/8290A	EPA 1613B/8290A
1,2,3,4,7,8-Hexachlorodibenzofuran	----------	EPA 1613B/8290A	EPA 1613B/8290A
1,2,3,6,7,8-Hexachlorodibenzofuran	----------	EPA 1613B/8290A	EPA 1613B/8290A
2,3,4,6,7,8-Hexachlorodibenzofuran	----------	EPA 1613B/8290A	EPA 1613B/8290A
1,2,3,7,8,9-Hexachlorodibenzofuran	----------	EPA 1613B/8290A	EPA 1613B/8290A
1,2,3,4,6,7,8-Heptachlorodibenzofuran	----------	EPA 1613B/8290A	EPA 1613B/8290A
1,2,3,4,7,8,9-Heptachlorodibenzofuran	----------	EPA 1613B/8290A	EPA 1613B/8290A
1,2,3,4,5,6,7,8-Octachlorodibenzofuran	----------	EPA 1613B/8290A	EPA 1613B/8290A
Total Tetrachlorodibenzo-p-dioxin	----------	EPA 1613B/8290A	EPA 1613B/8290A
Total Pentachlorodibenzo-p-dioxin	----------	EPA 1613B/8290A	EPA 1613B/8290A
Total Hexachlorodibenzo-p-dioxin	----------	EPA 1613B/8290A	EPA 1613B/8290A
Total Heptachlorodibenzo-p-dioxin	----------	EPA 1613B/8290A	EPA 1613B/8290A

5301 Buckeystown Pike, Suite 350 | Frederick, Maryland 21704-8373 | Phone: 301 644 3248 | Fax: 301 662 2974 | www.A2LA.org

Parameter/Analyte	Potable Water	Nonpotable Water	Solid Hazardous Waste
Total Tetrachlorodibenzofuran	----------	EPA 1613B/8290A	EPA 1613B/8290A
Total Pentachlorodibenzofuran	----------	EPA 1613B/8290A	EPA 1613B/8290A
Total Hexachlorodibenzofuran	----------	EPA 1613B/8290A	EPA 1613B/8290A
Total Heptachlorodibenzofuran	----------	EPA 1613B/8290A	EPA 1613B/8290A
2-Chlorobiphenyl (1)	----------	EPA 1668A	EPA 1668A
3-Chlorobiphenyl (2)	----------	EPA 1668A	EPA 1668A
4-Chlorobiphenyl (3)	----------	EPA 1668A	EPA 1668A
2,2'-Dichlorobiphenyl (4)	----------	EPA 1668A	EPA 1668A
2,3-Dichlorobiphenyl (5)	----------	EPA 1668A	EPA 1668A
2,3'-Dichlorobiphenyl (6)	----------	EPA 1668A	EPA 1668A
2,4-Dichlorobiphenyl (7)	----------	EPA 1668A	EPA 1668A
2,4'-Dichlorobiphenyl (8)	----------	EPA 1668A	EPA 1668A
2,5-Dichlorobiphenyl (9)	----------	EPA 1668A	EPA 1668A
2,6-Dichlorobiphenyl (10)	----------	EPA 1668A	EPA 1668A
3,3'-Dichlorobiphenyl (11)	----------	EPA 1668A	EPA 1668A
3,4-Dichlorobiphenyl (12)	----------	EPA 1668A	EPA 1668A
3,4'-Dichlorobiphenyl (13)	----------	EPA 1668A	EPA 1668A
3,5-Dichlorobiphenyl (14)	----------	EPA 1668A	EPA 1668A
4,4'-Dichlorobiphenyl (15)	----------	EPA 1668A	EPA 1668A
2,2',3-Trichlorobiphenyl (16)	----------	EPA 1668A	EPA 1668A
2,2',4-Trichlorobiphenyl (17)	----------	EPA 1668A	EPA 1668A
2,2',5-Trichlorobiphenyl (18)	----------	EPA 1668A	EPA 1668A
2,2',6-Trichlorobiphenyl (19)	----------	EPA 1668A	EPA 1668A
2,3,3'-Trichlorobiphenyl (20)	----------	EPA 1668A	EPA 1668A
2,3,4-Trichlorobiphenyl (21)	----------	EPA 1668A	EPA 1668A
2,3,4'-Trichlorobiphenyl (22)	----------	EPA 1668A	EPA 1668A
2,3,5-Trichlorobiphenyl (23)	----------	EPA 1668A	EPA 1668A
2,3,6-Trichlorobiphenyl (24)	----------	EPA 1668A	EPA 1668A
2,3',4-Trichlorobiphenyl (25)	----------	EPA 1668A	EPA 1668A
2,3',5-Trichlorobiphenyl (26)	----------	EPA 1668A	EPA 1668A
2,3',6-Trichlorobiphenyl (27)	----------	EPA 1668A	EPA 1668A
2,4,4'-Trichlorobiphenyl (28)	----------	EPA 1668A	EPA 1668A
2,4,5-Trichlorobiphenyl (29)	----------	EPA 1668A	EPA 1668A
2,4,6-Trichlorobiphenyl (30)	----------	EPA 1668A	EPA 1668A
2,4',5-Trichlorobiphenyl (31)	----------	EPA 1668A	EPA 1668A
2,4',6-Trichlorobiphenyl (32)	----------	EPA 1668A	EPA 1668A
2',3,4-Trichlorobiphenyl (33)	----------	EPA 1668A	EPA 1668A
2',3,5-Trichlorobiphenyl (34)	----------	EPA 1668A	EPA 1668A
3,3',4-Trichlorobiphenyl (35)	----------	EPA 1668A	EPA 1668A
3,3',5-Trichlorobiphenyl (36)	----------	EPA 1668A	EPA 1668A
3,4,4'-Trichlorobiphenyl (37)	----------	EPA 1668A	EPA 1668A
3,4,5-Trichlorobiphenyl (38)	----------	EPA 1668A	EPA 1668A
3,4',5-Trichlorobiphenyl (39)	----------	EPA 1668A	EPA 1668A
2,2',3,3'-Tetrachorobiphenyl (40)	----------	EPA 1668A	EPA 1668A
2,2',3,4-Tetrachlorobiphenyl (41)	----------	EPA 1668A	EPA 1668A
2,2',3,4'-Tetrachlorobiphenyl (42)	----------	EPA 1668A	EPA 1668A
2,2',3,5-Tetrachlorobiphenyl (43)	----------	EPA 1668A	EPA 1668A
2,2',3,5'-Tetrachlorobiphenyl (44)	----------	EPA 1668A	EPA 1668A
2,2',3,6-Tetrachlorobiphenyl (45)	----------	EPA 1668A	EPA 1668A
2,2',3,6'-Tetrachlorobiphenyl (46)	----------	EPA 1668A	EPA 1668A
2,2'4,4'-Tetrachlorobiphenyl (47)	----------	EPA 1668A	EPA 1668A

Parameter/Analyte	Potable Water	Nonpotable Water	Solid Hazardous Waste
2,2',4,5-Tetrachlorobiphenyl (48)	----------	EPA 1668A	EPA 1668A
2,2',4,5'-Tetrachlorobiphenyl (49)	----------	EPA 1668A	EPA 1668A
2,2',4,6-Tetrachlorobiphenyl (50)	----------	EPA 1668A	EPA 1668A
2,2',4,6'-Tetrachlorobiphenyl (51)	----------	EPA 1668A	EPA 1668A
2,2',5,5'-Tetrachlorobiphenyl (52)	----------	EPA 1668A	EPA 1668A
2,2',5,6'-Tetrachlorobiphenyl (53)	----------	EPA 1668A	EPA 1668A
2,2',6,6'-Tetrachlorobiphenyl (54)	----------	EPA 1668A	EPA 1668A
2,3,3',4-Tetrachlorobiphenyl (55)	----------	EPA 1668A	EPA 1668A
2,3,3',4'-Tetrachlorobiphenyl (56)	----------	EPA 1668A	EPA 1668A
2,3,3',5-Tetrachlorobiphenyl (57)	----------	EPA 1668A	EPA 1668A
2,3,3',5'-Tetrachlorobiphenyl (58)	----------	EPA 1668A	EPA 1668A
2,3,3',6-Tetrachlorobiphenyl (59)	----------	EPA 1668A	EPA 1668A
2,3,4,4'-Tetrachlorobiphenyl (60)	----------	EPA 1668A	EPA 1668A
2,3,4,5-Tetrachlorobiphenyl (61)	----------	EPA 1668A	EPA 1668A
2,3,4,6-Tetrachlorobiphenyl (62)	----------	EPA 1668A	EPA 1668A
2,3,4',5-Tetrachlorobiphenyl (63)	----------	EPA 1668A	EPA 1668A
2,3,4',6-Tetrachlorobiphenyl (64)	----------	EPA 1668A	EPA 1668A
2,3,5,6-Tetrachlorobiphenyl (65)	----------	EPA 1668A	EPA 1668A
2,3',4,4'-Tetrachlorobiphenyl (66)	----------	EPA 1668A	EPA 1668A
2,3',4,5-Tetrachlorobiphenyl (67)	----------	EPA 1668A	EPA 1668A
2,3',4,5'-Tetrachlorobiphenyl (68)	----------	EPA 1668A	EPA 1668A
2,3',4,6-Tetrachlorobiphenyl (69)	----------	EPA 1668A	EPA 1668A
2,3',4',5-Tetrachlorobiphenyl (70)	----------	EPA 1668A	EPA 1668A
2,3',4',6-Tetrachlorobiphenyl (71)	----------	EPA 1668A	EPA 1668A
2,3',5,5'-Tetrachlorobiphenyl (72)	----------	EPA 1668A	EPA 1668A
2,3',5',6-Tetrachlorobiphenyl (73)	----------	EPA 1668A	EPA 1668A
2,4,4',5-Tetrachlorobiphenyl (74)	----------	EPA 1668A	EPA 1668A
2,4,4',6-Tetrachlorobiphenyl (75)	----------	EPA 1668A	EPA 1668A
2',3,4,5-Tetrachlorobiphenyl (76)	----------	EPA 1668A	EPA 1668A
3,3',4,4'-Tetrachlorobiphenyl (77)	----------	EPA 1668A	EPA 1668A
3,3',4,5-Tetrachlorobiphenyl (78)	----------	EPA 1668A	EPA 1668A
3,3',4,5'-Tetrachlorobiphenyl (79)	----------	EPA 1668A	EPA 1668A
3,3',5,5'-Tetrachlorobiphenyl (80)	----------	EPA 1668A	EPA 1668A
3,4,4',5-Tetrachlorobiphenyl (81)	----------	EPA 1668A	EPA 1668A
2,2',3,3',4-Pentachlorobiphenyl (82)	----------	EPA 1668A	EPA 1668A
2,2',3,3',5-Pentachlorobiphenyl (83)	----------	EPA 1668A	EPA 1668A
2,2',3,3',6-Pentachlorobiphenyl (84)	----------	EPA 1668A	EPA 1668A
2,2',3,4,4'-Pentachlorobiphenyl (85)	----------	EPA 1668A	EPA 1668A
2,2',3,4,5-Pentachlorobiphenyl (86)	----------	EPA 1668A	EPA 1668A
2,2',3,4,5'-Pentachlorobiphenyl (87)	----------	EPA 1668A	EPA 1668A
2,2',3,4,6-Pentachlorobiphenyl (88)	----------	EPA 1668A	EPA 1668A
2,2',3,4,6'-Pentachlorobiphenyl (89)	----------	EPA 1668A	EPA 1668A
2,2',3,4',5-Pentachlorobiphenyl (90)	----------	EPA 1668A	EPA 1668A
2,2',3,4',6-Pentachlorobiphenyl (91)	----------	EPA 1668A	EPA 1668A
2,2',3,5,5'-Pentachlorobiphenyl (92)	----------	EPA 1668A	EPA 1668A
2,2',3,5,6-Pentachlorobiphenyl (93)	----------	EPA 1668A	EPA 1668A
2,2',3,5,6'-Pentachlorobiphenyl (94)	----------	EPA 1668A	EPA 1668A
2,2',3,5',6-Pentachlorobiphenyl (95)	----------	EPA 1668A	EPA 1668A
2,2',3,6,6'-Pentachlorobiphenyl (96)	----------	EPA 1668A	EPA 1668A
2,2',3',4,5-Pentachlorobiphenyl (97)	----------	EPA 1668A	EPA 1668A
2,2',3',4,6-Pentachlorobiphenyl (98)	----------	EPA 1668A	EPA 1668A

Parameter/Analyte	Potable Water	Nonpotable Water	Solid Hazardous Waste
2,2',4,4',5-Pentachlorobiphenyl (99)	----------	EPA 1668A	EPA 1668A
2,2',4,4',6-Pentachlorobiphenyl (100)	----------	EPA 1668A	EPA 1668A
2,2',4,5,5'-Pentachlorobiphenyl (101)	----------	EPA 1668A	EPA 1668A
2,2',4,5,6'-Pentachlorobiphenyl (102)	----------	EPA 1668A	EPA 1668A
2,2',4,5',6-Pentachlorobiphenyl (103)	----------	EPA 1668A	EPA 1668A
2,2',4,6,6'-Pentachlorobiphenyl (104)	----------	EPA 1668A	EPA 1668A
2,3,3',4,4'-Pentachlorobiphenyl (105)	----------	EPA 1668A	EPA 1668A
2,3,3',4,5-Pentachlorobiphenyl (106)	----------	EPA 1668A	EPA 1668A
2,3,3',4',5-Pentachlorobiphenyl (107)	----------	EPA 1668A	EPA 1668A
2,3,3',4,5'-Pentachlorobiphenyl (108)	----------	EPA 1668A	EPA 1668A
2,3,3',4,6-Pentachlorobiphenyl (109)	----------	EPA 1668A	EPA 1668A
2,3,3',4',6-Pentachlorobiphenyl (110)	----------	EPA 1668A	EPA 1668A
2,3,3',5,5'-Pentachlorobiphenyl (111)	----------	EPA 1668A	EPA 1668A
2,3,3',5,6-Pentachlorobiphenyl (112)	----------	EPA 1668A	EPA 1668A
2,3,3',5',6-Pentachlorobiphenyl (113)	----------	EPA 1668A	EPA 1668A
2,3,4,4',5-Pentachlorobiphenyl (114)	----------	EPA 1668A	EPA 1668A
2,3,4,4',6-Pentachlorobiphenyl (115)	----------	EPA 1668A	EPA 1668A
2,3,4,5,6-Pentachlorobiphenyl (116)	----------	EPA 1668A	EPA 1668A
2,3,4',5,6-Pentachlorobiphenyl (117)	----------	EPA 1668A	EPA 1668A
2,3',4,4',5-Pentachlorobiphenyl (118)	----------	EPA 1668A	EPA 1668A
2,3',4,4',6-Pentachlorobiphenyl (119)	----------	EPA 1668A	EPA 1668A
2,3',4,5,5'-Pentachlorobiphenyl (120)	----------	EPA 1668A	EPA 1668A
2,3',4,5',6-Pentachlorobiphenyl (121)	----------	EPA 1668A	EPA 1668A
2',3,3',4,5-Pentachlorobiphenyl (122)	----------	EPA 1668A	EPA 1668A
2',3,4,4',5-Pentachlorobiphenyl (123)	----------	EPA 1668A	EPA 1668A
2',3,4,5,5'-Pentachlorobiphenyl (124)	----------	EPA 1668A	EPA 1668A
2',3,4,5,6'-Pentachlorobiphenyl (125)	----------	EPA 1668A	EPA 1668A
3,3',4,4',5-Pentachlorobiphenyl (126)	----------	EPA 1668A	EPA 1668A
3,3',4,5,5'-Pentachlorobiphenyl (127)	----------	EPA 1668A	EPA 1668A
2,2',3,3',4,4'-Hexachlorobiphenyl (128)	----------	EPA 1668A	EPA 1668A
2,2',3,3',4,5-Hexachlorobiphenyl (129)	----------	EPA 1668A	EPA 1668A
2,2',3,3',4,5'-Hexachlorobiphenyl (130)	----------	EPA 1668A	EPA 1668A
2,2',3,3',4,6-Hexachlorobiphenyl (131)	----------	EPA 1668A	EPA 1668A
2,2',3,3',4,6'-Hexachlorobiphenyl (132)	----------	EPA 1668A	EPA 1668A
2,2',3,3',5,5'-Hexachlorobiphenyl (133)	----------	EPA 1668A	EPA 1668A
2,2',3,3',5,6-Hexachlorobiphenyl (134)	----------	EPA 1668A	EPA 1668A
2,2',3,3',5,6'-Hexachlorobiphenyl (135)	----------	EPA 1668A	EPA 1668A
2,2',3,3',6,6'-Hexachlorobiphenyl (136)	----------	EPA 1668A	EPA 1668A
2,2',3,4,4',5-Hexachlorobiphenyl (137)	----------	EPA 1668A	EPA 1668A
2,2',3,4,4',5'-Hexachlorobiphenyl (138)	----------	EPA 1668A	EPA 1668A
2,2',3,4,4',6-Hexachlorobiphenyl (139)	----------	EPA 1668A	EPA 1668A
2,2',3,4,4',6'-Hexachlorobiphenyl (140)	----------	EPA 1668A	EPA 1668A
2,2',3,4,5,5'-Hexachlorobiphenyl (141)	----------	EPA 1668A	EPA 1668A
2,2',3,4,5,6-Hexachlorobiphenyl (142)	----------	EPA 1668A	EPA 1668A
2,2',3,4,5,6'-Hexachlorobiphenyl (143)	----------	EPA 1668A	EPA 1668A
2,2',3,4,5',6-Hexachlorobiphenyl (144)	----------	EPA 1668A	EPA 1668A
2,2',3,4,6,6'-Hexachlorobiphenyl (145)	----------	EPA 1668A	EPA 1668A
2,2',3,4',5,5'-Hexachlorobiphenyl (146)	----------	EPA 1668A	EPA 1668A
2,2',3,4',5,6-Hexachlorobiphenyl (147)	----------	EPA 1668A	EPA 1668A
2,2',3,4',5,6'-Hexachlorobiphenyl (148)	----------	EPA 1668A	EPA 1668A
2,2',3,4',5',6-Hexachlorobiphenyl (149)	----------	EPA 1668A	EPA 1668A

Parameter/Analyte	Potable Water	Nonpotable Water	Solid Hazardous Waste
2,2',3,4',6,6'-Hexachlorobiphenyl (150)	----------	EPA 1668A	EPA 1668A
2,2',3,5,5',6-Hexachlorobiphenyl (151)	----------	EPA 1668A	EPA 1668A
2,2',3,5,6,6'-Hexachlorobiphenyl (152)	----------	EPA 1668A	EPA 1668A
2,2',4,4',5,5'-Hexachlorobiphenyl (153)	----------	EPA 1668A	EPA 1668A
2,2',4,4',5',6-Hexachlorobiphenyl (154)	----------	EPA 1668A	EPA 1668A
2,2',4,4',6,6'-Hexachlorobiphenyl (155)	----------	EPA 1668A	EPA 1668A
2,3,3',4,4',5-Hexachlorobiphenyl (156)	----------	EPA 1668A	EPA 1668A
2,3,3',4,4',5'-Hexachlorobiphenyl (157)	----------	EPA 1668A	EPA 1668A
2,3,3',4,4',6-Hexachlorobiphenyl (158)	----------	EPA 1668A	EPA 1668A
2,3,3',4,5,5'-Hexachlorobiphenyl (159)	----------	EPA 1668A	EPA 1668A
2,3,3',4,5,6-Hexachlorobiphenyl (160)	----------	EPA 1668A	EPA 1668A
2,3,3',4,5',6-Hexachlorobiphenyl (161)	----------	EPA 1668A	EPA 1668A
2,3,3',4',5,5'-Hexachlorobiphenyl (162)	----------	EPA 1668A	EPA 1668A
2,3,3',4',5,6-Hexachlorobiphenyl (163)	----------	EPA 1668A	EPA 1668A
2,3,3',4',5',6-Hexachlorobiphenyl (164)	----------	EPA 1668A	EPA 1668A
2,3,3',5,5',6-Hexachlorobiphenyl (165)	----------	EPA 1668A	EPA 1668A
2,3,4,4',5,6-Hexachlorobiphenyl (166)	----------	EPA 1668A	EPA 1668A
2,3',4,4',5,5'-Hexachlorobiphenyl (167)	----------	EPA 1668A	EPA 1668A
2,3',4,4',5',6-Hexachlorobiphenyl (168)	----------	EPA 1668A	EPA 1668A
3,3',4,4',5,5'-Hexachlorobiphenyl (169)	----------	EPA 1668A	EPA 1668A
2,2',3,3',4,4',5-Heptachlorobiphenyl (170)	----------	EPA 1668A	EPA 1668A
2,2',3,3',4,4',6-Heptachlorobiphenyl (171)	----------	EPA 1668A	EPA 1668A
2,2',3,3',4,5,5'-Heptachlorobiphenyl (172)	----------	EPA 1668A	EPA 1668A
2,2',3,3',4,5,6-Heptachlorobiphenyl (173)	----------	EPA 1668A	EPA 1668A
2,2',3,3',4,5,6'-Heptachlorobiphenyl (174)	----------	EPA 1668A	EPA 1668A
2,2',3,3',4,5',6-Heptachlorobiphenyl (175)	----------	EPA 1668A	EPA 1668A
2,2',3,3',4,6,6'-Heptachlorobiphenyl (176)	----------	EPA 1668A	EPA 1668A
2,2',3,3',4',5,6-Heptachlorobiphenyl (177)	----------	EPA 1668A	EPA 1668A
2,2',3,3',5,5',6-Heptachlorobiphenyl (178)	----------	EPA 1668A	EPA 1668A
2,2',3,3',5,6,6'-Heptachlorobiphenyl (179)	----------	EPA 1668A	EPA 1668A
2,2',3,4,4',5,5'-Heptachlorobiphenyl (180)	----------	EPA 1668A	EPA 1668A
2,2',3,4,4',5,6-Heptachlorobiphenyl (181)	----------	EPA 1668A	EPA 1668A
2,2',3,4,4',5,6'-Heptachlorobiphenyl (182)	----------	EPA 1668A	EPA 1668A
2,2',3,4,4',5',6-Heptachlorobiphenyl (183)	----------	EPA 1668A	EPA 1668A
2,2',3,4,4',6,6'-Heptachlorobiphenyl (184)	----------	EPA 1668A	EPA 1668A
2,2',3,4,5,5',6-Heptachlorobiphenyl (185)	----------	EPA 1668A	EPA 1668A
2,2',3,4,5,6,6'-Heptachlorobiphenyl (186)	----------	EPA 1668A	EPA 1668A
2,2',3,4',5,5',6-Heptachlorobiphenyl (187)	----------	EPA 1668A	EPA 1668A
2,2',3,4',5,6,6'-Heptachlorobiphenyl (188)	----------	EPA 1668A	EPA 1668A
2,3,3',4,4',5,5'-Heptachlorobiphenyl (189)	----------	EPA 1668A	EPA 1668A
2,3,3',4,4',5,6-Heptachlorobiphenyl (190)	----------	EPA 1668A	EPA 1668A
2,3,3',4,4',5',6-Heptachlorobiphenyl (191)	----------	EPA 1668A	EPA 1668A
2,3,3',4,5,5',6-Heptachlorobiphenyl (192)	----------	EPA 1668A	EPA 1668A
2,3,3',4',5,5',6-Heptachlorobiphenyl (193)	----------	EPA 1668A	EPA 1668A
2,2',3,3',4,4',5,5'-Octachlorobiphenyl (194)	----------	EPA 1668A	EPA 1668A
2,2',3,3',4,4',5,6-Octachlorobiphenyl (195)	----------	EPA 1668A	EPA 1668A
2,2',3,3',4,4',5,6'-Octachlorobiphenyl (196)	----------	EPA 1668A	EPA 1668A
2,2',3,3',4,4',6,6'-Octachlorobiphenyl (197)	----------	EPA 1668A	EPA 1668A
2,2',3,3',4,5,5',6-Octachlorobiphenyl (198)	----------	EPA 1668A	EPA 1668A
2,2',3,3',4,5,5',6'-Octachlorobiphenyl (199)	----------	EPA 1668A	EPA 1668A
2,2',3,3',4,5,6,6'-Octachlorobiphenyl (200)	----------	EPA 1668A	EPA 1668A

Parameter/Analyte	Potable Water	Nonpotable Water	Solid Hazardous Waste
2,2',3,3',4,5',6,6'-Octachlorobiphenyl (201)	----------	EPA 1668A	EPA 1668A
2,2',3,3',5,5',6,6'-Octachlorobiphenyl (202)	----------	EPA 1668A	EPA 1668A
2,2',3,4,4',5,5',6-Octachlorobiphenyl (203)	----------	EPA 1668A	EPA 1668A
2,2',3,4,4',5,6,6'-Octachlorobiphenyl (204)	----------	EPA 1668A	EPA 1668A
2,3,3',4,4',5,5',6-Octachlorobiphenyl (205)	----------	EPA 1668A	EPA 1668A
2,2',3,3',4,4',5,5',6-Nonachlorobiphenyl (206)	----------	EPA 1668A	EPA 1668A
2,2',3,3',4,4',5,6,6'-Nonachlorobiphenyl (207)	----------	EPA 1668A	EPA 1668A
2,2',3,3',4,5,5',6,6'-Nonachlorobiphenyl (208)	----------	EPA 1668A	EPA 1668A
2,2',3,3',4,4',5,5',6,6'-Decachlorobiphenyl (209)	----------	EPA 1668A	EPA 1668A
Soxhlet/Dean-Stark Extraction	----------	----------	EPA 3540C
Continuous Liquid-Liquid Extraction	EPA 3520C	----------	----------

The American Association for Laboratory Accreditation

World Class Accreditation

Accredited DoD ELAP Laboratory

A2LA has accredited

CAPE FEAR ANALYTICAL, LLC

Wilmington, NC

for technical competence in the field of

Environmental Testing

In recognition of the successful completion of the A2LA evaluation process that includes an assessment of the laboratory's compliance with ISO/IEC 17025:2005, the 2003 NELAC Chapter 5 Standard, and the requirements of the Department of Defense Environmental Laboratory Accreditation Program (DoD ELAP) as detailed in the DoD Quality Systems Manual for Environmental Laboratories (QSM v4.1); accreditation is granted to this laboratory to perform recognized EPA methods as defined on the associated A2LA Environmental Scope of Accreditation. This accreditation demonstrates technical competence for this defined scope and the operation of a laboratory quality management system (*refer to joint ISO-ILAC-IAF Communiqué dated 8 January 2009*).

Presented this 5th day of April 2010.

President & CEO
For the Accreditation Council
Certificate Number 3014.01
Valid to May 31, 2012

For the tests or types of tests to which this accreditation applies, please refer to the laboratory's Environmental Scope of Accreditation.

Accredited Labs Report

10/14/2011 4:03:24 PM

NELAP	08/07/2006	Non-Potable Water	Antimony	EPA 200.7
NELAP	08/07/2006	Non-Potable Water	Arsenic	EPA 200.7
NELAP	08/07/2006	Non-Potable Water	Barium	EPA 200.7
NELAP	01/24/2006	Drinking Water	Barium	EPA 200.7
NELAP	01/24/2006	Drinking Water	Beryllium	EPA 200.7
NELAP	08/07/2006	Non-Potable Water	Beryllium	EPA 200.7
NELAP	08/07/2006	Non-Potable Water	Boron	EPA 200.7
NELAP	08/07/2006	Non-Potable Water	Cadmium	EPA 200.7
NELAP	01/24/2006	Drinking Water	Cadmium	EPA 200.7
NELAP	08/07/2006	Non-Potable Water	Calcium	EPA 200.7
NELAP	01/24/2006	Drinking Water	Calcium	EPA 200.7
NELAP	01/24/2006	Drinking Water	Calcium hardness as CaCO3	EPA 200.7
NELAP	08/07/2006	Non-Potable Water	Chromium	EPA 200.7
NELAP	01/24/2006	Drinking Water	Chromium	EPA 200.7
NELAP	08/07/2006	Non-Potable Water	Cobalt	EPA 200.7
NELAP	01/24/2006	Drinking Water	Copper	EPA 200.7
NELAP	08/07/2006	Non-Potable Water	Copper	EPA 200.7
NELAP	01/24/2006	Drinking Water	Iron	EPA 200.7
NELAP	08/07/2006	Non-Potable Water	Iron	EPA 200.7
NELAP	08/07/2006	Non-Potable Water	Lead	EPA 200.7
NELAP	01/21/2010	Non-Potable Water	Magnesium	EPA 200.7
NELAP	08/07/2006	Non-Potable Water	Manganese	EPA 200.7
NELAP	01/24/2006	Drinking Water	Manganese	EPA 200.7
NELAP	08/07/2006	Non-Potable Water	Molybdenum	EPA 200.7
NELAP	08/07/2006	Non-Potable Water	Nickel	EPA 200.7
NELAP	01/24/2006	Drinking Water	Nickel	EPA 200.7
NELAP	01/21/2010	Non-Potable Water	Potassium	EPA 200.7
NELAP	08/07/2006	Non-Potable Water	Selenium	EPA 200.7
NELAP	08/07/2006	Non-Potable Water	Silver	EPA 200.7

Accredited Labs Report

10/14/2011 4:03:24 PM

NELAP	01/24/2006	Drinking Water	Silver	EPA 200.7
NELAP	01/23/2009	Drinking Water	Sodium	EPA 200.7
NELAP	08/07/2006	Non-Potable Water	Sodium	EPA 200.7
NELAP	08/07/2006	Non-Potable Water	Thallium	EPA 200.7
NELAP	01/21/2010	Non-Potable Water	Tin	EPA 200.7
NELAP	01/24/2006	Drinking Water	Total hardness as CaCO3	EPA 200.7
NELAP	08/07/2006	Non-Potable Water	Vanadium	EPA 200.7
NELAP	01/24/2006	Drinking Water	Zinc	EPA 200.7
NELAP	08/07/2006	Non-Potable Water	Zinc	EPA 200.7
NELAP	01/21/2010	Drinking Water	Aluminum	EPA 200.8
NELAP	08/07/2006	Non-Potable Water	Aluminum	EPA 200.8
NELAP	08/07/2006	Non-Potable Water	Antimony	EPA 200.8
NELAP	01/24/2006	Drinking Water	Antimony	EPA 200.8
NELAP	08/07/2006	Non-Potable Water	Arsenic	EPA 200.8
NELAP	08/07/2006	Non-Potable Water	Barium	EPA 200.8
NELAP	01/21/2010	Drinking Water	Barium	EPA 200.8
NELAP	08/07/2006	Non-Potable Water	Beryllium	EPA 200.8
NELAP	01/21/2010	Drinking Water	Beryllium	EPA 200.8
NELAP	08/07/2006	Non-Potable Water	Cadmium	EPA 200.8
NELAP	01/21/2010	Drinking Water	Cadmium	EPA 200.8
NELAP	08/07/2006	Non-Potable Water	Chromium	EPA 200.8
NELAP	01/21/2010	Drinking Water	Chromium	EPA 200.8
NELAP	08/07/2006	Non-Potable Water	Cobalt	EPA 200.8
NELAP	08/07/2006	Non-Potable Water	Copper	EPA 200.8
NELAP	01/21/2010	Drinking Water	Copper	EPA 200.8
NELAP	01/24/2006	Drinking Water	Lead	EPA 200.8
NELAP	08/07/2006	Non-Potable Water	Lead	EPA 200.8
NELAP	08/07/2006	Non-Potable Water	Manganese	EPA 200.8
NELAP	01/21/2010	Drinking Water	Manganese	EPA 200.8

pennsylvania
DEPARTMENT OF ENVIRONMENTAL PROTECTION

Accredited Labs Report

10/14/2011 4:03:24 PM

68-00548

Chemtech

284 Sheffield Street

Mountainside, NJ 07092

(908) 728-3150

TYPE	EFFECTIVE DATE	MATRIX	ANALYTE	METHOD
NELAP	11/09/2007	Solid and Chemical Materials	Ignitability	EPA 1010
NELAP	11/09/2007	Non-Potable Water	Ignitability	EPA 1010
NELAP	11/09/2007	Solid and Chemical Materials	Ignitability	EPA 1030
NELAP	08/07/2006	Solid and Chemical Materials	Corrosivity	EPA 1110
NELAP	08/07/2006	Non-Potable Water	Corrosivity	EPA 1110A
NELAP	08/07/2006	Non-Potable Water	Conductivity	EPA 120.1
NELAP	11/09/2007	Non-Potable Water	Toxicity characteristic leaching procedure (TCLP)	EPA 1311
NELAP	11/09/2007	Solid and Chemical Materials	Toxicity characteristic leaching procedure (TCLP)	EPA 1311
NELAP	11/09/2007	Non-Potable Water	Synthetic precipitation leaching procedure (SPLP)	EPA 1312
NELAP	11/09/2007	Solid and Chemical Materials	Synthetic precipitation leaching procedure (SPLP)	EPA 1312
NELAP	01/07/2011	Non-Potable Water	Residue, volatile	EPA 160.4
NELAP	11/09/2007	Non-Potable Water	Non-polar material	EPA 1664 Rev A
NELAP	11/09/2007	Solid and Chemical Materials	Oil and grease	EPA 1664 Rev A
NELAP	08/07/2006	Non-Potable Water	Oil and grease	EPA 1664 Rev A
NELAP	11/09/2007	Drinking Water	Turbidity	EPA 180.1
NELAP	08/07/2006	Non-Potable Water	Turbidity	EPA 180.1
NELAP	08/07/2006	Non-Potable Water	Aluminum	EPA 200.7
NELAP	01/24/2006	Drinking Water	Aluminum	EPA 200.7

NELAP	08/07/2006	Non-Potable Water	Molybdenum	EPA 200.8
NELAP	08/07/2006	Non-Potable Water	Nickel	EPA 200.8
NELAP	01/21/2010	Drinking Water	Nickel	EPA 200.8
NELAP	01/24/2006	Drinking Water	Selenium	EPA 200.8
NELAP	08/07/2006	Non-Potable Water	Selenium	EPA 200.8
NELAP	08/07/2006	Non-Potable Water	Silver	EPA 200.8
NELAP	01/21/2010	Drinking Water	Silver	EPA 200.8
NELAP	01/24/2006	Drinking Water	Thallium	EPA 200.8
NELAP	08/07/2006	Non-Potable Water	Thallium	EPA 200.8
NELAP	08/07/2006	Non-Potable Water	Vanadium	EPA 200.8
NELAP	08/07/2006	Non-Potable Water	Zinc	EPA 200.8
NELAP	01/21/2010	Drinking Water	Zinc	EPA 200.8
NELAP	01/24/2006	Drinking Water	Mercury	EPA 245.1
NELAP	01/21/2010	Non-Potable Water	Mercury	EPA 245.1
NELAP	08/07/2006	Non-Potable Water	Bromide	EPA 300.0
NELAP	08/07/2006	Non-Potable Water	Chloride	EPA 300.0
NELAP	11/09/2007	Drinking Water	Chloride	EPA 300.0
NELAP	11/09/2007	Drinking Water	Fluoride	EPA 300.0
NELAP	08/07/2006	Non-Potable Water	Fluoride	EPA 300.0
NELAP	11/09/2007	Drinking Water	Nitrate	EPA 300.0
NELAP	08/07/2006	Non-Potable Water	Nitrate as N	EPA 300.0
NELAP	11/09/2007	Drinking Water	Nitrite	EPA 300.0
NELAP	08/07/2006	Non-Potable Water	Nitrite as N	EPA 300.0
NELAP	11/09/2007	Drinking Water	Orthophosphate as P	EPA 300.0
NELAP	08/07/2006	Non-Potable Water	Orthophosphate as P	EPA 300.0
NELAP	11/09/2007	Drinking Water	Sulfate	EPA 300.0
NELAP	08/07/2006	Non-Potable Water	Sulfate	EPA 300.0
NELAP	01/21/2010	Non-Potable Water	Preconcentration under acid	EPA 3005
NELAP	08/07/2006	Non-Potable Water	Hot plate acid digestion (HNO3 + HCl)	EPA 3010A

NELAP	01/21/2010	Solid and Chemical Materials	Acid digestion of solids	EPA 3050B
NELAP	01/21/2010	Solid and Chemical Materials	Alkaline digestion of Cr(VI)	EPA 3060
NELAP	01/21/2010	Non-Potable Water	Separatory funnel liquid-liquid extraction	EPA 3510C
NELAP	01/21/2010	Non-Potable Water	Continuous liquid-liquid extraction	EPA 3520C
NELAP	08/07/2006	Solid and Chemical Materials	Automated soxhlet extraction	EPA 3541
NELAP	01/21/2010	Solid and Chemical Materials	Pressurized fluid extraction (PFE)	EPA 3545
NELAP	08/07/2006	Solid and Chemical Materials	Ultrasonic extraction	EPA 3550B
NELAP	01/21/2010	Solid and Chemical Materials	Waste dilution	EPA 3580A
NELAP	08/07/2006	Solid and Chemical Materials	Alumina cleanup	EPA 3610B
NELAP	08/07/2006	Solid and Chemical Materials	Florisil cleanup	EPA 3620B
NELAP	08/07/2006	Solid and Chemical Materials	Silica gel cleanup	EPA 3630C
NELAP	08/07/2006	Solid and Chemical Materials	Gel permeation cleanup (GPC)	EPA 3640A
NELAP	11/09/2007	Non-Potable Water	Phosphorus, total	EPA 365.3
NELAP	08/07/2006	Solid and Chemical Materials	Sulfur cleanup	EPA 3660B
NELAP	08/07/2006	Solid and Chemical Materials	Sulfuric acid/permanganate clean-up	EPA 3665A
NELAP	08/07/2006	Non-Potable Water	Total phenolics	EPA 420.1
NELAP	12/18/2003	Drinking Water	1,1,1,2-Tetrachloroethane	EPA 524.2
NELAP	12/18/2003	Drinking Water	1,1,1-Trichloroethane	EPA 524.2
NELAP	12/18/2003	Drinking Water	1,1,2,2-Tetrachloroethane	EPA 524.2
NELAP	12/18/2003	Drinking Water	1,1,2-Trichloroethane	EPA 524.2
NELAP	12/18/2003	Drinking Water	1,1-Dichloroethane	EPA 524.2
NELAP	12/18/2003	Drinking Water	1,1-Dichloroethene (1,1-Dichloroethylene)	EPA 524.2
NELAP	12/18/2003	Drinking Water	1,1-Dichloropropene	EPA 524.2

NELAP	01/21/2010	Drinking Water	1,2,3-Trichlorobenzene	EPA 524.2
NELAP	12/18/2003	Drinking Water	1,2,3-Trichloropropane (1,2,3-TCP)	EPA 524.2
NELAP	12/18/2003	Drinking Water	1,2,4-Trichlorobenzene	EPA 524.2
NELAP	01/21/2010	Drinking Water	1,2,4-Trimethylbenzene	EPA 524.2
NELAP	12/18/2003	Drinking Water	1,2-Dichlorobenzene (o-Dichlorobenzene)	EPA 524.2
NELAP	12/18/2003	Drinking Water	1,2-Dichloroethane	EPA 524.2
NELAP	12/18/2003	Drinking Water	1,2-Dichloropropane	EPA 524.2
NELAP	01/21/2010	Drinking Water	1,3,5-Trimethylbenzene	EPA 524.2
NELAP	12/18/2003	Drinking Water	1,3-Dichlorobenzene (m-Dichlorobenzene)	EPA 524.2
NELAP	12/18/2003	Drinking Water	1,3-Dichloropropane	EPA 524.2
NELAP	12/18/2003	Drinking Water	1,4-Dichlorobenzene (p-Dichlorobenzene)	EPA 524.2
NELAP	12/18/2003	Drinking Water	2,2-Dichloropropane	EPA 524.2
NELAP	12/18/2003	Drinking Water	2-Chlorotoluene	EPA 524.2
NELAP	12/18/2003	Drinking Water	4-Chlorotoluene	EPA 524.2
NELAP	01/21/2010	Drinking Water	4-Isopropyltoluene (p-Isopropyltoluene)	EPA 524.2
NELAP	12/18/2003	Drinking Water	Benzene	EPA 524.2
NELAP	12/18/2003	Drinking Water	Bromobenzene	EPA 524.2
NELAP	01/24/2006	Drinking Water	Bromochloromethane	EPA 524.2
NELAP	01/24/2006	Drinking Water	Bromodichloromethane	EPA 524.2
NELAP	12/18/2003	Drinking Water	Bromoform	EPA 524.2
NELAP	12/18/2003	Drinking Water	Carbon tetrachloride	EPA 524.2
NELAP	12/18/2003	Drinking Water	Chlorobenzene	EPA 524.2
NELAP	12/18/2003	Drinking Water	Chloroethane	EPA 524.2
NELAP	12/18/2003	Drinking Water	Chloroform	EPA 524.2
NELAP	12/18/2003	Drinking Water	cis-1,2-Dichloroethene	EPA 524.2
NELAP	12/18/2003	Drinking Water	cis-1,3-Dichloropropene	EPA 524.2
NELAP	12/18/2003	Drinking Water	Dibromochloromethane	EPA 524.2
NELAP	12/18/2003	Drinking Water	Dibromomethane	EPA 524.2
NELAP	01/21/2010	Drinking Water	Dichlorodifluoromethane (Freon 12)	EPA 524.2

NELAP	12/18/2003	Drinking Water	Dichloromethane (DCM, Methylene chloride)	EPA 524.2
NELAP	12/18/2003	Drinking Water	Ethylbenzene	EPA 524.2
NELAP	01/21/2010	Drinking Water	Hexachlorobutadiene (1,3-Hexachlorobutadiene)	EPA 524.2
NELAP	01/21/2010	Drinking Water	Isopropylbenzene (Cumene)	EPA 524.2
NELAP	12/18/2003	Drinking Water	Methyl bromide (Bromomethane)	EPA 524.2
NELAP	12/18/2003	Drinking Water	Methyl chloride (Chloromethane)	EPA 524.2
NELAP	01/24/2006	Drinking Water	Methyl tert-butyl ether (MTBE)	EPA 524.2
NELAP	01/21/2010	Drinking Water	n-Butylbenzene	EPA 524.2
NELAP	01/21/2010	Drinking Water	n-Propylbenzene	EPA 524.2
NELAP	01/21/2010	Drinking Water	Naphthalene	EPA 524.2
NELAP	01/21/2010	Drinking Water	Nitrobenzene	EPA 524.2
NELAP	01/21/2010	Drinking Water	sec-Butylbenzene	EPA 524.2
NELAP	12/18/2003	Drinking Water	Styrene	EPA 524.2
NELAP	01/21/2010	Drinking Water	tert-Butylbenzene	EPA 524.2
NELAP	12/18/2003	Drinking Water	Tetrachloroethene (PCE, Perchloroethylene)	EPA 524.2
NELAP	12/18/2003	Drinking Water	Toluene	EPA 524.2
NELAP	11/09/2007	Drinking Water	Total trihalomethanes (TTHMs)	EPA 524.2
NELAP	12/18/2003	Drinking Water	trans-1,2-Dichloroethene	EPA 524.2
NELAP	12/18/2003	Drinking Water	trans-1,3-Dichloropropene	EPA 524.2
NELAP	12/18/2003	Drinking Water	Trichloroethene (TCE, Trichloroethylene)	EPA 524.2
NELAP	01/21/2010	Drinking Water	Trichlorofluoromethane (Freon 11)	EPA 524.2
NELAP	12/18/2003	Drinking Water	Vinyl chloride (Chloroethene)	EPA 524.2
NELAP	12/18/2003	Drinking Water	Xylenes, total	EPA 524.2
NELAP	08/07/2006	Solid and Chemical Materials	Aluminum	EPA 6010
NELAP	08/07/2006	Non-Potable Water	Aluminum	EPA 6010
NELAP	08/07/2006	Non-Potable Water	Antimony	EPA 6010
NELAP	08/07/2006	Solid and Chemical Materials	Antimony	EPA 6010
NELAP	08/07/2006	Non-Potable Water	Arsenic	EPA 6010

NELAP	08/07/2006	Solid and Chemical Materials	Arsenic	EPA 6010
NELAP	08/07/2006	Non-Potable Water	Barium	EPA 6010
NELAP	08/07/2006	Solid and Chemical Materials	Barium	EPA 6010
NELAP	08/07/2006	Solid and Chemical Materials	Beryllium	EPA 6010
NELAP	08/07/2006	Non-Potable Water	Beryllium	EPA 6010
NELAP	08/07/2006	Non-Potable Water	Boron	EPA 6010
NELAP	01/21/2010	Solid and Chemical Materials	Boron	EPA 6010
NELAP	08/07/2006	Solid and Chemical Materials	Cadmium	EPA 6010
NELAP	08/07/2006	Non-Potable Water	Cadmium	EPA 6010
NELAP	08/07/2006	Non-Potable Water	Calcium	EPA 6010
NELAP	08/07/2006	Solid and Chemical Materials	Calcium	EPA 6010
NELAP	08/07/2006	Solid and Chemical Materials	Chromium	EPA 6010
NELAP	08/07/2006	Non-Potable Water	Chromium	EPA 6010
NELAP	08/07/2006	Solid and Chemical Materials	Cobalt	EPA 6010
NELAP	08/07/2006	Non-Potable Water	Cobalt	EPA 6010
NELAP	08/07/2006	Solid and Chemical Materials	Copper	EPA 6010
NELAP	08/07/2006	Non-Potable Water	Copper	EPA 6010
NELAP	08/07/2006	Solid and Chemical Materials	Iron	EPA 6010
NELAP	08/07/2006	Non-Potable Water	Iron	EPA 6010
NELAP	08/07/2006	Solid and Chemical Materials	Lead	EPA 6010
NELAP	08/07/2006	Non-Potable Water	Lead	EPA 6010
NELAP	08/07/2006	Solid and Chemical Materials	Magnesium	EPA 6010
NELAP	08/07/2006	Non-Potable Water	Magnesium	EPA 6010

NELAP	08/07/2006	Non-Potable Water	Manganese	EPA 6010
NELAP	08/07/2006	Solid and Chemical Materials	Manganese	EPA 6010
NELAP	08/07/2006	Solid and Chemical Materials	Molybdenum	EPA 6010
NELAP	01/21/2010	Non-Potable Water	Molybdenum	EPA 6010
NELAP	08/07/2006	Non-Potable Water	Nickel	EPA 6010
NELAP	08/07/2006	Solid and Chemical Materials	Nickel	EPA 6010
NELAP	08/07/2006	Solid and Chemical Materials	Potassium	EPA 6010
NELAP	08/07/2006	Non-Potable Water	Potassium	EPA 6010
NELAP	08/07/2006	Solid and Chemical Materials	Selenium	EPA 6010
NELAP	08/07/2006	Non-Potable Water	Selenium	EPA 6010
NELAP	08/07/2006	Solid and Chemical Materials	Silver	EPA 6010
NELAP	08/07/2006	Non-Potable Water	Silver	EPA 6010
NELAP	08/07/2006	Non-Potable Water	Sodium	EPA 6010
NELAP	08/07/2006	Solid and Chemical Materials	Sodium	EPA 6010
NELAP	08/07/2006	Non-Potable Water	Thallium	EPA 6010
NELAP	08/07/2006	Solid and Chemical Materials	Thallium	EPA 6010
NELAP	01/21/2010	Non-Potable Water	Tin	EPA 6010
NELAP	01/21/2010	Solid and Chemical Materials	Tin	EPA 6010
NELAP	08/07/2006	Non-Potable Water	Vanadium	EPA 6010
NELAP	08/07/2006	Solid and Chemical Materials	Vanadium	EPA 6010
NELAP	08/07/2006	Solid and Chemical Materials	Zinc	EPA 6010
NELAP	08/07/2006	Non-Potable Water	Zinc	EPA 6010
NELAP	08/07/2006	Solid and Chemical Materials	Metals by ICP/AES	EPA 6010B

NELAP	01/21/2010	Non-Potable Water	Metals by ICP/AES	EPA 6010B
NELAP	08/07/2006	Non-Potable Water	Aluminum	EPA 6020
NELAP	08/07/2006	Solid and Chemical Materials	Aluminum	EPA 6020
NELAP	08/07/2006	Non-Potable Water	Antimony	EPA 6020
NELAP	08/07/2006	Solid and Chemical Materials	Antimony	EPA 6020
NELAP	08/07/2006	Solid and Chemical Materials	Arsenic	EPA 6020
NELAP	08/07/2006	Non-Potable Water	Arsenic	EPA 6020
NELAP	08/07/2006	Solid and Chemical Materials	Barium	EPA 6020
NELAP	08/07/2006	Non-Potable Water	Barium	EPA 6020
NELAP	08/07/2006	Solid and Chemical Materials	Beryllium	EPA 6020
NELAP	08/07/2006	Non-Potable Water	Beryllium	EPA 6020
NELAP	08/07/2006	Non-Potable Water	Cadmium	EPA 6020
NELAP	08/07/2006	Solid and Chemical Materials	Cadmium	EPA 6020
NELAP	08/07/2006	Non-Potable Water	Chromium	EPA 6020
NELAP	08/07/2006	Solid and Chemical Materials	Chromium	EPA 6020
NELAP	08/07/2006	Solid and Chemical Materials	Cobalt	EPA 6020
NELAP	08/07/2006	Non-Potable Water	Cobalt	EPA 6020
NELAP	08/07/2006	Non-Potable Water	Copper	EPA 6020
NELAP	08/07/2006	Solid and Chemical Materials	Copper	EPA 6020
NELAP	08/07/2006	Non-Potable Water	Lead	EPA 6020
NELAP	08/07/2006	Solid and Chemical Materials	Lead	EPA 6020
NELAP	08/07/2006	Non-Potable Water	Manganese	EPA 6020
NELAP	08/07/2006	Solid and Chemical Materials	Manganese	EPA 6020

NELAP	08/07/2006	Solid and Chemical Materials	Metals by ICP/MS	EPA 6020
NELAP	08/07/2006	Non-Potable Water	Metals by ICP/MS	EPA 6020
NELAP	08/07/2006	Non-Potable Water	Nickel	EPA 6020
NELAP	08/07/2006	Solid and Chemical Materials	Nickel	EPA 6020
NELAP	08/07/2006	Non-Potable Water	Selenium	EPA 6020
NELAP	08/07/2006	Solid and Chemical Materials	Selenium	EPA 6020
NELAP	08/07/2006	Non-Potable Water	Silver	EPA 6020
NELAP	08/07/2006	Solid and Chemical Materials	Silver	EPA 6020
NELAP	08/07/2006	Solid and Chemical Materials	Thallium	EPA 6020
NELAP	08/07/2006	Non-Potable Water	Thallium	EPA 6020
NELAP	08/07/2006	Non-Potable Water	Vanadium	EPA 6020
NELAP	08/07/2006	Solid and Chemical Materials	Vanadium	EPA 6020
NELAP	08/07/2006	Solid and Chemical Materials	Zinc	EPA 6020
NELAP	08/07/2006	Non-Potable Water	Zinc	EPA 6020
NELAP	08/07/2006	Non-Potable Water	4,4'-DDD	EPA 608
NELAP	08/07/2006	Non-Potable Water	4,4'-DDE	EPA 608
NELAP	08/07/2006	Non-Potable Water	4,4'-DDT	EPA 608
NELAP	08/07/2006	Non-Potable Water	Aldrin (HHDN)	EPA 608
NELAP	08/07/2006	Non-Potable Water	alpha-BHC (alpha-Hexachlorocyclohexane)	EPA 608
NELAP	08/07/2006	Non-Potable Water	Aroclor-1016 (PCB-1016)	EPA 608
NELAP	08/07/2006	Non-Potable Water	Aroclor-1221 (PCB-1221)	EPA 608
NELAP	08/07/2006	Non-Potable Water	Aroclor-1232 (PCB-1232)	EPA 608
NELAP	08/07/2006	Non-Potable Water	Aroclor-1242 (PCB-1242)	EPA 608
NELAP	08/07/2006	Non-Potable Water	Aroclor-1248 (PCB-1248)	EPA 608
NELAP	08/07/2006	Non-Potable Water	Aroclor-1254 (PCB-1254)	EPA 608
NELAP	08/07/2006	Non-Potable Water	Aroclor-1260 (PCB-1260)	EPA 608

NELAP	08/07/2006	Non-Potable Water	beta-BHC (beta-Hexachlorocyclohexane)	EPA 608
NELAP	08/07/2006	Non-Potable Water	Chlordane (tech.)	EPA 608
NELAP	08/07/2006	Non-Potable Water	delta-BHC (delta-Hexachlorocyclohexane)	EPA 608
NELAP	08/07/2006	Non-Potable Water	Dieldrin	EPA 608
NELAP	08/07/2006	Non-Potable Water	Endosulfan I	EPA 608
NELAP	08/07/2006	Non-Potable Water	Endosulfan II	EPA 608
NELAP	08/07/2006	Non-Potable Water	Endosulfan sulfate	EPA 608
NELAP	08/07/2006	Non-Potable Water	Endrin	EPA 608
NELAP	08/07/2006	Non-Potable Water	Endrin aldehyde	EPA 608
NELAP	08/07/2006	Non-Potable Water	gamma-BHC (Lindane, gamma-Hexachlorocyclohexane)	EPA 608
NELAP	08/07/2006	Non-Potable Water	Heptachlor	EPA 608
NELAP	08/07/2006	Non-Potable Water	Heptachlor epoxide	EPA 608
NELAP	08/07/2006	Non-Potable Water	Toxaphene (Chlorinated camphene)	EPA 608
NELAP	08/07/2006	Non-Potable Water	1,1,1-Trichloroethane	EPA 624
NELAP	08/07/2006	Non-Potable Water	1,1,2,2-Tetrachloroethane	EPA 624
NELAP	08/07/2006	Non-Potable Water	1,1,2-Trichloroethane	EPA 624
NELAP	08/07/2006	Non-Potable Water	1,1-Dichloroethane	EPA 624
NELAP	08/07/2006	Non-Potable Water	1,1-Dichloroethene (1,1-Dichloroethylene)	EPA 624
NELAP	08/07/2006	Non-Potable Water	1,2-Dichlorobenzene (o-Dichlorobenzene)	EPA 624
NELAP	08/07/2006	Non-Potable Water	1,2-Dichloroethane	EPA 624
NELAP	08/07/2006	Non-Potable Water	1,2-Dichloropropane	EPA 624
NELAP	08/07/2006	Non-Potable Water	1,3-Dichlorobenzene (m-Dichlorobenzene)	EPA 624
NELAP	08/07/2006	Non-Potable Water	1,4-Dichlorobenzene (p-Dichlorobenzene)	EPA 624
NELAP	08/07/2006	Non-Potable Water	2-Chloroethyl vinyl ether	EPA 624
NELAP	08/07/2006	Non-Potable Water	Benzene	EPA 624
NELAP	08/07/2006	Non-Potable Water	Bromodichloromethane	EPA 624
NELAP	08/07/2006	Non-Potable Water	Bromoform	EPA 624
NELAP	08/07/2006	Non-Potable Water	Bromomethane (Methyl bromide)	EPA 624
NELAP	08/07/2006	Non-Potable Water	Carbon tetrachloride	EPA 624

NELAP	08/07/2006	Non-Potable Water	Chlorobenzene	EPA 624
NELAP	08/07/2006	Non-Potable Water	Chloroethane	EPA 624
NELAP	08/07/2006	Non-Potable Water	Chloroform	EPA 624
NELAP	08/07/2006	Non-Potable Water	Chloromethane (Methyl chloride)	EPA 624
NELAP	08/07/2006	Non-Potable Water	cis-1,3-Dichloropropene	EPA 624
NELAP	08/07/2006	Non-Potable Water	Dibromochloromethane	EPA 624
NELAP	08/07/2006	Non-Potable Water	Dichloromethane (DCM, Methylene chloride)	EPA 624
NELAP	08/07/2006	Non-Potable Water	Ethylbenzene	EPA 624
NELAP	08/07/2006	Non-Potable Water	Tetrachloroethene (PCE, Perchloroethylene)	EPA 624
NELAP	08/07/2006	Non-Potable Water	Toluene	EPA 624
NELAP	08/07/2006	Non-Potable Water	trans-1,2-Dichloroethene	EPA 624
NELAP	08/07/2006	Non-Potable Water	trans-1,3-Dichloropropene	EPA 624
NELAP	08/07/2006	Non-Potable Water	Trichloroethene (TCE, Trichloroethylene)	EPA 624
NELAP	08/07/2006	Non-Potable Water	Trichlorofluoromethane (Freon 11)	EPA 624
NELAP	08/07/2006	Non-Potable Water	Vinyl chloride (Chloroethene)	EPA 624
NELAP	08/07/2006	Non-Potable Water	Xylenes, total	EPA 624
NELAP	08/07/2006	Non-Potable Water	Styrene	EPA 624-Extended
NELAP	08/07/2006	Non-Potable Water	1,2,4-Trichlorobenzene	EPA 625
NELAP	08/07/2006	Non-Potable Water	2,4,5-Trichlorophenol	EPA 625
NELAP	08/07/2006	Non-Potable Water	2,4,6-Trichlorophenol	EPA 625
NELAP	08/07/2006	Non-Potable Water	2,4-Dichlorophenol	EPA 625
NELAP	08/07/2006	Non-Potable Water	2,4-Dimethylphenol	EPA 625
NELAP	08/07/2006	Non-Potable Water	2,4-Dinitrophenol	EPA 625
NELAP	08/07/2006	Non-Potable Water	2,4-Dinitrotoluene (2,4-DNT)	EPA 625
NELAP	08/07/2006	Non-Potable Water	2,6-Dinitrotoluene (2,6-DNT)	EPA 625
NELAP	08/07/2006	Non-Potable Water	2-Chloronaphthalene	EPA 625
NELAP	08/07/2006	Non-Potable Water	2-Chlorophenol	EPA 625
NELAP	08/07/2006	Non-Potable Water	2-Methyl-4,6-dinitrophenol (4,6-Dinitro-2-methylphenol)	EPA 625
NELAP	08/07/2006	Non-Potable Water	2-Nitrophenol	EPA 625

NELAP	08/07/2006	Non-Potable Water	3,3'-Dichlorobenzidine	EPA 625
NELAP	01/21/2010	Non-Potable Water	4-Bromophenyl phenyl ether	EPA 625
NELAP	08/07/2006	Non-Potable Water	4-Chloro-3-methylphenol	EPA 625
NELAP	08/07/2006	Non-Potable Water	4-Chlorophenyl phenyl ether	EPA 625
NELAP	08/07/2006	Non-Potable Water	4-Nitrophenol	EPA 625
NELAP	08/07/2006	Non-Potable Water	Acenaphthene	EPA 625
NELAP	08/07/2006	Non-Potable Water	Acenaphthylene	EPA 625
NELAP	08/07/2006	Non-Potable Water	Anthracene	EPA 625
NELAP	08/07/2006	Non-Potable Water	Benzidine	EPA 625
NELAP	08/07/2006	Non-Potable Water	Benzo[a]anthracene	EPA 625
NELAP	08/07/2006	Non-Potable Water	Benzo[a]pyrene	EPA 625
NELAP	08/07/2006	Non-Potable Water	Benzo[b]fluoranthene	EPA 625
NELAP	08/07/2006	Non-Potable Water	Benzo[ghi]perylene	EPA 625
NELAP	08/07/2006	Non-Potable Water	Benzo[k]fluoranthene	EPA 625
NELAP	01/21/2010	Non-Potable Water	bis(2-Chloroethoxy)methane	EPA 625
NELAP	08/07/2006	Non-Potable Water	bis(2-Chloroethyl) ether	EPA 625
NELAP	08/07/2006	Non-Potable Water	bis(2-Chloroisopropyl) ether	EPA 625
NELAP	08/07/2006	Non-Potable Water	bis(2-Ethylhexyl) phthalate (DEHP)	EPA 625
NELAP	08/07/2006	Non-Potable Water	Butyl benzyl phthalate (Benzyl butyl phthalate)	EPA 625
NELAP	08/07/2006	Non-Potable Water	Chrysene (Benzo[a]phenanthrene)	EPA 625
NELAP	08/07/2006	Non-Potable Water	Di-n-butyl phthalate	EPA 625
NELAP	08/07/2006	Non-Potable Water	Di-n-octyl phthalate	EPA 625
NELAP	08/07/2006	Non-Potable Water	Dibenzo[a,h]anthracene	EPA 625
NELAP	08/07/2006	Non-Potable Water	Diethyl phthalate	EPA 625
NELAP	08/07/2006	Non-Potable Water	Dimethyl phthalate	EPA 625
NELAP	08/07/2006	Non-Potable Water	Fluoranthene	EPA 625
NELAP	08/07/2006	Non-Potable Water	Fluorene	EPA 625
NELAP	08/07/2006	Non-Potable Water	Hexachlorobenzene	EPA 625
NELAP	08/07/2006	Non-Potable Water	Hexachlorobutadiene (1,3-Hexachlorobutadiene)	EPA 625

NELAP	08/07/2006	Non-Potable Water	Hexachlorocyclopentadiene	EPA 625
NELAP	08/07/2006	Non-Potable Water	Hexachloroethane	EPA 625
NELAP	08/07/2006	Non-Potable Water	Indeno(1,2,3-cd)pyrene	EPA 625
NELAP	01/21/2010	Non-Potable Water	Isophorone	EPA 625
NELAP	01/21/2010	Non-Potable Water	N-Nitrosodi-n-propylamine	EPA 625
NELAP	01/21/2010	Non-Potable Water	N-Nitrosodimethylamine	EPA 625
NELAP	01/21/2010	Non-Potable Water	N-Nitrosodiphenylamine	EPA 625
NELAP	08/07/2006	Non-Potable Water	Naphthalene	EPA 625
NELAP	01/21/2010	Non-Potable Water	Nitrobenzene	EPA 625
NELAP	08/07/2006	Non-Potable Water	Pentachlorophenol (PCP)	EPA 625
NELAP	08/07/2006	Non-Potable Water	Phenanthrene	EPA 625
NELAP	08/07/2006	Non-Potable Water	Phenol	EPA 625
NELAP	08/07/2006	Non-Potable Water	Pyrene	EPA 625
NELAP	08/07/2006	Non-Potable Water	Chromium VI	EPA 7196A
NELAP	08/07/2006	Solid and Chemical Materials	Chromium VI	EPA 7196A
NELAP	08/07/2006	Non-Potable Water	Mercury	EPA 7470A
NELAP	02/12/2010	Solid and Chemical Materials	Mercury	EPA 7471A
NELAP	01/21/2010	Non-Potable Water	Diesel-range organics (DRO)	EPA 8015
NELAP	08/07/2006	Solid and Chemical Materials	Diesel-range organics (DRO)	EPA 8015
NELAP	08/07/2006	Solid and Chemical Materials	Gasoline-range organics (GRO)	EPA 8015
NELAP	01/21/2010	Non-Potable Water	Gasoline-range organics (GRO)	EPA 8015
NELAP	01/21/2010	Non-Potable Water	Nonhalogenated organics by GC/FID	EPA 8015B
NELAP	08/07/2006	Solid and Chemical Materials	Nonhalogenated organics by GC/FID	EPA 8015B
NELAP	08/07/2006	Solid and Chemical Materials	4,4'-DDD	EPA 8081
NELAP	08/07/2006	Non-Potable Water	4,4'-DDD	EPA 8081
NELAP	08/07/2006	Solid and Chemical Materials	4,4'-DDE	EPA 8081

NELAP	08/07/2006	Non-Potable Water	4,4'-DDE	EPA 8081
NELAP	08/07/2006	Non-Potable Water	4,4'-DDT	EPA 8081
NELAP	08/07/2006	Solid and Chemical Materials	4,4'-DDT	EPA 8081
NELAP	08/07/2006	Solid and Chemical Materials	Aldrin (HHDN)	EPA 8081
NELAP	08/07/2006	Non-Potable Water	Aldrin (HHDN)	EPA 8081
NELAP	08/07/2006	Solid and Chemical Materials	alpha-BHC (alpha-Hexachlorocyclohexane)	EPA 8081
NELAP	08/07/2006	Non-Potable Water	alpha-BHC (alpha-Hexachlorocyclohexane)	EPA 8081
NELAP	08/07/2006	Non-Potable Water	alpha-Chlordane	EPA 8081
NELAP	08/07/2006	Solid and Chemical Materials	alpha-Chlordane	EPA 8081
NELAP	08/07/2006	Solid and Chemical Materials	beta-BHC (beta-Hexachlorocyclohexane)	EPA 8081
NELAP	08/07/2006	Non-Potable Water	beta-BHC (beta-Hexachlorocyclohexane)	EPA 8081
NELAP	08/07/2006	Non-Potable Water	Chlordane (tech.)	EPA 8081
NELAP	08/07/2006	Solid and Chemical Materials	Chlordane (tech.)	EPA 8081
NELAP	08/07/2006	Non-Potable Water	delta-BHC (delta-Hexachlorocyclohexane)	EPA 8081
NELAP	08/07/2006	Solid and Chemical Materials	delta-BHC (delta-Hexachlorocyclohexane)	EPA 8081
NELAP	08/07/2006	Non-Potable Water	Dieldrin	EPA 8081
NELAP	08/07/2006	Solid and Chemical Materials	Dieldrin	EPA 8081
NELAP	08/07/2006	Solid and Chemical Materials	Endosulfan I	EPA 8081
NELAP	08/07/2006	Non-Potable Water	Endosulfan I	EPA 8081
NELAP	08/07/2006	Non-Potable Water	Endosulfan II	EPA 8081
NELAP	08/07/2006	Solid and Chemical Materials	Endosulfan II	EPA 8081
NELAP	08/07/2006	Non-Potable Water	Endosulfan sulfate	EPA 8081
NELAP	08/07/2006	Solid and Chemical Materials	Endosulfan sulfate	EPA 8081

NELAP	08/07/2006	Solid and Chemical Materials	Endrin	EPA 8081
NELAP	08/07/2006	Non-Potable Water	Endrin	EPA 8081
NELAP	08/07/2006	Non-Potable Water	Endrin aldehyde	EPA 8081
NELAP	08/07/2006	Solid and Chemical Materials	Endrin aldehyde	EPA 8081
NELAP	08/07/2006	Solid and Chemical Materials	Endrin ketone	EPA 8081
NELAP	08/07/2006	Non-Potable Water	Endrin ketone	EPA 8081
NELAP	08/07/2006	Non-Potable Water	gamma-BHC (Lindane, gamma-Hexachlorocyclohexane)	EPA 8081
NELAP	08/07/2006	Solid and Chemical Materials	gamma-BHC (Lindane, gamma-Hexachlorocyclohexane)	EPA 8081
NELAP	08/07/2006	Non-Potable Water	gamma-Chlordane	EPA 8081
NELAP	08/07/2006	Solid and Chemical Materials	gamma-Chlordane	EPA 8081
NELAP	08/07/2006	Solid and Chemical Materials	Heptachlor	EPA 8081
NELAP	08/07/2006	Non-Potable Water	Heptachlor	EPA 8081
NELAP	08/07/2006	Non-Potable Water	Heptachlor epoxide	EPA 8081
NELAP	08/07/2006	Solid and Chemical Materials	Heptachlor epoxide	EPA 8081
NELAP	08/07/2006	Non-Potable Water	Methoxychlor	EPA 8081
NELAP	08/07/2006	Solid and Chemical Materials	Methoxychlor	EPA 8081
NELAP	01/21/2010	Non-Potable Water	Toxaphene (Chlorinated camphene)	EPA 8081
NELAP	08/07/2006	Solid and Chemical Materials	Toxaphene (Chlorinated camphene)	EPA 8081
NELAP	01/20/2010	Solid and Chemical Materials	Organochlorine pesticides by GC/ECD	EPA 8081A
NELAP	01/21/2010	Non-Potable Water	Organochlorine pesticides by GC/ECD	EPA 8081A
NELAP	08/07/2006	Solid and Chemical Materials	Aroclor-1016 (PCB-1016)	EPA 8082
NELAP	08/07/2006	Non-Potable Water	Aroclor-1016 (PCB-1016)	EPA 8082
NELAP	08/07/2006	Non-Potable Water	Aroclor-1221 (PCB-1221)	EPA 8082

NELAP	08/07/2006	Solid and Chemical Materials	Aroclor-1221 (PCB-1221)	EPA 8082
NELAP	08/07/2006	Solid and Chemical Materials	Aroclor-1232 (PCB-1232)	EPA 8082
NELAP	08/07/2006	Non-Potable Water	Aroclor-1232 (PCB-1232)	EPA 8082
NELAP	08/07/2006	Solid and Chemical Materials	Aroclor-1242 (PCB-1242)	EPA 8082
NELAP	08/07/2006	Non-Potable Water	Aroclor-1242 (PCB-1242)	EPA 8082
NELAP	08/07/2006	Solid and Chemical Materials	Aroclor-1248 (PCB-1248)	EPA 8082
NELAP	08/07/2006	Non-Potable Water	Aroclor-1248 (PCB-1248)	EPA 8082
NELAP	08/07/2006	Solid and Chemical Materials	Aroclor-1254 (PCB-1254)	EPA 8082
NELAP	08/07/2006	Non-Potable Water	Aroclor-1254 (PCB-1254)	EPA 8082
NELAP	08/07/2006	Non-Potable Water	Aroclor-1260 (PCB-1260)	EPA 8082
NELAP	08/07/2006	Solid and Chemical Materials	Aroclor-1260 (PCB-1260)	EPA 8082
NELAP	08/07/2006	Non-Potable Water	PCBs by GC/ECD	EPA 8082
NELAP	08/07/2006	Solid and Chemical Materials	PCBs by GC/ECD	EPA 8082
NELAP	08/07/2006	Non-Potable Water	2,4,5-T	EPA 8151
NELAP	08/07/2006	Solid and Chemical Materials	2,4,5-T	EPA 8151
NELAP	08/07/2006	Solid and Chemical Materials	2,4,5-TP (Silvex)	EPA 8151
NELAP	08/07/2006	Non-Potable Water	2,4,5-TP (Silvex)	EPA 8151
NELAP	08/07/2006	Solid and Chemical Materials	2,4-D	EPA 8151
NELAP	08/07/2006	Non-Potable Water	2,4-D	EPA 8151
NELAP	01/21/2010	Non-Potable Water	Dalapon (2,2-Dichloropropionic acid)	EPA 8151
NELAP	08/07/2006	Solid and Chemical Materials	Dalapon (2,2-Dichloropropionic acid)	EPA 8151
NELAP	01/21/2010	Non-Potable Water	Dicamba	EPA 8151
NELAP	01/07/2011	Solid and Chemical Materials	Dinoseb (2-sec-Butyl-4,6-dinitrophenol, DNBP)	EPA 8151

NELAP	01/21/2010	Non-Potable Water	Dinoseb (2-sec-Butyl-4,6-dinitrophenol, DNBP)	EPA 8151
NELAP	01/21/2010	Non-Potable Water	Picloram (4-Amino-3,5,6-trichloro-2-pyridinecarboxylic acid)	EPA 8151
NELAP	01/07/2011	Solid and Chemical Materials	Picloram (4-Amino-3,5,6-trichloro-2-pyridinecarboxylic acid)	EPA 8151
NELAP	08/07/2006	Solid and Chemical Materials	Chlorinated herbicides by GC/ECD	EPA 8151A
NELAP	08/07/2006	Non-Potable Water	Chlorinated herbicides by GC/ECD	EPA 8151A
NELAP	08/07/2006	Solid and Chemical Materials	1,1,1,2-Tetrachloroethane	EPA 8260
NELAP	08/07/2006	Non-Potable Water	1,1,1,2-Tetrachloroethane	EPA 8260
NELAP	08/07/2006	Non-Potable Water	1,1,1-Trichloroethane	EPA 8260
NELAP	08/07/2006	Solid and Chemical Materials	1,1,1-Trichloroethane	EPA 8260
NELAP	08/07/2006	Non-Potable Water	1,1,2,2-Tetrachloroethane	EPA 8260
NELAP	08/07/2006	Solid and Chemical Materials	1,1,2,2-Tetrachloroethane	EPA 8260
NELAP	08/07/2006	Solid and Chemical Materials	1,1,2-Trichloroethane	EPA 8260
NELAP	08/07/2006	Non-Potable Water	1,1,2-Trichloroethane	EPA 8260
NELAP	08/07/2006	Solid and Chemical Materials	1,1-Dichloroethane	EPA 8260
NELAP	08/07/2006	Non-Potable Water	1,1-Dichloroethane	EPA 8260
NELAP	08/07/2006	Non-Potable Water	1,1-Dichloroethene (1,1-Dichloroethylene)	EPA 8260
NELAP	08/07/2006	Solid and Chemical Materials	1,1-Dichloroethene (1,1-Dichloroethylene)	EPA 8260
NELAP	08/07/2006	Solid and Chemical Materials	1,2,3-Trichloropropane (1,2,3-TCP)	EPA 8260
NELAP	08/07/2006	Non-Potable Water	1,2,3-Trichloropropane (1,2,3-TCP)	EPA 8260
NELAP	08/07/2006	Non-Potable Water	1,2,4-Trichlorobenzene	EPA 8260
NELAP	08/07/2006	Solid and Chemical Materials	1,2,4-Trichlorobenzene	EPA 8260
NELAP	08/07/2006	Non-Potable Water	1,2-Dibromoethane (EDB, Ethylene dibromide)	EPA 8260
NELAP	01/21/2010	Solid and Chemical Materials	1,2-Dibromoethane (EDB, Ethylene dibromide)	EPA 8260

NELAP	08/07/2006	Non-Potable Water	1,2-Dichlorobenzene (o-Dichlorobenzene)	EPA 8260
NELAP	08/07/2006	Solid and Chemical Materials	1,2-Dichlorobenzene (o-Dichlorobenzene)	EPA 8260
NELAP	08/07/2006	Solid and Chemical Materials	1,2-Dichloroethane	EPA 8260
NELAP	08/07/2006	Non-Potable Water	1,2-Dichloroethane	EPA 8260
NELAP	08/07/2006	Non-Potable Water	1,2-Dichloropropane	EPA 8260
NELAP	08/07/2006	Solid and Chemical Materials	1,2-Dichloropropane	EPA 8260
NELAP	08/07/2006	Non-Potable Water	1,3-Dichlorobenzene (m-Dichlorobenzene)	EPA 8260
NELAP	08/07/2006	Solid and Chemical Materials	1,3-Dichlorobenzene (m-Dichlorobenzene)	EPA 8260
NELAP	08/07/2006	Solid and Chemical Materials	1,4-Dichlorobenzene (p-Dichlorobenzene)	EPA 8260
NELAP	08/07/2006	Non-Potable Water	1,4-Dichlorobenzene (p-Dichlorobenzene)	EPA 8260
NELAP	08/07/2006	Solid and Chemical Materials	2-Butanone (Methyl ethyl ketone, MEK)	EPA 8260
NELAP	08/07/2006	Non-Potable Water	2-Butanone (Methyl ethyl ketone, MEK)	EPA 8260
NELAP	08/07/2006	Solid and Chemical Materials	2-Chloroethyl vinyl ether	EPA 8260
NELAP	08/07/2006	Non-Potable Water	2-Chloroethyl vinyl ether	EPA 8260
NELAP	08/07/2006	Solid and Chemical Materials	2-Hexanone	EPA 8260
NELAP	08/07/2006	Non-Potable Water	2-Hexanone	EPA 8260
NELAP	01/21/2010	Solid and Chemical Materials	4-Methyl-2-pentanone (MIBK)	EPA 8260
NELAP	08/07/2006	Non-Potable Water	4-Methyl-2-pentanone (MIBK)	EPA 8260
NELAP	08/07/2006	Non-Potable Water	Acetone	EPA 8260
NELAP	01/21/2010	Solid and Chemical Materials	Acetone	EPA 8260
NELAP	08/07/2006	Non-Potable Water	Acrolein (Propenal)	EPA 8260
NELAP	08/07/2006	Non-Potable Water	Acrylonitrile	EPA 8260
NELAP	08/07/2006	Non-Potable Water	Benzene	EPA 8260
NELAP	08/07/2006	Solid and Chemical Materials	Benzene	EPA 8260

NELAP	08/07/2006	Non-Potable Water	Bromodichloromethane	EPA 8260
NELAP	08/07/2006	Solid and Chemical Materials	Bromodichloromethane	EPA 8260
NELAP	08/07/2006	Solid and Chemical Materials	Bromoform	EPA 8260
NELAP	08/07/2006	Non-Potable Water	Bromoform	EPA 8260
NELAP	08/07/2006	Non-Potable Water	Bromomethane (Methyl bromide)	EPA 8260
NELAP	08/07/2006	Solid and Chemical Materials	Bromomethane (Methyl bromide)	EPA 8260
NELAP	08/07/2006	Solid and Chemical Materials	Carbon disulfide	EPA 8260
NELAP	08/07/2006	Non-Potable Water	Carbon disulfide	EPA 8260
NELAP	08/07/2006	Solid and Chemical Materials	Carbon tetrachloride	EPA 8260
NELAP	08/07/2006	Non-Potable Water	Carbon tetrachloride	EPA 8260
NELAP	08/07/2006	Solid and Chemical Materials	Chlorobenzene	EPA 8260
NELAP	08/07/2006	Non-Potable Water	Chlorobenzene	EPA 8260
NELAP	08/07/2006	Non-Potable Water	Chloroethane	EPA 8260
NELAP	08/07/2006	Solid and Chemical Materials	Chloroethane	EPA 8260
NELAP	08/07/2006	Non-Potable Water	Chloroform	EPA 8260
NELAP	08/07/2006	Solid and Chemical Materials	Chloroform	EPA 8260
NELAP	08/07/2006	Non-Potable Water	Chloromethane (Methyl chloride)	EPA 8260
NELAP	08/07/2006	Solid and Chemical Materials	Chloromethane (Methyl chloride)	EPA 8260
NELAP	08/07/2006	Solid and Chemical Materials	cis-1,2-Dichloroethene	EPA 8260
NELAP	08/07/2006	Non-Potable Water	cis-1,2-Dichloroethene	EPA 8260
NELAP	08/07/2006	Non-Potable Water	cis-1,3-Dichloropropene	EPA 8260
NELAP	08/07/2006	Solid and Chemical Materials	cis-1,3-Dichloropropene	EPA 8260
NELAP	08/07/2006	Non-Potable Water	Dibromochloromethane	EPA 8260

NELAP	08/07/2006	Solid and Chemical Materials	Dibromochloromethane	EPA 8260
NELAP	08/07/2006	Solid and Chemical Materials	Dichlorodifluoromethane (Freon 12)	EPA 8260
NELAP	08/07/2006	Non-Potable Water	Dichlorodifluoromethane (Freon 12)	EPA 8260
NELAP	08/07/2006	Non-Potable Water	Ethylbenzene	EPA 8260
NELAP	08/07/2006	Solid and Chemical Materials	Ethylbenzene	EPA 8260
NELAP	08/07/2006	Solid and Chemical Materials	Hexachlorobutadiene (1,3-Hexachlorobutadiene)	EPA 8260
NELAP	08/07/2006	Non-Potable Water	Hexachlorobutadiene (1,3-Hexachlorobutadiene)	EPA 8260
NELAP	08/07/2006	Solid and Chemical Materials	Hexachloroethane	EPA 8260
NELAP	01/21/2010	Non-Potable Water	Hexachloroethane	EPA 8260
NELAP	08/07/2006	Solid and Chemical Materials	Methyl tert-butyl ether (MTBE)	EPA 8260
NELAP	08/07/2006	Non-Potable Water	Methyl tert-butyl ether (MTBE)	EPA 8260
NELAP	08/07/2006	Solid and Chemical Materials	Methylene chloride (Dichloromethane)	EPA 8260
NELAP	08/07/2006	Non-Potable Water	Methylene chloride (Dichloromethane)	EPA 8260
NELAP	08/07/2006	Non-Potable Water	Naphthalene	EPA 8260
NELAP	08/07/2006	Solid and Chemical Materials	Naphthalene	EPA 8260
NELAP	08/07/2006	Solid and Chemical Materials	Styrene	EPA 8260
NELAP	08/07/2006	Non-Potable Water	Styrene	EPA 8260
NELAP	01/21/2010	Non-Potable Water	tert-Butyl alcohol (2-Methyl-2-propanol)	EPA 8260
NELAP	08/07/2006	Solid and Chemical Materials	tert-Butyl alcohol (2-Methyl-2-propanol)	EPA 8260
NELAP	08/07/2006	Solid and Chemical Materials	Tetrachloroethene (PCE, Perchloroethylene)	EPA 8260
NELAP	08/07/2006	Non-Potable Water	Tetrachloroethene (PCE, Perchloroethylene)	EPA 8260
NELAP	08/07/2006	Solid and Chemical Materials	Toluene	EPA 8260
NELAP	08/07/2006	Non-Potable Water	Toluene	EPA 8260

NELAP	08/07/2006	Solid and Chemical Materials	trans-1,2-Dichloroethene	EPA 8260
NELAP	08/07/2006	Non-Potable Water	trans-1,2-Dichloroethene	EPA 8260
NELAP	08/07/2006	Solid and Chemical Materials	trans-1,3-Dichloropropene	EPA 8260
NELAP	08/07/2006	Non-Potable Water	trans-1,3-Dichloropropene	EPA 8260
NELAP	08/07/2006	Non-Potable Water	Trichloroethene (TCE, Trichloroethylene)	EPA 8260
NELAP	08/07/2006	Solid and Chemical Materials	Trichloroethene (TCE, Trichloroethylene)	EPA 8260
NELAP	08/07/2006	Solid and Chemical Materials	Trichlorofluoromethane (Freon 11)	EPA 8260
NELAP	08/07/2006	Non-Potable Water	Trichlorofluoromethane (Freon 11)	EPA 8260
NELAP	08/07/2006	Non-Potable Water	Vinyl acetate	EPA 8260
NELAP	08/07/2006	Solid and Chemical Materials	Vinyl acetate	EPA 8260
NELAP	08/07/2006	Solid and Chemical Materials	Vinyl chloride (Chloroethene)	EPA 8260
NELAP	08/07/2006	Non-Potable Water	Vinyl chloride (Chloroethene)	EPA 8260
NELAP	08/07/2006	Non-Potable Water	Xylenes, total	EPA 8260
NELAP	08/07/2006	Solid and Chemical Materials	Xylenes, total	EPA 8260
NELAP	08/07/2006	Solid and Chemical Materials	VOCs by GC/MS	EPA 8260B
NELAP	01/21/2010	Non-Potable Water	VOCs by GC/MS	EPA 8260B
NELAP	08/07/2006	Non-Potable Water	1,2,4-Trichlorobenzene	EPA 8270
NELAP	08/07/2006	Solid and Chemical Materials	1,2,4-Trichlorobenzene	EPA 8270
NELAP	08/07/2006	Solid and Chemical Materials	1,2-Dichlorobenzene (o-Dichlorobenzene)	EPA 8270
NELAP	08/07/2006	Non-Potable Water	1,2-Dichlorobenzene (o-Dichlorobenzene)	EPA 8270
NELAP	08/07/2006	Non-Potable Water	1,3-Dichlorobenzene (m-Dichlorobenzene)	EPA 8270
NELAP	08/07/2006	Solid and Chemical Materials	1,3-Dichlorobenzene (m-Dichlorobenzene)	EPA 8270
NELAP	08/07/2006	Non-Potable Water	1,4-Dichlorobenzene (p-Dichlorobenzene)	EPA 8270

Accredited Labs Report

10/14/2011 4:03:24 PM

NELAP	08/07/2006	Solid and Chemical Materials	1,4-Dichlorobenzene (p-Dichlorobenzene)	EPA 8270
NELAP	08/07/2006	Solid and Chemical Materials	2,4,5-Trichlorophenol	EPA 8270
NELAP	08/07/2006	Non-Potable Water	2,4,5-Trichlorophenol	EPA 8270
NELAP	08/07/2006	Non-Potable Water	2,4,6-Trichlorophenol	EPA 8270
NELAP	08/07/2006	Solid and Chemical Materials	2,4,6-Trichlorophenol	EPA 8270
NELAP	08/07/2006	Non-Potable Water	2,4-Dichlorophenol	EPA 8270
NELAP	08/07/2006	Solid and Chemical Materials	2,4-Dichlorophenol	EPA 8270
NELAP	01/21/2010	Solid and Chemical Materials	2,4-Dimethylphenol	EPA 8270
NELAP	08/07/2006	Non-Potable Water	2,4-Dimethylphenol	EPA 8270
NELAP	08/07/2006	Non-Potable Water	2,4-Dinitrophenol	EPA 8270
NELAP	01/21/2010	Solid and Chemical Materials	2,4-Dinitrophenol	EPA 8270
NELAP	01/21/2010	Non-Potable Water	2,4-Dinitrotoluene (2,4-DNT)	EPA 8270
NELAP	01/21/2010	Solid and Chemical Materials	2,4-Dinitrotoluene (2,4-DNT)	EPA 8270
NELAP	01/21/2010	Solid and Chemical Materials	2,6-Dinitrotoluene (2,6-DNT)	EPA 8270
NELAP	08/07/2006	Solid and Chemical Materials	2-Chloronaphthalene	EPA 8270
NELAP	08/07/2006	Non-Potable Water	2-Chloronaphthalene	EPA 8270
NELAP	08/07/2006	Non-Potable Water	2-Chlorophenol	EPA 8270
NELAP	08/07/2006	Solid and Chemical Materials	2-Chlorophenol	EPA 8270
NELAP	08/07/2006	Solid and Chemical Materials	2-Methyl-4,6-dinitrophenol (4,6-Dinitro-2-methylphenol)	EPA 8270
NELAP	08/07/2006	Non-Potable Water	2-Methyl-4,6-dinitrophenol (4,6-Dinitro-2-methylphenol)	EPA 8270
NELAP	08/07/2006	Non-Potable Water	2-Methylnaphthalene	EPA 8270
NELAP	08/07/2006	Solid and Chemical Materials	2-Methylnaphthalene	EPA 8270
NELAP	08/07/2006	Non-Potable Water	2-Methylphenol (o-Cresol)	EPA 8270

NELAP	08/07/2006	Solid and Chemical Materials	2-Methylphenol (o-Cresol)	EPA 8270
NELAP	08/07/2006	Solid and Chemical Materials	2-Nitroaniline	EPA 8270
NELAP	08/07/2006	Non-Potable Water	2-Nitroaniline	EPA 8270
NELAP	01/21/2010	Solid and Chemical Materials	2-Nitrophenol	EPA 8270
NELAP	08/07/2006	Non-Potable Water	2-Nitrophenol	EPA 8270
NELAP	08/07/2006	Solid and Chemical Materials	3,3'-Dichlorobenzidine	EPA 8270
NELAP	08/07/2006	Non-Potable Water	3,3'-Dichlorobenzidine	EPA 8270
NELAP	01/21/2010	Non-Potable Water	3-Methylphenol (m-Cresol)	EPA 8270
NELAP	08/07/2006	Solid and Chemical Materials	3-Methylphenol (m-Cresol)	EPA 8270
NELAP	01/21/2010	Non-Potable Water	3-Nitroaniline	EPA 8270
NELAP	08/07/2006	Solid and Chemical Materials	3-Nitroaniline	EPA 8270
NELAP	01/21/2010	Non-Potable Water	4-Bromophenyl phenyl ether	EPA 8270
NELAP	01/07/2011	Solid and Chemical Materials	4-Bromophenyl phenyl ether	EPA 8270
NELAP	01/21/2010	Solid and Chemical Materials	4-Chloro-3-methylphenol	EPA 8270
NELAP	08/07/2006	Non-Potable Water	4-Chloro-3-methylphenol	EPA 8270
NELAP	08/07/2006	Solid and Chemical Materials	4-Chloroaniline	EPA 8270
NELAP	01/21/2010	Non-Potable Water	4-Chloroaniline	EPA 8270
NELAP	08/07/2006	Solid and Chemical Materials	4-Chlorophenyl phenyl ether	EPA 8270
NELAP	01/21/2010	Non-Potable Water	4-Chlorophenyl phenyl ether	EPA 8270
NELAP	01/21/2010	Non-Potable Water	4-Methylphenol (p-Cresol)	EPA 8270
NELAP	08/07/2006	Solid and Chemical Materials	4-Methylphenol (p-Cresol)	EPA 8270
NELAP	08/07/2006	Non-Potable Water	4-Nitroaniline	EPA 8270
NELAP	08/07/2006	Solid and Chemical Materials	4-Nitroaniline	EPA 8270

NELAP	08/07/2006	Non-Potable Water	4-Nitrophenol	EPA 8270
NELAP	08/07/2006	Solid and Chemical Materials	4-Nitrophenol	EPA 8270
NELAP	08/07/2006	Solid and Chemical Materials	Acenaphthene	EPA 8270
NELAP	08/07/2006	Non-Potable Water	Acenaphthene	EPA 8270
NELAP	08/07/2006	Non-Potable Water	Acenaphthylene	EPA 8270
NELAP	08/07/2006	Solid and Chemical Materials	Acenaphthylene	EPA 8270
NELAP	01/21/2010	Non-Potable Water	Aniline	EPA 8270
NELAP	01/21/2010	Solid and Chemical Materials	Aniline	EPA 8270
NELAP	08/07/2006	Solid and Chemical Materials	Anthracene	EPA 8270
NELAP	08/07/2006	Non-Potable Water	Anthracene	EPA 8270
NELAP	08/07/2006	Solid and Chemical Materials	Benzidine	EPA 8270
NELAP	08/07/2006	Non-Potable Water	Benzidine	EPA 8270
NELAP	01/21/2010	Non-Potable Water	Benzo[a]anthracene	EPA 8270
NELAP	08/07/2006	Solid and Chemical Materials	Benzo[a]anthracene	EPA 8270
NELAP	08/07/2006	Solid and Chemical Materials	Benzo[a]pyrene	EPA 8270
NELAP	08/07/2006	Non-Potable Water	Benzo[a]pyrene	EPA 8270
NELAP	08/07/2006	Solid and Chemical Materials	Benzo[b]fluoranthene	EPA 8270
NELAP	08/07/2006	Non-Potable Water	Benzo[b]fluoranthene	EPA 8270
NELAP	08/07/2006	Solid and Chemical Materials	Benzo[ghi]perylene	EPA 8270
NELAP	08/07/2006	Non-Potable Water	Benzo[ghi]perylene	EPA 8270
NELAP	08/07/2006	Non-Potable Water	Benzo[k]fluoranthene	EPA 8270
NELAP	08/07/2006	Solid and Chemical Materials	Benzo[k]fluoranthene	EPA 8270
NELAP	01/21/2010	Non-Potable Water	bis(2-Chloroethoxy)methane	EPA 8270

NELAP	01/21/2010	Solid and Chemical Materials	bis(2-Chloroethoxy)methane	EPA 8270
NELAP	08/07/2006	Solid and Chemical Materials	bis(2-Chloroethyl) ether	EPA 8270
NELAP	08/07/2006	Non-Potable Water	bis(2-Chloroethyl) ether	EPA 8270
NELAP	08/07/2006	Solid and Chemical Materials	bis(2-Chloroisopropyl) ether	EPA 8270
NELAP	01/21/2010	Non-Potable Water	bis(2-Chloroisopropyl) ether	EPA 8270
NELAP	08/07/2006	Solid and Chemical Materials	bis(2-Ethylhexyl) phthalate (DEHP)	EPA 8270
NELAP	08/07/2006	Non-Potable Water	bis(2-Ethylhexyl) phthalate (DEHP)	EPA 8270
NELAP	08/07/2006	Solid and Chemical Materials	Butyl benzyl phthalate (Benzyl butyl phthalate)	EPA 8270
NELAP	08/07/2006	Non-Potable Water	Butyl benzyl phthalate (Benzyl butyl phthalate)	EPA 8270
NELAP	08/07/2006	Solid and Chemical Materials	Chrysene (Benzo[a]phenanthrene)	EPA 8270
NELAP	08/07/2006	Non-Potable Water	Chrysene (Benzo[a]phenanthrene)	EPA 8270
NELAP	08/07/2006	Solid and Chemical Materials	Di-n-butyl phthalate	EPA 8270
NELAP	08/07/2006	Non-Potable Water	Di-n-butyl phthalate	EPA 8270
NELAP	01/21/2010	Non-Potable Water	Di-n-octyl phthalate	EPA 8270
NELAP	08/07/2006	Solid and Chemical Materials	Di-n-octyl phthalate	EPA 8270
NELAP	01/21/2010	Solid and Chemical Materials	Dibenzo[a,h]anthracene	EPA 8270
NELAP	08/07/2006	Non-Potable Water	Dibenzo[a,h]anthracene	EPA 8270
NELAP	01/21/2010	Non-Potable Water	Dibenzofuran	EPA 8270
NELAP	01/21/2010	Solid and Chemical Materials	Dibenzofuran	EPA 8270
NELAP	08/07/2006	Non-Potable Water	Diethyl phthalate	EPA 8270
NELAP	08/07/2006	Solid and Chemical Materials	Diethyl phthalate	EPA 8270
NELAP	01/21/2010	Solid and Chemical Materials	Dimethyl phthalate	EPA 8270
NELAP	01/21/2010	Non-Potable Water	Dimethyl phthalate	EPA 8270

NELAP	08/07/2006	Solid and Chemical Materials	Fluoranthene	EPA 8270
NELAP	01/21/2010	Non-Potable Water	Fluoranthene	EPA 8270
NELAP	08/07/2006	Solid and Chemical Materials	Fluorene	EPA 8270
NELAP	08/07/2006	Non-Potable Water	Fluorene	EPA 8270
NELAP	08/07/2006	Solid and Chemical Materials	Hexachlorobenzene	EPA 8270
NELAP	08/07/2006	Non-Potable Water	Hexachlorobenzene	EPA 8270
NELAP	01/21/2010	Solid and Chemical Materials	Hexachlorobutadiene (1,3-Hexachlorobutadiene)	EPA 8270
NELAP	08/07/2006	Non-Potable Water	Hexachlorobutadiene (1,3-Hexachlorobutadiene)	EPA 8270
NELAP	08/07/2006	Solid and Chemical Materials	Hexachlorocyclopentadiene	EPA 8270
NELAP	08/07/2006	Non-Potable Water	Hexachlorocyclopentadiene	EPA 8270
NELAP	08/07/2006	Non-Potable Water	Hexachloroethane	EPA 8270
NELAP	01/21/2010	Solid and Chemical Materials	Hexachloroethane	EPA 8270
NELAP	08/07/2006	Non-Potable Water	Indeno(1,2,3-cd)pyrene	EPA 8270
NELAP	08/07/2006	Solid and Chemical Materials	Indeno(1,2,3-cd)pyrene	EPA 8270
NELAP	01/21/2010	Solid and Chemical Materials	Isophorone	EPA 8270
NELAP	01/21/2010	Non-Potable Water	Isophorone	EPA 8270
NELAP	08/07/2006	Solid and Chemical Materials	N-Nitrosodi-n-propylamine	EPA 8270
NELAP	08/07/2006	Non-Potable Water	N-Nitrosodi-n-propylamine	EPA 8270
NELAP	01/21/2010	Solid and Chemical Materials	N-Nitrosodiphenylamine	EPA 8270
NELAP	01/21/2010	Non-Potable Water	N-Nitrosodiphenylamine	EPA 8270
NELAP	08/07/2006	Non-Potable Water	Naphthalene	EPA 8270
NELAP	08/07/2006	Solid and Chemical Materials	Naphthalene	EPA 8270
NELAP	08/07/2006	Non-Potable Water	Nitrobenzene	EPA 8270

NELAP	08/07/2006	Solid and Chemical Materials	Nitrobenzene	EPA 8270
NELAP	08/07/2006	Solid and Chemical Materials	Pentachlorophenol (PCP)	EPA 8270
NELAP	08/07/2006	Non-Potable Water	Pentachlorophenol (PCP)	EPA 8270
NELAP	08/07/2006	Non-Potable Water	Phenanthrene	EPA 8270
NELAP	08/07/2006	Solid and Chemical Materials	Phenanthrene	EPA 8270
NELAP	08/07/2006	Non-Potable Water	Phenol	EPA 8270
NELAP	08/07/2006	Solid and Chemical Materials	Phenol	EPA 8270
NELAP	08/07/2006	Solid and Chemical Materials	Pyrene	EPA 8270
NELAP	08/07/2006	Non-Potable Water	Pyrene	EPA 8270
NELAP	01/21/2010	Non-Potable Water	Pyridine	EPA 8270
NELAP	01/21/2010	Solid and Chemical Materials	Pyridine	EPA 8270
NELAP	01/21/2010	Non-Potable Water	Base-neutral-acid extractable organics (BNAs)	EPA 8270C
NELAP	08/07/2006	Solid and Chemical Materials	Base-neutral-acid extractable organics (BNAs)	EPA 8270C
NELAP	08/07/2006	Solid and Chemical Materials	Carbazole	EPA 8270-Extended
NELAP	02/12/2010	Non-Potable Water	Carbazole	EPA 8270-Extended
NELAP	08/07/2006	Solid and Chemical Materials	Total cyanide	EPA 9010
NELAP	08/07/2006	Non-Potable Water	Total cyanide	EPA 9010C
NELAP	08/07/2006	Non-Potable Water	Total cyanide	EPA 9012
NELAP	11/09/2007	Solid and Chemical Materials	Total cyanide	EPA 9012B
NELAP	01/23/2009	Solid and Chemical Materials	Cyanide extraction for solids and oils	EPA 9013
NELAP	01/23/2009	Solid and Chemical Materials	Extractable organic halides (EOX)	EPA 9023
NELAP	11/09/2007	Non-Potable Water	Sulfide distillation	EPA 9030
NELAP	11/09/2007	Solid and Chemical Materials	Sulfide distillation	EPA 9030

NELAP	11/09/2007	Non-Potable Water	Purgeable sulfides	EPA 9031
NELAP	11/09/2007	Solid and Chemical Materials	Purgeable sulfides	EPA 9031
NELAP	11/09/2007	Solid and Chemical Materials	Sulfide	EPA 9034
NELAP	11/09/2007	Non-Potable Water	Sulfide	EPA 9034
NELAP	11/09/2007	Solid and Chemical Materials	Total sulfides	EPA 9034
NELAP	11/09/2007	Non-Potable Water	Total sulfides	EPA 9034
NELAP	11/09/2007	Non-Potable Water	Sulfate	EPA 9038
NELAP	11/09/2007	Solid and Chemical Materials	Sulfate	EPA 9038
NELAP	08/07/2006	Non-Potable Water	pH	EPA 9040C
NELAP	08/07/2006	Non-Potable Water	pH	EPA 9041
NELAP	11/09/2007	Solid and Chemical Materials	pH	EPA 9041
NELAP	11/09/2007	Solid and Chemical Materials	pH	EPA 9045
NELAP	08/07/2006	Non-Potable Water	Conductivity	EPA 9050
NELAP	08/07/2006	Solid and Chemical Materials	Bromide	EPA 9056A
NELAP	08/07/2006	Non-Potable Water	Bromide	EPA 9056A
NELAP	08/07/2006	Non-Potable Water	Chloride	EPA 9056A
NELAP	08/07/2006	Solid and Chemical Materials	Chloride	EPA 9056A
NELAP	08/07/2006	Solid and Chemical Materials	Fluoride	EPA 9056A
NELAP	08/07/2006	Non-Potable Water	Fluoride	EPA 9056A
NELAP	08/07/2006	Non-Potable Water	Inorganic ions by IC/COND	EPA 9056A
NELAP	08/07/2006	Solid and Chemical Materials	Inorganic ions by IC/COND	EPA 9056A
NELAP	08/07/2006	Solid and Chemical Materials	Nitrate	EPA 9056A
NELAP	08/07/2006	Non-Potable Water	Nitrate	EPA 9056A

NELAP	08/07/2006	Solid and Chemical Materials	Nitrite	EPA 9056A
NELAP	08/07/2006	Non-Potable Water	Nitrite	EPA 9056A
NELAP	08/07/2006	Solid and Chemical Materials	Orthophosphate as P	EPA 9056A
NELAP	08/07/2006	Non-Potable Water	Orthophosphate as P	EPA 9056A
NELAP	08/07/2006	Solid and Chemical Materials	Sulfate	EPA 9056A
NELAP	08/07/2006	Non-Potable Water	Sulfate	EPA 9056A
NELAP	08/07/2006	Solid and Chemical Materials	Total organic carbon (TOC)	EPA 9060
NELAP	11/09/2007	Non-Potable Water	Total organic carbon (TOC)	EPA 9060
NELAP	11/09/2007	Solid and Chemical Materials	Total phenolics	EPA 9065
NELAP	11/09/2007	Non-Potable Water	Total phenolics	EPA 9065
NELAP	08/07/2006	Solid and Chemical Materials	Oil and grease	EPA 9071
NELAP	11/09/2007	Solid and Chemical Materials	Cation exchange capacity of soils (Ammonium acetate)	EPA 9080
NELAP	11/09/2007	Solid and Chemical Materials	Paint filter liquids test	EPA 9095A
NELAP	01/21/2010	Non-Potable Water	Petroleum organics	NJ-OQA-QAM-025, Rev 7
NELAP	11/09/2007	Drinking Water	Color	SM 2120 B
NELAP	11/09/2007	Non-Potable Water	Color	SM 2120 B
NELAP	11/09/2007	Drinking Water	Turbidity	SM 2130 B
NELAP	11/09/2007	Non-Potable Water	Turbidity	SM 2130 B
NELAP	11/09/2007	Drinking Water	Odor	SM 2150 B
NELAP	11/09/2007	Drinking Water	Alkalinity as CaCO3	SM 2320 B
NELAP	11/09/2007	Non-Potable Water	Alkalinity as CaCO3	SM 2320 B
NELAP	11/09/2007	Drinking Water	Conductivity	SM 2510 B
NELAP	11/09/2007	Non-Potable Water	Conductivity	SM 2510 B
NELAP	11/09/2007	Non-Potable Water	Residue, total	SM 2540 B
NELAP	11/09/2007	Non-Potable Water	Residue, filterable (TDS)	SM 2540 C

NELAP	11/09/2007	Drinking Water	Residue, filterable (TDS)	SM 2540 C
NELAP	11/09/2007	Non-Potable Water	Residue, nonfilterable (TSS)	SM 2540 D
NELAP	11/09/2007	Non-Potable Water	Residue, settleable	SM 2540 F
NELAP	11/09/2007	Non-Potable Water	Temperature, deg. C	SM 2550 B
NELAP	11/09/2007	Non-Potable Water	Chloride	SM 4500-Cl- C
NELAP	01/21/2010	Drinking Water	Total chlorine	SM 4500-Cl G
NELAP	11/09/2007	Non-Potable Water	Cyanide	SM 4500-CN- C
NELAP	11/09/2007	Non-Potable Water	Cyanide distillation	SM 4500-CN- C
NELAP	11/09/2007	Drinking Water	pH	SM 4500-H+ B
NELAP	11/09/2007	Non-Potable Water	pH	SM 4500-H+ B
NELAP	11/09/2007	Non-Potable Water	Kjeldahl nitrogen, total (TKN)	SM 4500-Norg B
NELAP	11/09/2007	Non-Potable Water	Kjeldahl nitrogen, total (TKN)	SM 4500-Norg C
NELAP	11/09/2007	Non-Potable Water	Oxygen (dissolved)	SM 4500-O C
NELAP	11/09/2007	Non-Potable Water	Orthophosphate as P	SM 4500-P E
NELAP	01/23/2009	Drinking Water	Orthophosphate as P	SM 4500-P E
NELAP	11/09/2007	Drinking Water	Sulfate	SM 4500-SO4 E
NELAP	11/09/2007	Non-Potable Water	Biochemical oxygen demand (BOD)	SM 5210 B
NELAP	11/09/2007	Non-Potable Water	Carbonaceous BOD (CBOD)	SM 5210 B
NELAP	11/09/2007	Non-Potable Water	Chemical oxygen demand (COD)	SM 5220 D
NELAP	11/09/2007	Drinking Water	Total organic carbon (TOC)	SM 5310 B
NELAP	11/09/2007	Non-Potable Water	Total organic carbon (TOC)	SM 5310 B
NELAP	11/09/2007	Non-Potable Water	Surfactants as MBAS	SM 5540 C
NELAP	11/09/2007	Drinking Water	Surfactants as MBAS	SM 5540 C

pennsylvania
DEPARTMENT OF ENVIRONMENTAL PROTECTION

Accredited Labs Report

10/14/2011 4:08:25 PM

02-00416

TestAmerica Laboratories Inc dba TestAmerica Pittsburgh

301 Alpha Drive

Pittsburgh, PA 15238

(412) 963-7058

TYPE	EFFECTIVE DATE	MATRIX	ANALYTE	METHOD
NELAP	04/13/2009	Solid and Chemical Materials	Percent moisture in soil	ASTM D2216-05
NELAP	12/05/2007	Solid and Chemical Materials	Ash content	ASTM D2974-00
NELAP	12/05/2007	Solid and Chemical Materials	Moisture	ASTM D2974-00
NELAP	12/05/2007	Solid and Chemical Materials	Organic matter	ASTM D2974-00
NELAP	04/09/2009	Solid and Chemical Materials	Ash content	ASTM D2974-84
NELAP	04/09/2009	Solid and Chemical Materials	Organic matter	ASTM D2974-84
NELAP	12/05/2007	Solid and Chemical Materials	Shake extraction of solid waste with water	ASTM D3987-85
NELAP	09/27/2010	Non-Potable Water	Apparent specific gravity	ASTM D5057-90
NELAP	09/27/2010	Solid and Chemical Materials	Apparent specific gravity	ASTM D5057-90
NELAP	09/27/2010	Solid and Chemical Materials	Bulk density	ASTM D5057-90
NELAP	09/27/2010	Non-Potable Water	Bulk density	ASTM D5057-90
NELAP	04/09/2009	Solid and Chemical Materials	Total chlorine	ASTM D5384-95
NELAP	08/26/2006	Non-Potable Water	Ignitability	EPA 1010
NELAP	04/07/2005	Solid and Chemical Materials	Ignitability	EPA 1010
NELAP	04/09/2009	Solid and Chemical Materials	Ignitability	EPA 1010A

NELAP	04/07/2005	Solid and Chemical Materials	Ignitability	EPA 1020A
NELAP	04/09/2009	Solid and Chemical Materials	Ignitability	EPA 1020B
NELAP	08/24/2005	Non-Potable Water	Color	EPA 110.2
NELAP	04/07/2005	Non-Potable Water	Conductivity	EPA 120.1
NELAP	04/07/2005	Non-Potable Water	Total hardness as CaCO3	EPA 130.2
NELAP	04/07/2005	Solid and Chemical Materials	Extraction procedure (EP) toxicity test method	EPA 1310A
NELAP	08/26/2006	Non-Potable Water	Extraction procedure (EP) toxicity test method	EPA 1310A
NELAP	04/07/2005	Solid and Chemical Materials	Toxicity characteristic leaching procedure (TCLP)	EPA 1311
NELAP	04/18/2006	Solid and Chemical Materials	Synthetic precipitation leaching procedure (SPLP)	EPA 1312
NELAP	12/05/2007	Solid and Chemical Materials	Multiple extraction procedure	EPA 1320
NELAP	04/07/2005	Non-Potable Water	pH	EPA 150.1
NELAP	10/13/2010	Non-Potable Water	Residue, filterable (TDS)	EPA 160.1
NELAP	04/07/2005	Non-Potable Water	Residue, nonfilterable (TSS)	EPA 160.2
NELAP	08/26/2006	Solid and Chemical Materials	Residue, total	EPA 160.3
NELAP	04/07/2005	Non-Potable Water	Residue, total	EPA 160.3
NELAP	04/07/2005	Non-Potable Water	Residue, volatile	EPA 160.4
NELAP	08/26/2006	Non-Potable Water	Residue, settleable	EPA 160.5
NELAP	08/24/2005	Non-Potable Water	Non-polar material	EPA 1664 Rev A
NELAP	04/07/2005	Non-Potable Water	Oil and grease	EPA 1664 Rev A
NELAP	03/16/2009	Non-Potable Water	Temperature, deg. C	EPA 170.1
NELAP	08/26/2006	Non-Potable Water	Turbidity	EPA 180.1
NELAP	04/07/2005	Non-Potable Water	Aluminum	EPA 200.7
NELAP	04/07/2005	Non-Potable Water	Antimony	EPA 200.7
NELAP	04/07/2005	Non-Potable Water	Arsenic	EPA 200.7
NELAP	04/07/2005	Non-Potable Water	Barium	EPA 200.7
NELAP	04/07/2005	Non-Potable Water	Beryllium	EPA 200.7

NELAP	04/07/2005	Non-Potable Water	Boron	EPA 200.7
NELAP	04/07/2005	Non-Potable Water	Cadmium	EPA 200.7
NELAP	04/07/2005	Non-Potable Water	Calcium	EPA 200.7
NELAP	08/24/2005	Non-Potable Water	Calcium hardness as CaCO3	EPA 200.7
NELAP	04/07/2005	Non-Potable Water	Chromium	EPA 200.7
NELAP	04/07/2005	Non-Potable Water	Cobalt	EPA 200.7
NELAP	04/07/2005	Non-Potable Water	Copper	EPA 200.7
NELAP	08/24/2005	Non-Potable Water	Hardness (calc.)	EPA 200.7
NELAP	04/07/2005	Non-Potable Water	Iron	EPA 200.7
NELAP	04/07/2005	Non-Potable Water	Lead	EPA 200.7
NELAP	04/07/2005	Non-Potable Water	Magnesium	EPA 200.7
NELAP	08/24/2005	Non-Potable Water	Magnesium hardness	EPA 200.7
NELAP	04/07/2005	Non-Potable Water	Manganese	EPA 200.7
NELAP	04/07/2005	Non-Potable Water	Molybdenum	EPA 200.7
NELAP	04/07/2005	Non-Potable Water	Nickel	EPA 200.7
NELAP	04/07/2005	Non-Potable Water	Potassium	EPA 200.7
NELAP	04/07/2005	Non-Potable Water	Selenium	EPA 200.7
NELAP	08/24/2005	Non-Potable Water	Silica, as SiO2	EPA 200.7
NELAP	04/07/2005	Non-Potable Water	Silver	EPA 200.7
NELAP	04/07/2005	Non-Potable Water	Sodium	EPA 200.7
NELAP	04/07/2005	Non-Potable Water	Thallium	EPA 200.7
NELAP	04/07/2005	Non-Potable Water	Tin	EPA 200.7
NELAP	04/07/2005	Non-Potable Water	Titanium	EPA 200.7
NELAP	08/24/2005	Non-Potable Water	Total hardness as CaCO3	EPA 200.7
NELAP	04/07/2005	Non-Potable Water	Vanadium	EPA 200.7
NELAP	04/07/2005	Non-Potable Water	Zinc	EPA 200.7
NELAP	04/18/2006	Non-Potable Water	Cesium	EPA 200.7-Extended
NELAP	03/01/2007	Non-Potable Water	Strontium	EPA 200.7-Extended
NELAP	04/07/2005	Non-Potable Water	Aluminum	EPA 200.8

NELAP	04/07/2005	Non-Potable Water	Antimony	EPA 200.8
NELAP	04/07/2005	Non-Potable Water	Arsenic	EPA 200.8
NELAP	04/07/2005	Non-Potable Water	Barium	EPA 200.8
NELAP	04/07/2005	Non-Potable Water	Beryllium	EPA 200.8
NELAP	08/24/2005	Non-Potable Water	Boron	EPA 200.8
NELAP	04/07/2005	Non-Potable Water	Cadmium	EPA 200.8
NELAP	08/24/2005	Non-Potable Water	Calcium	EPA 200.8
NELAP	04/07/2005	Non-Potable Water	Chromium	EPA 200.8
NELAP	04/07/2005	Non-Potable Water	Cobalt	EPA 200.8
NELAP	04/07/2005	Non-Potable Water	Copper	EPA 200.8
NELAP	08/24/2005	Non-Potable Water	Iron	EPA 200.8
NELAP	04/07/2005	Non-Potable Water	Lead	EPA 200.8
NELAP	08/24/2005	Non-Potable Water	Magnesium	EPA 200.8
NELAP	01/22/2007	Non-Potable Water	Manganese	EPA 200.8
NELAP	04/07/2005	Non-Potable Water	Molybdenum	EPA 200.8
NELAP	04/07/2005	Non-Potable Water	Nickel	EPA 200.8
NELAP	08/24/2005	Non-Potable Water	Potassium	EPA 200.8
NELAP	04/07/2005	Non-Potable Water	Selenium	EPA 200.8
NELAP	04/07/2005	Non-Potable Water	Silver	EPA 200.8
NELAP	08/24/2005	Non-Potable Water	Sodium	EPA 200.8
NELAP	04/07/2005	Non-Potable Water	Thallium	EPA 200.8
NELAP	08/24/2005	Non-Potable Water	Tin	EPA 200.8
NELAP	08/24/2005	Non-Potable Water	Titanium	EPA 200.8
NELAP	04/07/2005	Non-Potable Water	Vanadium	EPA 200.8
NELAP	04/07/2005	Non-Potable Water	Zinc	EPA 200.8
NELAP	04/09/2009	Non-Potable Water	Calcium hardness as CaCO3	EPA 200.8-Extended
NELAP	04/18/2006	Non-Potable Water	Cesium	EPA 200.8-Extended
NELAP	01/21/2010	Non-Potable Water	Phosphorus, total	EPA 200.8-Extended
NELAP	04/18/2006	Non-Potable Water	Silica, as SiO2	EPA 200.8-Extended

NELAP	03/01/2007	Non-Potable Water	Strontium	EPA 200.8-Extended
NELAP	04/09/2009	Non-Potable Water	Total hardness as CaCO3	EPA 200.8-Extended
NELAP	04/07/2005	Non-Potable Water	Mercury	EPA 245.1
NELAP	04/20/2011	Solid and Chemical Materials	Bromide	EPA 300.0
NELAP	08/24/2005	Non-Potable Water	Bromide	EPA 300.0
NELAP	04/07/2005	Non-Potable Water	Chloride	EPA 300.0
NELAP	04/20/2011	Solid and Chemical Materials	Chloride	EPA 300.0
NELAP	08/24/2005	Non-Potable Water	Fluoride	EPA 300.0
NELAP	04/20/2011	Solid and Chemical Materials	Fluoride	EPA 300.0
NELAP	04/20/2011	Solid and Chemical Materials	Nitrate	EPA 300.0
NELAP	04/07/2005	Non-Potable Water	Nitrate as N	EPA 300.0
NELAP	04/20/2011	Solid and Chemical Materials	Nitrite	EPA 300.0
NELAP	04/07/2005	Non-Potable Water	Nitrite as N	EPA 300.0
NELAP	04/20/2011	Solid and Chemical Materials	Orthophosphate as P	EPA 300.0
NELAP	04/07/2005	Non-Potable Water	Orthophosphate as P	EPA 300.0
NELAP	04/20/2011	Solid and Chemical Materials	Sulfate	EPA 300.0
NELAP	04/07/2005	Non-Potable Water	Sulfate	EPA 300.0
NELAP	04/07/2005	Solid and Chemical Materials	Preconcentration under acid	EPA 3005A
NELAP	08/26/2006	Non-Potable Water	Preconcentration under acid	EPA 3005A
NELAP	04/07/2005	Solid and Chemical Materials	Hot plate acid digestion (HNO3 + HCl)	EPA 3010A
NELAP	08/26/2006	Non-Potable Water	Hot plate acid digestion (HNO3 + HCl)	EPA 3010A
NELAP	04/07/2005	Non-Potable Water	Acidity as CaCO3	EPA 305.1
NELAP	04/07/2005	Solid and Chemical Materials	Acid digestion of solids	EPA 3050B
NELAP	04/07/2005	Solid and Chemical Materials	Alkaline digestion of Cr(VI)	EPA 3060A

NELAP	08/26/2006	Non-Potable Water	Alkaline digestion of Cr(VI)	EPA 3060A
NELAP	04/07/2005	Non-Potable Water	Alkalinity as CaCO3	EPA 310.1
NELAP	11/08/2007	Non-Potable Water	Chloride	EPA 325.1
NELAP	04/07/2005	Non-Potable Water	Chloride	EPA 325.2
NELAP	04/07/2005	Non-Potable Water	Total cyanide	EPA 335.4
NELAP	04/07/2005	Non-Potable Water	Ammonia as N	EPA 350.1
NELAP	08/26/2006	Solid and Chemical Materials	Ammonia as N	EPA 350.1
NELAP	08/26/2006	Non-Potable Water	Organics extraction and sample preparation	EPA 3500B
NELAP	04/07/2005	Solid and Chemical Materials	Separatory funnel liquid-liquid extraction	EPA 3510C
NELAP	08/26/2006	Non-Potable Water	Separatory funnel liquid-liquid extraction	EPA 3510C
NELAP	08/26/2006	Non-Potable Water	Continuous liquid-liquid extraction	EPA 3520C
NELAP	04/07/2005	Solid and Chemical Materials	Continuous liquid-liquid extraction	EPA 3520C
NELAP	04/07/2005	Non-Potable Water	Nitrate as N	EPA 353.2
NELAP	08/26/2006	Non-Potable Water	Nitrite as N	EPA 353.2
NELAP	04/20/2011	Solid and Chemical Materials	Total nitrate-nitrite	EPA 353.2
NELAP	08/26/2006	Non-Potable Water	Total nitrate-nitrite	EPA 353.2
NELAP	04/13/2009	Non-Potable Water	Solid-phase extraction (SPE)	EPA 3535A
NELAP	04/07/2005	Solid and Chemical Materials	Automated soxhlet extraction	EPA 3541
NELAP	04/07/2005	Solid and Chemical Materials	Ultrasonic extraction	EPA 3550B
NELAP	04/09/2009	Solid and Chemical Materials	Ultrasonic extraction	EPA 3550C
NELAP	04/07/2005	Solid and Chemical Materials	Waste dilution	EPA 3580A
NELAP	04/07/2005	Solid and Chemical Materials	Waste dilution for VOCs	EPA 3585
NELAP	03/16/2009	Non-Potable Water	Oxygen (dissolved)	EPA 360.1
NELAP	04/18/2006	Solid and Chemical Materials	Florisil cleanup	EPA 3620B

NELAP	08/26/2006	Non-Potable Water	Florisil cleanup	EPA 3620B
NELAP	04/09/2009	Solid and Chemical Materials	Florisil cleanup	EPA 3620C
NELAP	03/16/2009	Non-Potable Water	Florisil cleanup	EPA 3620C
NELAP	04/18/2006	Solid and Chemical Materials	Gel permeation cleanup (GPC)	EPA 3640A
NELAP	08/26/2006	Non-Potable Water	Gel permeation cleanup (GPC)	EPA 3640A
NELAP	08/26/2006	Non-Potable Water	Sulfur cleanup	EPA 3660B
NELAP	04/18/2006	Solid and Chemical Materials	Sulfur cleanup	EPA 3660B
NELAP	04/18/2006	Solid and Chemical Materials	Sulfuric acid/permanganate clean-up	EPA 3665A
NELAP	04/07/2005	Non-Potable Water	Sulfide	EPA 376.1
NELAP	06/24/2008	Non-Potable Water	Biochemical oxygen demand (BOD)	EPA 405.1
NELAP	04/07/2005	Non-Potable Water	Chemical oxygen demand (COD)	EPA 410.4
NELAP	08/26/2006	Solid and Chemical Materials	Chemical oxygen demand (COD)	EPA 410.4
NELAP	04/07/2005	Non-Potable Water	Total organic carbon (TOC)	EPA 415.1
NELAP	04/08/2008	Non-Potable Water	Total phenolics	EPA 420.1
NELAP	04/07/2005	Non-Potable Water	Total phenolics	EPA 420.2
NELAP	07/13/2007	Non-Potable Water	Total phenolics	EPA 420.4
NELAP	04/20/2011	Non-Potable Water	Aqueous-phase purge-and-trap	EPA 5030
NELAP	04/20/2011	Solid and Chemical Materials	Bulk purge-and-trap (methanol)	EPA 5030
NELAP	04/07/2005	Solid and Chemical Materials	Closed-system purge-and-trap (bisulfate option)	EPA 5035
NELAP	04/07/2005	Solid and Chemical Materials	Closed-system purge-and-trap (methanol option)	EPA 5035
NELAP	08/24/2005	Solid and Chemical Materials	Closed-system purge-and-trap (unpreserved)	EPA 5035
NELAP	08/24/2005	Solid and Chemical Materials	Aluminum	EPA 6010
NELAP	08/26/2006	Non-Potable Water	Aluminum	EPA 6010
NELAP	08/26/2006	Non-Potable Water	Antimony	EPA 6010

NELAP	04/07/2005	Solid and Chemical Materials	Antimony	EPA 6010
NELAP	04/07/2005	Solid and Chemical Materials	Arsenic	EPA 6010
NELAP	08/26/2006	Non-Potable Water	Arsenic	EPA 6010
NELAP	04/07/2005	Solid and Chemical Materials	Barium	EPA 6010
NELAP	08/26/2006	Non-Potable Water	Barium	EPA 6010
NELAP	04/07/2005	Solid and Chemical Materials	Beryllium	EPA 6010
NELAP	08/26/2006	Non-Potable Water	Beryllium	EPA 6010
NELAP	04/07/2005	Solid and Chemical Materials	Boron	EPA 6010
NELAP	08/26/2006	Non-Potable Water	Boron	EPA 6010
NELAP	08/26/2006	Non-Potable Water	Cadmium	EPA 6010
NELAP	04/07/2005	Solid and Chemical Materials	Cadmium	EPA 6010
NELAP	08/26/2006	Non-Potable Water	Calcium	EPA 6010
NELAP	04/07/2005	Solid and Chemical Materials	Calcium	EPA 6010
NELAP	08/26/2006	Non-Potable Water	Chromium	EPA 6010
NELAP	04/07/2005	Solid and Chemical Materials	Chromium	EPA 6010
NELAP	08/26/2006	Non-Potable Water	Cobalt	EPA 6010
NELAP	04/07/2005	Solid and Chemical Materials	Cobalt	EPA 6010
NELAP	08/26/2006	Non-Potable Water	Copper	EPA 6010
NELAP	04/07/2005	Solid and Chemical Materials	Copper	EPA 6010
NELAP	04/07/2005	Solid and Chemical Materials	Iron	EPA 6010
NELAP	08/26/2006	Non-Potable Water	Iron	EPA 6010
NELAP	08/26/2006	Non-Potable Water	Lead	EPA 6010
NELAP	04/07/2005	Solid and Chemical Materials	Lead	EPA 6010

NELAP	08/26/2006	Non-Potable Water	Lithium	EPA 6010
NELAP	04/22/2010	Solid and Chemical Materials	Lithium	EPA 6010
NELAP	04/07/2005	Solid and Chemical Materials	Magnesium	EPA 6010
NELAP	08/26/2006	Non-Potable Water	Magnesium	EPA 6010
NELAP	08/26/2006	Non-Potable Water	Manganese	EPA 6010
NELAP	04/07/2005	Solid and Chemical Materials	Manganese	EPA 6010
NELAP	04/07/2005	Solid and Chemical Materials	Molybdenum	EPA 6010
NELAP	08/26/2006	Non-Potable Water	Molybdenum	EPA 6010
NELAP	08/26/2006	Non-Potable Water	Nickel	EPA 6010
NELAP	04/07/2005	Solid and Chemical Materials	Nickel	EPA 6010
NELAP	08/26/2006	Non-Potable Water	Potassium	EPA 6010
NELAP	04/07/2005	Solid and Chemical Materials	Potassium	EPA 6010
NELAP	08/26/2006	Non-Potable Water	Selenium	EPA 6010
NELAP	04/07/2005	Solid and Chemical Materials	Selenium	EPA 6010
NELAP	04/18/2006	Non-Potable Water	Silica, as SiO2	EPA 6010
NELAP	04/07/2005	Solid and Chemical Materials	Silica, as SiO2	EPA 6010
NELAP	06/03/2010	Solid and Chemical Materials	Silicon	EPA 6010
NELAP	06/03/2010	Non-Potable Water	Silicon	EPA 6010
NELAP	04/07/2005	Solid and Chemical Materials	Silver	EPA 6010
NELAP	08/26/2006	Non-Potable Water	Silver	EPA 6010
NELAP	04/07/2005	Solid and Chemical Materials	Sodium	EPA 6010
NELAP	08/26/2006	Non-Potable Water	Sodium	EPA 6010
NELAP	08/26/2006	Non-Potable Water	Strontium	EPA 6010

NELAP	04/07/2005	Solid and Chemical Materials	Strontium	EPA 6010
NELAP	04/07/2005	Solid and Chemical Materials	Thallium	EPA 6010
NELAP	08/26/2006	Non-Potable Water	Thallium	EPA 6010
NELAP	04/07/2005	Solid and Chemical Materials	Tin	EPA 6010
NELAP	08/26/2006	Non-Potable Water	Tin	EPA 6010
NELAP	04/07/2005	Solid and Chemical Materials	Titanium	EPA 6010
NELAP	08/26/2006	Non-Potable Water	Titanium	EPA 6010
NELAP	04/07/2005	Solid and Chemical Materials	Vanadium	EPA 6010
NELAP	08/26/2006	Non-Potable Water	Vanadium	EPA 6010
NELAP	04/07/2005	Solid and Chemical Materials	Zinc	EPA 6010
NELAP	08/26/2006	Non-Potable Water	Zinc	EPA 6010
NELAP	04/08/2009	Solid and Chemical Materials	Metals by ICP/AES	EPA 6010B
NELAP	04/08/2009	Non-Potable Water	Metals by ICP/AES	EPA 6010B
NELAP	04/09/2009	Solid and Chemical Materials	Metals by ICP/AES	EPA 6010C
NELAP	03/16/2009	Non-Potable Water	Metals by ICP/AES	EPA 6010C
NELAP	04/18/2006	Solid and Chemical Materials	Cesium	EPA 6010-Extended
NELAP	04/18/2006	Non-Potable Water	Cesium	EPA 6010-Extended
NELAP	08/26/2006	Non-Potable Water	Aluminum	EPA 6020
NELAP	04/07/2005	Solid and Chemical Materials	Aluminum	EPA 6020
NELAP	04/07/2005	Solid and Chemical Materials	Antimony	EPA 6020
NELAP	08/26/2006	Non-Potable Water	Antimony	EPA 6020
NELAP	04/07/2005	Solid and Chemical Materials	Arsenic	EPA 6020
NELAP	08/26/2006	Non-Potable Water	Arsenic	EPA 6020

NELAP	08/26/2006	Non-Potable Water	Barium	EPA 6020
NELAP	04/07/2005	Solid and Chemical Materials	Barium	EPA 6020
NELAP	08/26/2006	Non-Potable Water	Beryllium	EPA 6020
NELAP	04/07/2005	Solid and Chemical Materials	Beryllium	EPA 6020
NELAP	08/26/2006	Non-Potable Water	Boron	EPA 6020
NELAP	04/07/2005	Solid and Chemical Materials	Cadmium	EPA 6020
NELAP	08/26/2006	Non-Potable Water	Cadmium	EPA 6020
NELAP	08/26/2006	Non-Potable Water	Calcium	EPA 6020
NELAP	04/07/2005	Solid and Chemical Materials	Chromium	EPA 6020
NELAP	08/26/2006	Non-Potable Water	Chromium	EPA 6020
NELAP	04/07/2005	Solid and Chemical Materials	Cobalt	EPA 6020
NELAP	08/26/2006	Non-Potable Water	Cobalt	EPA 6020
NELAP	04/07/2005	Solid and Chemical Materials	Copper	EPA 6020
NELAP	08/26/2006	Non-Potable Water	Copper	EPA 6020
NELAP	08/26/2006	Non-Potable Water	Iron	EPA 6020
NELAP	04/07/2005	Solid and Chemical Materials	Lead	EPA 6020
NELAP	08/26/2006	Non-Potable Water	Lead	EPA 6020
NELAP	08/26/2006	Non-Potable Water	Magnesium	EPA 6020
NELAP	04/07/2005	Solid and Chemical Materials	Manganese	EPA 6020
NELAP	01/22/2007	Non-Potable Water	Manganese	EPA 6020
NELAP	04/09/2009	Solid and Chemical Materials	Metals by ICP/MS	EPA 6020
NELAP	03/16/2009	Non-Potable Water	Metals by ICP/MS	EPA 6020
NELAP	04/07/2005	Solid and Chemical Materials	Nickel	EPA 6020
NELAP	08/26/2006	Non-Potable Water	Nickel	EPA 6020

NELAP	08/26/2006	Non-Potable Water	Potassium	EPA 6020
NELAP	04/07/2005	Solid and Chemical Materials	Silver	EPA 6020
NELAP	08/26/2006	Non-Potable Water	Silver	EPA 6020
NELAP	08/26/2006	Non-Potable Water	Sodium	EPA 6020
NELAP	04/07/2005	Solid and Chemical Materials	Thallium	EPA 6020
NELAP	08/26/2006	Non-Potable Water	Thallium	EPA 6020
NELAP	08/26/2006	Non-Potable Water	Zinc	EPA 6020
NELAP	04/07/2005	Solid and Chemical Materials	Zinc	EPA 6020
NELAP	03/16/2009	Non-Potable Water	Metals by ICP/MS	EPA 6020A
NELAP	04/09/2009	Solid and Chemical Materials	Metals by ICP/MS	EPA 6020A
NELAP	08/24/2005	Solid and Chemical Materials	Boron	EPA 6020-Extended
NELAP	08/24/2005	Solid and Chemical Materials	Calcium	EPA 6020-Extended
NELAP	04/18/2006	Solid and Chemical Materials	Cesium	EPA 6020-Extended
NELAP	04/18/2006	Non-Potable Water	Cesium	EPA 6020-Extended
NELAP	08/24/2005	Solid and Chemical Materials	Iron	EPA 6020-Extended
NELAP	08/24/2005	Solid and Chemical Materials	Magnesium	EPA 6020-Extended
NELAP	08/26/2006	Non-Potable Water	Molybdenum	EPA 6020-Extended
NELAP	04/07/2005	Solid and Chemical Materials	Molybdenum	EPA 6020-Extended
NELAP	01/21/2010	Non-Potable Water	Phosphorus, total	EPA 6020-Extended
NELAP	08/24/2005	Solid and Chemical Materials	Potassium	EPA 6020-Extended
NELAP	04/07/2005	Solid and Chemical Materials	Selenium	EPA 6020-Extended
NELAP	08/26/2006	Non-Potable Water	Selenium	EPA 6020-Extended
NELAP	04/18/2006	Non-Potable Water	Silica, as SiO2	EPA 6020-Extended

NELAP	04/18/2006	Solid and Chemical Materials	Silica, as SiO2	EPA 6020-Extended
NELAP	06/03/2010	Non-Potable Water	Silicon	EPA 6020-Extended
NELAP	06/03/2010	Solid and Chemical Materials	Silicon	EPA 6020-Extended
NELAP	08/24/2005	Solid and Chemical Materials	Sodium	EPA 6020-Extended
NELAP	08/26/2006	Non-Potable Water	Strontium	EPA 6020-Extended
NELAP	04/07/2005	Solid and Chemical Materials	Strontium	EPA 6020-Extended
NELAP	08/24/2005	Solid and Chemical Materials	Tin	EPA 6020-Extended
NELAP	08/26/2006	Non-Potable Water	Tin	EPA 6020-Extended
NELAP	08/24/2005	Solid and Chemical Materials	Titanium	EPA 6020-Extended
NELAP	08/26/2006	Non-Potable Water	Titanium	EPA 6020-Extended
NELAP	08/26/2006	Non-Potable Water	Vanadium	EPA 6020-Extended
NELAP	04/07/2005	Solid and Chemical Materials	Vanadium	EPA 6020-Extended
NELAP	04/07/2005	Non-Potable Water	4,4'-DDD	EPA 608
NELAP	04/07/2005	Non-Potable Water	4,4'-DDE	EPA 608
NELAP	04/07/2005	Non-Potable Water	4,4'-DDT	EPA 608
NELAP	04/07/2005	Non-Potable Water	Aldrin (HHDN)	EPA 608
NELAP	04/07/2005	Non-Potable Water	alpha-BHC (alpha-Hexachlorocyclohexane)	EPA 608
NELAP	04/07/2005	Non-Potable Water	Aroclor-1016 (PCB-1016)	EPA 608
NELAP	04/07/2005	Non-Potable Water	Aroclor-1221 (PCB-1221)	EPA 608
NELAP	04/07/2005	Non-Potable Water	Aroclor-1232 (PCB-1232)	EPA 608
NELAP	04/07/2005	Non-Potable Water	Aroclor-1242 (PCB-1242)	EPA 608
NELAP	04/07/2005	Non-Potable Water	Aroclor-1248 (PCB-1248)	EPA 608
NELAP	04/07/2005	Non-Potable Water	Aroclor-1254 (PCB-1254)	EPA 608
NELAP	04/07/2005	Non-Potable Water	Aroclor-1260 (PCB-1260)	EPA 608
NELAP	04/07/2005	Non-Potable Water	beta-BHC (beta-Hexachlorocyclohexane)	EPA 608
NELAP	04/07/2005	Non-Potable Water	Chlordane (tech.)	EPA 608

NELAP	04/07/2005	Non-Potable Water	delta-BHC (delta-Hexachlorocyclohexane)	EPA 608
NELAP	04/07/2005	Non-Potable Water	Dieldrin	EPA 608
NELAP	04/07/2005	Non-Potable Water	Endosulfan I	EPA 608
NELAP	04/07/2005	Non-Potable Water	Endosulfan II	EPA 608
NELAP	04/07/2005	Non-Potable Water	Endosulfan sulfate	EPA 608
NELAP	04/07/2005	Non-Potable Water	Endrin	EPA 608
NELAP	11/07/2006	Non-Potable Water	Endrin aldehyde	EPA 608
NELAP	04/07/2005	Non-Potable Water	gamma-BHC (Lindane, gamma-Hexachlorocyclohexane)	EPA 608
NELAP	04/07/2005	Non-Potable Water	Heptachlor	EPA 608
NELAP	04/07/2005	Non-Potable Water	Heptachlor epoxide	EPA 608
NELAP	04/18/2006	Non-Potable Water	Methoxychlor	EPA 608
NELAP	04/07/2005	Non-Potable Water	Toxaphene (Chlorinated camphene)	EPA 608
NELAP	04/18/2006	Non-Potable Water	alpha-Chlordane	EPA 608-Extended
NELAP	04/08/2009	Non-Potable Water	Aroclor-1262 (PCB-1262)	EPA 608-Extended
NELAP	04/08/2009	Non-Potable Water	Aroclor-1268 (PCB-1268)	EPA 608-Extended
NELAP	03/01/2007	Non-Potable Water	Endrin ketone	EPA 608-Extended
NELAP	04/18/2006	Non-Potable Water	gamma-Chlordane	EPA 608-Extended
NELAP	04/07/2005	Non-Potable Water	Acenaphthene	EPA 610
NELAP	04/07/2005	Non-Potable Water	Acenaphthylene	EPA 610
NELAP	04/07/2005	Non-Potable Water	Anthracene	EPA 610
NELAP	04/07/2005	Non-Potable Water	Benzo[a]anthracene	EPA 610
NELAP	04/07/2005	Non-Potable Water	Benzo[a]pyrene	EPA 610
NELAP	04/07/2005	Non-Potable Water	Benzo[b]fluoranthene	EPA 610
NELAP	04/07/2005	Non-Potable Water	Benzo[ghi]perylene	EPA 610
NELAP	04/07/2005	Non-Potable Water	Benzo[k]fluoranthene	EPA 610
NELAP	04/07/2005	Non-Potable Water	Chrysene (Benzo[a]phenanthrene)	EPA 610
NELAP	04/07/2005	Non-Potable Water	Dibenzo[a,h]anthracene	EPA 610
NELAP	04/07/2005	Non-Potable Water	Fluoranthene	EPA 610
NELAP	04/07/2005	Non-Potable Water	Fluorene	EPA 610

NELAP	04/07/2005	Non-Potable Water	Indeno(1,2,3-cd)pyrene	EPA 610
NELAP	04/07/2005	Non-Potable Water	Naphthalene	EPA 610
NELAP	04/07/2005	Non-Potable Water	Phenanthrene	EPA 610
NELAP	04/07/2005	Non-Potable Water	Pyrene	EPA 610
NELAP	04/08/2009	Non-Potable Water	1-Methylnaphthalene	EPA 610-Extended
NELAP	05/20/2011	Non-Potable Water	2-Methylnaphthalene	EPA 610-Extended
NELAP	04/08/2009	Non-Potable Water	Carbazole	EPA 610-Extended
NELAP	04/07/2005	Non-Potable Water	1,1,1-Trichloroethane	EPA 624
NELAP	04/07/2005	Non-Potable Water	1,1,2,2-Tetrachloroethane	EPA 624
NELAP	04/07/2005	Non-Potable Water	1,1,2-Trichloroethane	EPA 624
NELAP	04/07/2005	Non-Potable Water	1,1-Dichloroethane	EPA 624
NELAP	04/07/2005	Non-Potable Water	1,1-Dichloroethene (1,1-Dichloroethylene)	EPA 624
NELAP	04/07/2005	Non-Potable Water	1,2-Dichlorobenzene (o-Dichlorobenzene)	EPA 624
NELAP	04/07/2005	Non-Potable Water	1,2-Dichloroethane	EPA 624
NELAP	04/07/2005	Non-Potable Water	1,2-Dichloropropane	EPA 624
NELAP	04/07/2005	Non-Potable Water	1,3-Dichlorobenzene (m-Dichlorobenzene)	EPA 624
NELAP	04/07/2005	Non-Potable Water	1,4-Dichlorobenzene (p-Dichlorobenzene)	EPA 624
NELAP	04/07/2005	Non-Potable Water	2-Chloroethyl vinyl ether	EPA 624
NELAP	04/07/2005	Non-Potable Water	Acrolein (Propenal)	EPA 624
NELAP	04/07/2005	Non-Potable Water	Acrylonitrile	EPA 624
NELAP	04/07/2005	Non-Potable Water	Benzene	EPA 624
NELAP	04/07/2005	Non-Potable Water	Bromodichloromethane	EPA 624
NELAP	04/07/2005	Non-Potable Water	Bromoform	EPA 624
NELAP	04/07/2005	Non-Potable Water	Carbon tetrachloride	EPA 624
NELAP	04/07/2005	Non-Potable Water	Chlorobenzene	EPA 624
NELAP	04/07/2005	Non-Potable Water	Chloroethane	EPA 624
NELAP	04/07/2005	Non-Potable Water	Chloroform	EPA 624
NELAP	04/07/2005	Non-Potable Water	cis-1,3-Dichloropropene	EPA 624
NELAP	04/07/2005	Non-Potable Water	Dibromochloromethane	EPA 624

NELAP	04/07/2005	Non-Potable Water	Ethylbenzene	EPA 624
NELAP	08/24/2005	Non-Potable Water	m+p-Xylene	EPA 624
NELAP	08/26/2006	Non-Potable Water	m-Xylene	EPA 624
NELAP	11/07/2006	Non-Potable Water	Methyl bromide (Bromomethane)	EPA 624
NELAP	04/07/2005	Non-Potable Water	Methyl chloride (Chloromethane)	EPA 624
NELAP	04/07/2005	Non-Potable Water	Methylene chloride (Dichloromethane)	EPA 624
NELAP	08/24/2005	Non-Potable Water	o-Xylene	EPA 624
NELAP	08/26/2006	Non-Potable Water	p-Xylene	EPA 624
NELAP	04/07/2005	Non-Potable Water	Tetrachloroethene (PCE, Perchloroethylene)	EPA 624
NELAP	04/07/2005	Non-Potable Water	Toluene	EPA 624
NELAP	04/07/2005	Non-Potable Water	trans-1,2-Dichloroethene	EPA 624
NELAP	04/07/2005	Non-Potable Water	trans-1,3-Dichloropropene	EPA 624
NELAP	04/07/2005	Non-Potable Water	Trichloroethene (TCE, Trichloroethylene)	EPA 624
NELAP	04/07/2005	Non-Potable Water	Trichlorofluoromethane (Freon 11)	EPA 624
NELAP	04/07/2005	Non-Potable Water	Vinyl chloride (Chloroethene)	EPA 624
NELAP	04/07/2005	Non-Potable Water	Xylenes, total	EPA 624
NELAP	04/08/2009	Non-Potable Water	1,1,2-Trichloro-1,2,2-trifluoroethane (Freon 113)	EPA 624-Extended
NELAP	04/08/2009	Non-Potable Water	1,1-Dichloropropene	EPA 624-Extended
NELAP	04/08/2009	Non-Potable Water	1,2,3-Trichlorobenzene	EPA 624-Extended
NELAP	04/08/2009	Non-Potable Water	1,2,3-Trichloropropane (1,2,3-TCP)	EPA 624-Extended
NELAP	04/08/2009	Non-Potable Water	1,2,4-Trichlorobenzene	EPA 624-Extended
NELAP	04/08/2009	Non-Potable Water	1,2,4-Trimethylbenzene	EPA 624-Extended
NELAP	04/08/2009	Non-Potable Water	1,2-Dibromo-3-chloropropane (DBCP, Dibromochloropropane)	EPA 624-Extended
NELAP	04/08/2009	Non-Potable Water	1,2-Dibromoethane (EDB, Ethylene dibromide)	EPA 624-Extended
NELAP	04/08/2009	Non-Potable Water	1,3,5-Trichlorobenzene	EPA 624-Extended
NELAP	04/08/2009	Non-Potable Water	1,3,5-Trimethylbenzene	EPA 624-Extended
NELAP	04/08/2009	Non-Potable Water	1,3-Dichloropropane	EPA 624-Extended
NELAP	04/08/2009	Non-Potable Water	1,4-Dioxane (1,4-Diethyleneoxide)	EPA 624-Extended

NELAP	04/08/2009	Non-Potable Water	2,2-Dichloropropane	EPA 624-Extended
NELAP	04/08/2009	Non-Potable Water	2,3,6-Trichlorotoluene	EPA 624-Extended
NELAP	04/08/2009	Non-Potable Water	2,3-Dichlorotoluene	EPA 624-Extended
NELAP	04/08/2009	Non-Potable Water	2,4,5-Trichlorotoluene	EPA 624-Extended
NELAP	04/08/2009	Non-Potable Water	2,4-Dichlorobenzotrifluoride	EPA 624-Extended
NELAP	04/08/2009	Non-Potable Water	2,4-Dichlorotoluene	EPA 624-Extended
NELAP	04/08/2009	Non-Potable Water	2,5-Dichlorobenzotrifluoride	EPA 624-Extended
NELAP	04/08/2009	Non-Potable Water	2,5-Dichlorotoluene	EPA 624-Extended
NELAP	04/08/2009	Non-Potable Water	2,6-Dichlorotoluene	EPA 624-Extended
NELAP	03/01/2007	Non-Potable Water	2-Butanone (Methyl ethyl ketone, MEK)	EPA 624-Extended
NELAP	04/08/2009	Non-Potable Water	2-Chlorobenzotrifluoride	EPA 624-Extended
NELAP	04/08/2008	Non-Potable Water	2-Hexanone	EPA 624-Extended
NELAP	04/08/2009	Non-Potable Water	3,4-Dichlorobenzotrifluoride	EPA 624-Extended
NELAP	04/08/2009	Non-Potable Water	3,4-Dichlorotoluene	EPA 624-Extended
NELAP	04/08/2009	Non-Potable Water	3-Chlorobenzotrifluoride	EPA 624-Extended
NELAP	04/08/2009	Non-Potable Water	3-Chlorotoluene	EPA 624-Extended
NELAP	04/08/2009	Non-Potable Water	4-Chlorobenzotrifluoride	EPA 624-Extended
NELAP	04/08/2009	Non-Potable Water	4-Chlorotoluene	EPA 624-Extended
NELAP	04/08/2009	Non-Potable Water	4-Isopropyltoluene (p-Isopropyltoluene)	EPA 624-Extended
NELAP	04/08/2009	Non-Potable Water	4-Methyl-2-pentanone (MIBK)	EPA 624-Extended
NELAP	04/08/2008	Non-Potable Water	Acetone	EPA 624-Extended
NELAP	04/08/2009	Non-Potable Water	Acetonitrile	EPA 624-Extended
NELAP	04/08/2009	Non-Potable Water	Bromobenzene	EPA 624-Extended
NELAP	03/01/2007	Non-Potable Water	Bromochloromethane	EPA 624-Extended
NELAP	04/08/2009	Non-Potable Water	Carbon disulfide	EPA 624-Extended
NELAP	04/08/2009	Non-Potable Water	cis-1,2-Dichloroethene	EPA 624-Extended
NELAP	04/08/2009	Non-Potable Water	Cyclohexane	EPA 624-Extended
NELAP	04/08/2009	Non-Potable Water	Cyclohexanol	EPA 624-Extended
NELAP	04/08/2009	Non-Potable Water	Dibromomethane	EPA 624-Extended

NELAP	04/08/2009	Non-Potable Water	Dichlorodifluoromethane (Freon 12)	EPA 624-Extended
NELAP	04/08/2009	Non-Potable Water	Ethyl methacrylate	EPA 624-Extended
NELAP	04/08/2009	Non-Potable Water	Hexachlorobutadiene (1,3-Hexachlorobutadiene)	EPA 624-Extended
NELAP	04/20/2011	Non-Potable Water	Hexane	EPA 624-Extended
NELAP	04/08/2009	Non-Potable Water	Iodomethane (Methyl iodide)	EPA 624-Extended
NELAP	04/08/2009	Non-Potable Water	Isobutyl alcohol (2-Methyl-1-propanol)	EPA 624-Extended
NELAP	04/08/2009	Non-Potable Water	Isopropylbenzene (Cumene)	EPA 624-Extended
NELAP	04/08/2009	Non-Potable Water	Methacrylonitrile	EPA 624-Extended
NELAP	04/08/2009	Non-Potable Water	Methyl acetate	EPA 624-Extended
NELAP	04/08/2008	Non-Potable Water	Methyl isobutyl ketone (MIBK, 4-Methyl-2-pentanone)	EPA 624-Extended
NELAP	04/08/2008	Non-Potable Water	Methyl tert-butyl ether (MTBE)	EPA 624-Extended
NELAP	04/08/2009	Non-Potable Water	Methylcyclohexane	EPA 624-Extended
NELAP	04/08/2009	Non-Potable Water	Methylmethacrylate	EPA 624-Extended
NELAP	04/08/2009	Non-Potable Water	n-Butylbenzene	EPA 624-Extended
NELAP	04/08/2009	Non-Potable Water	n-Propylbenzene	EPA 624-Extended
NELAP	04/08/2009	Non-Potable Water	Naphthalene	EPA 624-Extended
NELAP	04/08/2009	Non-Potable Water	Propionitrile (Ethyl cyanide)	EPA 624-Extended
NELAP	04/08/2009	Non-Potable Water	sec-Butylbenzene	EPA 624-Extended
NELAP	04/08/2009	Non-Potable Water	Styrene	EPA 624-Extended
NELAP	04/08/2009	Non-Potable Water	tert-Amyl methyl ether (TAME)	EPA 624-Extended
NELAP	04/08/2009	Non-Potable Water	tert-Butyl alcohol (2-Methyl-2-propanol)	EPA 624-Extended
NELAP	04/08/2009	Non-Potable Water	tert-Butylbenzene	EPA 624-Extended
NELAP	04/08/2009	Non-Potable Water	trans-1,4-Dichloro-2-butene	EPA 624-Extended
NELAP	04/08/2009	Non-Potable Water	Vinyl acetate	EPA 624-Extended
NELAP	04/07/2005	Non-Potable Water	1,2,4-Trichlorobenzene	EPA 625
NELAP	04/07/2005	Non-Potable Water	1,2-Dichlorobenzene (o-Dichlorobenzene)	EPA 625
NELAP	04/07/2005	Non-Potable Water	1,3-Dichlorobenzene (m-Dichlorobenzene)	EPA 625
NELAP	04/07/2005	Non-Potable Water	1,4-Dichlorobenzene (p-Dichlorobenzene)	EPA 625
NELAP	08/24/2005	Non-Potable Water	2,4,5-Trichlorophenol	EPA 625

NELAP	04/07/2005	Non-Potable Water	2,4,6-Trichlorophenol	EPA 625
NELAP	04/07/2005	Non-Potable Water	2,4-Dichlorophenol	EPA 625
NELAP	04/07/2005	Non-Potable Water	2,4-Dimethylphenol	EPA 625
NELAP	04/07/2005	Non-Potable Water	2,4-Dinitrophenol	EPA 625
NELAP	04/07/2005	Non-Potable Water	2,4-Dinitrotoluene (2,4-DNT)	EPA 625
NELAP	04/07/2005	Non-Potable Water	2,6-Dinitrotoluene (2,6-DNT)	EPA 625
NELAP	04/07/2005	Non-Potable Water	2-Chloronaphthalene	EPA 625
NELAP	04/07/2005	Non-Potable Water	2-Chlorophenol	EPA 625
NELAP	04/07/2005	Non-Potable Water	2-Methyl-4,6-dinitrophenol (4,6-Dinitro-2-methylphenol)	EPA 625
NELAP	04/07/2005	Non-Potable Water	2-Nitrophenol	EPA 625
NELAP	04/07/2005	Non-Potable Water	3,3'-Dichlorobenzidine	EPA 625
NELAP	04/07/2005	Non-Potable Water	4-Bromophenyl phenyl ether	EPA 625
NELAP	04/07/2005	Non-Potable Water	4-Chloro-3-methylphenol	EPA 625
NELAP	04/07/2005	Non-Potable Water	4-Chlorophenyl phenyl ether	EPA 625
NELAP	04/07/2005	Non-Potable Water	4-Nitrophenol	EPA 625
NELAP	04/07/2005	Non-Potable Water	Acenaphthene	EPA 625
NELAP	10/27/2010	Non-Potable Water	Acenaphthylene	EPA 625
NELAP	08/24/2005	Non-Potable Water	Acetophenone	EPA 625
NELAP	04/07/2005	Non-Potable Water	Anthracene	EPA 625
NELAP	04/07/2005	Non-Potable Water	Benzidine	EPA 625
NELAP	04/07/2005	Non-Potable Water	Benzo[a]anthracene	EPA 625
NELAP	04/07/2005	Non-Potable Water	Benzo[a]pyrene	EPA 625
NELAP	04/07/2005	Non-Potable Water	Benzo[b]fluoranthene	EPA 625
NELAP	04/07/2005	Non-Potable Water	Benzo[ghi]perylene	EPA 625
NELAP	04/07/2005	Non-Potable Water	Benzo[k]fluoranthene	EPA 625
NELAP	04/07/2005	Non-Potable Water	bis(2-Chloroethoxy)methane	EPA 625
NELAP	04/07/2005	Non-Potable Water	bis(2-Chloroethyl) ether	EPA 625
NELAP	04/07/2005	Non-Potable Water	bis(2-Chloroisopropyl) ether	EPA 625
NELAP	04/07/2005	Non-Potable Water	bis(2-Ethylhexyl) phthalate (DEHP)	EPA 625

NELAP	04/07/2005	Non-Potable Water	Butyl benzyl phthalate (Benzyl butyl phthalate)	EPA 625
NELAP	04/07/2005	Non-Potable Water	Chrysene (Benzo[a]phenanthrene)	EPA 625
NELAP	04/18/2006	Non-Potable Water	Cresols (total)	EPA 625
NELAP	04/07/2005	Non-Potable Water	Di-n-butyl phthalate	EPA 625
NELAP	04/07/2005	Non-Potable Water	Di-n-octyl phthalate	EPA 625
NELAP	04/07/2005	Non-Potable Water	Dibenzo[a,h]anthracene	EPA 625
NELAP	04/07/2005	Non-Potable Water	Diethyl phthalate	EPA 625
NELAP	04/07/2005	Non-Potable Water	Dimethyl phthalate	EPA 625
NELAP	04/07/2005	Non-Potable Water	Fluoranthene	EPA 625
NELAP	04/07/2005	Non-Potable Water	Fluorene	EPA 625
NELAP	04/07/2005	Non-Potable Water	Hexachlorobenzene	EPA 625
NELAP	04/07/2005	Non-Potable Water	Hexachlorobutadiene (1,3-Hexachlorobutadiene)	EPA 625
NELAP	04/07/2005	Non-Potable Water	Hexachlorocyclopentadiene	EPA 625
NELAP	04/07/2005	Non-Potable Water	Hexachloroethane	EPA 625
NELAP	04/07/2005	Non-Potable Water	Indeno(1,2,3-cd)pyrene	EPA 625
NELAP	04/07/2005	Non-Potable Water	Isophorone	EPA 625
NELAP	04/07/2005	Non-Potable Water	N-Nitrosodi-n-propylamine	EPA 625
NELAP	04/07/2005	Non-Potable Water	N-Nitrosodimethylamine	EPA 625
NELAP	04/07/2005	Non-Potable Water	N-Nitrosodiphenylamine	EPA 625
NELAP	04/07/2005	Non-Potable Water	Naphthalene	EPA 625
NELAP	04/07/2005	Non-Potable Water	Nitrobenzene	EPA 625
NELAP	04/07/2005	Non-Potable Water	Pentachlorophenol (PCP)	EPA 625
NELAP	04/07/2005	Non-Potable Water	Phenanthrene	EPA 625
NELAP	04/07/2005	Non-Potable Water	Phenol	EPA 625
NELAP	04/07/2005	Non-Potable Water	Pyrene	EPA 625
NELAP	04/08/2009	Non-Potable Water	1,1'-Biphenyl (Biphenyl, Lemonene)	EPA 625-Extended
NELAP	04/08/2009	Non-Potable Water	1,2,3,4-Tetrahydronaphthalene	EPA 625-Extended
NELAP	04/08/2009	Non-Potable Water	1,2,4,5-Tetrachlorobenzene	EPA 625-Extended
NELAP	04/08/2009	Non-Potable Water	1,2-Diphenylhydrazine	EPA 625-Extended

NELAP	04/08/2009	Non-Potable Water	1,3-Dinitrobenzene (1,3-DNB)	EPA 625-Extended
NELAP	04/08/2009	Non-Potable Water	1,4-Dioxane (1,4-Diethyleneoxide)	EPA 625-Extended
NELAP	04/08/2009	Non-Potable Water	1-Methylnaphthalene	EPA 625-Extended
NELAP	04/08/2009	Non-Potable Water	1-Nitronaphthalene	EPA 625-Extended
NELAP	04/08/2009	Non-Potable Water	2,2'-Oxybis(1-chloropropane) (bis(2-Chloro-1-methylethyl) ether)	EPA 625-Extended
NELAP	04/08/2009	Non-Potable Water	2,3,4,6-Tetrachlorophenol	EPA 625-Extended
NELAP	04/08/2009	Non-Potable Water	2,3,5,6-Tetrachlorophenol	EPA 625-Extended
NELAP	04/08/2009	Non-Potable Water	2,3-Dichloroaniline	EPA 625-Extended
NELAP	04/08/2009	Non-Potable Water	2,6-Dinitrotoluene (2,6-DNT)	EPA 625-Extended
NELAP	04/08/2009	Non-Potable Water	2-Bromonaphthalene	EPA 625-Extended
NELAP	08/24/2005	Non-Potable Water	2-Methylnaphthalene	EPA 625-Extended
NELAP	04/18/2006	Non-Potable Water	2-Methylphenol (o-Cresol)	EPA 625-Extended
NELAP	04/18/2006	Non-Potable Water	2-Nitroaniline	EPA 625-Extended
NELAP	04/08/2009	Non-Potable Water	3+4-Methylphenol (m+p-Cresol)	EPA 625-Extended
NELAP	04/08/2009	Non-Potable Water	3-Chloroaniline	EPA 625-Extended
NELAP	04/18/2006	Non-Potable Water	3-Nitroaniline	EPA 625-Extended
NELAP	04/08/2009	Non-Potable Water	4,4'-Methylenebis(2-chloroaniline)	EPA 625-Extended
NELAP	04/08/2009	Non-Potable Water	4-Chloroaniline	EPA 625-Extended
NELAP	03/01/2007	Non-Potable Water	4-Methylphenol (p-Cresol)	EPA 625-Extended
NELAP	04/08/2009	Non-Potable Water	4-Nitrobiphenyl	EPA 625-Extended
NELAP	04/08/2009	Non-Potable Water	6-Methylchrysene	EPA 625-Extended
NELAP	04/08/2009	Non-Potable Water	alpha-Terpineol	EPA 625-Extended
NELAP	08/24/2005	Non-Potable Water	Aniline	EPA 625-Extended
NELAP	04/08/2009	Non-Potable Water	Aramite	EPA 625-Extended
NELAP	04/08/2009	Non-Potable Water	Atrazine	EPA 625-Extended
NELAP	04/08/2009	Non-Potable Water	Benzaldehyde	EPA 625-Extended
NELAP	04/08/2009	Non-Potable Water	Benzenethiol	EPA 625-Extended
NELAP	04/08/2009	Non-Potable Water	Benzoic acid	EPA 625-Extended

NELAP	04/08/2009	Non-Potable Water	Benzotrichloride	EPA 625-Extended
NELAP	04/08/2009	Non-Potable Water	Benzyl alcohol	EPA 625-Extended
NELAP	04/08/2009	Non-Potable Water	Caprolactam	EPA 625-Extended
NELAP	04/08/2009	Non-Potable Water	Carbaryl (Sevin)	EPA 625-Extended
NELAP	04/08/2009	Non-Potable Water	Carbazole	EPA 625-Extended
NELAP	04/08/2009	Non-Potable Water	Diallate (cis or trans)	EPA 625-Extended
NELAP	04/08/2009	Non-Potable Water	Dibenz[a,h]acridine	EPA 625-Extended
NELAP	04/08/2009	Non-Potable Water	Dibenzofuran	EPA 625-Extended
NELAP	04/08/2009	Non-Potable Water	Dimethoate	EPA 625-Extended
NELAP	04/08/2009	Non-Potable Water	Diphenylamine	EPA 625-Extended
NELAP	04/08/2009	Non-Potable Water	Ethyl parathion	EPA 625-Extended
NELAP	04/08/2009	Non-Potable Water	Hexachlorophene	EPA 625-Extended
NELAP	04/08/2009	Non-Potable Water	Isodrin	EPA 625-Extended
NELAP	04/08/2009	Non-Potable Water	Kepone	EPA 625-Extended
NELAP	04/08/2009	Non-Potable Water	Methyl parathion (Parathion, methyl)	EPA 625-Extended
NELAP	04/08/2009	Non-Potable Water	N-Nitrosodiethylamine	EPA 625-Extended
NELAP	04/08/2009	Non-Potable Water	n-Octadecane	EPA 625-Extended
NELAP	04/08/2009	Non-Potable Water	o-Toluidine (2-Toluidine, 2-Methylaniline)	EPA 625-Extended
NELAP	04/08/2009	Non-Potable Water	Pentachlorobenzene	EPA 625-Extended
NELAP	04/08/2009	Non-Potable Water	Pyridine	EPA 625-Extended
NELAP	04/08/2009	Non-Potable Water	Trifluralin (Treflan)	EPA 625-Extended
NELAP	11/08/2007	Solid and Chemical Materials	Chromium VI	EPA 6800
NELAP	08/26/2006	Non-Potable Water	Chromium VI	EPA 7196A
NELAP	04/07/2005	Solid and Chemical Materials	Chromium VI	EPA 7196A
NELAP	08/26/2006	Solid and Chemical Materials	Mercury	EPA 7470A
NELAP	08/26/2006	Non-Potable Water	Mercury	EPA 7470A
NELAP	04/07/2005	Solid and Chemical Materials	Mercury	EPA 7471A

NELAP	04/09/2009	Solid and Chemical Materials	Mercury	EPA 7471B
NELAP	04/18/2006	Non-Potable Water	1,2-Dibromo-3-chloropropane (DBCP, Dibromochloropropane)	EPA 8011
NELAP	04/18/2006	Non-Potable Water	1,2-Dibromoethane (EDB, Ethylene dibromide)	EPA 8011
NELAP	04/22/2010	Non-Potable Water	1,2,3-Trichloropropane (1,2,3-TCP)	EPA 8011-Extended
NELAP	04/20/2011	Solid and Chemical Materials	Ethylene glycol	EPA 8015
NELAP	04/20/2011	Non-Potable Water	Ethylene glycol	EPA 8015
NELAP	08/26/2006	Non-Potable Water	4,4'-DDD	EPA 8081
NELAP	04/07/2005	Solid and Chemical Materials	4,4'-DDD	EPA 8081
NELAP	08/26/2006	Non-Potable Water	4,4'-DDE	EPA 8081
NELAP	04/07/2005	Solid and Chemical Materials	4,4'-DDE	EPA 8081
NELAP	08/26/2006	Non-Potable Water	4,4'-DDT	EPA 8081
NELAP	04/07/2005	Solid and Chemical Materials	4,4'-DDT	EPA 8081
NELAP	04/07/2005	Solid and Chemical Materials	Aldrin (HHDN)	EPA 8081
NELAP	08/26/2006	Non-Potable Water	Aldrin (HHDN)	EPA 8081
NELAP	04/07/2005	Solid and Chemical Materials	alpha-BHC (alpha-Hexachlorocyclohexane)	EPA 8081
NELAP	08/26/2006	Non-Potable Water	alpha-BHC (alpha-Hexachlorocyclohexane)	EPA 8081
NELAP	01/06/2006	Non-Potable Water	alpha-Chlordane	EPA 8081
NELAP	04/07/2005	Solid and Chemical Materials	alpha-Chlordane	EPA 8081
NELAP	04/07/2005	Solid and Chemical Materials	beta-BHC (beta-Hexachlorocyclohexane)	EPA 8081
NELAP	08/26/2006	Non-Potable Water	beta-BHC (beta-Hexachlorocyclohexane)	EPA 8081
NELAP	08/26/2006	Non-Potable Water	Chlordane (tech.)	EPA 8081
NELAP	04/07/2005	Solid and Chemical Materials	Chlordane (tech.)	EPA 8081
NELAP	08/26/2006	Non-Potable Water	Chlorobenzilate	EPA 8081

NELAP	08/26/2006	Solid and Chemical Materials	Chlorobenzilate	EPA 8081
NELAP	08/26/2006	Non-Potable Water	delta-BHC (delta-Hexachlorocyclohexane)	EPA 8081
NELAP	04/07/2005	Solid and Chemical Materials	delta-BHC (delta-Hexachlorocyclohexane)	EPA 8081
NELAP	08/26/2006	Solid and Chemical Materials	Diallate (cis or trans)	EPA 8081
NELAP	08/26/2006	Non-Potable Water	Diallate (cis or trans)	EPA 8081
NELAP	04/07/2005	Solid and Chemical Materials	Dieldrin	EPA 8081
NELAP	08/26/2006	Non-Potable Water	Dieldrin	EPA 8081
NELAP	04/07/2005	Solid and Chemical Materials	Endosulfan I	EPA 8081
NELAP	08/26/2006	Non-Potable Water	Endosulfan I	EPA 8081
NELAP	04/07/2005	Solid and Chemical Materials	Endosulfan II	EPA 8081
NELAP	08/26/2006	Non-Potable Water	Endosulfan II	EPA 8081
NELAP	04/07/2005	Solid and Chemical Materials	Endosulfan sulfate	EPA 8081
NELAP	08/26/2006	Non-Potable Water	Endosulfan sulfate	EPA 8081
NELAP	04/07/2005	Solid and Chemical Materials	Endrin	EPA 8081
NELAP	08/26/2006	Non-Potable Water	Endrin	EPA 8081
NELAP	04/07/2005	Solid and Chemical Materials	Endrin aldehyde	EPA 8081
NELAP	11/07/2006	Non-Potable Water	Endrin aldehyde	EPA 8081
NELAP	01/06/2006	Non-Potable Water	Endrin ketone	EPA 8081
NELAP	04/07/2005	Solid and Chemical Materials	Endrin ketone	EPA 8081
NELAP	04/07/2005	Solid and Chemical Materials	gamma-BHC (Lindane, gamma-Hexachlorocyclohexane)	EPA 8081
NELAP	08/26/2006	Non-Potable Water	gamma-BHC (Lindane, gamma-Hexachlorocyclohexane)	EPA 8081
NELAP	01/06/2006	Non-Potable Water	gamma-Chlordane	EPA 8081
NELAP	04/07/2005	Solid and Chemical Materials	gamma-Chlordane	EPA 8081

NELAP	04/07/2005	Solid and Chemical Materials	Heptachlor	EPA 8081
NELAP	08/26/2006	Non-Potable Water	Heptachlor	EPA 8081
NELAP	08/26/2006	Non-Potable Water	Heptachlor epoxide	EPA 8081
NELAP	04/07/2005	Solid and Chemical Materials	Heptachlor epoxide	EPA 8081
NELAP	05/20/2011	Non-Potable Water	Hexachlorobenzene	EPA 8081
NELAP	05/12/2011	Solid and Chemical Materials	Hexachlorobenzene	EPA 8081
NELAP	08/26/2006	Solid and Chemical Materials	Hexachlorocyclopentadiene	EPA 8081
NELAP	08/26/2006	Non-Potable Water	Hexachlorocyclopentadiene	EPA 8081
NELAP	08/24/2005	Solid and Chemical Materials	Isodrin	EPA 8081
NELAP	08/26/2006	Non-Potable Water	Isodrin	EPA 8081
NELAP	04/07/2005	Solid and Chemical Materials	Methoxychlor	EPA 8081
NELAP	01/06/2006	Non-Potable Water	Methoxychlor	EPA 8081
NELAP	08/24/2005	Solid and Chemical Materials	Mirex	EPA 8081
NELAP	08/26/2006	Non-Potable Water	Mirex	EPA 8081
NELAP	08/26/2006	Non-Potable Water	Toxaphene (Chlorinated camphene)	EPA 8081
NELAP	04/07/2005	Solid and Chemical Materials	Toxaphene (Chlorinated camphene)	EPA 8081
NELAP	04/08/2009	Non-Potable Water	Organochlorine pesticides by GC/ECD	EPA 8081A
NELAP	04/08/2009	Solid and Chemical Materials	Organochlorine pesticides by GC/ECD	EPA 8081A
NELAP	04/09/2009	Solid and Chemical Materials	Organochlorine pesticides by GC/ECD	EPA 8081B
NELAP	04/08/2009	Non-Potable Water	Organochlorine pesticides by GC/ECD	EPA 8081B
NELAP	04/18/2006	Non-Potable Water	2,4'-DDD	EPA 8081-Extended
NELAP	04/18/2006	Solid and Chemical Materials	2,4'-DDD	EPA 8081-Extended
NELAP	04/18/2006	Solid and Chemical Materials	2,4'-DDE	EPA 8081-Extended

NELAP	04/18/2006	Non-Potable Water	2,4'-DDE	EPA 8081-Extended
NELAP	04/18/2006	Non-Potable Water	2,4'-DDT	EPA 8081-Extended
NELAP	04/18/2006	Solid and Chemical Materials	2,4'-DDT	EPA 8081-Extended
NELAP	04/18/2006	Solid and Chemical Materials	Chlorbenside	EPA 8081-Extended
NELAP	04/18/2006	Non-Potable Water	Chlorbenside	EPA 8081-Extended
NELAP	04/18/2006	Non-Potable Water	cis-Nonachlor	EPA 8081-Extended
NELAP	04/18/2006	Solid and Chemical Materials	cis-Nonachlor	EPA 8081-Extended
NELAP	08/26/2006	Solid and Chemical Materials	Dacthal (DCPA)	EPA 8081-Extended
NELAP	08/26/2006	Non-Potable Water	Dacthal (DCPA)	EPA 8081-Extended
NELAP	04/08/2009	Non-Potable Water	Oxychlordane	EPA 8081-Extended
NELAP	04/09/2009	Solid and Chemical Materials	Oxychlordane	EPA 8081-Extended
NELAP	04/18/2006	Solid and Chemical Materials	trans-Nonachlor	EPA 8081-Extended
NELAP	04/18/2006	Non-Potable Water	trans-Nonachlor	EPA 8081-Extended
NELAP	08/26/2006	Solid and Chemical Materials	2,2',3,3',4,4',5,5',6-Nonachlorobiphenyl (BZ 206)	EPA 8082
NELAP	08/26/2006	Non-Potable Water	2,2',3,3',4,4',5,5',6-Nonachlorobiphenyl (BZ 206)	EPA 8082
NELAP	08/26/2006	Non-Potable Water	2,2',3,3',4,4',5-Heptachlorobiphenyl (BZ 170)	EPA 8082
NELAP	08/26/2006	Solid and Chemical Materials	2,2',3,3',4,4',5-Heptachlorobiphenyl (BZ 170)	EPA 8082
NELAP	08/26/2006	Solid and Chemical Materials	2,2',3,4',5,5',6-Heptachlorobiphenyl (BZ 187)	EPA 8082
NELAP	08/26/2006	Non-Potable Water	2,2',3,4',5,5',6-Heptachlorobiphenyl (BZ 187)	EPA 8082
NELAP	08/26/2006	Non-Potable Water	2,2',3,4,4',5',6-Heptachlorobiphenyl (BZ 183)	EPA 8082
NELAP	08/26/2006	Solid and Chemical Materials	2,2',3,4,4',5',6-Heptachlorobiphenyl (BZ 183)	EPA 8082
NELAP	08/26/2006	Non-Potable Water	2,2',3,4,4',5'-Hexachlorobiphenyl (BZ 138)	EPA 8082
NELAP	08/26/2006	Solid and Chemical Materials	2,2',3,4,4',5'-Hexachlorobiphenyl (BZ 138)	EPA 8082

NELAP	08/26/2006	Solid and Chemical Materials	2,2',3,4,4',5,5'-Heptachlorobiphenyl (BZ 180)	EPA 8082
NELAP	08/26/2006	Non-Potable Water	2,2',3,4,4',5,5'-Heptachlorobiphenyl (BZ 180)	EPA 8082
NELAP	08/26/2006	Solid and Chemical Materials	2,2',3,4,5'-Pentachlorobiphenyl (BZ 87)	EPA 8082
NELAP	08/26/2006	Non-Potable Water	2,2',3,4,5'-Pentachlorobiphenyl (BZ 87)	EPA 8082
NELAP	08/26/2006	Non-Potable Water	2,2',3,4,5,5'-Hexachlorobiphenyl (BZ 141)	EPA 8082
NELAP	08/26/2006	Solid and Chemical Materials	2,2',3,4,5,5'-Hexachlorobiphenyl (BZ 141)	EPA 8082
NELAP	08/26/2006	Solid and Chemical Materials	2,2',3,5'-Tetrachlorobiphenyl (BZ 44)	EPA 8082
NELAP	08/26/2006	Non-Potable Water	2,2',3,5'-Tetrachlorobiphenyl (BZ 44)	EPA 8082
NELAP	08/26/2006	Non-Potable Water	2,2',3,5,5',6-Hexachlorobiphenyl (BZ 151)	EPA 8082
NELAP	08/26/2006	Solid and Chemical Materials	2,2',3,5,5',6-Hexachlorobiphenyl (BZ 151)	EPA 8082
NELAP	08/26/2006	Solid and Chemical Materials	2,2',4,4',5,5'-Hexachlorobiphenyl (BZ 153)	EPA 8082
NELAP	08/26/2006	Non-Potable Water	2,2',4,4',5,5'-Hexachlorobiphenyl (BZ 153)	EPA 8082
NELAP	08/26/2006	Solid and Chemical Materials	2,2',4,5,5'-Pentachlorobiphenyl (BZ 101)	EPA 8082
NELAP	08/26/2006	Non-Potable Water	2,2',4,5,5'-Pentachlorobiphenyl (BZ 101)	EPA 8082
NELAP	08/26/2006	Non-Potable Water	2,2',5,5'-Tetrachlorobiphenyl (BZ 52)	EPA 8082
NELAP	08/26/2006	Solid and Chemical Materials	2,2',5,5'-Tetrachlorobiphenyl (BZ 52)	EPA 8082
NELAP	08/26/2006	Non-Potable Water	2,2',5-Trichlorobiphenyl (BZ 18)	EPA 8082
NELAP	08/26/2006	Solid and Chemical Materials	2,2',5-Trichlorobiphenyl (BZ 18)	EPA 8082
NELAP	08/26/2006	Non-Potable Water	2,3',4,4'-Tetrachlorobiphenyl (BZ 66)	EPA 8082
NELAP	08/26/2006	Solid and Chemical Materials	2,3',4,4'-Tetrachlorobiphenyl (BZ 66)	EPA 8082
NELAP	08/26/2006	Non-Potable Water	2,3,3',4',6-Pentachlorobiphenyl (BZ 110)	EPA 8082
NELAP	08/26/2006	Solid and Chemical Materials	2,3,3',4',6-Pentachlorobiphenyl (BZ 110)	EPA 8082
NELAP	08/26/2006	Non-Potable Water	2,3-Dichlorobiphenyl (BZ 5)	EPA 8082

NELAP	08/26/2006	Solid and Chemical Materials	2,3-Dichlorobiphenyl (BZ 5)	EPA 8082
NELAP	08/26/2006	Solid and Chemical Materials	2,4',5-Trichlorobiphenyl (BZ 31)	EPA 8082
NELAP	08/26/2006	Non-Potable Water	2,4',5-Trichlorobiphenyl (BZ 31)	EPA 8082
NELAP	08/26/2006	Solid and Chemical Materials	2-Chlorobiphenyl (BZ 1)	EPA 8082
NELAP	08/26/2006	Non-Potable Water	2-Chlorobiphenyl (BZ 1)	EPA 8082
NELAP	11/08/2007	Solid and Chemical Materials	Aroclor-1016 (PCB-1016)	EPA 8082
NELAP	08/26/2006	Non-Potable Water	Aroclor-1016 (PCB-1016)	EPA 8082
NELAP	11/08/2007	Solid and Chemical Materials	Aroclor-1221 (PCB-1221)	EPA 8082
NELAP	08/26/2006	Non-Potable Water	Aroclor-1221 (PCB-1221)	EPA 8082
NELAP	08/26/2006	Non-Potable Water	Aroclor-1232 (PCB-1232)	EPA 8082
NELAP	11/08/2007	Solid and Chemical Materials	Aroclor-1232 (PCB-1232)	EPA 8082
NELAP	08/26/2006	Non-Potable Water	Aroclor-1242 (PCB-1242)	EPA 8082
NELAP	11/08/2007	Solid and Chemical Materials	Aroclor-1242 (PCB-1242)	EPA 8082
NELAP	08/26/2006	Non-Potable Water	Aroclor-1248 (PCB-1248)	EPA 8082
NELAP	11/08/2007	Solid and Chemical Materials	Aroclor-1248 (PCB-1248)	EPA 8082
NELAP	08/26/2006	Non-Potable Water	Aroclor-1254 (PCB-1254)	EPA 8082
NELAP	11/08/2007	Solid and Chemical Materials	Aroclor-1254 (PCB-1254)	EPA 8082
NELAP	08/26/2006	Non-Potable Water	Aroclor-1260 (PCB-1260)	EPA 8082
NELAP	11/08/2007	Solid and Chemical Materials	Aroclor-1260 (PCB-1260)	EPA 8082
NELAP	08/26/2006	Solid and Chemical Materials	PCBs as congeners	EPA 8082
NELAP	08/26/2006	Non-Potable Water	PCBs as congeners	EPA 8082
NELAP	04/08/2009	Non-Potable Water	PCBs by GC/ECD	EPA 8082
NELAP	04/09/2009	Solid and Chemical Materials	PCBs by GC/ECD	EPA 8082

NELAP	04/08/2009	Non-Potable Water	Total Aroclors	EPA 8082
NELAP	04/09/2009	Solid and Chemical Materials	Total Aroclors	EPA 8082
NELAP	04/08/2009	Non-Potable Water	PCBs by GC/ECD	EPA 8082A
NELAP	04/09/2009	Solid and Chemical Materials	PCBs by GC/ECD	EPA 8082A
NELAP	08/26/2006	Solid and Chemical Materials	2,2',3,3',4,4',5,5',6,6'-Decachlorobiphenyl (BZ 209)	EPA 8082-Extended
NELAP	08/26/2006	Non-Potable Water	2,2',3,3',4,4',5,5',6,6'-Decachlorobiphenyl (BZ 209)	EPA 8082-Extended
NELAP	08/26/2006	Solid and Chemical Materials	2,2',3,3',4,4',5,5'-Octachlorobiphenyl (BZ 194)	EPA 8082-Extended
NELAP	08/26/2006	Non-Potable Water	2,2',3,3',4,4',5,5'-Octachlorobiphenyl (BZ 194)	EPA 8082-Extended
NELAP	04/13/2009	Non-Potable Water	2,2',3,3',4,4',5,6'-Octachlorobiphenyl (BZ 196)	EPA 8082-Extended
NELAP	04/13/2009	Solid and Chemical Materials	2,2',3,3',4,4',5,6'-Octachlorobiphenyl (BZ 196)	EPA 8082-Extended
NELAP	04/13/2009	Solid and Chemical Materials	2,2',3,3',4,4',5,6,6'-Nonachlorobiphenyl (BZ 207)	EPA 8082-Extended
NELAP	04/13/2009	Non-Potable Water	2,2',3,3',4,4',5,6,6'-Nonachlorobiphenyl (BZ 207)	EPA 8082-Extended
NELAP	04/13/2009	Non-Potable Water	2,2',3,3',4,4',5,6-Octachlorobiphenyl (BZ 195)	EPA 8082-Extended
NELAP	04/13/2009	Solid and Chemical Materials	2,2',3,3',4,4',5,6-Octachlorobiphenyl (BZ 195)	EPA 8082-Extended
NELAP	04/13/2009	Solid and Chemical Materials	2,2',3,3',4,4',6,6'-Octachlorobiphenyl (BZ 197)	EPA 8082-Extended
NELAP	04/13/2009	Non-Potable Water	2,2',3,3',4,4',6,6'-Octachlorobiphenyl (BZ 197)	EPA 8082-Extended
NELAP	04/13/2009	Non-Potable Water	2,2',3,3',4,4',6-Heptachlorobiphenyl (BZ 171)	EPA 8082-Extended
NELAP	04/13/2009	Solid and Chemical Materials	2,2',3,3',4,4',6-Heptachlorobiphenyl (BZ 171)	EPA 8082-Extended
NELAP	08/26/2006	Non-Potable Water	2,2',3,3',4,4'-Hexachlorobiphenyl (BZ 128)	EPA 8082-Extended
NELAP	08/26/2006	Solid and Chemical Materials	2,2',3,3',4,4'-Hexachlorobiphenyl (BZ 128)	EPA 8082-Extended
NELAP	04/13/2009	Solid and Chemical Materials	2,2',3,3',4,5',6'-Heptachlorobiphenyl (BZ 177)	EPA 8082-Extended
NELAP	04/13/2009	Non-Potable Water	2,2',3,3',4,5',6'-Heptachlorobiphenyl (BZ 177)	EPA 8082-Extended
NELAP	04/13/2009	Solid and Chemical Materials	2,2',3,3',4,5',6,6'-Octachlorobiphenyl (BZ 201)	EPA 8082-Extended

NELAP	04/13/2009	Non-Potable Water	2,2',3,3',4,5',6,6'-Octachlorobiphenyl (BZ 201)	EPA 8082-Extended
NELAP	04/13/2009	Non-Potable Water	2,2',3,3',4,5',6-Heptachlorobiphenyl (BZ 175)	EPA 8082-Extended
NELAP	04/13/2009	Solid and Chemical Materials	2,2',3,3',4,5',6-Heptachlorobiphenyl (BZ 175)	EPA 8082-Extended
NELAP	04/13/2009	Solid and Chemical Materials	2,2',3,3',4,5'-Hexachlorobiphenyl (BZ 130)	EPA 8082-Extended
NELAP	04/13/2009	Non-Potable Water	2,2',3,3',4,5'-Hexachlorobiphenyl (BZ 130)	EPA 8082-Extended
NELAP	04/13/2009	Non-Potable Water	2,2',3,3',4,5,5',6'-Octachlorobiphenyl (BZ 199)	EPA 8082-Extended
NELAP	04/13/2009	Solid and Chemical Materials	2,2',3,3',4,5,5',6'-Octachlorobiphenyl (BZ 199)	EPA 8082-Extended
NELAP	04/13/2009	Non-Potable Water	2,2',3,3',4,5,5',6,6'-Nonachlorobiphenyl (BZ 208)	EPA 8082-Extended
NELAP	04/13/2009	Solid and Chemical Materials	2,2',3,3',4,5,5',6,6'-Nonachlorobiphenyl (BZ 208)	EPA 8082-Extended
NELAP	04/13/2009	Solid and Chemical Materials	2,2',3,3',4,5,5',6-Octachlorobiphenyl (BZ 198)	EPA 8082-Extended
NELAP	04/13/2009	Non-Potable Water	2,2',3,3',4,5,5',6-Octachlorobiphenyl (BZ 198)	EPA 8082-Extended
NELAP	04/13/2009	Solid and Chemical Materials	2,2',3,3',4,5,5'-Heptachlorobiphenyl (BZ 172)	EPA 8082-Extended
NELAP	04/13/2009	Non-Potable Water	2,2',3,3',4,5,5'-Heptachlorobiphenyl (BZ 172)	EPA 8082-Extended
NELAP	04/13/2009	Solid and Chemical Materials	2,2',3,3',4,5,6'-Heptachlorobiphenyl (BZ 174)	EPA 8082-Extended
NELAP	04/13/2009	Non-Potable Water	2,2',3,3',4,5,6'-Heptachlorobiphenyl (BZ 174)	EPA 8082-Extended
NELAP	04/13/2009	Non-Potable Water	2,2',3,3',4,5,6,6'-Octachlorobiphenyl (BZ 200)	EPA 8082-Extended
NELAP	04/13/2009	Solid and Chemical Materials	2,2',3,3',4,5,6,6'-Octachlorobiphenyl (BZ 200)	EPA 8082-Extended
NELAP	04/13/2009	Non-Potable Water	2,2',3,3',4,5,6-Heptachlorobiphenyl (BZ 173)	EPA 8082-Extended
NELAP	04/13/2009	Solid and Chemical Materials	2,2',3,3',4,5,6-Heptachlorobiphenyl (BZ 173)	EPA 8082-Extended
NELAP	04/13/2009	Solid and Chemical Materials	2,2',3,3',4,5-Hexachlorobiphenyl (BZ 129)	EPA 8082-Extended
NELAP	04/13/2009	Non-Potable Water	2,2',3,3',4,5-Hexachlorobiphenyl (BZ 129)	EPA 8082-Extended
NELAP	04/13/2009	Solid and Chemical Materials	2,2',3,3',4,6'-Hexachlorobiphenyl (BZ 132)	EPA 8082-Extended
NELAP	04/13/2009	Non-Potable Water	2,2',3,3',4,6'-Hexachlorobiphenyl (BZ 132)	EPA 8082-Extended

NELAP	04/13/2009	Solid and Chemical Materials	2,2',3,3',4,6,6'-Heptachlorobiphenyl (BZ 176)	EPA 8082-Extended
NELAP	04/13/2009	Non-Potable Water	2,2',3,3',4,6,6'-Heptachlorobiphenyl (BZ 176)	EPA 8082-Extended
NELAP	04/13/2009	Solid and Chemical Materials	2,2',3,3',4,6-Hexachlorobiphenyl (BZ 131)	EPA 8082-Extended
NELAP	04/13/2009	Non-Potable Water	2,2',3,3',4,6-Hexachlorobiphenyl (BZ 131)	EPA 8082-Extended
NELAP	04/13/2009	Solid and Chemical Materials	2,2',3,3',4-Pentachlorobiphenyl (BZ 82)	EPA 8082-Extended
NELAP	04/13/2009	Non-Potable Water	2,2',3,3',4-Pentachlorobiphenyl (BZ 82)	EPA 8082-Extended
NELAP	04/13/2009	Non-Potable Water	2,2',3,3',5,5',6,6'-Octachlorobiphenyl (BZ 202)	EPA 8082-Extended
NELAP	04/13/2009	Solid and Chemical Materials	2,2',3,3',5,5',6,6'-Octachlorobiphenyl (BZ 202)	EPA 8082-Extended
NELAP	04/13/2009	Solid and Chemical Materials	2,2',3,3',5,5',6-Heptachlorobiphenyl (BZ 178)	EPA 8082-Extended
NELAP	04/13/2009	Non-Potable Water	2,2',3,3',5,5',6-Heptachlorobiphenyl (BZ 178)	EPA 8082-Extended
NELAP	04/13/2009	Solid and Chemical Materials	2,2',3,3',5,5'-Hexachlorobiphenyl (BZ 133)	EPA 8082-Extended
NELAP	04/13/2009	Non-Potable Water	2,2',3,3',5,5'-Hexachlorobiphenyl (BZ 133)	EPA 8082-Extended
NELAP	04/13/2009	Solid and Chemical Materials	2,2',3,3',5,6'-Hexachlorobiphenyl (BZ 135)	EPA 8082-Extended
NELAP	04/13/2009	Non-Potable Water	2,2',3,3',5,6'-Hexachlorobiphenyl (BZ 135)	EPA 8082-Extended
NELAP	04/13/2009	Non-Potable Water	2,2',3,3',5,6,6'-Heptachlorobiphenyl (BZ 179)	EPA 8082-Extended
NELAP	04/13/2009	Solid and Chemical Materials	2,2',3,3',5,6,6'-Heptachlorobiphenyl (BZ 179)	EPA 8082-Extended
NELAP	04/13/2009	Non-Potable Water	2,2',3,3',5,6-Hexachlorobiphenyl (BZ 134)	EPA 8082-Extended
NELAP	04/13/2009	Solid and Chemical Materials	2,2',3,3',5,6-Hexachlorobiphenyl (BZ 134)	EPA 8082-Extended
NELAP	04/13/2009	Non-Potable Water	2,2',3,3',5-Pentachlorobiphenyl (BZ 83)	EPA 8082-Extended
NELAP	04/13/2009	Solid and Chemical Materials	2,2',3,3',5-Pentachlorobiphenyl (BZ 83)	EPA 8082-Extended
NELAP	04/13/2009	Non-Potable Water	2,2',3,3',6,6'-Hexachlorobiphenyl (BZ 136)	EPA 8082-Extended
NELAP	04/13/2009	Solid and Chemical Materials	2,2',3,3',6,6'-Hexachlorobiphenyl (BZ 136)	EPA 8082-Extended
NELAP	04/13/2009	Solid and Chemical Materials	2,2',3,3',6-Pentachlorobiphenyl (BZ 84)	EPA 8082-Extended

NELAP	04/13/2009	Non-Potable Water	2,2',3,3',6-Pentachlorobiphenyl (BZ 84)	EPA 8082-Extended
NELAP	04/13/2009	Non-Potable Water	2,2',3,3'-Tetrachlorobiphenyl (BZ 40)	EPA 8082-Extended
NELAP	04/13/2009	Solid and Chemical Materials	2,2',3,3'-Tetrachlorobiphenyl (BZ 40)	EPA 8082-Extended
NELAP	04/13/2009	Non-Potable Water	2,2',3,4',5',6-Hexachlorobiphenyl (BZ 149)	EPA 8082-Extended
NELAP	04/13/2009	Solid and Chemical Materials	2,2',3,4',5',6-Hexachlorobiphenyl (BZ 149)	EPA 8082-Extended
NELAP	04/13/2009	Non-Potable Water	2,2',3,4',5'-Pentachlorobiphenyl (BZ 97)	EPA 8082-Extended
NELAP	04/13/2009	Solid and Chemical Materials	2,2',3,4',5'-Pentachlorobiphenyl (BZ 97)	EPA 8082-Extended
NELAP	04/13/2009	Solid and Chemical Materials	2,2',3,4',5,5'-Hexachlorobiphenyl (BZ 146)	EPA 8082-Extended
NELAP	04/13/2009	Non-Potable Water	2,2',3,4',5,5'-Hexachlorobiphenyl (BZ 146)	EPA 8082-Extended
NELAP	04/13/2009	Solid and Chemical Materials	2,2',3,4',5,6'-Hexachlorobiphenyl (BZ 148)	EPA 8082-Extended
NELAP	04/13/2009	Non-Potable Water	2,2',3,4',5,6'-Hexachlorobiphenyl (BZ 148)	EPA 8082-Extended
NELAP	04/13/2009	Solid and Chemical Materials	2,2',3,4',5,6,6'-Heptachlorobiphenyl (BZ 188)	EPA 8082-Extended
NELAP	04/13/2009	Non-Potable Water	2,2',3,4',5,6,6'-Heptachlorobiphenyl (BZ 188)	EPA 8082-Extended
NELAP	04/13/2009	Non-Potable Water	2,2',3,4',5,6-Hexachlorobiphenyl (BZ 147)	EPA 8082-Extended
NELAP	04/13/2009	Solid and Chemical Materials	2,2',3,4',5,6-Hexachlorobiphenyl (BZ 147)	EPA 8082-Extended
NELAP	04/13/2009	Non-Potable Water	2,2',3,4',5-Pentachlorobiphenyl (BZ 90)	EPA 8082-Extended
NELAP	04/13/2009	Solid and Chemical Materials	2,2',3,4',5-Pentachlorobiphenyl (BZ 90)	EPA 8082-Extended
NELAP	04/13/2009	Non-Potable Water	2,2',3,4',6'-Pentachlorobiphenyl (BZ 98)	EPA 8082-Extended
NELAP	04/13/2009	Solid and Chemical Materials	2,2',3,4',6'-Pentachlorobiphenyl (BZ 98)	EPA 8082-Extended
NELAP	04/13/2009	Solid and Chemical Materials	2,2',3,4',6,6'-Hexachlorobiphenyl (BZ 150)	EPA 8082-Extended
NELAP	04/13/2009	Non-Potable Water	2,2',3,4',6,6'-Hexachlorobiphenyl (BZ 150)	EPA 8082-Extended
NELAP	04/13/2009	Solid and Chemical Materials	2,2',3,4',6-Pentachlorobiphenyl (BZ 91)	EPA 8082-Extended
NELAP	04/13/2009	Non-Potable Water	2,2',3,4',6-Pentachlorobiphenyl (BZ 91)	EPA 8082-Extended
NELAP	04/13/2009	Non-Potable Water	2,2',3,4'-Tetrachlorobiphenyl (BZ 42)	EPA 8082-Extended

NELAP	04/13/2009	Solid and Chemical Materials	2,2',3,4'-Tetrachlorobiphenyl (BZ 42)	EPA 8082-Extended
NELAP	04/13/2009	Non-Potable Water	2,2',3,4,4',5,5',6-Octachlorobiphenyl (BZ 203)	EPA 8082-Extended
NELAP	04/13/2009	Solid and Chemical Materials	2,2',3,4,4',5,5',6-Octachlorobiphenyl (BZ 203)	EPA 8082-Extended
NELAP	04/13/2009	Non-Potable Water	2,2',3,4,4',5,6'-Heptachlorobiphenyl (BZ 182)	EPA 8082-Extended
NELAP	04/13/2009	Solid and Chemical Materials	2,2',3,4,4',5,6'-Heptachlorobiphenyl (BZ 182)	EPA 8082-Extended
NELAP	04/13/2009	Solid and Chemical Materials	2,2',3,4,4',5,6,6'-Octachlorobiphenyl (BZ 204)	EPA 8082-Extended
NELAP	04/13/2009	Non-Potable Water	2,2',3,4,4',5,6,6'-Octachlorobiphenyl (BZ 204)	EPA 8082-Extended
NELAP	04/13/2009	Non-Potable Water	2,2',3,4,4',5,6-Heptachlorobiphenyl (BZ 181)	EPA 8082-Extended
NELAP	04/13/2009	Solid and Chemical Materials	2,2',3,4,4',5,6-Heptachlorobiphenyl (BZ 181)	EPA 8082-Extended
NELAP	04/13/2009	Non-Potable Water	2,2',3,4,4',5-Pentachlorobiphenyl (BZ 137)	EPA 8082-Extended
NELAP	04/13/2009	Solid and Chemical Materials	2,2',3,4,4',5-Pentachlorobiphenyl (BZ 137)	EPA 8082-Extended
NELAP	04/13/2009	Solid and Chemical Materials	2,2',3,4,4',6,6'-Heptachlorobiphenyl (BZ 184)	EPA 8082-Extended
NELAP	04/13/2009	Non-Potable Water	2,2',3,4,4',6,6'-Heptachlorobiphenyl (BZ 184)	EPA 8082-Extended
NELAP	04/13/2009	Solid and Chemical Materials	2,2',3,4,4',6-Hexachlorobiphenyl (BZ 139)	EPA 8082-Extended
NELAP	04/13/2009	Non-Potable Water	2,2',3,4,4',6-Hexachlorobiphenyl (BZ 139)	EPA 8082-Extended
NELAP	04/13/2009	Non-Potable Water	2,2',3,4,4'-Pentachlorobiphenyl (BZ 85)	EPA 8082-Extended
NELAP	04/13/2009	Solid and Chemical Materials	2,2',3,4,4'-Pentachlorobiphenyl (BZ 85)	EPA 8082-Extended
NELAP	04/13/2009	Solid and Chemical Materials	2,2',3,4,5',6-Hexachlorobiphenyl (BZ 144)	EPA 8082-Extended
NELAP	04/13/2009	Non-Potable Water	2,2',3,4,5',6-Hexachlorobiphenyl (BZ 144)	EPA 8082-Extended
NELAP	04/13/2009	Non-Potable Water	2,2',3,4,5,5',6-Heptachlorobiphenyl (BZ 185)	EPA 8082-Extended
NELAP	04/13/2009	Solid and Chemical Materials	2,2',3,4,5,5',6-Heptachlorobiphenyl (BZ 185)	EPA 8082-Extended
NELAP	04/13/2009	Solid and Chemical Materials	2,2',3,4,5,6'-Hexachlorobiphenyl (BZ 143)	EPA 8082-Extended
NELAP	04/13/2009	Non-Potable Water	2,2',3,4,5,6'-Hexachlorobiphenyl (BZ 143)	EPA 8082-Extended

NELAP	04/13/2009	Solid and Chemical Materials	2,2',3,4,5,6,6'-Heptachlorobiphenyl (BZ 186)	EPA 8082-Extended
NELAP	04/13/2009	Non-Potable Water	2,2',3,4,5,6,6'-Heptachlorobiphenyl (BZ 186)	EPA 8082-Extended
NELAP	04/13/2009	Solid and Chemical Materials	2,2',3,4,5,6-Hexachlorobiphenyl (BZ 142)	EPA 8082-Extended
NELAP	04/13/2009	Non-Potable Water	2,2',3,4,5,6-Hexachlorobiphenyl (BZ 142)	EPA 8082-Extended
NELAP	04/13/2009	Non-Potable Water	2,2',3,4,5-Pentachlorobiphenyl (BZ 86)	EPA 8082-Extended
NELAP	04/13/2009	Solid and Chemical Materials	2,2',3,4,5-Pentachlorobiphenyl (BZ 86)	EPA 8082-Extended
NELAP	04/13/2009	Non-Potable Water	2,2',3,4,6'-Pentachlorobiphenyl (BZ 89)	EPA 8082-Extended
NELAP	04/13/2009	Solid and Chemical Materials	2,2',3,4,6'-Pentachlorobiphenyl (BZ 89)	EPA 8082-Extended
NELAP	04/13/2009	Solid and Chemical Materials	2,2',3,4,6,6'-Hexachlorobiphenyl (BZ 145)	EPA 8082-Extended
NELAP	04/13/2009	Non-Potable Water	2,2',3,4,6,6'-Hexachlorobiphenyl (BZ 145)	EPA 8082-Extended
NELAP	04/13/2009	Non-Potable Water	2,2',3,4,6-Pentachlorobiphenyl (BZ 88)	EPA 8082-Extended
NELAP	04/13/2009	Solid and Chemical Materials	2,2',3,4,6-Pentachlorobiphenyl (BZ 88)	EPA 8082-Extended
NELAP	04/13/2009	Non-Potable Water	2,2',3,4-Tetrachlorobiphenyl (BZ 41)	EPA 8082-Extended
NELAP	04/13/2009	Solid and Chemical Materials	2,2',3,4-Tetrachlorobiphenyl (BZ 41)	EPA 8082-Extended
NELAP	04/13/2009	Solid and Chemical Materials	2,2',3,5',6-Pentachlorobiphenyl (BZ 95)	EPA 8082-Extended
NELAP	04/13/2009	Non-Potable Water	2,2',3,5',6-Pentachlorobiphenyl (BZ 95)	EPA 8082-Extended
NELAP	04/13/2009	Solid and Chemical Materials	2,2',3,5,5'-Pentachlorobiphenyl (BZ 92)	EPA 8082-Extended
NELAP	04/13/2009	Non-Potable Water	2,2',3,5,5'-Pentachlorobiphenyl (BZ 92)	EPA 8082-Extended
NELAP	04/13/2009	Non-Potable Water	2,2',3,5,6'-Pentachlorobiphenyl (BZ 94)	EPA 8082-Extended
NELAP	04/13/2009	Solid and Chemical Materials	2,2',3,5,6'-Pentachlorobiphenyl (BZ 94)	EPA 8082-Extended
NELAP	04/13/2009	Solid and Chemical Materials	2,2',3,5,6,6'-Hexachlorobiphenyl (BZ 152)	EPA 8082-Extended
NELAP	04/13/2009	Non-Potable Water	2,2',3,5,6,6'-Hexachlorobiphenyl (BZ 152)	EPA 8082-Extended
NELAP	04/13/2009	Non-Potable Water	2,2',3,5,6-Pentachlorobiphenyl (BZ 93)	EPA 8082-Extended

NELAP	04/13/2009	Solid and Chemical Materials	2,2',3,5,6-Pentachlorobiphenyl (BZ 93)	EPA 8082-Extended
NELAP	04/13/2009	Solid and Chemical Materials	2,2',3,5-Tetrachlorobiphenyl (BZ 43)	EPA 8082-Extended
NELAP	04/13/2009	Non-Potable Water	2,2',3,5-Tetrachlorobiphenyl (BZ 43)	EPA 8082-Extended
NELAP	04/13/2009	Solid and Chemical Materials	2,2',3,6'-Tetrachlorobiphenyl (BZ 46)	EPA 8082-Extended
NELAP	04/13/2009	Non-Potable Water	2,2',3,6'-Tetrachlorobiphenyl (BZ 46)	EPA 8082-Extended
NELAP	04/13/2009	Solid and Chemical Materials	2,2',3,6,6'-Pentachlorobiphenyl (BZ 96)	EPA 8082-Extended
NELAP	04/13/2009	Non-Potable Water	2,2',3,6,6'-Pentachlorobiphenyl (BZ 96)	EPA 8082-Extended
NELAP	04/13/2009	Solid and Chemical Materials	2,2',3,6-Tetrachlorobiphenyl (BZ 45)	EPA 8082-Extended
NELAP	04/13/2009	Non-Potable Water	2,2',3,6-Tetrachlorobiphenyl (BZ 45)	EPA 8082-Extended
NELAP	04/13/2009	Non-Potable Water	2,2',3-Trichlorobiphenyl (BZ 16)	EPA 8082-Extended
NELAP	04/13/2009	Solid and Chemical Materials	2,2',3-Trichlorobiphenyl (BZ 16)	EPA 8082-Extended
NELAP	04/13/2009	Solid and Chemical Materials	2,2',4,4',5,6'-Hexachlorobiphenyl (BZ 154)	EPA 8082-Extended
NELAP	04/13/2009	Non-Potable Water	2,2',4,4',5,6'-Hexachlorobiphenyl (BZ 154)	EPA 8082-Extended
NELAP	04/13/2009	Non-Potable Water	2,2',4,4',5-Pentachlorobiphenyl (BZ 99)	EPA 8082-Extended
NELAP	04/13/2009	Solid and Chemical Materials	2,2',4,4',5-Pentachlorobiphenyl (BZ 99)	EPA 8082-Extended
NELAP	04/13/2009	Non-Potable Water	2,2',4,4',6,6'-Hexachlorobiphenyl (BZ 155)	EPA 8082-Extended
NELAP	04/13/2009	Solid and Chemical Materials	2,2',4,4',6,6'-Hexachlorobiphenyl (BZ 155)	EPA 8082-Extended
NELAP	04/13/2009	Solid and Chemical Materials	2,2',4,4',6-Pentachlorobiphenyl (BZ 100)	EPA 8082-Extended
NELAP	04/13/2009	Non-Potable Water	2,2',4,4',6-Pentachlorobiphenyl (BZ 100)	EPA 8082-Extended
NELAP	04/13/2009	Non-Potable Water	2,2',4,4'-Tetrachlorobiphenyl (BZ 47)	EPA 8082-Extended
NELAP	04/13/2009	Solid and Chemical Materials	2,2',4,4'-Tetrachlorobiphenyl (BZ 47)	EPA 8082-Extended
NELAP	04/13/2009	Non-Potable Water	2,2',4,5',6-Pentachlorobiphenyl (BZ 103)	EPA 8082-Extended
NELAP	04/13/2009	Solid and Chemical Materials	2,2',4,5',6-Pentachlorobiphenyl (BZ 103)	EPA 8082-Extended

NELAP	08/26/2006	Non-Potable Water	2,2',4,5'-Tetrachlorobiphenyl (BZ 49)	EPA 8082-Extended
NELAP	08/26/2006	Solid and Chemical Materials	2,2',4,5'-Tetrachlorobiphenyl (BZ 49)	EPA 8082-Extended
NELAP	04/13/2009	Non-Potable Water	2,2',4,5,6'-Pentachlorobiphenyl (BZ 102)	EPA 8082-Extended
NELAP	04/13/2009	Solid and Chemical Materials	2,2',4,5,6'-Pentachlorobiphenyl (BZ 102)	EPA 8082-Extended
NELAP	04/13/2009	Non-Potable Water	2,2',4,5-Tetrachlorobiphenyl (BZ 48)	EPA 8082-Extended
NELAP	04/13/2009	Solid and Chemical Materials	2,2',4,5-Tetrachlorobiphenyl (BZ 48)	EPA 8082-Extended
NELAP	04/13/2009	Non-Potable Water	2,2',4,6'-Tetrachlorobiphenyl (BZ 51)	EPA 8082-Extended
NELAP	04/13/2009	Solid and Chemical Materials	2,2',4,6'-Tetrachlorobiphenyl (BZ 51)	EPA 8082-Extended
NELAP	04/13/2009	Solid and Chemical Materials	2,2',4,6,6'-Pentachlorobiphenyl (BZ 104)	EPA 8082-Extended
NELAP	04/13/2009	Non-Potable Water	2,2',4,6,6'-Pentachlorobiphenyl (BZ 104)	EPA 8082-Extended
NELAP	04/13/2009	Solid and Chemical Materials	2,2',4,6-Tetrachlorobiphenyl (BZ 50)	EPA 8082-Extended
NELAP	04/13/2009	Non-Potable Water	2,2',4,6-Tetrachlorobiphenyl (BZ 50)	EPA 8082-Extended
NELAP	04/13/2009	Non-Potable Water	2,2',4-Trichlorobiphenyl (BZ 17)	EPA 8082-Extended
NELAP	04/13/2009	Solid and Chemical Materials	2,2',4-Trichlorobiphenyl (BZ 17)	EPA 8082-Extended
NELAP	04/13/2009	Non-Potable Water	2,2',5,6'-Tetrachlorobiphenyl (BZ 53)	EPA 8082-Extended
NELAP	04/13/2009	Solid and Chemical Materials	2,2',5,6'-Tetrachlorobiphenyl (BZ 53)	EPA 8082-Extended
NELAP	04/13/2009	Non-Potable Water	2,2',6,6'-Tetrachlorobiphenyl (BZ 54)	EPA 8082-Extended
NELAP	04/13/2009	Solid and Chemical Materials	2,2',6,6'-Tetrachlorobiphenyl (BZ 54)	EPA 8082-Extended
NELAP	04/13/2009	Non-Potable Water	2,2',6-Trichlorobiphenyl (BZ 19)	EPA 8082-Extended
NELAP	04/13/2009	Solid and Chemical Materials	2,2',6-Trichlorobiphenyl (BZ 19)	EPA 8082-Extended
NELAP	04/13/2009	Non-Potable Water	2,2'-Dichlorobiphenyl (BZ 4)	EPA 8082-Extended
NELAP	04/13/2009	Solid and Chemical Materials	2,2'-Dichlorobiphenyl (BZ 4)	EPA 8082-Extended
NELAP	04/13/2009	Non-Potable Water	2,3',4',5',6-Pentachlorobiphenyl (BZ 125)	EPA 8082-Extended

NELAP	04/13/2009	Solid and Chemical Materials	2,3',4',5',6-Pentachlorobiphenyl (BZ 125)	EPA 8082-Extended
NELAP	04/13/2009	Non-Potable Water	2,3',4',5'-Tetrachlorobiphenyl (BZ 76)	EPA 8082-Extended
NELAP	04/13/2009	Solid and Chemical Materials	2,3',4',5'-Tetrachlorobiphenyl (BZ 76)	EPA 8082-Extended
NELAP	04/13/2009	Solid and Chemical Materials	2,3',4',5,5'-Pentachlorobiphenyl (BZ 124)	EPA 8082-Extended
NELAP	04/13/2009	Non-Potable Water	2,3',4',5,5'-Pentachlorobiphenyl (BZ 124)	EPA 8082-Extended
NELAP	04/13/2009	Solid and Chemical Materials	2,3',4',5-Tetrachlorobiphenyl (BZ 70)	EPA 8082-Extended
NELAP	04/13/2009	Non-Potable Water	2,3',4',5-Tetrachlorobiphenyl (BZ 70)	EPA 8082-Extended
NELAP	04/13/2009	Non-Potable Water	2,3',4',6-Tetrachlorobiphenyl (BZ 71)	EPA 8082-Extended
NELAP	04/13/2009	Solid and Chemical Materials	2,3',4',6-Tetrachlorobiphenyl (BZ 71)	EPA 8082-Extended
NELAP	04/13/2009	Solid and Chemical Materials	2,3',4'-Trichlorobiphenyl (BZ 33)	EPA 8082-Extended
NELAP	04/13/2009	Non-Potable Water	2,3',4'-Trichlorobiphenyl (BZ 33)	EPA 8082-Extended
NELAP	04/13/2009	Solid and Chemical Materials	2,3',4,4',5',6-Hexachlorobiphenyl (BZ 168)	EPA 8082-Extended
NELAP	04/13/2009	Non-Potable Water	2,3',4,4',5',6-Hexachlorobiphenyl (BZ 168)	EPA 8082-Extended
NELAP	04/13/2009	Non-Potable Water	2,3',4,4',5'-Pentachlorobiphenyl (BZ 123)	EPA 8082-Extended
NELAP	04/13/2009	Solid and Chemical Materials	2,3',4,4',5'-Pentachlorobiphenyl (BZ 123)	EPA 8082-Extended
NELAP	04/13/2009	Non-Potable Water	2,3',4,4',5,5'-Hexachlorobiphenyl (BZ 167)	EPA 8082-Extended
NELAP	04/13/2009	Solid and Chemical Materials	2,3',4,4',5,5'-Hexachlorobiphenyl (BZ 167)	EPA 8082-Extended
NELAP	08/26/2006	Solid and Chemical Materials	2,3',4,4',5-Pentachlorobiphenyl (BZ 118)	EPA 8082-Extended
NELAP	08/26/2006	Non-Potable Water	2,3',4,4',5-Pentachlorobiphenyl (BZ 118)	EPA 8082-Extended
NELAP	04/13/2009	Solid and Chemical Materials	2,3',4,4',6-Pentachlorobiphenyl (BZ 119)	EPA 8082-Extended
NELAP	04/13/2009	Non-Potable Water	2,3',4,4',6-Pentachlorobiphenyl (BZ 119)	EPA 8082-Extended
NELAP	04/13/2009	Non-Potable Water	2,3',4,5',6-Pentachlorobiphenyl (BZ 121)	EPA 8082-Extended
NELAP	04/13/2009	Solid and Chemical Materials	2,3',4,5',6-Pentachlorobiphenyl (BZ 121)	EPA 8082-Extended

NELAP	04/13/2009	Non-Potable Water	2,3',4,5'-Tetrachlorobiphenyl (BZ 68)	EPA 8082-Extended
NELAP	04/13/2009	Solid and Chemical Materials	2,3',4,5'-Tetrachlorobiphenyl (BZ 68)	EPA 8082-Extended
NELAP	04/13/2009	Solid and Chemical Materials	2,3',4,5,5'-Pentachlorobiphenyl (BZ 120)	EPA 8082-Extended
NELAP	04/13/2009	Non-Potable Water	2,3',4,5,5'-Pentachlorobiphenyl (BZ 120)	EPA 8082-Extended
NELAP	04/13/2009	Non-Potable Water	2,3',4,5-Tetrachlorobiphenyl (BZ 67)	EPA 8082-Extended
NELAP	04/13/2009	Solid and Chemical Materials	2,3',4,5-Tetrachlorobiphenyl (BZ 67)	EPA 8082-Extended
NELAP	04/13/2009	Non-Potable Water	2,3',4,6-Tetrachlorobiphenyl (BZ 69)	EPA 8082-Extended
NELAP	04/13/2009	Solid and Chemical Materials	2,3',4,6-Tetrachlorobiphenyl (BZ 69)	EPA 8082-Extended
NELAP	04/13/2009	Non-Potable Water	2,3',4-Trichlorobiphenyl (BZ 25)	EPA 8082-Extended
NELAP	04/13/2009	Solid and Chemical Materials	2,3',4-Trichlorobiphenyl (BZ 25)	EPA 8082-Extended
NELAP	04/13/2009	Non-Potable Water	2,3',5',6-Tetrachlorobiphenyl (BZ 73)	EPA 8082-Extended
NELAP	04/13/2009	Solid and Chemical Materials	2,3',5',6-Tetrachlorobiphenyl (BZ 73)	EPA 8082-Extended
NELAP	08/26/2006	Solid and Chemical Materials	2,3',5'-Trichlorobiphenyl (BZ 34)	EPA 8082-Extended
NELAP	08/26/2006	Non-Potable Water	2,3',5'-Trichlorobiphenyl (BZ 34)	EPA 8082-Extended
NELAP	04/13/2009	Solid and Chemical Materials	2,3',5,5'-Tetrachlorobiphenyl (BZ 72)	EPA 8082-Extended
NELAP	04/13/2009	Non-Potable Water	2,3',5,5'-Tetrachlorobiphenyl (BZ 72)	EPA 8082-Extended
NELAP	04/13/2009	Solid and Chemical Materials	2,3',5-Trichlorobiphenyl (BZ 26)	EPA 8082-Extended
NELAP	04/13/2009	Non-Potable Water	2,3',5-Trichlorobiphenyl (BZ 26)	EPA 8082-Extended
NELAP	04/13/2009	Solid and Chemical Materials	2,3',6-Trichlorobiphenyl (BZ 27)	EPA 8082-Extended
NELAP	04/13/2009	Non-Potable Water	2,3',6-Trichlorobiphenyl (BZ 27)	EPA 8082-Extended
NELAP	04/13/2009	Solid and Chemical Materials	2,3'-Dichlorobiphenyl (BZ 6)	EPA 8082-Extended
NELAP	04/13/2009	Non-Potable Water	2,3'-Dichlorobiphenyl (BZ 6)	EPA 8082-Extended
NELAP	04/13/2009	Solid and Chemical Materials	2,3,3',4',5'-Pentachlorobiphenyl (BZ 122)	EPA 8082-Extended

NELAP	04/13/2009	Non-Potable Water	2,3,3',4',5'-Pentachlorobiphenyl (BZ 122)	EPA 8082-Extended
NELAP	04/13/2009	Non-Potable Water	2,3,3',4',5,5',6-Heptachlorobiphenyl (BZ 193)	EPA 8082-Extended
NELAP	04/13/2009	Solid and Chemical Materials	2,3,3',4',5,5',6-Heptachlorobiphenyl (BZ 193)	EPA 8082-Extended
NELAP	04/13/2009	Solid and Chemical Materials	2,3,3',4',5,5'-Hexachlorobiphenyl (BZ 162)	EPA 8082-Extended
NELAP	04/13/2009	Non-Potable Water	2,3,3',4',5,5'-Hexachlorobiphenyl (BZ 162)	EPA 8082-Extended
NELAP	04/13/2009	Solid and Chemical Materials	2,3,3',4',5,6-Hexachlorobiphenyl (BZ 163)	EPA 8082-Extended
NELAP	04/13/2009	Non-Potable Water	2,3,3',4',5,6-Hexachlorobiphenyl (BZ 163)	EPA 8082-Extended
NELAP	04/13/2009	Non-Potable Water	2,3,3',4',5-Pentachlorobiphenyl (BZ 107)	EPA 8082-Extended
NELAP	04/13/2009	Solid and Chemical Materials	2,3,3',4',5-Pentachlorobiphenyl (BZ 107)	EPA 8082-Extended
NELAP	04/13/2009	Non-Potable Water	2,3,3',4'-Tetrachlorobiphenyl (BZ 56)	EPA 8082-Extended
NELAP	04/13/2009	Solid and Chemical Materials	2,3,3',4'-Tetrachlorobiphenyl (BZ 56)	EPA 8082-Extended
NELAP	04/13/2009	Non-Potable Water	2,3,3',4,4',5',6-Heptachlorobiphenyl (BZ 191)	EPA 8082-Extended
NELAP	04/13/2009	Solid and Chemical Materials	2,3,3',4,4',5',6-Heptachlorobiphenyl (BZ 191)	EPA 8082-Extended
NELAP	04/13/2009	Non-Potable Water	2,3,3',4,4',5'-Hexachlorobiphenyl (BZ 157)	EPA 8082-Extended
NELAP	04/13/2009	Solid and Chemical Materials	2,3,3',4,4',5'-Hexachlorobiphenyl (BZ 157)	EPA 8082-Extended
NELAP	04/13/2009	Non-Potable Water	2,3,3',4,4',5,5',6-Octachlorobiphenyl (BZ 205)	EPA 8082-Extended
NELAP	04/13/2009	Solid and Chemical Materials	2,3,3',4,4',5,5',6-Octachlorobiphenyl (BZ 205)	EPA 8082-Extended
NELAP	04/13/2009	Solid and Chemical Materials	2,3,3',4,4',5,5'-Heptachlorobiphenyl (BZ 189)	EPA 8082-Extended
NELAP	04/13/2009	Non-Potable Water	2,3,3',4,4',5,5'-Heptachlorobiphenyl (BZ 189)	EPA 8082-Extended
NELAP	04/13/2009	Solid and Chemical Materials	2,3,3',4,4',5,6-Heptachlorobiphenyl (BZ 190)	EPA 8082-Extended
NELAP	04/13/2009	Non-Potable Water	2,3,3',4,4',5,6-Heptachlorobiphenyl (BZ 190)	EPA 8082-Extended
NELAP	04/13/2009	Non-Potable Water	2,3,3',4,4',5-Hexachlorobiphenyl (BZ 156)	EPA 8082-Extended
NELAP	04/13/2009	Solid and Chemical Materials	2,3,3',4,4',5-Hexachlorobiphenyl (BZ 156)	EPA 8082-Extended

NELAP	04/13/2009	Solid and Chemical Materials	2,3,3',4,4',6-Hexachlorobiphenyl (BZ 158)	EPA 8082-Extended
NELAP	04/13/2009	Non-Potable Water	2,3,3',4,4',6-Hexachlorobiphenyl (BZ 158)	EPA 8082-Extended
NELAP	04/13/2009	Non-Potable Water	2,3,3',4,4'-Pentachlorobiphenyl (BZ 105)	EPA 8082-Extended
NELAP	04/13/2009	Solid and Chemical Materials	2,3,3',4,4'-Pentachlorobiphenyl (BZ 105)	EPA 8082-Extended
NELAP	04/13/2009	Non-Potable Water	2,3,3',4,5',6-Hexachlorobiphenyl (BZ 161)	EPA 8082-Extended
NELAP	04/13/2009	Solid and Chemical Materials	2,3,3',4,5',6-Hexachlorobiphenyl (BZ 161)	EPA 8082-Extended
NELAP	04/13/2009	Solid and Chemical Materials	2,3,3',4,5'-Pentachlorobiphenyl (BZ 108)	EPA 8082-Extended
NELAP	04/13/2009	Non-Potable Water	2,3,3',4,5'-Pentachlorobiphenyl (BZ 108)	EPA 8082-Extended
NELAP	04/13/2009	Non-Potable Water	2,3,3',4,5,5',6-Heptachlorobiphenyl (BZ 192)	EPA 8082-Extended
NELAP	04/13/2009	Solid and Chemical Materials	2,3,3',4,5,5',6-Heptachlorobiphenyl (BZ 192)	EPA 8082-Extended
NELAP	04/13/2009	Solid and Chemical Materials	2,3,3',4,5,5'-Hexachlorobiphenyl (BZ 159)	EPA 8082-Extended
NELAP	04/13/2009	Non-Potable Water	2,3,3',4,5,5'-Hexachlorobiphenyl (BZ 159)	EPA 8082-Extended
NELAP	04/13/2009	Non-Potable Water	2,3,3',4,5,6-Hexachlorobiphenyl (BZ 160)	EPA 8082-Extended
NELAP	04/13/2009	Solid and Chemical Materials	2,3,3',4,5,6-Hexachlorobiphenyl (BZ 160)	EPA 8082-Extended
NELAP	04/13/2009	Solid and Chemical Materials	2,3,3',4,5-Pentachlorobiphenyl (BZ 106)	EPA 8082-Extended
NELAP	04/13/2009	Non-Potable Water	2,3,3',4,5-Pentachlorobiphenyl (BZ 106)	EPA 8082-Extended
NELAP	04/13/2009	Non-Potable Water	2,3,3',4,6-Pentachlorobiphenyl (BZ 109)	EPA 8082-Extended
NELAP	04/13/2009	Solid and Chemical Materials	2,3,3',4,6-Pentachlorobiphenyl (BZ 109)	EPA 8082-Extended
NELAP	04/13/2009	Solid and Chemical Materials	2,3,3',4-Tetrachlorobiphenyl (BZ 55)	EPA 8082-Extended
NELAP	04/13/2009	Non-Potable Water	2,3,3',4-Tetrachlorobiphenyl (BZ 55)	EPA 8082-Extended
NELAP	04/13/2009	Non-Potable Water	2,3,3',5',6-Pentachlorobiphenyl (BZ 113)	EPA 8082-Extended
NELAP	04/13/2009	Solid and Chemical Materials	2,3,3',5',6-Pentachlorobiphenyl (BZ 113)	EPA 8082-Extended
NELAP	04/13/2009	Non-Potable Water	2,3,3',5'-Tetrachlorobiphenyl (BZ 58)	EPA 8082-Extended

NELAP	04/13/2009	Solid and Chemical Materials	2,3,3',5'-Tetrachlorobiphenyl (BZ 58)	EPA 8082-Extended
NELAP	04/13/2009	Non-Potable Water	2,3,3',5,5',6-Hexachlorobiphenyl (BZ 165)	EPA 8082-Extended
NELAP	04/13/2009	Solid and Chemical Materials	2,3,3',5,5',6-Hexachlorobiphenyl (BZ 165)	EPA 8082-Extended
NELAP	04/13/2009	Solid and Chemical Materials	2,3,3',5,5'-Pentachlorobiphenyl (BZ 111)	EPA 8082-Extended
NELAP	04/13/2009	Non-Potable Water	2,3,3',5,5'-Pentachlorobiphenyl (BZ 111)	EPA 8082-Extended
NELAP	04/13/2009	Solid and Chemical Materials	2,3,3',5,6-Pentachlorobiphenyl (BZ 112)	EPA 8082-Extended
NELAP	04/13/2009	Non-Potable Water	2,3,3',5,6-Pentachlorobiphenyl (BZ 112)	EPA 8082-Extended
NELAP	04/13/2009	Non-Potable Water	2,3,3',5-Tetrachlorobiphenyl (BZ 57)	EPA 8082-Extended
NELAP	04/13/2009	Solid and Chemical Materials	2,3,3',5-Tetrachlorobiphenyl (BZ 57)	EPA 8082-Extended
NELAP	04/13/2009	Non-Potable Water	2,3,3',6-Tetrachlorobiphenyl (BZ 59)	EPA 8082-Extended
NELAP	04/13/2009	Solid and Chemical Materials	2,3,3',6-Tetrachlorobiphenyl (BZ 59)	EPA 8082-Extended
NELAP	04/13/2009	Non-Potable Water	2,3,3'-Trichlorobiphenyl (BZ 20)	EPA 8082-Extended
NELAP	04/13/2009	Solid and Chemical Materials	2,3,3'-Trichlorobiphenyl (BZ 20)	EPA 8082-Extended
NELAP	04/13/2009	Non-Potable Water	2,3,4',5,6-Pentachlorobiphenyl (BZ 117)	EPA 8082-Extended
NELAP	04/13/2009	Solid and Chemical Materials	2,3,4',5,6-Pentachlorobiphenyl (BZ 117)	EPA 8082-Extended
NELAP	04/13/2009	Solid and Chemical Materials	2,3,4',5-Tetrachlorobiphenyl (BZ 63)	EPA 8082-Extended
NELAP	04/13/2009	Non-Potable Water	2,3,4',5-Tetrachlorobiphenyl (BZ 63)	EPA 8082-Extended
NELAP	04/13/2009	Non-Potable Water	2,3,4',6-Tetrachlorobiphenyl (BZ 64)	EPA 8082-Extended
NELAP	04/13/2009	Solid and Chemical Materials	2,3,4',6-Tetrachlorobiphenyl (BZ 64)	EPA 8082-Extended
NELAP	04/13/2009	Non-Potable Water	2,3,4'-Trichlorobiphenyl (BZ 22)	EPA 8082-Extended
NELAP	04/13/2009	Solid and Chemical Materials	2,3,4'-Trichlorobiphenyl (BZ 22)	EPA 8082-Extended
NELAP	04/13/2009	Solid and Chemical Materials	2,3,4,4',5,6-Hexachlorobiphenyl (BZ 166)	EPA 8082-Extended
NELAP	04/13/2009	Non-Potable Water	2,3,4,4',5,6-Hexachlorobiphenyl (BZ 166)	EPA 8082-Extended

NELAP	04/13/2009	Non-Potable Water	2,3,4,4',5-Pentachlorobiphenyl (BZ 114)	EPA 8082-Extended
NELAP	04/13/2009	Solid and Chemical Materials	2,3,4,4',5-Pentachlorobiphenyl (BZ 114)	EPA 8082-Extended
NELAP	04/13/2009	Solid and Chemical Materials	2,3,4,4',6-Pentachlorobiphenyl (BZ 115)	EPA 8082-Extended
NELAP	04/13/2009	Non-Potable Water	2,3,4,4',6-Pentachlorobiphenyl (BZ 115)	EPA 8082-Extended
NELAP	04/13/2009	Non-Potable Water	2,3,4,4'-Tetrachlorobiphenyl (BZ 60)	EPA 8082-Extended
NELAP	04/13/2009	Solid and Chemical Materials	2,3,4,4'-Tetrachlorobiphenyl (BZ 60)	EPA 8082-Extended
NELAP	04/13/2009	Non-Potable Water	2,3,4,5,6-Pentachlorobiphenyl (BZ 116)	EPA 8082-Extended
NELAP	04/13/2009	Solid and Chemical Materials	2,3,4,5,6-Pentachlorobiphenyl (BZ 116)	EPA 8082-Extended
NELAP	04/13/2009	Solid and Chemical Materials	2,3,4,5-Tetrachlorobiphenyl (BZ 61)	EPA 8082-Extended
NELAP	04/13/2009	Non-Potable Water	2,3,4,5-Tetrachlorobiphenyl (BZ 61)	EPA 8082-Extended
NELAP	04/13/2009	Non-Potable Water	2,3,4,6-Tetrachlorobiphenyl (BZ 62)	EPA 8082-Extended
NELAP	04/13/2009	Solid and Chemical Materials	2,3,4,6-Tetrachlorobiphenyl (BZ 62)	EPA 8082-Extended
NELAP	04/13/2009	Non-Potable Water	2,3,4-Trichlorobiphenyl (BZ 21)	EPA 8082-Extended
NELAP	04/13/2009	Solid and Chemical Materials	2,3,4-Trichlorobiphenyl (BZ 21)	EPA 8082-Extended
NELAP	04/13/2009	Solid and Chemical Materials	2,3,5,6-Tetrachlorobiphenyl (BZ 65)	EPA 8082-Extended
NELAP	04/13/2009	Non-Potable Water	2,3,5,6-Tetrachlorobiphenyl (BZ 65)	EPA 8082-Extended
NELAP	04/13/2009	Solid and Chemical Materials	2,3,5-Trichlorobiphenyl (BZ 23)	EPA 8082-Extended
NELAP	04/13/2009	Non-Potable Water	2,3,5-Trichlorobiphenyl (BZ 23)	EPA 8082-Extended
NELAP	04/13/2009	Solid and Chemical Materials	2,3,6-Trichlorobiphenyl (BZ 24)	EPA 8082-Extended
NELAP	04/13/2009	Non-Potable Water	2,3,6-Trichlorobiphenyl (BZ 24)	EPA 8082-Extended
NELAP	04/13/2009	Non-Potable Water	2,4',6-Trichlorobiphenyl (BZ 32)	EPA 8082-Extended
NELAP	04/13/2009	Solid and Chemical Materials	2,4',6-Trichlorobiphenyl (BZ 32)	EPA 8082-Extended
NELAP	04/13/2009	Solid and Chemical Materials	2,4'-Dichlorobiphenyl (BZ 8)	EPA 8082-Extended

NELAP	04/13/2009	Non-Potable Water	2,4'-Dichlorobiphenyl (BZ 8)	EPA 8082-Extended
NELAP	04/13/2009	Solid and Chemical Materials	2,4,4',5-Tetrachlorobiphenyl (BZ 74)	EPA 8082-Extended
NELAP	04/13/2009	Non-Potable Water	2,4,4',5-Tetrachlorobiphenyl (BZ 74)	EPA 8082-Extended
NELAP	04/13/2009	Non-Potable Water	2,4,4',6-Tetrachlorobiphenyl (BZ 75)	EPA 8082-Extended
NELAP	04/13/2009	Solid and Chemical Materials	2,4,4',6-Tetrachlorobiphenyl (BZ 75)	EPA 8082-Extended
NELAP	04/13/2009	Non-Potable Water	2,4,4'-Trichlorobiphenyl (BZ 28)	EPA 8082-Extended
NELAP	04/13/2009	Solid and Chemical Materials	2,4,4'-Trichlorobiphenyl (BZ 28)	EPA 8082-Extended
NELAP	04/13/2009	Solid and Chemical Materials	2,4,5-Trichlorobiphenyl (BZ 29)	EPA 8082-Extended
NELAP	04/13/2009	Non-Potable Water	2,4,5-Trichlorobiphenyl (BZ 29)	EPA 8082-Extended
NELAP	04/13/2009	Non-Potable Water	2,4,6-Trichlorobiphenyl (BZ 30)	EPA 8082-Extended
NELAP	04/13/2009	Solid and Chemical Materials	2,4,6-Trichlorobiphenyl (BZ 30)	EPA 8082-Extended
NELAP	04/13/2009	Non-Potable Water	2,4-Dichlorobiphenyl (BZ 7)	EPA 8082-Extended
NELAP	04/13/2009	Solid and Chemical Materials	2,4-Dichlorobiphenyl (BZ 7)	EPA 8082-Extended
NELAP	04/13/2009	Non-Potable Water	2,5-Dichlorobiphenyl (BZ 9)	EPA 8082-Extended
NELAP	04/13/2009	Solid and Chemical Materials	2,5-Dichlorobiphenyl (BZ 9)	EPA 8082-Extended
NELAP	04/13/2009	Solid and Chemical Materials	2,6-Dichlorobiphenyl (BZ 10)	EPA 8082-Extended
NELAP	04/13/2009	Non-Potable Water	2,6-Dichlorobiphenyl (BZ 10)	EPA 8082-Extended
NELAP	04/13/2009	Non-Potable Water	3,3',4,4',5,5'-Hexachlorobiphenyl (BZ 169)	EPA 8082-Extended
NELAP	04/13/2009	Solid and Chemical Materials	3,3',4,4',5,5'-Hexachlorobiphenyl (BZ 169)	EPA 8082-Extended
NELAP	04/13/2009	Solid and Chemical Materials	3,3',4,4',5-Pentachlorobiphenyl (BZ 126)	EPA 8082-Extended
NELAP	04/13/2009	Non-Potable Water	3,3',4,4'-Tetrachlorobiphenyl (BZ 77)	EPA 8082-Extended
NELAP	04/13/2009	Solid and Chemical Materials	3,3',4,4'-Tetrachlorobiphenyl (BZ 77)	EPA 8082-Extended
NELAP	04/13/2009	Non-Potable Water	3,3',4,5'-Tetrachlorobiphenyl (BZ 79)	EPA 8082-Extended

NELAP	04/13/2009	Solid and Chemical Materials	3,3',4,5'-Tetrachlorobiphenyl (BZ 79)	EPA 8082-Extended
NELAP	04/13/2009	Solid and Chemical Materials	3,3',4,5,5'-Pentachlorobiphenyl (BZ 127)	EPA 8082-Extended
NELAP	04/13/2009	Non-Potable Water	3,3',4,5,5'-Pentachlorobiphenyl (BZ 127)	EPA 8082-Extended
NELAP	04/13/2009	Non-Potable Water	3,3',4,5-Tetrachlorobiphenyl (BZ 78)	EPA 8082-Extended
NELAP	04/13/2009	Solid and Chemical Materials	3,3',4,5-Tetrachlorobiphenyl (BZ 78)	EPA 8082-Extended
NELAP	04/13/2009	Non-Potable Water	3,3',4-Trichlorobiphenyl (BZ 35)	EPA 8082-Extended
NELAP	04/13/2009	Solid and Chemical Materials	3,3',4-Trichlorobiphenyl (BZ 35)	EPA 8082-Extended
NELAP	04/13/2009	Non-Potable Water	3,3',5,5'-Tetrachlorobiphenyl (BZ 80)	EPA 8082-Extended
NELAP	04/13/2009	Solid and Chemical Materials	3,3',5,5'-Tetrachlorobiphenyl (BZ 80)	EPA 8082-Extended
NELAP	04/13/2009	Non-Potable Water	3,3',5-Trichlorobiphenyl (BZ 36)	EPA 8082-Extended
NELAP	04/13/2009	Solid and Chemical Materials	3,3',5-Trichlorobiphenyl (BZ 36)	EPA 8082-Extended
NELAP	08/26/2006	Solid and Chemical Materials	3,3'-Dichlorobiphenyl (BZ 11)	EPA 8082-Extended
NELAP	08/26/2006	Non-Potable Water	3,3'-Dichlorobiphenyl (BZ 11)	EPA 8082-Extended
NELAP	04/13/2009	Non-Potable Water	3,4',5-Trichlorobiphenyl (BZ 39)	EPA 8082-Extended
NELAP	04/13/2009	Solid and Chemical Materials	3,4',5-Trichlorobiphenyl (BZ 39)	EPA 8082-Extended
NELAP	04/13/2009	Non-Potable Water	3,4'-Dichlorobiphenyl (BZ 13)	EPA 8082-Extended
NELAP	04/13/2009	Solid and Chemical Materials	3,4'-Dichlorobiphenyl (BZ 13)	EPA 8082-Extended
NELAP	04/13/2009	Solid and Chemical Materials	3,4,4',5-Tetrachlorobiphenyl (BZ 81)	EPA 8082-Extended
NELAP	04/13/2009	Non-Potable Water	3,4,4',5-Tetrachlorobiphenyl (BZ 81)	EPA 8082-Extended
NELAP	04/13/2009	Non-Potable Water	3,4,4'-Trichlorobiphenyl (BZ 37)	EPA 8082-Extended
NELAP	04/13/2009	Solid and Chemical Materials	3,4,4'-Trichlorobiphenyl (BZ 37)	EPA 8082-Extended
NELAP	04/13/2009	Non-Potable Water	3,4,5-Trichlorobiphenyl (BZ 38)	EPA 8082-Extended
NELAP	04/13/2009	Solid and Chemical Materials	3,4,5-Trichlorobiphenyl (BZ 38)	EPA 8082-Extended

NELAP	04/13/2009	Non-Potable Water	3,4-Dichlorobiphenyl (BZ 12)	EPA 8082-Extended
NELAP	04/13/2009	Solid and Chemical Materials	3,4-Dichlorobiphenyl (BZ 12)	EPA 8082-Extended
NELAP	04/13/2009	Solid and Chemical Materials	3,5-Dichlorobiphenyl (BZ 14)	EPA 8082-Extended
NELAP	04/13/2009	Non-Potable Water	3,5-Dichlorobiphenyl (BZ 14)	EPA 8082-Extended
NELAP	04/13/2009	Non-Potable Water	3-Chlorobiphenyl (BZ 2)	EPA 8082-Extended
NELAP	04/13/2009	Solid and Chemical Materials	3-Chlorobiphenyl (BZ 2)	EPA 8082-Extended
NELAP	04/13/2009	Non-Potable Water	4,4'-Dichlorobiphenyl (BZ 15)	EPA 8082-Extended
NELAP	04/13/2009	Solid and Chemical Materials	4,4'-Dichlorobiphenyl (BZ 15)	EPA 8082-Extended
NELAP	04/13/2009	Non-Potable Water	4-Chlorobiphenyl (BZ 3)	EPA 8082-Extended
NELAP	04/13/2009	Solid and Chemical Materials	4-Chlorobiphenyl (BZ 3)	EPA 8082-Extended
NELAP	04/08/2008	Non-Potable Water	Aroclor-1262 (PCB-1262)	EPA 8082-Extended
NELAP	04/08/2008	Solid and Chemical Materials	Aroclor-1262 (PCB-1262)	EPA 8082-Extended
NELAP	04/08/2008	Solid and Chemical Materials	Aroclor-1268 (PCB-1268)	EPA 8082-Extended
NELAP	04/08/2008	Non-Potable Water	Aroclor-1268 (PCB-1268)	EPA 8082-Extended
NELAP	08/26/2006	Non-Potable Water	Azinphos-methyl (Guthion)	EPA 8141
NELAP	04/07/2005	Solid and Chemical Materials	Azinphos-methyl (Guthion)	EPA 8141
NELAP	08/26/2006	Non-Potable Water	Bolstar (Sulprofos)	EPA 8141
NELAP	04/18/2006	Solid and Chemical Materials	Bolstar (Sulprofos)	EPA 8141
NELAP	08/26/2006	Non-Potable Water	Chlorpyrifos	EPA 8141
NELAP	08/24/2005	Solid and Chemical Materials	Chlorpyrifos	EPA 8141
NELAP	08/26/2006	Non-Potable Water	Coumaphos	EPA 8141
NELAP	08/24/2005	Solid and Chemical Materials	Coumaphos	EPA 8141
NELAP	04/08/2009	Non-Potable Water	Demeton	EPA 8141

NELAP	04/09/2009	Solid and Chemical Materials	Demeton	EPA 8141
NELAP	08/26/2006	Non-Potable Water	Demeton-O	EPA 8141
NELAP	04/07/2005	Solid and Chemical Materials	Demeton-O	EPA 8141
NELAP	04/07/2005	Solid and Chemical Materials	Demeton-S	EPA 8141
NELAP	08/26/2006	Non-Potable Water	Demeton-S	EPA 8141
NELAP	08/26/2006	Non-Potable Water	Diazinon (Spectracide)	EPA 8141
NELAP	04/07/2005	Solid and Chemical Materials	Diazinon (Spectracide)	EPA 8141
NELAP	08/24/2005	Solid and Chemical Materials	Dichlorovos (DDVP, Dichlorvos)	EPA 8141
NELAP	08/26/2006	Non-Potable Water	Dichlorovos (DDVP, Dichlorvos)	EPA 8141
NELAP	08/24/2005	Solid and Chemical Materials	Dimethoate	EPA 8141
NELAP	08/26/2006	Non-Potable Water	Dimethoate	EPA 8141
NELAP	04/07/2005	Solid and Chemical Materials	Disulfoton	EPA 8141
NELAP	08/26/2006	Non-Potable Water	Disulfoton	EPA 8141
NELAP	08/26/2006	Non-Potable Water	EPN (Santox)	EPA 8141
NELAP	08/24/2005	Solid and Chemical Materials	EPN (Santox)	EPA 8141
NELAP	04/22/2010	Solid and Chemical Materials	Ethion	EPA 8141
NELAP	04/22/2010	Non-Potable Water	Ethion	EPA 8141
NELAP	08/26/2006	Non-Potable Water	Ethoprop (Prophos)	EPA 8141
NELAP	08/24/2005	Solid and Chemical Materials	Ethoprop (Prophos)	EPA 8141
NELAP	08/26/2006	Non-Potable Water	Famphur	EPA 8141
NELAP	08/24/2005	Solid and Chemical Materials	Famphur	EPA 8141
NELAP	08/26/2006	Non-Potable Water	Fensulfothion	EPA 8141
NELAP	08/24/2005	Solid and Chemical Materials	Fensulfothion	EPA 8141

NELAP	08/24/2005	Solid and Chemical Materials	Fenthion	EPA 8141
NELAP	08/26/2006	Non-Potable Water	Fenthion	EPA 8141
NELAP	04/07/2005	Solid and Chemical Materials	Malathion	EPA 8141
NELAP	08/26/2006	Non-Potable Water	Malathion	EPA 8141
NELAP	08/26/2006	Non-Potable Water	Methyl parathion (Parathion, methyl)	EPA 8141
NELAP	04/07/2005	Solid and Chemical Materials	Methyl parathion (Parathion, methyl)	EPA 8141
NELAP	08/24/2005	Solid and Chemical Materials	Mevinphos	EPA 8141
NELAP	08/26/2006	Non-Potable Water	Mevinphos	EPA 8141
NELAP	04/07/2005	Solid and Chemical Materials	Parathion (Ethyl parathion)	EPA 8141
NELAP	08/26/2006	Non-Potable Water	Parathion, ethyl (Ethyl parathion, Parathion)	EPA 8141
NELAP	08/26/2006	Non-Potable Water	Phorate (Thimet)	EPA 8141
NELAP	08/24/2005	Solid and Chemical Materials	Phorate (Thimet)	EPA 8141
NELAP	08/26/2006	Non-Potable Water	Ronnel	EPA 8141
NELAP	04/18/2006	Solid and Chemical Materials	Ronnel	EPA 8141
NELAP	08/26/2006	Non-Potable Water	Stirophos (Tetrachlorovinphos)	EPA 8141
NELAP	04/18/2006	Solid and Chemical Materials	Stirophos (Tetrachlorovinphos)	EPA 8141
NELAP	08/26/2006	Non-Potable Water	Sulfotepp (Tetraethyl dithiopyrophosphate)	EPA 8141
NELAP	08/26/2006	Solid and Chemical Materials	Sulfotepp (Tetraethyl dithiopyrophosphate)	EPA 8141
NELAP	04/18/2006	Solid and Chemical Materials	Thionazine (Thionazin, Zinophos)	EPA 8141
NELAP	08/26/2006	Non-Potable Water	Thionazine (Thionazin, Zinophos)	EPA 8141
NELAP	08/26/2006	Non-Potable Water	Tokuthion (Prothiophos)	EPA 8141
NELAP	04/18/2006	Solid and Chemical Materials	Tokuthion (Prothiophos)	EPA 8141
NELAP	04/18/2006	Solid and Chemical Materials	Trichloronate	EPA 8141

NELAP	08/26/2006	Non-Potable Water	Trichloronate	EPA 8141
NELAP	04/08/2009	Solid and Chemical Materials	Organophosphorus compounds by GC/NPD	EPA 8141A
NELAP	04/08/2009	Non-Potable Water	Organophosphorus compounds by GC/NPD	EPA 8141A
NELAP	04/08/2009	Non-Potable Water	Organophosphorus compounds by GC/NPD	EPA 8141B
NELAP	04/09/2009	Solid and Chemical Materials	Organophosphorus compounds by GC/NPD	EPA 8141B
NELAP	03/01/2007	Non-Potable Water	O,O,O-Triethyl phosphorothioate	EPA 8141-Extended
NELAP	04/18/2006	Solid and Chemical Materials	O,O,O-Triethyl phosphorothioate	EPA 8141-Extended
NELAP	04/22/2010	Non-Potable Water	Triphenyl phosphate	EPA 8141-Extended
NELAP	04/18/2006	Solid and Chemical Materials	Triphenyl phosphate	EPA 8141-Extended
NELAP	04/07/2005	Solid and Chemical Materials	2,4,5-T	EPA 8151
NELAP	08/26/2006	Non-Potable Water	2,4,5-T	EPA 8151
NELAP	04/07/2005	Solid and Chemical Materials	2,4,5-TP (Silvex)	EPA 8151
NELAP	08/26/2006	Non-Potable Water	2,4,5-TP (Silvex)	EPA 8151
NELAP	08/26/2006	Non-Potable Water	2,4-D	EPA 8151
NELAP	04/07/2005	Solid and Chemical Materials	2,4-D	EPA 8151
NELAP	08/26/2006	Non-Potable Water	2,4-DB (Butoxon)	EPA 8151
NELAP	04/07/2005	Solid and Chemical Materials	2,4-DB (Butoxon)	EPA 8151
NELAP	08/26/2006	Non-Potable Water	Dalapon (2,2-Dichloropropionic acid)	EPA 8151
NELAP	08/24/2005	Solid and Chemical Materials	Dalapon (2,2-Dichloropropionic acid)	EPA 8151
NELAP	08/26/2006	Non-Potable Water	Dicamba	EPA 8151
NELAP	04/07/2005	Solid and Chemical Materials	Dicamba	EPA 8151
NELAP	04/07/2005	Solid and Chemical Materials	Dichloroprop (Dichlorprop)	EPA 8151
NELAP	08/26/2006	Non-Potable Water	Dichloroprop (Dichlorprop)	EPA 8151

NELAP	04/07/2005	Solid and Chemical Materials	Dinoseb (2-sec-Butyl-4,6-dinitrophenol, DNBP)	EPA 8151
NELAP	08/26/2006	Non-Potable Water	Dinoseb (2-sec-Butyl-4,6-dinitrophenol, DNBP)	EPA 8151
NELAP	04/07/2005	Solid and Chemical Materials	MCPA	EPA 8151
NELAP	08/26/2006	Non-Potable Water	MCPA	EPA 8151
NELAP	04/07/2005	Solid and Chemical Materials	MCPP (Mecoprop)	EPA 8151
NELAP	08/26/2006	Non-Potable Water	MCPP (Mecoprop)	EPA 8151
NELAP	08/26/2006	Non-Potable Water	Pentachlorophenol (PCP)	EPA 8151
NELAP	04/07/2005	Solid and Chemical Materials	Pentachlorophenol (PCP)	EPA 8151
NELAP	04/08/2009	Non-Potable Water	Chlorinated herbicides by GC/ECD	EPA 8151A
NELAP	04/08/2009	Solid and Chemical Materials	Chlorinated herbicides by GC/ECD	EPA 8151A
NELAP	04/18/2006	Non-Potable Water	1,1,1,2-Tetrachloroethane	EPA 8260
NELAP	08/24/2005	Solid and Chemical Materials	1,1,1,2-Tetrachloroethane	EPA 8260
NELAP	08/26/2006	Non-Potable Water	1,1,1-Trichloroethane	EPA 8260
NELAP	04/07/2005	Solid and Chemical Materials	1,1,1-Trichloroethane	EPA 8260
NELAP	08/26/2006	Non-Potable Water	1,1,2,2-Tetrachloroethane	EPA 8260
NELAP	04/07/2005	Solid and Chemical Materials	1,1,2,2-Tetrachloroethane	EPA 8260
NELAP	08/26/2006	Non-Potable Water	1,1,2-Trichloroethane	EPA 8260
NELAP	04/07/2005	Solid and Chemical Materials	1,1,2-Trichloroethane	EPA 8260
NELAP	08/26/2006	Non-Potable Water	1,1-Dichloroethane	EPA 8260
NELAP	04/07/2005	Solid and Chemical Materials	1,1-Dichloroethane	EPA 8260
NELAP	04/07/2005	Solid and Chemical Materials	1,1-Dichloroethene (1,1-Dichloroethylene)	EPA 8260
NELAP	08/26/2006	Non-Potable Water	1,1-Dichloroethene (1,1-Dichloroethylene)	EPA 8260
NELAP	08/26/2006	Solid and Chemical Materials	1,1-Dichloropropene	EPA 8260

NELAP	08/26/2006	Non-Potable Water	1,1-Dichloropropene	EPA 8260
NELAP	08/26/2006	Solid and Chemical Materials	1,2,3-Trichlorobenzene	EPA 8260
NELAP	08/26/2006	Non-Potable Water	1,2,3-Trichlorobenzene	EPA 8260
NELAP	04/07/2005	Solid and Chemical Materials	1,2,3-Trichloropropane (1,2,3-TCP)	EPA 8260
NELAP	08/26/2006	Non-Potable Water	1,2,3-Trichloropropane (1,2,3-TCP)	EPA 8260
NELAP	04/07/2005	Solid and Chemical Materials	1,2,4-Trichlorobenzene	EPA 8260
NELAP	08/26/2006	Non-Potable Water	1,2,4-Trichlorobenzene	EPA 8260
NELAP	08/26/2006	Non-Potable Water	1,2,4-Trimethylbenzene	EPA 8260
NELAP	08/26/2006	Solid and Chemical Materials	1,2,4-Trimethylbenzene	EPA 8260
NELAP	04/18/2006	Non-Potable Water	1,2-Dibromo-3-chloropropane (DBCP, Dibromochloropropane)	EPA 8260
NELAP	08/24/2005	Solid and Chemical Materials	1,2-Dibromo-3-chloropropane (DBCP, Dibromochloropropane)	EPA 8260
NELAP	04/07/2005	Solid and Chemical Materials	1,2-Dibromoethane (EDB, Ethylene dibromide)	EPA 8260
NELAP	08/26/2006	Non-Potable Water	1,2-Dibromoethane (EDB, Ethylene dibromide)	EPA 8260
NELAP	08/26/2006	Non-Potable Water	1,2-Dichlorobenzene (o-Dichlorobenzene)	EPA 8260
NELAP	04/07/2005	Solid and Chemical Materials	1,2-Dichlorobenzene (o-Dichlorobenzene)	EPA 8260
NELAP	04/07/2005	Solid and Chemical Materials	1,2-Dichloroethane	EPA 8260
NELAP	08/26/2006	Non-Potable Water	1,2-Dichloroethane	EPA 8260
NELAP	04/07/2005	Solid and Chemical Materials	1,2-Dichloropropane	EPA 8260
NELAP	08/26/2006	Non-Potable Water	1,2-Dichloropropane	EPA 8260
NELAP	08/26/2006	Non-Potable Water	1,3,5-Trimethylbenzene	EPA 8260
NELAP	08/26/2006	Solid and Chemical Materials	1,3,5-Trimethylbenzene	EPA 8260
NELAP	08/26/2006	Non-Potable Water	1,3-Dichlorobenzene (m-Dichlorobenzene)	EPA 8260
NELAP	04/07/2005	Solid and Chemical Materials	1,3-Dichlorobenzene (m-Dichlorobenzene)	EPA 8260

NELAP	08/26/2006	Solid and Chemical Materials	1,3-Dichloropropane	EPA 8260
NELAP	08/26/2006	Non-Potable Water	1,3-Dichloropropane	EPA 8260
NELAP	08/26/2006	Non-Potable Water	1,4-Dichlorobenzene (p-Dichlorobenzene)	EPA 8260
NELAP	04/07/2005	Solid and Chemical Materials	1,4-Dichlorobenzene (p-Dichlorobenzene)	EPA 8260
NELAP	08/26/2006	Non-Potable Water	1,4-Dioxane (1,4-Diethyleneoxide)	EPA 8260
NELAP	08/24/2005	Solid and Chemical Materials	1,4-Dioxane (1,4-Diethyleneoxide)	EPA 8260
NELAP	08/26/2006	Non-Potable Water	2,2-Dichloropropane	EPA 8260
NELAP	08/26/2006	Solid and Chemical Materials	2,2-Dichloropropane	EPA 8260
NELAP	08/24/2005	Solid and Chemical Materials	2-Butanone (Methyl ethyl ketone, MEK)	EPA 8260
NELAP	04/18/2006	Non-Potable Water	2-Butanone (Methyl ethyl ketone, MEK)	EPA 8260
NELAP	08/26/2006	Non-Potable Water	2-Chloroethyl vinyl ether	EPA 8260
NELAP	04/07/2005	Solid and Chemical Materials	2-Chloroethyl vinyl ether	EPA 8260
NELAP	04/07/2005	Solid and Chemical Materials	2-Chlorotoluene	EPA 8260
NELAP	08/26/2006	Non-Potable Water	2-Chlorotoluene	EPA 8260
NELAP	01/06/2006	Non-Potable Water	2-Hexanone	EPA 8260
NELAP	08/24/2005	Solid and Chemical Materials	2-Hexanone	EPA 8260
NELAP	08/26/2006	Solid and Chemical Materials	2-Nitropropane	EPA 8260
NELAP	08/26/2006	Non-Potable Water	2-Nitropropane	EPA 8260
NELAP	08/26/2006	Non-Potable Water	2-Pentanone	EPA 8260
NELAP	08/26/2006	Solid and Chemical Materials	2-Pentanone	EPA 8260
NELAP	04/07/2005	Solid and Chemical Materials	4-Chlorotoluene	EPA 8260
NELAP	08/26/2006	Non-Potable Water	4-Chlorotoluene	EPA 8260
NELAP	08/26/2006	Solid and Chemical Materials	4-Isopropyltoluene (p-Isopropyltoluene)	EPA 8260

NELAP	08/26/2006	Non-Potable Water	4-Isopropyltoluene (p-Isopropyltoluene)	EPA 8260
NELAP	04/07/2005	Solid and Chemical Materials	4-Methyl-2-pentanone (MIBK)	EPA 8260
NELAP	01/06/2006	Non-Potable Water	4-Methyl-2-pentanone (MIBK)	EPA 8260
NELAP	04/07/2005	Solid and Chemical Materials	Acetone	EPA 8260
NELAP	01/06/2006	Non-Potable Water	Acetone	EPA 8260
NELAP	04/07/2005	Solid and Chemical Materials	Acetonitrile	EPA 8260
NELAP	08/26/2006	Non-Potable Water	Acetonitrile	EPA 8260
NELAP	08/26/2006	Non-Potable Water	Acrolein (Propenal)	EPA 8260
NELAP	04/07/2005	Solid and Chemical Materials	Acrolein (Propenal)	EPA 8260
NELAP	04/07/2005	Solid and Chemical Materials	Acrylonitrile	EPA 8260
NELAP	08/26/2006	Non-Potable Water	Acrylonitrile	EPA 8260
NELAP	08/26/2006	Solid and Chemical Materials	Allyl chloride (3-Chloropropene)	EPA 8260
NELAP	08/26/2006	Non-Potable Water	Allyl chloride (3-Chloropropene)	EPA 8260
NELAP	04/07/2005	Solid and Chemical Materials	Benzene	EPA 8260
NELAP	08/26/2006	Non-Potable Water	Benzene	EPA 8260
NELAP	08/26/2006	Non-Potable Water	Benzyl chloride	EPA 8260
NELAP	08/26/2006	Solid and Chemical Materials	Benzyl chloride	EPA 8260
NELAP	08/26/2006	Non-Potable Water	Bromoacetone	EPA 8260
NELAP	08/26/2006	Non-Potable Water	Bromobenzene	EPA 8260
NELAP	04/07/2005	Solid and Chemical Materials	Bromobenzene	EPA 8260
NELAP	08/26/2006	Non-Potable Water	Bromochloromethane	EPA 8260
NELAP	08/24/2005	Solid and Chemical Materials	Bromochloromethane	EPA 8260
NELAP	04/07/2005	Solid and Chemical Materials	Bromodichloromethane	EPA 8260
NELAP	08/26/2006	Non-Potable Water	Bromodichloromethane	EPA 8260

NELAP	08/26/2006	Non-Potable Water	Bromoform	EPA 8260
NELAP	04/07/2005	Solid and Chemical Materials	Bromoform	EPA 8260
NELAP	01/06/2006	Non-Potable Water	Carbon disulfide	EPA 8260
NELAP	08/24/2005	Solid and Chemical Materials	Carbon disulfide	EPA 8260
NELAP	08/26/2006	Non-Potable Water	Carbon tetrachloride	EPA 8260
NELAP	04/07/2005	Solid and Chemical Materials	Carbon tetrachloride	EPA 8260
NELAP	04/07/2005	Solid and Chemical Materials	Chlorobenzene	EPA 8260
NELAP	08/26/2006	Non-Potable Water	Chlorobenzene	EPA 8260
NELAP	04/07/2005	Solid and Chemical Materials	Chloroethane	EPA 8260
NELAP	08/26/2006	Non-Potable Water	Chloroethane	EPA 8260
NELAP	08/26/2006	Non-Potable Water	Chloroform	EPA 8260
NELAP	04/07/2005	Solid and Chemical Materials	Chloroform	EPA 8260
NELAP	08/26/2006	Solid and Chemical Materials	Chloroprene (2-Chloro-1,3-butadiene)	EPA 8260
NELAP	08/26/2006	Non-Potable Water	Chloroprene (2-Chloro-1,3-butadiene)	EPA 8260
NELAP	08/26/2006	Non-Potable Water	cis-1,2-Dichloroethene	EPA 8260
NELAP	04/07/2005	Solid and Chemical Materials	cis-1,2-Dichloroethene	EPA 8260
NELAP	08/26/2006	Non-Potable Water	cis-1,3-Dichloropropene	EPA 8260
NELAP	04/07/2005	Solid and Chemical Materials	cis-1,3-Dichloropropene	EPA 8260
NELAP	08/26/2006	Non-Potable Water	Dibromochloromethane	EPA 8260
NELAP	04/07/2005	Solid and Chemical Materials	Dibromochloromethane	EPA 8260
NELAP	08/26/2006	Solid and Chemical Materials	Dibromofluoromethane	EPA 8260
NELAP	08/26/2006	Non-Potable Water	Dibromofluoromethane	EPA 8260
NELAP	08/24/2005	Solid and Chemical Materials	Dibromomethane	EPA 8260

NELAP	04/18/2006	Non-Potable Water	Dibromomethane	EPA 8260
NELAP	08/26/2006	Non-Potable Water	Dichlorodifluoromethane (Freon 12)	EPA 8260
NELAP	04/07/2005	Solid and Chemical Materials	Dichlorodifluoromethane (Freon 12)	EPA 8260
NELAP	08/26/2006	Solid and Chemical Materials	Diethyl ether (Ethyl ether)	EPA 8260
NELAP	08/26/2006	Non-Potable Water	Diethyl ether (Ethyl ether)	EPA 8260
NELAP	08/26/2006	Non-Potable Water	Epichlorohydrin (1-Chloro-2,3-epoxypropane)	EPA 8260
NELAP	08/26/2006	Non-Potable Water	Ethanol	EPA 8260
NELAP	08/26/2006	Non-Potable Water	Ethyl acetate	EPA 8260
NELAP	04/09/2009	Solid and Chemical Materials	Ethyl acetate	EPA 8260
NELAP	08/24/2005	Solid and Chemical Materials	Ethyl methacrylate	EPA 8260
NELAP	04/18/2006	Non-Potable Water	Ethyl methacrylate	EPA 8260
NELAP	08/26/2006	Non-Potable Water	Ethylbenzene	EPA 8260
NELAP	04/07/2005	Solid and Chemical Materials	Ethylbenzene	EPA 8260
NELAP	08/26/2006	Non-Potable Water	Ethylene oxide	EPA 8260
NELAP	08/24/2005	Solid and Chemical Materials	Hexachlorobutadiene (1,3-Hexachlorobutadiene)	EPA 8260
NELAP	08/26/2006	Non-Potable Water	Hexachlorobutadiene (1,3-Hexachlorobutadiene)	EPA 8260
NELAP	08/26/2006	Non-Potable Water	Hexachloroethane	EPA 8260
NELAP	08/26/2006	Non-Potable Water	Iodomethane (Methyl iodide)	EPA 8260
NELAP	08/26/2006	Solid and Chemical Materials	Iodomethane (Methyl iodide)	EPA 8260
NELAP	08/26/2006	Solid and Chemical Materials	Isobutyl alcohol (2-Methyl-1-propanol)	EPA 8260
NELAP	08/26/2006	Non-Potable Water	Isobutyl alcohol (2-Methyl-1-propanol)	EPA 8260
NELAP	04/07/2005	Solid and Chemical Materials	Isopropylbenzene (Cumene)	EPA 8260
NELAP	08/26/2006	Non-Potable Water	Isopropylbenzene (Cumene)	EPA 8260
NELAP	08/26/2006	Solid and Chemical Materials	m+p-Xylene	EPA 8260

NELAP	08/24/2005	Non-Potable Water	m+p-Xylene	EPA 8260
NELAP	08/26/2006	Non-Potable Water	m-Xylene	EPA 8260
NELAP	04/09/2009	Solid and Chemical Materials	m-Xylene	EPA 8260
NELAP	08/26/2006	Solid and Chemical Materials	Methacrylonitrile	EPA 8260
NELAP	08/26/2006	Non-Potable Water	Methacrylonitrile	EPA 8260
NELAP	08/26/2006	Non-Potable Water	Methanol	EPA 8260
NELAP	04/07/2005	Solid and Chemical Materials	Methyl bromide (Bromomethane)	EPA 8260
NELAP	08/26/2006	Non-Potable Water	Methyl bromide (Bromomethane)	EPA 8260
NELAP	04/07/2005	Solid and Chemical Materials	Methyl chloride (Chloromethane)	EPA 8260
NELAP	08/26/2006	Non-Potable Water	Methyl chloride (Chloromethane)	EPA 8260
NELAP	04/07/2005	Solid and Chemical Materials	Methyl tert-butyl ether (MTBE)	EPA 8260
NELAP	08/26/2006	Non-Potable Water	Methyl tert-butyl ether (MTBE)	EPA 8260
NELAP	08/26/2006	Solid and Chemical Materials	Methylacrylate	EPA 8260
NELAP	04/07/2005	Solid and Chemical Materials	Methylene chloride (Dichloromethane)	EPA 8260
NELAP	08/26/2006	Non-Potable Water	Methylene chloride (Dichloromethane)	EPA 8260
NELAP	04/18/2006	Non-Potable Water	Methylmethacrylate	EPA 8260
NELAP	08/24/2005	Solid and Chemical Materials	Methylmethacrylate	EPA 8260
NELAP	04/08/2009	Non-Potable Water	n-Butyl alcohol (n-Butanol, 1-Butanol)	EPA 8260
NELAP	04/09/2009	Solid and Chemical Materials	n-Butyl alcohol (n-Butanol, 1-Butanol)	EPA 8260
NELAP	04/07/2005	Solid and Chemical Materials	n-Butylbenzene	EPA 8260
NELAP	08/26/2006	Non-Potable Water	n-Butylbenzene	EPA 8260
NELAP	04/07/2005	Solid and Chemical Materials	n-Propylbenzene	EPA 8260
NELAP	08/26/2006	Non-Potable Water	n-Propylbenzene	EPA 8260

NELAP	04/07/2005	Solid and Chemical Materials	Naphthalene	EPA 8260
NELAP	08/26/2006	Non-Potable Water	Naphthalene	EPA 8260
NELAP	08/26/2006	Solid and Chemical Materials	Nitrobenzene	EPA 8260
NELAP	08/26/2006	Solid and Chemical Materials	o-Xylene	EPA 8260
NELAP	08/24/2005	Non-Potable Water	o-Xylene	EPA 8260
NELAP	04/09/2009	Solid and Chemical Materials	p-Xylene	EPA 8260
NELAP	08/26/2006	Non-Potable Water	p-Xylene	EPA 8260
NELAP	08/26/2006	Solid and Chemical Materials	Paraldehyde	EPA 8260
NELAP	08/26/2006	Solid and Chemical Materials	Pentachloroethane	EPA 8260
NELAP	08/26/2006	Solid and Chemical Materials	Propargyl alcohol	EPA 8260
NELAP	08/24/2005	Solid and Chemical Materials	Propionitrile (Ethyl cyanide)	EPA 8260
NELAP	04/18/2006	Non-Potable Water	Propionitrile (Ethyl cyanide)	EPA 8260
NELAP	08/26/2006	Solid and Chemical Materials	Pyridine	EPA 8260
NELAP	08/26/2006	Non-Potable Water	sec-Butylbenzene	EPA 8260
NELAP	04/07/2005	Solid and Chemical Materials	sec-Butylbenzene	EPA 8260
NELAP	01/06/2006	Non-Potable Water	Styrene	EPA 8260
NELAP	04/07/2005	Solid and Chemical Materials	Styrene	EPA 8260
NELAP	04/08/2008	Non-Potable Water	tert-Butyl alcohol (2-Methyl-2-propanol)	EPA 8260
NELAP	04/08/2008	Solid and Chemical Materials	tert-Butyl alcohol (2-Methyl-2-propanol)	EPA 8260
NELAP	08/26/2006	Non-Potable Water	tert-Butylbenzene	EPA 8260
NELAP	04/07/2005	Solid and Chemical Materials	tert-Butylbenzene	EPA 8260
NELAP	08/26/2006	Non-Potable Water	Tetrachloroethene (PCE, Perchloroethylene)	EPA 8260

NELAP	04/07/2005	Solid and Chemical Materials	Tetrachloroethene (PCE, Perchloroethylene)	EPA 8260
NELAP	04/07/2005	Solid and Chemical Materials	Toluene	EPA 8260
NELAP	08/26/2006	Non-Potable Water	Toluene	EPA 8260
NELAP	08/26/2006	Non-Potable Water	trans-1,2-Dichloroethene	EPA 8260
NELAP	04/07/2005	Solid and Chemical Materials	trans-1,2-Dichloroethene	EPA 8260
NELAP	04/07/2005	Solid and Chemical Materials	trans-1,3-Dichloropropene	EPA 8260
NELAP	08/26/2006	Non-Potable Water	trans-1,3-Dichloropropene	EPA 8260
NELAP	04/07/2005	Solid and Chemical Materials	trans-1,4-Dichloro-2-butene	EPA 8260
NELAP	08/26/2006	Non-Potable Water	trans-1,4-Dichloro-2-butene	EPA 8260
NELAP	08/26/2006	Non-Potable Water	Trichloroethene (TCE, Trichloroethylene)	EPA 8260
NELAP	04/07/2005	Solid and Chemical Materials	Trichloroethene (TCE, Trichloroethylene)	EPA 8260
NELAP	08/26/2006	Non-Potable Water	Trichlorofluoromethane (Freon 11)	EPA 8260
NELAP	04/07/2005	Solid and Chemical Materials	Trichlorofluoromethane (Freon 11)	EPA 8260
NELAP	04/07/2005	Solid and Chemical Materials	Vinyl acetate	EPA 8260
NELAP	01/06/2006	Non-Potable Water	Vinyl acetate	EPA 8260
NELAP	04/07/2005	Solid and Chemical Materials	Vinyl chloride (Chloroethene)	EPA 8260
NELAP	08/26/2006	Non-Potable Water	Vinyl chloride (Chloroethene)	EPA 8260
NELAP	03/30/2006	Non-Potable Water	Xylenes, total	EPA 8260
NELAP	04/07/2005	Solid and Chemical Materials	Xylenes, total	EPA 8260
NELAP	04/08/2009	Solid and Chemical Materials	VOCs by GC/MS	EPA 8260B
NELAP	04/08/2009	Non-Potable Water	VOCs by GC/MS	EPA 8260B
NELAP	04/18/2006	Non-Potable Water	1,1,2-Trichloro-1,2,2-trifluoroethane (Freon 113)	EPA 8260-Extended
NELAP	04/18/2006	Solid and Chemical Materials	1,1,2-Trichloro-1,2,2-trifluoroethane (Freon 113)	EPA 8260-Extended

NELAP	04/18/2006	Solid and Chemical Materials	1,2-Dibromochloroethene (total)	EPA 8260-Extended
NELAP	03/01/2007	Solid and Chemical Materials	1,2-Dichloroethene (total)	EPA 8260-Extended
NELAP	03/01/2007	Non-Potable Water	1,2-Dichloroethene (total)	EPA 8260-Extended
NELAP	12/05/2007	Non-Potable Water	1,2-Epoxybutane	EPA 8260-Extended
NELAP	12/05/2007	Solid and Chemical Materials	1,2-Epoxybutane	EPA 8260-Extended
NELAP	04/09/2009	Solid and Chemical Materials	1,3,5-Trichlorobenzene	EPA 8260-Extended
NELAP	04/08/2009	Non-Potable Water	1,3,5-Trichlorobenzene	EPA 8260-Extended
NELAP	12/05/2007	Non-Potable Water	1,3-Butadiene (Divinyl)	EPA 8260-Extended
NELAP	12/05/2007	Solid and Chemical Materials	1,3-Butadiene (Divinyl)	EPA 8260-Extended
NELAP	12/05/2007	Solid and Chemical Materials	2,2,4-Trimethylpentane (Iso-octane)	EPA 8260-Extended
NELAP	12/05/2007	Non-Potable Water	2,2,4-Trimethylpentane (Iso-octane)	EPA 8260-Extended
NELAP	04/08/2009	Non-Potable Water	2,3,6-Trichlorotoluene	EPA 8260-Extended
NELAP	04/09/2009	Solid and Chemical Materials	2,3,6-Trichlorotoluene	EPA 8260-Extended
NELAP	04/08/2009	Non-Potable Water	2,3-Dichlorotoluene	EPA 8260-Extended
NELAP	04/09/2009	Solid and Chemical Materials	2,3-Dichlorotoluene	EPA 8260-Extended
NELAP	04/08/2009	Non-Potable Water	2,4,5-Trichlorotoluene	EPA 8260-Extended
NELAP	04/09/2009	Solid and Chemical Materials	2,4,5-Trichlorotoluene	EPA 8260-Extended
NELAP	04/08/2009	Non-Potable Water	2,4-Dichlorobenzotrifluoride	EPA 8260-Extended
NELAP	04/09/2009	Solid and Chemical Materials	2,4-Dichlorobenzotrifluoride	EPA 8260-Extended
NELAP	04/09/2009	Solid and Chemical Materials	2,4-Dichlorotoluene	EPA 8260-Extended
NELAP	04/08/2009	Non-Potable Water	2,4-Dichlorotoluene	EPA 8260-Extended
NELAP	04/09/2009	Solid and Chemical Materials	2,5-Dichlorobenzotrifluoride	EPA 8260-Extended
NELAP	04/08/2009	Non-Potable Water	2,5-Dichlorobenzotrifluoride	EPA 8260-Extended

NELAP	04/08/2009	Non-Potable Water	2,5-Dichlorotoluene	EPA 8260-Extended
NELAP	04/09/2009	Solid and Chemical Materials	2,5-Dichlorotoluene	EPA 8260-Extended
NELAP	04/08/2009	Non-Potable Water	2,6-Dichlorotoluene	EPA 8260-Extended
NELAP	04/09/2009	Solid and Chemical Materials	2,6-Dichlorotoluene	EPA 8260-Extended
NELAP	04/09/2009	Solid and Chemical Materials	2-Chlorobenzotrifluoride	EPA 8260-Extended
NELAP	04/08/2009	Non-Potable Water	2-Chlorobenzotrifluoride	EPA 8260-Extended
NELAP	04/08/2009	Non-Potable Water	3,4-Dichlorobenzotrifluoride	EPA 8260-Extended
NELAP	04/09/2009	Solid and Chemical Materials	3,4-Dichlorobenzotrifluoride	EPA 8260-Extended
NELAP	04/08/2009	Non-Potable Water	3,4-Dichlorotoluene	EPA 8260-Extended
NELAP	04/09/2009	Solid and Chemical Materials	3,4-Dichlorotoluene	EPA 8260-Extended
NELAP	04/09/2009	Solid and Chemical Materials	3-Chlorobenzotrifluoride	EPA 8260-Extended
NELAP	04/08/2009	Non-Potable Water	3-Chlorobenzotrifluoride	EPA 8260-Extended
NELAP	04/22/2010	Non-Potable Water	3-Chlorotoluene	EPA 8260-Extended
NELAP	04/09/2009	Solid and Chemical Materials	4-Chlorobenzotrifluoride	EPA 8260-Extended
NELAP	04/08/2009	Non-Potable Water	4-Chlorobenzotrifluoride	EPA 8260-Extended
NELAP	12/05/2007	Solid and Chemical Materials	bis(2-Chloroethyl) ether	EPA 8260-Extended
NELAP	12/05/2007	Non-Potable Water	bis(2-Chloroethyl) ether	EPA 8260-Extended
NELAP	04/18/2006	Non-Potable Water	Cyclohexane	EPA 8260-Extended
NELAP	04/18/2006	Solid and Chemical Materials	Cyclohexane	EPA 8260-Extended
NELAP	04/09/2009	Solid and Chemical Materials	Cyclohexanol	EPA 8260-Extended
NELAP	04/08/2009	Non-Potable Water	Cyclohexanol	EPA 8260-Extended
NELAP	04/09/2009	Solid and Chemical Materials	Dichloroethyl ether	EPA 8260-Extended
NELAP	04/08/2009	Non-Potable Water	Dichloroethyl ether	EPA 8260-Extended
NELAP	04/08/2009	Non-Potable Water	Dichlorofluoromethane (Freon 21)	EPA 8260-Extended

NELAP	04/09/2009	Solid and Chemical Materials	Dichlorofluoromethane (Freon 21)	EPA 8260-Extended
NELAP	12/05/2007	Solid and Chemical Materials	Ethyl acrylate	EPA 8260-Extended
NELAP	12/05/2007	Non-Potable Water	Ethyl acrylate	EPA 8260-Extended
NELAP	04/18/2006	Solid and Chemical Materials	Heptane	EPA 8260-Extended
NELAP	04/18/2006	Non-Potable Water	Heptane	EPA 8260-Extended
NELAP	12/05/2007	Non-Potable Water	Hexane	EPA 8260-Extended
NELAP	12/05/2007	Solid and Chemical Materials	Hexane	EPA 8260-Extended
NELAP	08/26/2006	Non-Potable Water	Isopropyl alcohol (2-Propanol)	EPA 8260-Extended
NELAP	08/26/2006	Solid and Chemical Materials	Isopropyl alcohol (2-Propanol)	EPA 8260-Extended
NELAP	04/18/2006	Solid and Chemical Materials	Methyl acetate	EPA 8260-Extended
NELAP	04/18/2006	Non-Potable Water	Methyl acetate	EPA 8260-Extended
NELAP	08/26/2006	Solid and Chemical Materials	Methyl isobutyl ketone (MIBK, 4-Methyl-2-pentanone)	EPA 8260-Extended
NELAP	08/26/2006	Non-Potable Water	Methyl isobutyl ketone (MIBK, 4-Methyl-2-pentanone)	EPA 8260-Extended
NELAP	04/18/2006	Non-Potable Water	Methylcyclohexane	EPA 8260-Extended
NELAP	04/18/2006	Solid and Chemical Materials	Methylcyclohexane	EPA 8260-Extended
NELAP	04/09/2009	Solid and Chemical Materials	tert-Amyl methyl ether (TAME)	EPA 8260-Extended
NELAP	04/08/2009	Non-Potable Water	tert-Amyl methyl ether (TAME)	EPA 8260-Extended
NELAP	04/22/2010	Non-Potable Water	Tetrahydrofuran (THF)	EPA 8260-Extended
NELAP	04/22/2010	Solid and Chemical Materials	Tetrahydrofuran (THF)	EPA 8260-Extended
NELAP	08/24/2005	Solid and Chemical Materials	Trichlorotrifluoroethane (Freon 113)	EPA 8260-Extended
NELAP	12/05/2007	Solid and Chemical Materials	Vinyl bromide (Bromoethene)	EPA 8260-Extended
NELAP	12/05/2007	Non-Potable Water	Vinyl bromide (Bromoethene)	EPA 8260-Extended
NELAP	04/07/2005	Solid and Chemical Materials	1,2,4,5-Tetrachlorobenzene	EPA 8270

NELAP	08/26/2006	Non-Potable Water	1,2,4,5-Tetrachlorobenzene	EPA 8270
NELAP	08/26/2006	Non-Potable Water	1,2,4-Trichlorobenzene	EPA 8270
NELAP	04/07/2005	Solid and Chemical Materials	1,2,4-Trichlorobenzene	EPA 8270
NELAP	08/26/2006	Non-Potable Water	1,2-Dichlorobenzene (o-Dichlorobenzene)	EPA 8270
NELAP	04/07/2005	Solid and Chemical Materials	1,2-Dichlorobenzene (o-Dichlorobenzene)	EPA 8270
NELAP	08/26/2006	Non-Potable Water	1,2-Dinitrobenzene (1,2-DNB)	EPA 8270
NELAP	08/26/2006	Solid and Chemical Materials	1,2-Dinitrobenzene (1,2-DNB)	EPA 8270
NELAP	04/18/2006	Non-Potable Water	1,2-Diphenylhydrazine	EPA 8270
NELAP	04/18/2006	Solid and Chemical Materials	1,2-Diphenylhydrazine	EPA 8270
NELAP	08/26/2006	Non-Potable Water	1,3,5-Trinitrobenzene (1,3,5-TNB)	EPA 8270
NELAP	08/26/2006	Solid and Chemical Materials	1,3,5-Trinitrobenzene (1,3,5-TNB)	EPA 8270
NELAP	04/07/2005	Solid and Chemical Materials	1,3-Dichlorobenzene (m-Dichlorobenzene)	EPA 8270
NELAP	08/26/2006	Non-Potable Water	1,3-Dichlorobenzene (m-Dichlorobenzene)	EPA 8270
NELAP	08/26/2006	Solid and Chemical Materials	1,3-Dinitrobenzene (1,3-DNB)	EPA 8270
NELAP	08/26/2006	Non-Potable Water	1,3-Dinitrobenzene (1,3-DNB)	EPA 8270
NELAP	08/26/2006	Non-Potable Water	1,4-Dichlorobenzene (p-Dichlorobenzene)	EPA 8270
NELAP	04/07/2005	Solid and Chemical Materials	1,4-Dichlorobenzene (p-Dichlorobenzene)	EPA 8270
NELAP	08/26/2006	Non-Potable Water	1,4-Naphthoquinone	EPA 8270
NELAP	08/26/2006	Solid and Chemical Materials	1,4-Naphthoquinone	EPA 8270
NELAP	08/26/2006	Non-Potable Water	1,4-Phenylenediamine	EPA 8270
NELAP	08/26/2006	Solid and Chemical Materials	1,4-Phenylenediamine	EPA 8270
NELAP	08/26/2006	Solid and Chemical Materials	1-Chloronaphthalene	EPA 8270
NELAP	08/26/2006	Non-Potable Water	1-Chloronaphthalene	EPA 8270
NELAP	08/26/2006	Non-Potable Water	1-Naphthylamine (alpha-Naphthylamine)	EPA 8270

NELAP	08/26/2006	Solid and Chemical Materials	1-Naphthylamine (alpha-Naphthylamine)	EPA 8270
NELAP	08/24/2005	Solid and Chemical Materials	2,3,4,6-Tetrachlorophenol	EPA 8270
NELAP	04/18/2006	Non-Potable Water	2,3,4,6-Tetrachlorophenol	EPA 8270
NELAP	04/07/2005	Solid and Chemical Materials	2,4,5-Trichlorophenol	EPA 8270
NELAP	08/26/2006	Non-Potable Water	2,4,5-Trichlorophenol	EPA 8270
NELAP	04/07/2005	Solid and Chemical Materials	2,4,6-Trichlorophenol	EPA 8270
NELAP	08/26/2006	Non-Potable Water	2,4,6-Trichlorophenol	EPA 8270
NELAP	04/07/2005	Solid and Chemical Materials	2,4-Dichlorophenol	EPA 8270
NELAP	08/26/2006	Non-Potable Water	2,4-Dichlorophenol	EPA 8270
NELAP	04/07/2005	Solid and Chemical Materials	2,4-Dimethylphenol	EPA 8270
NELAP	08/26/2006	Non-Potable Water	2,4-Dimethylphenol	EPA 8270
NELAP	08/26/2006	Non-Potable Water	2,4-Dinitrophenol	EPA 8270
NELAP	04/07/2005	Solid and Chemical Materials	2,4-Dinitrophenol	EPA 8270
NELAP	08/26/2006	Non-Potable Water	2,4-Dinitrotoluene (2,4-DNT)	EPA 8270
NELAP	04/07/2005	Solid and Chemical Materials	2,4-Dinitrotoluene (2,4-DNT)	EPA 8270
NELAP	08/24/2005	Solid and Chemical Materials	2,6-Dichlorophenol	EPA 8270
NELAP	04/18/2006	Non-Potable Water	2,6-Dichlorophenol	EPA 8270
NELAP	04/07/2005	Solid and Chemical Materials	2,6-Dinitrotoluene (2,6-DNT)	EPA 8270
NELAP	08/26/2006	Non-Potable Water	2,6-Dinitrotoluene (2,6-DNT)	EPA 8270
NELAP	08/26/2006	Non-Potable Water	2-Acetylaminofluorene	EPA 8270
NELAP	08/26/2006	Solid and Chemical Materials	2-Acetylaminofluorene	EPA 8270
NELAP	10/13/2010	Solid and Chemical Materials	2-Chloronaphthalene	EPA 8270
NELAP	08/26/2006	Non-Potable Water	2-Chloronaphthalene	EPA 8270

NELAP	04/07/2005	Solid and Chemical Materials	2-Chlorophenol	EPA 8270
NELAP	08/26/2006	Non-Potable Water	2-Chlorophenol	EPA 8270
NELAP	08/26/2006	Non-Potable Water	2-Cyclohexyl-4,6-dinitrophenol	EPA 8270
NELAP	04/18/2006	Non-Potable Water	2-Methyl-4,6-dinitrophenol (4,6-Dinitro-2-methylphenol)	EPA 8270
NELAP	04/07/2005	Solid and Chemical Materials	2-Methyl-4,6-dinitrophenol (4,6-Dinitro-2-methylphenol)	EPA 8270
NELAP	08/26/2006	Non-Potable Water	2-Methylnaphthalene	EPA 8270
NELAP	04/07/2005	Solid and Chemical Materials	2-Methylnaphthalene	EPA 8270
NELAP	01/06/2006	Non-Potable Water	2-Methylphenol (o-Cresol)	EPA 8270
NELAP	04/07/2005	Solid and Chemical Materials	2-Methylphenol (o-Cresol)	EPA 8270
NELAP	08/26/2006	Non-Potable Water	2-Naphthylamine (beta-Naphthylamine)	EPA 8270
NELAP	08/26/2006	Solid and Chemical Materials	2-Naphthylamine (beta-Naphthylamine)	EPA 8270
NELAP	04/07/2005	Solid and Chemical Materials	2-Nitroaniline	EPA 8270
NELAP	01/06/2006	Non-Potable Water	2-Nitroaniline	EPA 8270
NELAP	08/26/2006	Non-Potable Water	2-Nitrophenol	EPA 8270
NELAP	04/07/2005	Solid and Chemical Materials	2-Nitrophenol	EPA 8270
NELAP	04/18/2006	Solid and Chemical Materials	2-Picoline (2-Methylpyridine)	EPA 8270
NELAP	04/18/2006	Non-Potable Water	2-Picoline (2-Methylpyridine)	EPA 8270
NELAP	03/01/2007	Non-Potable Water	3+4-Methylphenol (m+p-Cresol)	EPA 8270
NELAP	08/26/2006	Non-Potable Water	3,3'-Dichlorobenzidine	EPA 8270
NELAP	04/07/2005	Solid and Chemical Materials	3,3'-Dichlorobenzidine	EPA 8270
NELAP	08/24/2005	Solid and Chemical Materials	3,3'-Dimethylbenzidine	EPA 8270
NELAP	04/18/2006	Non-Potable Water	3,3'-Dimethylbenzidine	EPA 8270
NELAP	08/26/2006	Solid and Chemical Materials	3-Amino-9-ethylcarbazole	EPA 8270
NELAP	08/26/2006	Non-Potable Water	3-Amino-9-ethylcarbazole	EPA 8270

NELAP	08/26/2006	Non-Potable Water	3-Methylcholanthrene	EPA 8270
NELAP	08/26/2006	Solid and Chemical Materials	3-Methylcholanthrene	EPA 8270
NELAP	04/07/2005	Solid and Chemical Materials	3-Methylphenol (m-Cresol)	EPA 8270
NELAP	04/18/2006	Non-Potable Water	3-Methylphenol (m-Cresol)	EPA 8270
NELAP	04/18/2006	Non-Potable Water	3-Nitroaniline	EPA 8270
NELAP	04/07/2005	Solid and Chemical Materials	3-Nitroaniline	EPA 8270
NELAP	04/18/2006	Non-Potable Water	4,4'-Methylenebis(2-chloroaniline)	EPA 8270
NELAP	08/24/2005	Solid and Chemical Materials	4,4'-Methylenebis(2-chloroaniline)	EPA 8270
NELAP	08/26/2006	Solid and Chemical Materials	4,4'-Methylenebis(N N-dimethylaniline)	EPA 8270
NELAP	08/26/2006	Non-Potable Water	4,4'-Methylenebis(N N-dimethylaniline)	EPA 8270
NELAP	08/26/2006	Solid and Chemical Materials	4-Aminobiphenyl	EPA 8270
NELAP	08/26/2006	Non-Potable Water	4-Aminobiphenyl	EPA 8270
NELAP	04/07/2005	Solid and Chemical Materials	4-Bromophenyl phenyl ether	EPA 8270
NELAP	08/26/2006	Non-Potable Water	4-Bromophenyl phenyl ether	EPA 8270
NELAP	04/07/2005	Solid and Chemical Materials	4-Chloro-3-methylphenol	EPA 8270
NELAP	08/26/2006	Non-Potable Water	4-Chloro-3-methylphenol	EPA 8270
NELAP	01/06/2006	Non-Potable Water	4-Chloroaniline	EPA 8270
NELAP	04/07/2005	Solid and Chemical Materials	4-Chloroaniline	EPA 8270
NELAP	04/07/2005	Solid and Chemical Materials	4-Chlorophenyl phenyl ether	EPA 8270
NELAP	08/26/2006	Non-Potable Water	4-Chlorophenyl phenyl ether	EPA 8270
NELAP	08/26/2006	Non-Potable Water	4-Dimethylaminoazobenzene (Dimethylaminoazobenzene)	EPA 8270
NELAP	08/26/2006	Solid and Chemical Materials	4-Dimethylaminoazobenzene (Dimethylaminoazobenzene)	EPA 8270
NELAP	01/06/2006	Non-Potable Water	4-Methylphenol (p-Cresol)	EPA 8270

NELAP	04/07/2005	Solid and Chemical Materials	4-Methylphenol (p-Cresol)	EPA 8270
NELAP	04/07/2005	Solid and Chemical Materials	4-Nitroaniline	EPA 8270
NELAP	04/18/2006	Non-Potable Water	4-Nitroaniline	EPA 8270
NELAP	08/26/2006	Solid and Chemical Materials	4-Nitrobiphenyl	EPA 8270
NELAP	08/26/2006	Non-Potable Water	4-Nitrobiphenyl	EPA 8270
NELAP	04/07/2005	Solid and Chemical Materials	4-Nitrophenol	EPA 8270
NELAP	08/26/2006	Non-Potable Water	4-Nitrophenol	EPA 8270
NELAP	04/18/2006	Solid and Chemical Materials	4-Nitroquinoline-1-oxide	EPA 8270
NELAP	04/18/2006	Non-Potable Water	4-Nitroquinoline-1-oxide	EPA 8270
NELAP	08/26/2006	Solid and Chemical Materials	5-Nitro-o-toluidine	EPA 8270
NELAP	08/26/2006	Non-Potable Water	5-Nitro-o-toluidine	EPA 8270
NELAP	08/26/2006	Non-Potable Water	7,12-Dimethylbenz(a)anthracene	EPA 8270
NELAP	08/26/2006	Solid and Chemical Materials	7,12-Dimethylbenz(a)anthracene	EPA 8270
NELAP	08/24/2005	Solid and Chemical Materials	a,a-Dimethylphenethylamine (Phentermine)	EPA 8270
NELAP	04/18/2006	Non-Potable Water	a,a-Dimethylphenethylamine (Phentermine)	EPA 8270
NELAP	08/26/2006	Non-Potable Water	Acenaphthene	EPA 8270
NELAP	04/07/2005	Solid and Chemical Materials	Acenaphthene	EPA 8270
NELAP	04/07/2005	Solid and Chemical Materials	Acenaphthylene	EPA 8270
NELAP	10/27/2010	Non-Potable Water	Acenaphthylene	EPA 8270
NELAP	08/26/2006	Solid and Chemical Materials	Acetophenone	EPA 8270
NELAP	08/26/2006	Non-Potable Water	Acetophenone	EPA 8270
NELAP	08/26/2006	Non-Potable Water	Aminoazobenzene	EPA 8270
NELAP	08/26/2006	Solid and Chemical Materials	Aminoazobenzene	EPA 8270

NELAP	08/26/2006	Non-Potable Water	Aniline	EPA 8270
NELAP	04/07/2005	Solid and Chemical Materials	Aniline	EPA 8270
NELAP	04/07/2005	Solid and Chemical Materials	Anthracene	EPA 8270
NELAP	08/26/2006	Non-Potable Water	Anthracene	EPA 8270
NELAP	04/18/2006	Non-Potable Water	Aramite	EPA 8270
NELAP	08/24/2005	Solid and Chemical Materials	Aramite	EPA 8270
NELAP	03/01/2007	Solid and Chemical Materials	Azinphos-methyl (Guthion)	EPA 8270
NELAP	08/26/2006	Non-Potable Water	Azinphos-methyl (Guthion)	EPA 8270
NELAP	08/26/2006	Non-Potable Water	Benzidine	EPA 8270
NELAP	04/07/2005	Solid and Chemical Materials	Benzidine	EPA 8270
NELAP	08/26/2006	Non-Potable Water	Benzo[a]anthracene	EPA 8270
NELAP	04/07/2005	Solid and Chemical Materials	Benzo[a]anthracene	EPA 8270
NELAP	04/07/2005	Solid and Chemical Materials	Benzo[a]pyrene	EPA 8270
NELAP	08/26/2006	Non-Potable Water	Benzo[a]pyrene	EPA 8270
NELAP	04/07/2005	Solid and Chemical Materials	Benzo[b]fluoranthene	EPA 8270
NELAP	08/26/2006	Non-Potable Water	Benzo[b]fluoranthene	EPA 8270
NELAP	08/26/2006	Non-Potable Water	Benzo[ghi]perylene	EPA 8270
NELAP	04/07/2005	Solid and Chemical Materials	Benzo[ghi]perylene	EPA 8270
NELAP	08/26/2006	Non-Potable Water	Benzo[k]fluoranthene	EPA 8270
NELAP	04/07/2005	Solid and Chemical Materials	Benzo[k]fluoranthene	EPA 8270
NELAP	04/07/2005	Solid and Chemical Materials	Benzoic acid	EPA 8270
NELAP	08/26/2006	Non-Potable Water	Benzoic acid	EPA 8270
NELAP	08/26/2006	Non-Potable Water	Benzyl alcohol	EPA 8270

NELAP	08/24/2005	Solid and Chemical Materials	Benzyl alcohol	EPA 8270
NELAP	08/26/2006	Non-Potable Water	bis(2-Chloroethoxy)methane	EPA 8270
NELAP	04/07/2005	Solid and Chemical Materials	bis(2-Chloroethoxy)methane	EPA 8270
NELAP	04/07/2005	Solid and Chemical Materials	bis(2-Chloroethyl) ether	EPA 8270
NELAP	08/26/2006	Non-Potable Water	bis(2-Chloroethyl) ether	EPA 8270
NELAP	04/07/2005	Solid and Chemical Materials	bis(2-Chloroisopropyl) ether	EPA 8270
NELAP	08/26/2006	Non-Potable Water	bis(2-Chloroisopropyl) ether	EPA 8270
NELAP	08/26/2006	Non-Potable Water	bis(2-Ethylhexyl) phthalate (DEHP)	EPA 8270
NELAP	04/07/2005	Solid and Chemical Materials	bis(2-Ethylhexyl) phthalate (DEHP)	EPA 8270
NELAP	04/07/2005	Solid and Chemical Materials	Butyl benzyl phthalate (Benzyl butyl phthalate)	EPA 8270
NELAP	08/26/2006	Non-Potable Water	Butyl benzyl phthalate (Benzyl butyl phthalate)	EPA 8270
NELAP	12/05/2007	Solid and Chemical Materials	Carbaryl (Sevin)	EPA 8270
NELAP	12/05/2007	Non-Potable Water	Carbaryl (Sevin)	EPA 8270
NELAP	01/06/2006	Non-Potable Water	Carbazole	EPA 8270
NELAP	04/07/2005	Solid and Chemical Materials	Carbazole	EPA 8270
NELAP	08/24/2005	Solid and Chemical Materials	Chlorobenzilate	EPA 8270
NELAP	04/18/2006	Non-Potable Water	Chlorobenzilate	EPA 8270
NELAP	04/07/2005	Solid and Chemical Materials	Chrysene (Benzo[a]phenanthrene)	EPA 8270
NELAP	08/26/2006	Non-Potable Water	Chrysene (Benzo[a]phenanthrene)	EPA 8270
NELAP	04/18/2006	Solid and Chemical Materials	Cresols (total)	EPA 8270
NELAP	04/18/2006	Non-Potable Water	Cresols (total)	EPA 8270
NELAP	04/07/2005	Solid and Chemical Materials	Di-n-butyl phthalate	EPA 8270
NELAP	08/26/2006	Non-Potable Water	Di-n-butyl phthalate	EPA 8270

NELAP	08/26/2006	Non-Potable Water	Di-n-octyl phthalate	EPA 8270
NELAP	04/07/2005	Solid and Chemical Materials	Di-n-octyl phthalate	EPA 8270
NELAP	04/18/2006	Solid and Chemical Materials	Diallate (cis or trans)	EPA 8270
NELAP	04/18/2006	Non-Potable Water	Diallate (cis or trans)	EPA 8270
NELAP	08/26/2006	Non-Potable Water	Dibenzo[a,h]anthracene	EPA 8270
NELAP	04/07/2005	Solid and Chemical Materials	Dibenzo[a,h]anthracene	EPA 8270
NELAP	04/07/2005	Solid and Chemical Materials	Dibenzofuran	EPA 8270
NELAP	01/06/2006	Non-Potable Water	Dibenzofuran	EPA 8270
NELAP	08/26/2006	Non-Potable Water	Diethyl phthalate	EPA 8270
NELAP	04/07/2005	Solid and Chemical Materials	Diethyl phthalate	EPA 8270
NELAP	08/26/2006	Solid and Chemical Materials	Dimethoate	EPA 8270
NELAP	08/26/2006	Non-Potable Water	Dimethoate	EPA 8270
NELAP	04/07/2005	Solid and Chemical Materials	Dimethyl phthalate	EPA 8270
NELAP	08/26/2006	Non-Potable Water	Dimethyl phthalate	EPA 8270
NELAP	08/26/2006	Solid and Chemical Materials	Dinoseb (2-sec-Butyl-4,6-dinitrophenol, DNBP)	EPA 8270
NELAP	08/26/2006	Non-Potable Water	Dinoseb (2-sec-Butyl-4,6-dinitrophenol, DNBP)	EPA 8270
NELAP	08/26/2006	Solid and Chemical Materials	Dioxathion	EPA 8270
NELAP	08/26/2006	Non-Potable Water	Diphenylamine	EPA 8270
NELAP	04/07/2005	Solid and Chemical Materials	Diphenylamine	EPA 8270
NELAP	08/26/2006	Non-Potable Water	Disulfoton	EPA 8270
NELAP	08/26/2006	Solid and Chemical Materials	Disulfoton	EPA 8270
NELAP	08/26/2006	Solid and Chemical Materials	Ethyl methanesulfonate	EPA 8270
NELAP	08/26/2006	Non-Potable Water	Ethyl methanesulfonate	EPA 8270

NELAP	08/26/2006	Solid and Chemical Materials	Famphur	EPA 8270
NELAP	08/26/2006	Non-Potable Water	Famphur	EPA 8270
NELAP	04/07/2005	Solid and Chemical Materials	Fluoranthene	EPA 8270
NELAP	08/26/2006	Non-Potable Water	Fluoranthene	EPA 8270
NELAP	04/07/2005	Solid and Chemical Materials	Fluorene	EPA 8270
NELAP	08/26/2006	Non-Potable Water	Fluorene	EPA 8270
NELAP	08/26/2006	Non-Potable Water	Hexachlorobenzene	EPA 8270
NELAP	04/07/2005	Solid and Chemical Materials	Hexachlorobenzene	EPA 8270
NELAP	04/07/2005	Solid and Chemical Materials	Hexachlorobutadiene (1,3-Hexachlorobutadiene)	EPA 8270
NELAP	08/26/2006	Non-Potable Water	Hexachlorobutadiene (1,3-Hexachlorobutadiene)	EPA 8270
NELAP	04/07/2005	Solid and Chemical Materials	Hexachlorocyclopentadiene	EPA 8270
NELAP	08/26/2006	Non-Potable Water	Hexachlorocyclopentadiene	EPA 8270
NELAP	04/07/2005	Solid and Chemical Materials	Hexachloroethane	EPA 8270
NELAP	08/26/2006	Non-Potable Water	Hexachloroethane	EPA 8270
NELAP	08/26/2006	Solid and Chemical Materials	Hexachlorophene	EPA 8270
NELAP	08/26/2006	Non-Potable Water	Hexachlorophene	EPA 8270
NELAP	04/18/2006	Non-Potable Water	Hexachloropropene	EPA 8270
NELAP	08/24/2005	Solid and Chemical Materials	Hexachloropropene	EPA 8270
NELAP	08/26/2006	Non-Potable Water	Indeno(1,2,3-cd)pyrene	EPA 8270
NELAP	04/07/2005	Solid and Chemical Materials	Indeno(1,2,3-cd)pyrene	EPA 8270
NELAP	08/26/2006	Solid and Chemical Materials	Isodrin	EPA 8270
NELAP	08/26/2006	Non-Potable Water	Isodrin	EPA 8270
NELAP	04/07/2005	Solid and Chemical Materials	Isophorone	EPA 8270

NELAP	08/26/2006	Non-Potable Water	Isophorone	EPA 8270
NELAP	08/26/2006	Non-Potable Water	Isosafrole	EPA 8270
NELAP	08/26/2006	Solid and Chemical Materials	Isosafrole	EPA 8270
NELAP	04/18/2006	Solid and Chemical Materials	Kepone	EPA 8270
NELAP	04/18/2006	Non-Potable Water	Kepone	EPA 8270
NELAP	03/01/2007	Solid and Chemical Materials	Malathion	EPA 8270
NELAP	08/26/2006	Non-Potable Water	Malathion	EPA 8270
NELAP	12/05/2007	Solid and Chemical Materials	Methapyrilene	EPA 8270
NELAP	08/26/2006	Non-Potable Water	Methapyrilene	EPA 8270
NELAP	08/26/2006	Non-Potable Water	Methyl methanesulfonate	EPA 8270
NELAP	08/26/2006	Solid and Chemical Materials	Methyl methanesulfonate	EPA 8270
NELAP	04/18/2006	Non-Potable Water	Methyl parathion (Parathion, methyl)	EPA 8270
NELAP	08/24/2005	Solid and Chemical Materials	Methyl parathion (Parathion, methyl)	EPA 8270
NELAP	04/18/2006	Non-Potable Water	N-Nitrosodi-n-butylamine	EPA 8270
NELAP	08/24/2005	Solid and Chemical Materials	N-Nitrosodi-n-butylamine	EPA 8270
NELAP	04/07/2005	Solid and Chemical Materials	N-Nitrosodi-n-propylamine	EPA 8270
NELAP	08/26/2006	Non-Potable Water	N-Nitrosodi-n-propylamine	EPA 8270
NELAP	04/07/2005	Solid and Chemical Materials	N-Nitrosodiethylamine	EPA 8270
NELAP	08/26/2006	Non-Potable Water	N-Nitrosodiethylamine	EPA 8270
NELAP	04/07/2005	Solid and Chemical Materials	N-Nitrosodimethylamine	EPA 8270
NELAP	08/26/2006	Non-Potable Water	N-Nitrosodimethylamine	EPA 8270
NELAP	04/07/2005	Solid and Chemical Materials	N-Nitrosodiphenylamine	EPA 8270
NELAP	08/26/2006	Non-Potable Water	N-Nitrosodiphenylamine	EPA 8270

NELAP	08/24/2005	Solid and Chemical Materials	N-Nitrosomethylethylamine	EPA 8270
NELAP	04/18/2006	Non-Potable Water	N-Nitrosomethylethylamine	EPA 8270
NELAP	08/26/2006	Non-Potable Water	N-Nitrosomorpholine	EPA 8270
NELAP	08/26/2006	Solid and Chemical Materials	N-Nitrosomorpholine	EPA 8270
NELAP	08/26/2006	Non-Potable Water	N-Nitrosopiperidine	EPA 8270
NELAP	08/26/2006	Solid and Chemical Materials	N-Nitrosopiperidine	EPA 8270
NELAP	08/26/2006	Non-Potable Water	N-Nitrosopyrrolidine	EPA 8270
NELAP	04/07/2005	Solid and Chemical Materials	N-Nitrosopyrrolidine	EPA 8270
NELAP	08/26/2006	Non-Potable Water	Naphthalene	EPA 8270
NELAP	04/07/2005	Solid and Chemical Materials	Naphthalene	EPA 8270
NELAP	04/07/2005	Solid and Chemical Materials	Nitrobenzene	EPA 8270
NELAP	08/26/2006	Non-Potable Water	Nitrobenzene	EPA 8270
NELAP	08/26/2006	Solid and Chemical Materials	Nitroquinoline-1-oxide	EPA 8270
NELAP	08/26/2006	Non-Potable Water	Nitroquinoline-1-oxide	EPA 8270
NELAP	08/26/2006	Solid and Chemical Materials	O,O,O-Triethyl phosphorothioate	EPA 8270
NELAP	08/26/2006	Non-Potable Water	O,O,O-Triethyl phosphorothioate	EPA 8270
NELAP	04/18/2006	Non-Potable Water	o-Toluidine (2-Toluidine, 2-Methylaniline)	EPA 8270
NELAP	08/24/2005	Solid and Chemical Materials	o-Toluidine (2-Toluidine, 2-Methylaniline)	EPA 8270
NELAP	08/24/2005	Solid and Chemical Materials	Parathion, ethyl (Ethyl parathion, Parathion)	EPA 8270
NELAP	04/18/2006	Non-Potable Water	Parathion, ethyl (Ethyl parathion, Parathion)	EPA 8270
NELAP	08/24/2005	Solid and Chemical Materials	Pentachlorobenzene	EPA 8270
NELAP	04/18/2006	Non-Potable Water	Pentachlorobenzene	EPA 8270
NELAP	08/24/2005	Solid and Chemical Materials	Pentachloronitrobenzene (PCNB)	EPA 8270

NELAP	04/18/2006	Non-Potable Water	Pentachloronitrobenzene (PCNB)	EPA 8270
NELAP	08/26/2006	Non-Potable Water	Pentachlorophenol (PCP)	EPA 8270
NELAP	04/07/2005	Solid and Chemical Materials	Pentachlorophenol (PCP)	EPA 8270
NELAP	08/26/2006	Solid and Chemical Materials	Phenacetin	EPA 8270
NELAP	08/26/2006	Non-Potable Water	Phenacetin	EPA 8270
NELAP	04/07/2005	Solid and Chemical Materials	Phenanthrene	EPA 8270
NELAP	08/26/2006	Non-Potable Water	Phenanthrene	EPA 8270
NELAP	04/07/2005	Solid and Chemical Materials	Phenol	EPA 8270
NELAP	08/26/2006	Non-Potable Water	Phenol	EPA 8270
NELAP	08/26/2006	Solid and Chemical Materials	Phorate (Thimet)	EPA 8270
NELAP	08/26/2006	Non-Potable Water	Phorate (Thimet)	EPA 8270
NELAP	04/18/2006	Non-Potable Water	Pronamide (Kerb)	EPA 8270
NELAP	08/24/2005	Solid and Chemical Materials	Pronamide (Kerb)	EPA 8270
NELAP	04/07/2005	Solid and Chemical Materials	Pyrene	EPA 8270
NELAP	08/26/2006	Non-Potable Water	Pyrene	EPA 8270
NELAP	04/18/2006	Non-Potable Water	Pyridine	EPA 8270
NELAP	04/18/2006	Solid and Chemical Materials	Pyridine	EPA 8270
NELAP	08/26/2006	Solid and Chemical Materials	Safrole	EPA 8270
NELAP	08/26/2006	Non-Potable Water	Safrole	EPA 8270
NELAP	08/26/2006	Non-Potable Water	Sulfotepp (Tetraethyl dithiopyrophosphate)	EPA 8270
NELAP	08/26/2006	Solid and Chemical Materials	Sulfotepp (Tetraethyl dithiopyrophosphate)	EPA 8270
NELAP	08/26/2006	Solid and Chemical Materials	Thionazine (Thionazin, Zinophos)	EPA 8270
NELAP	08/26/2006	Non-Potable Water	Thionazine (Thionazin, Zinophos)	EPA 8270
NELAP	08/26/2006	Non-Potable Water	Thiophenol (Benzenethiol)	EPA 8270

NELAP	08/26/2006	Solid and Chemical Materials	Thiophenol (Benzenethiol)	EPA 8270
NELAP	04/08/2008	Solid and Chemical Materials	1,2-Dichlorobenzene (o-Dichlorobenzene)	EPA 8270 SIM
NELAP	04/08/2008	Non-Potable Water	1,2-Dichlorobenzene (o-Dichlorobenzene)	EPA 8270 SIM
NELAP	04/08/2008	Solid and Chemical Materials	1,3-Dichlorobenzene (m-Dichlorobenzene)	EPA 8270 SIM
NELAP	04/08/2008	Non-Potable Water	1,3-Dichlorobenzene (m-Dichlorobenzene)	EPA 8270 SIM
NELAP	04/08/2008	Non-Potable Water	1,4-Dichlorobenzene (p-Dichlorobenzene)	EPA 8270 SIM
NELAP	04/08/2008	Solid and Chemical Materials	1,4-Dichlorobenzene (p-Dichlorobenzene)	EPA 8270 SIM
NELAP	04/08/2008	Solid and Chemical Materials	2,4-Dichlorophenol	EPA 8270 SIM
NELAP	04/08/2008	Non-Potable Water	2,4-Dichlorophenol	EPA 8270 SIM
NELAP	04/08/2008	Non-Potable Water	2-Chloronaphthalene	EPA 8270 SIM
NELAP	10/13/2010	Solid and Chemical Materials	2-Chloronaphthalene	EPA 8270 SIM
NELAP	04/08/2008	Non-Potable Water	2-Methylnaphthalene	EPA 8270 SIM
NELAP	04/08/2008	Solid and Chemical Materials	2-Methylnaphthalene	EPA 8270 SIM
NELAP	04/08/2008	Non-Potable Water	3,3'-Dichlorobenzidine	EPA 8270 SIM
NELAP	04/08/2008	Solid and Chemical Materials	3,3'-Dichlorobenzidine	EPA 8270 SIM
NELAP	04/08/2008	Non-Potable Water	Acenaphthene	EPA 8270 SIM
NELAP	04/08/2008	Solid and Chemical Materials	Acenaphthene	EPA 8270 SIM
NELAP	04/08/2008	Solid and Chemical Materials	Acenaphthylene	EPA 8270 SIM
NELAP	10/27/2010	Non-Potable Water	Acenaphthylene	EPA 8270 SIM
NELAP	04/08/2008	Non-Potable Water	Anthracene	EPA 8270 SIM
NELAP	04/08/2008	Solid and Chemical Materials	Anthracene	EPA 8270 SIM
NELAP	04/08/2008	Solid and Chemical Materials	Benzo[a]anthracene	EPA 8270 SIM
NELAP	04/08/2008	Non-Potable Water	Benzo[a]anthracene	EPA 8270 SIM

NELAP	04/08/2008	Solid and Chemical Materials	Benzo[a]pyrene	EPA 8270 SIM
NELAP	04/08/2008	Non-Potable Water	Benzo[a]pyrene	EPA 8270 SIM
NELAP	04/08/2008	Solid and Chemical Materials	Benzo[b]fluoranthene	EPA 8270 SIM
NELAP	04/08/2008	Non-Potable Water	Benzo[b]fluoranthene	EPA 8270 SIM
NELAP	04/08/2008	Non-Potable Water	Benzo[ghi]perylene	EPA 8270 SIM
NELAP	04/08/2008	Solid and Chemical Materials	Benzo[ghi]perylene	EPA 8270 SIM
NELAP	04/08/2008	Solid and Chemical Materials	Benzo[k]fluoranthene	EPA 8270 SIM
NELAP	04/08/2008	Non-Potable Water	Benzo[k]fluoranthene	EPA 8270 SIM
NELAP	04/08/2008	Solid and Chemical Materials	bis(2-Chloroethyl) ether	EPA 8270 SIM
NELAP	04/08/2008	Non-Potable Water	bis(2-Chloroethyl) ether	EPA 8270 SIM
NELAP	04/08/2008	Solid and Chemical Materials	bis(2-Chloroisopropyl) ether	EPA 8270 SIM
NELAP	04/08/2008	Non-Potable Water	bis(2-Chloroisopropyl) ether	EPA 8270 SIM
NELAP	04/08/2008	Solid and Chemical Materials	Carbazole	EPA 8270 SIM
NELAP	04/08/2008	Non-Potable Water	Carbazole	EPA 8270 SIM
NELAP	04/08/2008	Non-Potable Water	Chrysene (Benzo[a]phenanthrene)	EPA 8270 SIM
NELAP	04/08/2008	Solid and Chemical Materials	Chrysene (Benzo[a]phenanthrene)	EPA 8270 SIM
NELAP	04/08/2008	Solid and Chemical Materials	Dibenzo[a,h]anthracene	EPA 8270 SIM
NELAP	04/08/2008	Non-Potable Water	Dibenzo[a,h]anthracene	EPA 8270 SIM
NELAP	04/08/2008	Solid and Chemical Materials	Fluoranthene	EPA 8270 SIM
NELAP	04/08/2008	Non-Potable Water	Fluoranthene	EPA 8270 SIM
NELAP	04/08/2008	Non-Potable Water	Fluorene	EPA 8270 SIM
NELAP	04/08/2008	Solid and Chemical Materials	Fluorene	EPA 8270 SIM
NELAP	04/08/2008	Solid and Chemical Materials	Hexachlorobenzene	EPA 8270 SIM

NELAP	04/08/2008	Non-Potable Water	Hexachlorobenzene	EPA 8270 SIM
NELAP	04/08/2008	Non-Potable Water	Hexachlorobutadiene (1,3-Hexachlorobutadiene)	EPA 8270 SIM
NELAP	04/08/2008	Solid and Chemical Materials	Hexachlorobutadiene (1,3-Hexachlorobutadiene)	EPA 8270 SIM
NELAP	04/08/2008	Solid and Chemical Materials	Indeno(1,2,3-cd)pyrene	EPA 8270 SIM
NELAP	04/08/2008	Non-Potable Water	Indeno(1,2,3-cd)pyrene	EPA 8270 SIM
NELAP	04/08/2008	Non-Potable Water	N-Nitrosodi-n-propylamine	EPA 8270 SIM
NELAP	04/08/2008	Solid and Chemical Materials	N-Nitrosodi-n-propylamine	EPA 8270 SIM
NELAP	04/08/2008	Solid and Chemical Materials	Naphthalene	EPA 8270 SIM
NELAP	04/08/2008	Non-Potable Water	Naphthalene	EPA 8270 SIM
NELAP	04/08/2008	Solid and Chemical Materials	Nitrobenzene	EPA 8270 SIM
NELAP	04/08/2008	Non-Potable Water	Nitrobenzene	EPA 8270 SIM
NELAP	04/08/2008	Solid and Chemical Materials	Pentachlorophenol (PCP)	EPA 8270 SIM
NELAP	04/08/2008	Non-Potable Water	Pentachlorophenol (PCP)	EPA 8270 SIM
NELAP	04/08/2008	Non-Potable Water	Phenanthrene	EPA 8270 SIM
NELAP	04/08/2008	Solid and Chemical Materials	Phenanthrene	EPA 8270 SIM
NELAP	04/08/2008	Solid and Chemical Materials	Phenol	EPA 8270 SIM
NELAP	04/08/2008	Non-Potable Water	Phenol	EPA 8270 SIM
NELAP	04/08/2008	Non-Potable Water	Pyrene	EPA 8270 SIM
NELAP	04/08/2008	Solid and Chemical Materials	Pyrene	EPA 8270 SIM
NELAP	04/09/2009	Solid and Chemical Materials	1,4-Dioxane (1,4-Diethyleneoxide)	EPA 8270 SIM-Extended
NELAP	04/08/2009	Non-Potable Water	1,4-Dioxane (1,4-Diethyleneoxide)	EPA 8270 SIM-Extended
NELAP	04/08/2008	Solid and Chemical Materials	1,4-Dithiane (Diethylene disulfide)	EPA 8270 SIM-Extended
NELAP	04/08/2008	Non-Potable Water	1,4-Dithiane (Diethylene disulfide)	EPA 8270 SIM-Extended
NELAP	04/08/2008	Non-Potable Water	1,4-Oxathiane	EPA 8270 SIM-Extended

NELAP	04/08/2008	Solid and Chemical Materials	1,4-Oxathiane	EPA 8270 SIM-Extended
NELAP	04/08/2008	Non-Potable Water	1-Methylnaphthalene	EPA 8270 SIM-Extended
NELAP	04/08/2008	Solid and Chemical Materials	1-Methylnaphthalene	EPA 8270 SIM-Extended
NELAP	04/09/2009	Solid and Chemical Materials	2,2'-Oxybis(1-chloropropane) (bis(2-Chloro-1-methylethyl) ether)	EPA 8270 SIM-Extended
NELAP	04/08/2009	Non-Potable Water	2,2'-Oxybis(1-chloropropane) (bis(2-Chloro-1-methylethyl) ether)	EPA 8270 SIM-Extended
NELAP	04/08/2008	Non-Potable Water	Benzothiazole	EPA 8270 SIM-Extended
NELAP	04/08/2008	Solid and Chemical Materials	Benzothiazole	EPA 8270 SIM-Extended
NELAP	04/08/2008	Non-Potable Water	Dimethyl disulfide	EPA 8270 SIM-Extended
NELAP	04/08/2008	Solid and Chemical Materials	Dimethyl disulfide	EPA 8270 SIM-Extended
NELAP	04/08/2008	Solid and Chemical Materials	p-Chlorophenyl methyl sulfide	EPA 8270 SIM-Extended
NELAP	04/08/2008	Non-Potable Water	p-Chlorophenyl methyl sulfide	EPA 8270 SIM-Extended
NELAP	04/08/2008	Solid and Chemical Materials	p-Chlorophenyl methyl sulfone	EPA 8270 SIM-Extended
NELAP	04/08/2008	Non-Potable Water	p-Chlorophenyl methyl sulfone	EPA 8270 SIM-Extended
NELAP	04/08/2008	Non-Potable Water	p-Chlorophenyl methyl sulfoxide	EPA 8270 SIM-Extended
NELAP	04/08/2008	Solid and Chemical Materials	p-Chlorophenyl methyl sulfoxide	EPA 8270 SIM-Extended
NELAP	04/08/2009	Solid and Chemical Materials	SOCs by GC/MS	EPA 8270C
NELAP	04/08/2009	Non-Potable Water	SOCs by GC/MS	EPA 8270C
NELAP	04/08/2009	Non-Potable Water	SOCs by GC/MS	EPA 8270D
NELAP	04/09/2009	Solid and Chemical Materials	SOCs by GC/MS	EPA 8270D
NELAP	04/18/2006	Solid and Chemical Materials	1,1'-Biphenyl (Biphenyl, Lemonene)	EPA 8270-Extended
NELAP	04/18/2006	Non-Potable Water	1,1'-Biphenyl (Biphenyl, Lemonene)	EPA 8270-Extended
NELAP	08/26/2006	Non-Potable Water	1,2,3,4-Tetrachlorobenzene	EPA 8270-Extended
NELAP	08/26/2006	Solid and Chemical Materials	1,2,3,4-Tetrachlorobenzene	EPA 8270-Extended

NELAP	08/26/2006	Non-Potable Water	1,2,3,5-Tetrachlorobenzene	EPA 8270-Extended
NELAP	08/26/2006	Solid and Chemical Materials	1,2,3,5-Tetrachlorobenzene	EPA 8270-Extended
NELAP	08/26/2006	Non-Potable Water	1,3,5-Trichlorobenzene	EPA 8270-Extended
NELAP	08/26/2006	Solid and Chemical Materials	1,3,5-Trichlorobenzene	EPA 8270-Extended
NELAP	08/24/2005	Solid and Chemical Materials	1,4-Dioxane (1,4-Diethyleneoxide)	EPA 8270-Extended
NELAP	04/18/2006	Non-Potable Water	1,4-Dioxane (1,4-Diethyleneoxide)	EPA 8270-Extended
NELAP	12/05/2007	Solid and Chemical Materials	1,4-Phenylenediamine	EPA 8270-Extended
NELAP	12/05/2007	Non-Potable Water	1,4-Phenylenediamine	EPA 8270-Extended
NELAP	04/08/2009	Non-Potable Water	1-Methylnaphthalene	EPA 8270-Extended
NELAP	04/09/2009	Solid and Chemical Materials	1-Methylnaphthalene	EPA 8270-Extended
NELAP	04/18/2006	Solid and Chemical Materials	2,2'-Oxybis(1-chloropropane) (bis(2-Chloro-1-methylethyl) ether)	EPA 8270-Extended
NELAP	04/18/2006	Non-Potable Water	2,2'-Oxybis(1-chloropropane) (bis(2-Chloro-1-methylethyl) ether)	EPA 8270-Extended
NELAP	08/26/2006	Solid and Chemical Materials	2,3,5,6-Tetrachlorophenol	EPA 8270-Extended
NELAP	08/26/2006	Non-Potable Water	2,3,5,6-Tetrachlorophenol	EPA 8270-Extended
NELAP	08/26/2006	Non-Potable Water	2,3,7,8-TCDD (Dioxin) (screen)	EPA 8270-Extended
NELAP	08/26/2006	Solid and Chemical Materials	2,3,7,8-TCDD (Dioxin) (screen)	EPA 8270-Extended
NELAP	12/05/2007	Solid and Chemical Materials	2,3-Dichlorophenol (Dichlorophenol)	EPA 8270-Extended
NELAP	12/05/2007	Non-Potable Water	2,3-Dichlorophenol (Dichlorophenol)	EPA 8270-Extended
NELAP	04/09/2009	Solid and Chemical Materials	2,4,6-Tribromophenol	EPA 8270-Extended
NELAP	04/08/2009	Non-Potable Water	2,4,6-Tribromophenol	EPA 8270-Extended
NELAP	12/05/2007	Non-Potable Water	2,5-Dichlorophenol	EPA 8270-Extended
NELAP	12/05/2007	Solid and Chemical Materials	2,5-Dichlorophenol	EPA 8270-Extended
NELAP	04/09/2009	Solid and Chemical Materials	2-Phenylphenol	EPA 8270-Extended

NELAP	04/08/2009	Non-Potable Water	2-Phenylphenol	EPA 8270-Extended
NELAP	08/26/2006	Non-Potable Water	3-Nitrotoluene	EPA 8270-Extended
NELAP	08/26/2006	Non-Potable Water	4-Chlorophenol	EPA 8270-Extended
NELAP	08/26/2006	Solid and Chemical Materials	4-Chlorophenol	EPA 8270-Extended
NELAP	08/26/2006	Non-Potable Water	4-Nitrotoluene	EPA 8270-Extended
NELAP	08/26/2006	Solid and Chemical Materials	4-Nitrotoluene	EPA 8270-Extended
NELAP	12/05/2007	Non-Potable Water	6-Methylchrysene	EPA 8270-Extended
NELAP	12/05/2007	Solid and Chemical Materials	6-Methylchrysene	EPA 8270-Extended
NELAP	04/09/2009	Solid and Chemical Materials	alpha-Terpineol	EPA 8270-Extended
NELAP	04/08/2009	Non-Potable Water	alpha-Terpineol	EPA 8270-Extended
NELAP	04/18/2006	Non-Potable Water	Atrazine	EPA 8270-Extended
NELAP	04/18/2006	Solid and Chemical Materials	Atrazine	EPA 8270-Extended
NELAP	08/26/2006	Non-Potable Water	Benzaldehyde	EPA 8270-Extended
NELAP	08/26/2006	Solid and Chemical Materials	Benzaldehyde	EPA 8270-Extended
NELAP	12/05/2007	Solid and Chemical Materials	bis(2-Hydroxyphenyl) methane (2,2'-Methylenediphenol)	EPA 8270-Extended
NELAP	12/05/2007	Non-Potable Water	bis(2-Hydroxyphenyl) methane (2,2'-Methylenediphenol)	EPA 8270-Extended
NELAP	12/05/2007	Non-Potable Water	bis(4-Hydroxyphenyl) methane	EPA 8270-Extended
NELAP	12/05/2007	Solid and Chemical Materials	bis(4-Hydroxyphenyl) methane	EPA 8270-Extended
NELAP	04/18/2006	Non-Potable Water	Caprolactam	EPA 8270-Extended
NELAP	04/18/2006	Solid and Chemical Materials	Caprolactam	EPA 8270-Extended
NELAP	08/26/2006	Non-Potable Water	Di-n-propyl phthalate	EPA 8270-Extended
NELAP	04/09/2009	Solid and Chemical Materials	Diallate-A	EPA 8270-Extended
NELAP	04/08/2009	Non-Potable Water	Diallate-A	EPA 8270-Extended
NELAP	04/09/2009	Solid and Chemical Materials	Diallate-B	EPA 8270-Extended

NELAP	04/08/2009	Non-Potable Water	Diallate-B	EPA 8270-Extended
NELAP	12/05/2007	Solid and Chemical Materials	Dibenz[a,h]acridine	EPA 8270-Extended
NELAP	12/05/2007	Non-Potable Water	Dibenz[a,h]acridine	EPA 8270-Extended
NELAP	04/09/2009	Solid and Chemical Materials	Indene	EPA 8270-Extended
NELAP	04/08/2009	Non-Potable Water	Indene	EPA 8270-Extended
NELAP	04/08/2009	Non-Potable Water	n-Octadecane	EPA 8270-Extended
NELAP	04/09/2009	Solid and Chemical Materials	n-Octadecane	EPA 8270-Extended
NELAP	12/05/2007	Solid and Chemical Materials	Octachlorocyclopentene (Perchlorocyclopentene)	EPA 8270-Extended
NELAP	12/05/2007	Non-Potable Water	Octachlorocyclopentene (Perchlorocyclopentene)	EPA 8270-Extended
NELAP	12/05/2007	Solid and Chemical Materials	Octachlorostyrene	EPA 8270-Extended
NELAP	12/05/2007	Non-Potable Water	Octachlorostyrene	EPA 8270-Extended
NELAP	04/09/2009	Solid and Chemical Materials	p-(Dimethylamino)azobenzene	EPA 8270-Extended
NELAP	04/08/2009	Non-Potable Water	p-(Dimethylamino)azobenzene	EPA 8270-Extended
NELAP	12/05/2007	Non-Potable Water	p-Chlorobenzilate (Ethyl 4,4'-dichlorobenzilate)	EPA 8270-Extended
NELAP	12/05/2007	Solid and Chemical Materials	p-Chlorobenzilate (Ethyl 4,4'-dichlorobenzilate)	EPA 8270-Extended
NELAP	04/09/2009	Solid and Chemical Materials	p-Phenylenediamine	EPA 8270-Extended
NELAP	04/08/2009	Non-Potable Water	p-Phenylenediamine	EPA 8270-Extended
NELAP	08/26/2006	Non-Potable Water	Pentachloroethane	EPA 8270-Extended
NELAP	08/26/2006	Solid and Chemical Materials	Pentachloroethane	EPA 8270-Extended
NELAP	04/07/2005	Solid and Chemical Materials	Acenaphthene	EPA 8310
NELAP	08/26/2006	Non-Potable Water	Acenaphthene	EPA 8310
NELAP	08/26/2006	Non-Potable Water	Acenaphthylene	EPA 8310
NELAP	04/07/2005	Solid and Chemical Materials	Acenaphthylene	EPA 8310
NELAP	08/26/2006	Non-Potable Water	Anthracene	EPA 8310

NELAP	04/07/2005	Solid and Chemical Materials	Anthracene	EPA 8310
NELAP	04/07/2005	Solid and Chemical Materials	Benzo[a]anthracene	EPA 8310
NELAP	08/26/2006	Non-Potable Water	Benzo[a]anthracene	EPA 8310
NELAP	08/26/2006	Non-Potable Water	Benzo[a]pyrene	EPA 8310
NELAP	04/07/2005	Solid and Chemical Materials	Benzo[a]pyrene	EPA 8310
NELAP	04/07/2005	Solid and Chemical Materials	Benzo[b]fluoranthene	EPA 8310
NELAP	08/26/2006	Non-Potable Water	Benzo[b]fluoranthene	EPA 8310
NELAP	08/26/2006	Non-Potable Water	Benzo[ghi]perylene	EPA 8310
NELAP	04/07/2005	Solid and Chemical Materials	Benzo[ghi]perylene	EPA 8310
NELAP	08/26/2006	Non-Potable Water	Benzo[k]fluoranthene	EPA 8310
NELAP	04/07/2005	Solid and Chemical Materials	Benzo[k]fluoranthene	EPA 8310
NELAP	08/26/2006	Non-Potable Water	Chrysene (Benzo[a]phenanthrene)	EPA 8310
NELAP	04/07/2005	Solid and Chemical Materials	Chrysene (Benzo[a]phenanthrene)	EPA 8310
NELAP	08/26/2006	Non-Potable Water	Dibenzo[a,h]anthracene	EPA 8310
NELAP	04/07/2005	Solid and Chemical Materials	Dibenzo[a,h]anthracene	EPA 8310
NELAP	04/07/2005	Solid and Chemical Materials	Fluoranthene	EPA 8310
NELAP	08/26/2006	Non-Potable Water	Fluoranthene	EPA 8310
NELAP	04/07/2005	Solid and Chemical Materials	Fluorene	EPA 8310
NELAP	08/26/2006	Non-Potable Water	Fluorene	EPA 8310
NELAP	04/07/2005	Solid and Chemical Materials	Indeno(1,2,3-cd)pyrene	EPA 8310
NELAP	08/26/2006	Non-Potable Water	Indeno(1,2,3-cd)pyrene	EPA 8310
NELAP	04/07/2005	Solid and Chemical Materials	Naphthalene	EPA 8310
NELAP	08/26/2006	Non-Potable Water	Naphthalene	EPA 8310

NELAP	04/07/2005	Solid and Chemical Materials	Phenanthrene	EPA 8310
NELAP	08/26/2006	Non-Potable Water	Phenanthrene	EPA 8310
NELAP	08/26/2006	Non-Potable Water	Pyrene	EPA 8310
NELAP	04/07/2005	Solid and Chemical Materials	Pyrene	EPA 8310
NELAP	08/26/2006	Solid and Chemical Materials	1-Methylnaphthalene	EPA 8310-Extended
NELAP	08/26/2006	Non-Potable Water	1-Methylnaphthalene	EPA 8310-Extended
NELAP	08/26/2006	Solid and Chemical Materials	2-Methylnaphthalene	EPA 8310-Extended
NELAP	05/20/2011	Non-Potable Water	2-Methylnaphthalene	EPA 8310-Extended
NELAP	08/26/2006	Non-Potable Water	Carbazole	EPA 8310-Extended
NELAP	08/26/2006	Solid and Chemical Materials	Carbazole	EPA 8310-Extended
NELAP	04/08/2009	Non-Potable Water	Resorcinol (1,3-Dihydroxybenzene)	EPA 8310-Extended
NELAP	04/09/2009	Solid and Chemical Materials	Resorcinol (1,3-Dihydroxybenzene)	EPA 8310-Extended
NELAP	04/09/2009	Solid and Chemical Materials	Total cyanide	EPA 9010B
NELAP	12/05/2007	Non-Potable Water	Total cyanide	EPA 9010B
NELAP	10/22/2007	Solid and Chemical Materials	Total cyanide	EPA 9010C
NELAP	03/16/2009	Non-Potable Water	Total cyanide	EPA 9010C
NELAP	04/07/2005	Solid and Chemical Materials	Total cyanide	EPA 9012
NELAP	08/26/2006	Non-Potable Water	Total cyanide	EPA 9012
NELAP	04/09/2009	Solid and Chemical Materials	Total cyanide	EPA 9012A
NELAP	04/09/2009	Non-Potable Water	Total cyanide	EPA 9012A
NELAP	04/09/2009	Solid and Chemical Materials	Total cyanide	EPA 9012B
NELAP	03/16/2009	Non-Potable Water	Total cyanide	EPA 9012B
NELAP	12/05/2007	Solid and Chemical Materials	Cyanide extraction for solids and oils	EPA 9013

NELAP	04/22/2010	Solid and Chemical Materials	Cyanide extraction for solids and oils	EPA 9013A
NELAP	04/07/2005	Solid and Chemical Materials	Sulfide	EPA 9030B
NELAP	08/26/2006	Non-Potable Water	Sulfide	EPA 9030B
NELAP	08/26/2006	Non-Potable Water	Sulfide	EPA 9034
NELAP	04/07/2005	Solid and Chemical Materials	Sulfide	EPA 9034
NELAP	04/18/2006	Solid and Chemical Materials	Corrosivity (pH)	EPA 9040B
NELAP	04/18/2006	Non-Potable Water	pH	EPA 9040B
NELAP	04/07/2005	Solid and Chemical Materials	pH	EPA 9040B
NELAP	08/26/2006	Non-Potable Water	Corrosivity	EPA 9040C
NELAP	04/09/2009	Solid and Chemical Materials	pH	EPA 9040C
NELAP	08/26/2006	Solid and Chemical Materials	pH	EPA 9041
NELAP	04/07/2005	Solid and Chemical Materials	pH	EPA 9045C
NELAP	04/09/2009	Solid and Chemical Materials	pH	EPA 9045D
NELAP	08/26/2006	Non-Potable Water	Conductivity	EPA 9050
NELAP	03/16/2009	Non-Potable Water	Conductivity	EPA 9050A
NELAP	03/16/2009	Non-Potable Water	Anions by IC	EPA 9056
NELAP	04/09/2009	Solid and Chemical Materials	Anions by IC	EPA 9056
NELAP	08/26/2006	Solid and Chemical Materials	Bromide	EPA 9056
NELAP	08/26/2006	Non-Potable Water	Bromide	EPA 9056
NELAP	04/07/2005	Solid and Chemical Materials	Chloride	EPA 9056
NELAP	08/26/2006	Non-Potable Water	Chloride	EPA 9056
NELAP	08/26/2006	Non-Potable Water	Fluoride	EPA 9056
NELAP	04/07/2005	Solid and Chemical Materials	Fluoride	EPA 9056

NELAP	08/26/2006	Non-Potable Water	Nitrate	EPA 9056
NELAP	04/07/2005	Solid and Chemical Materials	Nitrate	EPA 9056
NELAP	08/26/2006	Non-Potable Water	Nitrite	EPA 9056
NELAP	04/07/2005	Solid and Chemical Materials	Nitrite	EPA 9056
NELAP	01/26/2009	Solid and Chemical Materials	Orthophosphate as P	EPA 9056
NELAP	08/26/2006	Non-Potable Water	Orthophosphate as P	EPA 9056
NELAP	08/26/2006	Non-Potable Water	Sulfate	EPA 9056
NELAP	04/07/2005	Solid and Chemical Materials	Sulfate	EPA 9056
NELAP	08/26/2006	Solid and Chemical Materials	Total nitrate-nitrite	EPA 9056
NELAP	03/16/2009	Non-Potable Water	Anions by IC	EPA 9056A
NELAP	04/09/2009	Solid and Chemical Materials	Anions by IC	EPA 9056A
NELAP	08/26/2006	Non-Potable Water	Total organic carbon (TOC)	EPA 9060
NELAP	04/07/2005	Solid and Chemical Materials	Total organic carbon (TOC)	EPA 9060
NELAP	04/22/2010	Non-Potable Water	Total organic carbon (TOC)	EPA 9060A
NELAP	12/05/2007	Solid and Chemical Materials	Total phenolics	EPA 9065
NELAP	04/08/2008	Non-Potable Water	Total phenolics	EPA 9065
NELAP	04/07/2005	Solid and Chemical Materials	Total phenolics	EPA 9066
NELAP	08/26/2006	Non-Potable Water	Total phenolics	EPA 9066
NELAP	04/04/2007	Solid and Chemical Materials	Oil and grease	EPA 9070
NELAP	04/04/2007	Non-Potable Water	Oil and grease	EPA 9070A
NELAP	12/05/2007	Solid and Chemical Materials	Oil and grease	EPA 9071
NELAP	04/09/2009	Solid and Chemical Materials	Oil and grease	EPA 9071B
NELAP	04/09/2009	Solid and Chemical Materials	Total chlorine	EPA 9077

NELAP	04/04/2007	Solid and Chemical Materials	Paint filter liquids test	EPA 9095A
NELAP	04/09/2009	Solid and Chemical Materials	Paint filter liquids test	EPA 9095B
NELAP	05/04/2009	Solid and Chemical Materials	Acid volatile sulfide (AVS)	EPA AVS and SEM Procedure
NELAP	05/04/2009	Solid and Chemical Materials	Cadmium	EPA AVS and SEM Procedure
NELAP	05/04/2009	Solid and Chemical Materials	Copper	EPA AVS and SEM Procedure
NELAP	05/04/2009	Solid and Chemical Materials	Lead	EPA AVS and SEM Procedure
NELAP	05/04/2009	Solid and Chemical Materials	Mercury	EPA AVS and SEM Procedure
NELAP	05/04/2009	Solid and Chemical Materials	Nickel	EPA AVS and SEM Procedure
NELAP	05/04/2009	Solid and Chemical Materials	Zinc	EPA AVS and SEM Procedure
NELAP	09/27/2007	Solid and Chemical Materials	Total organic carbon (TOC)	EPA Lloyd Kahn Method
NELAP	08/24/2005	Non-Potable Water	Available (free) cyanide	OIA 1677
NELAP	04/18/2006	Solid and Chemical Materials	Available (free) cyanide	OIA 1677
NELAP	12/05/2007	Non-Potable Water	Chemical oxygen demand (COD)	OTHER HACH 8000
NELAP	04/10/2007	Non-Potable Water	Color	SM 2120 B
NELAP	01/22/2007	Non-Potable Water	Acidity as CaCO3	SM 2310 B
NELAP	01/22/2007	Non-Potable Water	Alkalinity as CaCO3	SM 2320 B
NELAP	04/18/2006	Non-Potable Water	Total hardness as CaCO3	SM 2340 B
NELAP	01/22/2007	Non-Potable Water	Total hardness as CaCO3	SM 2340 C
NELAP	04/21/2010	Non-Potable Water	Conductivity	SM 2510 B
NELAP	04/08/2008	Solid and Chemical Materials	Salinity	SM 2520 B
NELAP	04/08/2008	Non-Potable Water	Salinity	SM 2520 B
NELAP	04/10/2007	Non-Potable Water	Residue, total	SM 2540 B
NELAP	04/08/2008	Solid and Chemical Materials	Residue, total	SM 2540 B

NELAP	10/13/2010	Non-Potable Water	Residue, filterable (TDS)	SM 2540 C
NELAP	04/10/2007	Non-Potable Water	Residue, nonfilterable (TSS)	SM 2540 D
NELAP	04/13/2009	Non-Potable Water	Fixed suspended solids	SM 2540 E
NELAP	04/13/2009	Non-Potable Water	Volatile suspended solids	SM 2540 E
NELAP	04/10/2007	Non-Potable Water	Residue, settleable	SM 2540 F
NELAP	04/13/2009	Solid and Chemical Materials	Percent moisture in soil	SM 2540 G
NELAP	12/05/2007	Solid and Chemical Materials	Residue, total	SM 2540 G
NELAP	08/26/2006	Non-Potable Water	Residue, volatile	SM 2540 G
NELAP	03/16/2009	Non-Potable Water	Temperature, deg. C	SM 2550 B
NELAP	05/04/2009	Non-Potable Water	Oxidation-reduction potential	SM 2580B
NELAP	08/24/2005	Non-Potable Water	Chromium VI	SM 3500-Cr B (20th ed.)
NELAP	04/07/2005	Non-Potable Water	Chromium VI	SM 3500-Cr D
NELAP	04/10/2007	Non-Potable Water	Chloride	SM 4500-Cl- E
NELAP	04/08/2008	Non-Potable Water	Total residual chlorine	SM 4500-Cl G
NELAP	04/10/2007	Non-Potable Water	pH	SM 4500-H+ B
NELAP	03/16/2009	Non-Potable Water	Oxygen (dissolved)	SM 4500-O G
NELAP	04/10/2007	Non-Potable Water	Sulfide	SM 4500-S F
NELAP	06/24/2008	Non-Potable Water	Biochemical oxygen demand (BOD)	SM 5210 B
NELAP	08/26/2006	Non-Potable Water	Carbonaceous BOD (CBOD)	SM 5210 B
NELAP	07/12/2010	Solid and Chemical Materials	Dissolved organic carbon (DOC)	SM 5310 C
NELAP	07/12/2010	Non-Potable Water	Dissolved organic carbon (DOC)	SM 5310 C
NELAP	07/12/2010	Non-Potable Water	Total inorganic carbon	SM 5310 C
NELAP	07/12/2010	Solid and Chemical Materials	Total inorganic carbon	SM 5310 C
NELAP	07/12/2010	Non-Potable Water	Total organic carbon (TOC)	SM 5310 C
NELAP	02/01/2011	Non-Potable Water	Surfactants as MBAS	SM 5540 C
NELAP	04/13/2009	Solid and Chemical Materials	Percent lipids	TestAmerica Pittsburgh SOP PITT-OP-011

NELAP	04/13/2009	Solid and Chemical Materials	1,1,1-Trichloroethane	TestAmerica Pittsburgh SOP PT-GC-001 (EPA 8015 Modified)
NELAP	04/13/2009	Solid and Chemical Materials	1,4-Dichlorobenzene (p-Dichlorobenzene)	TestAmerica Pittsburgh SOP PT-GC-001 (EPA 8015 Modified)
NELAP	04/13/2009	Solid and Chemical Materials	4-Bromochlorobenzene	TestAmerica Pittsburgh SOP PT-GC-001 (EPA 8015 Modified)
NELAP	04/13/2009	Non-Potable Water	Diethylene glycol, diethyl ether	TestAmerica Pittsburgh SOP PT-GC-001 (EPA 8015 Modified)
NELAP	04/13/2009	Non-Potable Water	Diethylene glycol, dimethyl ether	TestAmerica Pittsburgh SOP PT-GC-001 (EPA 8015 Modified)
NELAP	04/13/2009	Non-Potable Water	Ethylene glycol, dimethyl ether	TestAmerica Pittsburgh SOP PT-GC-001 (EPA 8015 Modified)
NELAP	04/13/2009	Non-Potable Water	Ethylene glycol, monobutyl ether acetate	TestAmerica Pittsburgh SOP PT-GC-001 (EPA 8015 Modified)
NELAP	04/13/2009	Non-Potable Water	Ethylene glycol, monoethyl ether acetate	TestAmerica Pittsburgh SOP PT-GC-001 (EPA 8015 Modified)
NELAP	04/13/2009	Non-Potable Water	Ethylene glycol, monomethyl ether acetate	TestAmerica Pittsburgh SOP PT-GC-001 (EPA 8015 Modified)
NELAP	04/13/2009	Solid and Chemical Materials	Methanol	TestAmerica Pittsburgh SOP PT-GC-001 (EPA 8015 Modified)
NELAP	04/13/2009	Solid and Chemical Materials	Methylene chloride (Dichloromethane)	TestAmerica Pittsburgh SOP PT-GC-001 (EPA 8015 Modified)
NELAP	04/13/2009	Solid and Chemical Materials	Tetrachloroethene (PCE, Perchloroethylene)	TestAmerica Pittsburgh SOP PT-GC-001 (EPA 8015 Modified)
NELAP	04/13/2009	Solid and Chemical Materials	Trichloroethene (TCE, Trichloroethylene)	TestAmerica Pittsburgh SOP PT-GC-001 (EPA 8015 Modified)
NELAP	04/13/2009	Solid and Chemical Materials	Triethylamine	TestAmerica Pittsburgh SOP PT-GC-001 (EPA 8015 Modified)
NELAP	04/08/2008	Solid and Chemical Materials	Total organic carbon (TOC)	Walkley Black

pennsylvania
DEPARTMENT OF ENVIRONMENTAL PROTECTION

Accredited Labs Report

10/14/2011 4:10:33 PM

68-04569

Cape Fear Analytical LLC
3306 Kitty Hawk Road
Suite 120
Wilmington, NC 28405-8784
(910) 795-0421

TYPE	EFFECTIVE DATE	MATRIX	ANALYTE	METHOD
NELAP	06/24/2011	Non-Potable Water	1,2,3,4,6,7,8,9-Octachlorodibenzo-p-dioxin (OCDD)	EPA 1613
NELAP	06/24/2011	Non-Potable Water	1,2,3,4,6,7,8,9-Octachlorodibenzofuran (OCDF)	EPA 1613
NELAP	06/24/2011	Non-Potable Water	1,2,3,4,6,7,8-Heptachlorodibenzo-p-dioxin (1,2,3,4,6,7,8-hpcdd)	EPA 1613
NELAP	06/24/2011	Non-Potable Water	1,2,3,4,6,7,8-Heptachlorodibenzofuran (1,2,3,4,6,7,8-hpcdf)	EPA 1613
NELAP	06/24/2011	Non-Potable Water	1,2,3,4,7,8,9-Heptachlorodibenzofuran (1,2,3,4,7,8,9-hpcdf)	EPA 1613
NELAP	06/24/2011	Non-Potable Water	1,2,3,4,7,8-Hexachlorodibenzo-p-dioxin (HxCDD)	EPA 1613
NELAP	06/24/2011	Non-Potable Water	1,2,3,4,7,8-Hexachlorodibenzofuran (HxCDF)	EPA 1613
NELAP	06/24/2011	Non-Potable Water	1,2,3,6,7,8-Hexachlorodibenzo-p-dioxin (HxCDD)	EPA 1613
NELAP	06/24/2011	Non-Potable Water	1,2,3,6,7,8-Hexachlorodibenzofuran (HxCDF)	EPA 1613
NELAP	06/24/2011	Non-Potable Water	1,2,3,7,8,9-Hexachlorodibenzo-p-dioxin (HxCDD)	EPA 1613
NELAP	06/24/2011	Non-Potable Water	1,2,3,7,8,9-Hexachlorodibenzofuran (HxCDF)	EPA 1613
NELAP	06/24/2011	Non-Potable Water	1,2,3,7,8-Pentachlorodibenzo-p-dioxin (PeCDD)	EPA 1613
NELAP	06/24/2011	Non-Potable Water	1,2,3,7,8-Pentachlorodibenzofuran (PeCDF)	EPA 1613
NELAP	06/24/2011	Non-Potable Water	2,3,4,6,7,8-Hexachlorodibenzofuran (HxCDF)	EPA 1613
NELAP	06/24/2011	Non-Potable Water	2,3,4,7,8-Pentachlorodibenzofuran (PeCDF)	EPA 1613
NELAP	06/24/2011	Non-Potable Water	2,3,7,8-TCDD (Dioxin)	EPA 1613
NELAP	09/08/2010	Drinking Water	2,3,7,8-TCDD (Dioxin)	EPA 1613
NELAP	06/24/2011	Non-Potable Water	2,3,7,8-Tetrachlorodibenzofuran (TCDF)	EPA 1613
NELAP	06/24/2011	Non-Potable Water	Continuous liquid-liquid extraction	EPA 3520C

Accredited Labs Report

10/14/2011 4:10:33 PM

NELAP	06/24/2011	Solid and Chemical Materials	Soxhlet extraction	EPA 3540C
NELAP	06/24/2011	Solid and Chemical Materials	Florisil cleanup	EPA 3620
NELAP	06/24/2011	Non-Potable Water	Florisil cleanup	EPA 3620C
NELAP	06/24/2011	Solid and Chemical Materials	Silica gel cleanup	EPA 3630
NELAP	06/24/2011	Non-Potable Water	Silica gel cleanup	EPA 3630C
NELAP	06/24/2011	Non-Potable Water	1,2,3,4,6,7,8,9-Octachlorodibenzo-p-dioxin (OCDD)	EPA 8290
NELAP	06/24/2011	Solid and Chemical Materials	1,2,3,4,6,7,8,9-Octachlorodibenzo-p-dioxin (OCDD)	EPA 8290
NELAP	06/24/2011	Solid and Chemical Materials	1,2,3,4,6,7,8,9-Octachlorodibenzofuran (OCDF)	EPA 8290
NELAP	06/24/2011	Non-Potable Water	1,2,3,4,6,7,8,9-Octachlorodibenzofuran (OCDF)	EPA 8290
NELAP	06/24/2011	Non-Potable Water	1,2,3,4,6,7,8-Heptachlorodibenzo-p-dioxin (1,2,3,4,6,7,8-hpcdd)	EPA 8290
NELAP	06/24/2011	Solid and Chemical Materials	1,2,3,4,6,7,8-Heptachlorodibenzo-p-dioxin (1,2,3,4,6,7,8-hpcdd)	EPA 8290
NELAP	06/24/2011	Solid and Chemical Materials	1,2,3,4,6,7,8-Heptachlorodibenzofuran (1,2,3,4,6,7,8-hpcdf)	EPA 8290
NELAP	06/24/2011	Non-Potable Water	1,2,3,4,6,7,8-Heptachlorodibenzofuran (1,2,3,4,6,7,8-hpcdf)	EPA 8290
NELAP	06/24/2011	Solid and Chemical Materials	1,2,3,4,7,8,9-Heptachlorodibenzofuran (1,2,3,4,7,8,9-hpcdf)	EPA 8290
NELAP	06/24/2011	Non-Potable Water	1,2,3,4,7,8,9-Heptachlorodibenzofuran (1,2,3,4,7,8,9-hpcdf)	EPA 8290
NELAP	06/24/2011	Non-Potable Water	1,2,3,4,7,8-Hexachlorodibenzo-p-dioxin (HxCDD)	EPA 8290
NELAP	06/24/2011	Solid and Chemical Materials	1,2,3,4,7,8-Hexachlorodibenzo-p-dioxin (HxCDD)	EPA 8290
NELAP	06/24/2011	Non-Potable Water	1,2,3,4,7,8-Hexachlorodibenzofuran (HxCDF)	EPA 8290
NELAP	06/24/2011	Solid and Chemical Materials	1,2,3,4,7,8-Hexachlorodibenzofuran (HxCDF)	EPA 8290
NELAP	06/24/2011	Solid and Chemical Materials	1,2,3,6,7,8-Hexachlorodibenzo-p-dioxin (HxCDD)	EPA 8290
NELAP	06/24/2011	Non-Potable Water	1,2,3,6,7,8-Hexachlorodibenzo-p-dioxin (HxCDD)	EPA 8290
NELAP	06/24/2011	Solid and Chemical Materials	1,2,3,6,7,8-Hexachlorodibenzofuran (HxCDF)	EPA 8290

Accredited Labs Report

10/14/2011 4:10:33 PM

NELAP	06/24/2011	Non-Potable Water	1,2,3,6,7,8-Hexachlorodibenzofuran (HxCDF)	EPA 8290
NELAP	06/24/2011	Non-Potable Water	1,2,3,7,8,9-Hexachlorodibenzo-p-dioxin (HxCDD)	EPA 8290
NELAP	06/24/2011	Solid and Chemical Materials	1,2,3,7,8,9-Hexachlorodibenzo-p-dioxin (HxCDD)	EPA 8290
NELAP	06/24/2011	Solid and Chemical Materials	1,2,3,7,8,9-Hexachlorodibenzofuran (HxCDF)	EPA 8290
NELAP	06/24/2011	Non-Potable Water	1,2,3,7,8,9-Hexachlorodibenzofuran (HxCDF)	EPA 8290
NELAP	06/24/2011	Non-Potable Water	1,2,3,7,8-Pentachlorodibenzo-p-dioxin (PeCDD)	EPA 8290
NELAP	06/24/2011	Solid and Chemical Materials	1,2,3,7,8-Pentachlorodibenzo-p-dioxin (PeCDD)	EPA 8290
NELAP	06/24/2011	Non-Potable Water	1,2,3,7,8-Pentachlorodibenzofuran (PeCDF)	EPA 8290
NELAP	06/24/2011	Solid and Chemical Materials	1,2,3,7,8-Pentachlorodibenzofuran (PeCDF)	EPA 8290
NELAP	06/24/2011	Solid and Chemical Materials	2,3,4,6,7,8-Hexachlorodibenzofuran (HxCDF)	EPA 8290
NELAP	06/24/2011	Non-Potable Water	2,3,4,6,7,8-Hexachlorodibenzofuran (HxCDF)	EPA 8290
NELAP	06/24/2011	Solid and Chemical Materials	2,3,4,7,8-Pentachlorodibenzofuran (PeCDF)	EPA 8290
NELAP	06/24/2011	Non-Potable Water	2,3,4,7,8-Pentachlorodibenzofuran (PeCDF)	EPA 8290
NELAP	06/24/2011	Solid and Chemical Materials	2,3,7,8-Tetrachlorodibenzo-p-dioxin (2,3,7,8-TCDD) (Dioxin)	EPA 8290
NELAP	06/24/2011	Non-Potable Water	2,3,7,8-Tetrachlorodibenzo-p-dioxin (2,3,7,8-TCDD) (Dioxin)	EPA 8290
NELAP	06/24/2011	Solid and Chemical Materials	2,3,7,8-Tetrachlorodibenzofuran (TCDF)	EPA 8290
NELAP	06/24/2011	Non-Potable Water	2,3,7,8-Tetrachlorodibenzofuran (TCDF)	EPA 8290
NELAP	06/24/2011	Non-Potable Water	Total heptachlorodibenzo-p-dioxin (HpCDD)	EPA 8290
NELAP	06/24/2011	Solid and Chemical Materials	Total heptachlorodibenzo-p-dioxin (HpCDD)	EPA 8290
NELAP	06/24/2011	Non-Potable Water	Total heptachlorodibenzofuran (HpCDF)	EPA 8290
NELAP	06/24/2011	Solid and Chemical Materials	Total heptachlorodibenzofuran (HpCDF)	EPA 8290
NELAP	06/24/2011	Solid and Chemical Materials	Total hexachlorodibenzo-p-dioxin (HxCDD)	EPA 8290
NELAP	06/24/2011	Non-Potable Water	Total hexachlorodibenzo-p-dioxin (HxCDD)	EPA 8290

Accredited Labs Report

10/14/2011 4:10:33 PM

NELAP	06/24/2011	Non-Potable Water	Total hexachlorodibenzofuran (HxCDF)	EPA 8290
NELAP	06/24/2011	Solid and Chemical Materials	Total hexachlorodibenzofuran (HxCDF)	EPA 8290
NELAP	06/24/2011	Solid and Chemical Materials	Total pentachlorodibenzo-p-dioxin (PeCDD)	EPA 8290
NELAP	06/24/2011	Non-Potable Water	Total pentachlorodibenzo-p-dioxin (PeCDD)	EPA 8290
NELAP	06/24/2011	Non-Potable Water	Total pentachlorodibenzofuran (PeCDF)	EPA 8290
NELAP	06/24/2011	Solid and Chemical Materials	Total pentachlorodibenzofuran (PeCDF)	EPA 8290
NELAP	06/24/2011	Solid and Chemical Materials	Total TCDD	EPA 8290
NELAP	06/24/2011	Non-Potable Water	Total TCDD	EPA 8290
NELAP	06/24/2011	Non-Potable Water	Total TCDF	EPA 8290
NELAP	06/24/2011	Solid and Chemical Materials	Total TCDF	EPA 8290

APPENDIX C

DQO MEETING MINUTES

NAS JRB WILLOW GROVE
TEAM MEETING 27
SUMMARY

Meeting Date: October 13, 2010
Meeting Time: 9:30 a.m.
Meeting Place: Conference Room, EPA Region 3

	Name	Organization
Attendance:	Lisa Cunningham	EPA
	Bruce Rundell	EPA
	Linda Watson	EPA
	Tim Sheehan	PADEP
	Jessica Kasmari	PADEP
	Bill Heil	Navy, NAS JRB Willow Grove
	Bob Lewandowski	Navy, BRAC Office
	Jeff Dale	Navy, BRAC Office
	Dave Barclift	Navy, BRAC Office
	Ron Sloto	USGS
	Russ Turner	Tetra Tech
	Don Whalen	Tetra Tech

1. General Information/Previous Team Meeting Minutes/Next Meeting Date

Meeting minutes from meeting 26 (August 4, 2010) were accepted with no further comments or changes. Tim Sheehan will be filling in as the PADEP RPM until a replacement for Chick Clark can be found. The next meeting was set for Tuesday, December 7, 2010 at 10:00 a.m. It was also agreed to meet as a Team on October 26, 2010 at 11:00 a.m. to discuss the Site 3 FS Preliminary Alternatives Analysis (PAA) document. EPA requested that the PAA be kept short: say five or six pages if possible. Kathleen Patnode will be added to the Partnering Team meeting distribution list.

2. Site 3 Response to EPA Comments on the Draft RI Report

There was no disagreement with the Navy response to comments document. The Navy will revise the RI report to clearly show human health and ecological COC's, clearly explaining the reason(s) why any potential chemical was not selected as a COC. In addition, the Navy will prepare changed pages where appropriate to facilitate EPA review of the draft RI report.

3. Site 5 Groundwater Pilot Study Update

The Navy provided a project summary to update the interim PADEP project officer. The group agreed that preliminary "proof of concept" appears to have been shown. The several interim reports, prepared over the past year or more, will be combined into a final report. The final report will be submitted for Team review.

There was a question about fire fighting foam (AFFF); was it ever used at the Fire Training Area? This topic has been discussed for other areas of the site. The Navy will collect existing information and distribute it for discussion at the next meeting.

4. Site 12 SAP "Strawman"

Tetra Tech provided an overview of the Site 12 Phase II RI sampling plan as well as a summary of Phase I RI results. The group agreed that the sampling plan appeared sufficient and in agreement with Team requests. OK to proceed. After the Site 3 PAA was discussed on October 26 (see Item 8 below), based

on the issue of hexavalent chromium in Site 3 soil that recently arose, it was agreed that the Site 12 Phase II RI SAP would be altered to include analysis for hexavalent chromium in Site 12 soil as well.

7. Review of Action Items Confirmation of Next Meeting Date.

The Master Action Item List was updated to include the new action items from this meeting.

The next Project Update Team meeting is scheduled for 10:00 a.m. Tuesday December 7, 2010. A partnering session at 9:00 a.m. will precede the Team meeting.

8. Preliminary Alternatives Analysis (PAA) for Site 3 Feasibility Study.

The Team reconvened on October 26 to discuss the draft PAA for Site 3. There was general agreement for the remedial alternatives, but not on the process in the PAA that developed the remediation goals. The Team prefers to see the selection of compounds of concern (COCs) clearly presented in the RI report. Any COPCs from the human health or ecological risk evaluations that are eliminated from COC selection for "multiple lines of evidence," such as comparison to background, insufficient laboratory detection limits available, historical evidence, or in the case of a soil to groundwater standard exceedence that does not have the corresponding compound found in groundwater after a long period of groundwater monitoring, the Team wants the rationale for elimination discussed in detail in the RI report, not in the FS. The RI will be revised accordingly.

Discussion of the proposed remediation goal (RG) for chromium noted that the standard for chromium in soil is based on hexavalent chromium. The Navy will perform additional analysis of hexavalent chromium in Site 3 soils in order to prepare a ratio of hexavalent chrome versus total chrome that can be applied to calculate an appropriate chromium remediation goal in the PAA.

APPENDIX D

PROJECT SCREENING LEVEL BACKUP DOCUMENTATION

NAS JRB Willow Grove Site 12 Human Health Screening Criteria - Surface and Subsurface Soil Samples

Analyte	CAS Number	EPA Regional Screening Level, Residential Soil [1] (mg/kg)	Adjusted EPA Regional Screening Level, Residential Soil [2] (mg/kg)	EPA Regional Screening Level, Migration to Groundwater [1] (mg/kg)	Adjusted EPA Regional Screening Level, Migration to Groundwater [2] (mg/kg)	2010 PADEP Medium-Specific Concentrations for Soil (mg/kg) [3]		Lowest Human Health Criterion	Lowest Human Health Criterion Reference	EPA Regional Screening Level, Industrial Soil [1] (mg/kg)	2010 PADEP Medium-Specific Concentrations for Soil (mg/kg) [3]	
						Residential	Migration to Groundwater				Non-Residential	Migration to Groundwater
Volatile Organic Compounds												
1,1,1-Trichloroethane	71-55-6	8700 N	870 N	3.2	64	10000	7.2	7.2	MTG-MSC	38000 N	10000	7.2
1,1,2,2-Tetrachloroethane	79-34-5	0.56 C	0.56 C	0.000026	0.00052	7.7	0.026	0.00052	RBSSL	2.8 C	38	0.13
1,1,2-trichloro-1,2,2-trifluoroethane (Freon 11	76-13-1	43000 N	4300 N	150	3000	10000	10000	3000	RBSSL	180000 N	10000	10000
1,1,2-Trichloroethane	79-00-5	1.6 N [4]	0.16 N [4]	0.000078	0.0016	28	0.15	0.0016	RBSSL	5.3 C	140	0.15
1,1-Dichloroethane	75-34-3	3.3 C	3.3 C	0.00069	0.014	280	0.75	0.014	RBSSL	17 C	1400	3.9
1,1-Dichloroethene	75-35-4	240 N	24 N	0.12	2.4	3800	0.19	0.19	MTG-MSC	1100 N	10000	0.19
1,2,3-Trichlorobenzene	87-61-6	49 N	4.9 N	0.087	1.7	NA	NA	1.7	RBSSL	490 N	NA	NA
1,2,4-Trichlorobenzene	120-82-1	62 N [4]	6.2 N [4]	0.0068	0.14	2200	27	0.14	RBSSL	270 N [4]	10000	27
1,2-Dibromo-3-chloropropane (DBCP)	96-12-8	0.0054 C	0.0054 C	0.00000014	0.0000028	0.029	0.0092	0.0000028	RBSSL	0.069 C	0.37	0.0092
1,2-Dibromoethane (EDB)	106-93-4	0.034 C	0.034 C	0.0000018	0.000036	0.74	0.0012	0.000036	RBSSL	0.17 C	3.7	0.0012
1,2-Dichlorobenzene	95-50-1	1900 N	190 N	0.36	7.2	3800	59	7.2	RBSSL	9800 N	10000	59
1,2-Dichloroethane	107-06-2	0.43 C	0.43 C	0.000042	0.00084	17	0.1	0.00084	RBSSL	2.2 C	86	0.1
1,2-Dichloropropane	78-87-5	0.94 C	0.94 C	0.00013	0.0026	45	0.11	0.0026	RBSSL	4.5 C	220	0.11
1,3-Dichlorobenzene	541-73-1	NA	NA	NA	NA	660	61	61	MTG-MSC	NA	8400	61
1,4-Dichlorobenzene	106-46-7	2.4 C	2.4 C	0.00041	0.0082	40	10	0.0082	RBSSL	12 C	200	10
1,4-Dioxane	123-91-1	4.9 C	4.9 C	0.00014	0.0028	58	0.084	0.0028	RBSSL	160 C	290	0.42
2-Butanone (MEK)	78-93-3	28000 N	2800 N	1.5	30	10000	76	30	RBSSL	200000 N	10000	76
2-Hexanone	591-78-6	210 N	21 N	0.011	0.22	96	0.27	0.22	RBSSL	1400 N	400	1.1
4-Methyl-2-pentanone (MIBK)	108-10-1	5300 N	530 N	0.45	9.0	10000	45	9.0	RBSSL	53000 N	10000	130
Acetone	67-64-1	61000 N	6100 N	4.5	90	10000	370	90	MTG-MSC	630000 N	10000	1000
Benzene	71-43-2	1.1 C	1.1 C	0.00021	0.0042	57	0.13	0.0042	RBSSL	5.4 C	290	0.13
Bromochloromethane	74-97-5	NA	NA	NA	NA	2200	1.6	1.6	MTG-MSC	NA	10000	1.6
Bromodichloromethane	75-27-4	0.27 C	0.27 C	0.000032	0.00064	12	2.7	0.00064	RBSSL	1.4 C	60	2.7
Bromoform	75-25-2	62 C	62 C	0.0023	0.046	410	3.5	0.046	RBSSL	220 C	2000	3.5
Bromomethane	74-83-9	7.3 N	0.73 N	0.0022	0.044	96	0.54	0.044	RBSSL	32 N	400	0.54
Carbon disulfide	75-15-0	820 N	82 N	0.31	6.2	10000	130	6.2	RBSSL	3700 N	10000	530
Carbon tetrachloride	56-23-5	0.61 C	0.61 C	0.00017	0.0034	30	0.26	0.0034	RBSSL	3.0 C	150	0.26
Chlorobenzene	108-90-7	290 N	29 N	0.062	1.2	960	6.1	1.2	RBSSL	1400 N	4000	6.1
Chloroethane	75-00-3	15000 N	1500 N	5.9	118	6200	5	5	MTG-MSC	61000 N	10000	19
Chloroform	67-66-3	0.29 C	0.29 C	0.000053	0.0011	19	2	0.0011	RBSSL	1.5 C	97	2
Chloromethane	74-87-3	120 N	12 N	0.049	0.98	NA	NA	0.98	RBSSL	500 N	NA	NA
cis-1,2-Dichloroethene	156-59-2	160 N	16 N	0.021	0.42	2200	1.6	0.42	RBSSL	10000 N	10000	1.6
cis-1,3-Dichloropropene	10061-01-5	1.7 C [5]	1.7 C [5]	0.00015 [5]	0.0030 [5]	110	0.12	0.0030	RBSSL	8.1 C [5]	560	0.46
Cyclohexane	110-82-7	7000 N	700 N	13	260	10000	1700	260	RBSSL	29000 N	10000	6900
Dibromochloromethane	124-48-1	0.68 C	0.68 C	0.000039	0.00078	17	2.5	0.00078	RBSSL	3.3 C	82	2.5
Dichlorodifluoromethane	75-71-8	94 N	9.4 N	0.31	6.2	3900	100	6.2	RBSSL	780 N	10000	100
Ethylbenzene	100-41-4	5.4 C	5.4 C	0.0017	0.034	10000	46	0.034	RBSSL	27 C	10000	46
Isopropylbenzene	98-82-8	2100 N	210 N	1.1	22	7700	600	22	RBSSL	11000 N	10000	2500
m-Xylene	108-38-3	590 N	59 N	0.20	4.0	1900	990	4.0	RBSSL	2500	8000	990
p-Xylene	106-42-3	600 N	60 N	0.20	4.0	1900	990	4.0	RBSSL	2600	8000	990
m,p-Xylenes	179601-23-1	620 N [6]	62 N [6]	0.20 [6]	4.0 [6]	1900	990	4.0	RBSSL	2700 [6]	8000	990
Methyl acetate	79-20-9	78000 N	7800 N	7.50	150	10000	690	150	RBSSL	1000000 N	10000	1900
Methylcyclohexane	108-87-2	NA	NA	NA	NA	NA	NA	NA	None	NA	NA	NA
Methylene chloride	75-09-2	11 C	11 C	0.0012	0.024	950	0.076	0.024	RBSSL	53 C	4700	0.076
Methyl-tert-butyl ether	1634-04-4	43 C	43 C	0.0028	0.056	620	0.28	0.056	RBSSL	220 C	3200	0.28
o-Xylene	95-47-6	690 N	69 N	0.20	4.0	1900	990	4.0	RBSSL	19000 N	8000	990
Styrene	100-42-5	6300 N	630 N	1.8	36	10000	24	24	MTG-MSC	36000 N	10000	24
Tetrachloroethene	127-18-4	0.55 C	0.55 C	0.000049	0.00098	340	0.43	0.00098	RBSSL	2.6 C	1500	0.43
Toluene	108-88-3	5000 N	500 N	1.6	32	10000	44	32	RBSSL	45000 N	10000	44
trans-1,2-Dichloroethene	156-60-5	150 N	15 N	0.031	0.62	1100	2.3	0.62	RBSSL	690 N	4800	2.3
trans-1,3-Dichloropropene	10061-02-6	1.7 C [5]	1.7 C [5]	0.00015 [5]	0.0030 [5]	110	0.12	0.0030	RBSSL	8.1 C [5]	560	0.46
Trichloroethene	79-01-6	2.5 N [4]	0.25 N [4]	0.00072	0.014	260	0.17	0.014	RBSSL	14 C	1300	0.17
Trichlorofluoromethane	75-69-4	790 N	79 N	0.83	17	NA	NA	17	RBSSL	3400 N	NA	NA

NAS JRB Willow Grove Site 12 Human Health Screening Criteria - Surface and Subsurface Soil Samples

Analyte	CAS Number	EPA Regional Screening Level, Residential Soil [1] (mg/kg)	Adjusted EPA Regional Screening Level, Residential Soil [2] (mg/kg)	EPA Regional Screening Level, Migration to Groundwater [1] (mg/kg)	Adjusted EPA Regional Screening Level, Migration to Groundwater [2] (mg/kg)	2010 PADEP Medium-Specific Concentrations for Soil (mg/kg) [3]		Lowest Human Health Criterion	Lowest Human Health Criterion Reference	EPA Regional Screening Level, Industrial Soil [1] (mg/kg)	2010 PADEP Medium-Specific Concentrations for Soil (mg/kg) [3]	
						Residential	Migration to Groundwater				Non-Residential	Migration to Groundwater
Vinyl chloride	75-01-4	0.060 C	0.060 C	0.0000056	0.00011	1.9	0.027	0.00011	RBSSL	1.7 C	110	0.027
Xylenes (total)	1330-20-7	630 N	63 N	0.20	4.0	1900	990	4.0	RBSSL	2700 N	8000	990
Semivolatile Organic Compounds												
1,1'-Biphenyl	92-52-4	3900 N	390 N	19	380	11000	790	380	RBSSL	51000 N	140000	2200
1,2,4,5-Tetrachlorobenzene	95-94-3	18 N	1.8 N	0.051	1.0	66	5.1	1.0	RBSSL	180 N	840	14
2,2'-Oxybis(1-chloropropane)	108-60-1	4.6 C	4.6 C	0.00012	0.0024	NA	NA	0.0024	RBSSL	22 C	NA	NA
2,3,4,6-Tetrachlorophenol	58-90-2	1800 N	180 N	6.7	130	6600	1700	130	RBSSL	18000 N	84000	4800
2,4,5-Trichlorophenol	95-95-4	6100 N	610 N	14	280	22000	2300	280	RBSSL	62000 N	190000	6100
2,4,6-Trichlorophenol	88-06-2	61 N[4]	6.1 N[4]	0.023 [4]	0.46 [4]	220	11	0.46	RBSSL	620 N[4]	2800	29
2,4-Dichlorophenol	120-83-2	180 N	18 N	0.13	2.6	660	1.0	1.0	MTG-MSC	1800 N	8400	1
2,4-Dimethylphenol	105-67-9	1200 N	120 N	0.86	17	4400	32	17	RBSSL	12000 N	10000	87
2,4-Dinitrophenol	51-28-5	120 N	12 N	0.082	1.6	440	0.83	0.83	MTG-MSC	1200 N	5600	2.3
2,4-Dinitrotoluene	121-14-2	1.6 C	1.6 C	0.00029	0.0058	58	0.05	0.0058	RBSSL	5.5 C	260	0.2
2,6-Dinitrotoluene	606-20-2	61 N	6.1 N	0.050	1.0	220	1.1	1.0	RBSSL	620 N	2800	3
2-Chloronaphthalene	91-58-7	6300 N	630 N	15	300	18000	6200	300	RBSSL	82000 N	190000	18000
2-Chlorophenol	95-57-8	390 N	39 N	0.15	3.0	1100	4.4	3.0	RBSSL	5100 N	10000	4.4
2-Methylphenol (o-Cresol)	95-48-7	3100 N	310 N	1.5	30	11000	30	30	RBSSL	31000 N	140000	85
2-Nitroaniline	88-74-4	610 N	61 N	0.15	3.0	660	2.0	2.0	MTG-MSC	6000 N	8400	5.5
2-Nitrophenol	88-75-5	120 N[7]	12 N[7]	0.08 [7]	1.6 [7]	1800	5.9	1.6	RBSSL	1200 N[7]	22000	17
3,3'-Dichlorobenzidine	91-94-1	1.1 C	1.1 C	0.0010	0.020	40	8.3	0.020	RBSSL	3.8 C	180	32
3-Methylphenol (m-Cresol)	108-39-4	3100 N	310 N	1.5	30	10000	36	30	RBSSL	31000 N	10000	100
3-Nitroaniline	99-09-2	NA	NA	NA	NA	66	0.17	0.17	MTG-MSC	NA	840	0.48
4,6-Dinitro-2-methylphenol	534-52-1	4.9 N	0.49 N	0.0050	0.10	22	0.28	0.10	RBSSL	49 N	280	0.75
4-Bromophenyl phenyl ether	101-55-3	NA	NA	NA	NA	NA	NA	NA	None	NA	NA	NA
4-Chloro-3-methyl phenol	59-50-7	6100 N	610 N	4.3	86	NA	NA	86	RBSSL	62000 N	NA	NA
4-Chloroanaline	106-47-8	2.4 C	2.40 C	0.00014	0.0028	90	0.42	0.0028	RBSSL	8.6 C	400	1.6
4-Chlorophenyl phenyl ether	7005-72-3	NA	NA	NA	NA	NA	NA	NA	None	NA	NA	NA
4-Methylphenol (p-Cresol)	106-44-5	310 N	31 N	0.15	3.0	10000	4.2	3.0	RBSSL	3100 N	10000	12
4-Nitroaniline	100-01-6	24 C	24 C	0.0014	0.028	880	0.49	0.028	RBSSL	86 C	4000	1.9
4-Nitrophenol	100-02-7	NA	NA	NA	NA	1800	4.1	4.1	MTG-MSC	NA	22000	4.1
Acetophenone	98-86-2	7800 N	780 N	1.1	22	10000	200	22	RBSSL	100000 N	10000	540
Atrazine	1912-24-9	2.1 C	2.1 C	0.00019	0.0038	78	0.13	0.0038	RBSSL	7.5 C	340	0.13
Benzaldehyde	100-52-7	7800 N	780 N	0.81	16.2	NA	NA	16.2	RBSSL	100000 N	NA	NA
Bis(2-chloroethoxy)methane	111-91-1	180 N	18 N	0.025	0.50	660	2.9	0.50	RBSSL	1800 N	8400	8.2
Bis(2-chloroethyl)ether	111-44-4	0.21 C	0.21 C	0.0000031	0.000062	1.3	0.0045	0.000062	RBSSL	1.0 C	6.7	0.023
Bis(2-ethylhexyl)phthalate	117-81-7	35 C	35 C	1.1	22	1300	130	22	RBSSL	120 C	5700	130
Butyl benzyl phthalate	85-68-7	260 C	260 C	0.51	10	9400	3000	10	RBSSL	910 C	10000	10000
Caprolactam	105-60-2	31000 N	3100 N	4.5	90	NA	NA	90	RBSSL	310000 N	NA	NA
Carbazole	86-74-8	NA	NA	NA	NA	900	21	21	MTG-MSC	NA	4000	83
Dibenzofuran	132-64-9	78 N	7.8 N	0.68	13.6	220	95	7.8	R-RSL	1000 N	2800	260
Diethyl phthalate	84-66-2	49000 N	4900 N	12	240	10000	910	240	RBSSL	490000 N	10000	2600
Dimethyl phthalate	131-11-3	49000 N[8]	4900 N[8]	12 [8]	240 [8]	NA	NA	240	RBSSL	490000 N[8]	NA	NA
Di-n-butyl phthalate	84-74-2	6100 N	610 N	9.2	184	10000	1500	184	RBSSL	62000 N	10000	4100
Di-n-octyl phthalate	117-84-0	NA	NA	NA	NA	8800	10000	8800	RES-MSC	NA	10000	10000
Hexachlorobenzene	118-74-1	0.30 C	0.30 C	0.00053	0.011	11	0.96	0.011	RBSSL	1.1 C	50	0.96
Hexachlorobutadiene	87-68-3	61 N[4]	6.1 N[4]	0.0017	0.034	220	10	0.034	RBSSL	22 C	1000	39
Hexachlorocyclopentadiene	77-47-4	370 N	37 N	0.68	14	1300	91	14	RBSSL	3700 N	10000	91
Hexachloroethane	67-72-1	61 N[4]	6.1 N[4]	0.0029	0.058	110	0.56	0.058	RBSSL	620 N[4]	550	0.56
Isophorone	78-59-1	510 C	510 C	0.023	0.46	10000	1.9	0.46	RBSSL	1800 C	10000	1.9
Nitrobenzene	98-95-3	4.8 C	4.8 C	0.000079	0.0016	440	3.2	0.0016	RBSSL	24 C	5600	8.7
N-Nitrosodi-n-propylamine	621-64-7	0.069 C	0.069 C	0.0000072	0.00014	2.6	0.0013	0.00014	RBSSL	0.25 C	11	0.0051
N-Nitrosodiphenylamine	86-30-6	99 C	99 C	0.075	1.5	3700	20	1.5	RBSSL	350 C	16000	83
Pentachlorophenol	87-86-5	0.89 C	0.89 C	0.0017	0.034	150	5	0.034	RBSSL	9.0 C	660	5
Phenol	108-95-2	18000 N	1800 N	6.3	126	66000	33	33	MTG-MSC	180000 N	190000	33

NAS JRB Willow Grove Site 12 Human Health Screening Criteria - Surface and Subsurface Soil Samples

Analyte	CAS Number	EPA Regional Screening Level, Residential Soil [1] (mg/kg)	Adjusted EPA Regional Screening Level, Residential Soil [2] (mg/kg)	EPA Regional Screening Level, Migration to Groundwater [1] (mg/kg)	Adjusted EPA Regional Screening Level, Migration to Groundwater [2] (mg/kg)	2010 PADEP Medium-Specific Concentrations for Soil (mg/kg) [3]		Lowest Human Health Criterion	Lowest Human Health Criterion Reference	EPA Regional Screening Level, Industrial Soil [1] (mg/kg)	2010 PADEP Medium-Specific Concentrations for Soil (mg/kg) [3]	
						Residential	Migration to Groundwater				Non-Residential	Migration to Groundwater
Polycyclic Aromatic Hydrocarbons												
2-Methylnaphthalene	91-57-6	310 N	31 N	0.75	15	880	600	15	RBSSL	4100 N	11000	1600
Acenaphthene	83-32-9	3400 N	340 N	22	440	13000	2700	340	R-RSL	33000 N	170000	4700
Acenaphthylene	208-96-8	3400 N[9]	340 N[9]	360 [9]	7200 [9]	13000	2500	340	R-RSL	170000 N[9]	170000	6900
Anthracene	120-12-7	17000 N	1700 N	360	7200	66000	350	350	MTG-MSC	170000 N	190000	350
Benzo(a)anthracene	56-55-3	0.15 C	0.15 C	0.010	0.20	5.7	25	0.15	R-RSL	2.1 C	110	320
Benzo(a)pyrene	50-32-8	0.015 C	0.015 C	0.0035	0.070	0.57	46	0.015	R-RSL	0.21 C	11	46
Benzo(b)fluoranthene	205-99-2	0.15 C	0.15 C	0.035	0.70	5.7	40	0.15	R-RSL	2.1 C	110	170
Benzo(g,h,i)perylene	191-24-2	1700 N[10]	170 N[10]	120 [10]	2400 [10]	13000	180	170	R-RSL	17000 N[10]	170000	180
Benzo(k)fluoranthene	207-08-9	1.5 C	1.5 C	0.35	7.0	57	610	1.5	R-RSL	21 C	1100	610
Chrysene	218-01-9	15 C	15 C	1.1	22	570	230	15	R-RSL	210 C	11000	230
Dibenzo(a,h)anthracene	53-70-3	0.015 C	0.015 C	0.011	0.22	0.57	13	0.015	R-RSL	0.21 C	11	160
Fluoranthene	206-44-0	2300 N	230 N	160	3200	8800	3200	230	R-RSL	22000 N	110000	3200
Fluorene	86-73-7	2300 N	230 N	27	540	8800	3000	230	R-RSL	22000 N	110000	3800
Indeno(1,2,3-c,d)pyrene	193-39-5	0.15 C	0.15 C	0.12	2.4	5.7	2200	0.15	R-RSL	2.1 C	110	28000
Naphthalene	91-20-3	3.6 C	3.60 C	0.00047	0.0094	4400	25	0.0094	RBSSL	18 C	56000	25
Phenanthrene	85-01-8	1700 N[10]	170 N[10]	120 [10]	2400 [10]	66000	10000	170	R-RSL	17000 N[10]	190000	10000
Pyrene	129-00-0	1700 N	170 N	120	2400	6600	2200	170	R-RSL	17000 N	84000	2200
Polychlorinated Biphenyls												
Aroclor-1016	12674-11-2	3.9 N	0.39 N	0.092	1.8	15	72	0.39	R-RSL	37 N[4]	200	200
Aroclor-1221	11104-28-2	0.14 C	0.14 C	0.00012	0.0024	9	0.16	0.0024	RBSSL	0.54 C	40	0.63
Aroclor-1232	11141-16-5	0.14 C	0.14 C	0.00012	0.0024	9	0.13	0.0024	RBSSL	0.54 C	40	0.5
Aroclor-1242	53469-21-9	0.22 C	0.22 C	0.0053	0.11	9	4	0.11	RBSSL	0.74 C	40	16
Aroclor-1248	12672-29-6	0.22 C	0.22 C	0.0052	0.10	9	16	0.10	RBSSL	0.74 C	40	62
Aroclor-1254	11097-69-1	1.1 N[4]	0.11 N[4]	0.0088	0.18	4.4	67	0.11	R-RSL	0.74 C	40	260
Aroclor-1260	11096-82-5	0.22 C	0.22 C	0.024	0.48	9	150	0.22	R-RSL	0.74 C	40	590
Total PCBs	1336-36-3	NA	NA	NA	NA	NA	NA	NA	None	NA	NA	NA
Metals												
Aluminum	7429-90-5	77000 N	7700 N	55000	1100000	190000	NA	7700	R-RSL	990000 NM	190000	NA
Antimony	7440-36-0	31 N	3.1 N	0.66	13	88	27	3.1	R-RSL	410 N	1100	27
Arsenic	7440-38-2	0.39 C	0.39 C	0.0013	0.026	12	29	0.026	RBSSL	1.6 C	53	29
Barium	7440-39-3	15000 N	1500 N	300	6000	44000	8200	1500	R-RSL	190000 NM	190000	8200
Beryllium	7440-41-7	160 N	16 N	58	1160	440	320	16	R-RSL	2000 N	5600	320
Cadmium	7440-43-9	70 N	7 N	1.4	28	110	38	7	R-RSL	800 N	1400	38
Calcium	7440-70-2	NA	NA	NA	NA	NA	NA	NA	None	NA	NA	NA
Chromium	7440-47-3	0.29 C[11]	0.29 C[11]	0.00083 [11]	0.017 [11]	94	190	0.017	RBSSL	5.6 C[11]	420	190
Cobalt	7440-48-4	23 N	2.3 N	0.49	9.8	66	50	2.3	R-RSL	300 N	840	140
Copper	7440-50-8	3100 N	310 N	51	1020	8100	43000	310	R-RSL	41000 N	100000	43000
Iron	7439-89-6	55000 N	5500 N	640	12800	150000	NA	5500	R-RSL	720000 N	190000	NA
Lead	7439-92-1	400 [12]	400 [12]	14 [15]	280 [15]	500	450	280	RBSSL	800 [12]	1000	450
Magnesium	7439-95-4	NA	NA	NA	NA	NA	NA	NA	None	NA	NA	NA
Manganese	7439-96-5	1800 N	180 N	57	1140	10000	2000	180	R-RSL	23000 N	130000	2000
Mercury	7439-97-6	23 N[13]	2.3 N[13]	0.57 [13]	11.4 [13]	35	10	2.3	R-RSL	310 N[13]	450	10
Nickel	7440-02-0	1500 N	150 N	48	960	4400	650	150	R-RSL	20000 N	56000	650
Potassium	7440-09-7	NA	NA	NA	NA	NA	NA	NA	None	NA	NA	NA
Selenium	7782-49-2	390 N	39 N	0.95	19	1100	26	19	RBSSL	5100 N	190000	26
Silver	7440-22-4	390 N	39 N	1.6	32	1100	84	32	RBSSL	5100 N	14000	84
Sodium	7440-23-5	NA	NA	NA	NA	NA	NA	NA	None	NA	NA	NA
Thallium	7440-28-0	0.78 N	0.078 N	0.026	0.52	15	14	0.078	R-RSL	NA	200	14
Vanadium	7440-62-2	390 N[14]	39 N[14]	180 [14]	3600 [14]	1500	26000	39	R-RSL	5200 N[14]	20000	72000
Zinc	7440-66-6	23000 N	2300 N	680	13600	66000	12000	2300	R-RSL	310000 N	190000	12000
Hexavalent Chromium												
Hexavalent Chromium	18540-29-9	0.29 C[11]	0.29 C[11]	2.1 [11]	42 [11]	660[11]	190[11]	0.29	R-RSL	5.6 C[11]	8400[11]	190[11]

NAS JRB Willow Grove Site 12 Human Health Screening Criteria - Surface and Subsurface Soil Samples

Analyte	CAS Number	EPA Regional Screening Level, Residential Soil [1] (mg/kg)	Adjusted EPA Regional Screening Level, Residential Soil [2] (mg/kg)	EPA Regional Screening Level, Migration to Groundwater [1] (mg/kg)	Adjusted EPA Regional Screening Level, Migration to Groundwater [2] (mg/kg)	2010 PADEP Medium-Specific Concentrations for Soil (mg/kg) [3]		Lowest Human Health Criterion	Lowest Human Health Criterion Reference	EPA Regional Screening Level, Industrial Soil [1] (mg/kg)	2010 PADEP Medium-Specific Concentrations for Soil (mg/kg) [3]	
						Residential	Migration to Groundwater				Non-Residential	Migration to Groundwater
Trivalent Chromium	16065-83-1	120000 N	12000 N	99000000	2000000000	NA	NA	12000	R-RSL	1500000 N	NA	NA
Cyanide												
Cyanide	57-12-5	1600 N	160 N	7.4	148	4400	200	148	RBSSL	20000 N	56000	200
Pesticides												
4,4'-DDD	72-54-8	2.0 C	2.0 C	0.066	1.3	75	31	1.3	RBSSL	7.2 C	330	120
4,4'-DDE	72-55-9	1.4 C	1.4 C	0.046	0.92	53	41	0.92	RBSSL	5.1 C	230	170
4,4'-DDT	50-29-3	1.7 C	1.7 C	0.067	1.3	53	110	1.3	RBSSL	7.0 C	230	330
Aldrin	309-00-2	0.029 C	0.029 C	0.00065	0.013	1.1	0.47	0.013	RBSSL	0.10 C	4.7	1.8
alpha-BHC	319-84-6	0.077 C	0.077 C	0.000062	0.0012	2.8	0.046	0.0012	RBSSL	0.27 C	13	0.19
alpha-Chlordane	5103-71-9	1.6 C[16]	1.6 C[16]	0.013 [16]	0.26 [16]	51	49	0.26	RBSSL	6.5 C[16]	230	49
beta-BHC	319-85-7	0.27 C	0.27 C	0.00022	0.0044	9.9	0.22	0.0044	RBSSL	0.96 C	44	0.82
delta-BHC	319-86-8	0.077 C[17]	0.077 C[17]	0.000062 [17]	0.0012 [17]	NA	NA	0.0012	RBSSL	0.27 C[17]	NA	NA
Dieldrin	60-57-1	0.030 C	0.030 C	0.00017	0.0034	1.1	0.11	0.0034	RBSSL	0.11 C	5.0	0.44
Endosulfan I	959-98-8	370 N[18]	37 N[18]	3.0 [18]	60 [18]	1300	110	37	R-RSL	3700 N[18]	17000	260
Endosulfan II	33213-65-9	370 N[18]	37 N[18]	3.0 [18]	60 [18]	1300	130	37	R-RSL	3700 N[18]	17000	260
Endosulfan sulfate	1031-07-8	370 N[18]	37 N[18]	3.0 [18]	60 [18]	1300	70	37	R-RSL	3700 N[18]	47000	70
Endrin	72-20-8	18 N	1.8 N	0.44	8.8	66	5.5	1.8	R-RSL	180 N	840	5.5
Endrin aldehyde	7421-93-4	18 N[19]	1.8 N	0.44 [19]	8.8 [19]	66	5.5	1.8	R-RSL	180 N[19]	840	5.5
Endrin ketone	53494-70-5	18 N[19]	1.8 N	0.44 [19]	8.8 [19]	66	5.5	1.8	R-RSL	180 N[19]	840	5.5
gamma-BHC (Lindane)	58-89-9	0.52 C	0.52 C	0.00036	0.0072	16	0.072	0.0072	RBSSL	2.1 C	72	0.072
gamma-chlordane	5103-74-2	1.6 C[16]	1.6 C[16]	0.013 [16]	0.26 [16]	51	49	0.26	RBSSL	6.5 C[16]	230	49
Heptachlor	76-44-8	0.11 C	0.11 C	0.0012	0.024	4.0	0.68	0.024	RBSSL	0.38 C	18	0.68
Heptachlor epoxide	1024-57-3	0.053 C	0.053 C	0.00015	0.0030	2.0	1.1	0.0030	RBSSL	0.19 C	8.7	1.1
Methoxychlor	72-43-5	310 N	31 N	9.9	198	1100	630	31	R-RSL	3100 N	14000	630
Toxaphene	8001-35-2	0.44 C	0.44 C	0.0094	0.19	16	1.2	0.19	RBSSL	1.6 C	72	1.2
Dioxins/Furans												
1,2,3,4,6,7,8,9-OCDD	3268-87-9	0.015 C[20]	0.015 C[20]	0.00087 [20]	0.017 [20]	NA	NA	0.015	R-RSL	0.06 C[20]	NA	NA
1,2,3,4,6,7,8,9-OCDF	39001-02-0	0.015 C[20]	0.015 C[20]	0.00087 [20]	0.017 [20]	NA	NA	0.015	R-RSL	0.06 C[20]	NA	NA
1,2,3,4,6,7,8-HPCDD	35822-46-9	0.00045 C[20]	0.00045 C[20]	0.000026 [20]	0.00052 [20]	NA	NA	0.00045	R-RSL	0.0018 C[20]	NA	NA
1,2,3,4,6,7,8-HPCDF	67562-39-4	0.00045 C[20]	0.00045 C[20]	0.000026 [20]	0.00052 [20]	NA	NA	0.00045	R-RSL	0.0018 C[20]	NA	NA
1,2,3,4,7,8,9-HPCDF	55673-89-7	0.00045 C[20]	0.00045 C[20]	0.000026 [20]	0.00052 [20]	NA	NA	0.00045	R-RSL	0.0018 C[20]	NA	NA
1,2,3,4,7,8-HXCDD	39227-28-6	0.000045 C[20]	4.5E-05 C[20]	0.0000026 [20]	0.000052 [20]	NA	NA	0.000045	R-RSL	0.00018 C[20]	NA	NA
1,2,3,4,7,8-HXCDF	70648-26-9	0.000045 C[20]	4.5E-05 C[20]	0.0000026 [20]	0.000052 [20]	NA	NA	0.000045	R-RSL	0.00018 C[20]	NA	NA
1,2,3,6,7,8-HXCDD	57653-85-7	0.000045 C[20]	4.5E-05 C[20]	0.0000026 [20]	0.000052 [20]	NA	NA	0.000045	R-RSL	0.00018 C[20]	NA	NA
1,2,3,6,7,8-HXCDF	57117-44-9	0.000045 C[20]	4.5E-05 C[20]	0.0000026 [20]	0.000052 [20]	NA	NA	0.000045	R-RSL	0.00018 C[20]	NA	NA
1,2,3,7,8,9-HXCDD	19408-74-3	0.000045 C[20]	4.5E-05 C[20]	0.0000026 [20]	0.000052 [20]	NA	NA	0.000045	R-RSL	0.00018 C[20]	NA	NA
1,2,3,7,8,9-HXCDF	72918-21-9	0.000045 C[20]	4.5E-05 C[20]	0.0000026 [20]	0.000052 [20]	NA	NA	0.000045	R-RSL	0.00018 C[20]	NA	NA
1,2,3,7,8-PECDD	40321-76-4	0.0000045 C[20]	4.5E-06 C[20]	0.00000026 [20]	0.0000052 [20]	NA	NA	0.0000045	R-RSL	0.000018 C[20]	NA	NA
1,2,3,7,8-PECDF	57117-41-6	0.00015 C[20]	0.00015 C[20]	0.0000087 [20]	0.00017 [20]	NA	NA	0.00015	R-RSL	0.00060 C[20]	NA	NA
2,3,4,6,7,8-HXCDF	60851-34-5	0.000045 C[20]	4.5E-05 C[20]	0.0000026 [20]	0.000052 [20]	NA	NA	0.000045	R-RSL	0.00018 C[20]	NA	NA
2,3,4,7,8-PECDF	57117-31-4	0.000015 C[20]	1.5E-05 C[20]	0.00000087 [20]	0.000017 [20]	NA	NA	0.000015	R-RSL	0.000060 C[20]	NA	NA
2,3,7,8-TCDD	1746-01-6	0.0000045 C	4.5E-06 C	0.00000026	0.0000052	0.00014	0.032	0.0000045	R-RSL	0.000018 C	0.00061	0.032
2,3,7,8-TCDF	51207-31-9	0.000045 C[20]	4.5E-05 C[20]	0.0000026 [20]	0.000052 [20]	NA	NA	0.000045	R-RSL	0.00018 C[20]	NA	NA
Total HpCDD	37871-00-4	NA	NA	NA	NA	NA	NA	NA	None	NA	NA	NA
Total HpCDF	38998-75-3	NA	NA	NA	NA	NA	NA	NA	None	NA	NA	NA
Total HxCDD	34465-46-8	NA	NA	NA	NA	NA	NA	NA	None	NA	NA	NA
Total HxCDF	55684-94-1	NA	NA	NA	NA	NA	NA	NA	None	NA	NA	NA
Total PeCDD	36088-22-9	NA	NA	NA	NA	NA	NA	NA	None	NA	NA	NA
Total PeCDF	30402-15-4	NA	NA	NA	NA	NA	NA	NA	None	NA	NA	NA
Total TCDD	41903-57-5	NA	NA	NA	NA	NA	NA	NA	None	NA	NA	NA
Total TCDF	55722-27-5	NA	NA	NA	NA	NA	NA	NA	None	NA	NA	NA

NAS JRB Willow Grove Site 12 Human Health Screening Criteria - Surface and Subsurface Soil Samples

Analyte	CAS Number	EPA Regional Screening Level, Residential Soil [1] (mg/kg)	Adjusted EPA Regional Screening Level, Residential Soil [2] (mg/kg)	EPA Regional Screening Level, Migration to Groundwater [1] (mg/kg)	Adjusted EPA Regional Screening Level, Migration to Groundwater [2] (mg/kg)	2010 PADEP Medium-Specific Concentrations for Soil (mg/kg) [3]		Lowest Human Health Criterion	Lowest Human Health Criterion Reference	EPA Regional Screening Level, Industrial Soil [1] (mg/kg)	2010 PADEP Medium-Specific Concentrations for Soil (mg/kg) [3]	
						Residential	Migration to Groundwater				Non-Residential	Migration to Groundwater

Notes:

1 - The residential direct contact (R-RSL) and risk-based migration to groundwater soil screening levels (RBSSL) from the ORNL Regional Screening Levels, June, 2011 available online at http://epa-prgs.ornl.gov/chemicals/index.shtml. The risk-based screening levels are based on a target hazard quotient of 1 for noncarcinogens (denoted with a "N" flag) or an incremental lifetime cancer risk (ILCR) of 1E-6 for carcinogens (denoted with a "C" flag). (Industrial criteria are also presented for information purposes.)

2 - The ORNL R-RSL (June, 2011) residential soil screening level for noncarcinogens adjusted by dividing by 10, equivalent to a target hazard quotient of 0.1. The residential soil screening level for carcinogens (not adjusted) is equivalent to an incremental lifetime cancer risk (ILCR) of 1E-6. The ORNL RBSSL (June, 2011) is adjusted for a dilution attenuation factor (DAF) of 20.

3 - Pennsylvania Department of Environmental Protection (PADEP) Medium-Specific Concentration (MSC) screening levels, residential (RES-MSC) and migration to groundwater (MTG-MSC) screening levels from PA Code (2010). (Non-residential criteria are also presented for information purposes.)

4 - One tenth the noncarcinogenic value is less than the carinogenic value; therefore, the noncarcinogenic value is presented.

5 - Value is for 1,3-dichloropropene.

6 - Value is for xylene, mixture.

7 - Value is for 2,4-dinitrophenol.

8 - Value is for diethyl phthalate.

9 - Value is for acenapththene.

10 - Value is for pyrene.

11 - Value is for hexavalent chromium.

12 - Office of Solid Waste and Emergency Response soil screening level (EPA, 1994b)

13 - Value is for mercuy, inorganic salts.

14 - Value is for vanadium and compounds.

15 - Calculated from the EPA website (http://epa-prgs.ornl.gov/cgi-bin/chemicals/csl_search).

Abbreviations:

NA - Not applicable or not available
C - Carcinogen
EPA - U.S. Environmental Protection Agency
N - Noncarcinogen
NA - Not available
SSL - Soil Screening Level

NAS JRB Willow Grove Site 12 Human Health Screening Criteria - Groundwater Samples

Analyte	CAS Number	EPA Regional Screening Level, Tap Water[1] (ug/L)	Adjusted EPA Regional Screening Level, Tap Water[2] (ug/L)	EPA Regional Screening Level, Vapor[1] (ug/L)	Adjusted EPA Regional Screening Level, Vapor[2] (ug/L)	EPA Maximum Contaminant Level (ug/L)[3]	PADEP MSC Residential GW[4] (ug/L)	PADEP MSC Non-Residential GW[4] (ug/L)	Minimum Criteria (ug/L)	Minimum Criterion Reference
Volatile Organic Compounds										
1,1,1-Trichloroethane	71-55-6	9100 N	910 N	7400 N	740 N	200	200	200	200	MCL
1,1,2,2-Tetrachloroethane	79-34-5	0.067 C	0.067 C	2.8 C	2.8 C	NA	0.84	4.3	0.067	T-RSL
1,1,2-trichloro-1,2,2-trifluoroethane (Freon 113)	76-13-1	59000 N	5900 N	1400 N	140 N	NA	63000	170000	140	VAPOR
1,1,2-Trichloroethane	79-00-5	0.42 N[5]	0.04 N[5]	4.4 C	4.4 C	5	5	5	0.042	T-RSL
1,1-Dichloroethane	75-34-3	2.4 C	2.4 C	6.5 C	6.5 C	NA	31	160	2.4	T-RSL
1,1-Dichloroethene	75-35-4	340 N	34 N	190 N	19 N	7	7	7	7	MCL
1,2,3-Trichlorobenzene	87-61-6	29 N	2.9 N	NA	NA	NA	NA	NA	2.9	T-RSL
1,2,4-Trichlorobenzene	120-82-1	4.1 N[5]	0.41 N[5]	36 N	3.6 N	70	70	70	0.41	T-RSL
1,2-Dibromo-3-chloropropane (DBCP)	96-12-8	0.00032 C	0.00032 C	0.027 C	0.027 C	0.2	0.2	0.2	0.00032	T-RSL
1,2-Dibromoethane (EDB)	106-93-4	0.0065 C	0.0065 C	0.15 C	0.15 C	0.05	0.05	0.05	0.0065	T-RSL
1,2-Dichlorobenzene	95-50-1	370 N	37 N	2700 N	270 N	600	600	600	37	T-RSL
1,2-Dichloroethane	107-06-2	0.15 C	0.15 C	2.0 C	2.0 C	5	5	5	0.15	T-RSL
1,2-Dichloropropane	78-87-5	0.39 C	0.39 C	2.0 C	2.0 C	5	5	5	0.39	T-RSL
1,3-Dichlorobenzene	541-73-1	NA	NA	NA	NA	NA	600	600	600	RGW-MSC
1,4-Dichlorobenzene	106-46-7	0.43 C	0.43 C	2.2 C	2.2 C	75	75	75	0.43	T-RSL
1,4-Dioxane	123-91-1	0.67 C	0.67 C	NA	NA	NA	NA	NA	0.67	T-RSL
2-Butanone (MEK)	78-93-3	7100 N	710 N	2300000 N	230000 N	NA	6.4	32	6.4	RGW-MSC
2-Hexanone	591-78-6	47 N	4.7 N	8200 N	820 N	NA	11	44	4.7	T-RSL
4-Methyl-2-pentanone (MIBK)	108-10-1	2000 N	200 N	550000 N	55000 N	NA	2900	8200	200	T-RSL
Acetone	67-64-1	22000 N	2200 N	23000000 N	2300000 N	NA	33000	92000	2200	T-RSL
Benzene	71-43-2	0.41 C	0.41 C	1.3 C	1.3 C	5	5	5	0.41	T-RSL
Bromochloromethane	74-97-5	NA	NA	NA	NA	NA	90	90	90	RGW-MSC
Bromodichloromethane	75-27-4	0.12 C	0.12 C	0.76 C	0.76 C	80	80	80	0.12	T-RSL
Bromoform	75-25-2	8.5 C	8.5 C	100 C	100 C	80	80	80	8.5	T-RSL
Bromomethane	74-83-9	8.7 N	0.87 N	17 N	1.7 N	NA	10	10	0.87	T-RSL
Carbon disulfide	75-15-0	1000 N	100 N	1200 N	120 N	NA	1500	6200	100	T-RSL
Carbon tetrachloride	56-23-5	0.44 C	0.44 C	0.37 C	0.37 C	5	5	5	0.37	VAPOR
Chlorobenzene	108-90-7	91 N	9.1 N	400 N	40 N	100	100	100	9.1	T-RSL
Chloroethane	75-00-3	21000 N	2100 N	22000 N	2200 N	NA	230	900	230	RGW-MSC
Chloroform	67-66-3	0.19 C	0.19 C	0.73 C	0.73 C	80	80	80	0.19	T-RSL
Chloromethane	74-87-3	190 N	19 N	260 N	26 N	NA	NA	NA	19	T-RSL
cis-1,2-Dichloroethene	156-59-2	73 N	7.3 N	NA	NA	70	70	70	7.3	T-RSL
cis-1,3-Dichloropropene	10061-01-5	40 N[6]	4 N[6]	4.1 C[6]	4.1 C[6]	NA	6.6	26	4	T-RSL
Cyclohexane	110-82-7	13000 N	1300 N	1000 N	100 N	NA	13000	53000	100	VAPOR
Dibromochloromethane	124-48-1	0.15 C	0.15 C	2.8 C	2.8 C	80	80	80	0.15	T-RSL
Dichlorodifluoromethane	75-71-8	200 N	20 N	15 N	1.5 N	NA	1000	1000	1.5	VAPOR
Ethylbenzene	100-41-4	1.5 C	1.5 C	3.0 C	3 C	700	700	700	1.5	T-RSL
Isopropylbenzene	98-82-8	680 N	68 N	890 N	89 N	NA	840	3500	68	T-RSL
m-Xylene	108-38-3	200 N	20 N	480 N	48 N	10000	10000	10000	20	T-RSL
p-Xylene	106-42-3	200 N	20 N	480 N	48 N	10000	10000	10000	20	T-RSL
m,p-Xylenes	179601-23-1	200 N[7]	20 N[7]	480 N[7]	48 N[7]	10000	10000	10000	20	T-RSL
Methyl acetate	79-20-9	37000 N	3700 N	NA	NA	NA	37000	100000	3700	T-RSL
Methylcyclohexane	108-87-2	NA	NA	NA	NA	NA	NA	NA	NA	None
Methylene chloride	75-09-2	4.8 C	4.8 C	40 C	40 C	5	5	5	4.8	T-RSL
Methyl-tert-butyl ether	1634-04-4	12 C	12 C	390 C	390 C	NA	20	20	12	T-RSL
o-Xylene	95-47-6	200 N	20 N	3500 N	350 N	NA	10000	10000	20	T-RSL
Styrene	100-42-5	1600 N	160 N	9100 N	910 N	100	100	100	100	MCL
Tetrachloroethene	127-18-4	0.11 C	0.11 C	0.57 C	0.57 C	5	5	5	0.11	T-RSL

NAS JRB Willow Grove Site 12 Human Health Screening Criteria - Groundwater Samples

Analyte	CAS Number	EPA Regional Screening Level, Tap Water[1] (ug/L)	Adjusted EPA Regional Screening Level, Tap Water[2] (ug/L)	EPA Regional Screening Level, Vapor[1] (ug/L)	Adjusted EPA Regional Screening Level, Vapor[2] (ug/L)	EPA Maximum Contaminant Level (ug/L)[3]	PADEP MSC Residential GW[4] (ug/L)	PADEP MSC Non-Residential GW[4] (ug/L)	Minimum Criteria (ug/L)	Minimum Criterion Reference
Toluene	108-88-3	2300 N	230 N	19000 N	1900 N	1000	1000	1000	230	T-RSL
trans-1,2-Dichloroethene	156-60-5	110 N	11 N	370 N	37 N	100	100	100	11	T-RSL
trans-1,3-Dichloropropene	10061-02-6	40 N[6]	4.0 N[6]	4.1 C[6]	4.1 C[6]	NA	6.6	26	4.0	T-RSL
Trichloroethene	79-01-6	2.0 C	2.0 C	3.0 C	3.0 C	5	5	5	2.0	T-RSL
Trichlorofluoromethane	75-69-4	1300 N	130 N	180 N	18 N	NA	NA	NA	18	VAPOR
Vinyl chloride	75-01-4	0.016 C	0.016 C	0.15 C	0.15 C	2	2	2	0.016	T-RSL
Xylenes (total)	1330-20-7	200 N	20 N	480 N	48 N	10000	10000	10000	20	T-RSL
Semivolatile Organic Compounds										
1,1'-Biphenyl	92-52-4	1800 N	180 N	NA	NA	NA	1800	5100	180	T-RSL
1,2,4,5-Tetrachlorobenzene	95-94-3	11 N	1.1 N	NA	NA	NA	11	31	1.1	T-RSL
2,2'-Oxybis(1-chloropropane)	108-60-1	0.32 C	0.32 C	80 C	80 C	NA	NA	NA	0.32	T-RSL
2,3,4,6-Tetrachlorophenol	58-90-2	1100 N	110 N	NA	NA	NA	1100	3100	110	T-RSL
2,4,5-Trichlorophenol	95-95-4	3700 N	370 N	NA	NA	NA	3700	10000	370	T-RSL
2,4,6-Trichlorophenol	88-06-2	37 N[5]	3.7 N[5]	NA	NA	NA	37	100	3.7	T-RSL
2,4-Dichlorophenol	120-83-2	110 N	11 N	NA	NA	NA	20	20	11	T-RSL
2,4-Dimethylphenol	105-67-9	730 N	73 N	NA	NA	NA	730	2000	73	T-RSL
2,4-Dinitrophenol	51-28-5	73 N	7.3 N	NA	NA	NA	73	200	7.3	T-RSL
2,4-Dinitrotoluene	121-14-2	0.22 C	0.22 C	NA	NA	NA	2.1	8.4	0.22	T-RSL
2,6-Dinitrotoluene	606-20-2	37 N	3.7 N	NA	NA	NA	37	100	3.7	T-RSL
2-Chloronaphthalene	91-58-7	2900 N	290 N	NA	NA	NA	2900	8200	290	T-RSL
2-Chlorophenol	95-57-8	180 N	18 N	NA	NA	NA	40	40	18	T-RSL
2-Methylphenol (o-Cresol)	95-48-7	1800 N	180 N	NA	NA	NA	1800	5100	180	T-RSL
2-Nitroaniline	88-74-4	370 N	37 N	NA	NA	NA	110	310	37	T-RSL
2-Nitrophenol	88-75-5	73 N[8]	7.3 N[8]	NA	NA	NA	290	820	7.3	T-RSL
3,3'-Dichlorobenzidine	91-94-1	0.15 C	0.15 C	NA	NA	NA	1.5	5.8	0.15	T-RSL
3-Nitroaniline	99-09-2	NA	NA	NA	NA	NA	11	31	11	RGW-MSC
4,6-Dinitro-2-methylphenol	534-52-1	2.9 N	0.29 N	NA	NA	NA	3.7	10	0.29	T-RSL
4-Bromophenyl phenyl ether	101-55-3	NA	NA	NA	NA	NA	NA	NA	NA	None
4-Chloro-3-methyl phenol	59-50-7	3700 N	370 N	NA	NA	NA	180	570	180	T-RSL
4-Chloroanaline	106-47-8	0.34 C	0.34 C	NA	NA	NA	3.3	13	0.34	T-RSL
4-Chlorophenyl phenyl ether	7005-72-3	NA	NA	NA	NA	NA	NA	NA	NA	None
4-Methylphenol (p-Cresol)	106-44-5	180 N	18 N	NA	NA	NA	180	510	18	T-RSL
4-Nitroaniline	100-01-6	3.4 C	3.4 C	NA	NA	NA	33	130	3.4	T-RSL
4-Nitrophenol	100-02-7	NA	NA	NA	NA	NA	60	60	60	RGW-MSC
Acetophenone	98-86-2	3700 N	370 N	NA	NA	NA	3700	10000	370	T-RSL
Atrazine	1912-24-9	0.29 C	0.29 C	NA	NA	3	3	3	0.29	T-RSL
Benzaldehyde	100-52-7	3700 N	370 N	NA	NA	NA	NA	NA	370	T-RSL
Bis(2-chloroethoxy)methane	111-91-1	110 N	11 N	NA	NA	NA	110	310	11	T-RSL
Bis(2-chloroethyl)ether	111-44-4	0.012 C	0.012 C	11 C	11 C	NA	0.15	0.76	0.012	T-RSL
Bis(2-ethylhexyl)phthalate	117-81-7	4.8 C	4.8 C	NA	NA	6	6	6	4.8	T-RSL
Butyl benzyl phthalate	85-68-7	35 C	35 C	NA	NA	NA	350	1400	35	T-RSL
Caprolactam	105-60-2	18000 N	1800 N	NA	NA	NA	NA	NA	1800	T-RSL
Carbazole	86-74-8	NA	NA	NA	NA	NA	33	130	33	RGW-MSC
Dibenzofuran	132-64-9	37 N	3.7 N	NA	NA	NA	37	100	3.7	T-RSL
Diethyl phthalate	84-66-2	29000 N	2900 N	NA	NA	NA	29000	82000	2900	T-RSL
Dimethyl phthalate	131-11-3	29000 N[9]	2900 N[9]	NA	NA	NA	NA	NA	2900	T-RSL
Di-n-butyl phthalate	84-74-2	3700 N	370 N	NA	NA	NA	NA	NA	370	T-RSL
Di-n-octyl phthalate	117-84-0	NA	NA	NA	NA	NA	1500	3000	1500	RGW-MSC
Hexachlorobenzene	118-74-1	0.042 C	0.042 C	0.076 C	0.076 C	1	1	1	0.042	T-RSL

NAS JRB Willow Grove Site 12 Human Health Screening Criteria - Groundwater Samples

Analyte	CAS Number	EPA Regional Screening Level, Tap Water[1] (ug/L)	Adjusted EPA Regional Screening Level, Tap Water[2] (ug/L)	EPA Regional Screening Level, Vapor[1] (ug/L)	Adjusted EPA Regional Screening Level, Vapor[2] (ug/L)	EPA Maximum Contaminant Level (ug/L)[3]	PADEP MSC Residential GW[4] (ug/L)	PADEP MSC Non-Residential GW[4] (ug/L)	Minimum Criteria (ug/L)	Minimum Criterion Reference
Hexachlorobutadiene	87-68-3	0.86 C	0.86 C	NA	NA	NA	8.5	33	0.86	T-RSL
Hexachlorocyclopentadiene	77-47-4	220 N	22 N	0.19 N	0.019 N	50	50	50	0.019	VAPOR
Hexachloroethane	67-72-1	37 N[5]	3.7 N[5]	3.8 C	3.8 C	NA	1	1	1	RGW-MSC
Isophorone	78-59-1	71 C	71 C	NA	NA	NA	100	100	71	T-RSL
Nitrobenzene	98-95-3	0.12 C	0.12 C	62 C	62 C	NA	73	200	0.12	T-RSL
N-Nitrosodi-n-propylamine	621-64-7	0.0096 C	0.0096 C	NA	NA	NA	0.094	0.37	0.0096	T-RSL
N-Nitrosodiphenylamine	86-30-6	14 C	14 C	NA	NA	NA	130	530	14	T-RSL
Pentachlorophenol	87-86-5	0.17 C	0.17 C	NA	NA	1	1	1	0.17	T-RSL
Phenol	108-95-2	11000 N	1100 N	NA	NA	NA	2000	2000	1100	T-RSL
Polycyclic Aromatic Hydrocarbons										
2-Methylnaphthalene	91-57-6	150 N	15 N	NA	NA	NA	150	410	15	T-RSL
Acenaphthene	83-32-9	2200 N	220 N	NA	NA	NA	2200	3800	220	T-RSL
Acenaphthylene	208-96-8	2200 N[10]	220 N[10]	NA	NA	NA	2200	6100	220	T-RSL
Anthracene	120-12-7	11000 N	1100 N	NA	NA	NA	66	66	66	RGW-MSC
Benzo(a)anthracene	56-55-3	0.029 C	0.029 C	NA	NA	NA	0.29	3.6	0.029	T-RSL
Benzo(a)pyrene	50-32-8	0.0029 C	0.0029 C	NA	NA	0.2	0.2	0.2	0.0029	T-RSL
Benzo(b)fluoranthene	205-99-2	0.029 C	0.029 C	320 C	320 C	NA	0.29	0.29	0.029	T-RSL
Benzo(g,h,i)perylene	191-24-2	1100 N[11]	110 N[11]	NA	NA	NA	0.26	0.26	0.26	RGW-MSC
Benzo(k)fluoranthene	207-08-9	0.29 C	0.29 C	NA	NA	NA	0.55	0.55	0.29	T-RSL
Chrysene	218-01-9	2.9 C	2.9 C	410 C	410 C	NA	1.9	1.9	1.9	RGW-MSC
Dibenzo(a,h)anthracene	53-70-3	0.0029 C	0.0029 C	NA	NA	NA	0.029	0.029	0.0029	T-RSL
Fluoranthene	206-44-0	1500 N	150 N	NA	NA	NA	260	260	150	T-RSL
Fluorene	86-73-7	1500 N	150 N	NA	NA	NA	1500	1900	150	T-RSL
Indeno(1,2,3-c,d)pyrene	193-39-5	0.029 C	0.029 C	NA	NA	NA	0.29	3.6	0.029	T-RSL
Naphthalene	91-20-3	0.14 C	0.14 C	4.0 C	4.0 C	NA	100	100	0.14	T-RSL
Phenanthrene	85-01-8	1100 N[11]	110 N[11]	NA	NA	NA	1100	1100	110	T-RSL
Pyrene	129-00-0	1100 N	110 N	NA	NA	NA	130	130	110	T-RSL
Polychlorinated Biphenyls										
Aroclor-1016	12674-11-2	0.96 C	0.96 C	NA	NA	0.5	2.6	7.2	0.5	MCL
Aroclor-1221	11104-28-2	0.0068 C	0.0068 C	NA	NA	0.5	0.33	1.3	0.0068	T-RSL
Aroclor-1232	11141-16-5	0.0068 C	0.0068 C	NA	NA	0.5	0.33	1.3	0.0068	T-RSL
Aroclor-1242	53469-21-9	0.034 C	0.034 C	NA	NA	0.5	0.33	1.3	0.034	T-RSL
Aroclor-1248	12672-29-6	0.034 C	0.034 C	NA	NA	0.5	0.33	1.3	0.034	T-RSL
Aroclor-1254	11097-69-1	0.034 C	0.034 C	NA	NA	0.5	0.33	1.3	0.034	T-RSL
Aroclor-1260	11096-82-5	0.034 C	0.034 C	NA	NA	0.5	0.33	1.3	0.034	T-RSL
Total PCBs	1336-36-3	NA	NA	NA	NA	0.5	NA	NA	0.5	MCL
Metals										
Aluminum	7429-90-5	37000 N	3700 N	NA	NA	NA	NA	NA	3700	T-RSL
Antimony	7440-36-0	15 N	1.5 N	NA	NA	6	6	6	1.5	T-RSL
Arsenic	7440-38-2	0.045 C	0.045 C	NA	NA	10	10	10	0.045	T-RSL
Barium	7440-39-3	7300 N	730 N	NA	NA	2000	2000	2000	730	T-RSL
Beryllium	7440-41-7	73 N	7.3 N	NA	NA	4	4	4	4	MCL
Cadmium	7440-43-9	18 N	1.8 N	NA	NA	5	5	5	1.8	T-RSL
Calcium	7440-70-2	NA	NA	NA	NA	NA	NA	NA	NA	None
Chromium	7440-47-3	0.043 C[12]	0.043 C[12]	NA	NA	100	100	100	0.043	T-RSL
Cobalt	7440-48-4	11 N	1.1 N	NA	NA	NA	11	31	1.1	T-RSL
Copper	7440-50-8	1500 N	150 N	NA	NA	1300	1000	1000	150	T-RSL
Iron	7439-89-6	26000 N	2600 N	NA	NA	NA	NA	NA	2600	T-RSL
Lead	7439-92-1	15 [13]	15 [13]	NA	NA	15	5	5	5	RGW-MSC

NAS JRB Willow Grove Site 12 Human Health Screening Criteria - Groundwater Samples

Analyte	CAS Number	EPA Regional Screening Level, Tap Water[1] (ug/L)	Adjusted EPA Regional Screening Level, Tap Water[2] (ug/L)	EPA Regional Screening Level, Vapor[1] (ug/L)	Adjusted EPA Regional Screening Level, Vapor[2] (ug/L)	EPA Maximum Contaminant Level (ug/L)[3]	PADEP MSC Residential GW[4] (ug/L)	PADEP MSC Non-Residential GW[4] (ug/L)	Minimum Criteria (ug/L)	Minimum Criterion Reference
Magnesium	7439-95-4	NA	NA	NA	NA	NA	NA	NA	NA	None
Manganese	7439-96-5	880 N	88 N	NA	NA	NA	300	300	88	T-RSL
Mercury	7439-97-6	11 N[14]	1.1 N[14]	NA	NA	2	2	2	1.1	T-RSL
Nickel	7440-02-0	730 N	73 N	NA	NA	NA	100	100	73	T-RSL
Potassium	7440-09-7	NA	NA	NA	NA	NA	NA	NA	NA	None
Selenium	7782-49-2	180 N	18 N	NA	NA	50	50	50	18	T-RSL
Silver	7440-22-4	180 N	18 N	NA	NA	NA	100	100	18	T-RSL
Sodium	7440-23-5	NA	NA	NA	NA	NA	NA	NA	NA	None
Thallium	7440-28-0	0.37 N	0.037 N	NA	NA	2	2	2	0.037	T-RSL
Vanadium	7440-62-2	180 N[15]	18 N[15]	NA	NA	NA	260	720	18	T-RSL
Zinc	7440-66-6	11000 N	1100 N	NA	NA	NA	2000	2000	1100	T-RSL
Hexavalent Chromium										
Hexavalent Chromium	18540-29-9	0.043 C[12]	0.043 C[12]	NA	NA	100	110	100	0.043	T-RSL
Cyanide										
Cyanide	57-12-5	730 N	73 N	NA	NA	200	200	200	73	T-RSL
Pesticides										
4,4'-DDD	72-54-8	0.28 C	0.28 C	NA	NA	NA	2.8	11	0.28	T-RSL
4,4'-DDE	72-55-9	0.20 C	0.20 C	NA	NA	NA	1.9	7.6	0.20	T-RSL
4,4'-DDT	50-29-3	0.20 C	0.20 C	NA	NA	NA	1.9	5.5	0.20	T-RSL
Aldrin	309-00-2	0.0040 C	0.0040 C	NA	NA	NA	3	3	0.0040	T-RSL
alpha-BHC	319-84-6	0.011 C	0.011 C	NA	NA	NA	0.1	0.41	0.011	T-RSL
alpha-Chlordane	5103-71-9	0.19 C[16]	0.19 C[16]	NA	NA	NA	2	2	0.19	T-RSL
beta-BHC	319-85-7	0.037 C	0.037 C	NA	NA	NA	0.37	1.4	0.037	T-RSL
delta-BHC	319-86-8	0.011 C[17]	0.011 C[17]	NA	NA	NA	NA	NA	0.011	T-RSL
Dieldrin	60-57-1	0.0042 C	0.0042 C	NA	NA	NA	0.041	0.16	0.0042	T-RSL
Endosulfan I	959-98-8	220 N[18]	22 N[18]	NA	NA	NA	220	500	22	T-RSL
Endosulfan II	33213-65-9	220 N[18]	22 N[18]	NA	NA	NA	220	450	22	T-RSL
Endosulfan sulfate	1031-07-8	220 N[18]	22 N[18]	NA	NA	NA	120	120	22	T-RSL
Endrin	72-20-8	11 N	1.1 N	NA	NA	2	2	2	1.1	T-RSL
Endrin aldehyde	7421-93-4	11 N[19]	1.1 N[19]	NA	NA	NA	2	2	1.1	T-RSL
Endrin ketone	53494-70-5	11 N[19]	1.1 N[19]	NA	NA	NA	2	2	1.1	T-RSL
gamma-BHC (Lindane)	58-89-9	0.061 C	0.061 C	NA	NA	0.2	0.2	0.2	0.061	T-RSL
gamma-chlordane	5103-74-2	0.19 C[16]	0.19 C[16]	NA	NA	NA	2	2	0.19	T-RSL
Heptachlor	76-44-8	0.015 C	0.015 C	NA	NA	0.4	0.4	0.4	0.015	T-RSL
Heptachlor epoxide	1024-57-3	0.0074 C	0.0074 C	NA	NA	0.2	0.2	0.2	0.0074	T-RSL
Methoxychlor	72-43-5	180 N	18 N	NA	NA	40	40	40	18	T-RSL
Toxaphene	8001-35-2	0.061 C	0.061 C	NA	NA	3	3	3	0.061	T-RSL
Dioxins/Furans										
1,2,3,4,6,7,8,9-OCDD	3268-87-9	0.0017 C[20]	0.0017 C[20]	NA	NA	NA	NA	NA	0.0017	T-RSL
1,2,3,4,6,7,8,9-OCDF	39001-02-0	0.0017 C[20]	0.0017 C[20]	NA	NA	NA	NA	NA	0.0017	T-RSL
1,2,3,4,6,7,8-HPCDD	35822-46-9	0.000052 C[20]	0.000052 C[20]	NA	NA	NA	NA	NA	0.000052	T-RSL
1,2,3,4,6,7,8-HPCDF	67562-39-4	0.000052 C[20]	0.000052 C[20]	NA	NA	NA	NA	NA	0.000052	T-RSL
1,2,3,4,7,8,9-HPCDF	55673-89-7	0.000052 C[20]	0.000052 C[20]	NA	NA	NA	NA	NA	0.000052	T-RSL
1,2,3,4,7,8-HXCDD	39227-28-6	0.0000052 C[20]	0.0000052 C[20]	NA	NA	NA	NA	NA	0.0000052	T-RSL
1,2,3,4,7,8-HXCDF	70648-26-9	0.0000052 C[20]	0.0000052 C[20]	NA	NA	NA	NA	NA	0.0000052	T-RSL
1,2,3,6,7,8-HXCDD	57653-85-7	0.0000052 C[20]	0.0000052 C[20]	NA	NA	NA	NA	NA	0.0000052	T-RSL
1,2,3,6,7,8-HXCDF	57117-44-9	0.0000052 C[20]	0.0000052 C[20]	NA	NA	NA	NA	NA	0.0000052	T-RSL
1,2,3,7,8,9-HXCDD	19408-74-3	0.0000052 C[20]	0.0000052 C[20]	NA	NA	NA	NA	NA	0.0000052	T-RSL

NAS JRB Willow Grove Site 12 Human Health Screening Criteria - Groundwater Samples

Analyte	CAS Number	EPA Regional Screening Level, Tap Water[1] (ug/L)	Adjusted EPA Regional Screening Level, Tap Water[2] (ug/L)	EPA Regional Screening Level, Vapor[1] (ug/L)	Adjusted EPA Regional Screening Level, Vapor[2] (ug/L)	EPA Maximum Contaminant Level (ug/L)[3]	PADEP MSC Residential GW[4] (ug/L)	PADEP MSC Non-Residential GW[4] (ug/L)	Minimum Criteria (ug/L)	Minimum Criterion Reference
1,2,3,7,8,9-HXCDF	72918-21-9	0.0000052 C[20]	0.0000052 C[20]	NA	NA	NA	NA	NA	0.0000052	T-RSL
1,2,3,7,8-PECDD	40321-76-4	0.00000052 C[20]	0.00000052 C[20]	NA	NA	NA	NA	NA	0.00000052	T-RSL
1,2,3,7,8-PECDF	57117-41-6	0.000017 C[20]	0.000017 C[20]	NA	NA	NA	NA	NA	0.000017	T-RSL
2,3,4,6,7,8-HXCDF	60851-34-5	0.0000052 C[20]	0.0000052 C[20]	NA	NA	NA	NA	NA	0.0000052	T-RSL
2,3,4,7,8-PECDF	57117-31-4	0.0000017 C[20]	0.0000017 C[20]	NA	NA	NA	NA	NA	0.0000017	T-RSL
2,3,7,8-TCDD	1746-01-6	0.00000052 C	0.00000052 C	NA	NA	0.00003	0.00003	0.00003	0.00000052	T-RSL
2,3,7,8-TCDF	51207-31-9	0.0000052 C[20]	0.0000052 C[20]	NA	NA	NA	NA	NA	0.0000052	T-RSL
Total HpCDD	37871-00-4	NA	NA	NA	NA	NA	NA	NA	NA	None
Total HpCDF	38998-75-3	NA	NA	NA	NA	NA	NA	NA	NA	None
Total HxCDD	34465-46-8	NA	NA	NA	NA	NA	NA	NA	NA	None
Total HxCDF	55684-94-1	NA	NA	NA	NA	NA	NA	NA	NA	None
Total PeCDD	36088-22-9	NA	NA	NA	NA	NA	NA	NA	NA	None
Total PeCDF	30402-15-4	NA	NA	NA	NA	NA	NA	NA	NA	None
Total TCDD	41903-57-5	NA	NA	NA	NA	NA	NA	NA	NA	None
Total TCDF	55722-27-5	NA	NA	NA	NA	NA	NA	NA	NA	None

Notes:

1 - The tapwater screening levels from the ORNL Regional Screening Levels (T-RSLs), June, 2011 available online at http://epa-prgs.ornl.gov/chemicals/index.shtml. The vapor screening levels (VAPOR) were calculated using USEPA guidance (November, 2002) and toxicity values from USEPA (June, 2011). The risk-based screening levels are based on a target hazard quotient of 1 for noncarcinogens (denoted with a "N" flag) or an incremental lifetime cancer risk (ILCR) of 1E-6 for carcinogens (denoted with a "C" flag).

2 - The ORNL T-RSL (June, 2011) and VAPOR (calculated using USEPA guidance [November, 2002] and toxicity criteria [June, 2011]) adjusted values from the risk-based screening level for noncarcinogens adjusted by dividing by 10, equivalent to a target hazard quotient of 0.1. The risk-based screening level for carcinogens is equivalent to an incremental lifetime cancer risk (ILCR) of 1E-6.

3 - USEPA Maximum Contaminant Levels (MCLs) from the 2009 Edition of the Drinking Water Standards and Health Advisories (USEPA, October 2009).

4 - Pennsylvania Department of Environmental Protection (PADEP) Medium-Specific Concentration (MSC) screening levels, residential groundwater (RGW-MSC) screening levels from PA Code (2010). (Non-residential groundwater criteria are also presented for information purposes.)

5 - One tenth the noncarcinogenic value is less than the carinogenic value; therefore, the noncarcinogenic value is presented.

6 - Value is for 1,3-dichloropropene.

7 - Value is for xylene, mixture.

8 - Value is for 2,4-dinitrophenol.

9 - Value is for diethyl phthalate.

10 - Value is for acenapththene.

11 - Value is for pyrene.

12 - Value is for hexavalent chromium.

13 - Action level under Safe Drinking Water Act.

14 - Value is for mercuy, inorganic salts.

15 - Value is for vanadium and compounds.

Abbreviations:

NA - Not available or not applicable

N - Noncarcinogen

C - carcinogen

NAS JRB Willow Grove Site 12 Human Health Screening Criteria - Sediment Samples

Analyte	CAS Number	EPA Regional Screening Level, Residential Soil [1] (mg/kg)	Adjusted EPA Regional Screening Level, Residential Soil [2] (mg/kg)	2010 PADEP Medium-Specific Concentrations for Soil (mg/kg) [3]		Lowest Human Health Criterion	Lowest Human Health Criterion Reference	EPA Regional Screening Level, Industrial Soil [1] (mg/kg)
				Residential	Non-Residential			
Volatile Organic Compounds								
1,1,1-Trichloroethane	71-55-6	8700 N	870 N	10000	10000	870	R-RSL	38000 N
1,1,2,2-Tetrachloroethane	79-34-5	0.56 C	0.56 C	7.7	38	0.56	R-RSL	2.8 C
1,1,2-trichloro-1,2,2-trifluoroethane (Freon 11	76-13-1	43000 N	4300 N	10000	10000	4300	R-RSL	180000 N
1,1,2-Trichloroethane	79-00-5	1.6 N[4]	0.16 N[4]	28	140	0.16	R-RSL	5.3 C
1,1-Dichloroethane	75-34-3	3.3 C	3.3 C	280	1400	3.3	R-RSL	17 C
1,1-Dichloroethene	75-35-4	240 N	24 N	3800	10000	24	R-RSL	1100 N
1,2,3-Trichlorobenzene	87-61-6	49 N	4.9 N	NA	NA	4.9	R-RSL	490 N
1,2,4-Trichlorobenzene	120-82-1	62 N[4]	6.2 N[4]	2200	10000	6.2	R-RSL	270 N[4]
1,2-Dibromo-3-chloropropane (DBCP)	96-12-8	0.0054 C	0.0054 C	0.029	0.37	0.0054	R-RSL	0.069 C
1,2-Dibromoethane (EDB)	106-93-4	0.034 C	0.034 C	0.74	3.7	0.034	R-RSL	0.17 C
1,2-Dichlorobenzene	95-50-1	1900 N	190 N	3800	10000	190	R-RSL	9800 N
1,2-Dichloroethane	107-06-2	0.43 C	0.43 C	17	86	0.43	R-RSL	2.2 C
1,2-Dichloropropane	78-87-5	0.94 C	0.94 C	45	220	0.94	R-RSL	4.5 C
1,3-Dichlorobenzene	541-73-1	NA	NA	660	8400	660	RES-MSC	NA
1,4-Dichlorobenzene	106-46-7	2.4 C	2.4 C	40	200	2.4	R-RSL	12 C
1,4-Dioxane	123-91-1	4.9 C	4.9 C	58	290	4.9	R-RSL	17 C
2-Butanone (MEK)	78-93-3	28000 N	2800 N	10000	10000	2800	R-RSL	200000 N
2-Hexanone	591-78-6	210 N	21 N	96	400	21	R-RSL	1400 N
4-Methyl-2-pentanone (MIBK)	108-10-1	5300 N	530 N	10000	10000	530	R-RSL	53000 N
Acetone	67-64-1	61000 N	6100 N	10000	10000	6100	R-RSL	630000 N
Benzene	71-43-2	1.1 C	1.1 C	57	290	1.1	R-RSL	5.4 C
Bromochloromethane	74-97-5	NA	NA	2200	10000	2200	RES-MSC	NA
Bromodichloromethane	75-27-4	0.27 C	0.27 C	12	60	0.27	R-RSL	1.4 C
Bromoform	75-25-2	62 C	62 C	410	2000	62	R-RSL	220 C
Bromomethane	74-83-9	7.3 N	0.73 N	96	400	0.73	R-RSL	32 N
Carbon disulfide	75-15-0	820 N	82 N	10000	10000	82	R-RSL	3700 N
Carbon tetrachloride	56-23-5	0.61 C	0.61 C	30	150	0.61	R-RSL	3.0 C
Chlorobenzene	108-90-7	290 N	29 N	960	4000	29	R-RSL	1400 N
Chloroethane	75-00-3	15000 N	1500 N	6200	10000	1500	R-RSL	61000 N
Chloroform	67-66-3	0.29 C	0.29 C	19	97	0.29	R-RSL	1.5 C
Chloromethane	74-87-3	120 N	12 N	NA	NA	12	R-RSL	500 N
cis-1,2-Dichloroethene	156-59-2	160 N	16 N	2200	10000	16	R-RSL	2000 N
cis-1,3-Dichloropropene	10061-01-5	1.7 C[5]	1.7 C[5]	110	560	1.7	R-RSL	8.1 C[5]
Cyclohexane	110-82-7	7000 N	700 N	10000	10000	700	R-RSL	29000 N
Dibromochloromethane	124-48-1	0.68 C	0.68 C	17	82	0.68	R-RSL	3.3 C
Dichlorodifluoromethane	75-71-8	94 N	9.4 N	3900	10000	9.4	R-RSL	780 N

NAS JRB Willow Grove Site 12 Human Health Screening Criteria - Sediment Samples

Analyte	CAS Number	EPA Regional Screening Level, Residential Soil [1] (mg/kg)	Adjusted EPA Regional Screening Level, Residential Soil [2] (mg/kg)	2010 PADEP Medium-Specific Concentrations for Soil (mg/kg) [3]		Lowest Human Health Criterion	Lowest Human Health Criterion Reference	EPA Regional Screening Level, Industrial Soil [1] (mg/kg)
				Residential	Non-Residential			
Ethylbenzene	100-41-4	5.4 C	5.4 C	10000	10000	5.4	R-RSL	27 C
Isopropylbenzene	98-82-8	2100 N	210 N	7700	10000	210	R-RSL	11000 N
m-Xylene	108-38-3	590 N	59 N	1900	8000	59	R-RSL	2700
p-Xylene	106-42-3	600 N	60 N	1900	8000	60	R-RSL	2700
m,p-Xylenes	179601-23-1	620 N[6]	62 N[6]	1900	8000	62	R-RSL	2700 [6]
Methyl acetate	79-20-9	78000 N	7800 N	10000	10000	7800	R-RSL	1000000 N
Methylcyclohexane	108-87-2	NA	NA	NA	NA	NA	None	NA
Methylene chloride	75-09-2	11 C	11 C	950	4700	11	R-RSL	53 C
Methyl-tert-butyl ether	1634-04-4	43 C	43 C	620	3200	43	R-RSL	220 C
o-Xylene	95-47-6	690 N	69 N	1900	8000	69	R-RSL	19000 N
Styrene	100-42-5	6300 N	630 N	10000	10000	630	R-RSL	36000 N
Tetrachloroethene	127-18-4	0.55 C	0.55 C	340	1500	0.55	R-RSL	2.6 C
Toluene	108-88-3	5000 N	500 N	10000	10000	500	R-RSL	45000 N
trans-1,2-Dichloroethene	156-60-5	150 N	15 N	1100	4800	15	R-RSL	690 N
trans-1,3-Dichloropropene	10061-02-6	1.7 C[5]	1.7 C[5]	110	560	1.7	R-RSL	8.1 C[5]
Trichloroethene	79-01-6	2.5 N[4]	0.25 N[4]	260	1300	0.25	R-RSL	14 C
Trichlorofluoromethane	75-69-4	790 N	79 N	NA	NA	79	R-RSL	3400 N
Vinyl chloride	75-01-4	0.060 C	0.060 C	1.9	110	0.060	R-RSL	1.7 C
Xylenes (total)	1330-20-7	630 N	63 N	1900	8000	63	R-RSL	2700 N
Semivolatile Organic Compounds								
1,1'-Biphenyl	92-52-4	51 N	5.1 N	11000	140000	5.1	R-RSL	51000 N
1,2,4,5-Tetrachlorobenzene	95-94-3	18 N	1.8 N	66	840	1.8	R-RSL	180 N
2,2'-Oxybis(1-chloropropane)	108-60-1	4.6 C	4.6 C	NA	NA	4.6	R-RSL	22 C
2,3,4,6-Tetrachlorophenol	58-90-2	1800 N	180 N	6600	84000	180	R-RSL	18000 N
2,4,5-Trichlorophenol	95-95-4	6100 N	610 N	22000	190000	610	R-RSL	62000 N
2,4,6-Trichlorophenol	88-06-2	61 N[4]	6.1 N[4]	220	2800	6.1	R-RSL	620 N[4]
2,4-Dichlorophenol	120-83-2	180 N	18 N	660	8400	18	R-RSL	1800 N
2,4-Dimethylphenol	105-67-9	1200 N	120 N	4400	10000	120	R-RSL	12000 N
2,4-Dinitrophenol	51-28-5	120 N	12 N	440	5600	12	R-RSL	1200 N
2,4-Dinitrotoluene	121-14-2	1.6 C	1.6 C	58	260	1.6	R-RSL	5.5 C
2,6-Dinitrotoluene	606-20-2	61 N	6.1 N	220	2800	6.1	R-RSL	620 N
2-Chloronaphthalene	91-58-7	6300 N	630 N	18000	190000	630	R-RSL	82000 N
2-Chlorophenol	95-57-8	390 N	39 N	1100	10000	39	R-RSL	5100 N
2-Methylphenol (o-Cresol)	95-48-7	3100 N	310 N	11000	140000	310	R-RSL	31000 N
2-Nitroaniline	88-74-4	610 N	61 N	660	8400	61	R-RSL	6000 N
2-Nitrophenol	88-75-5	120 N[7]	12 N[7]	1800	22000	12	R-RSL	1200 N[7]

NAS JRB Willow Grove Site 12 Human Health Screening Criteria - Sediment Samples

Analyte	CAS Number	EPA Regional Screening Level, Residential Soil [1] (mg/kg)	Adjusted EPA Regional Screening Level, Residential Soil [2] (mg/kg)	2010 PADEP Medium-Specific Concentrations for Soil (mg/kg) [3]		Lowest Human Health Criterion	Lowest Human Health Criterion Reference	EPA Regional Screening Level, Industrial Soil [1] (mg/kg)
				Residential	Non-Residential			
3,3'-Dichlorobenzidine	91-94-1	1.1 C	1.1 C	40	180	1.1	R-RSL	3.8 C
3-Methylphenol (m-Cresol)	108-39-4	3100 N	310 N	10000	10000	310	R-RSL	31000 N
3-Nitroaniline	99-09-2	NA	NA	66	840	66	RES-MSC	NA
4,6-Dinitro-2-methylphenol	534-52-1	4.9 N	0.49 N	22	280	0.49	R-RSL	49 N
4-Bromophenyl phenyl ether	101-55-3	NA	NA	NA	NA	NA	NA	NA
4-Chloro-3-methyl phenol	59-50-7	6100 N	610 N	NA	NA	610	R-RSL	62000 N
4-Chloroanaline	106-47-8	2.4 C	2.4 C	90	400	2.4	R-RSL	8.6 C
4-Chlorophenyl phenyl ether	7005-72-3	NA	NA	NA	NA	NA	None	NA
4-Methylphenol (p-Cresol)	106-44-5	310 N	31 N	10000	10000	31	R-RSL	3100 N
4-Nitroaniline	100-01-6	24 C	24 C	880	4000	24	R-RSL	86 C
4-Nitrophenol	100-02-7	NA	NA	1800	22000	1800	RES-MSC	NA
Acetophenone	98-86-2	7800 N	780 N	10000	10000	780	R-RSL	100000 N
Atrazine	1912-24-9	2.1 C	2.1 C	78	340	2.1	R-RSL	7.5 C
Benzaldehyde	100-52-7	7800 N	780 N	NA	NA	780	R-RSL	100000 N
Bis(2-chloroethoxy)methane	111-91-1	180 N	18 N	660	8400	18	R-RSL	1800 N
Bis(2-chloroethyl)ether	111-44-4	0.21 C	0.21 C	1.3	6.7	0.21	R-RSL	1.0 C
Bis(2-ethylhexyl)phthalate	117-81-7	35 C	35 C	1300	5700	35	R-RSL	120 C
Butyl benzyl phthalate	85-68-7	260 C	260 C	9400	10000	260	R-RSL	910 C
Caprolactam	105-60-2	31000 N	3100 N	NA	NA	3100	R-RSL	310000 N
Carbazole	86-74-8	NA	NA	900	4000	900	RES-MSC	NA
Dibenzofuran	132-64-9	78 N	7.8 N	220	2800	7.8	R-RSL	1000 N
Diethyl phthalate	84-66-2	49000 N	4900 N	10000	10000	4900	R-RSL	490000 N
Dimethyl phthalate	131-11-3	49000 N[8]	4900 N[8]	NA	NA	4900	R-RSL	490000 N[8]
Di-n-butyl phthalate	84-74-2	6100 N	610 N	10000	10000	610	R-RSL	62000 N
Di-n-octyl phthalate	117-84-0	NA	NA	8800	10000	8800	RES-MSC	NA
Hexachlorobenzene	118-74-1	0.30 C	0.30 C	11	50	0.30	R-RSL	1.1 C
Hexachlorobutadiene	87-68-3	61 N[4]	6.1 N[4]	220	1000	6.1	R-RSL	22 C
Hexachlorocyclopentadiene	77-47-4	370 N	37 N	1300	10000	37	R-RSL	3700 N
Hexachloroethane	67-72-1	61 N[4]	6.1 N[4]	110	550	6.1	R-RSL	620 N[4]
Isophorone	78-59-1	510 C	510 C	10000	10000	510	R-RSL	1800 C
Nitrobenzene	98-95-3	4.8 C	4.8 C	440	5600	4.8	R-RSL	24 C
N-Nitrosodi-n-propylamine	621-64-7	0.069 C	0.069 C	2.6	11	0.069	R-RSL	0.25 C
N-Nitrosodiphenylamine	86-30-6	99 C	99 C	3700	16000	99	R-RSL	350 C
Pentachlorophenol	87-86-5	0.89 C	0.89 C	150	660	0.89	R-RSL	2.7 C
Phenol	108-95-2	18000 N	1800 N	66000	190000	1800	R-RSL	180000 N
Polycyclic Aromatic Hydrocarbons								

NAS JRB Willow Grove Site 12 Human Health Screening Criteria - Sediment Samples

Analyte	CAS Number	EPA Regional Screening Level, Residential Soil [1] (mg/kg)	Adjusted EPA Regional Screening Level, Residential Soil [2] (mg/kg)	2010 PADEP Medium-Specific Concentrations for Soil (mg/kg) [3]		Lowest Human Health Criterion	Lowest Human Health Criterion Reference	EPA Regional Screening Level, Industrial Soil [1] (mg/kg)
				Residential	Non-Residential			
2-Methylnaphthalene	91-57-6	310 N	31 N	880	11000	31	R-RSL	4100 N
Acenaphthene	83-32-9	3400 N	340 N	13000	170000	340	R-RSL	33000 N
Acenaphthylene	208-96-8	3400 N[9]	340 N[9]	13000	170000	340	R-RSL	170000 N[9]
Anthracene	120-12-7	17000 N	1700 N	66000	190000	1700	R-RSL	170000 N
Benzo(a)anthracene	56-55-3	0.15 C	0.15 C	5.7	110	0.15	R-RSL	2.1 C
Benzo(a)pyrene	50-32-8	0.015 C	0.015 C	0.57	11	0.015	R-RSL	0.21 C
Benzo(b)fluoranthene	205-99-2	0.15 C	0.15 C	5.7	110	0.15	R-RSL	2.1 C
Benzo(g,h,i)perylene	191-24-2	1700 N[10]	170 N[10]	13000	170000	170	R-RSL	17000 N[10]
Benzo(k)fluoranthene	207-08-9	1.5 C	1.5 C	57	1100	1.5	R-RSL	21 C
Chrysene	218-01-9	15 C	15 C	570	11000	15	R-RSL	210 C
Dibenzo(a,h)anthracene	53-70-3	0.015 C	0.015 C	0.57	11	0.015	R-RSL	0.21 C
Fluoranthene	206-44-0	2300 N	230 N	8800	110000	230	R-RSL	22000 N
Fluorene	86-73-7	2300 N	230 N	8800	110000	230	R-RSL	22000 N
Indeno(1,2,3-c,d)pyrene	193-39-5	0.15 C	0.15 C	5.7	110	0.15	R-RSL	2.1 C
Naphthalene	91-20-3	3.6 C	3.6 C	4400	56000	3.6	R-RSL	18 C
Phenanthrene	85-01-8	1700 N[10]	170 N[10]	66000	190000	170	R-RSL	17000 N[10]
Pyrene	129-00-0	1700 N	170 N	6600	84000	170	R-RSL	17000 N
Polychlorinated Biphenyls								
Aroclor-1016	12674-11-2	3.9 N	0.39 N	15	200	0.39	R-RSL	37 N[4]
Aroclor-1221	11104-28-2	0.14 C	0.14 C	9	40	0.14	R-RSL	0.54 C
Aroclor-1232	11141-16-5	0.14 C	0.14 C	9	40	0.14	R-RSL	0.54 C
Aroclor-1242	53469-21-9	0.22 C	0.22 C	9	40	0.22	R-RSL	0.74 C
Aroclor-1248	12672-29-6	0.22 C	0.22 C	9	40	0.22	R-RSL	0.74 C
Aroclor-1254	11097-69-1	1.1 N[4]	0.11 N[4]	4.4	40	0.11	R-RSL	0.74 C
Aroclor-1260	11096-82-5	0.22 C	0.22 C	9	40	0.22	R-RSL	0.74 C
Aroclor-1262	37324-23-5	NA	NA	NA	NA	NA	None	NA
Aroclor-1268	11100-14-4	NA	NA	NA	NA	NA	None	NA
Total PCBs	1336-36-3	NA	NA	NA	NA	NA	None	NA
Metals								
Aluminum	7429-90-5	77000 N	7700 N	190000	190000	7700	R-RSL	990000 NM
Antimony	7440-36-0	31 N	3.1 N	88	1100	3.1	R-RSL	410 N
Arsenic	7440-38-2	0.39 C	0.39 C	12	53	0.39	R-RSL	1.6 C
Barium	7440-39-3	15000 N	1500 N	44000	190000	1500	R-RSL	190000 NM
Beryllium	7440-41-7	160 N	16 N	440	5600	16	R-RSL	2000 N
Cadmium	7440-43-9	70 N	7 N	110	1400	7	R-RSL	800 N
Calcium	7440-70-2	NA	NA	NA	NA	NA	None	NA

NAS JRB Willow Grove Site 12 Human Health Screening Criteria - Sediment Samples

Analyte	CAS Number	EPA Regional Screening Level, Residential Soil [1] (mg/kg)	Adjusted EPA Regional Screening Level, Residential Soil [2] (mg/kg)	2010 PADEP Medium-Specific Concentrations for Soil (mg/kg) [3]		Lowest Human Health Criterion	Lowest Human Health Criterion Reference	EPA Regional Screening Level, Industrial Soil [1] (mg/kg)
				Residential	Non-Residential			
Chromium	7440-47-3	0.29 C[11]	0.29 C[11]	94	420	0.29	R-RSL	5.6 C[11]
Cobalt	7440-48-4	23 N	2.3 N	66	840	2.3	R-RSL	300 N
Copper	7440-50-8	3100 N	310 N	8100	100000	310	R-RSL	41000 N
Iron	7439-89-6	55000 N	5500 N	150000	190000	5500	R-RSL	720000 N
Lead	7439-92-1	400 [12]	400 [12]	500	1000	400	R-RSL	800 [12]
Magnesium	7439-95-4	NA	NA	NA	NA	NA	None	NA
Manganese	7439-96-5	1800 N	180 N	10000	130000	180	R-RSL	23000 N
Mercury	7439-97-6	23 N[13]	2.3 N[13]	35	450	2.3	R-RSL	310 N[13]
Nickel	7440-02-0	1500 N	150 N	4400	56000	150	R-RSL	20000 N
Potassium	7440-09-7	NA	NA	NA	NA	NA	None	NA
Selenium	7782-49-2	390 N	39 N	1100	190000	39	R-RSL	5100 N
Silver	7440-22-4	390 N	39 N	1100	14000	39	R-RSL	5100 N
Sodium	7440-23-5	NA	NA	NA	NA	NA	None	NA
Thallium	7440-28-0	0.78	0.078	15	200	0.078	R-RSL	NA
Vanadium	7440-62-2	390 N[14]	39 N[14]	1500	20000	39	R-RSL	5200 N[14]
Zinc	7440-66-6	23000 N	2300 N	66000	190000	2300	R-RSL	310000 N
Hexavalent Chromium								
Hexavalent Chromium	18540-29-9	0.29 C[11]	0.29 C[11]	660[11]	8400[11]	0.29	R-RSL	5.6 C[11]
Cyanide								
Cyanide	57-12-5	1600 N	160 N	4400	56000	160	R-RSL	20000 N
Pesticides								
4,4'-DDD	72-54-8	2.0 C	2.0 C	75	330	2.0	R-RSL	7.2 C
4,4'-DDE	72-55-9	1.4 C	1.4 C	53	230	1.4	R-RSL	5.1 C
4,4'-DDT	50-29-3	1.7 C	1.7 C	53	230	1.7	R-RSL	7.0 C
Aldrin	309-00-2	0.029 C	0.029 C	1.1	4.7	0.029	R-RSL	0.10 C
alpha-BHC	319-84-6	0.077 C	0.077 C	2.8	13	0.077	R-RSL	0.27 C
alpha-Chlordane	5103-71-9	1.6 C[16]	1.6 C[16]	51	230	1.6	R-RSL	6.5 C[16]
beta-BHC	319-85-7	0.27 C	0.27 C	9.9	44	0.27	R-RSL	0.96 C
delta-BHC	319-86-8	0.077 C[17]	0.077 C[17]	NA	NA	0.077	R-RSL	0.27 C[17]
Dieldrin	60-57-1	0.030 C	0.030 C	1.1	5.0	0.030	R-RSL	0.11 C
Endosulfan I	959-98-8	370 N[18]	37 N[18]	1300	17000	37	R-RSL	3700 N[18]
Endosulfan II	33213-65-9	370 N[18]	37 N[18]	1300	17000	37	R-RSL	3700 N[18]
Endosulfan sulfate	1031-07-8	370 N[18]	37 N[18]	1300	47000	37	R-RSL	3700 N[18]
Endrin	72-20-8	18 N	1.8 N	66	840	1.8	R-RSL	180 N
Endrin aldehyde	7421-93-4	18 N[19]	1.8 N	66	840	1.8	R-RSL	180 N[19]

NAS JRB Willow Grove Site 12 Human Health Screening Criteria - Sediment Samples

Analyte	CAS Number	EPA Regional Screening Level, Residential Soil [1] (mg/kg)	Adjusted EPA Regional Screening Level, Residential Soil [2] (mg/kg)	2010 PADEP Medium-Specific Concentrations for Soil (mg/kg) [3]		Lowest Human Health Criterion	Lowest Human Health Criterion Reference	EPA Regional Screening Level, Industrial Soil [1] (mg/kg)
				Residential	Non-Residential			
Endrin ketone	53494-70-5	18 N[19]	1.8 N	66	840	1.8	R-RSL	180 N[19]
gamma-BHC (Lindane)	58-89-9	0.52 C	0.52 C	16	72	0.52	R-RSL	2.1 C
gamma-chlordane	5103-74-2	1.6 C[16]	1.6 C[16]	51	230	1.6	R-RSL	6.5 C[16]
Heptachlor	76-44-8	0.11 C	0.11 C	4.0	18	0.11	R-RSL	0.38 C
Heptachlor epoxide	1024-57-3	0.053 C	0.053 C	2.0	8.7	0.053	R-RSL	0.19 C
Methoxychlor	72-43-5	310 N	31 N	1100	14000	31	R-RSL	3100 N
Toxaphene	8001-35-2	0.44 C	0.44 C	16	72	0.44	R-RSL	1.6 C
Dioxins/Furans								
1,2,3,4,6,7,8,9-OCDD	3268-87-9	0.015 C[20]	0.015 C[20]	NA	NA	0.015	R-RSL	0.06 C[20]
1,2,3,4,6,7,8,9-OCDF	39001-02-0	0.015 C[20]	0.015 C[20]	NA	NA	0.015	R-RSL	0.06 C[20]
1,2,3,4,6,7,8-HPCDD	35822-46-9	0.00045 C[20]	0.00045 C[20]	NA	NA	0.00045	R-RSL	0.0018 C[20]
1,2,3,4,6,7,8-HPCDF	67562-39-4	0.00045 C[20]	0.00045 C[20]	NA	NA	0.00045	R-RSL	0.0018 C[20]
1,2,3,4,7,8,9-HPCDF	55673-89-7	0.00045 C[20]	0.00045 C[20]	NA	NA	0.00045	R-RSL	0.0018 C[20]
1,2,3,4,7,8-HXCDD	39227-28-6	0.000045 C[20]	4.5E-05 C[20]	NA	NA	0.000045	R-RSL	0.00018 C[20]
1,2,3,4,7,8-HXCDF	70648-26-9	0.000045 C[20]	4.5E-05 C[20]	NA	NA	0.000045	R-RSL	0.00018 C[20]
1,2,3,6,7,8-HXCDD	57653-85-7	0.000045 C[20]	4.5E-05 C[20]	NA	NA	0.000045	R-RSL	0.00018 C[20]
1,2,3,6,7,8-HXCDF	57117-44-9	0.000045 C[20]	4.5E-05 C[20]	NA	NA	0.000045	R-RSL	0.00018 C[20]
1,2,3,7,8,9-HXCDD	19408-74-3	0.000045 C[20]	4.5E-05 C[20]	NA	NA	0.000045	R-RSL	0.00018 C[20]
1,2,3,7,8,9-HXCDF	72918-21-9	0.000045 C[20]	4.5E-05 C[20]	NA	NA	0.000045	R-RSL	0.00018 C[20]
1,2,3,7,8-PECDD	40321-76-4	0.0000045 C[20]	4.5E-06 C[20]	NA	NA	0.0000045	R-RSL	0.000018 C[20]
1,2,3,7,8-PECDF	57117-41-6	0.00015 C[20]	0.00015 C[20]	NA	NA	0.00015	R-RSL	0.00060 C[20]
2,3,4,6,7,8-HXCDF	60851-34-5	0.000045 C[20]	4.5E-05 C[20]	NA	NA	0.000045	R-RSL	0.00018 C[20]
2,3,4,7,8-PECDF	57117-31-4	0.000015 C[20]	1.5E-05 C[20]	NA	NA	0.000015	R-RSL	0.000060 C[20]
2,3,7,8-TCDD	1746-01-6	0.0000045 C	4.5E-06 C	0.00014	0.00061	0.0000045	R-RSL	0.000018 C
2,3,7,8-TCDF	51207-31-9	0.000045 C[20]	4.5E-05 C[20]	NA	NA	0.000045	R-RSL	0.00018 C[20]
Total HpCDD	37871-00-4	NA	NA	NA	NA	NA	None	NA
Total HpCDF	38998-75-3	NA	NA	NA	NA	NA	None	NA
Total HxCDD	34465-46-8	NA	NA	NA	NA	NA	None	NA
Total HxCDF	55684-94-1	NA	NA	NA	NA	NA	None	NA
Total PeCDD	36088-22-9	NA	NA	NA	NA	NA	None	NA
Total PeCDF	30402-15-4	NA	NA	NA	NA	NA	None	NA
Total TCDD	41903-57-5	NA	NA	NA	NA	NA	None	NA
Total TCDF	55722-27-5	NA	NA	NA	NA	NA	None	NA

NAS JRB Willow Grove Site 12 Human Health Screening Criteria - Sediment Samples

Analyte	CAS Number	EPA Regional Screening Level, Residential Soil [1] (mg/kg)	Adjusted EPA Regional Screening Level, Residential Soil [2] (mg/kg)	2010 PADEP Medium-Specific Concentrations for Soil (mg/kg) [3]		Lowest Human Health Criterion	Lowest Human Health Criterion Reference	EPA Regional Screening Level, Industrial Soil [1] (mg/kg)
				Residential	Non-Residential			

Notes:

1 - The residential direct contact (R-RSL) and risk-based migration to groundwater soil screening levels (RBSSL) from the ORNL Regional Screening Levels, June, 2011 available online at http://epa-prgs.ornl.gov/chemicals/index.shtml. The risk-based screening levels are based on a target hazard quotient of 1 for noncarcinogens (denoted with a "N" flag) or an incremental lifetime cancer risk (ILCR) of 1E-6 for carcinogens (denoted with a "C" flag). (Industrial criteria are also presented for information purposes.)

2 - The ORNL R-RSL (June, 2011) residential soil screening level for noncarcinogens adjusted by dividing by 10, equivalent to a target hazard quotient of 0.1. The residential soil screening level for carcinogens (not adjusted) is equivalent to an incremental lifetime cancer risk (ILCR) of 1E-6. The ORNL RBSSL (June, 2011) is adjusted for a dilution attenuation factor (DAF) of 20.

3 - Pennsylvania Department of Environmental Protection (PADEP) Medium-Specific Concentration (MSC) screening levels, residential (R-MSC) and non-residential (NR-MSC) screening levels from PA Code (2010).

4 - One tenth the noncarcinogenic value is less than the carinogenic value; therefore, the noncarcinogenic value is presented.

5 - Value is for 1,3-dichloropropene.

6 - Value is for xylene, mixture.

7 - Value is for 2,4-dinitrophenol.

8 - Value is for diethyl phthalate.

9 - Value is for acenaphthene.

10 - Value is for pyrene.

11 - Value is for hexavalent chromium.

12 - Office of Solid Waste and Emergency Response soil screening level (EPA, 1994b)

13 - Value is for mercuy, inorganic salts.

14 - Value is for vanadium and compounds.

15 - Calculated from the EPA website (http://epa-prgs.ornl.gov/cgi-bin/chemicals/csl_search).

Abbreviations:

NA - Not applicable or not available
C - Carcinogen
EPA - U.S. Environmental Protection Agency
N - Noncarcinogen
NA - Not available
SSL - Soil Screening Level

NAS JRB Willow Grove Site 12 Human Health Screening Criteria - Surface Water Samples

Analyte	CAS Number	EPA Regional Screening Level, Tap Water[1] (ug/L)	Adjusted EPA Regional Screening Level, Tap Water[2] (ug/L)	EPA Maximum Contaminant Level (ug/L)[3]	PADEP MSC Residential GW[4] (ug/L)	PADEP MSC Non-Residential GW[4] (ug/L)	Minimum Criteria (ug/L)	Minimum Criterion Reference
Volatile Organic Compounds								
1,1,1-Trichloroethane	71-55-6	9100 N	910 N	200	200	200	200	MCL
1,1,2,2-Tetrachloroethane	79-34-5	0.067 C	0.067 C	NA	0.84	4.3	0.067	T-RSL
1,1,2-trichloro-1,2,2-trifluoroethane (Freon 113)	76-13-1	59000 N	5900 N	NA	63000	170000	5900	T-RSL
1,1,2-Trichloroethane	79-00-5	0.42 N[5]	0.042 N[5]	5	5	5	0.042	T-RSL
1,1-Dichloroethane	75-34-3	2.4 C	2.4 C	NA	31	160	2.4	T-RSL
1,1-Dichloroethene	75-35-4	340 N	34 N	7	7	7	7	MCL
1,2,3-Trichlorobenzene	87-61-6	29 N	2.9 N	NA	NA	NA	2.9	T-RSL
1,2,4-Trichlorobenzene	120-82-1	4.1 N[5]	0.41 N[5]	70	70	70	0.41	T-RSL
1,2-Dibromo-3-chloropropane (DBCP)	96-12-8	0.00032 C	0.00032 C	0.2	0.2	0.2	0.00032	T-RSL
1,2-Dibromoethane (EDB)	106-93-4	0.0065 C	0.0065 C	0.05	0.05	0.05	0.0065	T-RSL
1,2-Dichlorobenzene	95-50-1	370 N	37 N	600	600	600	37	T-RSL
1,2-Dichloroethane	107-06-2	0.15 C	0.15 C	5	5	5	0.15	T-RSL
1,2-Dichloropropane	78-87-5	0.39 C	0.39 C	5	5	5	0.39	T-RSL
1,3-Dichlorobenzene	541-73-1	NA	NA	NA	600	600	600	RGW-MSC
1,4-Dichlorobenzene	106-46-7	0.43 C	0.43 C	75	75	75	0.43	T-RSL
1,4-Dioxane	123-91-1	0.67 C	0.67 C	NA	NA	NA	0.67	T-RSL
2-Butanone (MEK)	78-93-3	7100 N	710 N	NA	6.4	32	6.4	RGW-MSC
2-Hexanone	591-78-6	47 N	4.7 N	NA	11	44	4.7	T-RSL
4-Methyl-2-pentanone (MIBK)	108-10-1	2000 N	200 N	NA	2900	8200	200	T-RSL
Acetone	67-64-1	22000 N	2200 N	NA	33000	92000	2200	T-RSL
Benzene	71-43-2	0.41 C	0.41 C	5	5	5	0.41	T-RSL
Bromochloromethane	74-97-5	NA	NA	NA	90	90	90	RGW-MSC
Bromodichloromethane	75-27-4	0.12 C	0.12 C	80	80	80	0.12	T-RSL
Bromoform	75-25-2	8.5 C	8.5 C	80	80	80	8.5	T-RSL
Bromomethane	74-83-9	8.7 N	0.87 N	NA	10	10	0.87	T-RSL
Carbon disulfide	75-15-0	1000 N	100 N	NA	1500	6200	100	T-RSL
Carbon tetrachloride	56-23-5	0.44 C	0.44 C	5	5	5	0.44	T-RSL
Chlorobenzene	108-90-7	91 N	9.1 N	100	100	100	9.1	T-RSL
Chloroethane	75-00-3	21000 N	2100 N	NA	230	900	230	RGW-MSC
Chloroform	67-66-3	0.19 C	0.19 C	80	80	80	0.19	T-RSL
Chloromethane	74-87-3	190 N	19 N	NA	NA	NA	19	T-RSL
cis-1,2-Dichloroethene	156-59-2	73 N	7.3 N	70	70	70	7.3	T-RSL
cis-1,3-Dichloropropene	10061-01-5	40 N[6]	4 N[6]	NA	6.6	26	4	T-RSL
Cyclohexane	110-82-7	13000 N	1300 N	NA	13000	53000	1300	T-RSL
Dibromochloromethane	124-48-1	0.15 C	0.15 C	80	80	80	0.15	T-RSL
Dichlorodifluoromethane	75-71-8	200 N	20 N	NA	1000	1000	20	T-RSL
Ethylbenzene	100-41-4	1.5 C	1.5 C	700	700	700	1.5	T-RSL
Isopropylbenzene	98-82-8	680 N	68 N	NA	840	3500	68	T-RSL
m-Xylene	108-38-3	200 N	20 N	10000	10000	10000	20	T-RSL

NAS JRB Willow Grove Site 12 Human Health Screening Criteria - Surface Water Samples

Analyte	CAS Number	EPA Regional Screening Level, Tap Water[1] (ug/L)	Adjusted EPA Regional Screening Level, Tap Water[2] (ug/L)	EPA Maximum Contaminant Level (ug/L)[3]	PADEP MSC Residential GW[4] (ug/L)	PADEP MSC Non-Residential GW[4] (ug/L)	Minimum Criteria (ug/L)	Minimum Criterion Reference
p-Xylene	106-42-3	200 N	20 N	10000	10000	10000	20	T-RSL
m,p-Xylenes	179601-23-1	200 N[7]	20 N[7]	10000	10000	10000	20	T-RSL
Methyl acetate	79-20-9	37000 N	3700 N	NA	37000	100000	3700	T-RSL
Methylcyclohexane	108-87-2	NA	NA	NA	NA	NA	NA	None
Methylene chloride	75-09-2	4.8 C	4.8 C	5	5	5	4.8	T-RSL
Methyl-tert-butyl ether	1634-04-4	12 C	12 C	NA	20	20	12	T-RSL
o-Xylene	95-47-6	200 N	20 N	NA	10000	10000	20	T-RSL
Styrene	100-42-5	1600 N	160 N	100	100	100	100	MCL
Tetrachloroethene	127-18-4	0.11 C	0.11 C	5	5	5	0.11	T-RSL
Toluene	108-88-3	2300 N	230 N	1000	1000	1000	230	T-RSL
trans-1,2-Dichloroethene	156-60-5	110 N	11 N	100	100	100	11	T-RSL
trans-1,3-Dichloropropene	10061-02-6	40 N[6]	4.0 N[6]	NA	6.6	26	4.0	T-RSL
Trichloroethene	79-01-6	2.0 C	2.0 C	5	5	5	2.0	T-RSL
Trichlorofluoromethane	75-69-4	1300 N	130 N	NA	NA	NA	130	T-RSL
Vinyl chloride	75-01-4	0.016 C	0.016 C	2	2	2	0.016	T-RSL
Xylenes (total)	1330-20-7	200 N	20 N	10000	10000	10000	20	T-RSL
Semivolatile Organic Compounds								
1,1'-Biphenyl	92-52-4	0.83 N	0.083 N	NA	1800	5100	0.083	T-RSL
1,2,4,5-Tetrachlorobenzene	95-94-3	11 N	1.1 N	NA	11	31	1.1	T-RSL
2,2'-Oxybis(1-chloropropane)	108-60-1	0.32 C	0.32 C	NA	NA	NA	0.32	T-RSL
2,3,4,6-Tetrachlorophenol	58-90-2	1100 N	110 N	NA	1100	3100	110	T-RSL
2,4,5-Trichlorophenol	95-95-4	3700 N	370 N	NA	3700	10000	370	T-RSL
2,4,6-Trichlorophenol	88-06-2	37 N[5]	3.7 N[5]	NA	37	100	3.7	T-RSL
2,4-Dichlorophenol	120-83-2	110 N	11 N	NA	20	20	11	T-RSL
2,4-Dimethylphenol	105-67-9	730 N	73 N	NA	730	2000	73	T-RSL
2,4-Dinitrophenol	51-28-5	73 N	7.3 N	NA	73	200	7.3	T-RSL
2,4-Dinitrotoluene	121-14-2	0.22 C	0.22 C	NA	2.1	8.4	0.22	T-RSL
2,6-Dinitrotoluene	606-20-2	37 N	3.7 N	NA	37	100	3.7	T-RSL
2-Chloronaphthalene	91-58-7	2900 N	290 N	NA	2900	8200	290	T-RSL
2-Chlorophenol	95-57-8	180 N	18 N	NA	40	40	18	T-RSL
2-Methylphenol (o-Cresol)	95-48-7	1800 N	180 N	NA	1800	5100	180	T-RSL
2-Nitroaniline	88-74-4	370 N	37 N	NA	110	310	37	T-RSL
2-Nitrophenol	88-75-5	73 N[8]	7.3 N[8]	NA	290	820	7.3	T-RSL
3,3'-Dichlorobenzidine	91-94-1	0.15 C	0.15 C	NA	1.5	5.8	0.15	T-RSL
3-Nitroaniline	99-09-2	NA	NA	NA	11	31	11	RGW-MSC
4,6-Dinitro-2-methylphenol	534-52-1	2.9 N	0.29 N	NA	3.7	10	0.29	T-RSL
4-Bromophenyl phenyl ether	101-55-3	NA	NA	NA	NA	NA	NA	None
4-Chloro-3-methyl phenol	59-50-7	3700 N	370 N	NA	180	570	180	RGW-MSC
4-Chloroanaline	106-47-8	0.34 C	0.34 C	NA	3.3	13	0.34	T-RSL
4-Chlorophenyl phenyl ether	7005-72-3	NA	NA	NA	NA	NA	NA	None

NAS JRB Willow Grove Site 12 Human Health Screening Criteria - Surface Water Samples

Analyte	CAS Number	EPA Regional Screening Level, Tap Water[1] (ug/L)	Adjusted EPA Regional Screening Level, Tap Water[2] (ug/L)	EPA Maximum Contaminant Level (ug/L)[3]	PADEP MSC Residential GW[4] (ug/L)	PADEP MSC Non-Residential GW[4] (ug/L)	Minimum Criteria (ug/L)	Minimum Criterion Reference
4-Methylphenol (p-Cresol)	106-44-5	180 N	18 N	NA	180	510	18	T-RSL
4-Nitroaniline	100-01-6	3.4 C	3.4 C	NA	33	130	3.4	T-RSL
4-Nitrophenol	100-02-7	NA	NA	NA	60	60	60	RGW-MSC
Acetophenone	98-86-2	3700 N	370 N	NA	3700	10000	370	T-RSL
Atrazine	1912-24-9	0.29 C	0.29 C	3	3	3	0.29	T-RSL
Benzaldehyde	100-52-7	3700 N	370 N	NA	NA	NA	370	T-RSL
Bis(2-chloroethoxy)methane	111-91-1	110 N	11 N	NA	110	310	11	T-RSL
Bis(2-chloroethyl)ether	111-44-4	0.012 C	0.012 C	NA	0.15	0.76	0.012	T-RSL
Bis(2-ethylhexyl)phthalate	117-81-7	4.8 C	4.8 C	6	6	6	4.8	T-RSL
Butyl benzyl phthalate	85-68-7	35 C	35 C	NA	350	1400	35	T-RSL
Caprolactam	105-60-2	18000 N	1800 N	NA	NA	NA	1800	T-RSL
Carbazole	86-74-8	NA	NA	NA	33	130	33	RGW-MSC
Dibenzofuran	132-64-9	37 N	3.7 N	NA	37	100	3.7	T-RSL
Diethyl phthalate	84-66-2	29000 N	2900 N	NA	29000	82000	2900	T-RSL
Dimethyl phthalate	131-11-3	29000 N[9]	2900 N[9]	NA	NA	NA	2900	T-RSL
Di-n-butyl phthalate	84-74-2	3700 N	370 N	NA	NA	NA	370	T-RSL
Di-n-octyl phthalate	117-84-0	NA	NA	NA	1500	3000	1500	RGW-MSC
Hexachlorobenzene	118-74-1	0.042 C	0.042 C	1	1	1	0.042	T-RSL
Hexachlorobutadiene	87-68-3	0.86 C	0.86 C	NA	8.5	33	0.86	T-RSL
Hexachlorocyclopentadiene	77-47-4	220 N	22 N	50	50	50	22	T-RSL
Hexachloroethane	67-72-1	37 N[5]	3.7 N[5]	NA	1	1	1	RGW-MSC
Isophorone	78-59-1	71 C	71 C	NA	100	100	71	T-RSL
Nitrobenzene	98-95-3	0.12 C	0.12 C	NA	73	200	0.12	T-RSL
N-Nitrosodi-n-propylamine	621-64-7	0.0096 C	0.0096 C	NA	0.094	0.37	0.0096	T-RSL
N-Nitrosodiphenylamine	86-30-6	14 C	14 C	NA	130	530	14	T-RSL
Pentachlorophenol	87-86-5	0.17 C	0.17 C	1	1	1	0.17	T-RSL
Phenol	108-95-2	11000 N	1100 N	NA	2000	2000	1100	T-RSL
Polycyclic Aromatic Hydrocarbons								
2-Methylnaphthalene	91-57-6	150 N	15 N	NA	150	410	15	T-RSL
Acenaphthene	83-32-9	2200 N	220 N	NA	2200	3800	220	T-RSL
Acenaphthylene	208-96-8	2200 N[10]	220 N[10]	NA	2200	6100	220	T-RSL
Anthracene	120-12-7	11000 N	1100 N	NA	66	66	66	RGW-MSC
Benzo(a)anthracene	56-55-3	0.029 C	0.029 C	NA	0.29	3.6	0.029	T-RSL
Benzo(a)pyrene	50-32-8	0.0029 C	0.0029 C	0.2	0.2	0.2	0.0029	T-RSL
Benzo(b)fluoranthene	205-99-2	0.029 C	0.029 C	NA	0.29	0.29	0.029	T-RSL
Benzo(g,h,i)perylene	191-24-2	1100 N[11]	110 N[11]	NA	0.26	0.26	0.26	RGW-MSC
Benzo(k)fluoranthene	207-08-9	0.29 C	0.29 C	NA	0.55	0.55	0.29	T-RSL
Chrysene	218-01-9	2.9 C	2.9 C	NA	1.9	1.9	1.9	RGW-MSC
Dibenzo(a,h)anthracene	53-70-3	0.0029 C	0.0029 C	NA	0.029	0.029	0.0029	T-RSL
Fluoranthene	206-44-0	1500 N	150 N	NA	260	260	150	T-RSL

NAS JRB Willow Grove Site 12 Human Health Screening Criteria - Surface Water Samples

Analyte	CAS Number	EPA Regional Screening Level, Tap Water[1] (ug/L)	Adjusted EPA Regional Screening Level, Tap Water[2] (ug/L)	EPA Maximum Contaminant Level (ug/L)[3]	PADEP MSC Residential GW[4] (ug/L)	PADEP MSC Non-Residential GW[4] (ug/L)	Minimum Criteria (ug/L)	Minimum Criterion Reference
Fluorene	86-73-7	1500 N	150 N	NA	1500	1900	150	T-RSL
Indeno(1,2,3-c,d)pyrene	193-39-5	0.029 C	0.029 C	NA	0.29	3.6	0.029	T-RSL
Naphthalene	91-20-3	0.14 C	0.14 C	NA	100	100	0.14	T-RSL
Phenanthrene	85-01-8	1100 N[11]	110 N[11]	NA	1100	1100	110	T-RSL
Pyrene	129-00-0	1100 N	110 N	NA	130	130	110	T-RSL
Metals								
Aluminum	7429-90-5	37000 N	3700 N	NA	NA	NA	3700	T-RSL
Antimony	7440-36-0	15 N	1.5 N	6	6	6	1.5	T-RSL
Arsenic	7440-38-2	0.045 C	0.045 C	10	10	10	0.045	T-RSL
Barium	7440-39-3	7300 N	730 N	2000	2000	2000	730	T-RSL
Beryllium	7440-41-7	73 N	7.3 N	4	4	4	4	RGW-MSC
Cadmium	7440-43-9	18 N	1.8 N	5	5	5	1.8	T-RSL
Calcium	7440-70-2	NA	NA	NA	NA	NA	NA	None
Chromium	7440-47-3	0.043 C[12]	0.043 C[12]	100	100	100	0.043	T-RSL
Cobalt	7440-48-4	11 N	1.1 N	NA	11	31	1.1	T-RSL
Copper	7440-50-8	1500 N	150 N	1300	1000	1000	150	T-RSL
Iron	7439-89-6	26000 N	2600 N	NA	NA	NA	2600	T-RSL
Lead	7439-92-1	15 [13]	15 [13]	15	5	5	5	RGW-MSC
Magnesium	7439-95-4	NA	NA	NA	NA	NA	NA	None
Manganese	7439-96-5	880 N	88 N	NA	300	300	88	T-RSL
Mercury	7439-97-6	11 N[14]	1.1 N[14]	2	2	2	1.1	T-RSL
Nickel	7440-02-0	730 N	73 N	NA	100	100	73	T-RSL
Potassium	7440-09-7	NA	NA	NA	NA	NA	NA	None
Selenium	7782-49-2	180 N	18 N	50	50	50	18	T-RSL
Silver	7440-22-4	180 N	18 N	NA	100	100	18	T-RSL
Sodium	7440-23-5	NA	NA	NA	NA	NA	NA	None
Thallium	7440-28-0	0.37 N	0.037 N	2	2	2	0.037	MCL
Vanadium	7440-62-2	180 N[15]	18 N[15]	NA	260	720	18	T-RSL
Zinc	7440-66-6	11000 N	1100 N	NA	2000	2000	1100	T-RSL
Hexavalent Chromium								
Hexavalent Chromium	18540-29-9	0.043 C[12]	0.043 C[12]	100	110	100	0.043	T-RSL
Cyanide								
Cyanide	57-12-5	730 N	73 N	200	200	200	73	T-RSL
Pesticides								
4,4'-DDD	72-54-8	0.28 C	0.28 C	NA	2.8	11	0.28	T-RSL
4,4'-DDE	72-55-9	0.20 C	0.20 C	NA	1.9	7.6	0.20	T-RSL
4,4'-DDT	50-29-3	0.20 C	0.20 C	NA	1.9	5.5	0.20	T-RSL
Aldrin	309-00-2	0.0040 C	0.0040 C	NA	3	3	0.0040	T-RSL
alpha-BHC	319-84-6	0.011 C	0.011 C	NA	0.1	0.41	0.011	T-RSL
alpha-Chlordane	5103-71-9	0.19 C[16]	0.19 C[16]	NA	2	2	0.19	T-RSL

NAS JRB Willow Grove Site 12 Human Health Screening Criteria - Surface Water Samples

Analyte	CAS Number	EPA Regional Screening Level, Tap Water[1] (ug/L)	Adjusted EPA Regional Screening Level, Tap Water[2] (ug/L)	EPA Maximum Contaminant Level (ug/L)[3]	PADEP MSC Residential GW[4] (ug/L)	PADEP MSC Non-Residential GW[4] (ug/L)	Minimum Criteria (ug/L)	Minimum Criterion Reference
beta-BHC	319-85-7	0.037 C	0.037 C	NA	0.37	1.4	0.037	T-RSL
delta-BHC	319-86-8	0.011 C[17]	0.011 C[17]	NA	NA	NA	0.011	T-RSL
Dieldrin	60-57-1	0.0042 C	0.0042 C	NA	0.041	0.16	0.0042	T-RSL
Endosulfan I	959-98-8	220 N[18]	22 N[18]	NA	220	500	22	T-RSL
Endosulfan II	33213-65-9	220 N[18]	22 N[18]	NA	220	450	22	T-RSL
Endosulfan sulfate	1031-07-8	220 N[18]	22 N[18]	NA	120	120	22	T-RSL
Endrin	72-20-8	11 N	1.1 N	2	2	2	1.1	T-RSL
Endrin aldehyde	7421-93-4	11 N[19]	1.1 N[19]	NA	2	2	1.1	T-RSL
Endrin ketone	53494-70-5	11 N[19]	1.1 N[19]	NA	2	2	1.1	T-RSL
gamma-BHC (Lindane)	58-89-9	0.061 C	0.061 C	0.2	0.2	0.2	0.061	T-RSL
gamma-chlordane	5103-74-2	0.19 C[16]	0.19 C[16]	NA	2	2	0.19	T-RSL
Heptachlor	76-44-8	0.015 C	0.015 C	0.4	0.4	0.4	0.015	T-RSL
Heptachlor epoxide	1024-57-3	0.0074 C	0.0074 C	0.2	0.2	0.2	0.0074	T-RSL
Methoxychlor	72-43-5	180 N	18 N	40	40	40	18	T-RSL
Toxaphene	8001-35-2	0.061 C	0.061 C	3	3	3	0.061	T-RSL
Dioxins/Furans								
1,2,3,4,6,7,8,9-OCDD	3268-87-9	0.0017 C[20]	0.0017 C[20]	NA	NA	NA	0.0017	T-RSL
1,2,3,4,6,7,8,9-OCDF	39001-02-0	0.0017 C[20]	0.0017 C[20]	NA	NA	NA	0.0017	T-RSL
1,2,3,4,6,7,8-HPCDD	35822-46-9	0.000052 C[20]	0.000052 C[20]	NA	NA	NA	0.000052	T-RSL
1,2,3,4,6,7,8-HPCDF	67562-39-4	0.000052 C[20]	0.000052 C[20]	NA	NA	NA	0.000052	T-RSL
1,2,3,4,7,8,9-HPCDF	55673-89-7	0.000052 C[20]	0.000052 C[20]	NA	NA	NA	0.000052	T-RSL
1,2,3,4,7,8-HXCDD	39227-28-6	0.0000052 C[20]	0.0000052 C[20]	NA	NA	NA	0.0000052	T-RSL
1,2,3,4,7,8-HXCDF	70648-26-9	0.0000052 C[20]	0.0000052 C[20]	NA	NA	NA	0.0000052	T-RSL
1,2,3,6,7,8-HXCDD	57653-85-7	0.0000052 C[20]	0.0000052 C[20]	NA	NA	NA	0.0000052	T-RSL
1,2,3,6,7,8-HXCDF	57117-44-9	0.0000052 C[20]	0.0000052 C[20]	NA	NA	NA	0.0000052	T-RSL
1,2,3,7,8,9-HXCDD	19408-74-3	0.0000052 C[20]	0.0000052 C[20]	NA	NA	NA	0.0000052	T-RSL
1,2,3,7,8,9-HXCDF	72918-21-9	0.0000052 C[20]	0.0000052 C[20]	NA	NA	NA	0.0000052	T-RSL
1,2,3,7,8-PECDD	40321-76-4	0.00000052 C[20]	0.00000052 C[20]	NA	NA	NA	0.00000052	T-RSL
1,2,3,7,8-PECDF	57117-41-6	0.000017 C[20]	0.000017 C[20]	NA	NA	NA	0.000017	T-RSL
2,3,4,6,7,8-HXCDF	60851-34-5	0.0000052 C[20]	0.0000052 C[20]	NA	NA	NA	0.0000052	T-RSL
2,3,4,7,8-PECDF	57117-31-4	0.0000017 C[20]	0.0000017 C[20]	NA	NA	NA	0.0000017	T-RSL
2,3,7,8-TCDD	1746-01-6	0.00000052 C	0.00000052 C	0.00003	0.00003	0.00003	0.00000052	T-RSL
2,3,7,8-TCDF	51207-31-9	0.0000052 C[20]	0.0000052 C[20]	NA	NA	NA	0.0000052	T-RSL
Total HpCDD	37871-00-4	NA	NA	NA	NA	NA	NA	None
Total HpCDF	38998-75-3	NA	NA	NA	NA	NA	NA	None
Total HxCDD	34465-46-8	NA	NA	NA	NA	NA	NA	None
Total HxCDF	55684-94-1	NA	NA	NA	NA	NA	NA	None
Total PeCDD	36088-22-9	NA	NA	NA	NA	NA	NA	None
Total PeCDF	30402-15-4	NA	NA	NA	NA	NA	NA	None

NAS JRB Willow Grove Site 12 Human Health Screening Criteria - Surface Water Samples

Analyte	CAS Number	EPA Regional Screening Level, Tap Water[1] (ug/L)	Adjusted EPA Regional Screening Level, Tap Water[2] (ug/L)	EPA Maximum Contaminant Level (ug/L)[3]	PADEP MSC Residential GW[4] (ug/L)	PADEP MSC Non-Residential GW[4] (ug/L)	Minimum Criteria (ug/L)	Minimum Criterion Reference
Total TCDD	41903-57-5	NA	NA	NA	NA	NA	NA	None
Total TCDF	55722-27-5	NA	NA	NA	NA	NA	NA	None

Notes:

1 - The surface water screening levels from the ORNL Tapwater Regional Screening Levels (T-RSLs), June, 2011 available online at http://epa-prgs.ornl.gov/chemicals/index.shtml. The risk-based screening levels are based on a target hazard quotient of 1 for noncarcinogens (denoted with a "N" flag) or an incremental lifetime cancer risk (ILCR) of 1E-6 for carcinogens (denoted with a "C" flag).

2 - The ORNL T-RSL (June, 2011) adjusted values from the risk-based screening level for noncarcinogens adjusted by dividing by 10, equivalent to a target hazard quotient of 0.1. The risk-based screening level for carcinogens is equivalent to an incremental lifetime cancer risk (ILCR) of 1E-6.

3 - USEPA Maximum Contaminant Levels (MCLs) from the 2009 Edition of the Drinking Water Standards and Health Advisories (USEPA, October 2009).

4 - Pennsylvania Department of Environmental Protection (PADEP) Medium-Specific Concentration (MSC) screening levels, residential groundwater (RGW-MSC) screening levels from PA Code (2010). (Non-residential groundwater criteria are also presented for information purposes.)

5 - One tenth the noncarcinogenic value is less than the carinogenic value; therefore, the noncarcinogenic value is presented.

6 - Value is for 1,3-dichloropropene.

7 - Value is for xylene, mixture.

8 - Value is for 2,4-dinitrophenol.

9 - Value is for diethyl phthalate.

10 - Value is for acenapththene.

11 - Value is for pyrene.

12 - Value is for hexavalent chromium.

13 - Action level under Safe Drinking Water Act.

14 - Value is for mercuy, inorganic salts.

15 - Value is for vanadium and compounds.

Abbreviations:

NA - Not available or not applicable

N - Noncarcinogen

C - carcinogen

NAS JRB Willow Grove Site 12 Ecological Screening Criteria - Surface Soil Samples

Analyte	CAS Number	Ecological Soil Screening Level [1] (mg/kg)	Source of Ecological Soil Screening Level	EPA Eco SSL (mg/kg)	NOAA SQUIRT (mg/kg)
Volatile Organic Compounds					
1,1,1-Trichloroethane	71-55-6	29.8	R5 ECOS	NA	**29.8**
1,1,2,2-Tetrachloroethane	79-34-5	0.127	R5 ECOS	NA	**0.127**
1,1,2-trichloro-1,2,2-trifluoroethane (Freon 113)	76-13-1	--	--	NA	NA
1,1,2-Trichloroethane	79-00-5	28.6	R5 ECOS	NA	**28.6**
1,1-Dichloroethane	75-34-3	20.1	R5 ECOS	NA	**20.1**
1,1-Dichloroethene	75-35-4	8.28	R5 ECOS	NA	**8.28**
1,2,3-Trichlorobenzene	87-61-6	11.1	R5 ECOS	NA	**11.1**
1,2,4-Trichlorobenzene	120-82-1	11.1	R5 ECOS	NA	**11.1**
1,2-Dibromo-3-chloropropane (DBCP)	96-12-8	0.0352	R5 ECOS	NA	**0.0352**
1,2-Dibromoethane (EDB)	106-93-4	1.23	R5 ECOS	NA	**1.23**
1,2-Dichlorobenzene	95-50-1	2.96	R5 ECOS	NA	**2.96**
1,2-Dichloroethane	107-06-2	21.2	R5 ECOS	NA	**21.2**
1,2-Dichloropropane	78-87-5	32.7	R5 ECOS	NA	**32.7**
1,3-Dichlorobenzene	541-73-1	37.7	R5 ECOS	NA	**37.7**
1,4-Dichlorobenzene	106-46-7	0.546	R5 ECOS	NA	**0.546**
1,4-Dioxane	123-91-1	2.05	R5 ECOS	NA	**2.05**
2-Butanone (MEK)	78-93-3	89.6	R5 ECOS	NA	**89.6**
2-Hexanone	591-78-6	12.6	R5 ECOS	NA	**12.6**
4-Methyl-2-pentanone (MIBK)	108-10-1	443	R5 ECOS	NA	**443**
Acetone	67-64-1	2.5	R5 ECOS	NA	**2.5**
Benzene	71-43-2	0.255	R5 ECOS	NA	**0.255**
Bromochloromethane	74-97-5	--	--	NA	NA
Bromodichloromethane	75-27-4	0.54	R5 ECOS	NA	**0.54**
Bromoform	75-25-2	15.9	R5 ECOS	NA	**15.9**
Bromomethane	74-83-9	0.235	R5 ECOS	NA	**0.235**
Carbon disulfide	75-15-0	0.0941	R5 ECOS	NA	**0.0941**
Carbon tetrachloride	56-23-5	2.98	R5 ECOS	NA	**2.98**
Chlorobenzene	108-90-7	13.1	R5 ECOS	NA	**13.1**
Chloroethane	75-00-3	--	--	NA	NA
Chloroform	67-66-3	1.19	R5 ECOS	NA	**1.19**
Chloromethane	74-87-3	10.4	R5 ECOS	NA	**10.4**
cis-1,2-Dichloroethene	156-59-2	0.78373	R5 ECOS	NA	**0.784**
cis-1,3-Dichloropropene	10061-01-5	0.398	R5 ECOS	NA	**0.398**
Cyclohexane	110-82-7	--	--	NA	NA
Dibromochloromethane	124-48-1	--	--	NA	NA
Dichlorodifluoromethane	75-71-8	39.5	R5 ECOS	NA	**39.5**
Ethylbenzene	100-41-4	5.16	R5 ECOS	NA	**5.16**
Isopropylbenzene	98-82-8	--	--	NA	NA
m,p-Xylenes	179601-23-1	10	R5 ECOS	NA	**10**
Methyl acetate	79-20-9	--	--	NA	NA
Methylcyclohexane	108-87-2	--	--	NA	NA
Methylene chloride	75-09-2	4.05	R5 ECOS	NA	**4.05**
Methyl-tert-butyl ether	1634-04-4	--	--	NA	NA
o-Xylene	95-47-6	10	R5 ECOS	NA	**10**
Styrene	100-42-5	4.69	R5 ECOS	NA	**4.69**
Tetrachloroethene	127-18-4	9.92	R5 ECOS	NA	**9.92**
Toluene	108-88-3	5.45	R5 ECOS	NA	**5.45**
trans-1,2-Dichloroethene	156-60-5	0.784	R5 ECOS	NA	**0.784**
trans-1,3-Dichloropropene	10061-02-6	0.398	R5 ECOS	NA	**0.398**
Trichloroethene	79-01-6	12.4	R5 ECOS	NA	**12.4**
Trichlorofluoromethane	75-69-4	16.4	R5 ECOS	NA	**16.4**
Vinyl chloride	75-01-4	0.646	R5 ECOS	NA	**0.646**
Xylenes (total)	1330-20-7	10	R5 ECOS	NA	**10**
Semivolatile Organic Compounds					
1,1'-Biphenyl	92-52-4	60	R5 ECOS	NA	**60**
1,2,4,5-Tetrachlorobenzene	95-94-3	2.02	R5 ECOS	NA	**2.02**
2,2'-Oxybis(1-chloropropane)	108-60-1	19.9	R5 ECOS	NA	**19.9**
2,3,4,6-Tetrachlorophenol	58-90-2	0.199	R5 ECOS	NA	**0.199**
2,4,5-Trichlorophenol	95-95-4	14.1	R5 ECOS	NA	**14.1**
2,4,6-Trichlorophenol	88-06-2	9.94	R5 ECOS	NA	**9.94**
2,4-Dichlorophenol	120-83-2	87.5	R5 ECOS	NA	**87.5**
2,4-Dimethylphenol	105-67-9	0.01	R5 ECOS	NA	**0.01**
2,4-Dinitrophenol	51-28-5	0.0609	R5 ECOS	NA	**0.0609**
2,4-Dinitrotoluene	121-14-2	1.28	R5 ECOS	NA	**1.28**
2,6-Dinitrotoluene	606-20-2	0.0328	R5 ECOS	NA	**0.0328**
2-Chloronaphthalene	91-58-7	0.0122	R5 ECOS	NA	**0.0122**
2-Chlorophenol	95-57-8	0.243	R5 ECOS	NA	**0.243**
2-Methylphenol (o-Cresol)	95-48-7	40.4	R5 ECOS	NA	**40.4**
2-Nitroaniline	88-74-4	74.1	R5 ECOS	NA	**74.1**
2-Nitrophenol	88-75-5	1.6	R5 ECOS	NA	**1.6**
3,3'-Dichlorobenzidine	91-94-1	0.646	R5 ECOS	NA	**0.646**
3-Nitroaniline	99-09-2	3.16	R5 ECOS	NA	**3.16**
4,6-Dinitro-2-methylphenol	534-52-1	0.144	R5 ECOS	NA	**0.144**
4-Bromophenyl phenyl ether	101-55-3	--	--	NA	NA
4-Chloro-3-methyl phenol	59-50-7	7.95	R5 ECOS	NA	**7.95**
4-Chloroanaline	106-47-8	1.1	R5 ECOS	NA	**1.1**
4-Chlorophenyl phenyl ether	7005-72-3	--	--	NA	NA
4-Methylphenol (p-Cresol)	106-44-5	163	R5 ECOS	NA	**163**
4-Nitroaniline	100-01-6	21.9	R5 ECOS	NA	**21.9**
4-Nitrophenol	100-02-7	5.12	R5 ECOS	NA	**5.12**
Acetophenone	98-86-2	300	R5 ECOS	NA	**300**
Atrazine	1912-24-9	--	--	NA	NA
Benzaldehyde	100-52-7	--	--	NA	NA

NAS JRB Willow Grove Site 12 Ecological Screening Criteria - Surface Soil Samples

Analyte	CAS Number	Ecological Soil Screening Level [1] (mg/kg)	Source of Ecological Soil Screening Level	EPA Eco SSL (mg/kg)	NOAA SQUIRT (mg/kg)
Bis(2-chloroethoxy)methane	111-91-1	0.302	R5 ECOS	NA	**0.302**
Bis(2-chloroethyl)ether	111-44-4	23.7	R5 ECOS	NA	**23.7**
Bis(2-ethylhexyl)phthalate	117-81-7	0.925	R5 ECOS	NA	**0.925**
Butyl benzyl phthalate	85-68-7	0.239	R5 ECOS	NA	**0.239**
Caprolactam	105-60-2	--	--	NA	NA
Carbazole	86-74-8	--	--	NA	NA
Dibenzofuran	132-64-9	--	--	NA	NA
Diethyl phthalate	84-66-2	24.8	R5 ECOS	NA	**24.8**
Dimethyl phthalate	131-11-3	734	R5 ECOS	NA	**734**
Di-n-butyl phthalate	84-74-2	0.15	R5 ECOS	NA	**0.15**
Di-n-octyl phthalate	117-84-0	709	R5 ECOS	NA	**709**
Hexachlorobenzene	118-74-1	0.199	R5 ECOS	NA	**0.199**
Hexachlorobutadiene	87-68-3	0.0398	R5 ECOS	NA	**0.0398**
Hexachlorocyclopentadiene	77-47-4	0.755	R5 ECOS	NA	**0.755**
Hexachloroethane	67-72-1	0.596	R5 ECOS	NA	**0.596**
Isophorone	78-59-1	139	R5 ECOS	NA	**139**
Nitrobenzene	98-95-3	1.31	R5 ECOS	NA	**1.31**
N-Nitrosodi-n-propylamine	621-64-7	0.544	R5 ECOS	NA	**0.544**
N-Nitrosodiphenylamine	86-30-6	0.545	R5 ECOS	NA	**0.545**
Pentachlorophenol	87-86-5	0.119	R5 ECOS	NA	**0.119**
Phenol	108-95-2	120	R5 ECOS	NA	**120**
Polycyclic Aromatic Hydrocarbons					
2-Methylnaphthalene	91-57-6	29	Eco SSL	**29**	3.24
Acenaphthene	83-32-9	29	Eco SSL	**29**	682
Acenaphthylene	208-96-8	29	Eco SSL	**29**	682
Anthracene	120-12-7	29	Eco SSL	**29**	1480
Benzo(a)anthracene	56-55-3	1.1	Eco SSL	**1.1**	5.21
Benzo(a)pyrene	50-32-8	1.1	Eco SSL	**1.1**	1.52
Benzo(b)fluoranthene	205-99-2	1.1	Eco SSL	**1.1**	59.8
Benzo(g,h,i)perylene	191-24-2	1.1	Eco SSL	**1.1**	119
Benzo(k)fluoranthene	207-08-9	1.1	Eco SSL	**1.1**	148
Chrysene	218-01-9	1.1	Eco SSL	**1.1**	4.73
Dibenzo(a,h)anthracene	53-70-3	1.1	Eco SSL	**1.1**	18.4
Fluoranthene	206-44-0	29	Eco SSL	**29**	122
Fluorene	86-73-7	29	Eco SSL	**29**	122
Indeno(1,2,3-c,d)pyrene	193-39-5	1.1	Eco SSL	**1.1**	109
Naphthalene	91-20-3	29	Eco SSL	**29**	0.0994
Phenanthrene	85-01-8	29	Eco SSL	**29**	45.7
Pyrene	129-00-0	1.1	Eco SSL	**1.1**	78.5
Polychlorinated Biphenyls					
Aroclor-1016	12674-11-2	0.000332	R5 ECOS	NA	**0.000332**
Aroclor-1221	11104-28-2	0.000332	R5 ECOS	NA	**0.000332**
Aroclor-1232	11141-16-5	0.000332	R5 ECOS	NA	**0.000332**
Aroclor-1242	53469-21-9	0.000332	R5 ECOS	NA	**0.000332**
Aroclor-1248	12672-29-6	0.000332	R5 ECOS	NA	**0.000332**
Aroclor-1254	11097-69-1	0.000332	R5 ECOS	NA	**0.000332**
Aroclor-1260	11096-82-5	0.000332	R5 ECOS	NA	**0.000332**
Aroclor-1262	37324-23-5	0.000332	R5 ECOS	NA	**0.000332**
Aroclor-1268	11100-14-4	0.000332	R5 ECOS	NA	**0.000332**
Total PCBs	1336-36-3	0.000332	R5 ECOS	NA	**0.000332**
Metals					
Aluminum	7429-90-5	pH>5.5	Eco SSL	**pH>5.5**	NA
Antimony	7440-36-0	0.27	Eco SSL	**0.27**	0.142
Arsenic	7440-38-2	18	Eco SSL	**18**	5.7
Barium	7440-39-3	330	Eco SSL	**330**	1.04
Beryllium	7440-41-7	21	Eco SSL	**21**	1.06
Cadmium	7440-43-9	0.36	Eco SSL	**0.36**	0.00222
Calcium	7440-70-2	--	--	NA	NA
Chromium	7440-47-3	26	Eco SSL	**26**	0.4
Cobalt	7440-48-4	13	Eco SSL	**13**	0.14
Copper	7440-50-8	28	Eco SSL	**28**	5.4
Iron	7439-89-6	5<pH<8	Eco SSL	**5<pH<8**	NA
Lead	7439-92-1	11	Eco SSL	**11**	0.0537
Magnesium	7439-95-4	--	--	NA	NA
Manganese	7439-96-5	220	Eco SSL	**220**	**220**
Mercury	7439-97-6	0.1	R5 ECOS	NA	**0.1**
Nickel	7440-02-0	38	Eco SSL	**38**	13.6
Potassium	7440-09-7	--	--	NA	NA
Selenium	7782-49-2	0.52	Eco SSL	**0.52**	**0.52**
Silver	7440-22-4	4.2	Eco SSL	**4.2**	2
Sodium	7440-23-5	--	--	NA	NA
Thallium	7440-28-0	0.0569	R5 ECOS	NA	**0.0569**
Vanadium	7440-62-2	7.8	Eco SSL	**7.8**	1.59
Zinc	7440-66-6	46	Eco SSL	**46**	6.62
Hexavalent Chromium					
Hexavalent Chromium	18540-29-9	0.4	R5 ECOS	NA	**0.4**
Cyanide					
Cyanide	57-12-5	1.33	R5 ECOS	NA	**1.33**
Pesticides					
4,4'-DDD	72-54-8	0.758	R5 ECOS	NA	**0.758**
4,4'-DDE	72-55-9	0.596	R5 ECOS	NA	**0.596**
4,4'-DDT	50-29-3	0.021	Eco SSL	**0.021**	0.0035
Aldrin	309-00-2	0.00332	R5 ECOS	NA	**0.00332**

NAS JRB Willow Grove Site 12 Ecological Screening Criteria - Surface Soil Samples

Analyte	CAS Number	Ecological Soil Screening Level [1] (mg/kg)	Source of Ecological Soil Screening Level	EPA Eco SSL (mg/kg)	NOAA SQUIRT (mg/kg)
alpha-BHC	319-84-6	0.0994	R5 ECOS	NA	**0.0994**
alpha-Chlordane	5103-71-9	0.224	R5 ECOS	NA	**0.224**
beta-BHC	319-85-7	0.00398	R5 ECOS	NA	**0.00398**
delta-BHC	319-86-8	9.94	R5 ECOS	NA	**9.94**
Dieldrin	60-57-1	0.0049	Eco SSL	**0.0049**	0.00238
Endosulfan I	959-98-8	0.119	R5 ECOS	NA	**0.119**
Endosulfan II	33213-65-9	0.119	R5 ECOS	NA	**0.119**
Endosulfan sulfate	1031-07-8	0.0358	R5 ECOS	NA	**0.0358**
Endrin	72-20-8	0.0101	R5 ECOS	NA	**0.0101**
Endrin aldehyde	7421-93-4	0.0105	R5 ECOS	NA	**0.0105**
Endrin ketone	53494-70-5	--	--	NA	NA
gamma-BHC (Lindane)	58-89-9	0.005	R5 ECOS	NA	**0.005**
gamma-chlordane	5103-74-2	0.224	R5 ECOS	NA	**0.224**
Heptachlor	76-44-8	0.00598	R5 ECOS	NA	**0.00598**
Heptachlor epoxide	1024-57-3	0.152	R5 ECOS	NA	**0.152**
Methoxychlor	72-43-5	0.0199	R5 ECOS	NA	**0.0199**
Toxaphene	8001-35-2	0.119	R5 ECOS	NA	**0.119**
Dioxins/Furans					
1,2,3,4,6,7,8,9-OCDD	3268-87-9	**0.000000199**	R5 ECOS	NA	**0.000000199**
1,2,3,4,6,7,8,9-OCDF	39001-02-0	**0.0000386**	R5 ECOS	NA	**0.0000386**
1,2,3,4,6,7,8-HPCDD	35822-46-9	**0.000000199**	R5 ECOS	NA	**0.000000199**
1,2,3,4,6,7,8-HPCDF	67562-39-4	**0.0000386**	R5 ECOS	NA	**0.0000386**
1,2,3,4,7,8,9-HPCDF	55673-89-7	**0.0000386**	R5 ECOS	NA	**0.0000386**
1,2,3,4,7,8-HXCDD	39227-28-6	**0.000000199**	R5 ECOS	NA	**0.000000199**
1,2,3,4,7,8-HXCDF	70648-26-9	**0.0000386**	R5 ECOS	NA	**0.0000386**
1,2,3,6,7,8-HXCDD	57653-85-7	**0.000000199**	R5 ECOS	NA	**0.000000199**
1,2,3,6,7,8-HXCDF	57117-44-9	**0.0000386**	R5 ECOS	NA	**0.0000386**
1,2,3,7,8,9-HXCDD	19408-74-3	**0.000000199**	R5 ECOS	NA	**0.000000199**
1,2,3,7,8,9-HXCDF	72918-21-9	**0.0000386**	R5 ECOS	NA	**0.0000386**
1,2,3,7,8-PECDD	40321-76-4	**0.000000199**	R5 ECOS	NA	**0.000000199**
1,2,3,7,8-PECDF	57117-41-6	**0.0000386**	R5 ECOS	NA	**0.0000386**
2,3,4,6,7,8-HXCDF	60851-34-5	**0.0000386**	R5 ECOS	NA	**0.0000386**
2,3,4,7,8-PECDF	57117-31-4	**0.0000386**	R5 ECOS	NA	**0.0000386**
2,3,7,8-TCDD	1746-01-6	**0.000000199**	R5 ECOS	NA	**0.000000199**
2,3,7,8-TCDF	51207-31-9	**0.0000386**	R5 ECOS	NA	**0.0000386**
Total HpCDD	37871-00-4	--	NA	NA	NA
Total HpCDF	38998-75-3	--	NA	NA	NA
Total HxCDD	34465-46-8	--	NA	NA	NA
Total HxCDF	55684-94-1	--	NA	NA	NA
Total PeCDD	36088-22-9	--	NA	NA	NA
Total PeCDF	30402-15-4	--	NA	NA	NA
Total TCDD	41903-57-5	--	NA	NA	NA
Total TCDF	55722-27-5	--	NA	NA	NA

1- The following hierarchy was used for selecting the Ecological Screening level in order of preference:
USEPA Ecological Soil Screening Levels (Eco SSL) (EPA, 2003, 2005, 2006, 2007). The lower of the plant, invertebrate, or wildlife Eco SSL is selected as the screening level.
The lower of the Oak Ridge National Laboratory (ORNL) plant or invertebrate benchmarks (Efroymson, et al., 1997a, 1997b).
Lowest of National Oceanographic and Atmospheric Administration (NOAA) Screening Quick Reference Tables (SQUIRT) surface soil benchmarks (Buchman, 2008) unless value is the Dutch Target Value.

Shaded cells are values that were selected as the overall ecological soil screening level.

NAS JRB Willow Grove Site 12 Ecological Screening Criteria - Sediment Samples

Analyte	CAS Number	Ecological Soil Screening Level [1] (mg/kg)	Source of Ecological Soil Screening Level	EPA R3 BTAG SED (mg/kg)	NOAA SQUIRT (mg/kg)
Volatile Organic Compounds					
1,1,1-Trichloroethane	71-55-6	**0.0302**	R3 BTAG SED	**0.0302**	0.213
1,1,2,2-Tetrachloroethane	79-34-5	**1.36**	R3 BTAG SED	**1.36**	0.85
1,1,2-trichloro-1,2,2-trifluoroethane (Freon 113)	76-13-1	--	None	NA	NA
1,1,2-Trichloroethane	79-00-5	**1.24**	R3 BTAG SED	**1.24**	0.518
1,1-Dichloroethane	75-34-3	**0.000575**	NOAA	NA	**0.000575**
1,1-Dichloroethene	75-35-4	**0.031**	R3 BTAG SED	**0.031**	0.0194
1,2,3-Trichlorobenzene	87-61-6	**0.858**	R3 BTAG SED	**0.858**	NA
1,2,4-Trichlorobenzene	120-82-1	**2.1**	R3 BTAG SED	**2.1**	5.062
1,2-Dibromo-3-chloropropane (DBCP)	96-12-8	--	None	NA	NA
1,2-Dibromoethane (EDB)	106-93-4	--	None	NA	NA
1,2-Dichlorobenzene	95-50-1	**0.0165**	R3 BTAG SED	**0.0165**	0.294
1,2-Dichloroethane	107-06-2	**0.26**	NOAA	NA	**0.26**
1,2-Dichloropropane	78-87-5	**0.333**	NOAA	NA	**0.333**
1,3-Dichlorobenzene	541-73-1	**4.43**	R3 BTAG SED	**4.43**	1.315
1,4-Dichlorobenzene	106-46-7	**0.599**	R3 BTAG SED	**0.599**	0.318
1,4-Dioxane	123-91-1	**0.119**	NOAA	NA	**0.119**
2-Butanone (MEK)	78-93-3	**0.0424**	NOAA	NA	**0.0424**
2-Hexanone	591-78-6	**0.0582**	NOAA	NA	**0.0582**
4-Methyl-2-pentanone (MIBK)	108-10-1	**0.0251**	NOAA	NA	**0.0251**
Acetone	67-64-1	**0.0099**	NOAA	NA	**0.0099**
Benzene	71-43-2	**0.142**	NOAA	NA	**0.142**
Bromochloromethane	74-97-5	--	None	NA	NA
Bromodichloromethane	75-27-4	--	None	NA	NA
Bromoform	75-25-2	**0.654**	R3 BTAG SED	**0.654**	0.492
Bromomethane	74-83-9	**0.00137**	NOAA	NA	**0.00137**
Carbon disulfide	75-15-0	**0.000851**	R3 BTAG SED	**0.000851**	0.0239
Carbon tetrachloride	56-23-5	**0.0642**	R3 BTAG SED	**0.0642**	1.45
Chlorobenzene	108-90-7	**0.00842**	R3 BTAG SED	**0.00842**	0.291
Chloroethane	75-00-3	--	None	NA	NA
Chloroform	67-66-3	**0.121**	NOAA	NA	**0.121**
Chloromethane	74-87-3	--	None	NA	NA
cis-1,2-Dichloroethene	156-59-2	**0.20894**	NOAA	NA	**0.20894**
cis-1,3-Dichloropropene	10061-01-5	**0.00296**	NOAA	NA	**0.00296**
Cyclohexane	110-82-7	--	None	NA	NA
Dibromochloromethane	124-48-1	--	None	NA	NA
Dichlorodifluoromethane	75-71-8	--	None	NA	NA
Ethylbenzene	100-41-4	**1.1**	R3 BTAG SED	**1.1**	0.175
Isopropylbenzene	98-82-8	**0.086**	R3 BTAG SED	**0.086**	NA
m,p-Xylenes	179601-23-1	**65**	R3 BTAG SED	**65**	27
Methyl acetate	79-20-9	--	None	NA	NA
Methylcyclohexane	108-87-2	--	None	NA	NA
Methylene chloride	75-09-2	**0.159**	NOAA	NA	**0.159**
Methyl-tert-butyl ether	1634-04-4	--	None	NA	NA
o-Xylene	95-47-6	**27**	NOAA	NA	**27**
Styrene	100-42-5	**0.559**	R3 BTAG SED	**0.559**	0.254
Tetrachloroethene	127-18-4	**0.468**	R3 BTAG SED	**0.468**	0.99
Toluene	108-88-3	**1.22**	NOAA	NA	**1.22**
trans-1,2-Dichloroethene	156-60-5	**1.05**	R3 BTAG SED	**1.05**	0.654
trans-1,3-Dichloropropene	10061-02-6	**0.00296**	NOAA	NA	**0.00296**
Trichloroethene	79-01-6	**0.0969**	R3 BTAG SED	**0.0969**	0.112
Trichlorofluoromethane	75-69-4	--	None	NA	NA
Vinyl chloride	75-01-4	**0.202**	NOAA	NA	**0.202**
Xylenes (total)	1330-20-7	**65**	R3 BTAG SED	**65**	27
Semivolatile Organic Compounds					
1,1'-Biphenyl	92-52-4	**1.22**	R3 BTAG SED	**1.22**	NA
1,2,4,5-Tetrachlorobenzene	95-94-3	**1.09**	R3 BTAG SED	**1.09**	1.252
2,2'-Oxybis(1-chloropropane)	108-60-1	--	None	NA	NA
2,3,4,6-Tetrachlorophenol	58-90-2	**0.284**	R3 BTAG SED	**0.284**	0.129
2,4,5-Trichlorophenol	95-95-4	--	None	NA	NA
2,4,6-Trichlorophenol	88-06-2	**0.213**	R3 BTAG SED	**0.213**	0.208
2,4-Dichlorophenol	120-83-2	**0.117**	R3 BTAG SED	**0.117**	0.0817
2,4-Dimethylphenol	105-67-9	**0.029**	R3 BTAG SED	**0.029**	0.304
2,4-Dinitrophenol	51-28-5	**0.00621**	NOAA	NA	**0.00621**
2,4-Dinitrotoluene	121-14-2	**0.0416**	R3 BTAG SED	**0.0416**	0.0144
2,6-Dinitrotoluene	606-20-2	**0.0398**	NOAA	NA	**0.0398**
2-Chloronaphthalene	91-58-7	**0.417**	NOAA	NA	**0.417**
2-Chlorophenol	95-57-8	**0.0312**	R3 BTAG SED	**0.0312**	0.0319
2-Methylphenol (o-Cresol)	95-48-7	**0.0554**	NOAA	NA	**0.0554**

NAS JRB Willow Grove Site 12 Ecological Screening Criteria - Sediment Samples

Analyte	CAS Number	Ecological Soil Screening Level [1] (mg/kg)	Source of Ecological Soil Screening Level	EPA R3 BTAG SED (mg/kg)	NOAA SQUIRT (mg/kg)
2-Nitroaniline	88-74-4	--	None	NA	NA
2-Nitrophenol	88-75-5	--	None	NA	NA
3,3'-Dichlorobenzidine	91-94-1	**0.127**	R3 BTAG SED	**0.127**	**0.127**
3-Nitroaniline	99-09-2	--	None	NA	NA
4,6-Dinitro-2-methylphenol	534-52-1	**0.104**	NOAA	NA	**0.104**
4-Bromophenyl phenyl ether	101-55-3	**1.23**	R3 BTAG SED	**1.23**	1.55
4-Chloro-3-methyl phenol	59-50-7	**0.388**	NOAA	NA	**0.388**
4-Chloroanaline	106-47-8	**0.146**	NOAA	NA	**0.146**
4-Chlorophenyl phenyl ether	7005-72-3	--	None	NA	NA
4-Methylphenol (p-Cresol)	106-44-5	**0.67**	R3 BTAG SED	**0.67**	0.0202
4-Nitroaniline	100-01-6	--	None	NA	NA
4-Nitrophenol	100-02-7	**0.0133**	NOAA	NA	**0.0133**
Acetophenone	98-86-2	--	None	NA	NA
Atrazine	1912-24-9	**0.00662**	R3 BTAG SED	**0.00662**	NA
Benzaldehyde	100-52-7	--	None	NA	NA
Bis(2-chloroethoxy)methane	111-91-1	--	None	NA	NA
Bis(2-chloroethyl)ether	111-44-4	**3.52**	NOAA	NA	**3.52**
Bis(2-ethylhexyl)phthalate	117-81-7	**0.18**	R3 BTAG SED	**0.18**	0.182
Butyl benzyl phthalate	85-68-7	**10.9**	R3 BTAG SED	**10.9**	1.97
Caprolactam	105-60-2	--	None	NA	NA
Carbazole	86-74-8	--	None	NA	NA
Dibenzofuran	132-64-9	**0.415**	R3 BTAG SED	**0.415**	0.449
Diethyl phthalate	84-66-2	**0.603**	R3 BTAG SED	**0.603**	0.295
Dimethyl phthalate	131-11-3	--	None	NA	NA
Di-n-butyl phthalate	84-74-2	**6.47**	R3 BTAG SED	**6.47**	1.114
Di-n-octyl phthalate	117-84-0	**40.6**	NOAA	NA	**40.6**
Hexachlorobenzene	118-74-1	**0.02**	R3 BTAG SED	**0.02**	**0.02**
Hexachlorobutadiene	87-68-3	**0.0265**	NOAA	NA	**0.0265**
Hexachlorocyclopentadiene	77-47-4	**0.901**	NOAA	NA	**0.901**
Hexachloroethane	67-72-1	**1.027**	R3 BTAG SED	**1.027**	0.584
Isophorone	78-59-1	**0.432**	NOAA	NA	**0.432**
Nitrobenzene	98-95-3	**0.145**	NOAA	NA	**0.145**
N-Nitrosodi-n-propylamine	621-64-7	--	None	NA	NA
N-Nitrosodiphenylamine	86-30-6	**2.68**	R3 BTAG SED	**2.68**	NA
Pentachlorophenol	87-86-5	**0.504**	R3 BTAG SED	**0.504**	23
Phenol	108-95-2	**0.42**	R3 BTAG SED	**0.42**	0.0491
Polycyclic Aromatic Hydrocarbons					
2-Methylnaphthalene	91-57-6	**0.0202**	R3 BTAG SED	**0.0202**	**0.0202**
Acenaphthene	83-32-9	**0.0067**	R3 BTAG SED	**0.0067**	0.00671
Acenaphthylene	208-96-8	**0.0059**	R3 BTAG SED	**0.0059**	0.00587
Anthracene	120-12-7	**0.0572**	R3 BTAG SED	**0.0572**	**0.0572**
Benzo(a)anthracene	56-55-3	**0.108**	R3 BTAG SED	**0.108**	**0.108**
Benzo(a)pyrene	50-32-8	**0.15**	R3 BTAG SED	**0.15**	**0.15**
Benzo(b)fluoranthene	205-99-2	**10.4**	NOAA	NA	**10.4**
Benzo(g,h,i)perylene	191-24-2	**0.17**	R3 BTAG SED	**0.17**	**0.17**
Benzo(k)fluoranthene	207-08-9	**0.24**	R3 BTAG SED	**0.24**	**0.24**
Chrysene	218-01-9	**0.166**	R3 BTAG SED	**0.166**	**0.166**
Dibenzo(a,h)anthracene	53-70-3	**0.033**	R3 BTAG SED	**0.033**	**0.033**
Fluoranthene	206-44-0	**0.423**	R3 BTAG SED	**0.423**	**0.423**
Fluorene	86-73-7	**0.0774**	R3 BTAG SED	**0.0774**	**0.0774**
Indeno(1,2,3-c,d)pyrene	193-39-5	**0.017**	R3 BTAG SED	**0.017**	0.2
Naphthalene	91-20-3	**0.176**	R3 BTAG SED	**0.176**	**0.176**
Phenanthrene	85-01-8	**0.204**	R3 BTAG SED	**0.204**	**0.204**
Pyrene	129-00-0	**0.195**	R3 BTAG SED	**0.195**	**0.195**
Polychlorinated Biphenyls					
Aroclor-1016	12674-11-2	**0.0598**	NOAA	NA	**0.0598**
Aroclor-1221	11104-28-2	**0.0598**	NOAA	NA	**0.0598**
Aroclor-1232	11141-16-5	**0.0598**	NOAA	NA	**0.0598**
Aroclor-1242	53469-21-9	**0.0598**	NOAA	NA	**0.0598**
Aroclor-1248	12672-29-6	**0.0598**	NOAA	NA	**0.0598**
Aroclor-1254	11097-69-1	**0.0598**	NOAA	NA	**0.0598**
Aroclor-1260	11096-82-5	**0.0598**	NOAA	NA	**0.0598**
Aroclor-1262	37324-23-5	**0.0598**	NOAA	NA	**0.0598**
Aroclor-1268	11100-14-4	**0.0598**	NOAA	NA	**0.0598**
Total PCBs	1336-36-3	**0.0598**	R3 BTAG SED	**0.0598**	**0.0598**
Metals					
Aluminum	7429-90-5	--	None	NA	NA
Antimony	7440-36-0	**2**	R3 BTAG SED	**2**	NA

NAS JRB Willow Grove Site 12 Ecological Screening Criteria - Sediment Samples

Analyte	CAS Number	Ecological Soil Screening Level [1] (mg/kg)	Source of Ecological Soil Screening Level	EPA R3 BTAG SED (mg/kg)	NOAA SQUIRT (mg/kg)
Arsenic	7440-38-2	**9.8**	R3 BTAG SED	**9.8**	9.79
Barium	7440-39-3	--	None	NA	NA
Beryllium	7440-41-7	--	None	NA	NA
Cadmium	7440-43-9	**0.99**	R3 BTAG SED	**0.99**	**0.99**
Calcium	7440-70-2	--	None	NA	NA
Chromium	7440-47-3	**43.4**	R3 BTAG SED	**43.4**	**43.4**
Cobalt	7440-48-4	**50**	R3 BTAG SED	**50**	**50**
Copper	7440-50-8	**31.6**	R3 BTAG SED	**31.6**	**31.6**
Iron	7439-89-6	**20000**	R3 BTAG SED	**20000**	NA
Lead	7439-92-1	**35.8**	R3 BTAG SED	**35.8**	**35.8**
Magnesium	7439-95-4	--	None	NA	NA
Manganese	7439-96-5	**460**	R3 BTAG SED	**460**	NA
Mercury	7439-97-6	**0.18**	R3 BTAG SED	**0.18**	0.174
Nickel	7440-02-0	**22.7**	R3 BTAG SED	**22.7**	**22.7**
Potassium	7440-09-7	--	None	NA	NA
Selenium	7782-49-2	**2**	R3 BTAG SED	**2**	NA
Silver	7440-22-4	**1**	R3 BTAG SED	**1**	0.5
Sodium	7440-23-5	--	None	NA	NA
Thallium	7440-28-0	--	None	NA	NA
Vanadium	7440-62-2	--	None	NA	NA
Zinc	7440-66-6	**121**	NOAA	**121**	**121**
Hexavalent Chromium					
Hexavalent Chromium	18540-29-9	**26**	NOAA	NA	**26**
Cyanide					
Cyanide	57-12-5	**0.1**	R3 BTAG SED	**0.1**	0.0001
Pesticides					
4,4'-DDD	72-54-8	**0.00488**	R3 BTAG SED	**0.00488**	**0.00488**
4,4'-DDE	72-55-9	**0.00316**	R3 BTAG SED	**0.00316**	**0.00316**
4,4'-DDT	50-29-3	**0.00416**	NOAA	NA	**0.00416**
Aldrin	309-00-2	**0.002**	R3 BTAG SED	**0.002**	**0.002**
alpha-BHC	319-84-6	**0.006**	R3 BTAG SED	**0.006**	**0.006**
alpha-Chlordane	5103-71-9	**0.0045**	NOAA	NA	**0.0045**
beta-BHC	319-85-7	**0.005**	R3 BTAG SED	**0.005**	**0.005**
delta-BHC	319-86-8	**6.4**	R3 BTAG SED	**6.4**	71.5
Dieldrin	60-57-1	**0.0019**	R3 BTAG SED	**0.0019**	**0.0019**
Endosulfan I	959-98-8	**0.0029**	R3 BTAG SED	**0.0029**	0.00326
Endosulfan II	33213-65-9	**0.014**	R3 BTAG SED	**0.014**	0.00194
Endosulfan sulfate	1031-07-8	**0.0054**	R3 BTAG SED	**0.0054**	0.0346
Endrin	72-20-8	**0.00222**	R3 BTAG SED	**0.00222**	**0.00222**
Endrin aldehyde	7421-93-4	**0.48**	NOAA	NA	**0.48**
Endrin ketone	53494-70-5	--	None	NA	NA
gamma-BHC (Lindane)	58-89-9	**0.00237**	R3 BTAG SED	**0.00237**	**0.00237**
gamma-chlordane	5103-74-2	**0.0045**	NOAA	NA	**0.0045**
Heptachlor	76-44-8	**0.068**	R3 BTAG SED	**0.068**	0.0006
Heptachlor epoxide	1024-57-3	**0.00247**	R3 BTAG SED	**0.00247**	**0.00247**
Methoxychlor	72-43-5	**0.0187**	R3 BTAG SED	**0.0187**	0.0136
Toxaphene	8001-35-2	**0.0001**	R3 BTAG SED	**0.0001**	7.70E-05
Dioxins/Furans					
1,2,3,4,6,7,8,9-OCDD	3268-87-9	**0.0000033**	NOAA	NA	**0.0000033**
1,2,3,4,6,7,8,9-OCDF	39001-02-0	**1.29E-08**	NOAA	NA	**1.29E-08**
1,2,3,4,6,7,8-HPCDD	35822-46-9	**0.0000033**	NOAA	NA	**0.0000033**
1,2,3,4,6,7,8-HPCDF	67562-39-4	**1.29E-08**	NOAA	NA	**1.29E-08**
1,2,3,4,7,8,9-HPCDF	55673-89-7	**1.29E-08**	NOAA	NA	**1.29E-08**
1,2,3,4,7,8-HXCDD	39227-28-6	**0.0000033**	NOAA	NA	**0.0000033**
1,2,3,4,7,8-HXCDF	70648-26-9	**1.29E-08**	NOAA	NA	**1.29E-08**
1,2,3,6,7,8-HXCDD	57653-85-7	**0.0000033**	NOAA	NA	**0.0000033**
1,2,3,6,7,8-HXCDF	57117-44-9	**1.29E-08**	NOAA	NA	**1.29E-08**
1,2,3,7,8,9-HXCDD	19408-74-3	**0.0000033**	NOAA	NA	**0.0000033**
1,2,3,7,8,9-HXCDF	72918-21-9	**1.29E-08**	NOAA	NA	**1.29E-08**
1,2,3,7,8-PECDD	40321-76-4	**0.0000033**	NOAA	NA	**0.0000033**
1,2,3,7,8-PECDF	57117-41-6	**1.29E-08**	NOAA	NA	**1.29E-08**
2,3,4,6,7,8-HXCDF	60851-34-5	**1.29E-08**	NOAA	NA	**1.29E-08**
2,3,4,7,8-PECDF	57117-31-4	**1.29E-08**	NOAA	NA	**1.29E-08**
2,3,7,8-TCDD	1746-01-6	**0.00000085**	R3 BTAG SED	**0.00000085**	1.20E-07
2,3,7,8-TCDF	51207-31-9	--	None	NA	NA
Total HpCDD	37871-00-4	--	None	NA	NA
Total HpCDF	38998-75-3	--	None	NA	NA
Total HxCDD	34465-46-8	--	None	NA	NA

NAS JRB Willow Grove Site 12 Ecological Screening Criteria - Sediment Samples

Analyte	CAS Number	Ecological Soil Screening Level [(1)] (mg/kg)	Source of Ecological Soil Screening Level	EPA R3 BTAG SED (mg/kg)	NOAA SQUIRT (mg/kg)
Total HxCDF	55684-94-1	--	None	NA	NA
Total PeCDD	36088-22-9	--	None	NA	NA
Total PeCDF	30402-15-4	--	None	NA	NA
Total TCDD	41903-57-5	--	None	NA	NA
Total TCDF	55722-27-5	--	None	NA	NA

1- The following hierarchy was used for selecting the Ecological Screening level in order of preference:
USEPA Region 3 BTAG Ecological Sediment Screening Levels (R3 BTAG SED) (USEPA, 2005).
Lowest of National Oceanographic and Atmospheric Administration (NOAA) Screening Quick Reference Tables (SQUIRT) surface water benchmarks (Buchman, 2008) .

Shaded cells are values that were selected as the overall ecological sediment screening level.

NAS JRB Willow Grove Site 12 Ecological Screening Criteria - Surface Water Samples

Analyte	CAS Number	Ecological Soil Screening Level [(1)] (ug/L)	Source of Ecological Soil Screening Level	EPA R3 BTAG FW SW (ug/L)	EPA R5 Eco SW (ug/L)	EPA T-RSL Adjusted (ug/L)	NOAA SQUIRT (ug/L)
Volatile Organic Compounds							
1,1,1-Trichloroethane	71-55-6	11	R3 BTAG SW	11	76	910	
1,1,2,2-Tetrachloroethane	79-34-5	610	R3 BTAG SW	610	380	0.067	
1,1,2-trichloro-1,2,2-trifluoroethane (Freon 113)	76-13-1	5900	T-RSL	NA	NA	5900	
1,1,2-Trichloroethane	79-00-5	1200	R3 BTAG SW	1200	500	0.24	
1,1-Dichloroethane	75-34-3	47	R3 BTAG SW	47	47	2.4	
1,1-Dichloroethene	75-35-4	25	R3 BTAG SW	25	65	34	
1,2,3-Trichlorobenzene	87-61-6	8	R3 BTAG SW	8	NA	2.9	
1,2,4-Trichlorobenzene	120-82-1	24	R3 BTAG SW	24	30	0.41	
1,2-Dibromo-3-chloropropane (DBCP)	96-12-8	0.00032	T-RSL	NA	NA	0.00032	
1,2-Dibromoethane (EDB)	106-93-4	0.0065	T-RSL	NA	NA	0.0065	
1,2-Dichlorobenzene	95-50-1	0.7	R3 BTAG SW	0.7	14	37	
1,2-Dichloroethane	107-06-2	100	R3 BTAG SW	100	910	0.15	
1,2-Dichloropropane	78-87-5	360	R5 ECO SW	NA	360	0.39	
1,3-Dichlorobenzene	541-73-1	150	R3 BTAG SW	150	38	NA	
1,4-Dichlorobenzene	106-46-7	26	R3 BTAG SW	26	9.4	0.43	
1,4-Dioxane	123-91-1	22000	R5 ECO SW	NA	22000	6.1	
2-Butanone (MEK)	78-93-3	14000	R3 BTAG SW	14000	2200	710	
2-Hexanone	591-78-6	99	R3 BTAG SW	99	99	NA	
4-Methyl-2-pentanone (MIBK)	108-10-1	170	R3 BTAG SW	170	170	200	
Acetone	67-64-1	1500	R3 BTAG SW	1500	1700	2200	
Benzene	71-43-2	370	R3 BTAG SW	370	114	0.41	
Bromochloromethane	74-97-5	--	None	NA	NA	NA	
Bromodichloromethane	75-27-4	0.12	T-RSL	NA	NA	0.12	
Bromoform	75-25-2	320	R3 BTAG SW	320	230	8.5	
Bromomethane	74-83-9	16	R5 ECO SW	NA	16	0.87	
Carbon disulfide	75-15-0	0.92	R3 BTAG SW	0.92	15	100	
Carbon tetrachloride	56-23-5	13.3	R3 BTAG SW	13.3	240	0.44	
Chlorobenzene	108-90-7	1.3	R3 BTAG SW	1.3	47	9.1	
Chloroethane	75-00-3	2100	T-RSL	NA	NA	2100	
Chloroform	67-66-3	1.8	R3 BTAG SW	1.8	140	0.19	
Chloromethane	74-87-3	19	T-RSL	NA	NA	19	
cis-1,2-Dichloroethene	156-59-2	37	T-RSL	NA	NA	37	
cis-1,3-Dichloropropene	10061-01-5	7.9	R5 ECO SW	NA	7.9	4	
Cyclohexane	110-82-7	1300	T-RSL	NA	NA	1300	
Dibromochloromethane	124-48-1	0.15	T-RSL	NA	NA	0.15	
Dichlorodifluoromethane	75-71-8	39	T-RSL	NA	NA	39	
Ethylbenzene	100-41-4	90	R3 BTAG SW	90	14	1.5	
Isopropylbenzene	98-82-8	2.6	R3 BTAG SW	2.6	NA	68	
m,p-Xylenes	179601-23-1	27	R5 ECO SW	NA	27	20	
Methyl acetate	79-20-9	3700	T-RSL	NA	NA	3700	
Methylcyclohexane	108-87-2	--	None	NA	NA	NA	
Methylene chloride	75-09-2	98.1	R3 BTAG SW	98.1	0.94	4.8	
Methyl-tert-butyl ether	1634-04-4	11070	R3 BTAG SW	11070	NA	12	
o-Xylene	95-47-6	27	R5 ECO SW	NA	27	120	
Styrene	100-42-5	72	R3 BTAG SW	72	32	160	
Tetrachloroethene	127-18-4	111	R3 BTAG SW	111	45	0.11	
Toluene	108-88-3	2	R3 BTAG SW	2	253	230	
trans-1,2-Dichloroethene	156-60-5	970	R3 BTAG SW	970	970	11	
trans-1,3-Dichloropropene	10061-02-6	7.9	R5 ECO SW	NA	7.9	NA	
Trichloroethene	79-01-6	21	R3 BTAG SW	21	47	2	
Trichlorofluoromethane	75-69-4	130	T-RSL	NA	NA	130	
Vinyl chloride	75-01-4	930	R3 BTAG SW	930	930	0.016	
Xylenes (total)	1330-20-7	13	R3 BTAG SW	13	27	20	
Semivolatile Organic Compounds							
1,1'-Biphenyl	92-52-4	14	R3 BTAG SW	14	NA	180	
1,2,4,5-Tetrachlorobenzene	95-94-3	3	R3 BTAG SW	3	3	1.1	
2,2'-Oxybis(1-chloropropane)	108-60-1	0.32	T-RSL	NA	NA	0.32	
2,3,4,6-Tetrachlorophenol	58-90-2	1.2	R3 BTAG SW	1.2	1.2	110	
2,4,5-Trichlorophenol	95-95-4	370	T-RSL	NA	NA	370	
2,4,6-Trichlorophenol	88-06-2	4.9	R3 BTAG SW	4.9	4.9	3.7	
2,4-Dichlorophenol	120-83-2	11	R3 BTAG SW	11	11	11	
2,4-Dimethylphenol	105-67-9	100	R5 ECO SW	NA	100	73	
2,4-Dinitrophenol	51-28-5	19	R5 ECO SW	NA	19	73	
2,4-Dinitrotoluene	121-14-2	44	R3 BTAG SW	44	44	0.22	
2,6-Dinitrotoluene	606-20-2	81	R3 BTAG SW	81	81	3.7	
2-Chloronaphthalene	91-58-7	0.396	R5 ECO SW	NA	0.396	290	
2-Chlorophenol	95-57-8	24	R3 BTAG SW	24	24	18	
2-Methylphenol (o-Cresol)	95-48-7	13	R3 BTAG SW	13	67	180	
2-Nitroaniline	88-74-4	37	T-RSL	NA	NA	37	
2-Nitrophenol	88-75-5	1920	R3 BTAG SW	1920	NA	7.3	
3,3'-Dichlorobenzidine	91-94-1	4.5	R3 BTAG SW	4.5	4.5	0.15	
3-Nitroaniline	99-09-2	--	None	NA	NA	NA	
4,6-Dinitro-2-methylphenol	534-52-1	23	R5 ECO SW	NA	23	0.29	
4-Bromophenyl phenyl ether	101-55-3	1.5	R3 BTAG SW	1.5	1.5	NA	
4-Chloro-3-methyl phenol	59-50-7	34.8	R5 ECO SW	NA	34.8	370	
4-Chloroanaline	106-47-8	232	R3 BTAG SW	232	232	0.34	
4-Chlorophenyl phenyl ether	7005-72-3	--	None	NA	NA	NA	

NAS JRB Willow Grove Site 12 Ecological Screening Criteria - Surface Water Samples

Analyte	CAS Number	Ecological Soil Screening Level [(1)] (ug/L)	Source of Ecological Soil Screening Level	EPA R3 BTAG FW SW (ug/L)	EPA R5 Eco SW (ug/L)	EPA T-RSL Adjusted (ug/L)	NOAA SQUIRT (ug/L)
4-Methylphenol (p-Cresol)	106-44-5	543	R3 BTAG SW	543	25	18	
4-Nitroaniline	100-01-6	3.4	T-RSL	NA	NA	3.4	
4-Nitrophenol	100-02-7	60	R3 BTAG SW	60	60	NA	
Acetophenone	98-86-2	370	T-RSL	NA	NA	370	
Atrazine	1912-24-9	1.8	R3 BTAG SW	1.8	NA	0.29	
Benzaldehyde	100-52-7	370	T-RSL	NA	NA	370	
Bis(2-chloroethoxy)methane	111-91-1	11	T-RSL	NA	NA	11	
Bis(2-chloroethyl)ether	111-44-4	19000	R5 ECO SW	NA	19000	0.012	
Bis(2-ethylhexyl)phthalate	117-81-7	16	R3 BTAG SW	16	0.3	4.8	
Butyl benzyl phthalate	85-68-7	19	R3 BTAG SW	19	23	35	
Caprolactam	105-60-2	1800	T-RSL	NA	NA	1800	
Carbazole	86-74-8	--	None	NA	NA	NA	
Dibenzofuran	132-64-9	3.7	R3 BTAG SW	3.7	4	3.7	
Diethyl phthalate	84-66-2	210	R3 BTAG SW	210	110	2900	
Dimethyl phthalate	131-11-3	--	None	NA	NA	NA	
Di-n-butyl phthalate	84-74-2	19	R3 BTAG SW	19	9.7	370	
Di-n-octyl phthalate	117-84-0	22	R3 BTAG SW	22	30	NA	
Hexachlorobenzene	118-74-1	0.0003	R3 BTAG SW	0.0003	0.0003	0.042	
Hexachlorobutadiene	87-68-3	1.3	R3 BTAG SW	1.3	0.053	0.86	
Hexachlorocyclopentadiene	77-47-4	77	R5 ECO SW	NA	77	22	
Hexachloroethane	67-72-1	12	R3 BTAG SW	12	8	3.7	
Isophorone	78-59-1	920	R5 ECO SW	NA	920	71	
Nitrobenzene	98-95-3	220	R5 ECO SW	NA	220	0.12	
N-Nitrosodi-n-propylamine	621-64-7	0.0096	T-RSL	NA	NA	0.0096	
N-Nitrosodiphenylamine	86-30-6	210	R3 BTAG SW	210	NA	14	
Pentachlorophenol	87-86-5	0.5	R3 BTAG SW	0.5	4	0.56	
Phenol	108-95-2	4	R3 BTAG SW	4	180	1100	
Polycyclic Aromatic Hydrocarbons							
2-Methylnaphthalene	91-57-6	4.7	R3 BTAG SW	4.7	330	15	
Acenaphthene	83-32-9	5.8	R3 BTAG SW	5.8	38	220	
Acenaphthylene	208-96-8	4840	R5 ECO SW	NA	4840	220	
Anthracene	120-12-7	0.012	R3 BTAG SW	0.012	0.035	1100	
Benzo(a)anthracene	56-55-3	0.018	R3 BTAG SW	0.018	0.025	0.029	
Benzo(a)pyrene	50-32-8	0.015	R3 BTAG SW	0.015	0.014	0.0029	
Benzo(b)fluoranthene	205-99-2	9.07	R5 ECO SW	NA	9.07	0.029	
Benzo(g,h,i)perylene	191-24-2	7.64	R5 ECO SW	NA	7.64	110	
Benzo(k)fluoranthene	207-08-9	0.29	T-RSL	NA	NA	0.29	
Chrysene	218-01-9	2.9	T-RSL	NA	NA	2.9	
Dibenzo(a,h)anthracene	53-70-3	0.0029	T-RSL	NA	NA	0.0029	
Fluoranthene	206-44-0	0.04	R3 BTAG SW	0.04	1.9	150	
Fluorene	86-73-7	3	R3 BTAG SW	3	19	150	
Indeno(1,2,3-c,d)pyrene	193-39-5	4.31	R5 ECO SW	NA	4.31	0.029	
Naphthalene	91-20-3	1.1	R3 BTAG SW	1.1	13	0.14	
Phenanthrene	85-01-8	0.4	R3 BTAG SW	0.4	3.6	110	
Pyrene	129-00-0	0.025	R3 BTAG SW	0.025	0.3	110	
Polychlorinated Biphenyls							
Aroclor-1016	12674-11-2	0.000074	R3 BTAG SW	0.000074	0.00012	0.96	
Aroclor-1221	11104-28-2	0.000074	R3 BTAG SW	0.000074	0.00012	0.0068	
Aroclor-1232	11141-16-5	0.000074	R3 BTAG SW	0.000074	0.00012	0.0068	
Aroclor-1242	53469-21-9	0.000074	R3 BTAG SW	0.000074	0.00012	0.034	
Aroclor-1248	12672-29-6	0.000074	R3 BTAG SW	0.000074	0.00012	0.034	
Aroclor-1254	11097-69-1	0.000074	R3 BTAG SW	0.000074	0.00012	0.034	
Aroclor-1260	11096-82-5	0.000074	R3 BTAG SW	0.000074	0.00012	0.034	
Aroclor-1262	37324-23-5	0.00012	R5 ECO SW	NA	0.00012	NA	
Aroclor-1268	11100-14-4	0.00012	R5 ECO SW	NA	0.00012	NA	
Total PCBs	1336-36-3	0.000074	R3 BTAG SW	0.000074	0.00012	NA	
Metals							
Aluminum	7429-90-5	87	R3 BTAG SW	87	NA	3700	
Antimony	7440-36-0	30	R3 BTAG SW	30	80	1.5	
Arsenic	7440-38-2	5	R3 BTAG SW	5	148	0.045	
Barium	7440-39-3	4	R3 BTAG SW	4	220	730	
Beryllium	7440-41-7	0.66	R3 BTAG SW	0.66	3.6	7.3	
Cadmium	7440-43-9	0.25	R3 BTAG SW	0.25	0.15	1.8	
Calcium	7440-70-2	116000	R3 BTAG SW	116000	NA	NA	
Chromium	7440-47-3	85	R3 BTAG SW	85	42	0.043	
Cobalt	7440-48-4	23	R3 BTAG SW	23	24	1.1	
Copper	7440-50-8	9	R3 BTAG SW	9	1.58	150	
Iron	7439-89-6	300	R3 BTAG SW	300	NA	2600	
Lead	7439-92-1	2.5	R3 BTAG SW	2.5	1.17	15	
Magnesium	7439-95-4	82000	R3 BTAG SW	82000	NA	NA	
Manganese	7439-96-5	120	R3 BTAG SW	120	NA	88	
Mercury	7439-97-6	0.026	R3 BTAG SW	0.026	0.0013	1.1	
Nickel	7440-02-0	52	R3 BTAG SW	52	28.9	73	
Potassium	7440-09-7	53000	R3 BTAG SW	53000	NA	NA	
Selenium	7782-49-2	1	R3 BTAG SW	1	5	18	
Silver	7440-22-4	3.2	R3 BTAG SW	3.2	0.12	18	
Sodium	7440-23-5	680000	R3 BTAG SW	680000	NA	NA	
Thallium	7440-28-0	0.8	R3 BTAG SW	0.8	10	NA	

NAS JRB Willow Grove Site 12 Ecological Screening Criteria - Surface Water Samples

Analyte	CAS Number	Ecological Soil Screening Level [(1)] (ug/L)	Source of Ecological Soil Screening Level	EPA R3 BTAG FW SW (ug/L)	EPA R5 Eco SW (ug/L)	EPA T-RSL Adjusted (ug/L)	NOAA SQUIRT (ug/L)
Vanadium	7440-62-2	20	R3 BTAG SW	20	12	18	
Zinc	7440-66-6	120	R3 BTAG SW	120	65.7	1100	
Hexavalent Chromium							
Hexavalent Chromium	18540-29-9	11	R3 BTAG SW	11	42	0.043	
Cyanide							
Cyanide	57-12-5	5	R3 BTAG SW	5	5.2	73	
Pesticides							
4,4'-DDD	72-54-8	0.011	R3 BTAG SW	0.011	NA	0.28	
4,4'-DDE	72-55-9	4.51E-09	R5 ECO SW	NA	4.51E-09	0.2	
4,4'-DDT	50-29-3	0.0005	R3 BTAG SW	0.0005	1.10E-05	0.2	
Aldrin	309-00-2	3	R3 BTAG SW	3	0.017	0.004	
alpha-BHC	319-84-6	12.4	R5 ECO SW	NA	12.4	0.011	
alpha-Chlordane	5103-71-9	0.00029	R5 ECO SW	NA	0.00029	0.19	
beta-BHC	319-85-7	2.2	R3 BTAG SW	2.2	0.495	0.037	
delta-BHC	319-86-8	141	R3 BTAG SW	141	667	0.011	
Dieldrin	60-57-1	0.056	R3 BTAG SW	0.056	7.10E-05	0.0042	
Endosulfan I	959-98-8	0.051	R3 BTAG SW	0.051	0.056	22	
Endosulfan II	33213-65-9	0.051	R3 BTAG SW	0.051	0.056	22	
Endosulfan sulfate	1031-07-8	2.22	R5 ECO SW	NA	2.22	22	
Endrin	72-20-8	0.036	R3 BTAG SW	0.036	0.036	1.1	
Endrin aldehyde	7421-93-4	0.15	R5 ECO SW	NA	0.15	1.1	
Endrin ketone	53494-70-5	11	T-RSL	NA	NA	1.1	
gamma-BHC (Lindane)	58-89-9	0.01	R3 BTAG SW	0.01	0.026	0.061	
gamma-chlordane	5103-74-2	0.00029	R5 ECO SW	NA	0.00029	0.19	
Heptachlor	76-44-8	0.0019	R3 BTAG SW	0.0019	0.0038	0.015	
Heptachlor epoxide	1024-57-3	0.0019	R3 BTAG SW	0.0019	0.0038	0.0074	
Methoxychlor	72-43-5	0.019	R3 BTAG SW	0.019	0.019	18	
Toxaphene	8001-35-2	0.0002	R3 BTAG SW	0.0002	0.00014	0.061	
Dioxins/Furans							
1,2,3,4,6,7,8,9-OCDD	3268-87-9	0.000000278	R5 ECO SW	NA	2.78E-07	0.0017	
1,2,3,4,6,7,8,9-OCDF	39001-02-0	0.00129	R5 ECO SW	NA	0.00129	0.0017	
1,2,3,4,6,7,8-HPCDD	35822-46-9	0.000000278	R5 ECO SW	NA	2.78E-07	0.000052	
1,2,3,4,6,7,8-HPCDF	67562-39-4	0.00129	R5 ECO SW	NA	0.00129	0.000052	
1,2,3,4,7,8,9-HPCDF	55673-89-7	0.00129	R5 ECO SW	NA	0.00129	0.000052	
1,2,3,4,7,8-HXCDD	39227-28-6	0.000000278	R5 ECO SW	NA	2.78E-07	0.0000052	
1,2,3,4,7,8-HXCDF	70648-26-9	0.00129	R5 ECO SW	NA	0.00129	0.0000052	
1,2,3,6,7,8-HXCDD	57653-85-7	0.000000278	R5 ECO SW	NA	2.78E-07	0.0000052	
1,2,3,6,7,8-HXCDF	57117-44-9	0.00129	R5 ECO SW	NA	0.00129	0.0000052	
1,2,3,7,8,9-HXCDD	19408-74-3	0.000000278	R5 ECO SW	NA	2.78E-07	0.0000052	
1,2,3,7,8,9-HXCDF	72918-21-9	0.00129	R5 ECO SW	NA	0.00129	0.0000052	
1,2,3,7,8-PECDD	40321-76-4	0.000000278	R5 ECO SW	NA	2.78E-07	0.00000052	
1,2,3,7,8-PECDF	57117-41-6	0.00129	R5 ECO SW	NA	0.00129	0.000017	
2,3,4,6,7,8-HXCDF	60851-34-5	0.00129	R5 ECO SW	NA	0.00129	0.0000052	
2,3,4,7,8-PECDF	57117-31-4	0.00129	R5 ECO SW	NA	0.00129	0.0000017	
2,3,7,8-TCDD	1746-01-6	3.1E-09	R3 BTAG SW	3.1E-09	3.00E-09	0.00000052	
2,3,7,8-TCDF	51207-31-9	0.0000052	T-RSL	NA	NA	0.0000052	
Total HpCDD	37871-00-4	NA	None	NA	NA	NA	
Total HpCDF	38998-75-3	NA	None	NA	NA	NA	
Total HxCDD	34465-46-8	NA	None	NA	NA	NA	
Total HxCDF	55684-94-1	NA	None	NA	NA	NA	
Total PeCDD	36088-22-9	NA	None	NA	NA	NA	
Total PeCDF	30402-15-4	NA	None	NA	NA	NA	
Total TCDD	41903-57-5	NA	None	NA	NA	NA	
Total TCDF	55722-27-5	NA	None	NA	NA	NA	

1- The following hierarchy was used for selecting the Ecological Screening level in order of preference:

USEPA Region 3 BTAG Ecological Surface Water Screening Levels (R3 BTAG SW) (USEPA, 2005).
USEPA Region 5 Ecological Surface Water Screening Levels (R5 ECO SW) (USEPA, 2005).
USEPA Regions 3, 6, and 9 Tapwater Regional Screening Levels (T-RSL), adjusted to 0.1x value for non-carcinogens (USEPA, May 2010).
Lowest of National Oceanographic and Atmospheric Administration (NOAA) Screening Quick Reference Tables (SQUIRT) surface water benchmarks (Buchman, 2008) .

Shaded cells are values that were selected as the overall ecological surface water screening level.