N60200.AR.003443
NAS CECIL FIELD, FL
5090.3a

REMEDIAL ACTION PLAN FOR JET ENGINE TEST CELL AND OIL-WATER SEPARATOR

334-OW NAS CECIL FIELD FL

9/27/2002

TETRA TECH NUS INC

Remedial Action Plan
for
Jet Engine Test Cell and Oil-Water Separator 334-OW

at

Naval Air Station Cecil Field
Jacksonville, Florida

Southern Division
Naval Facilities Engineering Command
Contract Number N62467-94-D-0888

Contract Task Order 0248

September 2002

Rev. 0
09/27/02

REMEDIAL ACTION PLAN
FOR
JET ENGINE TEST CELL AND OIL-WATER SEPARATOR 334-OW

NAVAL AIR STATION CECIL FIELD
JACKSONVILLE, FLORIDA

CONPREHENSIVE LONG-TERM
ENVIRONMENTAL ACTION NAVY (CLEAN) CONTRACT

Submitted to:
Southern Division
Naval Facilities Engineering Command
2155 Eagle Drive
North Charleston, South Carolina 29406

Submitted by:
Tetra Tech NUS, Inc.
661 Andersen Drive
Foster Plaza 7
Pittsburgh, PA 15220-2745

CONTRACT NUMBER N62467-94-D-0888
CONTRACT TASK ORDER 0248

SEPTEMBER 2002

PREPARED UNDER THE SUPERVISION OF:

Paul E. Calligan

PAUL CALLIGAN, P.G.
TASK ORDER MANAGER
TETRA TECH NUS, INC.
FLORIDA LICENSE NO. PG-0001864
TAMPA, FLORIDA

APPROVED FOR SUBMITTAL BY:

Debra M Wroblewski

DEBBIE WROBLEWSKI
PROGRAM MANAGER
TETRA TECH NUS, INC.
PITTSBURGH, PENNSYLVANIA

CERTIFICATION OF TECHNICAL
DATA CONFORMITY

The Contractor, Tetra Tech NUS, Inc., hereby certifies that, to the best of its knowledge and belief, the technical data delivered herewith under Contract No. N62467-94-D-0888 are complete and accurate and comply with all requirements of this contract.

DATE: September 27, 2002

COMPANY CERTIFICATION AUTHORIZATION NUMBER: 7988
Tetra Tech NUS, Inc.
661 Andersen Drive
Pittsburgh, PA 15220

NAME AND TITLE OF CERTIFYING OFFICIAL: Steven L. Brashers, P.E.
Project Engineer

The professional opinions rendered in this decision document identified as Remedial Action Plan for Jet Engine Test Cell Site, Naval Air Station Cecil Field, Jacksonville, Florida were developed in accordance with commonly accepted procedures consistent with applicable standards of practice. Decision documents were prepared under the supervision of the signing engineer and are based on information obtained from others. If conditions are determined to exist differently than those described in this document, then the undersigned professional engineer should be notified to evaluate the effects of any additional information on the project described in this document.

Steven L Brashers
9-24-2002

Steven L. Brashers, P.E.
Professional Engineering Number FL 47151
Tetra Tech NUS, Inc. Engineering Number 7988

TABLE OF CONTENTS

SECTION **PAGE NO.**

CERTIFICATION OF TECHNICAL DATA CONFORMITY iii

PROFESSIONAL ENGINEER AUTHORIZATION iv

ACRONYMS viii

EXECUTIVE SUMMARY ES-1

1.0 INTRODUCTION 1-1
1.1 PURPOSE AND SCOPE 1-1
1.2 SITE DESCRIPTION 1-1
1.3 SITE HISTORY 1-2
1.4 REPORT ORGANIZATION 1-3

2.0 SITE ASSESSMENT REPORT FINDINGS AND CONCLUSIONS 2-1
2.1 FIELD ACTIVITIES 2-1
2.2 GROUNDWATER FLOW DIRECTION 2-1
2.3 CONTAMINATED SOIL ASSESSMENT 2-1
2.4 CONTAMINATED GROUNDWATER ASSESSMENT 2-2
2.4.1 Northern Plume 2-3
2.4.2 Southern Plume 2-3
2.4.3 Well CEF-811-8S Area 2-3
2.5 SITE ASSESSMENT REPORT CONCLUSIONS 2-4

3.0 REMEDIAL ACTION PLAN GOALS 3-1
3.1 SOIL TARGET LEVELS 3-1
3.2 GROUNDWATER TARGET LEVELS 3-2

4.0 CONTAMINANT DISTRIBUTION 4-1
4.1 ESTIMATED MASS OF CONTAMINANTS IN SOIL 4-1
4.2 ESTIMATED MASS OF CONTAMINANTS IN GROUNDWATER 4-1

5.0 REMEDIAL ALTERNATIVE TECHNOLOGY SCREENING 5-1
5.1 EVALUATION OF SOIL TREATMENT ALTERNATIVES 5-1
5.1.1 Excavation and Off-site Treatment/Disposal 5-1
5.1.2 Institutional Controls 5-2
5.2 EVALUATION OF GROUNDWATER TREATMENT ALTERNATIVES 5-2
5.2.1 Air Sparging 5-3
5.2.2 In-situ Aerobic Biological Treatment 5-3
5.3 COST COMPARISON AND RATIONALE FOR SELECTION 5-4

6.0 REMEDIAL SYSTEM DESIGN 6-1
6.1 AIR SPARGING DESIGN DETAILS 6-1
6.1.1 Air Sparging System 6-1
6.2 AIR SPARGING CONSTRUCTION DETAILS 6-2
6.2.1 Air Sparging Component Construction 6-3
6.3 OFF-GAS TREATMENT 6-3
6.4 ELECTRICAL AND CONTROLS 6-3
6.4.1 Control Panel 6-3
6.4.2 AS System Controls/Operation 6-4

TABLE OF CONTENTS

SECTION **PAGE NO.**

7.0 OPERATION & MAINTENANCE AND MONITORING 7-1
7.1 SYSTEM START-UP 7-1
7.2 DESIGNATION OF OBSERVATION WELLS 7-2
7.3 MONITORING PLAN 7-2
7.4 MONITORING REMEDIATION PROGRESS 7-3
7.5 SYSTEM OPERATIONS AND MAINTENANCE 7-4
7.6 STATUS REPORTS 7-5
7.7 SYSTEM DEACTIVATION 7-5

APPENDIX

A SOIL AND GROUNDWATER MASS CALCULATIONS
B REMEDIAL TIME ESTIMATIONS
C REMEDIAL ALTERNATIVE COST ESTIMATES
D AS DESIGN CALCULATIONS
E AS EQUIPMENT SPECIFICATIONS
F RAP CHECK LIST

TABLES

NUMBER

2-1 Groundwater Level Measurements
2-2 SARA Groundwater Analytical Results Summary
3-1 Chemicals of Concern and Associated Selected Soil Cleanup Target Levels
3-2 Chemicals of Concern and Associated Groundwater Cleanup Target Levels
5-1 Groundwater Remedial Alternatives Cost Summary
7-1 Long-Term Monitoring Wells

FIGURES

NUMBER

1-1 Facility Location Map
1-2 Site Location Map
1-3 Site Plan
2-1 Groundwater Elevation and Contour Map
2-2 Areas of Soil Excavation and Extend of Contamination
2-3 Groundwater Analytical Results
6-1 Proposed Remedial System Layout
6-2 Air Sparging Process and Instrumentation Diagram
6-3 Remedial Equipment Layout
6-4 Air Sparging Well Detail
6-5 Trench Detail

ACRONYMS

ABB-ES	ABB Environmental Services, Inc.
AS	Air sparging
AST	Aboveground storage tank
bgs	Below ground surface
BTEX	Benzene, toluene, ethylbenzene, and xylenes
CA	Contamination Assessment
CAR	Contamination Assessment Report
CARA	CAR Addendum
CLEAN	Comprehensive Long-Term Environmental Action Navy
COC	Chemicals of Concern
CSR	Confirmatory Sampling Report
CTO	Contract Task Order
DO	Dissolved oxygen
DPT	Direct push technology
FAC	Florida Administrative Code
FDEP	Florida Department of Environmental Protection
FID	Flame ionization detector
FL-PRO	Florida Petroleum Range Organics
Ft	Feet
ft^2	Square feet
GCTL	Groundwater cleanup target level
HOA	Hands-On-Auto
HZ	Hertz
JETC	Jet Engine Test Cell
lbs	Pounds
lbs/day	Pounds per day
MOP	Monitoring Only Plan
NAS	Naval Air Station
NADSC	Natural attenuation default source concentrations
Navy	United States Navy
O&M	Operations and maintenance
ORC	Oxygen-release compound
OSHA	Occupational Safety and Health Administration
OWS	Oil / Water Separator

PCA	Preliminary Contamination Assessment
P&ID	Piping and instrumentation diagram
ppm	Parts-per-million
psig	Pounds per square inch gauge
PVC	Polyvinyl chloride
RAC	Remedial Action Contractor
RAP	Remedial Action Plan
ROI	Radius of Influence
SAR	Sampling and Analysis Report
SARA	Sampling and Analysis Report Addendum
SCFM	Standard cubic feet per minute
SCTL	Soil cleanup target level
SRR	Source Removal Report
SVE	Soil vapor extraction
TEFC	Totally enclosed, fan-cooled
TOC	Top of casing
TRPH	Total recoverable petroleum hydrocarbons
TtNUS	Tetra Tech NUS, Inc.
µg/L	Micrograms per liter
UST	Underground storage tank
U.S. ACE	United States Army Corps of Engineers
U.S. EPA	United States Environmental Protection Agency
VOC	Volatile organic compound
yd^3	Cubic yards

1.0 INTRODUCTION

1.1 PURPOSE AND SCOPE

This Remedial Action Plan (RAP) was prepared by Tetra Tech NUS, Inc. (TtNUS) for the United States Navy (Navy) Southern Division, Naval Facilities Engineering Command under Contract Task Order (CTO) 0248 for the Comprehensive Long-term Environmental Action Navy (CLEAN) III, Contract Number N62467-94-D-0888. This RAP recommends treatment options for the contaminated soil and groundwater at the Jet Engine Test Cell (JETC) and Building 334, Tank 334-OW at Naval Air Station (NAS) Cecil Field, Jacksonville, Florida.

The purpose of this RAP is to select a remedial alternative to address contaminated soil and groundwater in accordance with the requirements of Florida Administrative Code (FAC) Chapter 62-770. This RAP evaluates applicable alternatives to protect human health and the environment and to reduce contaminant concentrations within impacted soil and groundwater. This RAP selects the preferred alternative to remediate the site in a cost effective and timely manner, and provides a conceptual design for the selected alternative.

1.2 SITE DESCRIPTION

NAS Cecil Field is located in the western portion of Duval County and northeast portions of Clay County, Florida (Figure 1-1). The majority of NAS Cecil Field, including the JETC site, lies in Duval County. As shown on Figure 1-2, Site Location Map, the JETC site is located west of the northern portion of the north-south runways. The JETC facility was previously used by the Navy, and is currently used by the private sector, to test jet engines. Jet engines were mounted and operated in Buildings 334, 339, and 811 (Figure 1-3). Building 811 was demolished several years ago and only its foundation remains. Each building has a smaller control building associated with it. During the tests, a jet engine is mounted in a test building, connected to a fuel system, and activated.

The JETC site, located near the intersection of Flightline Road (formerly Jet Road) and Cecil Pines Street (formerly 10th Street), includes Buildings 339, 334, 328, and 811 (see Figure 1-3). The area between Flightline Road and the buildings is generally paved and the remainder of the site is generally unpaved. Two 20,000-gallon JP-5 underground storage tanks (USTs), Tanks 339-TC1 and 339-TC2, were located in a fuel tank yard between Buildings 811 and 339. The eastern portion of this tank yard also contained a 5,000-gallon JP-5 aboveground storage tank (AST), Tank 339-TC3, surrounded by a 3-foot-high concrete block containment wall. One 940-gallon AST, known as Tank 334P, contained 10W engine oil and was located within a rubber containment structure on a concrete pad on the north side of Building 334. Other

petroleum storage/handling facilities associated with the JETC site include three oil-water separators (OWSs) – Building 334, Tank 325-OW, Building 334, Tank 334-OW, and Building 339, Tank 339-OW (See Figure 1-3).

1.3 SITE HISTORY

Environmental investigations began at the JETC site in 1989 when leaks were discovered during tightness testing at Tanks 339-TC1 and -TC2, the 20,000-gallon JP-5 tanks northwest of Building 339. In addition to leakage, spills from overfilling during site operations were also reported for Tanks 339-TC1 and 339-TC2. ABB Environmental Services, Inc. (ABB-ES) began a Preliminary Contamination Assessment (PCA) in 1990, during which excessively contaminated soil, defined as having a flame ionization detector (FID) reading of greater than 50 parts per million (ppm), was identified and a Contamination Assessment (CA) was recommended. CA field activities were performed by United States Army Corps of Engineers (U.S. ACE) and ABB-ES from 1991 to 1994. Free product and soil and groundwater contamination associated with Tanks 339-TC1 and 39-TC2 were identified and delineated during the multi-phase CA and CA Report Addendum (CARA) field efforts (ABB-ES, 1994).

Soil contamination was also identified at Building 334, Tank 334-OW during Confirmatory Sampling Report (CSR) field activities (ABB-ES, 1997). The extent of contamination was not adequately delineated during this investigation, and additional soil delineation work was recommended. Soil contamination at Tank 334-OW was delineated during field activities for associated with the September 1999 Sampling and Analysis Report (SAR) (HLA, 1999). Groundwater contamination was not detected during the CSR or SAR field efforts for Tank 334-OW.

Soil excavation activities were conducted at the Tank 334-OW site in 1999; however, all of the contaminated soil as defined in the September 1999 SAR was not removed.

In addition to investigations at Tanks 339-TC1, 339-TC2, and 334-OW, environmental investigations at other petroleum storage/handing units at the JETC site included the following:

- A November 1997 SAR for Tank 339P that found no soil contamination (ABB-ES, 1997).
- A February 1999 CAR for Tank 339-OW that found no soil or groundwater contamination in excess of regulatory levels (ABB-ES, 1999).
- A September 1999 CSR for Building 334, Tank 325-OW that found no soil or groundwater contamination in excess of regulatory levels.

At each of these sites, no further action until proper removal and closure of the tank was recommended. One well associated with Tank 325-OW was resampled in 2000 to confirm CSR analytical results with high detection levels (TtNUS, 2000c)

In May 1999, a groundwater Monitoring Only Plan (MOP) for natural attenuation was approved by Florida Department of Environmental Protection (FDEP) for the JETC site, including wells associated with Tanks 339-TC1, TC-2, and 334-OW. Quarterly groundwater sampling was conducted under this plan from July 1999 to October 2000. Based on quarterly sampling results, it was decided that additional delineation of the groundwater contamination at the site was required, and, as described in Section 2.0, a Site Assessment Report Addendum (SARA) field investigation was conducted in 2001 to meet this requirement (TtNUS, 2001).

1.4 REPORT ORGANIZATION

This report is organized into seven sections. Below is a list of the sections and a brief description of their purpose:

Section 1.0	Introduction	Summarizes the report's purpose, scope, site information, and report organization.
Section 2.0	Site Assessment Report Addendum Findings and Conclusions	Reviews the approved SARA and summarizes the SARA's findings and conclusions.
Section 3.0	RAP Goals	Establishes the soil and groundwater treatment objectives for the remedial system/plan.
Section 4.0	Contaminant Distribution	Estimates the mass of contaminants in the soil and groundwater.
Section 5.0	Remedial Alternative Technology Screening	Presents the alternatives for remediation, determines the suitability for the site, and develops budgetary costs for each.
Section 6.0	Remedial System Design	Presents all of the assumptions made and provides the detailed design of the preferred remedial alternative.
Section 7.0	Operation & Maintenance (O&M) and Monitoring	Establishes start-up and O&M procedures and provides a monitoring plan for the remediation system and sampling frequencies to evaluate the system's effectiveness.
Section 8.0	References	Lists all references used.

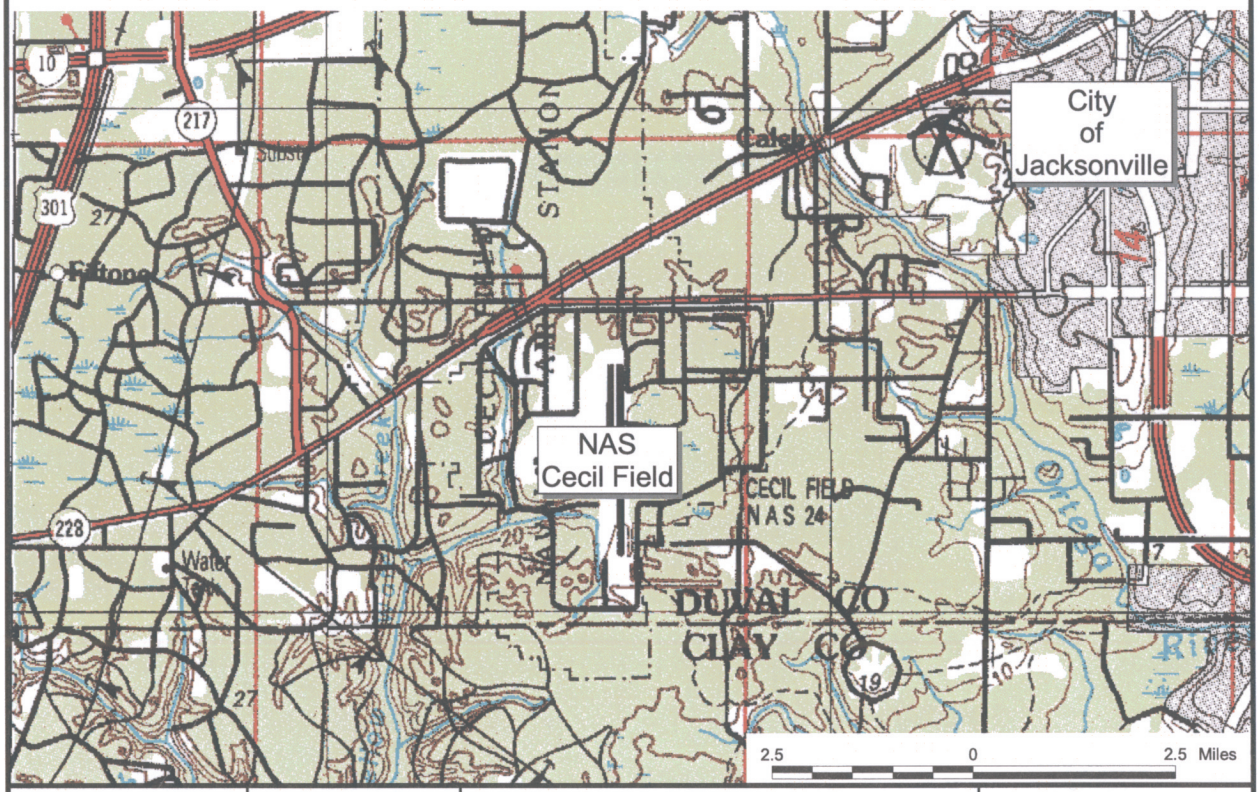

DRAWN BY MJJ	DATE 30Jul02	FACILITY LOCATION MAP JET ENGINE TEST CELL NAVAL AIR STATION CECIL FIELD JACKSONVILLE, FLORIDA	CONTRACT NUMBER N4248
CHECKED BY VS	DATE 9/24/02		APPROVED BY MPL DATE 9/24/02
COST/SCHEDULE-AREA			APPROVED BY — DATE —
SCALE AS NOTED			DRAWING NO. FIGURE 1-1 REV 0

P:\GIS\NAS_CecilField\JETC02-RAP.apr 30Jul02 MJJ Layout01

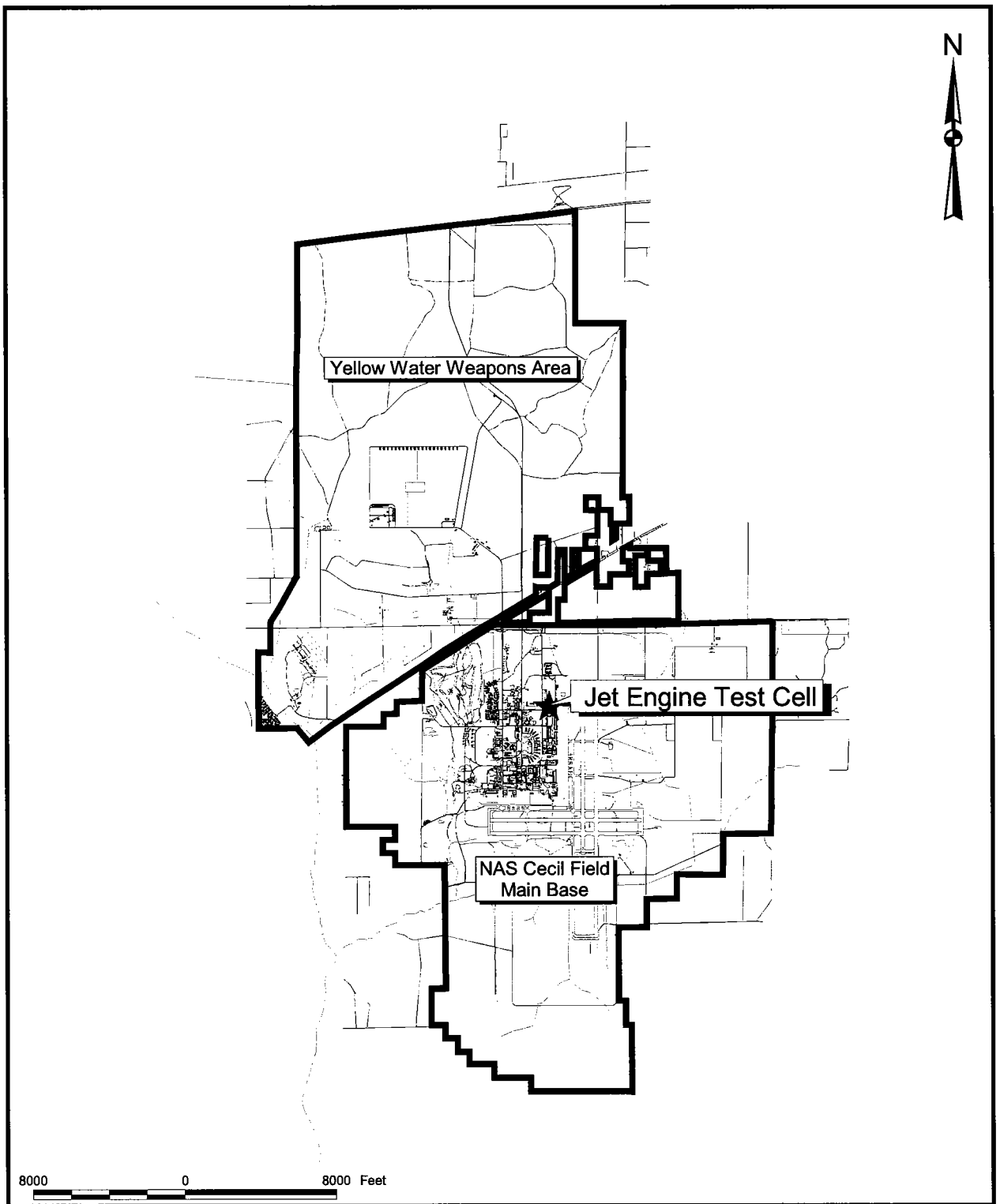

DRAWN BY MJJ	DATE 30Jul02	SITE LOCATION MAP JET ENGINE TEST CELL NAVAL AIR STATION CECIL FIELD JACKSONVILLE, FLORIDA	CONTRACT NUMBER N4248
CHECKED BY	DATE 9/24/02		APPROVED BY MPS DATE 9/24/02
COST/SCHEDULE-AREA			APPROVED BY DATE
SCALE AS NOTED			DRAWING NO. FIGURE 1-2 REV 0

P:\GIS\NAS_CecilField\JETC02-RAP.apr 30Jul02 MJJ Layout01

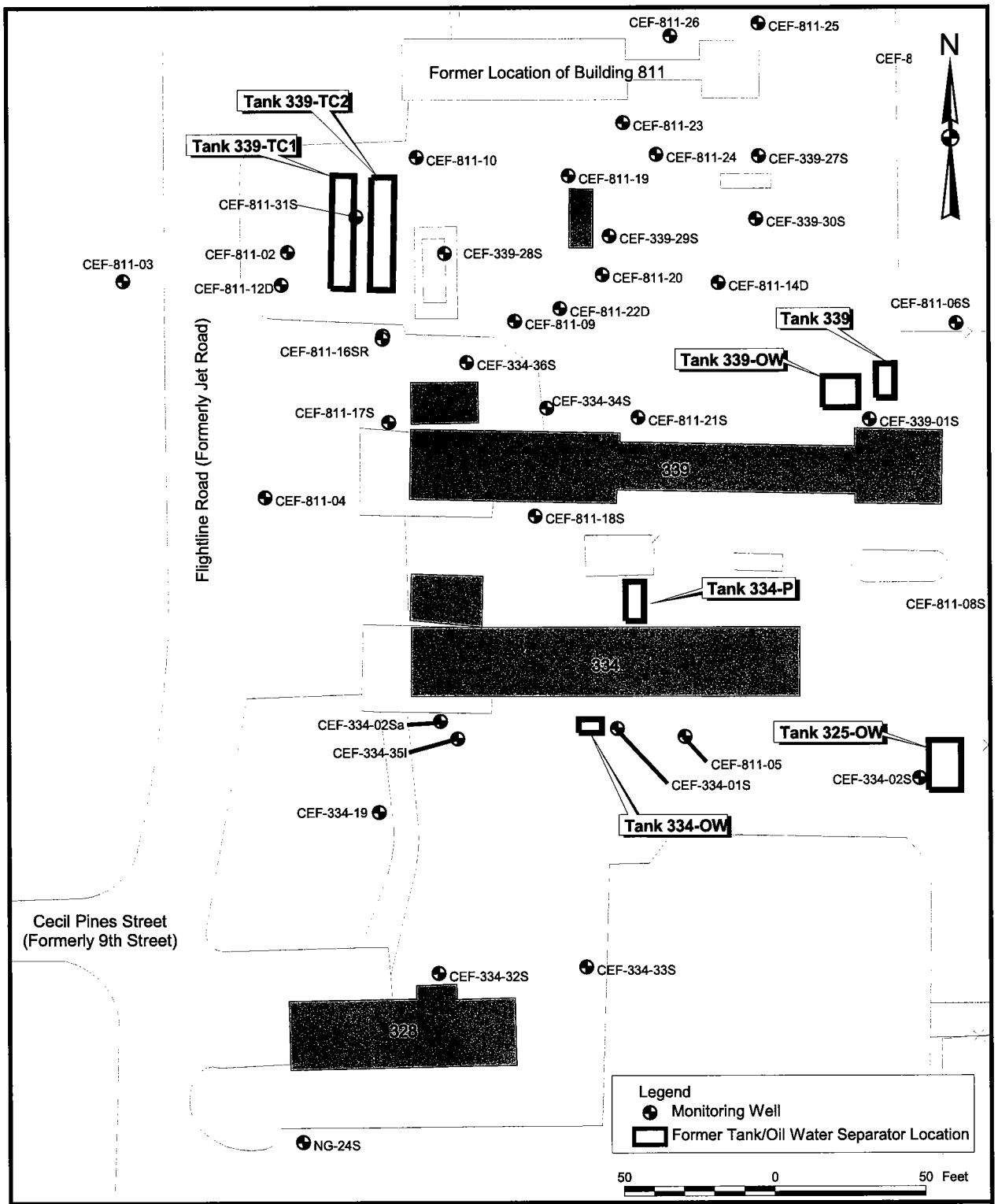

DRAWN BY	DATE			CONTRACT NUMBER
MJJ	14Aug02			N4248
CHECKED BY	DATE	SITE PLAN	APPROVED BY	DATE
DB	9/24/02	JET ENGINE TEST CELL	MPS	9/24/02
COST/SCHEDULE-AREA		NAVAL AIR STATION CECIL FIELD	APPROVED BY	DATE
		JACKSONVILLE, FLORIDA	—	—
SCALE			DRAWING NO.	REV
AS NOTED			FIGURE 1-3	0

P:\GIS\NAS_CecilField\JETC02-RAP.apr 30Jul02 MJJ Layout05

2.0 SITE ASSESSMENT REPORT FINDINGS AND CONCLUSIONS

Since December 1990, various environmental investigations have been conducted at the JETC site. The following is a summary of the SARA submitted to the FDEP in October 2001 based on a site assessment conducted by TtNUS to estimate groundwater contamination at the site.

2.1 FIELD ACTIVITIES

A work plan was developed that described the SARA investigation and was presented to the FDEP for concurrence prior to starting field activities. The investigation consisted of direct push technology (DPT) groundwater sampling, permanent monitoring well installation and sampling, and synoptic groundwater level measurements. These activities were conducted in general accordance with the applicable guidance in Chapter 62-770, FAC and TtNUS standard operating procedures and quality assurance protocols.

2.2 GROUNDWATER FLOW DIRECTION

The depth to groundwater, during the SARA, ranged from approximately 8 to 10 feet below ground surface (bgs). There is an area of high groundwater table elevation in the vicinity of the former USTs, 339-TC1 and 339-TC2. The groundwater flow direction is generally to the south-southeast, but for various reasons (including the local high water table at the former USTs, and manmade structures above and below grade), the direction is more to the south on the western portion of the site, and more to the southeast on the eastern portion of the site.

Groundwater flow direction at other sites along the flightline (for example Site 16) is typically to the southeast. The southerly component of the groundwater at JETC may be the result of the extensive unpaved areas to the north and west of the JETC, compared to the extensive paving to the south and east of the site. Table 2-1 presents the monitoring well construction data and groundwater elevations from June 11 and 13, 2001. Figure 2-1 presents the groundwater potentiometric surface map from June 2001.

2.3 CONTAMINATED SOIL ASSESSMENT

In the September 1999, SAR Rev. 1 (HLA, 1999d), the extent of contaminated soil was delineated by FID and laboratory analyses. This delineation showed the contaminated soil starting roughly at the midpoint along Building 334 at the location of Tank 334-OW and extending west to the western end of the building and an area east of the Tank 334-OW. Figure 2-2 shows the outline of the excavation and the outline of the extent of contamination in general agreement with the September 1999 SAR Rev. 1 (HLA, 1999d).

The excavation was performed by first removing the Tank 334-OW then making FID measurements of the soil from the walls of the excavation. Where the FID measurements were greater than 50 ppm, the soil was excavated and additional soil headspace measurements were made. When the Tank 334-OW was removed, no high FID readings were detected on the eastern side of the excavation, so the excavation was not advanced in that direction. Confirmatory samples were collected at the edges of the excavation. Further, at the time of the excavation, there was no excavation plan, and the only information that the Remedial Action Contractor (RAC) had was the SAR, Rev. 0 (HLA, 1999b).

Based on the data presented in the Source Removal Report (SRR) (CH2MHill, 2000), the contaminated soil that had been delineated in the September 1999 SAR, Rev. 1 (HLA, 1999d) was not completely removed.

Institutional controls are required at two areas to prevent exposure to contaminated soil that was not accessible to excavation. The first area is to the south of the former USTs (339-TC1 and 339-TC2) beneath the water supply line, the control building, and the sidewalk just north of Building 339. The second area is beneath Building 334. The institutional controls should consist of the requirement to keep the site for industrial uses only. Other controls should prevent disturbance of the soil underneath the following locations: Building 334, the control building north of Building 339, the sidewalk next to the control building for Building 339, and the soil overlying the water line to the north of the control building.

2.4 CONTAMINATED GROUNDWATER ASSESSMENT

The vertical and horizontal extent of petroleum-impacted groundwater was assessed through groundwater analyses performed during the direct-push field investigation and monitoring well installation as described in the SARA (TtNUS, 2001). Groundwater was assessed using DPT and a mobile laboratory to identify where permanent monitoring wells should be placed. Permanents monitoring well locations were chosen based on DPT groundwater data. Groundwater samples were collected in June 1999 from existing and newly installed permanent monitoring wells. All groundwater samples were analyzed for volatile organic compounds (VOCs) by United States Environmental Protection Agency (USEPA) Method SW-846 8021B, polycyclic aromatic hydrocarbons (PAHs) by USEPA Method SW-846 8310, and TRPH by Florida Petroleum Range Organics (FL-PRO). In addition, the new wells were analyzed for MTBE by USEPA Method SW-846 8021B, total lead by USEPA Method SW-846 6010B, and 1,2-dibromoethane by USEPA Method 504.1. Table 2-2 summarizes the groundwater fixed-based laboratory results as presented in the SARA. The groundwater analytical results from the permanent monitoring wells indicate the presence of northern and southern plumes at the site (Figure 2-3).

2.4.1 Northern Plume

Exceedance of groundwater cleanup target levels (GCTL) in wells CEF-338-28S, CEF-339-29S, CEF-811-16SR, CEF-811-17S, CEF-811-34S, and CEF-811-18S characterize the northern plume. Benzene, ethylbenzene, naphthalene, 1-methylnaphthalene, 2-methylnaphthalene, and total recoverable petroleum hydrocarbons (TRPH) were detected at concentrations greater than GCTLs. Benzene, ethylbenzene, naphthalene, and TRPH concentrations were high near the location of the former USTs, but at the outer edges of the plume, only naphthalene, 1-methylnaphthalene, 2-methylnaphthalene and TRPH were detected. The extent of the plume is defined by CEF-339-30S, CEF-811-21S, DPT-007, DPT-008, and DPT-004 where contaminants were either less than GCTLs or below detection limits.

A drawing of the foundation of Building 339 shows that the western portion of the building has a shallow slab foundation that does not extend to the water table. The center portion of the building has a deep foundation that is about 7 to 8 feet bgs, and therefore intercepts the groundwater during high water table conditions. Shallow groundwater contamination may migrate west along this barrier.

2.4.2 Southern Plume

Exceedance of GCTLs in wells CEF-334-2Sa and 334-34S characterize the southern plume. Benzene, ethylbenzene, toluene, xylenes, naphthalene, 1-methylnaphthalene, 2-methylnaphthalene, and TRPH were detected at concentrations greater than GCTLs in well CEF-334-2Sa. The concentrations of xylenes and naphthalene were also greater than natural attenuation default concentrations. Further downgradient at CEF-334-32S, only naphthalene, 1-methylnaphthalene, 2-methylnaphthalene and TRPH were detected. The extent of the plume is defined by CEF-334-1S, DPT-014, CEF-334-33S, NG-24S, DPT-018, and DPT-016 where contaminants were either less than GCTLs or below detection limits. Well CEF-334-35I, in which COCs were either below GCTLs or not detected, defines the vertical extent of the plume.

2.4.3 Well CEF-811-8S Area

The historic sampling results at well CEF-811-8S have not been consistent. During early phases of the investigation of the JETC, contaminants were detected in samples from this well, but were later found not to be present. After a period without sampling, the well was resampled in July 2000 and October 2000. Naphthalene, 1-methylnaphthalene, 2-methylnaphthalene, and TRPH were detected at concentrations greater than GCTLs in July 2000, but no contaminants were detected in October 2000. No contaminants were detected during the SARA sampling at CEF-811-8S or at wells downgradient of it (NG-8S and NG-10S). The occasionally observed contamination may be the result of contaminants periodically released from the smear zone

2.5 SITE ASSESSMENT REPORT CONCLUSIONS

The SARA delineated the extent of groundwater contamination and concluded that not all of the contaminated soil identified by previous investigations was removed from the vicinity of the OWS at the site.

Groundwater contamination appears to be limited to the northern and southern plumes in the area of the Buildings 334 and 339. Benzene, ethylbenzene, toluene, xylenes, naphthalene, 1-methylnaphthalene, 2-methylnaphthalene, and TRPH were detected above target levels in monitoring wells within the two plumes.

In the SARA, TtNUS recommended that the two plumes be handled as one site due to their proximity and that remaining contaminated soil to the east of the Tank 334-OW excavation be excavated and disposed offsite. Also, in accordance with Chapter 62-770, FAC, TtNUS recommended the preparation and implementation of a RAP to remediate the soil and groundwater at the site.

TABLE 2-1

GROUNDWATER LEVEL MEASUREMENTS
JETC AND TANK 334-OW REMEDIAL ACTION PLAN
NAVAL AIR STATION CECIL FIELD
JACKSONVILLE, FLORIDA

Monitoring Well Identification	Well Depth (feet below TOC)	Top-of-Casing Elevation (feet above msl)	June 2001	
			Depth to Water (feet below TOC)	Water-Level Elevation (feet above msl)
CEF-334-1S	13.85	77.58	6.94	70.64
CEF-811-31S	14.95	78.29	7.33	70.96
CEF-334-2Sa	15.00	77.65	7.06	70.59
CEF-339-1S	12.80	78.06	7.39	70.67
CEF-339-27S	14.05	78.36	7.56	70.80
CEF-339-28S*	14.00	78.19	7.52	70.67
CEF-339-29S	14.54	78.29	7.53	70.76
CEF-339-30S	14.00	77.84	7.10	70.74
CEF-811-6S	12.85	78.02	7.39	70.63
CEF-811-8S	13.70	77.80	7.24	70.56
CEF-811-16SR	13.30	78.14	7.37	70.77
CEF-811-17S	14.62	77.91	7.17	70.74
CEF-811-18S	14.85	78.09	7.34	70.75
CEF-811-21S*	14.98	77.71	6.90	70.81
CEF-811-01S	N/A	78.37	7.40	70.97
CEF-811-03S	N/A	78.20	7.43	70.77
CEF-811-04S	N/A	77.86	7.17	70.69
CEF-811-07S	N/A	77.98	7.13	70.85
CEF-811-25S	N/A	78.11	7.29	70.82
CEF-811-26S	N/A	78.38	7.52	70.86
CEF-811-11S	N/A	78.18	6.52	71.66
NG-8S	N/A	76.98	5.93	71.05
NG-10S	N/A	76.56	5.36	71.20
CEF-334-2S	13.00	77.26	6.62	70.64
CEF-334-32S	13.30	78.39	7.86	70.53
CEF-334-33S	13.30	77.84	7.32	70.52
CEF-811-34S*	13.30	77.73	6.85	70.88
CEF-811-35I	34.10	77.79	7.37	70.42

Notes:
msl - Mean sea level.
TOC = Top of casing.
* = Anomalous data not used in contouring.
N/A = Not available.

TABLE 2-2

SARA GROUNDWATER ANALYTICAL RESULTS SUMMARY
JETC REMEDIAL ACTION PLAN
NAVAL AIR STATION CECIL FIELD
JACKSONVILLE, FLORIDA

Well Number (CEF-)	NADSC/GCTL (see notes 1 & 2)	339-28S	339-29S	811-8S	811-16SR	811-17S	811-18S	334-1S	334-6S
Volatile Organic Compounds (µg/L)									
Benzene	100/1	**2.3/2.2**	1.0U	1.0U	**14.3**	1.0U	1.0U	1.0U	1.0U
Ethylbenzene	300/30	**41/42.2**	21.2	1.0U	**33.3**	4.6	1.0U	2	1.0U
Toluene	400/40	0.9/0.91	1.0U	1.0U	0.76	1.0U	1.0U	1.0U	1.0U
Total Xylenes	200/20	6.2/5.9	4.5	3.0U	4.3	3.0U	3.0U	3.0U	3.0U
Bromodichloromethane	60/0.6	1.0U	1.0U	1.0U	1.0U	1.0U	1.0U	1.0U	1.0U
Chloroform	570/5.7	1.0U	1.0U	1.0U	1.0U	1.0U	1.0U	1.0U	1.0U
Polynuclear Aromatic Hydrocarbons (µg/L)									
Acenaphthene	200/20	17U	20U	4.0U	4.0U	17U	10.3	4.0U	4.0U
Fluorene	2800/280	8.6U	10U	2.0U	2.0U	8.6U	2.0U	2.0U	2.0U
1-Methylnaphthalene	200/20	**92.8/118**	**93.5**	2.0U	2.0U	**28.8**	9.6	8.5	2.0U
2-Methylnaphthalene	200/20	**102/130**	**71.7**	2.0U	2.0U	19.7	10	5.9	2.0U
Naphthalene	200/20	**101/132**	**133**	2.0U	2.0U	**38.3**	**22.8**	13.6	2.0U
Phenanthrene	2100/210	8.6U	10U	2.0U	2.0U	2.2U	2.0U	2.0U	2.0U
Total Recoverable Petroleum Hydrocarbons (mg/L)									
TRPH	50/5	**13.6/13.8**	**8**	0.277/0.216	**6.16**	**17.6**	2.75	0.908	0.25

TABLE 2-2

SARA GROUNDWATER ANALYTICAL RESULTS SUMMARY
JETC REMEDIAL ACTION PLAN
NAVAL AIR STATION CECIL FIELD
JACKSONVILLE, FLORIDA

Well Number (CEF-)	NADSC/GCTL (see notes 1 & 2)	811-21S	339-30S	811-31S	334-2Sa	334-32S	334-33S	811-34S	334-35I
Volatile Organic Compounds (µg/L)									
Benzene	100/1	1.0U	1.0U	1.0U	**11.8**	1.0U	1.0U	1.0U	1.0U
Ethylbenzene	300/30	1.0U	0.75	1.0U	**76.3**	2.1	1.0U	1.0U	1.6
Toluene	400/40	1.0U	1.0U	1.0U	**86.4**	1.0U	1.0U	1.0U	1.0U
Total Xylenes	200/20	3.0U	3.0U	3.0U	**296**	7.6	3.0U	3.0U	1.6
Bromodichloromethane	60/0.6	1.0U	1.0U	1.0U	2.0U	1.0U	1.0U	1.0U	**2**
Chloroform	570/5.7	1.0U	1.0U	1.0U	2.0U	1.0U	1.0U	1.0U	**5.8**
Polynuclear Aromatic Hydrocarbons (µg/L)									
Acenaphthene	200/20	4.4U	4.4U	7.9	40U	4.4U	4.0U	21U	4.0U
Fluorene	2800/280	2.2U	2.2U	3.6	20U	2.2U	2.0U	11U	2.0U
1-Methylnaphthalene	200/20	2.2U	4	2.2U	**172**	19.5	2.0U	11U	2.0U
2-Methylnaphthalene	200/20	2.2U	2.2	2.2U	**181**	14.9	2.0U	11U	2.0U
Naphthalene	200/20	2.2U	2.2U	2.2U	**378**	**30.4**	2.0U	11U	2.0U
Phenanthrene	2100/210	2.2U	2.2U	4.6	20U	2.2U	2.0U	2.2U	2.0U
Total Recoverable Petroleum Hydrocarbons (mg/L)									
TRPH	50/5	0.28U	0.28U	0.49	**14.6**	2.30	0.25U	**24.1**	0.528

TABLE 2-2

SARA GROUNDWATER ANALYTICAL RESULTS SUMMARY
JETC REMEDIAL ACTION PLAN
NAVAL AIR STATION CECIL FIELD
JACKSONVILLE, FLORIDA

Well Number (CEF-)	NADSC/GCTL (see notes 1 & 2)	334-35I	NG-8	NG-10	NG-24
Volatile Organic Compounds (µg/L)					
Benzene	100/1	1.0U	1.0U	1.0U	1.0U
Ethylbenzene	300/30	1.3	1.0U	1.0U	1.0U
Toluene	400/40	1.0U	1.0U	1.0U	1.0U
Total Xylenes	200/20	1.0U	3.0U	3.0U	3.0U
Bromodichloromethane	60/0.6	1.0U	1.0U	1.0U	1.0U
Chloroform	570/5.7	1.0U	1.0U	1.0U	1.0U
Polynuclear Aromatic Hydrocarbons (µg/L)					
Acenaphthene	200/20	NA	4.4U	4.0U	4.0U
Fluorene	2800/280	NA	2.2U	2.0U	2.0U
1-Methylnaphthalene	200/20	NA	2.2U	2.0U	2.0U
2-Methylnaphthalene	200/20	NA	2.2U	2.0U	2.0U
Naphthalene	200/20	NA	2.2U	2.0U	2.0U
Phenanthrene	2100/210	NA	2.2U	2.0U	2.0U
Total Recoverable Petroleum Hydrocarbons (mg/L)					
TRPH	50/5	NA	0.25U	0.25U	0.25U

Notes:
1 GCTL = Groundwater Cleanup Target Levels based on Chapter 62-770, Florida Administrative Code.
2 NADSC = Natural Attenuation Default Source Concentrations as promulgated in Chapter 62-770.690.
Values exceeding milestones, NADSC or GCTL, are in bold.
An "S" (meaning shallow) was added to the well identifications in the text and table that were not shown in the laboratory report.
µg/L = micrograms per liter
mg/L = milligrams per liter
U = Not detected at or above detection limit (associated value)
J = Estimated concentration
NA = not analyzed

ACAD: 4248GP01.dwg 09/03/02 HJB PIT

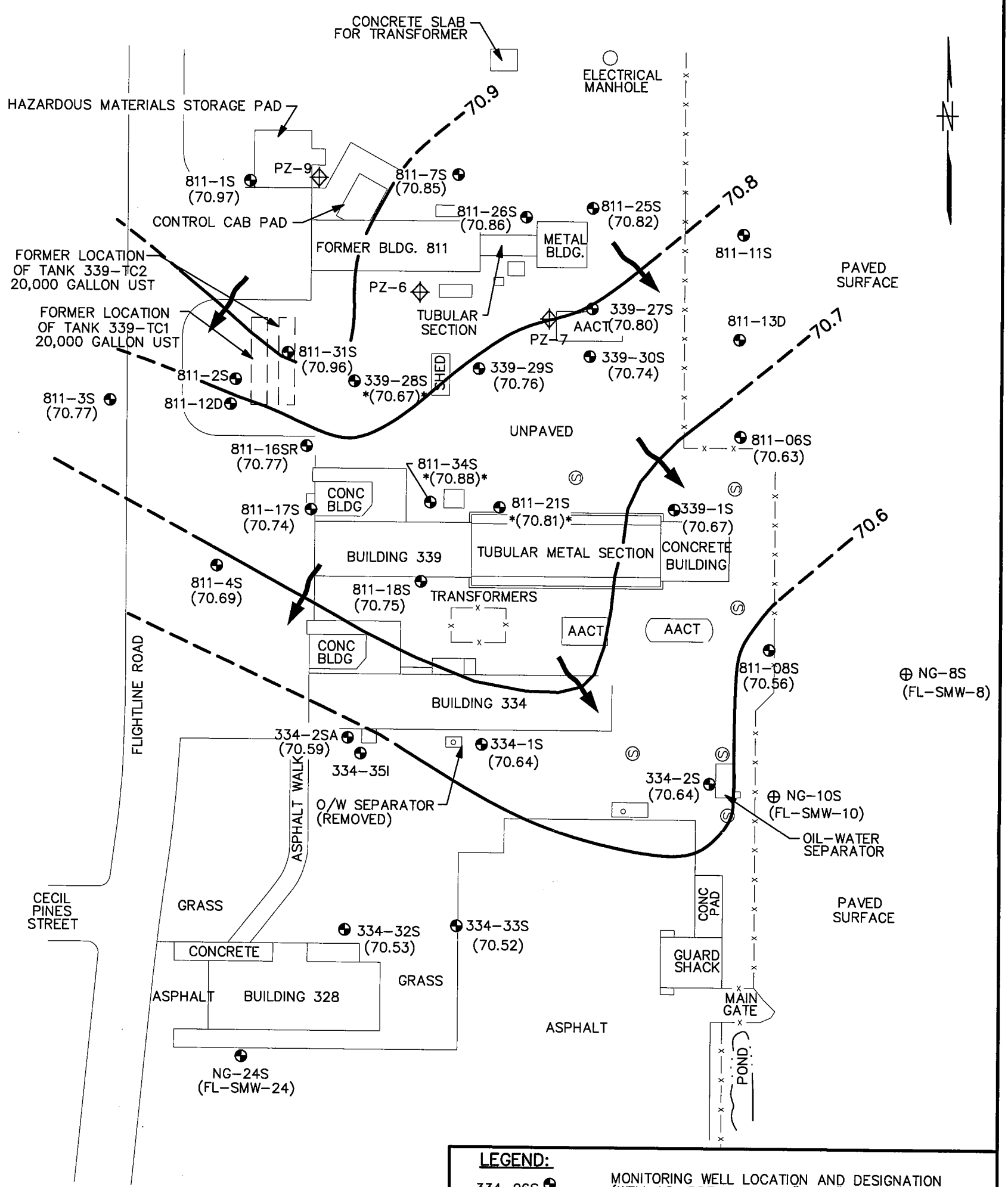

LEGEND:

334-06S	MONITORING WELL LOCATION AND DESIGNATION (WELL I.D. PRECEDED BY "CEF-" IN REPORT)
FL-SMW-8	SHALLOW MONITORING WELL LOCATION (INSTALLED FOR NORTHROP GRUMMAN)
PZ-8	PIEZOMETER LOCATION AND DESIGNATION
	SANITARY SEWER MANHOLE
70.7	EQUIPOTENTIAL LINE (FT MSL) (DASHED WHERE INFERRED)
(70.67)	WATER TABLE ELEVATION (FT MSL)
	INFERRED DIRECTION OF GROUNDWATER FLOW
(70.88)	ANOMALOUS DATA NOT USED IN CONTOURING
AST	ABOVEGROUND STORAGE TANK
UST	UNDERGROUND STORAGE TANK
AACT	ABOVEGROUND AIR COMPRESSOR TANK(S)
—x—x—	TYPICAL CHAIN-LINK FENCE WITH BARBED WIRE OVERHANG

0 50 100
SCALE IN FEET

DRAWN BY HJB DATE 8/29/02	GROUNDWATER ELEVATION CONTOUR MAP JUNE 2001 REMEDIAL ACTION PLAN JETC AND OWS 334-OW NAVAL AIR STATION CECIL FIELD JACKSONVILLE, FLORIDA	CONTRACT NO. 4248	
CHECKED BY DATE		APPROVED BY MPS DATE 9/24/02	
COST/SCHED-AREA		APPROVED BY DATE	
SCALE AS NOTED		DRAWING NO. FIGURE 2-1	REV. 0

FORM CADD NO. SDIV_BV.DWG – REV 0 – 1/20/98

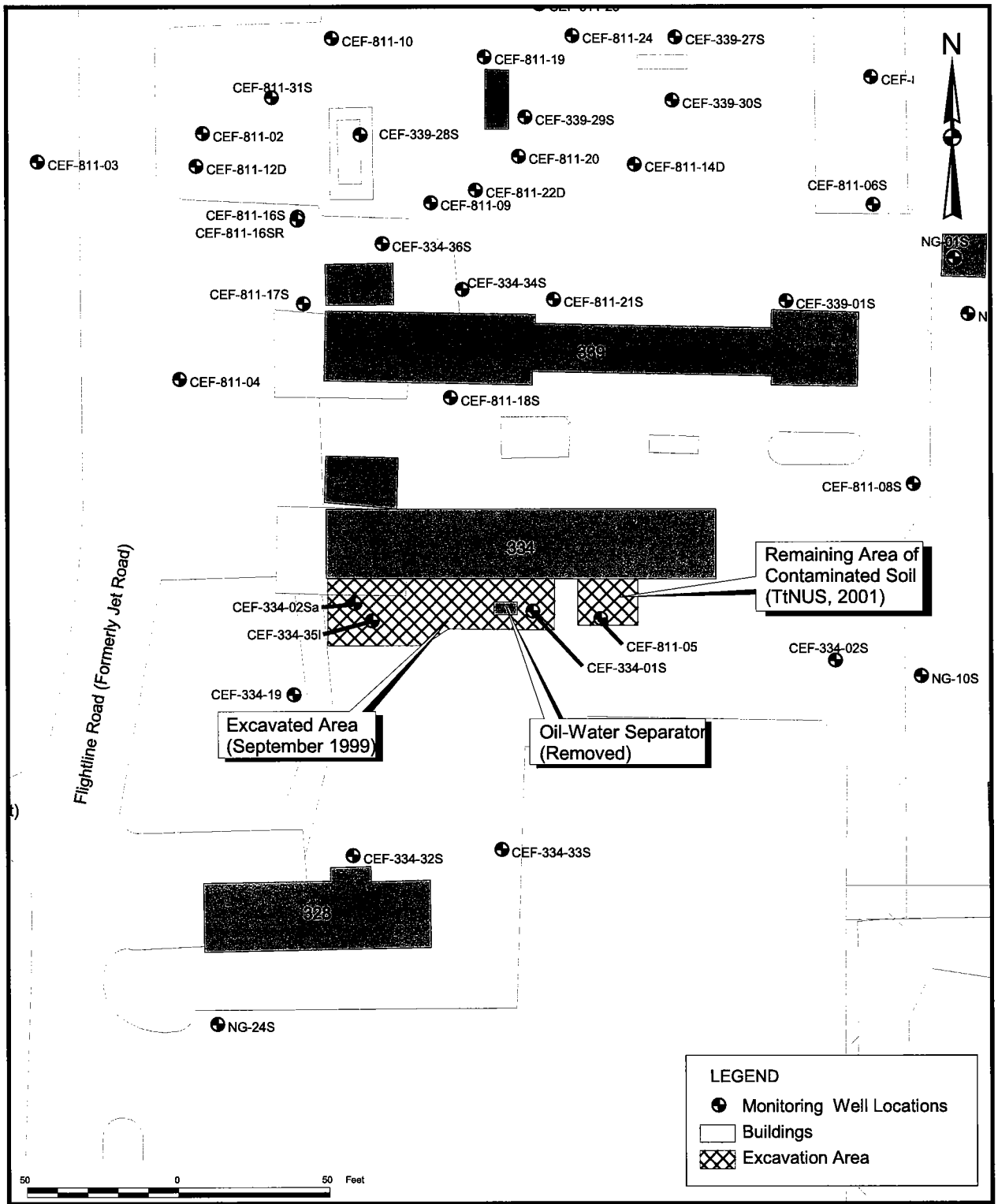

DRAWN BY MJJ	DATE 30Jul02	AREAS OF SOIL EXCAVATION AND EXTEND OF CONTAMINATION REMEDIAL ACTION PLAN JET ENGINE TEST CELL NAVAL AIR STATION CECIL FIELD JACKSONVILLE, FLORIDA	CONTRACT NUMBER N4248
CHECKED BY	DATE 9/24/02		APPROVED BY MPA DATE 9/24/02
COST/SCHEDULE-AREA			APPROVED BY DATE
SCALE AS NOTED			DRAWING NO. FIGURE 2-2 REV 0

P:\GIS\NAS_CecilField\JETC02-RAP.apr 30Jul02 MJJ Layout03

ACAD: 4248GT01.dwg 09/03/02 HJB PIT

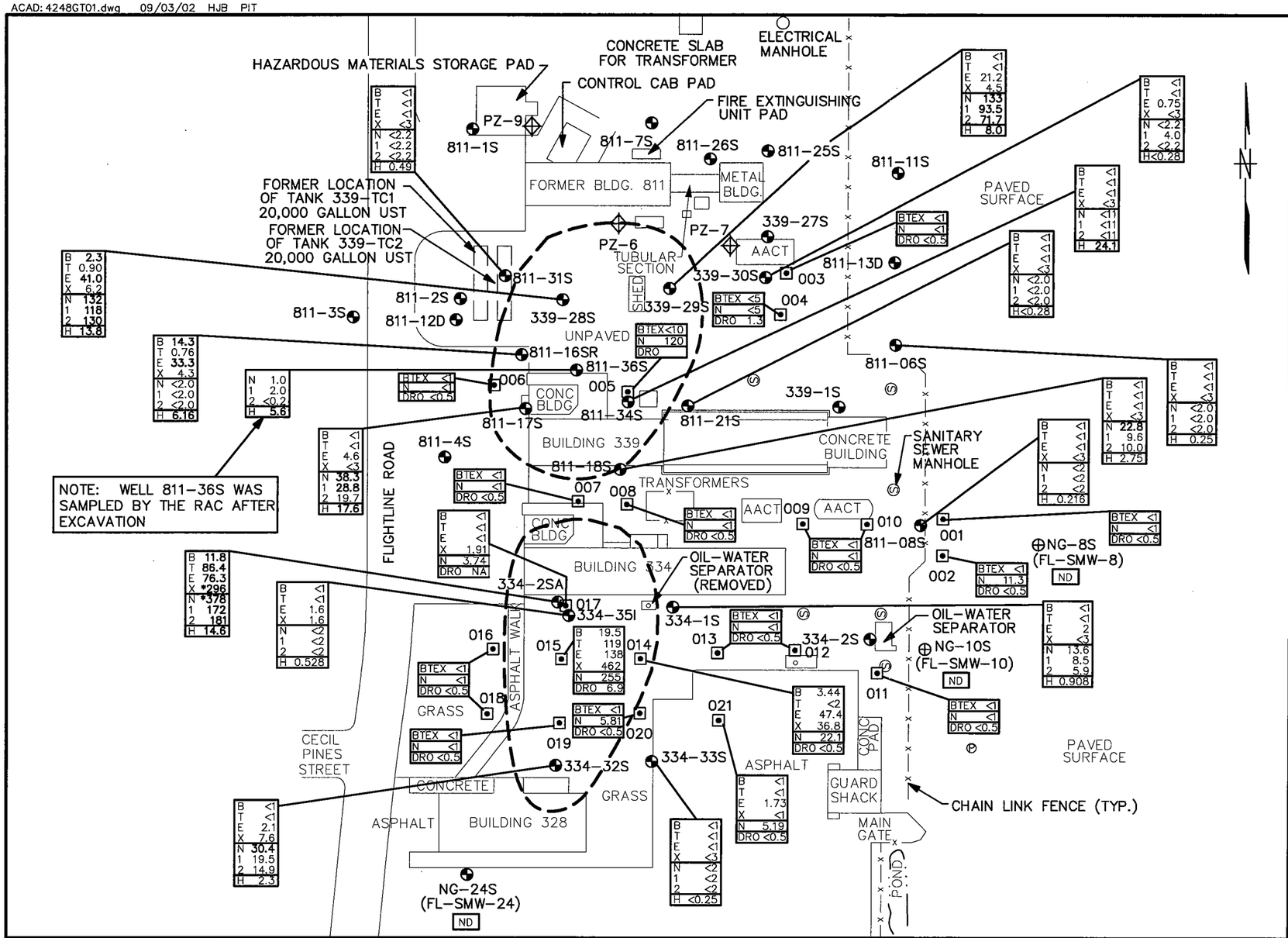

LEGEND:

811-2S	MONITORING WELL LOCATION AND DESIGNATION (WELL I.D. PRECEDED BY "CEF-" IN REPORT)
NG-8S	SHALLOW MONITORING WELL LOCATION (INSTALLED FOR NORTHROP GRUMMAN)
016	DPT GROUNDWATER SAMPLE LOCATION/ID No.
PZ-8	PIEZOMETER LOCATION AND DESIGNATION
*	CONCENTRATION GREATER THAN NATURAL ATTENUATION DEFAULT SOURCE CRITERIA
ND	NO ANALYZED CONSTITUENTS DETECTED BY LABORATORY
— — —	APPROXIMATE GROUNDWATER PLUME BASED ON COMBINED GCTLs FOR BTEX AND NAPHTHALENE COMPOUNDS
AACT	ABOVE GROUND AIR COMPRESSOR TANK(S)
AST	ABOVE GROUND STORAGE TANK
DRO	DIESEL RANGE ORGANICS
FDEP	FLORIDA DEPARTMENT OF ENVIRONMENTAL PROTECTION
GCTL	GROUNDWATER CLEANUP TARGET LEVEL
UST	UNDERGROUND STORAGE TANK
B	BENZENE
T	TOLUENE
E	ETHYLBENZENE
X	XYLENES
N	NAPHTHALENE
1	1-METHYLNAPHTHALENE
2	2-METHYLNAPHTHALENE
H	TOTAL RECOVERABLE PETROLEUM HYDROCARBONS

NOTES:

1. BOLD VALUES INDICATE CONCENTRATIONS GREATER THAN FDEP GCTLs.
2. ALL CONCENTRATIONS ARE MEASURED IN ug/L EXCEPT FOR TOTAL RECOVERABLE PETROLEUM HYDROCARBONS WHICH IS mg/L.

0 60 120
SCALE IN FEET

NO.	DATE	REVISIONS	BY	CHKD	APPD	REFERENCES

DRAWN BY HJB DATE 8/30/02
CHECKED BY DATE 9/24/02
COST/SCHED-AREA
SCALE AS NOTED

DEPARTMENT OF THE NAVY SOUTHERN DIV FACILITIES ENGINEERING COMD

DPT AND MONITORING WELL GROUNDWATER ANALYTICAL RESULTS REMEDIAL ACTION PLAN JETC AND OWS 334-OW NAVAL AIR STATION CECIL FIELD JACKSONVILLE, FLORIDA

CONTRACT NO. 4248
APPROVED BY MB DATE 9/24/02
APPROVED BY DATE
DRAWING NO. FIGURE 2-3 REV. 0

FORM CADD NO. SDIV_BH.DWG – REV 0 – 1/20/98

3.0 REMEDIAL ACTION PLAN GOALS

The objective of this RAP is to recommend a relevant and cost-effective technology to:

- Reduce contaminant concentrations in the petroleum-impacted soil at the site.
- Retard plume migration at the site.
- Protect human health and the environment by reducing the concentrations of hydrocarbons detected at the site to target cleanup levels.

The goals and expected accomplishments of the RAP include:

- Identifying a method to reduce the petroleum-impacted soil and groundwater at the JETC site;
- Selecting a remedial alternative to remove the petroleum-impacted soil to the east of Tank 334-OW;
- Selecting a remedial alternative that will reduce the hydrocarbon constituents within the groundwater; and
- Selecting a remedial alternative that is protective of human health and the environment.

The target cleanup concentrations for soil and groundwater at the subject site are based on analytes detected in the soil and groundwater in exceedance of Chapter 62-770, FAC. The following subsections list the target levels for the site-specific chemicals of concern (COCs).

3.1 SOIL TARGET LEVELS

Table 3-1 presents the soil remediation goals for the site-specific COCs based on the soil cleanup target levels (SCTLs) listed in Table II of Chapter 62-777, FAC.

TABLE 3-1

CHEMICALS OF CONCERN AND ASSOCIATED SELECTED SOIL CLEANUP TARGET LEVELS

Site-Specific COC	Residential SCTL (mg/kg)	Leachability to Groundwater SCTL (mg/kg)
Benzene	1.1	0.007
Ethylbenzene	1,100	0.6
Toluene	380	0.5
Total Xylenes	5,900	0.2
Naphthalene	40	1.7
1-Methylnaphthalene	68	2.2
2-Methylnaphthalene	83	6.1

Note: Concentrations from SCTLs Table II, 62-777, FAC.

3.2 GROUNDWATER TARGET LEVELS

Table 3-2 presents the groundwater remediation goals for the site-specific COCs based on the groundwater cleanup target levels (GCTLs) listed in Table I of Chapter 62-777, FAC.

TABLE 3-2

CHEMICALS OF CONCERN AND ASSOCIATED SELECTED GROUNDWATER CLEANUP TARGET LEVELS

Site-Specific COC	GCTL (μg/L)
Benzene	1
Ethylbenzene	30
Toluene	40
Total Xylenes	20
Naphthalene	20
1-Methylnaphthalene	20
2-Methylnaphthalene	20
TRPH	5,000

Note: Concentrations from GCTLs Table I, 62-777, FAC.

4.0 CONTAMINANT DISTRIBUTION

4.1 ESTIMATED MASS OF CONTAMINANTS IN SOIL

The SARA concluded that the excessively contaminated soil in the area to the east of the Tank 334-OW excavation should be excavated and disposed offsite. The excavation area, as presented in Figure 2-2, is approximately 300 square feet (ft^2) and will extend to the water table (estimated to be 8 feet bgs). The volume of the excavation is approximately 90 yd^3.

4.2 ESTIMATED MASS OF CONTAMINANTS IN GROUNDWATER

Laboratory analytical data from the groundwater samples during the SARA field investigation illustrate that the plume (Figure 2-3) occupies an area of approximately 19,000 ft^2. The impacted thickness of groundwater contamination is conservatively estimated at 20 ft, yielding a total volume of approximately 710,000 gallons of contaminated groundwater. The thickness of 20 ft was chosen based on the low levels of contaminants detected in well CEF-334-35I that is screened from 29.5 to 34.5 feet bgs. The estimated quantity of groundwater COCs within the saturated zone is 2,112 pounds. This estimate includes the dissolved mass (64 pounds) as well as the mass adsorbed to the soil within the saturated zone (2,048 pounds). The calculations used to derive these quantities are presented in Appendix A.

5.0 REMEDIAL ALTERNATIVE TECHNOLOGY SCREENING

TtNUS conducted a screening of available technologies in order to evaluate the most feasible remedial alternative for the site. Potential remedial technologies and process options for soil and groundwater remediation have been identified and evaluated based on their ability to meet clean-up objectives (effectiveness), applicability based on site conditions, feasibility of implementation, reliability, anticipated duration, and cost.

5.1 EVALUATION OF SOIL TREATMENT ALTERNATIVES

Based on the data presented in the SRR (CH2M Hill, 2000), contaminated soil delineated in the September 1999 SAR, Rev.1 (HLA, 1999d) has not been completely removed. Approximately 90 yd^3 of contaminated soil remains. TtNUS recommends the remainder of the contaminated soil be excavated and treated or disposed off-site using the methods described in the SRR (CH2M Hill, 2000).

The following section briefly discusses the soil remedial action recommended for implementation at this site.

5.1.1 Excavation and Off-site Treatment/Disposal

This alternative consists of the physical removal and off-site treatment/disposal of impacted soils with hydrocarbon constituents exceeding the target cleanup levels. To complete this excavation of impacted soils, removal of approximately 300 ft^2 to a depth of 8 feet bgs (estimated depth to water table) is required.

Removal operations can be accomplished using standard equipment. Following removal and stockpiling of the impacted soil, analysis of samples collected from excavation sidewalls and bottom will be performed to confirm achievement of the target cleanup levels. After confirmatory sampling is complete, the excavation will be backfilled with clean fill material and the surface restored to its original condition. The stockpiled soil and other debris generated during excavation will be characterized, loaded, and transported off-site to a permitted facility for treatment and/or disposal. Treatment of the impacted soil, if necessary prior to disposal, typically consists of low temperature thermal desorption or biolandfarming.

The primary advantage of excavation and off-site treatment/disposal is the complete removal of contaminants from the site over a short duration. Impacted soils can be physically removed from the site in a matter of days, thus eliminating the potential for dispersion of hydrocarbon constituents to unaffected soil or groundwater during the remedial process.

The excavation of impacted soils is a preferred alternative based on:

1) low capital and operation and maintenance (O&M) costs, and
2) proven effectiveness.

The estimated costs for soil excavation, transportation, off-site treatment/disposal, and site restoration is $13,500. The basis for this estimate is a cost of $150 per yard, which has been the typical unit cost for excavations at this facility.

5.1.2 Institutional Controls

Institutional controls are required at two areas to prevent exposure to contaminated soil that was not accessible to excavation. The first area is to the south of the former USTs (339-TC1 and 339-TC2) beneath the water supply line, the control building, and the sidewalk just north of Building 339. The second area is beneath Building 334. The institutional controls should consist of the requirement to keep the site for industrial uses only. Other controls prevent disturbance of the soil beneath the following locations: Building 334, the control building north of Building 339, the sidewalk next to the control building for Building 339, and the soil overlying the water line to the north of the control building.

5.2 EVALUATION OF GROUNDWATER TREATMENT ALTERNATIVES

Dissolved phase hydrocarbons have been detected within the groundwater at the site. Based on the SARA Report (TtNUS 2001), the dissolved hydrocarbon plume encompasses a surface area of approximately 19,000 ft^2, extending vertically approximately 20 feet below the water table. An estimated volume of 710,000 gallons of groundwater exhibits dissolved hydrocarbon concentrations in excess of FDEP clean-up levels (calculations are presented in Appendix A).

The following actions have been identified for remediation of groundwater and will be evaluated in this RAP:

- Air sparging (AS),
- In-situ Aerobic Biological Treatment.

The following sections briefly discuss both of these alternatives with respect to their suitability for implementation at this site. Monitoring only for natural attenuation was not analyzed because monitoring only is not allowed per FAC 62-770.690.

5.2.1 Air Sparging

AS technology involves injecting air under pressure into the contaminated aquifer thereby increasing the mass transfer of the dissolved volatile contaminants into the air bubbles followed by upward migration of the volatilized contaminants to the vadose zone. The supply of air to the contaminated zone will also stimulate indigenous aerobic biodegradation of petroleum constituents.

This technology has proven effective in remediating groundwater contaminated with petroleum hydrocarbons. There are advantages to AS over other active remediation technologies in that O&M are typically less expensive. It should be noted that AS systems generally use an integrated soil vapor extraction (SVE) system to recover volatile organic compounds (VOCs) removed from the contaminated aquifer. However, a detailed characterization of potential extracted vapors was conducted using the recalibrated Site 3 and Site 16 model to assess whether extraction and treatment of these vapors is necessary. The plume was evaluated with operational data from both AS systems at Site 3 and Site 16 to develop a range of predicted remedial emissions (additional details are provided in Appendix B).

Based on the calculated emission rates for the proposed system, the maximum total emissions will be approximately 1.5 lbs per day which does not exceed the FDEP requirements (emission of a single contaminant is not greater than 5.5 lbs per day and total emissions are not greater than 13.7 lbs per day). Therefore, the vapor extraction component is not required for the proposed AS system.

Preliminary calculations indicate an approximate remedial time period range of 1.5 to 5 years using AS technology to attain the FDEP groundwater cleanup target levels. AS is a proven technology for reducing BTEX, naphthalenes, and TRPH levels in groundwater and is an economical approach to in-situ groundwater remediation. The use of AS is a preferred alternative based on: 1) low capital and O&M costs, 2) low environmental impact of in-situ well installation, and 3) proven effectiveness. An estimated cost of AS implementation with 1 year of O&M is presented in Table 5-1 and Appendix C, Table C-1.

5.2.2 In-situ Aerobic Biological Treatment

Biological treatment involves the use of indigenous microorganisms, primarily bacteria, actinomycetes, and fungi to breakdown hazardous organic compounds into nontoxic or less toxic forms. This technology would enhance natural attenuation for the treatment the plume.

This option would consist of using an oxygen-release compound (ORC) to enhance the growth of indigenous microorganisms and natural biodegradation processes while monitoring groundwater quality to estimate the extent to which these microorganisms and processes break down contaminants over time. ORCs, such as hydrogen peroxide or magnesium peroxide, would be used to enhance the aerobic

biodegradation of BTEX. These compounds would initially be injected into the contaminant plume using DPT, after which a re-application dosage maybe required. New monitoring wells would be installed as required, and samples from these new wells and existing wells would be regularly collected and analyzed to monitor treatment progress.

Preliminary calculations indicate an approximate remedial time period range of 1.5 to 5 years using ORC technology to attain FDEP groundwater and soil cleanup target levels. ORC is a proven technology for reducing BTEX, naphthalenes, and TRPH levels in groundwater and is an economical approach to in-situ groundwater remediation. The use of a ORC is a preferred alternative based on: 1) low capital and O&M costs, 2) low environmental impact of in-situ well installation, and 3) proven effectiveness. An estimated cost of ORC implementation with 1 year of O&M is presented in Table 5-1 and Appendix C, Table C-2.

5.3 COST COMPARISON AND RATIONALE FOR SELECTION

A table comparing the estimated cost of remediation of groundwater at the site using the evaluated alternatives is provided in Table 5-1. Based on a review of the advantages, disadvantages, costs, and TtNUS project experience at sites with similar conditions, TtNUS recommends the design of an AS system to remediate the groundwater contamination at this site and the excavation of the remaining contaminated soil associated with the Tank 334-OW.

AS provides the highest degree of overall protection to human health and the environment by providing reduction in risk and hydrocarbon concentrations through in situ methods. AS will promote in situ biodegradation and volatilization of hydrocarbon constituents within the soil and groundwater matrices. The equipment and controls needed for AS are reliable, easily operated, and commonly available, and systems typically require minimal O&M. Minimal permitting is required for the implementation and operation of the AS system.

TABLE 5-1

GROUNDWATER REMEDIAL ALTERNATIVES SUMMARY
JETC AND TANK 334-OW REMEDIAL ACTION PLAN
NAVAL AIR STATION CECIL FIELD
JACKSONVILLE, FLORIDA

ALTERNATIVE	CAPITAL COST	ANNUAL O&M	ESTIMATED YEARS OF OPERATION	PRESENT WORTH TOTAL COST	RECOMMENDATION / CONCLUSION
Air Sparging	$95,000	$77,000 (1) $49,000 (2)	4	$327,000	Retain - Cost effective, Installation intrusions minimal, Histroically Effective
In-situ Aerobic Biological Treatment	$429,000	$59,000 (3)	2	$551,000	Eliminated - Higher Cost and more intrusive than Air Sparging Alternative, Historically limited success

1 Cost includes annual groundwater sampling of 10 monitoring wells quarterly.
2 Cost includes annual groundwater sampling of 10 monitoring wells semi annualy.
3 Cost includes annual groundwater sampling of 10 monitoring wells quarterly.

Note: See Appendix C for detailed cost estimates for the remediation alternatives.

6.0 REMEDIAL SYSTEM DESIGN

The preferred remedial alternative presented in this RAP was selected because it is the most cost-effective method for recovery and/or treatment of hydrocarbons within the vadose and saturated zone at the site. The potential remedial technologies and process options for soil and groundwater remediation were identified and screened, and the results were presented in Section 5.0. The selected alternative is AS.

In addition, applicable technologies were presented at the NAS Cecil Field Partnering Team's Petroleum Subcommittee meeting, at which time consensus was reached on an integrated AS system as the remedial technology that will most effectively remediate contaminated groundwater at the JETC site.

6.1 AIR SPARGING DESIGN DETAILS

The conceptual design of the proposed AS remedial system was developed based on knowledge of site lithology and soil permeability and based on AS systems at other sites at NAS Cecil Field with similar soil conditions. In particular, the design parameters were based on the radius of influence (ROI) and operational data for the existing shallow AS system at Sites 36/37. The following table summarizes the assumptions used to develop the design for the proposed AS remediation system.

System	Radius of Influence	Flow rate
Air Sparging	30	10 scfm per well

scfm = standard cubic feet per minute

The proposed remediation system layout and plan view schematic are shown on Figure 6-1. The piping and instrumentation diagram (P&ID) for the air sparging system is presented on Figure 6-2. The following subsections provide the design rational and outline the components for the AS remedial system.

6.1.1 Air Sparging System

As shown in Figure 2-3, the contaminant plume, as defined by the GCTLs for naphthalene (20 µg/L) and benzene (1 µg/L), encompasses an area of approximately 19,000 ft^2 within the JETC area. SARA results indicate that groundwater contamination at the site extends to an approximate depth of 20 feet below the water table. Based on the plume area and the estimated 30 feet ROI, 10 air sparging wells screened at 28 to 30 feet bgs are proposed to remediate the groundwater underlying the subject site. The locations of the proposed AS wells are presented in Figure 6-1.

Based on the proposed 10 air sparing wells operated at a flow rate of 10 standard cubic feet per minute (scfm) each well, a total injection flow rate of 100 scfm will be used to ensure the transfer of air into the saturated zone and to maximize volatilization and addition of oxygen to the aquifer. An AS injection pressure of 15 pounds per square inch gauge (psig) has been selected to overcome the head losses and the average hydraulic head of 25 feet in each air sparging well. AS pressure and flow calculations are presented in Appendix D.

6.1.1.1 Air Sparging Components

The AS system will consists of a sparge blower with a minimum inlet capacity of 100 scfm at a discharge pressure of 15 psig. The sparge blower shall be designed for continuous industrial service, delivering clean air free of oils or any other debris. The blower motor shall be a 20-horsepower, totally enclosed, fan-cooled (TEFC) motor, 460 VAC 3-phase. The motor will operate at 60 HZ to supply the specified flow rate and pressure.

The AS system will be mounted on a steel skid or frame constructed of carbon steel. The skid package will consist of the blower/motor, heat exchanger, Occupational Safety and Health Administration (OSHA) approved belt guard, motor slide base, intake air filter/silencer, inlet and discharge silencer, and air bleed exhaust valve and silencer. Temperature, pressure, and timing cutout switches and gauges, pressure relief valve, on/off valves, and pitot-tube flow sensors will be installed per manufacturer's written instructions at locations shown on Figure 6-3. The gauges will be mounted on the skid in an easy-to-read location without blocking maintenance activities. All piping and fittings shall be 2-inch carbon steel or black iron on the intake and discharge side of the blower. Underground piping to the well will be constructed of 2 inch, Schedule 80 PVC. The skid will be equipped with lifting lugs for loading and unloading. All non-coated steel will be coated with corrosion-prohibiting, gray enamel primer and paint. Blower skid packages will be of a horizontal design with blowers mounted in the horizontal position. The in-line locations of the equipment components are shown on Figure 6-3. Manufacturer's specifications for the components of the proposed AS system are presented in Appendix E.

6.2 AIR SPARGING CONSTRUCTION DETAILS

The proposed AS remedial system layout including sparging wells, secure equipment area, and associated trenching/piping is presented in Figure 6-1. The AS well system design for the subject site consists of 10 air sparging wells. Support calculations are presented in Appendices B and E. Detailed design plans and specifications are presented in Figures 6-2 through 6-5. A 6-ft high wooden fence with a lockable 8-ft wide gate will surround the AS equipment outlined above.

6.2.1 Air Sparging Component Construction

The AS wells will consist of 2-inch Schedule 40 PVC with flush threaded joints. The AS wells will be installed to a depth of 30 feet with the bottom 2 feet (28 to 30 ft bgs) screened with 0.010-inch slot PVC. Wells will be installed with a 20/30 sand pack around the screen and a 2-ft bentonite seal above the sand pack. The remaining borehole will be filled with cement grout. A 2 ft by 2 ft by 2 ft, flush-mounted steel well box with bolt-down driveover lid will be placed over the top of each air sparging well. All AS wells will be fully developed. The AS well details are shown on Figure 6-4.

To ensure a uniform air injection flow rate at each proposed air sparging well, a ½-inch pressure regulator rated for 10 scfm at a discharge pressure of 15 psig will be installed at each AS well head as shown on Figure 6-4. Also, each sparging well will be equipped with a ¼-inch sample port and a 2-inch butterfly valve.

The pressurized air will be supplied to the AS wells through 2-inch carbon steel or black iron piping from the AS blower within the secure equipment area. The blower will be connected to the AS wells by a common header pipe. The AS piping will be placed under the existing ground surface and will be buried a minimum of 24 inches below grade. Underground sections of pipe will be 2-inch Schedule 80 PVC. A typical cross-section of the pipeline trenches is shown on Figure 6-5. All pipe sections, joints, couplings, and connections will be checked for tightness prior to trench backfilling.

6.3 OFF-GAS TREATMENT

The FDEP requires off-gas treatment for at least 30 days, and until the total VOC effluent discharge is less than 13.7 lbs/day. Based on hydrocarbon concentrations in soil and groundwater at the JETC site and using the estimated time for AS to effectively remediate the groundwater as the remediation time required to complete the removal of hydrocarbons from the subsurface, an estimated average air emission rate of 1.5 lbs/day has been calculated for this site. Because the maximum emission rate is below the discharge rate of 13.7 lbs/day, collection and treatment of off gas will be not required at this site.

6.4 ELECTRICAL AND CONTROLS

6.4.1 Control Panel

There will be a single field-mounted control panel for the AS system with a single "ON" switch with additional subsystem control switches and individual Hand-On-Auto (HOA) switches for individual motors.

When in “ON” position, all devices that are equipped with HOA switches will operate when their switch is in the “HAND” position and shall be enabled when their switch is in the “AUTO” position.

The control panel will be designed and fabricated to receive 3-phase, 460 VAC as well as 120 VAC single-phase power from a breaker panel. Individual power sources (circuit breakers) for each load will be provided in the power panel to be wired directly to the individual motor starters. The control panel will be designed to properly operate system electrical equipment and will contain all relays, motor starters, terminal blocks, transformers, and other components necessary for operation of the electrical equipment. The panel will be pre-wired and fabricated in accordance with the National Electric Code and will utilize readily available electrical components.

The control panel will contain motor starters with thermal overload and overcurrent protection, automatic reset, HOA switches, and on/off control logic for the AS blowers. The panel will also contain all relays, terminal blocks, and other components necessary for automatic operation of the AS system. All alarm circuits will be equipped with indicator lights at the control panel to serve as 'first out annunciators' when alarm conditions occur. The alarm conditions will include a high-high level in the condensate holding tank.

A starter timer will be included on the AS blower to allow intermittent operation. The electrical control panel will be located outside; therefore a NEMA 4 external flange-mounted enclosure surrounding a NEMA 1 enclosure that is complete with externally-mounted blower hour meters, HOA blower switches, reset button, and high liquid level indicator lights will be required. The NEMA 4 enclosure will have a locking cover for controlled access.

6.4.2 AS System Controls/Operation

The control panel will control the on/off operation of the AS blower, and associated control valves, high pressure and high temperature cut-outs switches on blower, and liquid level (high-high level) shut off switches installed in the air/water separator and the holding tank.

The AS main control and operation components are listed below:

- One (1) blower motor starter with thermal overload, overcurrent protection, and loss of three-phase protection, automatic reset, external hour meters, and HOA switches.

- Condensate holding tank high-high level sensor and controls will deactivate the air sparge blower in the event of an abnormally high liquid level condition in the tank.

- One (1) high temperature sensor (located on the discharge of the blower) and controls will deactivate the blower in the event of an abnormally high temperature condition at the blower.

- One (1) high-pressure sensor (located at the discharge of the blower) and controls will deactivate the blower in the event a high-pressure condition is detected downstream of the blower.

- One (1) timer for intermittent operation (located in the control panel) that will be programmable by hour and/or day operation. This will provide the ability to run the system in pulse mode once leveling off of the stripping is detected.

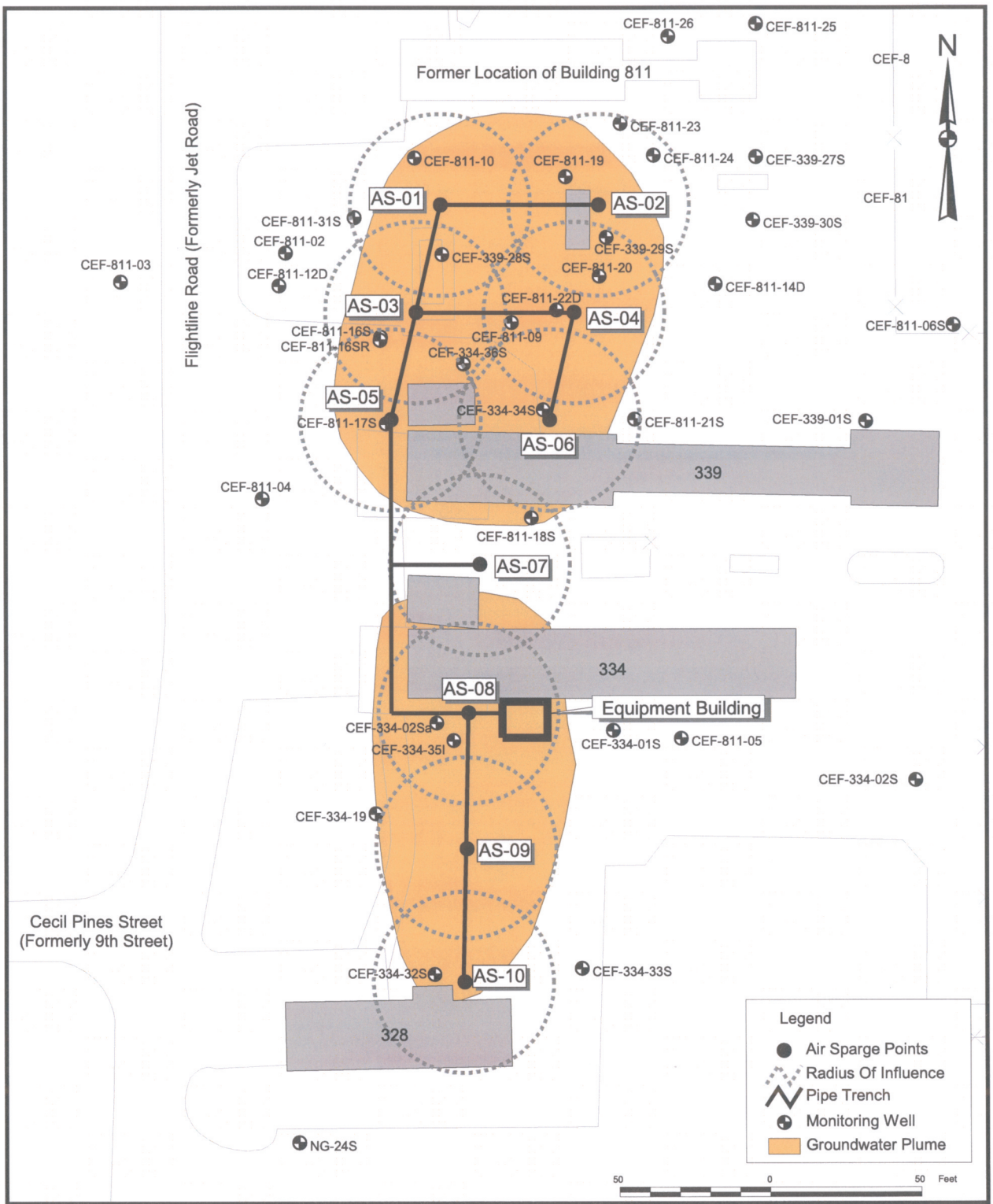

DRAWN BY MJJ	DATE 14Aug02	PROPOSED REMEDIAL SYSTEM LAYOUT JET ENGINE TEST CELL NAVAL AIR STATION CECIL FIELD JACKSONVILLE, FLORIDA	CONTRACT NUMBER N4248
CHECKED BY	DATE 9/24/02		APPROVED BY MA DATE 9/24/02
COST/SCHEDULE-AREA			APPROVED BY — DATE —
SCALE AS NOTED			DRAWING NO. FIGURE 6-1 REV 0

P:\GIS\NAS_CecilField\JETC02-RAP.apr 30Jul02 MJJ Layout04

ACAD: 4248PF01.dwg 08/30/02 HJB PIT

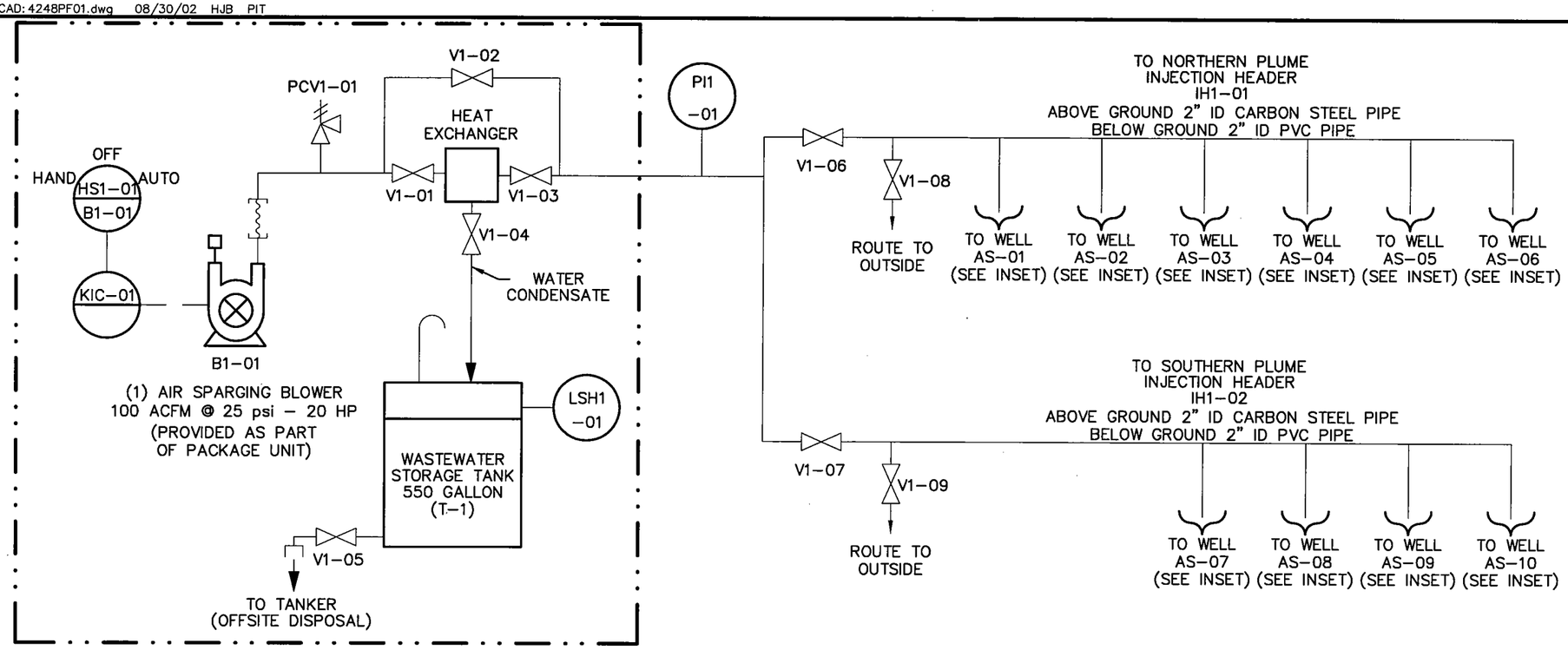

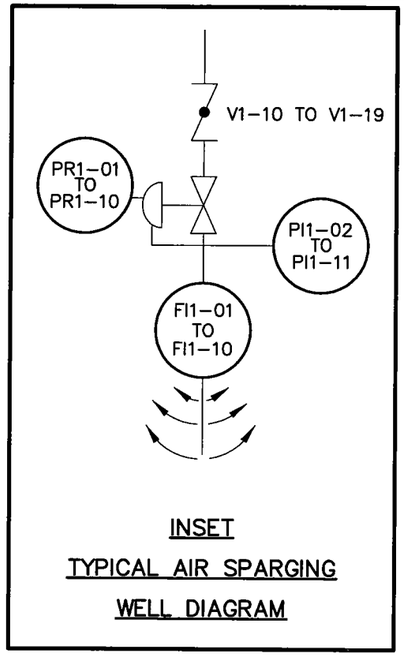

WELL	BUTTERFLY VALVE	PRESSURE REGULATOR	PRESSURE INDICATOR	FLOW INDICATOR
AS-01	V1-10	PR1-01	PI1-02	FI1-01
AS-02	V1-11	PR1-02	PI1-03	FI1-02
AS-03	V1-12	PR1-03	PI1-04	FI1-03
AS-04	V1-13	PR1-04	PI1-05	FI1-04
AS-05	V1-14	PR1-05	PI1-08	FI1-05
AS-06	V1-15	PR1-06	PI1-06	FI1-06
AS-07	V1-16	PR1-07	PI1-07	FI1-09
AS-08	V1-17	PR1-08	PI1-08	FI1-08
AS-09	V1-18	PR1-09	PI1-09	FI1-09
AS-10	V1-19	PR1-10	PI1-10	FI1-10

LEGEND:

FI	FLOW INDICATOR
HS	HAND SWITCH
IH	INJECTION HEADER
PCV	PRESSURE RELIEF VALVE
PI	PRESSURE INDICATOR
PR	PRESSURE REGULATOR
AS	SPARGE WELL
KIC	TIMER INDICATOR CONTROLLER

QUICK DISCONNECT COUPLING

PRESSURE REGULATOR

RELIEF VALVE

GATE VALVE

BUTTERFLY VALVE

NO.	DATE	REVISIONS	BY	CHKD	APPD	REFERENCES

DRAWN BY HJB DATE 8/30/02
CHECKED BY DATE 9/24/02
COST/SCHED-AREA
SCALE NOT TO SCALE

DEPARTMENT OF THE NAVY SOUTHERN DIV FACILITIES ENGINEERING COMD

AIR SPARGING
PIPING AND INSTRUMENTATION DIAGRAM
JET ENGINE TEST CELL
NAVAL AIR STATION CECIL FIELD
JACKSONVILLE, FLORIDA

CONTRACT NO. 4248
APPROVED BY MPB DATE 9/24/02
APPROVED BY DATE
DRAWING NO. FIGURE 6-2
REV. 0

FORM CADD NO. SDIV_BH.DWG - REV 0 - 1/20/98

ACAD: 4248PF02.dwg 08/30/02 HJB PIT

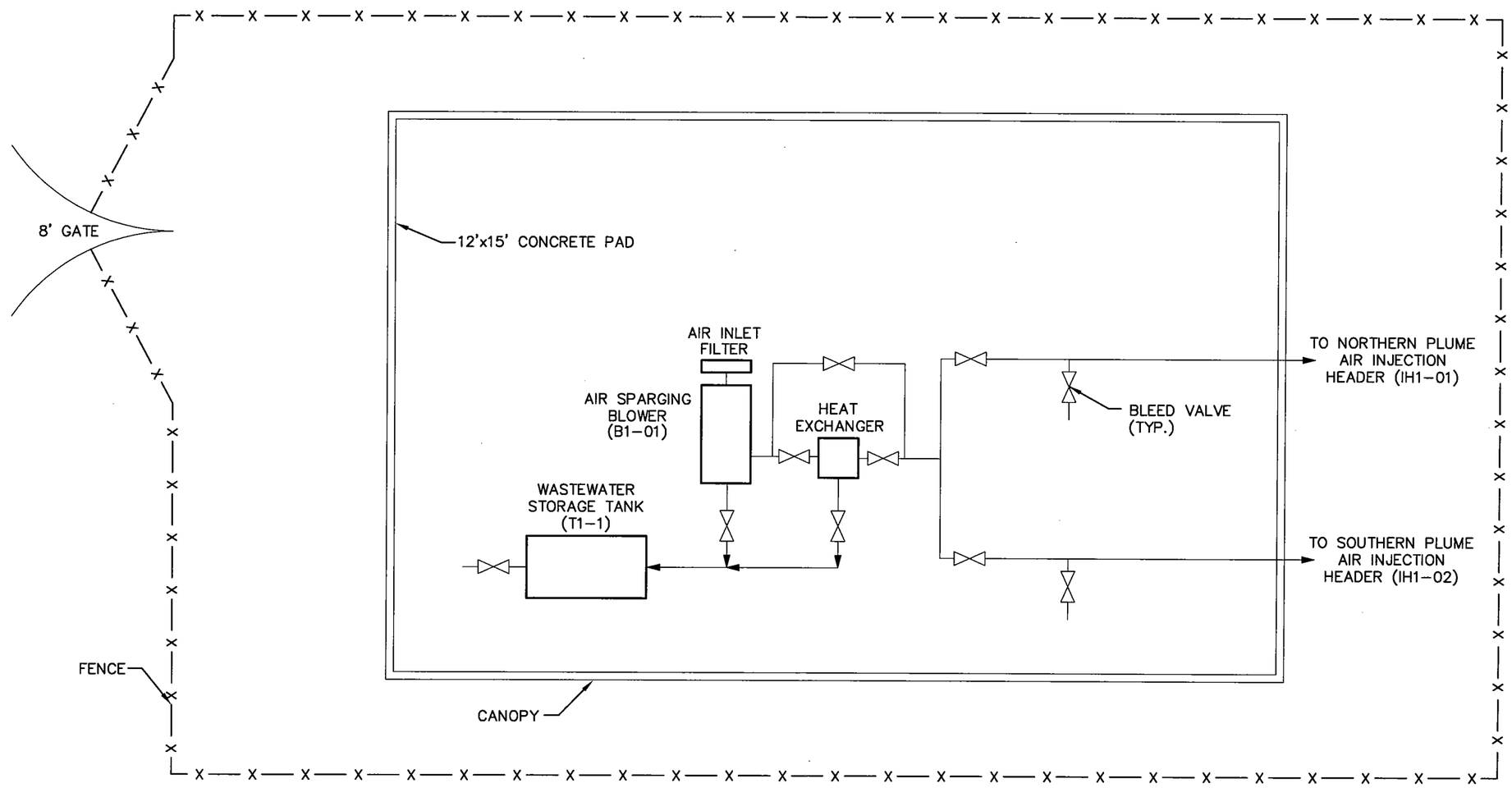

NO.	DATE	REVISIONS	BY	CHKD	APPD	REFERENCES

DRAWN BY HJB DATE 8/30/02
CHECKED BY DATE 9/24/02
COST/SCHED-AREA
SCALE NOT TO SCALE

REMEDIAL EQUIPMENT LAYOUT
JET ENGINE TEST CELL
NAVAL AIR STATION CECIL FIELD
JACKSONVILLE, FLORIDA

CONTRACT NO. 4248
APPROVED BY MPS DATE 9/24/02
APPROVED BY DATE
DRAWING NO. FIGURE 6-3
REV. 0

FORM CADD NO. SDV_BH12.DGN - REV 0 - 1/20/98

ACAD: 4248CD01.dwg 08/30/02 HJB PIT

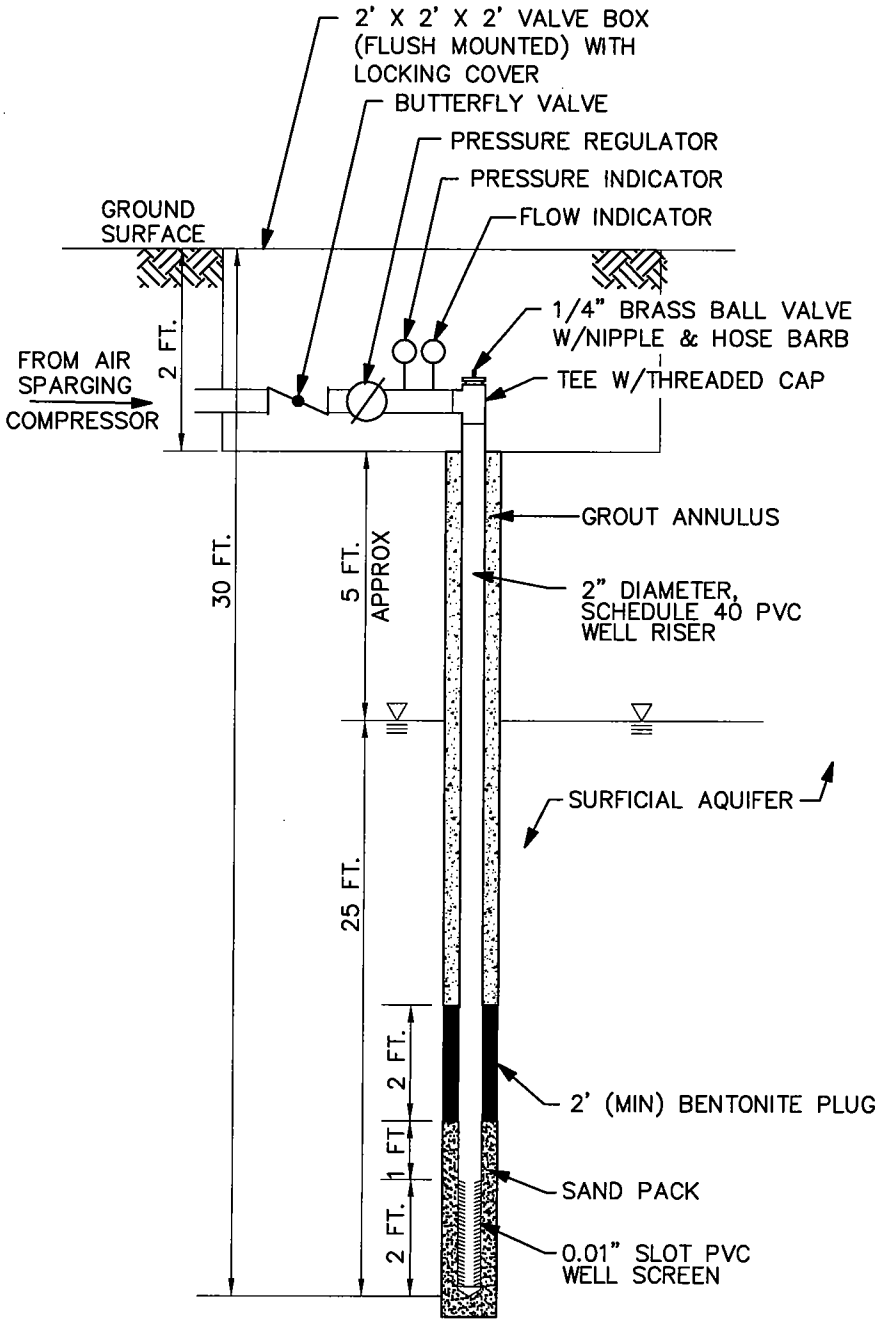

DRAWN BY HJB DATE 8/30/02	DEPARTMENT OF THE NAVY SOUTHERN DIV FACILITIES ENGINEERING COMD	AIR SPARGING WELL DETAIL JET ENGINE TEST CELL NAVAL AIR STATION CECIL FIELD JACSONVILLE, FLORIDA	CONTRACT NO. 4248
CHECKED BY DATE 9/24/02			APPROVED BY MPS DATE 9/24/02
COST/SCHED-AREA			APPROVED BY DATE
SCALE NOT TO SCALE			DRAWING NO. FIGURE 6-4 REV. 0

FORM CADD NO. SDIV_AV.DWG - REV 0 - 1/20/98

ACAD: 4248CD02.dwg 09/03/02 HJB PIT

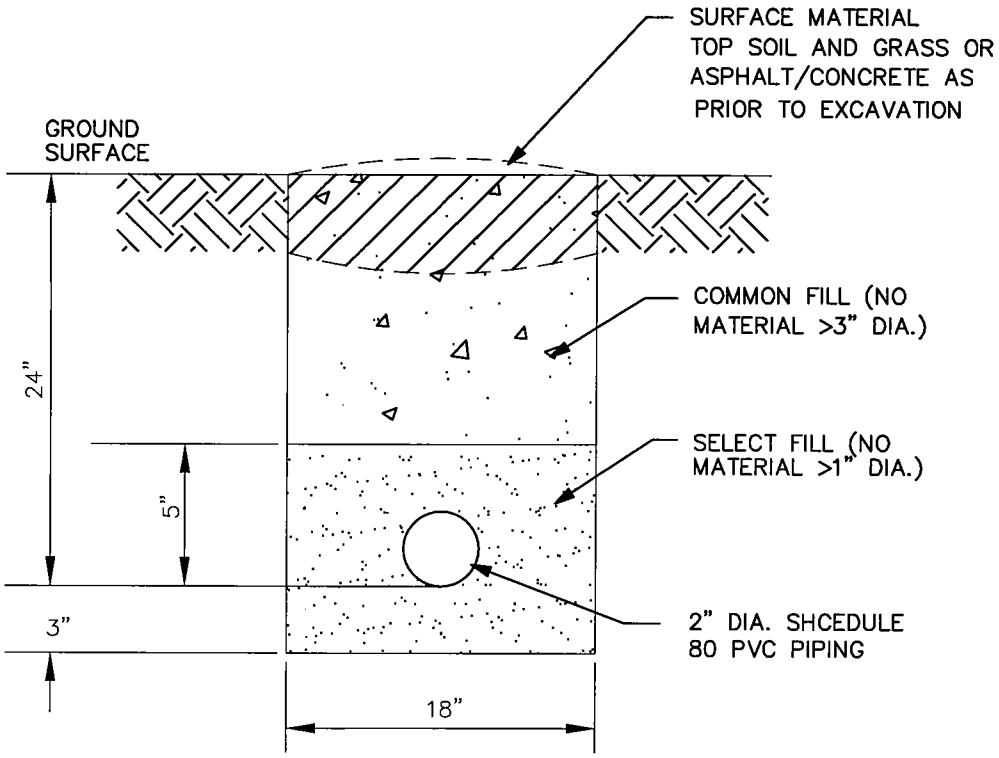

PVC PIPE TRENCH
CROSS SECTION

DRAWN BY HJB DATE 8/30/02			CONTRACT NO. 4248
CHECKED BY JB DATE 9/24/02		TRENCH DETAIL JET ENGINE TEST CELL NAVAL AIR STATION CECIL FIELD JACKSONVILL, FLORIDA	APPROVED BY MPd DATE 9/24/02
COST/SCHED-AREA			APPROVED BY DATE
SCALE AS NOTED			DRAWING NO. FIGURE 6-5 REV. 0

FORM CADD NO. SDIV_AV.DWG - REV 0 - 1/20/98

7.0 OPERATION & MAINTENANCE AND MONITORING

The following sections establish procedures for the start-up of the system, routine operation and maintenance of the remediation equipment, monitoring of the AS operating parameters, and final system deactivation.

7.1 SYSTEM START-UP

Following final inspection and acceptance by the Navy, the system will be set for initial start-up. Approximately 1 week prior to start-up, a full round of water levels and dissolved oxygen (DO) measurements will be collected (See Table 7-1). During this event, the AS wells in the area will also be surveyed in reference to elevation to establish a baseline top of casing elevation for each remedial well. Following collection of water levels, all of the wells will be sampled and analyzed using United States Environmental Protection Agency (U.S. EPA) Method SW-846 8310 for polynuclear aromatic hydrocarbons, U.S. EPA Method SW-846 8021B for purgeable aromatics, and the Florida Petroleum Range Organics (FL-PRO) method for TRPH. The initial round of measurements and groundwater analytical results will establish the baseline contaminant profiles and comparable monitoring parameters.

System start-up will commence approximately 1 week following the initial round of sampling. The following steps outline the start-up procedures.

1. Prior to any testing, bump and check each motor for proper rotation.

2. Inspect all equipment and ensure that all moving parts are free from obstructions.

3. Energize the control panel disconnect switch. Confirm that the voltage supplied to the panel is as specified.

4. Check all control sensors, alarms, and control logic by forcing alarm conditions, e.g., filling holding tank with potable water to check operation of the high-high sensor and the interlocked logic.

5. Check all motor amp loads against manufacturer's specified operating loads provided in the operations manual. Any motors found to be exceeding full load amp draw will undergo troubleshooting activities and the cause will be determined and rectified.

6. Energize the AS blower. Check the discharge pressure of the blower to ensure that it operates to manufacturer's specifications

7. Adjust the air bleed valve on the AS system until the specified discharge pressure and system airflow rate are reached.

8. Set/adjust temperature and pressure sensors and cut-out switches

9. Monitor the AS system for 2 hours and record the flow rate, and temperatures.

10. Balance the flow rates for all the AS wells.

11. Measure and record the outlet pressure of the flow regulator mounted at each AS well. The measured pressure at each AS well should be equal to or greater than 11 psig to evacuate the water from the well. If not, increase the discharge pressure at the AS blower until the pressure at the each air sparging well is equal to or greater than 11 psig.

12. Allow the system to operate for approximately 2 hours without adjustment and then record the pressure and flow rate measurements.

13. Allow the system to run for 24 hours. Record all pressures and flows for future comparison during weekly visits for the first month of operation followed by monthly visits thereafter. Readjust as necessary.

7.2 DESIGNATION OF OBSERVATION WELLS

Based on the configuration of the dissolved hydrocarbon plume and the hydraulic gradient at the JETC site, monitoring wells CEF-334-02a (source), CEF-334-32S (source), CEF-338-28S (source) CEF-339-29S (source), and NG-24S (downgradient) will be used to monitor the effectiveness of the remedial system efforts.

7.3 MONITORING PLAN

A monitoring program is anticipated to be initiated upon approval of this RAP and subsequent installation and startup of the remedial action system. The monitoring plan has three main objectives:

- To monitor the overall effectiveness of the remedial system in removing hydrocarbons from the groundwater;

- To verify that the contaminant plume is not migrating beyond the remediation area, and

- To monitor the performance of the remedial equipment.

The proposed monitoring plan includes the following:

- Measurements of groundwater levels to determine groundwater flow and dissolved oxygen (DO) concentrations in the monitoring wells listed in Table 7-1 to determine groundwater mounding and to verify the radius of influence (ROI) estimates will be taken weekly for the first month, monthly for the next 2 months, and quarterly thereafter. Measurements will be performed using a water level indicator and a DO meter.

- Measurements of AS pressure and flow rates will be performed weekly for the first month, monthly for the next 2 months, and quarterly thereafter. Measurement will be performed using pressure gauges and flow meters mounted in the well vaults.

- Sampling and laboratory testing of groundwater from the selected monitoring wells to document remediation of the groundwater plume will be performed quarterly. The groundwater samples will be analyzed using U.S. EPA Method SW-846 8310 for polynuclear aromatic hydrocarbons, U.S. EPA Method SW-846 8021B for purgeable aromatics, and FL-PRO for TRPH.

- The results of quarterly sampling will be reported every quarter in a status report (See Section 7.6).

7.4 MONITORING REMEDIATION PROGRESS

The performance monitoring program will be re-evaluated after 6 months of sampling and testing and will be modified as necessary to maximize the effectiveness of the remediation system. The overall effectiveness of the proposed remediation system and cleanup progress will be monitored by evaluating the following monitoring data:

- The trend of DO concentrations as the remedial system progresses.

- The trend of hydrocarbon concentrations in groundwater as the remedial system progresses.

These monitoring data will be used to determine if the objectives of the RAP and standards of the design criteria are being met. The remedial system will be modified if the monitoring data indicate that the

cleanup goals cannot be met in the time frame as specified in the RAP. Modifications of the remedial system will be based on the site-specific monitoring data.

7.5 SYSTEM OPERATIONS AND MAINTENANCE

The proposed remedial system is designed to operate continually and automatically with minimal maintenance. Site visits for system inspection and maintenance will be performed by a trained and qualified technician and will be performed in conjunction with system monitoring to reduce costs.

The following O&M items are scheduled to be performed weekly for the first month and monthly thereafter:

1. Record the AS equipment hour meter readings, flow rates, pressures, and the amount (if any) of water collected in the holding tank.

2. If there is significant condensate in the 500-gallon holding tank, it will be pumped out and disposed of by a licensed hauler.

3. Inspect the air sparging blower. Grease the bearings. Visually check the particle filters for signs of dust or debris accumulation and replace if necessary. Record the condition of the filters. Fully inspect the condition of the entire blower unit (belt tension, rust, etc.)

4. Inspect the heat exchanger. Visually check the particle filters for signs of dust or debris accumulation and replace if necessary.

5. Adjust the pressures and flow rates to the original operational levels established during system startup.

6. Maintain good housekeeping measures for the entire remediation system compound, picking up trash, cutting weeds as necessary.

7. Log all inspection activities and repairs performed.

An O&M Manual will be provided with all equipment and systems installed at the site. The manual will have, at a minimum, sections covering the unloading, installation, set-up, operation instruction, and maintenance instruction for each component of the system.

7.6 STATUS REPORTS

During the implementation and operation of the remedial system described in this RAP, quarterly status reports will be prepared and submitted to Navy. The reports will summarize all remedial activities and will contain at a minimum the following information:

- Startup date;
- Hydrocarbon constituent concentrations in groundwater as measured from monitoring wells and water table elevations;
- Concentrations of DO in the groundwater;
- Recent hydrocarbon plume and groundwater contour maps;
- Summary of system operational data,
- Conclusions as to the effectiveness of the active remedial system, and recommendations on further monitoring and operations of the system.

7.7 SYSTEM DEACTIVATION

The following criteria must be met for active remediation to be deemed complete and prior to deactivation of the AS system:

1. Further Action criteria as defined in 62-770.680 FAC have been met.
2. Natural Attenuation criteria established in 62-770.690 FAC has been achieved.
3. Concentrations of chemicals of concern in the designated monitoring wells have “leveled off” as defined in 62-770.700 FAC.

After the site meets one the above criteria and the NAS Cecil Field Petroleum Subcommittee agrees with the decision to deactivate the AS system, the system will be deactivated. The following steps shall be followed during system deactivation:

1. Deactivate the air-sparging blower and allow to cool down.
2. De-energize the control panel via the service disconnect.

3. Properly transport and dispose of the condensate water collected.

4. AS equipment will remain on site until after the post closure monitoring verifies that the site has been properly remediated, at which point it will be removed from the site as directed by the Navy.

Following AS system deactivation, a Post Active Remediation Monitoring Plan must be developed for the site and approved by the FDEP. The contents of this plan are included in 62-770.750 FAC. This monitoring shall occur for a minimum of 1 year.

TABLE 7-1

MONITORING WELL SAMPLE NUMBERS
LONG-TERM MONITORING
JETC AND TANK 334-OW REMEDIAL ACTION PLAN
NAVAL AIR STATION CECIL FIELD
JACKSONVILLE, FLORIDA

Monitoring Well No.	Position	Analysis
CEF-334-01S	Sidegradient	WL
CEF-334-02S	Sidegradient	WL
CEF-334-02Sa	Source	V, P, T
CEF-334-32S	Downgradient/Source	V, P, T
CEF-334-33S	Downgradient	V, P, T
CEF-334-34S	Source	V, P, T
CEF-339-28S	Source	V, P, T
CEF-339-29S	Source	V, P, T
CEF-339-30S	Sidegradient	WL
CEF-811-06S	Sidegradient	WL
CEF-811-08S	Sidegradient	WL
CEF-811-16SR	Source	V, P, T
CEF-811-17S	Source	V, P, T
CEF-811-18S	Downgradient	V, P, T
NG-24S	Downgradient	V, P, T

V - VOCs by method U.S. EPA SW-846 8021.
P - PAHs by method U.S. EPA SW-846 8310.
T - TRPH by FL-PRO.
WL - Water Levels only.

REFERENCES

ABB-ES (ABB Environmental Services, Inc.), 1994. *Contamination Assesssment Report Addendum, Jet Engine Test Cell*, Naval Air Station Cecil Field, Jacksonville, Florida. Prepared for Southern Division Naval Facilities Engineering Command, North Charleston, South Carolina. November.

ABB-ES, 1997a. *Confirmatory Sampling Report, Building 334, Tank 325-OW*, Naval Air Station Cecil Field, Jacksonville, Florida. Prepared for Southern Division Naval Facilities Engineering Command, North Charleston, South Carolina. October.

ABB-ES, 1997b. *Confirmatory Sampling Report, Building 334, Tank 334-OW*, Naval Air Station Cecil Field, Jacksonville, Florida. Prepared for Southern Division Naval Facilities Engineering Command, North Charleston, South Carolina. November.

ABB-ES, 1997c. *Confirmatory Sampling Report, Building 334, Tank 334P*, Naval Air Station Cecil Field, Jacksonville, Florida. Prepared for Southern Division Naval Facilities Engineering Command, North Charleston, South Carolina. November.

ABB-ES, 1999. *Confirmatory Sampling Report, Building 339, Oil-Water Separator 339-OW*, Naval Air Station Cecil Field, Jacksonville, Florida. Prepared for Southern Division Naval Facilities Engineering Command, North Charleston, South Carolina. February.

CH2MHill (CH2MHill Constructors, Inc.), 2000. *Source Removal Report, Oil/Water Separator Removal at Building 334*, Naval Air Station Cecil Field, Jacksonville, Florida. Prepared for Southern Division Naval Facilities Engineering Command, North Charleston, South Carolina. October.

HLA (Harding Lawson Associates), 1999a. *Confirmatory Sampling Report, Building 339, Oil-Water Separator 339-OW*, Naval Air Station Cecil Field, Jacksonville, Florida. Prepared for Southern Division Naval Facilities Engineering Command, North Charleston, South Carolina. February.

HLA, 1999b. *Site Assessment Report, Building 334, Oil-Water Separator 334-OW, Rev. 0.0*, Naval Air Station Cecil Field, Jacksonville, Florida. Prepared for Southern Division Naval Facilities Engineering Command, North Charleston, South Carolina. April.

HLA, 1999c. *Monitoring Only Proposal for Natural Attenuation, Building 334, Jet Engine Test Cell*, Naval Air Station Cecil Field, Jacksonville, Florida. Prepared for Southern Division Naval Facilities Engineering Command, North Charleston, South Carolina. April.

HLA, 1999d. *Site Assessment Report, Building 334, Oil-Water Separator 334-OW, Rev. 1.0*, Naval Air Station Cecil Field, Jacksonville, Florida. Prepared for Southern Division Naval Facilities Engineering Command, North Charleston, South Carolina. September.

HLA, 2000a. *Letter Report, 2nd Quarter Groundwater Sampling Results, Jet Engine Test Cell*, Naval Air Station Cecil Field, Jacksonville, Florida. Prepared for Southern Division Naval Facilities Engineering Command, North Charleston, South Carolina. February.

HLA, 2000b. *Letter Report, 3rd Quarter Groundwater Sampling Results, Jet Engine Test Cell*, Naval Air Station Cecil Field, Jacksonville, Florida. Prepared for Southern Division Naval Facilities Engineering Command, North Charleston, South Carolina. March.

HLA, 2000c. *Letter Report, 4th Quarter Groundwater Sampling Results, Jet Engine Test Cell*, Naval Air Station Cecil Field, Jacksonville, Florida. Prepared for Southern Division Naval Facilities Engineering Command, North Charleston, South Carolina. June.

TtNUS (Tetra Tech NUS, Inc.), 2000a. *Groundwater Monitoring Report, 1st Quarter, 2nd Year, Jet Engine Test Cell*, Naval Air Station Cecil Field, Jacksonville, Florida. Prepared for Southern Division Naval Facilities Engineering Command, North Charleston, South Carolina. August.

TtNUS, 2000b. *Groundwater Monitoring Report, 2nd Quarter, 2nd Year, Jet Engine Test Cell*, Naval Air Station Cecil Field, Jacksonville, Florida. Prepared for Southern Division Naval Facilities Engineering Command, North Charleston, South Carolina. December.

TtNUS, 2000c. *Confirmatory Sampling Report Addendum, Building 334, Tank 325-OW*, Naval Air Station Cecil Field, Jacksonville, Florida. Prepared for Southern Division Naval Facilities Engineering Command, North Charleston, South Carolina. September.

TtNUS, 2001. *Site Assessment Report Addendum, Jet Engine Test Cell and Oil-Water Seperator 334-OW*, Naval Air Station Cecil Field, Jacksonville, Florida. Prepared for Southern Division Naval Facilities Engineering Command, North Charleston, South Carolina. October.

APPENDIX A

SOIL AND GROUNDWATER MASS CALCULATIONS

TABLE A-1
ESTIMATED MASS OF DISSOLVED AND ADSORBED CONTAMINANTS IN SATURATED ZONE

Remedial Action Plan
Jet Engine Test Cell
Naval Air Station Cecil Field
Jacksonville, Florida

Mass of Soluble Contaminants Calculations

Well No.	Benzene (ug/l)	Toluene (ug/l)	Ethyl-Benzene (ug/l)	Xylene (ug/l)	BTEX (ug/l)	Naphthalene (ug/l)	1-Methyl (ug/l)	2-Methyl (ug/l)	TPH (ug/l)	Impacted Thickness (feet)
29S	0.5	0.5	21.2	4.5	26.7	133	93.5	71.7	8000	20
28S	2.3	0.9	41	6.2	50.4	132	118	130	13800	20
16SR	14.3	0.76	33.3	4.3	52.7	1	1	1	6160	20
36S	NS	NS	NS	NS	0	1	2	0.1	5600	20
17S	0.5	0.5	4.6	1.5	7.1	38.3	28.8	19.7	17600	20
34S	0.5	0.5	0.5	1.5	3	5.5	5.5	5.5	24100	20
18S	0.5	0.5	0.5	1.5	3	22.8	9.6	10	2750	20
2Sa	11.8	86.4	76.3	296	470.5	378	172	181	14600	20
32S	0.5	0.5	2.1	7.6	10.7	30.4	19.5	14.9	2300	20
Average Dissolved Contaminant Concentration (ug/l) =	**3.9**	**11.3**	**22.4**	**40.4**	**69.3**	**82.4**	**50.0**	**48.2**	**10545.6**	

Estimated GW Volume: Impacted Area x Impacted Thickness x Porosity = (19,000 ft^2)(20 ft)(0.25)(7.48 gal/ft^3) = **710,600** gallons

Estimated Mass of Soluble Contaminants: M(dissolved)(lbs) = C(dissolved)(ug/l) x V(gw)(gal) x 3.7854(l/gal) x 2.205E-9(lb/ug)

where: M(dissolved) = mass of dissolved contaminants (lbs)
C(dissolved) = average dissolved contaminant concentration (mg/l)
V(gw) = volume of impacted groundwater (gal)

Estimated Mass of Soluble Contaminants (lbs) =	**0.0**	**0.1**	**0.1**	**0.2**	**0.4**	**0.5**	**0.3**	**0.3**	**62.5**

Estimated Total Mass of Soluble Contaminants Based on sum of COC Concentrations = **64.0** lbs

TABLE A-1
ESTIMATED MASS OF DISSOLVED AND ADSORBED CONTAMINANTS IN SATURATED ZONE

Remedial Action Plan
Jet Engine Test Cell
Naval Air Station Cecil Field
Jacksonville, Florida

Mass of Adsorbed Contaminants Calculations

Concentration of Contaminants Adsorbed to Soil: C(soil) = C(dissolved) x Kd

where: C(soil) = contaminant concentration in soil (mg/kg)
C(dissolved) = average dissolved contaminant concentration (mg/l)
Kd = solid/liquid distribution coefficient (l/kg)

For organics: Kd = Koc x Foc

where: Koc = organic carbon/water partition coefficient (l/kg) (from Mullens & Rogers, AICE 1993)
Foc = fractional organic carbon content (0.5 % by weight for typical sand) (from EPA 440/5-89-002)

	Benzene	Toluene	Ethyl-Benzene	Xylene	BTEX	Naphthalene	1-Methyl	2-Methyl	TPH
Koc (l/kg):	38	135	1288	240	NA	1288	1288	1288	1288
Foc (kg/kg):	0.005	0.005	0.005	0.005	NA	0.005	0.005	0.005	0.005
Kd (l/kg) =	**0.19**	**0.68**	**6.44**	**1.20**	**NA**	**6.44**	**6.44**	**6.44**	**6.44**
C(dissolved) (mg/l):	0.004	0.011	0.022	0.040	NA	0.082	0.050	0.048	10.55
Kd (l/kg):	0.19	0.68	6.44	1.20	NA	6.44	6.44	6.44	6.44
C(soil) (mg/kg) =	**0.0007**	**0.0076**	**0.144**	**0.048**	**NA**	**0.531**	**0.322**	**0.310**	**67.91**

(*) - Based on Naphthalene value

Estimated Impacted Soil Mass: M(soil) = Impacted Area x Impacted Thickness x (1-n) = (19,000 ft^2)(20 ft)(1-0.25)(1.0 yd^3/27 ft^3)(1.4 tons/yd^3)(907.2 kg/ton) = **1.34E+07** kg

Estimated Mass of Contaminants Adsorbed to Soil: M(adsorbed)(lbs) = C(soil)(mg/kg) x M(soil)(kg) x 2.205E-6 (lb/mg)

C(soil) (mg/kg):	0.00073	0.007641	0.144	0.048	NA	0.531	0.322	0.310	67.91
M(soil):	1.34E+07	1.34E+07	1.34E+07	1.34E+07	NA	1.34E+07	1.34E+07	1.34E+07	1.34E+07
M(adsorbed) (lbs) =	**0.022**	**0.226**	**4.27**	**1.433**	**NA**	**15.70**	**9.52**	**9.18**	**2008**

Estimated Total Mass of Soluble Contaminants Based on sum of COC Concentrations = **2048** **lbs**

TOTAL ESTIMATED MASS OF HYDROCARBONS IN SATURATED ZONE (LBS) = ADSORBED MASS + DISSOLVED MASS = **2112** **lbs**

Notes:
1) NS: Not Sampled
2) NA: Not applicable to mass calculation
3) ND: No Data Available
4) Values in shaded cells equal to 1/2 the method detection limits (MDLs) were used when concentrations were <MDLs.

Prepared by: _____

Checked by: _____ 8/30/02
Date

APPENDIX B

REMEDIAL TIME ESTIMATIONS

AIR SPARGING CLEANUP DURATION ESTIMATION
JETC NORTH AND SOUTH PLUMES

CLIENT SITE NO.:	NAS Cecil Field JETC		
TTNUS PROJECT NO.:	CTO-248	By:	Mark Jonnet
DATE CALCULATED:	8/21/2002	Checked By:	8/30/02

(Source: "Air Sparging Model for Predicting Groundwater Cleanup Rate" K.L. Sellers and R.P Schreiber, CDM Inc. 1992)

The following first order decay/rate equation may be used to estimate a conservative time for the contaminants of concern concentrations to be reduced below the remedial action ojectives. This model calculates both the average and maximum clean-up times as dictated by the initial concemtrations. This model has been calibrated to Site-16 and Site-3 long term data. You will see two versions of this calculation.

$$C_{(t)} = C_{(o)} \times e^{-Bt}$$

Variables:

$C_{(t)}$ = Concentration at end of duration or RAO's (ug/L)

$C_{(o)}$max = Initial Maximum Concentration (ug/L)

$C_{(o)}$ave = Initial Weighted Average Concentration (ug/L)

e = base of the natural log (approx. 2.71828)

B = first order differential rate constant (see page 2 of 10)

t = duration (solving for)

Solving for t reduces to:

$$t = \ln(C_{(t)}/C_{(o)}) / -B$$

CONTAMINANT TYPE	C_o Max (ug/l)*	C_o Ave (ug/L)*	C_t (ug/L)*	t Max (years)	t Ave (years)
Benzene	14	4	1.00	0.48	0.26
Ethylbenzene	76	23	30.00	0.17	0.00
Toluene	86	12	40.00	0.14	0.00
Xylenes, Total	296	41	20.00	0.48	0.13
Naphthalene	378	83	20.00	0.66	0.32
1-Methylnaphthalene	172	51	20.00	0.48	0.21
2-Methylnaphthalene	181	49	20.00	0.49	0.20
TPH	24100	10546	5000.00	0.35	0.17
			TOTAL	3.25	1.28

Assumptions:

The bubble radius was recalculated for Site-16 Air Sparging System using the time the systems ran and the amount of reduction at the site. The radius of the bubble size was the factor which was varied to meet the actual time and contaminant reduction for each site.

1) Maximum TCE prior to Startup: 410,000 ug/L @ CEF-016-45I during 9/98 sampling effort.
2) Maximum TCE when system was shut off: 318 ug/L @ CEF-016-09D during 4/00 sampling effort 45I was abandoned in March 2000 and 46I was installed as a replacement well. 46I was non detect for TCE in 4/00.
3) System ran for one year from 6/99 to 5/00.
4) Recalculated Bubble radius: 1.66E-03 m Original calculation was 4.49E-03 m.

AIR SPARGING CLEANUP DURATION
JETC NORTH AND SOUTH PLUMES
"Calculation of Rate Constant B"

CLIENT SITE NO.:	NAS Cecil Field JETC		
TTNUS PROJECT NO.:	CTO-248	By:	Mark Jonnet
DATE CALCULATED:	8/21/2002	Checked by:	JWL 8/20/02

(Source:"Air Sparging Model for Predicting Groundwater Cleanup Rate" K.L. Sellers and R.P Schreiber,CDM Inc. 1992)

The first order rate coefficient B can be calculated by the following equation.

$$B = f \times d \times D/L \times S/V \times H/\upsilon \times Q/V_s$$

Variables:

f = Fraction of plume sparged (unitless)	f =	1.0	assumed
d = Fraction of 24-hour day unit operates (unitless)	d =	1.0	assumed
D = Contaminant diffusion coefficent (cm^2/s)	D =	see below	
L = Diffusive distance around bubble (m) [Recalculated using Site-16]	L =	**1.66E-03**	see page 3 of 10
S/V = effective surface area to volume ratio of a bubble (m^{-1})	S/V =	1812.5	see page 3 of 10
H = Depth of screen below water table (m)	H =	7.6	see page 4 of 10
υ = Bubble terminal Rise velocity (m/s)	υ =	2.53E-01	see page 3 of 10
Q = Total air flow (m^3/s)	Q =	2.69E-02	see page 4 of 10
V_s = Volume of water in plume that contact bubbles (m^3)	V_s =	5001.0	see page 4 of 10

CONTAMINANT TYPE	D	B (sec^{-1})	B (yr^{-1})
Benzene	1.00E-09	1.77E-07	5.59E+00
Ethylbenzene	1.00E-09	1.77E-07	5.59E+00
Toluene	1.00E-09	1.77E-07	5.59E+00
Xylenes, Total	1.00E-09	1.77E-07	5.59E+00
Naphthalene	8.00E-10	1.42E-07	4.47E+00
1-Methylnaphthalene	8.00E-10	1.42E-07	4.47E+00
2-Methylnaphthalene	8.00E-10	1.42E-07	4.47E+00
TPH	8.00E-10	1.42E-07	4.47E+00

AIR SPARGING CLEANUP DURATION
JETC NORTH AND SOUTH PLUMES
"Calculation of Variables"

Estimation of Contaminant Diffusion Coefficient

Volatiles =	**1.00E-09**	**m^2/s**
Semi-Volatiles =	**8.00E-10**	**m^2/s**

Calculate the diffusive distance around bubble (L)

This model assumes L = r

Where r is equal to the effective radius of the bubble

$$r = 2 \times R \times \{6\sigma/[R^2 \times (P_w - P_a) \times g]\}^{1/3}$$

Given

R =	**1.27E-05**	**m**	(orifice diameter of the sparger or well screen slot)
σ =	**0.0728**	**N/m**	(air water surface tension)
Pw =	**1000**	**kg/m^3**	(density of water)
Pa =	**1.29**	**kg/m^3**	(density of air at 50F)
g =	**9.8**	**m/s^2**	(acceleration due to gravity)
well slot =	**0.0005**	**in**	(back calculated using actual conditions from Site-16 Air Sparing System)

L = r = 1.66E-03 m

S/V is the effective surface area to volume ratio of a bubble

S/V = 3/r

r is calculated above, therefore

S/V = 1812.5 m^{-1}

υ is the terminal rise velocity of a bubble

$$\upsilon = \{1.04 \times g \times r + (1.07 \times \sigma)/(r \times P_w)\}^{1/2}$$

Where:

g =	**9.8**	**m/s^2**	(acceleration due to gravity)
r =	**1.66E-03**	**m**	(calculated above)
σ =	**0.0728**	**N/m**	(air water surface tension)
P_w =	**1000**	**kg/m^3**	(density of water)

υ = 0.253 m/s

AIR SPARGING CLEANUP DURATION
JETC NORTH AND SOUTH PLUMES
"Calculation of Variables"

The height H is equal to the average total depth of the sparge well to the water table

TD =	**30**	**ft (10 wells @ 30 deep)**
DTW =	**5**	**ft**
H =	**25.0**	**ft**
H =	**7.6**	**m**

The air flow rate is determined by the number of sparge wells and a correction for pressure caused by well depth

Q = # wells x flow rate per well x adjustment for pressure

# wells =	**10**	**unitless**
low/well =	**10**	**SCFM**
TD =	**30**	**ft**
DTW =	**5**	**ft**
ADJF =	**0.57**	**unitless**
Q =	**56.90**	**CFM**
Q =	**2.69E-02**	**m^3/s**

Volume of plume in sparged area is determined by following calculation

Vs = A x h x η

Where:

A =	**28,274**	**ft2 (plume sparged area= 10 air sparging locations x 30 ft radius circles**
h =	**25.00**	**ft (groundwater plume average thickness)**
η =	**0.25**	**unitless (porosity from RI)**
V_s =	**176714.587**	**ft^3**
V_s =	**5001.0**	**m^3**

EMISSION RATE ESTIMATION
JETC NORTH AND SOUTH PLUMES

CLIENT SITE NO.:	NAS Cecil Field JETC		
TTNUS PROJECT NO.:	CTO-248	By:	Mark Jonnet
DATE CALCULATED:	8/21/2002	Checked By:	JWS 8/30/02

Estimate the VOC emission rate from the AS system:

Emission from air sparging:

Vs x -dC(t)/dt

where:Vs= plume volume= 5001 m^3

dC(t)/dt= rate of decrease of gw concentration

$= C_{(o)} \times (-B) \times e^{-Bt}$

Time (day)	Benzene (lb/day)	Ethylbenzene (lb/day)	Toluene (lb/day)	Xylenes, Tota (lb/day)	Naphthalene (lb/day)	1-Methylnaph (lb/day)	2-Methylnaph (lb/day)	TPH (lb/day)	Total (lb/day)
0	7.0E-04	3.8E-03	2.0E-03	6.9E-03	1.1E-02	6.8E-03	6.6E-03	1.4E+00	1.46
30	4.4E-04	2.4E-03	1.2E-03	4.4E-03	7.8E-03	4.7E-03	4.6E-03	9.8E-01	1.01
180	4.5E-05	2.4E-04	1.2E-04	4.4E-04	1.2E-03	7.5E-04	7.3E-04	1.6E-01	0.16
365	2.6E-06	1.4E-05	7.3E-06	2.6E-05	1.3E-04	7.8E-05	7.5E-05	1.6E-02	0.02

Conclusion:

Emission for any single contaminant is less than 5.5 lbs per day and total is less than 13.7 lbs per day.

Therefore no vapor extraction will be required to attain the FDEP Air Regulations.

AIR SPARGING CLEANUP DURATION ESTIMATION
JETC NORTH AND SOUTH PLUMES

CLIENT SITE NO.:	NAS Cecil Field JETC		
TTNUS PROJECT NO.:	CTO-248	By:	Mark Jonnet
DATE CALCULATED:	8/21/2002	Checked By:	8/30/02

(Source: "Air Sparging Model for Predicting Groundwater Cleanup Rate" K.L. Sellers and R.P Schreiber, CDM Inc. 1992)

The following first order decay/rate equation may be used to estimate a conservative time for the contaminants of concern concentrations to be reduced below the remedial action ojectives. This model calculates both the average and maximum clean-up times as dictated by the initial concemtrations.

$$C_{(t)} = C_{(o)} \times e^{-Bt}$$

Variables:

$C_{(t)}$ = Concentration at end of duration or RAO's (ug/L)

$C_{(o)}$max = Initial Maximum Concentration (ug/L)

$C_{(o)}$ave = Initial Weighted Average Concentration (ug/L)

e = base of the natural log (approx. 2.71828)

B = first order differential rate constant (see page 7 of 10)

t = duration (solving for)

Solving for t reduces to:

$$t = \ln(C_{(t)}/C_{(o)}) / -B$$

CONTAMINANT TYPE	C_o Max (ug/l)*	C_o Ave (ug/L)*	C_t (ug/L)*	t Max (years)	t Ave (years)
Benzene	14	4	1.00	1.80	0.97
Ethylbenzene	76	23	30.00	0.63	0.00
Toluene	86	12	40.00	0.52	0.00
Xylenes, Total	296	41	20.00	1.83	0.49
Naphthalene	378	83	20.00	2.49	1.21
1-Methylnaphthalene	172	51	20.00	1.82	0.79
2-Methylnaphthalene	181	49	20.00	1.87	0.76
TPH	24100	10546	5000.00	1.33	0.63
			TOTAL	**12.29**	**4.84**

Assumptions:

The bubble radius was recalculated for Site-3 Air Sparging System using the time the systems ran and the amount of reduction at the site. The radius of the bubble size was the factor which was varied to meet the actual time and contaminant reduction for each site.

1) Maximum TCE prior to Startup: 1700 ug/L @ CEF-003-13S during 2/98 sampling effort
2) Maximum TCE when system was shut off: 410 ug/L @ CEF-003-03S during 4/00 sampling effort 13S was 35.3 ug/L.
3) System ran for one year from 5/99 to 5/00.
4) Recalculated Bubble radius: 3.31E-03 m Original calculation was 4.49E-03 m.

AIR SPARGING CLEANUP DURATION
JETC NORTH AND SOUTH PLUMES
"Calculation of Rate Constant B"

CLIENT SITE NO.:	NAS Cecil Field JETC		
TTNUS PROJECT NO.:	CTO-248	By:	Mark Jonnet
DATE CALCULATED:	8/21/2002	Checked by:	9/30/02

(Source:"Air Sparging Model for Predicting Groundwater Cleanup Rate" K.L. Sellers and R.P Schreiber,CDM Inc. 1992)

The first order rate coefficient B can be calculated by the following equation.

$$B = f \times d \times D/L \times S/V \times H/\upsilon \times Q/V_s$$

Variables:

f = Fraction of plume sparged (unitless)	f =	1.0	assumed
d = Fraction of 24-hour day unit operates (unitless)	d =	1.0	assumed
D = Contaminant diffusion coefficent (cm^2/s)	D =	see below	
L = Diffusive distance around bubble (m) [Recalculated using Site-3]	L =	**3.31E-03**	see page 8 of 10
S/V = effective surface area to volume ratio of a bubble (m^{-1})	S/V =	906.3	see page 8 of 10
H = Depth of screen below water table (m)	H =	7.6	see page 9 of 10
υ = Bubble terminal Rise velocity (m/s)	υ =	2.39E-01	see page 8 of 10
Q = Total air flow (m^3/s)	Q =	2.69E-02	see page 9 of 10
V_s = Volume of water in plume that contact bubbles (m^3)	V_s =	5001.0	see page 9 of 10

CONTAMINANT TYPE	D	B (sec^{-1})	B (yr^{-1})
Benzene	1.00E-09	4.68E-08	1.48E+00
Ethylbenzene	1.00E-09	4.68E-08	1.48E+00
Toluene	1.00E-09	4.68E-08	1.48E+00
Xylenes, Total	1.00E-09	4.68E-08	1.48E+00
Naphthalene	8.00E-10	3.74E-08	1.18E+00
1-Methylnaphthalene	8.00E-10	3.74E-08	1.18E+00
2-Methylnaphthalene	8.00E-10	3.74E-08	1.18E+00
TPH	8.00E-10	3.74E-08	1.18E+00

Estimation of Contaminant Diffusion Coefficient

Volatiles = 1.00E-09 m^2/s
Semi-Volatiles = 8.00E-10 m^2/s

Calculate the diffusive distance around bubble (L)

This model assumes L = r

Where r is equal to the effective radius of the bubble

$$r = 2 \times R \times \{6\sigma/[R^2 \times (P_w - P_a) \times g]\}^{1/3}$$

Given

R =	**1.02E-04**	**m**	(orifice diameter of the sparger or well screen slot)
σ =	**0.0728**	**N/m**	(air water surface tension)
Pw =	**1000**	**kg/m^3**	(density of water)
Pa =	**1.29**	**kg/m^3**	(density of air at 50F)
g =	**9.8**	**m/s^2**	(acceleration due to gravity)
well slot =	**0.004**	**in**	(back calculated using actual conditions from Site-3 Air Sparing System)

L = r = 3.31E-03 m

S/V is the effective surface area to volume ratio of a bubble

S/V = 3/r

r is calculated above, therefore

S/V = 906.3 m^{-1}

υ is the terminal rise velocity of a bubble

$$\upsilon = \{1.04 \times g \times r + (1.07 \times \sigma)/(r \times P_w)\}^{1/2}$$

Where:

g =	**9.8**	**m/s^2**	(acceleration due to gravity)
r =	**3.31E-03**	**m**	(calculated above)
σ =	**0.0728**	**N/m**	(air water surface tension)
P_w =	**1000**	**kg/m^3**	(density of water)

υ = 0.239 m/s

AIR SPARGING CLEANUP DURATION
JETC NORTH AND SOUTH PLUMES
"Calculation of Variables"

The height H is equal to the average total depth of the sparge well to the water table

TD =	**30**	**ft (10 wells @ 30 deep)**
DTW =	**5**	**ft**
H =	**25.0**	**ft**
H =	**7.6**	**m**

The air flow rate is determined by the number of sparge wells and a correction for pressure caused by well depth

Q = # wells x flow rate per well x adjustment for pressure

# wells =	**10**	**unitless**
low/well =	**10**	**SCFM**
TD =	**30**	**ft**
DTW =	**5**	**ft**
ADJF =	**0.57**	**unitless**
Q =	**56.90**	**CFM**
Q =	**2.69E-02**	**m^3/s**

Volume of plume in sparged area is determined by following calculation

Vs = A x h x η

Where:

A =	**28,274**	**ft2 (plume sparged area= 10 air sparging locations x 30 ft radius circles**
h =	**25.00**	**ft (groundwater plume average thickness)**
η =	**0.25**	**unitless (porosity from RI)**
V_s =	**176714.587**	**ft^3**
V_s =	**5001.0**	**m^3**

EMISSION RATE ESTIMATION
JETC NORTH AND SOUTH PLUMES

CLIENT SITE NO.:	NAS Cecil Field JETC		
TTNUS PROJECT NO.:	CTO-248	By:	Mark Jonnet
DATE CALCULATED:	8/21/2002	Checked By:	8/30/02

Estimate the VOC emission rate from the AS system:

Emission from air sparging:

Vs x -dC(t)/dt

where:Vs= plume volume= 5001 m^3

dC(t)/dt= rate of decrease of gw concentration

$= C_{(o)} \times (-B) \times e^{-Bt}$

Time (day)	Benzene (lb/day)	Ethylbenzene (lb/day)	Toluene (lb/day)	Xylenes, Tota (lb/day)	Naphthalene (lb/day)	1-Methylnaph (lb/day)	2-Methylnaph (lb/day)	TPH (lb/day)	Total (lb/day)	Total (lb/day)
0	1.9E-04	1.0E-03	5.2E-04	1.8E-03	3.0E-03	1.8E-03	1.7E-03	3.8E-01	0.39	0.008
30	1.6E-04	8.9E-04	4.6E-04	1.6E-03	2.7E-03	1.6E-03	1.6E-03	3.4E-01	0.35	0.007
180	9.0E-05	4.8E-04	2.5E-04	8.8E-04	1.7E-03	1.0E-03	9.7E-04	2.1E-01	0.22	0.004
365	4.2E-05	2.3E-04	1.2E-04	4.2E-04	9.1E-04	5.5E-04	5.3E-04	1.2E-01	0.12	0.002

Conclusion:

Emission for any single contaminant is less than 5.5 lbs per day and total is less than 13.7 lbs per day.

Therefore no vapor extraction will be required to attain the FDEP Air Regulations.

APPENDIX C

REMEDIAL ALTERNATIVE COST ESTIMATES

Table C-1
Air Sparging

Remedial Action Plan
Jet Engine Test Cell
Naval Air Station Cecil Field
Jacksonville, Florida

Estimator: MJJ
Checked By:

COST SUMMARY TABLE (costs rounded to nearest $1000)

DIRECT COSTS		
Site Preparation		$11,000
Piping and Equipment		$68,000
TOTAL DIRECT COST		**$79,000**
INDIRECT COSTS		
Engineering and Design (10%)		$8,000
Contingency (10%)		$8,000
TOTAL INDIRECT COST		**$16,000**
Total Capital Costs (Direct + Indirect)		**$95,000**
OPERATIONS AND MAINTENANCE		
Administrative O&M		
O&M Manual		$5,000
Health and Safety Plan for Monitoring Activities		$6,000
Sampling and analysis Plan (SAP) for Monitoring Activities		$8,000
Total Treatment System O&M 1st year costs only		**$19,000**
Groundwater Monitoring		
Quarterly Groundwater Sampling Activities (4 Events)		$36,000
Total Reporting Cost for 4 Sampling Events		$24,000
Treatment System O&M		
System Maintenance		$14,000
Utilities		$8,000
Total Treatment System O&M		**$82,000**
Present Worth of Treatment System O&M (7%, 1st yr)	($76,636)	$77,000
Present Worth of Treatment System O&M (7%, 2nd-4th yrs)	($136,464)	$136,000

Assumption - System will run for four years. (1st yr - quarterly, each year thereafter semi-annually)

TOTAL COST	**$327,000**

Table C-1 (Continued)
Air Sparging Cost Alternative

DIRECT COSTS	Quantity	Unit	Subcontract	Unit Cost Material	Labor	Equipment	Total Cost
Site Preparation							
Storage trailer	2	mo	$85	$0	$0	$0	$170
Treatment system concrete pad (6")	180	ft^2	$0	$3	$3	$1	$1,210
Chain-link fence, 6' high	70	ft	$0	$10	$3	$2	$1,042
8' Gates for access to treatment system fence	1	ea	$0	$504	$235	$169	$908
Utility connection for treatment system assumes power available from Bldg 334	1	ls	$5,000	$0	$0	$0	$5,000
Pressure washer and water tank	2	mo	$0	$0	$0	$528	$1,056
ODCs(Plastic sheeting, drums, pumps, hoses, supplies,etc.)	1	ls	$0	$2,000	$0	$0	$2,000
Total Site Preparation							**$11,385**
Air Sparge System							
Piping and Equipment							
20 HP Oilless Blower, Heat Exchanger, Sound Enclosure, Control Panel, & Shipping	1	ls	$23,470	$0	$929	$0	$24,399
Wastewater Storage Tank - 500 Gallon	1	ea	$0	$530	$421	$0	$951
Equipment plumbing (piping, elbows, instruments, etc.)	1	ls	$0	$5,582	$843	$0	$6,425
Install Air Sparging Wells - Drilling Rotary Mud (10 @ 30' depth)	300	ft	$27	$0	$0	$0	$8,100
Install Air Sparging Wells - Development	0	well	$75	$0	$0	$0	$0
IDW - 3 drums per wells	30	drum	$100	$0	$0	$0	$3,000
Air Sparge Well plumbing (piping, elbows, instruments, etc.)	1	ls	$0	$15,541	$3,493	$0	$19,034
Misc construction materials	1	ls	$0	$1,000	$0	$0	$1,000
Trench/Backfill, 24" deep	500	lf	$0.00	$0.26	$0.50	$0.29	$525
Site restoration (paving, hydroseeding, etc.)	1	ls	$3,000	$0	$0	$0	$3,000
Remedial well survey (survey of new well locations)	1	ls	$1,000	$0	$0	$0	$1,000
System start-up	1	day	$0	$0	$886	$0	$886
Total Piping and Equipment							**$68,320**
TOTAL DIRECT COSTS							**$79,705**

Table C-1 (Continued)
Air Sparging Cost Alternative

	Quantity	Unit	Subcontract	Material	Labor	Equipment	Total Cost
				Unit Cost			
OPERATIONS AND MAINTENANCE							
O&M Manual							
Labor:							
Mid-level Engineer	40	hrs	$0	$0	$45	$0	$1,800
Word Processor	16	hrs	$0	$0	$35	$0	$560
CADD	32	hrs	$0	$0	$40	$0	$1,280
Editor	8	hrs	$0	$0	$60	$0	$480
Copying: 50 pgs x 25 copies	1250	page	$0	$0.10	$0	$0	$125
Binding/shipping, 25 copies	25	ea	$0	$20	$0	$0	$500
Total O&M Manual							**$4,745**
LONG TERM MONITORING							
Health and Safety Plan for Monitoring Activities							
Labor:							
H&S Supervisor	16	hrs	$0	$0	$60	$0	$960
Mid-level Geologist/Scientist	40	hrs	$0	$0	$45	$0	$1,800
Word Processor	16	hrs	$0	$0	$35	$0	$560
CADD	32	hrs	$0	$0	$40	$0	$1,280
Editor	8	hrs	$0	$0	$60	$0	$480
Copying: 50 pgs x 25 copies	1250	page	$0	$0.10	$0	$0	$125
Binding/shipping, 25 copies	25	ea	$0	$20	$0	$0	$500
Total HASP							**$5,705**
Sampling and analysis Plan (SAP) for Monitoring Activities							
Labor:							
Jr.-Level Geologist/Scientist	80	hrs	$0	$0	$45	$0	$3,600

Table C-1 (Continued)
Air Sparging Cost Alternative

			Unit Cost			
Senior Geologist	16 hrs	$0	$0	$80	$0	$1,280
ODC's, Production Support (editing, copying, binders, etc.)						
Word Processor	16 hrs	$0	$0	$35	$0	$560
CADD	32 hrs	$0	$0	$40	$0	$1,280
Editor	8 hrs	$0	$0	$60	$0	$480
Copying: 50pgs x 25 copies	1250 page	$0	$0.10	$0	$0	$125
Binding/shipping, 25 copies	25 ea	$0	$20	$0	$0	$500
Total SAP						**$7,825**
Quarterly Groundwater Sampling Activities Per Event						
1 geologist & 1 technician per sampling event @ 10 hour days	40 hrs	$0	$0	$75	$0	$3,000
Handle IDW (1 geologist per sampling event)	4 hrs	$0	$0	$75	$0	$300
Lab analysis						
Volatile Organics, Method SW846-8021B, assume 10 wells, 2 QC samples	12 ea	$80	$0	$0	$0	$960
PAHs, Method SW846-8310, assume 10 wells, 2 QC samples	12 ea	$135	$0	$0	$0	$1,620
TRPH (FLPRO), assume 10 wells, 2 QC samples	12 ea	$120	$0	$0	$0	$1,440
Expendables and equipment	1 ls	$300	$928	$0	$410	$1,638
Total Sampling Cost:						**$8,958**

				Unit Cost			
REPORTING	Quantity	Unit	Subcontract	Material	Labor	Equipment	Total Cost
Site Activities Report (Quarterly)							
Jr. Level Engineer	40	hrs	$0	$0	$45	$0	$1,800
Senior Engineer	16	hrs	$0	$0	$80	$0	$1,280
Production:							
Word processing	12	hrs	$0	$0	$35	$0	$420
Technical Expert	6	hrs	$0	$0	$75	$0	$450
Editor	8	hrs	$0	$0	$60	$0	$480
CADD operator, 3 dwgs per report @ 8 hours per dwg	24	hrs	$0	$0	$40	$0	$960
Reproduction: 100 pgs @ 20 copies	2000	pg	$0.00	$0.10	$0.00	$0.00	$200
Shipping/binding: 20 reports	20	ea	$0	$20	$0	$0	$400
Total Report Cost:							**$5,990**
TOTAL LONG TERM MONITORING COSTS 8 Quarters							**$133,114**

Table C-1 (Continued)
Air Sparging Cost Alternative

TREATMENT SYSTEM O&M	Quantity	Unit	Subcontract	Unit Cost Material	Unit Cost Labor	Equipment	Total Cost
System Maintenance							
Technician, 8 hrs per month	96	hrs	$0	$0	$30	$0	$2,880
Project Manager, 2 hrs per month	96	hrs	$0	$0	$100	$0	$9,600
Electrician/Plumber, 4 hrs per year	4	hrs	$0	$0	$500	$0	$2,000
Utilities (Electric)							
Assume 15 kW*24 hr/day*365 day/yr= 131400KWh	131400	KWh	$0	$0.06	$0	$0	$7,884
Total Treatment System O&M (Annual)							**$22,364**

Table C-2
ORC Injection

Remedial Action Plan
Jet Engine Test Cell
Naval Air Station Cecil Field
Jacksonville, Florida

Estimator: MJJ
Checked By: [illegible]

COST SUMMARY TABLE (costs rounded to nearest $1000)

DIRECT COSTS		
Site Preparation		$3,000
Total ORC Injection		$354,000
TOTAL DIRECT COST		**$357,000**
INDIRECT COSTS		
Engineering and Design (10%)		$36,000
Contingency (10%)		$36,000
TOTAL INDIRECT COST		**$72,000**
Total Capital Costs (Direct + Indirect)		**$429,000**
MONITORING COSTS		
Health and Safety Plan for Monitoring Activities		$6,000
Sampling and analysis Plan (SAP) for Monitoring Activities		$8,000
Monitoring Costs (1st year costs only)		**$14,000**
Quarterly Groundwater Sampling Activities 4 Events		$36,000
Total Reporting Cost for 4 Sampling Events		$24,000
Monioring Costs, (2 year duration)		**$60,000**
Present worth of LTM (7%, 2 yrs)	($108,481)	$108,000
Assumption - Remediation duration will be two years,		
TOTAL COST		**$551,000**

Table C-2 (Continued)
ORC Cost Alternative

DIRECT COSTS	Quantity	Unit	Subcontract	Unit Cost Material	Labor	Equipment	Total Cost
Site Preparation							
Storage trailer	1	mo	$85	$0	$0	$0	$85
Pressure washer and water tank	1	mo	$0	$0	$0	$528	$528
ODCs(Plastic sheeting, drums, pumps, hoses, supplies,etc.)	1	ls	$0	$2,000	$0	$0	$2,000
Total Site Preparation							**$2,613**
ORC Injection (1st Application)							
Treatability Study	1	ls	$15,000	$0	$0	$0	$15,000
Direct Push Holes (mob/demob)	1	ls	$5,000	$0	$0	$0	$5,000
Direct Push Holes (108 injection locations)	30	day	$4,500	$0	$0	$0	$135,000
Inject ORC	10368	lb	$0	$8	$0	$0	$82,944
ORC Injection (2nd Application)							
Direct Push Holes (mob/demob)	1	ls	$5,000	$0	$0	$0	$5,000
Direct Push Holes (50 injection locations)	15	day	$4,500	$0	$0	$0	$67,500
Inject ORC	5184	lb	$0	$8	$0	$0	$41,472
Site restoration (paving, hydroseeding, etc.)	1	ls	$2,000	$0	$0	$0	$2,000
Total ORC Injection							**$353,916**
TOTAL DIRECT COSTS							**$356,529**

Unit Cost

Table C-2 (Continued)
ORC Cost Alternative

LONG TERM MONITORING	Quantity	Unit	Subcontract	Unit Cost Material	Labor	Equipment	Total Cost
Health and Safety Plan for Monitoring Activities							
Labor:							
H&S Supervisor	16	hrs	$0	$0	$60	$0	$960
Mid-level Geologist/Scientist	40	hrs	$0	$0	$45	$0	$1,800
Word Processor	16	hrs	$0	$0	$35	$0	$560
CADD	32	hrs	$0	$0	$40	$0	$1,280
Editor	8	hrs	$0	$0	$60	$0	$480
Copying: 50 pgs x 25 copies	1250	page	$0	$0.10	$0	$0	$125
Binding/shipping, 25 copies	25	ea	$0	$20	$0	$0	$500
Total HASP							**$5,705**
Sampling and analysis Plan (SAP) for Monitoring Activities							
Labor:							
Jr.-Level Geologist/Scientist	80	hrs	$0	$0	$45	$0	$3,600
Senior Geologist	16	hrs	$0	$0	$80	$0	$1,280
ODC's, Production Support (editing, copying, binders, etc.)							
Word Processor	16	hrs	$0	$0	$35	$0	$560
CADD	32	hrs	$0	$0	$40	$0	$1,280
Editor	8	hrs	$0	$0	$60	$0	$480
Copying: 50pgs x 25 copies	1250	page	$0	$0.10	$0	$0	$125
Binding/shipping, 25 copies	25	ea	$0	$20	$0	$0	$500
Total SAP							**$7,825**
Quarterly Groundwater Sampling Activities Per Event							
1 geologist & 1 technician per sampling event @ 10 hour days	40	hrs	$0	$0	$75	$0	$3,000
Handle IDW (1 geologist per sampling event)	4	hrs	$0	$0	$75	$0	$300
Lab analysis							
Volatile Organics, Method 8260, assume 10 wells, 2 QC samples	12	ea	$80	$0	$0	$0	$960
PAHs, Method 8310, assume 10 wells, 2 QC samples	12	ea	$135	$0	$0	$0	$1,620
TRPH (FLPRO), assume 10 wells, 2 QC samples	12	ea	$120	$0	$0	$0	$1,440
Expendables and equipment	1	ls	$300	$928	$0	$410	$1,638
Total Sampling Cost:							**$8,958**

Table C-2 (Continued)
ORC Cost Alternative

REPORTING	Quantity	Unit	Subcontract	Unit Cost Material	Labor	Equipment	Total Cost
Site Activities Report (Quarterly)							
Jr. Level Engineer	40	hrs	$0	$0	$45	$0	$1,800
Senior Engineer	16	hrs	$0	$0	$80	$0	$1,280
Production:							
Word processing	12	hrs	$0	$0	$35	$0	$420
Technical Expert	6	hrs	$0	$0	$75	$0	$450
Editor	8	hrs	$0	$0	$60	$0	$480
CADD operator, 3 dwgs per report @ 8 hours per dwg	24	hrs	$0	$0	$40	$0	$960
Reproduction: 100 pgs @ 20 copies	2000	pg	$0.00	$0.10	$0.00	$0.00	$200
Shipping/binding: 20 reports	20	ea	$0	$20	$0	$0	$400
Total Report Cost:							**$5,990**

APPENDIX D

AS DESIGN CALCULATIONS

Pressure Loss Air Sparging System
By: Mark Jonnet
Checked by: _____

Pressure Loss Calculation: Air Sparging Systems

Start with the pressure required to force out/evacuate the water column in the deeper air sparging well
Calculate fitting and line losses from farthest air spraging well location to the treatment plant
Within the treatment plant, include fittings and line losses

All piping outside the plant is Schedule 80 PVC
All piping inside the plant is Schedule 80 carbon steel
For the purposes of pressure loss, both are assumed identical

For all line losses and all fitting losses:

Crane manual (1942) is used (see attached copy)
ChemAire Product Guide & technical Manual (see attached copy)
Dwyer Flow Meters spec sheet (see attached copy)
American Industrial ASA Heat Exchanger (See attached copy)

Northern Plume

See "AS-02, 30 ft well, 2" diameter conveyance piping" Spreadsheet for pressure requirements

Southern Plume

See "AS-10, 30 ft well, 2" diameter conveyance piping" Spreadsheet for pressure requirements

The northern and southern plumes will be serviced by One blower that will require a 25 psig & 100 SCFM

	Run or L/D Ft	CFM	Available Pressure PSI	Pressure Loss or Required PSI	Reference
Blower		100	25		
2" Gate 100% open	1.2				Crane - 1942 Tech Paper 409
Heat Exchanger			24.5	0.5	American Industrial ACA 3362-3
2" Gate 100% open	1.2				Crane - 1942 Tech Paper 409
Pressure Indicator					
2" Gate 25% open	150				Crane - 1942 Tech Paper 409
Say 2-inch pipe 100 CFM 0.22 psi / 100 ft @ 25 psi	152.4		24	0.33	Crane -1988 Tech Paper 410 Schedule 40 Steel Pipe @ 60^{0}F Page B-15
From blower to Northern Plume		100 -> 60			
2" - 90^0 Elbow	4				Chem Aire tech paper
2" - 90^0 Elbow	4				Chem Aire tech paper
2" - Flow Thru Tee	2.7				Chem Aire tech paper
2" - Flow Thru Tee	2.7				Chem Aire tech paper
2" - Side Flow Tee	8.1				Chem Aire tech paper
2" - 90^0 Elbow	4				Chem Aire tech paper
2" - Butterfly Valve Gate 25% open	120				Crane - 1942 Tech Paper 409
Pipe Run	265				
Say 2-inch pipe 60 CFM 0.13 psi / 100 ft @ 24 psi	410.5		24	0.53	Crane -1988 Tech Paper 410 Schedule 40 Steel Pipe @ 60^{0}F Page B-15
		60 -> 10			
Pressure Regulator		10	19	5	Fisher-Rosemount 1stView
1/2" - hose	2.6				Chem Aire tech paper
1/2" Flow Indicator			17	2	Dwyer model RMC-123-SSV
1/2" - hose	1.7				Chem Aire tech paper
2" - Side Flow Tee with adaptor	12				Chem Aire tech paper
Head	25			8.6	Static Pressure of Water
Screen			14	3	Profession Judgement
Say 1/2 hose 10 CFM 0.15 psi / 100 ft @ 14 psi	41.3		14	0.062	Crane -1988 Tech Paper 410 Schedule 40 Steel Pipe @ 60^{0}F Page B-15
		10			
				20	Total Pressure Required

	Run or L/D Ft	CFM	Available Pressure PSI	Pressure Loss or Required PSI	Reference
Blower		100	25		
2" Gate 100% open	1.2				Crane - 1942 Tech Paper 409
Heat Exchanger			24.5	0.5	American Industrial ACA 3362-3
2" Gate 100% open	1.2				Crane - 1942 Tech Paper 409
Pressure Indicator					
2" Gate 25% open	150				Crane - 1942 Tech Paper 409
Say 2-inch pipe 100 CFM 0.22 psi / 100 ft @ 25 psi	152.4		24	0.33	Crane -1988 Tech Paper 410 Schedule 40 Steel Pipe @ 60^{0}F Page B-15
From blower to Northern Plume		100 -> 40			
2" - 90^0 Elbow	4				Chem Aire tech paper
2" - 90^0 Elbow	4				Chem Aire tech paper
2" - Side Flow Tee	8.1				Chem Aire tech paper
2" - Flow Thru Tee	2.7				Chem Aire tech paper
2" - 90^0 Elbow	4				Chem Aire tech paper
2" - Butterfly Valve Gate 25% open	120				Crane - 1942 Tech Paper 409
Pipe Run	85				
Say 2-inch pipe 60 CFM 0.06 psi / 100 ft @ 24 psi	227.8		24	0.14	Crane -1988 Tech Paper 410 Schedule 40 Steel Pipe @ 60^{0}F Page B-15
		40 -> 10			
Pressure Regulator		10	19	5	Fisher-Rosemount 1stView
1/2" - hose	2.6				Chem Aire tech paper
1/2" Flow Indicator			17	2	Dwyer model RMC-123-SSV
1/2" - hose	1.7				Chem Aire tech paper
2" - Side Flow Tee with adaptor	12				Chem Aire tech paper
Head	25			8.6	Static Pressure of Water
Screen			14	3	Profession Judgement
Say 1/2 hose 10 CFM 0.07 psi / 100 ft @ 14 psi	41.3		14	0.030	Crane -1988 Tech Paper 410 Schedule 40 Steel Pipe @ 60^{0}F Page B-15
		10			
				20	Total Pressure Required

APPENDIX E

AS EQUIPMENT SPECIFICATIONS

Fliteway Technologies, Inc.
P.O. Box 108
6901 Industrial Loop
Greendale, WI 53129

Fax Cover Sheet

DATE:	August 19, 2002	**TIME:**	12:22 PM
TO:	Tetra Tech Mark Jonnet	**PHONE:** **FAX:**	412-921-7090 412-921-4040
FROM:	William E. Diehl	**PHONE:** **FAX:**	414-423-5600 414-423-9007
RE:	**Q12413 Rev 1**		
CC:			

Number of pages including cover sheet: [3]

Message

Mark,

Please call if you have any questions

Bill Diehl

Fliteway Technologies, Inc.
6801 Industrial Loop • P.O. Box 108 • Greendale, WI 53129
(414) 423-8600 • 1-800-238-3580 • FAX (414) 423-9007

August 19, 2002

Tetra Tech
Pittsburg, PA

Q12413 Rev 1

Attn: Mark Jonnet
Reference: Quotation for Air Sparge Unit for Florida

Dear Mark,

We are pleased to provide our quotation on the following Air Sparging System for your project.

Air Sparging System
Fliteway Model FS20N3-DTLF 250 (86 DBA) rated for 150 SCFM at up to 25 PSIG

- 20 HP TEFC C Face 208-230 / 460 VAC Three Phase Motor
- Becker DTLF 250 Oilless Rotary Vane Pump.
- Built in internal Carbon Dust Inlet and Discharge Filters
- Mini magnahelic to monitor differential pressure across filter element
- Built in Pressure Regulating Valve
- External Discharge Silencer
- Relief Valve
- Air Bleed Valve with silencer
- All iron pipe and fittings
- American Industrial Model ACA-3362-3 Low Pressure Drop Heat Exchanger
  - 1 HP TEFC Motor
  (Sized for discharge temperature within 15 degrees of ambient Temperature)
- Discharge Check Valve
- Discharge Pressure and Temperature Gauges before and after heat exchanger
- High Temperature Shutdown Switch
- Discharge Pressure Switch
- Steel Base Frame with Forklift Pockets

$ 13,312

- Steel Sound Enclosure surrounding Blower and Motor with:
  - TEFC Vent Fan
  - One Layer of 2" Convoluted Polyether Noise Absorption Foam

$ 1,895

- **NEMA 4 Control Panel (Mounted and Tested)**

  - Lockable NEMA 4 Panel with inner panel
  - Fused Disconnect
  - Motor Starter and overload Protectionfor:
    - 20 HP Air Sparge Motor
    - 1 HP Heat Exchanger Motor
  - Two (2) HOA Switches
    - Air Sparge
    - Heat Exchanger
  - Control Transformer
  - Relay Logic
  - Alarm Lights
    - Air Sparge Motor Failure
    - High Discharge Temperature
    - High Discharge Pressure
  - 24 Hour Timer
  - Weekly Timer
  - Alarm Reset
  - Surge Protection
  - Lightning Protection
  - Phase Monitor
  - UL Certification

$ 5,802

Total $ 21,009

6% Florida State Sales Tax $ 1,261

Estimated Freight $ 1,200

Quotation Valid for 30 Days

Pricing: FOB Greendale, WI (Applicable sales taxes if any not included)

Terms: Net 30 days (1 1/2 % per month finance charge on unpaid balance over 30 days).

Delivery: 6-7 weeks from date written order.

Sincerely,

William E. Diehl
President

Regulator
R21

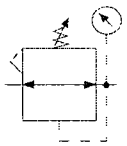

Relieving

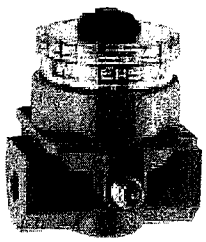

R21-02-000

Dial-Air™

Dial-Air™ regulators feature a transparent pressure-calibrated, non-rising adjustment dial which allows one to dial any secondary pressure. If a gauge is required for monitoring reasons, two 1/4" gauge ports are provided; however, these are usually used for additional outlet ports. In less than a 270° turn the full secondary pressure range can be dialed. This feature is particularly advantageous if secondary pressure must be changed frequently. The transparent dial can be color or graphics coded for easy reference to required pressure changes. Dial-Air™ regulators can be mounted in any position so dial face is always visible. All Dial-Air™ units have a slight constant air bleed: 0.05 scfm (0,024 dm³/s), 100 psig (7 bar) inlet and 90 psig (6 bar) outlet.

Features

- Balanced valve design.
- Non-rising pressure adjusting dial.
- High-relief flow (3/16" relief orifice).
- Two 1/4" NPT gauge ports, usually used for additional outlets.
- Piston operated.

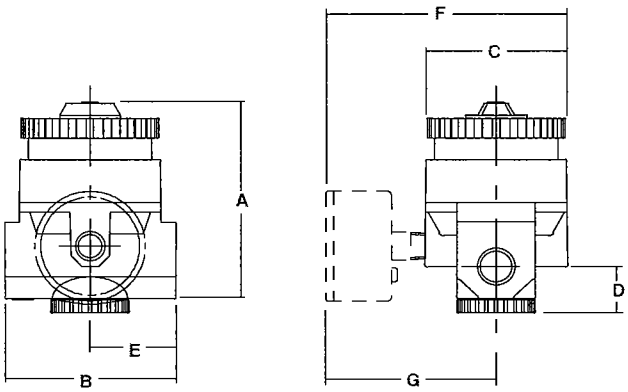

Specifications

Flow Capacity*	1/4	117 scfm (55 dm³/s)
	3/8	180 scfm (85 dm³/s)
	1/2	195 scfm (92 dm³/s)
	3/4	220 scfm (103 dm³/s)
Maximum Operating Temperature		175°F (79°C)
Maximum Supply Pressure		300 psig (21 bar)
Adjusting Range Pressure		0-40 psig (0-2,8 bar) 0-160 psig (0-11 bar)
Bleed Rate		0.05 scfm (0,024 bar)
Port Size	NPT/BSPP-G	1/4, 3/8, 1/2, 3/4
Gauge Port (2 ea.)	NPT/BSPT-Rc	1/4
Weight	lb. (kg)	2.3 (1,04)

*Inlet pressure 100 psig (7 bar). Secondary pressure (1/4, 1/2 & 3/4) 90 psig (6 bar); (3/8) 80 psig (5,5 bar).

Materials of Construction

Body	Zinc
Bonnet	Zinc/Brass
Piston	Acetal
Valve Assembly	Brass/Nitrile/Acetal
Springs	Steel
Seals	Nitrile

Dimensions

Models	Inches mm	A	B	C	D	E	F	G
Standard Unit		4.1	3.2	2.6	.95	1.6	—	—
R21-XX-000		104	81	66	24	41	—	—
With Gauge (order separately)		4.1	3.2	2.6	.95	1.6	4.3	2.70
R21-XX-XXX		104	81	66	24	41	109	68.5

Replacement Kits

Adjustment Dial Knob RRP-16-024-000
Conversion Kit (Series A to Series B) RRP-95-766
O-ring, Repair Kit GRP-95-260
Piston, Bottom and O-ring seal RRP-95-192
Spring, Regulating, Belleville Washer
0-40 psig (0-2,8 bar) RRP-95-906
Spring, Regulating, Belleville Washer
0-160 psig (0-11 bar) RRP-95-905
Valve, Main with U-Cup Seal RRP-95-151
Valve, Main with U-Cup Seal and Bottom Plug
(Nitrile Elastomers) RRP-95-914
Valve, Main with U-Cup Seal and Bottom Plug
(Fluorocarbon Elastomers) RRP-95-915
Valve, Pilot with O-ring and valve spring RRP-96-934

Accessories

Wall Mounting Bracket, Gauge Port Adapter, 1/4 NPT RRP-95-590
Gauge, Pressure, 0-60 psig (0-4 bar), 2 Dial Face
1/4 NPT, CBM RRP-95-230
Gauge, Pressure, 0-160 psig (0-11 bar), 2 Dial Face
1/4 NPT, CBM GRP-95-229
Tamper Resistant Kit RRP-95-585
Cover Kit (Remote)—Bonnet and Nitrile
O-ring (Series B) RRP-95-910
Cover Kit (Remote)—Bonnet and Fluorocarbon
O-ring (Series B) RRP-95-911
O-ring, Repair Kit GRP-95-260
Piston, Bottom and O-ring seal RRP-95-192
Valve, Main (Remote) with U-Cup Seal RRP-96-952
Valve, Main (Remote) with U-cup seal and
bottom plug—(nitrile elastomers) RRP-95-912
Valve, Main (Remote) with U-cup seal and
bottom plug—(fluorocarbon elastomers) RRP-95-913

For best performance, regulated pressure should always be set by increasing the pressure up to the desired setting.

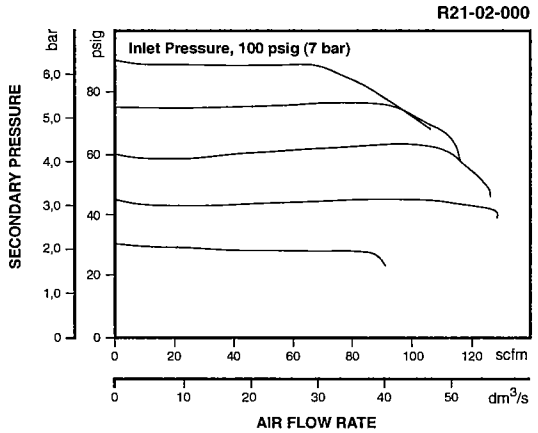

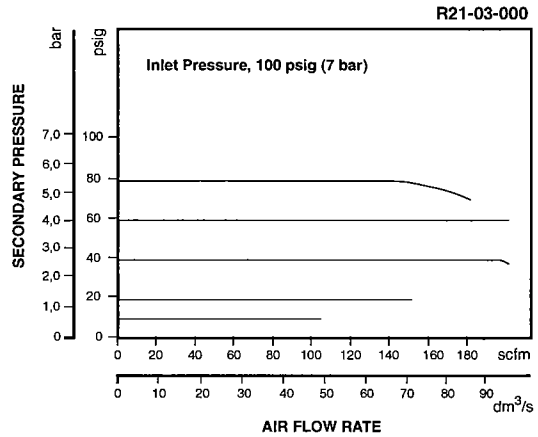

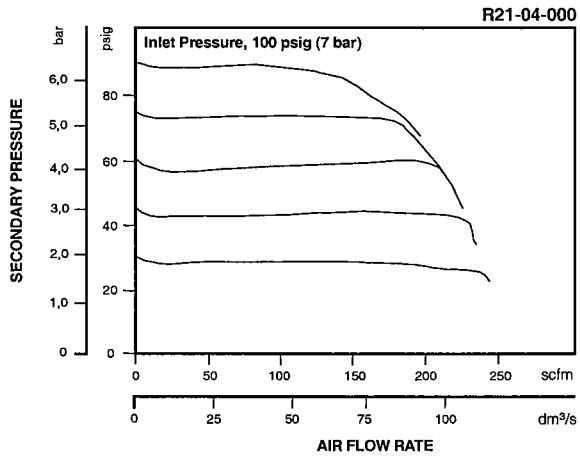

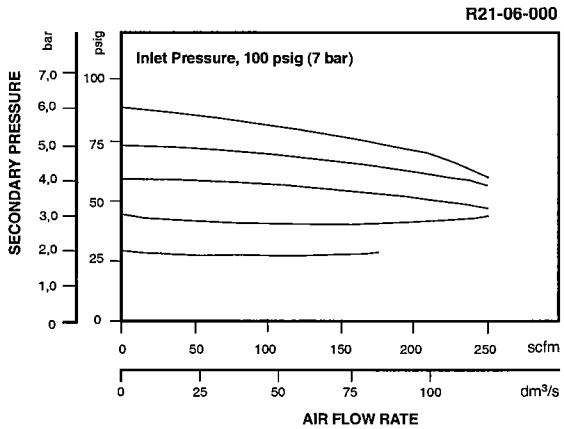

Ordering Information

Model Type	Port Size	High Flow 5-160 psig (0,4-11 bar)	Low Pressure 2-40 psig (0,1-3 bar)	Remote 5-160 psig (0,4-11 bar)
Relieving	1/4	R21-02-000	R21-02-L00	R21-02-R00
	3/8	R21-03-000	R21-03-L00	R21-03-R00
	1/2	R21-04-000	R21-04-L00	R21-04-R00
	3/4	R21-06-000	R21-06-L00	R21-06-R00

Options - To order an option supplied with the unit model, add the appropriate coded suffix letter in position 6, 7, 8 of the model number.
For additional information on accessories and repair kits refer to pages 326 through 334.

APPENDIX F

RAP CHECKLIST

Remedial Action Plan Summary

DEP Form # 62-770.900(4)
Form Title: Remedial Action Plan Summary
Effective Date: September 23, 1997

Site Name Jet Engine Test Cell
Location NAS Cecil Field, Jacksonville, FL
Media Contaminated: ☑ Groundwater ☑ Soil

FDEP Facility ID No. _____
Current Date 8 / 20 / 2
Date of Last GW Analysis 6 / 13 / 1

Type(s) of Product(s) Discharged:
☐ Gasoline Analytical Group
☑ Kerosene Analytical Group (Diesel)
- Estimated Petroleum Mass (lbs):
  Groundwater 64
  Saturated Zone Soil 2048
  Vadose Zone Soil _____
- Area of Plume 19,000 (ft^2)
- Thickness of Plume 20 (ft)

Groundwater Recovery and Specifications:
- No. of Recovery Wells _____
  ☐ Vertical ☐ Horizontal
- Design Flow Rate/Well _____ (gpm)
- Total Flow Rate _____ (gpm)
- Hydraulic Conductivity _____ (ft/day)
- Recovery Well Screen Interval _____ (ft)
- Depth to Groundwater _____ (ft)

Method of Groundwater Remediation:
☐ Pump-and-Treat
☐ Air Stripper
☐ Low Profile ☐ Packed Tower
☐ Diffused Aerator
☐ Activated Carbon
☐ Primary Treatment ☐ Polishing
☑ In Situ Air Sparging
- No. of Sparge Points 10
  ☑ Vertical ☐ Horizontal
- Pressure 15 (psi)
- Design Air Flow Rate/Well 10 (cfm)
- Total Air Flow Rate 100 (cfm)

☐ Biosparging
- No. of Sparge Points _____
  ☐ Vertical ☐ Horizontal
- Design Air Flow Rate/Well _____ (cfm)

☐ Bioremediation
☐ In Situ ☐ Ex Situ
☐ Other _____

Method of Groundwater Disposal:
☐ Infiltration Gallery ☐ Sanitary Sewer
☐ Surface Discharge/NPDES ☐ Injection Well
☐ Other _____

Free Product Present: ☐ Yes ☑ No
- Estimated Volume _____ (gal)
- Maximum Thickness _____ (in)
- Method of Recovery (check all that apply):
  ☐ Manual Bailing ☐ Skimming Pump
  ☐ Other _____

Method of Soil Remediation:
☑ Excavation
Volume to be Excavated 90 (yds^3)
☐ Thermal Treatment ☐ Land Farming On Site
☑ Landfill ☐ Bioremediation
☐ Other _____

☐ Vapor Extraction System (VES)
- No. of Venting Wells _____
  ☐ Vertical ☐ Horizontal
- VES - Applied Vacuum _____ (wg)
- Design Air Flow Rate _____ (cfm)
- Design Radius of Influence _____ (ft)
- Air Emissions Treatment
  ☐ Thermal Oxidizer ☐ Catalytic Converter
  ☐ Carbon ☐ Other _____

☐ Soil Bioventing
- No. of Venting Wells _____
  ☐ Vertical ☐ Horizontal
- Design Air Flow Rate _____ (cfm)

☐ In Situ Bioremediation
☐ Other _____

Natural Attenuation:
- Method of Evaluation
  ☐ Rule 62-770.690(1)(e), F.A.C.
  ☐ Rule 62-770.690(1)(f), F.A.C.

Estimated Time of Cleanup: 1460 (days)
- Method of Estimation
  ☐ Pore Volumes (no. of pore vols. = _____)
  ☑ Exponential Decay (Decay Rate) 0.01 (day^{-1})
  ☐ Groundwater Model
  ☐ Other _____

Estimated Cost:
- Est. Capital Cost (incl. install.) $ 93,000.00
- Est. O & M Cost (per year) $ 79,000.00
- Est. Total Cleanup Cost $ 376,000.00