N60200.AR.004371
NAS CECIL FIELD, FL
5090.3a

PILOT STUDY WORK PLAN FOR IN SITU BIOREMEDIATION AT OPERABLE UNIT 9 (OU 9) SITE 59 BUILDINGS 324/1845 AREA NAS CECIL FIELD FL

1/1/2006

TETRA TECH NUS INC

Comprehensive Long-term Environmental Action Navy

CONTRACT NUMBER N62467-94-D-0888

Rev. 1
01/06

Pilot Study Work Plan
for
In Situ Bioremediation
at
Operable Unit 9
Site 59, Buildings 324/1845 Area

Naval Air Station Cecil Field
Jacksonville, Florida

Contract Task Order 0078

January 2006

Southern Division
Naval Facilities Engineering Command
2155 Eagle Drive
North Charleston, South Carolina 29406

TETRA TECH NUS, Inc.

060507/P

PILOT STUDY WORK PLAN
FOR
IN SITU BIOREMEDIATION
AT
OPERABLE UNIT 9
SITE 59, BUILDINGS 324/1845 AREA

NAVAL AIR STATION CECIL FIELD
JACKSONVILLE, FLORIDA

COMPREHENSIVE LONG-TERM
ENVIRONMENTAL ACTION NAVY (CLEAN) CONTRACT

Submitted to:
Southern Division
Naval Facilities Engineering Command
2155 Eagle Drive
North Charleston, South Carolina 29406

Submitted by:
Tetra Tech NUS, Inc.
661 Andersen Drive
Foster Plaza 7
Pittsburgh, Pennsylvania 15220

CONTRACT NUMBER N62467-94-D-0888
CONTRACT TASK ORDER 0078

JANUARY 2006

PREPARED UNDER THE SUPERVISION OF:

MARK SPERANZA, P.E.
TASK ORDER MANAGER
TETRA TECH NUS, INC.
PITTSBURGH, PENNSYLVANIA

APPROVED FOR SUBMITTAL BY:

DEBRA M. HUMBERT
PROGRAM MANAGER
TETRA TECH NUS, INC.
PITTSBURGH, PENNSYLVANIA

This document that describes the Pilot Study Work Plan for In Situ Bioremediation for Operable Unit 9, Site 59, at Naval Air Station Cecil Field, Jacksonville, Florida, has been prepared under the direction of a Florida-registered professional engineer. The work and professional opinions rendered in this report were conducted or developed in accordance with commonly accepted procedures consistent with applicable standards of practice.

Mark P. Speranza

Mark P. Speranza, P.E.
Professional Engineer No. PE0050304

Date: 1/10/06

Mark P. Speranza

TABLE OF CONTENTS

SECTION **PAGE NO.**

PROFESSIONAL ENGINEER AUTHORIZATION iii

ACRONYMS viii

1.0 INTRODUCTION 1-1
1.1 PURPOSE OF REPORT 1-1
1.2 SCOPE AND OBJECTIVE 1-1
1.3 SITE BACKGROUND 1-1
1.4 DOCUMENT ORGANIZATION 1-2

2.0 ENHANCED IN SITU ANAEROBIC REDUCTIVE DECHLORINATION 2-1
2.1 DECHLORINATION OF CHLORINATED VOC 2-1
2.2 BIODEGRADATION OF CHLORINATED VOC 2-1
2.3 GROUNDWATER RECIRCULATION 2-2
2.4 BIOREMEDIATION INDICATORS 2-2

3.0 PILOT STUDY AREA BASELINE CONDITIONS 3-1
3.1 GROUNDWATER CONTAMINATION 3-1
3.2 HYDROGEOLOGY 3-1
3.3 NATURAL ATTENTUATION PARAMETERS 3-2

4.0 PILOT STUDY RATIONALE 4-1
4.1 RECIRCULATION SYSTEM LAYOUT 4-1
4.1.1 Injection / Extraction Wells 4-2
4.1.2 Monitoring Wells 4-2
4.1.3 Recirculation Pumping Rate and Groundwater Zone of Capture 4-3
4.2 RECIRCULATION SYSTEM 4-3
4.2.1 Chemical Amendments 4-4
4.2.2 Microbial Inoculum 4-4
4.3 PILOT SCALE SAMPLING 4-5

5.0 FIELD OPERATIONS 5-1
5.1 MOBILIZATION/DEMOBILIZATION 5-1
5.2 INJECTION / EXTRACTION AND MONITORING WELL INSTALLATION 5-1
5.3 GROUNDWATER RECIRCULATION SYSTEM 5-2
5.3.1 System Construction 5-3
5.3.2 System Startup and Operation 5-3
5.3.3 Shutdown and Restart 5-7
5.4 DECONTAMINATION 5-8
5.5 INVESTIGATION-DERIVED WASTE HANDLING 5-8
5.6 SURVEYING 5-8

TABLE OF CONTENTS (Continued)

SECTION **PAGE NO.**

6.0 PILOT STUDY SAMPLING PROCEDURES 6-1
6.1 SAMPLING PROCEDURES 6-1
6.1.2 Groundwater Sampling 6-1
6.1.3 QA/QC Samples 6-2
6.2 SAMPLE HANDLING 6-2
6.2.1 Field Documentation 6-2
6.2.2 Sample Nomenclature 6-3
6.2.3 Sample Containers, Preservatives, and Holding Times 6-3
6.2.4 Sample Packaging and Shipping 6-3
6.3 SAMPLE CUSTODY 6-3

REFERENCES R-1

APPENDICES

A MSDS
B PUMPING RATE AND GROUNDWATER ZONE OF CAPTURE
C CALCULATIONS
D pH STUDY DATA AND RESULTS
E EQUIPMENT LIST AND CUT SHEETS

TABLES

NUMBER

6-1 Sampling and Analysis Summary
6-2 Groundwater Field Analyses, Biological Activity Indicators
6-3 Frequency and Type of Field Quality Assurance/Quality Control Samples
6-4 Summary of Fixed-Base Laboratory Analyses, Methodologies, Bottle Requirements, Preservation Requirements, and Holding Times

FIGURES

NUMBER

1-1 Site Location Map
3-1 TCE Isoconcentration Map
3-2 Groundwater Potentiometric Surface Contour Map
3-3 Site 59 Subsurface Cross Section
4-1 Pilot System Site Plan
4-2 Extraction Well Detail
4-3 Injection Well Detail
4-4 Piping and Implementation Diagram
4-5 General Schedule of Activities

ACRONYMS

bgs	Below ground surface
BRAC	Base Realignment and Closure
CERCLA	Comprehensive Environmental Response, Compensation, and Liability Act
CLEAN	Comprehensive Long-Term Environmental Action Navy
CSSI	Compound Specific Stable Isotope
CTO	Contract Task Order
DHC	*Dehalococcoides*
DO	Dissolved Oxygen
DCE	Dichloroethene
FAC	Florida Adminstrative Code
FDEP	Florida Department of Environmental Protection
FOL	Field Operations Leader
GCTL	Groundwater cleanup target level
gpm	Gallons per minute
ID	Inside diameter
IDW	Investigation-derived waste
IR	Installation Restoration
MNA	Monitored Natural Attenuation
MSDS	Material Safety Data Sheet
mV	Millivolts
NAS	Naval Air Station
NAVFAC EFD South	Naval Facilities Engineering Field Division South
NGVD	National Geodetic Vertical Datum
ORP	Oxidation-reduction potential
OU	Operable Unit
PCE	Tetrachloroethene
PCR	polymerase chain reaction
PVC	Polyvinyl chloride
QA/QC	Quality assurance/quality control
RI	Remedial Investigation
ROI	Radius of Influence
SOP	Standard Operating Procedure
SVOC	Semivolatile organc compound
TCE	Trichloroethene
TOC	Total organic carbon
TtNUS	Tetra Tech NUS, Inc.

U.S. EPA	United States Environmental Protection Agency
VOC	Volatile Organic Compound
VC	Vinyl chloride

1.0 INTRODUCTION

1.1 PURPOSE OF REPORT

This Pilot Study Work Plan for Naval Air Station (NAS) Cecil Field, Jacksonville, Florida, has been prepared by Tetra Tech NUS, Inc., (TtNUS) for Naval Facilities Engineering Field Division South Command (NAVFAC EFD SOUTH) under the Navy Comprehensive Long-Term Environmental Action Navy (CLEAN) Program, Contract Number N62467-94-D-0888, Contract Task Order (CTO) 0078. This Work Plan describes a pilot study that will be conducted to determine the feasibility and effectiveness of in situ bioremediation to treat a contaminated groundwater plume at Site 59.

1.2 SCOPE AND OBJECTIVE

Previous groundwater sampling conducted at Site 59 identified trichloroethene (TCE) concentrations greater than its Florida Department of Environmental Protection (FDEP) Groundwater Cleanup Target Levels (GCTL) and monitored natural attenuation (MNA) default values. The purpose of this Pilot Study Work Plan is to organize a treatability study to determine the effectiveness of an in situ remediation technology at Site 59.

Sodium lactate and sodium bicarbonate will be injected into the subsurface of Site 59 via a groundwater recirculation application to promote anaerobic degradation of the identified contaminant. Once appropriate geochemical conditions of the treatment zone are established, a microbial inoculum will be injected to enhance in situ bioremediation. The pilot study results will be evaluated and the information will be used to support the preparation of the Feasibility Study.

1.3 SITE BACKGROUND

Groundwater sampling conducted around Buildings 324/1845 under the Base Realignment and Closure (BRAC) program identified TCE contamination, and the area was designated Site 59 under Operable Unit (OU) 9 (see Figure 1-1). Site 59 is being investigated under the Installation Restoration (IR) program as governed by the Comprehensive Environmental Response, Compensation, and Liability Act (CERCLA).

Building 324 was built in 1989 and used as the Engine Maintenance Shack primarily by a Navy subcontractor. Past investigations at this site revealed no evidence of contamination. A recent due diligence investigation revealed evidence of primarily TCE contaminants with little to no indication of degradation products within the groundwater.

Currently, a Remedial Investigation (RI) is being conducted at Site 59 that will provide more information on the nature and extent of contamination.

1.4 DOCUMENT ORGANIZATION

This Work Plan includes site-specific information to be used for the pilot study at Site 59 at Cecil Field. Section 1.0 is the introduction to this site-specific Work Plan and describes the purpose of the document, outlines the scope and objectives of the work, summarizes Site 59 background information, and describes the document organization. Section 2.0 is a brief description of the intended remediation technologies. Section 3.0 describes the baseline conditions of the site and the hydrogeology of Site 59. Section 4.0 develops the rationale for the proposed pilot study. Section 5.0 and 6.0 discuss field implementation and sampling procedures, respectively.

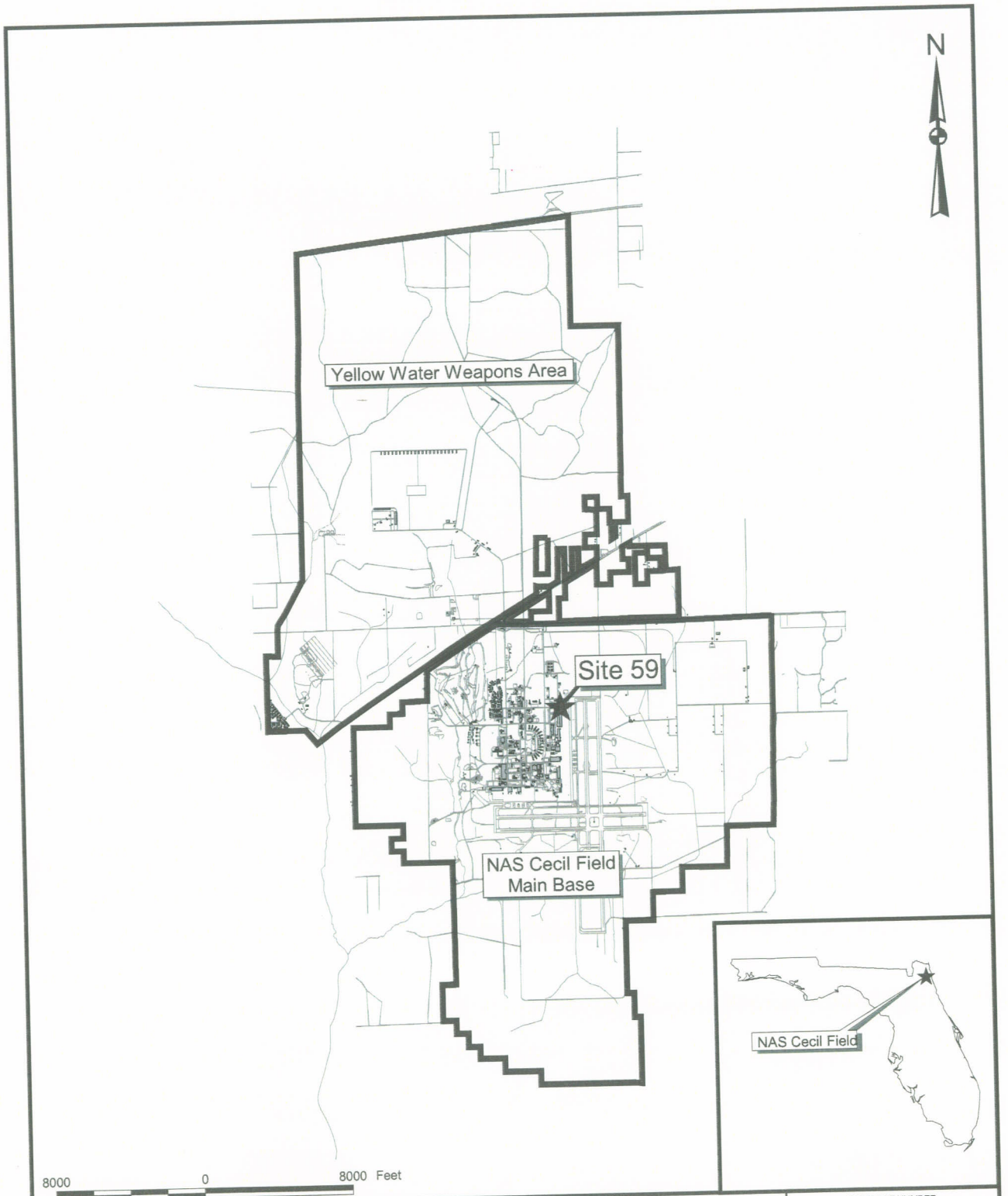

DRAWN BY MJJ	DATE 30Jun05	GENERAL LOCATION MAP PILOT STUDY WORK PLAN OPERABLE UNIT 9, SITE 59 NAVAL AIR STATION CECIL FIELD JACKSONVILLE, FLORIDA	CONTRACT NUMBER 0039
CHECKED BY	DATE		APPROVED BY DATE 1/10/06
COST/SCHEDULE-AREA			APPROVED BY DATE
SCALE AS NOTED	NAVFAC		DRAWING NO. FIGURE 1-1 REV 0

P:\GIS\NAS_CecilField\Site-59_20050616.apr 16June05 MJJ Layout05

2.0 ENHANCED IN SITU ANAEROBIC REDUCTIVE DECHLORINATION

This section provides a brief summary of technology used in enhanced in situ anaerobic reductive dechlorination for chlorinated VOCs. It describes how the introduction of additional electron donors with the appropriate bacteria can stimulate or accelerate the reductive dechlorination process.

2.1 DECHLORINATION OF CHLORINATED VOC

Reductive dechlorination is one of several processes by which chlorinated VOCs are transformed to environmentally innocuous compounds. It is widely recognized that in the presence of hydrogen, TCE (C_2HCl_3), can be reduced to dichloroethene (DCE) ($C_2H_2Cl_2$). While various DCE isomers (e.g., 1,1-DCE, cis-1,2-DCE, and trans-1,2-DCE) can be produced, it is well documented that cis-1,2-DCE is the most common degradation product of TCE. DCE can then be reduced to vinyl chloride (VC) (C_2H_3Cl), which, in turn, can be reduced to ethene (C_2H_4) and potentially ethane (C_2H_6), or via mineralization to carbon dioxide (CO_2), water (H_2O), and chloride ions (Cl^-).

2.2 BIODEGRADATION OF CHLORINATED VOC

In the presence of the appropriate bacteria, a suitable electron donor (e.g., hydrogen), and favorable geochemical conditions, a microbial dechlorination can occur in the subsurface. This rigorously studied microbial process occurs under anaerobic (oxygen-deficient) conditions where organic carbon ferments and produces hydrogen.

One of the requirements for in situ reductive dechlorination is the presence of the appropriate bacteria. Without the appropriate bacteria, complete in situ reductive dechlorination will not occur. It is widely recognized that the reduction of TCE may stall at DCE because of a lack of the specific bacteria stain *Dehalococcoides*. *Dehalococcoides* bacteria and various strains are thought to be the only bacteria to successfully complete reductive dechlorination of chlorinated solvents. In response to DCE stall, many studies have since shown that DCE stall can be avoided by the injection of a *Dehalococcoides* bacteria inoculum to the bioremediation area.

Another requirement for in situ reductive dechlorination is the presence of a suitable electron donor. This electron donor can come from natural organic carbon or anthropogenic carbon sources such as hydrocarbon contaminants (e.g., benzene, toluene). One substrate that has been used as a suitable electron donor is lactate, which is a soluble electron donor. Lactate dissolves in water and is typically used quickly by indigenous microorganisms, primarily bacteria, which metabolize the lactic acid and produce hydrogen. An advantage of soluble electron donors is that delivery and distribution is more

easily achieved in a heterogeneous environment. Also, injection from a given point can cover a larger area than with slow-release electron donors. The disadvantage of soluble electron donors is that they are generally consumed within 1 to 2 months.

The last requirement for in situ reductive dechlorination is favorable anaerobic geochemical conditions. One of the most important geochemical parameters is pH. The microorganisms that degrade the injected carbon substrates and produce hydrogen essential for reductive dechlorination most efficiently grow and reproduce in a pH range of 6 to 8. If natural pH is low, sodium bicarbonate addition can increase the pH of an aquifer within a preferred range. It can also add a buffering capacity to the aquifer to resist future pH change, which can be very useful because typical carbon substrates are organic acids (lactic acid) and microbial processes reduce the pH.

2.3 GROUNDWATER RECIRCULATION

Groundwater recirculation is an application that enables the natural flow rate of groundwater to be increased, enhances the distribution of amendments, and increases the overall rate of bioremediation. It can be cost effective in areas where the groundwater flow rate is low. Typically an extraction well is located downgradient of the contaminated groundwater plume to be treated and an injection well is located upgradient of the area to be treated. Groundwater is extracted from the extraction well and injected into the injection well to enhance groundwater flow. Depending on the rates of injection and extraction, the flow of the groundwater within the area of concern can be greatly increased. Increased groundwater flow allows the rate-limiting process of contaminant mass transport to occur more quickly.

Groundwater recirculation is also thought to more thoroughly capture groundwater within an area of contamination than by relying solely on natural groundwater flow. Using modeling techniques, contaminated subsurface geological conditions, and the injection and extraction rates, an approximate “area of capture” can be determined.

2.4 BIOREMEDIATION INDICATORS

There are several lines of evidence by which biodegradation processes can be measured. Because biodegradation processes in natural attenuation are the same as in enhanced bioremediation, similar measures of performance can be used to demonstrate whether enhanced bioremediation is effectively reducing contamination. The first line of evidence is to demonstrate a trend of decreasing contaminant mass and/or concentration. More specifically, demonstrating a decrease of the parent compounds [tetrachloroethene (PCE), TCE] coupled with the generation or increase of daughter or breakdown products (cis-1,2-DCE, VC, ethene, etc.) is useful. It is important to note that because dechlorination

occurs sequentially, dechlorination of TCE may result in a temporary increase, then decrease, of the various daughter products.

A secondary line of evidence includes the use of geochemistry data to indirectly illustrate that biodegradation is occurring. Natural attenuation (i.e., geochemical) parameters are generally used to evaluate the suitability of geochemical conditions for biodegradation and to determine if bioremediation is occurring. The complex relationship among many of these parameters is described in the following sections.

Dissolved Oxygen: Dissolved oxygen (DO) acts as a primary substrate or co-substrate during the initial stages of metabolism. For chlorinated hydrocarbon degradation, anaerobic pathways are more efficient. If DO concentrations are greater than 0.5 to 1.0 mg/L, anaerobic bacteria cannot exist and reductive dechlorination will not occur.

Nitrate/Nitrite: After DO has been depleted through aerobic respiration, anaerobes will utilize nitrate (NO_3^-) as an electron acceptor to anaerobically degrade hydrocarbons (denitrification). This process reduces nitrate to nitrite (NO_2) and generates carbon dioxide.

Dissolved Manganese: After DO and nitrate have been depleted, anaerobic microbes will utilize manganese (Mn^{4+}) as an electron acceptor to anaerobically degrade hydrocarbons, generating manganese (Mn^{2+}) and carbon dioxide.

Ferric Iron/Ferrous Iron: After DO, nitrate, and manganese reduction, anaerobic microbes will utilize ferric iron (Fe^{3+}) as an electron acceptor (iron reduction), generating ferrous iron (Fe^{2+}) and carbon dioxide. Ferric iron is not typically analyzed, thus, the presence or increase in concentration of ferrous iron (Fe^{2+}) and carbon dioxide are indicators of iron reduction.

Sulfate/Sulfide: After dissolved oxygen, nitrate, manganese, and ferric iron have been utilized, anaerobic microbes will utilize sulfate (SO_4^{2-}) as an electron acceptor, resulting in sulfide and carbon dioxide increases. Sulfate reduction, along with methanogenesis, is one of the most important reduction pathways indicating conditions favorable for biodegradation of chlorinated hydrocarbons. Sulfide can be present in many forms, the three primary forms being the sulfide ion (S^{2-}) or dissolved hydrogen sulfide as either H_2S or HS^-.

Phosphate: Similar in mechanism to sulfate reduction (but to a lesser degree), phosphate (PO_4^{3-}) reduction is an anaerobic biodegradation process whereby bacteria can use phosphate as an electron acceptor. Phosphate, along with nitrogen, are also regarded as nutrients for biodegradation.

Dissolved Carbon Dioxide: Methanogenesis occurs after oxygen, nitrate, manganese, ferric iron, and sulfate have been utilized. It is one of the most important reduction pathways responsible for chlorinated VOC degradation. During methanogenesis, bacteria utilize carbon dioxide as an electron acceptor, generating methane as a byproduct. Carbon dioxide is produced by every terminal electron acceptor process.

Dissolved Methane: Because methane is not a chemical component of solvents, its presence at concentrations greater than background provides strong evidence of methanogenic fermentation (and carbon dioxide utilization). Background concentrations of methane are important because some natural sources of methane exist.

Dissolved Hydrogen: Hydrogen is produced as a result of fermentation of organic carbon. Hydrogen is then utilized by respiratory microbes such as nitrate reducers, iron reducers, sulfate reducers, and methane producers. Each microbe utilizes hydrogen more or less efficiently, leading to either a buildup or a decrease of hydrogen concentration. The hydrogen concentration therefore can provide an indication of the reduction process that is most prevalent in the subsurface at any one location.

Dissolved Ethene/Ethane: As discussed earlier, ethene and possibly ethane signify the final degradation step of chlorinated ethenes. Concentrations of ethene greater than 0.01 mg/L and ethane greater than 0.1 mg/L provide strong evidence of such degradation.

Chloride: Chloride concentrations are used to evaluate biodegradation because chloride is released into groundwater during dechlorination of chlorinated VOCs. Therefore, an increase in chloride concentration in the downgradient direction is direct evidence of dechlorination.

Oxidation-Reduction Potential: The oxidation-reduction potential (ORP) of groundwater (Eh) is a measure of the relative tendency of the groundwater solution to accept or donate electrons and the amount of energy released during electron transfer. The Eh [in millivolts; (mV)] can provide evidence of the type of biodegradation processes that are active in a particular plume or area within a plume. The range of Eh values representing optimum conditions for reductive dechlorination are typically, within -100 to -350 mV. Eh should be used only as a qualitative indicator of the overall oxidation/reduction state.

Total Alkalinity: A result of both aerobic and anerobic biodegradation is hydrogen production. When hydrogen is produced, alkalinity will be reduced. In low alkalinity aquifers, the pH may drop to levels outside the range of microbial activity. Thus, to have optimum conditions for microbial growth, it is essential to have a properly buffered aquifer.

pH: pH concentration is an indicator of the amount of free hydrogen available in a solution. Optimum conditions for microbial growth are within the pH range of 6 to 8.

Temperature: Temperature affects the metabolic activity of bacteria, as well as the solubility of geochemical species. Microbes are generally more active and efficient in warmer water. Biochemical processes are accelerated at temperatures greater than approximately 20 degrees Celsius.

3.0 PILOT STUDY AREA BASELINE CONDITIONS

3.1 GROUNDWATER CONTAMINATION

Figure 3-1 shows an isoconcentration map of the TCE contaminant plume at Site 59. The figure was generated based on groundwater results from the ongoing RI. As shown in Figure 3-1, the "hot spots" are located at CEF-059-003-73, CEF-059-004-73, and CEF-59-006-50. CEF-59-004-73 had the highest concentration of TCE at 1,760 μg/l. Although, the 73-foot well at the CEF-59-004 location had the highest concentration of TCE, CEF-59-003-73 was chosen as the pilot study area because the location was the best delineated of the three.

3.2 HYDROGEOLOGY

The hydraulic gradient of the groundwater at Site 59 was estimated to be 0.003 and groundwater flow is to the southwest based on graphical interpretation of the most recent potentiometric groundwater contour map as shown on Figure 3-2. Figure 3-3 is a geologic cross section of the Site 59 area generated from well borings drilled as part of the RI. Based on this information, the majority of unconsolidated materials across is fine to very fine sand with varying amounts of silt. Isolated discontinuous relatively thin clay layers were encountered to approximately 40 feet bgs, and clay content increases significantly at approximately 90 feet bgs. The average hydraulic conductivity of the aquifer at Site 59, based on data collected during the RI, is 19 feet per day.

The estimated groundwater velocity (V_s) at Site 59 was calculated using the following equation:

$$V_s = K \times i \ (1/n)$$

Where:

V_s	=	estimated groundwater velocity (feet/day)
K	=	horizontal hydraulic conductivity (feet/day)
i	=	hydraulic gradient (feet/feet)
n	=	effective porosity

For Site 59, the values used to calculate groundwater velocity were as follows:

K	=	19 (feet/day)
n	=	0.30 (assumed to be 30 percent for sands)
i	=	0.003 (foot per foot)

The resulting estimated V_s is 0.19 feet per day or 69 feet per year.

3.3 NATURAL ATTENTUATION PARAMETERS

Geochemical data collected during the RI at the CEF-059-003-53 well cluster are summarized as follows:

- The DO concentration in this interval at this well location indicates anaerobic conditions (less than 0.5 mg/L) favorable to reductive dechlorination. At CEF-59-003-53 the DO was 1.1 mg/L, at CEF-59-003-73 the DO was 0.4 mg/L, and at CEF-59-003-121, the DO was 1.8 mg/L. DO concentrations at other Site 59 well locations and at other intervals generally do not indicate anaerobic conditions.

- Concentrations of nitrate, ferrous iron, and sulfate, compared to background concentrations, indicate conditions favorable for reductive dechlorination.

- The ORP reading (+141 mV) was greater -100 mV, generally not indicative of reducing conditions.

- The pH value (4.9) was not within the range optimal for biodegradation (6 to 8).

- The TOC concentration (1 mg/L) indicated the need for an additional carbon source to act as a primary substrate for microbial growth.

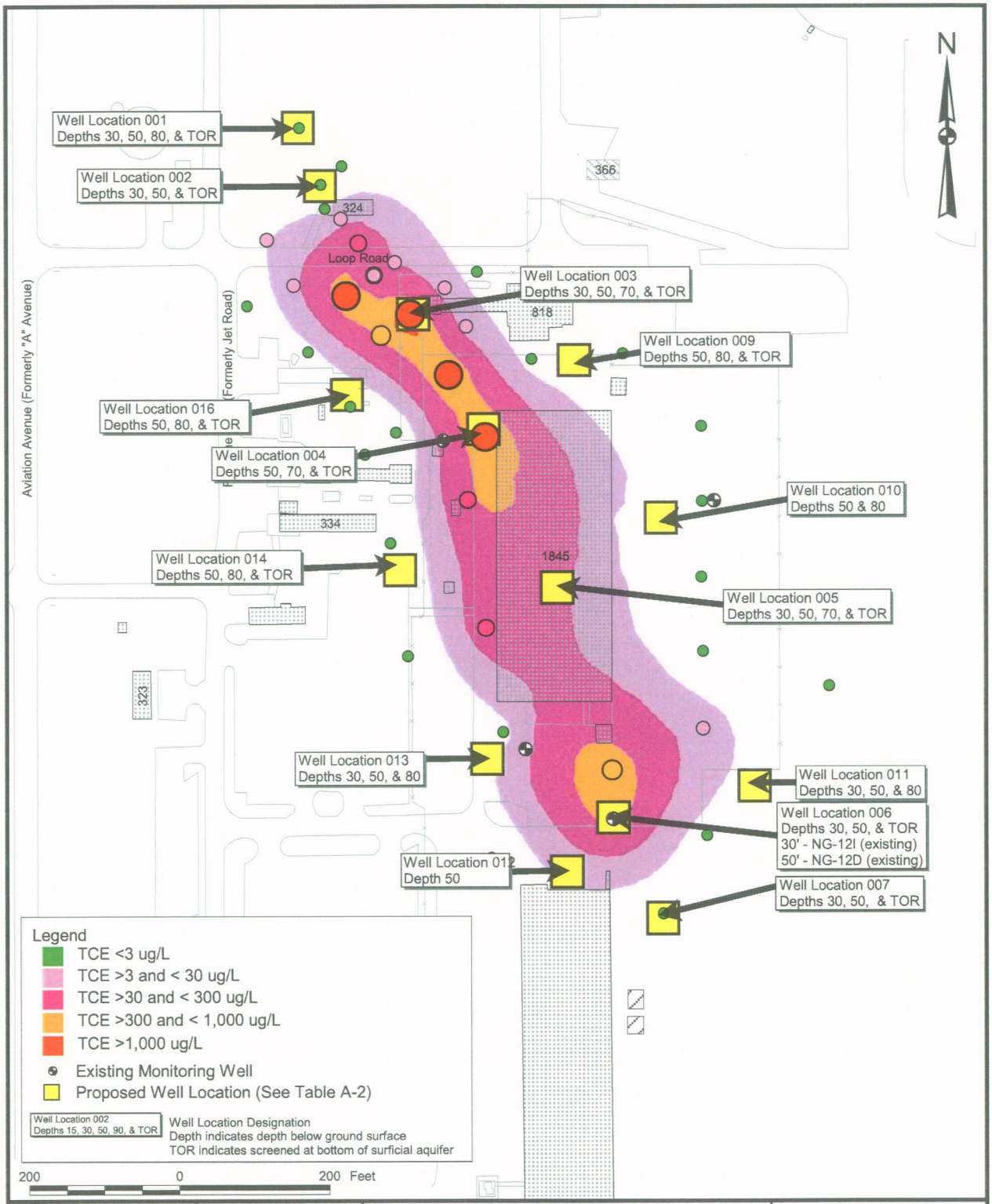

DRAWN BY MJJ	DATE 30Jun04	MONITORING WELL LOCATIONS 50-FOOT INTERVAL PILOT STUDY WORK PLAN OPERABLE UNIT 9, SITE 59 NAVAL AIR STATION CECIL FIELD JACKSONVILLE, FLORIDA	CONTRACT NUMBER 0039
CHECKED BY	DATE		APPROVED BY 1/12/06 DATE
COST/SCHEDULE-AREA			APPROVED BY DATE
SCALE AS NOTED	NAVFAC		DRAWING NO. FIGURE 3-1 / REV 0

P:\GIS\NAS_CecilField\Site-59_20050616.apr 16June05 MJJ Layout01

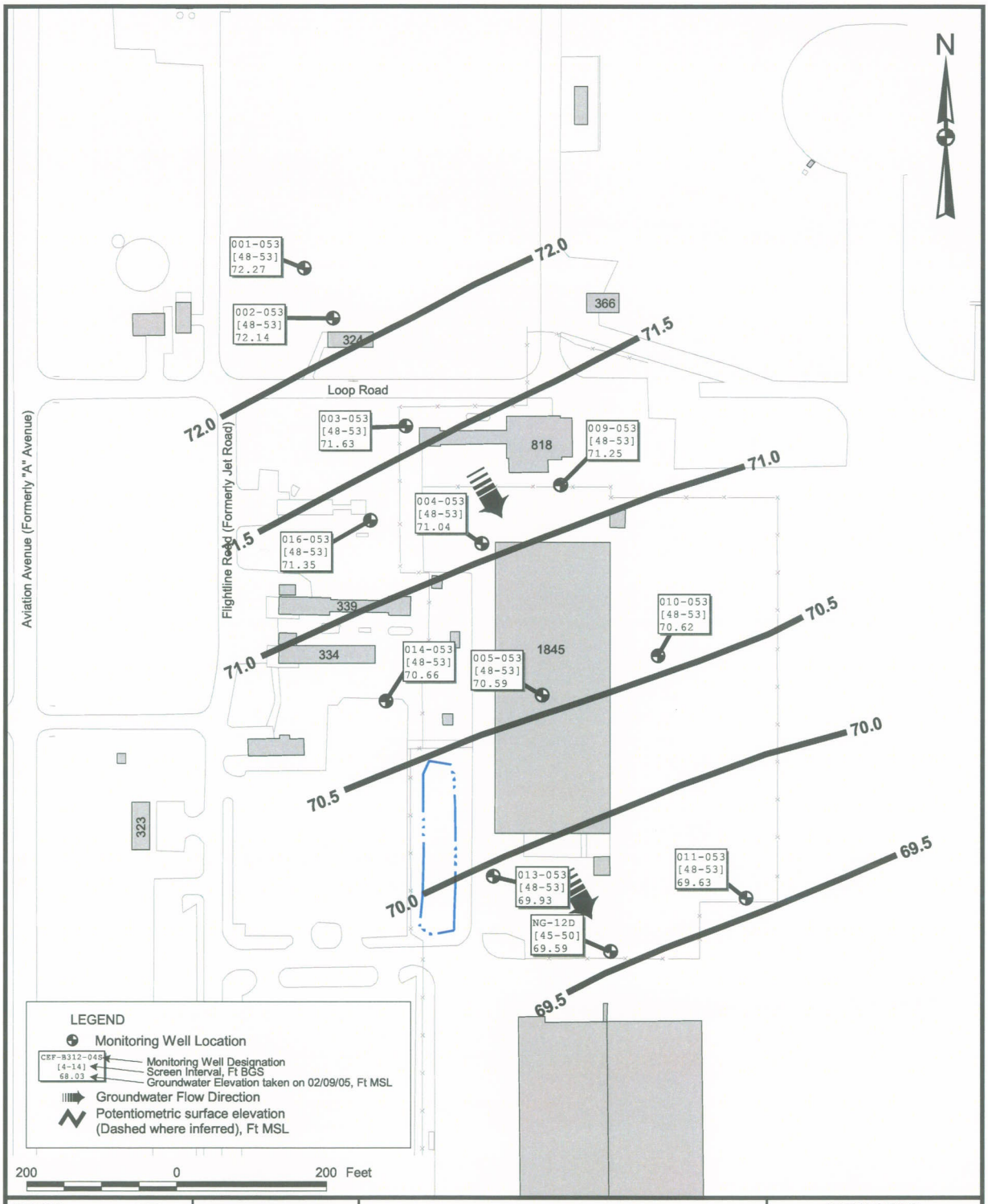

DRAWN BY MJJ	DATE 30Jun04	POTENTIOMETRIC SURFACE 50-FOOT INTERVAL PILOT STUDY WORK PLAN OPERABLE UNIT 9, SITE 59 NAVAL AIR STATION CECIL FIELD JACKSONVILLE, FLORIDA	CONTRACT NUMBER 0039
CHECKED BY	DATE		APPROVED BY 1/10/06 DATE
COST/SCHEDULE-AREA			APPROVED BY DATE
SCALE AS NOTED	NAVFAC		DRAWING NO. FIGURE 3-2 / REV 0

P:\GIS\NAS_CecilField\Site-59_20050616.apr 09Jan06 MJJ Layout02

ACAD:0039gx11.dwg 10/25/05 HJB PIT

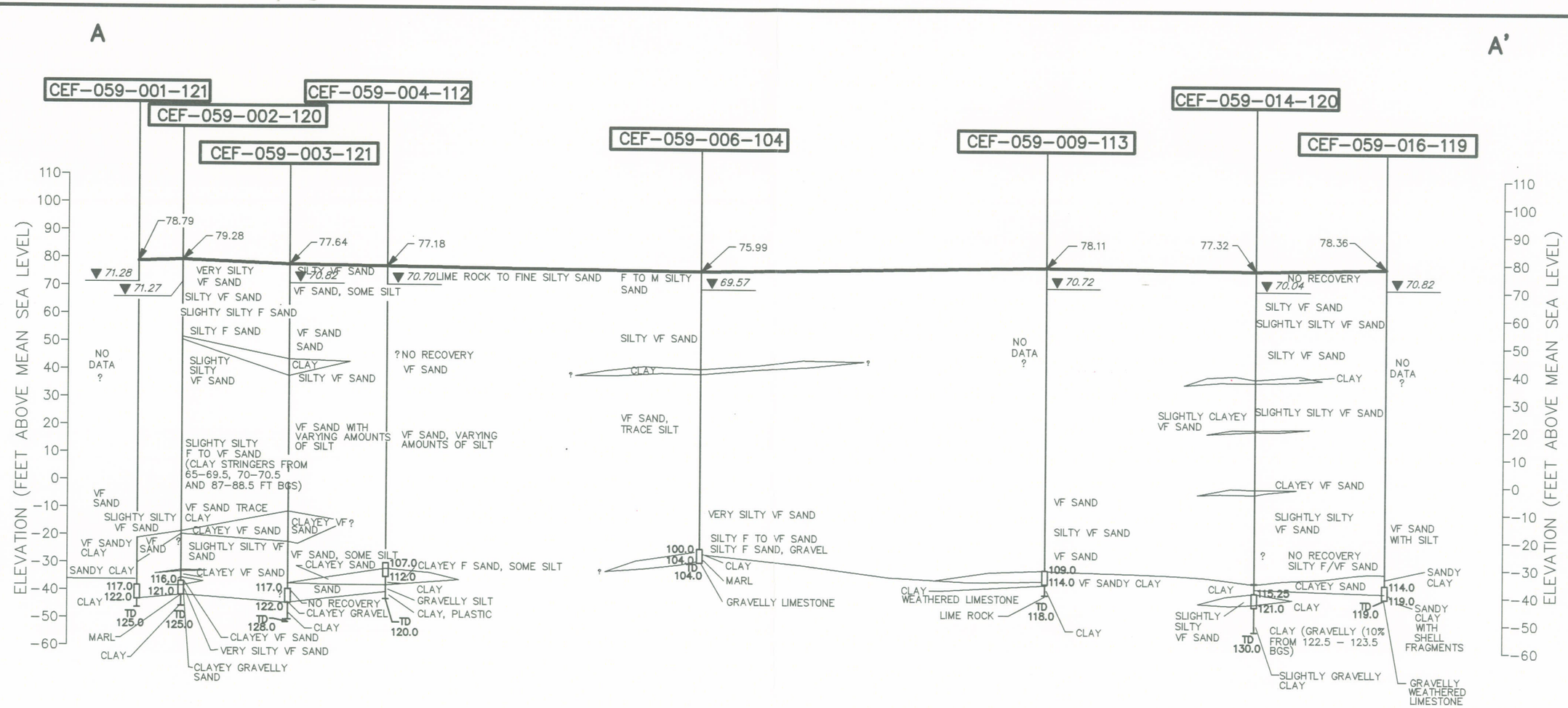

LEGEND:

MONITORING WELL OR BORING NUMBER — CEF-059-009-113

GROUND SURFACE ELEVATION — 78.11

GROUND SURFACE

GROUNDWATER ELEVATION

TOP OF MONITORED INTERVAL (FT BGS) — 109.00

LITHOLOGIC CONTACT (INFERRED BETWEEN BORINGS)

BOTTOM OF MONITORED INTERVAL (FT BGS) — 114.0

TOTAL DEPTH OF WELL OR BORING (FT BGS) — TD=118.0

VF – VERY FINE
F– FINE
M – MEDIUM
FT BGS – FEET BELOW GROUND SURFACE

0 200 400
HORIZONTAL SCALE IN FEET

0 40 80
VERTICAL SCALE IN FEET

DRAWN BY HJB	DATE 10/25/05	CROSS SECTION A-A' PILOT STUDY WORK PLAN OPERABLE UNIT 9, SITE 59 NAVAL AIR STATION CECIL FIELD JACKSONVILLE, FLORIDA	CONTRACT NO. 0039
CHECKED BY	DATE		OWNER NO. 0000
REVISED BY	DATE		APPROVED BY / DATE 1/10/06
SCALE AS NOTED		NAVFAC	DRAWING NO. FIGURE 3-3 / REV. 0

FORM CADD NO. SDIV-BH.DWG - REV 1 - 9/10/98

FORM CADD NO. TTNUS-D-STD.DWG - REV 1 - 9/11/98

4.0 PILOT STUDY RATIONALE

This section describes the rationale used to ensure the data from the pilot study is beneficial. In this pilot study, sodium lactate and sodium bicarbonate are to be continuously injected via a groundwater recirculation system to stimulate bioremediation of the contaminant plume. A microbial inoculum, including but not limited to *Dehalococcoides,* will be injected as a one-time injection.

The rationale for proceeding with the bioaugmentation early in the study considers the geochemistry and the fact that polymerase chain reaction (PCR) analysis conducted on samples from four wells in the study area to date. This analysis was non-detect for *Dehalococcoides*, the only known microbe for complete dechlorination of chlorinated ethenes, at this site. This weighted approach suggests that biostimulation alone would not be successful based upon our experience.

Second, the rationale for proceeding with the bioaugmentation early in the study is based on the strict time and schedule limiting factors in this project. The EPA has stated that they want all sites at Cecil Field to be "Construction Completed" by June 30, 2007. In order to meet that date, the feasibility study, proposed plan, record of decision, remedial design, remedy implementation, and to a significant degree, performance of the remedy must be completed rapidly and in a relatively short period of time. In concert with this accelerated schedule the timetable of the pilot study needs efficient and as short as possible. As implied in the comment, it is entirely possible that the biostimulation alone may be sufficient to achieve the needed reduction at the site. However, considering the geochemistry, microbial data, and our experience at other sites, there is insufficient time (e.g., 6 to 9+ months) for observing the results of injecting electron donor alone and deciding at that point that it is necessary to bioaugment the site with a grown culture.

Third, the cost of the inoculum (provided by an estimate from one potential vendor) is $295 per liter. Approximately ten liters are needed for the pilot study, so the cost for the material is about $3,000. Assuming the total cost of the bioaugmentation is approximately $3,000 and the total cost of the project is approximately $100,000 the cost of bioaugmentation is only 3% or a very small portion of the overall total project cost. Further, this relatively small investment upfront could avoid time and additional expense later.

4.1 RECIRCULATION SYSTEM LAYOUT

Figure 4-1 is the field investigation map that shows the pilot study area, which is located around existing monitoring well CEF-59-003-73. The pilot study area was chosen because the location was the best delineated of the hotspots at Site 59. Figure 4-1 also indicates the location of existing wells, proposed

injection points, proposed extraction points, and proposed new monitoring wells at Site 59. It should be noted, that proposed locations in the Figure 4-1 may be modified slightly to accommodate existing field conditions.

A recirculation system approach was selected instead of a multiple injection point system for several reasons. First, the depth to the interval to be treated is about 75 feet bgs which at Cecil Field has been shown to be difficult to reach with typical DPT methods. Multiple injection points to this depth would require conventional drilling methods that would have a significant cost impact. Further, multiple chemical injection and inoculum injection steps would require several drilling events, which would add to the overall project cost. Finally, the area of the pilot study is relatively large, and recirculation systems are better suited to larger areas.

4.1.1 Injection / Extraction Wells

As shown Figure 4-1, the recirculation system will include one extraction well and two injection wells will be installed to address concerns of possible biofouling, located 30 feet apart and centered on existing monitoring well CEF-059-003-73. The 30 foot spacing is to provide a short groundwater recirculation cycle which will increase the flushing of pore volumes within the pilot study area. The two injection wells will be screened at 65 to 75 feet bgs and will be installed 5 feet to the left and 5 feet to the right of a point 15 feet upgradient of existing monitoring well CEF-059-003-73. The two injection wells will be 4 inches in diameter, have a slot size of 0.02 inch, and will be plumbed together to address concerns of possible biofouling. One extraction well will be screened at 65 to 75 feet bgs and will be installed 15 feet downgradient of existing monitoring well CEP-059-003-73. The extraction well will be 4 inches in diameter and have a slot size of 0.02 inch. The extraction well detail is shown on Figure 4-2 and the injection well detail is shown on Figure 4-3.

4.1.2 Monitoring Wells

As shown Figure 4-1, five new 2-inch monitoring wells, screened at 68 to 73 foot bgs, will be installed around existing monitoring well CEF-059-003-73. One monitoring well will be installed 7.5 feet upgradient from CEF-059-003-73, and another monitoring well will be installed 7.5 feet downgradient of CEF-059-003-73. The two monitoring wells will be located perpendicular to groundwater flow at 15 feet and 7.5 feet west and east, respectively, of CEF-059-003-73. One monitoring well will be installed 10 feet downgradient of the extraction well. The monitoring wells are spaced and located to provide data on the actual bioremediation area, the dispersion of injected amendments, and possibly the location of individual bacteria strains. The location and spacing of the monitoring wells are also designed to verify groundwater flow rates under pumping conditions.

4.1.3 Recirculation Pumping Rate and Groundwater Zone of Capture

Based on a groundwater flow model using MODFLOW and particle tracking using MODPATH, 3 gallons per minute was selected as the optimal groundwater recirculation rate. An estimated minimum travel time of 6.7 days for the injected groundwater and additives to travel from the injection point to the extraction point was determined under steady-state water level conditions. Steady-state water level conditions are estimated to occur in less than 1 day after startup of recirculation system. Detailed groundwater pumping rate calculations and models are provided in Appendix B.

Groundwater modeling of the pilot study area was also used to estimate the zone of capture under groundwater recirculation conditions. The groundwater zone of capture is representative of the subsurface pore volumes that will be "flushed" at least once during the pilot study. Because it is expected that several flushes or pore volumes will be required to achieve remediation, a groundwater zone of capture where several pore volumes are replaced is required. Consequently, a groundwater zone of capture with a particulate travel time of 1 month was considered. The corresponding groundwater zone of capture for a particulate travel time of 1 month was approximately 35 feet in diameter centered between the injection well and extraction well at 64 to 76 foot bgs. The volume of groundwater estimated to be treated within this groundwater zone of capture was 25,894 gallons. This volume of groundwater was compared to the volume of groundwater recirculated at 3 gpm for 6.7 days (the travel time from the injection well to the extraction well) within the pilot study area, which is 29,255 gallons. The higher of the two volumes, 29,255 gallons, was used as the volume of groundwater treated for chemical amendment calculations.

4.2 RECIRCULATION SYSTEM

FDEP requires that the application of injection-type in situ aquifer remediation fluids meet injection requirements of Chapter 62-528, Florida Administrative Code (FAC), which are the minimum groundwater criteria of Rule 62-520.400, FAC and the primary and secondary drinking water standards of Rules 62-550.310 and 62-550.320, FAC, respectively. Injection fluids that do not meet the minimum groundwater criteria must petition for a variance from Rule 62-522.300(3) for a zone of discharge.

The injection products sodium lactate, sodium bicarbonate, and a microbial inoculum, will not exceed any of the drinking water standards listed in the FAC 62-528. Further, site groundwater will be recirculated with previously mentioned injection products. The recirculated groundwater will be of the same water quality as groundwater at the site. The Material Safety Data Sheet (MSDS) for sodium lactate, sodium bicarbonate, and a general microbial inoculum are included in the Appendix A.

4.2.1 Chemical Amendments

As can be seen in Figure 4-4, groundwater, sodium lactate, and sodium bicarbonate are to be continuously injected into the pilot study area via the recirculation system. After the groundwater is extracted, sodium lactate and sodium bicarbonate will be proportionally added to the recirculation of groundwater as shown in Figure 4-4.

The amount of sodium lactate to be added was calculated based on the stoichometric hydrogen demand for the reduction of the groundwater constituents: oxygen, nitrogen dioxide, magnesium, iron, sulfate, and TCE (see Appendix C). Approximately 367 pounds of sodium lactate will be added over the duration of the pilot study to stimulate anaerobic biodegradation. A continuous-feed pump will inject sodium lactate at a concentration of 0.84 pound per gallon into the groundwater injection line at approximately 4.0 pound per day for the duration of the pilot study. The feed rate is based on adding the sodium lactate in 3 months.

The amount of sodium bicarbonate to be added was calculated based on a field titration of the groundwater and soil at Site 59 on June 21, 2005. Specifically, sodium bicarbonate was added to a sample of the saturated soil matrix and groundwater sample until the pH of water was 7.0. The amount and concentration of sodium bicarbonate required to bring and maintain the pH of the groundwater to 7.0 was found to be approximately 0.0172 pound of sodium bicarbonate per gallon of site groundwater.

Sodium bicarbonate will be injected into the recirculation system in two phases: an initial pH adjustment phase and a post pH adjustment phase. The initial pH adjustment phase will occur over approximately 2 weeks and serve to change the pH of the subsurface from approximately 4.9 to approximately 7. The second phase will occur after the initial phase for the duration of the pilot study and serve to maintain the pH of the pilot study area. A total of approximately 503 pounds of sodium bicarbonate will be added over the duration of the pilot study. A continuous-feed pump will inject sodium bicarbonate into the groundwater injection line at a concentration of 0.36 pound per gallon at approximately 18.2 and 3 pound per day during the first phase and second phase, respectively. The calculations and data used to determine the amount of sodium lactate and sodium bicarbonate is provided in Appendix C.

4.2.2 Microbial Inoculum

A microbial inoculum containing, but not limited to, *Dehalococcoides* organisms will be injected via the recirculation injection well. Injection is to occur after reducing conditions are achieved as a result of the lactate amendment, which is estimated to be approximately 4 weeks, so that oxygen-sensitive *Dehalococcoides* bacteria can be implemented to facilitate complete TCE reduction. Reducing conditions will be monitored primarily by DO concentration and ORP potential at the extraction and monitoring wells.

Reducing conditions are expected to occur by organisms which will use lactate as a carbon source and ferment the electron donor (hydrogen). The hydrogen produced is expected to be used sequentially according to the oxidized species being reduced. The sequential reduction of species (that is, terminal electron acceptor processes) is expected occur in the approximate following order: DO, nitrate, magnesium, iron, sulfate, and TCE to ethene, is based on ORP potential. Complete depletion of one species is not required, rather, a combination of reductions is likely to occur.

4.3 PILOT SCALE SAMPLING

Groundwater samples will be taken over the course of the pilot study to determine the effectiveness of the treatment technology. A preliminary schedule of the timing of these events is shown on Figure 4-5. Groundwater samples and water level measurements will be taken at CEF-59-003-73 and CEF-59-003-53, the four new proposed monitoring wells, and an upgradient injection well if not in use by the groundwater recirculation line. An initial round of groundwater samples will be taken prior to groundwater recirculation to provide a baseline for later sampling rounds. Field natural attenuation parameters will be measured 2 weeks after the start of the recirculation system. A second round of samples with full analyses will be taken approximately 3 weeks after the startup of the amendment addition to the groundwater recirculation to determine if the pilot study area has achieved reducing conditions. If reducing conditions have been achieved, the microbial inoculum will be injected. A third round will be taken approximately 4 weeks after injection of the microbial inoculum to determine any initial reductions in natural attention parameters and/or TCE concentrations followed by another round 4 weeks later. Sampling rounds will continue, as shown on Table 6-1 (see Section 6), thereafter for approximately 19 weeks to determine the effectiveness of the treatment technology and the area of treatment.

Collected groundwater samples will be analyzed for chlorinated VOCs, dissolved gasses, iron (total and dissolved), manganese (total and dissolved), sulfide, sulfate, nitrate, nitrite, chloride, phosphate, lactic, pyruvic, acetic, propionic, butyric, total organic carbon (TOC), and field parameters including: temperature, pH, specific conductivity, ORP, dissolved CO_2, alkalinity, dissolved oxygen, iron, HS, and water levels. Some samples will be analyzed for polymerase chain reaction (PCR) and enzymes to monitor the presence and abundance of *Dehalococcoides*. Some samples will be subjected to Compound Specific Stable Isotope (CSSI) analysis for isotopic carbon in the chlorinated compounds to evaluate biological degradation compared to reduction due to physical and/or non-biological processes. The samples just after the startup of groundwater recirculation will not be analyzed for all parameters. See Table 6-1 for further detail. After the data are collected and analyzed, it will be interpreted to evaluate groundwater recirculation and substrate injection effectiveness.

The pore volume displacement and product travel in the pilot study area will also be verified during the pilot study. $NaHCO_3$ sampled as alkalinity in each sampling round will be used to verify the pore volume

displacement and product travel due to recirculation. The pore volume displacement, which is related to the groundwater velocity, is to be found by monitoring the time of injection of $NaHCO_3$ and the time the $NaHCO_3$ influences the downgradient monitoring wells. The product travel of $NaHCO_3$ perpendicular to groundwater flow will be verified by monitoring the influence of $NaHCO_3$ at the sidegradient monitoring wells.

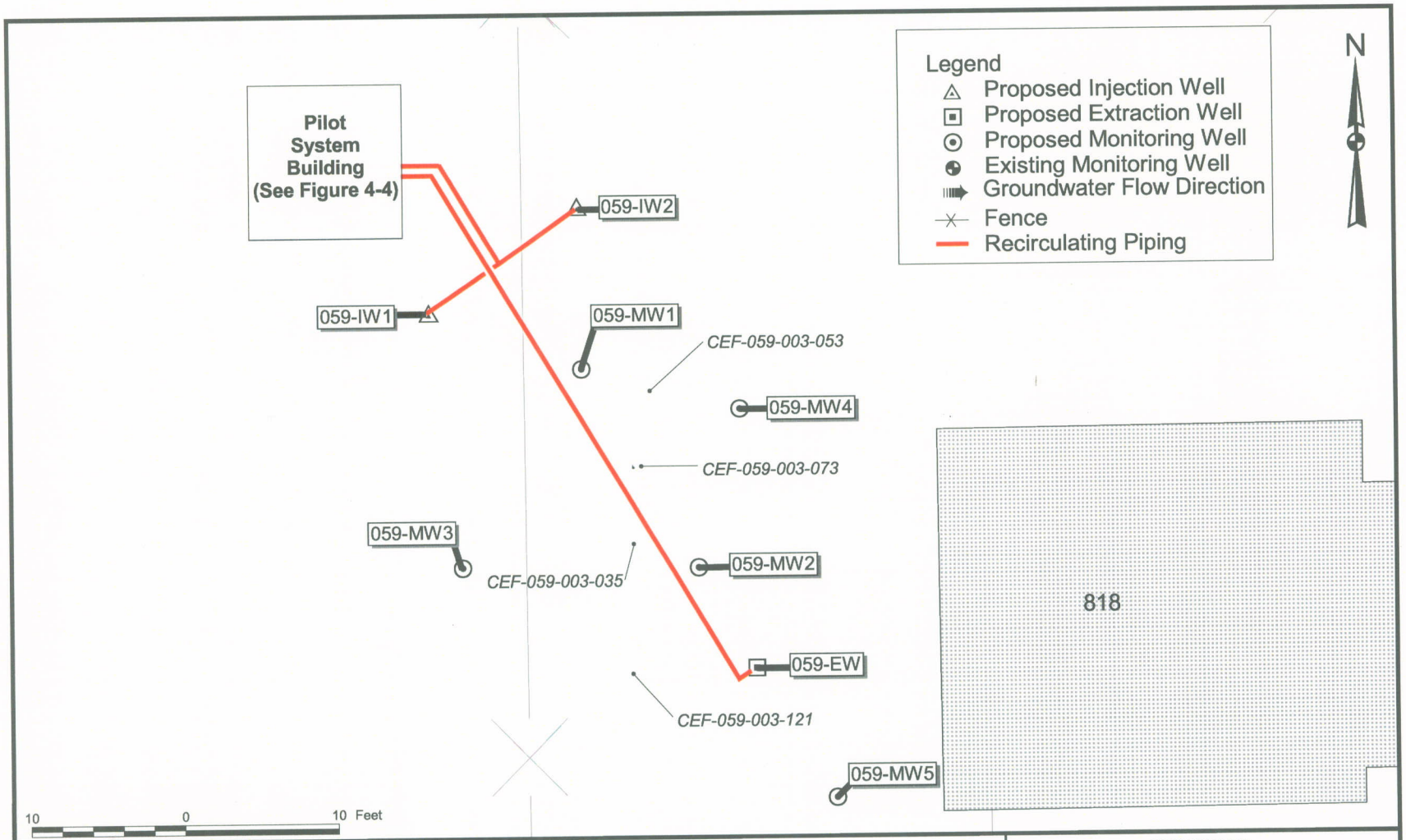

DRAWN BY	DATE
MJJ	16Jun04
CHECKED BY	DATE
J. LOGAN	10/26/05
COST/SCHEDULE-AREA	
SCALE	AS NOTED

NAVFAC

PILOT SYSTEM SITE PLAN
PILOT STUDY WORK PLAN
OPERABLE UNIT 9, SITE 59
NAVAL AIR STATION CECIL FIELD
JACKSONVILLE, FLORIDA

CONTRACT NUMBER 0039

APPROVED BY DATE 1/10/06

APPROVED BY DATE

DRAWING NO. FIGURE 4-1

REV 0

P:\GIS\NAS_CecilField\Site-59_20050616.apr 10Jan06 MJJ Layout03

ACAD: 0039CD01.dwg 12/20/05 MF PIT

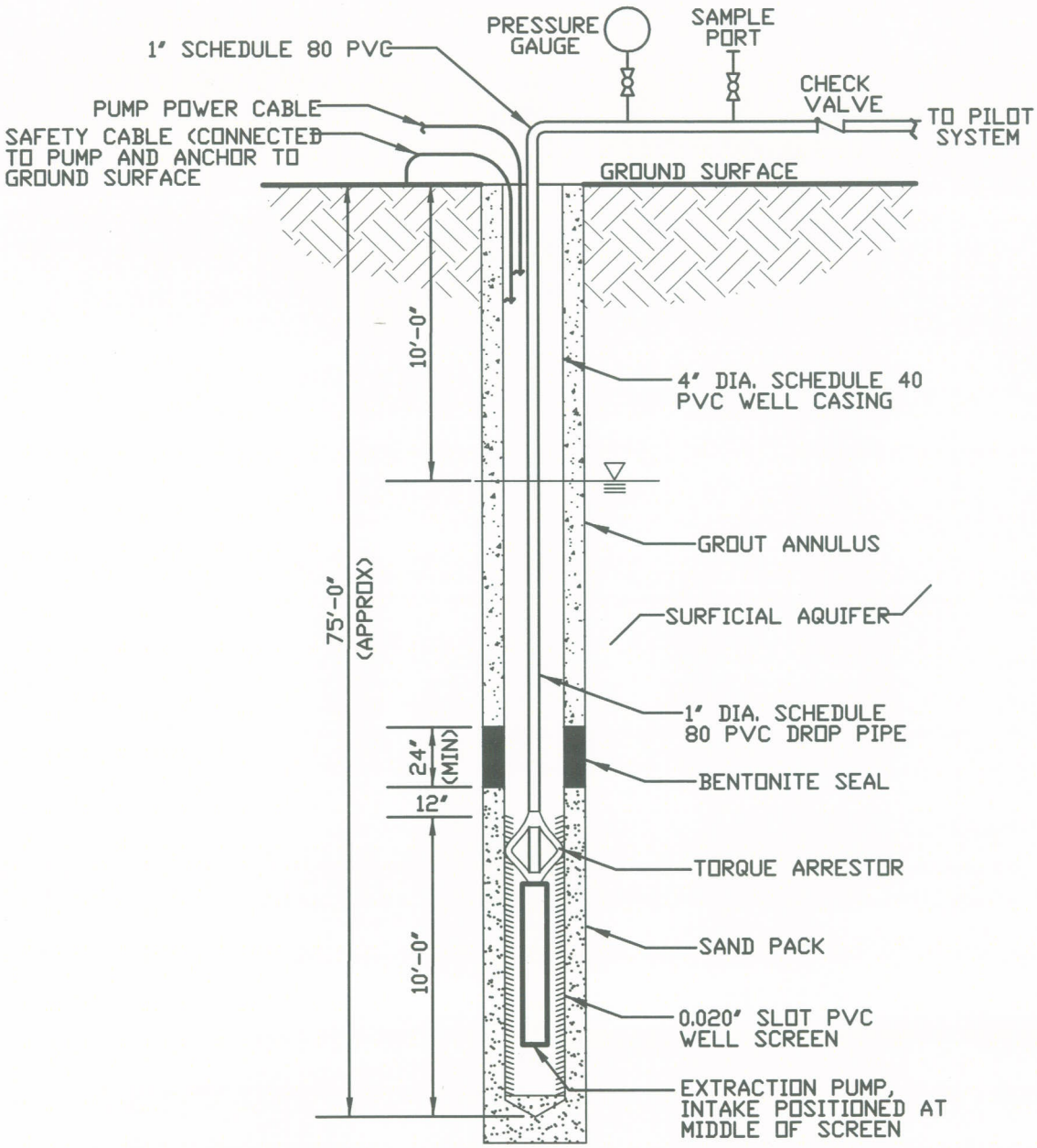

DRAWN BY MF	DATE 12/19/05	EXTRACTION WELL DETAIL PILOT STUDY WORK PLAN OU 9, SITE 59 NAS CECIL FIELD JACKSONVILLE, FLORIDA	CONTRACT NO. 0039
CHECKED BY	DATE		OWNER NO. 0000
REVISED BY	DATE		APPROVED BY 1/10/06 DATE
SCALE NONE			DRAWING NO. FIGURE 4-2 REV. 0

NAVFAC

FORM CADD NO. SDIV-AV.DWG - REV 1 - 9/10/98

ACAD: 0039CD02.dwg 01/09/06 MF PIT

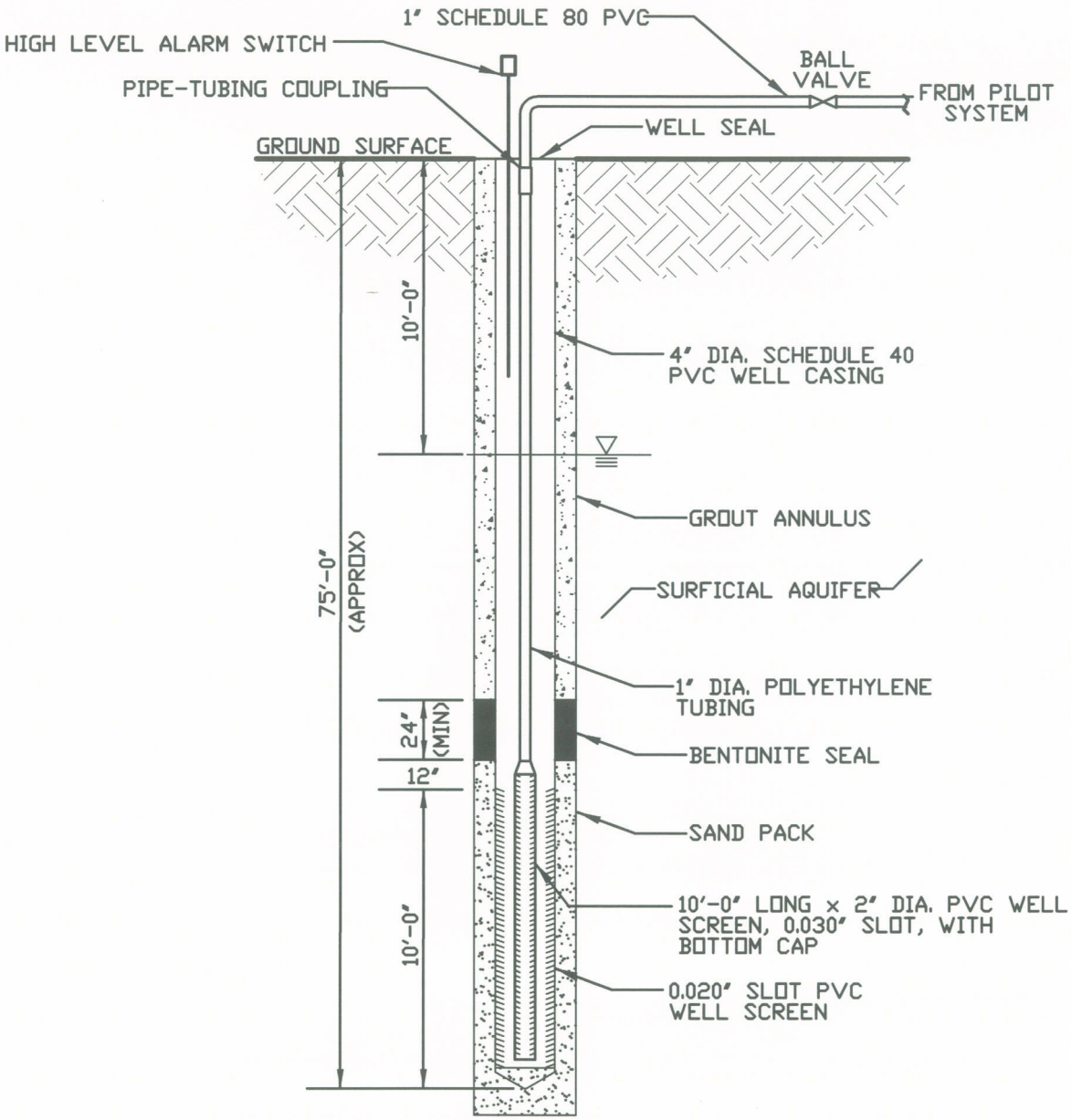

NOTE:
TYPICAL OF TWO.

DRAWN BY MF DATE 12/19/05	NAVFAC	INJECTION WELL DETAIL PILOT STUDY WORK PLAN OU 9, SITE 59 NAS CECIL FIELD JACKSONVILLE, FLORIDA	CONTRACT NO. 0039
CHECKED BY DATE			OWNER NO. 0000
REVISED BY DATE			APPROVED BY DATE 1/9/06
SCALE NONE			DRAWING NO. FIGURE 4-3 REV. 0

FORM CADD NO. SDIV-AV.DWG - REV 1 - 9/10/98

ACAD:0039PF18.dwg 01/11/06 MF PIT

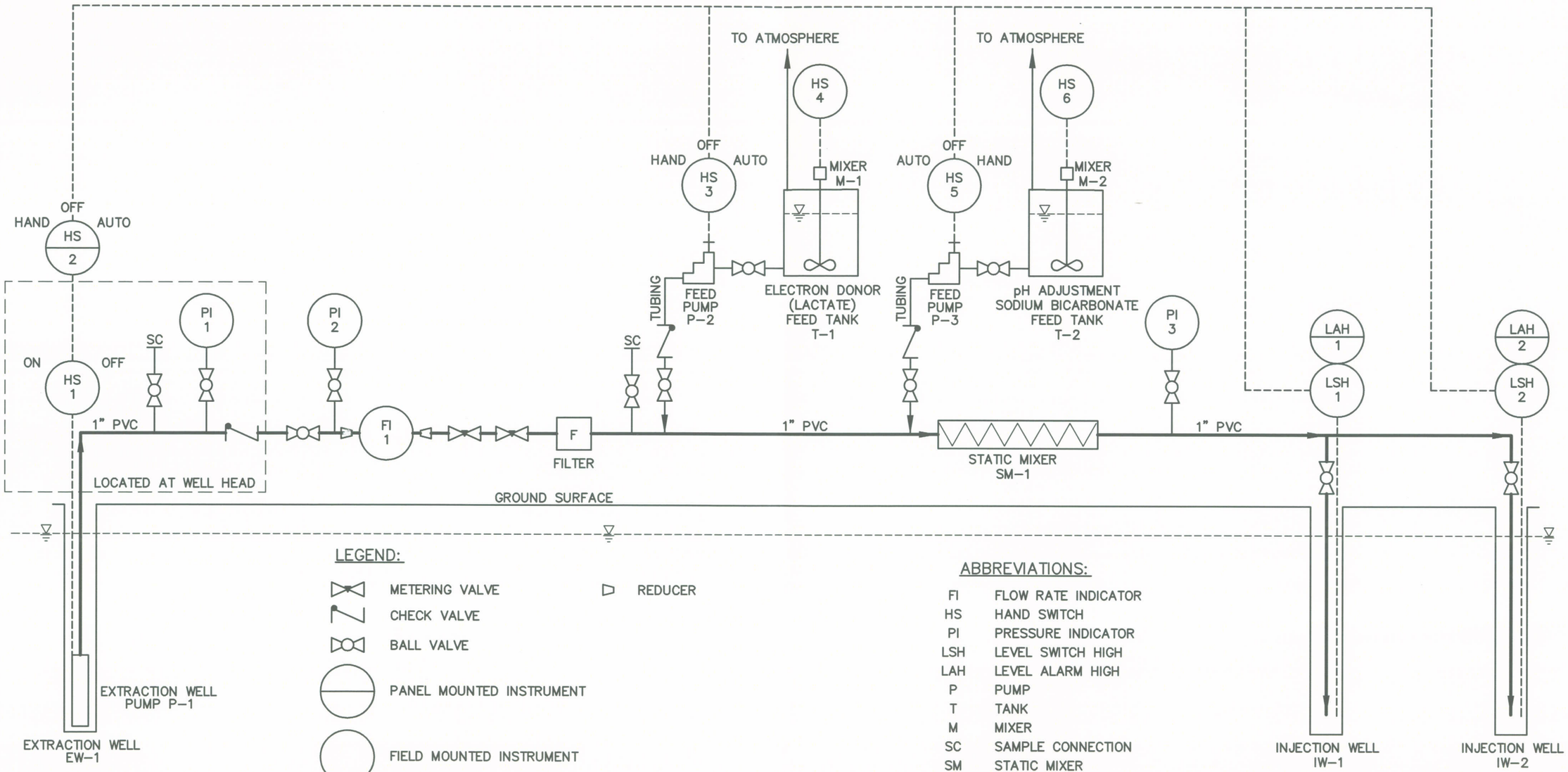

LEGEND:

- METERING VALVE
- CHECK VALVE
- BALL VALVE
- PANEL MOUNTED INSTRUMENT
- FIELD MOUNTED INSTRUMENT
- WATER LEVEL
- METERING PUMP
- ELECTRICAL CONNECTION
- REDUCER

ABBREVIATIONS:

FI	FLOW RATE INDICATOR
HS	HAND SWITCH
PI	PRESSURE INDICATOR
LSH	LEVEL SWITCH HIGH
LAH	LEVEL ALARM HIGH
P	PUMP
T	TANK
M	MIXER
SC	SAMPLE CONNECTION
SM	STATIC MIXER

DRAWN BY MF	DATE 10/11/05	PIPING AND INSTRUMENTATION DIAGRAM PILOT STUDY WORK PLAN OU 9, SITE 59 NAS CECIL FIELD JACKSONVILLE, FLORIDA	CONTRACT NO. 0039
CHECKED BY	DATE		OWNER NO. 0000
REVISED BY	DATE		APPROVED BY DATE 1/11/06
SCALE AS NOTED	NAVFAC		DRAWING NO. FIGURE 4-4 REV. 0

FORM CADD NO. SDIV-AMDWG - REV 1 - 9/16/98

FIGURE 4-5

GENERAL SCHEDULE OF ACTIVITIES
PILOT STUDY WORK PLAN
OPERABLE UNIT 9, SITE 59
NAVAL AIR STATION CECIL FIELD
JACKSONVILLE, FLORIDA
PAGE 1 OF 2

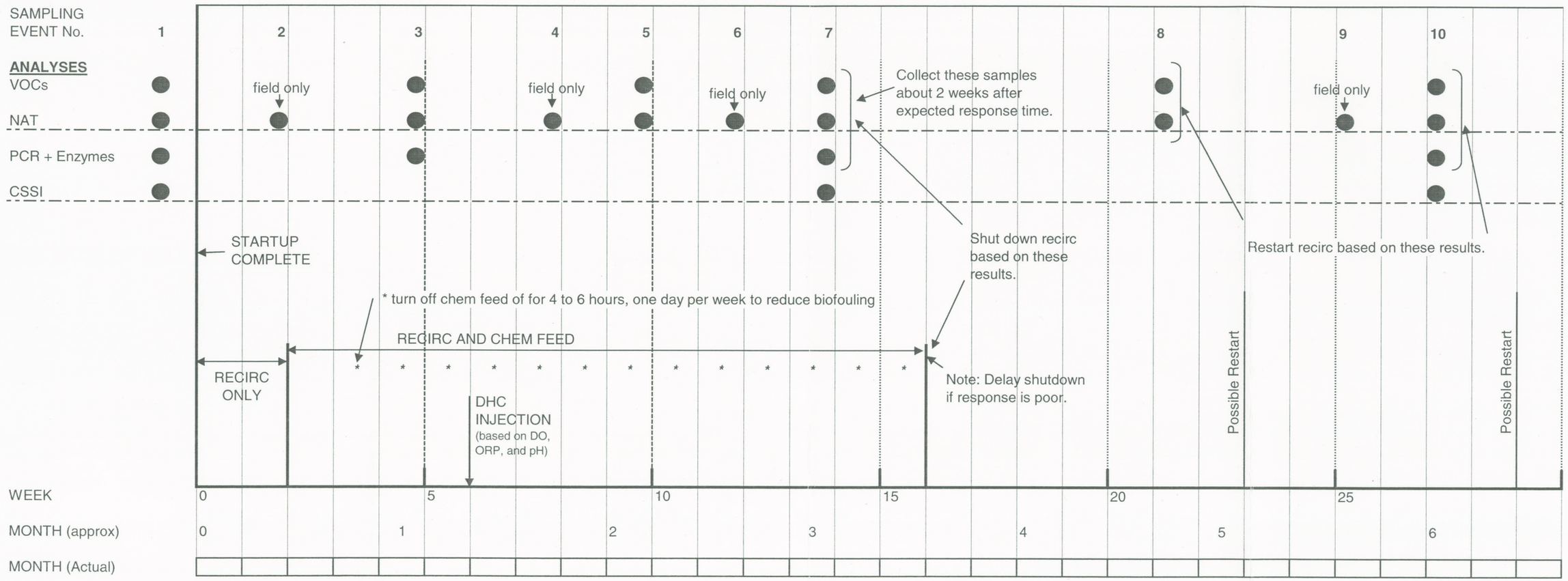

Notes
● Parameters to be analyzed for the sampling event shown.
Event 1 is the baseline event and is to be performed anytime prior to startup.
This figure only shows general events. Refer to the Work Plan for details.
NAT = Natural attenuation parameters.

FIGURE 4-5

GENERAL SCHEDULE OF ACTIVITIES
PILOT STUDY WORK PLAN
OPERABLE UNIT 9, SITE 59
NAVAL AIR STATION CECIL FIELD
JACKSONVILLE, FLORIDA

SAMPLING EVENT No.				11																	
ANALYSES																					
VOCs				●																	
NAT				●																	
PCR + Enzymes																					
CSSI																					
WEEK	30					35					40					45					50
MONTH (approx)		7					8				9					10					
MONTH (Actual)																					

5.0 FIELD OPERATIONS

A range of site evaluation techniques will be used to collect data during the pilot study at Site 59. This section provides specific field operations, methods, and procedures that will be conducted for this pilot study field effort.

5.1 MOBILIZATION/DEMOBILIZATION

During the monitoring well installation, injection well installation, and sampling, the field crew will consist of a Field Operations Leader (FOL)/site geologist, a environmental technician, and drilling subcontractor personnel. The technician will be assigned the role of Site Safety Officer for the field activities.

5.2 INJECTION / EXTRACTION AND MONITORING WELL INSTALLATION

The two injection wells and an extraction well will be drilled and screened from 65 to 75 feet bgs. Four monitoring wells will be drilled and screened from 68 to 73 feet bgs. All wells will be logged during installation. As noted below, soil samples will be collected for analysis. The injection wells (CEF-598-IW1 and -IW2), extraction well (CEF-59-EW), and monitoring wells (CEF-59-MW1, -MW2, -MW3, and -MW4) will be located according to Figure 4-1.

Injection and extraction wells will be installed using hollow-stem augers and will be constructed with certified-clean well construction materials including 4-inch, inside diameter (ID) flush-threaded polyvinyl chloride (PVC) well screen and riser. Well screens will be 0.020-inch slot for all wells, with a screen length of 10 feet. Well installation procedures for 4-inch wells will be as described in the Site 36/37 RI report (TtNUS, 1999), with the exception that bentonite instead of choke sand will be used as a well seal.

Monitoring wells will be installed using hollow-stem augers and will be constructed with certified-clean well construction materials including 2-inch ID flush-threaded PVC well screen and riser. Well screens will be 0.010-inch slot for all wells, with a screen length of 5 feet. Well installation procedures for 2-inch wells will be as described in the Site 36/37 RI report (TtNUS, 1999), with the exception that bentonite instead of choke sand will be used as a well seal.

All wells will be finished as flush-mounted wells with protective steel covers and bolt-on lids. Wells will be provided with locking caps.

The injection wells and extraction well will be developed thoroughly to remove fine particles that could clog the injection wells. A SPECAP test will be performed on the extraction well to confirm how much water can be produced.

Soil Samples

Soil samples will be collected for analysis during the installation of each new well (extraction well, injection wells, and monitoring wells) as described below.

Contaminated Saturated Soil

To estimate the total mass of contaminants, two soil samples will be collected from each well boring from within the screened interval. Soil samples collected with a split spoon or DPT core sampler will be screened using a photoionization detector (PID) or flame ionization detector (FID) and the soil with the highest readings will be selected for laboratory analysis for VOCs. Refer to Table 6-4 for analytical method and bottle information.

Fraction Organic Carbon

Because there is no site-specific data for fraction organic carbon, soil samples will be collected for fraction organic carbon (foc) analysis during the installation of three wells. To minimize the effect of contaminants, the samples will be collected from an interval of the lowest observed contamination, from a depth of about 50 to 55 feet bgs. Samples will be collected during the installation of the extraction well, one injection well, and one cross-gradient monitoring well. Refer to Table 6-4 for analytical method and bottle information.

5.3 GROUNDWATER RECIRCULATION SYSTEM

Groundwater is to be pumped from the extraction well through a mixing system and returned to the subsurface via the injection wells at approximately 3 gpm. Sodium lactate and sodium bicarbonate solutions will be proportionally injected into the groundwater piping and mixed in by a static mixer. Approximately 367 pounds sodium lactate and 503 pounds of $NaHCO_3$ will be added over the duration of the pilot study. Metering pumps will inject sodium lactate into the groundwater injection line at approximately 4.0 pounds per day at a concentration of 0.84 pounds per gallon. Sodium bicarbonate will be added in two separate phases. The first phase is estimated to last approximately 2 weeks or until reducing conditions have been achieved. The second phase will occur after the first phase and continue throughout the duration of pilot study. Metering pumps will inject sodium bicarbonate at a concentration of 0.36 pounds per gallon into the groundwater injection line at approximately 18.2 and 3.0 pounds per day for the first and second phase, respectively. Detailed calculations and data used to estimate the amount of sodium lactate and sodium bicarbonate is provided in Appendix C.

The injection wells will be monitored routinely for biofouling. If biofouling is observed, the chemical feed rates will be reduced.

Figure 4-1 shows a schematic of the treatment system, and Figure 4-2 shows the layout of the pilot study wells and treatment system.

5.3.1 System Construction

Groundwater is to be extracted from extraction well EW-1 by a Grundfos SQ pump. The flow rate will be controlled with a manually adjusted globe or diaphragm valve. A paddle wheel flow meter or rotameter will be used to measure the flow rate and adjust the control valve. Sodium lactate solution will be prepared in a 50-gallon tank and injected into the groundwater piping upstream of a static mixer. Similarly, the sodium bicarbonate solution will be prepared in a 150-gallon tank and injected into the groundwater piping upstream of a static mixer. The chemicals and groundwater will be thoroughly blended using an inline static mixer. This mixing approach was used to minimize introduction of oxygen to the groundwater. After mixing, the groundwater will be piped to one of two injection wells, IW-1 and IW-2. Two injection wells have been provided for continuous operation in case one of the wells becomes clogged.

A 5 micron filter will be used during the initial operation of the recirculation system to capture particles from the extraction well. The filter will be removed during normal operation.

The sodium lactate solution tank provides approximately 7 days of storage. The sodium bicarbonate tank provides approximately 3 days of storage at the short-term phase and 30 days of storage in the long-term phase.

A high-level switch and alarm will be installed in each injection well to shut down the system to prevent the release of contaminated groundwater to the ground surface in the event that an injection well becomes clogged. An auto-dialer system will provide notification of system shutdown. Pressure gauges will be provided to monitoring pressure drop through the system.

5.3.2 System Startup and Operation

Figure 4-5 summarizes the operating and sampling events for the pilot study. Details of these activities are described below and in Section 6.0.

Equipment and System Inspection

After all of the equipment has been installed, mechanical equipment (pumps and mixers) will be tested briefly to ensure operation. To test the extraction well pump, open the valves at the injection wells, close the valves at the chemical injection points, close the control valves, and open the shut-off valve at the control valves. Activate the pump and slowly open the control valves while observing the flow meter. Gradually open the control valves until 3 gpm is reached while noting the number of turns on the control valves. Check the system for leaks. Then shut off the pump, and close the control valves.

Test the chemical feed pumps by disconnecting the discharge hose and directing the discharge back into the appropriate feed tank. Operate the pumps long enough to confirm operation.

Startup

Startup of the system will be performed in a stepwise manner.

Prior to activation of the recirculation system, prepare the chemical solution. Prepare the lactate solution in the lactate tank at a concentration of 100 g sodium lactate per liter of water, or 0.84 pound per gallon. Prepare the sodium bicarbonate in the bicarbonate tank at 43 grams sodium bicarbonate per liter of water, or 0.36 lb per gallon. Care must be taken to minimize aeration of the water when the tanks are filled with water and mixed with the chemicals. Keep the tanks covered to minimize oxygen in the makeup water. Note and record the levels of the chemical feed tanks.

Set the dials for the sodium lactate feed pump at 0.20 gallon per hour. Set the dials for the sodium bicarbonate feed pump at 2.15 gallon per hour for the first 14 days of operation, including startup. (After 14 days, the sodium bicarbonate feed rate will be turned down to 0.23 gallon per hour and the concentration increased to 0.54 lb/gal.)

The recirculation system will be operated initially with no chemical addition. Open both injection well valves and the shut-off valve at the control valves. Close the flow rate control valves and then start the extraction well pump. Gradually open the flow rate control valves to fill the system with water. Monitor the flow rate while opening the valves until the operating flow rate of 3 gpm is reached. The flow rate should stabilize in a short time because there is very little air to purge from the system.

Operate the recirculation system with no chemical addition long enough to reach steady-state water level conditions within the pilot study area. The recirculation system will be operated at least 1 week without chemical addition. Water level steady-state conditions will be determined by routinely measuring the water levels within the pilot study area. After water levels have stabilized, the chemical feed pumps will be

activated. Ensure that the shut-off valve at each injection point is open, and then activate the sodium lactate pump, followed by the sodium bicarbonate pump. Monitor and record the levels in the chemical feed tanks to confirm the feed rate. Monitor and record the water level in the injection wells.

During startup, the following tasks will be performed during each visit:

- Monitor and record water levels in the extraction well, injection wells, new monitoring wells, and in the existing CEF-59-003 monitoring well.
- Monitor and record the extraction flow rate.
- Record pressure gauge readings.
- Record reading on extraction well pump run meter.
- Monitor and record the chemical tank levels.
- Adjust chemical feed pump settings, if needed.
- Check the filter and replace the cartridge as needed.
- Replenish chemical solutions, as needed.
- Monitor and record the DO concentrations, pH, and ORP in the monitoring wells and the extraction well.

Short-Term Operation

The groundwater recirculation system will be operated with chemical injection for several weeks to create anaerobic conditions prior to the addition of the *Dehalococcoides*. Based on modeling, it is anticipated that the pilot study area will become anaerobic in 1 to 2 weeks. Anaerobic conditions will be identified by DO and ORP measurements within the pilot study area.

Remove filter cartridge during normal operations, unless excessive sediment has been observed.

After chemical addition is started, the pilot plant will be visited 2 to 3 times a week. Each time the site is visited, the following tasks will be performed:

- Monitor and record water levels in the extraction well, injection wells, new monitoring wells, and in the existing CEF-59-003 monitoring well.
- Monitor and record the extraction flow rate.
- Record pressure gauge readings.
- Record reading on extraction well pump run meter.
- Monitor and record the chemical tank levels.
- Adjust chemical feed pump settings, if needed.
- Replenish chemical solutions, as needed.

- Monitor and record the DO concentrations, pH, and ORP in the monitoring wells and the extraction well.
- After 14 days, the settings on the sodium bicarbonate feed pump can be adjusted to 0.23 gal/hour and the concentration increased to 0.54 lb/gal.
- Collect groundwater samples for analysis according to the sampling schedule (see Table 4-1).

To minimize the potential for injection well clogging, the sodium lactate feed will be stopped for 4-6 hours on 1 day each week to flush the immediate vicinity of the injection well.

Long-Term Operation

After the DO concentrations in the monitoring wells have decreased to less than 0.2 mg/L and ORP to less than -100 mV, and anaerobic conditions have been reached, the *Dehalococcoides* will be added. Inject the culture using the higher-rate sodium bicarbonate pump and the lower-volume lactate tank. After the lactate tank has been drawn down to about 1 gallon, turn off the chemical feed pumps. Connect the suction line from the sodium carbonate pump to the lactate tank.

The *Dehalococcoides* inoculum is added according to the vendor's recommendations to minimize exposure to oxygen. The inoculum is provided in special sealed containers. The container has a fitting for compressed nitrogen gas and a vent valve to release gas from the container. A hose from the nitrogen gas regulator is attached to the container and nitrogen is purged through the inoculum in the container at 3 psig for 3 to 5 minutes. After the container has been degassed, the inoculum can be injected. The inoculum is mixed with de-oxygenated water prior to pumping into the subsurface. The water is deoxygenated using an oxygen-scavenging compound that is also provided by the vendor.

Set the feed pump to 1.5 gallons per hour. Close the valve to the upstream injection well. Activate the feed pump; the feed should be completed in 6 to 7 hours. After the *Dehalococcoides* has been fed, restore the chemical feed pumps to the original configurations and pump settings, open the injection well valve, make up the lactate solution, and restart the chemical feeds. Anoxic water will be used for chemical solution makeup after the inoculum injection.

After *Dehalococcoides* is added, the pilot plant will continue to be visited 2 to 3 times a week. Each time the site is visited, the following tasks will be performed:

- Monitor and record water levels in the extraction well, injection wells, new monitoring wells, and in the existing CEF-59-003 monitoring well.
- Monitor and record the extraction flow rate.
- Record pressure gauge readings.

- Record reading on extraction well pump run meter.
- Monitor and record the chemical tank levels.
- Adjust chemical feed pump settings, if needed.
- Replenish chemical solutions, as needed.
- Monitor and record the DO concentrations, pH, and ORP in the monitoring wells and the extraction well.
- Collect groundwater samples for analysis according to the sampling schedule (see Table 4-1)

To minimize the potential of injection well clogging, the sodium lactate feed will be stopped for 4 to 6 hours on 1 day each week to flush the immediate vicinity of the injection well.

The recirculation system will be operated for approximately 3 months. Chemical feed rates and/or frequency and duration of chemical feeds may be modified over the course of the study based on observations of injection well water levels and results of groundwater analyses. After the results of the 3-month samples are received from the laboratory, the results and trends will be evaluated to determine whether to shutdown the recirculation system or to continue operations.

5.3.3 Shutdown and Restart

The pilot system is primarily a manually operated system and is provided with a minimum of automation. The system automatically shuts down if the water level in either injection well becomes too high to prevent spilling contaminated groundwater on the ground surface. The chemical feed pumps will shut down automatically if the extraction well pump overload protection device trips to prevent overfeeding the chemicals.

Care must be taken following any shutdown because the individual pump switches may be "on", but power has been interrupted further up the line. When the power is restored or the system controls reset, the pumps may begin operating.

Automatic Shutdown

The system controls shuts down the recirculation system if either injection well high level switch trips or if extraction well pump (P-1) overloads. If either level switch trips, P-1 is shut off and AC power to the chemical feed pumps (P-2 and P-3) is shut off. If the P-1 overload relay trips, AC power to the chemical feed pumps (P-2 and P-3) is shut off.

The system will remain shut off until the system is manually reset and restarted.

Manual Shutdown

To manually shut down the system:

- Turn off P-2 using the on/off switch on the pump.
- Turn off P-3 using the on/off switch on the pump.
- Close the valves both chemical feed lines.
- Turn off the extraction well pump (P-1).

(The pumps may be turned off in any order, if needed.)

Note that manually turning off P-1 does not automatically turn off P-2 and P-3. This allows for testing and or operation of P-2 and P-3 with P-1 not running.

Restart After Automatic Shutdown

The system can be restarted after determining and correcting the cause of the shutdown. Prior to resetting and restarting the system, manually turn off P-2 and P-3, and turn P-1 to off. Press the Reset button. Then proceed with the startup sequence described in "Startup", above.

Restart After Manual Shutdown

If the system has been shutdown manually, proceed with startup as described in "Startup", above.

5.4 DECONTAMINATION

Decontamination activities will be conducted during the field investigation in accordance with TtNUS Decontamination of Field Equipment and Waste Handling Standard Operating Procedure (SOP).

5.5 INVESTIGATION-DERIVED WASTE HANDLING

Investigation-derived waste (IDW) generated during the pilot study is to be handled and disposed in accordance with TtNUS Decontamination of Field Equipment and Waste Handling SOP and NAS Cecil Field practices.

5.6 SURVEYING

The new monitoring wells will be surveyed. Existing wells in the Site 59 area will be utilized as reference points.

6.0 PILOT STUDY SAMPLING PROCEDURES

This section describes the procedures for pilot study sampling and sample handling requirements.

6.1 SAMPLING PROCEDURES

This section details the field sampling procedures to be used for the collection of pilot study groundwater samples.

6.1.2 Groundwater Sampling

Groundwater sampling and analysis is presented in Table 6-1. Groundwater samples will be collected as follows as shown on Figure 4-5:

- Prior to groundwater recirculation and substrate injection (baseline)
- 2 weeks after recirculation system activation (field parameters only)
- 3 weeks after the startup of groundwater recirculation and substrate injection
- 2 weeks after injection of *Dehalococcoides* (field parameters only)
- 4 weeks after injection of *Dehalococcoides*
- 6 weeks after injectionof *Dehalococcoides* (field parameters only)
- 8 weeks after injection of *Dehalococcoides*
- 15 weeks after injection of *Dehalococcoides*
- 19 weeks after injection of *Dehalococcoides* (field parameters only)
- 21 weeks after injection of *Dehalococcoides*
- 27 weeks after injection of *Dehalococcoides*

Collected groundwater samples will be analyzed as indicated on Table 6-1.

Groundwater samples will be collected using low-flow sampling techniques. A complete round of synoptic water levels will be collected from the existing and newly installed wells prior to purging and sampling. Groundwater samples will be field analyzed as summarized in Table 6-2. After the data are collected and analyzed, it will be interpreted to evaluate groundwater recirculation and substrate injection effectiveness.

6.1.3 QA/QC Samples

To assure that data obtained during the investigation are accurate, various quality assurance/quality control (QA/QC) requirements have been established for fieldwork, laboratory analysis of the collected samples, and validation of the analytical results obtained from the laboratory.

The collection of rinsate and trip blanks has been eliminated at NAS Cecil Field. In addition, field blanks will not be collected during this sampling program because there will be minimal decontamination of sampling equipment. In accordance with these changes, Table 6-3 summarizes the frequency and type of field QA/QC samples to be collected for this sampling program. These requirements do not apply to field parameters, PCR, and CSSI analyses.

All samples will be subjected to limited data validation in accordance with the procedures outlined in Navy guidance (Sampling and Chemical Analysis Quality Assurance Requirements for the Navy Installation Restoration Program, NFESC 20.2-047B) and United States Environmental Protection Agency (U.S. EPA) Contract Laboratory Program National Functional Guidelines for Organic and Inorganic Data Review (U.S. EPA, 1999, and 2004). Data validation is an objective systematic process in which analytical data are reviewed to ascertain the validity of the reported results and to identify for the data user the possible limitations of these results. The limited data validation review will consist of an evaluation of the data to eliminate false positives and to preclude false negatives. The limited data validation review will evaluate environmental samples for data completeness, holding time compliance, calibration compliance, and laboratory blank contamination. The limited data validation review will be primarily limited to the aforementioned criteria; however, if noncompliances compromising false negatives or false positives are noted, the reviewer would take appropriate action to qualify the data.

6.2 SAMPLE HANDLING

This section details sample handling procedures including, field-related considerations concerning the selection of sample containers, preservatives, and allowable holding times for requested analyses. In addition, sample identification, packaging, and shipping are addressed in this section.

6.2.1 Field Documentation

Field documentation will be conducted as described in TtNUS SOP SA-6.3. Completed chain-of-custody forms will be faxed to the TtNUS project manager on a daily basis.

6.2.2 Sample Nomenclature

Each collected sample will be assigned a unique sample tracking number consisting of an alphanumeric code, as shown in Table 6-1. Any other pertinent information regarding sample identification will be recorded in the field logbooks and on the sample log sheets.

Soil samples will be numbered as: CEF-59-SB-XXX-YY

Where: XXX is the well designation (EW, IW1, IW2, MW1, MW2, MW3, and MW4).
YY is the sample depth in feet bgs.

6.2.3 Sample Containers, Preservatives, and Holding Times

Table 6-4 provides a summary of the analyses, methodology, bottle requirements, preservation requirements, and holding times for the samples to be submitted for fixed-base laboratory analysis.

6.2.4 Sample Packaging and Shipping

When the samples are containerized, they will be placed on ice in a cooler and, within a reasonable period of time, delivered to a local Federal Express office. Sample containers provided by the laboratory are pre-preserved. The FOL will be responsible for completion of the following forms:

- Sample labels
- Chain-of-custody forms
- Chain-of-custody labels

6.3 SAMPLE CUSTODY

Custody of samples must be maintained and documented at all times. Chain of custody begins with the collection of the samples in the field. A chain-of-custody form provided by the subcontracted laboratory will be used during the sample handling process.

TABLE 6-1

GROUNDWATER SAMPLING AND ANALYSIS SUMMARY
OU 9 SITE 59 PILOT STUDY
NAVAL AIR STATION CECIL FIELD
JACKSONVILLE, FLORIDA

Location	Sample Designation	Screen Depth (feet bgs)	LABORATORY ANALYSES										FIELD TESTS									
			Chlorinated VOCs	Dissolved Gases[1]	Iron (Dissolved)	Manganese (Dissolved)	Sulfide	Miscellaneous Anions[2]	Metabolic Acids[3]	TOC	PCR and enzymes[4]	CSSI	Temperature	pH	Specific Conductivity	Oxidation / Reduction Potential	Dissolved CO_2	Alkalinity as ($CaCO_3$)	Dissolved Oxygen	Iron (Ferrous)	Hydrogen Sulfide	Water Level
Event 1 - Baseline Samples																						
059-IW2	CEF-059-GW-IW2-01A	65-75	•	•	•	•	•	•	•	•			•	•	•	•	•	•	•	•	•	•
059-MW1	CEF-059-GW-MW1-01A	68-73	•	•	•	•	•	•	•	•	•	•	•	•	•	•	•	•	•	•	•	•
059-MW2	CEF-059-GW-MW2-01A	68-73	•	•	•	•	•	•	•	•	•	•	•	•	•	•	•	•	•	•	•	•
059-003-73 (Ex)	CEF-059-GW-003-73-01A	68-73	•	•	•	•	•	•	•	•			•	•	•	•	•	•	•	•	•	•
059-003-53 (Ex)	CEF-059-GW-003-53-01A	48-53	•																			
059-MW3	CEF-059-GW-MW3-01A	68-73	•	•	•	•	•	•	•	•			•	•	•	•	•	•	•	•	•	•
059-MW4	CEF-059-GW-MW4-01A	68-73	•	•	•	•	•	•	•	•			•	•	•	•	•	•	•	•	•	•
059-MW5	CEF-059-GW-MW5-01A	68-73	•																			
059-001-083 (Ex)	CEF-059-GW-001-83-01A	78-83									•											
059-002-30 (Ex)	CEF-059-GW-002-30-01A	25-30	•									•										
Event 2 - 2 weeks after recirc start																						
059-IW2	CEF-059-GW-IW2-02A	65-75											•	•	•	•	•	•	•	•	•	•
059-MW1	CEF-059-GW-MW1-02A	68-73											•	•	•	•	•	•	•	•	•	•
059-MW2	CEF-059-GW-MW2-02A	68-73											•	•	•	•	•	•	•	•	•	•
059-003-73 (Ex)	CEF-059-GW-003-73-02A	68-73											•	•	•	•	•	•	•	•	•	•
059-MW3	CEF-059-GW-MW3-02A	68-73											•	•	•	•	•	•	•	•	•	•
059-MW4	CEF-059-GW-MW4-02A	68-73											•	•	•	•	•	•	•	•	•	•
Event 3 - 3 weeks after chem feed start																						
059-IW2	CEF-059-GW-IW2-03A	65-75	•	•	•	•	•	•	•	•	•		•	•	•	•	•	•	•	•	•	•
059-MW1	CEF-059-GW-MW1-03A	68-73	•	•	•	•	•	•	•	•	•		•	•	•	•	•	•	•	•	•	•
059-MW2	CEF-059-GW-MW2-03A	68-73	•	•	•	•	•	•	•	•	•		•	•	•	•	•	•	•	•	•	•
059-003-73 (Ex)	CEF-059-GW-003-73-03A	68-73	•	•	•	•	•	•	•	•			•	•	•	•	•	•	•	•	•	•
059-003-53 (Ex)	CEF-059-GW-003-53-03A	48-53	•																			
059-MW3	CEF-059-GW-MW3-03A	68-73	•	•	•	•	•	•	•	•			•	•	•	•	•	•	•	•	•	•
059-MW4	CEF-059-GW-MW4-03A	68-73	•	•	•	•	•	•	•	•			•	•	•	•	•	•	•	•	•	•
059-MW5	CEF-059-GW-MW5-03A	68-73	•																			
059-001-083 (Ex)	CEF-059-GW-001-83-03A	78-83									•											
Event 4 - 2 weeks after DHC injection																						
059-EW	CEF-059-GW-EW-04A	65-75											•	•	•	•	•	•	•	•	•	•
059-MW1	CEF-059-GW-MW1-04A	68-73											•	•	•	•	•	•	•	•	•	•
059-MW2	CEF-059-GW-MW2-04A	68-73											•	•	•	•	•	•	•	•	•	•

TABLE 6-1

GROUNDWATER SAMPLING AND ANALYSIS SUMMARY
OU 9 SITE 59 PILOT STUDY
NAVAL AIR STATION CECIL FIELD
JACKSONVILLE, FLORIDA

Location	Sample Designation	Screen Depth (feet bgs)	LABORATORY ANALYSES										FIELD TESTS									
			Chlorinated VOCs	Dissolved Gases[1]	Iron (Dissolved)	Manganese (Dissolved)	Sulfide	Miscellaneous Anions[2]	Metabolic Acids[3]	TOC	PCR and enzymes[4]	CSSI	Temperature	pH	Specific Conductivity	Oxidation / Reduction Potential	Dissolved CO_2	Alkalinity as ($CaCO_3$)	Dissolved Oxygen	Iron (Ferrous)	Hydrogen Sulfide	Water Level
Event 5 - 4 weeks after DHC injection																						
059-IW2	CEF-059-GW-IW2-05A	65-75	•						•	•			•	•	•	•	•	•	•	•	•	•
059-MW1	CEF-059-GW-MW1-05A	68-73	•						•	•			•	•	•	•	•	•	•	•	•	•
059-MW2	CEF-059-GW-MW2-05A	68-73	•						•	•			•	•	•	•	•	•	•	•	•	•
059-003-73 (Ex)	CEF-059-GW-003-73-05A	68-73	•						•	•			•	•	•	•	•	•	•	•	•	•
059-MW3	CEF-059-GW-MW3-05A	68-73	•						•	•			•	•	•	•	•	•	•	•	•	•
059-MW4	CEF-059-GW-MW4-05A	68-73	•						•	•			•	•	•	•	•	•	•	•	•	•
059-MW5	CEF-059-GW-MW5-05A	68-73	•																			
Event 6 - 6 weeks after DHC injection																						
059-EW	CEF-059-GW-EW-06A	65-75											•	•	•	•	•	•	•	•	•	•
059-MW1	CEF-059-GW-MW1-06A	68-73											•	•	•	•	•	•	•	•	•	•
059-MW2	CEF-059-GW-MW2-06A	68-73											•	•	•	•	•	•	•	•	•	•
Event 7 - 8 weeks after DHC injection																						
059-IW2	CEF-059-GW-IW2-07A	65-75	•	•	•	•	•	•	•	•	•		•	•	•	•	•	•	•	•	•	•
059-MW1	CEF-059-GW-MW1-07A	68-73	•	•	•	•	•	•	•	•	•	•	•	•	•	•	•	•	•	•	•	•
059-MW2	CEF-059-GW-MW2-07A	68-73	•	•	•	•	•	•	•	•	•	•	•	•	•	•	•	•	•	•	•	•
059-003-73 (Ex)	CEF-059-GW-003-73-07A	68-73	•	•	•	•	•	•	•	•			•	•	•	•	•	•	•	•	•	•
059-003-53 (Ex)	CEF-059-GW-003-53-07A	48-53	•																			
059-MW3	CEF-059-GW-MW3-07A	68-73	•	•	•	•	•	•	•	•			•	•	•	•	•	•	•	•	•	•
059-MW4	CEF-059-GW-MW4-07A	68-73	•	•	•	•	•	•	•	•			•	•	•	•	•	•	•	•	•	•
059-MW5	CEF-059-GW-MW5-07A	68-73	•																			
059-001-083 (Ex)	CEF-059-GW-001-83-07A	78-83									•											
059-002-30 (Ex)	CEF-059-GW-002-30-07A	25-30	•									•										
Event 8 - 15 weeks after DHC injection																						
059-IW2	CEF-059-GW-IW2-08A	65-75	•	•	•	•	•	•	•	•			•	•	•	•	•	•	•	•	•	•
059-MW1	CEF-059-GW-MW1-08A	68-73	•	•	•	•	•	•	•	•			•	•	•	•	•	•	•	•	•	•
059-MW2	CEF-059-GW-MW2-08A	68-73	•	•	•	•	•	•	•	•			•	•	•	•	•	•	•	•	•	•
059-003-73 (Ex)	CEF-059-GW-003-73-08A	68-73	•	•	•	•	•	•	•	•			•	•	•	•	•	•	•	•	•	•
059-003-53 (Ex)	CEF-059-GW-003-53-08A	48-53	•																			
059-MW3	CEF-059-GW-MW3-08A	68-73	•	•	•	•	•	•	•	•			•	•	•	•	•	•	•	•	•	•
059-MW4	CEF-059-GW-MW4-08A	68-73	•	•	•	•	•	•	•	•			•	•	•	•	•	•	•	•	•	•
059-MW5	CEF-059-GW-MW5-08A	68-73	•																			

TABLE 6-1

GROUNDWATER SAMPLING AND ANALYSIS SUMMARY
OU 9 SITE 59 PILOT STUDY
NAVAL AIR STATION CECIL FIELD
JACKSONVILLE, FLORIDA

Location	Sample Designation	Screen Depth (feet bgs)	LABORATORY ANALYSES										FIELD TESTS									
			Chlorinated VOCs	Dissolved Gases(1)	Iron (Dissolved)	Manganese (Dissolved)	Sulfide	Miscellaneous Anions(2)	Metabolic Acids(3)	TOC	PCR and enzymes(4)	CSSI	Temperature	pH	Specific Conductivity	Oxidation / Reduction Potential	Dissolved CO_2	Alkalinity as ($CaCO_3$)	Dissolved Oxygen	Iron (Ferrous)	Hydrogen Sulfide	Water Level
Event 9 - 19 weeks after DHC injection																						
059-EW	CEF-059-GW-EW-09A	65-75											•	•	•	•	•	•	•	•	•	•
059-MW1	CEF-059-GW-MW1-09A	68-73											•	•	•	•	•	•	•	•	•	•
059-MW2	CEF-059-GW-MW2-09A	68-73											•	•	•	•	•	•	•	•	•	•
Event 10 - 21 weeks after DHC injection																						
059-IW2	CEF-059-GW-IW2-10A	65-75									•											
059-MW1	CEF-059-GW-MW1-10A	68-73	•	•	•	•	•	•	•	•	•	•	•	•	•	•	•	•	•	•	•	•
059-MW2	CEF-059-GW-MW2-10A	68-73									•	•										
059-003-73 (Ex)	CEF-059-GW-003-73-10A	68-73	•	•	•	•	•	•	•	•			•	•	•	•	•	•	•	•	•	•
059-MW3	CEF-059-GW-MW3-10A	68-73																				
059-MW4	CEF-059-GW-MW4-10A	68-73	•	•	•	•	•	•	•	•			•	•	•	•	•	•	•	•	•	•
059-MW5	CEF-059-GW-MW5-10A	68-73	•																			
059-001-083 (Ex)	CEF-059-GW-001-83-10A	78-83									•											
059-002-30 (Ex)	CEF-059-GW-002-30-10A	25-30	•									•										
Event 11 - 27 weeks after DHC injection																						
059-IW2	CEF-059-GW-IW2-11A	65-75																				
059-MW1	CEF-059-GW-MW1-11A	68-73	•	•	•	•	•	•	•	•			•	•	•	•	•	•	•	•	•	•
059-MW2	CEF-059-GW-MW2-11A	68-73																				
059-003-73 (Ex)	CEF-059-GW-003-73-11A	68-73	•	•	•	•	•	•	•	•			•	•	•	•	•	•	•	•	•	•
059-MW3	CEF-059-GW-MW3-11A	68-73																				
059-MW4	CEF-059-GW-MW4-11A	68-73	•	•	•	•	•	•	•	•			•	•	•	•	•	•	•	•	•	•

1 Dissolved gases include ethane, ethene, methane, and acetylene.
2 Miscellaneous anions include sulfate, sulfide, nitrate, nitrite, chloride, phosphate.
3 Metabolic Acids include lactic, pyruvic, acetic, propionic, and butyric.
4 Enzymes include TCE reductase, BAV1 VC reductase, and VC reductase.
bgs = Below ground surface.
CSSI = Compound Specific Stable Isotope.
Ex = Existing.
PCR = Polymerase chain reaction.
VOC = Volatile organic compounds.

TABLE 6-2

GROUNDWATER FIELD ANALYSES[1]
BIOLOGICAL ACTIVITY INDICATORS
OPERABLE UNIT 9 SITE 59
NAVAL AIR STATION CECIL FIELD
JACKSONVILLE, FLORIDA

Parameter	Method/ Reference	Sample Volume, Container, & Preservation
Ferrous Iron	HACH IR-18C	Follow test kit instructions. Analyze immediately at well head. Filter if turbid.
Hydrogen Sulfide	HACH HS-C	Follow test kit instructions. Do not aerate or agitate. Avoid agitation and analyze immediately at well head.
Temperature	Direct-reading meter	100 to 250 ml in glass or plastic container. Analyze at well head.
Dissolved Oxygen	CHEMetrics – K-7501, K-7512 vacuum vials	Follow test kit instructions. Analyze at well head.
pH	Direct-reading meter	100 to 250 ml in glass or plastic container. Analyze at well head.
Specific Conductivity	Direct-reading meter	100 to 250 ml in glass or plastic container. Analyze at well head.
Oxidation/Reduction Potential (ORP)	Direct-reading meter	10 to 250 ml in glass container filling from the bottom. Do not aerate or agitate. Analyze at well head with flow-through cell.
Alkalinity	CHEMetrics ampoules kits	Follow test kit instructions.

1 Table adapted from overview of the Technical Guidelines for Evaluating Natural Attenuation of Chlorinated Solvents in Groundwater (U.S. EPA, 1998).

TABLE 6-3

FREQUENCY AND TYPE OF FIELD
QUALITY ASSURANCE/QUALITY CONTROL SAMPLES
OPERABLE UNIT 9 SITE 59
NAVAL AIR STATION CECIL FIELD
JACKSONVILLE, FLORIDA

Type Of Samples	Frequency	Samples to be Collected
Lab MS/MSD	1 per 10 sample/matrix	5
Field Duplicate	1per 20 samples/matrix	3(1)

1 MS/MSD is a laboratory QA/QC requirement. Separate samples are not required, only additional volume (2X).

TABLE 6-4

SUMMARY OF FIXED-BASE LABORATORY ANALYSES, METHODOLOGIES, BOTTLE REQUIREMENTS, PRESERVATION REQUIREMENTS, AND HOLDING TIMES
OPERABLE UNIT 9 SITE 59
NAVAL AIR STATION CECIL FIELD
JACKSONVILLE, FLORIDA

Analysis	Analytical Method or SOP	Quantity of Samples[1]	Quantity of Containers per Sample	Container Type	Preservation Requirements	Holding Times[2]
Aqueous Samples						
Chlorinated VOC	SW-846 8260B	25	3	40-mL vials with Teflon septa (Borosilicate glass)	Cool to 4°C HCl to pH $\leq$ 2	14 days to analysis
Manganese and Iron (Dissolved)	SW-846 6010B	25	1	500 mL HDPE	Field filtering; HNO_3 to pH $\leq$ 2	6 months to analysis
Anions: Chloride (Cl^-), Nitrate (NO_3^-), Nitrite (NO_2^-), Sulfate (SO_4), Orthophosphate	EPA Method 300.0[6]	25	1	1 L HDPE[5]	None required	Cl & SO_4 28 days to analysis; orthophosphate, NO_2 & NO_3 48 hours to analysis.
Sulfide (S^-)	EPA 376.1[7]	25	1	1-liter HDPE	Zinc Acetate & NaOH to pH > 9 Cool to 4°C	7 days to analysis
Methane, Ethane, Ethene, Acetylene	RSK[8] SOPs 147 & 175	25	2	40-mL glass, plastic screw cap, foil-faced silicon septum	Cool to 4°C	14 days to analysis
Total Organic Carbon (TOC)	EPA 415.1[9]	25	1	125-mL HDPE	H_2SO_4 to pH < 2 Cool to 4°C	28 days to analysis
Metabolic Acids: Lactic, Pyruvic, Acetic, Propionic, Butyric	Laboratory SOP	25	2	40-mL glass, plastic screw cap, silicon septum	Cool to 4°C	Not specified
PCR and enzymes (TCE reductase, BAV1 VC reductase, and VC reductase)	Laboratory SOP	15	1	1L glass bottle	Cool to 4°C	Ship on day of collection

TABLE 6-4

SUMMARY OF FIXED-BASE LABORATORY ANALYSES, METHODOLOGIES, BOTTLE REQUIREMENTS, PRESERVATION REQUIREMENTS, AND HOLDING TIMES
OPERABLE UNIT 9 SITE 59
NAVAL AIR STATION CECIL FIELD
JACKSONVILLE, FLORIDA

Analysis	Analytical Method or SOP	Quantity of Samples[1]	Quantity of Containers per Sample	Container Type	Preservation Requirements	Holding Times[2]
CSSI	Laboratory SOP	9	3	40-mL vials with Teflon septa	Cool to 4°C HCl to pH $\leq$ 2	14 days to analysis
Solid Samples						
VOCs	SW-846 8260B	14	3	Encore samplers	Cool to 4°C	48 hours to preservation by laboratory; 14 days to analysis
Fraction Organic Carbon	SW-846 9060	3	1	200 gram wide glass jar	Cool to 4°C	14 days to analysis

NOTES:

HDPE High density polyethylene.
PCR Polymerase chain reaction.
SOP Standard operating procedure.
VOC Volatile organic compound.
CSSI Compound Specific Stable Isotope.

1 Number does not include QA/QC samples to be analyzed.
2 All holding times are determined from date of collection.
3 US EPA CLP, 1999. Statement of Work for Inorganic Analysis, Multi-Media, Multi-Concentration; ILM04.1.
4 US EPA, 1983. Methods for Chemical Analysis of Water and Wastes. Method 310.1.
5 For groundwater, alkalinity and anions samples will be provided in the same 1000 mL bottle
6 US EPA, 1983. Methods for Chemical Analysis of Water and Wastes. Method 300.0.
7 US EPA, 1983. Methods for Chemical Analysis of Water and Wastes. Method 376.1.
8 RSK = Robert S. Kerr Environmental Research Center, Oklahoma.
9 US EPA, 1983. Methods for Chemical Analysis of Water and Wastes. Method 415.1.

REFERENCES

TtNUS, 2004. Remedial Investigation Work Plan, Site Operable Unit 9, Site 59 - Buildings 324/1845 Area, Naval Air Station (NAS) Cecil Field, Jacksonville, Florida, August 2004.

U.S. EPA, 2000a. (Environmental Protection Agency). *Guidance for the Data Quality Objectives Process (EPA QA/G-4)*. EPA/600/R-96/055. Washington, DC. August, 2000.

U.S. EPA, 1999a. (Environmental Protection Agency). *Contract Laboratory Program National Functional Guidelines for Organic Data Review*. EPA-540/R-99-008. Washington, DC. October, 1999.

U.S. EPA, 2004. (Environmental Protection Agency). *Contract Laboratory Program National Functional Guidelines for Inorganic Data Review*. EPA 540-R-04-004. Washington, DC. October, 2004.

APPENDIX A

MSDS

CHURCH & DWIGHT CO., INC.

CONSUMER PRODUCTS • SPECIALTY PRODUCTS

MATERIAL SAFETY DATA SHEET

1. PRODUCT AND COMPANY IDENTIFICATION

Product Name

SODIUM BICARBONATE
(BAKING SODA)

Church & Dwight Co., Inc.
469 N. Harrison Street
Princeton, NJ 08543

Information Phone:
1-609-683-5900 (USA)

Medical Emergency Phone:
1-888-234-1828

2. COMPOSITION/INFORMATION ON INGREDIENTS

Chemical Ingredient (% by Weight)		CAS Number
Sodium Bicarbonate	100%	144-55-8

Not hazardous under OSHA Standard 29 CFR 1910.1200.
Not a WHMIS controlled substance.

3. HAZARDS IDENTIFICATION

EMERGENCY OVERVIEW

White crystalline powder; no odor.
Not a fire hazard.
No significant health or environmental effects associated with this material.

HMIS Rating	
Health	0
Fire	0
Reactivity	0

Potential Health Effects

EYE: Not an eye irritant.

SKIN CONTACT: Not a skin irritant.

INGESTION: Material is practically non-toxic. Small amounts (1-2 tablespoonfuls) swallowed during normal handling operations are not likely to cause injury as long as the stomach is not overly full; swallowing larger amounts may cause injury (see Note in Section IV).

INHALATION: None known.

SUBCHRONIC EFFECTS/CARCINOGENICITY: Based on published studies on its effects in animals and humans, sodium bicarbonate is not teratogenic or genotoxic. Only known subchronic effect is that of a marked systemic alkalosis. Not classified as carcinogenic by NTP, IARC, OSHA, ACGIH or NIOSH.

4. FIRST AID MEASURES

EYES: Check for and remove contacts. Flood eyes with clean flowing water, low pressure and luke warm (not hot) if possible, occasionally lifting eyelids.

INGESTION: If large amounts of this material are swallowed, do not induce vomiting. Administer water if person is conscious. Never give anything by mouth to an unconscious person.

NOTE TO PHYSICIAN: Large doses may produce systemic alkalosis and expansion in extracellular fluid volume with edema.

5. FIRE FIGHTING MEASURES

FLAMMABLE PROPERTIES
FLASHPOINT: Not combustible
METHOD USED: Not applicable

FLAMMABLE LIMITS
LFL: Not applicable
UFL: Not applicable

EXTINGUISHING MEDIA: Non-combustible material. Use extinguishing media appropriate for surrounding fire.

FIRE-FIGHTING INSTRUCTIONS: Carbon Dioxide may be generated making necessary the use of a self-contained breathing apparatus (SCBA) and full protective equipment (Bunker Gear). Carbon dioxide is an asphyxiant at levels over 5% w/w. Sodium oxide, another thermal decomposition product existing at temperatures above 1564°F is a respiratory, eye, and skin irritant. Avoid inhalation, eye and skin contact with sodium oxide dusts.

UNUSUAL FIRE AND EXPLOSION HAZARDS: None known.

6. ACCIDENTAL RELEASE MEASURES

Scoop up into dry, clean containers. Wash away uncontaminated residue with water.

7. HANDLING AND STORAGE

Store in cool, dry areas and away from incompatible substances (see Section 10).

Sodium Bicarbonate reacts with acids to yield carbon dioxide gas which can accumulate in confined spaces. Do not enter confined spaces until they have been well ventilated and carbon dioxide and oxygen levels have been determined to be safe.

HAZARDOUS POLYMERIZATION: Not applicable.

11. TOXICOLOGICAL INFORMATION

EYE EFFECTS: The material was minimally irritating to unwashed eyes and practically non-irritating to washed eyes (rabbits).

SKIN EFFECTS: Not a skin irritant or dermally toxic. Not a contact sensitizer.

ACUTE ORAL EFFECTS: Acute Oral-rat LD_{50} = 7.3 g/kg.

ACUTE INHALATION: LC_{50} (rat) > 4.74 mg/l.

12. ECOTOXICOLOGICAL INFORMATION

AQUATIC TOXICITY:

Daphnids: EC_{50} = 4100 mg/l.
Bluegill: LC_{50} = 7100 mg/l.
Rainbow Trout: LC_{50} = 7700 mg/l.

PERSISTENCE: This product is not expected to persist in the environment.
BIOACCUMULATION: This product is not expected to bioaccumulate.

13. DISPOSAL CONSIDERATIONS

Bury in a secured landfill in accordance with all local, state and federal environmental regulations. Empty containers may be incinerated or discarded as general trash.

14. TRANSPORTATION INFORMATION

D.O.T. SHIPPING NAME: Not regulated
TECHNICAL SHIPPING NAME: Sodium Bicarbonate
D.O.T. HAZARD CLASS: None
U.N./N.A. NUMBER: None
HAZARDOUS SUBSTANCE/RQ: None
D.O.T. LABEL: None

15. REGULATORY INFORMATION

CLEAN AIR ACT SECTION 611: Material neither contains nor is it manufactured with ozone depleting substances (ODS).

FEDERAL WATER POLLUTION CONTROL ACT (40 CFR 401.15): Material contains no intentionally added or detectable (contaminant) levels of EPA priority toxic pollutants.

FOOD AND DRUG ADMINISTRATION: Generally Recognized As Safe (GRAS) direct food additive (21 CFR 184.1736).

US DEPARTMENT OF AGRICULTURE: List of Proprietary Substances - Permitted Use Codes 3A, J1, A1, G1, and L1.
CERCLA REPORTABLE QUANTITY: None
OSHA: Not hazardous under 29 CFR 1910.1200
RCRA: Not a hazardous material or a hazardous waste by listing or characteristic.
SARA TITLE III:
Section 302, Extremely Hazardous Substances: None
Section 311/312, Hazardous Categories: Non-hazardous
Section 313, Toxic Chemicals: None
Sodium Bicarbonate is reported in the EPA TSCA InventoryList.

Contains no VOCs.

NATIONAL STOCKING NUMBER: 6810002646618, Contract No. DLA 40086C1831
NSF STANDARD 60: Corrosion and Scale Control in Potable Water. Max use 200 mg/l.
CANADA-DSL
EUROPEAN INVENTORY (EINECS): 205-633-8
JAPANESE INVENTORY (MITI): 1-164
AUSTRALIAN INVENTORY (AICS): Carbonic acid, monosodium salt.

16. OTHER INFORMATION

SUPERSEDES DATE: 07/02/02
REASON FOR REVISION: Conversion to a 16 Section Format and added Ecotoxicological information.

For additional non-emergency health, safety and environmental information telephone 609.279.7705 or write to:

Church & Dwight Co. Inc.
R & D Technical Regulatory Affairs
469 North Harrison Street
Princeton, New Jersey 08543

This Product Safety Data Sheet is offered solely for your information, consideration and investigation. Church & Dwight Co., Inc. provides no warranties, either express or implied, and assumes no responsibility for the accuracy or completeness of data contained herein. Church & Dwight Co., Inc. urges persons receiving this information to make their own determination as to the information suitability for their particular application.

Material Safety Data Sheet

Section 1. Product and Company Identification

Product Name Sodium Lactate Solution about 50% extra pure, low in endotoxins,Ph Eur,USP,BP,E325

Product Code 1.06522

Manufacturer EMD Chemicals Inc.
P.O. Box 70
480 Democrat Road
Gibbstown, NJ 08027
Prior to January 1, 2003 EMD Chemicals Inc. was EM Industries, Inc. or EM Science, Division of EM Industries, Inc.

Effective Date 3/4/2003

For More Information Call
856–423–6300 Technical Service
Monday–Friday: 8:00 AM – 5:00 PM

In Case of Emergency Call
800–424–9300 CHEMTREC (USA)
613–996–6666 CANUTEC (Canada)
24 Hours/Day: 7 Days/Week

Synonym Not available.
Material Uses Laboratory Reagent
Chemical Family Aqueous Solution

Section 2. Composition and Information on Ingredients

Component	CAS #	% by Weight
Sodium Lactate	72–17–3	50
Water	7732–18–5	50

Section 3. Hazards Identification

Physical State and Appearance Liquid.

Emergency Overview CAUTION !
MAY CAUSE RESPIRATORY TRACT, EYE AND SKIN IRRITATION.

Routes of Entry Eye contact. Inhalation. Ingestion.

Potential Acute Health Effects

Eyes May be hazardous in case of eye contact (irritant).

Skin May be hazardous in case of skin contact (irritant). Skin inflammation is characterized by itching, scaling, reddening, or, occasionally, blistering.

Inhalation May be hazardous in case of inhalation (lung irritant).

Ingestion No known acute effects of this product resulting from ingestion.

Potential Chronic Health Effects

Carcinogenic Effects This material is not known to cause cancer in animals or humans.

Additional information See Toxicological Information (section 11)

Medical Conditions Aggravated by Overexposure: Repeated or prolonged exposure is not known to aggravate medical condition.

Section 4. First Aid Measures

Eye Contact	Check for and remove any contact lenses. In case of contact, immediately flush eyes with plenty of water for at least 15 minutes. Cold water may be used. Get medical attention.
Skin Contact	In case of contact, immediately flush skin with plenty of water. Cover the irritated skin with an emollient. Remove contaminated clothing and shoes. Cold water may be used. Wash clothing before reuse. Thoroughly clean shoes before reuse. Get medical attention.
Inhalation	If inhaled, remove to fresh air. If not breathing, give artificial respiration. If breathing is difficult, give oxygen. Get medical attention.
Ingestion	Do NOT induce vomiting unless directed to do so by medical personnel. Never give anything by mouth to an unconscious person. If large quantities of this material are swallowed, call a physician immediately. Loosen tight clothing such as a collar, tie, belt or waistband.

Section 5. Fire Fighting Measures

Flammability of the Product	Non–flammable.
Auto–ignition Temperature	Not applicable.
Flash Points	Not applicable.
Flammable Limits	Not applicable.
Products of Combustion	Not applicable.
Fire Hazards in Presence of Various Substances	Not applicable.
Explosion Hazards in Presence of Various Substances	**Risks of explosion of the product in presence of static discharge:** No. **Risks of explosion of the product in presence of mechanical impact:** No.
Fire Fighting Media and Instructions	Not applicable.
Protective Clothing (Fire)	Not applicable.
Special Remarks on Fire Hazards	Not available.
Special Remarks on Explosion Hazards	Development of hazardous combustion gases or vapors possible in the event of fire.

Section 6. Accidental Release Measures

Small Spill and Leak	Dilute with water and mop up, or absorb with an inert dry material and place in an appropriate waste disposal container.
Large Spill and Leak	Absorb with an inert material and put the spilled material in an appropriate waste disposal. Finish cleaning by spreading water on the contaminated surface and allow to evacuate through the sanitary system.
Spill Kit Information	No specific spill kit required for this product.

Section 7. Handling and Storage

Handling Avoid contact with eyes, skin and clothing. Avoid breathing vapors or spray mists. Use with adequate ventilation. Wash thoroughly after handling.

Storage Keep container tightly closed. Keep container in a cool, well–ventilated area. Store between 15 to 25°C (59 to 77°F).

Section 8. Exposure Controls/Personal Protection

Engineering Controls Provide exhaust ventilation or other engineering controls to keep the airborne concentrations of vapors below their respective occupational exposure limits.

Personal Protection

Eyes Splash goggles.

Body Lab coat.

Respiratory Vapor respirator. Be sure to use an approved/certified respirator or equivalent.

Hands Gloves.

Feet Not applicable.

Protective Clothing (Pictograms)

Personal Protection in Case of a Large Spill Splash goggles. Full suit. Vapor respirator. Boots. Gloves. A self–contained breathing apparatus should be used to avoid inhalation of the product. Suggested protective clothing might not be sufficient; consult a specialist BEFORE handling this product.

Product Name	Exposure Limits
Sodium Lactate	Not available.
Water	Not available.

Section 9. Physical and Chemical Properties

Odor Odorless.

Color Light Yellow.

Physical State and Appearance Liquid.

Molecular Weight Not applicable.

Molecular Formula Not applicable.

pH 6 (Conc. (% w/w): 50) [Acidic.]

Boiling/Condensation Point The lowest known value is 99.9°C (211.8°F) (Water).

Melting/Freezing Point 109°C (228.2°F)

Specific Gravity 1.263 (Water = 1)

Vapor Pressure Not available.

Vapor Density Not available.

Odor Threshold Not available.

Evaporation Rate 0.36 (Water) compared to (n–BUTYL ACETATE=1)

LogKow Not available.

Solubility Soluble in water.

Section 10. Stability and Reactivity

Stability and Reactivity The product is stable.

Conditions of Instability Not available.

Incompatibility with Various Substances Not available.

Rem/Incompatibility Avoid Heat

Hazardous Decomposition Products Not available.

Hazardous Polymerization Will not occur.

Section 11. Toxicological Information

RTECS Number:

	Sodium Lactate	OD5680000
	Water	ZC0110000

Toxicity LD50: Not available.
LC50: Not available.

Chronic Effects on Humans Not available.

Acute Effects on Humans May be hazardous in case of eye contact (irritant). May be hazardous in case of skin contact (irritant). Skin inflammation is characterized by itching, scaling, reddening, or, occasionally, blistering. May be hazardous in case of inhalation (lung irritant).

Synergetic Products (Toxicologically) Not available.

Irritancy Draize Test: Not available.

Sensitization Not available.

Carcinogenic Effects This material is not known to cause cancer in animals or humans.

Toxicity to Reproductive System Not available.

Teratogenic Effects Not available.

Mutagenic Effects Not available.

Section 12. Ecological Information

Ecotoxicity Not available.

BOD5 and COD Not available.

Toxicity of the Products of Biodegradation The product itself and its products of degradation are not toxic.

Section 13. Disposal Considerations

EPA Waste Number Not available.

Treatment Material does not have an EPA Waste number and is not a listed waste, however consultation with a permitted waste disposal site (TSD) should be accomplished.
ALWAYS CONTACT A PERMITTED WASTE DISPOSER (TSD) TO ASSURE COMPLIANCE WITH ALL CURRENT LOCAL, STATE

AND FEDERAL REGULATIONS.

Section 14. Transport Information

DOT Classification	Proper Shipping Name: CHEMICALS,N.O.S. RQ: Not applicable.
TDG Classification	Not available.
IMO/IMDG Classification	Not available.
ICAO/IATA Classification	Not available.

Section 15. Regulatory Information

U.S. Federal Regulations	TSCA 8(b) inventory: Sodium Lactate; Water SARA 302/304/311/312 extremely hazardous substances: No products were found. SARA 302/304 emergency planning and notification: No products were found. SARA 302/304/311/312 hazardous chemicals: No products were found. SARA 311/312 MSDS distribution – chemical inventory – hazard identification: No products were found. SARA 313 toxic chemical notification and release reporting: No products were found. Clean Water Act (CWA) 307: No products were found. Clean Water Act (CWA) 311: No products were found. Clean air act (CAA) 112 accidental release prevention: No products were found. Clean air act (CAA) 112 regulated flammable substances: No products were found. Clean air act (CAA) 112 regulated toxic substances: No products were found.
WHMIS (Canada)	Not controlled under WHMIS (Canada). CEPA DSL: Sodium Lactate; Water This product has been classiifed in accordance with the hazard criteria of the Controlled Product Regulations and the MSDS contains all required information.
International Regulations	
EINECS	Sodium Lactate 200–772–0 Water 231–791–2
DSCL (EEC)	R36/37/38– Irritating to eyes, respiratory system and skin.
International Lists	Australia (NICNAS): Sodium Lactate; Water China: Sodium Lactate Japan (MITI): Sodium Lactate; Water Korea (TCCL): Sodium Lactate; Water

	Philippines (RA6969): Sodium Lactate; Water
	China: Sodium Lactate
State Regulations	New Jersey: Sodium Lactate Solution about 50% extra pure, low in endotoxins,Ph Eur,USP,BP,E325
	California prop. 65: No products were found.

Section 16. Other Information

National Fire Protection Association (U.S.A.)		**0**	**Fire Hazard**
	Health	**10**	
			Reactivity
			Specific Hazard

Changed Since Last Revision +

Notice to Reader

The statements contained herein are based upon technical data that EMD Chemicals Inc. believes to be reliable, are offered for information purposes only and as a guide to the appropriate precautionary and emergency handling of the material by a properly trained person having the necessary technical skills. Users should consider these data only as a supplement to other information gathered by them and must make independent determinations of suitability and completeness of information from all sources to assure proper use, storage and disposal of these materials and the safety and health of employees and customers and the protection of the environment. EMD CHEMICALS INC. MAKES NO REPRESENTATION OR WARRANTY OF ANY KIND, EXPRESS OR IMPLIED, INCLUDING MERCHANTABILITY OR FITNESS FOR A PARTICULAR USE, WITH RESPECT TO THE INFORMATION HEREIN OR THE PRODUCT TO WHICH THE INFORMATION REFERS.

APPENDIX B

PUMPING RATE AND GROUNDWATER ZONE OF CAPTURE

TETRA TECH NUS, INC. **CALCULATION WORKSHEET**

CLIENT Cecil Field Site 59		JOB NUMBER	
SUBJECT Groundwater Zone of Capture			
BASED ON Scenario 5 particle tracking		DRAWING NUMBER	
BY CJ	CHECKED BY	APPROVED BY	DATE

Groundwater capture zone of 1 month

- Use groundwater model "Scenario 5 - Injection - Extraction at 3 gpm. Arrows are posted every 7 days"

- 30 days particulate travel time can be found between the two highlighted particulate trave lines

- The area is approximately in the shape of circle and is estimated of 35 feet in diameter.

(1) Area = $17.5^2 * \pi$ = $\boxed{961.6\ ft^2}$

- Use groundwater model "Scenario 5 - Injection - Extraction at 3 gpm. Cross Sectional View

- A travel distance of 90 days is modeled just a few feet from bottom of pumping screen.

⇒ Estimate depth of capture zone @ 12 ft

Volume of groundwater captured = 961.6 ft^2 * 12 ft * 0.3 (porosity)

(2) Volume = 3461.8 ft^3 = $\boxed{25{,}894 \text{ gallons}}$

TETRA TECH NUS, INC. **CALCULATION WORKSHEET**

CLIENT	Cecil Field Site 59	JOB NUMBER	
SUBJECT	Volume of groundwater treated		
BASED ON	Injection-Capture Zone Analysis	DRAWING NUMBER	
BY	CHECKED BY	APPROVED BY	DATE

Volume of Groundwater Treated

Maxium groundwater velocity @ pumping rate 3 gpm was calculated at 4.43 ft/day.

Estimated time to travel from injection well to extraction well.

(1) 30 ft / 4.43 ft/day = 6.77 days

Estimated Volume of Groundwater treated

(2) 6.77 days * 3 gpm * 1440 min/day = 29,255 gallons

Cecil Field - Site 59
Injection - Capture Zone Analysis
Job Number 112GN0039.0000.DS010F20

Steady State Scenario

Injection Well	71.75
Injection Well +/- 5 feet N/S	71.75
Injection Well +/- 10 feet N/S	71.75
Injection Well +/- 15 feet N/S	71.75
Extraction Well	71.67
Extraction Well +/- 5 feet N/S	71.67
Extraction Well +/- 10 feet N/S	71.67
Extraction Well +/- 15 feet N/S	71.67

Scenario Number 1 - Pumping/Extraction 0.5 gpm

Location	WL Elevation	Difference
Injection Well	71.92	*0.17*
Injection Well +/- 5 feet N/S	71.84	*0.09*
Injection Well +/- 10 feet N/S	71.80	*0.05*
Injection Well +/- 15 feet N/S	71.78	*0.03*
Extraction Well	71.50	*0.17*
Extraction Well +/- 5 feet N/S	71.58	*0.09*
Extraction Well +/- 10 feet N/S	71.62	*0.05*
Extraction Well +/- 15 feet N/S	71.63	*0.04*

Scenario Number 2 - Pumping/Extraction 1 gpm

Location	WL Elevation	Difference
Injection Well	72.09	*0.34*
Injection Well +/- 5 feet N/S	71.92	*0.17*
Injection Well +/- 10 feet N/S	71.85	*0.10*
Injection Well +/- 15 feet N/S	71.82	*0.07*
Extraction Well	71.33	*0.34*
Extraction Well +/- 5 feet N/S	71.50	*0.17*
Extraction Well +/- 10 feet N/S	71.57	*0.10*
Extraction Well +/- 15 feet N/S	71.60	*0.07*

Scenario Number 3 - Pumping/Extraction 2 gpm

Location	WL Elevation	Difference
Injection Well	72.41	*0.66*
Injection Well +/- 5 feet N/S	72.09	*0.34*
Injection Well +/- 10 feet N/S	71.96	*0.21*
Injection Well +/- 15 feet N/S	71.88	*0.13*
Extraction Well	70.99	*0.68*
Extraction Well +/- 5 feet N/S	71.33	*0.34*
Extraction Well +/- 10 feet N/S	71.46	*0.21*
Extraction Well +/- 15 feet N/S	71.53	*0.14*

Scenario Number 4 - Pumping/Extraction 4 gpm

Location	WL Elevation	Difference
Injection Well	73.08	*1.33*
Injection Well +/- 5 feet N/S	72.43	*0.68*
Injection Well +/- 10 feet N/S	72.16	*0.41*
Injection Well +/- 15 feet N/S	72.02	*0.27*
Extraction Well	70.33	*1.34*
Extraction Well +/- 5 feet N/S	70.99	*0.68*
Extraction Well +/- 10 feet N/S	71.26	*0.41*
Extraction Well +/- 15 feet N/S	71.39	*0.28*

Scenario Number 5 - Pumping/Extraction 3 gpm

Location	WL Elevation	Difference
Injection Well	72.76	*1.01*
Injection Well +/- 5 feet N/S	72.26	*0.51*
Injection Well +/- 10 feet N/S	72.06	*0.31*
Injection Well +/- 15 feet N/S	71.95	*0.20*
Extraction Well	70.66	*1.01*
Extraction Well +/- 5 feet N/S	71.16	*0.51*
Extraction Well +/- 10 feet N/S	71.36	*0.31*
Extraction Well +/- 15 feet N/S	71.47	*0.20*

Maximum Velocities between Injection-Extraction Wells

	Gradient	Velocity (ft/day)
Scenario 1	0.0140	0.887
Scenario 2	0.0253	1.604
Scenario 3	0.0473	2.998
Scenario 4	0.0917	5.806
Scenario 5	0.0700	4.433

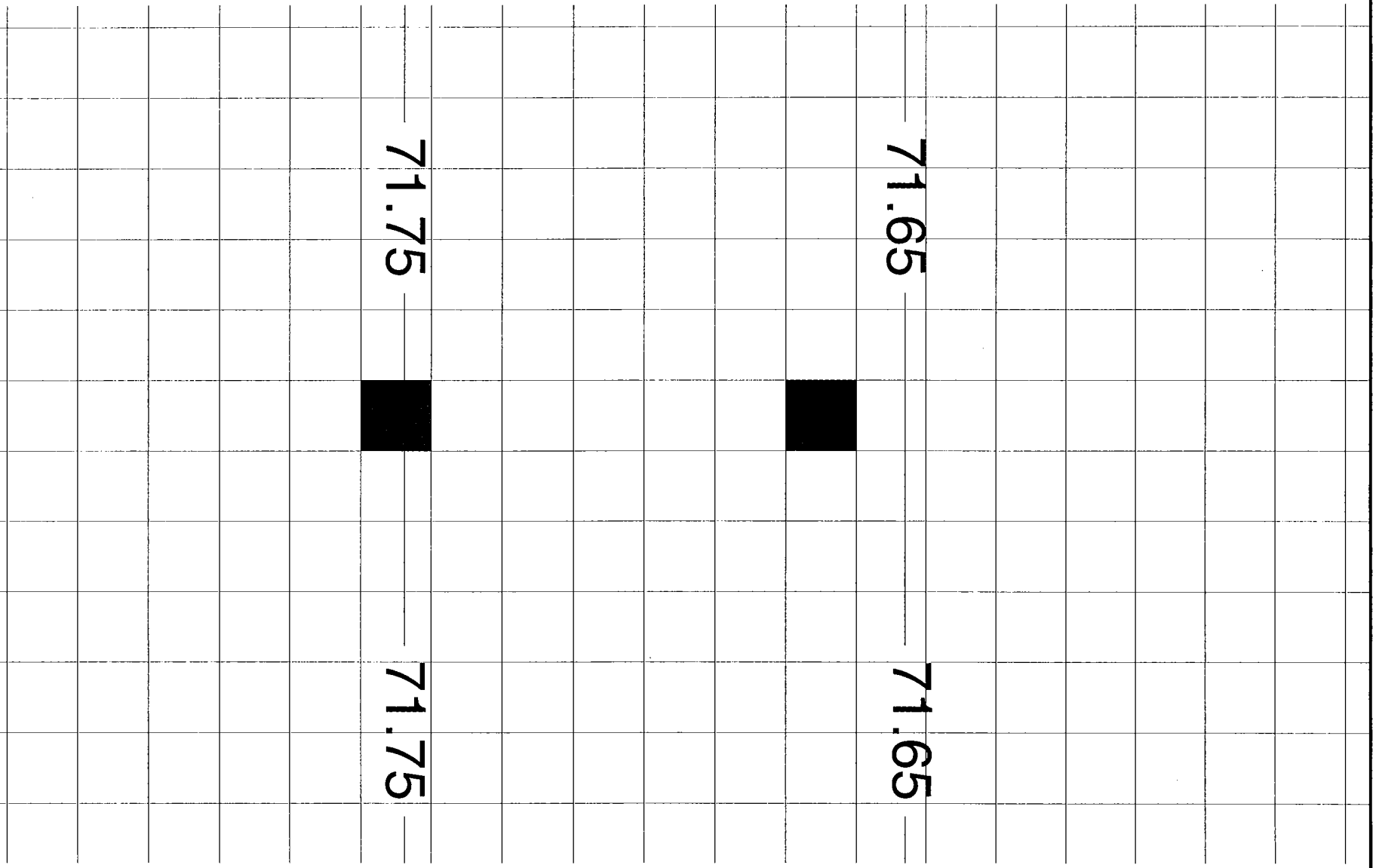

Steady State Scenario - No Pumping or Extraction

Grid cells are 5 feet by 5 feet

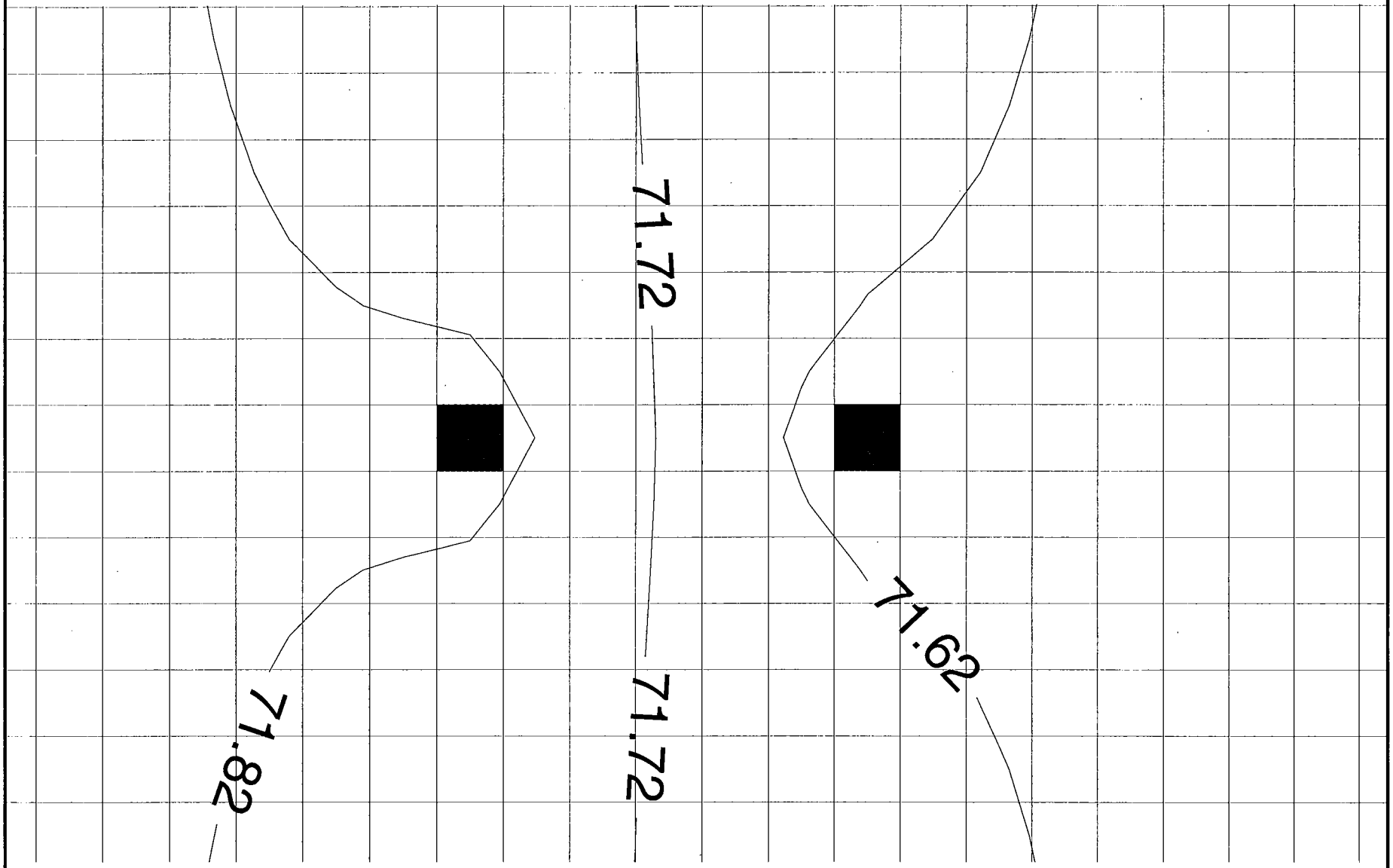

Scenario 1 - Injection-Extraction at 0.5 GPM

Grid cells are 5 feet by 5 feet

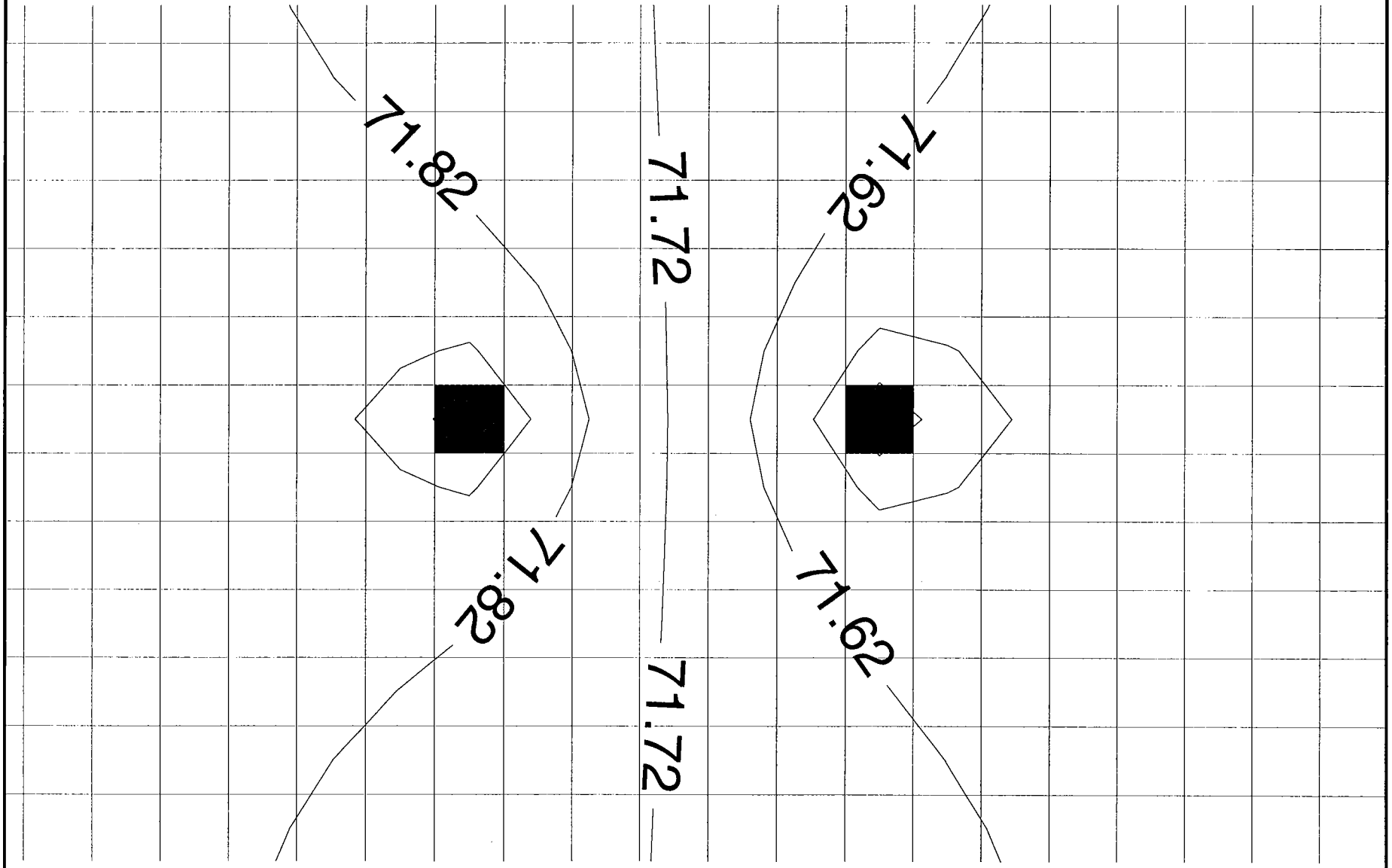

Scenario 2 - Injection-Extraction at 1 GPM

Grid cells are 5 feet by 5 feet

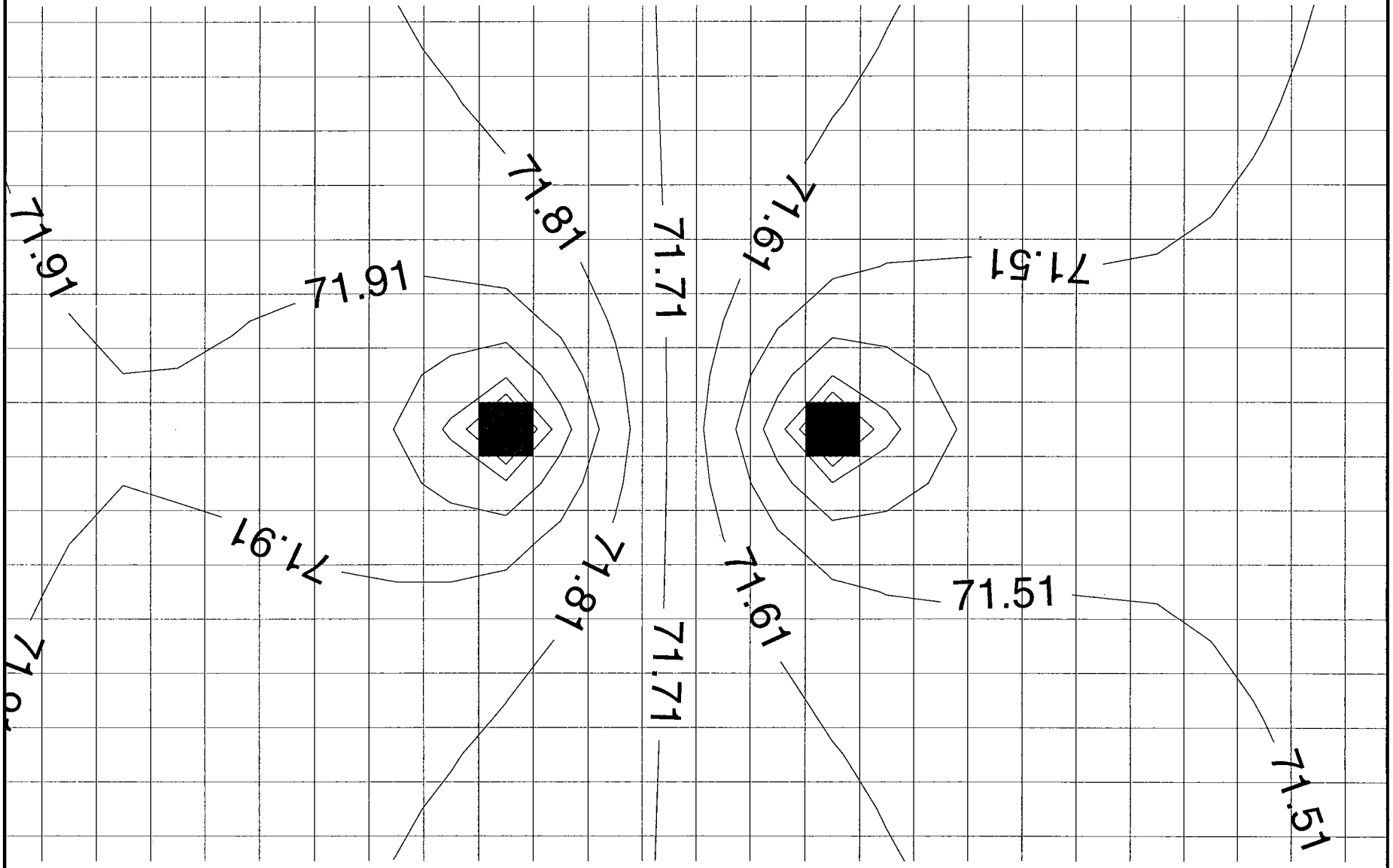

Scenario 3 - Injection-Extraction at 2 GPM

Grid cells are 5 feet by 5 feet

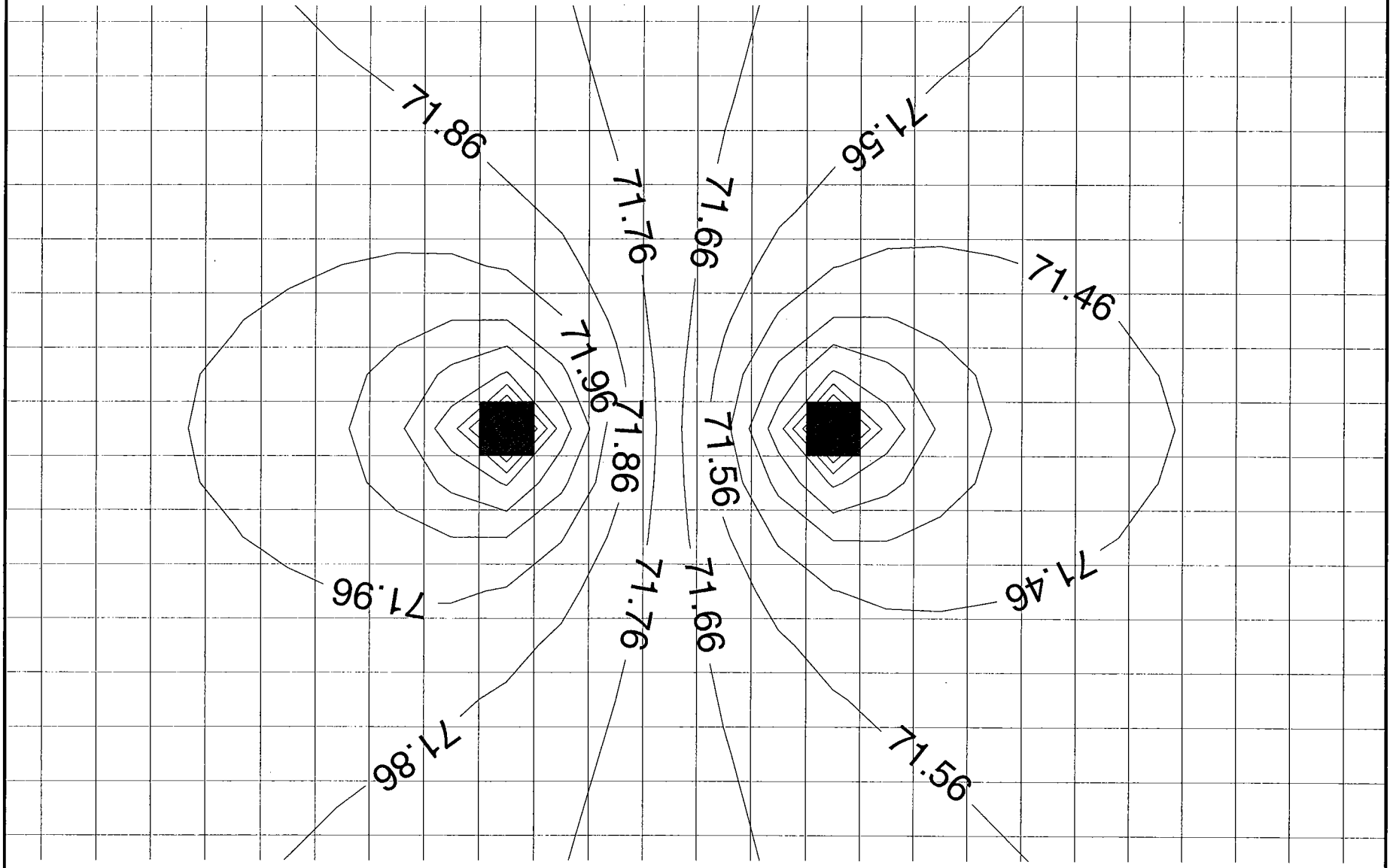

Scenario 5 - Injection-Extraction at 3 GPM

Grid cells are 5 feet by 5 feet

BY _____ DATE _____ PROJECT _____ SHEET NO. 1 OF _____

CHKD. BY _____ DATE _____ PROJ. NO. _____

Cecil Field Flow Modeling

- wells will be screened from 65-80' BGS (15')
- Injection / Extraction well are to be located 30 feet apart

Conceptual Model:

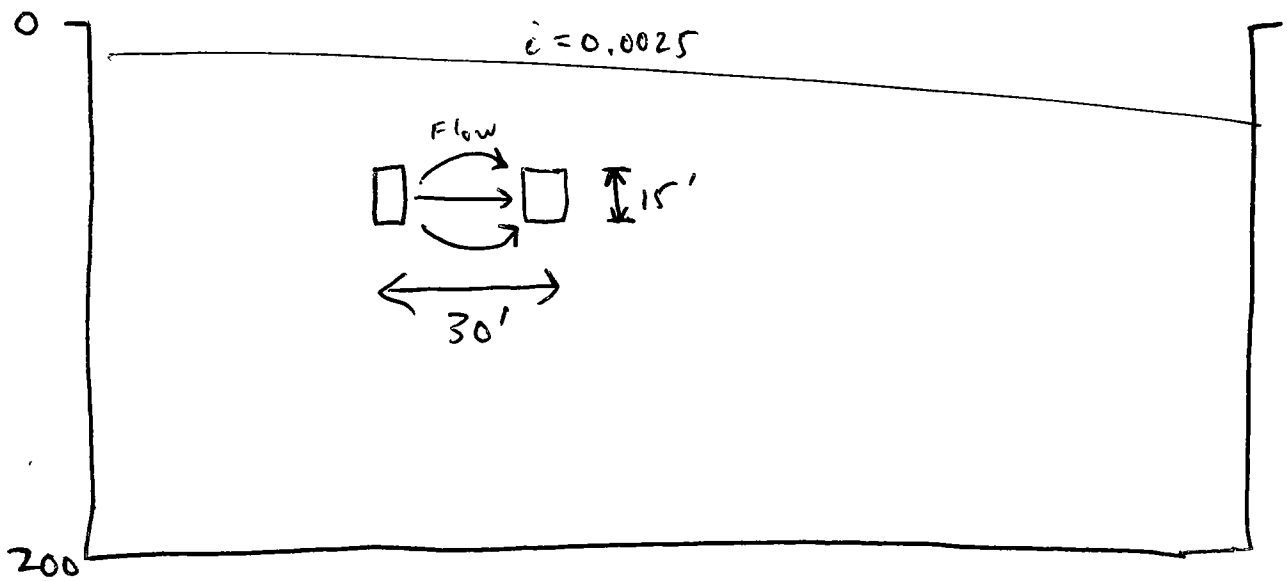

cross-sectional view

- make layers 15' Thick, 15 layers (225')
- make Rows 5' Thick, 50 Rows/Columns (250')

K = 19 ft/day, uniform

porosity = 0.3

Top of Layer 1 – 5'
Bottom Layer 1 – 20'
Bottom Layer 2 – 35'
⋮
Bottom Layer 15 – 230'

* Zone of well @ Layer 5 (top 65', Bottom 80')

→ match Top / Bottom elevations...

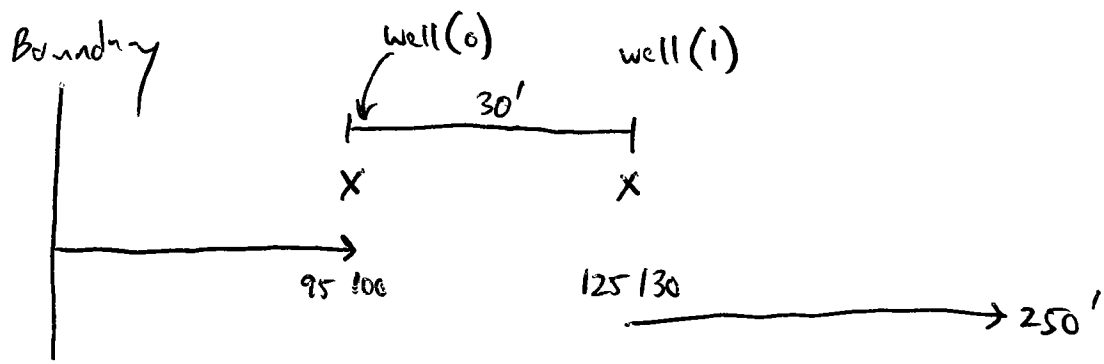

→ Calculate CH, based on calculated gradient of 0.00277 ft/ft

- Assume well(0) - Injection is at 71.75, based on map provided.

① Upgradient CH = 71.75' + (0.00277 ft)(97.5')
= 71.75' + 0.270075
$\boxed{= 72.020075'}$

② Downgradient CH = 71.75' + (0.00277 ft)(152.5')
= 71.75' − 0.422425'
$\boxed{= 71.327575'}$

Verify Gradient: $\frac{72.020075' - 71.327575'}{250'}$

$i = \frac{0.6925'}{250'}$

$i = 0.00277$ ft/ft ✓

→ set to PCG2 solver.

→ reset using initial head save file...

Run 4 scenarios for different pumping rates

① $\frac{0.5 \text{ gallons}}{\text{minute}} \times \frac{1440 \text{ min}}{1 \text{ day}} \times \frac{0.1336806 \text{ ft}^3}{1 \text{ gallon}} = 96.250032 \text{ ft}^3/\text{day}$

② $\frac{1 \text{ gallon}}{\text{minute}} \times$ ↓ $\times$ ↓ $= 192.500064 \text{ ft}^3/\text{day}$

③ $\frac{2 \text{ gallon}}{\text{minute}} \times$ $\times$ $= 385.000128 \text{ ft}^3/\text{day}$

④ $\frac{4 \text{ gallon}}{\text{minute}} \times$ $\times$ $= 770.000256 \text{ ft}^3/\text{day}$

Bottom_Elevations

Bottom
15

1	2.000000e+001	9.426203e-317	2.000000e+001
2	3.500000e+001	0.000000e+000	3.500000e+001
3	5.000000e+001	0.000000e+000	5.000000e+001
4	6.500000e+001	0.000000e+000	6.500000e+001
5	8.000000e+001	0.000000e+000	8.000000e+001
6	9.500000e+001	0.000000e+000	9.500000e+001
7	1.100000e+002	0.000000e+000	1.100000e+002
8	1.250000e+002	0.000000e+000	1.250000e+002
9	1.400000e+002	0.000000e+000	1.400000e+002
10	1.550000e+002	0.000000e+000	1.550000e+002
11	1.700000e+002	0.000000e+000	1.700000e+002
12	1.850000e+002	0.000000e+000	1.850000e+002
13	2.000000e+002	0.000000e+000	2.000000e+002
14	2.150000e+002	0.000000e+000	2.150000e+002
15	2.300000e+002	0.000000e+000	2.300000e+002

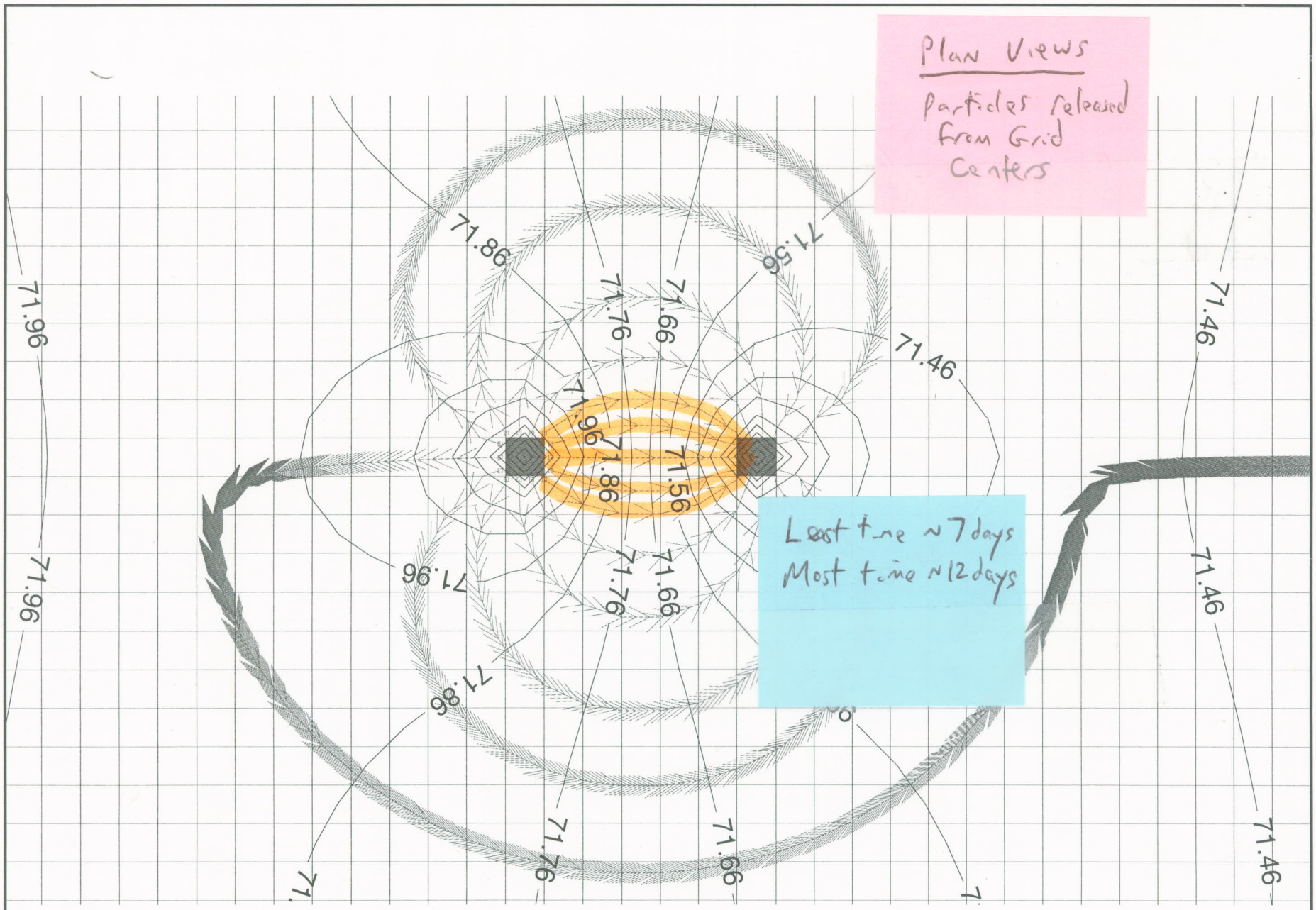

Scenario 5 - Injection-Extraction at 3 GPM

Grid cells are 5 feet by 5 feet

Arrows posted every 2 days

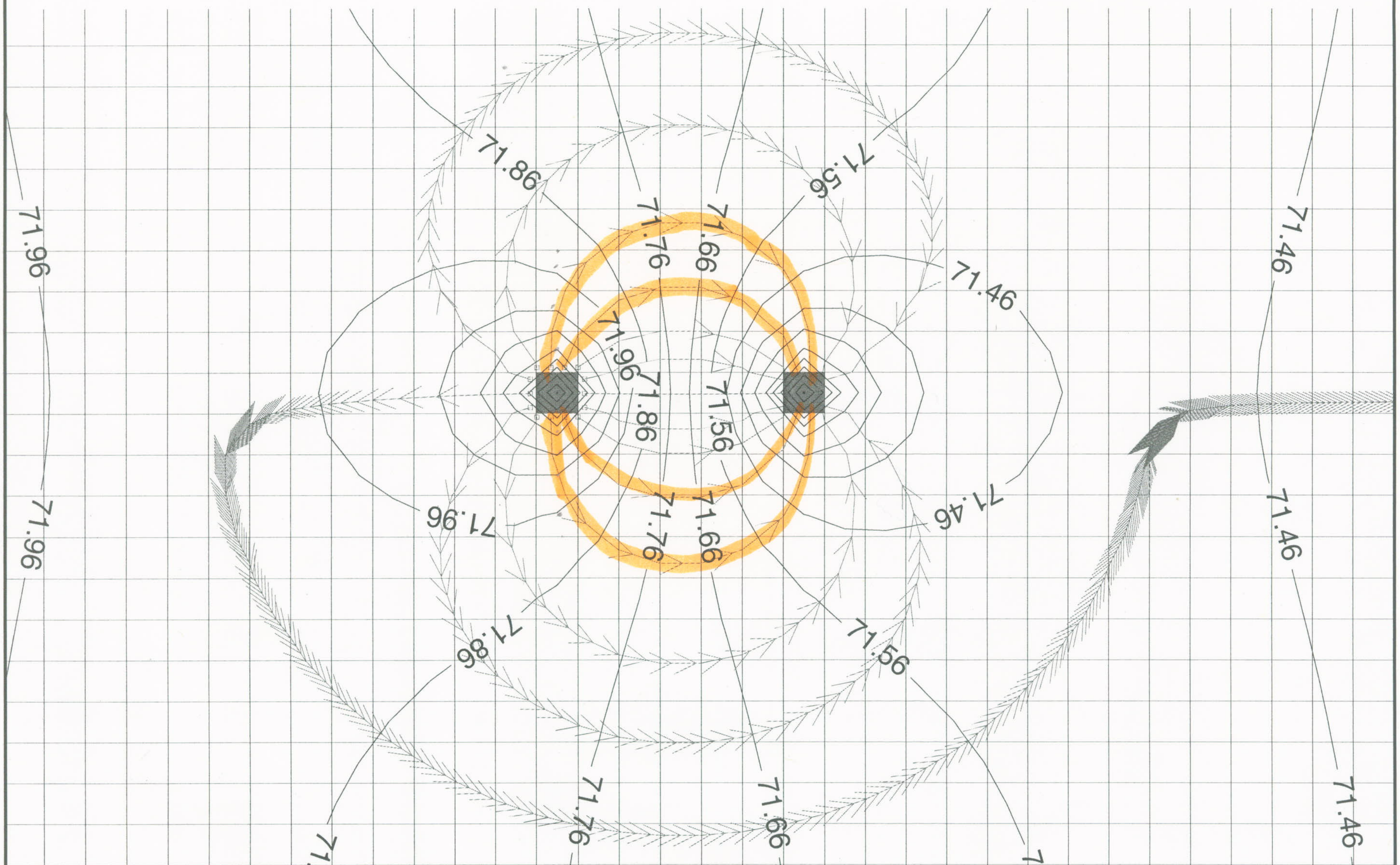

Scenario 5 - Injection-Extraction at 3 GPM
Grid cells are 5 feet by 5 feet
Arrows posted every 7 days

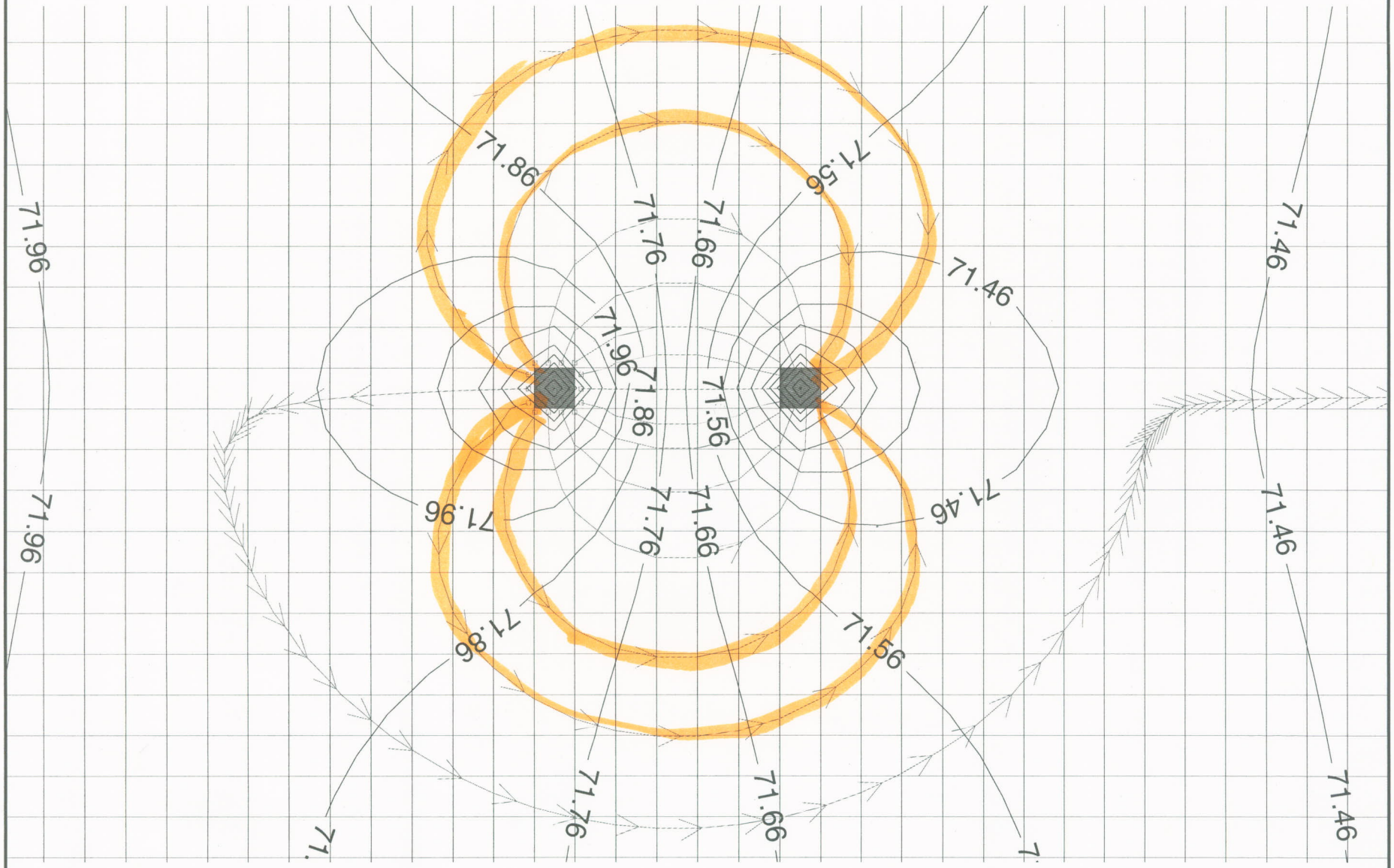

Scenario 5 - Injection-Extraction at 3 GPM

Grid cells are 5 feet by 5 feet

Arrows posted every 30 days

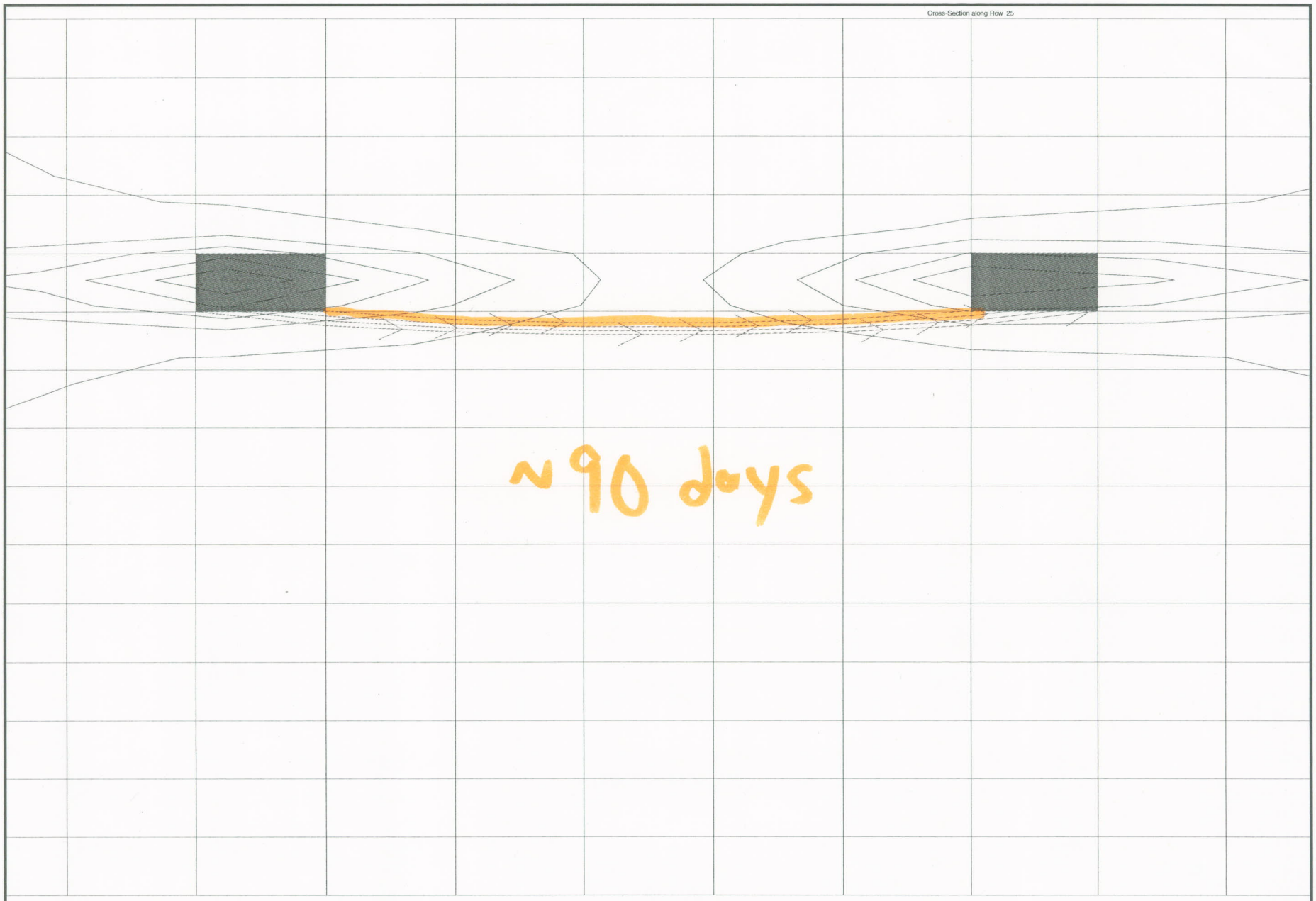

Scenario 5 - Injection-Extraction at 3 GPM

Grid cells are 5 feet wide by 15 feet tall

Arrows posted every 30 days - started at base of pumping zone

TETRA TECH NUS, INC. **CALCULATION WORKSHEET** PAGE _____ OF _____

CLIENT		JOB NUMBER	
SUBJECT Transient Run for Cecil field/Site 59 Capture zone			
BASED ON		DRAWING NUMBER	
BY Scott Anderson	CHECKED BY	APPROVED BY	DATE 10-12-05

Task: ① Determine time necessary for capture/extraction zone scenario at 3.0 gpm to stabilize water levels at extraction/injection wells.

② Particle tracking (Plan & Cross-section) in 3 GPM. Arrows in days.

---

① Set-up transient scenario...

Scenario5_3GPM_Transient

→ A) 10 days, 4 steps per day (6 hours)

* Appears to instantly converge/reach steady state

B.) 2 days, 48 total ~~ap~~ SA steps (1 hour each)

* Appears to stabilize in ~3 hours (close @2)

C.) 1 day, 48 total steps (½ hour each step)

* Stabilized at 2 hours at injection/extraction

→ Time for whole capture zone = 4 hours

② Put particles around injection well (Grid)

* produce multiple print-outs due to quick & long travel times...

APPENDIX C

CALCULATIONS

Hydrogen Demand Calculation

Treatment Area Dimensions

Width of source area perpendicular to groundwater flow		ft		m
Length of source area parallel to groundwater flow		ft		m
Minimum depth to contamination		ft		m
Maximum depth of contamination		ft		m
Treatment thickness		ft		m
Treatment zone cross-sectional area		ft^2		m^2
Treatment zone volume	13,037	ft^3		m^2
Treatment zone groundwater volume (volume x effective porosity)	29,255	gallons	110,730	L

Groundwater Flow Rate/ Site Data

Soil Characteristics				
Nominal Soil Type (enter clay, silt, silty sand, sand, or gravel)	sand			
Hydraulic Characteristics				
Total Porosity (accept default or enter n)	0.38	(decimal)		
Effective Porosity (accept default or n_e)	0.30	(decimal)		
Hydraulic Conductivity (accept default or enter K)	19	ft/day	6.7E-03	cm/sec
Hydraulic Gradient (accept default or enter i)	0.003	ft/ft		
Groundwater velocity (V_x)	0.190	ft/day	0.0579	m/day
Groundwater flowrate through treatment zone (Q)		gallons/day		L/day

Design Lifespan For One Application	0.5	year(s)	typical values 5 to 10 years	
Total groundwater volume treated over design life	29,255	gallons	110,730	L

Electron Acceptors

Inputs	Typical Value	GW Conc. (mg/L)	MW (g/mole)	e^- equiv./ mole	Stoichmetry *Contaminant/H (wt/wt H)*	Hydrogen Demand *(g H)*
Dissolved Oxygen (DO)	0 to 8	0.5	32.0	4	7.94	6.97557722
Nitrate Nitrogen (NO_2^- - N)	1 to 10	1	62.0	5	12.30	8.99969601
Sulfate (SO_4^{2-})	10 to 500	13.5	96.1	8	11.91	125.480393
Tetrachloroethene (PCE), C_2Cl_4			165.8	8	20.57	
Trichloroethene (TCE), C_2HCl_3		1.1	131.4	6	21.73	5.6062067
cis-1,2-dichloroethene (c-DCE), $C_2H_2Cl_2$			96.9	4	24.05	
Vinyl Chloride (VC), C_2H_3Cl			62.5	2	31.00	
Carbon tetrachloride, CCl_4			153.8	8	19.08	
Chloroform, $CHCl_3$			119.4	6	19.74	
sym-tetrachloroethane, $C_2H_2Cl_4$			167.8	8	20.82	
1,1,1-Trichloroethane (TCA), CH_3CCl_3			133.4	6	22.06	
1,1-Dichloroethane (DCA), CH_2CHCl_2			99.0	4	24.55	
Chloroethane, C_2H_5Cl			64.9	2	32.18	
Perchlorate, ClO_4^-			99.4	8	12.33	
Hexavalent Chromium, Cr[VI]			52.0	3	17.20	
User added						
User added						
User added						

Additional Hydrogen Demand

Generation (Potential Amount Formed)	Typical Value	GW Conc. (mg/L)	MW (g/mole)	e^- equiv./ mole	Stoichmetry *Contaminant/H (wt/wt H)*	Hydrogen Demand *(g H)*
Estimated Amount of Fe^{2+} Formed	10 to 100	10	55.8	1	55.41	19.9847883
Estimated Amount of Manganese (Mn^{2+}) Formed		5	54.9	2	27.25	20.3147275
Estimated Amount of CH_4 Formed	5 to 20	2	16.0	8	1.99	111.308691

Note:
Calculations assume:
1.) all reactions go to completion
2.) perfect reaction stoichiometry.

Calculations Based on Hydrogen Demand

Stoichiometric Hydrogen Demand	0.66	pounds

CLIENT Cecil Field Site 59		JOB NUMBER 0039	
SUBJECT Dosage of Lactate			
BASED ON Hydrogen Demand Calc.		DRAWING NUMBER	
BY CJM	CHECKED BY	APPROVED BY	DATE

(1) Anaerobic degrodation of Sodium Lactate

$$Na^+ + C_3H_5O_3^- + 2H_2O \Rightarrow C_2H_3O_2^- + CO_2 + H_2O + 2H_2 + Na^+$$

Moles of $C_3H_5O_3$ used = 1

Moles of H produced = 4

MW of $NaC_3H_5O_3$ = 112.06 g/mol

MW of H = 1.01 g/mol

$$\frac{\text{g of H produced}}{\text{grams of } NaC_5H_5O_3 \text{ reacted}} \quad \frac{4 * 1.01}{1 * 112.06} = 0.036 \frac{g\ H}{g\ NaC_5H_5O_3}$$

(2) Stoichiometric Hydrogen Demand = 1.32 lbs of H (Doubled from Hydrogen Demand Calc)

$$1.32\ lb * \frac{454\ g}{lb} = 599 \text{ grams of H}$$

Stoichiometric $NaC_3H_5O_3$ Demand

$$599 \text{ grams of H} / 0.036\ g\ H / g\ NaC_5H_5O_3$$

$NaC_3H_5O_3$ Demand = 16,647 grams = 36.7 lbs of $NaC_3H_5O_3$

CLIENT Cecil Field Site 59		JOB NUMBER 0039	
SUBJECT Dosage of Lactate			
BASED ON Hydrogen Demand Calc.		DRAWING NUMBER	
BY CJM	CHECKED BY	APPROVED BY	DATE

③ $NaC_3H_5O_3$ Demand = 36.7 lbs

Safety Factor = 10 - (More Lactate because of unknown DNAPL and other chemicals.)

36.7 lbs * 10 = 367 lbs

Period of Pilot Study

= 6 months = 180 days

Amount of $NaC_3H_5O_3$ per day

= 367 lbs / 180 days

= 2.04 lbs/day ⇒ **2.00 lbs/day**

CLIENT Cecil Field Site 59		JOB NUMBER	
SUBJECT Flow rate & Conc. for Lactate			
BASED ON Dosage of Lactate		DRAWING NUMBER	
BY	CHECKED BY	APPROVED BY	DATE

Determine flow rate and concentration of Lactate

- 2.0 lbs/day is required for duration of T.S.
- Solubility of Lactate ≈ 500 grams/L @ 20°C
- Use 10% of solubility limit for design Conc.

$\frac{500 \text{ grams}}{\text{Liter}} * .10 = 50 \text{ grams/Liter}$

(1) $50 \text{ grams/liter} * 1 \text{ lb}/454 \text{ grams} * \frac{3.785 \text{ L}}{1 \text{ Gal}} = \boxed{0.42 \text{ lbs/gallon}}$

- Determine Flowrate

$2.0 \text{ lbs/day} / 0.42 \text{ lbs/gallon} = 4.8 \text{ gallons/day}$

(2) $= \boxed{0.20 \text{ gallons/hr}}$

CLIENT Cecil Field Site 59		JOB NUMBER	
SUBJECT Dosage of $NaHCO_3$			
BASED ON pH Study		DRAWING NUMBER	
BY CJM	CHECKED BY	APPROVED BY	DATE

Total Volume of GW Treated

= 29,255 gallons (From Groundwater Zone of Capture Calc)

Dosage of $NaHCO_3$ Required (From pH Study Appendix D)

= 0.0172 lbs/gal

= 0.0172 lbs/gal * 29,255 Gallons/P.S.

(1) = 503 lbs

Initial pH adjustment to pilot study area

- Assume 1/2 of Dosage is to be used for initial pH adjustment

(2) 255 lbs $NaHCO_3$ / 14 days = 18.2 lbs/day

Continuing pH adjustments for length of P.S.

(3) 250 lb $NaHCO_3$ / 165 days = 1.5 lbs/day

CLIENT Cecil Field Site 59		JOB NUMBER	
SUBJECT Flow rate & Conc for $NaHCO_3$			
BASED ON Dosage of $NaHCO_3$		DRAWING NUMBER	
BY	CHECKED BY	APPROVED BY	DATE

Determine Initial (14 days) flow rate and concentration

- 18.2 lbs/day for 14 days is required for initial pH adjustment
- Solubility of $NaHCO_3$ @ 20°C is 86 grams/Liter
- Use ½ of solubility limit for design conc.

86 grams/Liter / 2 => 43 grams/Liter

(1) 43 grams/Liter * 1 lb / 454 grams * 3.785 L / 1 gallon = **0.36 lbs/gallon**

- Determine Flow rate

18.2 lbs/day / 0.36 lbs/gallon = 51.67 gallons/day

(2) = **2.15 gal/hr**

Determine post pH adjustment flow rate

- 1.5 lbs/day for 165 days is required post pH adjustment

1.5 lbs/day / 0.36 lbs/gallon = 4.17 gallons/day

(1) = **0.17 gallons/hr**

Tetra Tech NUS			STANDARD CALCULATION SHEET
CLIENT: NAS Cecil Field	FILE No: N0039	BY: JWL	PAGE: 1 of 5
SUBJECT: Site 59 Pilot Study – Equipment sizing		CHECKED BY: JLG 10/29/05 jlg	DATE: 10/20/05

Purpose: Estimate equipment sizes for Pilot Study facility. Refer to P&ID. In general, groundwater will be pumped from the extraction well, lactate and sodium bicarbonate will be added, then mixed in a static mixer, and then discharge to the injection wells.

These items need to be sized:

- Static Mixer (SM1)
- Extraction well (EW) pump (P-1)
- Lactate Feed pump (P-2)
- Sodium bicarbonate feed pump (P-3)
- Lactate Tank (T-1)
- Sodium bicarbonate tank (T-2)
- Lactate mixer (M-1)
- Sodium bicarbonate mixer (M-2)

1. Static Mixer (SM-1)

Select static mixer based on 3 gpm. Use Koflo because of size (Smallest Komax is 2" in diameter. Koflo makes flanged and threaded end versions. Make final selection later, for now, assume threaded (small diameter, flanges will be difficult to install).

For 3 gpm, 1-inch diameter Model 328 has pressure drop calculated by:

ΔP (psi) = (Q, gpm)^2 /22 (per telephone conversation with Koflo rep)

So at 3 gpm:

ΔP (psi) = $(3)^2$ / 22 = 0.41 psi, use 0.5 psi.

→ Select Koflo Model 1-80-4-6-2, Schedule 80 PVC, 1-ich diameter, threaded ends.

2. Extraction Pump (P-1)

At this low flowrate there are limited pumps. Select the smallest Grundfos submersible, and then throttle off the excess pressure. At 3 gpm, this is a 5SQ03A-90.

<u>Estimate system pressure losses</u>:

<u>Dynamic head losses:</u>

Assume 1-inch schedule 80 PVC.

From Chemtrol book:

ID = 0.957 in = 0.0798 ft

V, ft/sec = 3 gal/min x min/60 sec x ft^3/gal x 1/ (π x 0.0798 ft^2/4) = 1.34 feet/sec

(at 5 gpm, V = 2.34 ft/sec)

From Chemtrol, calculate head loss per length.

h (feet/100 feet) = $0.2083(100/C)^{1.852} \times (q^{1.852}) / d^{4.8655}$

$= 0.2083(100/150)^{1.852} \times (3^{1.852}) / 0.957^{4.8655}$

= 0.93 ft/100 ft

a. Estimate Pipe Length:

EW Depth	80 feet
Injection well (IW) depth	80 feet
Above ground	80 feet (est)
Total	240 feet

b. Fittings:

	Number	Eq L. ft	Total equiv L, ft
90 els	10	2.6	26
T - through	8	1.7	13.6
Total			40 feet

c. Other pressure losses at 3 gpm: ΔP, psi = Q^2, gpm x s.g. / C_v^2

	C_v	number	ΔP, psi	ΔP, feet	Total, ft
Check valves	24	1	0.015	0.03	0.03
Other valves	50	5	0.0036	0.008	0.02
Total					0.05

d. Flow meter pressure loss

Assume 1.5 psi = 3.5 feet (typical for rotameter)

e. Static Mixer pressure loss:

See above, 0.5 psi = 1.1 feet.

Total Pressure Drop:

Piping and fittings (a & b)	(240 + 40 ft) x 0.93 ft/100 ft =	2.6 feet
Valves (c)		0.05
Flow meter (d)	Assume 1.5 psi	3.5
Static mixer (e)		1.1
Total		7.3 feet

Apply a 20 % safety factor, 1.2 x 7.3 = 8.8 feet – Use 10 feet

Static Head:

At start, the pump will have to fill the system up:

Depth to water	10 feet
Ground level to "top of system"	5 feet
	15 feet

Then, the elevation of water in each well will be the same, so there is no static head.

Then, the EW will draw down and IW will mound. The model indicates that the drawdown will be 1 foot and the mounding 1 foot, for a total of 2 feet of static head at steady state.

Total head:

	Dynamic head, feet	Static head, feet	Total, feet
Initial	10	0	10
Long term	10	2	12

Smallest Grundfos submersible (excluding Rediflow 2) puts oft 118 feet at 3 gpm. (SQ 5) [Note, the Rediflow 2 pumps are intended for sampling, not long-term continuous pumping.]

So specify SQ 5 pump and throttle, with a globe valve or diaphragm valve.

Because of the large amount of head to be throttled and uncertainties in the characteristics of the valves, use two control valves in series. The first valve will take (Total pressure drop)$^{0.5}$ of the pressure drop, the second valve will take the balance.

A system curve was approximated by estimating the pressure drop at 5 gpm. Using the Chemtrol book, the pressure drop per 100 feet at 5 gpm is 2.75 feet. The ratio to 3 gpm is 2.75/0.93 = 3.

At 5 gpm, dynamic head loss is: 10 feet x 3 = 30 feet.

Total head is 30 feet + 2 feet = 32 feet.

→ Select Grundfos 5SQ 3A-90

See attached pump curve – system curve.

[Note that the operating point with the valves wide open in very close to the run-out point of the pump, and care must be taken in operation to start the pump against closed valves.]

3. Chemical Feed Pumps (P-2, P-3)

Lactate flow has been calculated to be: 0.20 gal/hr (See other calculations)

Long term Sodium Bicarbonate solution flow rate has been calculated to be: 0.20 gal/hr (See other calculations)
Start up Sodium Bicarbonate (SB) solution flow rate has been calculated to be: 2.2 gal/hr (See other calculations)

For pump selection, aim for 50% of maximum output. If 50% cannot be matched to standard pumps, go to as much as 80 %.

Thus for Lactate pump, desired range of max output of the selected pump is: 0.40 gal/hr.
For SB pump, the target maximum for long-term is: 0.40 gal/hr.
But, during startup, SB pump must be selected for: approximately 4.4 gal/hr based on 50% (and 2.75 gal/hr based on 80%.)

Preliminary selection:

→ for Lactate (P-2), select – LMI P03 0.4 gal/hr max , 110 psi; w/391SI liquid end 0.375" OD tubing.
→ for SB (P-3), select – LMI C12 4.0 gal/hr max, 100 psi, w/ 361SI liquid end 0.375" OD tubing <u>or</u> 72S liquid end 0.5" tubing. (A large pump will be selected for flexibility in feed rate. The next size down is 2.5 gal/hr. The selected pump, though large, should have enough turndown capacity]10% on stroke and 30% on frequency] to reach the desired rate. If necessary, the solution can be diluted to increase the volumetric rate.)

4. Tanks (T-1, T-2)

<u>Lactate tank (T-1)</u>

0.2 gal/hr x 24 hr/day = 4.8 gal/day

1 week: 7 day x 4.8 gal/day = 33.6 gal

→ Use standard 50 gal HDPE LMI tank with mixer (1/20 hp)

Provide bulkhead fitting on bottom for flooded suction on feed.

<u>Sodium bicarbonate tank (T-2)</u>

Size for start up condition. High feed rates at startup will last about 2 weeks. A few days storage is needed, at least for the weekend, although during long-term operation, a larger tank will provide several weeks of storage. Select 3 to 4 days to get through the weekend.:

2.2 gal/hr x 24 hr/day = 52.8 gal/day

3 days: 3 day x 52.8 gal/day = 158 gal

4 days: 4 day x 52.8 gal/day = 211 gal

→ Use 150-gallon HDPE tank, just less than 3 days. 31" dia x 48" high.

Provide bulkhead fitting on bottom for flooded suction on feed.

The 150 gallon (3-day) size was selected to get through the weekend. Note that in long term, this will provide about 30 days of storage (150 gal /[0.2 gal/hr x 24 hr/day]).

5. Mixers (M-1, M-2)

Lactate tank Mixer (M-1)

→ LMI 1/20 hp mixer fits the selected tank.

Sodium bicarbonate tank mixer (M-2)

→ From USA Bluebook, use 1/3 HP for 150 gallon tank handling water, propeller-blade mixer. A mixer support stand will be needed.

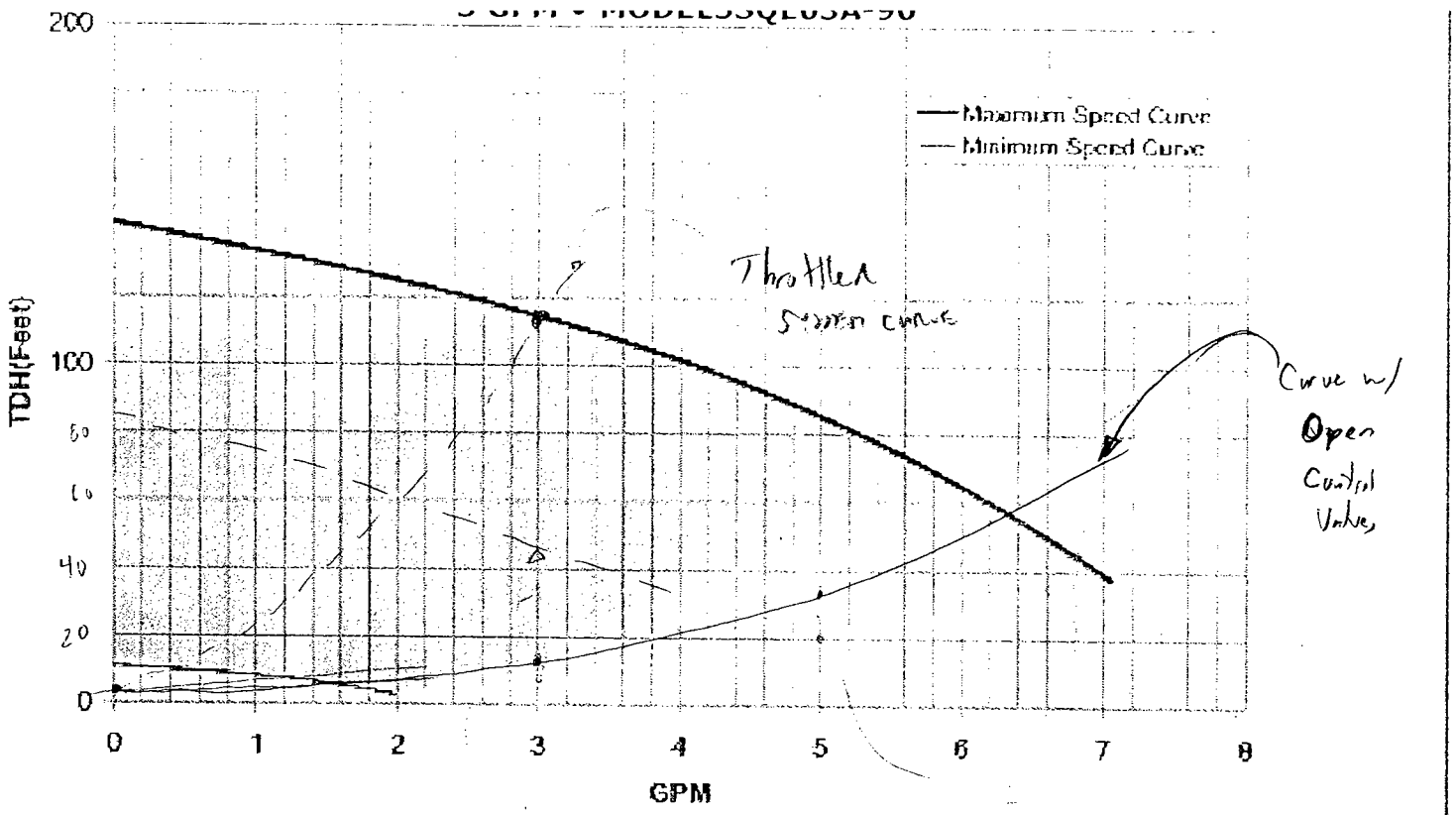

.OW RANGE: 1.5 - 8 GPM **OUTLET SIZE: 1" NPT** **NOMINAL DIA. 3"**

:CIFICATIONS SUBJECT TO CHANGE WITHOUT NOTICE.

> Back

5 GPM	5 GPM • MODEL5SQE03A-90	5 GPM • MODEL5SQE07B-320
GPM	5 GPM • MODEL5SQE03A-140	5 GPM • MODEL5SQE10C-360
15 GPM	5 GPM • MODEL5SQE05A-180	5 GPM • MODEL5SQE10C-410
22 GPM	5 GPM • MODEL5SQE05B-230	5 GPM • MODEL5SQE10C-450
30 GPM	5 GPM • MODEL5SQE05B-270	

TCE MASS ESTIMATE PILOT STUDY OU 9 SITE 59 NAVAL AIR STATION CECIL FIELD JACKSONVILLE, FLORIDA							
Constituent	**Concentration Aq, (ug/L)**	**Aqueous Volume (liters)**	**Mass (aq, lb)**	**Koc**	**Ksw**	**Mass (sorbed, lb)**	**Mass Total (lb)**
TCE	1100	110730	0.27	160.00	1.60	2.65	2.92

Notes:

Concentration Aq (ug/L) =TCE aqueous concentration from CEF-059-003-73 on 11/17/04
Volume = Groundwater Cature Zone (35 Diameter x 12 feet deep); Page 4-2 of Site 59 Pilot Study Work Plan
Koc (TCE) = 160; US Army Corps of Engineers, SOIL VAPOR EXTRACTION AND BIOVENTING, 3 June 2002
Foc = .01; Cecil Field Site 36/37 RI Appendix D, average of three Foc samples
Porosity = 0.3; Page 3-1 of Site 59 Pilot Study Work Plan
Soil Density = 2.65 (specific gravity for sand); Page 3-1 of Site 59 Pilot Study Work Plan

Calculations:

Mass (aq, lb) = (1100*110730)/(1000*1000*454)
Ksw = Koc * Foc
Mass (sorbed, lb) = 0.27*1.6*2.65*(0.7/0.3)
Mass Total (lb) = 0.27 + 2.65

APPENDIX D

PH STUDY DATA AND RESULTS

Groundwater Test (Approximately 0.75 Liters of Groundwater)				Results			
	pH						
	#1	#2	#3				
0.8 molar NaHCO3 (mL) Added				ml of 1.0 molar NaHCO3 needed per liter of ground water (ml / L)	grams of NaHC03 Needed per Liter of Groundwater (g/L)	lbs of NaHC03 Needed per Gallon of Groundwater (lbs/gal)	lbs of NaHC03 Needed per ft3 of Groundwater (lbs/ft3)
1							
2	6.05			2.13	0.18	0.00	0.01
3				3.20	0.27	0.00	0.02
4	6.24			4.27	0.36	0.00	0.02
5		6.31		5.33	0.45	0.00	0.03
6	6.40		6.32	6.40	0.54	0.00	0.03
7				7.47	0.63	0.01	0.04
8	6.52			8.53	0.72	0.01	0.04
9				9.60	0.81	0.01	0.05
10	6.63	6.62		10.67	0.90	0.01	0.06
11				11.73	0.99	0.01	0.06
12	6.71		6.66	12.80	1.08	0.01	0.07
13				13.87	1.16	0.01	0.07
14	6.77	6.77		14.93	1.25	0.01	0.08
15				16.00	1.34	0.01	0.08
16	6.82			17.07	1.43	0.01	0.09
17				18.13	1.52	0.01	0.09
18	6.89	6.90	6.84	19.20	1.61	0.01	0.10
19				20.27	1.70	0.01	0.11
20	6.94	6.94	6.90	21.33	1.79	0.01	0.11
21				22.40	1.88	0.02	0.12
22	6.99	6.98	6.94	23.47	1.97	0.02	0.12
23				24.53	2.06	0.0172	0.13
24	7.04	7.03	6.98	25.60	2.15	0.02	0.13
25				26.67	2.24	0.02	0.14
26			7.03	27.73	2.33	0.02	0.14

The highlighted column represents the amount of NaHCO3 to be added to get to a pH of 7. The three "titrations" seem to be very similar representing good consistency in the data and samples. The groundwater samples were actually taken on Tuesday 6/21 at CEF 59 006 at approximately 15 ft bgs. Samples were not taken at 50' bgs because disposable baler was not able to get an isolated sample at a depth below GW elevation.

APPENDIX E

EQUIPMENT LIST AND CUT SHEETS

PROCESS EQUIPMENT LIST
PILOT STUDY WORK PLAN
OPERABLE UNIT 9, SITE 59
NAVAL AIR STATION CECIL FIELD
JACKSONVILLE, FLORIDA

1.0 TANKS

ITEM NUMBER	NUMBER REQUIRED	NAME/DESCRIPTION
T-1	1	**Electron Donor Feed Tank** • Configuration: Vertical, cylindrical, closed-top • Features: top-mounted mixer • Materials of fabrication: HDPE • Dimensions: 23 inch diameter x 34 inch SSH – 50 gal • Vendor: LMI (provided by feed pump vendor)
T-2	1	**Sodium Bicarbonate Feed Tank** • Configuration: Vertical, cylindrical, closed-top • Features: angle-mounted mixer, tank stand, mixer mount • Materials of fabrication: HDPE • Dimensions: 31 inch diameter x 48 inch SSH – 150 gal

IMPORTANT NOTE: ALL EQUIPMENT SIZES INDICATED IN THE ABOVE LIST ARE PRELIMINARY IN NATURE AND SUBJECT TO CHANGE

PROCESS EQUIPMENT LIST
PILOT STUDY WORK PLAN
OPERABLE UNIT 9, SITE 59
NAVAL AIR STATION CECIL FIELD
JACKSONVILLE, FLORIDA

2.0 MIXERS

ITEM NUMBER	NUMBER REQUIRED	NAME/DESCRIPTION
M-1	1	**Electron Donor Feed Tank Mixer** • Type: high-speed, propeller type • Configuration: top-mounted • Motor: 1/20 HP, 120 AC plug • Vendor: LMI (provided by feed pump vendor)
M-2	1	**Sodium Bicarbonate Feed Tank Mixer** • Type: high-speed, propeller type • Configuration: angle-mounted, mount and stand are required. • Motor: 1/3 HP, field wire • Vendor: USABluebook • Model: Neptune Economy Batch Mixer, 1/3 HP

IMPORTANT NOTE: ALL EQUIPMENT SIZES INDICATED IN THE ABOVE LIST ARE PRELIMINARY IN NATURE AND SUBJECT TO CHANGE

PROCESS EQUIPMENT LIST
PILOT STUDY WORK PLAN
OPERABLE UNIT 9, SITE 59
NAVAL AIR STATION CECIL FIELD
JACKSONVILLE, FLORIDA

3.0 STATIC MIXER

ITEM NUMBER	NUMBER REQUIRED	NAME/DESCRIPTION
SM-1	1	**Static Mixer** • Type: Inline, static • Configuration: threaded ends • Materials of fabrication: PVC • Vendor: Koflo • Model: 328 – 6 element

IMPORTANT NOTE: ALL EQUIPMENT SIZES INDICATED IN THE ABOVE LIST ARE PRELIMINARY IN NATURE AND SUBJECT TO CHANGE

PROCESS EQUIPMENT LIST
PILOT STUDY WORK PLAN
OPERABLE UNIT 9, SITE 59
NAVAL AIR STATION CECIL FIELD
JACKSONVILLE, FLORIDA

4.0 PUMPS

ITEM NUMBER	NUMBER REQUIRED	NAME/DESCRIPTION
P-1	1	**Extraction Well Pump** • Type: Submersible • Rating: 3 gpm @ 115 ft TDH • Motor: 1/3 HP, 200-240/1/60, field wire • Vendor: Grundfos • Model: 5SQ 3A-90, 1" NPT
P-2	1	**Electron Donor Feed Pump** • Type: chemical metering pump • Rating: 0.4 GPH max; 110 psi; 1:100 turndown • Vendor: LMI • Model: LMI P03, 391SI liquid end, 0.375" OD tubing, 120 AC plug end • Include combination valve for anti-siphon, pressure relief, back pressure, and drain
P-3	1	**Sodium Bicarbonate Feed Pump** • Type: chemical metering pump • Rating: 4 GPH max; 100 psi; 1:100 turndown • Vendor: LMI • Model: LMI C12, 361SI liquid end, 0.375" OD tubing, or 72S liquid end 0.5" tubing; 120 AC plug end • Include combination valve for anti-siphon, pressure relief, back pressure, and drain

IMPORTANT NOTE: ALL EQUIPMENT SIZES INDICATED IN THE ABOVE LIST ARE PRELIMINARY IN NATURE AND SUBJECT TO CHANGE

PROCESS EQUIPMENT LIST
PILOT STUDY WORK PLAN
OPERABLE UNIT 9, SITE 59
NAVAL AIR STATION CECIL FIELD
JACKSONVILLE, FLORIDA

5.0 CONTROL PANELS

ITEM NUMBER	NUMBER REQUIRED	NAME/DESCRIPTION
CP-1	1	**System Control Panel** NEMA 4 enclosure with face-mounted instruments and controls. Features: • Extraction Well Pump HS (HOA) and run indication • Injection Well IW-1 High Level Alarm Light • Injection Well IW-2 High Level Alarm Light

IMPORTANT NOTE: ALL EQUIPMENT SIZES INDICATED IN THE ABOVE LIST ARE PRELIMINARY IN NATURE AND SUBJECT TO CHANGE

PROCESS EQUIPMENT LIST
PILOT STUDY WORK PLAN
OPERABLE UNIT 9, SITE 59
NAVAL AIR STATION CECIL FIELD
JACKSONVILLE, FLORIDA

6.0 INSTRUMENTATION

ITEM NUMBER	NUMBER REQUIRED	NAME/DESCRIPTION
FI-1	1	**Extraction Flow Indicator** • Rotameter, 0.5 to 5 gpm • Vendor: Cole Parmer • Model: EW-32477-18 (½-inch FNPT openings)
LSH-1, LAH-1	1	**IW-1 High Level Alarm** • One (1) high level float switch (LSH-1) • One (1) panel-mounted high level alarm (LAH-1) • Vendor: (LSH) Omega • Model: LV-510 Single Station Vertical Float
LSH-2, LAH-2	1	**IW-2 High Level Alarm** • One (1) high level float switch (LSH-2) • One (1) panel-mounted high level alarm (LAH-2) • Vendor: (LSH) Omega • Model: LV-510 Single Station Vertical Float
PI -1	1	**Extraction Well Flow Pressure Gauge** • One (1) pressure gauge (0 to 60 psi) (PI-1), with snubber • Vendor: Wika • Model: Bourdon Tube, stainless Steel
PI -2	1	**Control Valve Pressure Gauge** • One (1) pressure gauge (0 to 60 psi) (PI-2), with snubber • Vendor: Wika • Model: Bourdon Tube, stainless Steel
PI -3	1	**Injection Well Flow Pressure Gauge** • One (1) pressure gauge (0 to 60 psi) (PI-3), with snubber • Vendor: Wika • Model: Bourdon Tube, stainless Steel

END OF EQUIPMENT LIST

IMPORTANT NOTE: ALL EQUIPMENT SIZES INDICATED IN THE ABOVE LIST ARE PRELIMINARY IN NATURE AND SUBJECT TO CHANGE

SQ/SQE

P-1

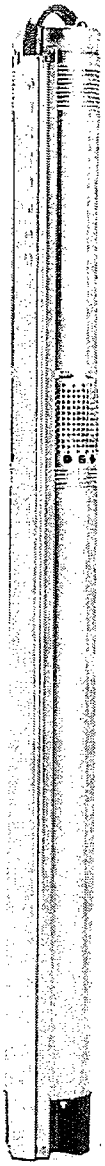

Drinking Water System Components
ANSI/NSF 61
(65GM)

P-1

Supply Voltage:	1x200-240V +6%/-10%, 50/60 Hz, LE 1x100-115V +6%/-10%, 50/60 Hz, LE
Operation via Generator:	Recommended generator output must be equal to P1[KW]+50% and minimum P1+10%
Starting Current:	The motor starting current is equal to the highest value stated on the motor nameplate
Starting:	Soft starting
Run-up Time:	Maximum : 2 seconds
Motor Protection:	The motor is protected against: Dry running, overvoltage, undervoltage, overload, over-temperature
Power Factor:	PF= 1
Service Factor:	0.33-0.50A[HP]-1.75 at 115V/230V 0.50-0.75A[HP]-1.4 at 230V 1.0 -1.5C[HP] -1.15 at 230V
Motor Cable: Length	3 Wire, 14 AWG XLPE 5 ft
Motor Liquid: **pH Values:**	Type SML 2 SO and SQE: 5 to 9
Liquid Temperature:	The temperature of the pumped liquid must not exceed 104°F.
Note: if liquids with a viscosity higher than that of water are to be pumped, please contact GRUNDFOS	
Discharge Port:	5SQ/SQE- 1"NPT 10-15SQ/SQE- 1 1/4" NPT 22-30SQ/SQE- 1 1/2" NPT
STORAGE CONDITIONS	
Minimum Ambient Temperature: **Maximum Ambient Temperature:**	-4°F +140°F
Freeze Protection:	If the pump has to be stored after use, it must be stored on a frost-free location or it must be ensured that the motor liquid is frost-proof. **(The motor must be stored without being filled with motor liquid.)**
OPERATING CONDITIONS	
Minimum Ambient Fluid Temperature: Maximum Ambient Fluid Temperature:	-4°F +104°F
APPROXIMATE DIMENSIONS AND WEIGHT	
Motor Dimensions (MS 3 & MSE 3): 0.33-0.50A[hp] 0.50-0.75B[hp] 1.0-1.5C[hp]	 20.9" length x 2.68" diameter 20.9" length x 2.68" diameter 22.3" length x 2.68" diameter
Motor Weights (MS 3 & MSE 3): 0.33-0.50A[hp] 0.50-0.75B[hp] 1.0-1.5C[hp]	 6.0 Lbs. 7.1 Lbs. 8.2 Lbs.
Pump End Dimensions: **Pump Diameter:** **Pump Diameter, incl. cable guard:** **Pump End Dimensions(min. and max.):** 5SQ/SQE 10SQ/SQE 15SQ/SQE 22SQ/SQE 30SQ/SQE	 2.68" 2.91" 10.6" to 18.0" 10.6" to 16.9" 10.6" to 16.9" 10.6" to 16.9" 10.6" to 13.7"
Pump End Weights(min. and max.): All SQ/SQE Models **Well Diameter (minimum):** **Installation Depth (Maximum):**	 2.2 lbs. to 3.5 lbs. 3" 500 feet, below static water level.

5 GPM • MODEL5SQE03A-90

P-1

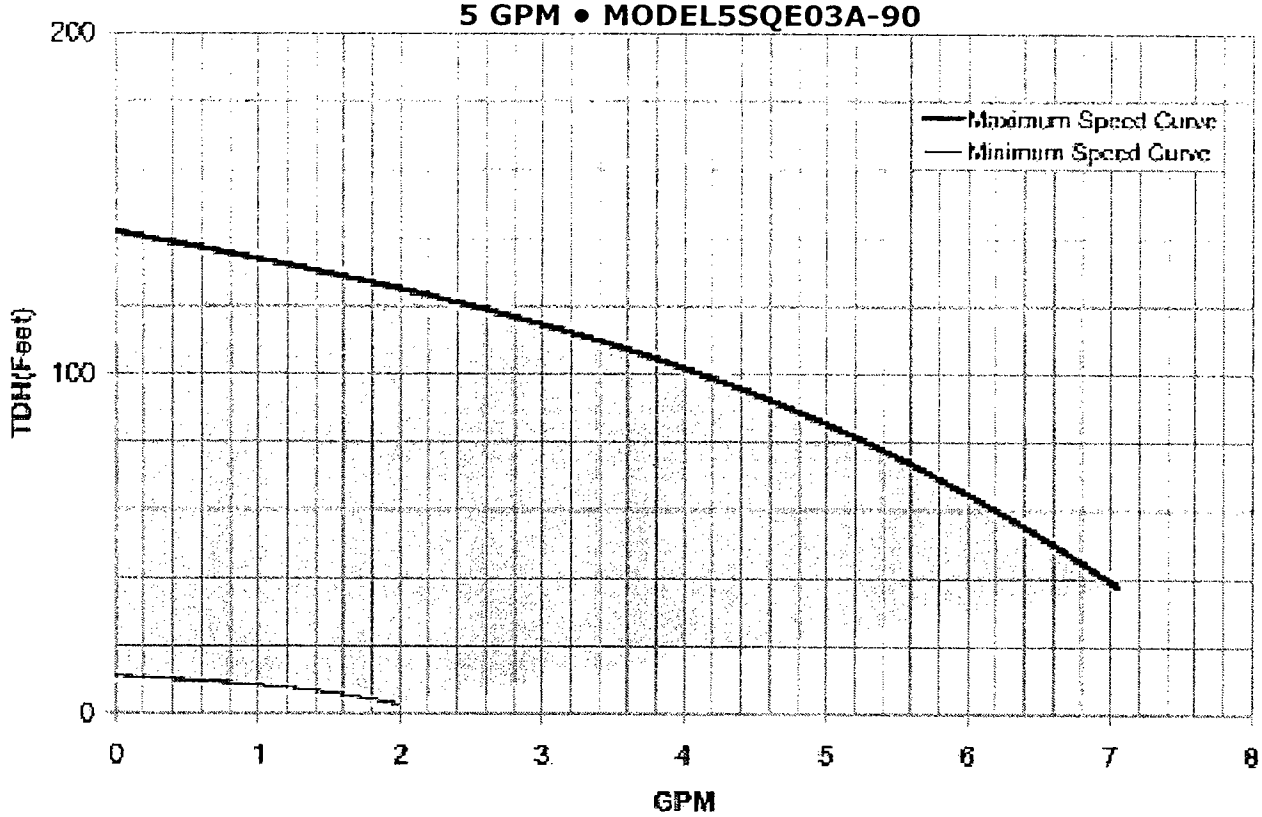

FLOW RANGE: 1.5 - 8 GPM **OUTLET SIZE: 1" NPT** **NOMINAL DIA. 3"**

SPECIFICATIONS SUBJECT TO CHANGE WITHOUT NOTICE.

> Back

> 5 GPM
>) GPM
> 15 GPM
> 22 GPM
> 30 GPM

5 GPM • MODEL5SQE03A-90
5 GPM • MODEL5SQE03A-140
5 GPM • MODEL5SQE05A-180
5 GPM • MODEL5SQE05B-230
5 GPM • MODEL5SQE05B-270

5 GPM • MODEL5SQE07B-320
5 GPM • MODEL5SQE10C-360
5 GPM • MODEL5SQE10C-410
5 GPM • MODEL5SQE10C-450

P-2

Data Sheet

Series P
Electronic Metering Pumps

Configuration Data

Model P14 1 - 351SI

Manual Control

Speed (stroking frequency) fixed and stroke length manually adjustable.

P02 --- 0.20 GPH (0.79 l/h) --- 150 psi (10.3 Bar)
P03 --- 0.40 GPH (1.6 l/h) --- 110 psi (7.6 Bar)
P04 --- 0.58 GPH (2.2 l/h) --- 250 psi (17.3 Bar)
P05 --- 1.00 GPH (3.8 l/h) --- 110 psi (7.6 Bar)
P06 --- 2.00 GPH (7.6 l/h) --- 50 psi (3.5 Bar)

Dual Manual Control

Speed (stroking frequency) and stroke length manually adjustable.

P12 --- 0.20 GPH (0.79 l/h) --- 150 psi (10.3 Bar)
P13 --- 0.42 GPH (1.6 l/h) --- 110 psi (7.6 Bar)
P14 --- 0.58 GPH (2.2 l/h) --- 250 psi (17.3 Bar)
P15 --- 1.00 GPH (3.8 l/h) --- 110 psi (7.6 Bar)
P16 --- 2.00 GPH (7.6 l/h) --- 50 psi (3.5 Bar)

Voltage Code

1 ------- 120 VAC US Plug
2 ------- 240 VAC US Plug
3 ------- 220-240 VAC DIN Plug
5 ------- 240-250 VAC, UK Plug
6 ------- 240-250 VAC, Aust./NZ Plug
7 ------- 220 VAC, Swiss Plug

Liquid End

See next page for complete liquid end specifications and selection.

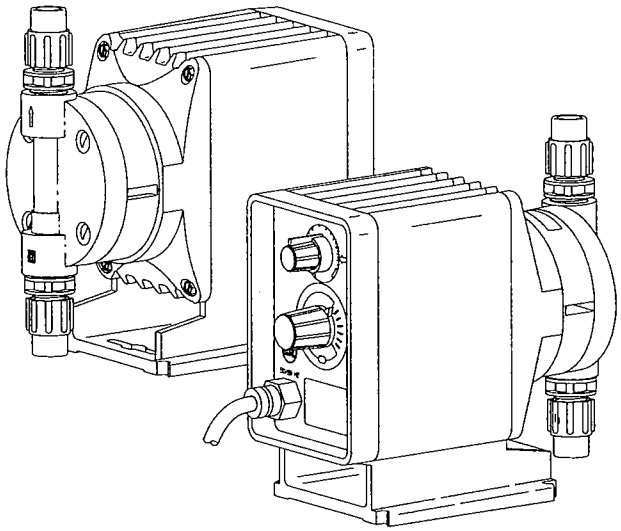

Specifications

Series	Strokes Per Minute (Adjustable) Min	Max	Stroke Length (Adjustable) Recommended Minimum	Average Input Power @ Max Speed	Shipping Weight
P02, P03	fixed - 60		30%	22 watts	7.6 lbs (3.5 kg)
P04 P05 P06	fixed - 100		20%		
P12, P13	.6	60	30%		
P14 P15 P16	1	100	20%		

Dimensions

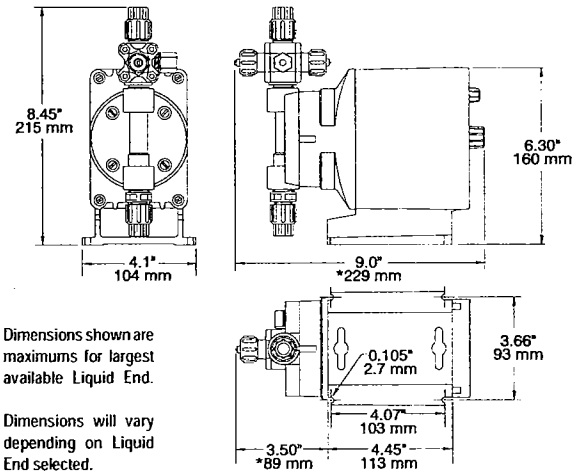

* Dimensions shown are maximums for largest available Liquid End.

Dimensions will vary depending on Liquid End selected.

LMI MILTON ROY

8 Post Office Square
Acton, MA 01720 USA
TEL: (978) 263-9800
FAX: (978) 264-9172
http://www.lmipumps.com

Replaces same of Rev. B 8/96
1713.C 10/97

Configuration Data & Materials of Construction

Drive Assembly	Liquid End No.	Size Code	Head & Fittings	Materials of Construction: Balls	Liquifram™	Check Valve	Accessory	Tubing & Connections: Discharge	Suction
	350SI†	0.5	Acrylic / PGC™	Ceramic	Fluorofilm™	PGC™ / Polyprel®	4FV	PE .250" O.D.	
P02 ☐ -	351SI†	0.5	PGC™ / PGC™	Ceramic	Fluorofilm™	PGC™ / Polyprel®	4FV	PE .250" O.D.	
P04 ☐ -	352SI†	0.5	PVDF / PVDF	Ceramic	Fluorofilm™	PVDF / Polyprel®	4FV	PE .250" O.D.	
P12 ☐ -	353SI†	0.5	PVDF / PVDF	Ceramic	Fluorofilm™	PVDF / PTFE	4FV	PE .250" O.D.	
P14 ☐ -	156	0.5	Acrylic / PP	316 S.S.	Fluorofilm™	Hypalon®		PE .5" O.D.	Vinyl .938" O.D.
	257	0.5	316 S.S.	316 S.S.	Fluorofilm™	316 S.S.		Pipe 1/4" NPT M	
	390SI†	0.9	Acrylic / PGC™	Ceramic	Fluorofilm™	PGC™ / Polyprel®	4FV	PE .375" O.D.	
P03 ☐ -	391SI†	0.9	PGC™ / PGC™	Ceramic	Fluorofilm™	PGC™ / Polyprel®	4FV	PE .375" O.D.	
P05 ☐ -	392SI†	0.9	PVDF / PVDF	Ceramic	Fluorofilm™	PVDF / Polyprel®	4FV	PE .375" O.D.	
P13 ☐ -	393SI†	0.9	PVDF / PVDF	Ceramic	Fluorofilm™	PVDF / PTFE	4FV	PE .375" O.D.	
P15 ☐ -	297	0.9	316 S.S.	316 S.S.	Fluorofilm™	316 S.S.		Pipe 1/4" NPT M	
	86	0.9	Acrylic / PP	316 S.S.	Fluorofilm™	Hypalon®		PE .5" O.D.	Vinyl .938" O.D.
	360SI†	1.8	Acrylic / PGC™	Ceramic	Fluorofilm™	PGC™ / Polyprel®	4FV	PE .375" O.D.	
P06 ☐ -	361SI†	1.8	PGC™ / PGC™	Ceramic	Fluorofilm™	PGC™ / Polyprel®	4FV	PE .375" O.D.	
P16 ☐ -	362SI†	1.8	PVDF / PVDF	Ceramic	Fluorofilm™	PVDF / Polyprel®	4FV	PE .375" O.D.	
	363SI†	1.8	PVDF / PVDF	Ceramic	Fluorofilm™	PVDF / PTFE	4FV	PE .375" O.D.	
	277	1.8	316 S.S.	316 S.S.	Fluorofilm™	316 S.S.		Pipe 1/4" NPT M	
	76	1.8	Acrylic / PP	316 S.S.	Fluorofilm™	Hypalon®		PE .5" O.D.	Vinyl .938" O.D.

☐ See front page for voltage code specifications.

† To specify ¼" NPT male, change 'I' to 'P'. To specify black, UV resistant tubing, change 'I' to 'U'. To specify Bleed 4FV, change 'S' to 'B'. To specify 3FV, change 'S' to 'T'.

3FV indicates that the pump is equipped with an LMI Three Function Valve (pressure relief, priming aid, line drain).

4FV indicates that the pump is equipped with an LMI Four Function Valve. This diaphragm type ,anti- syhon/pressure relief valve is installed on the pump head. It provides anti-syphon protection and aids in priming, even under pressure.

Fluorofilm™ is a copolymer of PTFE and PFA.
Polyprel® is an elastomeric PTFE copolymer.

Polyprel is a registered trademark of Liquid Metronics, Inc.
Flourofilm, Liquifram, PGC are trademarks of Liquid Metronics, Inc.
Hypalon is a registered trademark of E. I. du Pont de Nemours & Co., Inc.

Output Information

Series	Gallons per Hour Min	Max	Liters per Hour Min	Max	mL/cc per Minute Min	Max	mL/cc per Stroke Min	Max	Maximum Injection Pressure	
P02	0.063	0.21	0.237	0.79	3.94	13	0.07	0.22	150 psi	(10.3 Bar)
P03	0.125	0.42	0.473	1.6	7.89	26	0.13	0.44	110 psi	(7.6 Bar)
P04	0.117	0.58	0.442	2.2	7.36	37	0.07	0.37	250 psi	(17.3 Bar)
P05	0.200	1.0	0.757	3.8	12.62	63	0.13	0.63	110 psi	(7.6 Bar)
P06	0.400	2.0	1.510	7.6	25.23	126	0.25	1.26	50 psi	(3.5 Bar)
P12	0.001	0.21	0.002	0.79	0.04	13	0.07	0.22	150 psi	(10.3 Bar)
P13	0.001	0.42	0.005	1.6	0.08	27	0.13	0.44	110 psi	(7.6 Bar)
P14	0.001	0.58	0.004	2.2	0.07	37	0.07	0.37	250 psi	(17.3 Bar)
P15	0.002	1.0	0.008	3.8	0.13	63	0.13	0.63	110 psi	(7.6 Bar)
P16	0.004	2.0	0.015	7.6	0.25	126	0.25	1.26	50 psi	(3.5 Bar)

© 1997 LMI Milton Roy - All Rights Reserved
Printed in USA
Specifications subject to change without notice.

Specification **Sheet**

Series P

GENERAL

Chemical metering pumps shall be positive displacement, Liquifram™ type pumps that are UL and CUL approved. Output volume shall be adjustable while pumps are in operation from zero to maximum capacity of:

P02, P12 - 0.21 GPH (0.79 liters per hour)
P03, P13 - 0.42 GPH (1.6 liters per hour)
P04, P14 - 0.58 GPH (2.2 liters per hour)
P05, P15 - 1.0 GPH (3.8 liters per hour)
P06, P16 - 2.0 GPH (7.6 liters per hour)

Chemical metering pumps shall be capable, without a hydraulically backed diaphragm, of injecting solutions against pressures up to:

P02, P12 - 150psig (10.3 Bar)
P03, P13 - 110psig (7.6 Bar)
P04, P14 - 250psig (17.3 Bar)
P05, P15 - 110psig (7.6 Bar)
P06, P16 - 50psig (3.5 Bar)

SERIES P0

The stroke frequency will be fixed at the following rates.

P02, P03 - 60 strokes per minute
P04, P05, P06 - 100 strokes per minute

Stroke length shall be adjustable by readily accessible dial knob located opposite the liquid handling end.

SERIES P1

Adjustment shall be by means of readily accessible dial knobs, one for changing stroke length and the other for changing stroke frequency. Both knobs are to be located opposite the liquid handling end.

DRIVE

The pump drive shall be totally enclosed with no exposed moving parts. Solid state electronic pulser shall be fully encapsulated and supplied with quick connect terminals at least 3/16" (4.75 mm) wide. Electronics shall be housed in chemical resistant enclosure at the rear of the pump for maximum protection against chemical spillage. Electrical power consumption shall not exceed 22 watts per hour under full speed and maximum pressure conditions. Pump weight shall not exceed 14 lbs (6.5 kg).

AUTOMATIC PRESSURE RELIEF

To eliminate need for pressure relief valve, Liquifram™ shall automatically stop pulsating when discharge pressure exceeds pump pressure rating by not more than 35%.

MATERIAL

Chemical metering pump housing shall be of chemically resistant glass fiber reinforced thermoplastic. All exposed fasteners shall be stainless steel. Chemical metering pump valves shall be ball type, with ceramic balls[1]. Valve seat and seal ring shall be renewable by replacing the combination seat-seal ring[2] or cartridge valve assembly. Pump head shall be of transparent acrylic[3] material capable of resisting the pumped chemical. Fittings and connections at pump head shall be PVC[4].

CHECK VALVES AND TUBING

A total of 16 ft (4.8 m) of polyethylene tubing[5] shall be provided per pump complete with compression connections. A foot valve with integral one piece strainer shall be provided for the suction line, and an injection check/back pressure valve with ½" NPT male connection for the injection point. The injection check valve shall incorporate a dilating orifice which prohibits scale formation and accumulation of crystalline deposits.

Notes:

1. Type 316 stainless steel or PTFE may be specified.
2. Hypalon®, PTFE or Polyprel® may be specified.
3. PVDF, PVC, Polypropylene, or Type 316 stainless steel may be specified.
4. PVDF, Polypropylene, or Type 316 stainless steel may be specified.
5. 6 ft. (1.8 m) of vinyl suction tubing may be specified in place of polyethylene for the suction side only. 1/4" pipe thread may be specified.

LMI
MILTON ROY

8 Post Office Square
Acton, MA 01720 USA
TEL: (978) 263-9800
FAX: (978) 264-9172
http://www.lmipumps.com

ISO9001

1934 Rev. A 12/99

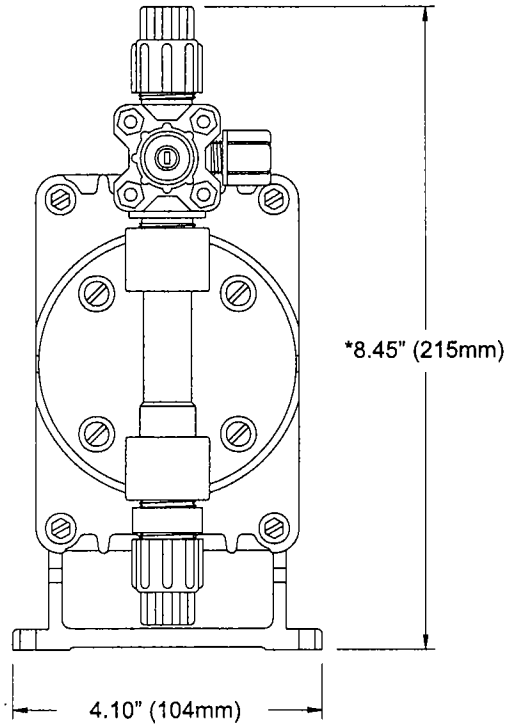

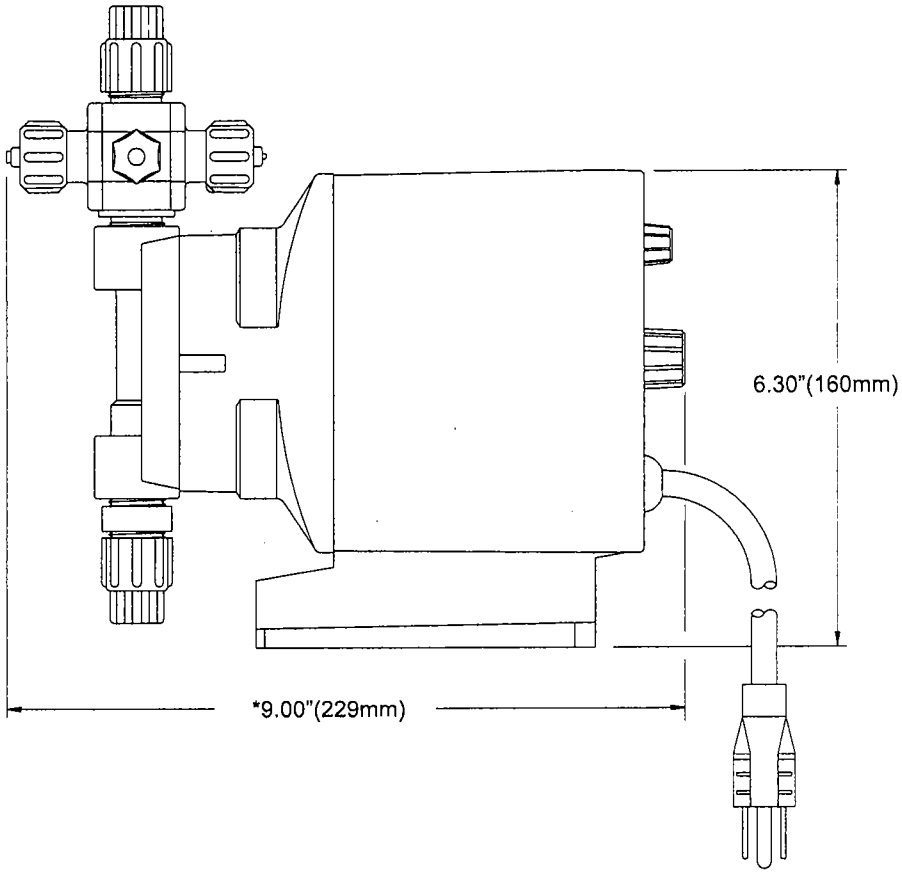

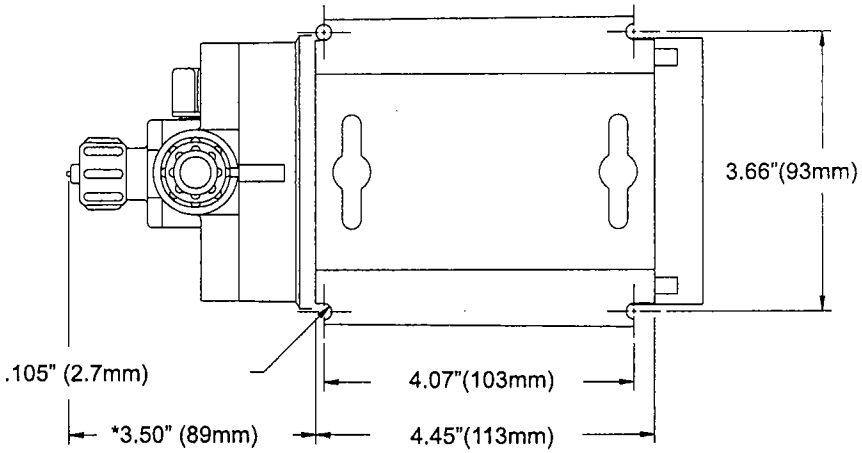

* Dimensions shown are maximum for largest liquid end available. These dimensions vary depending on the liquid end selected.

© 1999 LMI Milton Roy - All Rights Reserved
Printed in USA
Specifications subject to change without notice.

Polyprel is a registered trademark of Liquid Metronics Incorporated.
Liquifram, Liquitron, Micropace are trademarks of Liquid Metronics Incorporated.
Hypalon and Viton are registered trademarks of E. I. du Pont de Nemours & Co., Inc.

P-3

Data Sheet

Series C
Electronic Metering Pumps

Configuration Data

Model C92 1 - 363SI

Control & Output Code

Manual Control
Speed (stroking frequency) and stroke length manually adjustable.

C10 — 1.3 GPH (4.9 l/h)... 300 psi (20.7 Bar)
C11 — 2.5 GPH (9.5 l/h)... 150 psi (10.3 Bar)
C12 — 4.0 GPH (15.1 l/h)... 100 psi (6.9 Bar)
C13 — 8.0 GPH (30 l/h)..... 60 psi (4.1 Bar)
C14 — 20 GPH (76 l/h)..... 25 psi (1.7 Bar)

Instrument Responsive/Manual Control
Manual adjustment features of C1 Series plus switch conversion to external control for automatic systems.

C70 — 1.3 GPH (4.9 l/h)... 300 psi (20.7 Bar)
C71 — 2.5 GPH (9.5 l/h)... 150 psi (10.3 Bar)
C72 — 4.0 GPH (15.1 l/h)... 100 psi (6.9 Bar)
C73 — 8.0 GPH (30 l/h)..... 60 psi (4.1 Bar)
C74 — 20 GPH (76 l/h)..... 25 psi (1.7 Bar)
C77 — 10 GPH (38 l/h)..... 80 psi (5.5 Bar)
C78 — 25 GPH (95 l/h)..... 30 psi (2.07 Bar)
C90 — 1.3 GPH (4.9 l/h)... 300 psi (20.7 Bar)
C91 — 2.5 GPH (9.5 l/h)... 150 psi (10.3 Bar)
C92 — 4.0 GPH (15.1 l/h)... 100 psi (6.9 Bar)
C93 — 8.0 GPH (30 l/h)..... 60 psi (4.1 Bar)
C94 — 20 GPH (76 l/h)..... 25 psi (1.7 Bar)

Voltage Code

1 — 120 VAC US Plug
2 — 240 VAC US Plug
3 — 220-240 VAC DIN Plug
5 — 240-250 VAC, UK Plug
6 — 240-250 VAC, AUST/NZ Plug
7 — 220-240 VAC, SWISS Plug

Liquid End

See next page for complete liquid end specifications and selection.

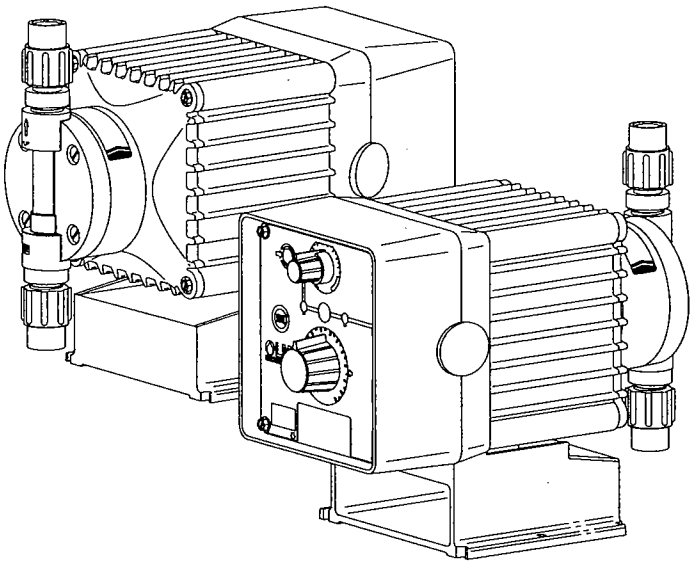

Dimensions

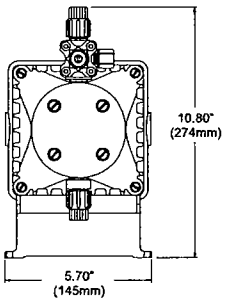

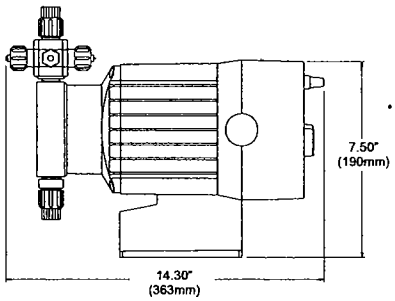

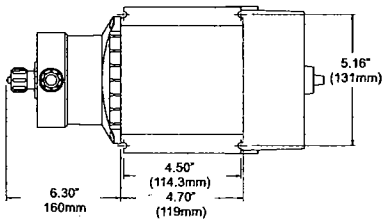

* Dimensions shown are maximum for largest liquid end available. These dimensions vary depending on the liquid end selected.

Specifications

Series	Strokes Per Minute (Adjustable) Min	Max	Stroke Length (Adjustable) Recommended Minimum	Average Input Power @ Max Speed	Shipping Weight
C10, C70, C90 C11, C71, C91 C12, C72, C92 C13, C73, C93 C14, C74, C94	1	100	10%	44 watts	20 lbs (9.1 kg)
C77 C78	1	100	10%	87 watts	28 lbs (12.7 kg)

LMI MILTON ROY

8 Post Office Square
Acton, MA 01720 USA
TEL: (978) 263-9800
FAX: (978) 264-9172
http://www.lmipumps.com

Replaces same of Rev.C 9/97
1712.D 10/99

Configuration Data & Materials of Construction

Drive Assembly	Liquid End No.	Size Code	Materials of Construction: Head & Fittings	Balls	Liquifram™	Seal Ring	Accessory	Tubing & Connections: Discharge	Suction
C90 ☐ -									
C70 ☐ -	297	0.9	316 S.S.	316 S.S.	Fluorofilm™	316 S.S.		Pipe 1/4" NPT M	
C10 ☐ -	94S**	0.9	PVC	Ceramic	Fluorofilm™	PTFE	4FV	Pipe 1/4" NPT M	
	360SI †	1.8	Acrylic/PGC	Ceramic	Fluorofilm™	PGC / Polyprel®	4FV	PE .375" O.D.	
	361SI †	1.8	PGC/PGC	Ceramic	Fluorofilm™	PGC / Polyprel®	4FV	PE .375" O.D.	
C91 ☐ -	362SI †	1.8	PVDF / PVDF	Ceramic	Fluorofilm™	PVDF/ Polyprel®	4FV	PE .375" O.D.	
C92 ☐ -	363SI †	1.8	PVDF / PVDF	Ceramic	Fluorofilm™	PVDF/ PTFE	4FV	PE .375" O.D.	
C71 ☐ -	277	1.8	316 S.S.	316 S.S.	Fluorofilm™	316 S.S.		Pipe 1/4" NPT M	
C72 ☐ -	71FS	1.8	Acrylic/PVDF	PTFE	Hypalon®	Hypalon®	4FV	PE .5" O.D.	Vinyl .5" O.D.
C11 ☐ -	71S †	1.8	Acrylic/PVC	Ceramic	Fluorofilm™	PTFE	4FV	PE .5" O.D.	Vinyl .5" O.D.
C12 ☐ -	72S †	1.8	PVC	Ceramic	Fluorofilm™	PTFE	4FV	PE .5" O.D.	
	74S**	1.8	PVC	Ceramic	Fluorofilm™	PTFE	4FV	Pipe 1/4" NPT M	
	75HV	1.8	Polypropylene	316 S.S.	Fluorofilm™	PTFE		PE .5" O.D.	Vinyl .938" O.D.
	75S †	1.8	Polypropylene	Ceramic	Fluorofilm™	PTFE	4FV	PE .5" O.D.	
	76	1.8	Acrylic/PP	316 S.S.	Fluorofilm™	Hypalon®		PE .5" O.D.	Vinyl .938" O.D.
	79	1.8	UHMW PE	Ceramic	Hypalon®	Hypalon®		PE .5" O.D.	Vinyl .5" O.D.
	310SI †	3.0	Acrylic/PGC	Ceramic	Fluorofilm™	PGC / Polyprel®	4FV	PE .375" O.D.	
	311SI †	3.0	PGC/PGC	Ceramic	Fluorofilm™	PGC / Polyprel®	4FV	PE .375" O.D.	
	312SI †	3.0	PVDF / PVDF	Ceramic	Fluorofilm™	PVDF/ Polyprel®	4FV	PE .375" O.D.	
C93 ☐ -	313SI †	3.0	PVDF / PVDF	Ceramic	Fluorofilm™	PVDF / PTFE	4FV	PE .375" O.D.	
C73 ☐ -	20HV	3.0	Acrylic/PP	316 S.S.	Fluorofilm™	Hypalon®		PE .5" O.D.	Vinyl .938" O.D.
C13 ☐ -	20S**	3.0	Acrylic/PVC	Ceramic	Fluorofilm™	Hypalon®	4FV	PE .5" O.D.	Vinyl .5" O.D.
	24	3.0	PVC	Ceramic	Fluorofilm™	PTFE		Pipe 1/2" NPT M	
	25HV	3.0	Polypropylene	316 S.S.	Fluorofilm™	PTFE		PE .5" O.D.	Vinyl .938" O.D.
	25P	3.0	Polypropylene	Ceramic	Fluorofilm™	PTFE		Pipe 1/2" NPT M	
	25T	3.0	Polypropylene	Ceramic	Fluorofilm™	PTFE		PE .5" O.D.	
	26S**	3.0	PVC	Ceramic	Fluorofilm™	Viton®	4FV	PE .5" O.D.	
	27	3.0	316 S.S.	316 S.S.	Fluorofilm™	PTFE		Pipe 1/2" NPT M	
	29	3.0	UHMW PE	Ceramic	Fluorofilm™	Hypalon®		PE .5" O.D.	
	30	6.0	Acrylic/PVC	Ceramic	Fluorofilm™	PTFE		PE .5" O.D	Vinyl .5" O.D.
C94 ☐ -	32	6.0	PVDF	Ceramic	Fluorofilm™	PTFE		PE .5" O.D.	
C78 ☐ -	34	6.0	PVC	Ceramic	Fluorofilm™	PTFE		Pipe 1/2" NPT M	
C74 ☐ -	35P	6.0	Polypropylene	Ceramic	Fluorofilm™	PTFE		Pipe 1/2" NPT M	
C14 ☐ -	35T	6.0	Polypropylene	Ceramic	Fluorofilm™	PTFE		PE .5" O.D.	
	36	6.0	PVC	Ceramic	Fluorofilm™	PTFE		PE .5" O.D.	
	37	6.0	316 S.S.	316 S.S.	Fluorofilm™	PTFE		Pipe 1/2" NPT M	
	20HV	3.0	Acrylic/PP	316 S.S.	Fluorofilm™	Hypalon®		PE .5" O.D.	Vinyl .938" O.D.
	20S**	3.0	Acrylic/PVC	Ceramic	Fluorofilm™	Hypalon®	4FV	PE .5" O.D.	Vinyl .5" O.D.
	24	3.0	PVC	Ceramic	Fluorofilm™	PTFE		Pipe 1/2" NPT M	
C77 ☐ -	25HV	3.0	Polypropylene	316 S.S.	Fluorofilm™	PTFE		PE .5" O.D.	Vinyl .938" O.D.
	25P	3.0	Polypropylene	Ceramic	Fluorofilm™	PTFE		Pipe 1/2" NPT M	
	25T	3.0	Polypropylene	Ceramic	Fluorofilm™	PTFE		PE .5" O.D.	
	26S**	3.0	PVC	Ceramic	Fluorofilm™	Viton®	4FV	PE .5" O.D.	
	27	3.0	316 S.S.	316 S.S.	Fluorofilm™	PTFE		Pipe 1/2" NPT M	
	29	3.0	UHMW PE	Ceramic	Fluorofilm™	Hypalon®		PE .5" O.D.	

☐ See front page for voltage code specifications.

** These Liquid Ends are available without a 4FV, simply drop the 'S' at the end of the Liquid End number to order the model without a 4FV.

† To specify ¼" NPT male, change 'I' to 'P'. To specify black, UV resistant tubing, change 'I' to 'U'. To specify Bleed 4FV, change 'S' to 'B'. To specify 3FV, change 'S' to'T'.
Fluorofilm™ is a copolymer of PTFE and PFA.
Polyprel® is an elastomeric PTFE copolymer.

4FV indicates that the pump is equipped with an LMI Four Function Valve. This diaphragm type anti-syphon/pressure relief valve is installed on the pump head. It provides anti-syphon protection and aids in priming, even under pressure.

Output Information

Series	Gallons per Hour Min	Max	Liters per Hour Min	Max	mL/cc per Minute Min	Max	mL/cc per Stroke Min	Max	Maximum Injection Pressure
C10, C70*, C90*	0.001	1.3	0.005	4.9	0.08	82	0.08	0.82	300 psi (20.7 Bar)
C11, C71*, C91*	0.003	2.5	0.010	9.5	0.16	158	0.16	1.58	150 psi (10.3 Bar)
C12, C72*, C92*	0.004	4.0	0.015	15.1	0.25	252	0.25	2.52	100 psi (6.9 Bar)
C13, C73*, C93*	0.008	8.0	0.030	30	0.51	505	0.51	5.05	60 psi (4.1 Bar)
C14, C74*, C94*	0.020	20.0	0.076	76	1.26	1262	1.26	12.62	25 psi (1.7 Bar)
C77*	0.010	10.0	0.038	38	0.63	631	0.63	6.31	80 psi (5.5 Bar)
C78*	0.025	25.0	0.095	95	1.58	1577	1.58	15.77	30 psi (2.07 Bar)

Minimum output is based on 1 stroke per minute and 10% stroke setting, minimum output can be reduced further in external mode. Series C9 pumps may be programmed for strokes per hour for lower outputs.

© 1999 LMI Milton Roy - All Rights Reserved
Printed in USA
Specifications subject to change without notice.

Polyprel is a registered trademark of Liquid Metronics Incorporated.
Flourofilm and Liquifram are trademarks of Liquid Metronics Incorporated.
Hypalon and Viton are registered trademarks of E. I. du Pont de Nemours & Co., Inc.

P-3

Specification **Sheet**

Series C

GENERAL

Chemical metering pumps shall be positive displacement, Liquifram™ type pumps that are UL and CUL approved. Output volume shall be adjustable while pumps are in operation from zero to maximum capacity of:

C10, C70, C90	- 1.3 GPH	(4.9 liters per hour)
C11, C71, C91	- 2.5 GPH	(9.5 liters per hour)
C12, C72, C92	- 4.0 GPH	(15.1 liters per hour)
C13, C73, C93	- 8.0 GPH	(30.0 liters per hour)
C14, C74, C94	- 20.0 GPH	(76.0 liters per hour)
C77	- 10.0 GPH	(38.0 liters per hour)
C78	- 25.0 GPH	(95.0 liters per hour)

Chemical metering pumps shall be capable, without a hydraulically backed diaphragm, of injecting solutions against pressures up to:

C10, C70, C90	- 300 psig	(20.7 bar)
C11, C71, C91	- 150 psig	(10.3 bar)
C12, C72, C92	- 100 psig	(6.9 bar)
C13, C73, C93	- 60 psig	(4.1 bar)
C14, C74, C94	- 25 psig	(1.7 bar)
C77	- 80 psig	(5.5 bar)
C78	- 30 psig	(2.1 bar)

SERIES C1

Adjustment shall be by means of readily accessible dial knobs, one for changing stroke length and the other for changing stroke frequency (speed). Both knobs are to be located opposite the liquid handling end.

SERIES C7

Control of Series C7 metering pumps shall be selectable between internal and external pulsing by means of a 3-position center-off switch. Stroke length shall be adjustable by means of readily accessible dial knob. When in external pulsed mode, Series C7 units shall accept signals without the use of electrical timer or internal timer. Pressure capacity shall be adjustable to reduce noise, vibration and wear.

SERIES C9

Series C9 metering pumps shall have a clear liquid crystal display. Control shall be selectable between internal and external pulsing by means of a tactile keypad. Internal stroke frequency shall be adjustable from 1 stroke per hour to 100 strokes per minute. Pressure capacity shall be keypad adjustable to reduce noise, vibration and wear. Metering pump shall be capable of dividing or multiplying pulse inputs from 1 to 999 or responding directly or inversely to a 4-20mA input signal.

DRIVE

The pump drive shall be totally enclosed with no exposed moving parts. Solid state electronic pulser shall be encapsulated and supplied with quick connect terminals at least 3/16" (4.75 mm) wide. Electronics shall be housed in chemical resistant enclosure at the rear of the pump for maximum protection against chemical spillage. Electrical power consumption shall not exceed 87 watts under full speed and maximum pressure conditions. Pump weight shall not exceed 28 lbs (12.7 kg).

AUTOMATIC PRESSURE RELIEF

To eliminate need for pressure relief valve, Liquifram™ shall automatically stop pulsating when discharge pressure exceeds pump pressure rating by not more than 35%.

MATERIAL

Chemical metering pump housing shall be of chemically resistant glass fiber reinforced thermoplastic with a glass fiber reinforced polypropylene EPU carrier[1]. All exposed fasteners shall be stainless steel. Chemical metering pump valves shall be ball type, with ceramic balls[2]. Valve seat and seal ring shall be renewable by replacing the combination seat-seal ring[3] or cartridge valve assembly. Pump head shall be of transparent acrylic[4] material capable of resisting the pumped chemical. Fittings and connections at pump head shall be PVC[5].

CHECK VALVES AND TUBING

A total of 16 ft (4.8 m) of polyethylene tubing[6] shall be provided per pump complete with compression connections. A foot valve with integral one piece strainer shall be provided for the suction line, and an injection check/back pressure valve with ½" NPT male connection for the injection point. The injection check valve shall incorporate a dilating orifice which prohibits scale formation and accumulation of crystalline deposits.

Notes:

1. With plastic coated cast iron EPU carrier for Series C77 and C78.
2. Type 316 stainless steel or PTFE may be specified.
3. Hypalon®, PTFE, Viton® or Polyprel® may be specified
4. PVC, polypropylene, or Type 316 stainless steel may be specified.
5. PVDF, Polypropylene, or Type 316 stainless steel may be specified.
6. 6 ft. (1.8 m) of vinyl suction tubing may be specified in place of polyethylene for the suction side only. 1/4" or 1/2" male pipe thread may be specified.

LMI
MILTON ROY

8 Post Office Square
Acton, MA 01720 USA
TEL: (978) 263-9800
FAX: (978) 264-9172
http://www.lmipumps.com

Replaces same of Rev. B 8/97
1619. C 12/99

P-3

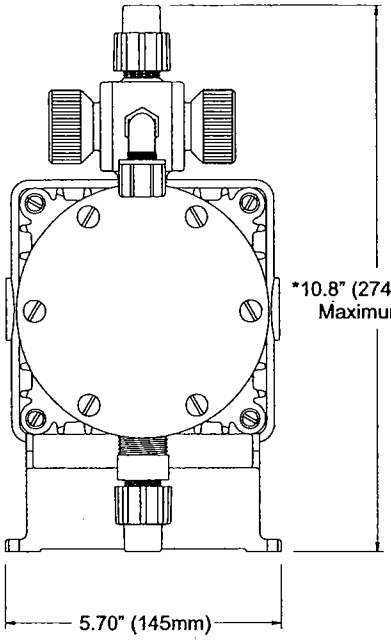

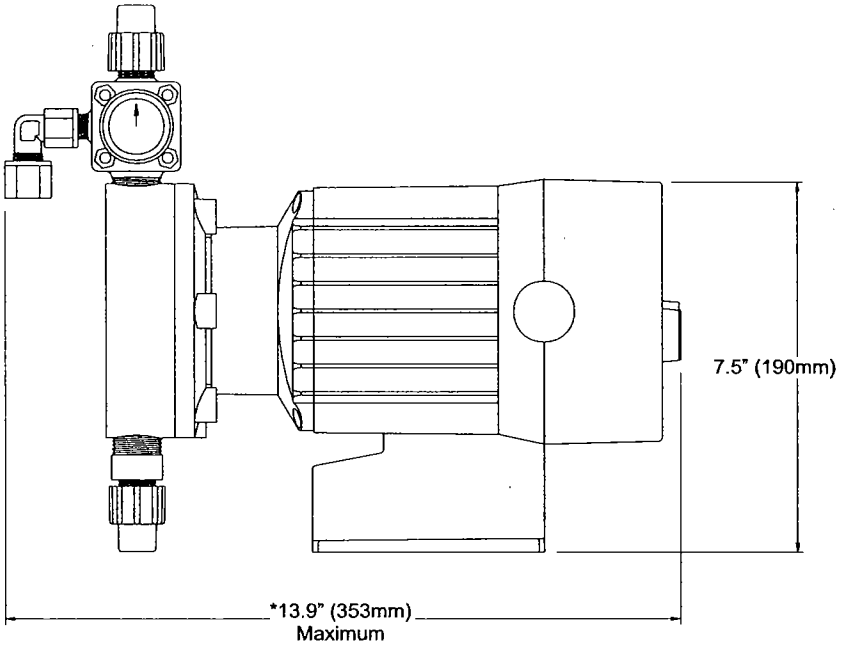

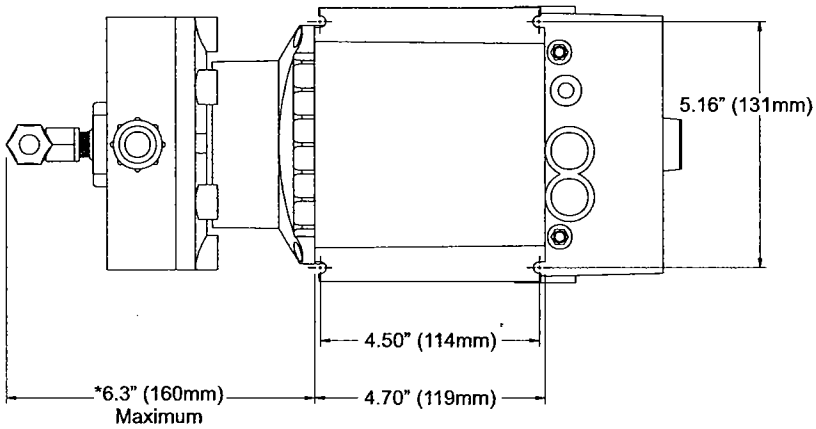

*Dimensions shown are maximum for largest liquid end available.These dimensions vary depending on the liquid end selected.

© 1999 LMI Milton Roy - All Rights Reserved
Printed in USA
Specifications subject to change without notice.

Polyprel is a registered trademark of Liquid Metronics Incorporated.
Liquifram, Liquitron, Micropace are trademarks of Liquid Metronics Incorporated.
Hypalon and Viton are registered trademarks of E. I. du Pont de Nemours & Co., Inc.

P-2, P-3

Information Sheet

Metric LiquiPro™ 4-Function Valve

For 300 Series Cartridge Valve Type Liquid Ends

Anti-Syphon

A positive diaphragm-type anti-syphon function makes it possible to meter liquids "down hill".

Back Pressure

Supplies approximately 1.4 Bar (20 psi) back pressure to prevent over-pumping when little or no system pressure is present.

Priming - Pressure Release

This function makes it easy to depressurize the discharge line without loosening tubing or fittings. It also allows you to prime your LMI pump while it is connected to a pressurized line.

Pressure Relief Function

Provides protection against excessive system pressure.

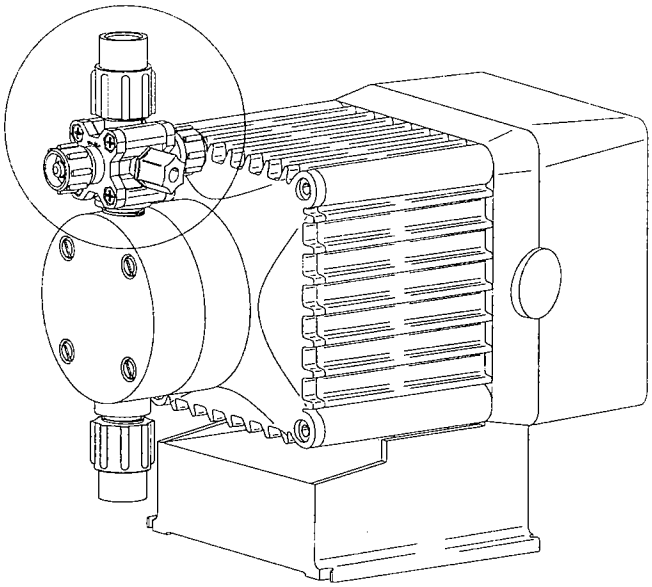

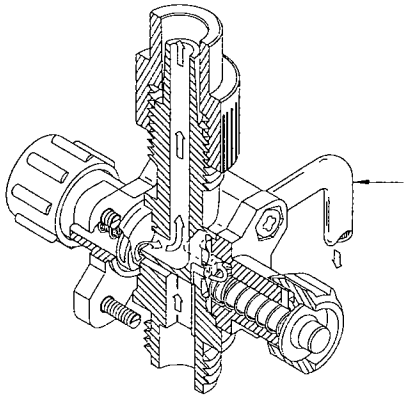

Part No.	Tubing Size	Materials of Construction	
		Diaphragm	Body
36628	4 x 6 mm	PTFE	PGC™
36629	4 x 6 mm	PTFE	PVDF
36630	6 x 8 mm	PTFE	PGC™
36631	6 x 8 mm	PTFE	PVDF
36273	9 x 12 mm	PTFE	PGC™
36277	9 x 12 mm	PTFE	PVDF

Part numbers are for 300 Series LiquiPro™ cartridge valve type Liquid Ends only. See Publication #1243 for ball and seal ring type 4-Function valves.

LMI
LIQUID METRONICS DIVISION
MILTON ROY
A unit of Sundstrand Corporation

8 Post Office Square
Acton, MA 01720 USA
TEL: (978) 263-9800
FAX: (978) 264-9172
http://www.lmipumps.com

1869.A 10/97

Threaded PVC Static Mixer Series 328

Drawing

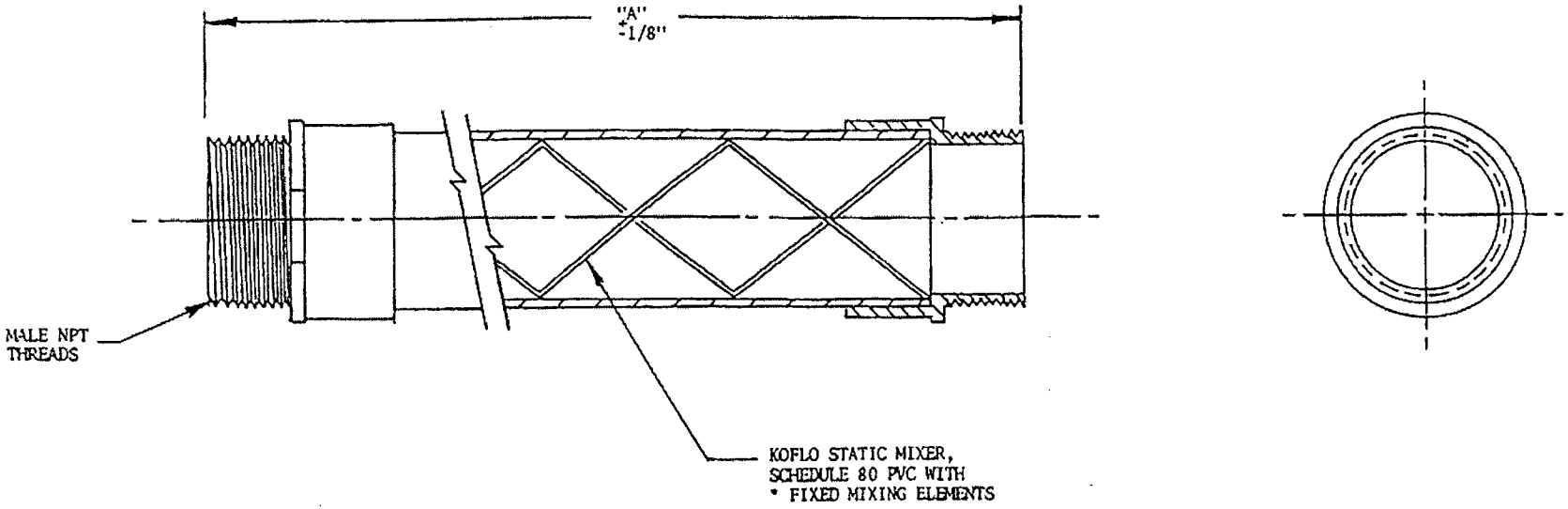

SM-1

*Number of Elements	"A" Pipe Size								
	1/2"	3/4"	1"	1-1/4"	1-1/2"	2"	2-1/2"	3"	4"
6	7"	8"	10"	14"	15"	18"	22"	28"	36"
12	11"	14"	19"	25"	26"	33"	40"	51"	66"

Koflo

Koflo Corporation
309 CARY POINT DR.
CARY, IL 60013

SCALE: NONE	APPROVED BY	DRAWN BY A.R.E.
DATE:		REVISED 10/15/01 REV. 2
CUSTOMER:		REVISED
		REVISED
MODEL NO: SCHEDULE 80 PVC MIXER		DRAWING NUMBER KD-1025

M-3

Neptune Series JG Low Speed Mixers

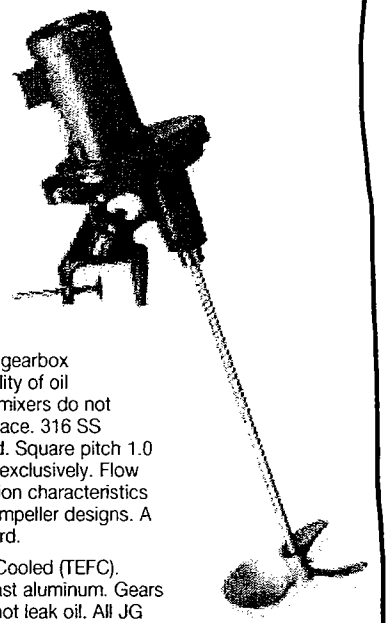

- **For use with polymers or other high viscosity liquids**
- **350 rpm**
- **Gear Drive Mixers**

Neptune's most powerful mixers for the most difficult mixing applications. Grease-filled gearbox eliminates oil seal and the possibility of oil contamination of process. These mixers do not have clutches to slip, wear or replace. 316 SS propellers and shafts are standard. Square pitch 1.0 ration marine propellers are used exclusively. Flow coefficients and power consumption characteristics equal those of the best hydrofoil impeller designs. A vibration-absorbing pad is standard.

Motors are Totally Enclosed Fan Cooled (TEFC). Motor housings are made from cast aluminum. Gears run in grease lubrication and cannot leak oil. All JG series mixer shaft bearings are permanently lubricated.

Two mounting configurations are available. A clamp mount or a cup plate mount. Dual propeller units are usually specified when the liquid depth is 1.5 times the diameter of the tank or more.

MOTOR	SHAFT DIA x L	SINGLE PROP STOCK #	SINGLE PROP EACH	DUAL PROP STOCK #	DUAL PROP EACH
MIXERS W/CLAMP MOUNT					
1/3 hp, 1 ph, 115/230V	3/4" x 48"	75251	$ 1,173.01	75257	$ 1,230.81
1/2 hp, 1 ph, 115/230V	3/4" x 48"	75252	1,356.61	75258	1,395.71
3/4 hp, 1 ph, 115/230V	3/4" x 60"	75253	1,472.21	75259	1,597.16
1 hp, 3 ph, 230/460V	1" x 60"	75254	1,547.01	75260	1,703.41
1 1/2 hp, 3 ph, 230/460V	1" x 60"	75255	1,712.76	75261	1,790.11
MIXERS W/CUP PLATE MOUNT					
1/3 hp, 1 ph, 115/230V	3/4" x 48"	75263	$ 1,173.01	75271	$ 1,230.81
1/2 hp, 1 ph, 115/230V	3/4" x 48"	75264	1,356.61	75272	1,395.71
3/4 hp, 1 ph, 115/230V	3/4" x 60"	75265	1,472.21	75273	1,597.16
1 hp, 3 ph, 230/460V	1" x 60"	75266	1,547.01	75274	1,703.41
1 1/2 hp, 3 ph, 230/460V	1" x 60"	75267	1,712.76	75275	1,790.11
2 hp. 3 ph, 230/460V	1 1/4" x 60"	75268	2,379.16	75276	2,550.87
3 hp. 3 ph, 230/460V	1 1/4" x 72"	75269	2,438.66	75277	2,691.12

Neptune Drum Mixers

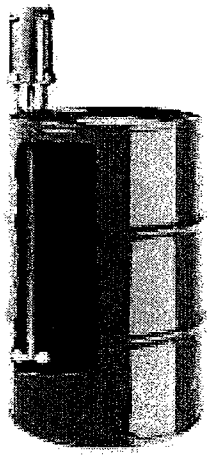

- **Available in low-speed version for polymers and other high viscosity liquids or standard speeds for routine mixing**

Our drum mixers are convenient and easy to use. Standard 1750 rpm mixers are for general purpose mixing of materials less than 200 cP and available with 2" bung threads for standard 55 gallon drums. High viscosity, 430 rpm mixers can handle materials up to 16,000 cps.

Shafts and propellers are made from 316 SS. Propellers fold for easy entry and spring open after entry into drum to 3-3/4" diameter while operating. Motors are Totally Enclosed Fan Cooled (TEFC). Each unit is supplied with 8 ft of cord and a 3-prong plug.

MOTOR	STANDARD MIXERS STOCK #	STANDARD MIXERS EACH	HIGH VISCOSITY MIXERS STOCK #	HIGH VISCOSITY MIXERS EACH
1/4 hp, 1 ph. 115/230V	75285	$ 463.25	—	—
1/3 hp, 1 ph, 115/230V	75287	486.20	75291	$ 931.61
1/2 hp, 1 ph, 115/230V	75289	516.80	75292	909.51

Neptune Economy Batch Mixers

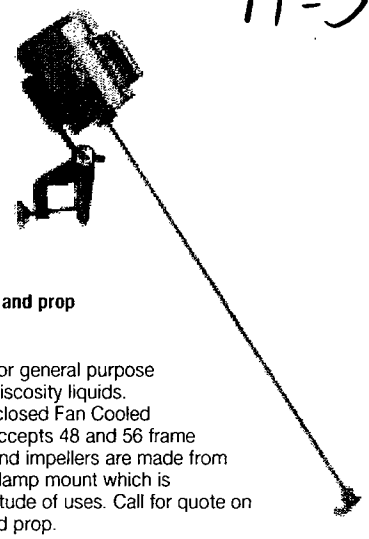

- **General purpose mixers**
- **Available with PVC-coated shaft and prop for use with chlorine**

These economy mixers are ideal for general purpose mixing of small batches and low viscosity liquids. Motors come standard Totally Enclosed Fan Cooled (TEFC). Universal motor mounts accepts 48 and 56 frame footed motors. The mixer shafts and impellers are made from 316 SS. Each unit comes with a clamp mount which is adjustable to any angle for a multitude of uses. Call for quote on models with PVC-coated shaft and prop.

316 SS MIXERS MOTOR	SHAFT DIA x L	SINGLE PROP STOCK #	SINGLE PROP EACH	DUAL PROP STOCK #	DUAL PROP EACH
1/4 hp 1 ph 115/230V	1/2" x 32"	75279	$ 327.25	75280	$ 359.55
1/3 hp 1 ph 115/230V	1/2" x 32"	75281	398.65	75282	430.95
1/2 hp 1 ph 115/230V	5/8" x 32"	75283	449.65	75284	481.95

Replacement Neptune Mixer Shafts, Props & Couplings

- **For all Neptune mixers**
- **Change your existing shaft length or prop diameter with ease**

Replacement Shafts – 316 SS

DIA x L	STOCK #	EACH
1/2" x 32"	78021	$ 57.20
5/8" x 29"	78022	66.00
5/8" x 32"	78023	66.00
5/8" x 35"	78024	68.20
5/8" x 29" High Viscosity	78025	177.10
3/4" x 48"	78026	117.00
3/4" x 60"	78027	134.00
1" x 60"	78028	160.10
1 1/4" x 72"	78029	349.80

Replacement Props – 316 SS

BORE x DIA	STOCK #	EACH
1/2" x 4"	78030	$ 45.10
5/8" x 4"	78031	45.10
5/8" x Folding, for Drum Mixers	78032	77.00
3/4" x 4"	78033	47.30
3/4" x 5"	78034	53.90
3/4" x 8"	78035	116.60
3/4" x 10"	78036	148.40
3/4" x 12"	78037	191.90
3/4" x 13"	78038	251.30
1" x 5"	78039	68.20
1" x 6"	78040	92.40
1" x 12"	78041	197.20
1" x 13"	78042	256.60
1" x 14"	78043	315.90
1" x 15"	78044	379.50
1 1/4" x 14"	78045	328.60
1 1/4" x 15"	78046	395.40
1 1/4" x 16"	78047	433.60

Replacement Couplings - 304 SS

DIA	STOCK #	EACH
5/8" x 5/8"	73867	$ 70.00
1/2" x 1/2"	73868	70.00
1/2" x 5/8"	73869	70.00

Chem-Tainer® Black PE Tanks

- **Seamless, one-piece molded design ensures long, dependable service**
- **UV-resistant black resin holds up well outdoors**

These linear polyethylene (PE) tanks have excellent chemical and impact resistance and provide long and dependable service. Manufactured from resins that comply with U.S. FDA standard 21 CFR 177.1520 (c) 3.1 and 3.2. Operating temperatures to 140°F. Tanks include a one-piece molded polyethylene cover. Optional stands are made of heavy-duty steel with a corrosion resistant coating. Elevated stands support tank 20" off the ground. Both floor stands and elevated stands have agitator mounting supports.

Ordering info: Factory-installed fittings can be ordered with your tank. Simply choose a fitting shown elsewhere in this section. Then when placing your order, tell our customer service rep what fitting(s) you want installed. A copy of the tank drawing will be faxed and you can simply sketch on the drawing where the fitting(s) are to be mounted and fax back. We can NOT process orders without this sketch. **All tanks larger than 60 gallons ship by motor freight.**

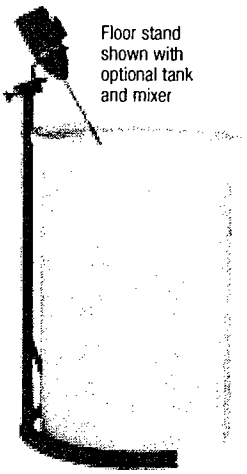

Floor stand shown with optional tank and mixer

Suitable for use with: calcium hydroxide, calcium hypochlorite, hydrochloric acid, hydrofluosilicic acid (up to 32%), hydrogen peroxide (up to 10%), magnesium hydroxide, nitric acid (up to 30%), sodium bicarbonate, sodium bisulfite, sodium hydroxide, and sodium hypochlorite. **Call us with questions about compatibility with any chemicals not on this list!**

for T-2/M-2

CAPACITY (GAL)	GRADUATION (GAL)	DIA x HT	TANKS STOCK #	TANKS EACH	FLOOR STANDS STOCK #	FLOOR STANDS EACH	ELEVATED STANDS STOCK #	ELEVATED STANDS EACH
30	2.5	18" x 29"	27390	$ 86.93	25556	$ 306.00	25565	$ 186.00
55	2.5	22" x 36"	27391	124.10	25557	306.00	25566	205.00
85	None	28" x 32"	27392	215.28	N/A		N/A	
100	10	28" x 42"	27393	260.10	25558	477.00	25568	292.00
150	10	31" x 48"	27394	324.70	25559	420.00	25569	312.00
200	25	36" x 48"	27395	378.70	25560	448.00	25570	319.00
275	25	42" x 48"	27396	475.15	25561	476.00	25571	425.00
360	25	48" x 48"	27397	587.35	25562	513.80	25572	465.00

See pages 1098-1099 for **Accessory Tank Fittings**

Chem-Tainer® Translucent PE Tanks

T-2

- **Seamless, one-piece molded design ensures long, dependable service**
- **Translucent—check liquid levels at a glance**

These linear polyethylene (PE) tanks have excellent chemical and impact resistance and provide long and dependable service. Manufactured from resins that comply with U.S. FDA standard 21 CFR 177.1520 (c) 3.1 and 3.2. Operating temperatures to 140°F. Tanks include a one-piece molded polyethylene cover. Optional stands are made of heavy-duty steel with a corrosion resistant coating. Elevated stands support tank 20" off the ground. Both floor stands and elevated stands have agitator mounting supports.

Ordering info: Factory-installed fittings can be ordered with your tank. Simply choose a fitting shown elsewhere in this section. Then when placing your order, tell our customer service rep what fitting(s) you want installed. A copy of the tank drawing will be faxed and you can simply sketch on the drawing where the fitting(s) are to be mounted and fax back. We can NOT process orders without this sketch. **All tanks larger than 60 gallons ship by motor freight.**

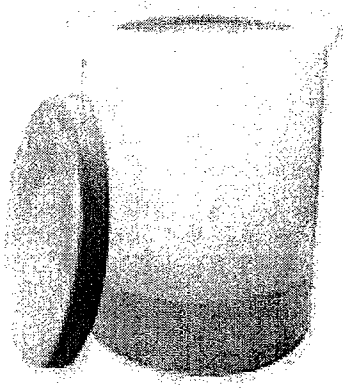

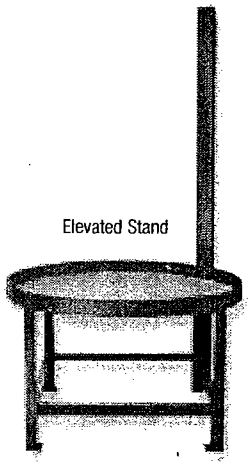

Elevated Stand

Suitable for use with: calcium hydroxide, calcium hypochlorite, hydrochloric acid, hydrofluosilicic acid (up to 32%), hydrogen peroxide (up to 10%), magnesium hydroxide, nitric acid (up to 30%), sodium bicarbonate, sodium bisulfite, sodium hydroxide, and sodium hypochlorite. **Call us with questions about compatibility with any chemicals not on this list!**

CAPACITY (GAL)	GRADUATION (GAL)	DIA x HT	TANKS STOCK #	TANKS EACH	FLOOR STANDS STOCK #	FLOOR STANDS EACH	ELEVATED STANDS STOCK #	ELEVATED STANDS EACH
10	None	13" x 21"	27377	$ 39.10	N/A		N/A	
30	2.5	18" x 29"	27378	79.05	25556	$ 306.00	25565	$ 186.00
55	2.5	22" x 36"	27379	113.05	25557	306.00	25566	205.00
85	None	28" x 32"	27380	195.50	N/A		N/A	
100	10	28" x 42"	27381	236.30	25558	477.00	25568	292.00
150	10	31" x 48"	27382	294.95	25559	420.00	25569	312.00
200	25	36" x 48"	27383	344.49	25560	448.00	25570	319.00
275	25	42" x 48"	27384	431.80	25561	476.00	25571	425.00
360	25	48" x 48"	27385	533.80	25562	513.00	25572	465.00
500	25	52" x 60"	27386	836.40	25563	618.00	25573	559.00
1000	25	66" x 72"	27389	2,153.05	25564	797.00	25574	2,581.00

See pages 1098-1099 for **Accessory Tank Fittings**

USABlueBook
Your Complete Source for Water and Wastewater Supplies
1-800-548-1234
Fax: (847) 689-3030

Home

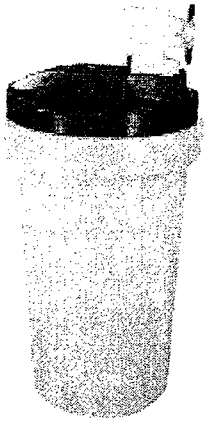

LMI Solution Tank 50 Gallon Top Mount

T-1

In Stock

Stock #: 61124

Catalog #116 Page 1091 (PDF)

Catalog Price: $221.00

Item Lookup

Shopping Cart reflects possible Quantity Breaks. View PDF Page for product details & alternatives.

View Performance Specs

Get Acrobat Reader

Notes:
LMI Chemical Solution Tanks

Translucent

Extra heavy duty

These rigid yellow polyethylene tanks include covers or caps as appropriate. The 10 gallon size has easy to read markings for each gallon. It also has a molded recess in the top for LMI Series A pumps.

The 35-gallon size marked with 5 gallon lines also has a bottom recess for any LMI Series AA which when used as a flooded suction pump virtually eliminates the need for priming.

Bulkhead adapters for 3/8" and 1/4" tubing plus Velcro to attach pump included. The 50-gallon style has markings every 5 gallons and a cover designed to accept the agitator by drilling a hole in the pre-scored lid. For flooded suction on the 50-gallon, purchase optional bulkhead fittings. Ships UPS.

Information Sheet

Polyethylene Tank and Cover Assembly and Accessories

MODEL NO. 26350
50 GALLON TANK ASSEMBLY

- Ultraviolet resistant, molded yellow polyethylene tank.
- High rigidity black polyethylene cover with molded recess for mounting of pump, agitator* and liquid level switch. M-1
- 5 gallon (20 liter) graduations
- Self supporting, tapered sides.
- Suitable for most corrosive and noncorrosive solutions.
- Can be nested up to four (4) per carton for shipping economy.

T-1

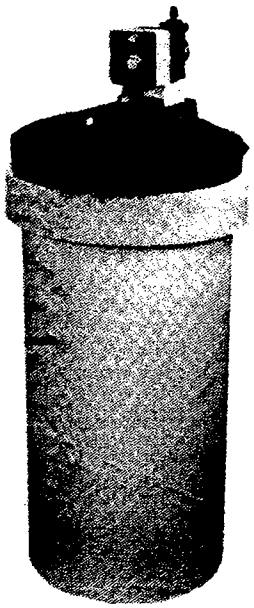

Model No. 26350

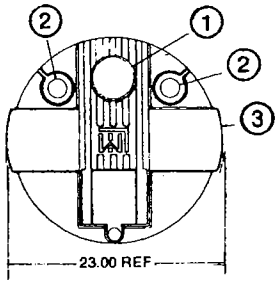

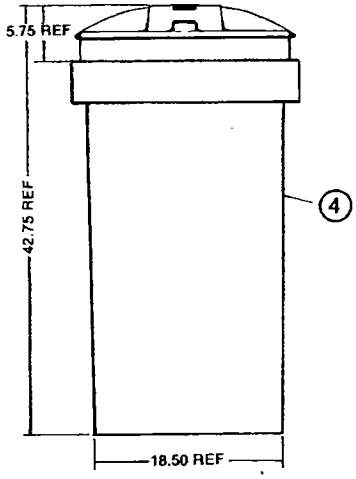

COMPONENT PARTS

Ref No.	Part No.	Description	Qty
1	25985	Caplug Assembly Black Polyethylene	1
2	10346	Caplug Assembly Black Polyethylene	2
3*	26637	Cover, Black Polyethylene	1
4	25688	Tank, 50 Gallon Yellow Polyethylene	1

Shipping wt. 25 lbs (11.4 kg)

NOTES:

1. Full, flat bottom support required.
2. Maximum solution/ambient temperature 110°F (43°C)
3. Minimum solution/ambient temperature 0°F (-18°C)
4. Maximum weight limit for cover 50 lbs (23 kg)
5. Not suitable for use with concentrated organic solvents, oils and related materials.

Cover must be drilled at factory for agitator mounting. Please indicate your desire for this option when ordering.

LMI
LIQUID METRONICS DIVISION
MILTON ROY
A unit of Sundstrand Corporation

ISO9001

AGITATORS WITH SUCTION TUBE SHIELD

M-1

115V Model	Shaft Length	Impeller	Motor
No. 10590	34" S.S. +	303 S.S.+	1600 RPM, 115 VAC, 50/60 Hz., 1.5 AMP. 175 WATTS, 1/20 H.P.
No. 10592	34" S.S. +	Neoprene**	
No. 27591	27" S.S. +	303 S.S.+	

220V Model	Shaft Length	Impeller	Motor
No. 25290	34" S.S.+	303 S.S.+	1600 RPM, 220-240 VAC, 50 Hz., .75 AMP.175 WATTS 1/20 H.P. DIN Plug
No. 25292	34" S.S.+	Neoprene**	
No. 34504	27" S.S.+	303 S.S.+	

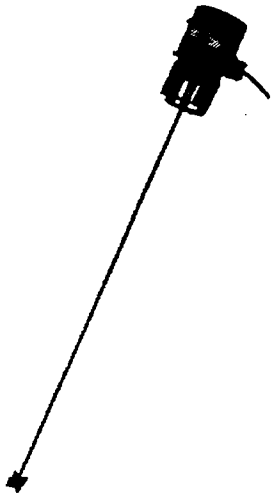

+ ***Epoxy chemical resistant coating.***
** ***Has bronze hub for noncorrosive abrasive slurries only.***

LIQUID LEVEL SWITCH
MODEL NO. 26731

- Corrosion resistant housing of glass - fiber, reinforced polypropylene.
- Chemical resistant polypropylene float.
- Receptacles for connection to metering pump and low level signal device (alarm).
- Convenient mounting on an LMI 50 gallon tank with cover assembly.
- Electrical: Voltage 115 VAC, 50/60 Hz. Max Load: 3 Amps. Also available in 230 VAC, (Model No. 26732).

Double Open End Filter Housings

for use with Filter Cartridges on Pages 392-393

A-F Standard Housings

- Withstand up to 100,000 pulses from 0 to 150 psi at 12 to 20 pulses/minute
- Screw-on caps for easy filter changes
- Model 01509-02 available with pressure relief valve

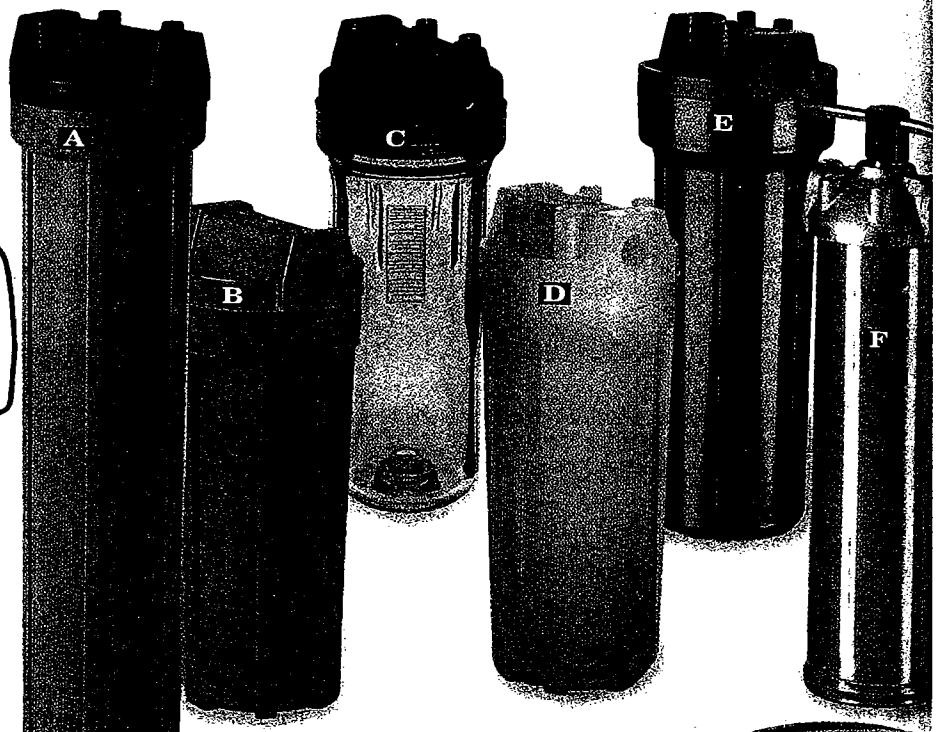

10"

A Cold Water Housing with Blue Sump is constructed of talc-filled polypropylene. Model 01508-35 accepts one 20" cartridge or two coupled pleated or carbon-impregnated paper cartridges. Maximum temperature is 125°F (52°C); maximum pressure is 125 psi. Buna N seal.

B Hot Water Housing with Glass-Reinforced Nylon Sump and Cap. Maximum temperature is 165°F (73°C); maximum pressure is 125 psi. Accepts all double open end (DOE) cartridges. Buna N seal.

C Cold Water Housing with Transparent, Styrene Acrylonitrile (SAN) Sump. Talc-filled polypropylene cap. Maximum temperature is 125°F (52°C); maximum pressure is 125 psi. Available with a pressure relief valve. Accepts all DOE cartridges. Buna N seal. Model 01509-02 features a pressure relief valve.

D Pure Polypropylene Housing and Sump. Maximum temperature is 100°F (38°C); maximum pressure is 100 psi. Accepts all DOE cartridges. Includes three drain valves and Viton® O-ring.

E High-Temperature Housing with Nylon Sump is an economical alternative to stainless steel and carbon housings. Maximum temperature is 165°F (73°C); maximum pressure is 125 psi. Constructed of glass-reinforced nylon. Excellent chemical compatibility—ideal for organic solvents (except ketones), sea water, alcohol, petroleum, and vegetable oils.

F High-Temperature Housing with 304 Stainless Steel Sump and forged brass/nickel plated cap. T-handle nut on cap screws onto center shaft inside sump. Maximum temperature is 300°F (149°C); maximum pressure is 250 psi. Accepts all DOE cartridges (except silver/carbon 01508-91 and granulated activated carbon 01508-92 cartridges). Buna N seal.

Key	Catalog number	Flow rate GPM	Size	NPT(F) port	Dimensions (H x dia)	Shpg wt lb (kg)	Price
A	A-01508-25	1 to 10	10"	¾"	12 1/16" x 5 1/8"	4 (1.9)	$ 21.10
	A-01508-35	1 to 15	20"	¾"	22 7/8" x 5 1/8"	5 (2.3)	36.60
B	A-01508-30	1 to 10	10"	¾"	12 1/16" x 5 1/8"	4 (1.9)	100.00
C	A-01509-00	1 to 10	10"	¾"	12 5/8" x 5 1/8"	3 (1.4)	27.10
	A-01509-02*	1 to 10	10"	¾"	12 5/8" x 5 1/8"	3 (1.4)	27.60
D	A-01508-27	1 to 10	10"	¾"	12 1/4" x 5 1/8"	3 (1.4)	60.90
	A-01508-29	1 to 15	20"	¾"	22 3/8" x 5 1/8"	5 (2.3)	87.20
E	A-01508-31	1 to 8	10"	½"	11 3/4" x 4 3/8"	3 (1.4)	52.50
	A-01508-32	1 to 10	10"	¾"	12 1/8" x 5 1/8"	4 (1.9)	100.00
	A-01508-33	1 to 8	20"	½"	21 7/8" x 4 3/8"	4 (1.9)	99.90
	A-01508-34	1 to 10	20"	¾"	22 1/4" x 5 1/8"	5 (2.3)	154.00
F	A-01508-40	1 to 10	10"	¾"	12 7/8" x 3 15/16"	7 (3.2)	158.90
	A-01508-41	1 to 15	20"	¾"	22 3/4" x 4 1/8"	10 (4.5)	280.20
	A-01508-42	1 to 20	30"	¾"	32 3/8" x 4 1/8"	13 (5.9)	337.30

*Model 01509-02 includes pressure relief valve.

G Stainless Steel Multiple Filter Housings

- Stack up to 20 double open end cartridges in one housing!
- Clearly labeled ports—easy to install and maintain

Stainless steel housings are ideal for drinking water applications in schools, restaurants, institutions, and industrial plants. Housings hold 4 to 20 double open end cartridges. Housings feature durable 304 stainless steel construction with epoxy finish to provide better chemical compatibility. All ports are clearly labeled for easy installation.

Maximum pressure is 125 psi; maximum temperature is 300°F (149°C). Clean and dirty drains are ¼", inlet and outlet ports are 2" NPT (M). Order cartridges on pages 392-393. Buna N seal.

Key	Catalog number	(Number of cartridges) cartridge size	Flow rate GPM	Dimensions (H x dia)	Shpg wt lb (kg)	Price
G	A-29810-05	(4) 9¾" or 10"	28	21" x 12"	20 (9.1)	$838.00
	A-29810-10	(8) 9¾" or 10"; (4) 20"	56	32" x 12"	30 (13.7)	907.00
	A-29810-15	(12) 9¾" or 10"; (4) 30"	84	42" x 12"	40 (18.2)	987.00
	A-29810-16	(16) 9¾" or 10"; (4) 40"; (8) 20"	110	50" x 12"	50 (22.7)	1151.00
	A-29810-17	(20) 9¾" or 10"; (4) 30"; (10) 20"	125	50" x 12"	50 (22.7)	1395.00

More info...
Use with a variety of DOE cartridges. Order cartridges on pages 392-393.

More info...
See our Fittings section on pages 412-461 for a wide variety of hose barb and compression fittings.

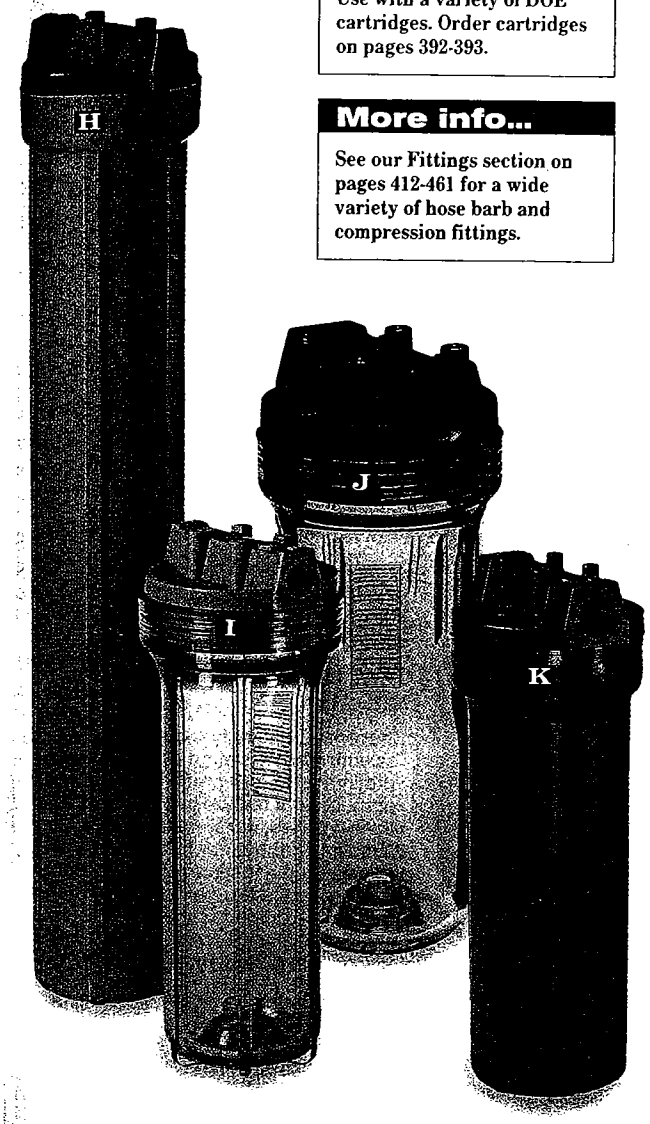

H-K Slim Line™ Housings

▶ **Slim design reduces space required for installation without sacrificing capacity**

H Polypropylene Housings are designed for lower flow rates and conservation of space. Smaller overall diameter and port sizes make them ideal for multiple function applications when mounted in series. Housings have NPT connections. Maximum pressure is 125 psi; maximum temperature is 125°F (52°C). Buna-N seal.

I Housings with FDA Styrene-Acrylonitrile (SAN) have been stress-relieved for added clarity and strength. Clear body allows on-site examination of flow and cartridge performance. Housings have ⅜" connections for medium to light duty applications. Maximum pressure is 125 psi; maximum temperature is 125°F (52°C). Buna-N seal.

Catalog number	Flow rate GPM	Pressure relief valve	NPT(F) port	Dimensions (H x dia)	Shpg wt lb (kg)	Price
H Polypropylene (opaque) housing, 10"						
A-29820-00	1 to 5	—	⅜"	11¾" x 4⅜"	3 (1.4)	$12.50
A-29820-01	1 to 5	Yes	⅜"	11¾" x 4⅜"	3 (1.4)	18.00
A-29820-32	1 to 5	—	½"	11¾" x 4⅜"	3 (1.4)	13.00
A-29820-33	1 to 5	Yes	½"	11¾" x 4⅜"	3 (1.4)	18.00
H Polypropylene (opaque) housing, 20"						
A-29820-30	1 to 5	—	⅜"	21⅞" x 4⅜"	5 (2.3)	27.50
A-29820-31	1 to 5	Yes	⅜"	21⅞" x 4⅜"	5 (2.3)	32.00
A-29820-36	1 to 8	—	½"	21⅞" x 4⅜"	5 (2.3)	28.50
A-29820-37	1 to 8	Yes	½"	21⅞" x 4⅜"	5 (2.3)	33.00
I SAN (clear) housing, 10"						
A-29820-10	1 to 5	—	⅜"	12⅛" x 4⅝"	3 (1.4)	18.50
A-29820-11	1 to 5	Yes	⅜"	12⅛" x 4⅝"	3 (1.4)	24.00
A-29820-34	1 to 8	—	½"	12⅛" x 4⅝"	3 (1.4)	19.50
A-29820-35	1 to 8	Yes	½"	12⅛" x 4⅝"	3 (1.4)	24.00

J Slim-Line Housing Assembly with Conductive Cap. Use this housing in applications where grounding of the filter housing is required. Applications include filtering organic liquids and solvents and cleaning fluids. Maximum temperature is 125°F (52°C); maximum pressure is 125 psi. Connections are ½" NPT(F). Buna-N seal.

Key	Catalog number	Flow rate	Dimensions	Shpg wt	Price
J	A-29820-40	1 to 8 GPM	12⅛"H x 4⅝" dia	3 lb (1.4 kg)	$47.00

K FDA-Grade Nylon Housing is reinforced with long glass fibers for high pressure and corrosive applications (**Note:** Do not use with ketones). Cap is molded with ½" inlet/outlet ports. Housing is rated at 125 psi and 125°F (52°C). Steam sterilizable. Buna N O-ring is not included; order from "Housing Accessories" below.

Key	Catalog number	Flow rate	Dimensions	Shpg wt	Price
K	A-29820-20	1 to 10 GPM	11¾"H x 4⅜" dia	3 lb (1.4 kg)	$52.50

Housing Accessories

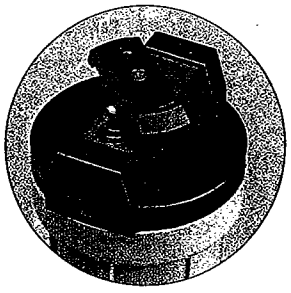

Double Open End Valve Caps easily turn your filter line on and off. Simply turn the handle to shut off the inlet and outlet ports. No external clamps required. Feature ¾" NPT(F) ports and an automatic relief valve. Use at flow rates up to 25 GPM. Made of polypropylene. Shpg wt 1 lb (0.5 kg).

A-01508-46 Valve cap, black, PP. Fits housings 01508-25 and -35 ..... $25.25

A-01508-47 Valve cap, blue; talc-filled PP. Fits housing 01509-00 ..... $25.25

Wall Bracket attaches at ports of the housing. Includes four screws. Shpg wt 1 lb (0.5 kg).

A-01508-36 Wall bracket $5.50

Buna N O-Rings for plastic housings. Pack of six.

A-01508-38 Buna N O-rings $9.30/pk

Cartridge Coupler joins two 10" cartridges together to create a 20" filter, or three 10" cartridges for a 30" filter. Compatible with all 10" cartridges on pages 392-393. Pack of five.

A-01508-39 Cartridge coupler $6.75/pk

Teflon® PTFE Thread Seal in ribbon form. Gives fast, positive seal. Roll measures 260"L x ½"W. Pack of ten rolls.

A-08782-27 Teflon PTFE thread seal $10.50/pk

Spanner Wrench loosens the filter housing cap to make filter replacement easier.

A-29802-52 Spanner wrench $5.00

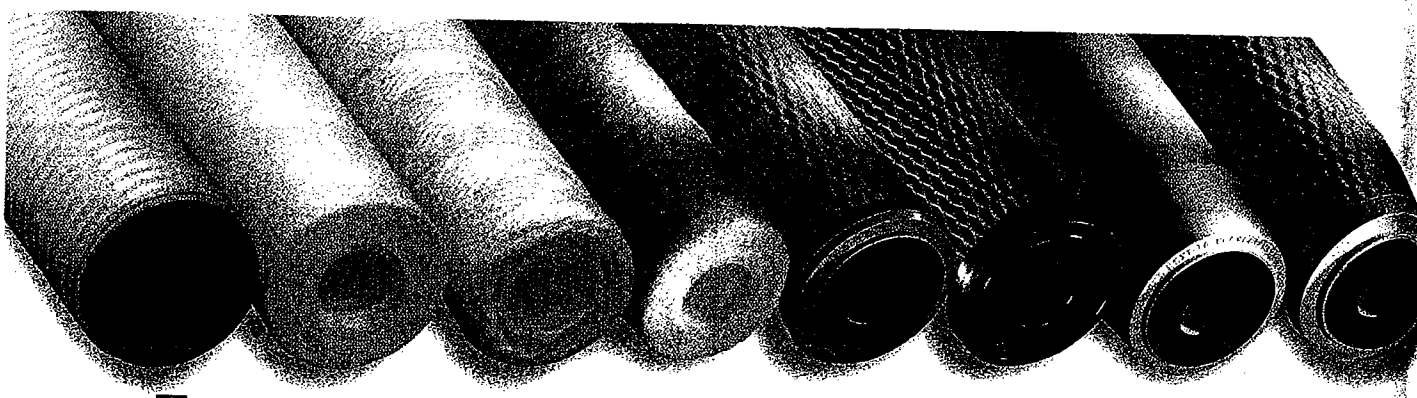

A 06479-40 | B 01512-00 | C 01513-00 | D 01509-35 | E 01509-07 | F 01509-25 | G 01508-92 | H 01508-93

Double Open End Liquid Filter Cartridges

A Submicronic Filter Cartridges have a maximum differential pressure rating of 60 psi, are autoclavable at 250°F (121°C) and in-line sterilizable (except where noted) at 261°F (127°C). **Note:** These submicronic filters will not fit into the 29820-series slim-line housings on page 393.

Serial-layer magna nylon cartridges have two pleated nylon membranes—top membrane acts as a prefilter. Cartridges exhibit high retention capacity and high yields.

Glass-fiber cartridge features interwoven borosilicate glass microfibers held by acrylic binders for exceptional retention. Use as a prefilter to protect membrane filter systems. Not in-line sterilizable.

Polypropylene (PP) filter cartridges have a single-layer filter medium. Chemically inert and high dirt-loading capacity allow you to use these cartridges as prefilters for aqueous solutions. Hydrophobic; prewet* before use. Not in-line sterilizable.

PTFE membrane cartridges consist of single layer, pleated PTFE membranes laminated to a PP support. Acid, alkali, and solvent resistant. Use for gas filtration and venting. Hydrophobic; prewet* when filtering aqueous solutions.

Semiconductor cartridge has a single-layer PES membrane. Each is flushed with 18 MΩ water to ensure downstream cleanliness and rapid resistivity recovery. Diffusion rate of 12 mL/min at 30 psi.

Cat. no.	Cartridge type	Pore size[1]	Filtration area	Length	Price
A-06479-16	Serial nylon	0.2 µm	6.9 sq ft	10"	$85.00
A-06479-20	Serial nylon	0.45 µm	6.9 sq ft	10"	85.00
A-06479-24	Glass fiber	3.0 µm	4.3 sq ft	10"	51.75
A-06479-32	Polypropylene	1.0 µm	4.0 sq ft	10"	47.00
A-06479-36	Polypropylene	3.0 µm	4.7 sq ft	10"	47.00
A-06479-40	Polypropylene	5 µm	5.5 sq ft	10"	36.00
A-06479-44	Polypropylene	10 µm	5.6 sq ft	10"	36.00
A-06479-48	PTFE	0.1 µm	5.9 sq ft	10"	202.00
A-06479-52	PTFE	0.2 µm	5.9 sq ft	10"	185.00
A-06479-60	Semiconductor	0.2 µm	6.9 sq ft	10"	96.95

B Polypropylene Sediment Cartridges provide high efficiency filtration and a consistent flow rate without adding taste, odor, or color to the liquid. Micro-grooves on the surface increase surface area. Filter media are thermally bonded to a rigid core for added durability. Maximum temperature is 175°F (79°C).

Catalog number	Pore size	Flow rate[1]	Length	Price
A-01512-00	1 µm nominal	2 GPM at 2 psid	10"	$7.00
A-01512-08	5 µm nominal	2 GPM at 2 psid	10"	7.00
A-01512-18	10 µm nominal	5 GPM at 2 psid	10"	7.00
A-01512-28	25 µm nominal	10 GPM at 2 psid	10"	7.00
A-01512-38	50 µm nominal	10 GPM at 2 psid	10"	7.00
A-01512-02	1 µm nominal	5 GPM at 2 psid	20"	11.00
A-01512-12	5 µm nominal	5 GPM at 2 psid	20"	11.00
A-01512-22	10 µm nominal	10 GPM at 2 psid	20"	11.00
A-01512-32	25 µm nominal	15 GPM at 2 psid	20"	11.00
A-01512-42	50 µm nominal	15 GPM at 2 psid	20"	8.15

*To use with aqueous solutions, prewet with methanol, then rinse with water before use.
[1]Pore sizes for polypropylene cartridges are nominal.

C Polypropylene String-Wound Cartridges reduce sand, silt, rust, and scale from a variety of fluids. Ideal for sediment filtration applications such as municipal and well water. Maximum temperature is 165°F (74°C).

Catalog number	Pore size	Flow rate[1]	Length	Price
A-01513-00	5 µm nominal	7 GPM at 1 psid	10"	$8.00
A-01513-02	30 µm nominal	10 GPM at 1 psid	10"	7.00
A-01513-04	50 µm nominal	10 GPM at 1 psid	10"	5.00

D Spun Polypropylene Progressive-Density Cartridges have high dirt-loading capacity for removing sand, silt, sludge, rust, and scale. Maximum temperature is 145°F (63°C); maximum differential pressure is 70 psid**.

Catalog number	Pore size	Flow rate[1]	Length	Price
A-01509-14	1 µm nominal	5 GPM at 2 psid	10"	$6.00/ea
A-01509-15	5 µm nominal	5 GPM at 2 psid	10"	7.00/2
A-01509-35	25 µm nominal	5 GPM at 2 psid	10"	6.80/2
A-01509-37	1 µm nominal	10 GPM at 2 psid	20"	7.80/ea
A-01509-40	5 µm nominal	10 GPM at 2 psid	20"	7.10/ea
A-01509-41	25 µm nominal	10 GPM at 2 psid	20"	9.00/ea

E Pleated Cellulose/Polyester Cartridges have double the surface area of standard cartridges. Designed for long life in high-flow applications with low pressure drops. Excellent wet strength. Polypropylene core and end caps. Maximum temperature is 165°F (74°C); maximum differential pressure is 70 psid**.

Alt ①

Catalog number	Pore size	Flow rate[1]	Length	Price
A-01509-05	1 µm nominal	20 GPM at 2.0 psid	10"	$9.85
A-01509-06	5 µm nominal	20 GPM at 1.8 psid	10"	9.40
A-01509-07	10 µm nominal	20 GPM at 1.6 psid	10"	8.95

F Activated Carbon-Impregnated Cellulose Cartridges are paper cartridges for cold water filtration. Reduces odors/taste of water. Maximum temperature is 125°F (52°C); maximum differential pressure is 70 psid**.

Catalog number	Pore size	Flow rate[1]	Length	Price
A-01509-25	5 µm nominal	5 GPM at 3.5 psid	10"	$12.00/2
A-01509-27	5 µm nominal	10 GPM at 3.5 psid	20"	14.00/ea

G Granular Activated Carbon Cartridges remove odors and chlorine taste from water. Approximately 10-oz of granular carbon is packed in the plastic tube. End caps have filters to protect carbon. Use at 1 GPM or lower. For cold water only. May initially contain leachable carbon dust; flush system well after installation. Maximum temperature is 125°F (52°C); maximum differential pressure is 70 psid**.

Catalog number	Pore size	Flow rate[1]	Length	Price
A-01508-92	20 µm nominal	1 GPM at 1.5 psid	10"	$9.80
A-01508-95	20 µm nominal	1 GPM at 8 psid	20"	22.00

[1]psid refers to pounds per square inch pressure drop through the filter system.
**For optimal performance, change cartridges at 25 psid.

FI-1

Cole-Parmer® Delivering Solutions You Trust USA
Please Login Login | 0 Items | Checkout Order Search
Order online or call 1-800-323-4340
Home | My CP | Online Catalog | Technical Info | Free Catalogs | Contact Us
Catalog | Table of Contents | Shopping Cart | Catalog Help |
Search

Product Detail

Back To List

EW-32477-00

Acrylic In-Line Flowmeters

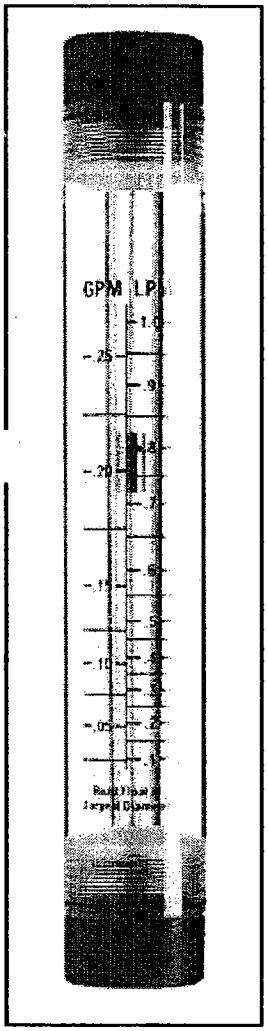

click to enlarge

EW-32477-00
General-Purpose Acrylic In-Line Flowmeter for Liquids; 0.025 to 0.25 GPM, 1/4" NPT(F) Adapter

Qty: 1 Add To Cart

$83.00 / each (USD) In stock.

- Choose the high/low level alarm meters to monitor critical flow points.
- Units designed for in-line installation.
- General purpose liquid flowmeters feature easy-to-read dual scales (GPM/LPM).
- Polypropylene-reinforced fittings have aluminum stress rings for added strength.
- Machined high-quality acrylic rod stock, polished to a clear-as-glass finish.
- Flow ranges up to 50 GPM with model 32477-82.

General-Purpose Acrylic Flowmeters are for liquids or air. Models for liquids have both English and metric direct-reading scales; models for air have English direct-reading scales only.

Large-Body Flowmeters are for use with liquids and are direct reading, with PVC floats and 11/2" NPT(M) PVC adapters.

Flowmeters with High/Low Level Alarm are for use with liquids and feature an adjustable aluminum sensor bezel clamp with an enclosed one-watt reed switch. Two lead wires are included for hookup to your own electronics.

Literature
- 03-04 Catalog
- 05-06 Catalog

More Info
(click to view)
- Acrylic In-Line Flowmeters

Specifications

Media		Liquids
Flow rate (water)		0.025 to 0.25 GPM (0.1 to 1 LPM)
Accuracy		±5% of reading
Repeatability		±1%
Material	Housing	Acrylic
	fitting	Polypropylene-reinforced with aluminum stress rings
	o-ring	Viton®
	float	316 SS

FI-1

Max operating temperature	150°F
Max pressure	150 psi
Connections	1/4" NPT(F), polypropylene reinforced, aluminum stress rings
Dimensions	8 3/16"H x 1 1/4" dia.
Scale	English/Metric

FI-1

Pressure Drop Data for Acrylic In-Line Flowmeters

General-Purpose Acrylic Flowmeters

Model number	Flow range	Max pressure drop
In-line acrylic flowmeters for liquids		
32477-00 32477-02	0.025 to 0.25 GPM (0.1 to 1 LPM)	0.25 psi
32477-04 32477-06	0.1 to 1 GPM (0.4 to 4 LPM)	0.25 psi
32477-08 32477-10	0.2 to 2 GPM (1 to 7.5 LPM)	0.25 psi
32477-12 32477-14	0.3 to 3 GPM (1.5 to 11.5 LPM)	0.25 psi
32477-16 32477-18	0.5 to 5 GPM (1.8 to 18 LPM)	1.5 psi
32477-20 32477-22	1 to 10 GPM (4 to 38 LPM)	1.5 psi
32477-24 32477-26	1 to 17 GPM (4 to 64 LPM)	2 psi
32477-28 32477-30	2 to 20 GPM (8 to 80 LPM)	2 psi
In-line acrylic flowmeters for air		
32477-70 32477-72	0.75 to 7.5 scfm	0.25 psi
32477-74 32477-76	4.0 to 45 scfm	0.25 psi

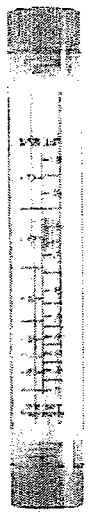

General purpose flowmeter for liquids 32477-00

General purpose flowmeter for air 32477-70

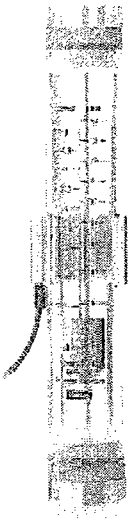

Flowmeter with high/low level alarm 32477-50

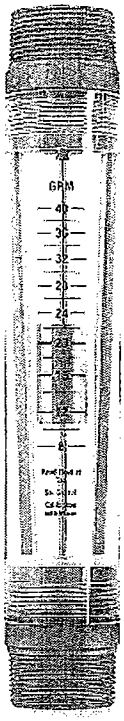

Large-body flowmeter 32477-80

Flowmeters with High/Low Level Alarm

Model number	Flow range	Max pressure drop
32477-50 32477-52	0.5 to 5 GPM (2 to 20 LPM)	1.5 psi
32477-54 32477-56	2 to 20 GPM (8 to 80 LPM)	2 psi

Large-Body Flowmeters

Model number	Flow range	Max pressure drop
Flowmeters with English-reading scales		
32477-78 32477-80 32477-82	5 to 25 GPM 8 to 40 GPM 10 to 50 GPM	2 psi 3 psi 3 psi
Flowmeters with metric-reading scales		
32477-84 32477-86 32477-88	20 to 100 LPM 30 to 150 LPM 40 to 180 LPM	2 psi 3 psi 3 psi

Cole-Parmer®
Delivering Solutions You Trust

800-323-4340
www.coleparmer.com
Fax: 847-247-2929
E-mail: info@coleparmer.com

International fax: 847-549-1700
In Canada, call Labcor at 800-363-5900
In the UK, call Cole Parmer Instrument Co. Ltd. at 0500 345 300

Copyright © 2002 all rights reserved

FI-1

Easy-View Acrylic In-Line Flowmeters

Highly durable meters provide an unobstructed 360° view

- Flow ranges up to 50 GPM (200 LPM) with dual-unit scales for flexibility
- Machined from high-quality acrylic rod stock—extremely durable
- The one-piece in-line body consumes less space for a clean installation

These meters are designed for use in more aggressive process environments. In addition to the machined acrylic bodies, the design utilizes SS float guides. The combination is a meter suitable for high-vibration, high-fluctuation process applications. Some versions include polypropylene end fittings reinforced with aluminum stress rings for added strength to the meters' design.

Choose the meters with a high/low level alarm to monitor critical flow points. The alarm is mounted on an adjustable aluminum bezel clamp. Enclosed within the clamp is a normally-open one-watt reed switch; the switch includes 25 feet of 2-wire cable for one-piece wiring within many systems.

Models for liquids have direct-reading scales in English and metric units; models for air have direct-reading scales in English.

General-purpose flowmeter for liquids 32477-26

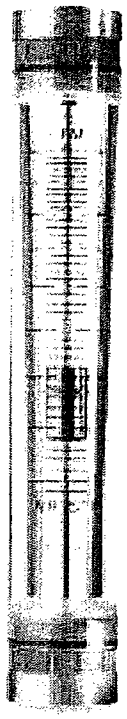

General-purpose flowmeter for air 32477-76

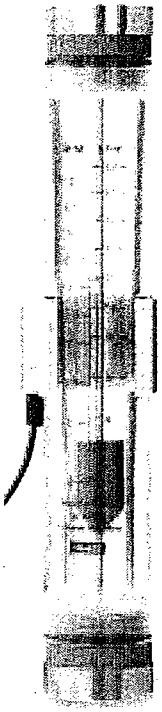

Flowmeter with high/low alarm 32477-50

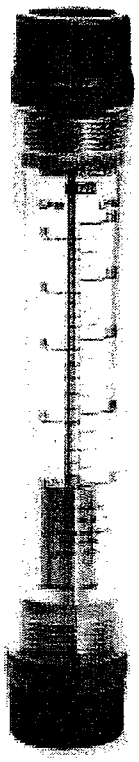

Large-body flowmeter for liquids 32477-82

Specifications for all Flowmeters

Accuracy: ±5% of reading
Media type: liquids or air
Max pressure: 150 psi (10.3 bar); 130 psig (8.8 bar) for large-body models
Max temperature: 150°F (65°C); 130°F (54°C) for large-body models

Dimensions
Models with flow rates up to 5 GPM: 8³⁄₁₆"H x 1¼" dia
Models with flow rates from 10 to 20 GPM: 11"H x 1¾" dia
Large-body models: 12"H x 2" dia

Materials of Construction

Part	General-purpose	Large-body	With alarm
Body	Acrylic		
Float	316 SS or PVC		
Fittings	PP*	PVC	PP*
O-rings	Viton®		
Guides	316 SS		

*Reinforced with aluminum stress rings.

Ordering Information for General-Purpose Flowmeters

Catalog number	Flow range	Float	Connections	Price
For liquids				
C-32477-00 C-32477-02	0.025 to 0.25 GPM/0.1 to 1 LPM	PVC	¼" NPT(F) ⅜" NPT(F)	
C-32477-04 C-32477-06	0.1 to 1 GPM/0.4 to 4 LPM	PVC	⅜" NPT(F) ½" NPT(F)	
C-32477-08 C-32477-10	0.2 to 2 GPM/1 to 7.5 LPM	316 SS	⅜" NPT(F) ½" NPT(F)	
C-32477-12 C-32477-14	0.3 to 3 GPM/1.5 to 11.1 LPM	316 SS	⅜" NPT(F) ½" NPT(F)	
C-32477-16 C-32477-18	0.5 to 5 GPM/2.0 to 20 LPM	316 SS	⅜" NPT(F) ½" NPT(F)	
C-32477-20 C-32477-22	1 to 10 GPM/4 to 38 LPM	316 SS	¾" NPT(F) 1" NPT(F)	
C-32477-24 C-32477-26	1 to 17 GPM/4 to 64 LPM	316 SS	¾" NPT(F) 1" NPT(F)	
C-32477-28 C-32477-30	2 to 20 GPM/8 to 80 LPM	316 SS	¾" NPT(F) 1" NPT(F)	
For air				
C-32477-70 C-32477-72	0.75 to 7.5 scfm	316 SS	⅜" NPT (F) ½" NPT (F)	
C-32477-74 C-32477-76	4.0 to 45 scfm	316 SS	¾" NPT (F) 1" NPT (F)	

Ordering Information for Large-Body Flowmeters

Catalog number	Flow range	Float	Connections	Price
For liquids				
C-32477-78 C-32477-80 C-32477-82	5 to 25 GPM (20 to 100 LPM) 8 to 40 GPM (30 to 150 LPM) 10 to 50 GPM (40 to 200 LPM)	316 SS	1½" NPT (M)	

Ordering Information for Flowmeters with High/Low Level Alarm

Catalog number	Flow range	Float	Connections	Price
For liquids				
C-32477-50 C-32477-52	0.5 to 5 GPM/2 to 20 LPM	PVC	¾" NPT (F) 1" NPT (F)	
C-32477-54 C-32477-56	2 to 20 GPM/8 to 80 LPM	316 SS	¾" NPT (F) 1" NPT (F)	

INNOCAL™
INNOVATIVE CALIBRATION SOLUTIONS
NIST TRACEABLE

Service includes a NIST-traceable calibration certificate with before and after test data at five- to seven points across range (0.1 to 60 LPM, 1 to 60,000 sccm).

SA-17080-00 NIST-traceable certificate for air/gas flowmeter
SA-17080-10 NIST-traceable certificate for mass flowmeter

FLOW CONTROL VALVE

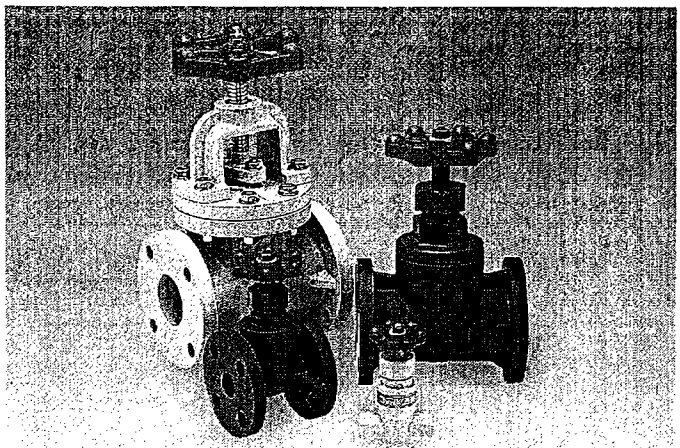

Globe Valve

Specifications

Sizes:	1/2" - 4"
Bodies:	PVC and PP
Models:	Flanged ANSI 1/2" - 4"*
	Socket PVC 1/2" - 2"
	PP** 1/2" - 1"
	Thread PVC 1/2" - 2"
	PP 1/2" - 1"
Plug:	PP
Seals:	EPDM or FKM

* 2-1/2" - 4": Outside stem and yoke type
** DIN Socket also available

Standard Features (Sizes 1/2"– 4")

- Used for effici ent throttling of flow
- Positive shut-off
- Displays excellent flow regulating characteristics throughout the entire lift of the disc
- All sizes rated for full vacuum service
- EPDM seals. Other elastomers optional

Parts List/Thd-Soc (Sizes 1/2"– 2")

PARTS			
NO.	DESCRIPTION	PCS.	MATERIAL
1	Body	1	PVC, PP
2	Bonnet	1	PVC, PP
3	Stem	1	PVC, PP
4	Gland	1	PVC, PP
5	Gland Nut	1	PVC, PP
6	Sheet Gasket	1	EPDM, Others
7	Gland Packing	2	EPDM, Others
8	Disc	1	PP
9	Stem Holder	1	PP
13	Ring	1	Stainless Steel 304
14	Hand Wheel	1	PP
15	Nut	1	PVC
16	Washer	1	PVC

Sample Specification

All Globe Valves shall be of a thermoplastic construction and have no metal part that comes in contact with media. Sizes 1/2" through 2" shall be of union bonnet design, 2 1/2" through 4" shall be of outside stem and yoke type. PVC shall conform to ASTM D1784 Cell Classification 12454-A and PP conforming to ASTM D4101 Cell Classification PP0210B67272. PVC valves shall be rated to 150 psi at 70 degrees F sizes 1/2" thru 2" 110 psi at 70 degrees F sizes 2-1/2" thru 4". PP rated to 110 psi at 70 degrees F sizes 1/2" thru 4", as manufactured by Asahi/America, Inc.

Parts List/Flanged (Sizes 1/2" – 4")

PARTS			
NO.	DESCRIPTION	PCS.	MATERIAL
1	Body	1	PVC, PP
2	Bonnet	1	PVC, PP
3	Stem	1	PVC, PP
4	Gland	1	PVC, PP
5	Gland Nut	1	PVC, PP
6	Gland Gasket	1	EPDM, Others
7	Gland Packing	1	EPDM, Others
8	Disc	1	PVC, PP
9	Stem Holder	1	PVC, PP
10	Stem with Trapezoid Screw	1	Copper Alloy
11	Bolt, Nut, Washer	8	Stainless Steel 304
12	Stud Bolt, Nut	2	Stainless Steel 304
13	Stem Support	1	PP
14	Hand Wheel	1	PP
15	Nut (A)	1	PVC*
		2	Stainless Steel 304
16	Washer	1	PVC*
		1	Stainless Steel 304
17	Reinforcing Ring	1	Stainless Steel 304
18	Inserted Nut	1	Copper Alloy
19	Stem Metal Insert	1	Steel
20	Inserted Metal	1	Bronze

* PVC nut and washer on sizes 1/2" through 2"

Pressure vs. Temperature (PSI, WATER, NON-SHOCK)

NOMINAL SIZE		PVC			PP		
INCHES	mm	30° F 70° F	71° F 105° F	106° F 120° F	-5° F 70° F	71° F 120° F	121° F 175° F
1/2 - 1 1/2	15-40	150	150	110	110	95	65
2	50	150	150	95	110	75	45
2 1/2 - 3	65-80	110	110	95	110	60	35
4	100	110	80	65	110	60	35

Globe Valves

SOCKET AND THREADED END
1 1/2" — 2"

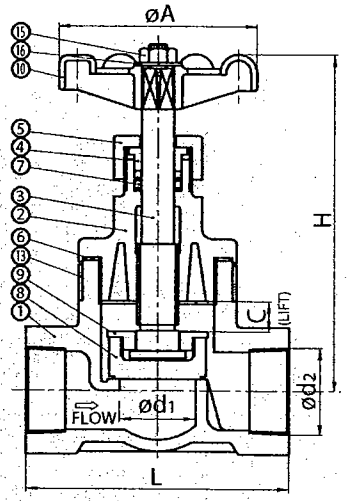

SOCKET END
1/2" — 1 1/4"

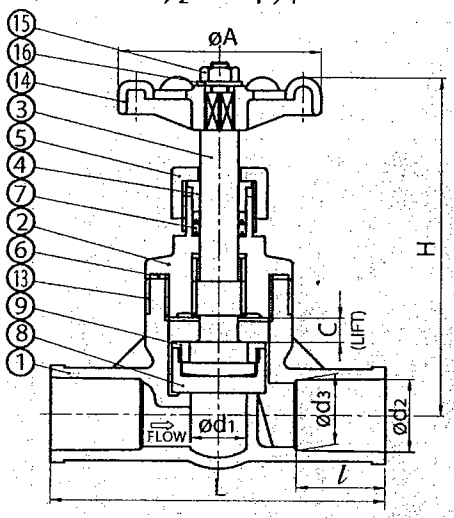

THREADED END
1/2" — 1 1/4"

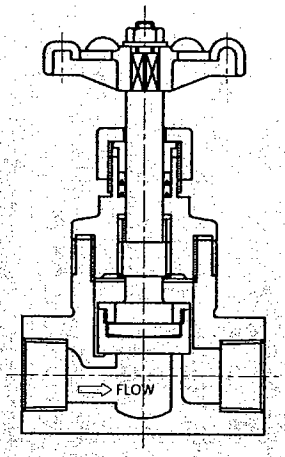

FLANGED 2 1/2" — 4"

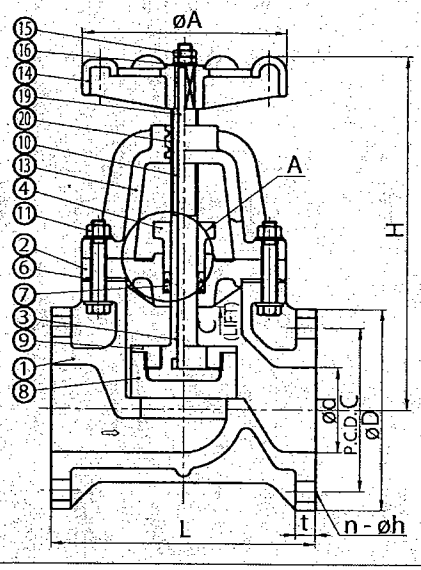

FLANGED
1 1/2" — 2"

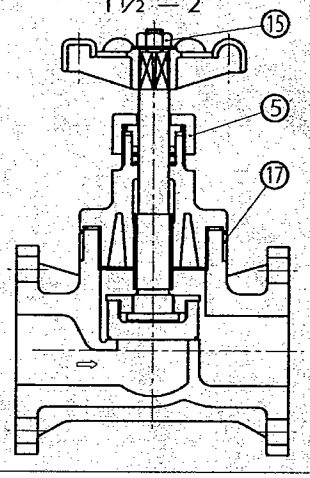

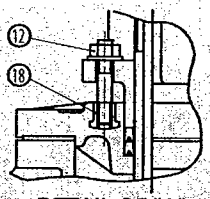

DETAIL OF "A"

FLANGED
1/2" — 2 1/4"

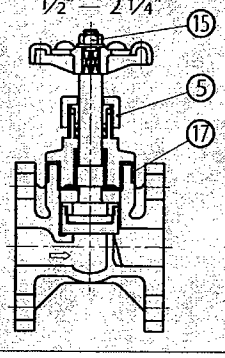

Dimensions (INCHES)

NOMINAL SIZE		FLANGED										SOCKET AND THREADED										Cv VALUES
		WT. (LBS)	d	C	D	L	t	LIFT C	H (open)	n	h	WT. (LBS)	THREADED		SOCKET			LIFT C	d1	H (open)	A	
IN.	mm												d2	L	d2	L	l					
1/2	15	0.88	0.71	2.38	3.50	3.35	0.47	0.31	5.20	4	0.62	0.66	NPT 1/2	3.35	0.85	4.33	1.18	0.32	0.59	5.20	2.60	4.1
3/4	20	1.10	0.94	2.75	3.88	3.74	0.55	0.31	5.51	4	0.62	1.10	NPT 3/4	3.74	1.06	5.12	1.38	0.32	0.71	5.51	2.60	6.4
1	25	2.20	1.10	3.12	4.25	4.33	0.55	0.43	6.34	4	0.62	1.10	NPT 1	4.33	1.33	5.91	1.58	0.43	0.98	6.34	3.58	9.7
1 1/4	32	2.90	1.46	3.50	4.62	5.31	0.63	0.51	6.57	4	0.62	1.30	NPT 1 1/4	5.32	1.67	5.32	0.98	0.51	1.38	6.58	3.58	18.0
1 1/2	40	4.41	1.61	3.88	5.00	7.48	0.63	0.79	9.06	4	0.62	2.70	NPT 1 1/2	5.51	1.91	5.51	0.98	0.79	1.61	9.06	5.31	22.0
2	50	5.30	2.05	4.75	6.00	7.87	0.63	0.94	9.92	4	0.75	3.50	NPT 2	7.09	2.38	7.09	1.06	0.95	2.05	9.92	5.31	29.0
2 1/2	65	13.25	2.64	5.50	7.00	8.66	0.71	1.38	13.58	4	0.75	–	–	–	–	–	–	–	–	–	7.28	57.0
3	80	15.00	3.07	6.00	7.50	9.45	0.71	1.38	14.13	4	0.75	–	–	–	–	–	–	–	–	–	7.28	78.0
4	100	22.00	3.94	7.50	9.00	11.42	0.71	1.57	16.50	8	0.75	–	–	–	–	–	–	–	–	–	7.28	115.0