N60200.AR.004979
NAS CECIL FIELD, FL
5090.3a

# FINAL GROUNDWATER REMEDIAL DESIGN FOR OPERABLE UNIT 9 (OU 9) SITE 59 NAS CECIL FIELD FL

3/1/2008

TETRA TECH NUS INC

**C**omprehensive **L**ong-term **E**nvironmental **A**ction **N**avy

CONTRACT NUMBER N62467-94-D-0888

# Remedial Design for Operable Unit 9, Site 59

## Naval Air Station Cecil Field
## Jacksonville, Florida

## Contract Task Order 0374

## March 2008


Naval Facilities Engineering Command
Southeast
2155 Eagle Drive
North Charleston, South Carolina 29406

TETRA TECH NUS, Inc.

030705/P

# REMEDIAL DESIGN
# FOR
# OPERABLE UNIT 9, SITE 59

## NAVAL AIR STATION CECIL FIELD
## JACKSONVILLE, FLORIDA

## COMPREHENSIVE LONG-TERM
## ENVIRONMENTAL ACTION NAVY (CLEAN) CONTRACT

**Submitted to:**
**Naval Facilities Engineering Command**
**Southeast**
**2155 Eagle Drive**
**North Charleston, South Carolina 29406**

**Submitted by:**
**Tetra Tech NUS, Inc.**
**661 Andersen Drive**
**Foster Plaza 7**
**Pittsburgh, Pennsylvania 15220**

**CONTRACT NUMBER N62467-94-D-0888**
**CONTRACT TASK ORDER 0374**

**MARCH 2008**


**PREPARED UNDER THE SUPERVISION OF:**

ROBERT F. SIMCIK, P.E.
TASK ORDER MANAGER
TETRA TECH NUS, INC.
PITTSBURGH, PENNSYLVANIA

**APPROVED FOR SUBMITTAL BY:**

DEBRA M. HUMBERT
PROGRAM MANAGER
TETRA TECH NUS, INC.
PITTSBURGH, PENNSYLVANIA

This document, which describes the Remedial Design for Operable Unit 9, Site 59, Naval Air Station Cecil Field, Jacksonville, Florida, has been prepared under the direction of a Florida-registered professional engineer. The work and professional opinions rendered in this report were conducted or developed in accordance with commonly accepted procedures consistent with applicable standards of practice.

Robert F. Simcik, P.E.
Professional Engineer No. PE0061263

Date: 7/27/07

7/27/07

CERTIFICATION OF TECHNICAL
DATA CONFORMITY

The Contractor, Tetra Tech NUS, Inc., hereby certifies that, to the best of its knowledge and belief, the technical data delivered herewith under Contract No. N62467-94-D-0888 are complete and accurate and comply with all requirements of this contract.

DATE: July 5, 2007

COMPANY CERTIFICATION AUTHORIZATION NUMBER: 7988
Tetra Tech NUS, Inc.
661 Andersen Drive
Pittsburgh, PA 15220

NAME AND TITLE OF CERTIFYING OFFICIAL: Robert F. Simcik, P.E.
Task Order Manager

# TABLE OF CONTENTS


**SECTION** **PAGE NO.**

**PROFESSIONAL ENGINEER AUTHORIZATION ..... iii**

**CERTIFICATION OF TECHNICAL DATA CONFORMITY ..... v**

**ACRONYMS ..... x**

**1.0 INTRODUCTION ..... 1-1**
1.1 RECORD OF DECISION ..... 1-1
1.2 PURPOSE ..... 1-2
1.3 SCOPE ..... 1-2
1.4 REPORT ORGANIZATION ..... 1-2

**2.0 SITE BACKGROUND AND NATURE AND EXTENT OF CONTAMINATION ..... 2-1**
2.1 LOCATION, DESCRIPTION, AND HISTORY ..... 2-1
2.1.1 Site Location ..... 2-1
2.2 NATURE AND EXTENT OF CONTAMINATION ..... 2-2
2.3 CLEANUP GOALS ..... 2-3

**3.0 RECIRCULATION TREATMENT SYSTEMS ..... 3-1**
3.1 GENERAL APPROACH TO TREATMENT ..... 3-1
3.2 WELL INSTALLATION ..... 3-2
3.3 RECIRCULATION SYSTEMS ..... 3-3
3.3.1 General Layout ..... 3-3
3.3.2 Process Description ..... 3-4
3.4 PIPING AND SYSTEM LAYOUT ..... 3-7
3.5 POWER SOURCE ..... 3-7
3.6 WATER SOURCE ..... 3-7
3.7 SYSTEM ABANDONMENT ..... 3-8

**4.0 SYSTEM START-UP, OPERATION, AND MONITORING ..... 4-1**
4.1 GROUNDWATER RECIRCULATION SYSTEMS ..... 4-1
4.1.1 Common System Description ..... 4-1
4.1.2 System Startup and Operation ..... 4-2
4.1.3 Shutdown and Restart ..... 4-7
4.1.4 Equipment Maintenance ..... 4-9
4.2 PERSONNEL REQUIREMENTS ..... 4-9
4.3 SAMPLING PROCEDURES ..... 4-9
4.3.1 Groundwater Sampling ..... 4-10
4.3.2 PCR Sample Collection ..... 4-10
4.3.3 Quality Assurance/Quality Control ..... 4-10
4.4 SAMPLE HANDLING ..... 4-11
4.4.1 Field Documentation ..... 4-11
4.4.2 Sample Nomenclature ..... 4-11
4.4.3 Sample Containers, Preservatives, and Holding Times ..... 4-11
4.4.4 Sample Packaging and Shipping ..... 4-11
4.5 SAMPLE CUSTODY ..... 4-11
4.6 REMEDIAL CLEANUP TIME ..... 4-12

## TABLE OF CONTENTS (Continued)

**SECTION** **PAGE NO.**

**5.0 COST ESTIMATE ..... 5-1**

**REFERENCES ..... R-1**

**APPENDICES**

**A GROUNDWATER REMEDIAL DESIGN WORK PLAN FOR LONG-TERM MONITORING**
**B CALCULATIONS AND MODELING**
**C WELL CONSTRUCTION FORMS (POST-RI MONITORING WELLS)**
**D POST-RI LABORATORY DATA**
**E COST ESTIMATE**

## TABLES

**NUMBER**

3-1 Process Equipment and Instrument List – Hot Spot No. 2A
3-2 Process Equipment and Instrument List – Hot Spot No. 2B
3-3 Process Equipment and Instrument List – Hot Spot No. 3
4-1 System Operating Parameters
4-2 Sodium Lactate Solution Proportions
4-3 Sodium Bicarbonate Solution Proportions
4-4 Groundwater Sampling and Analysis Summary for TCE Plume
4-5 Summary of Fixed-Base Laboratory Analyses, Methodologies, Bottle Requirements, Preservation Requirements, and Holding Times
4-6 Groundwater Field Analyses - Biological Activity Indicators

# FIGURES

**NUMBER**


2-1 General Site Location Map
2-2 General Site Arrangement
2-3 TCE in Groundwater, RI and Post-RI Data – 30-foot
2-4 TCE in Groundwater, RI and Post-RI Data – 50-foot
2-5 TCE in Groundwater, RI and Post-RI Data – 70-foot
2-6 TCE in Groundwater, RI and Post-RI Data – 100-foot
3-1 Site Layout - Hot Spot No. 2A
3-2 Site Layout - Hot Spot No. 2B and Petroleum Hydrocarbon Plume
3-3 Site Layout - Hot Spot No. 3
3-4 Process and Instrumentation Diagram, Hot Spot 2A System 1
3-5 Process and Instrumentation Diagram, Hot Spot 2A System 2
3-6 Process and Instrumentation Diagram, Hot Spot 2B System 1
3-7 Process and Instrumentation Diagram, Hot Spot 2B System 2
3-8 Process and Instrumentation Diagram, Hot Spot 3 System 1
3-9 Process and Instrumentation Diagram, Hot Spot 3 System 2
3-10 Process and Instrumentation Diagram, Hot Spot 3 System 3
3-11 Process and Instrumentation Diagram, Hot Spot 3 System 4
3-12 Site Layout - Recirculation Systems and Well Locations, Hot Spot No. 2A
3-13 Site Layout - Recirculation Systems and Well Locations, Hot Spot No. 2B
3-14 Site Layout - Recirculation Systems and Well Locations, Hot Spot No. 3
3-15 Extraction and Injection Well Details
3-16 Treatment Building Layout and Piping

# ACRONYMS

| | |
|---|---|
| bgs | Below ground surface |
| CERCLA | Comprehensive Environmental Response, Compensation, and Liability Act |
| CLEAN | Comprehensive Long-Term Environmental Action Navy |
| COC | Contaminant of concern |
| CTO | Contract Task Order |
| DCE | Dichloroethene |
| ºC | Degrees Celsius |
| DDI | Due Diligence Investigation |
| DHC | *Dehalococcoides* |
| DO | Dissolved oxygen |
| DPT | Direct push technology |
| EISOPQAM | Environmental Investigation Standard Operating Procedures and Quality Assurance Manual |
| FDEP | Florida Department of Environmental Protection |
| FS | Feasibility Study |
| $ft^2$ | Square feet |
| GCTL | Groundwater Cleanup Target Level |
| GPH | Gallons per hour |
| gpm | Gallon(s) per minute |
| HDPE | High density polyethylene |
| HOA | Hand-Off-Auto |
| IDW | Investigation-derived waste |
| JAA | Jacksonville Airport Authority |
| Lb | pound |
| LUC | Land use control |
| µg/L | Microgram(s) per liter |
| mg/L | Milligram(s) per liter |
| MCL | Maximum Contaminant Level |
| msl | Mean sea level |
| mV | Millivolts |
| NADEP | Naval Aviation Depot |
| NAS | Naval Air Station |
| NAVFAC SE | Naval Facilities Engineering Command Southeast |
| NCP | National Oil and Hazardous Substances Pollution Contingency Plan |
| ORP | Oxidation-reduction potential |
| OSHA | Occupational Safety and Health Act |

| | |
|---|---|
| OU | Operable Unit |
| PCR | Polymerase chain reaction |
| PRG | Preliminary Remedial Goal |
| PSC | Potential Source of Contamination |
| psi | Pounds per square inch |
| psig | Pounds per square inch gauge |
| PVC | Polyvinyl chloride |
| P&ID | Piping and instrumentation diagram |
| QA/QC | Quality assurance/quality control |
| RAC | Remdial action contractor |
| RAO | Remedial Action Objective |
| RD | Remedial Design |
| RI | Remedial Investigation |
| ROD | Record of Decision |
| SOP | Standard operating procedure |
| SSH | Straight shell height |
| SVOC | Semivolatile organic compound |
| TCE | Trichloroethene |
| TH | Total head |
| TOC | Total organic carbon |
| TOR | Top-of-rock |
| TtNUS | Tetra Tech NUS, Inc. |
| U.S. EPA | United States Environmental Protection Agency |
| UV | ultraviolet light |
| VOC | Volatile organic compound |

# 1.0 INTRODUCTION

This document presents the remedial design for groundwater treatment at Operable Unit (OU) 9, Site 59 at Naval Air Station (NAS) Cecil Field, Jacksonville, Florida. This remedial design is being performed under Contract Task Order (CTO) 0374 as part of the Comprehensive Long-Term Environmental Action Navy (CLEAN) III Contract No. N62467-94-D-0888.

## 1.1 RECORD OF DECISION

Based on consideration of the requirements of the Comprehensive Environmental Response, Compensation, and Liability Act (CERCLA), the National Oil and hazardous Substances Pollution Contingency Plan (NCP) [United States Environmental Protection Agency (U.S. EPA), 1990a], U.S. EPA, Florida Department of Environmental Protection (FDEP), and public comments, a remedy was selected as part of the Record of Decision (ROD) to address the contaminants in groundwater at OU 9, Site 59 (TtNUS, 2007b).

The major components of the selected remedy are as follows (TtNUS, 2007b):

- In-situ biological treatment of trichloroethene (TCE) Hot Spots (where TCE concentrations are greater than the FDEP monitored natural attenuation default value of 300 µg/L) using groundwater recirculation systems to inject an electron donor compound (sodium lactate), a pH buffer (sodium bicarbonate), and, if needed, a bacterial culture [*Dehalococcoides* (DHC)] to promote their anaerobic biodegradation.

- Natural attenuation of the less contaminated areas of the TCE Plumes, which would rely on naturally occurring processes in the aquifer to reduce concentrations of contaminants of concern (COCs).

- Monitoring of several wells within and downgradient of the TCE Plumes and the TCE Hot Spots to evaluate decreases in COC concentrations that may result from in-situ treatment and/or natural attenuation.

- Land use controls (LUCs), in the form of deed restrictions, will be implemented to prevent use of the surficial aquifer groundwater. Annual inspections will be conducted to verify the continued implementation of the LUCs, which will remain applicable during Navy and subsequent ownership of the site.

## 1.2 PURPOSE

The purpose of this document is to provide sufficient information for the installation and operation of an enhanced bioaugmentation system to address Hot Spot groundwater TCE contamination identified in the Remedial Investigation (RI) (TtNUS, 2006b) and Feasibility Study (FS) for OU 9, Site 59 (TtNUS, 2007a). The Long-Term Monitoring at Site 59 is included as Appendix A to this document..

## 1.3 SCOPE

The groundwater remedial design to be implemented at OU 9, Site 59 includes the following components:

- Installation of biostimulation groundwater recirculation systems: one to address the northern portion of TCE Hot Spot No. 2 (2A), one to address the southern portion of TCE Hot Spot No. 2 (2B), and one to address TCE Hot No. Spot 3.

- Startup and operation of the systems.

- Monitoring the groundwater plumes to evaluate the effectiveness of the systems and natural processes in contaminant reduction.

- Upon completion of each long-term monitoring sampling event, a summary report will be prepared documenting investigation activities performed, analytical data generated during that sampling event, and a comparison of current data to past data to verify reductions in contaminant concentrations.

A LUC Remedial Design (RD) will be prepared and submitted under separate cover.

## 1.4 REPORT ORGANIZATION

Section 1.0 presents the purpose and scope of this document. The remaining sections of the report contain the following:

- Section 2.0 presents the site background, including contaminant characterization and target cleanup levels.

- Section 3.0 presents design details for the TCE Hot Spot recirculation systems.

- Section 4.0 presents the recirculation systems startup, operation, and process monitoring plan.

- Section 5.0 presents costing information for system installation, operation, and monitoring.
- Appendix A presents the Groundwater Remedial Design Work Plan for Long-Term Monitoring.
- Appendix B presents the recirculation system design calculations.
- Appendix C has boring logs and groundwater monitoring well construction forms for wells installed after the RI.
- Appendix D has post-RI laboratory data reports.
- Appendix E presents the cost estimates for Site 59 treatment systems.

# 2.0 SITE BACKGROUND AND NATURE AND EXTENT OF CONTAMINATION

The following subsections contain brief summaries of the location, description, history, and nature and extent of groundwater contamination at OU 9, Site 59. A detailed description of site physical and geological conditions, human and ecological risks, and nature and extent of groundwater contamination can be found in the RI report for OU 9, Site 59 (TtNUS, 2006b).

## 2.1 LOCATION, DESCRIPTION, AND HISTORY

NAS Cecil Field is located 14 miles southwest of Jacksonville, Florida. The majority of Cecil Field is located within Duval County; the southernmost part of the facility is located in Clay County (see Figure 2-1). NAS Cecil Field was established in 1941 and provided facilities, services, and material support for the operation and maintenance of naval weapons, aircraft, and other units of the operation forces as designated by the Chief of Naval Operations. Some of the tasks required to accomplish this mission included operation of fuel storage facilities, performance of aircraft maintenance, maintenance and operation of engine repair facilities and test cells for turbo-jet engines, and support of special weapons systems. NAS Cecil Field was closed in 1999. Much of the facility has been transferred to the Jacksonville Airport Authority (formerly the Jacksonville Port Authority). The facility will have multiple uses but will be used primarily for aviation-related activities.

### 2.1.1 Site Location

Site 59 is located in the Main Base area of NAS Cecil Field, near the northern end of the north-south runways. The site consists of buildings and parking lots. The majority of Site 59 is paved, with a concrete flightline apron that covers the eastern portion of the site, and buildings and parking lots that cover most of the balance of the site (see Figure 2-2).

Facilities associated with Site 59 include Buildings 324, 334, 339, 811, 814, 815, 837LN, 885, and 1845, two sanitary sewer lift stations (LS-1 and LS-2), an oil-water separator associated with Building 334 (334-OW), and Potential Source of Contamination (PSC) 56, Stormwater Retention Pond.

Site 59 is essentially flat with very little change in elevation. Elevations range from approximately 75 feet above mean sea level (msl) in the southeastern portion of the site to approximately 79 feet above msl in the northwestern portion of the site. Grass-lined drainage ditches receive runoff along Loop Road near Building 324. Runoff from other areas of the site is generally collected by below-ground storm sewer pipes that discharge to a flightline outfall on the eastern side of the north-south runways. A stormwater

retention pond located in the southwestern portion of the site, southwest of Hangar 1846, was investigated as PSC 56.

Grassy and wooded areas surround Building 324, north of Skymaster Road, a wooded area is located southeast of the intersection of Flightline Road and Skymaster Road, and grassy areas surround Buildings 334 and 339 and extend between a parking lot along Flightline Road and Hangar 1845. The areas around Building 818 and south of Hangar 1845 are paved, and the concrete flight apron covers the portion of the site east of Hangar 1845.

## 2.2 NATURE AND EXTENT OF CONTAMINATION

The predominant contaminant detected in groundwater at Site 59 is TCE, a chlorinated volatile organic compound (VOC). The source of the TCE contamination is not known. Solvents were reportedly used and stored in several buildings associated with the site. Hazardous waste storage areas were previously located southwest of Building 818 and west and south of Hangar 1845, and an additional area south of Hangar 1845 was noted in a Due Diligence Investigation (DDI) as storing 55-gallon drums of solvent emulsion cleaner. Spillage and surface staining were also noted in this area during the DDI (Golder Associates, 1998).

Groundwater samples were collected at Site 59 from a total of 60 permanent monitoring wells and analyzed for VOCs as part of the Site 59 RI. The RI data plus supplemental sampling of existing wells and new wells installed after the RI and FS were used to define the horizontal and vertical extent of groundwater contamination for the remedial design. Figures 2-3 through 2-6 present TCE results form the RI and post-RI sampling for the 30-foot, 50-foot, 70- to 80-foot, and top-of-rock (TOR) zones, respectively.

TCE was the only COC detected at concentrations greater than FDEP Groundwater Cleanup Target Levels (GCTLs) during the RI. The TCE breakdown products 1,1-dichloroethene (DCE), cis-1,2-DCE, and vinyl chloride were detected less frequently and at significantly lower concentrations in samples collected during the RI. Petroleum-related VOCs (ethylbenzene and toluene) were detected at low levels throughout the shallow surficial aquifer in the areas of Buildings 1845 and 815 and the flightline.

At the 30-foot depth, TCE exceedances occur at two locations; one from just north of Building 324, centered west of Building 818, and extending southeast to Building 1845, and one oriented approximately east-west between Buildings 1845 and 815. The northern plume in this zone covers approximately 82,000 square feet ($ft^2$), and the southern plume covers approximately 42,000 $ft^2$. At the 50-foot depth, the northern plume has a more east-west orientation, but it is still centered just west of Building 818 and covers an area of approximately 84,000 $ft^2$. The position of the southern plume shifts in this zone from between Buildings 1845 and 815 to encompassing most of Building 1845 and extending to Building 815,

and the orientation changes from east-west to northwest-southeast. The area covered by the plume in this zone is approximately 115,000 $ft^2$. At the 70- to 80-foot depth, the plumes coalesce into a single plume extending from southeast of Building 324 to within the Building 1845 footprint, with a northwest-southeast orientation, and the center shifts toward the northwestern corner of Building 1845. This plume covers approximately 150,000 $ft^2$. Based on the most recent data, there is no plume in the TOR zone. Within each plume are areas where TCE concentrations are greater than the FDEP monitored natural attenuation default value of 300 µg/L, referred to as Hot Spots which will be actively remediated.

## 2.3 CLEANUP GOALS

Remedial Action Objectives (RAOs) for OU 9, Site 59 were developed during the FS. Based on the FS, active treatment will be used on the areas of the greatest contamination (Hot Spots), and monitored natural attenuation will provide remediation for the rest of the plume.

A cleanup goal is the target concentration to which a COC must be reduced within a particular medium of concern to achieve RAOs. The cleanup goals for groundwater at Site 59 is as follows:

- TCE: 3 µg/L

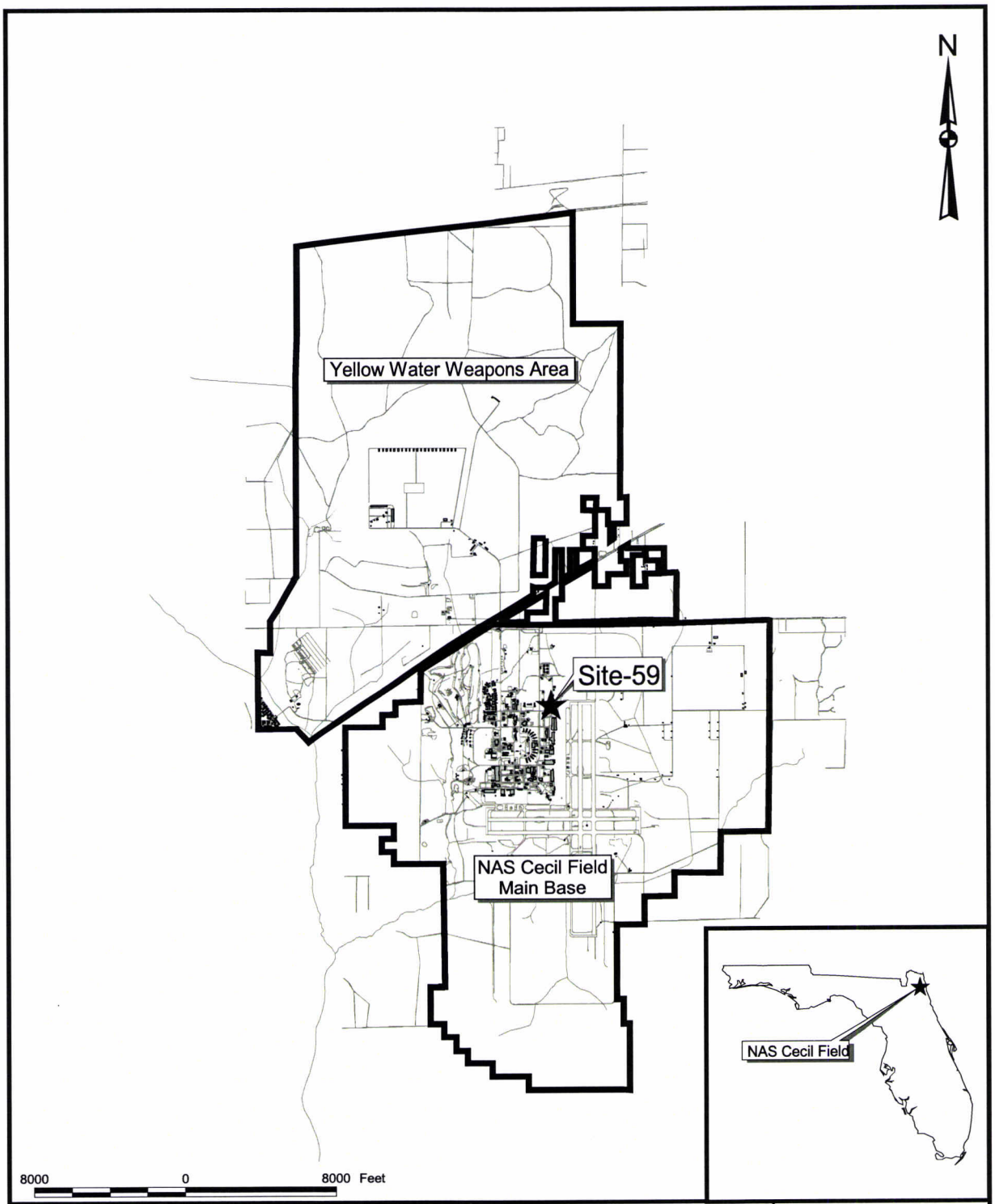


| | | | |
|---|---|---|---|
| DRAWN BY MJJ | DATE 10Jan06 | GENERAL LOCATION MAP<br>OU 9, SITE 59<br>REMEDIAL DESIGN<br>NAVAL AIR STATION CECIL FIELD<br>JACKSONVILLE, FLORIDA | CONTRACT NUMBER 8925 |
| CHECKED BY | DATE | | APPROVED BY 7/24/07 DATE |
| COST/SCHEDULE-AREA | | | APPROVED BY DATE |
| SCALE AS NOTED | | | DRAWING NO. FIGURE 2-1 REV 0 |

P:\GIS\NAS_CecilField\Site-59_Design.apr 17Feb07 MJJ Layout00

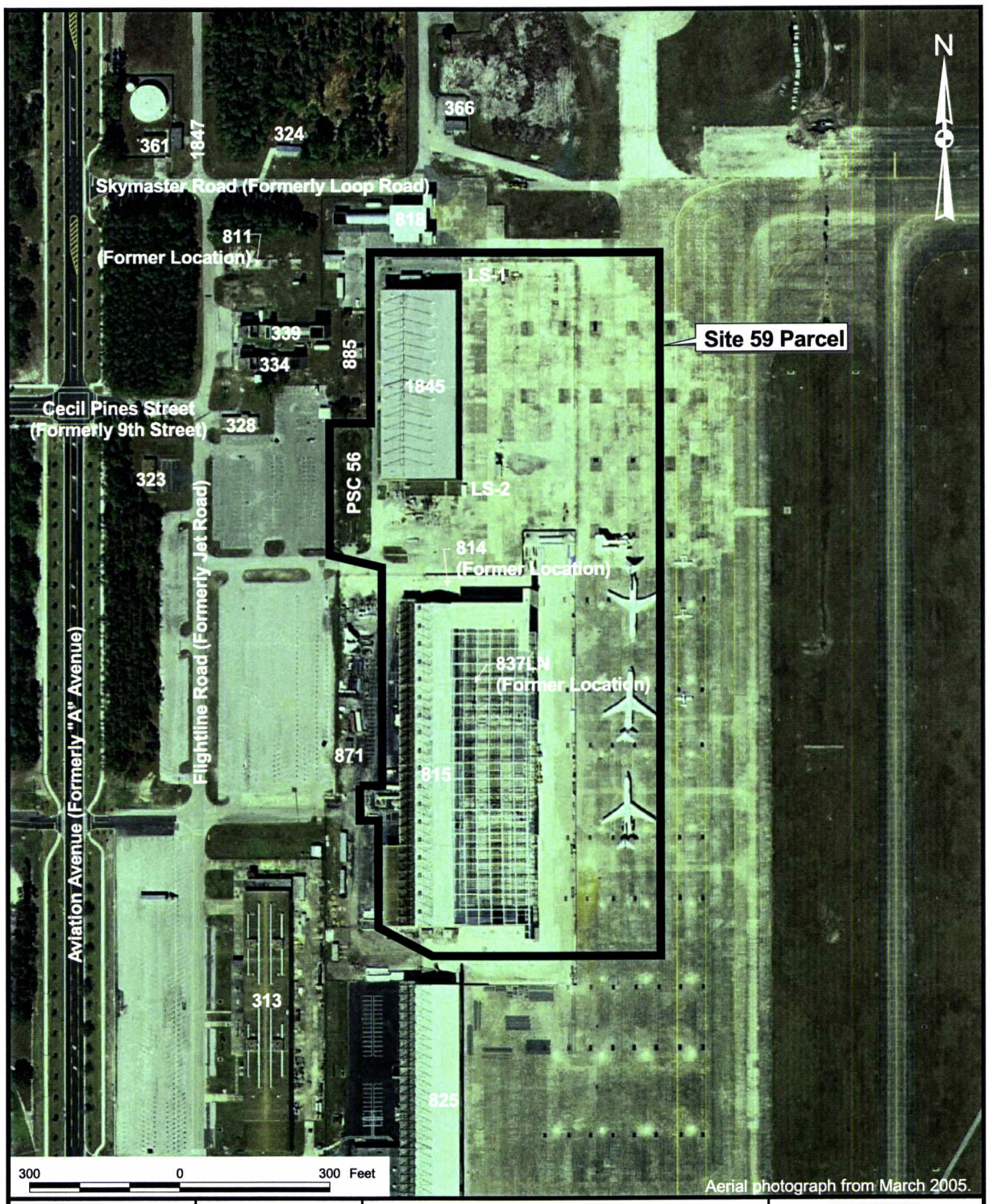


| | | | |
|---|---|---|---|
| DRAWN BY MJJ | DATE 10Jan06 | GENERAL SITE ARRANGEMENT<br>OU 9, SITE 59<br>REMEDIAL DESIGN<br>NAVAL AIR STATION CECIL FIELD<br>JACKSONVILLE, FLORIDA | CONTRACT NUMBER 8925 |
| CHECKED BY | DATE | | APPROVED BY DATE 7/24/07 |
| COST/SCHEDULE-AREA | | | APPROVED BY DATE |
| SCALE AS NOTED | NAVFAC | | DRAWING NO. FIGURE 2-2 / REV 0 |

P:\GIS\NAS_CecilField\Site-59_Design.apr 09Mar07 MJJ Layout05

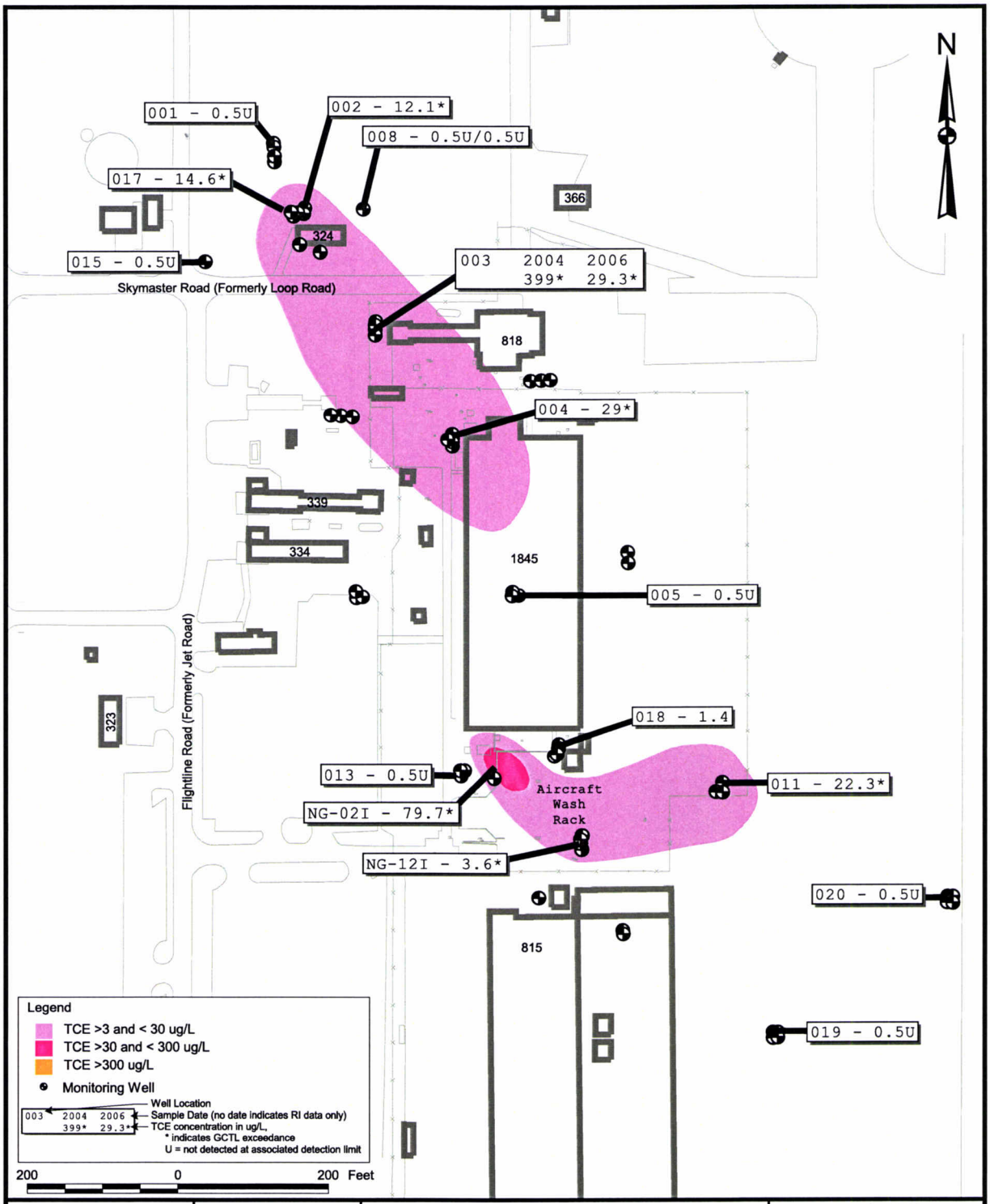


| | | | |
|---|---|---|---|
| DRAWN BY MJJ | DATE 17Jan06 | TCE IN GROUNDWATER, RI AND POST-RI DATA<br>30-FOOT ZONE<br>OU 9, SITE 59<br>REMEDIAL DESIGN<br>NAVAL AIR STATION CECIL FIELD<br>JACKSONVILLE, FLORIDA | CONTRACT NUMBER 8925 |
| CHECKED BY | DATE | | APPROVED BY DATE 7/24/07 |
| COST/SCHEDULE-AREA | | | APPROVED BY DATE |
| SCALE AS NOTED | NAVFAC | | DRAWING NO. FIGURE 2-3 / REV 0 |

P:\GIS\NAS_CecilField\Site-59_Design.apr 09Mar07 MJJ Layout041

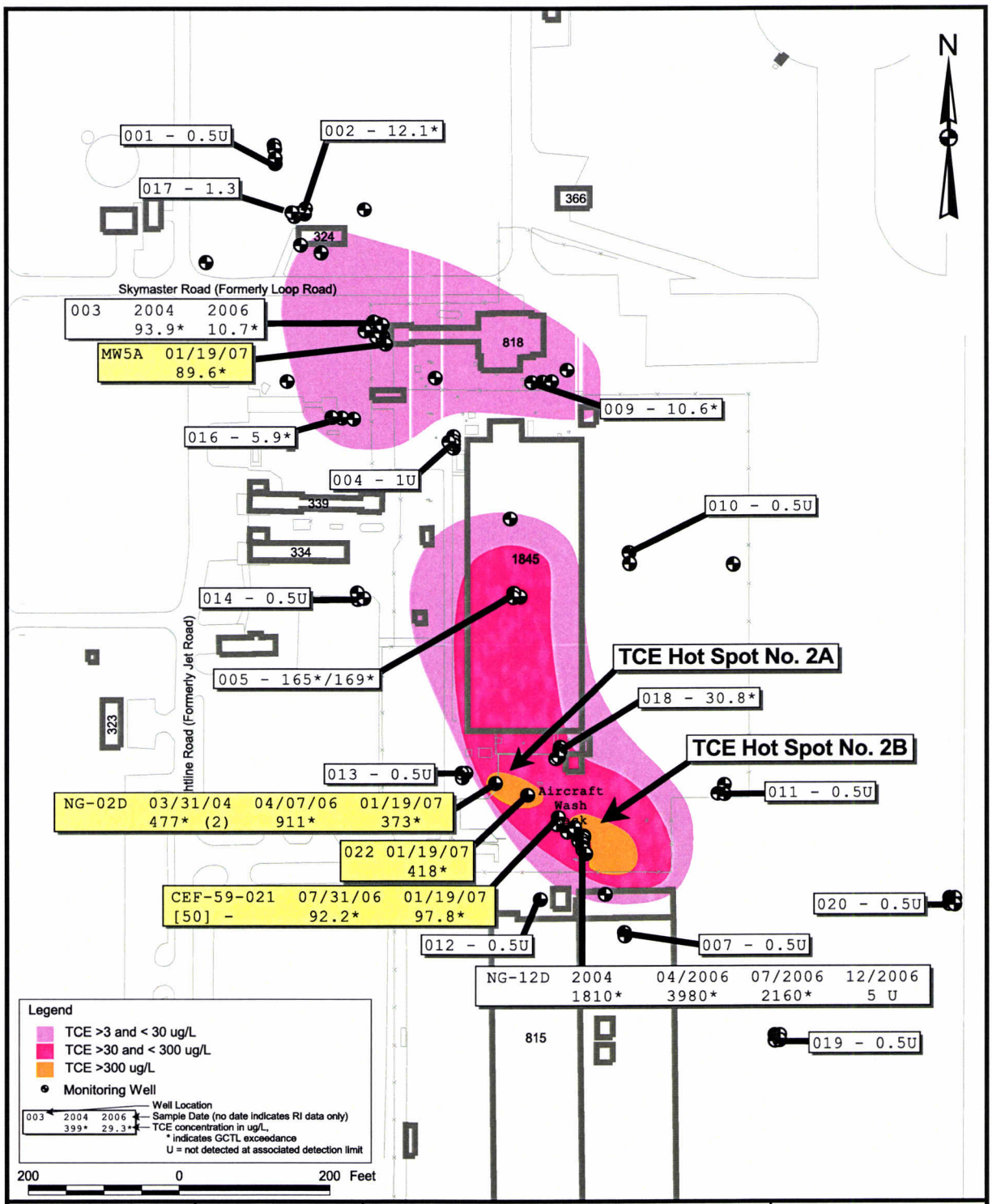


| | | | |
|---|---|---|---|
| DRAWN BY MJJ | DATE 17Jan06 | TCE IN GROUNDWATER, RI AND POST-RI DATA<br>50-FOOT ZONE<br>OU 9, SITE 59<br>REMEDIAL DESIGN<br>NAVAL AIR STATION CECIL FIELD<br>JACKSONVILLE, FLORIDA | CONTRACT NUMBER 8925 |
| CHECKED BY | DATE | | APPROVED BY DATE 7/24/07 |
| COST/SCHEDULE-AREA | | | APPROVED BY DATE |
| SCALE AS NOTED | NAVFAC | | DRAWING NO. FIGURE 2-4 REV 0 |

P:\GIS\NAS_CecilField\Site-59_Design.apr 09Mar07 MJJ Layout151

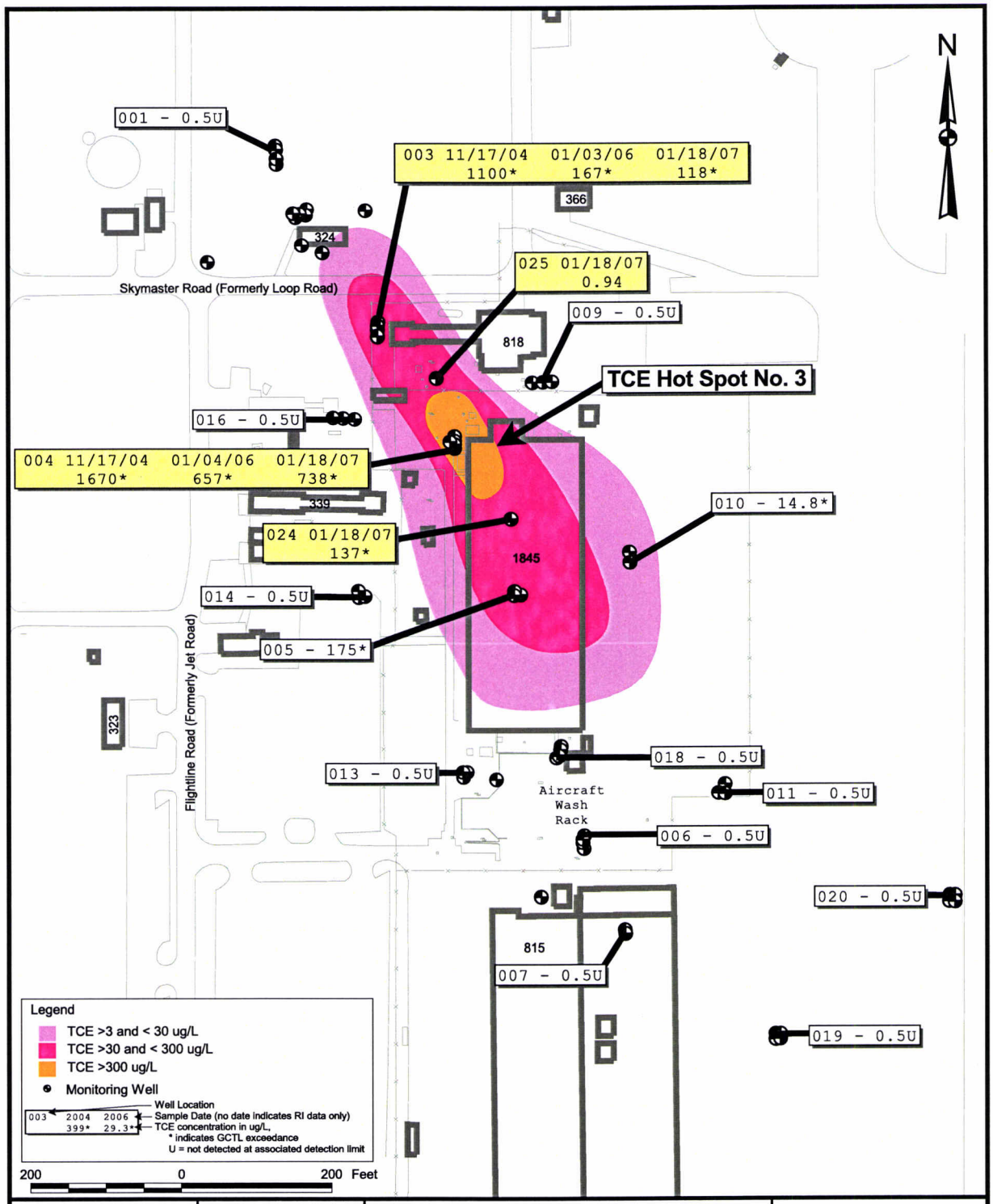


| | | | |
|---|---|---|---|
| DRAWN BY MJJ | DATE 17Jan06 | TCE IN GROUNDWATER, RI AND POST-RI DATA<br>70- TO 80-FOOT ZONE<br>OU 9, SITE 59<br>REMEDIAL DESIGN<br>NAVAL AIR STATION CECIL FIELD<br>JACKSONVILLE, FLORIDA | CONTRACT NUMBER 8925 |
| CHECKED BY | DATE | | APPROVED BY 7/24/07 DATE |
| COST/SCHEDULE-AREA | | | APPROVED BY DATE |
| SCALE AS NOTED | NAVFAC | | DRAWING NO. FIGURE 2-5 REV 0 |

P:\GIS\NAS_CecilField\Site-59_Design.apr 09Mar07 MJJ Layout161

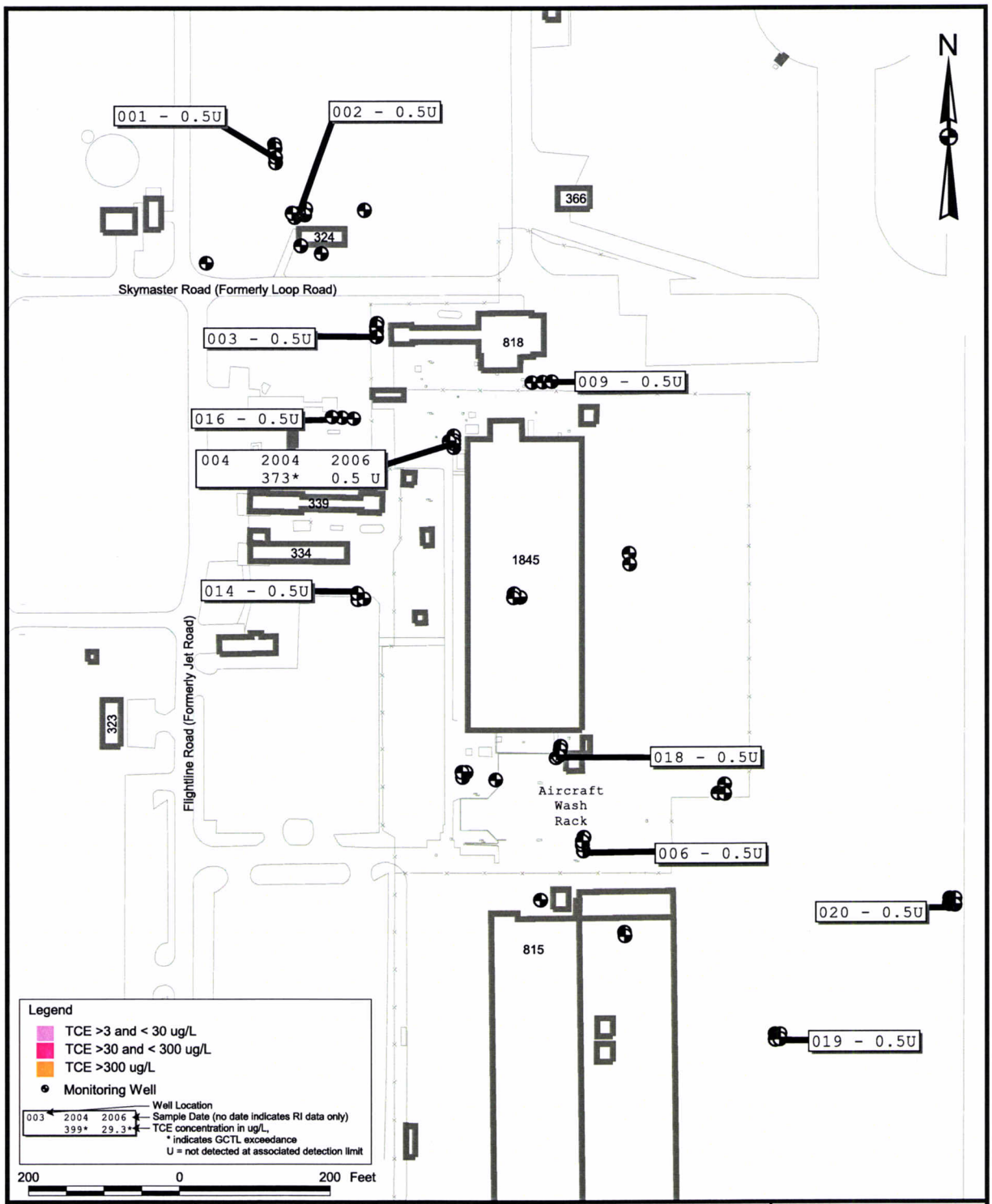


| | | | |
|---|---|---|---|
| DRAWN BY MJJ | DATE 17Jan06 | TCE IN GROUNDWATER, RI AND POST-RI DATA<br>TOP OF ROCK ZONE<br>OU 9, SITE 59<br>REMEDIAL DESIGN<br>NAVAL AIR STATION CECIL FIELD<br>JACKSONVILLE, FLORIDA | CONTRACT NUMBER 8925 |
| CHECKED BY | DATE | | APPROVED BY DATE 7/24/07 |
| COST/SCHEDULE-AREA | | | APPROVED BY DATE |
| SCALE AS NOTED | NAVFAC | | DRAWING NO. FIGURE 2-6 / REV 0 |

P:\GIS\NAS_CecilField\Site-59_Design.apr 09Mar07 MJJ Layout071

# 3.0 RECIRCULATION TREATMENT SYSTEMS

This section contains information on the design of the enhanced biostimulation/bioaugmentation systems for OU 9, Site 59, Hot Spots 2 and 3. (The numbering convention for the plumes was established during the FS. Post-RI sampling showed that there was no Hot Spot in Plume No. 1) The design of the recirculation systems is based on the results of pilot studies performed at Site 59 in 2006 and 2007 (TtNUS, 2007a).

Remediation of the TCE Plume at Site 59 will consist of enhanced biostimulation/bioaugmentation of the Hot Spots and natural attenuation for the remaining portions of the plume. As TCE concentrations are reduced in the Hot Spots, it is expected that this will accelerate the removal of remaining COC concentrations through natural attenuation. Comprehensive groundwater monitoring will be conducted according to the Long-Term Monitoring Work Plan included in Appendix A.

## 3.1 GENERAL APPROACH TO TREATMENT

TCE contamination in the Hot Spots will be remediated by initially using in-situ enhanced biostimulation; followed by bioaugmentation, if needed. Sodium lactate will be injected into the groundwater using a groundwater extraction/injection recirculation system. Sodium bicarbonate will also be injected to increase the pH to within the optimal range for biological activity. If, after approximately 6 months of operation, no significant TCE degradation is observed, a DHC inoculum will be added to promote reductive dechlorination of TCE. Calculations for the treatment systems are included in Appendix B.

Following the RI, additional monitoring wells were installed to confirm the sizes of the Hot Spots (wells CEF-59-21-50, CEF-59-22-50, CEF-59-24-73, and CEF-59-25-73). Results from these wells showed that Hot Spot No. 2 could be separated into two smaller Hot Spots designated Hot Spot No. 2A and Hot Spot No. 2B, as shown on Figures 3-1 to 3-3. Note that the size of Hot Spot No. 2B was reduced by the pilot study operations. Well construction forms for the new wells are in Appendix C, and laboratory reports for post-RI sampling are included in Appendix D.

Groundwater modeling was conducted to determine the quantity and placement of extraction and injection wells and recirculation rates in each plume. The number of extraction and injection wells and recirculation rates in each Hot Spot is summarized below.

| Hot Spot | Number of Extraction Wells | Number of Injection Wells | Extraction Well Rate, gpm |
|---|---|---|---|
| 2A | 2 | 6 | 3 |
| 2B | 2 | 6 | 3 |
| 3 | 4 | 6 | Two wells at 1 and two wells at 2 |

gpm – gallons per minute

The recirculation systems for Hot Spot Nos. 2A, 2B, and 3 are very similar. In the discussions below, a piping and instrumentation diagram (P&ID) is provided for each recirculation system. Individual equipment lists are also provided for each recirculation system. The following numbering convention is used for identifying individual pieces of equipment or instruments:

XXX-YYN-ZZ

Where:

XXX – Equipment or instrument tag, such as P (for pump) or PI (for pressure indicator).
YY – Hot Spot (2A, 2B, or 3).
N – Recirculation system number within a given Hot Spot, 1, 2, 3, etc. (2 each for Hot Spot Nos. 2A and 2B; 4 for Hot Spot No 3).
ZZ – Numerical sequence for a given item, 1, 2, etc.

For example, the extraction well pump in the second system in Hot Spot No. 3 is P-32-1.

Figures 3-1 to 3-3 show the surface features at each Hot Spot. Figures 3-4 to 3-11 are the P&IDs for the Hot Spots. Figures 3-12 to 3-14 show the arrangements of the wells and equipment for each Hot Spot.

## 3.2 WELL INSTALLATION

Figures 3-12 to 3-14 show the layouts of the extraction, injection, and monitoring wells for each Hot Spot. Groundwater will be extracted from wells in the center of each Hot Spot and injected into wells on the outer edge of each Hot Spot. The selected extraction and injection flow rates were limited by the shallow depth to groundwater; if too high of an injection rate were selected, mounding would cause groundwater to reach the ground surface. The depths of the wells are based on the depths to contaminated groundwater in the existing monitoring wells.

As shown on Figure 3-15, extraction wells will be constructed of flush-joint, threaded, 4-inch-diameter Schedule 80 polyvinyl chloride (PVC) risers and 0.010-inch slot screens. Injection wells will be constructed of flush-joint, threaded, 4-inch-diameter Schedule 80 PVC risers and 0.020-inch slot screens.

Shallow extraction and injection wells will be installed using hollow-stem auger drilling techniques which will prevent the sidewalls of the boring from becoming smeared with drilling mud as with mud rotary techniques. Deeper wells (greater than 50 feet below ground surface [bgs]) will likely require installation using rotosonic or other approved alternative methods. As shown on Figure 3-15, all wells will be installed with a typical sand pack consisting of 20 to 40 grade silica sand, a pure sodium bentonite seal, and grouted annulus consisting of 94 pounds of Type I Portland Cement to 7 gallons of water to 10 percent (by weight) of pure sodium bentonite. The wells will be completed with a flush-mount protective casing. Following installation, each well will be fully developed to ensure that it is functioning properly.

Shallow process monitoring wells (labeled as “MW” on Figures 3-12 to 3-14) will be installed using direct push technology (DPT). Based on experience at the site, DPT will not be able to be used to install deep process monitoring wells (greater than 50 feet bgs). Deeper process monitoring wells will be installed using hollow-stem auger and/or approved alternative methods. Process monitoring wells will be constructed of flush-joint, threaded, 1- or 2-inch-diameter Schedule 80 PVC risers with 5-foot screens with 0.010-inch slot screens. Sand pack, seal, and grouting will be accordance with Florida regulations, and the wells will be completed with a flush-mount protective casing.

Investigation-derived waste (IDW) such as drill cuttings, development water, decontamination fluids, etc. generated during installation of the wells will be containerized, characterized, and disposed off site.

The following table summarizes . well construction details for each Hot Spot.

| Hot Spot | Extraction and Injection Well Screen Interval, feet bgs | Extraction and Injection Well Diameter, inches | Process Monitoring Well Screen Interval, feet bgs | Process Monitoring Well Diameter, inches |
|---|---|---|---|---|
| 2A | 40 to 50 | 4 | 43 to 48 | 1 to 2 |
| 2B | 42 to 52 | 4 | 45 to 50 | 1 to 2 |
| 3 | 65 to 75 | 4 | 68 to 73 | 1 to 2 |

## 3.3 RECIRCULATION SYSTEMS

### 3.3.1 General Layout

The layouts of the recirculation systems are shown on Figures 3-12 to 3-14 for Hot Spot Nos. 2A, 2B, and 3, respectively. The treatment equipment will be housed in one or more structures within each Hot Spot. When possible, common chemical solution tanks will be used for more than one chemical feed pump within a Hot Spot.

### 3.3.2 Process Description

The P&IDs for each Hot Spot are shown on Figures 3-4 to 3-11. Figures 3-4 and 3-5 depict the two recirculation systems at Hot Spot No. 2A. Figures 3-6 and 3-7 depict the two recirculation systems at Hot Spot No. 2B. Figures 3-8, 3-9, 3-10, and 3-11 depict the four recirculation systems at Hot Spot No. 3.

The equipment and instrument lists for Hot Spot Nos. 2A, 2B, and 3 are shown on Tables 3-1, 3-2, and 3-3, respectively. These lists include each individual equipment item and instrument for each system. Table 3-1 lists the equipment and instruments for each of the two systems at Hot Spot No. 2A. Table 3-2 lists the equipment and instruments for each of the two systems at Hot Spot No. 2B. Table 3-3 lists the equipment and instruments for each of the four systems at Hot Spot No. 3.

Because the recirculation systems are nearly identical, a common process description is provided below. The equipment numbers used in the description consist of the equipment or instrument identifier and the sequence number. The numbers that identify the individual system are excluded. For example, P-1 corresponds to P-2A1-1 and P-31-1. Differences in the systems can be identified from the equipment lists. Operating conditions that vary from system to system are summarized on Table 4-1 (see Section 4). Variations for any systems, such as common equipment, will be noted as applicable.

Each recirculation system consists of the following major components:

- Extraction well (EW-1)
- Extraction well pump (P-1)
- Filter (F-1)
- Sodium lactate feed pump (P-2), solution tank (T-1), and mixer (M-1) (Tank and mixer are shared by two pumps.)
- Sodium bicarbonate feed pump (P-3), solution tank (T-2) and mixer (M-2)
- In-line static mixer (SM-1)
- One to three injection wells (IW-1, IW-2, IW-3)

- Extraction well pump flow totalizer(FQI-1) and flow meter (FI-1)
- One or two injection well flow meters (FI-2, FI-3)
- Flow control valves (CV-1 and CV-2)

The equipment and chemical feed systems are housed in enclosures. Groundwater is pumped by the extraction well pump to the treatment system. The flow rate is controlled by manual flow control valves. Sodium lactate and sodium bicarbonate are injected into the system piping and subsequently mixed in the in-line static mixer. The mixture then flows into the injection wells.

Groundwater is extracted from extraction well EW-1 using a submersible pump (P-1) at the flow rate listed on Table 4-1. The pump is turned on and off manually (HS-1), although a motor overload switch is built into the pump motor. A reset button is provided at the control panel. A run time meter (KQI-1) is provided at the pump control panel to record the cumulative time the motor has operated and to confirm operating durations. Water flows through 1-inch PVC hose and 1-inch Schedule 80 ultraviolet light (UV)-resistant PVC piping to the treatment system in the enclosure. Inside the enclosure, the hose is connected to 1-inch Schedule 80 PVC system piping. (The treatment system piping inside the building may be constructed with 2-inch PVC.) There is one enclosure for the two systems at Hot Spot No. 2A, one enclosure for the two systems at Hot Spot No. 2B, and two enclosures for the four systems at Hot Spot No. 3.

Inside the enclosure, the flow rate is controlled with a manually adjusted globe valve at the upstream end of the system (CV-1) and a manually adjusted globe valve at the downstream end of the system (CV-2). CV-2 is used to create the largest pressure drop and to maintain a positive pressure within the system. A positive pressure must be maintained in the system to minimize the occurrence of sub-atmospheric pressure conditions that could allow air to leak in at joints and seals. CV-1 is used for finer adjustments to the flow rate.

A cartridge filter (F-1) and sampling port are located after CV-1. A 5-micron disposable filter element will be used in the early operation of the system to capture particles from the extraction well to minimize plugging in the injection wells. The filter elements will be replaced by 50-micron filters 2 weeks after DHC injection. Pressure gauges are located upstream (PI-1) and downstream (PI-2) of the filter.

A jet flow meter (FQI-1) is used to measure cumulative flow and as a secondary method to adjust the control valves. Flow meter FI-1 is a paddle wheel flow meter with a direct readout in gpm that is used to adjust the control valves. (FQI-1 is also equipped with a dial that indicates the volume of flow through the meter, and the dial can also be used to measure the flow rate using a timer and observing the volume of a timed period.) Alternatively, the functions of FQI-1 and FI-1 can be accomplished in a single device.

Downstream of the flow meter are the injection points for the sodium lactate and the sodium bicarbonate solutions. The injection points have spring-loaded check valves to prevent flow of groundwater if the chemical feed pumps are taken off line. The chemical feed systems are described further below.

The in-line static mixer (SM-1) follows the injection points. The mixer is a 1-inch, clear PVC, six-element unit. Downstream of the static mixer is a pressure gauge (PI-3) and a sampling port.

After the static mixer, the water flows through CV-2 and splits into multiple lines (as needed), one for each injection well (three for each system at Hot Spot Nos. 2A and 2B, two each for systems 1 and 2 at Hot Spot No. 3, and one each for systems 3 and 4 at Hot Spot No. 3). A ball valve is located on each line immediately after the split. A paddle wheel flow meter with a direct readout (FI-2 for systems with two injection wells, and FI-3 for systems with three injection wells) is located on the line to IW-1 (and also IW-2 for three injection wells) and is used to balance the flow equally to the injection wells. (Systems 3 and 4 at Hot Spot No. 3 have only one injection well and do not have an injection well flow meter.) The groundwater then flows through 1-inch Schedule 80 UV-resistant PVC piping out of the treatment enclosure to the injection wells.

The piping and well head are sealed at each injection well to prevent groundwater from overflowing onto the ground. A drop pipe extends below the water surface to the bottom of the well and is provided with a 10-foot-long section of 2-inch-diameter 0.030-inch slot PVC screen to improve distribution of the water. The drop pipe is needed to prevent agitation and aeration of the groundwater.

Sodium lactate solution is prepared in a polyethylene tank (T-1) per Table 4-2 (see Section 4). A mixer (M-1) on the tank is used to mix the stock solution with water (the solution tank is common to two systems). The 60 percent sodium lactate solution is diluted to 0.83 pond per gallon (lb/gal) (about 10 percent) and injected by a metering pump (P-2) at the rate indicated on Table 4-1. At this rate, the sodium lactate tank will require refilling about once per week.

Sodium bicarbonate solution is prepared in a polyethylene tank (T-2) per Table 4-3 (see Section 4). A mixer (M-2) on the tank is used to mix the solid sodium bicarbonate with water (one solution tank for each system). Solid sodium bicarbonate in 50-lb bags is used to make the 0.68 lb/gal (about 8 percent) solution, and the solution is injected by a metering pump (P-3) at the rate indicated on Table 4-1. At this rate, the sodium bicarbonate tank will require refilling once per week. This concentration of sodium bicarbonate is close to saturation (approximately 98 percent of solubility at 10°C), and the low solubility limits the amount of sodium bicarbonate that can be injected.

Pumps P-2 and P-3 are set manually to pump at a constant flow rate. The pumps are activated automatically by the operation of P-1 by energizing the electrical outlet into which the metering pumps are plugged into. A Hand-Off-Auto (HOA) switch is provided on the control panel for each metering pump. In "Auto", the metering pumps will operate when P-1 is operating and will shut down when P-1 is shut down. The switch can be turned to "Hand" to operate the pumps manually if P-1 is off. A normally energized outlet is also provided for manual operation of the pumps. The pumps can also be turned on and off by an integral switch on the pump.

## 3.4 PIPING AND SYSTEM LAYOUT

The recirculation systems are expected to operate for a relatively short period of time, less than 1 year. Therefore, many components of the installation are temporary in nature.

Because of the high costs associated with cutting through and replacing the flightline concrete, the piping and conduit for Hot Spot Nos. 2A and 2B will run along the surface. Vehicle crossings will be constructed from off-the-shelf cable crossovers. For long piping runs, at least two vehicle crossovers will be provided. Safety barricades will be used to minimize running over the piping, conduit, and wells at other locations.

Asphalt paving overlies Hot Spot No. 3, and much of the piping and conduit will be in the vicinity of the disabilities access to Building 1845 and light vehicle traffic. Thus, piping and conduit in this area will generally be installed underground. Piping, conduit, and well installation within approximately 30 feet of the fence at the northern end of the Hot Spot No. 3 remediation area must be designed for the passage of a nominal 5-ton liquid oxygen tank delivery truck.

Enclosures, such as trailers or sheds, will be used to house mixing equipment, controls, and chemical feed equipment. Depending on the size of the structure, two or more mixing systems for each Hot Spot will be installed per structure. Where possible, chemical solution tanks are sized so that a single tank can serve two recirculation systems. Chemical solution tanks and pumps will be located adjacent to the mixing systems so that the length and exposure of chemical feed lines is minimized. Warning signs will be posted to restrict tempering with the treatment systems.

## 3.5 POWER SOURCE

Currently, it is assumed that permanent power for Hot Spot No. 2B can be provided through the service entrance installed for the southern pilot study. Service entrances for the Hot Spot Nos. 2A and 3 systems will have to be installed separately, although it may be possible to extend the northern pilot study service entrance, which is located just west of Building 818, to Hot Spot No. 3.

All electrical components will be installed in accordance with National Electric Codes and local requirements. All equipment will be grounded and wired to provide surge protection.

## 3.6 WATER SOURCE

Approximately 650 gallons of potable water per week at Hot Spot No. 2A, 700 gallons of potable water per week at Hot Spot No. 2B, and 800 gallons of potable water per week at Hot Spot No. 3 will be needed for preparation of chemical solutions. Provisions must be made to readily provide the water to the solution tanks.

## 3.7 SYSTEM ABANDONMENT

After remediation goals have been achieved, the systems will be abandoned in place. All wells installed for remediation will be abandoned in accordance with the U.S. EPA Region 4 Environmental Investigation Standard Operating Procedures and Quality Assurance Manual (EISOPQAM) and Saint John's River Water Management District guidance. Piping along the surface will be removed. Subsurface piping in paved areas will be capped and left in place; subsurface piping in unpaved areas will be removed. Structures used to house the recirculation systems will be removed.

**TABLE 3-1**

**PROCESS EQUIPMENT AND INSTRUMENT LIST – HOT SPOT NO. 2A**
**REMEDIAL DESIGN**
**OPERABLE UNIT 9, SITE 59**
**NAVAL AIR STATION CECIL FIELD**
**JACKSONVILLE, FLORIDA**


| Item Name | Item Number | Description |
|---|---|---|
| Filter | F-2A1-1<br>F-2A2-1 | • Cartridge filter with replaceable cartridges (5-micron initially, then 50-micron)<br>• Flow rate range: 1 to 10 gpm<br>• Polypropylene housing<br>• Size for 10-inch filters |
| Extraction Well Pump | P-2A1-1<br>P-2A2-1 | • Type: submersible<br>• Rating: 3 gpm @ 115 feet TH<br>• Motor: 1/3 HP<br>• Model: Grundfos 5SQ03A-90, 1-inch NPT (or equal) |
| Sodium Lactate Feed Pump | P-2A1-2<br>P-2A2-2 | • Type: chemical metering pump<br>• Rating: 0.42 GPH max; 110 psi; 1:100 turndown<br>• Model: LMI P031-498SI, PVC liquid end, 0.375-inch OD tubing, 120 AC plug end (or equal)<br>• Include combination valve for anti-siphon, pressure relief, back pressure, and drain |
| Sodium Bicarbonate Feed Pump | P-2A1-3<br>P-2A2-3 | • Type: chemical metering pump<br>• Rating: 4 GPH max; 100 psi; 1:100 turndown<br>• Model: LMI C121-468SI, PVC liquid end, 0.375-inch OD tubing; 120 AC plug end (or equal)<br>• Include combination valve for anti-siphon, pressure relief, back pressure, and drain |
| Sodium Lactate Solution Tank Mixer | M-2A1-1<br>Common | • Type: high-speed, propeller type<br>• Configuration: angle-mounted<br>• Motor: 1/4 HP<br>• Model: Neptune BN-1.0 (or equal) |
| Sodium Bicarbonate Solution Tank Mixer | M-2A1-2<br>M-2A2-2 | • Type: high-speed, propeller type<br>• Configuration: angle-mounted<br>• Motor: 1/3 HP<br>• Model: Neptune JD-2.0 (or equal) |
| Static Mixer | SM-2A1-1<br>SM-2A2-1 | • Type: inline, static, 1-inch diameter<br>• Configuration: threaded ends<br>• Material: PVC, clear<br>• Model: Koflo 328 – 6 element (or equal) |

**TABLE 3-1**

**PROCESS EQUIPMENT AND INSTRUMENT LIST – HOT SPOT NO. 2A**
**REMEDIAL DESIGN**
**OPERABLE UNIT 9, SITE 59**
**NAVAL AIR STATION CECIL FIELD**
**JACKSONVILLE, FLORIDA**


| Item Name | Item Number | Description |
|---|---|---|
| Sodium Lactate Solution Tank | T-2A1-1<br>Common | • Configuration: vertical, cylindrical, open-top with lid<br>• Features: mixer mount or stand<br>• Material: HDPE<br>• Dimensions: 28-inch diameter x 42-inch SSH – 100 gallons |
| Sodium Bicarbonate Solution Tank | T-2A1-2<br>T-2A2-2 | • Configuration: vertical, cylindrical, open-top with lid<br>• Features: mixer mount or stand<br>• Material: HDPE<br>• Dimensions: 42-inch diameter x 48-inch SSH – 275 gallons |
| Upstream Control Valve | CV-2A1-1<br>CV-2A2-1 | • Type: globe<br>• Material: PVC |
| Downstream Control Valve | CV-2A1-2<br>CV-2A2-2 | • Type: globe<br>• Material: PVC |
| System Control Panel | CP-2A1-1<br>Common | NEMA 4 enclosure with face-mounted instruments and controls.<br>Features:<br>• Extraction Well Pump HO switches and run time meters<br>• HOA switches for sodium lactate feed pumps<br>• HOA switches for sodium bicarbonate feed pumps<br>• HO switch for sodium lactate mixer<br>• HO switches for sodium bicarbonate mixers |
| Extraction Well Flow Rate Meter (1) | FI-2A1-1<br>FI-2A2-1 | • Paddle wheel with flow rate indicator in gpm<br>• Range: 1 to 5 gpm |
| Injection Well Flow Rate Meter | FI-2A1-2<br>FI-2A2-2 | • Paddle wheel with flow rate indicator<br>• Range: 0.5 to 5 gpm |
| Injection Well Flow Rate Meter | FI-2A1-3<br>FI-2A2-3 | • Paddle wheel with flow rate indicator<br>• Range: 0.5 to 5 gpm |
| Extraction Well Flow Totalizer (1) | FQI-2A1-1<br>FQI-2A2-1 | • Jet meter with totalizer and flow rate indicators<br>• Vendor: Hays (or equal) |
| Extraction Well Pump Run Time Meter | KQI-2A1-1<br>KQI-2A2-1 | • Odometer-type read out, in hours and tenths of hours |

**TABLE 3-1**

**PROCESS EQUIPMENT AND INSTRUMENT LIST – HOT SPOT NO. 2A**
**REMEDIAL DESIGN**
**OPERABLE UNIT 9, SITE 59**
**NAVAL AIR STATION CECIL FIELD**
**JACKSONVILLE, FLORIDA**


| Item Name | Item Number | Description |
|---|---|---|
| Pre-Filter Pressure Gauge | PI-2A1-1<br>PI-2A2-1 | • Pressure gauge (0 to 30 psi)<br>• Model: Bourdon Tube; stainless steel or plastic |
| Post-Filter Pressure Gauge | PI-2A1-2<br>PI-2A2-2 | • Pressure gauge (0 to 30 psi)<br>• Model: Bourdon Tube; stainless steel or plastic |
| Post-Mixer Pressure Gauge | P -2A1-3<br>PI-2A2-3 | • Pressure gauge (0 to 30 psi)<br>• Model: Bourdon Tube; stainless steel or plastic |
| Injection Pressure Gauge | PI-2A1-4<br>PI-2A2-4 | • Pressure gauge (0 to 30 psi)<br>• Model: Bourdon Tube; stainless steel or plastic |

Notes
1 - The functions of each extraction well flow rate meter and flow totalizer may be combined into a single device.

**TABLE 3-2**

**PROCESS EQUIPMENT AND INSTRUMENT LIST – HOT SPOT NO. 2B**
**REMEDIAL DESIGN**
**OPERABLE UNIT 9, SITE 59**
**NAVAL AIR STATION CECIL FIELD**
**JACKSONVILLE, FLORIDA**


| Item Name | Item Number | Description |
|---|---|---|
| Filter | F-2B1-1<br>F-2B2-1 | • Cartridge filter with replaceable cartridges (5-micron initially, then 50-micron)<br>• Flow rate range: 1 to 10 gpm<br>• Polypropylene housing<br>• Size for 10-inch filters |
| Extraction Well Pump | P-2B1-1<br>P-2B2-1 | • Type: submersible<br>• Rating: 3 gpm @ 115 feet TH<br>• Motor: 1/3 HP<br>• Model: Grundfos 5SQ03A-90, 1-inch NPT (or equal) |
| Sodium Lactate Feed Pump | P-2B1-2<br>P-2B2-2 | • Type: chemical metering pump<br>• Rating: 1.0 GPH max; 110 psi; 1:100 turndown<br>• Model: LMI P051-498SI, PVC liquid end, 0.375-inch OD tubing, 120 AC plug end (or equal)<br>• Include combination valve for anti-siphon, pressure relief, back pressure, and drain |
| Sodium Bicarbonate Feed Pump | P-2B1-3<br>P-2B2-3 | • Type: chemical metering pump<br>• Rating: 4 GPH max; 100 psi; 1:100 turndown<br>• Model: LMI C121-468SI, PVC liquid end, 0.375-inch OD tubing; 120 AC plug end (or equal)<br>• Include combination valve for anti-siphon, pressure relief, back pressure, and drain |
| Sodium Lactate Solution Tank Mixer | M-2B1-1<br>Common | • Type: high-speed, propeller type<br>• Configuration: angle-mounted<br>• Motor: 1/3 HP<br>• Model: Neptune JD-2.0 (or equal) |
| Sodium Bicarbonate Solution Tank Mixer | M-2B1-2<br>M-2B2-2 | • Type: high-speed, propeller type<br>• Configuration: angle-mounted<br>• Motor: 1/3 HP<br>• Model: Neptune JD-2.0 (or equal) |
| Static Mixer | SM-2B1-1<br>SM-2B2-1 | • Type: inline, static, 1-inch diameter<br>• Configuration: threaded ends<br>• Material: PVC, clear<br>• Model: Koflo 328 – 6 element (or equal) |

**TABLE 3-2**

**PROCESS EQUIPMENT AND INSTRUMENT LIST – HOT SPOT NO. 2B**
**REMEDIAL DESIGN**
**OPERABLE UNIT 9, SITE 59**
**NAVAL AIR STATION CECIL FIELD**
**JACKSONVILLE, FLORIDA**


| Item Name | Item Number | Description |
|---|---|---|
| Sodium Lactate Solution Tank | T-2B1-1<br>Common | • Configuration: vertical, cylindrical, open-top with lid<br>• Features: mixer mount or stand<br>• Material: HDPE<br>• Dimensions: 31-inch diameter x 48-inch SSH – 150 gallons |
| Sodium Bicarbonate Solution Tank | T-2B1-2<br>T-2B2-2 | • Configuration: vertical, cylindrical, open-top with lid<br>• Features: mixer mount or stand<br>• Material: HDPE<br>• Dimensions: 42-inch diameter x 48-inch SSH – 275 gallons |
| Upstream Control Valve | CV-2B1-1<br>CV-2B2-1 | • Type: globe<br>• Material: PVC |
| Downstream Control Valve | CV-2B1-2<br>CV-2B2-2 | • Type: globe<br>• Material: PVC |
| System Control Panel | CP-2B1-1<br>Common | NEMA 4 enclosure with face-mounted instruments and controls. Features:<br>• Extraction Well Pump HO switches and run time meters<br>• HOA switches for sodium lactate feed pumps<br>• HOA switches for sodium bicarbonate feed pumps<br>• HO switch for sodium lactate mixer<br>• HO switches for sodium bicarbonate mixers |
| Extraction Well Flow Rate Meter (1) | FI-2B1-1<br>FI-2B2-1 | • Paddle wheel with flow rate indicator in gpm<br>• Range: 1 to 5 gpm |
| Injection Well Flow Rate Meter | FI-2B1-2<br>FI-2B2-2 | • Paddle wheel with flow rate indicator<br>• Range: 0.5 to 5 gpm |
| Injection Well Flow Rate Meter | FI-2B1-3<br>FI-2B2-3 | • Paddle wheel with flow rate indicator<br>• Range: 0.5 to 5 gpm |
| Extraction Well Flow Totalizer (1) | FQI-2B1-1<br>FQI-2B2-1 | • Jet meter with totalizer and flow rate indicators<br>• Vendor: Hays (or equal) |
| Extraction Well Pump Run Time Meter | KQI-2B1-1<br>KQI-2B2-1 | • Odometer-type read out, in hours and tenths of hours |

**TABLE 3-2**

**PROCESS EQUIPMENT AND INSTRUMENT LIST – HOT SPOT NO. 2B**
**REMEDIAL DESIGN**
**OPERABLE UNIT 9, SITE 59**
**NAVAL AIR STATION CECIL FIELD**
**JACKSONVILLE, FLORIDA**


| Item Name | Item Number | Description |
|---|---|---|
| Pre-Filter Pressure Gauge | PI-2B1-1<br>PI-2B2-1 | • Pressure gauge (0 to 30 psi)<br>• Model: Bourdon Tube; stainless steel or plastic |
| Post-Filter Pressure Gauge | PI-2B1-2<br>PI-2B2-2 | • Pressure gauge (0 to 30 psi)<br>• Model: Bourdon Tube; stainless steel or plastic |
| Post-Mixer Pressure Gauge | PI-2B1-3<br>PI-2B2-3 | • Pressure gauge (0 to 30 psi)<br>• Model: Bourdon Tube; stainless steel or plastic |
| Injection Pressure Gauge | PI-2B1-4<br>PI-2B2-4 | • Pressure gauge (0 to 30 psi)<br>• Model: Bourdon Tube; stainless steel or plastic |

Notes
1 - The functions of each extraction well flow rate meter and flow totalizer may be combined into a single device.

**TABLE 3-3**

**PROCESS EQUIPMENT AND INSTRUMENT LIST – HOT SPOT NO. 3**
**REMEDIAL DESIGN**
**OPERABLE UNIT 9, SITE 59**
**NAVAL AIR STATION CECIL FIELD**
**JACKSONVILLE, FLORIDA**


| Item Name | Item Number | Description |
|---|---|---|
| Filter | F-31-1<br>F-32-1 | • Cartridge filter with replaceable cartridges (5-micron initially, then 50-micron)<br>• Flow rate range: 1 to 10 gpm<br>• Polypropylene housing<br>• Size for 10-inch filters |
| Extraction Well Pump | P-31-1<br>P-32-1 | • Type: submersible<br>• Rating: 2 gpm @ 125 feet TH<br>• Motor: 1/3 HP<br>• Model: Grundfos 5SQ03A-90, 1-inch NPT (or equal) |
| Sodium Lactate Feed Pump | P-31-2<br>P-32-2 | • Type: chemical metering pump<br>• Rating: 1.0 GPH max; 110 psi; 1:100 turndown<br>• Model: LMI P051-498SI, PVC liquid end, 0.375-inch OD tubing, 120 AC plug end (or equal)<br>• Include combination valve for anti-siphon, pressure relief, back pressure, and drain |
| Sodium Bicarbonate Feed Pump | P-31-3<br>P-32-3 | • Type: chemical metering pump<br>• Rating: 2.5 GPH max; 150 psi; 1:100 turndown<br>• Model: LMI C111-468SI, PVC liquid end, 0.375-inch OD tubing; 120 AC plug end (or equal)<br>• Include combination valve for anti-siphon, pressure relief, back pressure, and drain |
| Sodium Lactate Solution Tank Mixer | M-31-1<br>Common | • Type: high-speed, propeller type<br>• Configuration: angle-mounted<br>• Motor: 1/3 HP<br>• Model: Neptune JD-2.0 (or equal) |
| Sodium Bicarbonate Solution Tank Mixer | M-31-2<br>M-32-2 | • Type: high-speed, propeller type<br>• Configuration: angle-mounted<br>• Motor: 1/3 HP<br>• Model: Neptune JD-2.0 (or equal) |
| Static Mixer | SM-31-1<br>SM-32-1 | • Type: inline, static, 1-inch diameter<br>• Configuration: threaded ends<br>• Material: PVC, clear<br>• Model: Koflo 328 – 6 element (or equal) |

**TABLE 3-3**

**PROCESS EQUIPMENT AND INSTRUMENT LIST – HOT SPOT NO. 3**
**REMEDIAL DESIGN**
**OPERABLE UNIT 9, SITE 59**
**NAVAL AIR STATION CECIL FIELD**
**JACKSONVILLE, FLORIDA**


| Item Name | Item Number | Description |
|---|---|---|
| Sodium Lactate Solution Tank | T-31-1<br>Common | • Configuration: vertical, cylindrical, open-top with lid<br>• Features: mixer mount or stand<br>• Material: HDPE<br>• Dimensions: 36-inch diameter x 48-inch SSH – 200 gallons |
| Sodium Bicarbonate Solution Tank | T-31-2<br>T-32-2 | • Configuration: vertical, cylindrical, open-top with lid<br>• Features: mixer mount or stand<br>• Material: HDPE<br>• Dimensions: 36-inch diameter x 48-inch SSH – 200 gallons |
| Upstream Control Valve | CV-31-1<br>CV-32-1 | • Type: globe<br>• Material: PVC |
| Downstream Control Valve | CV-31-2<br>CV-32-2 | • Type: globe<br>• Material: PVC |
| System Control Panel | CP-31-1<br>Common | NEMA 4 enclosure with face-mounted instruments and controls.<br>Features:<br>• Extraction Well Pump HO switches and run time meters<br>• HOA switches for sodium lactate feed pumps<br>• HOA switches for sodium bicarbonate feed pumps<br>• HO switch for sodium lactate mixer<br>• HO switches for sodium bicarbonate mixers |
| Extraction Well Flow Rate Meter (1) | FI-31-1<br>FI-32-1 | • Paddle wheel with flow rate indicator in gpm<br>• Range: 0.5 to 5 gpm |
| Injection Well Flow Rate Meter | FI-31-2<br>FI-32-2 | • Paddle wheel with flow rate indicator<br>• Range: 0.5 to 5 gpm |
| Extraction Well Flow Totalizer (1) | FQI-31-1<br>FQI-32-1 | • Jet meter with totalizer and flow rate indicators<br>• Vendor: Hays (or equal) |
| Extraction Well Pump Run Time Meter | KQI-31-1<br>KQI-32-1 | • Odometer-type read out, in hours and tenths of hours |
| Pre-Filter Pressure Gauge | PI-31-1<br>PI-32-1 | • Pressure gauge (0 to 30 psi)<br>• Model: Bourdon Tube; stainless steel or plastic |

**TABLE 3-3**

**PROCESS EQUIPMENT AND INSTRUMENT LIST – HOT SPOT NO. 3**
**REMEDIAL DESIGN**
**OPERABLE UNIT 9, SITE 59**
**NAVAL AIR STATION CECIL FIELD**
**JACKSONVILLE, FLORIDA**


| Item Name | Item Number | Description |
|---|---|---|
| Post-Filter Pressure Gauge | PI-31-2<br>PI-32-2 | • Pressure gauge (0 to 30 psi)<br>• Model: Bourdon Tube; stainless steel or plastic |
| Post-Mixer Pressure Gauge | PI-31-3<br>PI-32-3 | • Pressure gauge (0 to 30 psi)<br>• Model: Bourdon Tube; stainless steel or plastic |
| Injection Pressure Gauge | PI-31-4<br>PI-32-4 | • Pressure gauge (0 to 30 psi)<br>• Model: Bourdon Tube; stainless steel or plastic |
| Filter | F-33-1<br>F-34-1 | • Cartridge filter with replaceable cartridges (5-micron initially, then 50-micron)<br>• Flow rate range: 1 to 10 gpm<br>• Polypropylene housing<br>• Size for 10-inch filters |
| Extraction Well Pump | P-33-1<br>P-34-1 | • Type: submersible<br>• Rating: 1 gpm @ 135 feet TH<br>• Motor: 1/3 HP<br>• Model: Grundfos 5SQ03A-90, 1-inch NPT (or equal) |
| Sodium Lactate Feed Pump | P-33-2<br>P-34-2 | • Type: chemical metering pump<br>• Rating: 0.42 GPH max; 110 psi; 1:100 turndown<br>• Model: LMI P031-498SI, PVC liquid end, 0.375-inch OD tubing, 120 AC plug end (or equal)<br>• Include combination valve for anti-siphon, pressure relief, back pressure, and drain |
| Sodium Bicarbonate Feed Pump | P-33-3<br>P-34-3 | • Type: chemical metering pump<br>• Rating: 2.5 GPH max; 150 psi; 1:100 turndown<br>• Model: LMI C111-468SI, PVC liquid end, 0.375-inch OD tubing; 120 AC plug end (or equal)<br>• Include combination valve for anti-siphon, pressure relief, back pressure, and drain |
| Sodium Lactate Solution Tank Mixer | M-33-1<br>Common | • Type: high-speed, propeller type<br>• Configuration: angle-mounted<br>• Motor: 1/4 HP<br>• Model: Neptune BN-1.0 (or equal) |

**TABLE 3-3**

**PROCESS EQUIPMENT AND INSTRUMENT LIST – HOT SPOT NO. 3**
**REMEDIAL DESIGN**
**OPERABLE UNIT 9, SITE 59**
**NAVAL AIR STATION CECIL FIELD**
**JACKSONVILLE, FLORIDA**


| Item Name | Item Number | Description |
|---|---|---|
| Sodium Bicarbonate Solution Tank Mixer | M-33-2<br>Common | • Type: high-speed, propeller type<br>• Configuration: angle-mounted<br>• Motor: 1/3 HP<br>• Model: Neptune JD-2.0 (or equal) |
| Static Mixer | SM-33-1<br>SM-34-1 | • Type: inline, static, 1-inch diameter<br>• Configuration: threaded ends<br>• Material: PVC, clear<br>• Model: Koflo 328 – 6 element (or equal) |
| Sodium Lactate Solution Tank | T-33-1<br>Common | • Configuration: vertical, cylindrical, open-top with lid<br>• Features: mixer mount or stand<br>• Material: HDPE<br>• Dimensions: 28-inch diameter x 42-inch SSH – 100 gallons |
| Sodium Bicarbonate Solution Tank | T-33-2<br>Common | • Configuration: vertical, cylindrical, open-top with lid<br>• Features: mixer mount or stand<br>• Material: HDPE<br>• Dimensions: 36-inch diameter x 48-inch SSH – 200 gallons |
| Upstream Control Valve | CV-33-1<br>CV-34-1 | • Type: globe<br>• Material: PVC |
| Downstream Control Valve | CV-33-2<br>CV-34-2 | • Type: globe<br>• Material: PVC |
| System Control Panel | CP-33-1<br>Common | NEMA 4 enclosure with face-mounted instruments and controls.<br>Features:<br>• Extraction Well Pump HO switches and run time meters<br>• HOA switches for sodium lactate feed pumps<br>• HOA switches for sodium bicarbonate feed pumps<br>• HO switch for sodium lactate mixer<br>• HO switches for sodium bicarbonate mixers |
| Extraction Well Flow Rate Meter (1) | FI-33-1<br>FI-34-1 | • Paddle wheel with flow rate indicator in gpm<br>• Range: 0.1 to 5 gpm |
| Extraction Well Flow Totalizer (1) | FQI-33-1<br>FQI-34-1 | • Jet meter with totalizer and flow rate indicators<br>• Vendor: Hays (or equal) |
| Extraction Well Pump Run Time | KQI-33-1<br>KQI-34-1 | • Odometer-type read out, in hours and tenths of hours |

**TABLE 3-3**

**PROCESS EQUIPMENT AND INSTRUMENT LIST – HOT SPOT NO. 3**
**REMEDIAL DESIGN**
**OPERABLE UNIT 9, SITE 59**
**NAVAL AIR STATION CECIL FIELD**
**JACKSONVILLE, FLORIDA**


| Item Name | Item Number | Description |
|---|---|---|
| Meter | | |
| Pre-Filter Pressure Gauge | PI-33-1<br>PI-34-1 | • Pressure gauge (0 to 30 psi)<br>• Model: Bourdon Tube; stainless steel or plastic |
| Post-Filter Pressure Gauge | PI-33-2<br>PI-34-2 | • Pressure gauge (0 to 30 psi)<br>• Model: Bourdon Tube; stainless steel or plastic |
| Post-Mixer Pressure Gauge | PI-33-3<br>PI-34-3 | • Pressure gauge (0 to 30 psi)<br>• Model: Bourdon Tube; stainless steel or plastic |
| Injection Pressure Gauge | PI-33-4<br>PI-34-4 | • Pressure gauge (0 to 30 psi)<br>• Model: Bourdon Tube; stainless steel or plastic |

Notes
1 - The functions of each extraction well flow rate meter and flow totalizer may be combined into a single device.

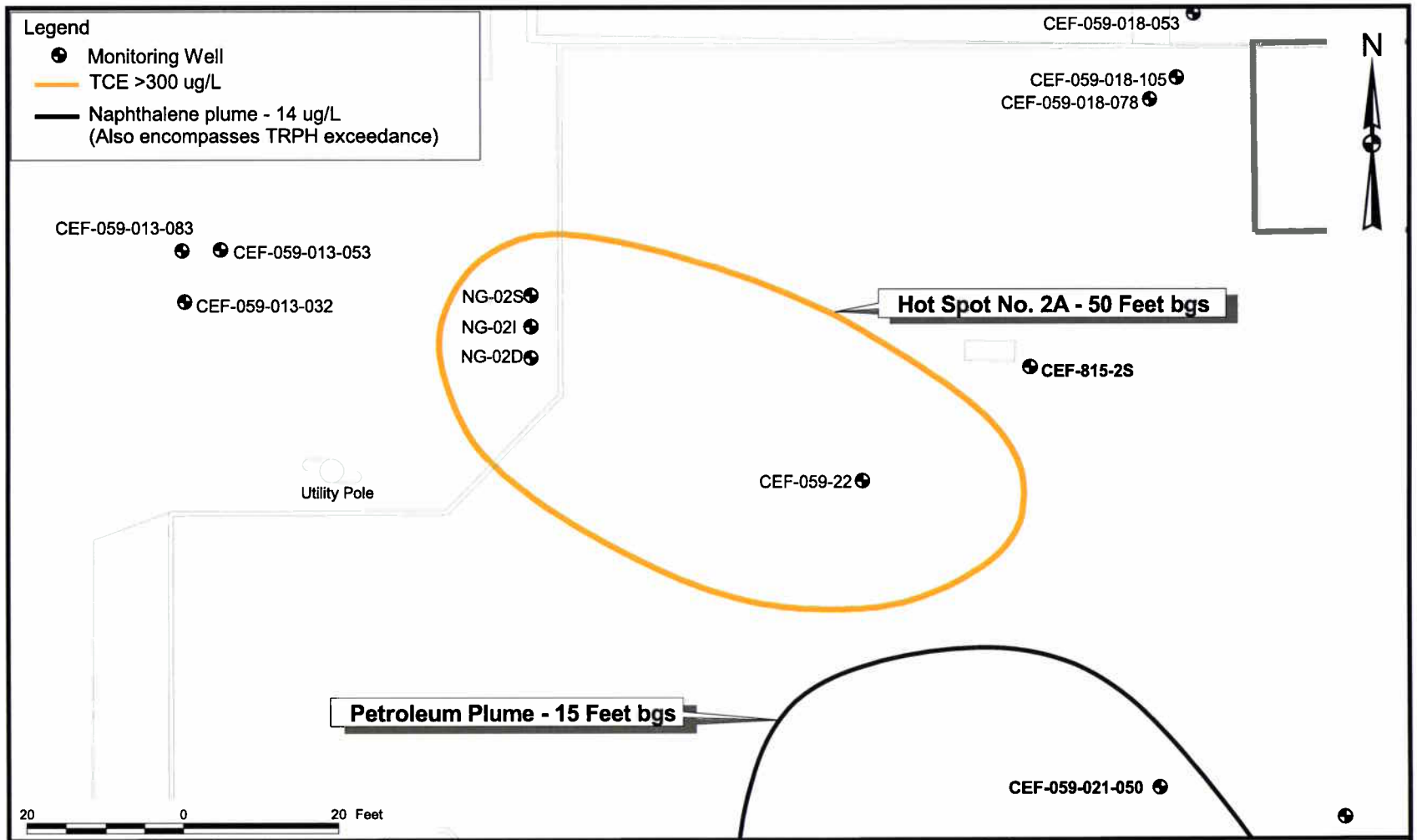


| | | | |
|---|---|---|---|
| DRAWN BY MJJ | DATE 06Feb07 | SITE LAYOUT - HOT SPOT No. 2A<br>OU 9, SITE 59<br>REMEDIAL DESIGN<br>NAVAL AIR STATION CECIL FIELD<br>JACKSONVILLE, FLORIDA | CONTRACT NUMBER 8925 |
| CHECKED BY | DATE | | APPROVED BY DATE 7/24/07 |
| COST/SCHEDULE-AREA | | | APPROVED BY DATE |
| SCALE AS NOTED | | | DRAWING NO. FIGURE 3-1 / REV 0 |

P:\GIS\NAS_CecilField\Site-59_Design.apr 12Mar07 MJJ Layout08

P:\GIS\NAS_CecilField\Site-59_Design.apr 12Mar07 MJJ Layout05

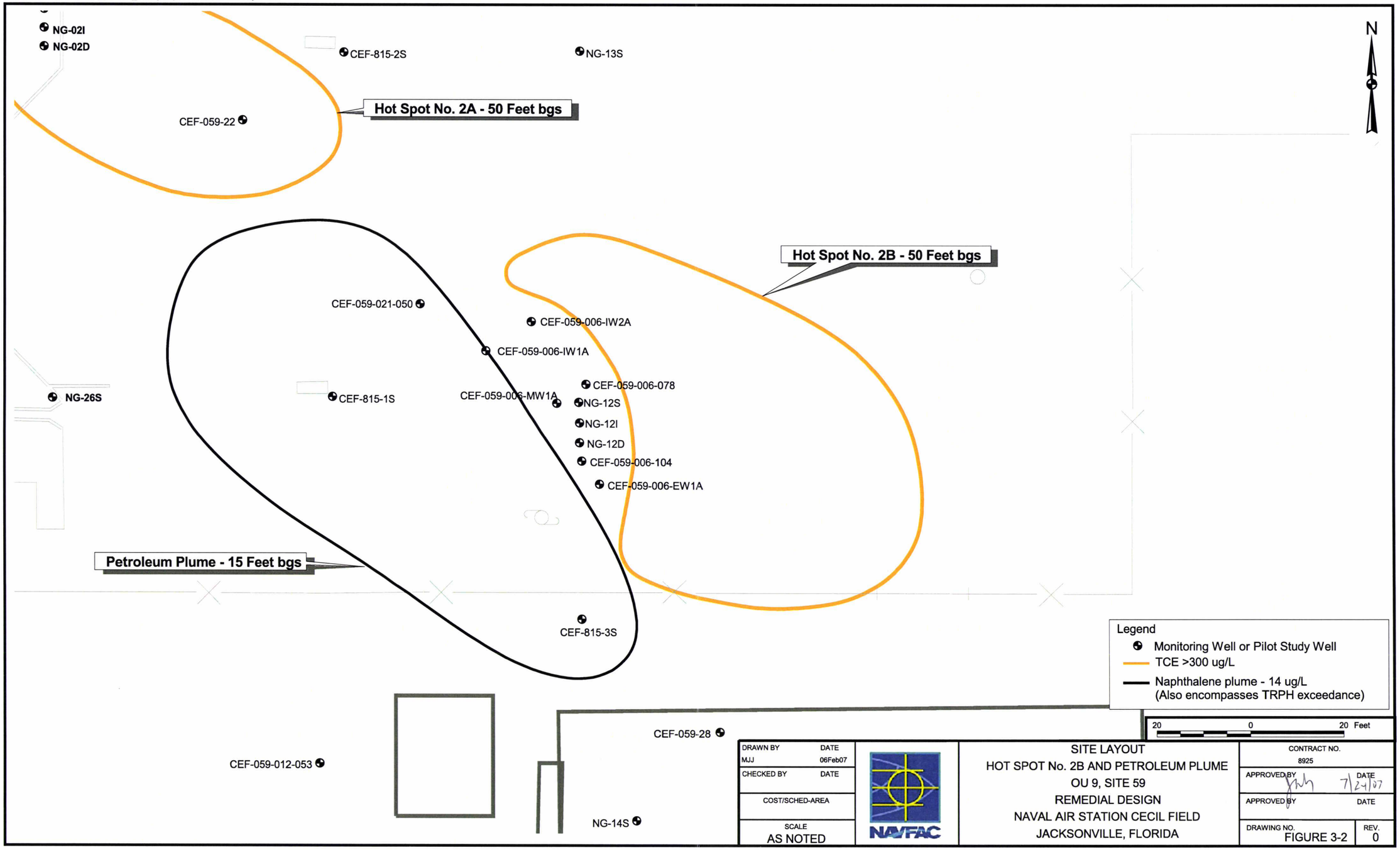


| | | | |
|---|---|---|---|
| DRAWN BY MJJ | DATE 06Feb07 | NAVFAC | SITE LAYOUT<br>HOT SPOT No. 2B AND PETROLEUM PLUME<br>OU 9, SITE 59<br>REMEDIAL DESIGN<br>NAVAL AIR STATION CECIL FIELD<br>JACKSONVILLE, FLORIDA |
| CHECKED BY | DATE | | |
| COST/SCHED-AREA | | | |
| SCALE AS NOTED | | | |

| | |
|---|---|
| CONTRACT NO. 8925 | |
| APPROVED BY | DATE 7/24/07 |
| APPROVED BY | DATE |
| DRAWING NO. FIGURE 3-2 | REV. 0 |

P:\GIS\NAS_CecilField\Site-59_Design.apr 12Mar07 MJJ Layout07

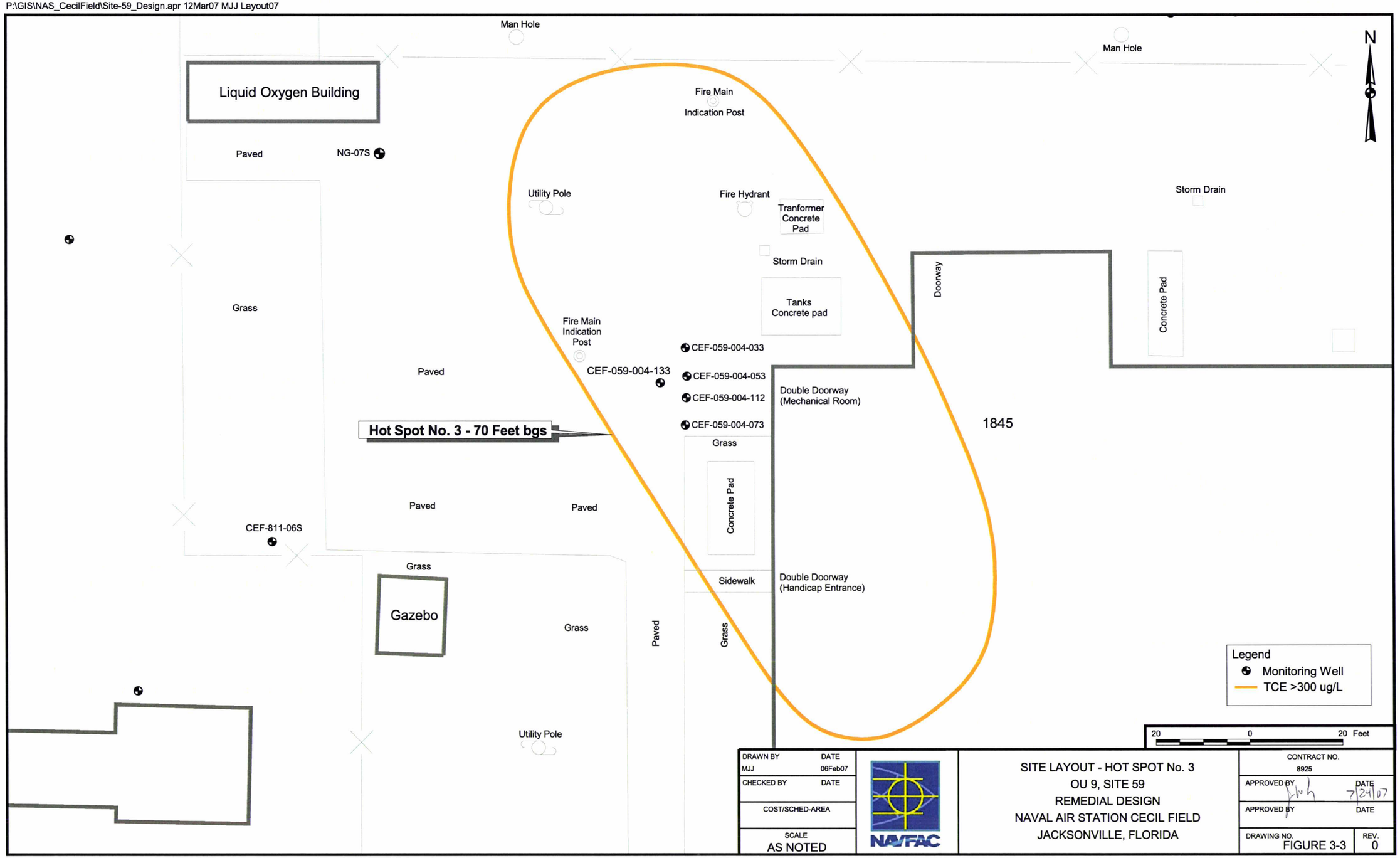


| DRAWN BY | DATE | | SITE LAYOUT - HOT SPOT No. 3 | CONTRACT NO. |
|---|---|---|---|---|
| MJJ | 06Feb07 | NAVFAC | OU 9, SITE 59 | 8925 |
| CHECKED BY | DATE | | REMEDIAL DESIGN | APPROVED BY / DATE: 7/24/07 |
| COST/SCHED-AREA | | | NAVAL AIR STATION CECIL FIELD | APPROVED BY / DATE |
| SCALE: AS NOTED | | | JACKSONVILLE, FLORIDA | DRAWING NO. FIGURE 3-3 / REV. 0 |

ACAD: 0064PF01.DWG 02/18/07 DT

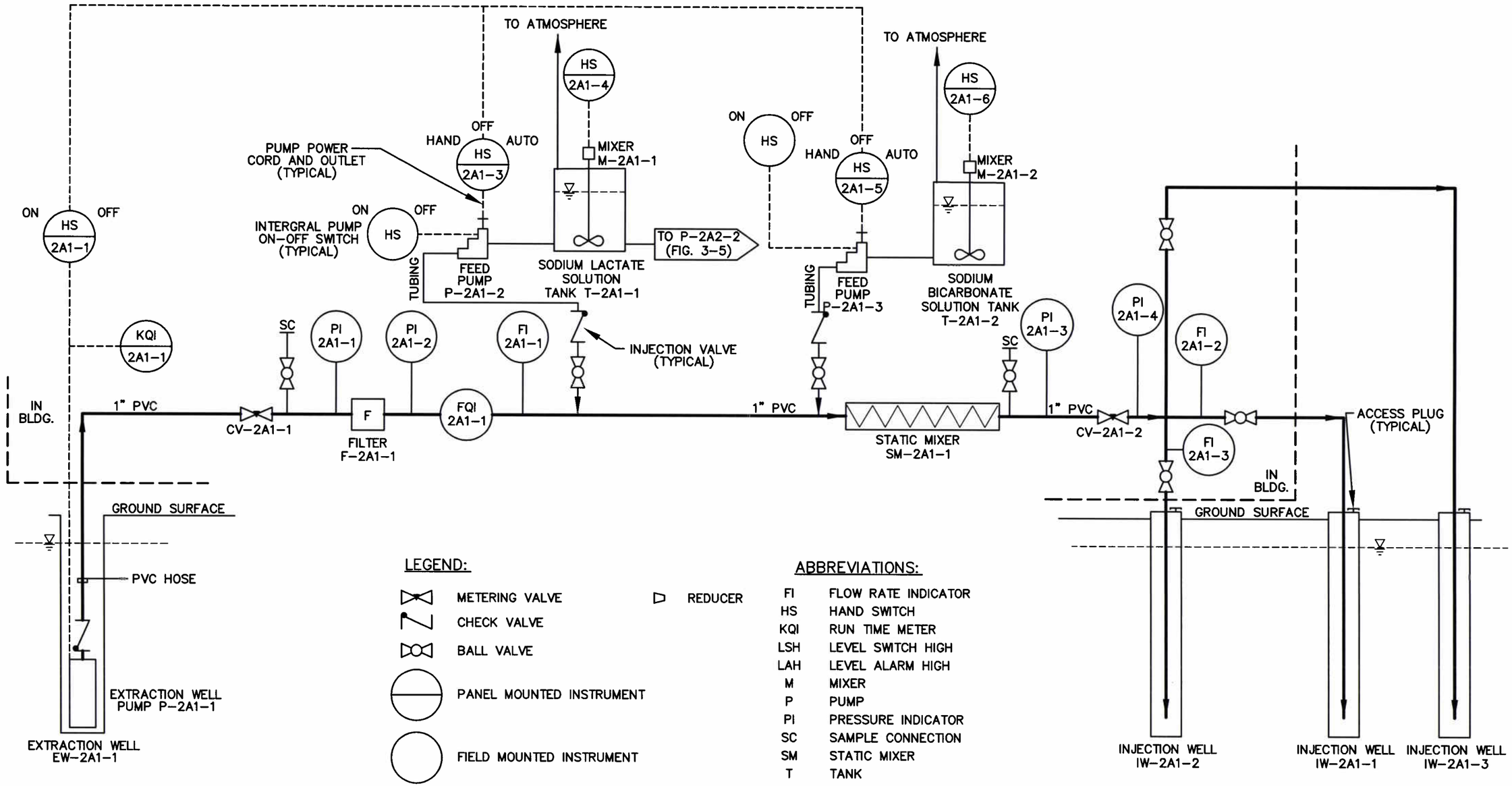


## LEGEND:

- METERING VALVE
- CHECK VALVE
- BALL VALVE
- PANEL MOUNTED INSTRUMENT
- FIELD MOUNTED INSTRUMENT
- WATER LEVEL
- METERING PUMP
- ELECTRICAL CONNECTION
- REDUCER

## ABBREVIATIONS:

| | |
|---|---|
| FI | FLOW RATE INDICATOR |
| HS | HAND SWITCH |
| KQI | RUN TIME METER |
| LSH | LEVEL SWITCH HIGH |
| LAH | LEVEL ALARM HIGH |
| M | MIXER |
| P | PUMP |
| PI | PRESSURE INDICATOR |
| SC | SAMPLE CONNECTION |
| SM | STATIC MIXER |
| T | TANK |

| | | |
|---|---|---|
| DRAWN BY DT | DATE 2/16/07 | PIPING AND INSTRUMENTATION DIAGRAM<br>HOT SPOT 2A, SYSTEM 1<br>REMEDIAL DESIGN<br>OU 9, SITE 59<br>NAS CECIL FIELD<br>JACKSONVILLE, FLORIDA |
| CHECKED BY | DATE | |
| REVISED BY | DATE | |
| SCALE AS NOTED | | |

NAVFAC

| | |
|---|---|
| CONTRACT NO. 0064 | |
| OWNER NO. 0000 | |
| APPROVED BY | DATE 7/24/07 |
| DRAWING NO. FIGURE 3-4 | REV. 0 |

FORM CADD NO. SBIV-RMDWG - REV 1 - 9/16/98

ACAD:0064PF02.dwg 02/18/07 DT

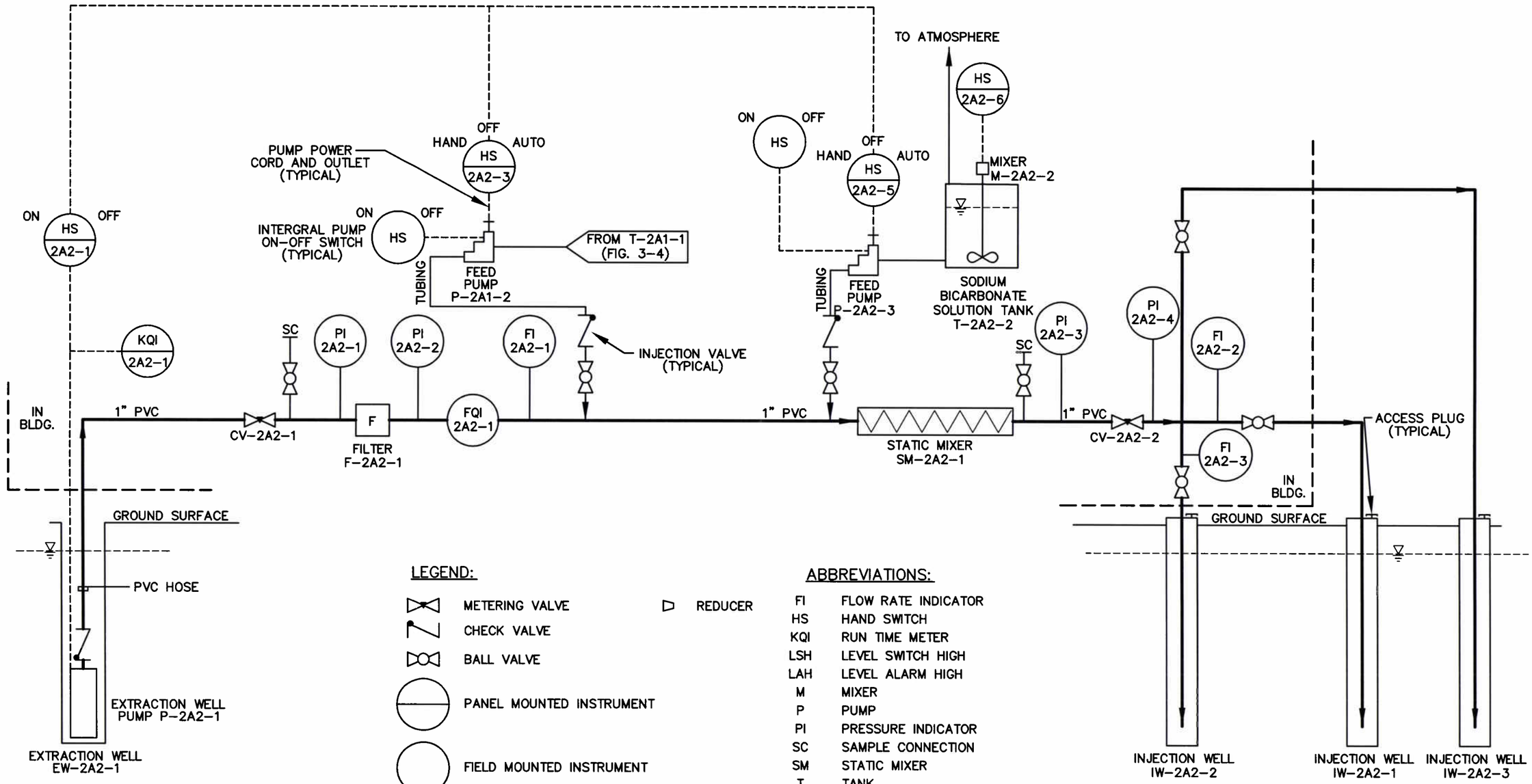


## LEGEND:

- METERING VALVE
- CHECK VALVE
- BALL VALVE
- PANEL MOUNTED INSTRUMENT
- FIELD MOUNTED INSTRUMENT
- WATER LEVEL
- METERING PUMP
- ELECTRICAL CONNECTION
- REDUCER

## ABBREVIATIONS:

| | |
|---|---|
| FI | FLOW RATE INDICATOR |
| HS | HAND SWITCH |
| KQI | RUN TIME METER |
| LSH | LEVEL SWITCH HIGH |
| LAH | LEVEL ALARM HIGH |
| M | MIXER |
| P | PUMP |
| PI | PRESSURE INDICATOR |
| SC | SAMPLE CONNECTION |
| SM | STATIC MIXER |
| T | TANK |

| | | |
|---|---|---|
| DRAWN BY DT | DATE 2/16/07 | PIPING AND INSTRUMENTATION DIAGRAM<br>HOT SPOT 2A, SYSTEM 2<br>REMEDIAL DESIGN<br>OU 9, SITE 59<br>NAS CECIL FIELD<br>JACKSONVILLE, FLORIDA |
| CHECKED BY | DATE | |
| REVISED BY | DATE | |
| SCALE AS NOTED | | |

NAVFAC

| | |
|---|---|
| CONTRACT NO. 0064 | |
| OWNER NO. 0000 | |
| APPROVED BY | DATE 7/24/07 |
| DRAWING NO. FIGURE 3-5 | REV. 0 |

FORM CADD NO. SDIV-RMDWG - REV 1 - 9/19/98

ACAD:0064PF01.DWG 02/18/07 DT

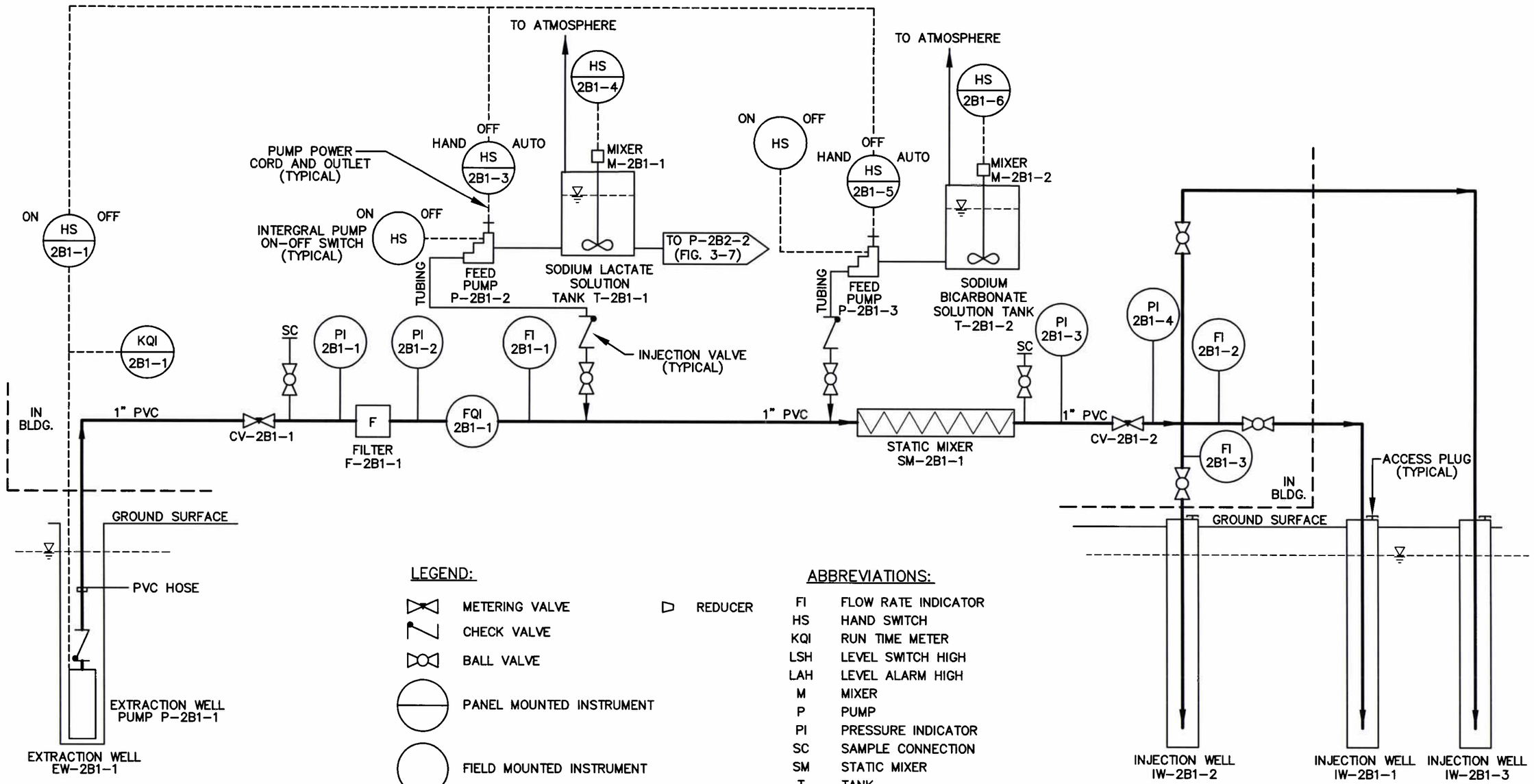


## LEGEND:

- METERING VALVE
- CHECK VALVE
- BALL VALVE
- PANEL MOUNTED INSTRUMENT
- FIELD MOUNTED INSTRUMENT
- WATER LEVEL
- METERING PUMP
- ELECTRICAL CONNECTION
- REDUCER

## ABBREVIATIONS:

| | |
|---|---|
| FI | FLOW RATE INDICATOR |
| HS | HAND SWITCH |
| KQI | RUN TIME METER |
| LSH | LEVEL SWITCH HIGH |
| LAH | LEVEL ALARM HIGH |
| M | MIXER |
| P | PUMP |
| PI | PRESSURE INDICATOR |
| SC | SAMPLE CONNECTION |
| SM | STATIC MIXER |
| T | TANK |

| | | |
|---|---|---|
| DRAWN BY DT | DATE 2/16/07 | PIPING AND INSTRUMENTATION DIAGRAM<br>HOT SPOT 2B, SYSTEM 1<br>REMEDIAL DESIGN<br>OU 9, SITE 59<br>NAS CECIL FIELD<br>JACKSONVILLE, FLORIDA |
| CHECKED BY | DATE | |
| REVISED BY | DATE | |
| SCALE AS NOTED | | |

NAVFAC

| | |
|---|---|
| CONTRACT NO. 0064 | |
| OWNER NO. 0000 | |
| APPROVED BY | DATE 7/24/07 |
| DRAWING NO. FIGURE 3-6 | REV. 0 |

FORM CADD NO. SDIV-RHDWG - REV 1 - 9/16/98

ACAD: 0064PF04.dwg 02/18/07 DT

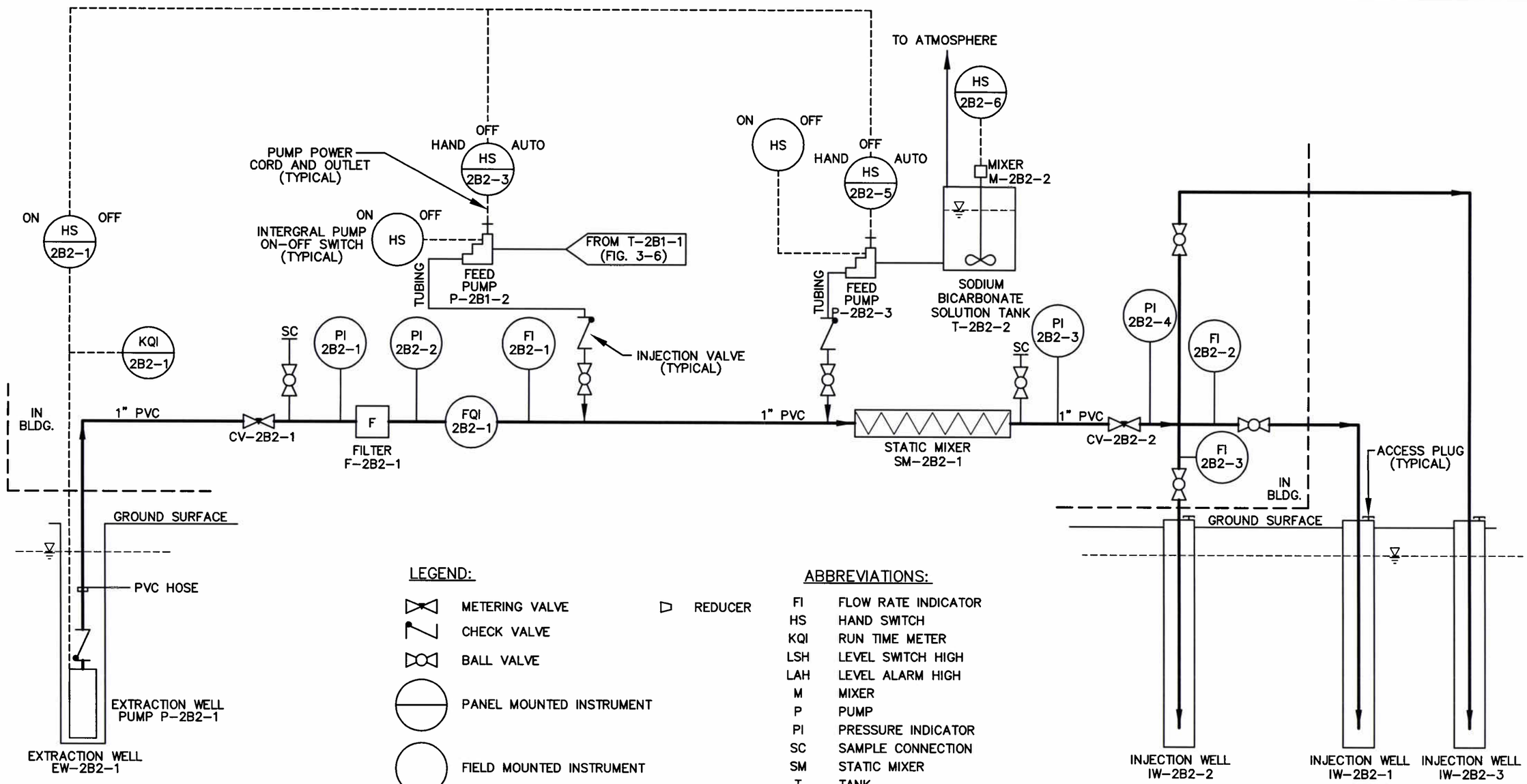


LEGEND:

- METERING VALVE
- CHECK VALVE
- BALL VALVE
- PANEL MOUNTED INSTRUMENT
- FIELD MOUNTED INSTRUMENT
- WATER LEVEL
- METERING PUMP
- ELECTRICAL CONNECTION
- REDUCER

ABBREVIATIONS:

| | |
|---|---|
| FI | FLOW RATE INDICATOR |
| HS | HAND SWITCH |
| KQI | RUN TIME METER |
| LSH | LEVEL SWITCH HIGH |
| LAH | LEVEL ALARM HIGH |
| M | MIXER |
| P | PUMP |
| PI | PRESSURE INDICATOR |
| SC | SAMPLE CONNECTION |
| SM | STATIC MIXER |
| T | TANK |

| | |
|---|---|
| DRAWN BY DT | DATE 2/16/07 |
| CHECKED BY | DATE |
| REVISED BY | DATE |
| SCALE AS NOTED | |

NAVFAC

PIPING AND INSTRUMENTATION DIAGRAM
HOT SPOT 2B, SYSTEM 2
REMEDIAL DESIGN
OU 9, SITE 59
NAS CECIL FIELD
JACKSONVILLE, FLORIDA

| | |
|---|---|
| CONTRACT NO. 0064 | |
| OWNER NO. 0000 | |
| APPROVED BY | DATE 7/24/07 |
| DRAWING NO. FIGURE 3-7 | REV. 0 |

FORM CADD NO. SDIV-RHDWG - REV 1 - 9/16/98

ACAD: 0064PF05.dwg 02/18/07 DT

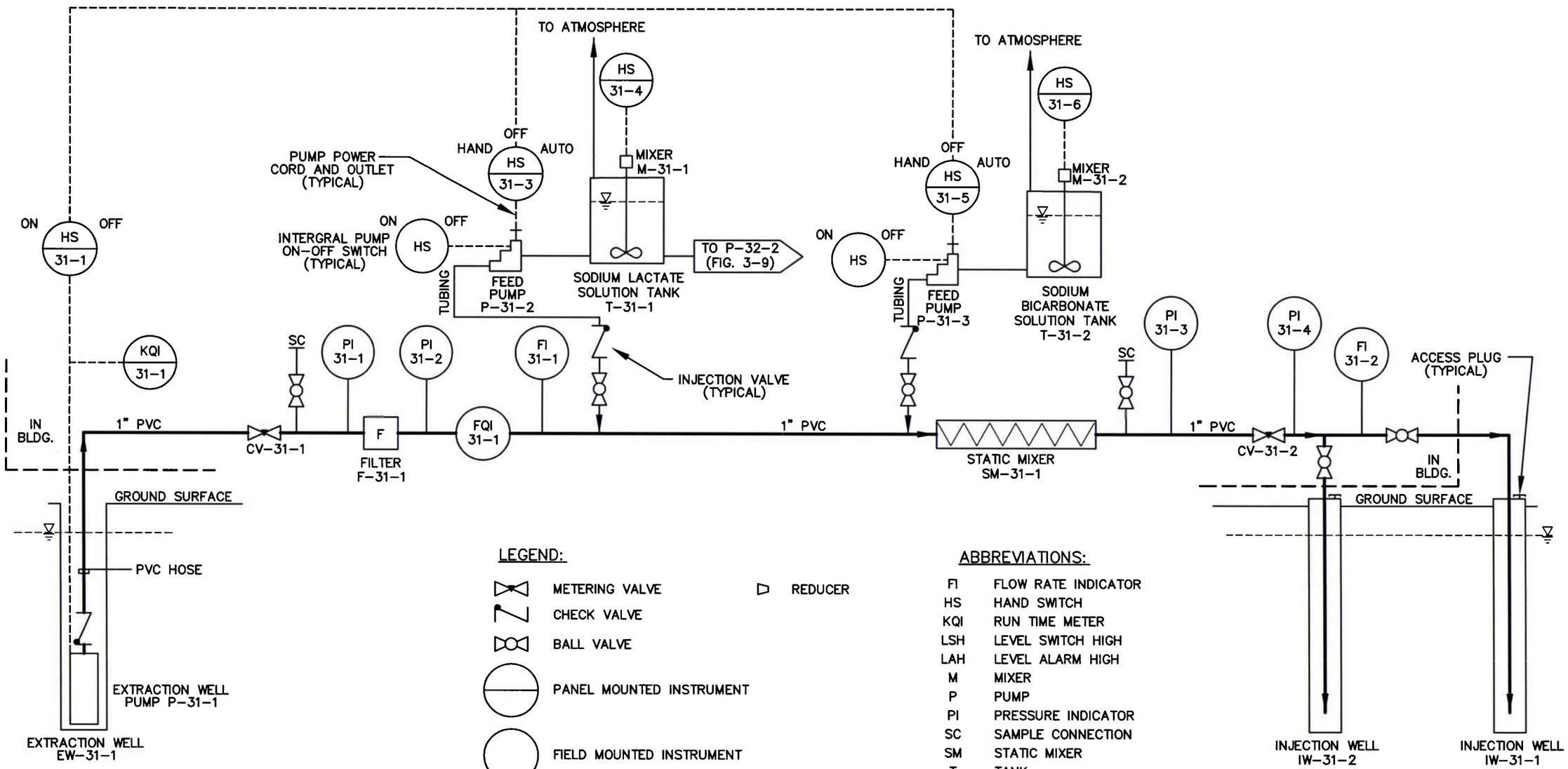


| | | | |
|---|---|---|---|
| DRAWN BY DT | DATE 2/16/07 | PIPING AND INSTRUMENTATION DIAGRAM<br>HOT SPOT 3, SYSTEM 1<br>REMEDIAL DESIGN<br>OU 9, SITE 59<br>NAS CECIL FIELD<br>JACKSONVILLE, FLORIDA | CONTRACT NO. 0064 |
| CHECKED BY | DATE | | OWNER NO. 0000 |
| REVISED BY | DATE | | APPROVED BY / DATE 7/24/07 |
| SCALE AS NOTED | | | DRAWING NO. FIGURE 3-8 / REV. 0 |

NAVFAC

FORM CADD NO. SDIV-RHDWS - REV 1 - 9/16/98

ACAD:0064PF06.dwg 03/01/07 MF PIT

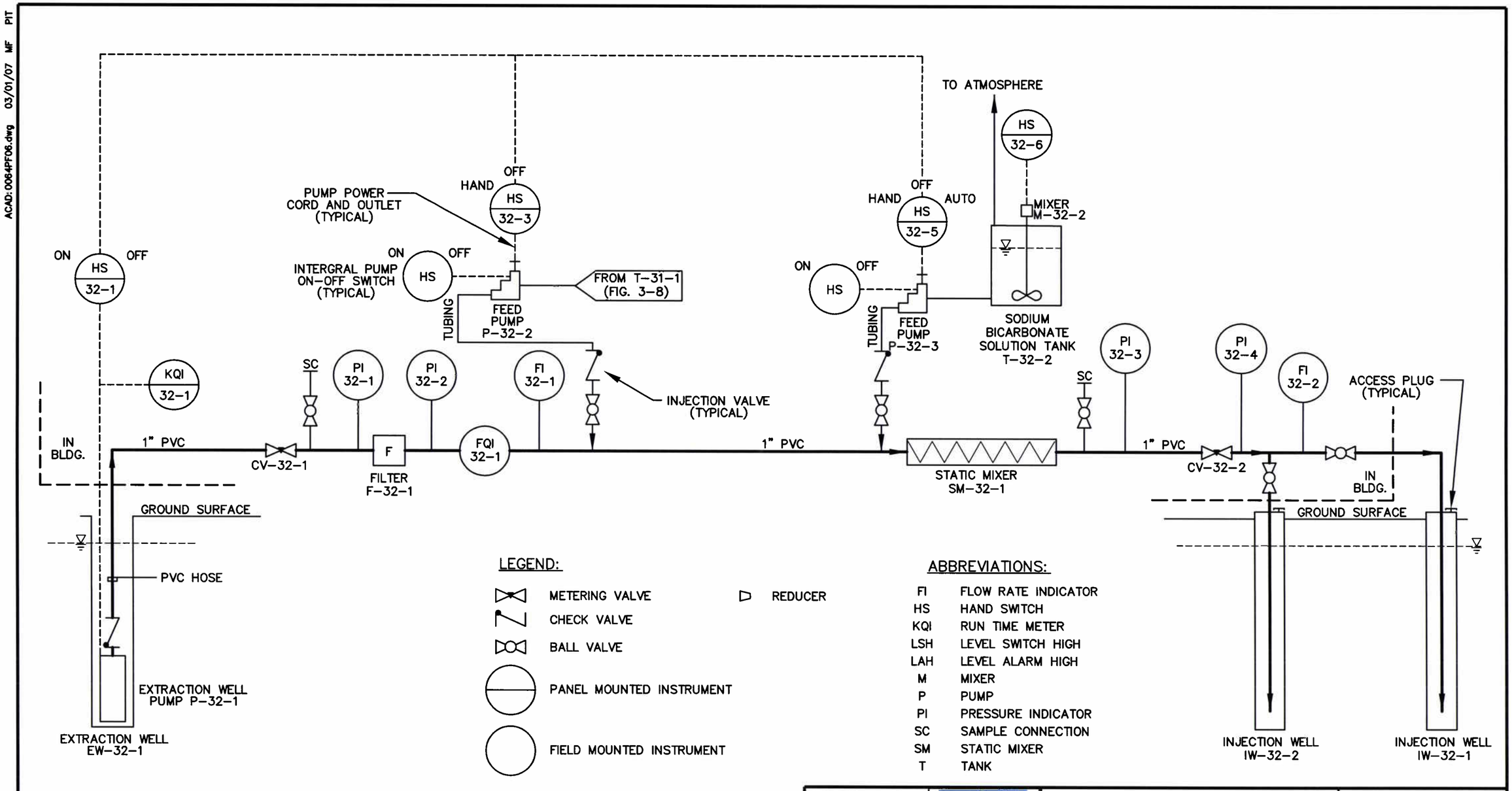


| | | | |
|---|---|---|---|
| DRAWN BY DT | DATE 2/16/07 | PIPING AND INSTRUMENTATION DIAGRAM<br>HOT SPOT 3, SYSTEM 2<br>REMEDIAL DESIGN<br>OU 9, SITE 59<br>NAS CECIL FIELD<br>JACKSONVILLE, FLORIDA | CONTRACT NO. 0064 |
| CHECKED BY | DATE | | OWNER NO. 0000 |
| REVISED BY | DATE | | APPROVED BY / DATE 7/24/07 |
| SCALE AS NOTED | NAVFAC | | DRAWING NO. FIGURE 3-9 / REV. 0 |

FORM CADD NO. SDIV-RMDVS - REV 1 - 9/19/98

ACAD:0064PF07.dwg 02/18/07 DT

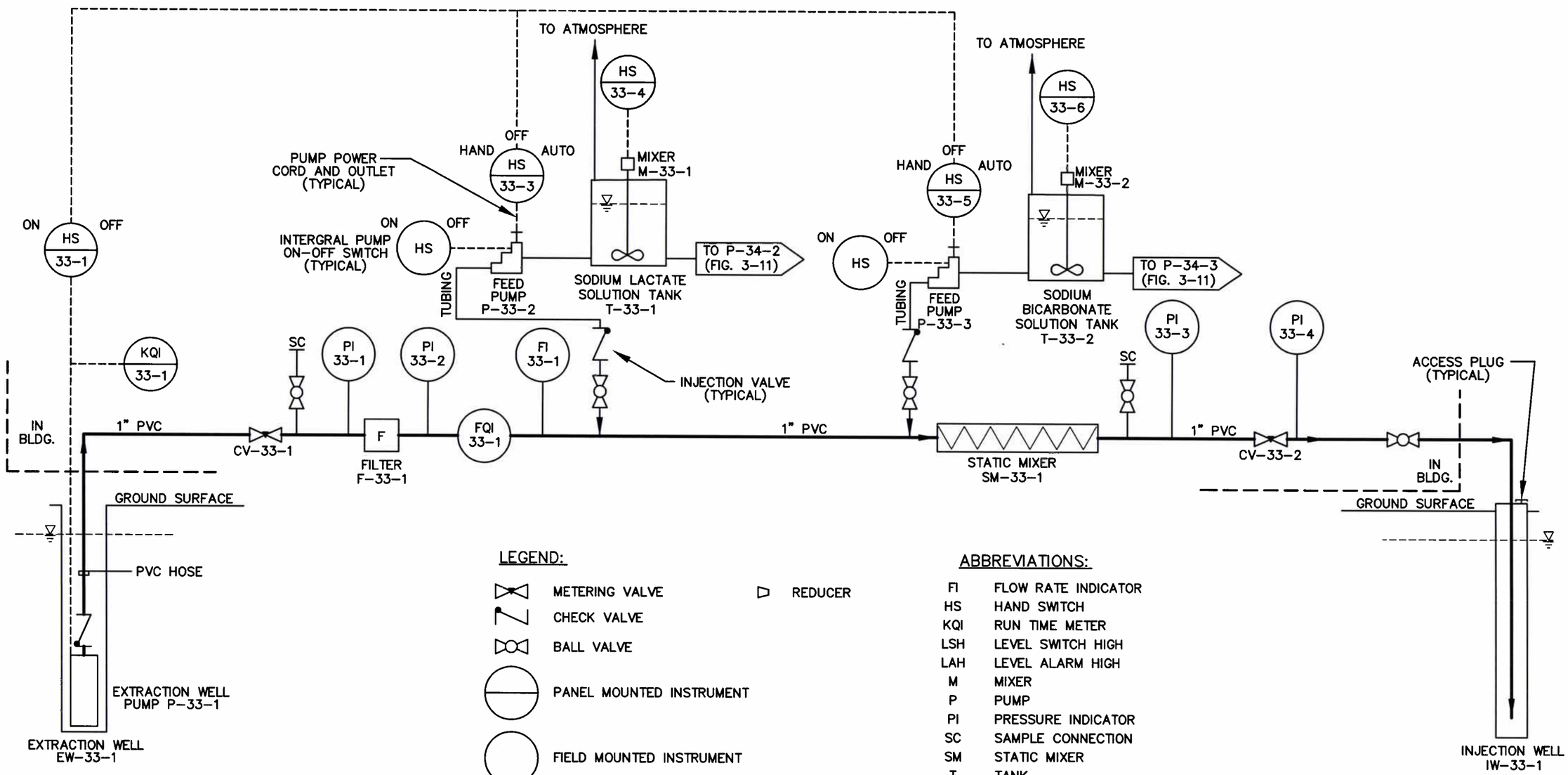


| | | | |
|---|---|---|---|
| DRAWN BY DT | DATE 2/16/07 | PIPING AND INSTRUMENTATION DIAGRAM<br>HOT SPOT 3, SYSTEM 3<br>REMEDIAL DESIGN<br>OU 9, SITE 59<br>NAS CECIL FIELD<br>JACKSONVILLE, FLORIDA | CONTRACT NO. 0064 |
| CHECKED BY | DATE | | OWNER NO. 0000 |
| REVISED BY | DATE | | APPROVED BY DATE 7/24/07 |
| SCALE AS NOTED | | | DRAWING NO. FIGURE 3-10 / REV. 0 |

FORM CADD NO. SDIV-AHDWG - REV 1 - 9/16/98

ACAD: 0064PF08.dwg 02/18/07 DT

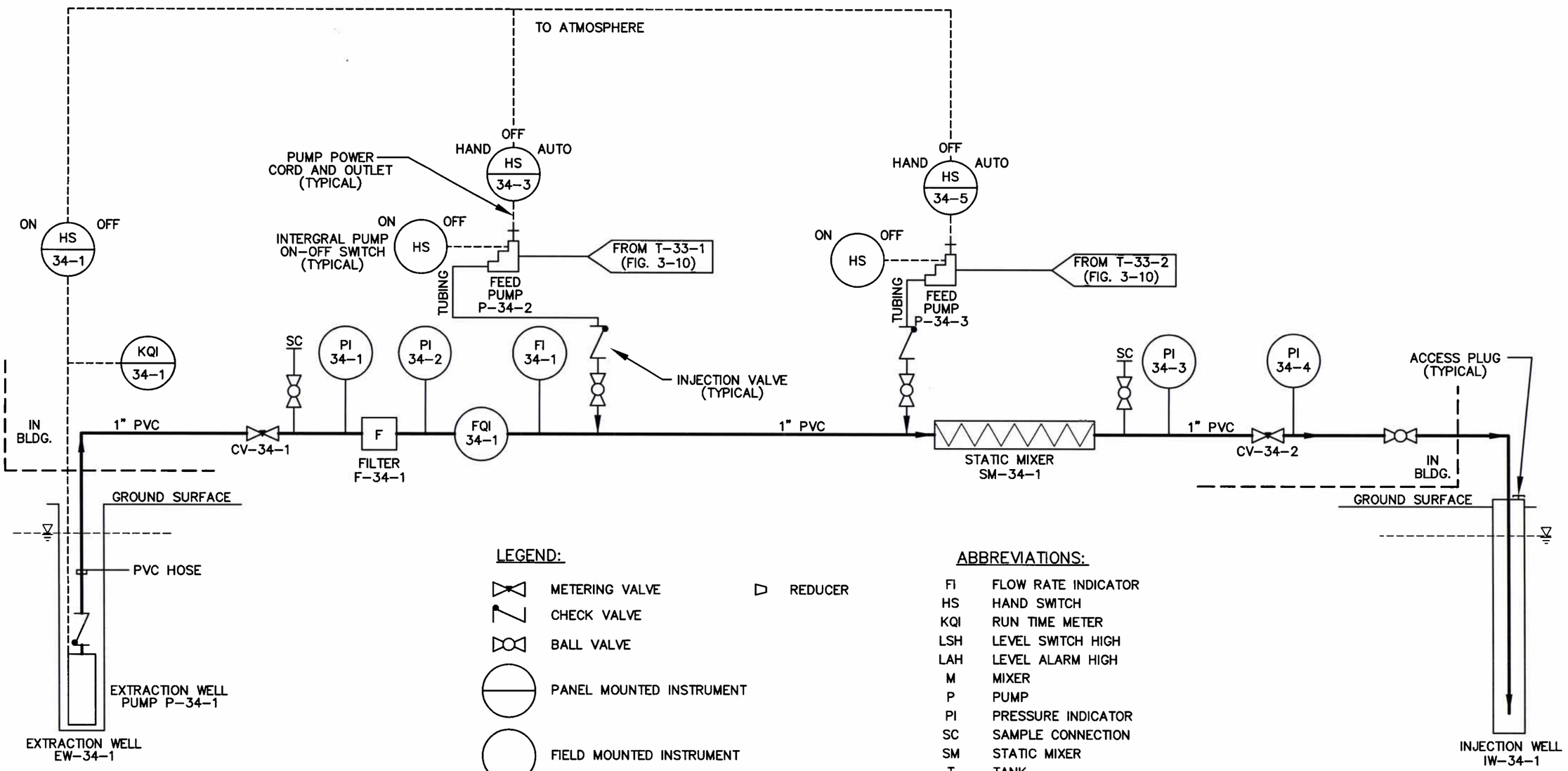


LEGEND:

- METERING VALVE
- CHECK VALVE
- BALL VALVE
- PANEL MOUNTED INSTRUMENT
- FIELD MOUNTED INSTRUMENT
- WATER LEVEL
- METERING PUMP
- ELECTRICAL CONNECTION
- REDUCER

ABBREVIATIONS:

| | |
|---|---|
| FI | FLOW RATE INDICATOR |
| HS | HAND SWITCH |
| KQI | RUN TIME METER |
| LSH | LEVEL SWITCH HIGH |
| LAH | LEVEL ALARM HIGH |
| M | MIXER |
| P | PUMP |
| PI | PRESSURE INDICATOR |
| SC | SAMPLE CONNECTION |
| SM | STATIC MIXER |
| T | TANK |

| | | | |
|---|---|---|---|
| DRAWN BY DT | DATE 2/16/07 | PIPING AND INSTRUMENTATION DIAGRAM<br>HOT SPOT 3, SYSTEM 4<br>REMEDIAL DESIGN<br>OU 9, SITE 59<br>NAS CECIL FIELD<br>JACKSONVILLE, FLORIDA | CONTRACT NO. 0064 |
| CHECKED BY | DATE | | OWNER NO. 0000 |
| REVISED BY | DATE | | APPROVED BY 7/24/07 DATE |
| SCALE AS NOTED | | | DRAWING NO. FIGURE 3-11 REV. 0 |

FORM CADD NO. SDEV-RMDVG - REV 1 - 9/19/98

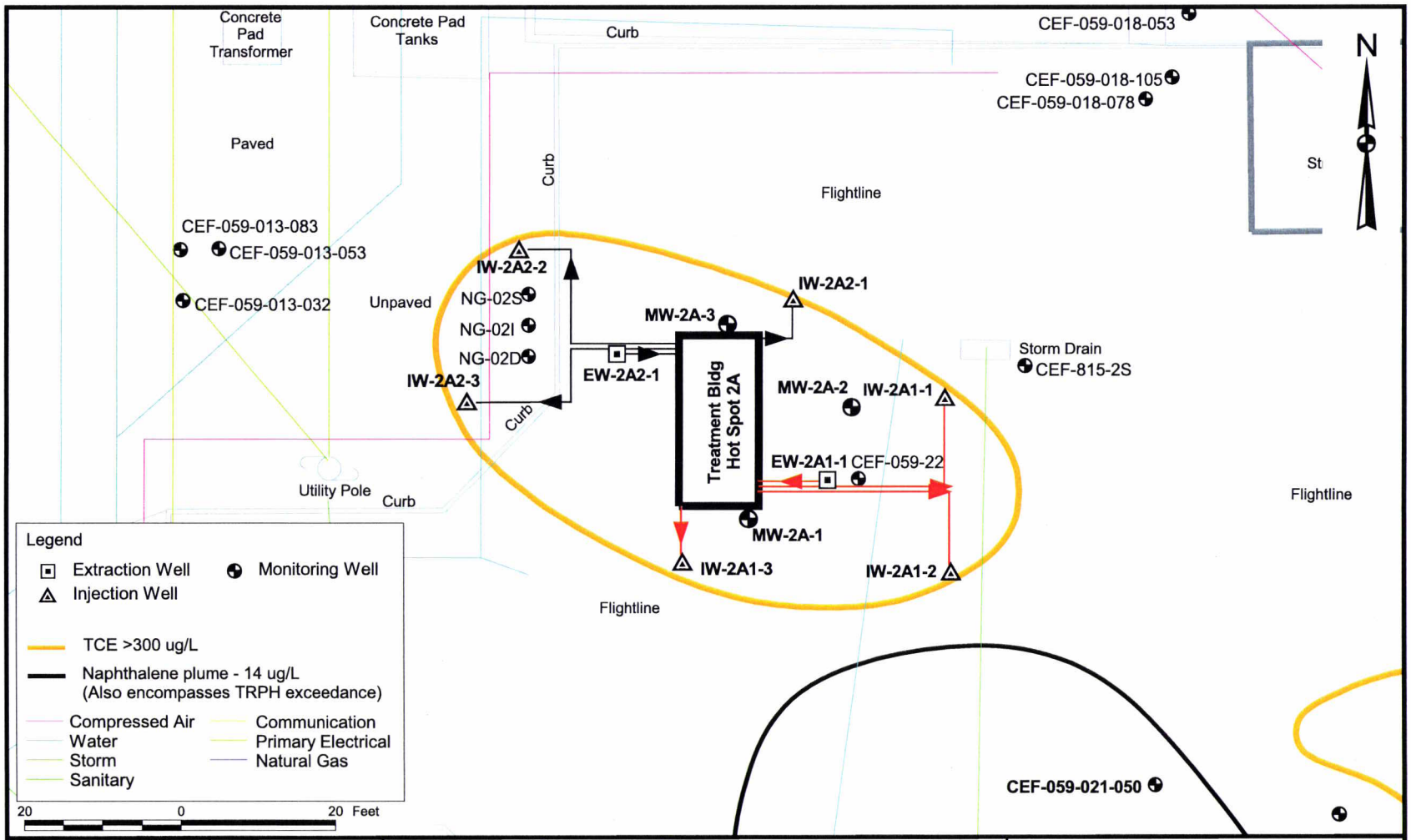


| | | | |
|---|---|---|---|
| DRAWN BY MJJ | DATE 06Feb07 | SITE LAYOUT - RECIRCULATION SYSTEMS AND WELL LOCATIONS - HOT SPOT No. 2A<br>OU 9, SITE 59<br>REMEDIAL DESIGN<br>NAVAL AIR STATION CECIL FIELD<br>JACKSONVILLE, FLORIDA | CONTRACT NUMBER 8925 |
| CHECKED BY | DATE | | APPROVED BY DATE 8/7/07 |
| COST/SCHEDULE-AREA | | | APPROVED BY DATE |
| SCALE AS NOTED | NAVFAC | | DRAWING NO. FIGURE 3-12 / REV 0 |

P:\GIS\NAS_CecilField\Site-59_Design.apr 25May07 MJJ Layout02

P:\GIS\NAS_CecilField\Site-59_Design.apr 25May07 MJJ Layout03

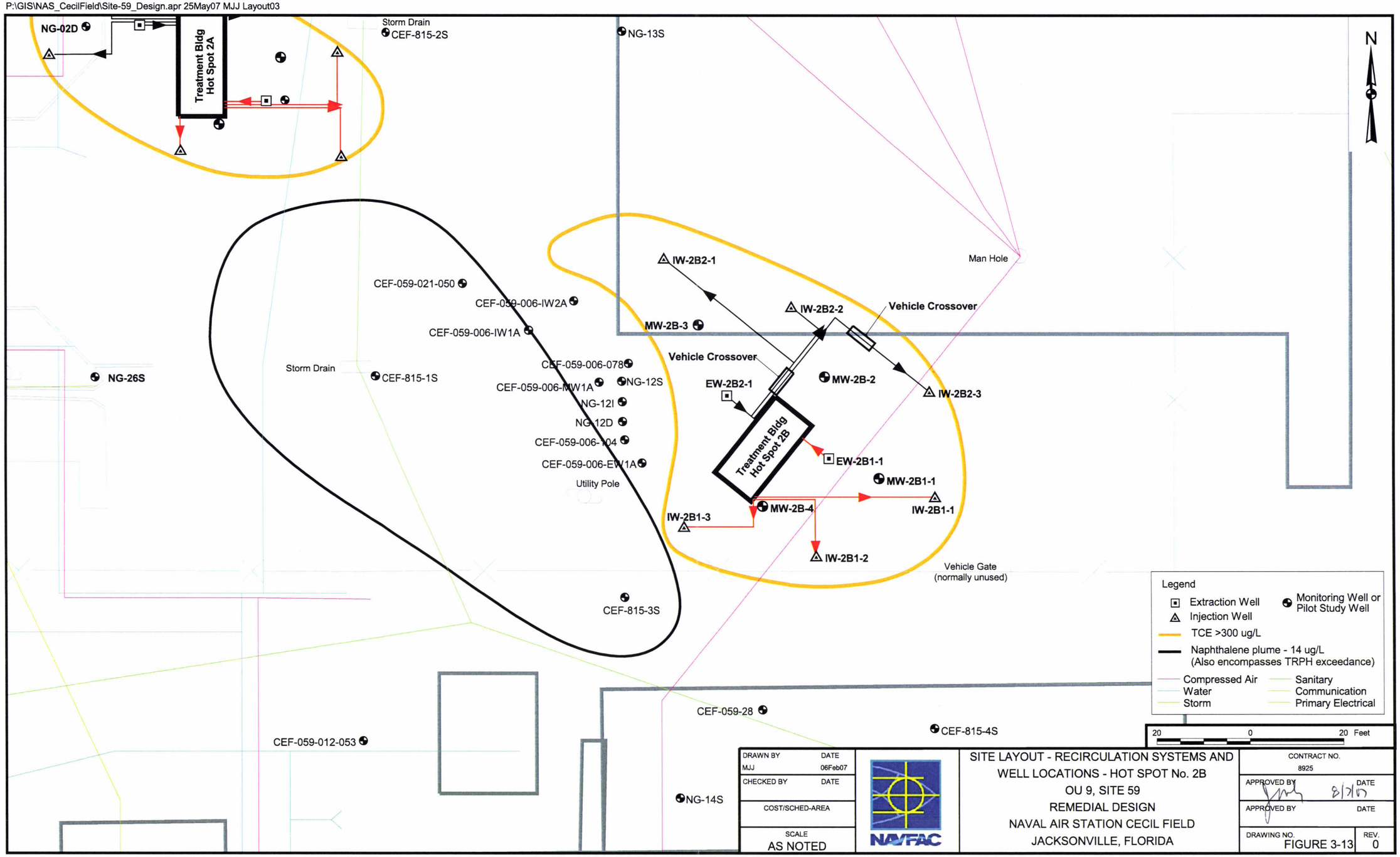


| DRAWN BY | DATE |
|---|---|
| MJJ | 06Feb07 |
| CHECKED BY | DATE |
| COST/SCHED-AREA | |
| SCALE | AS NOTED |

NAVFAC

SITE LAYOUT - RECIRCULATION SYSTEMS AND WELL LOCATIONS - HOT SPOT No. 2B
OU 9, SITE 59
REMEDIAL DESIGN
NAVAL AIR STATION CECIL FIELD
JACKSONVILLE, FLORIDA

| CONTRACT NO. 8925 | |
|---|---|
| APPROVED BY | DATE 8/7/07 |
| APPROVED BY | DATE |
| DRAWING NO. FIGURE 3-13 | REV. 0 |

P:\GIS\NAS_CecilField\Site-59_Design.apr 29May07 MJJ Layout01

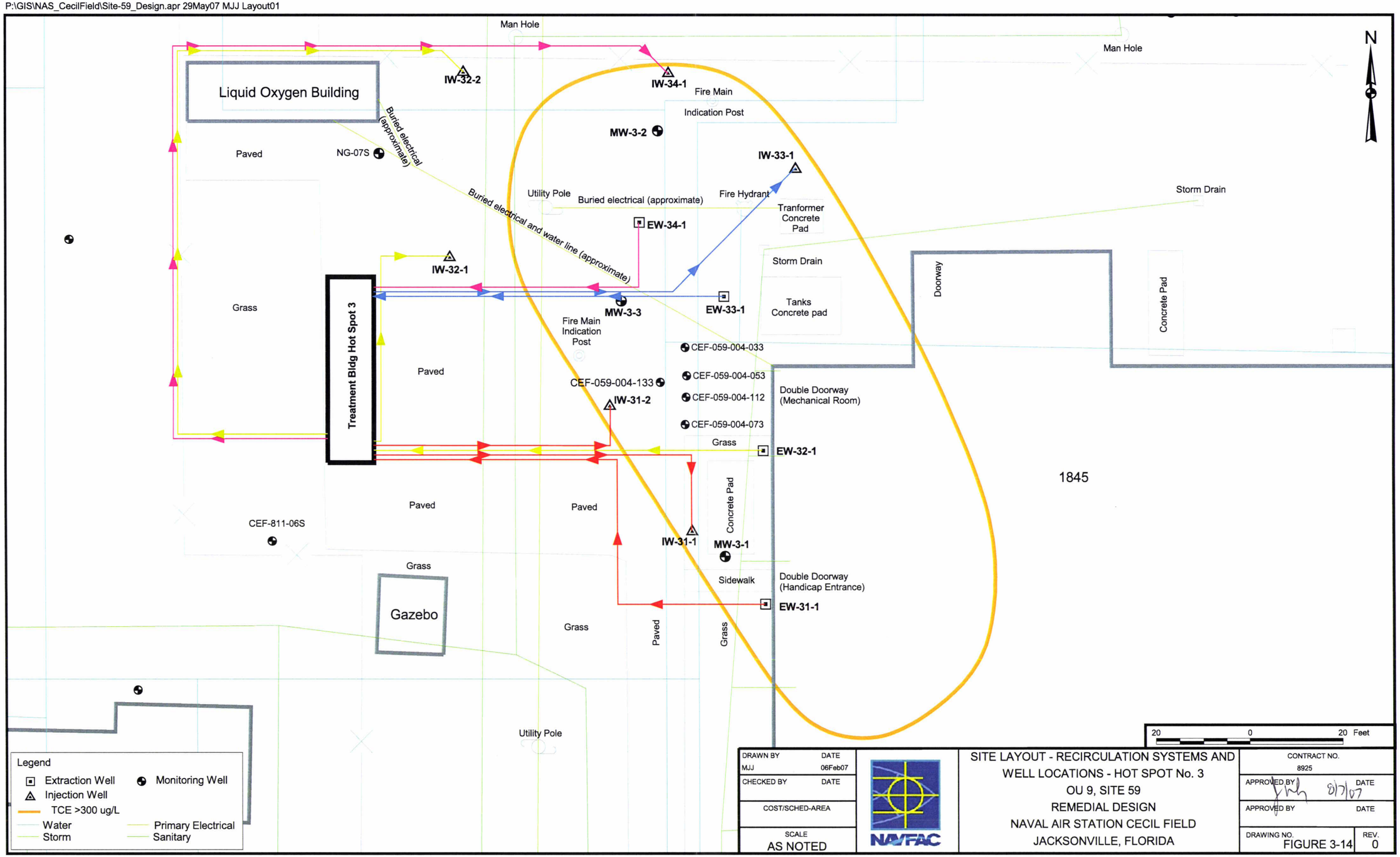


| | | | |
|---|---|---|---|
| DRAWN BY MJJ | DATE 06Feb07 | SITE LAYOUT - RECIRCULATION SYSTEMS AND WELL LOCATIONS - HOT SPOT No. 3<br>OU 9, SITE 59<br>REMEDIAL DESIGN<br>NAVAL AIR STATION CECIL FIELD<br>JACKSONVILLE, FLORIDA | CONTRACT NO. 8925 |
| CHECKED BY | DATE | | APPROVED BY 8/7/07 DATE |
| COST/SCHED-AREA | | | APPROVED BY DATE |
| SCALE AS NOTED | | | DRAWING NO. FIGURE 3-14 REV. 0 |

ACAD:0064CD01.dwg 03/08/07 MF PIT

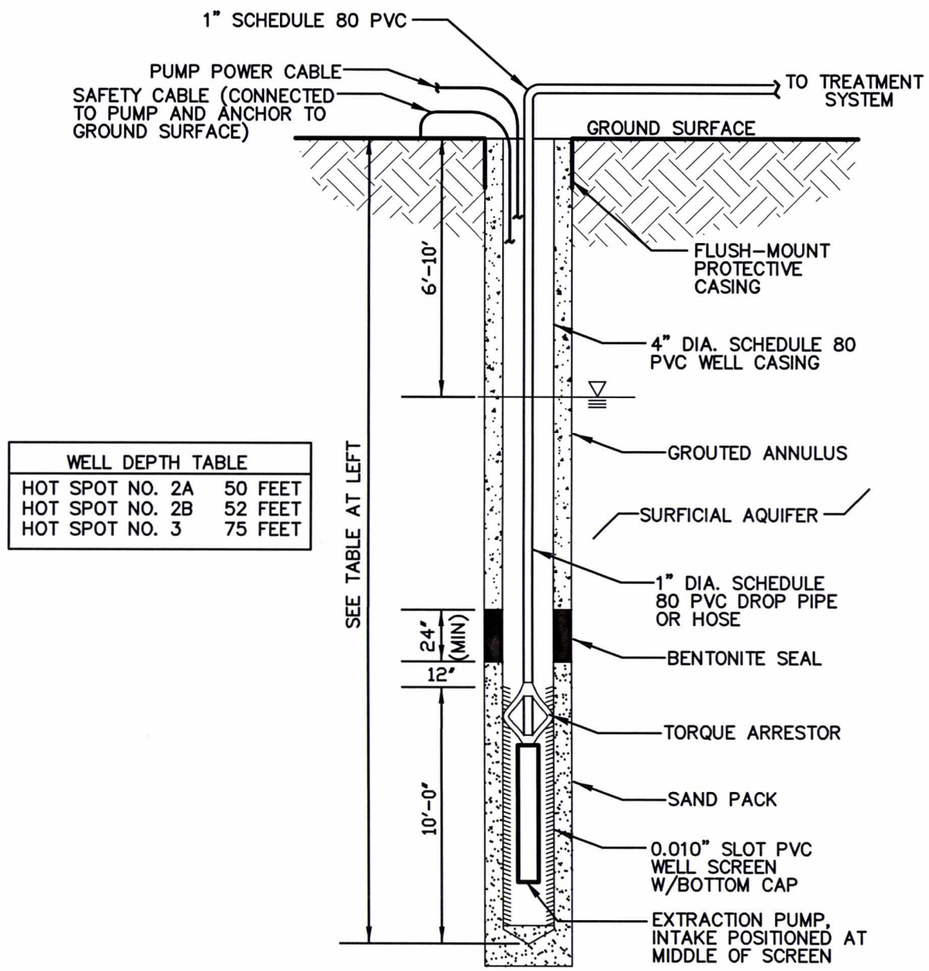


| WELL DEPTH TABLE | |
|---|---|
| HOT SPOT NO. 2A | 50 FEET |
| HOT SPOT NO. 2B | 52 FEET |
| HOT SPOT NO. 3 | 75 FEET |

EXTRACTION WELL

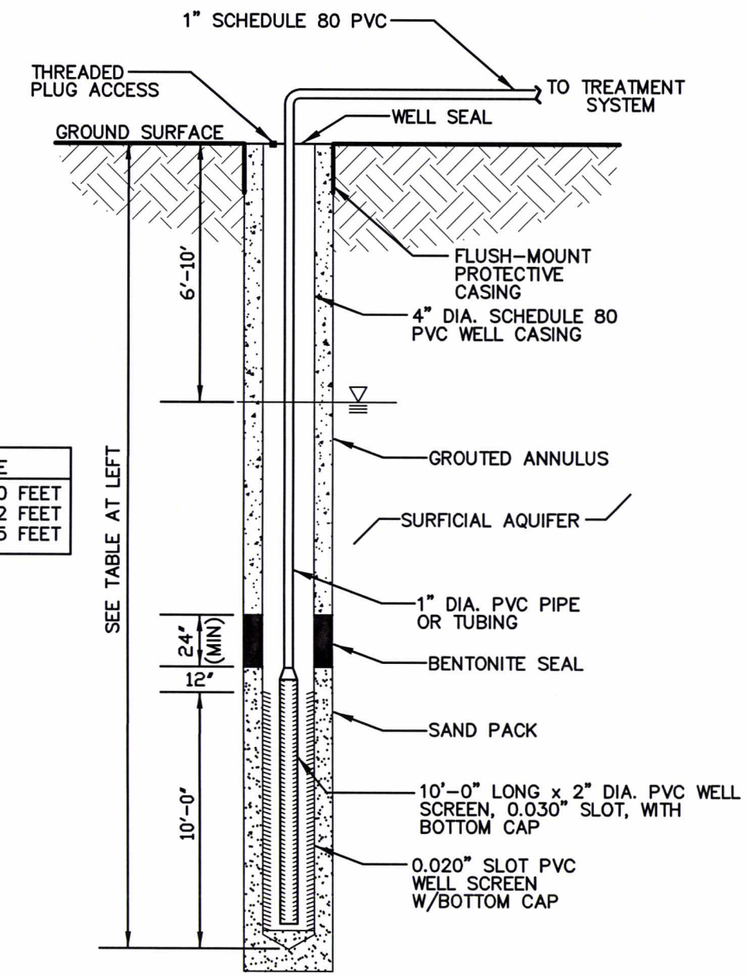


| WELL DEPTH TABLE | |
|---|---|
| HOT SPOT NO. 2A | 50 FEET |
| HOT SPOT NO. 2B | 52 FEET |
| HOT SPOT NO. 3 | 75 FEET |

INJECTION WELL

| | | | |
|---|---|---|---|
| DRAWN BY MF | DATE 2/3/07 | NAVFAC | EXTRACTION AND INJECTION WELL DETAILS<br>REMEDIAL DESIGN<br>OU 9, SITE 59<br>NAS CECIL FIELD<br>JACKSONVILLE, FLORIDA |
| CHECKED BY | DATE | | |
| REVISED BY | DATE | | |
| SCALE NOT TO SCALE | | | |

| | |
|---|---|
| CONTRACT NO. 0064 | |
| OWNER NO. | |
| APPROVED BY | DATE 7/24/07 |
| DRAWING NO. FIGURE 3-15 | REV. 0 |

FORM CADD NO. SDIV-BH.DWG - REV 1 - 9/10/98

ACAD:0064C002.dwg 03/08/07 MF PIT

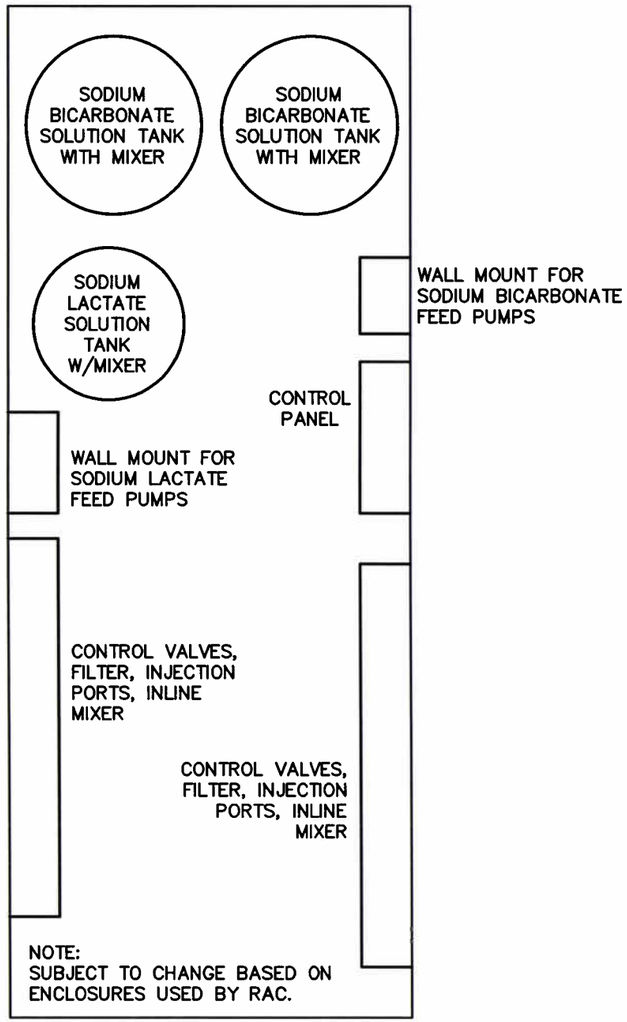


TREATMENT BUILDING LAYOUT
NOT TO SCALE

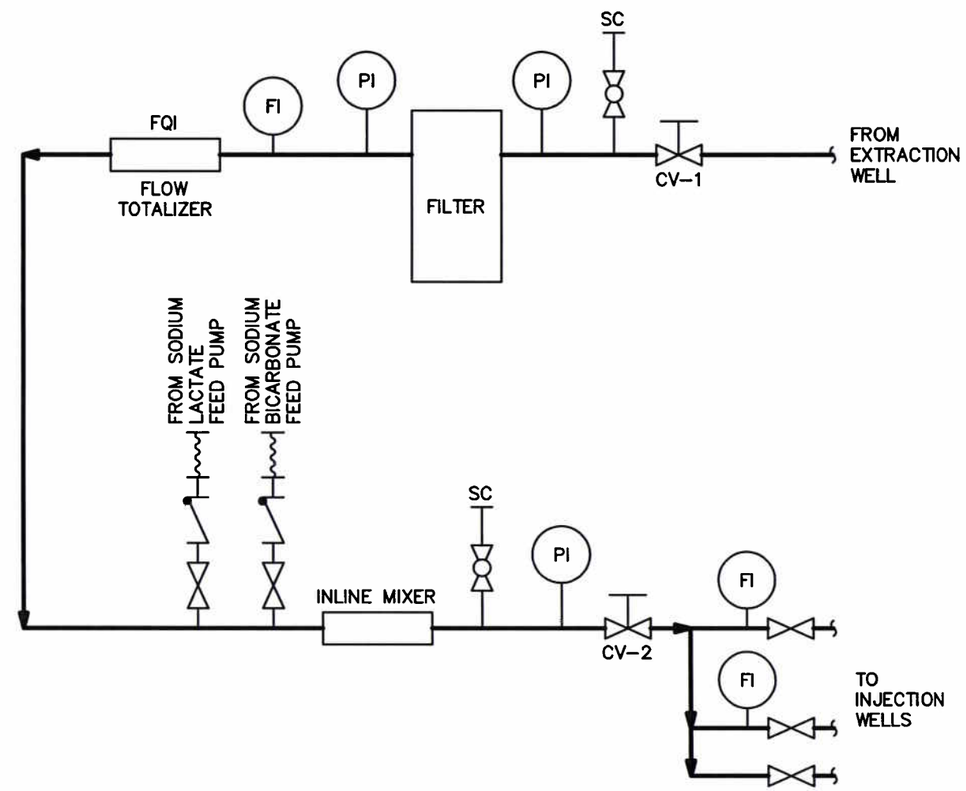


TREATMENT SYSTEM PIPING (TYPICAL)
NOT TO SCALE

| | | | |
|---|---|---|---|
| DRAWN BY MF | DATE 2/16/07 | TREATMENT BUILDING LAYOUT AND PIPING<br>REMEDIAL ACTION<br>OU 9, SITE 59<br>NAS CECIL FIELD<br>JACKSONVILLE, FLORIDA | CONTRACT NO. 0064 |
| CHECKED BY | DATE | | OWNER NO. |
| REVISED BY | DATE | | APPROVED BY DATE 7/24/07 |
| SCALE NOT TO SCALE | | | DRAWING NO. FIGURE 3-16 REV. 0 |

FORM CADD NO. SDIV-BH.DWG - REV 1 - 9/10/98

# 4.0 SYSTEM START-UP, OPERATION, AND MONITORING

Upon completion, each recirculation system will undergo a start-up period during which operational problems will be corrected, recirculation rates will be adjusted, and chemical solution rates will be adjusted. After the initial system troubleshooting is complete and the necessary adjustments have been made, normal operation will begin. The following sections describe the parameters to be monitored during system start-up and operation. Associated long-term groundwater monitoring, including analysis of natural attenuation parameters, is discussed in the Long-term Monitoring Work Plan included in Appendix A.

## 4.1 GROUNDWATER RECIRCULATION SYSTEMS

Groundwater will be pumped from the extraction wells through mixing systems and returned to the subsurface via the injection wells. Sodium lactate and sodium bicarbonate solutions will be proportionally injected by metering pumps into the groundwater piping and mixed in by a static mixer.

The injection wells will be monitored routinely for biofouling. If biofouling is observed, appropriate actions such as pulse chemical feeding and cleaning the screen will be performed.

### 4.1.1 Common System Description

Groundwater is extracted from extraction well EW-1 by extraction well pump P-1. The flow rate is controlled with manually adjusted globe valves CV-1 and CV-2. Flow meter F-1 is used to measure the flow rate and adjust the control valves. Sodium lactate solution is prepared in tank T-1 and injected into the groundwater piping upstream of static mixer SM-1. Similarly, the sodium bicarbonate solution is prepared in tank T-2 and injected into the groundwater piping upstream of the static mixer. The chemicals and groundwater are thoroughly blended by the static mixer. This mixing approach was used to minimize introduction of oxygen to the groundwater. After mixing, the groundwater is piped to the injection wells, (IW-1 through IW-3, depending on the number of wells) and flow meter FI-2 (and FI-3, if present) is used to split the flow so that equal portions flow to each well.

A 5-micron filter will be used during the initial operation of each recirculation system to capture particles from the extraction well. The filter will be replaced by a 50-micron filter during normal operation.

The sodium lactate solution tank and sodium bicarbonate tank each provide approximately 7 days of storage.

Pressure gauges are provided to monitor pressure drop through the system.

### 4.1.2 System Startup and Operation

Details of system startup and operation activities are described below.

**Equipment and System Inspection**

After all of the equipment has been installed, mechanical equipment (pumps and mixers) will be tested briefly to ensure operation. To test the extraction well pump, open the valves at the injection wells, close the valves at the chemical injection points, and close the control valves (CV-1 and CV-2). Open the sample valves slightly to allow air to vent. Activate the pump and slowly open the control valves while observing the flow meter and for discharge from the sample valves. When water begins to discharge from the sample valves, close the valves. Gradually open the control valves until the target recirculation rate is reached. Check the system for leaks. Then shut off the pump and close control valves (CV-1 and CV-2).

To test the mixers, fill the tanks part way so that the impellers are fully submerged, with at least 1 foot of water above the impellers, and activate the mixer. Operate the mixer for about 5 minutes to confirm operation.

Test the chemical feed pumps with water by disconnecting the discharge tubing at the injection port and directing the discharge into a graduated container, such as a beaker or graduated cylinder. Set the dials on the metering pumps for the target feed rate and check the output rate using a timer and graduated container. Operate the pumps long enough to confirm operation, then reconnect the tubing.

**Startup**

Startup of each recirculation system will be performed in a stepwise manner.

Prior to activation of the recirculation system, prepare the chemical solutions. Prepare the sodium lactate solution in the lactate tank at a concentration of 100 grams of sodium lactate per liter of water, or 0.83 pound per gallon (see Table 4-2). Prepare the sodium bicarbonate solution in the bicarbonate tank at 80 grams of sodium bicarbonate per liter of water, or 0.67 pound per gallon (see Table 4-3).

To prepare the solutions, fill the tank to the desired level water. Take care to minimize aeration of the water when the tanks are filled with water and mixed with the chemicals. Keep the water hose submerged to minimize agitation and aeration. After the water has been added, activate the mixer and gradually add the chemical. Sodium lactate is very soluble and can be added over a short time. After the sodium lactate

has been added, allow the mixer to operate for 5 to 10 minutes and then turn off the mixer. Sodium bicarbonate is poorly soluble and should be added slowly, 10 to 20 pounds at a time. Add additional increments of sodium bicarbonate after the preceding amount has dissolved. After the sodium bicarbonate has been added, allow the mixer to operate for 30 minutes and then turn off the mixer. Note that the target sodium bicarbonate concentration is very close to saturation, and solids will dissolve slowly toward the end of the solution preparation step. Keep the tanks covered to minimize oxygen in the solution. Note and record the levels of the chemical feed tanks.

Set the dials for the sodium lactate feed pump and the sodium bicarbonate feed pump according to the setting in Table 4-1.

The recirculation system will be operated initially with no chemical addition. Open both injection well valves. Open the sample valves slightly to allow air to vent. Close the control valves (CV-1 and CV-2) and then start the extraction well pump. Open the control valves (CV-1 and CV-2) very slightly to fill the system with water. Vent air from the piping through the sample valves and close each sample valve when water begins to discharge. Monitor the flow rate while gradually opening CV-1 until the operating flow rate is reached. Monitor the pressure gauges to confirm that the pressures are greater than atmospheric, 2 to 5 pounds per square inch gauge (psig) at pressure gauge PI-4. Setting the positions of CV-1 and CV-2 will require some trial and error. For example, on the first attempt, CV-1 may reach full open, but the flow rate may be too low. In this case, turn CV-1 back to the original slightly open position, open CV-2 a little more, and then try adjusting CV-1 again. CV-2 is to provide the greatest pressure drop so that the system will be above atmospheric pressure. The flow rate should stabilize in a short time because there is very little air to purge from the system.

Adjust the flows to the injection wells based on the readings of the injection well flow meter(s), FI-2 and FI-3, if present. Distribute the extracted water equally to the injection wells.

Operate the recirculation system with no chemical addition long enough to reach steady-state water level conditions. Each recirculation system will be operated for at least 1 week without chemical addition. Water level steady-state conditions will be determined by routinely measuring the water levels within the treatment areas. After water levels have stabilized, the chemical feed pumps will be activated by turning the chemical feed pump HOA switches to "Auto". Ensure that the shut-off valve at each injection point is open, and then activate the sodium lactate pump, followed by the sodium bicarbonate pump. Monitor and record the levels in the chemical feed tanks to confirm the feed rate.

During startup, the following tasks will be performed during each visit:

- Monitor and record water levels in extraction well and process monitoring wells.
- Monitor and record the extraction flow rate and totalized flow.
- Record pressure gauge readings.
- Record extraction well pump run meter readings.
- Monitor and record chemical tank levels.
- Record chemical feed pump settings.
- Adjust chemical feed pump settings, if needed.
- Check filters and replace cartridges as needed.
- Replenish chemical solutions, as needed.
- Adjust (as needed) and record injection well flow rates.
- Monitor and record dissolved oxygen (DO) concentrations, pH, specific conductivity, and oxidation-reduction potential (ORP) in injection wells, monitoring wells, and extraction wells.

**Operation**

The groundwater recirculation systems will be operated with chemical injection to create reducing conditions in the injection wells to promote anaerobic degradation of TCE. Based on the pilot study, it is anticipated that area in the vicinity of each injection well will become anaerobic and reducing in 4 to 6 weeks. Anaerobic conditions will be identified by DO and ORP measurements within the injection wells.

Replace the filter cartridge with a 50-micron filter during normal operations, unless excessive sediment has been observed.

Monitor the pressure gauges to confirm that pressures are greater than atmospheric, with 2 to 5 psig at pressure gauge PI-4.

After chemical addition is started, the treatment systems will be visited at least one time per week. Each time a system is visited, the following tasks will be performed:

- Monitor and record water levels in extraction well and process monitoring wells.
- Monitor and record the extraction flow rate and totalized flow.
- Record pressure gauge readings.
- Record extraction well pump run meter readings.
- Monitor and record chemical tank levels.
- Record chemical feed pump settings.
- Adjust chemical feed pump settings, if needed.
- Replenish chemical solutions, as needed.

- Adjust (as needed) and record injection well flow rates.
- Monitor and record DO concentrations, pH, specific conductivity, and ORP in monitoring wells and the extraction well.
- Collect groundwater samples for analysis according to the sampling schedule (see Table 4-4).

An Operators Log Sheet will be prepared to facilitate the routine inspection and monitoring of the recirculation systems.

To minimize the potential for injection well clogging, the sodium lactate feed will be stopped for 4 to 6 hours on 1 day each week to flush the immediate vicinity of the injection well. The injection wells will be monitored routinely for biofouling. If biofouling is observed, appropriate actions such as pulse chemical feeding and cleaning the screen will be performed.

**Evaluation of Biostimulation**

Groundwater samples will be collected at 6-week intervals during the biostimulation system. Typically, the effects of biostimulation will be observed after 3 to 6 months of operation.

As noted on Table 4-4, samples will be analyzed for VOCs, methane/ethane/ethane, Fe(II), sulfide, sulfate, alkalinity, TOC, sodium, ORP, pH, DO, and PCR (but at less frequent intervals). (ORP, DO, and pH will be monitored weekly.)

After 6 months of data have been collected, the data will be reviewed by the BCT and considered for bioaugmentation. If it appears that biostimulation is not effective, then bioaugmentation will be performed. The following should be considered to determine if bioaugmentation is required:

- at least 50 percent TCE reduction.
- cis-1,2-DCE concentrations during the 6-month period that are comparable to the initial TCE concentrations.
- the appearance of vinyl chloride.
- the appearance of ethene.
- PCR concentration of at least $10^5$ gene copies/liter.
- consistent anaerobic conditions, as indicated by ORP, DO, and Fe(II).
- pH of 6 to 8.

Based on these results, the BCT will make a decision whether or not to bioaugment. If the results do not indicate favorable TCE degradation, then DHC will be injected. Otherwise, the system will continue to operate as a biostimulation system.

**Later Operation and DHC Injection**

If DHC injection is required, anaerobic conditions must still be maintained. The DHC will be added by the vendor, SiREM. The target conditions at the injection wells are: pH of 6 to 8.5, DO less than 0.2 mg/L, and an ORP less than -75 millivolts (mV). The DHC injection is performed by the vendor and must be coordinated with the vendor.

The quantity of DHC inoculum to be added to each Hot Spot in listed in Table 4-1. For Hot Spot Nos. 2A and 2B, this quantity is to be distributed evenly among the injection wells in the Hot Spot. At Hot Spot No. 3, this quantity is to be distributed evenly among the injection wells for each pair of systems, that is, Systems 1 and 2 and Systems 3 and 4. The DHC inoculum is added by the vendor to minimize exposure to oxygen and is provided in specialized sealed containers. Each container has a fitting for compressed inert gas (nitrogen or argon) and a vent valve to release gas from the container. A hose from the inert gas regulator is attached to the container, and the inert gas is purged through the inoculum in the container at 3 psig for 3 to 5 minutes. The injection wells will also be purged with the inert gas. After the container has been degassed, the inoculum can be injected through tubing into the injection wells.

After DHC is added, the systems will continue to be visited at least once per week. Each time a system is visited, the following tasks will be performed:

- Monitor and record water levels in extraction well and process monitoring wells.
- Monitor and record the extraction flow rate and totalized flow.
- Record pressure gauge readings.
- Record extraction well pump run meter reading.
- Monitor and record chemical tank levels.
- Record chemical feed pump settings.
- Adjust chemical feed pump settings, if needed.

- Replenish chemical solutions, as needed.

- Check and replace filter cartridge, as needed. (Four weeks after DHC injection, discontinue use of filter cartridge.)

- Adjust (as needed) and record injection well flow rates.

- Monitor and record DO concentrations, pH, specific conductivity, and ORP in monitoring wells and extraction well.

- Collect groundwater samples for analysis according to the sampling schedule (see Table 4-4).

To minimize the potential of injection well clogging, the sodium lactate feed will be stopped for 4 to 6 hours on 1 day each week to flush the immediate vicinity of the injection well. The injection wells will be monitored routinely for biofouling. If biofouling is observed, appropriate actions such as pulse chemical feeding and cleaning the screen will be performed.

Monitor the pressure gauges to confirm that the pressures are greater than atmospheric, with 2 to 5 psig at pressure gauge PI-4.

Four weeks after DHC injection, remove and discontinue use of the 5-micron filter cartridge. This will minimize removal of microorganisms. However, if fines persist in the water from the extraction well, use a 50-micron filter cartridge and replace it weekly. Although the size of DHC cells is much less than 50 microns, the coating of the filter cartridge by fines may reduce the effective pore size of the filter, resulting in the capture of microorganisms.

The recirculation systems will be operated for approximately 6 to 9 months. Chemical feed rates and/or the frequency and duration of chemical feeds may be modified based on observations of injection well water levels and results of groundwater analyses. After the results of the 3-month samples are received from the laboratory, the results and trends will be evaluated to determine whether to shut down the chemical feed systems and/or recirculation systems or to continue operations.

### 4.1.3 Shutdown and Restart

The recirculation systems are primarily manually operated and are provided with minimum automation. Each system automatically shuts down if the extraction well pump overload protection device trips. The chemical feed pumps will shut down automatically if the extraction well pump is turned off to prevent overfeeding the chemicals.

Care must be taken following any shutdown because the individual chemical feed pump switches may be "On," but power may have been interrupted further up the line. When the power is restored or the system controls reset, the pumps will begin operating again.

**Automatic Shutdown**

The system controls shut down the recirculation system if the extraction well pump (P-1) overloads. If P-1 is shut off, electrical power to the chemical feed pumps (P-2 and P-3) is shut off. If the P-1 overload relay trips, electrical power to the chemical feed pumps (P-2 and P-3) is shut off.

The system will remain shut off until P-1 is manually reset and restarted.

**Manual Shutdown**

To manually shut down the system:

- Turn off the sodium lactate pump (P-2) using the HOA switch on the panel.
- Turn off the sodium bicarbonate pump (P-3) using the HOA switch on the panel.
- Close the valves to both chemical feed lines.
- Turn off the extraction well pump (P-1).

The pumps may be turned off in any order.

Note that manually turning off P-1 will deactivate P-2 and P-3 only if the panel switches are set to "Auto." This allows for testing and/or operation of P-2 and P-3 (in "Hand") with P-1 not running.

**Restart After Automatic Shutdown**

The system can be restarted after determining and correcting the cause of the shutdown. Prior to resetting and restarting the system, manually turn off P-2 and P-3, and turn P-1 to off. Press the Reset button. Then proceed with the startup sequence described in "Startup," above.

**Restart After Manual Shutdown**

If the system has been shut down manually, proceed with startup as described in "Startup," above.

### 4.1.4 Equipment Maintenance

Equipment will be maintained in accordance with manufacturer recommendations. Routine maintenance tasks include the following:

- Cleaning flow meters. Fines from the extraction well may accumulate in the flow totalizer and jam the internals. If this occurs, shut down and drain the system, then remove the flow meter at the unions and flush out the solids.

- Replace the filter cartridge. If the pressure drop through the filter is too high, the cartridge must be replaced. If this occurs, shut down and drain the system, then remove the outer housing, remove the cartridge, and replace it with a new cartridge. Drain any sediment that has accumulated in the filter housing.

- Clean chemical feed pump suction. If the flow of chemical stops, turn off the pump and inspect the intake filter on the suction line for debris. Clean off any debris.

## 4.2 PERSONNEL REQUIREMENTS

In addition to typical Occupational Safety and Health Act (OSHA) safety training, the following will also be required for personnel working at the sites:

**Ramp Training**

Site activities require entry onto the flightline. Personnel walking on the flightline must have Ramp Training or be escorted by someone who has had the training. Any personnel driving a vehicle on the flightline must have Ramp Training. Ramp Training is provided by Jacksonville Aviation Authority (JAA).

**Naval Aviation Depot (NADEP) Clearance**

Building 1845 and the surrounding area within the fencing is operated by Naval Aviation Depot (NADEP). Clearance is required for all personnel entering the fenced area. Information required by NADEP must be provided at least 5 days prior to access. Contact NADEP to determine what information is needed.

## 4.3 SAMPLING PROCEDURES

This section describes procedures for collection of groundwater samples for monitoring the progress of the recirculation systems.

### 4.3.1 Groundwater Sampling

Each Hot Spot has process monitoring wells located between the extraction wells and the injection wells. The process monitoring wells for each Hot Spot are listed in the following table.

| 2A | 2B | 3 |
|---|---|---|
| MW-2A-1 | MW-2B-1 | MW-3-1 |
| MW-2A-2 | MW-2B-2 | MW-3-2 |
| MW-2A-3 | MW-2B-3 | MW-3-3 |
| CEF-NG-02D | MW-2B-4 | CEF-59-004-73 |

Groundwater sampling, analysis, and frequency for the recirculation systems is presented in Table 4-4.

Groundwater samples will be collected using low-flow sampling techniques. Samples from extraction wells will be collected during pump operation through a sample valve. Laboratory analytical methods are listed in Table 4-5, and field analytical methods are listed in Table 4-6. After the results are collected and analyzed, they will be interpreted to evaluate groundwater recirculation and substrate injection effectiveness.

### 4.3.2 PCR Sample Collection

Sample for polymerase chain reaction (PCR) and functional gene analysis will be collected according to directions provided by the laboratory. PCR samples will be collected by pumping water from the sampling pump discharge through a filter provided by the laboratory. Pump 1 to 2 L of water through the filter and measure and record the volume that is pumped through the filter.

### 4.3.3 Quality Assurance/Quality Control

No quality assurance/quality control (QA/QC) samples such as duplicates, field blanks, trip blanks, or rinsate blanks are proposed for monitoring during routine operation of the recirculation systems.

All samples will be subjected to limited data validation. Data validation is an objective systematic process in which analytical data are reviewed to ascertain the validity of the reported results and to identify for the data user the possible limitations of these results. The limited data validation review will consist of an evaluation of the data to eliminate false positives and to preclude false negatives. The limited data validation review will evaluate environmental samples for data completeness, holding time compliance, calibration compliance, and laboratory blank contamination. The limited data validation review will be primarily limited to the aforementioned criteria; however, if noncompliances compromising false negatives or false positives are noted, the reviewer will take appropriate action to qualify the data.

## 4.4 SAMPLE HANDLING

This section details sample handling procedures including field-related considerations concerning the selection of sample containers, preservatives, and allowable holding times for requested analyses. In addition, sample identification, packaging, and shipping are addressed in this section.

### 4.4.1 Field Documentation

Sample collection information will be recorded in a field logbook and on sample collection log sheets. Sample collection information should also be noted on operator log sheets. Completed chain-of-custody forms will be maintained in the project file.

### 4.4.2 Sample Nomenclature

Each collected sample will be assigned a unique sample tracking number consisting of an alphanumeric code developed by the operator. Any other pertinent information regarding sample identification will be recorded in the field logbook and on sample log sheets.

### 4.4.3 Sample Containers, Preservatives, and Holding Times

Table 4-5 provides a summary of the analyses, methodologies, bottle requirements, preservation requirements, and holding times for the samples to be submitted for fixed-base laboratory analysis.

### 4.4.4 Sample Packaging and Shipping

When samples are containerized, they will be placed on ice in a cooler and, within a reasonable period of time, delivered to a local Federal Express office. Sample containers provided by the laboratory are pre-preserved. The following should be prepared for sample shipments:

- Sample labels
- Chain-of-custody forms
- Chain-of-custody seals

## 4.5 SAMPLE CUSTODY

Custody of samples must be maintained and documented at all times. Chain of custody begins with the collection of the samples in the field.

## 4.6 REMEDIAL CLEANUP TIME

Based on the results of the pilot study, it is estimated that 6 to 12 months will be needed to meet the cleanup goals in the TCE Hot Spots. Approximately 4 to 6 weeks is estimated to be needed to bring the areas around the injection wells to anaerobic and reducing conditions; however, the time for TCE degradation to begin is uncertain, although it is anticipated to occur within 3 to 6 months. Complete degradation of TCE to ethene is expected to occur within 8 to 12 months.

**TABLE 4-1**

**SYSTEM OPERATING PARAMETERS**
**REMEDIAL DESIGN**
**OPERABLE UNIT 9, SITE 59**
**NAVAL AIR STATION CECIL FIELD**
**JACKSONVILLE, FLORIDA**

| Parameter | Hot Spot 2A | Hot Spot 2B | Hot Spot 3 (Systems 1 & 2) | Hot Spot 3 (Systems 3 & 4) |
|---|---|---|---|---|
| Extraction Well Rate, gpm | 3 | 3 | 2 | 1 |
| Injection Well Rate, gpm | 1 | 1 | 1 | 1 |
| Sodium Lactate to be added, lb (total) | 860 | 1,530 | 1,630 | 820 |
| Sodium Lactate Solution Feed Rate, GPH (per system) (1) | 0.24 | 0.43 | 0.46 | 0.23 |
| Sodium Lactate Solution Tank, gallons | 100 | 150 | 200 | 100 |
| Sodium Lactate Solution Tank Mixer, HP | 1/4 | 1/3 | 1/3 | 1/4 |
| Sodium Bicarbonate to be added, lb (total) (2) | 4,590 | 4,590 | 3,230 | 1,530 |
| Sodium Bicarbonate Solution Feed Rate, GPH (per system) (3) | 1.56 | 1.56 | 1.1 | 0.52 |
| Sodium Bicarbonate Solution Tank, gallons | 2 x 275 | 2 x 275 | 2 x 200 | 1 x 200 |
| Sodium Bicarbonate Solution Tank Mixer, HP | 2 x 1/3 | 2 x 1/3 | 2 x 1/3 | 1 x 1/3 |
| DHC dose (total), liters | 62 | 110 | 115 | 55 |

1 - Based on sodium lactate solution concentration of 0.83 pound/gallon.
2 - Estimated, based on 90 days of injection.
3 - Based on sodium bicarbonate solution concentration of 0.68 pound/gallon.

**TABLE 4-2**

**SODIUM LACTATE SOLUTION PROPORTIONS**
**REMEDIAL DESIGN**
**OPERABLE UNIT 9 SITE 59**
**NAVAL AIR STATION CECIL FIELD**
**JACKSONVILLE, FLORIDA**

| Gallons of water | Stock Solution | | Estimated Final Volume, gallons |
|---|---|---|---|
| | Gallons | Liters | |
| 10 | 1.4 | 5.2 | 11 |
| 20 | 2.7 | 10.4 | 21 |
| 30 | 4.1 | 15.6 | 32 |
| 40 | 5.5 | 20.8 | 43 |
| 50 | 6.9 | 26.0 | 54 |
| 60 | 8.2 | 31.2 | 64 |
| 70 | 9.6 | 36.4 | 75 |
| 80 | 11.0 | 41.6 | 86 |
| 90 | 12.4 | 46.8 | 96 |
| 100 | 13.7 | 52.0 | 107 |
| 110 | 15.1 | 57.2 | 118 |
| 120 | 16.5 | 62.4 | 129 |
| 130 | 17.9 | 67.6 | 139 |
| 140 | 19.2 | 72.8 | 150 |
| 150 | 20.6 | 78.0 | 161 |
| 160 | 22.0 | 83.2 | 171 |
| 170 | 23.4 | 88.4 | 182 |
| 180 | 24.7 | 93.6 | 193 |
| 190 | 26.1 | 98.8 | 204 |
| 200 | 27.5 | 104.0 | 214 |

This table shows the proportions of water and stock sodium lactate solution to mix together to make up the solution to be fed to the process. These proportions yield a solution with the sodium lactate-to-water proportions listed below. The stock solution is assumed to be typical: 60 percent sodium lactate and a specific gravity of 1.3. The estimated final volume assumes that in the dilute solution, the sodium lactate does not have a significant effect solution volume.

100 gram/Liter
0.83 pound/gallon

For example, mixing 100 gallons of water with 13.7 gallons (or 52 liters) of stock solution yields 107 gallons of a 0.83 pound/gallon solution.

**TABLE 4-3**

**SODIUM BICARBONATE SOLUTION PROPORTIONS**
**REMEDIAL DESIGN**
**OPERABLE UNIT 9 SITE 59**
**NAVAL AIR STATION CECIL FIELD**
**JACKSONVILLE, FLORIDA**

| Water, gallons | Sodium Bicarbonate, pounds |
|---|---|
| 10 | 7 |
| 20 | 14 |
| 30 | 20 |
| 40 | 27 |
| 50 | 34 |
| 60 | 41 |
| 70 | 47 |
| 80 | 54 |
| 90 | 61 |
| 100 | 68 |
| 110 | 74 |
| 120 | 81 |
| 130 | 88 |
| 140 | 95 |
| 150 | 101 |
| 160 | 108 |
| 170 | 115 |
| 180 | 122 |
| 190 | 128 |
| 200 | 135 |
| 210 | 142 |
| 220 | 149 |
| 230 | 155 |
| 240 | 162 |
| 250 | 169 |
| 260 | 176 |
| 270 | 182 |
| 280 | 189 |
| 290 | 196 |
| 300 | 203 |

This table shows the proportions of water and sodium bicarbonate to mix together to make up the solution to be fed to the process. These proportions yield a solution with the sodium bicarbonate-to-water proportions listed below. This proportion is approximately 98 percent of solubility.

81 gram/Liter
0.68 pound/gallon

For example, mixing 100 gallons of water with 68 pounds of solid sodium bicarbonate solution yields approximately 100 gallons of a 0.68 pound/gallon solution.

**TABLE 4-4**

**GROUNDWATER SAMPLING AND ANALYSIS SUMMARY FOR TCE PLUME**
**REMEDIAL DESIGN**
**OPERABLE UNIT 9 SITE 59**
**NAVAL AIR STATION CECIL FIELD**
**JACKSONVILLE, FLORIDA**


| Wells | LABORATORY ANALYSES | | | | | FIELD TESTS | | | | | |
|---|---|---|---|---|---|---|---|---|---|---|---|
| | Chlorinated VOCs | Sodium (Total) | TOC | Dissolved Gases(1) | PCR and Genes(2) | Temperature | pH | Specific Conductivity | Oxidation / Reduction Potential | Dissolved Oxygen | Water Level |
| **Event 1 - Baseline Samples** | | | | | | | | | | | |
| Injection Wells | • | • | • | • | • | • | • | • | • | • | |
| Extraction Wells | • | | | | | • | • | • | • | • | • |
| Process Monitoring Wells | • | • | • | • | | • | • | • | • | • | • |
| **Event 2 - 1 Week after Recirculation Start** | | | | | | | | | | | |
| Injection Wells | | | | | | • | • | • | • | • | |
| Extraction Wells | | | | | | • | • | • | • | • | • |
| Process Monitoring Wells | | | | | | • | • | • | • | • | • |
| **Event 3 - 1 month after startup (when reducing conditions are confirmed)** | | | | | | | | | | | |
| Injection Wells | • | • | • | • | | • | • | • | • | • | |
| Extraction Wells | • | | | | | • | • | • | • | • | • |
| Process Monitoring Wells | • | • | • | • | | • | • | • | • | • | • |
| **Event 4 - 1.5 months after reducing conditions** | | | | | | | | | | | |
| Injection Wells | • | • | • | • | | • | • | • | • | • | |
| Extraction Wells | • | | | | | • | • | • | • | • | • |
| Process Monitoring Wells | • | • | • | • | | • | • | • | • | • | • |
| **Event 5 - 3 months after reducing conditions** | | | | | | | | | | | |
| Injection Wells | • | • | • | • | • | • | • | • | • | • | |
| Extraction Wells | • | | | | | • | • | • | • | • | • |
| Process Monitoring Wells | • | • | • | • | | • | • | • | • | • | • |
| **Event 6 - 4.5 months after reducing conditions** | | | | | | | | | | | |
| Injection Wells | • | • | • | • | | • | • | • | • | • | |
| Extraction Wells | • | | | | | • | • | • | • | • | • |
| Process Monitoring Wells | • | • | • | • | | • | • | • | • | • | • |
| **Event 7 - 6 months after reducing conditions** | | | | | | | | | | | |
| Injection Wells | • | • | • | • | • | • | • | • | • | • | |
| Extraction Wells | • | | | | | • | • | • | • | • | • |
| Process Monitoring Wells | • | • | • | • | | • | • | • | • | • | • |

**BCT To determine if DHC injection is to be performed.**

**TABLE 4-4**

**GROUNDWATER SAMPLING AND ANALYSIS SUMMARY FOR TCE PLUME**
**REMEDIAL DESIGN**
**OPERABLE UNIT 9 SITE 59**
**NAVAL AIR STATION CECIL FIELD**
**JACKSONVILLE, FLORIDA**


| Wells | LABORATORY ANALYSES | | | | | FIELD TESTS | | | | | |
|---|---|---|---|---|---|---|---|---|---|---|---|
| | Chlorinated VOCs | Sodium (Total) | TOC | Dissolved Gases(1) | PCR and Genes(2) | Temperature | pH | Specific Conductivity | Oxidation / Reduction Potential | Dissolved Oxygen | Water Level |
| **Event 8 - 1 month after DHC Injection** | | | | | | | | | | | |
| Injection Wells | • | • | • | • | | • | • | • | • | • | |
| Extraction Wells | | | | | | • | • | • | • | • | • |
| Process Monitoring Wells | | • | • | | | • | • | • | • | • | • |
| **Event 9 - 2 months after DHC Injection** | | | | | | | | | | | |
| Injection Wells | | | | | | • | • | • | • | • | |
| Extraction Wells | | | | | | • | • | • | • | • | • |
| Process Monitoring Wells | | | | | | • | • | • | • | • | • |
| **Event 10 - 3 months after DHC Injection** | | | | | | | | | | | |
| Injection Wells | • | | • | • | • | • | • | • | • | • | |
| Extraction Wells | • | | | | | • | • | • | • | • | • |
| Process Monitoring Wells | • | | • | | • | • | • | • | • | • | • |
| **Event 11 - 4 months after DHC Injection** | | | | | | | | | | | |
| Injection Wells | • | • | • | • | | • | • | • | • | • | |
| Extraction Wells | • | | | | | • | • | • | • | • | • |
| Process Monitoring Wells | • | • | • | • | | • | • | • | • | • | • |
| **Event 12 - 5 months after DHC Injection** | | | | | | | | | | | |
| Injection Wells | | | | | | • | • | • | • | • | |
| Extraction Wells | | | | | | • | • | • | • | • | • |
| Process Monitoring Wells | | | | | | • | • | • | • | • | • |
| **Event 13 - 6 months after DHC Injection** | | | | | | | | | | | |
| Injection Wells | • | | • | • | • | • | • | • | • | • | |
| Extraction Wells | • | | | | | • | • | • | • | • | • |
| Process Monitoring Wells | • | | • | • | • | • | • | • | • | • | • |

1 Dissolved gases include ethane, ethene, and methane.
2 Functional genes include TCE reductase, BAV1 VC reductase, and VC reductase.

PCR = Polymerase chain reaction.
VOCs = Volatile organic compounds.
TOC = Total organic carbon.

**TABLE 4-5**

**SUMMARY OF FIXED-BASE LABORATORY ANALYSES, METHODOLOGIES, BOTTLE REQUIREMENTS, PRESERVATION REQUIREMENTS, AND HOLDING TIMES**
**REMEDIAL DESIGN**
**OPERABLE UNIT 9, SITE 59**
**NAVAL AIR STATION CECIL FIELD**
**JACKSONVILLE, FLORIDA**

| Analysis | Analytical Method or SOP | Quantity of Containers per Sample | Container Type | Preservation Requirements | Holding Time[1] |
|---|---|---|---|---|---|
| Chlorinated VOCs | SW-846 8260B | 3 | 40-mL vials with Teflon septa (Borosilicate glass) | Cool to 4°C<br>HCl to pH $\leq$ 2 | 14 days to analysis |
| Methane, Ethane, Ethene | RSK[2] SOPs 147 & 175, or approved equal | 2 | 40-mL glass, plastic screw cap, foil-faced silicon septum | Cool to 4°C | 14 days to analysis |
| TOC | EPA 415.1[3] | 1 | 125-mL HDPE | $H_2SO_4$ to pH < 2<br>Cool to 4°C | 28 days to analysis |
| PCR and enzymes (TCE reductase, BAV1 VC reductase, and VC reductase) | Laboratory SOP | 1 | 1L glass bottle or filter provided by laboratory | Cool to 4°C | Ship on day of collection |
| Sodium (Total) | SW-846 6010B | 1 | 500 mL HDPE | $HNO_3$ to pH $\leq$ 2 | 6 months to analysis |

HDPE High density polyethylene.
PCR Polymerase chain reaction.
SOP Standard operating procedure.
TOC Total Organic Carbon
VOCs Volatile organic compound.

1 All holding times are determined from date of collection.
2 RSK = Robert S. Kerr Environmental Research Center, Oklahoma.
3 US EPA, 1983. Methods for Chemical Analysis of Water and Wastes. Method 415.1.

**TABLE 4-6**

**GROUNDWATER FIELD ANALYSES - BIOLOGICAL ACTIVITY INDICATORS**
**REMEDIAL DESIGN**
**OPERABLE UNIT 9, SITE 59**
**NAVAL AIR STATION CECIL FIELD**
**JACKSONVILLE, FLORIDA**

| Parameter | Method/ Reference | Sample Volume, Container, and Preservation |
|---|---|---|
| Temperature | Direct-reading meter | 100 to 250 ml in glass or plastic container. Analyze at well head. |
| Dissolved Oxygen (DO) | CHEMetrics – K-7501, K-7512 vacuum vials | Follow test kit instructions. Analyze at well head. |
| pH | Direct-reading meter | 100 to 250 ml in glass or plastic container. Analyze at well head. |
| Specific Conductivity | Direct-reading meter | 100 to 250 ml in glass or plastic container. Analyze at well head. |
| Oxidation/Reduction Potential (ORP) | Direct-reading meter | 10 to 250 ml in glass container filling from the bottom. Do not aerate or agitate. Analyze at well head with flow-through cell. |

# 5.0 COST ESTIMATE

The capital costs for construction of the recirculation systems is estimated to be $1,242,000. The net present worth of the project, including long-term monitoring, is $2,245,000. The detailed cost estimate for construction is provided in Appendix E.

# REFERENCES


FDEP (Florida Environmental Department of Environmental Protection), 2005. Soil and Groundwater Cleanup Target Levels. Florida Administrative Code (FAC) 62-777, Tables I and II. April.

Golder Associates, 1998. Report on Environmental Due Diligence Investigation, Flightline Facilities, Naval Air Station Cecil Field, Jacksonville, Duval County, Florida, August.

TtNUS (Tetra Tech NUS, Inc.), 2007a. Feasibility Study Report, Operable Unit 9, Site 59, Naval Air Station Cecil Field, Jacksonville, Florida. Prepared for NAVFAC Southeast, North Charleston, South Carolina. January.

TtNUS, 2007b. Draft Record of Decision, Operable Unit 9, Site 59, Naval Air Station Cecil Field, Jacksonville, Florida. Prepared for NAVFAC Southeast, North Charleston, South Carolina. January.

TtNUS, 2006a. Pilot Study Work Plan for In Situ Bioremediation at Operable Unit 9, Site 59, Building 1845, Southern Area. Naval Air Station Cecil Field, Jacksonville, Florida. Prepared for Naval Facilities Engineering Command Engineering Field Division South (NAVFAC EFD SOUTH), North Charleston, South Carolina. July.

TtNUS, 2006b. Remedial Investigation Report, Operable Unit 9, Site 59, Naval Air Station Cecil Field, Jacksonville, Florida. Prepared for NAVFAC EFD SOUTH, North Charleston, South Carolina. November.

TtNUS, 2005. Pilot Study Work Plan for In Situ Bioremediation at Operable Unit 9, Site 59, Building 324/1845 Area, Naval Air Station Cecil Field, Jacksonville, Florida. Prepared for Naval Facilities Engineering Command Engineering Field Division South (NAVFAC EFD SOUTH), North Charleston, South Carolina. January.

# APPENDIX A

# GROUNDWATER REMEDIAL DESIGN WORK PLAN FOR LONG-TERM MONITORING

**C**omprehensive **L**ong-term **E**nvironmental **A**ction **N**avy

CONTRACT NUMBER N62467-94-D-0888

# Groundwater Remedial Design Work Plan for Long-Term Monitoring at Operable Unit 9, Site 59

## Naval Air Station Cecil Field

### Jacksonville, Florida

**Contract Task Order 0374**

**August 2007**


NAVFAC Naval Facilities Engineering Command
Southeast
2155 Eagle Drive
North Charleston, South Carolina 29406

TETRA TECH NUS, Inc.

030706/P

# GROUNDWATER REMEDIAL DESIGN
# WORK PLAN FOR LONG-TERM MONITORING
# AT
# OPERABLE UNIT 9, SITE 59

## NAVAL AIR STATION CECIL FIELD
## JACKSONVILLE, FLORIDA

## COMPREHENSIVE LONG-TERM
## ENVIRONMENTAL ACTION NAVY (CLEAN) CONTRACT

**Submitted to:**
**Naval Facilities Engineering Command**
**Southeast**
**2155 Eagle Drive**
**North Charleston, South Carolina 29406**

**Submitted by:**
**Tetra Tech NUS, Inc.**
**661 Andersen Drive**
**Foster Plaza 7**
**Pittsburgh, Pennsylvania 15220**

**CONTRACT NUMBER N62467-94-D-0888**
**CONTRACT TASK ORDER 0374**

**MARCH 2007**


**PREPARED UNDER THE SUPERVISION OF:**

ROBERT SIMCIK, P.E.
TASK ORDER MANAGER
TETRA TECH NUS, INC.
PITTSBURGH, PENNSYLVANIA

**APPROVED FOR SUBMITTAL BY:**

DEBRA M. HUMBERT
PROGRAM MANAGER
TETRA TECH NUS, INC.
PITTSBURGH, PENNSYLVANIA

CERTIFICATION OF TECHNICAL
DATA CONFORMITY

The Contractor, Tetra Tech NUS, Inc., hereby certifies that, to the best of its knowledge and belief, the technical data delivered herewith under Contract No. N62467-94-D-0888 are complete and accurate and comply with all requirements of this contract.

DATE: August 1, 2007

COMPANY CERTIFICATION AUTHORIZATION NUMBER: 7988
Tetra Tech NUS, Inc.
661 Andersen Drive
Pittsburgh, PA 15220

NAME AND TITLE OF CERTIFYING OFFICIAL: Robert Simcik, P.E.
Task Order Manager

# TABLE OF CONTENTS


**SECTION** **PAGE NO.**

**CERTIFICATION OF DATA CONFORMITY ..... iii**

**ACRONYMS ..... vi**

**1.0 INTRODUCTION ..... 1-1**
1.1 OVERVIEW ..... 1-1

**2.0 FIELD OPERATIONS ..... 2-1**
2.1 LONG-TERM SAMPLING AND ANALYSIS ..... 2-1
2.2.1 General Groundwater Sampling Procedures ..... 2-1
2.2.2 Microbial Analysis Sampling Procedures ..... 2-2
2.2 SAMPLE NUMBERS ..... 2-3

**3.0 QUALITY ASSURANCE/QUALITY CONTROL ..... 3-1**

**4.0 EVALUATION CRITERIA ..... 4-1**

**5.0 LONG-TERM MONITORING REPORTS ..... 5-1**

**6.0 FIVE-YEAR REVIEWS ..... 6-1**
6.1 BACKGROUND ..... 6-1
6.2 PURPOSE ..... 6-1
6.3 EXECUTION ..... 6-1
6.4 REPORTING ..... 6-2

**7.0 REFERENCES ..... 7-1**

**APPENDIX**

**A MICROBIAL ANALYSIS SAMPLING INSTRUCTIONS AND EXAMPLE CHAIN OF CUSTODY FORM**


# TABLES


**NUMBER**

2-1 Monitoring Well Construction Information
2-2 Monitoring Wells and Sampling Rationale
2-3 Summary of Analytical Requirements for Chemicals of Concern
2-4 Summary of Fixed-Base Laboratory Analytical Requirements for Natural Attenuation Parameters
2-5 Summary of Field Analytical Requirements for Natural Attenuation and Water Quality Parameters

# FIGURES

**NUMBER**

1-1 General Location Map
1-2 Site Location Map
1-3 Site Layout and Monitoring Well Locations
1-4 Monitoring Wells to be Sampled for Long-Term Monitoring Program – 30-Foot Zone
1-5 Monitoring Wells to be Sampled for Long-Term Monitoring Program – 50-Foot Zone
1-6 Monitoring Wells to be Sampled for Long-Term Monitoring Program – 70- to 80-Foot Zone
1-7 Monitoring Wells to be Sampled for Long-Term Monitoring Program – TOR Zone
2-1 Long-Term Monitoring Program Wells

# ACRONYMS

| | |
|---|---|
| ARAR | Applicable or Relevant and Appropriate Requirement |
| AS | Air sparging |
| BCT | BRAC Cleanup Team |
| bgs | Below ground surface |
| BRAC | Base Realignment and Closure |
| $^{o}C$ | Degrees Celsius |
| CERCLA | Comprehensive Environmental Response, Compensation, and Liability Act |
| CLEAN | Comprehensive Long-Term Environmental Action Navy |
| COC | Chemical of concern |
| CTO | Contract Task Order |
| DDI | Due Diligence Investigation |
| DO | Dissolved oxygen |
| EISOPQAM | Environmental Investigation and Standard Operating Procedures and Quality Assurance Manual |
| FDEP | Florida Department of Environmental Protection |
| FFA | Federal Facility Agreement |
| $ft^2$ | Square feet |
| GCTL | Groundwater Cleanup Target Level |
| GIS | Geographic Information System |
| JAA | Jacksonville Aviation Authority |
| JETC | Jet Engine Test Cell |
| JPA | Jacksonville Port Authority |
| LTM | Long-Term Monitoring |
| mg/L | Milligrams per liter |
| MS/MSD | Matrix spike/matrix spike duplicate |
| mV | Millivolts |
| NAS | Naval Air Station |
| NAVFAC SE | Naval Facilities Engineering Command Southeast |
| NAVD | National American Vertical Datum |
| NCP | National Oil and Hazardous Substances Pollution Contingency Plan |
| NTU | Nephelometric turbidity unit |
| ORP | Oxidation-reduction potential |
| OU | Operable Unit |
| PCB | Polychlorinated biphenyl |
| PSC | Potential Source of Contamination |

| | |
|---|---|
| QA/QC | Quality assurance/quality control |
| RAO | Remedial Action Objective |
| RAP | Remedial Action Plan |
| RI | Remedial Investigation |
| ROD | Record of Decision |
| SOP | Standard Operating Procedure |
| TCE | Trichloroethene |
| TOC | Total organic carbon |
| TtNUS | Tetra Tech NUS, Inc. |
| U.S. EPA | United States Environmental Protection Agency |
| VOC | Volatile organic compound |

# 1.0 INTRODUCTION

This Groundwater Remedial Design Work Plan for Long-Term Monitoring (LTM) AT Operable Unit (OU) 9, Site 59 at Naval Air Station (NAS) Cecil Field, Jacksonville, Florida has been prepared by Tetra Tech NUS, Inc. (TtNUS) for Naval Facilities Engineering Command Southeast (NAVFAC SE) under the Comprehensive Long-Term Environmental Action Navy (CLEAN) Program, Contract Number N62467-94-D-0888, Contract Task Order (CTO) 0374. This Remedial Design Work Plan outlines the requirements and describes the procedures for performing sample collection and analysis activities for OU 9, Site 59. In-situ biological treatment and land use control issues are addressed in separate design documents.

NAS Cecil Field is located in Jacksonville, Florida. Most of the Base is located in Duval County, and a small portion is located in Clay County. The Base was closed by the Navy and the flightline was transferred to the Jacksonville Port Authority (JPA), now known as the Jacksonville Aviation Authority (JAA), in 1999. The former Base is currently known as Cecil Commerce Center. Site 59 is located near the end of the North-South Runways in the Main Base Area of the facility (see Figures 1-1 and 1-2).

## 1.1 OVERVIEW

Figure 1-3 provides the site layout and existing monitoring well locations at OU 9, Site 59. Figures 1-4 through 1-7 present plumes based on the latest groundwater data from the four Site 59 zones and wells to be sampled as part of the LTM Program. The TCE Plumes on Figures 1-4 through 1-6 are defined based on exceedances of the Florida Department of Environmental Protection (FDEP) Groundwater Cleanup Target Level (GCTL) for TCE of 3 µg/L.

OU 9, Site 59 consists of the contaminated groundwater identified in the Building 324/Hangar 1845 and Building 815 Wash Rack Area. As shown on Figure 1-1, Site 59 is located in the Main Base area of NAS Cecil Field, near the northern end of the North-South Runways. The site consists of buildings and parking lots. The majority of Site 59 is paved, with a concrete flightline apron that covers the eastern portion of the site, and buildings and parking lots that cover most of the remainder of the site (see Figure 1-2). Facilities associated with Site 59 include Buildings 324, 334, 339, 811, 814, 815, 837LN, 885, and 1845, two sanitary sewer lift stations (LS-1 and LS-2), an oil-water separator associated with Building 334 (334-OW), and Potential Source of Contamination (PSC) 56, Stormwater Retention Pond.

A 1998 Due Diligence Investigation (DDI) conducted in the areas of Buildings 815 and 1845 included identification of areas of environmental impacts and sampling within the current boundaries of Site 59 (Golder Associates, 1998). Elevated concentrations of volatile organic compounds (VOCs) in soil were

detected in a sample from soil boring SB-15, located south of Building 1845, near the area of an aircraft wash rack and a former hazardous waste storage area.

At the Jet Engine Test Cell (JETC) facility (Buildings 334, 339, 811, and 334-0W), petroleum-related contamination associated with two underground storage tanks and one above-ground storage tank used to supply fuel for engine testing is being addressed under the Petroleum Program. Contaminated soil was excavated, and contaminated groundwater in the shallow portion of the surficial aquifer is being addressed via an air sparging (AS) system.

Environmental investigations associated with Building 815 involved an electrical transformer on the western side of the building (outside of the Site 59 area) and an aircraft wash rack located north of the building, just south of Building 1845 (within the Site 59 area). A small area of polychlorinated biphenyl (PCB)-contaminated soil was delineated and excavated from the transformer area in 2000, and the excavated soil was properly disposed off site. Following this removal action, soil in this area no longer represents a threat to human health or the environment. In the Building 815 wash rack area, concentrations of naphthalene and total recoverable petroleum hydrocarbons (TRPH) in shallow surficial groundwater exceeded regulatory criteria and are being addressed under the Petroleum Program.

Based on Remedial Investigation (RI) and post-RI data, Site 59 trichloroethene (TCE) exceedances occur at two locations at the 30-foot depth, one from just north of Building 324, centered west of Building 818, and extending southeast to Building 1845, and one oriented approximately east-west between Buildings 1845 and 815. The northern plume covers approximately 82,000 square feet ($ft^2$), and the southern plume covers approximately 42,000 $ft^2$. At the 50-foot depth, the northern plume has a more east-west orientation, but it is still centered just west of Building 818 and covers an area of approximately 84,000 $ft^2$. The position of the southern plume shifts from between Buildings 1845 and 815 to encompassing most of Building 1845 and extending to Building 815, and the orientation changes from east-west to northwest-southeast. The area covered by this plume is approximately 115,000 $ft^2$. At the 70- to 80-foot depth, the plumes coalesce into a single area extending from southeast of Building 324 to within the Building 1845 footprint, with a northwest-southeast orientation, and the center shifts toward the northwestern corner of Building 1845. This plume covers approximately 150,000 $ft^2$. There is no plume in the TOR zone based on 2006 (post-RI) sampling data.

The objective of groundwater LTM at Site 59 is to evaluate the performance, progress, and effectiveness of in-situ biological treatment and natural attenuation. To achieve this objective, this monitoring plan is designed to determine trends in contaminant levels over time and to verify that contaminant reduction is occurring. The LTM program includes groundwater sampling and analysis for chemicals of concern

(COCs), natural attenuation parameters, and parameters associated with the in-situ biological treatment process.

In the event that data collected under this monitoring plan indicate that in-situ biological treatment and natural attenuation are insufficient to protect human health and the environment or to prevent plume expansion, a contingency plan will be developed to augment or replace this remedy.

This monitoring plan includes sentinel wells CEF-059-019-033, CEF-059-019-051, CEF-059-019-078, and CEF-59-19-105 located downgradient of the TCE Plumes. If analysis of a groundwater sample collected from any sentinel well indicates that any GCTL has been exceeded, the following step-by-step actions would be taken:

1. The sentinel well(s) will be re-sampled to verify the exceedance(s).

2. If any exceedances are verified, additional hydrogeological modeling will be performed to determine a revised predicted expansion rate of the contaminant plume(s) based on the new monitoring data.

3. Based on the results of the additional modeling, contingency remedies will be developed in accordance with the Record of Decision (ROD) (TtNUS, 2007b).

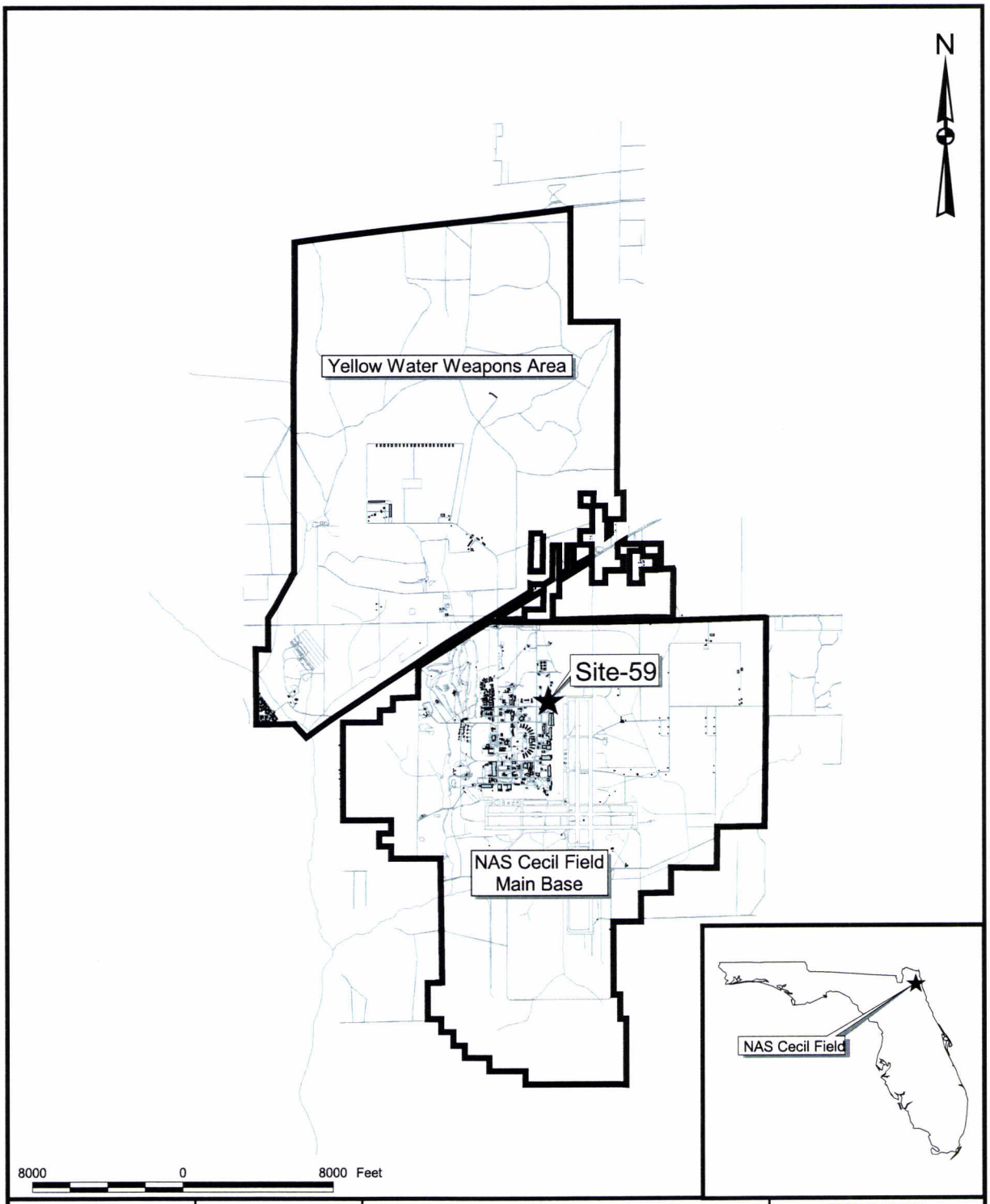


| | | | |
|---|---|---|---|
| DRAWN BY MJJ | DATE 10Jan06 | GENERAL LOCATION MAP<br>OU 9, SITE 59<br>NAVAL AIR STATION CECIL FIELD<br>JACKSONVILLE, FLORIDA | CONTRACT NUMBER 8925 |
| CHECKED BY | DATE | | APPROVED BY 8/3/07 DATE |
| COST/SCHEDULE-AREA | | | APPROVED BY DATE |
| SCALE AS NOTED | | | DRAWING NO. FIGURE 1-1 REV 0 |

NAVFAC

P:\GIS\NAS_CecilField\Site-59_LTM.apr 17Feb07 MJJ Layout000

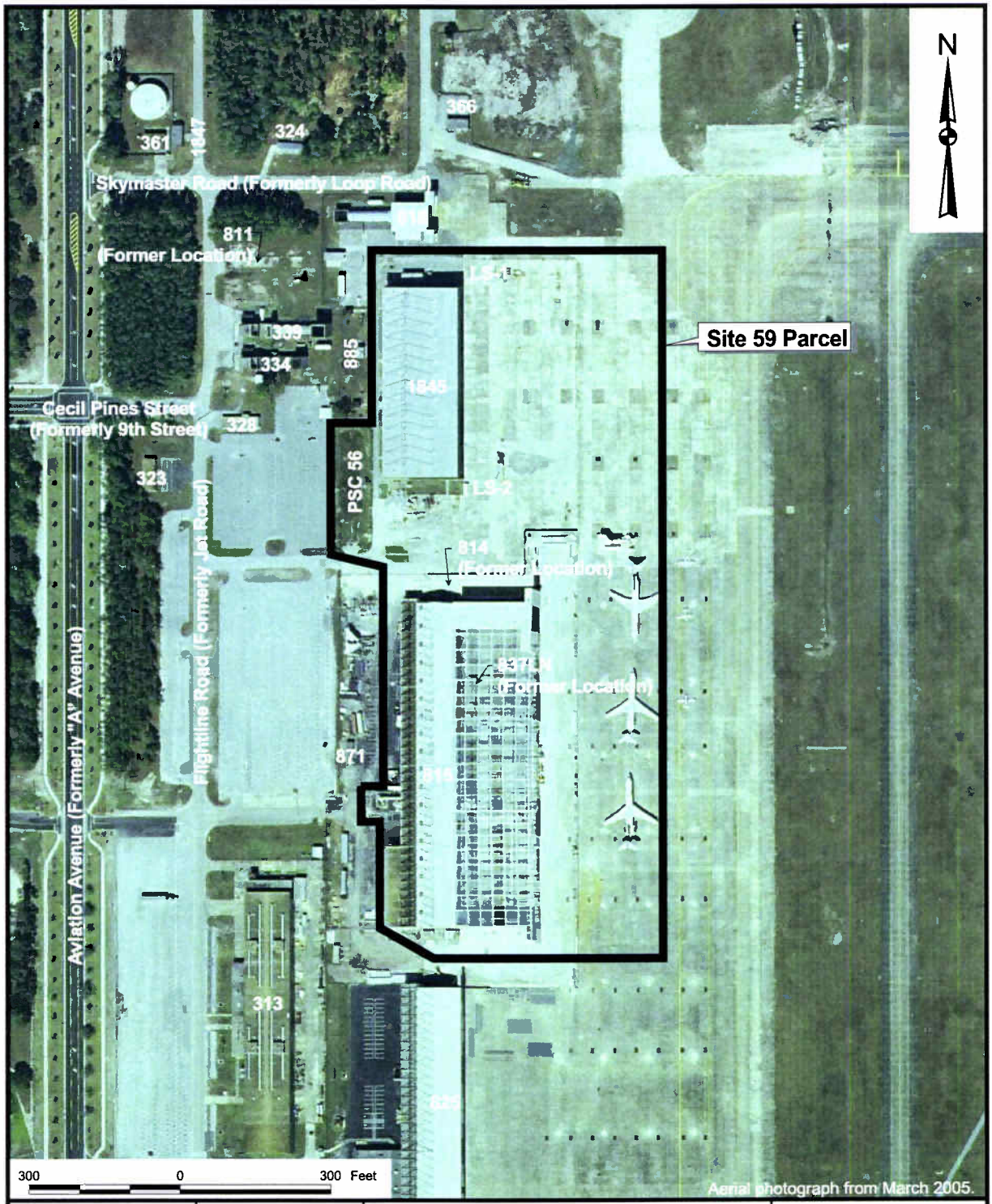


| | | | |
|---|---|---|---|
| DRAWN BY MJJ | DATE 10Jan06 | SITE LOCATION MAP<br>OU 9, SITE 59<br>NAVAL AIR STATION CECIL FIELD<br>JACKSONVILLE, FLORIDA | CONTRACT NUMBER 8925 |
| CHECKED BY | DATE | | APPROVED BY 8/3/07 DATE |
| COST/SCHEDULE-AREA | | | APPROVED BY DATE |
| SCALE AS NOTED | NAVFAC | | DRAWING NO. FIGURE 1-2 REV 0 |

P:\GIS\NAS_CecilField\Site-59_LTM.apr 20Feb07 MJJ Layout01

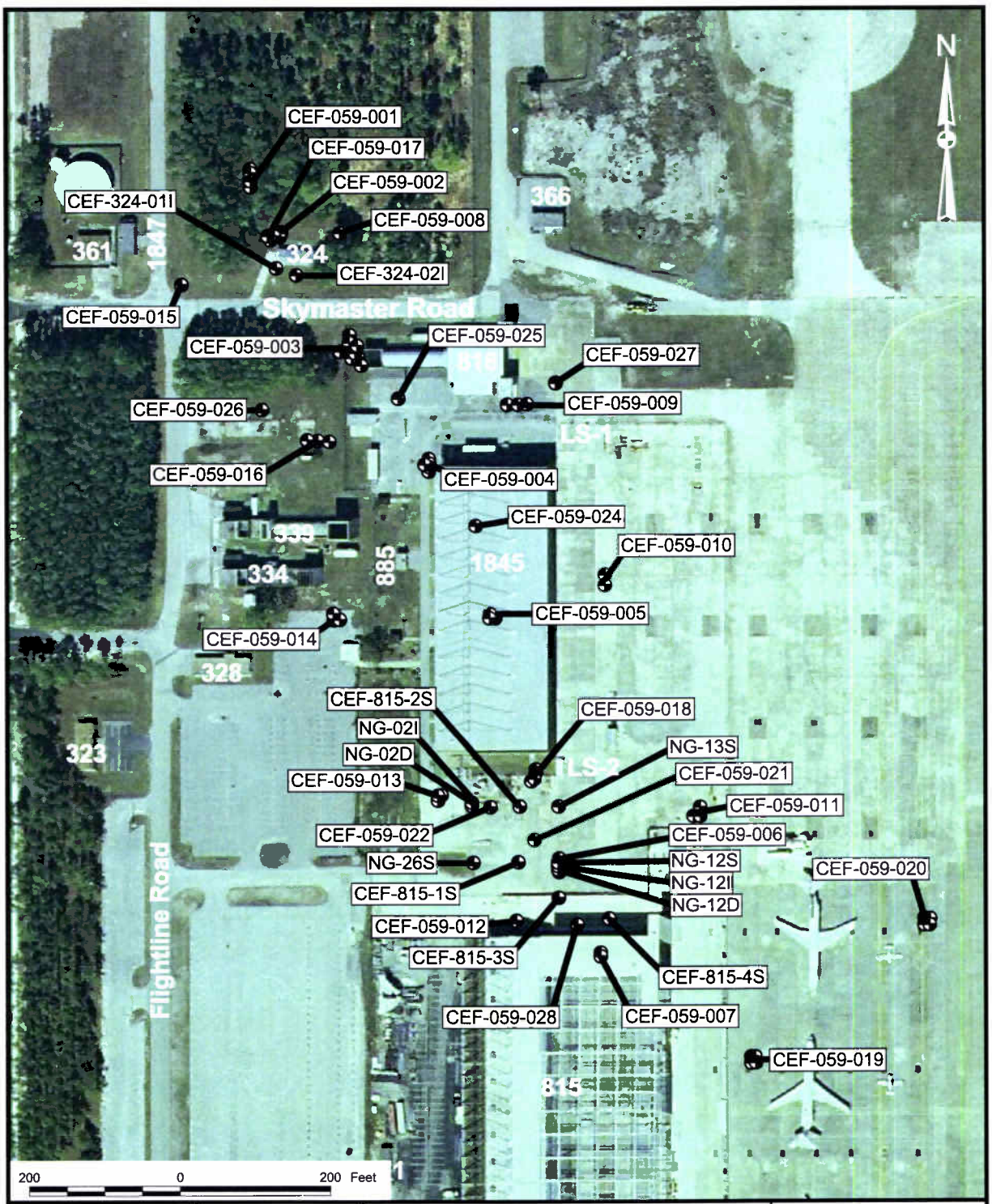


| | | | |
|---|---|---|---|
| DRAWN BY MJJ | DATE 10Jan06 | SITE LAYOUT AND MONITORING WELL LOCATIONS<br>OU 9, SITE 59<br>NAVAL AIR STATION CECIL FIELD<br>JACKSONVILLE, FLORIDA | CONTRACT NUMBER 8925 |
| CHECKED BY | DATE | | APPROVED BY 5/3/07 DATE |
| COST/SCHEDULE-AREA | | | APPROVED BY DATE |
| SCALE AS NOTED | NAVFAC | | DRAWING NO. FIGURE 1-3 REV 0 |

P:\GIS\NAS_CecilField\Site-59_LTM.apr 09Mar07 MJJ Layout02

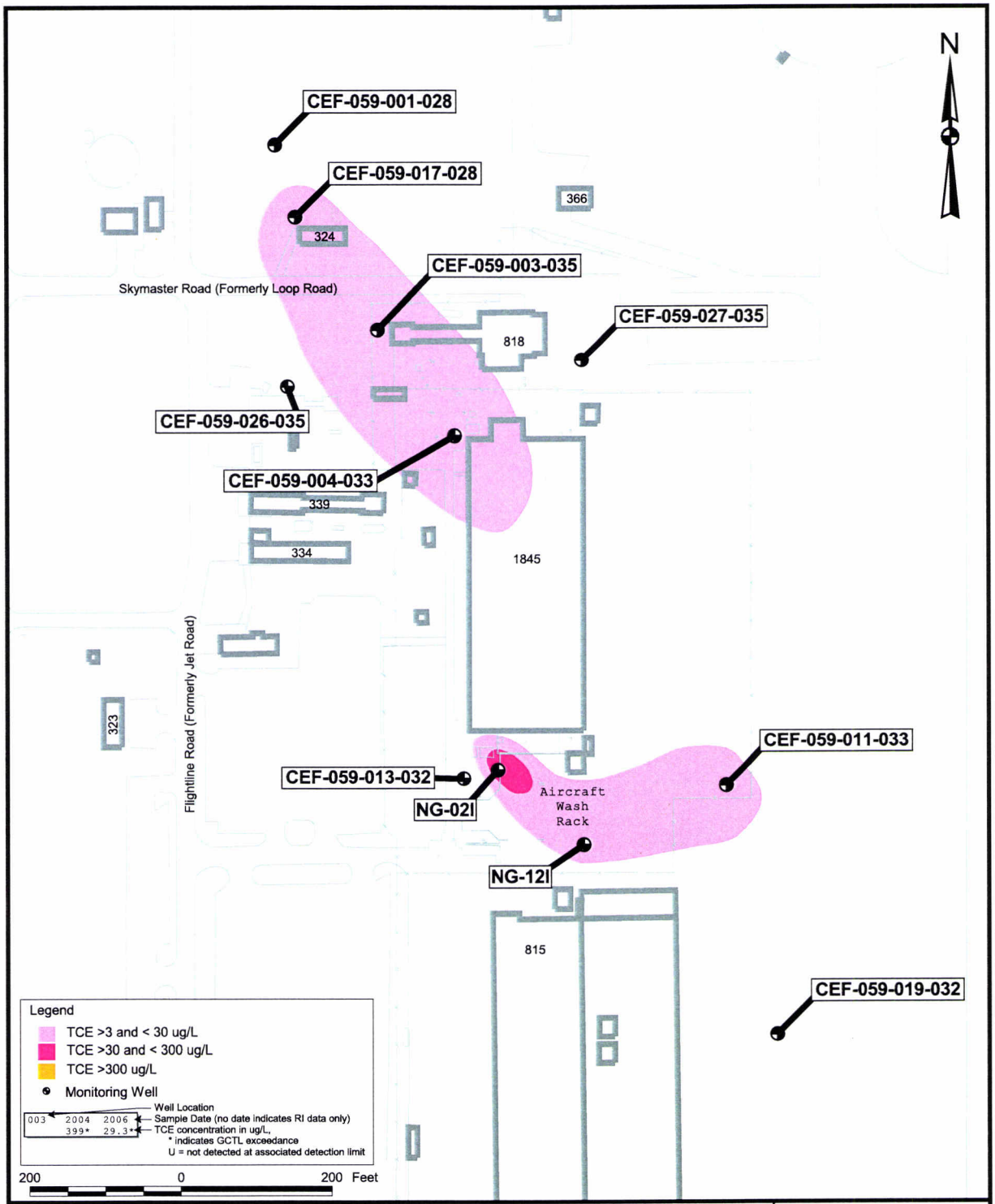


| | | | |
|---|---|---|---|
| DRAWN BY MJJ | DATE 17Jan06 | WELLS TO BE SAMPLED FOR<br>LONG-TERM MONITORING PROGRAM<br>30-FOOT ZONE<br>OU 9, SITE 59<br>NAVAL AIR STATION CECIL FIELD<br>JACKSONVILLE, FLORIDA | CONTRACT NUMBER 8925 |
| CHECKED BY | DATE | | APPROVED BY 8/3/07 DATE |
| COST/SCHEDULE-AREA | | | APPROVED BY DATE |
| SCALE AS NOTED | | | DRAWING NO. FIGURE 1-4 / REV 0 |

P:\GIS\NAS_CecilField\Site-59_LTM.apr 20Feb07 MJJ Layout041

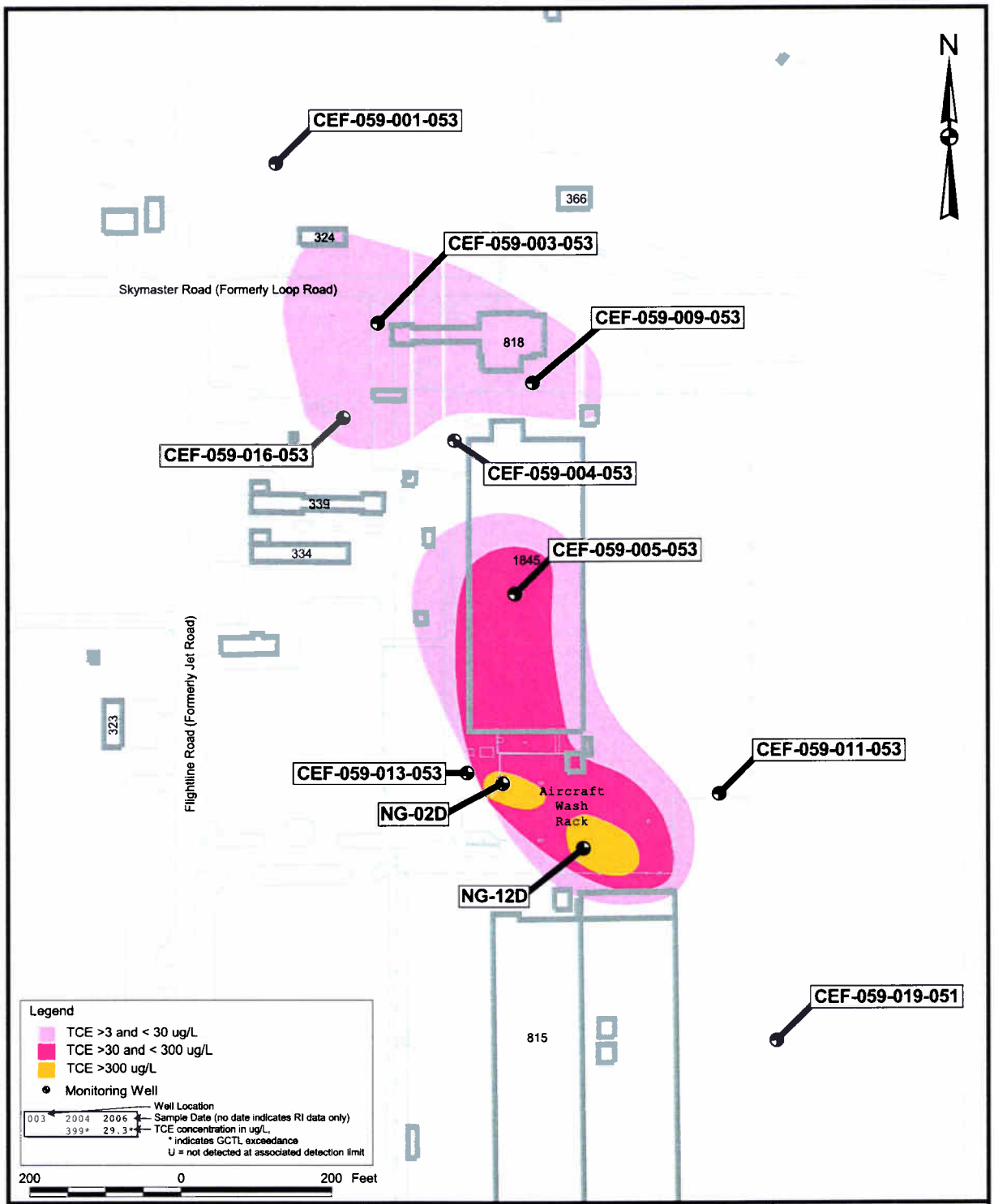


| | | | |
|---|---|---|---|
| DRAWN BY MJJ | DATE 17Jan06 | WELLS TO BE SAMPLED FOR<br>LONG-TERM MONITORING PROGRAM<br>50-FOOT ZONE<br>OU 9, SITE 59<br>NAVAL AIR STATION CECIL FIELD<br>JACKSONVILLE, FLORIDA | CONTRACT NUMBER 8925 |
| CHECKED BY | DATE | | APPROVED BY DATE 3/21/07 |
| COST/SCHEDULE-AREA | | | APPROVED BY DATE |
| SCALE AS NOTED | NAVFAC | | DRAWING NO. FIGURE 1-5 / REV 0 |

P:\GIS\NAS_CecilField\Site-59_LTM.apr 22Feb07 MJJ Layout051

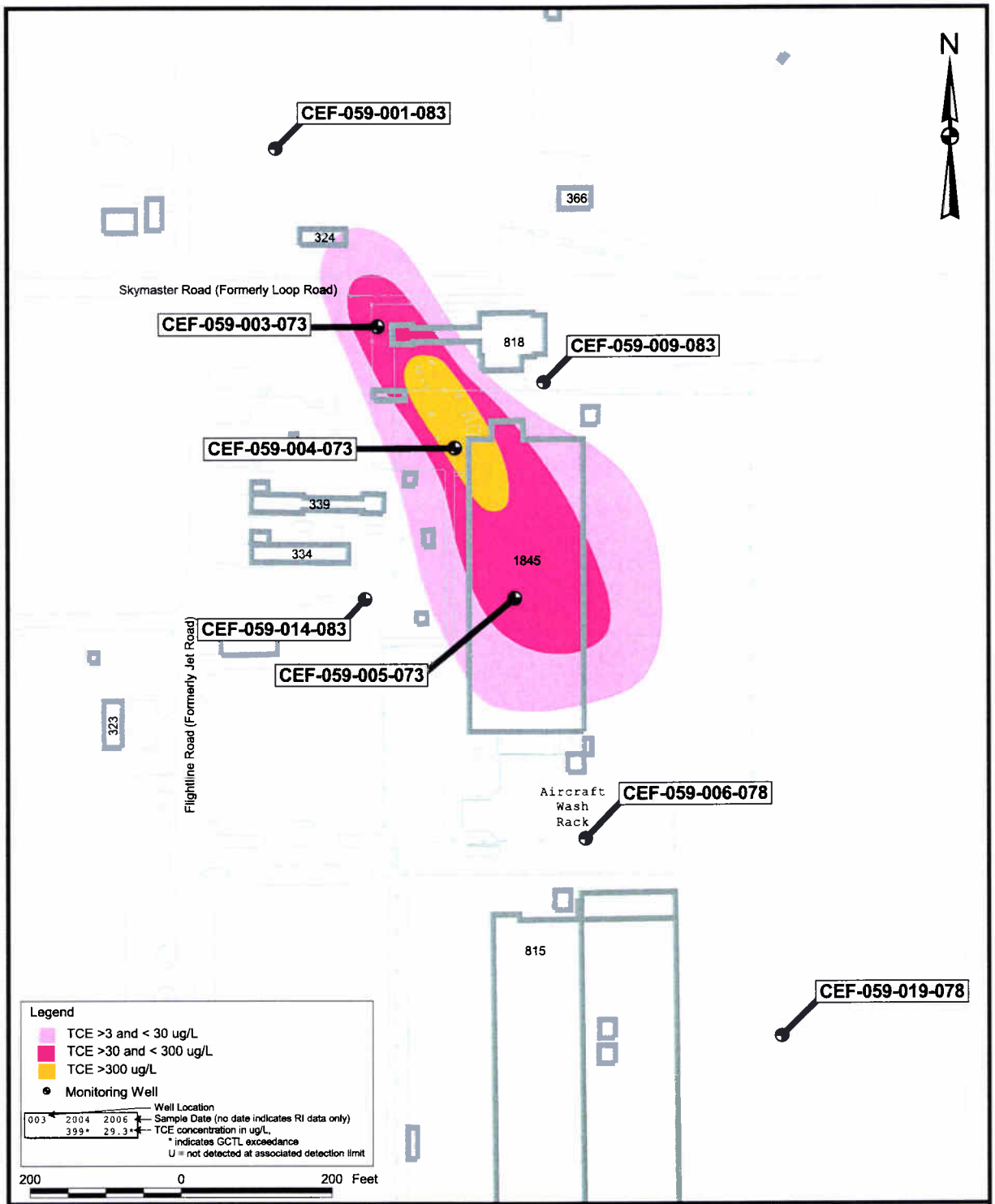


| | | | |
|---|---|---|---|
| DRAWN BY MJJ | DATE 17Jan06 | WELLS TO BE SAMPLED FOR<br>LONG-TERM MONITORING PROGRAM<br>70- TO 80-FOOT ZONE<br>OU 9, SITE 59<br>NAVAL AIR STATION CECIL FIELD<br>JACKSONVILLE, FLORIDA | CONTRACT NUMBER 8925 |
| CHECKED BY | DATE | | APPROVED BY DATE 8/3/07 |
| COST/SCHEDULE-AREA | | | APPROVED BY DATE |
| SCALE AS NOTED | NAVFAC | | DRAWING NO. FIGURE 1-6 / REV 0 |

P:\GIS\NAS_CecilField\Site-59_LTM.apr 20Feb07 MJJ Layout061

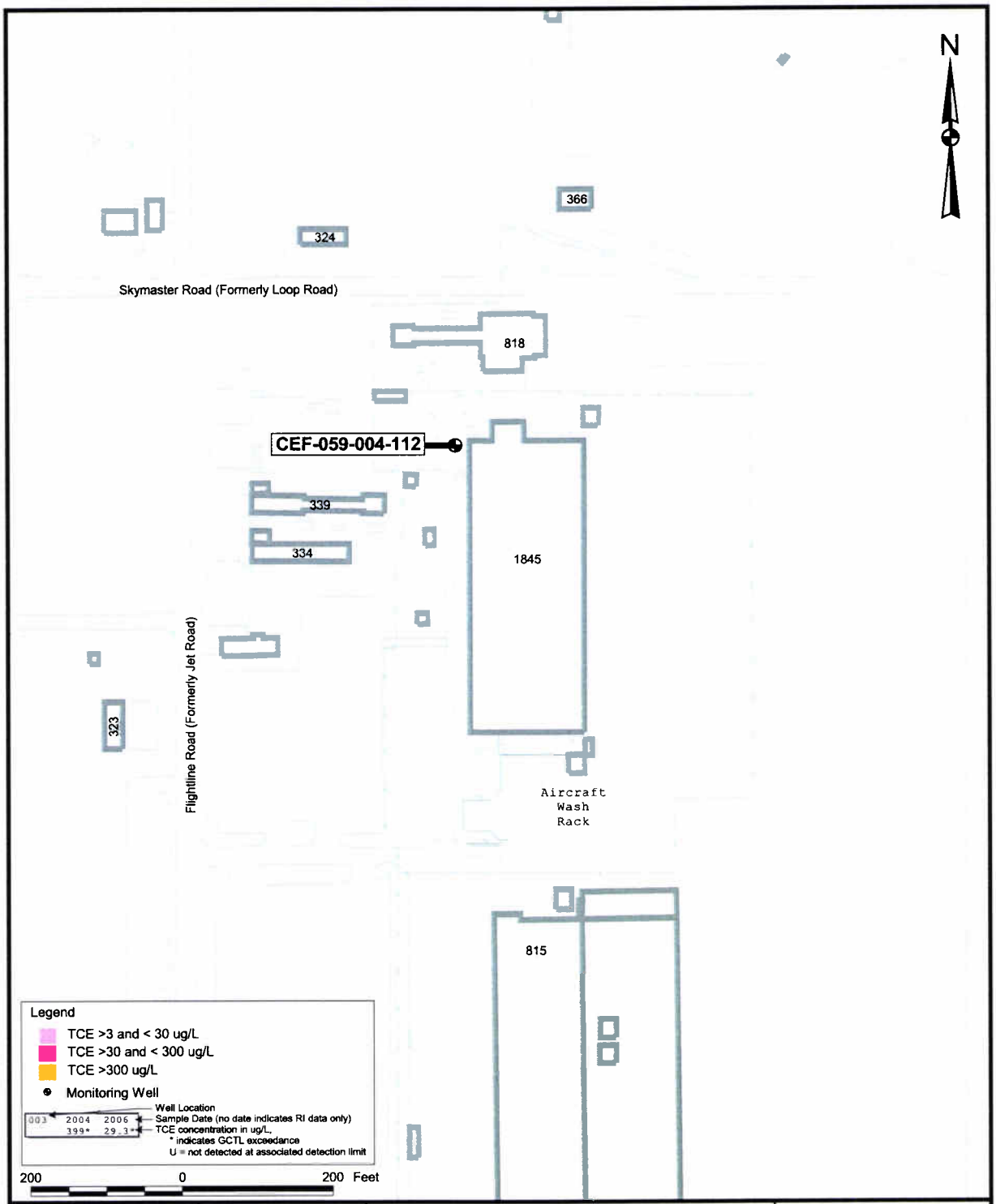


| | | | |
|---|---|---|---|
| DRAWN BY MJJ | DATE 17Jan06 | WELLS TO BE SAMPLED FOR<br>LONG-TERM MONITORING PROGRAM<br>TOP OF ROCK ZONE<br>OU 9, SITE 59<br>NAVAL AIR STATION CECIL FIELD<br>JACKSONVILLE, FLORIDA | CONTRACT NUMBER 8925 |
| CHECKED BY | DATE | | APPROVED BY DATE 8/3/07 |
| COST/SCHEDULE-AREA | | | APPROVED BY DATE |
| SCALE AS NOTED | | | DRAWING NO. FIGURE 1-7 / REV 0 |

P:\GIS\NAS_CecilField\Site-59_LTM.apr 20Feb07 MJJ Layout071

# 2.0 FIELD OPERATIONS

The locations of wells included in the LTM program for Site 59 are presented on Figure 2-1. Well construction information for these wells is presented in Table 2-1. The rationale for selection of these wells and analyses to be performed are presented in Table 2-2. Analytical requirements are summarized in Tables 2-3 through 2-5.

## 2.1 LONG-TERM SAMPLING AND ANALYSIS

Groundwater will be sampled and analyzed to verify that contaminant mass and mobility are being effectively reduced. A synoptic round of water-level measurements will be collected using an oil/water interface probe at each site during each sampling event at the monitoring wells to be sampled and other wells as listed in Table 2-2.

The sampling activities, quality assurance/quality control (QA/QC) procedures, and data validation requirements for field activities described in this work plan are in general agreement with the United States Environmental Protection Agency (U.S. EPA) Region 4 Environmental Investigation Standard Operating Procedures and Quality Assurance Manual (EISOPQAM), Florida Department of Environmental Protection (FDEP) Standard Operating Procedures (SOPs), and current TtNUS SOPs.

Changes in the monitoring program, including changes in analyses, wells, and sampling frequency, will be considered at least annually based on evaluation of the data and concurrence by the BCT. It is anticipated that the number of wells sampled and analysis performed in future sampling events may be reduced. Monitoring results will be tabulated and presented to the BCT in annual reports (see Section 5.0).

During the first 5-year period, sampling and analysis of the LTM well network will be conducted quarterly for the first year, semiannually for the next 2 years, and annually thereafter. The first year quarterly sampling events will be conducted to determine if there are significant temporal changes as a result of seasonal influences. If the data collected during this initial period support the observed efficiency of in-situ biological treatment and natural attenuation (i.e., that the plume is either in a steady-state condition or declining), the monitoring frequency may be reduced.

### 2.1.1 General Groundwater Sampling Procedures

Groundwater purging and sampling for all parameters except microbial analysis will be accomplished using peristaltic pumps, dedicated Teflon or polyethylene tubing, and general low-flow purging and

sampling techniques. The tubing will be stored within each well between sampling events and will be replaced approximately every 2 years. The intake end of the tubing will be placed at the midpoint of the saturated screened interval for purging and sampling of wells associated with the TCE Plumes. The target drawdown to be maintained during purging is 0.3 foot or less.

Flow-through cells will be used to collect field measurements of dissolved oxygen (DO), temperature, pH, conductivity, and turbidity during purging at 5- to 10-minute intervals. Purging will continue until field parameter readings stabilize as follows: temperature $\pm$ 1.0 degrees Celsius (°C), pH $\pm$ 0.1 standard units, specific conductance $\pm$ 5 percent, and turbidity less than 10 nephelometric turbidity units (NTUs). If the field parameters stabilize following three consecutive readings and a minimum of three to five well screen volumes have been purged, collection of samples for chemical and natural attenuation (laboratory and field) parameters can begin. If all field parameters except turbidity stabilize (i.e., a turbidity reading of less 5 NTUs cannot be reached), purging will be considered complete after removal of five saturated screen volumes.

Groundwater samples for VOC analysis will be collected first using the “soda straw” method as described in Section FS 2221 of the FDEP Groundwater Sampling SOP FS 2200 (FDEP, 2004). Samples for all other analyses will be collected with peristaltic pumps by filling sample bottles directly. Care will be taken to minimize the time that samples are exposed to air before analytical procedures are initiated. Separate sample volumes will be collected for each natural attenuation field test to be conducted.

Prepreserved bottles will be obtained from the laboratory for analyses that require concentrated acid/base for sample preservation. After bottles are filled, sample pH values will not be measured or adjusted in the field. Personnel protection equipment and other waste trash (e.g. disposable trowels) will not be considered hazardous and will be disposed in a municipal landfill. Such trash will be collected in a plastic bag and disposed in a suitable trash receptacle.

### 2.1.2 Microbial Analysis Sampling Procedures

Samples for microbial analyses will be collected according to directions provided by Microbial Insights, Inc. These samples will be collected by pumping water from the sampling pump discharge through a filter provided by the laboratory. One to 2 liters of water will be pumped through the filter, and the volume pumped will be measured and recorded. Detailed sampling instructions and an example chain of custody form are included in Appendix A.

## 2.2 SAMPLE NUMBERS

Each sample is to be assigned a unique sample identification number. Sample numbers will use the following convention that has been established for NAS Cecil Field and is similar to that used for the RI.

The nomenclature established for this investigation is as follows:

| 1 | | 2 | | 3 | | 4 | | 5 | | 6 |
|---|---|---|---|---|---|---|---|---|---|---|
| AAA | - | ENN | - | AA | - | NNNA | - | NNN | - | ANN |
| Site Location | | Site Designation | | Medium | | Sample Location | | Sample Depth | | Sample Round |

1. Site Location:

   CEF- NAS Cecil Field

2. Site Designation:

   The following existing two- to three-letter and/or digit site designations will be used:

   059 - Site 59

   324 - Site 59

   NG - Site 59

3. Media types:

   GW - Groundwater

   GF - Filtered groundwater (applies to filtered metals only)

   DU - Duplicate

   DF - Filtered groundwater duplicate (applies to filtered metals only)

4. Sampling location by media type:

   The existing two- to three-digit and one-letter (NNNA) well designations will be used. For example, for well CEF-059-019-078, CEF-GW-059-019-078 will be used, and for NG-14S, CEF-GW-NG-14S will be used.

5. The three-digit sampling depth will be used for applicable samples.

6. The monitoring well sampling event (ANN) is as follows:

   L01 = LTM event one

   L02 = LTM event two

   If a well requires resampling, “-A” will be suffixed to the sample designation

**TABLE 2-1**

**MONITORING WELL CONSTRUCTION INFORMATION**
**OPERABLE UNIT 9, SITE 59**
**NAVAL AIR STATION CECIL FIELD**
**JACKSONVILLE, FLORIDA**


| Well Location | Well ID | Date Installed | Diameter (in inches) | Drilling Method | Total Depth (in feet bgs) | Screened Interval (in feet bgs) | Ground Surface Elevation (in feet amsl) | Top of casing Elevation (in feet amsl) |
|---|---|---|---|---|---|---|---|---|
| **Site 59 Wells** | | | | | | | | |
| 001 | CEF-059-001-028 | 28-Oct-04 | 2 | Rotosonic | 28.5 | 23 to 28 | 78.80 | 78.71 |
| | CEF-059-001-053 | 21-Oct-04 | 0.75 | DPT | 53.5 | 48 to 53 | 78.89 | 78.95 |
| | CEF-059-001-083 | 18-Oct-04 | 2 | Rotosonic | 84 | 78 to 83 | 78.62 | 78.42 |
| | CEF-059-001-121 | 18-Oct-04 | 2 | Rotosonic | 125 | 116.5 to 121.5 | 78.79 | 78.72 |
| 002 | CEF-059-002-028 | 15-Oct-04 | 0.75 | DPT | 28.5 | 23 to 28 | 79.20 | 79.13 |
| | CEF-059-002-053 | 17-Oct-04 | 0.75 | DPT | 53 | 47.8 to 52.8 | 79.29 | 79.20 |
| | CEF-059-002-120 | 19-Oct-04 | 2 | Rotosonic | 121 | 115.5 to 120.5 | 79.28 | 79.25 |
| 003 | CEF-059-003-035 | 15-Oct-04 | 0.75 | DPT | 36 | 30.5 to 35.5 | 77.69 | 77.49 |
| | CEF-059-003-053 | 17-Oct-04 | 0.75 | DPT | 53 | 47.8 to 52.8 | 77.63 | 77.44 |
| | CEF-059-003-073 | 17-Oct-04 | 0.75 | DPT | 73 | 67.8 to 72.8 | 77.64 | 77.42 |
| | CEF-059-003-121 | 03-Oct-04 | 2 | Rotosonic | 123 | 116.5 to 121.5 | 77.64 | 77.63 |
| 004 | CEF-059-004-033 | 09-Jun-05 | 0.75 | DPT | 33 | 28 to 33 | 77.11 | 76.90 |
| | CEF-059-004-053 | 18-Oct-04 | 0.75 | DPT | 53 | 47.8 to 52.8 | 77.23 | 77.03 |
| | CEF-059-004-073 | 18-Oct-04 | 0.75 | DPT | 73 | 67.8 to 72.8 | 77.23 | 77.04 |
| | CEF-059-004-112 | 01-Oct-04 | 2 | Rotosonic | 120 | 107 to 112 | 77.18 | 76.86 |
| | CEF-059-004-135 | 19-Nov-05 | 2 | Rotosonic | 138 | 125 to 135 | 77.40 | 77.15 |
| 005 | CEF-059-005-033 | 15-Oct-04 | 0.75 | DPT | 33.5 | 28 to 33 | 77.72 | 77.35 |
| | CEF-059-005-053 | 21-Oct-04 | 0.75 | DPT | 53.5 | 48 to 53 | 77.77 | 77.60 |
| | CEF-059-005-073 | 21-Oct-04 | 0.75 | DPT | 73.5 | 68 to 73 | 77.73 | 77.44 |
| 006 | NG-12I | 08-Jun-98 | 2 | Mud rotary | 38 | 32.5 to 37.5 | NA | 76.01 |
| | NG-12D | 04-Jun-98 | 2 | Mud rotary | 57 | 45 to 50 | NA | 76.04 |
| | CEF-059-006-078 | 12-Jun-05 | 2 | Rotosonic | 78.8 | 73.6 to 78.6 | 75.87 | 75.65 |
| | CEF-059-006-104 | 30-Sep-04 | 2 | Rotosonic | 104.5 | 99.5 to 104 5 | 75.99 | 75.78 |
| 007 | CEF-059-007-053 | 11-Jun-05 | 0.75 | DPT | 53 | 48 to 53 | 75.86 | 75.44 |
| | CEF-059-007-078 | 11-Jun-05 | 2 | Rotosonic | 78.3 | 73 to 78 | 75.85 | 75.62 |

**TABLE 2-1**

**MONITORING WELL CONSTRUCTION INFORMATION**
**OPERABLE UNIT 9, SITE 59**
**NAVAL AIR STATION CECIL FIELD**
**JACKSONVILLE, FLORIDA**


| Well Location | Well ID | Date Installed | Diameter (in inches) | Drilling Method | Total Depth (in feet bgs) | Screened Interval (in feet bgs) | Ground Surface Elevation (in feet amsl) | Top of casing Elevation (in feet amsl) |
|---|---|---|---|---|---|---|---|---|
| **Site 59 Wells (continued)** | | | | | | | | |
| 008 | CEF-059-008-028 | 15-Oct-04 | 0.75 | DPT | 28.5 | 23 to 28 | 79.01 | 79.03 |
| 009 | CEF-059-009-053 | 15-Oct-04 | 2 | Rotosonic | 54 | 48 to 53 | 78.06 | 77.84 |
| | CEF-059-009-083 | 14-Oct-04 | 2 | Rotosonic | 84 | 78 to 83 | 78.06 | 77.88 |
| | CEF-059-009-113 | 14-Oct-04 | 2 | Rotosonic | 118 | 108.5 to 113.5 | 78.11 | 77.85 |
| 010 | CEF-059-010-053 | 20-Oct-04 | 0.75 | DPT | 53.5 | 48 to 53 | 76.82 | 76.53 |
| | CEF-059-010-083 | 13-Oct-04 | 2 | Rotosonic | 84 | 78 to 83 | 76.82 | 76.57 |
| 011 | CEF-059-011-033 | 15-Oct-04 | 0.75 | DPT | 33.5 | 28 to 33 | 75.94 | 75.70 |
| | CEF-059-011-053 | 20-Oct-04 | 0.75 | DPT | 53.5 | 48 to 53 | 75.79 | 75.53 |
| | CEF-059-011-083 | 07-Oct-04 | 2 | Rotosonic | 84 | 78 to 83 | 75.80 | 75.43 |
| 012 | CEF-059-012-053 | 10-Jun-05 | 0.75 | DPT | 53 | 48 to 53 | 75.84 | 75.69 |
| 013 | CEF-059-013-032 | 14-Oct-04 | 0.75 | DPT | 33.5 | 27 to 32 | 76.70 | 76.55 |
| | CEF-059-013-053 | 20-Oct-04 | 0.75 | DPT | 53.5 | 48 to 53 | 76.74 | 76.47 |
| | CEF-059-013-083 | 07-Oct-04 | 2 | Rotosonic | 84 | 78 to 83 | 76.76 | 76.59 |
| 014 | CEF-059-014-053 | 17-Oct-04 | 0.75 | DPT | 53 | 47.8 to 52.8 | 77.29 | 76.92 |
| | CEF-059-014-083 | 15-Oct-04 | 2 | Rotosonic | 84 | 78 to 83 | 77.12 | 77.05 |
| | CEF-059-014-120 | 05-Oct-04 | 2 | Rotosonic | 130 | 115.5 to 120.5 | 77.32 | 77.11 |
| 015 | CEF-059-015-028 | 15-Oct-04 | 0.75 | DPT | 28.5 | 23 to 28 | 77.86 | 77.86 |
| 016 | CEF-059-016-053 | 17-Oct-04 | 0.75 | DPT | 53 | 47.8 to 52.8 | 78.28 | 78.06 |
| | CEF-059-016-083 | 17-Oct-04 | 2 | Rotosonic | 84 | 78 to 83 | 78.22 | 78.03 |
| | CEF-059-016-119 | 16-Oct-04 | 2 | Rotosonic | 119 | 114 to 119 | 78.36 | 78.22 |
| 017 | CEF-059-017-028 | 18-Feb-05 | 2 | HSA | 28.5 | 23 to 28 | 79.22 | 79.36 |
| | CEF-059-017-053 | 18-Feb-05 | 2 | HSA | 53.5 | 48 to 53 | 79.07 | 79.12 |
| 018 | CEF-059-018-033 | 08-Jun-05 | 0.75 | DPT | 33 | 28 to 33 | 77.13 | 76.82 |
| | CEF-059-018-053 | 09-Jun-05 | 0.75 | DPT | 53 | 48 to 53 | 77.07 | 76.79 |
| | CEF-059-018-078 | 12-Jun-05 | 2 | Rotosonic | 78.5 | 73.2 to 78.2 | 76.30 | 75.92 |
| | CEF-059-018-105 | 12-Jun-05 | 2 | Rotosonic | 105 | 99.8 to 104.8 | 76.53 | 76.15 |

**TABLE 2-1**

**MONITORING WELL CONSTRUCTION INFORMATION**
**OPERABLE UNIT 9, SITE 59**
**NAVAL AIR STATION CECIL FIELD**
**JACKSONVILLE, FLORIDA**


| Well Location | Well ID | Date Installed | Diameter (in inches) | Drilling Method | Total Depth (in feet bgs) | Screened Interval (in feet bgs) | Ground Surface Elevation (in feet amsl) | Top of casing Elevation (in feet amsl) |
|---|---|---|---|---|---|---|---|---|
| **Site 59 Wells (continued)** | | | | | | | | |
| 019 | CEF-059-019-032 | 08-Jun-05 | 0.75 | DPT | 32.1 | 27 to 32 | 74.74 | 74.37 |
| | CEF-059-019-051 | 08-Jun-05 | 0.75 | DPT | 51.4 | 47 to 51 | 74.87 | 74.49 |
| | CEF-059-019-078 | 10-Jun-05 | 2 | Rotosonic | 78.5 | 73 to 78 | 74.79 | 74.54 |
| | CEF-059-019-106 | 10-Jun-05 | 2 | Rotosonic | 106.3 | 101 to 106 | 74.86 | 74.58 |
| 020 | CEF-059-020-033 | 09-Jun-05 | 0.75 | DPT | 33 | 28 to 33 | 77.07 | 76.50 |
| | CEF-059-020-053 | 10-Jun-05 | 0.75 | DPT | 53 | 48 to 53 | 77.02 | 76.49 |
| | CEF-059-020-078 | 09-Jun-05 | 2 | Rotosonic | 78.5 | 73 to 78 | 77.12 | 76.83 |
| | CEF-059-020-099 | 08-Jun-05 | 2 | Rotosonic | 105 | 94.5 to 99.5 | 77.08 | 76.81 |
| 021 | CEF-059-021-050 | 15-Jul-06 | 0.75 | Mud rotary | 50.5 | 45 to 50 | 75.39 | 75.79 |
| 022 | CEF-059-022-050 | 12-Jan-07 | 0.75 | DPT | 50.5 | 45 to 50 | 75.66 | 75.45 |
| 024 | CEF-059-024-073 | 12-Jan-07 | 0.75 | DPT | 73.5 | 68 to 73 | NA | NA |
| 025 | CEF-059-0245-073 | 10-Jan-07 | 0.75 | DPT | 73.5 | 68 to 73 | 76.86 | 76.61 |
| 026 | CEF-059-026-035 | 08-Jan-07 | 0.75 | DPT | 35.5 | 30 to 35 | 78.20 | 77.99 |
| 027 | CEF-059-027-035 | 08-Jan-07 | 0.75 | DPT | 35.5 | 30 to 35 | 77.74 | 77.45 |
| NG-02I | | 01-Jun-98 | 2 | Mud rotary | 39 | 33 to 38 | NA | 76.72 |
| NG-02D | | 01-Jun-98 | 2 | Mud rotary | 50 | 43 to 48 | NA | 76.74 |

* Covered with asphalt/concrete during the RI; reinstalled in January 2007.
DPT = Direct-push technology
HSA = Hollow-stem auger.
Elevation is referenced to 1988 National American Vertical Datum (NAVD).

NA = Not available.
bgs = Below ground surface.
amsl = Above mean sea level.

**TABLE 2-2**

**MONITORING WELLS AND SAMPLING RATIONALE**
**GROUNDWATER REMEDIAL DESIGN WORK PLAN FOR LTM**
**OPERABLE UNIT 9, SITE 59**
**NAVAL AIR STATION CECIL FIELD**
**JACKSONVILLE, FLORIDA**


| Well Location | Well ID | Total Depth in feet bgs | Analysis | | | WL | Rationale and Comments |
|---|---|---|---|---|---|---|---|
| | | | V | NA | Other[1] | | |
| **Site 59** | | | | | | | |
| 001 | CEF-059-001-028 | 28.5 | ● | ● | ● | ● | Upgradient |
| | CEF-059-001-053 | 53.5 | ● | | | ● | Upgradient |
| | CEF-059-001-083 | 84 | ● | ● | ● | ● | Upgradient |
| | CEF-059-001-121 | 125 | | | | ● | Water level only |
| 002 | CEF-059-002-028 | 28.5 | | | | ● | Water level only |
| | CEF-059-002-053 | 53 | | | | ● | Water level only |
| | CEF-059-002-120 | 121 | | | | ● | Water level only |
| 003 | CEF-059-003-035 | 36 | ● | ● | ● | ● | Source area, Northern Plume |
| | CEF-059-003-053 | 53 | ● | | | ● | Source area, Northern Plume |
| | CEF-059-003-073 | 73 | ● | ● | ● | ● | Source area, Coalesced Plume |
| | CEF-059-003-121 | 123 | | | | ● | Water level only |
| 004 | CEF-059-004-033 | 33 | ● | ● | ● | ● | Downplume, Northern Plume |
| | CEF-059-004-053 | 53 | ● | | | ● | Downgradient, Northern Plume |
| | CEF-059-004-073 | 73 | ● | ● | ● | ● | Source area, Coalesced Plume |
| | CEF-059-004-112 | 120 | ● | ● | ● | ● | Vertical migration, Northern Plume. |
| | CEF-059-004-135 | 138 | ●[2] | | | ● | To evaluate vertical migration. |
| 005 | CEF-059-005-033 | 33.5 | | | | ● | Water level only |
| | CEF-059-005-053 | 53.5 | ● | ● | ● | ● | Up plume, Southern Plume |
| | CEF-059-005-073 | 73.5 | ● | ● | ● | ● | Downplume, Coalesced Plume |
| 006 | NG-12I | 38 | ● | | | ● | Source area, Southern Plume |
| | NG-12D | 57 | ● | ● | ● | ● | Source area, Southern Plume |
| | CEF-059-006-078 | 78.8 | ● | | | ● | Downgradient, Coalasced Plume |
| | CEF-059-006-104 | 104.5 | | | | ● | Water level only |
| 007 | CEF-059-007-053 | 53 | | | | ● | Water level only |
| | CEF-059-007-078 | 78.3 | | | | ● | Water level only |
| 008 | CEF-059-008-028 | 28.5 | | | | ● | Water level only |
| 009 | CEF-059-009-053 | 54 | ● | | | ● | Downplume/sidegradient, Northern Plume |
| | CEF-059-009-083 | 84 | ● | | | ● | Sidegradient, Coalesced Plume |
| | CEF-059-009-113 | 118 | | | | ● | Water level only |
| 010 | CEF-059-010-053 | 53.5 | | | | ● | Water level only |
| | CEF-059-010-083 | 84 | | | | ● | Water level only |
| 011 | CEF-059-011-033 | 33.5 | ● | | | ● | Downplume, Southern Plume |
| | CEF-059-011-053 | 53.5 | ● | | | ● | Sidegradient, Southern Plume |
| | CEF-059-011-083 | 84 | | | | ● | Water level only |
| 012 | CEF-059-012-053 | 53 | ● | | | ● | Water level only |
| 013 | CEF-059-013-032 | 33.5 | ● | | | | Sidegradient, Southern Plume |
| | CEF-059-013-053 | 53.5 | ● | ● | ● | ● | Sidegradient, Southern Plume |
| | CEF-059-013-083 | 84 | | | | ● | Water level only |
| 014 | CEF-059-014-053 | 53 | | | | ● | Water level only |
| | CEF-059-014-083 | 84 | ● | ● | ● | ● | Sidegradient, Coalesced Plume |
| | CEF-059-014-120 | 130 | | | | ● | Water level only |
| 015 | CEF-059-015-028 | 28.5 | | | | ● | Water level only |
| 016 | CEF-059-016-053 | 53 | ● | | | ● | Downplume/sidegradient, Northern Plume |
| | CEF-059-016-083 | 84 | | | | ● | Water level only |
| | CEF-059-016-119 | 119 | | | | ● | Water level only |
| 017 | CEF-059-017-028 | 28.5 | ● | | | ● | Up plume, Northern Plume |
| | CEF-059-017-053 | 53.5 | | | | ● | Water level only |
| 018 | CEF-059-018-033 | 33 | | | | ● | Water level only |
| | CEF-059-018-053 | 53 | | | | ● | Water level only |
| | CEF-059-018-078 | 78.5 | | | | ● | Water level only |
| | CEF-059-018-105 | 105 | | | | ● | Water level only |

**TABLE 2-2**

**MONITORING WELLS AND SAMPLING RATIONALE**
**GROUNDWATER REMEDIAL DESIGN WORK PLAN FOR LTM**
**OPERABLE UNIT 9, SITE 59**
**NAVAL AIR STATION CECIL FIELD**
**JACKSONVILLE, FLORIDA**


| Well Location | Well ID | Total Depth in feet bgs | Analysis | | | WL | Rationale and Comments |
|---|---|---|---|---|---|---|---|
| | | | V | NA | Other(1) | | |
| 019 | CEF-059-019-032 | 32.1 | ● | | | ● | Downgradient/sentinel well |
| | CEF-059-019-051 | 51.4 | ● | | | ● | Downgradient/sentinel well |
| | CEF-059-019-078 | 78.5 | ● | | | ● | Downgradient/sentinel well |
| | CEF-059-019-106 | 106.3 | | | | ● | Water level only |
| 020 | CEF-059-020-033 | 33 | | | | ● | Water level only |
| | CEF-059-020-053 | 53 | | | | ● | Water level only |
| | CEF-059-020-078 | 78.5 | | | | ● | Water level only |
| | CEF-059-020-099 | 105 | | | | ● | Water level only |
| 021 | CEF-059-021-050 | 50.5 | | | | ● | Water level only |
| 022 | CEF-059-022-050 | 22.5 | | | | ● | Water level only |
| 025 | CEF-059-025-073 | 73.5 | | | | ● | Water level only |
| 026 | CEF-059-026-035 | 35.5 | ● | | | ● | Sidegradient, Northern Plume. |
| 027 | CEF-059-027-035 | 35.5 | ● | | | ● | Sidegradient, Northern Plume. |
| NG-02I | | 39 | ● | | | ● | Source area, Southern Plume |
| NG-02D | | 50 | ● | ● | ● | ● | Source area, Southern Plume |

1 Other parameters include metabolic acids and microbial analyses (see Table 2-4).
2 Bedrock well to be sampled once every 5 years.
Only wells being sampled as part of the Site 59 LTM Program are included.
V - Volatile organic compounds by Method SW-846 8260B.
NA - Natural attenuation parameters (see Tables 2-4 and 2-5).
WL - Water level only.
bgs - Below ground surface.
TOR - Top-of-rock zone.

**TABLE 2-3**

**SUMMARY OF ANALYTICAL REQUIREMENTS FOR CHEMICALS OF CONCERN**
**GROUNDWATER REMEDIAL DESIGN WORK PLAN FOR LTM**
**OPERABLE UNIT 9, SITE 59**
**NAVAL AIR STATION CECIL FIELD**
**JACKSONVILLE, FLORIDA**

| ANALYSIS | METHOD | SAMPLE VOLUME | BOTTLEWARE | PRESERVATION | HOLDING TIME(1) |
|---|---|---|---|---|---|
| **TCL VOCs** | SW-846 8260B | 3 x 40 mL | Glass vial<br>Teflon-lined septum cap | HCl to pH < 2;<br>Cool to $4^{o}$ C | 14 days to analysis |

HCl = Hydrochloric acid.
1 Holding times are measured from the date and time of sample collection.

**TABLE 2-4**

**SUMMARY OF FIXED-BASE LABORATORY ANALYTICAL REQUIREMENTS FOR NATURAL ATTENUATION PARAMETERS**
**GROUNDWATER REMEDIAL DESIGN WORK PLAN FOR LTM**
**OPERABLE UNIT 9, SITE 59**
**NAVAL AIR STATION CECIL FIELD**
**JACKSONVILLE, FLORIDA**

| ANALYSIS | METHOD[1] | DATA USE | SAMPLE VOLUME, CONTAINER, AND PRESERVATION |
|---|---|---|---|
| Alkalinity | EPA 310.1<br>Manual titrimetric | General water quality parameter used to measure the buffering capacity of the groundwater. | 100-250 mL plastic container<br>Cool to $4^{o}$ C<br>Analysis within 14 days |
| Chloride | EPA 300 | Provides direct evidence of dechlorination. Provides additional information on geochemical conditions. | 250 mL plastic container<br>Cool to $4^{o}$ C<br>Analysis within 28 days |
| Sulfate ($SO_4^{2-}$) | | Potential substrate for microbial respiration. May compete as an electron acceptor if present at moderate concentrations (>20 mg/L). | |
| Dissolved sulfide ($S^{2-}$)[2] | EPA 376.1 | Provides evidence of sulfate-based anaerobic degradation. | 500 mL plastic container; field filtered<br>NaOH to pH > 9<br>Cool to $4^{o}$ C<br>Analysis within 7 days |
| Dissolved iron[2] | SW-846 6010B | Iron can act as an electron acceptor during biodegradation. | 500 mL plastic container; field filtered<br>$HNO_3$ to pH <2<br>Cool to $4^{o}$ C<br>Analysis within 6 months |
| Methane, ethane, and ethene | RSK SOP-147 & 175 | Presence of methane indicates biological degradation via an anaerobic pathway utilizing CO2 as an electron acceptor. Ethane and ethene also indicate biological degradation of chlorinated VOCs. | 3 x 40 mL glass vial with Teflon-lined septum cap<br>HCl to pH < 2<br>Cool to $4^{o}$ C<br>Analysis within 14 days |
| Dissolved sodium | SW-846 6010B | To evaluate effects of addition of sodium lactate as part of in-situ biological treatment. | 500 mL HDPE; field filtered<br>HNO3 to pH < 2<br>6 months to analysis |
| Total organic carbon | E 415.1 | Indicates if the groundwater has a sufficient supply of carbon to act as the primary substrate. Collect from well located upgradient of site. | 125 mL amber glass container<br>HCl to pH < 2<br>Cool to $4^{o}$ C<br>Analysis within 28 days |
| Metabolic acids[3] | Laboratory SOP | To evaluate the progress of in-situ biological treatment/substrate degradation. | 40-mL glass vial with plastic screw cap and silicon septum<br>Cool to $4^{o}$C<br>Not specified |
| Microbial analyses[4] | Laboratory SOP | To evaluate the progress of in-situ biological treatment. | 1 liter glass bottle<br>Cool to $4^{o}$C<br>Ship on day of collection |

1 Method refers to U.S. EPA test methods. Standard Methods are based on Standard Methods for the Examination of Water and Wastewater (Clesceri et al., 1992).
2 Filter in field through 1-micron filter.
3 Metabolic acids include lactic, pyruvic, acetic, propionic, and butyric.
4 Microbial analyses include Q-Potential (DNA), qDHC, qTCE reductase, qBAV1 VC reductase, and VC reductase (see Appendix A).
HCl = Hydrochloric acid.
$HNO_3$ = Nitric acid.
NaOH = Sodium hydroxide.
HDPE = High-density polyethylene.
SOP = Standard operating procedure.

**TABLE 2-5**

**SUMMARY OF FIELD ANALYTICAL REQUIREMENTS FOR NATURAL ATTENUATION AND WATER QUALITY PARAMETERS**
**GROUNDWATER REMEDIAL DESIGN WORK PLAN FOR LTM**
**OPERABLE UNIT 9, SITE 59**
**NAVAL AIR STATION CECIL FIELD**
**JACKSONVILLE, FLORIDA**

| ANALYSIS | METHOD[1] | DATA USE | SAMPLE VOLUME, CONTAINER, AND PRESERVATION |
|---|---|---|---|
| Carbon dioxide | HACH Test Kit Number CA-DT<br>◆Digital Titration<br>◆Sodium Hydroxide and Phenolphthalein Method (HACH Method 8205) | Compared to background values as an indication of aerobic and anaerobic process. Produced during aerobic respiration and anaerobic processes. Utilized during methanogenesis. | Follow kit instructions<br>Do not aerate or agitate<br>Analyze immediately to nearest 0.1 mg/L |
| Dissolved oxygen | CHEMetrics ampoules kits | Concentration < 1.0 mg/L indicates anaerobic conditions. | Follow kit instructions<br>Analyze immediately to nearest 0.2 mg/L |
| Ferrous iron ($Fe^{2-}$) | HACH Test Kit Number IR-18C<br>◆ 1, 10 Phenanthroline Method<br>◆Color Disk, Colorimetric | Presence of ferrous iron may indicate presence of an anaerobic degradation process due to depletion of oxygen, nitrate, and manganese. | Follow kit instructions<br>Analyze immediately to nearest 0.2 mg/L |
| Hydrogen sulfide ($H_2S$) | HACH Test Kit Number HS-C<br>◆Effervescence of H2S<br>◆ Color Chart | Provides evidence of sulfate-based anaerobic degradation. May also indicate natural $H_2S$ production. | Follow kit instructions<br>Do not aerate or agitate<br>Analyze immediately to nearest 0.1 mg/L |
| Sulfide ($S^{2-}$) | HACH DR-850 | Provides evidence of sulfate-based anaerobic degradation. | Follow kit instructions<br>Analyze immediately |
| Temperature | Direct-reading thermometer | Biological processes are temperature dependent. | 100-250 mL glass or plastic container<br>Analyze immediately |
| pH | Direct-reading meter | Biological processes are pH sensitive. | 100-250 mL glass or plastic container<br>Analyze immediately |
| Conductivity | Direct-reading meter | General water quality parameter used to verify that site samples are obtained from the same groundwater system. | 100-250 mL glass or plastic container<br>Analyze immediately |
| Oxidation-reduction potential (ORP) | Direct-reading meter | ORP provides information on redox conditions and interpret the nature and state of chemical compounds and biological conditions. ORP ranges from +200mV in aerobic, oxidizing conditions to '-400mV in anaerobic, reductive conditions. | 10-250 mL glass container filling from the bottom<br>Do not agitate or aerate<br>Analyze immediately |
| Turbidity | Direct-reading meter | General water quality parameter used to assess metals data and the need to filter samples. | 100-250 mL glass or plastic container<br>Analyze immediately |

1 Method refers to U.S. EPA test methods. Standard Methods are based on Standard Methods for the Examination of Water and Wastewater (Clesceri, et al, 1992).
Table adapted from overview of the Technical Protocol for Evaluating Natural Attenuation of Chlorinated Solvents in Groundwater (U.S. EPA, 1998).

P:\GIS\NAS_CecilField\Site-59_LTM.apr 01Aug07 MJJ Layout08

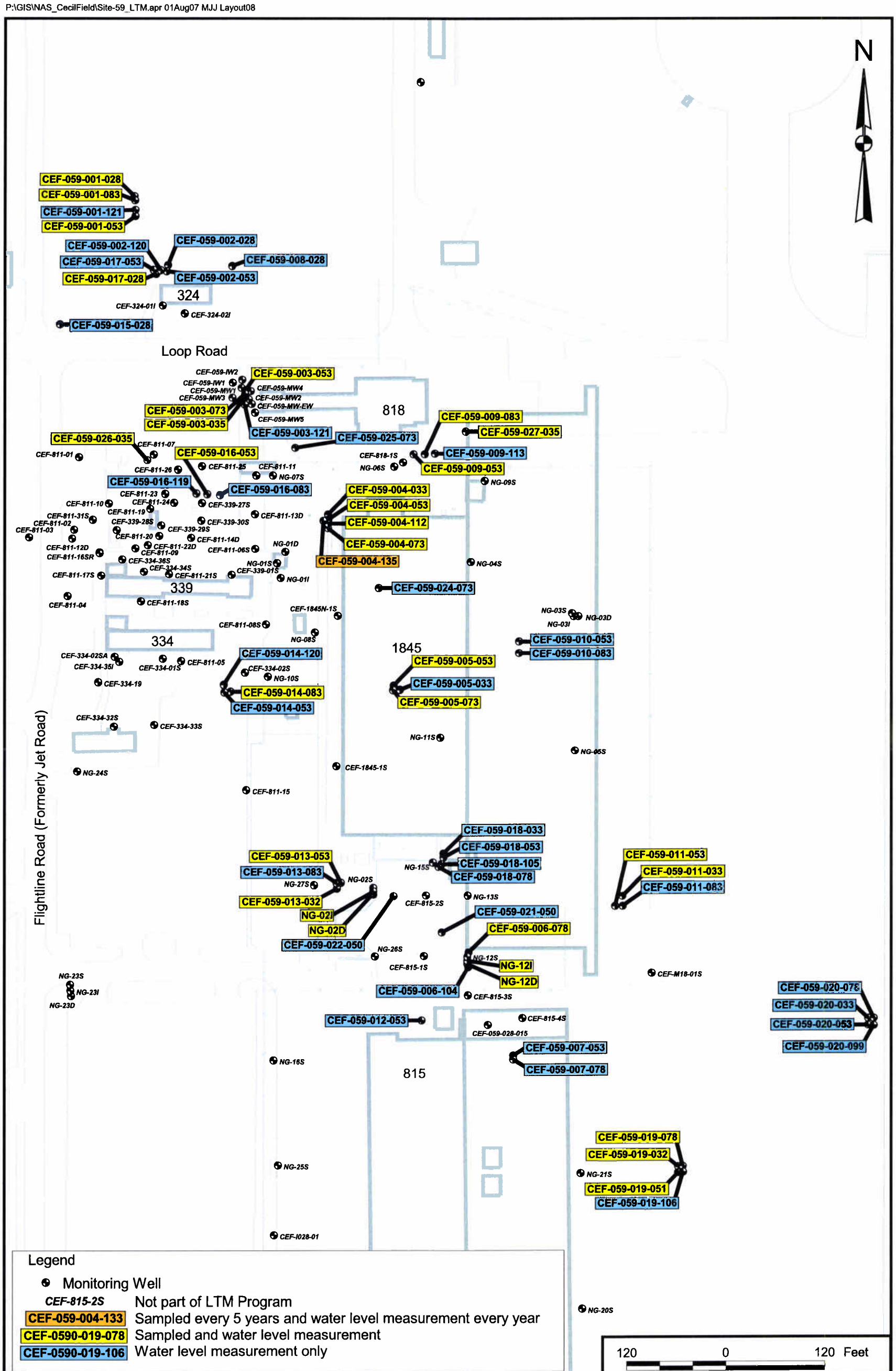


Legend

- Monitoring Well
- *CEF-815-2S* Not part of LTM Program
- CEF-059-004-133 Sampled every 5 years and water level measurement every year
- CEF-0590-019-078 Sampled and water level measurement
- CEF-0590-019-106 Water level measurement only

| | | | |
|---|---|---|---|
| DRAWN BY MJJ | DATE 17Feb07 | LONG-TERM MONITORING PROGRAM WELLS<br>OU 9, SITE 59<br>NAVAL AIR STATION CECIL FIELD<br>JACKSONVILLE, FLORIDA | CONTRACT NUMBER 8925 |
| CHECKED BY | DATE | | APPROVED BY DATE 8/7/07 |
| COST/SCHEDULE-AREA | | | APPROVED BY DATE |
| SCALE AS NOTED | | | DRAWING NO. FIGURE 2-1 REV 0 |

# 3.0 QUALITY ASSURANCE/QUALITY CONTROL

Typical QA/QC sample requirements have been modified for Cecil Field. Specifically, no trip blanks, field blanks, or rinsate blanks are required. Duplicates are to be collected at a rate of 10 percent of the total samples collected. Matrix spike/matrix spike duplicate (MS/MSD) samples are to be collected at a rate of 5 percent of the total samples collected.

# 4.0 EVALUATION CRITERIA

The primary evaluation criterion to determine the effectiveness of in-situ biological treatment and natural attenuation will be a decrease in concentrations of COCs detected in groundwater. COCs at Site 59 include TCE. Remediation will be deemed to have been achieved when the concentrations of all contaminants have reached cleanup goals, which are FDEP Groundwater Cleanup Target Levels (GCTLs). In addition, results for the parameters listed in Tables 2-4 and 2-5 will be used to evaluate natural attenuation. The following guidelines will be used for this evaluation:

**Oxidation-Reduction Potential (ORP)**: Dechlorination of chlorinated VOCs generally requires reductive conditions. ORP values of less than +50 millivolts (mV) indicate that reducing conditions are possible, and values of less than -100 mV indicate a high possibility of reducing conditions.

**DO**: Values of 0.5 to 1.0 milligrams per liter (mg/L) or greater indicate aerobic conditions; unfavorable conditions for reductive dechlorination for TCE. However, if values exceed 1.0 mg/L, certain chlorinated VOCs such as vinyl chloride and many nonhalogenated hydrocarbons may be aerobically degraded.

**Ferrous Iron ($Fe^{2+}$)**: Values greater than 1.0 mg/L indicate that reductive dechlorination is possible and that anaerobic processes are favorable.

**Sulfate ($SO_4^{2-}$)**: Values greater than 20 mg/L indicate that reductive dechlorination may be inhibited.

**Sulfide ($S^{2-}$)**: Values greater than 1.0 mg/L indicate that reductive dechlorination is possible and that anaerobic processes are favorable.

**Methane ($CH_4$)**: Values greater than 0.5 mg/L indicate that reductive dechlorination and anaerobic processes are potentially occurring but that vinyl chloride may accumulate.

**Carbon Dioxide ($CO_2$), Chloride ($Cl^-$), Alkalinity (as $CaCO_3$)**: Values greater than two times background levels indicate that complete degradation of organic COCs may be occurring.

**Total Organic Carbon (TOC)**: Organic carbon concentrations greater than 20 mg/L in an aquifer indicate a sufficient supply of carbon to act as the primary substrate for microbial growth.

**pH**: The optimal range of pH values for reductive dechlorination is 5 to 9 standard units.

**Temperature**: Biochemical processes are accelerated at temperatures greater than approximately 20$^{o}$C.

# 5.0 LONG-TERM MONITORING REPORTS

Upon completion of each round of sampling, a brief data summary report will be prepared for the BCT documenting the investigative activities performed and presenting the analytical data and groundwater elevation measurements from that sampling event. A comprehensive annual monitoring report will be prepared that presents the nature and extent of chemical and geochemical results, potentiometric contour maps, groundwater flow discussion, and recommendations for the next year's sampling program.

The annual reports will evaluate in-situ biological treatment and the natural attenuation process for each plume area and will provide conclusions and recommendations for future actions, as required. If it appears that contaminant reduction is not occurring or that contamination is migrating, a recommendation will be made that the selected remedy be re-evaluated.

LTM analytical results will be entered into the NAS Cecil Field Geographic Information System (GIS) database.

# 6.0 FIVE-YEAR REVIEWS

Five-year reviews will be conducted at OU 9, Site 59 in accordance with the Comprehensive Environmental Response, Compensation, and Liability Act (CERCLA), Section 121(c) and the National Oil and Hazardous Substances Pollution Contingency Plan (NCP), Section 300.430(f)(4)(ii).

## 6.1 BACKGROUND

Five-year reviews are conducted at sites where remedial action results in hazardous substances, pollutants, or contaminants remaining on site. Remedial action at Site 59 does not immediately remove all contaminants from the site; therefore, residual contaminants will remain on site until in-situ biological treatment and natural attenuation has been successfully completed.

Typically, U.S. EPA conducts 5-year reviews; however, remedial action at NAS Cecil Field is being implemented pursuant to a Federal Facility Agreement (FFA) under which the Navy is responsible for conducting these reviews. The next review is scheduled to be initiated in 2009 and completed by 2010.

## 6.2 PURPOSE

Five-year reviews are conducted to evaluate whether or not the remedy selected in the ROD for each site remains protective of human health and the environment.

## 6.3 EXECUTION

The 5-year review process for OU 9, Site 59 will consist of the following:

- Review of background documents concerning OU 9, Site 59, including LTM reports.
- Identification and review of new regulatory standards as may have been promulgated since the signing of the ROD or since the previous 5-year review.
- Site visit to conduct a visual inspection.
- Collection of cost information.
- Preparation of a 5-year review report including conclusions and recommendations for future actions as may be required.

## 6.4 REPORTING

A report will be prepared at the end of each 5-year review period and will include the following elements:

- An introduction including a summary of site characteristics.
- A brief discussion of Remedial Action Objectives (RAOs) and discussion of the Applicable or Relevant and Appropriate Requirements (ARARs).
- A description of monitoring and maintenance activities at the site.
- A presentation of monitoring results, including an evaluation of changes in monitoring parameters.
- An evaluation of how well the selected remedy has protected human health and the environment, including a formal statement of protectiveness of human health and the environment, a determination of remaining risks, and an analysis of potential deterioration of the remedy.
- A presentation of cost incurred.
- A summary description of the site visit.
- Documentation of areas of noncompliance, as may apply.
- Recommendations for future response actions, as may be required.

The 5-year review reports will be submitted to the U.S. EPA Region 4 and FDEP.

# 7.0 REFERENCES

FDEP (Florida Department of Environmental Protection), 2004. Bureau of Laboratories, Environmental Assessment Section. Department of Environmental Protection Standard Operating Procedures for Field Activities, DEP-SOP-001/01. February.

FDEP, 2005. Groundwater Cleanup Target Levels and Soil Cleanup Target Levels. FAC Chapter 62-777. April.

Golder Associates, 1998. Report of Environmental Due Diligence Investigation, Flightline Facilities, Naval Air Station Cecil Field, Jacksonville, Duval County, Florida, August.

TtNUS, 2006. Remedial Investigation Report for Site 59, Naval Air Station Cecil Field, Jacksonville, Florida. Prepared for Southern Division Naval Facilities Engineering Command, North Charleston, South Carolina, November.

TtNUS, 2007a. Feasibility Study Report for Site 57 and Site 58, Naval Air Station Cecil Field, Jacksonville, Florida. Prepared for Naval Facilities Engineering Command Southeast, North Charleston, South Carolina, TBD.

TtNUS, 2007b. Record of Decision for Site 59, Naval Air Station Cecil Field, Jacksonville, Florida. Prepared for Naval Facilities Engineering Command Southeast, North Charleston, South Carolina, TBD.

U.S. EPA (United States Environmental Protection Agency) Region 4, 1996. Environmental Investigations Standard Operating Procedures and Quality Assurance Manual, May.

U.S. EPA, 1998. Technical Protocol for Evaluating Natural Attenuation of Chlorinated Solvents in Groundwater, EPA/600/R-98/128, September.

# APPENDIX A

## MICROBIAL ANALYSIS SAMPLING INSTRUCTIONS AND EXAMPLE CHAIN OF CUSTODY FORM

2340 Stock Creek Blvd.
Rockford TN 37853-3044
Phone (865) 573-8188
Fax: (865) 573-8133
Email: info@microbe.com

# Bio-Flo Sampling Instruction — Q-Potential (DNA)

1. Prepare the pump (Peristaltic preferred, Grundfos, or air bladder) as normal. Use the Luer-Lock adapter & clamp provided to ensure a leak proof connection.

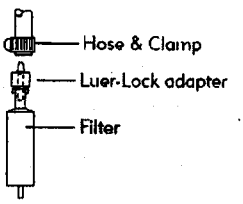

2. Remove the filter from Falcon tube.

3. Attach the inlet (larger end) of the filter with a 1/4" - 5/16" inner diameter (I.D.) tubing using the Luer-Lock adapter and secure the hose with the plastic clamp.

4. Place the filter within a receiving container so that the amount of water filtered can be measured accurately.

5. The amount of water which can be filtered will vary depending upon the turbidity of the sampling location. We suggest filtering a minimum of 1-2L, however, filtering should continue until the filter clogs (i.e. little/no flow out). The more volume that is filtered the more representative the results will be. If the filter clogs before 500 mL have been filtered, record how much water was filtered through the first filter, then collect an additional filter, recording the volume of water that went through the second filter as well. Both filters should be submitted for testing.

6. Accurately record the amount of water that passed through the filter. Once the volume of water has been recorded, the water can be discarded. Only the filters are submitted for testing.

## *To Submit Sample:*

Place the clogged filter in the Falcon tube provided. Note the **amount of water** that was passed through the filter, the **well location, sampling date,** and the **analyses** requested on the label attached to the tube.

A chain of custody form must be included with each shipment of samples. Access our chain of custody at www.microbe.com

## *Shipment:*

Place the Falcon tube in the foam crate (if provided) and seal within a zippered plastic bag. Samples collected for DNA-based analyses need to be shipped on ice (or blue ice) for next day delivery (please call to confirm Saturday delivery). If regular ice is used, the ice should be double bagged.

*Samples should be shipped to:*

Sample Custodian
Microbial Insights, Inc.
2340 Stock Creek Blvd.
Rockford, TN 37853-3044
(865) 573-8188

## *Saturday Delivery:*

Microbial Insights, Inc. is **not** open on weekends. Coolers to be delivered on **Saturday** can be collected by a representative of Microbial Insights, Inc. from their FedEx Drop Location. To ensure proper handling if Saturday delivery is required, the FedEx shipping label should be marked under (6) Special Handling, check **Hold Saturday**, and the cooler must be taped with FedEx SATURDAY tape. The cooler should then be addressed to our drop location (address below).

**Microbial Insights, Inc.**
FedEx Drop Location
1601 Murdock Road
Knoxville, TN 37932
(865) 300-8053 or
(865) 384-4005

Please note, it is essential that **our laboratory name** be on the address label and you **MUST** call Microbial Insights, Inc. on the Friday to arrange for collection of your shipment on Saturday, **with the Tracking # of the package**. **Without proper labeling and the tracking information, there is no guarantee that the samples will be collected.**

**REPORT TO:**

Reports will be provided to the contact(s) listed below. Parties other than the contact(s) listed below will require prior approval.

Name: MARK SPERANZA
Company: TETRA TECH NUS
Address: FOSTER PLAZA 7
661 ANDERSEN DR.
PITTSBURGH, PA 15220-2745
email: speranzam@ttnus.com
Phone: (800) 245-2730
Fax: (412) 921-7140

Project Manager: MARK SPERANZA
Project Name: SITE 59 PILOT STUDY
Project No.: 112GN0039

**INVOICE TO:**

For Invoices paid by a third party it is imperative that contact information & corresponding reference No. be provided.

Name: SAME
Company:
Address:
email:
Phone: ( )
Fax: ( )

Purchase Order No. 1007056
Subcontract No.

EXAMPLE

Report Type: ☒ Standard (default) ☐ Comprehensive (15% surcharge) ☐ Historical (30% surcharge)

microbialinsights
2340 Stock Creek Blvd.
Rockford, TN 37853-3044
phone (865) 573-8188
fax: (865) 573-8133
email: info@microbe.com
www.microbe.com

Please Check One:
☒ More samples to follow
☐ No Additional Samples

Saturday Delivery
Please see sampling protocol for instructions

Please contact us prior to submitting samples regarding questions about the analyses you are requesting at (865) 573-8188 (8:00 am to 4:00 pm M-F). After these hours please call (865) 300-8053.

| Sample Information | | | | | | | | | | | | | | | | | | | | | | | | | | | | | | | | | | | | | | | |
|---|---|---|---|---|---|---|---|---|---|---|---|---|---|---|---|---|---|---|---|---|---|---|---|---|---|---|---|---|---|---|---|---|---|---|---|---|---|---|---|
| MI ID (Laboratory Use Only) | Sample Name | Date Sampled | Time Sampled | Matrix | PLFA | VFA | ME/E | DGGE+3ID | DGGE+5ID | Q-Potential (DNA) | Q-Expression (RNA)* | qDHC (Dehalococcoides) | qTCE R-Dase | qBAV1 VC R-Dase | qDHB (Dehalobacter) | qDSM (Desulfuromonas) | qDSB (Desulfiobacterium) | qEBAC (Total) | qDSR (SRBs only) | qSRB/IRB | qMGN (methanogens) | qMOB (methanotrophs) | qONF (Denitrifying) | qAOB (ammonia oxidizing) | qPM1 (MTBE aerobic) | qTOD (Initial PAHs aerobic) | qCAT (Intermediate PAHs aerobic) | qBSS (Toluen/Xylene Anaerobic) | qNAH (Naphalene aerobic) | add. qPCR: | add. qPCR | add. qPCR: | Other VC R-Dase | Other | Other |
| | CEF-059-GW-MW2-01A | 3/14/06 | 1000 | GW | | | | | | X | | X | X | X | | | | | | | | | | | | | | | | | | | | X | | |
| | CEF-059-GW-MW1-01A | 3/14/06 | 1305 | GW | | | | | | X | | X | X | X | | | | | | | | | | | | | | | | | | | | X | | |
| | | | | | | | | | | | | | | | | | | | | | | | | | | | | | | | | | | | | |
| | | | | | | | | | | | | | | | | | | | | | | | | | | | | | | | | | | | | |
| | | | | | | | | | | | | | | | | | | | | | | | | | | | | | | | | | | | | |
| | | | | | | | | | | | | | | | | | | | | | | | | | | | | | | | | | | | | |
| | | | | | | | | | | | | | | | | | | | | | | | | | | | | | | | | | | | | |
| | | | | | | | | | | | | | | | | | | | | | | | | | | | | | | | | | | | | |
| | | | | | | | | | | | | | | | | | | | | | | | | | | | | | | | | | | | | |

Relinquished by: [signature] Date: 3/14/06 Received by: Date

In order for analysis to be completed correctly, it is vital that chain of custody is filled out correctly & that all relative information is provided. Failure to provide sufficient and/or correct information regarding reporting, invoicing & analyses requested information may result in delays for which MI will not be liable. *** additional cost and sample preservation are associated with RNA samples.**

# APPENDIX B

# CALCULATIONS AND MODELING

# PROCESS CALCULATIONS

| Tetra Tech NUS | | | **STANDARD CALCULATION SHEET** |
|---|---|---|---|
| **CLIENT:** NAS CECIL FIELD, Site 59 Remedial Design | **FILE No:** | **BY:** JWL | **PAGE:** 1 of 1 |
| **SUBJECT: Piping pressure losses** | | **CHECKED BY:** | **DATE:** 03/01/07 |

**Purpose**: Estimate pressure losses in piping system for each treatment system.

**Assumptions:**

Hot Spot 2A - Each extraction well is pumped at 3 gpm. After chemical mixing, the flow from each extraction well is distributed evenly (1 gpm) to three injection wells.

Hot Spot 2B - Each extraction well is pumped at 3 gpm. After chemical mixing, the flow from each extraction well is distributed evenly (1 gpm) to three injection wells.

Hot Spot 3 - (Systems 1 and 2) Each extraction well is pumped at 2 gpm. After chemical mixing, the flow from each extraction well is distributed evenly (1 gpm) to two injection wells.

Hot Spot 3 - (Systems 3 and 4) Each extraction well is pumped at 1 gpm. After chemical mixing, the flow from each extraction well is distributed evenly (1 gpm) to one injection wells.

Each system has two flow control valves. The pressure losses will be calculated assuming that the control valves are fully open. The control valves will be adjusted as needed to the desired flow rate.

For a given hot spot or pair of systems in Hot Spot No. 3, the pressure drop will be estimated based on the longest run of extraction well piping and longest run of injection well piping. The flow control valves and flow distribution valves on each injection well line will be adjusted to account for differences in the runs to the other wells.

NAS CECIL FIELD
SITE 59 REMEDIAL DESIGN
PIPING LOSSES
3/1/2007

**GENERAL**
Estimate piping friction losses for pump sizing.
Estimate pressure loss from extraction well through most distant IW for a given system.
Use pressure loss information from pilot study, as needed.
Exclude control valves - they will take up the balance of the line losses.

**1.**
Hot Spot 2A This applies to system 1 and system 2.

Material PVC, sch 80
Diameter, inch 1

**Friction losses**

| | flow | h, ft/100' | |
|---|---|---|---|
| Q (extraction), gpm | 3 | 1 | scaled from 5 gpm, square of flows |
| Q (injection), gpm | 1 | 0.2 | scaled from 3/4 dia, 5th power of diameters |

| | ft | | h, ft |
|---|---|---|---|
| Extraction piping | 90 | | 0.9 |
| Treatment piping | 52 | | 0.5 |
| Injection piping | 130 | | 0.3 |

| | Quan | eq ft/fitting | eq ft | h, ft |
|---|---|---|---|---|
| 90 deg ells, extract, treat | 10 | 2.6 | 26 | 0.26 |
| Tees, extract, treat | 8 | 1.7 | 13.6 | 0.14 |
| 90 deg ells, inject | 10 | 2.6 | 26 | 0.05 |
| Tees, inject | 1 | 1.7 | 1.7 | 0.00 |

| Other losses | Δh, psi | | h, ft | |
|---|---|---|---|---|
| Flow meter (FQI) | 4 | | 9.2 | typical is 8 psi at max flow (20 gpm), say 4 psi. |
| inline mixer | 0.5 | | 1.2 | From vendor |
| Misc (FIs) | 0.5 | | 1.2 | |
| Filter | 2 | | 4.6 | typical. |

| | Cv | ΔP, psi | | h, ft | |
|---|---|---|---|---|---|
| Check valve | 24 | 0.0156 | | 0.036 | delta P, psi = Q (gpm)$^2$ x sg/Cv$^2$ |

| | | | | |
|---|---|---|---|---|
| Total h, ft | | | | 18 |
| Safety factor | 0.2 | | | 4 |
| **Total friction h, ft** | | | | 22 |

**Static losses**

Under normal operation, the extraction and injection points are submerged, so the lift to the surface is not relevant.

| | |
|---|---|
| Est. drawdown, ft | 3 |
| Est. mounding, ft | 3 |

| | | | | |
|---|---|---|---|---|
| **Static head, ft** | | | | 6 |

| | | | | |
|---|---|---|---|---|
| **Total head, ft** | | | | **28** |

**2.**

Hot Spot 2B This applies to system 1 and system 2.

Material PVC, sch 80

Diameter, inch 1

**Friction losses**

| | flow | h, ft/100' | |
|---|---|---|---|
| Q (extraction), gpm | 3 | 1 | scaled from 5 gpm, square of flows |
| Q (injection), gpm | 1 | 0.2 | scaled from 3/4 dia, 5th power of diameters |

| | ft | | h, ft |
|---|---|---|---|
| Extraction piping | 90 | | 0.9 |
| Treatment piping | 52 | | 0.5 |
| Injection piping | 130 | | 0.3 |

| | Quan | eq ft/fitting | eq ft | h, ft |
|---|---|---|---|---|
| 90 deg ells, extract, treat | 10 | 2.6 | 26 | 0.26 |
| Tees, extract, treat | 8 | 1.7 | 13.6 | 0.14 |
| 90 deg ells, inject | 10 | 2.6 | 26 | 0.05 |
| Tees, inject | 1 | 1.7 | 1.7 | 0.00 |

| Other losses | Δh, psi | | h, ft | |
|---|---|---|---|---|
| Flow meter (FQI) | 4 | | 9.2 | typical is 8 psi at max flow (20 gpm), say 4 |
| inline mixer | 0.5 | | 1.2 | From vendor |
| Misc (FIs) | 0.5 | | 1.2 | |
| Filter | 2 | | 4.6 | typical. |

| | Cv | ΔP, psi | | h, ft | |
|---|---|---|---|---|---|
| Check valve | 24 | 0.0156 | | 0.036 | delta P, psi = Q (gpm)$^2$ x sg/Cv$^2$ |

| | |
|---|---|
| Total h, ft | 18 |

| | | | | |
|---|---|---|---|---|
| Safety factor | 0.2 | | | 4 |

| | | | | |
|---|---|---|---|---|
| **Total friction h, ft** | | | | 22 |

**Static losses**

Under normal operation, the extraction and injection points are submerged, so the lift to the surface is not relevant.

| | |
|---|---|
| Est. drawdown, ft | 3 |
| Est. mounding, ft | 3 |

| | | | | |
|---|---|---|---|---|
| **Static head, ft** | | | | 6 |

| | | | | |
|---|---|---|---|---|
| **Total head, ft** | | | | **28** |

**3.**

Hot Spot 3 This applies to system 1 and system 2.

Material PVC, sch 80

Diameter, inch 1

**Friction losses**

| | flow | h, ft/100' |
|---|---|---|
| Q (extraction), gpm | 2 | 0.88 |
| Q (injection), gpm | 1 | 0.2 |

scaled from 3/4 dia, 5th power of diameters

| | ft | | h, ft |
|---|---|---|---|
| Extraction piping | 200 | | 1.8 |
| Treatment piping | 52 | | 0.5 |
| Injection piping | 260 | | 0.5 |

| | Quan | eq ft/fitting | eq ft | h, ft |
|---|---|---|---|---|
| 90 deg ells, extract, treat | 10 | 2.6 | 26 | 0.2288 |
| Tees, extract, treat | 8 | 1.7 | 13.6 | 0.12 |
| 90 deg ells, inject | 10 | 2.6 | 26 | 0.05 |
| Tees, inject | 1 | 1.7 | 1.7 | 0.00 |

| Other losses | Δh, psi | | h, ft | |
|---|---|---|---|---|
| Flow meter (FQI) | 4 | | 9.2 | typical is 8 psi at max flow (20 gpm), say 4 |
| inline mixer | 0.5 | | 1.2 | From vendor |
| Misc (FIs) | 0.5 | | 1.2 | |
| Filter | 2 | | 4.6 | typical. |

| | Cv | ΔP, psi | | h, ft |
|---|---|---|---|---|
| Check valve | 24 | 0.0069 | | 0.016 |

delta P, psi = Q (gpm)$^2$ x sg/Cv$^2$

| | | | | |
|---|---|---|---|---|
| Total h, ft | | | | 19 |

| | | | | |
|---|---|---|---|---|
| Safety factor | 0.2 | | | 4 |

| | | | | |
|---|---|---|---|---|
| **Total friction h, ft** | | | | 23 |

**Static losses**

Under normal operation, the extraction and injection points are submerged, so the lift to the surface is not relevant.

| | |
|---|---|
| Est. drawdown, ft | 3 |
| Est. mounding, ft | 3 |

| | | | | |
|---|---|---|---|---|
| **Static head, ft** | | | | 6 |

| | | | | |
|---|---|---|---|---|
| **Total head, ft** | | | | **29** |

**4.**

Hot Spot 3 This applies to system 3 and system 4.

Material PVC, sch 80

Diameter, inch 1

**Friction losses**

| | flow | h, ft/100' | |
|---|---|---|---|
| Q (extraction), gpm | 1 | 0.2 | scaled from 3/4 dia, 5th power of diameters |
| Q (injection), gpm | 1 | 0.2 | scaled from 3/4 dia, 5th power of diameters |

| | ft | | h, ft |
|---|---|---|---|
| Extraction piping | 220 | | 0.4 |
| Treatment piping | 52 | | 0.1 |
| Injection piping | 170 | | 0.3 |

| | Quan | eq ft/fitting | eq ft | h, ft |
|---|---|---|---|---|
| 90 deg ells, extract, treat | 10 | 2.6 | 26 | 0.052 |
| Tees, extract, treat | 8 | 1.7 | 13.6 | 0.03 |
| 90 deg ells, inject | 10 | 2.6 | 26 | 0.05 |
| Tees, inject | 1 | 1.7 | 1.7 | 0.00 |

| Other losses | Δh, psi | | h, ft | |
|---|---|---|---|---|
| Flow meter (FQI) | 4 | | 9.2 | typical is 8 psi at max flow (20 gpm), say 4 |
| inline mixer | 0.5 | | 1.2 | From vendor |
| Misc (FIs) | 0.5 | | 1.2 | |
| Filter | 2 | | 4.6 | typical. |

| | Cv | ΔP, psi | | h, ft |
|---|---|---|---|---|
| Check valve | 24 | 0.0017 | | 0.004 |

delta P, psi = Q (gpm)$^2$ x sg/Cv$^2$

| | | | | |
|---|---|---|---|---|
| Total h, ft | | | | 17 |
| Safety factor | 0.2 | | | 3 |
| **Total friction h, ft** | | | | 21 |

**Static losses**

Under normal operation, the extraction and injection points are submerged, so the lift to the surface is not relevant.

| | |
|---|---|
| Est. drawdown, ft | 3 |
| Est. mounding, ft | 3 |

| | | | | |
|---|---|---|---|---|
| **Static head, ft** | | | | 6 |
| **Total head, ft** | | | | **27** |

| Tetra Tech NUS | | | STANDARD CALCULATION SHEET |
|---|---|---|---|
| CLIENT: NAS CECIL FIELD, Site 59 Remedial Design | FILE No: | BY: JWL | PAGE: 1 of 7 |
| SUBJECT: Sodium Lactate and sodium bicarbonate systems | | CHECKED BY: CJM | DATE: 03/01/07 |

**Purpose**: Estimate sodium lactate and sodium bicarbonate use, feed rate, and solution tank size.

Calculate area of each hot spot, to be used for volume calculations:

Hot Spot No. 2A

Plume area by planimeter: 7.55 $inch^2$ at 1" = 20'

Area = 3,020 $ft^2$

Hot Spot No. 2B

Plume area by planimeter: 13.47 $inch^2$ at 1" = 20'

Area = 5,388 $ft^2$

Hot Spot No. 3

Plume area by planimeter: 21.56 $inch^2$ at 1" = 20'

Area = 8,624 $ft^2$

**Hot Spot 2A**

Sodium Lactate feed and rate

Each system is at 3 gpm (assume equal areas will be treated 3,020 $ft^2$ / 2 = 1,510 $ft^2$)

Estimate lactate requirements based on volume of groundwater and 90-day feed period. The TCE concentration is similar to that of the pilot study and a large portion of the demand on electron donor is from natural sources.

Porosity = 0.3

Thickness = 10 feet

Volume of water =

1,510 $ft^3$ x 0.3 x 10 feet x 7.381 gal/ft3 = 34,000 gallons, each system

= 68,000 gallons, total plume

Pilot study use was 367 lb per 29,000 gallons.

Mass of sodium lactate for the hot spot will be in proportion to the pilot study:

68,000 gal x 367 lb/29,000 gal = 860 lb sodium lactate

For 90 days injection: 860 lb/ 90 days = 9.6 lb/day (total)

Using a 0.83 lb/gallons (about 20 % of maximum solubility)

9.6 lb/day x gal/ 0.83 lb = 11.6 gal/day (total)

At 7 days of storage – 81 gallons.

Use 100 gallon tank (28" dia x 42" H) with mixer (1/4 hp)

Common tank for both systems.

Mixer – Neptune BN-1.0

Metering pump:

11.6/2 gal/day = 5.8 gal/day = 0.24 gal/hr (per system)

Select a pump with this in the mid range
LMI P031 – max GPH = 0.42 (min rate is 30%).

<u>Sodium bicarbonate feed and rate</u>

The feed is in proportion to the extraction rate.

Use sodium bicarbonate rate from the end of the southern pilot study.

0.68 lb sodium bicarbonate/gal solution

Flow rate from settings at 60% (stroke) and 65% (speed) on a pump with maximum rate of 4 GPH

Q = 0.6 x 0.65 x 4 GPH = 1.56 GPH for 3 gpm extraction rate

Use same pump as in the pilot – LMI C121

Tank size – check common tank:

2 x 1.56 gal/hr x 24 hr/day x 7 days = 524 gal

Nearest size is 500 gallons, but is 72" high, which is too high for ease of filling the tank.

Therefore, use two tanks at 524/2 = 262 gallons each

Use two 275 gallon PE tanks, each 42" dia x 48" high

Total Quantity of sodium bicarbonate used per day:

2 x 1.56 gal/hr x 24 hr/day x 0.68 lb/gal = 51 lb/day

Mixer on tank (from Neptune literature) – 1/3 hp Model JD-2.0

**Hot Spot 2B**

Sodium Lactate feed and rate

Each system is at 3 gpm (assume equal areas will be treated 5,388 $ft^2$ / 2 = 2,694 $ft^2$)

Estimate lactate requirements based on volume and 90-day feed period.

Porosity = 0.3

Thickness = 10 feet

Volume of water =

2,294 $ft^3$ x 0.3 x 10 feet x 7.381 gal/ft3 = 60,500 gallons, each system

= 121,000 gallons, total

Pilot study use was 367 lb per 29,000 gallons.

Mass of sodium lactate:

121,000 gal x 367 lb/29,000 gal = 1,530 lb sodium lactate

For 90 days injection: 1,530 lb/ 90 days = 17 lb/day (total)

Using a 0.83 lb/gallons (about 20 % of maximum solubility)

17 lb/day x gal/ 0.83 lb = 20.5 gal/day (total)

At 7 days of storage – 143 gallons.

Use 150 gallon tank (31" dia x 48" H) with mixer (1/3 hp)

Common tank for both systems.

Mixer – Neptune JD-2.0

Metering pump:

20.5/2 gal/day = 10.3 gal/day = 0.43 gal/hr (per system)

Select a pump with this in the mid range
LMI P051 – max GPH = 1.0 (min rate is 20%).

Sodium bicarbonate feed and rate

The feed is in proportion to the extraction rate.

Use sodium bicarbonate rate from the end of the southern pilot study.

0.68 lb sodium bicarbonate/gal solution

Flow rate from settings at 60% (stroke) and 65% (speed) on a pump with maximum rate of 4 GPH

Q = 0.6 x 0.65 x 4 GPH = 1.56 GPH for 3 gpm extraction rate (Same as 2A)

Use same pump as in the pilot – LMI C121

Tank size – check common tank:

2 x 1.56 gal/hr x 24 hr/day x 7 days = 524 gal

Nearest size is 500 gallons, but is 72" high, which is too high for ease of filling the tank.

Therefore, use two tanks at 524/2 = 262 gallons each

Use two 275 gallon PE tanks, each 42" dia x 48" high

Total Quantity of sodium bicarbonate used per day:

2 x 1.56 gal/hr x 24 hr/day x 0.68 lb/gal = 51 lb/day

Mixer on tank (from Neptune literature) – 1/3 hp Model JD-2.0

**Hot Spot 3, Systems 1 and 2**

Sodium Lactate feed and rate

Each system is 2 gpm and treats 2/3 of the plume. (Systems 3 & 4 treat the other 1/3.)

Total Area will be treated 8,624 $ft^2$

Estimate lactate requirements based on volume and 90-day feed period.

Porosity = 0.3

Thickness = 10 feet

Volume of water in the plume =

8,624 $ft^3$ x 0.3 x 10 feet x 7.381 gal/$ft^3$ = 193,600 gallons, total

193,600 gallons / 3 = 64,500 gallons each in of System 1 and 2 (129,000 gal total).

Pilot study use was 367 lb per 29,000 gallons.

Mass of sodium lactate (total Systems 1 and 2):

2 x 64,500 gal x 367 lb/29,000 gal = 1,632 lb sodium lactate

For 90 days injection: 1,632 lb/ 90 days = 18.1 lb/day (total, Systems 1 and 2)

Using a 0.83 lb/gallons (about 20 % of maximum solubility)

18.1 lb/day x gal/ 0.83 lb = 21.9 gal/day (total, Systems 1 and 2)

At 7 days of storage – 153 gallons.

Use 200 gallon tank (36" dia x 48" H) with mixer (1/3 hp)

Common tank for both systems.

Mixer – Neptune JD-2.0

Metering pump:

21.9/2 gal/day = 0.46 gal/hr (per System 1 and 2)

Select a pump with this in the mid range
LMI P051 – max GPH = 1.0 (min rate is 20%).

<u>Sodium bicarbonate feed and rate</u>

The feed is in proportion to the extraction rate.

Use sodium bicarbonate rate from the end of the southern pilot study, which was with 3 gpm extraction rate.

0.68 lb sodium bicarbonate/gal solution

Flow rate from settings at 60% (stroke) and 65% (speed) on a pump with maximum rate of 4 GPH

Q = 2 gpm/ 3 gpm x 0.6 x 0.65 x 4 GPH = 1.04 GPH , say 1.1 GPH (for each System 1 and 2)

Use LMI C111 (max GPH = 2.5 GPH)

Tank size – check common tank:

2 x 1.1 gal/hr x 24 hr/day x 7 days = 370 gal

Nearest size is 500 gallons, but is 72" high which is too high for ease of filling the tank.

Therefore, use two tanks at 1.1 gal/hr x 24 hr/day x 7 days = 185 gal

Use two 200 gallon PE tanks, each 36" dia x 48" high

Total Quantity of sodium bicarbonate used per day:

2 x 1.1 gal/hr x 24 hr/day x 0.68 lb/gal = 36 lb/day

Mixer on tank (from Neptune literature) – 1/3 hp Model JD-2.0

**Hot Spot 3, Systems 3 and 4**

Sodium Lactate feed and rate

Each system is 1 gpm and together treats 1/3 of the plume. (Systems 1 & 2 treat the other 2/3.)

Area will be treated 8,624 $ft^2$

Estimate lactate requirements based on volume and 90-day feed period.

Porosity = 0.3

Thickness = 10 feet

Volume of water in the plume =

8,624 $ft^3$ x 0.3 x 10 feet x 7.381 gal/$ft^3$ = 193,600 gallons, total

193,600 gallons / 3 = 64,500 gallons total for Systems 3 and 4.

64,500 gallons /2 = 32,300 gallons each System 3 and 4

Pilot study use was 367 lb per 29,000 gallons.

Mass of sodium lactate (total of Systems 3 and 4):

2 x 32,300 gal x 367 lb/29,000 gal = 818 lb sodium lactate total of Systems 3 and 4

For 90 days injection: 818 lb/ 90 days = 9.1 lb/day (total Systems 3 and 4)

Using a 0.83 lb/gallons (about 20 % of maximum solubility)

9.1 lb/day x gal/ 0.83 lb = 11 gal/day (total Systems 3 and 4)

At 7 days of storage – 77 gallons.

Use common 100 gallon tank (28" dia x 42" H) with mixer (1/3 hp)

Common tank for both Systems 3 and 4.

Mixer – Neptune BN-1.0 (1/4 hp)

Metering pump:

11/2 gal/day = 0.23 gal/hr per System 3 and 4

Select a pump with this in the mid range
LMI P031 – max GPH = 0.42 (min rate is 30%).

<u>Sodium bicarbonate feed and rate</u>

The feed is in proportion to the extraction rate.

Use sodium bicarbonate rate from the end of the southern pilot study, which was with 3 gpm extraction rate.

0.68 lb sodium bicarbonate/gal solution

Flow rate from settings at 60% (stroke) and 65% (speed) on a pump with maximum rate of 4 GPH

Q = 1 gpm/ 3 gpm x 0.6 x 0.65 x 4 GPH = 0.52 GPH (for each System 3 and 4)

Use LMI C111 (max GPH = 2.5 GPH)

Tank size – check common tank:

2 x 0.52 gal/hr x 24 hr/day x 7 days = 175 gal

Use common tank, one 200 gallon PE tank, each 36" dia x 48" high

Total Quantity of sodium bicarbonate used per day:

2 x 0.52 gal/hr x 24 hr/day x 0.68 lb/gal = 17 lb/day

Mixer on tank (from Neptune literature) – 1/3 hp Model JD-2.

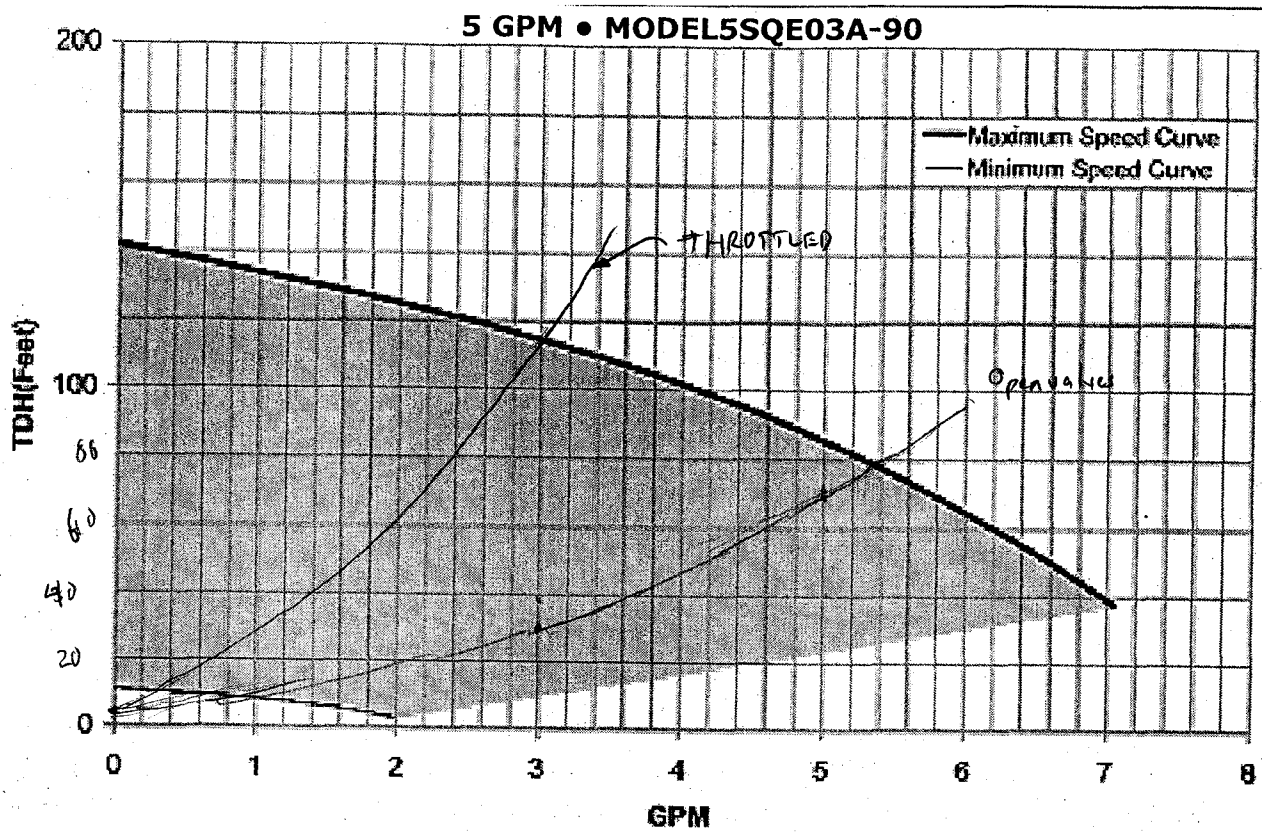


**FLOW RANGE: 1.5 - 8 GPM** **OUTLET SIZE: 1" NPT** **NOMINAL DIA. 3"**

SPECIFICATIONS SUBJECT TO CHANGE WITHOUT NOTICE.

> Back

| | | |
|---|---|---|
| > 5 GPM | 5 GPM • MODEL5SQE03A-90 | 5 GPM • MODEL5SQE07B-320 |
| > 0 GPM | 5 GPM • MODEL5SQE03A-140 | 5 GPM • MODEL5SQE10C-360 |
| > 15 GPM | 5 GPM • MODEL5SQE05A-180 | 5 GPM • MODEL5SQE10C-410 |
| > 22 GPM | 5 GPM • MODEL5SQE05B-230 | 5 GPM • MODEL5SQE10C-450 |
| > 30 GPM | 5 GPM • MODEL5SQE05B-270 | |

2A

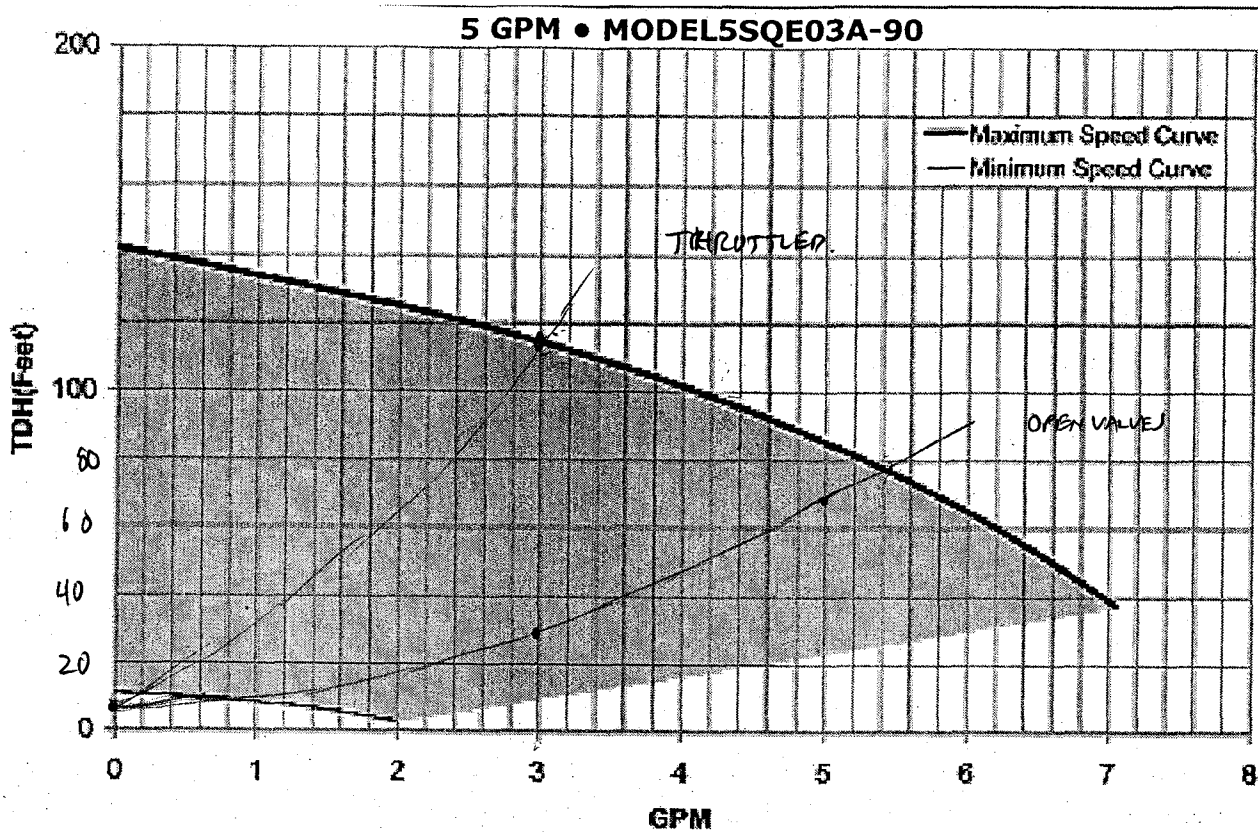


**FLOW RANGE: 1.5 - 8 GPM** **OUTLET SIZE: 1" NPT** **NOMINAL DIA. 3"**

SPECIFICATIONS SUBJECT TO CHANGE WITHOUT NOTICE.

> Back

| | | |
|---|---|---|
| > 5 GPM | 5 GPM • MODEL5SQE03A-90 | 5 GPM • MODEL5SQE07B-320 |
| > 10 GPM | 5 GPM • MODEL5SQE03A-140 | 5 GPM • MODEL5SQE10C-360 |
| > 15 GPM | 5 GPM • MODEL5SQE05A-180 | 5 GPM • MODEL5SQE10C-410 |
| > 22 GPM | 5 GPM • MODEL5SQE05B-230 | 5 GPM • MODEL5SQE10C-450 |
| > 30 GPM | 5 GPM • MODEL5SQE05B-270 | |

2B

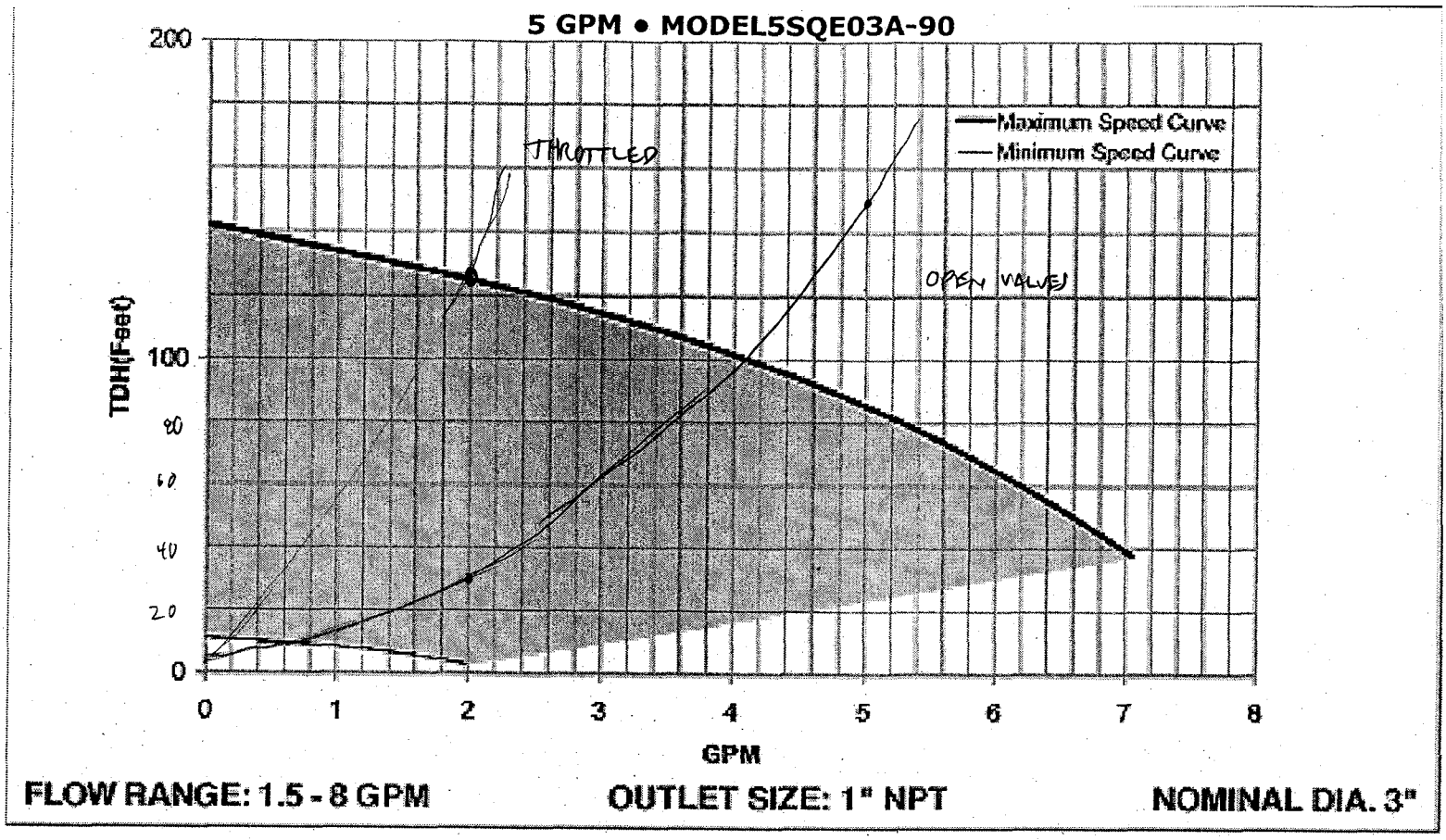


**FLOW RANGE: 1.5 - 8 GPM** **OUTLET SIZE: 1" NPT** **NOMINAL DIA. 3"**

SPECIFICATIONS SUBJECT TO CHANGE WITHOUT NOTICE.

> Back

| | | |
|---|---|---|
| > 5 GPM | 5 GPM • MODEL5SQE03A-90 | 5 GPM • MODEL5SQE07B-320 |
| > ) GPM | 5 GPM • MODEL5SQE03A-140 | 5 GPM • MODEL5SQE10C-360 |
| > 15 GPM | 5 GPM • MODEL5SQE05A-180 | 5 GPM • MODEL5SQE10C-410 |
| > 22 GPM | 5 GPM • MODEL5SQE05B-230 | 5 GPM • MODEL5SQE10C-450 |
| > 30 GPM | 5 GPM • MODEL5SQE05B-270 | |

3 systems 1.5

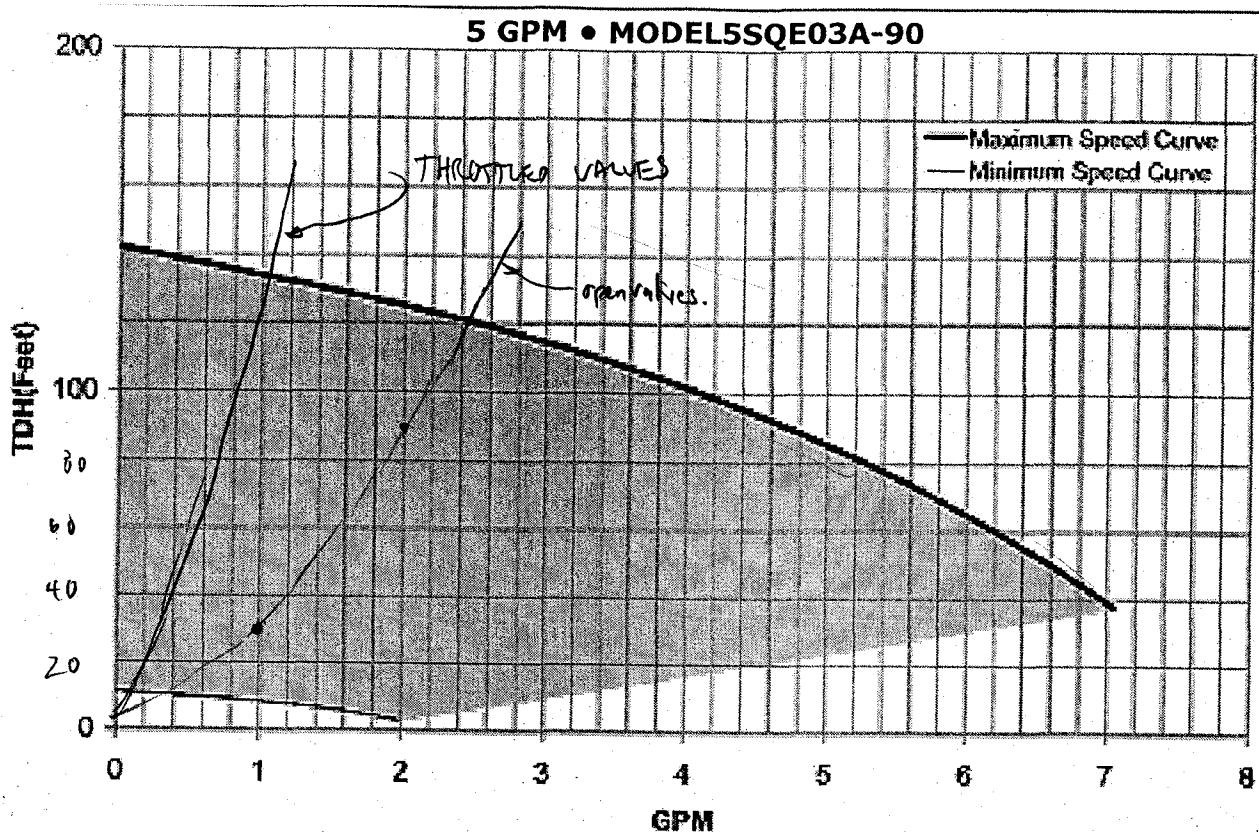


**FLOW RANGE: 1.5 - 8 GPM** **OUTLET SIZE: 1" NPT** **NOMINAL DIA. 3"**

SPECIFICATIONS SUBJECT TO CHANGE WITHOUT NOTICE.

> Back

| | | |
|---|---|---|
| > 5 GPM | 5 GPM • MODEL5SQE03A-90 | 5 GPM • MODEL5SQE07B-320 |
| > 0 GPM | 5 GPM • MODEL5SQE03A-140 | 5 GPM • MODEL5SQE10C-360 |
| > 15 GPM | 5 GPM • MODEL5SQE05A-180 | 5 GPM • MODEL5SQE10C-410 |
| > 22 GPM | 5 GPM • MODEL5SQE05B-230 | 5 GPM • MODEL5SQE10C-450 |
| > 30 GPM | 5 GPM • MODEL5SQE05B-270 | |

3 system 3 of 4

## Table 6

### Flow Capacity and Friction Loss for Schedule 40 Thermoplastic Pipe Per 100 Ft.

| Gallons per Minute | Velocity Feet per Second | Friction Head Feet | Friction Loss Pounds per Square Inch | Velocity Feet per Second | Friction Head Feet | Friction Loss Pounds per Square Inch | Velocity Feet per Second | Friction Head Feet | Friction Loss Pounds per Square Inch | Velocity Feet per Second | Friction Head Feet | Friction Loss Pounds per Square Inch | Velocity Feet per Second | Friction Head Feet | Friction Loss Pounds per Square Inch | Velocity Feet per Second | Friction Head Feet | Friction Loss Pounds per Square Inch | Velocity Feet per Second | Friction Head Feet | Friction Loss Pounds per Square Inch | Velocity Feet per Second | Friction Head Feet | Friction Loss Pounds per Square Inch |
|---|---|---|---|---|---|---|---|---|---|---|---|---|---|---|---|---|---|---|---|---|---|---|---|---|
| | ½ in. | | | ¾ in. | | | 1 in. | | | 1¼ in. | | | 1½ in. | | | 2 in. | | | 2½ in. | | | 3 in. | | |
| 1 | 1.13 | 2.08 | 0.90 | 0.63 | 0.51 | 0.22 | | | | | | | | | | | | | | | | | | |
| 2 | 2.26 | 4.16 | 1.80 | 1.26 | 1.02 | 0.44 | 0.77 | 0.55 | 0.24 | 0.44 | 0.14 | 0.06 | 0.33 | 0.07 | 0.03 | | | | | | | | | |
| 5 | 5.64 | 23.44 | 10.15 | 3.16 | 5.73 | 2.48 | 1.93 | 1.72 | 0.75 | 1.11 | 0.44 | 0.19 | 0.81 | 0.22 | 0.09 | 0.49 | 0.066 | 0.029 | 0.30 | 0.038 | 0.016 | 0.22 | 0.015 | 0.007 |
| 7 | 7.90 | 43.06 | 18.64 | 4.43 | 10.52 | 4.56 | 2.72 | 3.17 | 1.37 | 1.55 | 0.81 | 0.35 | 1.13 | 0.38 | 0.17 | 0.69 | 0.11 | 0.048 | 0.49 | 0.051 | 0.023 | 0.31 | 0.021 | 0.009 |
| 10 | 11.28 | 82.02 | 35.51 | 6.32 | 20.04 | 8.68 | 3.86 | 6.02 | 2.61 | 2.21 | 1.55 | 0.67 | 1.62 | 0.72 | 0.31 | 0.98 | 0.21 | 0.091 | 0.68 | 0.09 | 0.039 | 0.44 | 0.03 | 0.013 |
| 15 | | 4 in. | | 9.48 | 42.46 | 18.39 | 5.79 | 12.77 | 5.53 | 3.31 | 3.28 | 1.42 | 2.42 | 1.53 | 0.66 | 1.46 | 0.45 | 0.19 | 1.03 | 0.19 | 0.082 | 0.66 | 0.07 | 0.030 |
| 20 | 0.51 | 0.03 | 0.013 | 12.65 | 72.34 | 31.32 | 7.72 | 21.75 | 9.42 | 4.42 | 5.59 | 2.42 | 3.23 | 2.61 | 1.13 | 1.95 | 0.76 | 0.33 | 1.37 | 0.32 | 0.14 | 0.88 | 0.11 | 0.046 |
| 25 | 0.64 | 0.04 | 0.017 | | | | 9.65 | 32.88 | 14.22 | 5.52 | 8.45 | 3.66 | 4.04 | 3.95 | 1.71 | 2.44 | 1.15 | 0.50 | 1.71 | 0.49 | 0.21 | 1.10 | 0.17 | 0.074 |
| 30 | 0.77 | 0.06 | 0.026 | | | | 11.58 | 46.08 | 19.95 | 6.63 | 11.85 | 5.13 | 4.85 | 5.53 | 2.39 | 2.93 | 1.62 | 0.70 | 2.05 | 0.68 | 0.29 | 1.33 | 0.23 | 0.10 |
| 35 | 0.89 | 0.08 | 0.035 | | | | | | | 7.73 | 15.76 | 6.82 | 5.66 | 7.36 | 3.19 | 3.41 | 2.15 | 0.93 | 2.39 | 0.91 | 0.39 | 1.55 | 0.31 | 0.13 |
| 40 | 1.02 | 0.11 | 0.048 | | | | | | | 8.84 | 20.18 | 8.74 | 6.47 | 9.43 | 4.08 | 3.90 | 2.75 | 1.19 | 2.73 | 1.16 | 0.50 | 1.77 | 0.40 | 0.17 |
| 45 | 1.15 | 0.13 | 0.056 | | | | | 6 in. | | 9.94 | 25.10 | 10.87 | 7.27 | 11.73 | 5.08 | 4.39 | 3.43 | 1.49 | 3.08 | 1.44 | 0.62 | 1.99 | 0.50 | 0.22 |
| 50 | 1.28 | 0.16 | 0.069 | | | | 0.56 | 0.02 | 0.009 | 11.05 | 30.51 | 13.21 | 8.08 | 14.25 | 6.17 | 4.88 | 4.16 | 1.80 | 3.42 | 1.75 | 0.76 | 2.21 | 0.60 | 0.26 |
| 60 | 1.53 | 0.22 | 0.095 | | | | 0.67 | 0.03 | 0.013 | | | | 9.70 | 19.98 | 8.65 | 5.85 | 5.84 | 2.53 | 4.10 | 2.46 | 1.07 | 2.65 | 0.85 | 0.37 |
| 70 | 1.79 | 0.30 | 0.13 | | | | 0.79 | 0.04 | 0.017 | | | | | | | 6.83 | 7.76 | 3.36 | 4.79 | 3.27 | 1.42 | 3.09 | 1.13 | 0.49 |
| 75 | 1.92 | 0.34 | 0.15 | | | | 0.84 | 0.05 | 0.022 | | | | | | | 7.32 | 8.82 | 3.82 | 5.13 | 3.71 | 1.61 | 3.31 | 1.28 | 0.55 |
| 80 | 2.05 | 0.38 | 0.16 | | | | 0.90 | 0.05 | 0.022 | | 6 in. | | | | | 7.80 | 9.94 | 4.30 | 5.47 | 4.19 | 1.81 | 3.53 | 1.44 | 0.62 |
| 90 | 2.30 | 0.47 | 0.20 | | | | 1.01 | 0.06 | 0.026 | | | | | | | 8.78 | 12.37 | 5.36 | 6.15 | 5.21 | 2.26 | 3.98 | 1.80 | 0.78 |
| 100 | 2.56 | 0.58 | 0.25 | | | | 1.12 | 0.08 | 0.035 | 0.65 | 0.03 | 0.012 | | | | 9.75 | 15.03 | 6.51 | 6.84 | 6.33 | 2.74 | 4.42 | 2.18 | 0.94 |
| 125 | 3.20 | 0.88 | 0.38 | | | | 1.41 | 0.12 | 0.052 | 0.81 | 0.035 | 0.015 | | 10 in. | | | | | 8.55 | 9.58 | 4.15 | 5.52 | 3.31 | 1.43 |
| 150 | 3.84 | 1.22 | 0.53 | | | | 1.69 | 0.16 | 0.069 | 0.97 | 0.04 | 0.017 | | | | | | | 10.26 | 13.41 | 5.81 | 6.63 | 4.63 | 2.00 |
| 175 | 4.48 | 1.63 | 0.71 | | | | 1.97 | 0.22 | 0.096 | 1.14 | 0.055 | 0.024 | | | | | | | | | | 7.73 | 6.16 | 2.67 |
| 200 | 5.11 | 2.08 | 0.90 | | | | 2.25 | 0.28 | 0.12 | 1.30 | 0.07 | 0.030 | 0.82 | 0.027 | 0.012 | | 12 in. | | | | | 8.83 | 7.88 | 3.41 |
| 250 | 6.40 | 3.15 | 1.36 | | | | 2.81 | 0.43 | 0.19 | 1.63 | 0.11 | 0.048 | 1.03 | 0.035 | 0.015 | | | | | | | 11.04 | 11.93 | 5.17 |
| 300 | 7.67 | 4.41 | 1.91 | | | | 3.37 | 0.60 | 0.26 | 1.94 | 0.16 | 0.069 | 1.23 | 0.05 | 0.022 | | | | | | | | | |
| 350 | 8.95 | 5.87 | 2.55 | | | | 3.94 | 0.79 | 0.34 | 2.27 | 0.21 | 0.091 | 1.44 | 0.065 | 0.028 | 1.01 | 0.027 | 0.012 | | | | | | |
| 400 | 10.23 | 7.52 | 3.26 | | | | 4.49 | 1.01 | 0.44 | 2.59 | 0.27 | 0.12 | 1.64 | 0.09 | 0.039 | 1.16 | 0.04 | 0.017 | | | | | | |
| 450 | | | | | | | 5.06 | 1.26 | 0.55 | 2.92 | 0.33 | 0.14 | 1.85 | 0.11 | 0.048 | 1.30 | 0.05 | 0.022 | | | | | | |
| 500 | | | | | | | 5.62 | 1.53 | 0.66 | 3.24 | 0.40 | 0.17 | 2.05 | 0.13 | 0.056 | 1.45 | 0.06 | 0.026 | | | | | | |
| 750 | | | | | | | 8.43 | 3.25 | 1.41 | 4.86 | 0.85 | 0.37 | 3.08 | 0.28 | 0.12 | 2.17 | 0.12 | 0.052 | | | | | | |
| 1000 | | | | | | | 11.24 | 5.54 | 2.40 | 6.48 | 1.45 | 0.63 | 4.11 | 0.48 | 0.21 | 2.89 | 0.20 | 0.087 | | | | | | |
| 1250 | | | | | | | | | | 8.11 | 2.20 | 0.95 | 5.14 | 0.73 | 0.32 | 3.62 | 0.31 | 0.13 | | | | | | |
| 1500 | | | | | | | | | | 9.72 | 3.07 | 1.33 | 6.16 | 1.01 | 0.44 | 4.34 | 0.43 | 0.19 | | | | | | |
| 2000 | | | | | | | | | | | | | 8.21 | 1.72 | 0.74 | 5.78 | 0.73 | 0.32 | | | | | | |
| 2500 | | | | | | | | | | | | | 10.27 | 2.61 | 1.13 | 7.23 | 1.11 | 0.49 | | | | | | |
| 3000 | | | | | | | | | | | | | | | | 8.68 | 1.55 | 0.67 | | | | | | |
| 3500 | | | | | | | | | | | | | | | | 10.12 | 2.07 | 0.90 | | | | | | |
| 4000 | | | | | | | | | | | | | | | | 11.07 | 2.66 | 1.15 | | | | | | |

## Table 7

### Flow Capacity and Friction Loss for Schedule 80 Thermoplastic Pipe Per 100 Ft.

| Gallons per Minute | Velocity Feet per Second | Friction Head Feet | Friction Loss Pounds per Square Inch | Velocity Feet per Second | Friction Head Feet | Friction Loss Pounds per Square Inch | Velocity Feet per Second | Friction Head Feet | Friction Loss Pounds per Square Inch | Velocity Feet per Second | Friction Head Feet | Friction Loss Pounds per Square Inch | Velocity Feet per Second | Friction Head Feet | Friction Loss Pounds per Square Inch | Velocity Feet per Second | Friction Head Feet | Friction Loss Pounds per Square Inch | Velocity Feet per Second | Friction Head Feet | Friction Loss Pounds per Square Inch | Velocity Feet per Second | Friction Head Feet | Friction Loss Pounds per Square Inch |
|---|---|---|---|---|---|---|---|---|---|---|---|---|---|---|---|---|---|---|---|---|---|---|---|---|
| | ½ in. | | | ¾ in. | | | 1 in. | | | 1¼ in. | | | 1½ in. | | | 2 in. | | | 2½ in. | | | 3 in. | | |
| 1 | 1.48 | 4.02 | 1.74 | 0.74 | 0.86 | 0.37 | | | | | | | | | | | | | | | | | | |
| 2 | 2.95 | 8.03 | 3.48 | 1.57 | 1.72 | 0.74 | 0.94 | 0.88 | 0.38 | 0.52 | 0.21 | 0.09 | 0.38 | 0.10 | 0.041 | | | | | | | | | |
| 5 | 7.39 | 45.23 | 19.59 | 3.92 | 9.67 | 4.19 | 2.34 | 2.75 | 1.19 | 1.30 | 0.66 | 0.29 | 0.94 | 0.30 | 0.126 | 0.56 | 0.10 | 0.040 | 0.39 | 0.05 | 0.022 | 0.25 | 0.02 | 0.009 |
| 7 | 10.34 | 83.07 | 35.97 | 5.49 | 17.76 | 7.69 | 3.28 | 5.04 | 2.19 | 1.82 | 1.21 | 0.53 | 1.32 | 0.55 | 0.24 | 0.78 | 0.15 | 0.065 | 0.54 | 0.07 | 0.032 | 0.35 | 0.028 | 0.012 |
| 10 | | | | 7.84 | 33.84 | 14.65 | 4.68 | 9.61 | 4.16 | 2.60 | 2.30 | 1.00 | 1.88 | 1.04 | 0.45 | 1.12 | 0.29 | 0.13 | 0.78 | 0.12 | 0.052 | 0.50 | 0.04 | 0.017 |
| 15 | | 4 in. | | 11.76 | 71.70 | 31.05 | 7.04 | 20.36 | 8.82 | 3.90 | 4.87 | 2.11 | 2.81 | 2.20 | 0.95 | 1.68 | 0.62 | 0.27 | 1.17 | 0.26 | 0.11 | 0.75 | 0.09 | 0.039 |
| 20 | 0.57 | 0.04 | 0.017 | | | | 9.35 | 34.68 | 15.02 | 5.20 | 8.30 | 3.59 | 3.75 | 3.75 | 1.62 | 2.23 | 1.06 | 0.46 | 1.56 | 0.44 | 0.19 | 1.00 | 0.15 | 0.065 |
| 25 | 0.72 | 0.06 | 0.026 | | | | 11.69 | 52.43 | 22.70 | 6.50 | 12.55 | 5.43 | 4.69 | 5.67 | 2.46 | 2.79 | 1.60 | 0.69 | 1.95 | 0.67 | 0.29 | 1.25 | 0.22 | 0.095 |
| 30 | 0.86 | 0.08 | 0.035 | | | | 14.03 | 73.48 | 31.82 | 7.80 | 17.59 | 7.62 | 5.63 | 7.95 | 3.44 | 3.35 | 2.25 | 0.97 | 2.34 | 0.94 | 0.41 | 1.49 | 0.31 | 0.13 |
| 35 | 1.00 | 0.11 | 0.048 | | | | | | | 9.10 | 23.40 | 10.13 | 6.57 | 10.58 | 4.58 | 3.91 | 2.99 | 1.29 | 2.73 | 1.25 | 0.54 | 1.74 | 0.42 | 0.18 |
| 40 | 1.15 | 0.14 | 0.061 | | | | | | | 10.40 | 29.97 | 12.98 | 7.50 | 13.55 | 5.87 | 4.47 | 3.83 | 1.66 | 3.12 | 1.60 | 0.69 | 1.99 | 0.54 | 0.23 |
| 45 | 1.29 | 0.17 | 0.074 | | | | | 6 in. | | 11.70 | 37.27 | 16.14 | 8.44 | 16.85 | 7.30 | 5.03 | 4.76 | 2.07 | 3.51 | 1.99 | 0.86 | 2.24 | 0.67 | 0.29 |
| 50 | 1.43 | 0.21 | 0.091 | | | | 0.63 | 0.03 | 0.013 | 13.00 | 45.30 | 19.61 | 9.38 | 20.48 | 8.87 | 5.58 | 5.79 | 2.51 | 3.90 | 2.42 | 1.05 | 2.49 | 0.81 | 0.35 |
| 60 | 1.72 | 0.30 | 0.13 | | | | 0.75 | 0.04 | 0.017 | | | | 11.26 | 28.70 | 12.43 | 6.70 | 8.12 | 3.52 | 4.68 | 3.39 | 1.47 | 2.99 | 1.14 | 0.49 |
| 70 | 2.01 | 0.39 | 0.17 | | | | 0.88 | 0.05 | 0.022 | | | | | | | 7.82 | 10.80 | 4.68 | 5.46 | 4.51 | 1.95 | 3.49 | 1.51 | 0.65 |
| 75 | 2.15 | 0.45 | 0.19 | | | | 0.94 | 0.06 | 0.026 | | | | | | | 8.38 | 12.27 | 5.31 | 5.85 | 5.12 | 2.22 | 3.74 | 1.72 | 0.74 |
| 80 | 2.29 | 0.50 | 0.22 | | | | 1.00 | 0.07 | 0.030 | | | | | | | 8.93 | 13.88 | 5.99 | 6.24 | 5.77 | 2.50 | 3.99 | 1.94 | 0.84 |
| 90 | 2.58 | 0.63 | 0.27 | | | | 1.13 | 0.08 | 0.035 | | 6 in. | | | | | 10.05 | 17.20 | 7.45 | 7.02 | 7.16 | 3.11 | 4.48 | 2.41 | 1.04 |
| 100 | 2.87 | 0.76 | 0.33 | | | | 1.25 | 0.10 | 0.043 | | | | | | | 11.17 | 20.90 | 9.05 | 7.80 | 8.72 | 3.78 | 4.98 | 2.93 | 1.27 |
| 125 | 3.59 | 1.16 | 0.50 | | | | 1.57 | 0.16 | 0.068 | 0.90 | 0.045 | 0.019 | | 10 in. | | | | | 9.75 | 13.21 | 5.72 | 6.23 | 4.43 | 1.92 |
| 150 | 4.30 | 1.61 | 0.70 | | | | 1.88 | 0.22 | 0.095 | 1.07 | 0.05 | 0.022 | | | | | | | 11.70 | 18.48 | 8.00 | 7.47 | 6.20 | 2.68 |
| 175 | 5.02 | 2.15 | 0.93 | | | | 2.20 | 0.29 | 0.12 | 1.25 | 0.075 | 0.033 | | | | | | | | | | 8.72 | 8.26 | 3.58 |
| 200 | 5.73 | 2.75 | 1.19 | | | | 2.51 | 0.37 | 0.16 | 1.43 | 0.09 | 0.039 | 0.90 | 0.036 | 0.015 | | | | | | | 9.97 | 10.57 | 4.58 |
| 250 | 7.16 | 4.16 | 1.81 | | | | 3.14 | 0.56 | 0.24 | 1.79 | 0.14 | 0.061 | 1.14 | 0.045 | 0.02 | | 12 in. | | | | | 12.46 | 16.00 | 6.93 |
| 300 | 8.60 | 5.83 | 2.52 | | | | 3.76 | 0.78 | 0.34 | 2.14 | 0.20 | 0.087 | 1.36 | 0.07 | 0.03 | | | | | | | | | |
| 350 | 10.03 | 7.76 | 3.36 | | | | 4.39 | 1.04 | 0.45 | 2.50 | 0.27 | 0.12 | 1.59 | 0.085 | 0.037 | 1.12 | 0.037 | 0.016 | | | | | | |
| 400 | 11.47 | 9.93 | 4.30 | | | | 5.02 | 1.33 | 0.58 | 2.86 | 0.34 | 0.15 | 1.81 | 0.11 | 0.048 | 1.28 | 0.05 | 0.022 | | | | | | |
| 450 | | | | | | | 5.64 | 1.65 | 0.71 | 3.21 | 0.42 | 0.18 | 2.04 | 0.14 | 0.061 | 1.44 | 0.06 | 0.026 | | | | | | |
| 500 | | | | | | | 6.27 | 2.00 | 0.87 | 3.57 | 0.51 | 0.22 | 2.27 | 0.17 | 0.074 | 1.60 | 0.07 | 0.030 | | | | | | |
| 750 | | | | | | | 9.40 | 4.25 | 1.84 | 5.36 | 1.08 | 0.47 | 3.40 | 0.36 | 0.16 | 2.40 | 0.15 | 0.065 | | | | | | |
| 1000 | | | | | | | 12.54 | 7.23 | 3.13 | 7.14 | 1.84 | 0.80 | 4.54 | 0.61 | 0.26 | 3.20 | 0.26 | 0.11 | | | | | | |
| 1250 | | | | | | | | | | 8.93 | 2.78 | 1.20 | 5.67 | 0.92 | 0.40 | 4.01 | 0.40 | 0.17 | | | | | | |
| 1500 | | | | | | | | | | 10.71 | 3.89 | 1.68 | 6.80 | 1.29 | 0.56 | 4.81 | 0.55 | 0.24 | | | | | | |
| 2000 | | | | | | | | | | | | | 9.07 | 2.19 | 0.95 | 6.41 | 0.94 | 0.41 | | | | | | |
| 2500 | | | | | | | | | | | | | 11.34 | 3.33 | 1.44 | 8.01 | 1.42 | 0.62 | | | | | | |
| 3000 | | | | | | | | | | | | | | | | 9.61 | 1.99 | 0.86 | | | | | | |
| 3500 | | | | | | | | | | | | | | | | 11.21 | 2.65 | 1.15 | | | | | | |
| 4000 | | | | | | | | | | | | | | | | 12.82 | 3.41 | 1.48 | | | | | | |

## Table 8
## Equivalent Length of Pipe, Feet

| | | ¼" | ½" | ¾" | 1" | 1¼" | 1½" | 2" | 2½" | 3" | 4" | 6" | 8" | 10" | 12" |
|---|---|---|---|---|---|---|---|---|---|---|---|---|---|---|---|
| | 90° Standard Elbow | 0.9 | 1.6 | 2.1 | 2.6 | 3.5 | 4.0 | 5.5 | 6.2 | 7.7 | 10.1 | 15.2 | 20.0 | 25.1 | 29.8 |
| | 40° Standard Elbow | 0.5 | 0.8 | 1.1 | 1.4 | 1.8 | 2.1 | 2.8 | 3.3 | 4.1 | 5.4 | 8.1 | 10.6 | 13.4 | 15.9 |
| | 90° Long Radius Elbow | 0.6 | 1.0 | 1.4 | 1.7 | 2.3 | 2.7 | 4.3 | 5.1 | 6.3 | 8.3 | 12.5 | 16.5 | 20.7 | 24.7 |
| FITTINGS | 90° Street Elbow | 1.5 | 2.6 | 3.4 | 4.4 | 5.8 | 6.7 | 8.6 | 10.3 | 12.8 | 16.8 | 25.3 | 33.3 | 41.8 | 49.7 |
| | 45° Street Elbow | 0.8 | 1.3 | 1.8 | 2.3 | 3.0 | 3.5 | 4.5 | 5.4 | 6.6 | 8.7 | 13.1 | 17.3 | 21.7 | 25.9 |
| | Square Corner Elbow | 1.7 | 3.0 | 3.9 | 5.0 | 6.5 | 7.6 | 9.8 | 11.7 | 14.6 | 19.1 | 28.8 | 37.9 | 47.6 | 56.7 |
| | Standard — With Flow through run | 0.6 | 1.0 | 1.4 | 1.7 | 2.3 | 2.7 | 4.3 | 5.1 | 6.3 | 8.3 | 12.5 | 16.5 | 20.7 | 24.7 |
| | Tee — With Flow through branch | 1.8 | 4.0 | 5.1 | 6.0 | 6.9 | 8.1 | 12 | 14.3 | 16.3 | 22.1 | 32.2 | 39.9 | 50.1 | 59.7 |

# PLASTIC PIPING STANDARDS

Many commercial, industrial and governmental standards or specifications are available to assist the design engineer in specifying plastic piping systems. Standards most frequently referred to and most commonly called out in plastic piping specifications are ASTM Standards. These standards also often form the basis of other standards in existence. Below is a list and description of those standards most typically applied to industrial plastic piping.

## ASTM Standard D-1784

This standard covers PVC and CPVC compounds used in the manufacture of plastic pipe, valves and fittings. It provides a means for selecting and identifying compounds on the basis of a number of physical and chemical criteria. Conformance to a particular material classification in this standard requires meeting a number of minimum physical and chemical properties.

## ASTM Standards D-1785 and F-441

These standards cover the specification and quality of Schedule 40, 80 and 120 PVC (D-1785) and CPVC (F-441) pressure pipe. Outlined in these standards are dimensional specifications, burst, sustained and maximum operating pressure requirements and test procedures for determining pipe quality with respect to workmanship and materials.

EXAMPLE 1:

A 2" PVC schedule 80 pipe carries a fluid with a specific gravity of 1.2 at a rate of 30 gpm and at a line pressure of 160 psi. What would the surge pressure be if a valve were suddenly closed?

From table 5:

C = 24.2

$$p = (3.35)\left(\frac{(1.2-1)}{2}24.2 + 24.2\right)$$

$$p = (3.35)(26.6) = 90 \text{ psi}$$

Total line pressure =

90 + 160 = 250 psi

Schedule 80 2" PVC from the chart on page 15 has a pressure rating of 400 psi at room temperature.

Therefore, 2" schedule 80 PVC pipe is acceptable for this application.



**Table 5 C-SURGE WAVE CONSTANT**

| Pipe Size | PVC | | CPVC | | Polypro-pylene | (PVDF) |
|---|---|---|---|---|---|---|
| | Sch. 40 | Sch. 80 | Sch. 40 | Sch. 80 | Sch. 80 | Sch. 80 |
| ¼" | 31.3 | 34.7 | 33.2 | 37.3 | — | — |
| ⅜" | 29.3 | 32.7 | 31.0 | 34.7 | — | — |
| ½" | 28.7 | 31.7 | 30.3 | 33.7 | 25.9 | 28.3 |
| ¾" | 26.3 | 29.8 | 27.8 | 31.6 | 23.1 | 25.2 |
| 1" | 25.7 | 29.2 | 27.0 | 30.7 | 21.7 | 24.0 |
| 1¼" | 23.2 | 27.0 | 24.5 | 28.6 | 19.8 | — |
| 1½" | 22.0 | 25.8 | 23.2 | 27.3 | 18.8 | 20.6 |
| 2" | 20.2 | 24.2 | 21.3 | 25.3 | 17.3 | 19.0 |
| 2½" | 21.1 | 24.7 | 22.2 | 26.0 | — | |
| 3" | 19.5 | 23.2 | 20.6 | 24.5 | 16.6 | |
| 4" | 17.8 | 21.8 | 18.8 | 22.9 | 15.4 | |
| 6" | 15.7 | 20.2 | 16.8 | 21.3 | | |
| 8" | 14.8 | 18.8 | 15.8 | 19.8 | | |
| 10" | 14.0 | 18.3 | 15.1 | 19.3 | | |
| 12" | 13.7 | 18.0 | 14.7 | 19.2 | | |
| 14" | 13.4 | 17.9 | 14.4 | 19.2 | | |

**Proper design when laying out a piping system will eliminate the possibility of water hammer damage.**

The following suggestions will help in avoiding problems:

1. In a plastic piping system, a fluid velocity not exceeding 5 ft./sec. will minimize water hammer effects, even with quickly closing valves, such as solenoid valves.
2. Using actuated valves which have a specific closing time will eliminate the possibility of someone inadvertently slamming a valve open or closed too quickly. With pneumatic and air-spring actuators, it may be necessary to place a valve in the air line to slow down the valve operation cycle.
3. If possible, when starting a pump, partially close the valve in the discharge line to minimize the volume of liquid which is rapidly accelerating through the system. Once the pump is up to speed and the line completely full, the valve may be opened.
4. A check valve installed near a pump in the discharge line will keep the line full and help prevent excessive water hammer during pump start-up.

# PRESSURE LOSSES IN A PIPING SYSTEM

## Piping Calculations

As a fluid flows through a piping system, it will experience a head loss depending on, among other factors, fluid velocity, pipe wall smoothness and internal pipe surface area. Table 6 and 7 give Friction Loss and carrying capacity data for Sch. 40 and Sch. 80 thermoplastic pipe based on the Williams and Hazen formula where H is friction head

$$H = .2083\left(\frac{100}{C}\right)^{1.852} \times \left(\frac{q^{1.852}}{d^{4.8655}}\right)$$

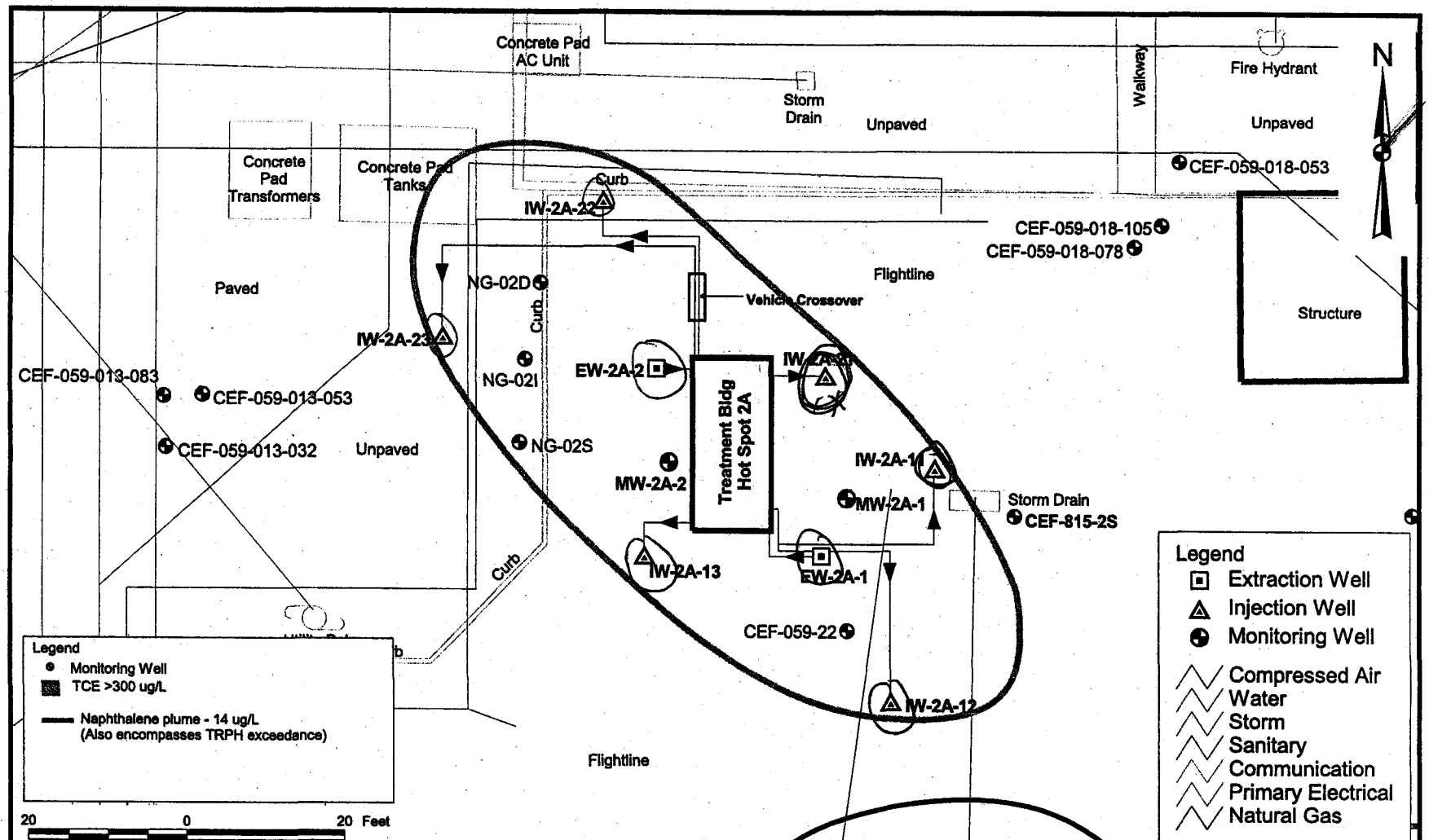


| | | | |
|---|---|---|---|
| DRAWN BY MJJ | DATE 06Feb07 | SITE LAYOUT - RECIRCULATION SYSTEMS AND WELL LOCATIONS HOT SPOT 2A<br>OU 9, SITE 59<br>REMEDIAL DESIGN<br>NAVAL AIR STATION CECIL FIELD<br>JACKSONVILLE, FLORIDA | CONTRACT NUMBER 8925 |
| CHECKED BY | DATE | | APPROVED BY / DATE |
| COST/SCHEDULE-AREA | | | APPROVED BY / DATE |
| SCALE AS NOTED | NAVFAC | | DRAWING NO. FIGURE 3-7 / REV 0 |

P:\GIS\NAS_CecilField\Site-59_Design.apr 06Feb07 MJJ Layout02

50' deep

P:\GIS\NAS_CecilField\Site-59_Design.apr 10Feb07 MJJ Layout03

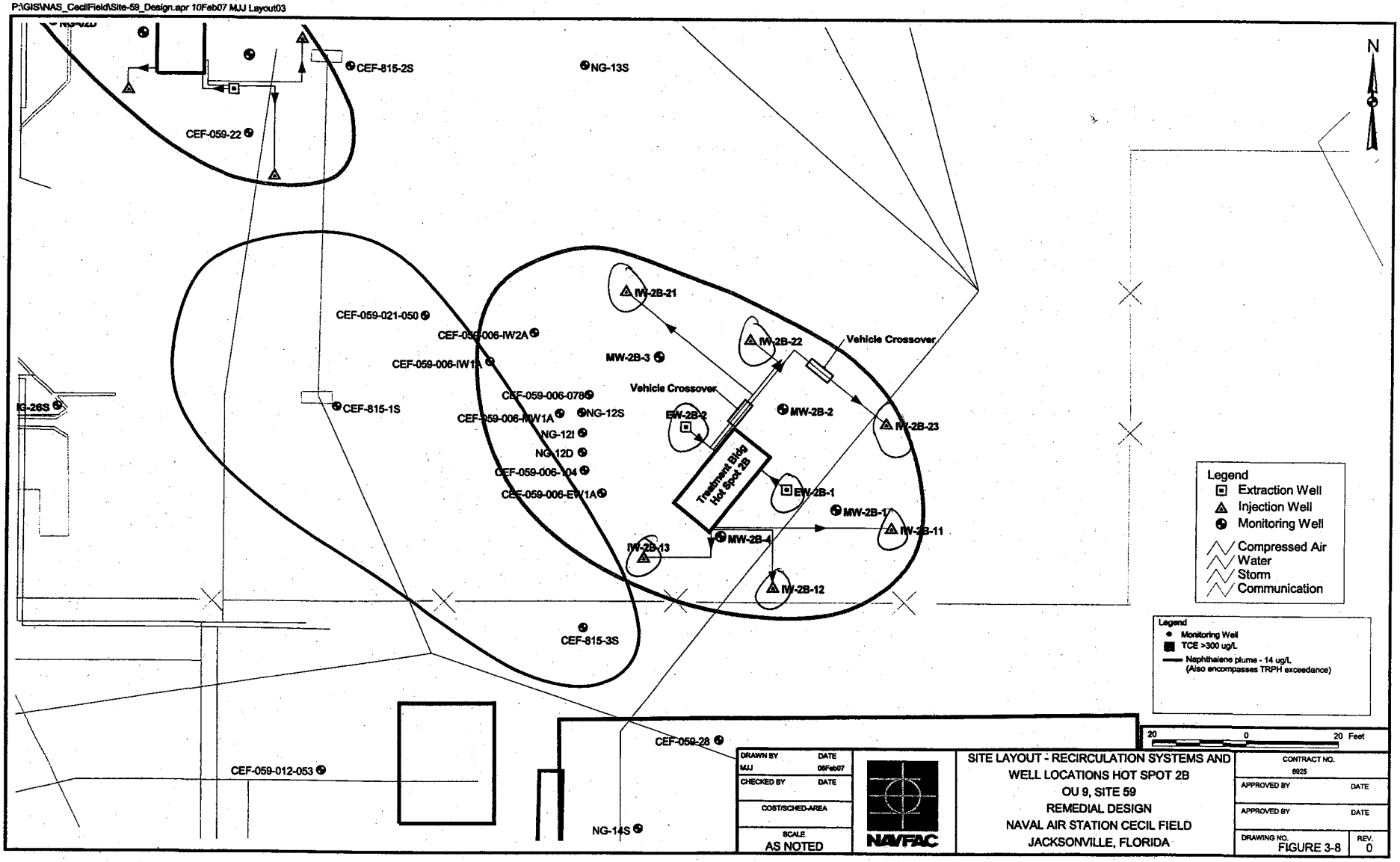


50 feet deep

P:\GIS\NAS_CecilField\Site-59_Design.apr 06Feb07 MJJ Layout01

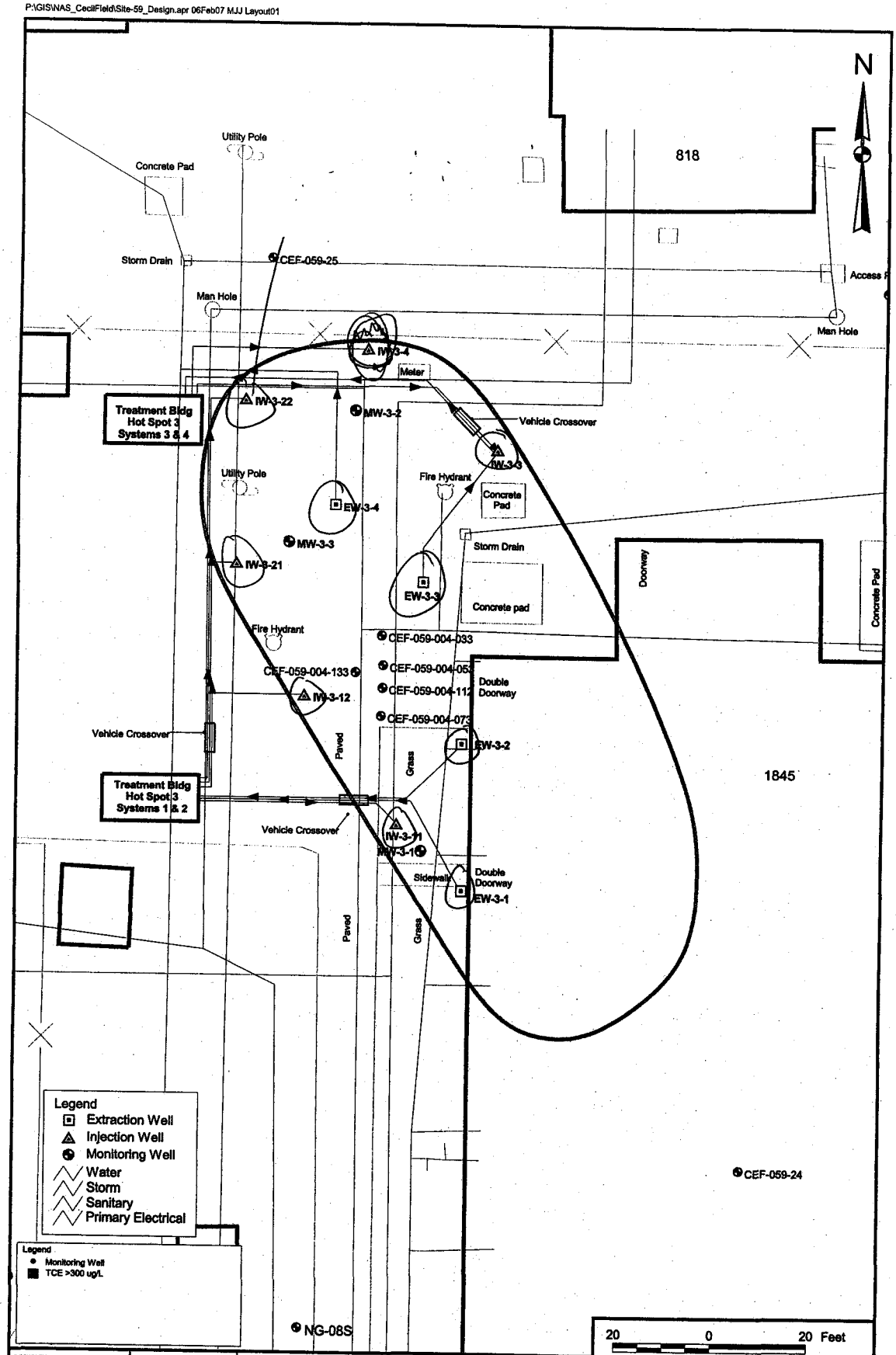


| | | | |
|---|---|---|---|
| DRAWN BY MJJ | DATE 06Feb07 | SITE LAYOUT - RECIRCULATION SYSTEMS AND WELL LOCATIONS HOT SPOT 3 | CONTRACT NUMBER 8925 |
| CHECKED BY | DATE | OU 9, SITE 59 | APPROVED BY DATE |
| COST/SCHEDULE-AREA | | REMEDIAL DESIGN | APPROVED BY DATE |
| SCALE AS NOTED | NAVFAC | NAVAL AIR STATION CECIL FIELD JACKSONVILLE, FLORIDA | DRAWING NO. FIGURE 3-9 REV 0 |

25 feet day

# GROUNDWATER MODELING NOTES

**MODFLOW GROUNDWATER MODELING**

**Recirculation System Design**

**Naval Air Station Cecil Field - OU9, Site 59**

**Jacksonville, Florida**

## OBJECTIVE, MODELING BACKGROUND AND MODELING APPROACH

The Groundwater Vistas modeling program was used to perform modeling at the Naval Air Station Cecil Field (OU9, Site 59) in Jacksonville, Florida. Groundwater Vistas is a commercially available Windows-based software package that provides a graphical design interface for MODFLOW, a three-dimensional finite-element groundwater simulation package. The modeling was done in order to design and evaluate a recirculation system for the selected remedy of enhanced bioaugmentation for the chlorinated solvent plumes at the site, establishing locations and pumping rates of injection and extraction wells to most effectively remediate the elevated concentrations of trichloroethylene (TCE) associated with the chlorinated solvent plumes. The approach taken is consistent with the work performed and assumptions made in the pilot study.

In the pilot study, a recirculation rate of 3 gallons per minute (gpm) was used, with the injection-extraction well pair located 30 feet apart. A major limitation encountered during the pilot study was a shallow depth to groundwater, resulting in the need to seal some wells (pressures remained between 3 to 10 pounds per square inch) due to mounding groundwater conditions. Several additional limitations in designing the recirculation system include many utilities in the northern plume area limiting well installation locations, changed plume shapes due to pilot study impacts, and inaccessibility to the southern portions of the northern plume since it is under Building 1845. Additionally, a target recirculation time of approximately 30 days is sought.

## MODEL SETUP

Groundwater Vistas requires that the user input a number of site-specific parameters for the model to operate properly and accurately represent site conditions. Site-specific parameters from the pilot study were used whenever possible to ensure direct correlation with pilot study assumptions and results.

The following are the input parameters used:

*Hydrogeologic Data*

- Grid spacing = 10 feet by 10 feet. A uniform model grid spacing of 10 feet by 10 feet was used which provided enough resolution to accurate represent site conditions. A total of 141 rows and 93 columns were created.

- Layer Thickness = 5 feet. A uniform layer thickness of 5 feet was used, resulting in a total of 26 model layers. Elevations in the model were based on elevations observed at the site.

- Hydraulic conductivity = 19 ft/day for horizontal, 1.9 ft/day for vertical (1:10 horizontal to vertical anistropy assumed). Source: Values of hydraulic conductivity are within the range of values observed at the site (14.2 to 42.9 feet/day, see Section 4.5.2.2 of the RI) and are consistent with pilot study. The 1:10 horizontal to vertical anistropy ratio is a standard modeling assumption.

- Hydraulic gradient = 0.00277 ft/ft. Source: Value is within range of calculated hydraulic gradients determined for each of the four zones (see Section 4.5.2.3, Figures 4-2 through 4-5 of the RI, with the range being 0.003 to 0.00417 ft/ft) and is consistent with

the pilot study and zones where contaminant plumes occur.

- Porosity = 0.30. Source: Used by TtNUS in estimating groundwater flow velocities in Section 4.5.2.3 of the RI. Value is consistent with literature published values (Freeze and Cherry, 1973).

A constant head boundary was set on the northern and southern model grid cells. The values applied on the northern model grid cells was set based on observed water levels (during RI investigation) and the values applied on the southern model grid cells was calculated based on the hydraulic gradient above. In general, since the gradient is uniform across the site, the values applied to the southern model edge were nearly identical to observed groundwater elevations.

*General Data – General Model Parameters*

- Simulation time was set to steady state (time independent).

- Injection/Extraction wells were assumed to have 10 foot screen lengths, consistent with the pilot study wells. This resulted in the wells occupying 2 model layers. Groundwater flow was evenly divided between the two layers.

- Plume Extents were digitized into the model, based on the most recent results obtained during sampling events associated with the pilot study.

**Recirculation System Design – Northern Chlorinated VOC Plume**

Four figures are provided that summarizes the recirculation system design for the Northern Chlorinated VOC Plume and are provided in Attachment A1. The figures include a well location map (injection and extraction well locations), well location map with simulated potentiometric surface and no injection or extraction (base case scenario), recirculation system with simulated potentiometric surface and particle tracking (to show recirculation time), and recirculation system with simulated potentiometric surface, particle tracking and plume outline (to show extent of plume capture/affected). When provided, the contour interval of the potentiometric surface is 0.1 feet. Distinction between injection and extraction wells is detailed below.

A total of 10 wells are proposed, six injection and four extraction wells. Injection wells have an injection rate of 1 gallon per minute (gpm) per well and are located along the periphery of the VOC Plume and produce mounding of approximately 0.4 to 0.5 feet. In general, the extraction wells are located in the center of the VOC Plume. The two northern most extraction wells have an extraction rate of 1 gpm and produce a drawdown of approximately 0.4 feet. The two southern most extraction wells are located along the northwestern wall of Building 1845 and each have an extraction rate of 2 gpm which produce a drawdown of approximately 0.8 to 1.0 feet. Travel times between injection and extraction wells is approximately 21 to 28 days. For locations between the injection wells along the periphery of the VOC plume, travel times from the plume periphery to extraction well is generally 28 to 35 days. Complete capture of the VOC plume is achieved, even under the building (capture times range from 35 to 42 days).

**Recirculation System Design – Southern Chlorinated VOC Plumes**

Four figures are provided that summarizes the recirculation system design for the Southern Chlorinated VOC Plumes and are provided in Attachment A2. The figures include for the Southern Chlorinated VOC Plumes are the same as provided for the Northern Chlorinated Plumes. When provided, the contour interval of the potentiometric surface is 0.1 feet. Distinction between injection and extraction wells is detailed below.

For each of the plumes, a recirculation system of 8 wells is proposed, six injection and two extraction wells. Injection wells have an injection rate of 1 gpm per well and are located along the

periphery of the VOC Plume and produce mounding of approximately 0.2 to 0.4 feet. In general, the extraction wells are located in the center of the VOC Plume. The two extraction wells have an extraction rate of 3 gpm each and produce a drawdown of approximately 1.0 to 1.2 feet. Travel times between injection and extraction wells is approximately 10 to 21 days. For locations between the injection wells along the periphery of the VOC plume, travel times from the plume periphery to extraction well is generally 21 to 28 days. Complete capture of the VOC plume is achieved for both plumes.

**Discussion of MODFLOW Modeling Recirculation System Results**

Limitations encountered during the pilot study and additional limitations concerning the design and evaluation of the recirculation system have been overcome by utilizing site-specific parameters. A closed system totaling 6 gpm was modeled for each VOC plume. Injection rates were reduced to 1 gpm per well location (compared to 3 gpm during the pilot study), that results in decreased groundwater mounding in the recirculation system compared to the pilot study. Injection and extraction well locations were moved to locations free of utilities and other obstructions yet complete capture of the VOC plumes is still achieved in approximately the anticipated recirculation target time frame. In summary, simplified recirculation systems were designed to site-specific parameters based on pilot study results that conform to known site conditions and meet project objectives.

## ATTACHMENT A

## RECIRCULATION SYSTEM MODEL RESULTS

A.1 NORTHERN CHLORINATED VOC PLUME
A.2 SOUTHERN CHLORINATED VOC PLUMES

## A.1

## NORTHERN CHLORINATED VOC PLUME

Northern Chlorinated Plume
Base case, no Pumping
6 Injection Wells, 4 Extraction Wells

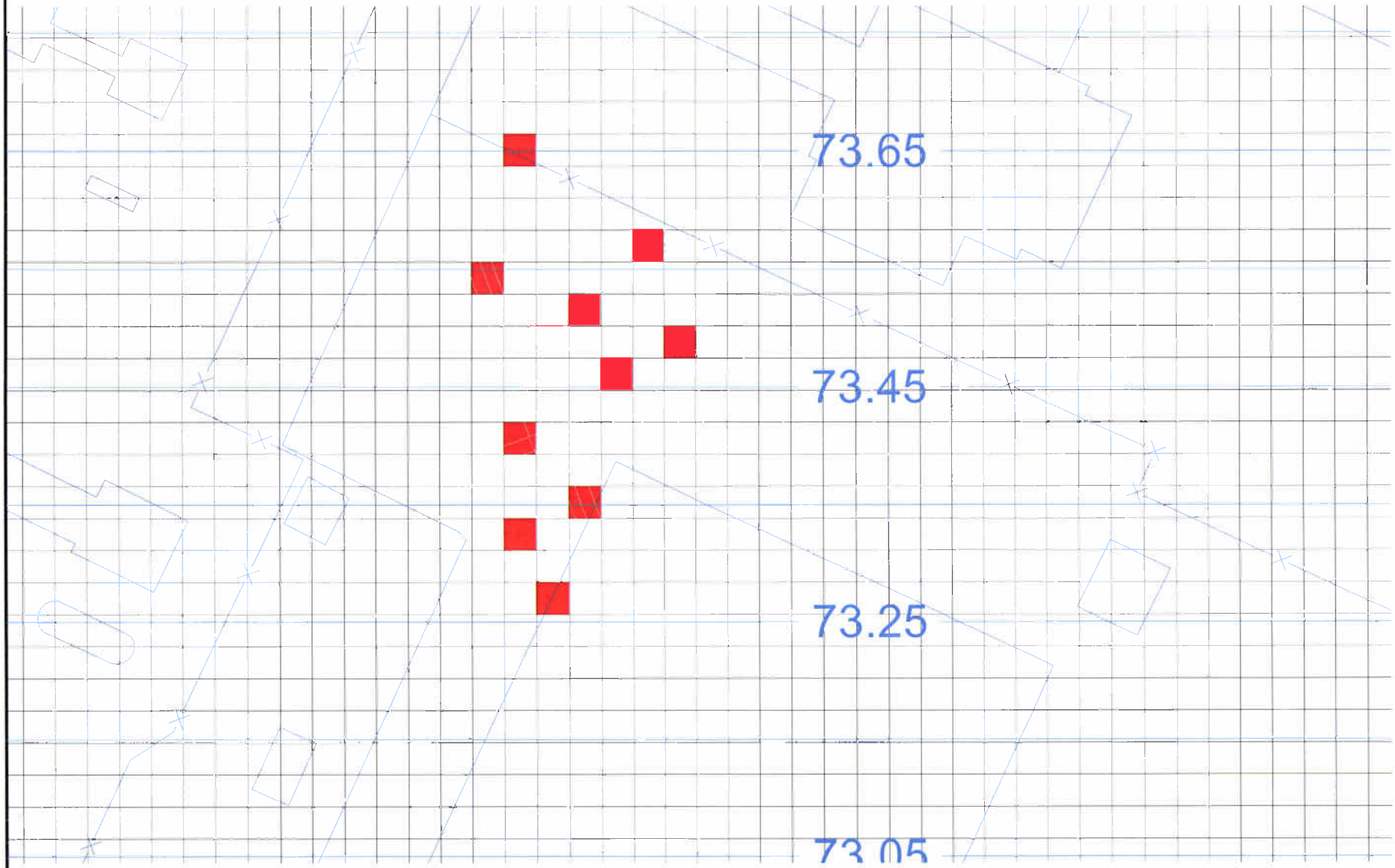

Northern Chlorinated Plume
Well Location Map
6 Injection Wells, 4 Extraction Wells

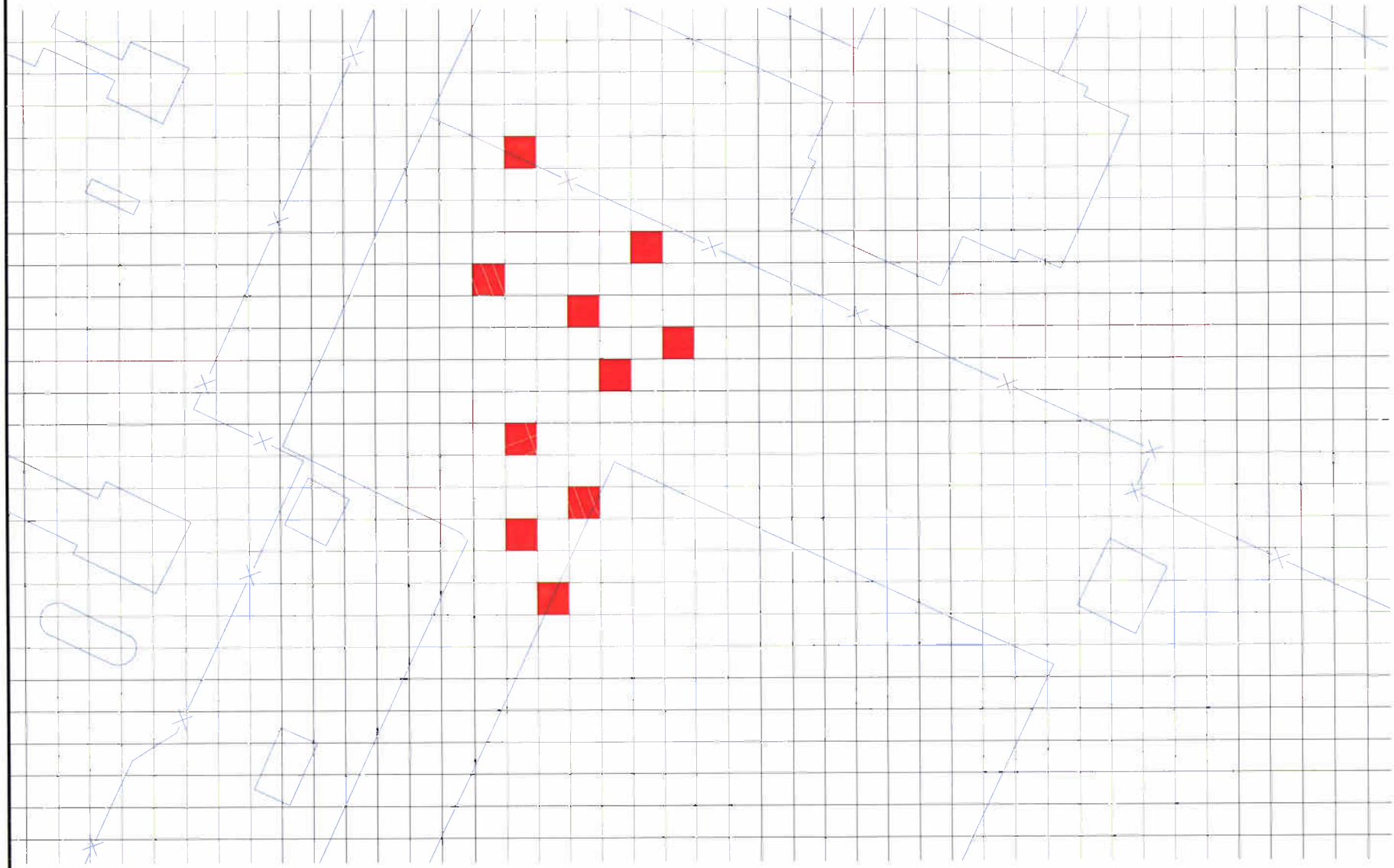

Northern Chlorinated Plume

Re-circulation System Results - with Plume outline

6 Injection Wells, 4 Extraction Wells

Arrows posted every 7 days

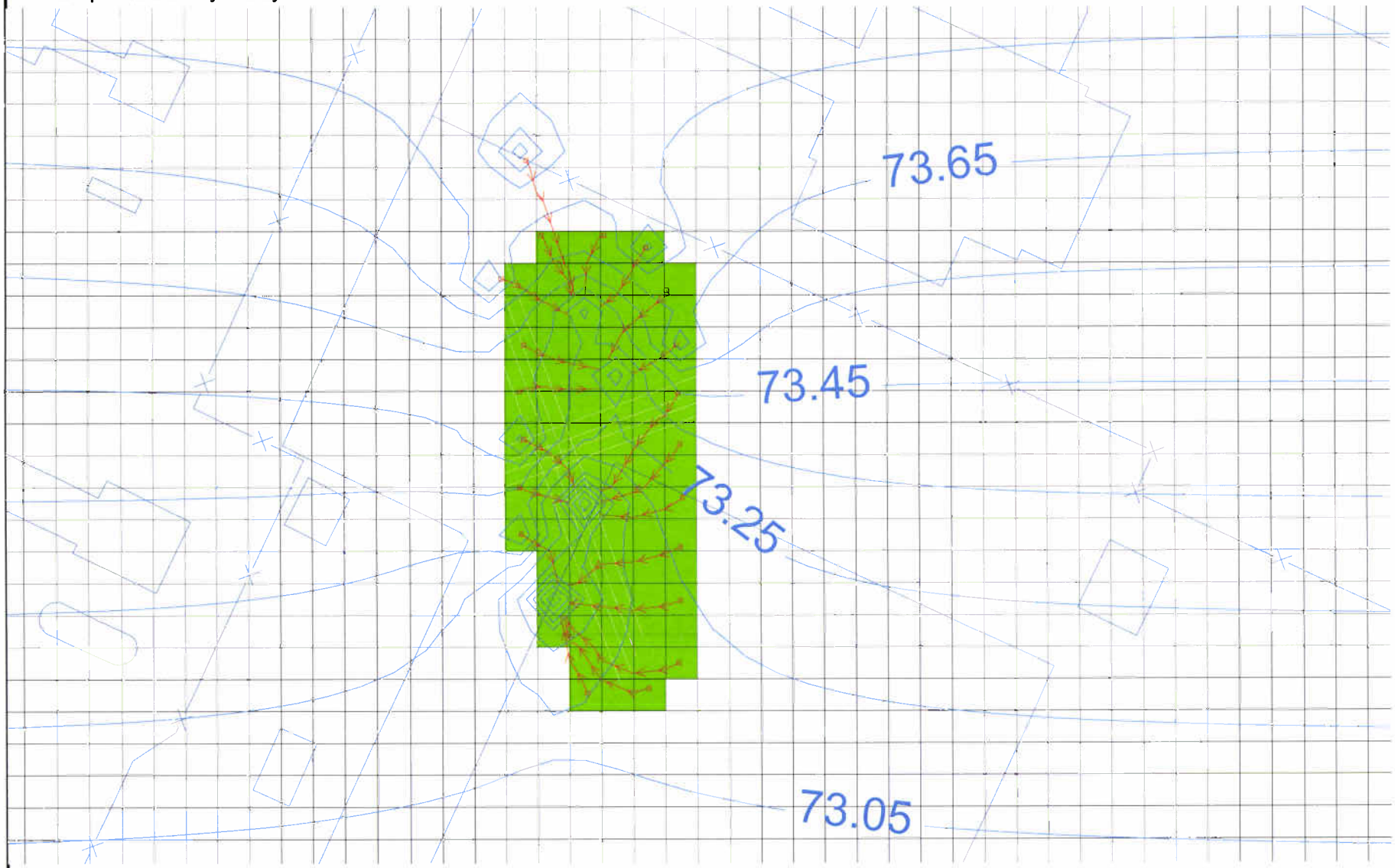

Northern Chlorinated Plume

Re-circulation System Results

6 Injection Wells, 4 Extraction Wells

Arrows posted every 7 days

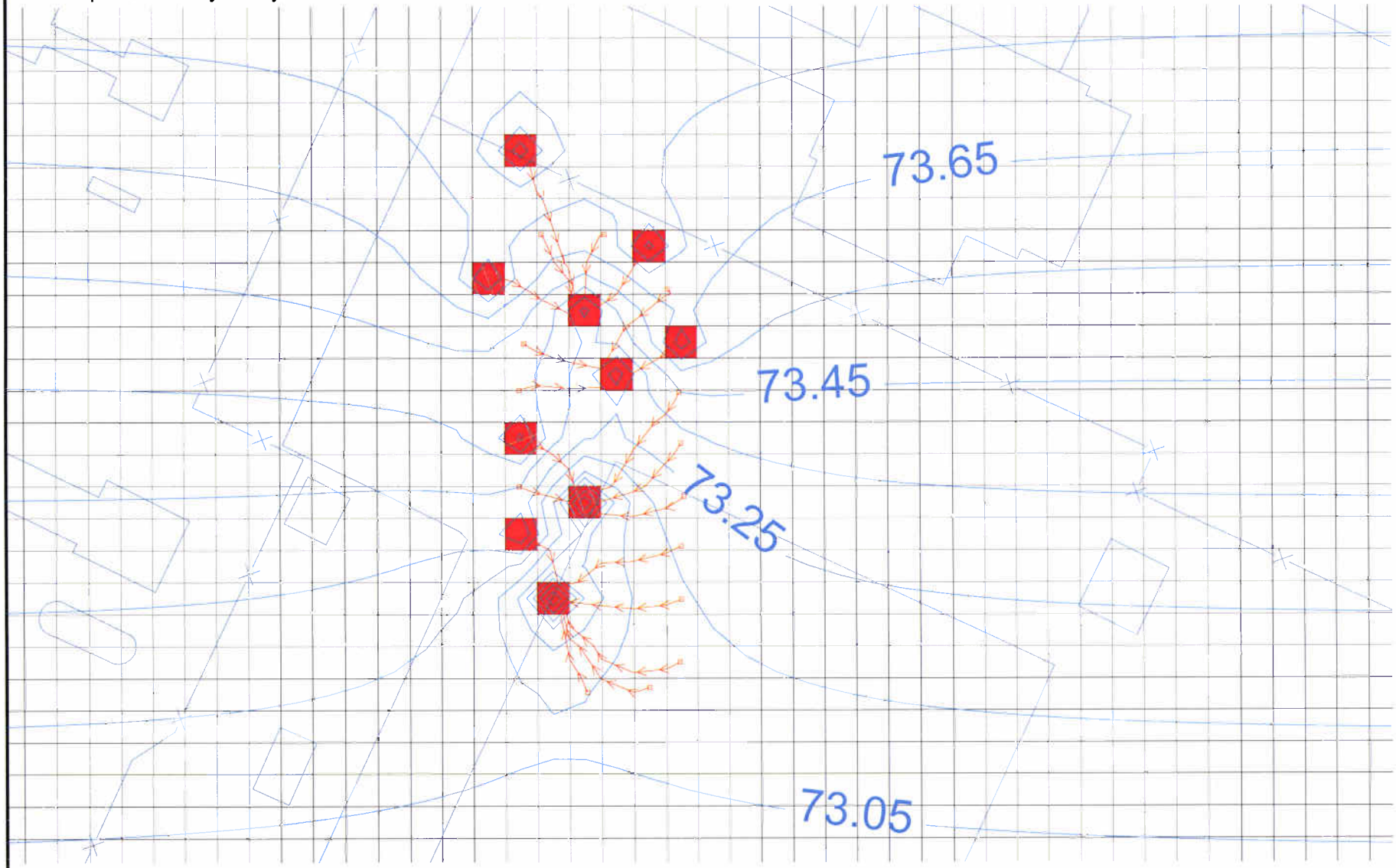

## A.2

## SOUTHERN CHLORINATED VOC PLUMES

Southern Chlorinated Plumes

Well Location Map

6 Injection Wells, 2 Extraction wells per Plume

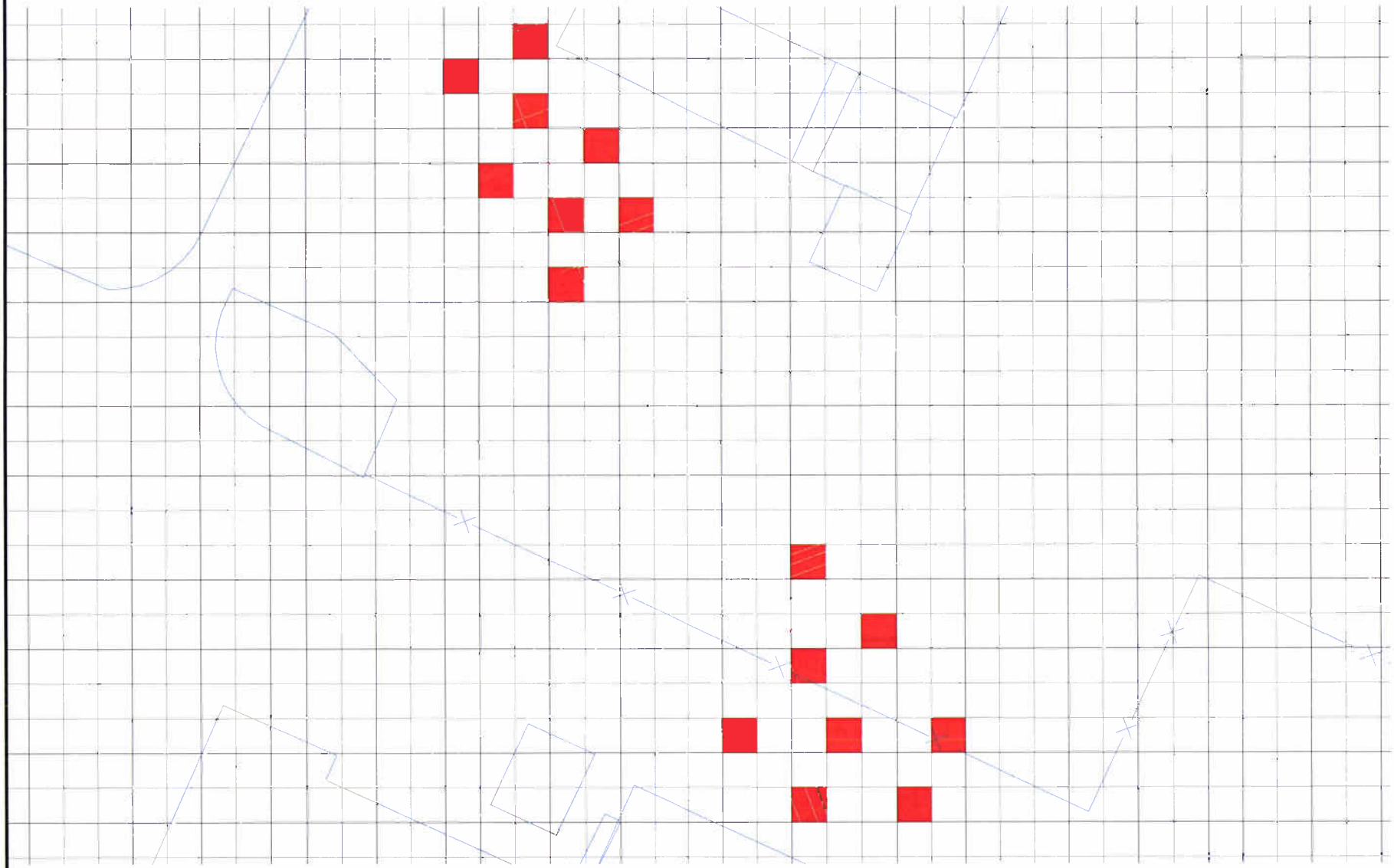

Southern Chlorinated Plumes
Base Conditions, no Pumping
6 Injection Wells, 2 Extraction wells per Plume

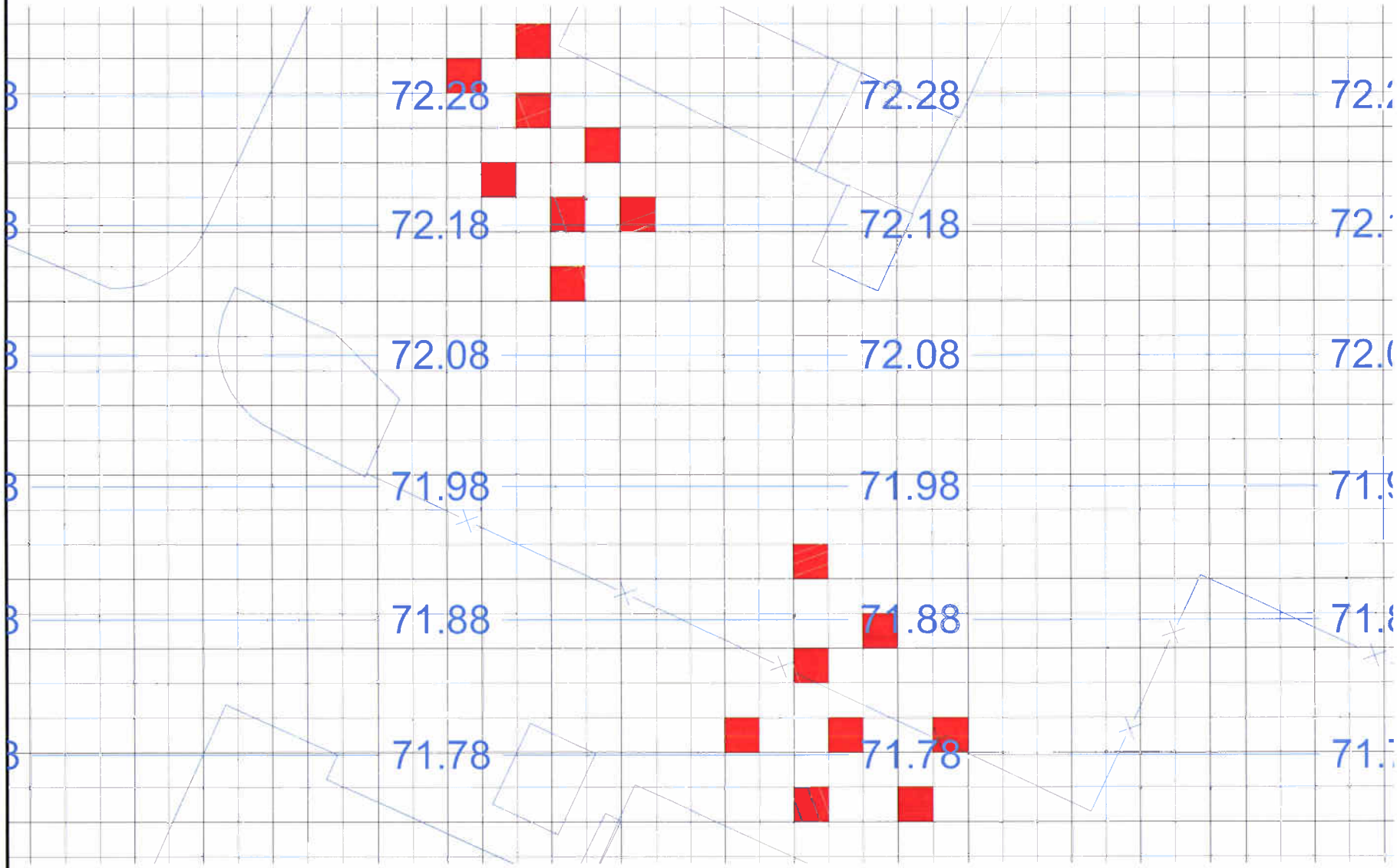

Southern Chlorinated Plumes
Re-circulation System Results - with Plume Outlines
6 Injection Wells, 2 Extraction wells per Plume
Arrows posted every 7 days

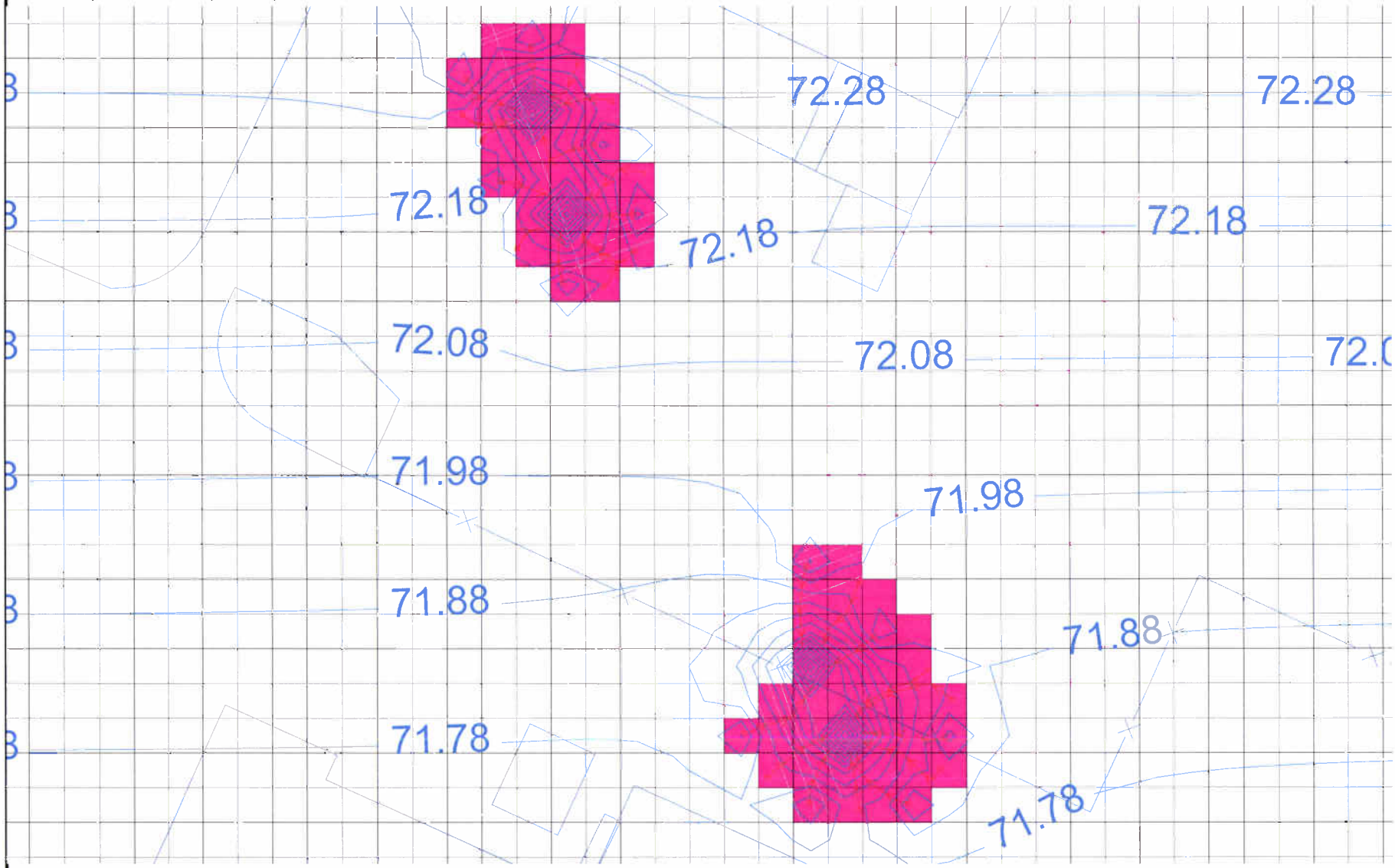

Southern Chlorinated Plumes

Re-circulation System Results

6 Injection Wells, 2 Extraction wells per Plume

Arrows posted every 7 days

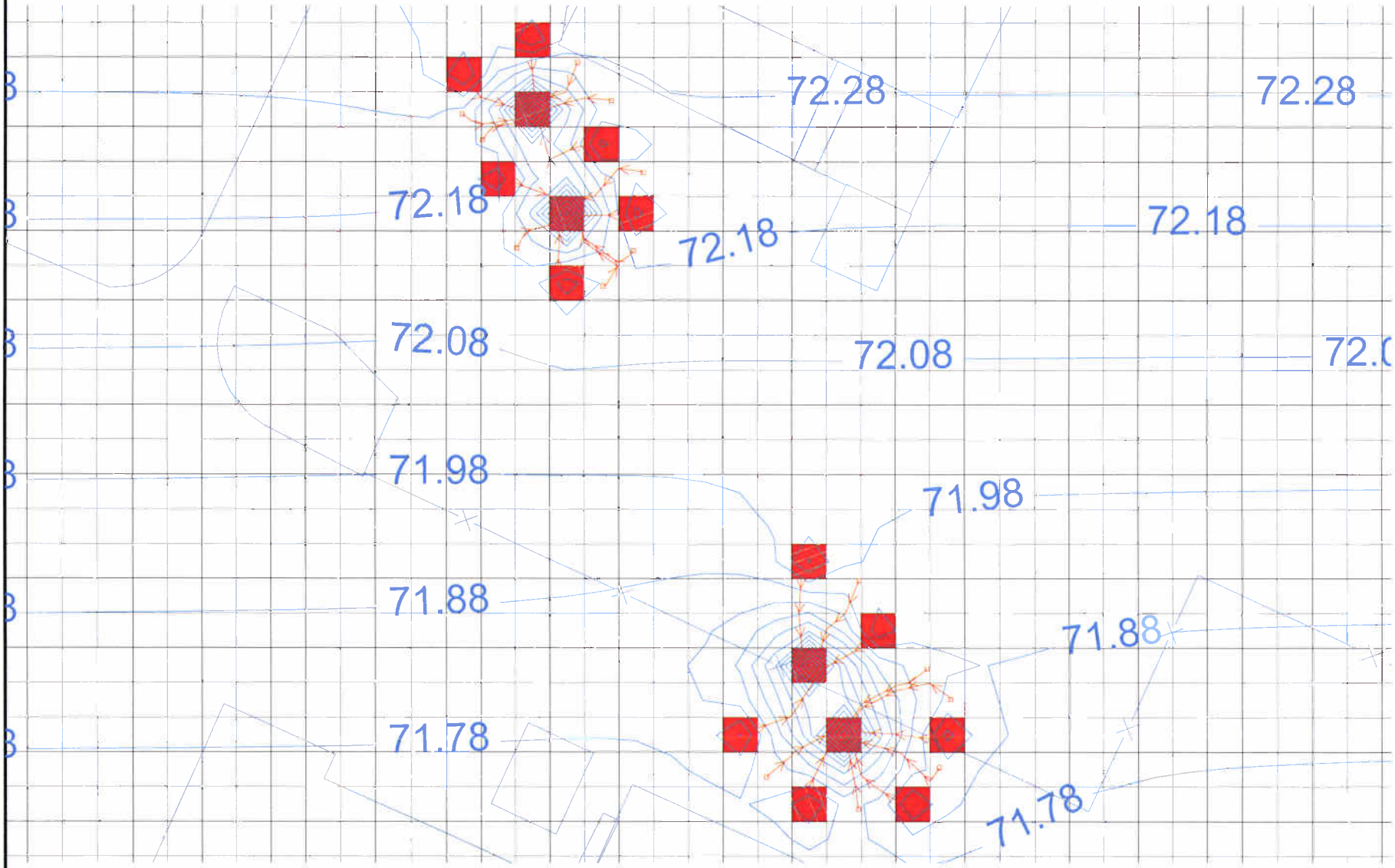

## MODEL CONSTRUCTION NOTES

# Cecil Field - Base Run

26 layers - 5 feet thick, from 78' to -47'
(Bottom is really -52')

---

X, Y spacing - uniform 10 feet by 10 feet
141 Rows (y)
93 Columns (x)

---

Hydraulic conductivity - 1 zone
19 ft/day (x, y), 1.9 ft/day (z)
- assume 1:10

---

Porosity = 0.30

---

BCs - Constant Heads by Zones

30-Foot Zone - 75.25' to 70.00'
50-Foot Zone - 75.50' to 70.25'
70/80-Foot Zone - 74.50' to 70.50'
TOR Zone - 74.50' to 71.00'

To be consistent with pilot study, we want

$i = 0.00277$ ft/ft , $i = \frac{\Delta WLs}{Distance}$

---

Assume highest WL is correct in each zone and calculate downgradient head...

1. 30 ft zone (CH(2))

$$0.00277 = \frac{75.25 - x}{1410}$$

$$3.9057 = 75.25 - x$$

$$-71.3443 = -x$$

$$\boxed{x = 71.3443 \text{ ft}}$$

---

2. 50 ft zone (CH(4))

$$0.00277 = \frac{75.50 - x}{1410}$$

$$3.9057 = 75.50 - x$$

$$-71.5943 = -x$$

$$\boxed{x = 71.5943}$$

---

3. 70/80 Foot zone (CH(6))

$$0.00277 = \frac{74.50 - x}{1410}$$

$$3.9057 = 74.50 - x$$

$$\boxed{x = 70.5943}$$

---

4. TOR Zone (CH(8))

$$0.00277 = \frac{74.50 - x}{1410}$$

$$\boxed{x = 70.5943}$$

---

☆ Update CH 2 → 8 as above.

Zones by Layer

30-Foot Zone = Layers 5, 6, 7 (58' to 43')

50-foot Zone = Layers 9, 10, 11 (38' to 23')

70-80 Foot Zone = Layers 14, 15, 16, 17 (13' to -7')

TOR Zone = Layers 24, 25, 26 (-37' to -52')

* Top is ~78'

---

Digitize Plumes as Zone 2 of storage/Porosity

- Keep property values equivalent, just change colors

* Use Figure 1 provided by Joe Jan. 26 via Email

1. For Hot Spot #2 (50-foot Zone) (North/South)
   Zone 2 (Fuschia)
2. For Hot Spot #3
   Zone 3 (Green)

* Assign to all layers in extraction/injection

---

* Determine well spacing/numbers for 50-foot Plumes

→ start with 3 GPM, 30 feet separate wells

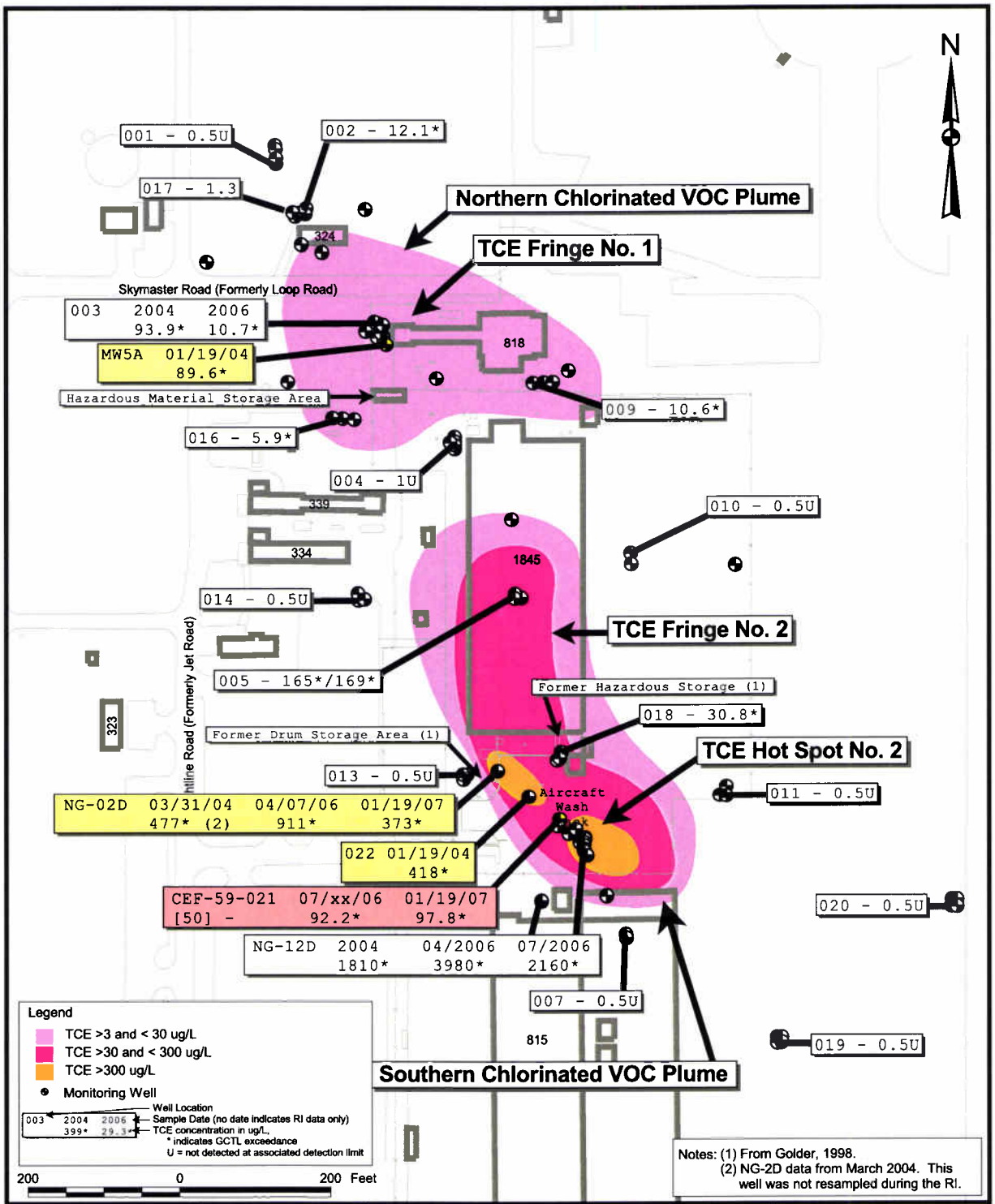


| | | | |
|---|---|---|---|
| DRAWN BY MJJ | DATE 17Jan06 | CHLORINATED VOCs PLUME, HOT SPOTS, AND FRINGE AREAS<br>50-FOOT ZONE<br>OU 9, SITE 59<br>DESIGN<br>NAVAL AIR STATION CECIL FIELD<br>JACKSONVILLE, FLORIDA | CONTRACT NUMBER 8925 |
| CHECKED BY | DATE | | APPROVED BY / DATE |
| COST/SCHEDULE-AREA | | | APPROVED BY / DATE |
| SCALE AS NOTED | NAVFAC | | DRAWING NO. FIGURE 2-2 / REV 0 |

P:\GIS\NAS_CecilField\Site-59_Design.apr 25Jan07 MJJ Layout151

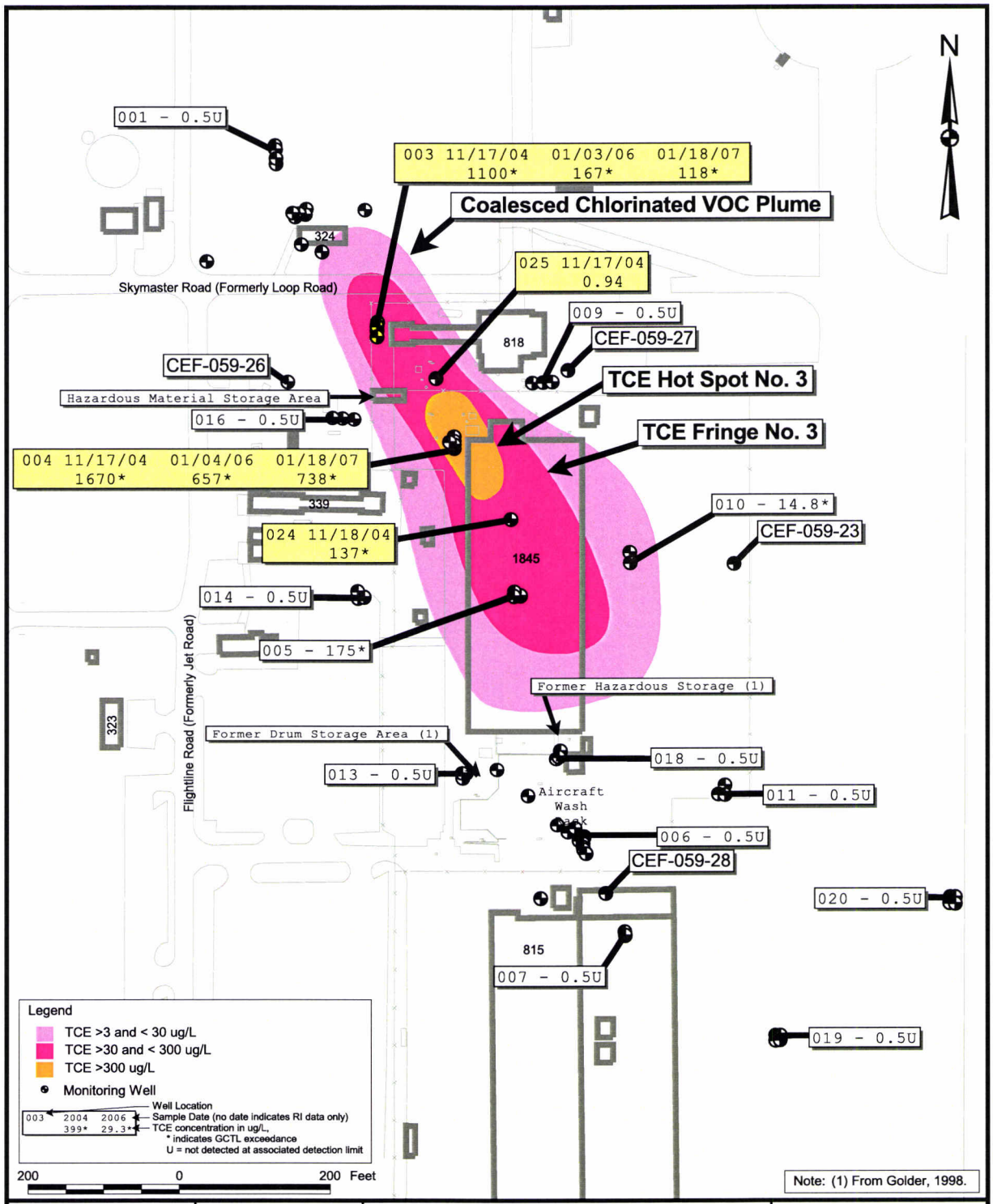


| | | | |
|---|---|---|---|
| DRAWN BY MJJ | DATE 17Jan06 | CHLORINATED VOCs PLUME, HOT SPOTS, AND FRINGE AREAS 70- TO 80-FOOT ZONE OU 9, SITE 59 DESIGN NAVAL AIR STATION CECIL FIELD JACKSONVILLE, FLORIDA | CONTRACT NUMBER 8925 |
| CHECKED BY | DATE | | APPROVED BY DATE |
| COST/SCHEDULE-AREA | | | APPROVED BY DATE |
| SCALE AS NOTED | NAVFAC | | DRAWING NO. FIGURE 2-3 REV 0 |

P:\GIS\NAS_CecilField\Site-59_Design.apr 25Jan07 MJJ Layout161

Add wells, ...

1 GPM = 192.5 $ft^3$/day

---

Hot Spot #2 - 50 foot zone, North

72.31' → 72.13' Heads, no pumping

Hot Spot #2 - 50 foot zone, South

71.92' → 71.74' Heads, no pumping

Hot Spot #3 - 70/80 Foot Zone

73.57' → 73.19' Heads, no pumping

---

Hot Spot #2, 50-FT Zone North

6 injection wells @ 96.25 $ft^3$/day x 3 layers

(577.5 $ft^3$/day) x 3

1732.5 $ft^3$/day or 9 GPM

---

2 extraction wells @ -288.75 $ft^3$/day x 3 layers

(-577.5 $ft^3$/day) x 3

1732.5 $ft^3$/day or 9 GPM

| CLIENT | | JOB NUMBER | |
|---|---|---|---|
| SUBJECT | | | |
| BASED ON | | DRAWING NUMBER | |
| BY | CHECKED BY | APPROVED BY | DATE |

Hot Spot #2, 50-FT Zone South

8 injection wells @ 96.25 ft³/day x 3 layers
(770 ft³/day) x 3 layers
2310 ft³/day or 12 GPM

4 extraction wells @ 192.5 ft³/day x 3 layers
(770 ft³/day) x 3 layers
2310 ft³/day or 12 GPM

Hot Spot #3, 70-80 FT Zone

8 injection wells @ 144.375 ft³/day x 4 layers
(1155 ft³/day) x 4 layers
4620 ft³/day or 24 GPM

3 extraction wells @ -128.33 ft³/day x 4 layers

3 extraction wells @ -256.66 ft³/day x 4 layers

| CLIENT | | JOB NUMBER | |
|---|---|---|---|
| SUBJECT | | | |
| BASED ON | | DRAWING NUMBER | |
| BY | CHECKED BY | APPROVED BY | DATE |

Cecil_Field_Site 59_50-Ft_Zone_Plumes_Run 2

→ Reduce screens to 10' (layers 10 & 11)

→ Edit southern extent of plume where pilot test reduced values to <30 PPM

* Reduced South Plume to 6 injection, 2 extraction
6 GPM total

---

Cecil_Field_Site 59_70-80-FT_Zone_Plumes_Run 2

→ Reduce screens to 10' (layers 15 & 16)

6 injection wells @ 96.25 $ft^3$/day = 577.5

2 extraction wells = $96.25 + \frac{96.25}{2} = 144.375$

3 extraction wells = 96.25

---

Cecil_Field_Site 59_70-80_FT-Zone_Plumes_Run 3

→ Remove 1 more extraction well

2 @ 2 GPM

2 @ 1 GPM

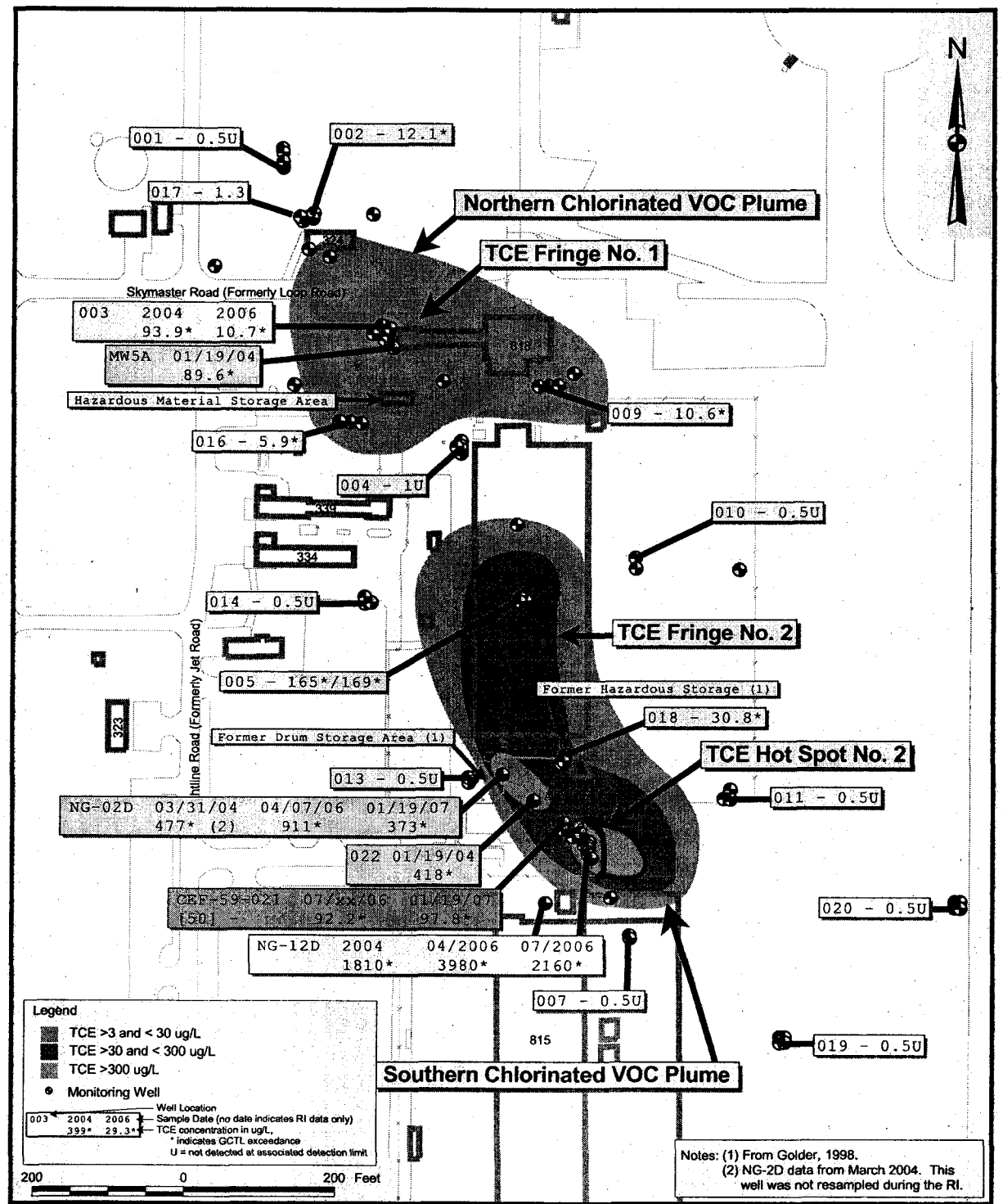


| | | | |
|---|---|---|---|
| DRAWN BY MJJ | DATE 17Jan06 | CHLORINATED VOCs PLUME, HOT SPOTS, AND FRINGE AREAS 50-FOOT ZONE OU 9, SITE 59 DESIGN NAVAL AIR STATION CECIL FIELD JACKSONVILLE, FLORIDA | CONTRACT NUMBER 8925 |
| CHECKED BY | DATE | | APPROVED BY DATE |
| COST/SCHEDULE-AREA | | | APPROVED BY DATE |
| SCALE AS NOTED | NAVFAC | | DRAWING NO. FIGURE 2-2 REV 0 |

P:\GIS\NAS_CecilField\Site-59_Design.apr 25Jan07 MJJ Layout151

Changes to Plume Shape due to pilot test sampling

| CLIENT | | JOB NUMBER | |
|---|---|---|---|
| SUBJECT | | | |
| BASED ON | | DRAWING NUMBER | |
| BY | CHECKED BY | APPROVED BY | DATE |

* Based on site visit by Joe Logan, There are issues with locations of 2 injection wells due to utilities...

Cecil_Field_Site 59_70-80_FT_Zone_Plumes_Run 4

→ move 2 northwestern most injection wells to "utility free" zones.

→ keep injection rate steady

Injection wells along perimeter @ 1 GPM each

4 extraction wells, two Northern @ 1 GPM each

two southern @ 2 GPM each

* Balanced at 6 GPM.

# APPENDIX C

## WELL CONSTRUCTION FORMS (POST-RI MONITORING WELLS)

Tetra Tech NUS, Inc.

WELL No.: MW-21

## MONITORING WELL SHEET

| | | | | | |
|---|---|---|---|---|---|
| PROJECT: | Site 59 Pilot | DRILLING Co.: | ATI | BORING No.: | |
| PROJECT No.: | 112G00039 | DRILLER: | Rose-Scruggs | DATE COMPLETED: | 7-15-06 |
| SITE: | 59 | DRILLING METHOD: | Mud rotary | NORTHING: | |
| GEOLOGIST: | DS | DEV. METHOD: | | EASTING: | |

Ground Elevation =

Datum:

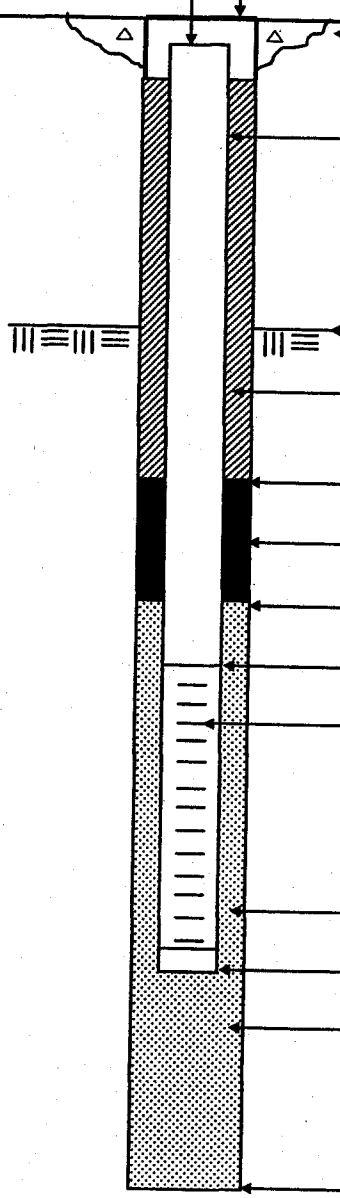

Not to Scale

Elevation / Depth of Top of Riser: 1

Elevation / Height of Top of Surface Casing: 1

I.D. of Surface Casing: 8"

Type of Surface Casing: manhole

Type of Surface Seal: grout
Quikrete

I.D. of Riser: 1"

Type of Riser: Sch 40 PVC

Borehole Diameter: 4"

Elevation / Depth Top of Rock: NA 1

Type of Backfill: grout

Elevation / Depth of Seal: 41 1

Type of Seal: bentonite

Elevation / Depth of Top of Filter Pack: 43 1

Elevation / Depth of Top of Screen: 45 1

Type of Screen: Sch 40 PVC

Slot Size x Length: 0.010x5'

I.D. of Screen: 1"

Type of Filter Pack: prepack 20/40

Elevation / Depth of Bottom of Screen: 58 1

Elevation / Depth of Bottom of Filter Pack: 50 1

Type of Backfill Below Well: formation

Elevation / Total Depth of Borehole: 60.51

Tetra Tech NUS, Inc.

WELL No.: CEF-059-22

# WELL COMPLETION LOG

| | | | | | |
|---|---|---|---|---|---|
| PROJECT: | cecil | DRILLING Co.: | Zebra | BORING No.: | 059-22-50 |
| PROJECT No.: | 112G0378 | DRILLER: | Rick Vining | DATE COMPLETED: | 01/12/07 |
| SITE: | site 59 | DRILLING METHOD: | DPT | NORTHING: | NA |
| GEOLOGIST: | SV | DEV. METHOD: | PP | EASTING: | NA |

Ground Elevation =
Datum:

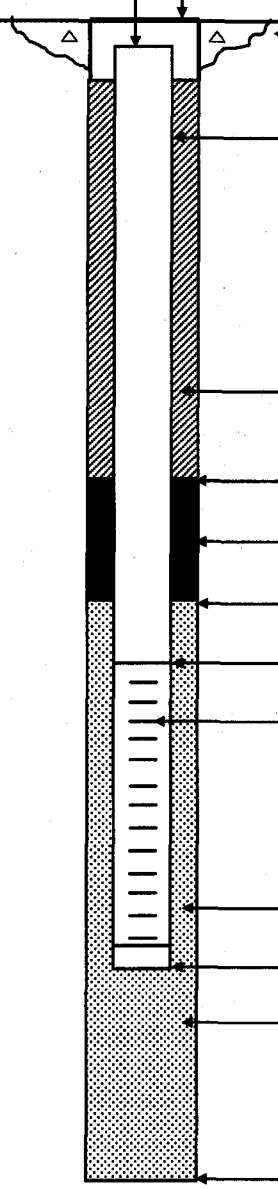

Not to Scale

| | | |
|---|---|---|
| Elevation / Depth of Top of Riser: | | NA / |
| Elevation / Height of Top of Surface Casing: | | NA /flush |
| I.D. of Surface Casing: | 1" | |
| Type of Surface Casing: | sch.40 PVC | |
| Type of Surface Seal: | grout | |
| I.D. of Riser: | 1" | |
| Type of Riser: | sch.40 PVC | |
| Borehole Diameter: | 2.0" | |
| Type of Backfill: | grout | |
| Elevation / Depth of Seal: | | NA / 41.0' |
| Type of Seal: | Betonite | |
| Elevation / Depth of Top of Filter Pack: | | NA / 43.0' |
| Elevation / Depth of Top of Screen: | | NA / 45.0' |
| Type of Screen: | sch40 PVC | |
| Slot Size x Length: | 0.01 5.0' | |
| I.D. of Screen: | 1" | |
| Type of Filter Pack: | 20/30 | |
| Elevation / Depth of Bottom of Screen: | | NA / 50.0 |
| Elevation / Depth of Bottom of Filter Pack: | | NA / 50.5 |
| Type of Backfill Below Well: | 20/30 Silica Sand | |
| Elevation / Total Depth of Borehole: | | NA / 50.5 |

Tetra Tech NUS, Inc.

WELL No.: CEF-059-23

# WELL COMPLETION LOG

| | | | | | |
|---|---|---|---|---|---|
| PROJECT: | cecil | DRILLING Co.: | Zebra | BORING No.: | 059-23-55 |
| PROJECT No.: | 112G0378 | DRILLER: | Rick Vining | DATE COMPLETED: | 01/12/07 |
| SITE: | site 59 | DRILLING METHOD: | DPT | NORTHING: | NA |
| GEOLOGIST: | SV | DEV. METHOD: | PP | EASTING: | NA |

Ground Elevation =
Datum:

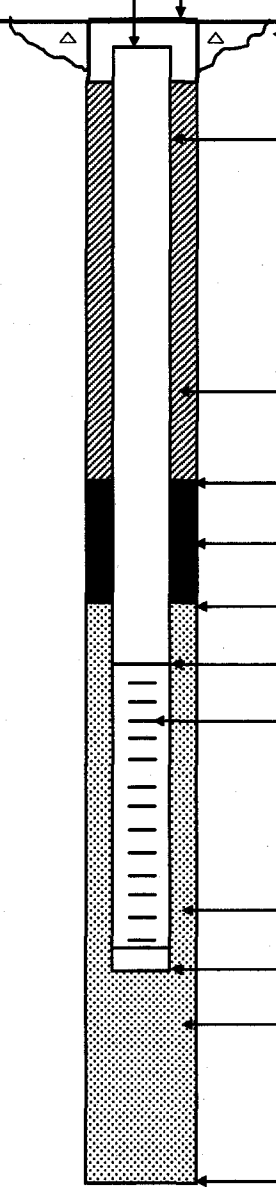

Not to Scale

| | | |
|---|---|---|
| Elevation / Depth of Top of Riser: | | NA / |
| Elevation / Height of Top of Surface Casing: | | NA /flush |
| I.D. of Surface Casing: | 1" | |
| Type of Surface Casing: | sch.40 PVC | |
| Type of Surface Seal: | grout | |
| I.D. of Riser: | 1" | |
| Type of Riser: | sch.40 PVC | |
| Borehole Diameter: | 2.0" | |
| Type of Backfill: | grout | |
| Elevation / Depth of Seal: | | NA / 46.0' |
| Type of Seal: | Betonite | |
| Elevation / Depth of Top of Filter Pack: | | NA / 48.0' |
| Elevation / Depth of Top of Screen: | | NA / 50.0' |
| Type of Screen: | sch40 PVC | |
| Slot Size x Length: | 0.01 5.0' | |
| I.D. of Screen: | 1" | |
| Type of Filter Pack: | 20/30 | |
| Elevation / Depth of Bottom of Screen: | | NA / 55.0 |
| Elevation / Depth of Bottom of Filter Pack: | | NA / 55.5 |
| Type of Backfill Below Well: | 20/30 Silica Sand | |
| Elevation / Total Depth of Borehole: | | NA / 55.5 |

Tetra Tech NUS, Inc.

WELL No.: CEF-059-24

# WELL COMPLETION LOG

| | | | | | |
|---|---|---|---|---|---|
| PROJECT: | cecil | DRILLING Co.: | Zebra | BORING No.: | 059-24-73 |
| PROJECT No.: | 112G0378 | DRILLER: | Rick Vining | DATE COMPLETED: | 01/12/07 |
| SITE: | site 59 | DRILLING METHOD: | DPT | NORTHING: | NA |
| GEOLOGIST: | SV | DEV. METHOD: | PP | EASTING: | NA |

Ground Elevation =
Datum:

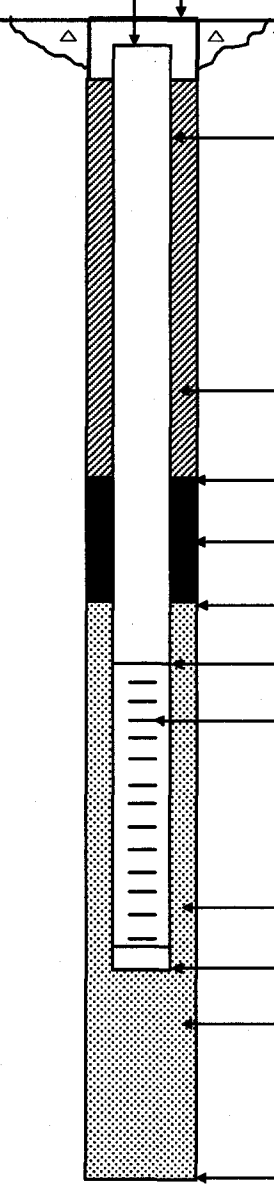

Not to Scale

| | | |
|---|---|---|
| Elevation / Depth of Top of Riser: | | NA / |
| Elevation / Height of Top of Surface Casing: | | NA /flush |
| I.D. of Surface Casing: | 1" | |
| Type of Surface Casing: | sch.40 PVC | |
| Type of Surface Seal: | grout | |
| I.D. of Riser: | 1" | |
| Type of Riser: | sch.40 PVC | |
| Borehole Diameter: | 2.0" | |
| Type of Backfill: | grout | |
| Elevation / Depth of Seal: | | NA / 63.0' |
| Type of Seal: | Betonite | |
| Elevation / Depth of Top of Filter Pack: | | NA / 66.0' |
| Elevation / Depth of Top of Screen: | | NA / 68.0' |
| Type of Screen: | sch40 PVC | |
| Slot Size x Length: | 0.01 5.0' | |
| I.D. of Screen: | 1" | |
| Type of Filter Pack: | 20/30 | |
| Elevation / Depth of Bottom of Screen: | | NA / 73.0 |
| Elevation / Depth of Bottom of Filter Pack: | | NA / 73.5 |
| Type of Backfill Below Well: | 20/30 Silica Sand | |
| Elevation / Total Depth of Borehole: | | NA / 73.5 |

Tetra Tech NUS, Inc.

WELL No.: CEF-059-25-73

# WELL COMPLETION LOG

| | | | | | |
|---|---|---|---|---|---|
| PROJECT: | Cecil | DRILLING Co.: | Zebra | BORING No.: | 059-25-73 |
| PROJECT No.: | 112G00378 | DRILLER: | Rick Vining | DATE COMPLETED: | 01/10/07 |
| SITE: | Site 59 | DRILLING METHOD: | DPT | NORTHING: | NA |
| GEOLOGIST: | SV | DEV. METHOD: | PP | EASTING: | NA |

Ground Elevation =

Datum:

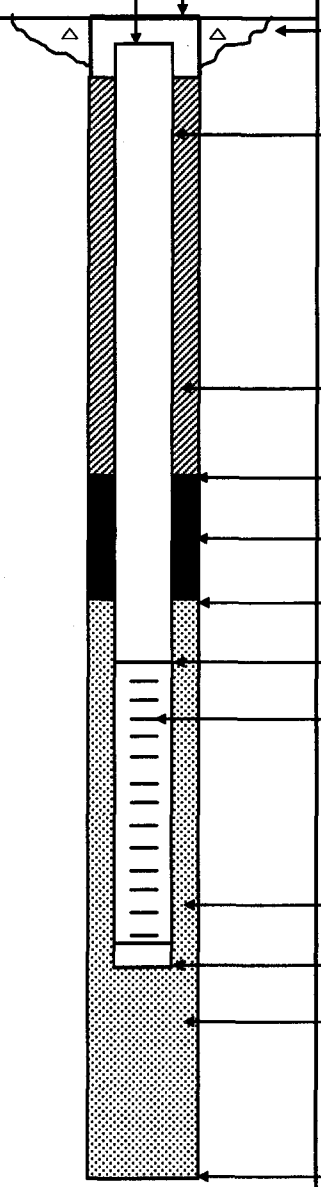

Not to Scale

| | | |
|---|---|---|
| Elevation / Depth of Top of Riser: | | NA / Flush |
| Elevation / Height of Top of Surface Casing: | | NA / |
| I.D. of Surface Casing: | 2" | |
| Type of Surface Casing: | sch.40 PVC | |
| Type of Surface Seal: | grout | |
| I.D. of Riser: | 2" | |
| Type of Riser: | sch 40 PVC | |
| Borehole Diameter: | 3.5" | |
| Type of Backfill: | grout | |
| Elevation / Depth of Seal: | | NA / 64.0' |
| Type of Seal: | | |
| Elevation / Depth of Top of Filter Pack: | | NA / 66.0' |
| Elevation / Depth of Top of Screen: | | NA / 68.0' |
| Type of Screen: | sch 40 PVC | |
| Slot Size x Length: | .10 x 5' | |
| I.D. of Screen: | 2" | |
| Type of Filter Pack: | 20/30 | |
| Elevation / Depth of Bottom of Screen: | | NA / 73.0 |
| Elevation / Depth of Bottom of Filter Pack: | | NA / 73.5 |
| Type of Backfill Below Well: | 20/30 Silica Sand | |
| Elevation / Total Depth of Borehole: | | NA / 73.5 |

Tetra Tech NUS, Inc.

WELL No.: CEF-059-26

# WELL COMPLETION LOG

| | | | | | |
|---|---|---|---|---|---|
| PROJECT: | cecil | DRILLING Co.: | Zebra | BORING No.: | 059-26-35 |
| PROJECT No.: | 112G0378 | DRILLER: | Rick Vining | DATE COMPLETED: | 01/08/07 |
| SITE: | site 59 | DRILLING METHOD: | DPT | NORTHING: | NA |
| GEOLOGIST: | SV | DEV. METHOD: | PP | EASTING: | NA |

Ground Elevation =

Datum:

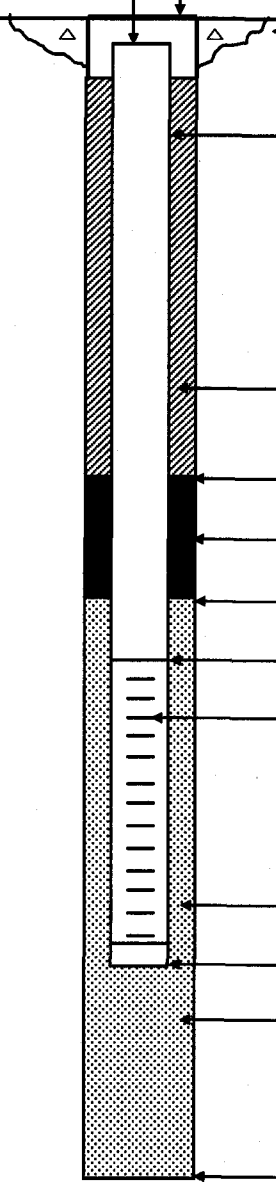

Not to Scale

| | | |
|---|---|---|
| Elevation / Depth of Top of Riser: | | NA / |
| Elevation / Height of Top of Surface Casing: | | NA /flush |
| I.D. of Surface Casing: | 1" | |
| Type of Surface Casing: | sch.40 PVC | |
| Type of Surface Seal: | grout | |
| I.D. of Riser: | 1" | |
| Type of Riser: | sch.40 PVC | |
| Borehole Diameter: | 3.5" | |
| Type of Backfill: | grout | |
| Elevation / Depth of Seal: | | NA / 27.0 |
| Type of Seal: | Betonite | |
| Elevation / Depth of Top of Filter Pack: | | NA / 29.0 |
| Elevation / Depth of Top of Screen: | | NA / 30.0 |
| Type of Screen: | sch40 PVC | |
| Slot Size x Length: | 0.01 5ft. | |
| I.D. of Screen: | 1" | |
| Type of Filter Pack: | pre-pack 20/30 | |
| Elevation / Depth of Bottom of Screen: | | NA / 35.0 |
| Elevation / Depth of Bottom of Filter Pack: | | NA / 35.5 |
| Type of Backfill Below Well: | 20/30 Silica Sand | |
| Elevation / Total Depth of Borehole: | | NA / 35.5 |

Tetra Tech NUS, Inc.

WELL No.: CEF-059-27

# WELL COMPLETION LOG

| | | | | | |
|---|---|---|---|---|---|
| PROJECT: | cecil | DRILLING Co.: | Zebra | BORING No.: | 059-27-35 |
| PROJECT No.: | 112G0378 | DRILLER: | Rick Vining | DATE COMPLETED: | 01/08/07 |
| SITE: | site 59 | DRILLING METHOD: | DPT | NORTHING: | NA |
| GEOLOGIST: | SV | DEV. METHOD: | PP | EASTING: | NA |

Ground Elevation =
Datum:

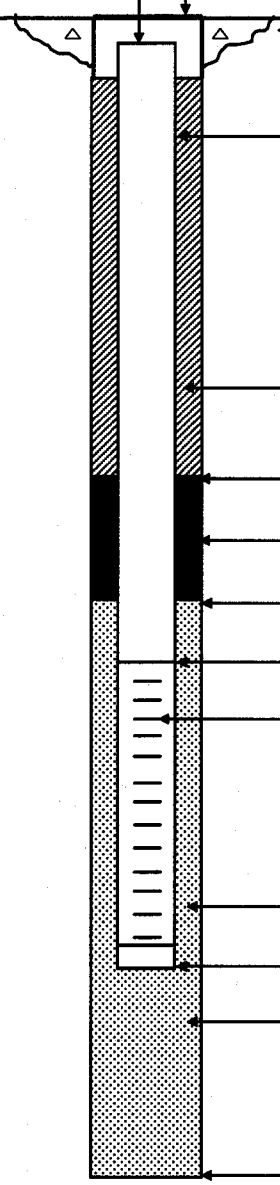

Not to Scale

| | | |
|---|---|---|
| Elevation / Depth of Top of Riser: | | NA / |
| Elevation / Height of Top of Surface Casing: | | NA /flush |
| I.D. of Surface Casing: | 1" | |
| Type of Surface Casing: | sch.40 PVC | |
| Type of Surface Seal: | grout | |
| I.D. of Riser: | 1" | |
| Type of Riser: | sch.40 PVC | |
| Borehole Diameter: | 3.5" | |
| Type of Backfill: | grout | |
| Elevation / Depth of Seal: | | NA / 27.0 |
| Type of Seal: | Betonite | |
| Elevation / Depth of Top of Filter Pack: | | NA / 29.0 |
| Elevation / Depth of Top of Screen: | | NA / 30.0 |
| Type of Screen: | sch40 PVC | |
| Slot Size x Length: | 0.01 5ft. | |
| I.D. of Screen: | 1" | |
| Type of Filter Pack: | pre-pack 20/30 | |
| Elevation / Depth of Bottom of Screen: | | NA / 35.0 |
| Elevation / Depth of Bottom of Filter Pack: | | NA / 35.5 |
| Type of Backfill Below Well: | 20/30 Silica Sand | |
| Elevation / Total Depth of Borehole: | | NA / 35.5 |

Tetra Tech NUS, Inc.

WELL No.: CEF-059-28

# WELL COMPLETION LOG

| | | | | | |
|---|---|---|---|---|---|
| PROJECT: | cecil | DRILLING Co.: | Zebra | BORING No.: | 059-28-15 |
| PROJECT No.: | 112G0378 | DRILLER: | Rick Vining | DATE COMPLETED: | 01/11/07 |
| SITE: | site 59 | DRILLING METHOD: | DPT | NORTHING: | NA |
| GEOLOGIST: | SV | DEV. METHOD: | PP | EASTING: | NA |

Ground Elevation =
Datum:

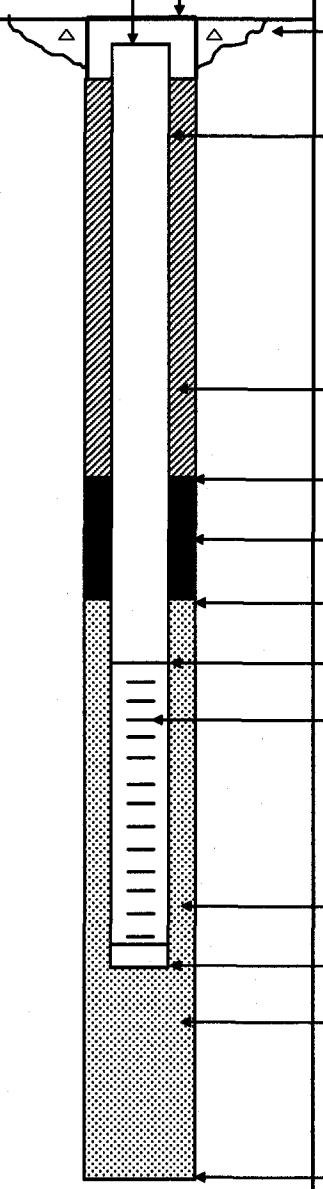

Not to Scale

| | | |
|---|---|---|
| Elevation / Depth of Top of Riser: | | NA / |
| Elevation / Height of Top of Surface Casing: | | NA /flush |
| I.D. of Surface Casing: | 1" | |
| Type of Surface Casing: | sch.40 PVC | |
| Type of Surface Seal: | grout | |
| I.D. of Riser: | 1" | |
| Type of Riser: | sch.40 PVC | |
| Borehole Diameter: | 3.5 | |
| Type of Backfill: | grout | |
| Elevation / Depth of Seal: | | NA / 3.0' |
| Type of Seal: | Betonite | |
| Elevation / Depth of Top of Filter Pack: | | NA / 4.0' |
| Elevation / Depth of Top of Screen: | | NA / 5.0' |
| Type of Screen: | sch40 PVC | |
| Slot Size x Length: | 0.01 10.0' | |
| I.D. of Screen: | 1" | |
| Type of Filter Pack: | 20/30 | |
| Elevation / Depth of Bottom of Screen: | | NA / 15.0 |
| Elevation / Depth of Bottom of Filter Pack: | | NA / 15.5 |
| Type of Backfill Below Well: | 20/30 Silica Sand | |
| Elevation / Total Depth of Borehole: | | NA / 15.5 |

# APPENDIX D

# POST-RI LABORATORY DATA REPORTS

# Report of Analysis



| | | | |
|---|---|---|---|
| Client Sample ID: | CEF-059-GW-003-73-SUPP | | |
| Lab Sample ID: | F46667-1 | Date Sampled: | 01/18/07 |
| Matrix: | AQ - Ground Water | Date Received: | 01/19/07 |
| Method: | SW846 8260B | Percent Solids: | n/a |
| Project: | Cecil Field Site 59 | | |

| | File ID | DF | Analyzed | By | Prep Date | Prep Batch | Analytical Batch |
|---|---|---|---|---|---|---|---|
| Run #1 | C0045940.D | 1 | 01/22/07 | KW | n/a | n/a | VC1853 |
| Run #2 | C0045976.D | 2 | 01/23/07 | KW | n/a | n/a | VC1855 |

| | Purge Volume |
|---|---|
| Run #1 | 5.0 ml |
| Run #2 | 5.0 ml |

VOA Halogenated List

| CAS No. | Compound | Result | RL | MDL | Units | Q |
|---|---|---|---|---|---|---|
| 75-27-4 | Bromodichloromethane | 0.50 U | 1.0 | 0.50 | ug/l | |
| 75-25-2 | Bromoform | 0.50 U | 1.0 | 0.50 | ug/l | |
| 108-90-7 | Chlorobenzene | 0.50 U | 1.0 | 0.50 | ug/l | |
| 75-00-3 | Chloroethane | 1.0 U | 2.0 | 1.0 | ug/l | |
| 67-66-3 | Chloroform | 0.50 U | 1.0 | 0.50 | ug/l | |
| 110-75-8 | 2-Chloroethyl vinyl ether | 2.5 U | 5.0 | 2.5 | ug/l | |
| 56-23-5 | Carbon tetrachloride | 0.50 U | 1.0 | 0.50 | ug/l | |
| 75-34-3 | 1,1-Dichloroethane | 0.50 U | 1.0 | 0.50 | ug/l | |
| 75-35-4 | 1,1-Dichloroethylene | 0.50 U | 1.0 | 0.50 | ug/l | |
| 107-06-2 | 1,2-Dichloroethane | 0.50 U | 1.0 | 0.50 | ug/l | |
| 78-87-5 | 1,2-Dichloropropane | 0.50 U | 1.0 | 0.50 | ug/l | |
| 124-48-1 | Dibromochloromethane | 0.40 U | 1.0 | 0.40 | ug/l | |
| 156-59-2 | cis-1,2-Dichloroethylene | 0.50 U | 1.0 | 0.50 | ug/l | |
| 10061-01-5 | cis-1,3-Dichloropropene | 0.30 U | 1.0 | 0.30 | ug/l | |
| 541-73-1 | m-Dichlorobenzene | 0.50 U | 1.0 | 0.50 | ug/l | |
| 95-50-1 | o-Dichlorobenzene | 0.50 U | 1.0 | 0.50 | ug/l | |
| 106-46-7 | p-Dichlorobenzene | 0.50 U | 1.0 | 0.50 | ug/l | |
| 156-60-5 | trans-1,2-Dichloroethylene | 0.50 U | 1.0 | 0.50 | ug/l | |
| 10061-02-6 | trans-1,3-Dichloropropene | 0.30 U | 1.0 | 0.30 | ug/l | |
| 74-83-9 | Methyl bromide | 1.0 U | 2.0 | 1.0 | ug/l | |
| 74-87-3 | Methyl chloride | 1.0 U | 2.0 | 1.0 | ug/l | |
| 75-09-2 | Methylene chloride | 1.0 U | 5.0 | 1.0 | ug/l | |
| 71-55-6 | 1,1,1-Trichloroethane | 0.50 U | 1.0 | 0.50 | ug/l | |
| 79-34-5 | 1,1,2,2-Tetrachloroethane | 0.40 U | 1.0 | 0.40 | ug/l | |
| 79-00-5 | 1,1,2-Trichloroethane | 0.50 U | 1.0 | 0.50 | ug/l | |
| 127-18-4 | Tetrachloroethylene | 0.50 U | 1.0 | 0.50 | ug/l | |
| 79-01-6 | Trichloroethylene | 118 [a] | 2.0 | 1.0 | ug/l | |
| 75-01-4 | Vinyl chloride | 0.50 U | 1.0 | 0.50 | ug/l | |

| CAS No. | Surrogate Recoveries | Run# 1 | Run# 2 | Limits |
|---|---|---|---|---|
| 1868-53-7 | Dibromofluoromethane | 103% | 107% | 87-116% |

U = Not detected MDL - Method Detection Limit
RL = Reporting Limit = PQL
L = Indicates value exceeds calibration range

I = Result > = MDL but < RL J = Estimated value
V = Indicates analyte found in associated method blank
N = Indicates presumptive evidence of a compound

# Report of Analysis



| | | | |
|---|---|---|---|
| Client Sample ID: | CEF-059-GW-003-73-SUPP | | |
| Lab Sample ID: | F46667-1 | Date Sampled: | 01/18/07 |
| Matrix: | AQ - Ground Water | Date Received: | 01/19/07 |
| Method: | SW846 8260B | Percent Solids: | n/a |
| Project: | Cecil Field Site 59 | | |

VOA Halogenated List

| CAS No. | Surrogate Recoveries | Run# 1 | Run# 2 | Limits |
|---|---|---|---|---|
| 17060-07-0 | 1,2-Dichloroethane-D4 | 105% | 116% | 76-127% |
| 2037-26-5 | Toluene-D8 | 97% | 98% | 86-112% |
| 460-00-4 | 4-Bromofluorobenzene | 100% | 101% | 84-120% |

(a) Result is from Run# 2

U = Not detected MDL - Method Detection Limit
RL = Reporting Limit = PQL
L = Indicates value exceeds calibration range

I = Result > = MDL but < RL J = Estimated value
V = Indicates analyte found in associated method blank
N = Indicates presumptive evidence of a compound

# Report of Analysis



| | | | |
|---|---|---|---|
| Client Sample ID: | CEF-059-GW-MW5A-73-SUPP | | |
| Lab Sample ID: | F46667-2 | Date Sampled: | 01/18/07 |
| Matrix: | AQ - Ground Water | Date Received: | 01/19/07 |
| Method: | SW846 8260B | Percent Solids: | n/a |
| Project: | Cecil Field Site 59 | | |

| | File ID | DF | Analyzed | By | Prep Date | Prep Batch | Analytical Batch |
|---|---|---|---|---|---|---|---|
| Run #1 | C0045941.D | 1 | 01/22/07 | KW | n/a | n/a | VC1853 |
| Run #2 | C0045977.D | 2 | 01/23/07 | KW | n/a | n/a | VC1855 |

| | Purge Volume |
|---|---|
| Run #1 | 5.0 ml |
| Run #2 | 5.0 ml |

VOA Halogenated List

| CAS No. | Compound | Result | RL | MDL | Units | Q |
|---|---|---|---|---|---|---|
| 75-27-4 | Bromodichloromethane | 0.50 U | 1.0 | 0.50 | ug/l | |
| 75-25-2 | Bromoform | 0.50 U | 1.0 | 0.50 | ug/l | |
| 108-90-7 | Chlorobenzene | 0.50 U | 1.0 | 0.50 | ug/l | |
| 75-00-3 | Chloroethane | 1.0 U | 2.0 | 1.0 | ug/l | |
| 67-66-3 | Chloroform | 0.50 U | 1.0 | 0.50 | ug/l | |
| 110-75-8 | 2-Chloroethyl vinyl ether | 2.5 U | 5.0 | 2.5 | ug/l | |
| 56-23-5 | Carbon tetrachloride | 0.50 U | 1.0 | 0.50 | ug/l | |
| 75-34-3 | 1,1-Dichloroethane | 0.50 U | 1.0 | 0.50 | ug/l | |
| 75-35-4 | 1,1-Dichloroethylene | 0.50 U | 1.0 | 0.50 | ug/l | |
| 107-06-2 | 1,2-Dichloroethane | 0.50 U | 1.0 | 0.50 | ug/l | |
| 78-87-5 | 1,2-Dichloropropane | 0.50 U | 1.0 | 0.50 | ug/l | |
| 124-48-1 | Dibromochloromethane | 0.40 U | 1.0 | 0.40 | ug/l | |
| 156-59-2 | cis-1,2-Dichloroethylene | 0.50 U | 1.0 | 0.50 | ug/l | |
| 10061-01-5 | cis-1,3-Dichloropropene | 0.30 U | 1.0 | 0.30 | ug/l | |
| 541-73-1 | m-Dichlorobenzene | 0.50 U | 1.0 | 0.50 | ug/l | |
| 95-50-1 | o-Dichlorobenzene | 0.50 U | 1.0 | 0.50 | ug/l | |
| 106-46-7 | p-Dichlorobenzene | 0.50 U | 1.0 | 0.50 | ug/l | |
| 156-60-5 | trans-1,2-Dichloroethylene | 0.50 U | 1.0 | 0.50 | ug/l | |
| 10061-02-6 | trans-1,3-Dichloropropene | 0.30 U | 1.0 | 0.30 | ug/l | |
| 74-83-9 | Methyl bromide | 1.0 U | 2.0 | 1.0 | ug/l | |
| 74-87-3 | Methyl chloride | 1.0 U | 2.0 | 1.0 | ug/l | |
| 75-09-2 | Methylene chloride | 1.0 U | 5.0 | 1.0 | ug/l | |
| 71-55-6 | 1,1,1-Trichloroethane | 0.50 U | 1.0 | 0.50 | ug/l | |
| 79-34-5 | 1,1,2,2-Tetrachloroethane | 0.40 U | 1.0 | 0.40 | ug/l | |
| 79-00-5 | 1,1,2-Trichloroethane | 0.50 U | 1.0 | 0.50 | ug/l | |
| 127-18-4 | Tetrachloroethylene | 0.50 U | 1.0 | 0.50 | ug/l | |
| 79-01-6 | Trichloroethylene | 89.6 [a] | 2.0 | 1.0 | ug/l | |
| 75-01-4 | Vinyl chloride | 0.50 U | 1.0 | 0.50 | ug/l | |

| CAS No. | Surrogate Recoveries | Run# 1 | Run# 2 | Limits |
|---|---|---|---|---|
| 1868-53-7 | Dibromofluoromethane | 104% | 108% | 87-116% |

U = Not detected MDL - Method Detection Limit
RL = Reporting Limit = PQL
L = Indicates value exceeds calibration range

I = Result > = MDL but < RL J = Estimated value
V = Indicates analyte found in associated method blank
N = Indicates presumptive evidence of a compound

# Report of Analysis



| | | | |
|---|---|---|---|
| Client Sample ID: | CEF-059-GW-MW5A-73-SUPP | | |
| Lab Sample ID: | F46667-2 | Date Sampled: | 01/18/07 |
| Matrix: | AQ - Ground Water | Date Received: | 01/19/07 |
| Method: | SW846 8260B | Percent Solids: | n/a |
| Project: | Cecil Field Site 59 | | |

VOA Halogenated List

| CAS No. | Surrogate Recoveries | Run# 1 | Run# 2 | Limits |
|---|---|---|---|---|
| 17060-07-0 | 1,2-Dichloroethane-D4 | 105% | 115% | 76-127% |
| 2037-26-5 | Toluene-D8 | 96% | 99% | 86-112% |
| 460-00-4 | 4-Bromofluorobenzene | 101% | 99% | 84-120% |

(a) Result is from Run# 2

U = Not detected MDL - Method Detection Limit
RL = Reporting Limit = PQL
L = Indicates value exceeds calibration range

I = Result > = MDL but < RL J = Estimated value
V = Indicates analyte found in associated method blank
N = Indicates presumptive evidence of a compound

# Report of Analysis



| | | | |
|---|---|---|---|
| Client Sample ID: | CEF-059-GW-025-73-SUPP | | |
| Lab Sample ID: | F46667-3 | Date Sampled: | 01/18/07 |
| Matrix: | AQ - Ground Water | Date Received: | 01/19/07 |
| Method: | SW846 8260B | Percent Solids: | n/a |
| Project: | Cecil Field Site 59 | | |

| | File ID | DF | Analyzed | By | Prep Date | Prep Batch | Analytical Batch |
|---|---|---|---|---|---|---|---|
| Run #1 | C0045978.D | 1 | 01/23/07 | KW | n/a | n/a | VC1855 |
| Run #2 | | | | | | | |

| | Purge Volume |
|---|---|
| Run #1 | 5.0 ml |
| Run #2 | |

VOA Halogenated List

| CAS No. | Compound | Result | RL | MDL | Units | Q |
|---|---|---|---|---|---|---|
| 75-27-4 | Bromodichloromethane | 0.50 U | 1.0 | 0.50 | ug/l | |
| 75-25-2 | Bromoform | 0.50 U | 1.0 | 0.50 | ug/l | |
| 108-90-7 | Chlorobenzene | 0.50 U | 1.0 | 0.50 | ug/l | |
| 75-00-3 | Chloroethane | 1.0 U | 2.0 | 1.0 | ug/l | |
| 67-66-3 | Chloroform | 3.1 | 1.0 | 0.50 | ug/l | |
| 110-75-8 | 2-Chloroethyl vinyl ether | 2.5 U | 5.0 | 2.5 | ug/l | |
| 56-23-5 | Carbon tetrachloride | 0.50 U | 1.0 | 0.50 | ug/l | |
| 75-34-3 | 1,1-Dichloroethane | 0.50 U | 1.0 | 0.50 | ug/l | |
| 75-35-4 | 1,1-Dichloroethylene | 0.50 U | 1.0 | 0.50 | ug/l | |
| 107-06-2 | 1,2-Dichloroethane | 0.50 U | 1.0 | 0.50 | ug/l | |
| 78-87-5 | 1,2-Dichloropropane | 0.50 U | 1.0 | 0.50 | ug/l | |
| 124-48-1 | Dibromochloromethane | 0.40 U | 1.0 | 0.40 | ug/l | |
| 156-59-2 | cis-1,2-Dichloroethylene | 0.50 U | 1.0 | 0.50 | ug/l | |
| 10061-01-5 | cis-1,3-Dichloropropene | 0.30 U | 1.0 | 0.30 | ug/l | |
| 541-73-1 | m-Dichlorobenzene | 0.50 U | 1.0 | 0.50 | ug/l | |
| 95-50-1 | o-Dichlorobenzene | 0.50 U | 1.0 | 0.50 | ug/l | |
| 106-46-7 | p-Dichlorobenzene | 0.50 U | 1.0 | 0.50 | ug/l | |
| 156-60-5 | trans-1,2-Dichloroethylene | 0.50 U | 1.0 | 0.50 | ug/l | |
| 10061-02-6 | trans-1,3-Dichloropropene | 0.30 U | 1.0 | 0.30 | ug/l | |
| 74-83-9 | Methyl bromide | 1.0 U | 2.0 | 1.0 | ug/l | |
| 74-87-3 | Methyl chloride | 1.0 U | 2.0 | 1.0 | ug/l | |
| 75-09-2 | Methylene chloride | 1.0 U | 5.0 | 1.0 | ug/l | |
| 71-55-6 | 1,1,1-Trichloroethane | 0.50 U | 1.0 | 0.50 | ug/l | |
| 79-34-5 | 1,1,2,2-Tetrachloroethane | 0.40 U | 1.0 | 0.40 | ug/l | |
| 79-00-5 | 1,1,2-Trichloroethane | 0.50 U | 1.0 | 0.50 | ug/l | |
| 127-18-4 | Tetrachloroethylene | 0.50 U | 1.0 | 0.50 | ug/l | |
| 79-01-6 | Trichloroethylene | 0.94 | 1.0 | 0.50 | ug/l | I |
| 75-01-4 | Vinyl chloride | 0.50 U | 1.0 | 0.50 | ug/l | |

| CAS No. | Surrogate Recoveries | Run# 1 | Run# 2 | Limits |
|---|---|---|---|---|
| 1868-53-7 | Dibromofluoromethane | 108% | | 87-116% |

U = Not detected MDL - Method Detection Limit
RL = Reporting Limit = PQL
L = Indicates value exceeds calibration range

I = Result > = MDL but < RL J = Estimated value
V = Indicates analyte found in associated method blank
N = Indicates presumptive evidence of a compound

# Report of Analysis



| | | | |
|---|---|---|---|
| Client Sample ID: | CEF-059-GW-025-73-SUPP | | |
| Lab Sample ID: | F46667-3 | Date Sampled: | 01/18/07 |
| Matrix: | AQ - Ground Water | Date Received: | 01/19/07 |
| Method: | SW846 8260B | Percent Solids: | n/a |
| Project: | Cecil Field Site 59 | | |

VOA Halogenated List

| CAS No. | Surrogate Recoveries | Run# 1 | Run# 2 | Limits |
|---|---|---|---|---|
| 17060-07-0 | 1,2-Dichloroethane-D4 | 115% | | 76-127% |
| 2037-26-5 | Toluene-D8 | 97% | | 86-112% |
| 460-00-4 | 4-Bromofluorobenzene | 101% | | 84-120% |

U = Not detected MDL - Method Detection Limit
RL = Reporting Limit = PQL
L = Indicates value exceeds calibration range

I = Result > = MDL but < RL J = Estimated value
V = Indicates analyte found in associated method blank
N = Indicates presumptive evidence of a compound

# Report of Analysis



| | | | |
|---|---|---|---|
| Client Sample ID: | CEF-059-GW-004-73-SUPP | | |
| Lab Sample ID: | F46667-4 | Date Sampled: | 01/18/07 |
| Matrix: | AQ - Ground Water | Date Received: | 01/19/07 |
| Method: | SW846 8260B | Percent Solids: | n/a |
| Project: | Cecil Field Site 59 | | |

| | File ID | DF | Analyzed | By | Prep Date | Prep Batch | Analytical Batch |
|---|---|---|---|---|---|---|---|
| Run #1 | C0045943.D | 1 | 01/22/07 | KW | n/a | n/a | VC1853 |
| Run #2 | C0045979.D | 20 | 01/23/07 | KW | n/a | n/a | VC1855 |

| | Purge Volume |
|---|---|
| Run #1 | 5.0 ml |
| Run #2 | 5.0 ml |

VOA Halogenated List

| CAS No. | Compound | Result | RL | MDL | Units | Q |
|---|---|---|---|---|---|---|
| 75-27-4 | Bromodichloromethane | 0.50 U | 1.0 | 0.50 | ug/l | |
| 75-25-2 | Bromoform | 0.50 U | 1.0 | 0.50 | ug/l | |
| 108-90-7 | Chlorobenzene | 0.50 U | 1.0 | 0.50 | ug/l | |
| 75-00-3 | Chloroethane | 1.0 U | 2.0 | 1.0 | ug/l | |
| 67-66-3 | Chloroform | 0.50 U | 1.0 | 0.50 | ug/l | |
| 110-75-8 | 2-Chloroethyl vinyl ether | 2.5 U | 5.0 | 2.5 | ug/l | |
| 56-23-5 | Carbon tetrachloride | 0.50 U | 1.0 | 0.50 | ug/l | |
| 75-34-3 | 1,1-Dichloroethane | 0.50 U | 1.0 | 0.50 | ug/l | |
| 75-35-4 | 1,1-Dichloroethylene | 0.50 U | 1.0 | 0.50 | ug/l | |
| 107-06-2 | 1,2-Dichloroethane | 0.50 U | 1.0 | 0.50 | ug/l | |
| 78-87-5 | 1,2-Dichloropropane | 0.50 U | 1.0 | 0.50 | ug/l | |
| 124-48-1 | Dibromochloromethane | 0.40 U | 1.0 | 0.40 | ug/l | |
| 156-59-2 | cis-1,2-Dichloroethylene | 1.5 | 1.0 | 0.50 | ug/l | |
| 10061-01-5 | cis-1,3-Dichloropropene | 0.30 U | 1.0 | 0.30 | ug/l | |
| 541-73-1 | m-Dichlorobenzene | 0.50 U | 1.0 | 0.50 | ug/l | |
| 95-50-1 | o-Dichlorobenzene | 0.50 U | 1.0 | 0.50 | ug/l | |
| 106-46-7 | p-Dichlorobenzene | 0.50 U | 1.0 | 0.50 | ug/l | |
| 156-60-5 | trans-1,2-Dichloroethylene | 0.50 U | 1.0 | 0.50 | ug/l | |
| 10061-02-6 | trans-1,3-Dichloropropene | 0.30 U | 1.0 | 0.30 | ug/l | |
| 74-83-9 | Methyl bromide | 1.0 U | 2.0 | 1.0 | ug/l | |
| 74-87-3 | Methyl chloride | 1.0 U | 2.0 | 1.0 | ug/l | |
| 75-09-2 | Methylene chloride | 1.0 U | 5.0 | 1.0 | ug/l | |
| 71-55-6 | 1,1,1-Trichloroethane | 0.50 U | 1.0 | 0.50 | ug/l | |
| 79-34-5 | 1,1,2,2-Tetrachloroethane | 0.40 U | 1.0 | 0.40 | ug/l | |
| 79-00-5 | 1,1,2-Trichloroethane | 0.50 U | 1.0 | 0.50 | ug/l | |
| 127-18-4 | Tetrachloroethylene | 0.50 U | 1.0 | 0.50 | ug/l | |
| 79-01-6 | Trichloroethylene | 738 [a] | 20 | 10 | ug/l | |
| 75-01-4 | Vinyl chloride | 0.50 U | 1.0 | 0.50 | ug/l | |

| CAS No. | Surrogate Recoveries | Run# 1 | Run# 2 | Limits |
|---|---|---|---|---|
| 1868-53-7 | Dibromofluoromethane | 104% | 109% | 87-116% |

U = Not detected MDL - Method Detection Limit
RL = Reporting Limit = PQL
L = Indicates value exceeds calibration range
I = Result > = MDL but < RL J = Estimated value
V = Indicates analyte found in associated method blank
N = Indicates presumptive evidence of a compound

# Report of Analysis



| | | | |
|---|---|---|---|
| Client Sample ID: | CEF-059-GW-004-73-SUPP | | |
| Lab Sample ID: | F46667-4 | Date Sampled: | 01/18/07 |
| Matrix: | AQ - Ground Water | Date Received: | 01/19/07 |
| Method: | SW846 8260B | Percent Solids: | n/a |
| Project: | Cecil Field Site 59 | | |

VOA Halogenated List

| CAS No. | Surrogate Recoveries | Run# 1 | Run# 2 | Limits |
|---|---|---|---|---|
| 17060-07-0 | 1,2-Dichloroethane-D4 | 106% | 118% | 76-127% |
| 2037-26-5 | Toluene-D8 | 98% | 98% | 86-112% |
| 460-00-4 | 4-Bromofluorobenzene | 100% | 100% | 84-120% |

(a) Result is from Run# 2

U = Not detected MDL - Method Detection Limit
RL = Reporting Limit = PQL
L = Indicates value exceeds calibration range

I = Result > = MDL but < RL J = Estimated value
V = Indicates analyte found in associated method blank
N = Indicates presumptive evidence of a compound

# Report of Analysis



| | | | |
|---|---|---|---|
| Client Sample ID: | CEF-059-GW-024-73-SUPP | | |
| Lab Sample ID: | F46667-5 | Date Sampled: | 01/18/07 |
| Matrix: | AQ - Ground Water | Date Received: | 01/19/07 |
| Method: | SW846 8260B | Percent Solids: | n/a |
| Project: | Cecil Field Site 59 | | |

| | File ID | DF | Analyzed | By | Prep Date | Prep Batch | Analytical Batch |
|---|---|---|---|---|---|---|---|
| Run #1 | C0045944.D | 1 | 01/22/07 | KW | n/a | n/a | VC1853 |
| Run #2 | C0045982.D | 5 | 01/23/07 | KW | n/a | n/a | VC1855 |

| | Purge Volume |
|---|---|
| Run #1 | 5.0 ml |
| Run #2 | 5.0 ml |

VOA Halogenated List

| CAS No. | Compound | Result | RL | MDL | Units | Q |
|---|---|---|---|---|---|---|
| 75-27-4 | Bromodichloromethane | 0.50 U | 1.0 | 0.50 | ug/l | |
| 75-25-2 | Bromoform | 0.50 U | 1.0 | 0.50 | ug/l | |
| 108-90-7 | Chlorobenzene | 0.50 U | 1.0 | 0.50 | ug/l | |
| 75-00-3 | Chloroethane | 1.0 U | 2.0 | 1.0 | ug/l | |
| 67-66-3 | Chloroform | 0.50 U | 1.0 | 0.50 | ug/l | |
| 110-75-8 | 2-Chloroethyl vinyl ether | 2.5 U | 5.0 | 2.5 | ug/l | |
| 56-23-5 | Carbon tetrachloride | 0.50 U | 1.0 | 0.50 | ug/l | |
| 75-34-3 | 1,1-Dichloroethane | 0.50 U | 1.0 | 0.50 | ug/l | |
| 75-35-4 | 1,1-Dichloroethylene | 0.50 U | 1.0 | 0.50 | ug/l | |
| 107-06-2 | 1,2-Dichloroethane | 0.50 U | 1.0 | 0.50 | ug/l | |
| 78-87-5 | 1,2-Dichloropropane | 0.50 U | 1.0 | 0.50 | ug/l | |
| 124-48-1 | Dibromochloromethane | 0.40 U | 1.0 | 0.40 | ug/l | |
| 156-59-2 | cis-1,2-Dichloroethylene | 0.57 | 1.0 | 0.50 | ug/l | I |
| 10061-01-5 | cis-1,3-Dichloropropene | 0.30 U | 1.0 | 0.30 | ug/l | |
| 541-73-1 | m-Dichlorobenzene | 0.50 U | 1.0 | 0.50 | ug/l | |
| 95-50-1 | o-Dichlorobenzene | 0.50 U | 1.0 | 0.50 | ug/l | |
| 106-46-7 | p-Dichlorobenzene | 0.50 U | 1.0 | 0.50 | ug/l | |
| 156-60-5 | trans-1,2-Dichloroethylene | 0.50 U | 1.0 | 0.50 | ug/l | |
| 10061-02-6 | trans-1,3-Dichloropropene | 0.30 U | 1.0 | 0.30 | ug/l | |
| 74-83-9 | Methyl bromide | 1.0 U | 2.0 | 1.0 | ug/l | |
| 74-87-3 | Methyl chloride | 1.0 U | 2.0 | 1.0 | ug/l | |
| 75-09-2 | Methylene chloride | 1.0 U | 5.0 | 1.0 | ug/l | |
| 71-55-6 | 1,1,1-Trichloroethane | 0.50 U | 1.0 | 0.50 | ug/l | |
| 79-34-5 | 1,1,2,2-Tetrachloroethane | 0.40 U | 1.0 | 0.40 | ug/l | |
| 79-00-5 | 1,1,2-Trichloroethane | 0.50 U | 1.0 | 0.50 | ug/l | |
| 127-18-4 | Tetrachloroethylene | 0.50 U | 1.0 | 0.50 | ug/l | |
| 79-01-6 | Trichloroethylene | 137 [a] | 5.0 | 2.5 | ug/l | |
| 75-01-4 | Vinyl chloride | 0.50 U | 1.0 | 0.50 | ug/l | |

| CAS No. | Surrogate Recoveries | Run# 1 | Run# 2 | Limits |
|---|---|---|---|---|
| 1868-53-7 | Dibromofluoromethane | 102% | 106% | 87-116% |

U = Not detected MDL - Method Detection Limit
RL = Reporting Limit = PQL
L = Indicates value exceeds calibration range
I = Result > = MDL but < RL J = Estimated value
V = Indicates analyte found in associated method blank
N = Indicates presumptive evidence of a compound

# Report of Analysis



| | | | |
|---|---|---|---|
| Client Sample ID: | CEF-059-GW-024-73-SUPP | | |
| Lab Sample ID: | F46667-5 | Date Sampled: | 01/18/07 |
| Matrix: | AQ - Ground Water | Date Received: | 01/19/07 |
| Method: | SW846 8260B | Percent Solids: | n/a |
| Project: | Cecil Field Site 59 | | |

VOA Halogenated List

| CAS No. | Surrogate Recoveries | Run# 1 | Run# 2 | Limits |
|---|---|---|---|---|
| 17060-07-0 | 1,2-Dichloroethane-D4 | 105% | 114% | 76-127% |
| 2037-26-5 | Toluene-D8 | 97% | 97% | 86-112% |
| 460-00-4 | 4-Bromofluorobenzene | 102% | 98% | 84-120% |

(a) Result is from Run# 2

U = Not detected MDL - Method Detection Limit
RL = Reporting Limit = PQL
L = Indicates value exceeds calibration range

I = Result > = MDL but < RL J = Estimated value
V = Indicates analyte found in associated method blank
N = Indicates presumptive evidence of a compound

# Report of Analysis



| | | | |
|---|---|---|---|
| Client Sample ID: | NG-02D-50-SUPP | | |
| Lab Sample ID: | F46667-6 | Date Sampled: | 01/19/07 |
| Matrix: | AQ - Ground Water | Date Received: | 01/19/07 |
| Method: | SW846 8260B | Percent Solids: | n/a |
| Project: | Cecil Field Site 59 | | |

| | File ID | DF | Analyzed | By | Prep Date | Prep Batch | Analytical Batch |
|---|---|---|---|---|---|---|---|
| Run #1 | C0045945.D | 1 | 01/22/07 | KW | n/a | n/a | VC1853 |
| Run #2 | C0045983.D | 10 | 01/23/07 | KW | n/a | n/a | VC1855 |

| | Purge Volume |
|---|---|
| Run #1 | 5.0 ml |
| Run #2 | 5.0 ml |

VOA Halogenated List

| CAS No. | Compound | Result | RL | MDL | Units | Q |
|---|---|---|---|---|---|---|
| 75-27-4 | Bromodichloromethane | 0.50 U | 1.0 | 0.50 | ug/l | |
| 75-25-2 | Bromoform | 0.50 U | 1.0 | 0.50 | ug/l | |
| 108-90-7 | Chlorobenzene | 0.50 U | 1.0 | 0.50 | ug/l | |
| 75-00-3 | Chloroethane | 1.0 U | 2.0 | 1.0 | ug/l | |
| 67-66-3 | Chloroform | 0.50 U | 1.0 | 0.50 | ug/l | |
| 110-75-8 | 2-Chloroethyl vinyl ether | 2.5 U | 5.0 | 2.5 | ug/l | |
| 56-23-5 | Carbon tetrachloride | 0.50 U | 1.0 | 0.50 | ug/l | |
| 75-34-3 | 1,1-Dichloroethane | 0.50 U | 1.0 | 0.50 | ug/l | |
| 75-35-4 | 1,1-Dichloroethylene | 0.50 U | 1.0 | 0.50 | ug/l | |
| 107-06-2 | 1,2-Dichloroethane | 0.50 U | 1.0 | 0.50 | ug/l | |
| 78-87-5 | 1,2-Dichloropropane | 0.50 U | 1.0 | 0.50 | ug/l | |
| 124-48-1 | Dibromochloromethane | 0.40 U | 1.0 | 0.40 | ug/l | |
| 156-59-2 | cis-1,2-Dichloroethylene | 0.55 | 1.0 | 0.50 | ug/l | I |
| 10061-01-5 | cis-1,3-Dichloropropene | 0.30 U | 1.0 | 0.30 | ug/l | |
| 541-73-1 | m-Dichlorobenzene | 0.50 U | 1.0 | 0.50 | ug/l | |
| 95-50-1 | o-Dichlorobenzene | 0.50 U | 1.0 | 0.50 | ug/l | |
| 106-46-7 | p-Dichlorobenzene | 0.50 U | 1.0 | 0.50 | ug/l | |
| 156-60-5 | trans-1,2-Dichloroethylene | 0.50 U | 1.0 | 0.50 | ug/l | |
| 10061-02-6 | trans-1,3-Dichloropropene | 0.30 U | 1.0 | 0.30 | ug/l | |
| 74-83-9 | Methyl bromide | 1.0 U | 2.0 | 1.0 | ug/l | |
| 74-87-3 | Methyl chloride | 1.0 U | 2.0 | 1.0 | ug/l | |
| 75-09-2 | Methylene chloride | 1.0 U | 5.0 | 1.0 | ug/l | |
| 71-55-6 | 1,1,1-Trichloroethane | 0.50 U | 1.0 | 0.50 | ug/l | |
| 79-34-5 | 1,1,2,2-Tetrachloroethane | 0.40 U | 1.0 | 0.40 | ug/l | |
| 79-00-5 | 1,1,2-Trichloroethane | 0.50 U | 1.0 | 0.50 | ug/l | |
| 127-18-4 | Tetrachloroethylene | 0.50 U | 1.0 | 0.50 | ug/l | |
| 79-01-6 | Trichloroethylene | 373 [a] | 10 | 5.0 | ug/l | |
| 75-01-4 | Vinyl chloride | 0.50 U | 1.0 | 0.50 | ug/l | |

| CAS No. | Surrogate Recoveries | Run# 1 | Run# 2 | Limits |
|---|---|---|---|---|
| 1868-53-7 | Dibromofluoromethane | 102% | 109% | 87-116% |

U = Not detected MDL - Method Detection Limit
RL = Reporting Limit = PQL
L = Indicates value exceeds calibration range
I = Result > = MDL but < RL J = Estimated value
V = Indicates analyte found in associated method blank
N = Indicates presumptive evidence of a compound

# Report of Analysis



| | | | |
|---|---|---|---|
| Client Sample ID: | NG-02D-50-SUPP | | |
| Lab Sample ID: | F46667-6 | Date Sampled: | 01/19/07 |
| Matrix: | AQ - Ground Water | Date Received: | 01/19/07 |
| Method: | SW846 8260B | Percent Solids: | n/a |
| Project: | Cecil Field Site 59 | | |

VOA Halogenated List

| CAS No. | Surrogate Recoveries | Run# 1 | Run# 2 | Limits |
|---|---|---|---|---|
| 17060-07-0 | 1,2-Dichloroethane-D4 | 106% | 116% | 76-127% |
| 2037-26-5 | Toluene-D8 | 97% | 97% | 86-112% |
| 460-00-4 | 4-Bromofluorobenzene | 100% | 99% | 84-120% |

(a) Result is from Run# 2

U = Not detected MDL - Method Detection Limit
RL = Reporting Limit = PQL
L = Indicates value exceeds calibration range

I = Result > = MDL but < RL J = Estimated value
V = Indicates analyte found in associated method blank
N = Indicates presumptive evidence of a compound

# Report of Analysis



| | | | |
|---|---|---|---|
| Client Sample ID: | CEF-059-GW-022-50-SUPP | | |
| Lab Sample ID: | F46667-7 | Date Sampled: | 01/19/07 |
| Matrix: | AQ - Ground Water | Date Received: | 01/19/07 |
| Method: | SW846 8260B | Percent Solids: | n/a |
| Project: | Cecil Field Site 59 | | |

| | File ID | DF | Analyzed | By | Prep Date | Prep Batch | Analytical Batch |
|---|---|---|---|---|---|---|---|
| Run #1 | C0045946.D | 1 | 01/22/07 | KW | n/a | n/a | VC1853 |
| Run #2 | C0045984.D | 10 | 01/23/07 | KW | n/a | n/a | VC1855 |

| | Purge Volume |
|---|---|
| Run #1 | 5.0 ml |
| Run #2 | 5.0 ml |

VOA Halogenated List

| CAS No. | Compound | Result | RL | MDL | Units | Q |
|---|---|---|---|---|---|---|
| 75-27-4 | Bromodichloromethane | 0.50 U | 1.0 | 0.50 | ug/l | |
| 75-25-2 | Bromoform | 0.50 U | 1.0 | 0.50 | ug/l | |
| 108-90-7 | Chlorobenzene | 0.50 U | 1.0 | 0.50 | ug/l | |
| 75-00-3 | Chloroethane | 1.0 U | 2.0 | 1.0 | ug/l | |
| 67-66-3 | Chloroform | 0.50 U | 1.0 | 0.50 | ug/l | |
| 110-75-8 | 2-Chloroethyl vinyl ether | 2.5 U | 5.0 | 2.5 | ug/l | |
| 56-23-5 | Carbon tetrachloride | 0.50 U | 1.0 | 0.50 | ug/l | |
| 75-34-3 | 1,1-Dichloroethane | 0.50 U | 1.0 | 0.50 | ug/l | |
| 75-35-4 | 1,1-Dichloroethylene | 0.63 | 1.0 | 0.50 | ug/l | I |
| 107-06-2 | 1,2-Dichloroethane | 0.50 U | 1.0 | 0.50 | ug/l | |
| 78-87-5 | 1,2-Dichloropropane | 0.50 U | 1.0 | 0.50 | ug/l | |
| 124-48-1 | Dibromochloromethane | 0.40 U | 1.0 | 0.40 | ug/l | |
| 156-59-2 | cis-1,2-Dichloroethylene | 3.9 | 1.0 | 0.50 | ug/l | |
| 10061-01-5 | cis-1,3-Dichloropropene | 0.30 U | 1.0 | 0.30 | ug/l | |
| 541-73-1 | m-Dichlorobenzene | 0.50 U | 1.0 | 0.50 | ug/l | |
| 95-50-1 | o-Dichlorobenzene | 0.50 U | 1.0 | 0.50 | ug/l | |
| 106-46-7 | p-Dichlorobenzene | 0.50 U | 1.0 | 0.50 | ug/l | |
| 156-60-5 | trans-1,2-Dichloroethylene | 0.50 U | 1.0 | 0.50 | ug/l | |
| 10061-02-6 | trans-1,3-Dichloropropene | 0.30 U | 1.0 | 0.30 | ug/l | |
| 74-83-9 | Methyl bromide | 1.0 U | 2.0 | 1.0 | ug/l | |
| 74-87-3 | Methyl chloride | 1.0 U | 2.0 | 1.0 | ug/l | |
| 75-09-2 | Methylene chloride | 1.0 U | 5.0 | 1.0 | ug/l | |
| 71-55-6 | 1,1,1-Trichloroethane | 0.50 U | 1.0 | 0.50 | ug/l | |
| 79-34-5 | 1,1,2,2-Tetrachloroethane | 0.40 U | 1.0 | 0.40 | ug/l | |
| 79-00-5 | 1,1,2-Trichloroethane | 0.50 U | 1.0 | 0.50 | ug/l | |
| 127-18-4 | Tetrachloroethylene | 0.50 U | 1.0 | 0.50 | ug/l | |
| 79-01-6 | Trichloroethylene | 418 [a] | 10 | 5.0 | ug/l | |
| 75-01-4 | Vinyl chloride | 0.50 U | 1.0 | 0.50 | ug/l | |

| CAS No. | Surrogate Recoveries | Run# 1 | Run# 2 | Limits |
|---|---|---|---|---|
| 1868-53-7 | Dibromofluoromethane | 105% | 108% | 87-116% |

U = Not detected MDL - Method Detection Limit
RL = Reporting Limit = PQL
L = Indicates value exceeds calibration range

I = Result > = MDL but < RL J = Estimated value
V = Indicates analyte found in associated method blank
N = Indicates presumptive evidence of a compound

# Report of Analysis



| | | | |
|---|---|---|---|
| Client Sample ID: | CEF-059-GW-022-50-SUPP | | |
| Lab Sample ID: | F46667-7 | Date Sampled: | 01/19/07 |
| Matrix: | AQ - Ground Water | Date Received: | 01/19/07 |
| Method: | SW846 8260B | Percent Solids: | n/a |
| Project: | Cecil Field Site 59 | | |

VOA Halogenated List

| CAS No. | Surrogate Recoveries | Run# 1 | Run# 2 | Limits |
|---|---|---|---|---|
| 17060-07-0 | 1,2-Dichloroethane-D4 | 107% | 117% | 76-127% |
| 2037-26-5 | Toluene-D8 | 97% | 99% | 86-112% |
| 460-00-4 | 4-Bromofluorobenzene | 99% | 100% | 84-120% |

(a) Result is from Run# 2

U = Not detected MDL - Method Detection Limit
RL = Reporting Limit = PQL
L = Indicates value exceeds calibration range

I = Result > = MDL but < RL J = Estimated value
V = Indicates analyte found in associated method blank
N = Indicates presumptive evidence of a compound

# Report of Analysis



| | | | |
|---|---|---|---|
| Client Sample ID: | CEF-059-GW-021-50-SUPP | | |
| Lab Sample ID: | F46667-8 | Date Sampled: | 01/19/07 |
| Matrix: | AQ - Ground Water | Date Received: | 01/19/07 |
| Method: | SW846 8260B | Percent Solids: | n/a |
| Project: | Cecil Field Site 59 | | |

| | File ID | DF | Analyzed | By | Prep Date | Prep Batch | Analytical Batch |
|---|---|---|---|---|---|---|---|
| Run #1 | C0045947.D | 1 | 01/22/07 | KW | n/a | n/a | VC1853 |
| Run #2 | C0045985.D | 10 | 01/23/07 | KW | n/a | n/a | VC1855 |

| | Purge Volume |
|---|---|
| Run #1 | 5.0 ml |
| Run #2 | 5.0 ml |

VOA Halogenated List

| CAS No. | Compound | Result | RL | MDL | Units | Q |
|---|---|---|---|---|---|---|
| 75-27-4 | Bromodichloromethane | 0.50 U | 1.0 | 0.50 | ug/l | |
| 75-25-2 | Bromoform | 0.50 U | 1.0 | 0.50 | ug/l | |
| 108-90-7 | Chlorobenzene | 0.50 U | 1.0 | 0.50 | ug/l | |
| 75-00-3 | Chloroethane | 1.0 U | 2.0 | 1.0 | ug/l | |
| 67-66-3 | Chloroform | 0.50 U | 1.0 | 0.50 | ug/l | |
| 110-75-8 | 2-Chloroethyl vinyl ether | 2.5 U | 5.0 | 2.5 | ug/l | |
| 56-23-5 | Carbon tetrachloride | 0.50 U | 1.0 | 0.50 | ug/l | |
| 75-34-3 | 1,1-Dichloroethane | 0.50 U | 1.0 | 0.50 | ug/l | |
| 75-35-4 | 1,1-Dichloroethylene | 0.80 | 1.0 | 0.50 | ug/l | I |
| 107-06-2 | 1,2-Dichloroethane | 0.50 U | 1.0 | 0.50 | ug/l | |
| 78-87-5 | 1,2-Dichloropropane | 0.50 U | 1.0 | 0.50 | ug/l | |
| 124-48-1 | Dibromochloromethane | 0.40 U | 1.0 | 0.40 | ug/l | |
| 156-59-2 | cis-1,2-Dichloroethylene | 393 [a] | 10 | 5.0 | ug/l | |
| 10061-01-5 | cis-1,3-Dichloropropene | 0.30 U | 1.0 | 0.30 | ug/l | |
| 541-73-1 | m-Dichlorobenzene | 0.50 U | 1.0 | 0.50 | ug/l | |
| 95-50-1 | o-Dichlorobenzene | 0.50 U | 1.0 | 0.50 | ug/l | |
| 106-46-7 | p-Dichlorobenzene | 0.50 U | 1.0 | 0.50 | ug/l | |
| 156-60-5 | trans-1,2-Dichloroethylene | 1.5 | 1.0 | 0.50 | ug/l | |
| 10061-02-6 | trans-1,3-Dichloropropene | 0.30 U | 1.0 | 0.30 | ug/l | |
| 74-83-9 | Methyl bromide | 1.0 U | 2.0 | 1.0 | ug/l | |
| 74-87-3 | Methyl chloride | 1.0 U | 2.0 | 1.0 | ug/l | |
| 75-09-2 | Methylene chloride | 1.0 U | 5.0 | 1.0 | ug/l | |
| 71-55-6 | 1,1,1-Trichloroethane | 0.50 U | 1.0 | 0.50 | ug/l | |
| 79-34-5 | 1,1,2,2-Tetrachloroethane | 0.40 U | 1.0 | 0.40 | ug/l | |
| 79-00-5 | 1,1,2-Trichloroethane | 0.50 U | 1.0 | 0.50 | ug/l | |
| 127-18-4 | Tetrachloroethylene | 0.50 U | 1.0 | 0.50 | ug/l | |
| 79-01-6 | Trichloroethylene | 97.8 | 1.0 | 0.50 | ug/l | |
| 75-01-4 | Vinyl chloride | 38.7 | 1.0 | 0.50 | ug/l | |

| CAS No. | Surrogate Recoveries | Run# 1 | Run# 2 | Limits |
|---|---|---|---|---|
| 1868-53-7 | Dibromofluoromethane | 103% | 110% | 87-116% |

U = Not detected MDL - Method Detection Limit
RL = Reporting Limit = PQL
L = Indicates value exceeds calibration range

I = Result > = MDL but < RL J = Estimated value
V = Indicates analyte found in associated method blank
N = Indicates presumptive evidence of a compound

# Report of Analysis



| | | | |
|---|---|---|---|
| Client Sample ID: | CEF-059-GW-021-50-SUPP | | |
| Lab Sample ID: | F46667-8 | Date Sampled: | 01/19/07 |
| Matrix: | AQ - Ground Water | Date Received: | 01/19/07 |
| Method: | SW846 8260B | Percent Solids: | n/a |
| Project: | Cecil Field Site 59 | | |

VOA Halogenated List

| CAS No. | Surrogate Recoveries | Run# 1 | Run# 2 | Limits |
|---|---|---|---|---|
| 17060-07-0 | 1,2-Dichloroethane-D4 | 106% | 118% | 76-127% |
| 2037-26-5 | Toluene-D8 | 98% | 98% | 86-112% |
| 460-00-4 | 4-Bromofluorobenzene | 99% | 102% | 84-120% |

(a) Result is from Run# 2

U = Not detected MDL - Method Detection Limit
RL = Reporting Limit = PQL
L = Indicates value exceeds calibration range

I = Result > = MDL but < RL J = Estimated value
V = Indicates analyte found in associated method blank
N = Indicates presumptive evidence of a compound

# APPENDIX E

# COST ESTIMATE

**NAVAL AIR STATION, CECIL FIELD**
**Jacksonville, Florida**
**Site 59 - Buildings 324/1845 Areas**
**Alternative 4A: In-situ Biological Treatment of TCE "Hot-Spots", National Attenuation, Institution Controls, and Monitoring**
**Capital Cost**



| Item | Quantity | Unit | Unit Cost Subcontract | Unit Cost Material | Unit Cost Labor | Unit Cost Equipment | Extended Cost Subcontract | Extended Cost Material | Extended Cost Labor | Extended Cost Equipment | Subtotal |
|---|---|---|---|---|---|---|---|---|---|---|---|
| **1 PROJECT PLANNING & DOCUMENTS** | | | | | | | | | | | |
| 1.1 Prepare LUC RD Documents | 300 | hr | | | $35.00 | | $0 | $0 | $10,500 | $0 | $10,500 |
| 1.2 Prepare Documents & Plans including Permits | 500 | hr | | | $35.00 | | $0 | $0 | $17,500 | $0 | $17,500 |
| **2 MOBILIZATION/DEMOBILIZATION & SITE SUPPORT** | | | | | | | | | | | |
| 2.1 Office Trailer | 2 | mo | | | | $340.00 | $0 | $0 | $0 | $680 | $680 |
| 2.2 Field Office Support | 2 | mo | | $145.00 | | | $0 | $290 | $0 | $0 | $290 |
| 2.3 Storage Trailer (1) | 2 | mo | | | | $109.00 | $0 | $0 | $0 | $218 | $218 |
| 2.4 Utility Connection/Disconnection (phone/electric) | 1 | ls | $1,500.00 | | | | $1,500 | $0 | $0 | $0 | $1,500 |
| 2.5 Construction Survey | 1.5 | ac | $2,000.00 | | | | $3,000 | $0 | $0 | $0 | $3,000 |
| 2.6 Equipment Mobilization/Demobilization | 2 | ea | | | $151.00 | $350.00 | $0 | $0 | $302 | $700 | $1,002 |
| 2.7 Site Utilities | 2 | mo | $150.00 | | | | $300 | $0 | $0 | $0 | $300 |
| 2.8 Field Construction Mgt. (5p * 5 days/week) | 9 | mwk | | | $7,500.00 | | $0 | $0 | $67,500 | $0 | $67,500 |
| **3 DECONTAMINATION** | | | | | | | | | | | |
| 3.1 Decontamination Services | 2 | mo | | $1,100.00 | $1,850.00 | $1,200.00 | $0 | $2,200 | $3,700 | $2,400 | $8,300 |
| 3.2 Temporary Equipment Decon Pad | 1 | ls | | $1,500.00 | $2,000.00 | $300.00 | $0 | $1,500 | $2,000 | $300 | $3,800 |
| 3.3 Decon Water | 2,000 | gal | | $0.20 | | | $0 | $400 | $0 | $0 | $400 |
| 3.4 Decon Water Storage Tank, 6,000 gallon | 2 | mo | | | | $645.00 | $0 | $0 | $0 | $1,290 | $1,290 |
| 3.5 Clean Water Storage Tank, 4,000 gallon | 2 | mo | | | | $580.00 | $0 | $0 | $0 | $1,160 | $1,160 |
| 3.6 Disposal of Decon Waste (liquid & solid) | 2 | mo | $950.00 | | | | $1,900 | $0 | $0 | $0 | $1,900 |
| **4 TCE "HOT-SPOT" No. 2A TREATMENT** | | | | | | | | | | | |
| 4.1 Install Wells (10 wells) | 496 | lf | $64.80 | | | | $32,141 | $0 | $0 | $0 | $32,141 |
| 4.2 Piping: 1" PVC (includes equiv length for fittings) | 2,900 | lf | | $0.50 | $3.89 | $6.24 | $0 | $1,450 | $11,281 | $18,096 | $30,827 |
| 4.3 Vehicle Crossover (6' wide) | 1 | ea | | $500.00 | $100.00 | | $0 | $500 | $100 | $0 | $600 |
| 4.4 Submersible Pumps, 3 gpm @ 115 TDH, 1/3 hp | 2 | ea | | $1,841.00 | $191.00 | | $0 | $3,682 | $382 | $0 | $4,064 |
| 4.5 Sodium Lactate FS, 100 gal tank | 1 | ea | | $680.98 | | | $0 | $681 | $0 | $0 | $681 |
| 4.6 Sodium Lactate FS, tank mixer, 1/4 hp | 1 | ea | | $431.08 | | | $0 | $431 | $0 | $0 | $431 |
| 4.7 Sodium Lactate FS, 10 gpd feed pump | 2 | ea | | $596.44 | | | $0 | $1,193 | $0 | $0 | $1,193 |
| 4.8 Sodium Bicarbonate FS, 275 gal tank | 2 | ea | | $1,171.48 | | | $0 | $2,343 | $0 | $0 | $2,343 |
| 4.9 Sodium Bicarbonate FS, tank mixer, 1/3 hp | 2 | ea | | $1,472.13 | | | $0 | $2,944 | $0 | $0 | $2,944 |
| 4.10 Sodium Bicarbonate FS, 96 gpd feed pump | 2 | ea | | $1,624.50 | | | $0 | $3,249 | $0 | $0 | $3,249 |
| 4.11 In-line Mixer, Static-type, 1" dia | 2 | ea | | $322.00 | | | $0 | $644 | $0 | $0 | $644 |
| 4.12 Electrical Service | 1 | ls | $10,500.00 | | | | $10,500 | $0 | $0 | $0 | $10,500 |
| 4.13 Equipment Shelter with pad, 200 sq ft | 1 | ls | | $6,400.00 | $3,600.00 | | $0 | $6,400 | $3,600 | $0 | $10,000 |
| 4.14 Instruments and Controls | 1 | ls | | $3,000.00 | $2,500.00 | | $0 | $3,000 | $2,500 | $0 | $5,500 |
| 4.15 Plumb/Electrify System | 1 | ls | | $1,000.00 | $5,000.00 | | $0 | $1,000 | $5,000 | $0 | $6,000 |
| 4.16 System Start-Up and Testing | 1 | ls | | $500.00 | $1,000.00 | | $0 | $500 | $1,000 | $0 | $1,500 |
| **5 TCE "HOT-SPOT" No. 2B TREATMENT** | | | | | | | | | | | |
| 5.1 Install Wells (12 wells) | 616 | lf | $64.80 | | | | $39,917 | $0 | $0 | $0 | $39,917 |
| 5.2 Piping: 1" PVC (includes equiv length for fittings) | 2,900 | lf | | $0.50 | $3.89 | $6.24 | $0 | $1,450 | $11,281 | $18,096 | $30,827 |
| 5.3 Vehicle Crossover (6' wide) | 2 | ea | | $500.00 | $100.00 | | $0 | $1,000 | $200 | $0 | $1,200 |
| 5.4 Submersible Pumps, 3 gpm @ 115 TDH, 1/3 hp | 2 | ea | | $1,841.00 | $191.00 | | $0 | $3,682 | $382 | $0 | $4,064 |
| 5.5 Sodium Lactate FS, 150 gal tank | 1 | ea | | $782.05 | | | $0 | $782 | $0 | $0 | $782 |
| 5.6 Sodium Lactate FS, tank mixer, 1/3 hp | 1 | ea | | $1,472.13 | | | $0 | $1,472 | $0 | $0 | $1,472 |
| 5.7 Sodium Lactate FS, 24 gpd feed pump | 1 | ea | | $596.44 | | | $0 | $596 | $0 | $0 | $596 |
| 5.8 Sodium Bicarbonate FS, 275 gal tank | 2 | ea | | $1,171.48 | | | $0 | $2,343 | $0 | $0 | $2,343 |
| 5.9 Sodium Bicarbonate FS, tank mixer, 1/3 hp | 2 | ea | | $1,472.13 | | | $0 | $2,944 | $0 | $0 | $2,944 |
| 5.10 Sodium Bicarbonate FS, 96 gpd feed pump | 2 | ea | | $1,624.50 | | | $0 | $3,249 | $0 | $0 | $3,249 |
| 5.11 In-line Mixer, Static-type, 1" dia | 2 | ea | | $322.00 | | | $0 | $644 | $0 | $0 | $644 |
| 5.12 Electrical Service | 1 | ls | $10,500.00 | | | | $10,500 | $0 | $0 | $0 | $10,500 |

**NAVAL AIR STATION, CECIL FIELD**
**Jacksonville, Florida**
**Site 59 - Buildings 324/1845 Areas**
**Alternative 4A: In-situ Biological Treatment of TCE "Hot-Spots", National Attenuation, Institution Controls, and Monitoring**
**Capital Cost**

| Item | Quantity | Unit | Unit Cost Subcontract | Unit Cost Material | Unit Cost Labor | Unit Cost Equipment | Extended Cost Subcontract | Extended Cost Material | Extended Cost Labor | Extended Cost Equipment | Subtotal |
|---|---|---|---|---|---|---|---|---|---|---|---|
| 5.13 Equipment Shelter with pad, 200 sq ft | 1 | ls | | $6,400.00 | $3,600.00 | | $0 | $6,400 | $3,600 | $0 | $10,000 |
| 5.14 Instruments and Controls | 1 | ls | | $3,000.00 | $2,500.00 | | $0 | $3,000 | $2,500 | $0 | $5,500 |
| 5.15 Plumb/Electrify System | 1 | ls | | $1,000.00 | $5,000.00 | | $0 | $1,000 | $5,000 | $0 | $6,000 |
| 5.16 System Start-Up and Testing | 1 | ls | | $500.00 | $1,000.00 | | $0 | $500 | $1,000 | $0 | $1,500 |
| **6 TCE "HOT-SPOT" No. 3 TREATMENT** | | | | | | | | | | | |
| 6.1 Install Wells (13 wells) | 969 | lf | $64.80 | | | | $62,791 | $0 | $0 | $0 | $62,791 |
| 6.2 Piping: 1" PVC w/trenching (length for fittings) | 4,500 | lf | | $0.50 | $3.89 | $6.24 | $0 | $2,250 | $17,505 | $28,080 | $47,835 |
| 6.3 Pavement Sawing | 4,000 | lf | | $0.46 | $1.32 | $0.79 | $0 | $1,840 | $5,280 | $3,160 | $10,280 |
| 6.4 Pavement Replacement | 112 | sy | $56.00 | | | | $6,272 | $0 | $0 | $0 | $6,272 |
| 6.5 Vehicle Crossover (6' wide) | 4 | ea | | $500.00 | $100.00 | | $0 | $2,000 | $400 | $0 | $2,400 |
| 6.6 Submersible Pumps, 3 gpm @ 115 TDH, 1/3 hp | 4 | ea | | $1,841.00 | $191.00 | | $0 | $7,364 | $764 | $0 | $8,128 |
| 6.7 (1 & 2) Sodium Lactate FS, 200 gal tank | 1 | ea | | $869.95 | | | $0 | $870 | $0 | $0 | $870 |
| 6.8 (1 & 2) Sodium Lactate FS, tank mixer, 1/3 hp | 1 | ea | | $1,472.13 | | | $0 | $1,472 | $0 | $0 | $1,472 |
| 6.9 (1 & 2) Sodium Lactate FS, 24 gpd feed pump | 2 | ea | | $596.44 | | | $0 | $1,193 | $0 | $0 | $1,193 |
| 6.10 (1 & 2) Sodium Bicarbonate FS, 200 gal tank | 2 | ea | | $869.95 | | | $0 | $1,740 | $0 | $0 | $1,740 |
| 6.11 (1 & 2) Sodium Bicarbonate FS, tank mixer, 1/3 hp | 2 | ea | | $1,472.13 | | | $0 | $2,944 | $0 | $0 | $2,944 |
| 6.12 (1 & 2) Sodium Bicarbonate FS, 60 gpd feed pump | 2 | ea | | $614.00 | | | $0 | $1,228 | $0 | $0 | $1,228 |
| 6.13 (1 & 2) In-line Mixer, Static-type, 1" dia | 2 | ea | | $322.00 | | | $0 | $644 | $0 | $0 | $644 |
| 6.14 (3 & 4) Sodium Lactate FS, 100 gal tank | 1 | ea | | $680.98 | | | $0 | $681 | $0 | $0 | $681 |
| 6.15 (3 & 4) Sodium Lactate FS, tank mixer, 1/4 hp | 1 | ea | | $431.08 | | | $0 | $431 | $0 | $0 | $431 |
| 6.16 (3 & 4) Sodium Lactate FS, 10 gpd feed pump | 2 | ea | | $596.44 | | | $0 | $1,193 | $0 | $0 | $1,193 |
| 6.17 (3 & 4) Sodium Bicarbonate FS, 200 gal tank | 1 | ea | | $869.95 | | | $0 | $870 | $0 | $0 | $870 |
| 6.18 (3 & 4) Sodium Bicarbonate FS, tank mixer, 1/3 hp | 1 | ea | | $1,472.13 | | | $0 | $1,472 | $0 | $0 | $1,472 |
| 6.19 (3 & 4) Sodium Bicarbonate FS, 60 gpd feed pump | 1 | ea | | $614.00 | | | $0 | $614 | $0 | $0 | $614 |
| 6.20 (3 & 4) In-line Mixer, Static-type, 1" dia | 1 | ea | | $322.00 | | | $0 | $322 | $0 | $0 | $322 |
| 6.21 Electrical Service | 1 | ls | $12,000.00 | | | | $12,000 | $0 | $0 | $0 | $12,000 |
| 6.22 Equipment Shelter with pad, 200 sq ft | 2 | ls | | $6,400.00 | $3,600.00 | | $0 | $12,800 | $7,200 | $0 | $20,000 |
| 6.23 Instruments and Controls | 2 | ls | | $5,100.00 | $4,500.00 | | $0 | $10,200 | $9,000 | $0 | $19,200 |
| 6.24 Plumb/Electrify System | 2 | ls | | $2,000.00 | $8,500.00 | | $0 | $4,000 | $17,000 | $0 | $21,000 |
| 6.25 System Start-Up and Testing | 1 | ls | | $1,000.00 | $2,000.00 | | $0 | $1,000 | $2,000 | $0 | $3,000 |
| **Subtotal** | | | | | | | $180,821 | $118,598 | $208,477 | $74,180 | $582,076 |
| **Local Area Adjustments** | | | | | | | 100.0% | 113.5% | 87.0% | 87.0% | |
| | | | | | | | $180,821 | $134,609 | $181,375 | $64,537 | $561,341 |
| Overhead on Labor Cost @ 30% | | | | | | | | | $54,412 | | $54,412 |
| G & A on Labor Cost @ 10% | | | | | | | | | $18,137 | | $18,137 |
| G & A on Material Cost @ 10% | | | | | | | | $13,461 | | | $13,461 |
| G & A on Equipment Cost @ 10% | | | | | | | | | | $6,454 | $6,454 |
| G & A on Subcontract Cost @ 10% | | | | | | | $18,082 | | | | $18,082 |
| **Total Direct Cost** | | | | | | | $198,903 | $148,070 | $253,925 | $70,990 | $671,888 |

**NAVAL AIR STATION, CECIL FIELD**
**Jacksonville, Florida**
**Site 59 - Buildings 324/1845 Areas**
**Alternative 4A: In-situ Biological Treatment of TCE "Hot-Spots", National Attenuation, Institution Controls, and Monitoring**
**Capital Cost**

| Item | Quantity | Unit | Unit Cost Subcontract | Unit Cost Material | Unit Cost Labor | Unit Cost Equipment | Extended Cost Subcontract | Extended Cost Material | Extended Cost Labor | Extended Cost Equipment | Subtotal |
|---|---|---|---|---|---|---|---|---|---|---|---|
| Indirects on Total Direct Cost @ 35% | | | | | | | | | | | $235,161 |
| Profit on Total Direct Cost @ 10% | | | | | | | | | | | $67,189 |
| **Subtotal** | | | | | | | | | | | $974,237 |
| Health & Safety Monitoring @ 2% | | | | | | | | | | | $19,485 |
| **Total Field Cost** | | | | | | | | | | | $993,722 |
| Contingency on Total Field Costs @ 20% | | | | | | | | | | | $198,744 |
| Engineering on Total Field Cost @ 5% | | | | | | | | | | | $49,686 |
| **TOTAL CAPITAL COST** | | | | | | | | | | | **$1,242,153** |

**NAVAL AIR STATION, CECIL FIELD**
**Jacksonville, Florida**
**Site 59 - Buildings 324/1845 Areas**
**Alternative 4A: In-situ Biological Treatment of TCE "Hot-Spots", National Attenuation, Institution Controls, and Monitoring**
**Operation and Maintenance Cost**

| | Item | Quantity | Unit | Unit Cost | Subtotal | Notes |
|---|---|---|---|---|---|---|
| **Treatment System (operate for 1 year)** | | | | | | |
| 1 | Energy - Electric | 20,000 | kWh | $0.08 | $1,600 | |
| 2 | TCE "Hot-Spot" No. 2A Additives | | | | | |
| | a: Sodium Lactate | 860 | pound | $2.00 | $1,720 | |
| | b: Sodium Bicarbonate | 4,590 | pound | $0.30 | $1,377 | |
| | c: Dihalococcides (DHC) bacteria | 62 | liter | $270.00 | $16,740 | |
| 3 | TCE "Hot-Spot" No. 2B Additives | | | | | |
| | a: Sodium Lactate | 1,530 | pound | $2.00 | $3,060 | |
| | b: Sodium Bicarbonate | 4,590 | pound | $0.30 | $1,377 | |
| | c: Dihalococcides (DHC) bacteria | 110 | liter | $270.00 | $29,700 | |
| 4 | TCE "Hot-Spot" No. 3 Additives | | | | | |
| | a: Sodium Lactate | 2,450 | pound | $2.00 | $4,900 | |
| | b: Sodium Bicarbonate | 4,760 | pound | $0.30 | $1,428 | |
| | c: Dihalococcides (DHC) bacteria | 170 | liter | $270.00 | $45,900 | |
| 5 | System Operations Labor | | | | | |
| | First Month | 168 | hours | $55.00 | $9,240 | 8 hours a day, 5 days a week |
| | Months 2 through 12 | 384 | hours | $55.00 | $21,120 | 8 hours a day, 1 day a week |
| 6 | Process Monitoring Sample Analyses | 1 | ls | $100,000 | $100,000 | |
| 7 | Quarterly Reports | 4 | ea | $5,000 | $20,000 | |
| | | | | Subtotal | $258,162 | |
| | | | | Contingency @ 10% | $25,816 | |
| | | | | **TOTAL** | **$283,978** | |

**NAVAL AIR STATION, CECIL FIELD**
**Jacksonville, Florida**
**Site 59 - Buildings 324/1845 Areas**
**Alternative 4A: In-situ Biological Treatment of TCE "Hot-Spots", National Attenuation, Institution Controls, and Monitoring**
**Annual Cost**

| Item | Item Cost year 1 | Item Cost years 2 & 3 | Item Cost years 4 & 5 | Item Cost years *1 | Item Cost year *2 | Item Cost every 5 years | Notes |
|---|---|---|---|---|---|---|---|
| Site Inspection: Visit | $1,830 | $1,830 | $1,830 | $1,830 | $1,830 | | One-day visit to verify LUC RD |
| Site Inspection: Report | $800 | $800 | $800 | $800 | $800 | | |
| Sampling | $96,120 | $48,060 | $24,030 | $24,030 | $24,030 | | Labor and supplies to collect samples from wells using a local crew of two, four times in year 1, two times in years 2 & 3, once a year for years 4 through 30. |
| Analysis/Water | $22,176 | $11,088 | $5,544 | $5,390 | $5,544 | | Analyze groundwater samples for TCL VOCs in years 1 through 30. |
| Analysis/Water | $33,880 | $16,940 | $8,470 | | | | Analyze groundwater samples for natural attenuation parameters in years 1 through 5. |
| Report | $8,000 | $4,000 | $2,000 | $2,000 | $2,000 | | Document sampling events and results |
| Site Review | | | | | | $15,000 | Five Year Site Reviews |
| Subtotal | $162,806 | $82,718 | $42,674 | $34,050 | $34,204 | $15,000 | |
| Contingency @ 10% | $16,281 | $8,272 | $4,267 | $3,405 | $3,420 | $1,500 | |
| **TOTAL** | **$179,087** | **$90,990** | **$46,941** | **$37,455** | **$37,624** | **$16,500** | |

years *1 = years 6 to 9, 11 to 14, 16 to 19, 21 to 24, 26 to 29
years *2 = 10, 15, 20, 25, 30

**NAVAL AIR STATION, CECIL FIELD**
**Jacksonville, Florida**
**Site 59 - Buildings 324/1845 Areas**
**Alternative 4A: In-situ Biological Treatment of TCE "Hot-Spots", National Attenuation, Institution Controls, and Monitoring**
**Present Worth Analysis**

| Year | Capital Cost | Operation & Maintenance Cost | Annual Cost | Total Year Cost | Annual Discount Rate at 7% | Present Worth |
|---|---|---|---|---|---|---|
| 0 | $1,242,153 | | | $1,242,153 | 1.000 | $1,242,153 |
| 1 | | $283,978 | $179,087 | $463,065 | 0.935 | $432,966 |
| 2 | | | $90,990 | $90,990 | 0.873 | $79,434 |
| 3 | | | $90,990 | $90,990 | 0.816 | $74,248 |
| 4 | | | $46,941 | $46,941 | 0.763 | $35,816 |
| 5 | | | $63,441 | $63,441 | 0.713 | $45,234 |
| 6 | | | $37,455 | $37,455 | 0.666 | $24,945 |
| 7 | | | $37,455 | $37,455 | 0.623 | $23,334 |
| 8 | | | $37,455 | $37,455 | 0.582 | $21,799 |
| 9 | | | $37,455 | $37,455 | 0.544 | $20,376 |
| 10 | | | $54,124 | $54,124 | 0.508 | $27,495 |
| 11 | | | $37,455 | $37,455 | 0.475 | $17,791 |
| 12 | | | $37,455 | $37,455 | 0.444 | $16,630 |
| 13 | | | $37,455 | $37,455 | 0.415 | $15,544 |
| 14 | | | $37,455 | $37,455 | 0.388 | $14,533 |
| 15 | | | $54,124 | $54,124 | 0.362 | $19,593 |
| 16 | | | $37,455 | $37,455 | 0.339 | $12,697 |
| 17 | | | $37,455 | $37,455 | 0.317 | $11,873 |
| 18 | | | $37,455 | $37,455 | 0.296 | $11,087 |
| 19 | | | $37,455 | $37,455 | 0.277 | $10,375 |
| 20 | | | $54,124 | $54,124 | 0.258 | $13,964 |
| 21 | | | $37,455 | $37,455 | 0.242 | $9,064 |
| 22 | | | $37,455 | $37,455 | 0.226 | $8,465 |
| 23 | | | $37,455 | $37,455 | 0.211 | $7,903 |
| 24 | | | $37,455 | $37,455 | 0.197 | $7,379 |
| 25 | | | $54,124 | $54,124 | 0.184 | $9,959 |
| 26 | | | $37,455 | $37,455 | 0.172 | $6,442 |
| 27 | | | $37,455 | $37,455 | 0.161 | $6,030 |
| 28 | | | $37,455 | $37,455 | 0.15 | $5,618 |
| 29 | | | $37,455 | $37,455 | 0.141 | $5,281 |
| 30 | | | $54,124 | $54,124 | 0.131 | $7,090 |
| | | | | | **TOTAL PRESENT WORTH** | **$2,245,118** |