N61165.AR.003309
CNC CHARLESTON
5090.3a

RESOURCE CONSERVATION AND RECOVERY ACT FACILITY INVESTIGATION REPORT ADDENDUM IM COMPLETION REPORT CORRECTIVE MEASURES STUDY WORK PLAN SOLID WASTE MANAGEMENT UNIT 3 ZONE G CNC CHARLESTON SC

2/1/2003

CH2MHILL

RFI REPORT ADDENDUM

RFI Report Addendum/IM Completion Report/ CMS Work Plan – SWMU 3, Zone G

Charleston Naval Complex
North Charleston, South Carolina

SUBMITTED TO
U.S. Navy Southern Division
Naval Facilities Engineering Command

PREPARED BY
CH2M-Jones

February 2003

Revision 0
Contract N62467-99-C-0960

CH2M HILL
3011 S.W. Williston Road
Gainesville, FL
32608-3928
Mailing address:
P.O. Box 147009
Gainesville, FL
32614-7009
Tel 352.335.7991
Fax 352.335.2959

CH2MHILL

February 6, 2003

Mr. David Scaturo
South Carolina Department of Health and
Environmental Control
Bureau of Land and Waste Management
2600 Bull Street
Columbia, SC 29201

Re: RFI Report Addendum/IM Completion Report/CMS Work Plan (Revision 0), – SWMU 3, Zone G

Dear Mr. Scaturo:

Enclosed please find four copies of the RFI Report Addendum/IM Completion Report/CMS Work Plan (Revision 0) for SWMU 3 in Zone G of the Charleston Naval Complex (CNC). This report has been prepared pursuant to agreements by the CNC BRAC Cleanup Team for completing the RCRA Corrective Action process.

The principal author of this document is David Lane. Please contact him at 352/335-5877, extension 2320, if you have any questions or comments.

Sincerely,

CH2M HILL

Dean Williamson, P.E.

cc: Dann Spariosu/USEPA, w/att
Rob Harrell/Navy, w/att
Gary Foster/CH2M HILL, w/att

RFI REPORT ADDENDUM

RFI Report Addendum/IM Completion Report/ CMS Work Plan - SWMU 3, Zone G

Charleston Naval Complex
North Charleston, South Carolina

SUBMITTED TO
U.S. Navy Southern Division
Naval Facilities Engineering Command

PREPARED BY
CH2M-Jones

February 2003

Revision 0
Contract N62467-99-C-0960
158814.ZG.PR.14

Certification Page for RFI Report Addendum/IM Completion Report/CMS Work Plan (Revision 0) –SWMU 3, Zone G

I, Dean Williamson, certify that this report has been prepared under my direct supervision. The data and information are, to the best of my knowledge, accurate and correct, and the report has been prepared in accordance with current standards of practice for engineering.

South Carolina

Permit No. 21428

Dean Williamson, P.E.

1/29/2003

Date

Contents

Section **Page**

Acronyms and Abbreviations ..... **vii**

1.0 Introduction **1-1**

1.1 Site Background and Setting 1-1

1.2 Background and Summary of the RFIRA/IMCR/CMSWP 1-2

1.3 Purpose of the RFIRA/IMCR/CMSWP 1-2

1.4 Report Organization 1-3

Figure 1-1 Location of SWMU 3 within Zone G 1-5

Figure 1-2 Aerial Photograph of SWMU 3 1-6

Figure 1-3 Historical Features of SWMU 3 1-7

2.0 Summary of RFI Conclusions for SWMU 3 ..... **2-1**

2.1 Overview of Previous Investigations 2-1

2.1 RFI Sampling and Analysis 2-2

2.2.1 Surface Soil Results 2-2

2.2.2 Subsurface Soil Results 2-3

2.2.3 Groundwater Results 2-4

2.3 Conclusions and Recommendations from the *Zone G RFI Report, Rev.0* 2-4

2.3.1 Surface Soil COCs 2-4

2.3.2 Subsurface Soil COCs 2-4

2.3.3 Groundwater COCs 2-5

Figure 2-1 RFI Sampling Locations 2-6

3.0 Summary of UST/AST and Interim Measures at SWMU 3 ..... **3-1**

3.1 UST/AST Removals 3-1

3.1 1998 Interim Measure (DET) 3-1

3.2 2002 Interim Measure (CH2M-Jones) 3-1

4.0 Summary of Additional Investigations **4-1**

4.1 Soil Investigations 4-1

4.1.1 1999-2000 4-1

4.1.2 November 2001 and January 2002 4-2

4.1.3 March 2002 4-2

4.1.4 May 2002 4-2

4.1.5 June 2002 4-3

Contents, Continued

4.1.6 September 2002 4-3
4.1.7 December 2002 4-3
4.2 Results and Screening of Additional Soil Investigations 4-3
4.2.1 Organic Compounds in Surface Soil 4-4
4.2.2 Organic Compounds in Subsurface Soil 4-5
4.3 Groundwater Investigation 4-7
4.3.1 Organic Compounds in Groundwater 4-8
4.3.2 Inorganic Compounds in Groundwater 4-9
Table 4-1 Organic Compounds Detected in Surface Soil 4-11
Table 4-2 Organic Compounds Detected in Subsurface Soil 4-29
Table 4-3 Organic Compounds Detected in Groundwater 4-43
Table 4-4 Inorganic Compounds Detected in Groundwater 4-45
Figure 4-1 Additional Soil Sample Locations 4-51
Figure 4-2 Groundwater Monitoring Wells and Contours 4-52
Figure 4-3 Shallow Groundwater Potentiometric Surface Map 4-53
5.0 COPC/COC Refinement 5-1
5.1 Introduction 5-1
5.2 Soil COCs 5-2
5.2.1 Surface Soil 5-2
5.2.2 Subsurface Soil 5-9
5.3 Groundwater COCs 5-13
5.3.1 Pesticides 5-13
5.3.2 Inorganics 5-15
5.4 Rescreening of VOCs using an SSL (DAF=1) 5-17
Table 5-1 COCs/COPCs Detected in Surface Soil 5-19
Table 5-2 COCs/COPCs Detected in Subsurface Soil 5-48
Table 5-3 Residual COC/COPC Concentrations in Surface Soil 5-58
Table 5-4 Residual COC/COPC Concentrations in Subsurface Soil 5-91
Table 5-5 Soil Screening Level (SSL) Calculations 5-115
Table 5-6 Organic COPCs Detected in Groundwater 5-116
Table 5-7 Inorganic COPCs Detected in Groundwater 5-117

Contents, Continued

Table 5-8 SWMU 3 Groundwater Field Data 5-121
Figure 5-1 Excavation Areas with Soil Sample Locations 5-123
Figure 5-2 Chlordane, Alpha-chlordane, and Gamma-chlordane in Surface Soil 5-124
Figure 5-3 Dieldrin Concentrations in Surface Soil 5-125
Figure 5-4 Heptachlor and Heptachlor Epoxide in Surface Soil 5-126
Figure 5-5 DDD, DDE, and DDT in Surface Soil 5-127
Figure 5-6 Aroclor-1248 in Surface Soil 5-128
Figure 5-7 Beta-BHC and Gamma-BHC in Subsurface Soil 5-129
Figure 5-8 Chlordane, Alpha-chlordane, and Gamma-chlordane in Subs. Soil 5-130
Figure 5-9 Dieldrin in Subsurface Soil 5-131
Figure 5-10 DDD and DDT in Subsurface Soil 5-132
6.0 Summary of Information Related to Site Closeout Issues 6-1
6.1 RFI Status 6-1
6.2 Presence of Inorganics in Groundwater 6-1
6.3 Potential Linkage to Investigated Sanitary Sewers (SWMU 37) 6-1
6.4 Potential Linkage to Investigated Storm Sewers (AOC 699) 6-1
6.5 Potential Linkage to AOC 504, Investigated Railroad Lines 6-2
6.6 Potential Migration Pathways to Surface Water Bodies at the CNC 6-2
6.7 Potential Contamination in Oil/Water Separators (OWSs) 6-2
6.8 Land Use Controls (LUCs) 6-2
7.0 Interim Measure Completion Report 7-1
7.1 Pre-Excavation Sampling and Contaminant Delineation 7-1
7.2 Technical Approach of the Interim Measure 7-1
7.3 Excavation Activities 7-2
7.3.1 Former Mix-Rinse Slab Area Excavation (Building 249) 7-2
7.3.2 Former Building 1316 Footprint Area Excavation 7-3
7.3.3 Building 419 (Former Building 42-A) Area Excavation 7-3
7.3.4 Waste Characterization Sampling 7-3
7.3.5 Site Restoration 7-3
8.0 Recommendations 8-1
9.0 CMS Work Plan for SWMU 3 Groundwater 9-1
9.1 Remedial Action Objectives 9-1

Contents, Continued

9.2 Remedial Goal Options and Proposed Media Cleanup Standards 9-1
9.3 Corrective Measure Technology Focused Evaluation 9-2
9.4 Focused CMS Approach 9-3
9.5 Approach to Evaluating Corrective Measure Alternatives 9-3
9.6 Focused CMS Report 9-5
Table 9-1 Outline of Focused CMS Report for SWMU 3 9-6
10.0 References 10-1

Appendices

A Copy of 1998 IM Completion Report (DET, 1998) for SWMU 3
B Analytical Data Summary Tables, EnSafe and CH2M-Jones' Additional Investigations
C Data Validation Summaries, EnSafe and CH2M-Jones' Additional Investigations
D Soil Boring Logs and Well Completion Reports
E Site-Specific Statistical Data
F CH2M-Jones' Responses to SCDHEC Comments Regarding SWMU 3
G Waste Manifests from the 2002 IM Field Activities at SWMU 3
H Photographs of the 2002 IM Field Activities at SWMU 3

Acronyms and Abbreviations

AST	Aboveground storage tank
BCT	BRAC Cleanup Team
BRAC	Base Realignment and Closure Act
BRC	Background reference concentration
CA	Corrective action
CMS	Corrective measures study
CNC	Charleston Naval Complex
COC	Chemical of concern
COPC	Chemical of potential concern
DAF	Dilution attenuation factor
DDD	Dichlorodiphenyldichloroethane
DDE	Dichlorodiphenyldichloroethene
DDT	Dichlorodiphenyltrichloroethane
DET	Navy Environmental Detachment
EnSafe	EnSafe Inc.
EPA	U.S. Environmental Protection Agency
ft bls	Feet below land surface
HHRA	Human health risk assessment
HI	Hazard index
HQ	Hazard quotient
ILCR	Incremental lifetime cancer risk
IM	Interim measure
IRP	Installation Restoration Program
LUC	Land use control
MCL	Maximum contaminant level
MCS	Media cleanup standard
μg/kg	Micrograms per kilogram
μg/L	Micrograms per liter
mg/kg	Milligrams per kilogram
mg/m^3	Milligrams per cubic meter
msl	Mean sea level
NAVBASE	Naval Base

Acronyms and Abbreviations, Continued

NFA	No further action
OWS	Oil/water separator
PCB	Polychlorinated biphenyl
ppm	Parts per million
QC	Quality control
RAO	Remedial action objective
RBC	Risk-based concentration
RCRA	Resource Conservation and Recovery Act
RFA	RCRA Facility Assessment
RFI	RCRA Facility Investigation
RGO	Remedial goal option
SAP	Sampling and analysis plan
SCDHEC	South Carolina Department of Health and Environmental Control
SSL	Soil screening level
SWMU	Solid waste management unit
SVOC	Semivolatile organic compound
TCDD	Tetrachlorodibenzo-p-dioxin
TEQ	TCDD equivalent
UCL_{95}	95-percent Upper Confidence Limit
UST	Underground storage tank
VOC	Volatile organic compound
yd^3	Cubic yard

Section 1.0

1.0 Introduction

In 1993, Naval Base (NAVBASE) Charleston was added to the list of bases scheduled for closure as part of the Defense Base Realignment and Closure Act (BRAC), which regulates closure and transition of property to the community. The Charleston Naval Complex (CNC) was formed as a result of the dis-establishment of the Charleston Naval Shipyard and NAVBASE on April 1, 1996.

Corrective Action (CA) activities are being conducted under the Resource Conservation and Recovery Act (RCRA), with the South Carolina Department of Health and Environmental Control (SCDHEC) as the lead agency for CA activities at the CNC. All RCRA CA activities are performed in accordance with the Final Permit (Permit No. SC0 170 022 560). As part of the RCRA CA activities for CNC, a RCRA Facility Investigation (RFI) was conducted for Zone G of the CNC. SWMU 3 is located within the investigative boundaries of SWMU 24, a fuel reclamation facility (see Figure 1-1).

1.1 Site Background and Setting

SWMU 3 was identified in the *RCRA Facility Assessment (RFA) Report* (EBASCO, 1987) and the *Zone G RFI Report, Revision 0* (EnSafe Inc. [EnSafe], 1998a) as an approximately 50 by 30-foot (ft) area used for pesticide handling adjacent to Building 249 and Tank 39-D in Zone G of CNC (see Figures 1-2 and 1-3). In the RFA this location was shown to be occupied by Building 42-A, however, historical records show Building 42-A was over 150 feet to the south of SWMU 3, where Building 419 is currently located. The RFI indicates a former mix/rinse slab adjacent to SWMU 3. Historical maps show a Building 1316 at the west end of present Building 249.

According to the RFA, pesticides were mixed in a small shed and equipment was rinsed on the slab or ground. The slab and shed were subsequently removed, and Building 249 has since been constructed at the site. The southwest wall and floor of Building 249 now cover a portion of the original Building 1316 area. During the 1982 Confirmation Study (Geraghty and Miller, 1982), a portion of the area adjacent to the shed was noted to be devoid of vegetation. This once-devoid area is now covered with grass. Soil and groundwater samples collected during the 1982 Confirmation Study revealed the presence of various pesticides and associated degradation products, consistent with the types of pesticides documented as being used there. Pesticides detected included dichlorodiphenyltrichloroethane (DDT) and

metabolites, heptachlor, and beta/delta-hexachlorocyclohexane (BHC). Groundwater sample results were below detection limits for pesticides, herbicides, polychlorinated biphenyls (PCBs), and arsenic.

SWMU 3 was further investigated as part of the RFI conducted by the Navy/EnSafe team in 1998, to confirm and delineate contamination at the site in the vicinity of the former mix/rinse slab, shed, and Building 1316. The field work involved sampling and analysis of soils and groundwater with analyses for metals, pesticides, and PCBs. The area of CNC where SWMU 3 is located is currently zoned M-1, for marine industrial land use.

1.2 Background and Summary of the RFI Report Addendum/IM Completion Report/CMS Work Plan

Since the submittal of the *Zone G RFI Report, Revision 0* in February 1998, additional investigations and remediation have been performed at the site. The U.S. Navy Environmental Detachment (DET) performed an interim measure (IM) in the summer of 1998 to remove approximately 22 cubic yards (yd^3) of pesticide-contaminated soil. One of the three existing monitoring wells was also abandoned in place during this effort due to damage to the wellhead.

CH2M-Jones conducted additional soil sampling in 2002 to further delineate pesticides in soils, and also conducted an additional IM to excavate the affected soils, and to install and sample additional monitoring wells to evaluate shallow groundwater quality in the vicinity of the excavated soils. CH2M-Jones has prepared this RFI Report Addendum (RFIRA) and IM Completion Report (IMCR) to present the results of the additional delineation and remediation work performed at SWMU 3 since submittal of the *Zone G RFI Report, Revision 0*. Because several chemicals of concern (COCs) were identified for groundwater, a Corrective Measures Study (CMS) Work Plan (CMS WP) is also included in this report, and is presented in Section 9.0.

1.3 Purpose of the RFI Report Addendum/IM Completion Report/CMS Work Plan

This RFIRA/IMCR/CMSWP provides additional information to support the recommendation of No Further Action (NFA) for soil and a CMS for shallow groundwater at SWMU 3. The information presented includes the results of additional surface and subsurface soil delineation sampling conducted by CH2M-Jones after submittal of the *Zone*

G RFI Report, Revision 0, the results of two IMs conducted at the site, and a groundwater sampling event performed by CH2M-Jones in July 2002.

Prior to changing the status of any site in the CNC RCRA CA permit, the BRAC Cleanup Team (BCT) agreed that the following issues should be addressed:

- Status of the RFI
- Presence of metals (inorganics) in groundwater
- Potential linkage of SWMU 3 to SWMU 37 (investigated sanitary sewers)
- Potential linkage of SWMU 3 to AOC 699 (investigated stormwater sewers)
- Potential linkage of SWMU 3 to AOC 504 (investigated railroad lines)
- Potential migration pathways to surface water bodies (Zone J)
- Potential contamination associated with oil/water separators (OWSs)
- Relevance or need for land use controls (LUCs) at the site

Information regarding these issues is provided in this RFIRA/IMCR/CMSWP to expedite evaluation of closure of the site.

1.4 Report Organization

This RFIRA/IMCR/CMSWP consists of the following sections, including this introductory section:

1.0 Introduction – Presents the purpose of the report and background information relating to the RFIRA/IMCR/CMSWP.

2.0 Summary of RFI Conclusions for SWMU 3– Summarizes the conclusions from the RFI and risk evaluations for SWMU 3 as presented in the *Zone G RFI Report, Revision 0* (EnSafe, 1998a).

3.0 Summary of UST/AST Removals and Interim Measures at SWMU 3– Provides information regarding the IMs conducted at the site during 1998 by the DET and 2002 by CH2M-Jones, and presents information regarding any tank removals at the site.

4.0 Summary of Additional Investigations – Presents the details and summarizes the results of additional investigations conducted after completion of the RFI report, and presents the 2002 groundwater data.

5.0 COPC/COC Refinement – Provides further evaluation of chemicals of potential concern (COPCs) based on the RFI and additional data to assess them as COCs.

6.0 Summary of Information Related to Site Closeout Issues – Discusses the various issues that the BCT agreed to evaluate prior to site closeout.

7.0 Interim Measure Completion Report - Presents the details and results of the soil removal IM that was completed by CH2M-Jones during 2002.

8.0 Recommendations – Provides recommendations for proceeding with site closure.

9.0 CMS Work Plan for SWMU 3 Groundwater – Presents a CMSWP for addressing trace levels of pesticides in site groundwater.

10.0 References – Lists the references used in this document.

Appendix A contains a copy of the 1998 IM CR prepared by the DET for SWMU 3.

Appendix B contains the analytical data summaries for EnSafe and CH2M-Jones' investigations performed subsequent to the *Zone G RFI Report, Revision 0.*

Appendix C contains the analytical data validation reports for the data presented in Appendix B.

Appendix D contains soil boring logs and well completion reports for the new wells installed by CH2M-Jones.

Appendix E contains the site-specific statistical data used in rescreening analytical results.

Appendix F contains CH2M-Jones' responses to SCDHEC comments regarding the SWMU 3 area from the *Zone G RFI Report, Revision 0.*

Appendix G contains copies of the waste manifests from the 2002 IM completed by CH2M-Jones at SWMU 3.

Appendix H contains copies of site photographs taken during the 2002 remediation activities of SWMU 3.

All tables and figures appear at the end of their respective sections.

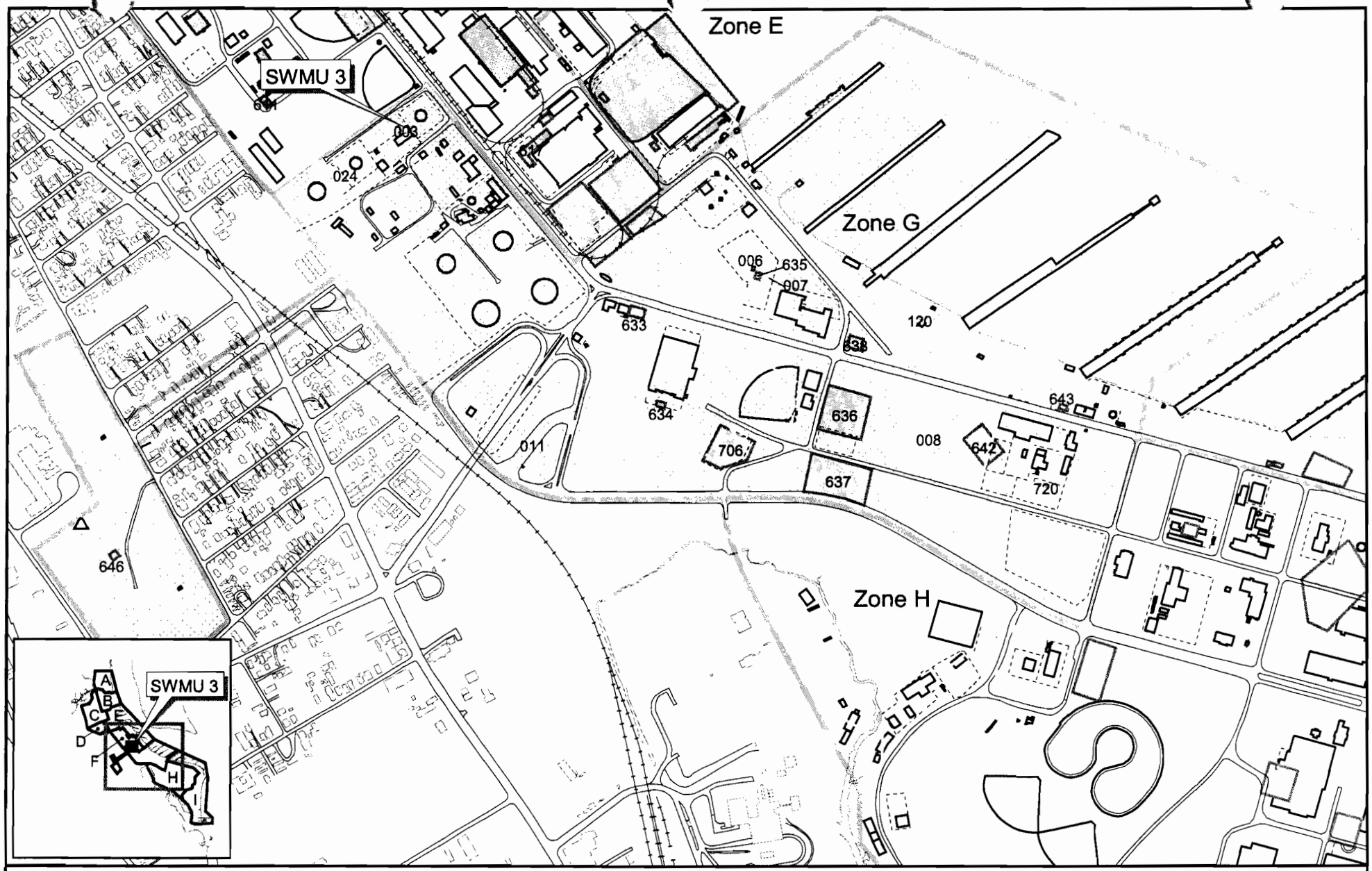

Fence
Railroads
Roads
Shoreline
AOC Boundary
SWMU Boundary
Buildings
Zone Boundary
Zone G

N

0 800 1600 Feet

1 inch = 750 feet

Figure 1-1
Site Location
SWMU 3, Zone G
Charleston Naval Complex

CH2MHILL

File Path: C:\18gis\Projects\Zone_G\zoneg_locationfig.apr, Date: 18 Nov 2002 7:31, User: NMOUDRY, SWMU 3 Figure 1-1 Zone G within CNC

NOTE: Aerial Photo [illegible] 997
NOTE: Original figu[illegible] in color

Fence
Roads
SWMU / AOC
Buildings
Zone Boundary

N

0 100 200 Feet

1 inch = 150 feet

Figure 1-2
Site Layout
SWMU 3, Zone G
Charleston Naval Complex

CH2MHILL

File Path: C:\18gis\Projects\Zone_G\zoneg_locationfig.apr, Date: 18 Nov 2002 7:36, User: NMOUDRY, SWMU 3 Figure 1-2 Site Layout

NOTE: Original figure created in color

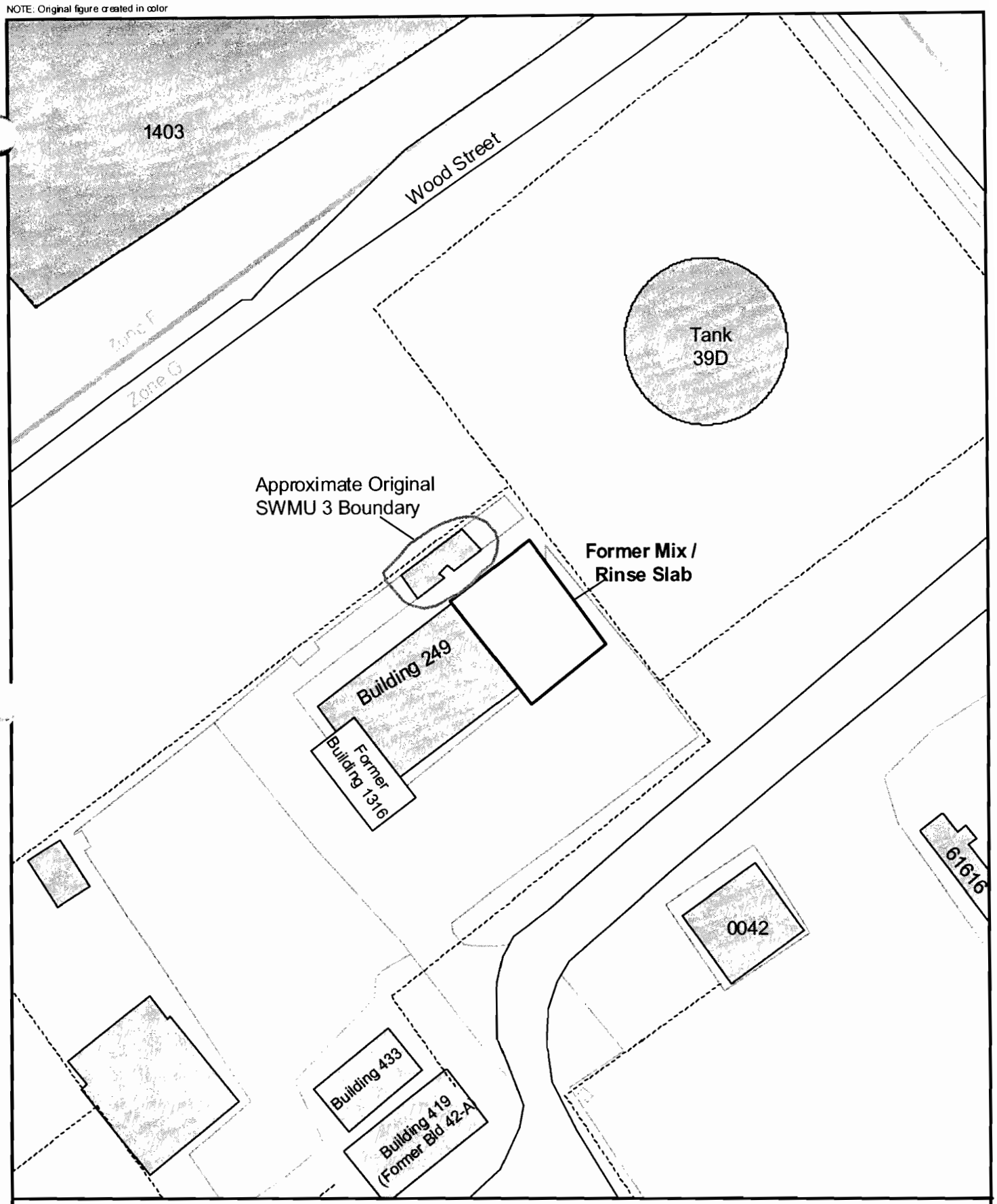

Original SWMU 3 Boundary
DET IM Excavation Area
Former Mix / Rinse Slab
Building 1316 Footprint
Fence
Roads
Pavement
Buildings
Zone Boundary

N

0 40 80 Feet

1 inch = 50 feet

Figure 1-3
Historical Features
SWMU 3, Zone G
Charleston Naval Complex

CH2MHILL

File Path: C:\18gis\Projects\Zone_G\SWMU3\apr\swmu3.apr. Date: 10 Jan 2003 7:26, User: NMOUDRY. * Figure 1-3 Historical Features

2.0 Summary of RFI Conclusions for SWMU 3

2.1 Overview of Previous Investigations

The following sequence of environmental work has been performed at SWMU 3 to date.

1980s- In 1982 a Confirmation Study (Geraghty and Miller, 1982) was performed at SWMU 3 as part of the Installation Restoration Program (IRP). Surface and subsurface soils were evaluated with four soil borings; samples were analyzed for arsenic, pesticides, herbicides and PCBs. Groundwater quality was evaluated with samples from two monitoring wells, analyzed for arsenic, pesticides, herbicides, and PCBs. All samples were collected from a 25 by 50-ft area directly north of a shed reported to be the former Building 42A. The results indicated that groundwater appeared to be unaffected by the former mix-rinse operation, but soils contained DDT and its metabolites, as well as heptachlor, BHCs, and PCBs.

1996- The RFI was conducted in 1996 and 1997 by the Navy/EnSafe team, and included installation and sampling of three shallow monitoring wells, and 10 soil borings for surface and subsurface soil sampling and analysis. Soil and groundwater samples were analyzed for metals, pesticides, and PCBs. Additional soil borings were completed in early 1997 to further delineate pesticides detected in soils during the first soil sampling event. The three monitoring wells were sampled four more times in 1997 and 1998. The results for only the first soil and groundwater sampling event were presented in the *Zone G RFI Report, Revision 0* (EnSafe, 1998a).

1998- An IM was conducted by the DET, which included removal of 22 yd^3 of pesticide/PCB-contaminated soil to a depth of 2 feet below land surface (ft bls). The excavation area was backfilled, and monitoring well G003GW003 was abandoned in place.

1999-2000- The *Zone G RFI Work Plan Addendum* (EnSafe, 2000) was prepared and implemented in late 1999 and early 2000. Six additional soil borings were installed and sampled to further delineate pesticides in soil, and to investigate areas to the north and east of the original concrete slab.

2001-2002 – CH2M-Jones continued soil and groundwater investigations to delineate the extent of soil with contaminant concentrations exceeding unrestricted (i.e., residential) land use criteria, to delineate hot spots of contaminated soil for removal, and assess groundwater quality.

The above investigations are summarized in this report, beginning with a summary of the RFI activities and conclusions from the *Zone G RFI Report, Revision 0* in the following subsections of Section 2.0.

2.2 RFI Sampling and Analysis

Soil and groundwater at SWMU 3 were sampled as part of the RFI in 1996 to determine whether contamination resulted from chemical and other waste disposal activities in the SWMU 3 area. The RFI soil and groundwater sample locations were presented in the *Zone G RFI Work Plan* (EnSafe, 1996) and were approved by SCDHEC after review of the sampling approach. The original RFI sampling locations are presented in Figure 2-1.

The initial SWMU 3 field sampling work included 10 soil borings with sampling of surface and subsurface soils, and installation and sampling of three shallow monitoring wells. Soil and groundwater samples were analyzed for metals, pesticides, and PCBs, with selected samples also analyzed for cyanide and semivolatile organic compounds (SVOCs). The second phase of investigation included sampling of surface and subsurface soils from 10 additional soil borings, with the same analyses, except that one soil sample was also analyzed for Synthetic Precipitation Leaching Procedure (SPLP) pesticides. Two more groundwater sampling events were conducted in 1997 for the same analytes. In response to SCDHEC comments, the wells were also resampled in December 1997 and April 1998 with samples analyzed for metals, volatile organic compounds (VOCs) and SVOCs. The *Zone G RFI Report, Revision 0* presented only the results of the first soil and groundwater sampling event.

2.2.1 Surface Soil Results

The RFI screening criteria for surface soil consisted of U.S. Environmental Protection Agency (EPA) Region III residential risk-based concentrations (RBCs) (hazard index [HI]=0.1 for non-carcinogens) for organic and inorganic compounds, and Zone G RFI background reference concentrations (BRC) for inorganic compounds. Analytical results from surface soil sampling were compared against these criteria with the following results:

- Nine pesticides were detected in RFI surface soil samples from SWMU 3. Alpha-chlordane, gamma-chlordane, 4,4'-DDE, and heptachlor were detected in surface soil at concentrations above their respective RBCs.

- Aroclor-1248 was detected in surface soil above its residential RBC (320 micrograms per kilogram [μg/kg]) at boring G003SB003 (28,000 μg/kg), but did not exceed the RBC in other surface soil samples.
- Dioxin (2,3,7,8-TCDD [TEQ]) was reported as detected in one duplicate surface soil sample, but below the action level of 1,000 nanograms per kilogram (ng/kg), which was used as the screening criterion.
- Twenty-one metals and cyanide were reported as detected in surface soils. Iron and manganese concentrations exceeded their residential RBCs in surface soil, and manganese also exceed its Zone G BRC.

Analytes that exceeded the screening criteria were further evaluated in the risk assessment to determine which of them were considered to be COCs at SWMU 3. The RFI human health risk assessment (HHRA) evaluated unrestricted (residential) and industrial (site worker) future land use scenarios. COCs were identified as any chemical with an Incremental Lifetime Cancer Risk (ILCR) of $1x10^{-6}$ or greater or whose hazard quotient (HQ) exceeds 0.1.

This evaluation resulted in Aroclor-1248, alpha-chlordane, and gamma-chlordane being identified as COCs for surface soil based on an unrestricted land use scenario. Of these, only Aroclor-1248 was identified as surface soil COC for the industrial land use scenario at SWMU 3.

2.2.2 Subsurface Soil Results

The screening criteria for inorganics in subsurface soil consisted of Zone G RFI BRCs, and both organic and inorganic chemicals detected in subsurface soil were screened against soil screening levels (SSLs) (based on dilution attenuation factor [DAF]=20); inorganic chemical concentrations were compared with the higher of their Zone G BRCs or SSL values. Analytical results from subsurface soil sampling were compared against these criteria with the following results:

- Six pesticides were detected in RFI subsurface soil samples at SWMU 3, but none exceeded their respective SSLs (DAF=20).
- No PCBs were detected in subsurface soil samples.
- Twenty-one metals and cyanide were detected in subsurface soil, but none exceeded their respective SSLs or BRCs.

No COCs were identified in the *Zone G RFI Report, Revision 0* for subsurface soil at SWMU 3.

2.2.3 Groundwater Results

Analytical results from the first groundwater sampling event were compared with the respective EPA Drinking Water Maximum Contaminant Levels (MCLs) and, for inorganic compounds, Zone G RFI grid well reference concentrations. Where MCLs were not specified for an analyte, the EPA Region III tap water RBC was used as a screening criterion. Analytical results from groundwater sampling were compared against these criteria with the following results:

- The RFI results indicated that no VOCs, SVOCs, pesticides, PCBs, or dioxins were detected in shallow groundwater samples from the three monitoring wells.
- Eighteen metals were detected in the SWMU 3 groundwater samples. Aluminum, beryllium, chromium, thallium, and vanadium exceeded their respective RBCs and grid-based reference concentrations.

Analytes that exceeded the screening criteria were further evaluated in the HHRA to determine which of them was considered a COC. COCs were identified as any chemical with an ILCR of $1x10^{-6}$ or greater, or whose HQ exceeds 0.1.

Based on the first quarter analytical results, the evaluation resulted in aluminum, beryllium, chromium, thallium, and vanadium being identified as COCs for groundwater at SWMU 3 based on an unrestricted (i.e., residential) land use scenario.

2.3 Conclusions and Recommendations from the *Zone G RFI Report, Revision 0*

Section 10.11.6 of the *Zone G RFI Report, Revision 0* presents the results of the HHRA conducted for SWMU 3. The following chemicals were identified as COCs in site soil and groundwater.

2.3.1 Surface Soil COCs

Aroclor-1248, alpha-chlordane, and gamma-chlordane were identified as COCs in surface soil at SWMU 3 under the unrestricted (i.e., residential) land use scenario. Aroclor-1248 was identified as a COC in surface soil at SWMU 3 under the industrial land use scenario.

2.3.2 Subsurface Soil COCs

No COCs were identified in the RFI report for subsurface soil at SWMU 3.

2.3.3 Groundwater COCs

Section 10.11.6 of the *Zone G RFI Report, Revision 0* identified aluminum, beryllium, chromium, thallium, and vanadium as COCs in groundwater at SWMU 3 under the unrestricted (i.e., residential land use scenario).

The RFI report recommended a CMS for soil and shallow groundwater at the site based on potential risks posed by the COCs. The COCs identified above are further addressed in Sections 3.0, 4.0, and 5.0 as targets of IMs and investigations, and, to the extent they remain onsite after the IMs, to determine if they are COCs based on current site conditions.

NOTE: Original figure in color

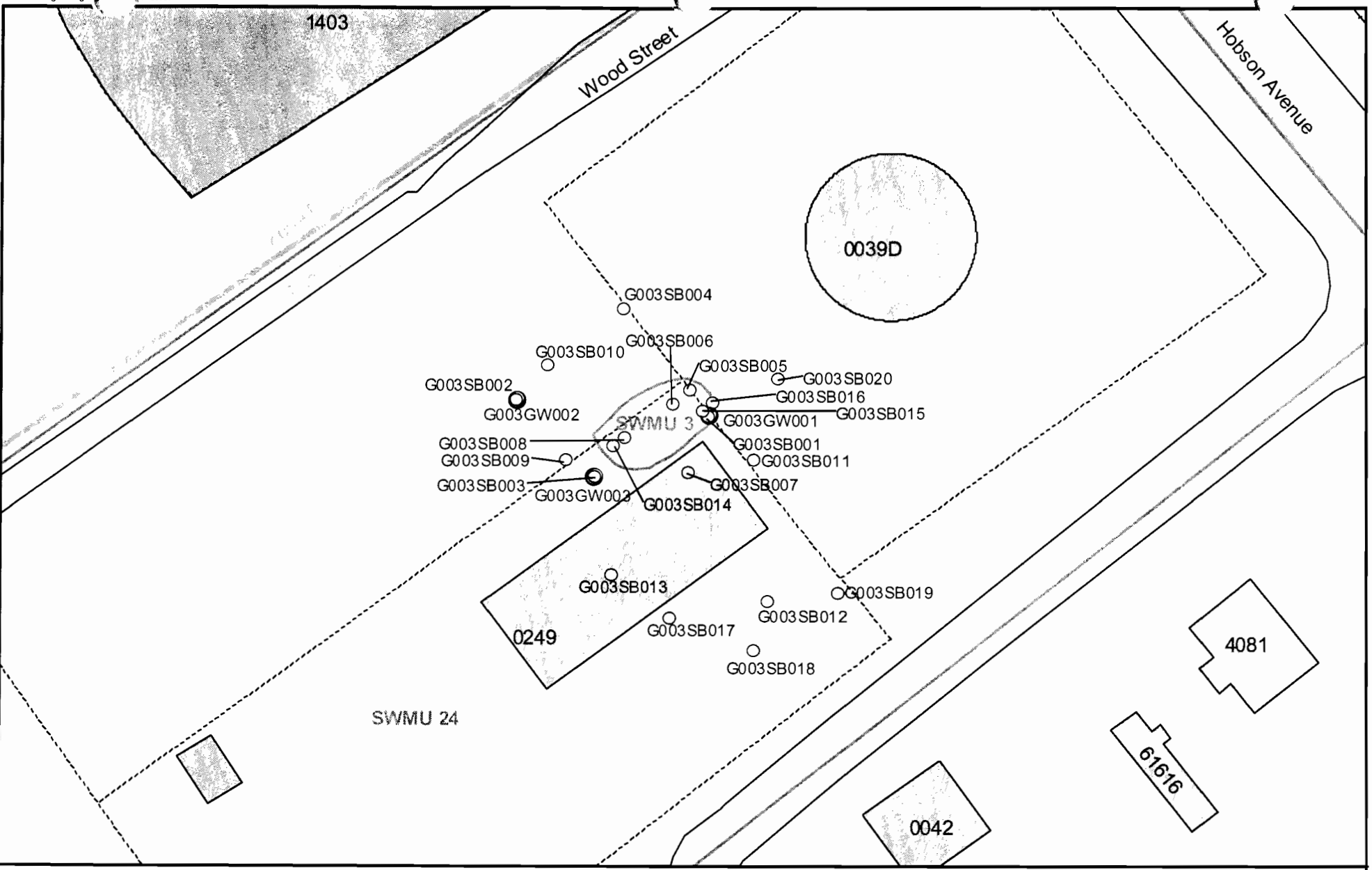

Soil Sample Location
Groundwater Sample Location
Fence
Roads
SWMU Boundary
Buildings
Zone Boundary

N

0 40 80 Feet

1 inch = 50 feet

Figure 2-1
Original RFI Sampling Locations
SWMU 3, Zone G
Charleston Naval Complex

CH2MHILL

File Path: c:\18gis\projects\zone_g\swmu3apr\swmu3.apr, Date: 18 Nov 2002 8:20, User: NMOUDRY, Figure 2-1 RFI Sampling Locations

Section 3.0

3.0 Summary of UST/AST Removals and Interim Measures at SWMU 3

This section summarizes information available about the status of any underground storage tanks (UST) or aboveground storage tanks (ASTs) at the site, as well as any IM activities performed at SWMU 3.

3.1 UST/AST Removals

Neither the *RCRA Facility Assessment (RFA) Report* (EBASCO, 1987) nor the *Zone G RFI Report, Revision 0* (EnSafe, 1998a) refers to the presence of any USTs or ASTs at SWMU 3. According to the Navy (NAVFAC, 2001), there were no storage tanks associated with former Buildings 1316 or 42-A, or with the present Building 249.

3.2 1998 Interim Measure (DET)

The DET conducted an IM in July 1998 to remove pesticide- and PCB-impacted soils. The objective of the IM was to reduce concentrations of contaminants at the site to less than the EPA Region III residential RBCs for chlordane, heptachlor, and DDE, and to reduce concentrations to less than the clean soil definition (40 CFR 761.125) for PCBs (1 part per million [ppm]). Soil was excavated to a depth of 2 feet in the area around a transformer pad on the north side of Building 249. A total of approximately 22 yd^3 of contaminated soils were removed, and the excavation area was backfilled. The IM activities required the in-place abandonment of monitoring well G003GW003. Appendix A presents the IM CR prepared by the DET for this site.

3.3 2002 Interim Measure (CH2M-Jones)

In October 2001, CH2M-Jones prepared and submitted a Phase I IMWP presenting a technical approach for delineation of pesticides in soils in SWMU 3. The delineation was to be carried out to meet unrestricted (i.e., residential) land use criteria. SCDHEC reviewed and approved the plan, and sampling was conducted in November 2001.

The results of the Phase I sampling were used to develop a Phase II IMWP submitted by CH2M-Jones in March 2002, which presented target soil excavation areas and proposed media cleanup standards (MCSs). Phase I MCSs are the lower of the EPA Region III

industrial RBC or the SSL for surface soil, and the EPA SSL for subsurface soil. The Phase II IMWP for soil excavation was submitted in March 2002, updated in a comment/response package in May 2002, and was implemented in July 2002. Phase II MCSs included the Phase I MCSs, but also included residential land use RBCs and "hot spot" criteria.

The objective of the IM was to remediate the surface soil to achieve industrial land use RBCs and, if feasible and cost effective, to achieve unrestricted (i.e., residential) land use RBCs. For subsurface soil, the IM objective was to remediate soil to generic or site-specific SSLs.

Three iterations of Sampling and Analysis Plans (SAPs) (Phases I, II, and III) for further soil delineation were submitted in March and April 2002, and implemented shortly thereafter. Concurrently, a separate SAP for groundwater sampling of existing wells was submitted in May 2002, with an Addendum issued in July 2002 to incorporate results of additional soil sampling, and to propose installation and sampling of 6 new monitoring wells.

The IMCR summarizing the soil removal IM is presented in Section 7.0 of this RFIRA/IMCR/CMSWP. The results of the additional groundwater sampling are discussed in Section 5.0. The analytical data for both of these efforts are presented as appendices to this submittal.

One supplemental surface soil removal area was added to the 2002 IM, as is discussed further in Section 7.0. At the conclusion of the 2002 IM, including this supplemental area, surface and subsurface soil cleanup objectives to levels that would allow unrestricted (residential) land use at this site were achieved. The site groundwater at SWMU 3 will require a CMS to address residual low-level pesticide contamination. A CMSWP is presented in Section 9.0 of this RFIRA/IMCR/CMSWP.

Section 4.0

4.0 Summary of Additional Investigations

This section describes the investigations that were conducted at SWMU 3 subsequent to the initial RFI. The soil and groundwater results conducted after the *Zone G RFI Report, Revision 0* (EnSafe, 1998a) was issued, are summarized and screened against applicable COPC screening criteria. Summaries of detected compounds are presented in Tables 4-1 (organics in surface soil), 4-2 (organics in subsurface soil), 4-3 (organics in groundwater), and 4-4 (inorganics in groundwater). Soil sample locations are presented in Figure 4-1 and groundwater monitoring well locations are presented in Figure 4-2. Appendix B contains the complete data summary tables for the additional investigations and Appendix C contains the data validation summary.

4.1 Soil Investigations

After the RFI investigation (1996 and 1998-2000) and the DET's IM (1998), CH2M-Jones continued soil investigations to complete the delineation of contaminants in surface and subsurface soil, to confirm the results of the IM, and to confirm the vertical and horizontal extent of contaminated soil proposed for removal. Figure 4-1 presents the sample locations at SWMU 3. These investigations were conducted over several phases, and are summarized in the following subsections. A summary of compounds detected above COPC screening criteria in the investigations conducted after the RFI is presented in Section 4.2.

4.1.1 1999 - 2000

Subsequent to submittal of the *Zone G RFI Report, Revision 0* in February 1998, and after completion of the 1998 soil removal IM, a second phase of soil boring investigations was performed, in which borings G003SB011 through G003SB014 were installed by the Navy/EnSafe team to address SCDHEC concerns about areas adjacent to the south side of the former concrete mix/rinse slab. Samples from boring G003SB012 contained levels of DDD and DDT that exceeded their RBC for unrestricted land use. Several additional groundwater sampling events were also conducted during the 1998 time frame.

In late 1999 and early 2000, EnSafe prepared and implemented an RFI Work Plan Addendum for installation and sampling of six more soil borings (G003SB015 through G003SB020) for further delineation of pesticides in surface and subsurface soils. The work included additional surface soil (0 to 1 ft bls) and subsurface soil (3 to 5 ft bls) sample

collection and analysis for pesticides. These additional borings were located outside of the existing SWMU boundary and IM area, to evaluate soils on the northern, eastern, and southern sides of the former concrete slab mix/rinse area.

This additional work was performed at SCDHEC's request, and included the advancement of two soil borings (G003SB015 and G003SB016) to sample surface and subsurface soil northeast and northwest of boring G003SB001; three additional soil borings (G003SB017 through G003SB019) were sampled to evaluate the area south of the former concrete slab; and boring G003SB020 was sampled to evaluate the area east of the slab outside the fence.

4.1.2 November 2001 and January 2002

In November 2001 and January 2002 soil samples were collected in accordance with the Phase I IMWP (CH2M-Jones, 2001). Twenty soil borings (G003SB021 through G003SB036 and G003SB039 through G003SB042) were advanced with a surface soil (0 to 1 ft bls) and subsurface soil (3 to 5 ft bls) sample collected from each boring. The samples were analyzed for VOCs and pesticides. Additionally, the samples collected from soil boring G003SB021 were also analyzed for PCBs.

4.1.3 March 2002

In March 2002, the investigated area was expanded further to include areas south of Building 249, and at Building 419 (previous Building 42-A). Twenty-seven soil borings (G003SB037, G003SB38 and G003SB043 through G003SB67) were advanced in accordance with the Phase II SAP (CH2M-Jones, 2002c). Surface soil samples were collected from borings G003SB037, G003SB038, and G003SB043 through G003SB059. Subsurface samples were also collected from most of these locations, except for soil borings G003SB043, G003SB045 through G003SB047, and G003SB050. Near-surface (1 to 2 ft bls) samples were collected from six sample locations (G003SB060 through G003SB062 and G003SB064 through G003SB066). One sample, 003SB06304, was collected at 5 to 6 ft bls. A subsurface sample was also collected from soil boring G003SB067. With the exception of sample 003SB05001, which was analyzed for VOCs only, all of these samples were analyzed for pesticides. The subsurface samples collected from eight locations (G003SB051 through G003SB058) were also analyzed for VOCs.

4.1.4 May 2002

In May 2002 seventeen soil borings (G003SB068 through G003SB084) were advanced in accordance with the Phase III SAP (CH2M-Jones, 2002d). Near-surface samples (1 to 3 ft bls) were collected from each boring. Surface samples were collected from soil borings

G003SB068 through G003SB081. Subsurface samples were also collected from three locations (G003SB070, G003SB077, and G003SB078). All of these samples were analyzed for pesticides.

4.1.5 June 2002

In June 2002 eight soil borings (G003SB085 through G003SB092) were advanced in accordance with the Phase II SAP Addendum issued by CH2M-Jones in 2002. Surface soil only was collected at soil borings G003SB085 and G003SB086. Subsurface soil only was collected at soil borings G003SB087 and G003SB092. Surface and near-surface (1 to 2 ft bls) samples were collected at soil borings G003SB088 through G003SB091. All of these samples were analyzed for pesticides. A waste characterization (toxicity characteristic leaching procedure [TCLP]) sample was also collected.

In June 2002 five soil borings (G003SB093 through G003SB097) were advanced in accordance with the Phase IV SAP issued by CH2M-Jones in 2002. Surface samples were collected at each soil boring. A near-surface (1 to 2 ft bls) sample was also collected at soil borings G003SB094 and G003SB095. All of these samples were analyzed for pesticides.

4.1.6 September 2002

In September 2002 one surface soil sample (003SB09801) was collected and analyzed for pesticides.

4.1.7 December 2002

In December 2002, three confirmation samples (003SB09901 through 003SB10101) were collected around the proposed supplemental IM removal area (surface soil) at station G003SB076. At this sample location, dieldrin exceeded its residential and industrial RBCs, SSLs [DAF=10], and the Zone G BRC. At station G003SB091, heptachlor epoxide exceeded residential RBCs in surface soil. Three additional surface soil samples (003SB10201 through 003SB10401) were collected to check the extent of heptachlor epoxide in this area.

Locations of these samples are presented in Figure 4-1. Results from these sampling events were reviewed prior to completion of the 2002 IM. Delineation of all COCs at the site was complete, and final adjustment of IM excavation areas was made.

4.2 Results and Screening of Additional Soil Investigations

The analytical results from these soil samples were compared to applicable screening criteria. For surface soil, the analytical results for organic compounds were compared to EPA Region III RBCs (HI=0.1 for noncarcinogens) and SSLs (DAF=1 for VOCs, DAF=10 for

other compounds). For subsurface soil, organic results were compared to SSLs (DAF=1 for VOCs, DAF=10 for other compounds).

4.2.1 Organic Compounds in Surface Soil

Analytical results for organic compounds were compared to the above screening criteria with the following results. These results are presented in Table 4-1.

Volatile Organic Compounds

No VOCs were detected above their respective RBCs in surface soil.

- Acetone was detected in two samples (003SB02401, 24 J mg/kg and 003SB03001, 1 J mg/kg) above its SSL (DAF=1) (0.8 mg/kg).
- Benzene was detected in one sample (003SB02401, 0.0034 J mg/kg) above its SSL (DAF=1) of 0.002 mg/kg.

Acetone and benzene are identified as COPCs in surface soil due to their potential to impact on shallow groundwater.

Pesticides

Sixteen pesticides were detected in surface soil samples from SWMU 3. Ten pesticides were detected above screening criteria in at least one sample.

- Alpha-chlordane was detected in two samples (003SB02601, 17 J mg/kg and 003SB05601, 2 J mg/kg) at concentrations that exceeded its RBC. Alpha-chlordane also exceeded its SSL in sample 003SB02601.
- Chlordane was detected in five samples (003SB02601, 140 mg/kg; 003SB04001, 2.4 J mg/kg; 003SB05601, 9.2 mg/kg; 003SB07901, 5.9 mg/kg; and 003SB09001, 4.7 mg/kg) above its RBC. Chlordane was also exceeded its SSL in three of these samples (003SB02601, 003SB05601, and 003SB07901).
- Dieldrin was detected above its SSL in 23 surface soil samples and above its SSL and RBC in nine samples (see Table 4-1). Dieldrin concentrations ranged from 0.0023 to 0.78 mg/kg in these samples.
- Gamma-BHC (lindane) was detected in two surface soil samples at SWMU 3. One sample (003SB07101, 0.07 mg/kg) contained lindane at a concentration that exceeded its SSL.

- Gamma-chlordane was detected at concentrations that exceed screening criteria in two samples (003SB02601, 19 mg/kg and 003SB05601, 2.1 mg/kg. Gamma-chlordane was detected above its RBC in sample 003SB05601 and above its RBC and SSL in sample 003SB02601.
- Heptachlor was detected above its RBC in one sample (003SB02601, 1.6 J mg/kg).
- Heptachlor epoxide was detected above its RBC in four surface soil samples (003SB05601, 0.11 J mg/kg; 003SB07901, 0.63 mg/kg; 003SB09001, 0.36 mg/kg; and 003SB09101, 0.12 mg/kg). One sample (003SB07901) also contained heptachlor epoxide above its SSL.
- DDD was detected above its RBC in four surface soil samples (003SB01801, 310 mg/kg; 003SB02801, 7.6 mg/kg; 003SB04401, 2.8 mg/kg; and 003SB04801, 10 mg/kg). Sample 003SB04801 also contained DDD above its SSL.
- DDE was detected above its RBC in eight surface soil samples (see Table 4-1). DDE was detected above its SSL in one sample.
- DDT was detected above its RBC in 21 surface soil samples (see Table 4-1). Six of these samples (003SB02801, 81 mg/kg; 003SB03401, 36 mg/kg; and 003SB04801, 68 mg/kg) also contained DDT above its SSL.

Based on the preceding discussion, alpha-chlordane, chlordane, dieldrin, gamma-chlordane, heptachlor, heptachlor epoxide, DDD, DDE, and DDT are identified as surface soil COPCs based on protection of human health. Acetone, benzene, alpha-chlordane, chlordane, dieldrin, gamma-chlordane, heptachlor epoxide, DDD, and DDT are identified as surface soil COPCs based on potential for leaching to groundwater.

4.2.2 Organic Compounds in Subsurface Soil

Analytical results for organic compounds were compared to the screening criteria described at the beginning of this section with the following results. These results are presented in Table 4-2.

Volatile Organic Compounds

Two VOCs were detected in subsurface soil samples at concentrations that exceed screening criteria.

- PCE was detected above its SSL in five samples (003SB04002, 0.0054 mg/kg; 003SB04102, 0.027 mg/kg; 003SB04202, 0.0071 mg/kg; 003SB05102, 0.013 mg/kg; and 003SB05202, 0.0037 mg/kg).
- TCE was detected in six samples (see Table 4-2) at concentrations that exceed its SSL. TCE concentrations ranged from 0.021 to 0.043 mg/kg.

PCE and TCE are identified as COPCs in subsurface soil based on protection of shallow groundwater.

Pesticides

Seventeen pesticides were detected in subsurface soil samples collected from SWMU 3. Eight pesticides, alpha-chlordane, beta-BHC, chlordane, dieldrin, gamma-BHC, gamma-chlordane, DDD, and DDT were detected at concentrations that exceeded their respective SSLs.

- Alpha-chlordane was present above its SSL in sample 003SB06403 (21 J mg/kg).
- Beta-BHC was present above its SSL in samples 003SB08103 (0.017 J mg/kg), 003SB08203 (0.29 J mg/kg), and 003SB09003 (0.0023 J mg/kg).
- Chlordane was detected above its SSL in four samples (003SB06403, 130 mg/kg; 003SB07903, 5.4 mg/kg; 003SB08103, 7.5 mg/kg; and 003SB08203, 26 mg/kg).
- Dieldrin was present above its SSL in 19 subsurface soil samples (see Table 4-2). These dieldrin concentrations ranged from 0.0021 J to 0.58 mg/kg.
- Gamma-BHC was present above its SSL in samples 003SB07103 (0.019 mg/kg), 003SB08103 (0.05 J mg/kg), and 003SB08203 (1.5 mg/kg).
- Gamma-chlordane was detected above its SSL in one sample (003SB06403, 25 mg/kg).
- DDD was detected above its SSL in one sample (003SB06103, 14 J mg/kg).
- DDT was present above its SSL in five subsurface soil samples (003SB01203, 73 mg/kg; 003SB06003, 53 J mg/kg; 003SB06103, 310 mg/kg; and 003SB07303, 31 mg/kg).

Based on these data, alpha-chlordane, beta-BHC, chlordane, dieldrin, gamma-BHC, gamma-chlordane, DDD, and DDT are identified as COPCs in subsurface soil based on potential for leaching to groundwater.

4.3 Groundwater Investigation

Three groundwater sampling events were conducted at the three site monitoring wells. The first sampling event was conducted in November 1996 by the Navy/EnSafe team. Data for the samples collected during the first sampling event were summarized and presented in the *Zone G RFI Report, Revision 0* (EnSafe, 1998). The first set of groundwater samples was analyzed for pesticides, organophosporus pesticides, PCBs and metals. A duplicate sample was also collected and analyzed for VOCs, SVOCs, and dioxins. Only metals were detected in these samples.

EnSafe collected four additional sets of groundwater samples from the three site monitoring wells in May 1997, September 1997, December 1997, and April 1998. The validated data from the May and September 1997samples were previously presented in the RFI report and are also included in the tables of this section, as they were not previously compared to COPC screening criteria. The data from the December 1997 and April 1998 sampling efforts are also screened in this section (the data validation report for the December 1997 and April 1998 sampling efforts are in Appendix C). Monitoring well locations are presented in Figure 4-2.

In May 2002, CH2M-Jones submitted a *Groundwater Sampling and Analysis Plan* (CH2M-Jones, 2002e). The SAP proposed installing six additional monitoring wells at SWMU 3. Samples were collected from all eight monitoring wells (G003GW001, G003GW002, and G003GW004 through G006GW009) at the site. Monitoring well G003GW003 was abandoned as part of an IM conducted at the site. The samples were collected in October 2002 and were analyzed for metals, pesticides, and VOCs. Copies of the boring logs and well completion reports for the newly installed monitoring wells are provided in Appendix D.

Shallow groundwater potentiometric isocontours for the SWMU 3 area are shown in Figure 4-2. The figure is based on water level data collected from the existing SWMU 3 monitoring wells on October 29, 2002, as shown in Table 4-5. The data show local shallow groundwater flow in a south-southeasterly direction across the SWMU 3/SWMU 24 area (SWMU 3 lies within SWMU 24), with a horizontal gradient decrease of approximately 2 feet from north to south. Both the average water table elevation (6 to 8 feet mean sea level [ft msl]) and horizontal gradient appear to be higher during this period than during March 2002, when a shallow groundwater potentiometric map was developed for SWMU 24 (see Figure 4-3).

The SWMU 24 map was developed using water level measurements from approximately 30 monitoring wells spread across the northern Zone G area, but using only one well from within SWMU 3. The SWMU 24 map depicted relatively stagnant low flow conditions in the

shallow aquifer in the SWMU 3 area, with less than one foot of hydraulic gradient across the area, water table elevations around 5 ft msl, and some indications of outward radial flow from the SWMU 3 area, with regional flow directions trending eastward. The differences in these two maps are believed to be due to drier conditions in March 2002, and due to the spatial distribution differences of the wells measured.

Tables 4-3 and 4-4 present a summary of detected organic and inorganic (respectively) compounds in SWMU 3 groundwater samples collected after November 1997. The locations of SWMU 3 monitoring wells are shown on Figure 4-2, along with aquifer potentiometric surface contours from recent water level measurements. This section provides a summary of these results.

The analytical results from these groundwater samples were compared to MCLs (or residential RBCs if MCLs were not available) and, for inorganic compounds, the Zone G range of background concentrations for shallow groundwater.

4.3.1 Organic Compounds in Groundwater

Pesticides

Until the most recent groundwater sampling event, no pesticides had been detected in groundwater samples from this site. For the groundwater samples collected during the October 2002 event, 17 pesticides (see Table 4-3) were detected in SWMU 3 groundwater samples. Alpha-BHC, delta-BHC, dieldrin, heptachlor epoxide, DDD, DDE, and DDT were detected at concentrations that exceeded their MCLs (or RBCs in the absence of an MCL) in at least one sample. All of the pesticide detections occurred in the newly installed monitoring wells.

- Alpha-BHC was detected in a single sample collected from monitoring well G003GW007. The detected concentration (0.013 J μg/L) was estimated and near the detection limit as indicated by the "J" qualifier, and marginally above its RBC (an MCL is not available for alpha-BHC). Based on these considerations, alpha-BHC is identified as a COPC in SWMU 3 groundwater.

- Delta-BHC was detected in a single sample collected from monitoring well G003GW007 (0.017 J μg/L). The detected concentration was estimated and near the detection limit as indicated by the "J" qualifier, and marginally above its RBC (an MCL is not available for delta-BHC). Based on these considerations, delta-BHC is identified as a COPC in SWMU 3 groundwater.

- Dieldrin was detected in two samples collected from site monitoring wells. It was detected above its RBC (an MCL is not available for dieldrin) in samples from both monitoring wells (G003GW005, 0.061 μg/L and G003GW007, 0.67 μg/L). Based on these considerations, dieldrin is identified as a COPC in SWMU 3 groundwater.

- Heptachlor epoxide was detected in five samples collected from site monitoring wells. It was detected above its MCL in one sample collected from monitoring well G003GW006 (0.21 J μg/L). Based on these considerations, heptachlor epoxide is identified as a COPC in SWMU 3 groundwater.

- DDD was detected in two samples collected from site monitoring wells. It was detected above its RBC (an MCL is not available for DDD) in the sample collected from monitoring well G003GW005 (1 J μg/L). The detected concentration was estimated and near the detection limit as indicated by the "J" qualifier. Based on these considerations, DDD is identified as a COPC in SWMU 3 groundwater.

- DDE was detected in two samples collected from site monitoring wells. It was detected above its RBC (an MCL is not available for DDE) in the sample collected from monitoring well G003GW005 (0.21 μg/L). Based on these considerations, DDE is identified as a COPC in SWMU 3 groundwater.

- DDT was detected in a two samples collected from site monitoring wells. It was detected above its RBC (an MCL is not available for DDT) in the samples collected from both monitoring wells (G003GW005, 1.2 μg/L and G003GW006, 1.6 J μg/L). Based on these considerations, DDT is identified as a COPC in SWMU 3 groundwater.

Alpha-BHC, delta-BHC, dieldrin, heptachlor epoxide, DDD, DDE, and DDT are identified as COPCs for shallow groundwater based on these data. The presence of these constituents is further discussed in Section 5.0.

Volatile Organic Compounds

One VOC, toluene, was detected in SWMU 3 groundwater samples during the most recent sampling event. The detected concentration was below the MCL. Therefore, no VOCs were identified as shallow groundwater COPCs.

4.3.2 Inorganic Compounds in Groundwater

Twenty metals were detected in groundwater samples collected after the first round of sampling at SWMU 3.

Aluminum

Aluminum was detected in 15 samples collected from site monitoring wells. It exceeded its residential RBC (HI=0.1, an MCL is not available for aluminum) and the Zone G range of background concentrations in two samples in which it was detected (it was not detected above its RBC based on a HI=1.0) in well G003GW003 during RFI sampling events of 1997 and 1998. Based on these data, aluminum is identified as a COPC.

Aluminum is identified as a COPC for shallow groundwater at SWMU 3. The presence of aluminum is further discussed in Section 5.0.

TABLE 4-1
Organic Compounds Detected in Surface Soil - Additional Investigation
RFI Report Addendum/IM Completion Report/CMS Work Plan, SWMU 3, Zone G, Charleston Naval Complex

Analyte	Sample Location	Concentration (mg/kg)	Qualifier	Date Collected	EPA Region III RBC [a] (HI=0.1)	SSL [b] (DAF=10)
VOCs						
Acetone	G003SB021	0.14	J	11/29/01	780	0.8
	G003SB023	0.12	J	11/29/01		
	G003SB024	**24**	J	11/29/01		
	G003SB025	0.12	J	11/29/01		
	G003SB026	0.12	J	11/29/01		
	G003SB029	0.56	J	11/29/01		
	G003SB030	**1**	J	11/29/01		
	G003SB031	0.31	J	11/29/01		
	G003SB034	0.28	J	11/29/01		
	G003SB035	0.15	J	11/29/01		
	G003SB036	0.2	J	11/29/01		
	G003SB050	0.26	J	03/28/02		
Benzene [c]	G003SB024	**0.0034**	J	11/29/01	12	0.002
Bromomethane	G003SB050	0.0051	J	03/28/02	11	0.001
Carbon Disulfide	G003SB023	0.0044	J	11/29/01	780	2
	G003SB024	0.01	J	11/29/01		
	G003SB031	0.0073	J	11/29/01		
	G003SB036	0.0022	J	11/29/01		
Ethylbenzene	G003SB021	0.0057	=	11/29/01	780	0.7
	G003SB024	0.0029	J	11/29/01		
	G003SB029	0.0022	J	11/29/01		
m+p Xylene	G003SB021	0.037	=	11/29/01	16,000	9
	G003SB029	0.012	=	11/29/01		
Methyl ethyl ketone (2-Butanone)	G003SB021	0.014	=	11/29/01	4,700	NA
	G003SB023	0.014	J	11/29/01		
	G003SB024	0.022	J	11/29/01		

TABLE 4-1
Organic Compounds Detected in Surface Soil - Additional Investigation
RFI Report Addendum/IM Completion Report/CMS Work Plan, SWMU 3, Zone G, Charleston Naval Complex

Analyte	Sample Location	Concentration (mg/kg)	Qualifier	Date Collected	EPA Region III RBC [a] (HI=0.1)	SSL [b] (DAF=10)
Methyl ethyl ketone (2-Butanone)	G003SB025	0.01	J	11/29/01	4,700	NA
	G003SB026	0.0078	J	11/29/01		
	G003SB029	0.008	J	11/29/01		
	G003SB031	0.011	=	11/29/01		
	G003SB036	0.0081	J	11/29/01		
	G003SB050	0.029	J	03/28/02		
o-Xylene	G003SB021	0.012	=	11/29/01	16,000	9
	G003SB029	0.0052	=	11/29/01		
Toluene	G003SB021	0.0023	J	11/29/01	1,600	0.6
	G003SB024	0.0031	J	11/29/01		
	G003SB039	0.0051	J	01/15/02		
	G003SB040	0.0046	J	01/15/02		
	G003SB041	0.002	J	01/15/02		
	G003SB042	0.0048	J	01/15/02		
Xylenes, Total	G003SB021	0.049	=	11/29/01	1,600	9
	G003SB029	0.018	=	11/29/01		
Pesticides						
Alpha-chlordane [c]	G003SB013	0.0071	J	07/30/99	1.8	5
	G003SB015	0.017	J	12/17/99		
	G003SB021	0.0035	=	11/29/01		
	G003SB026	**17**	J	11/29/01		
	G003SB027	0.00033	J	11/29/01		
	G003SB031	0.0031	J	11/29/01		
	G003SB032	0.069	=	11/28/01		
	G003SB033	0.3	=	11/29/01		
	G003SB034	0.13	=	11/29/01		
	G003SB039	0.75	=	01/15/02		
	G003SB040	0.38	=	01/15/02		

TABLE 4-1
Organic Compounds Detected in Surface Soil - Additional Investigation
RFI Report Addendum/IM Completion Report/CMS Work Plan, SWMU 3, Zone G, Charleston Naval Complex

Analyte	Sample Location	Concentration (mg/kg)	Qualifier	Date Collected	EPA Region III RBC [a] (HI=0.1)	SSL [b] (DAF=10)
Alpha-chlordane [c]	G003SB041	0.12	=	01/15/02	1.8	5
	G003SB042	0.052	J	01/15/02		
	G003SB045	0.065	J	03/27/02		
	G003SB046	0.00046	J	03/27/02		
	G003SB047	0.16	J	03/27/02		
	G003SB049	0.034	=	03/27/02		
	G003SB051	0.085	=	03/27/02		
	G003SB052	0.17	=	03/27/02		
	G003SB053	0.00046	J	03/28/02		
	G003SB054	0.044	=	03/27/02		
	G003SB055	0.075	J	03/27/02		
	G003SB056	2	J	03/27/02		
	G003SB057	0.22	J	03/27/02		
	G003SB058	0.099	J	03/27/02		
	G003SB068	0.0033	J	05/13/02		
	G003SB069	0.0029	=	05/13/02		
	G003SB071	0.15	=	05/15/02		
	G003SB072	0.27	J	05/13/02		
	G003SB073	0.046	=	05/15/02		
	G003SB074	0.0019	J	05/13/02		
	G003SB075	0.052	J	05/15/02		
	G003SB076	0.065	=	05/15/02		
	G003SB077	0.08	J	05/15/02		
	G003SB078	0.14	J	05/15/02		
	G003SB079	1	=	05/15/02		
	G003SB080	0.034	=	05/15/02		
	G003SB081	0.065	=	05/15/02		
	G003SB085	0.053	J	06/13/02		
	G003SB086	0.0061	J	06/13/02		
	G003SB088	0.02	J	06/13/02		

TABLE 4-1
Organic Compounds Detected in Surface Soil - Additional Investigation
RFI Report Addendum/IM Completion Report/CMS Work Plan, SWMU 3, Zone G, Charleston Naval Complex

Analyte	Sample Location	Concentration (mg/kg)	Qualifier	Date Collected	EPA Region III RBC [a] (HI=0.1)	SSL [b] (DAF=10)
Alpha-chlordane [c]	G003SB090	0.91	J	06/13/02	1.8	5
	G003SB091	0.4	J	06/13/02		
	G003SB093	0.045	J	07/25/02		
	G003SB097	0.039	J	07/25/02		
	G003SB098	0.00039	J	09/27/02		
	G003SB102	0.024	J	12/06/02		
	G003SB103	0.0024	J	12/06/02		
	G003SB104	0.016	J	12/06/02		
Chlordane [c]	G003SB026	**140**	=	11/29/01	1.8	5
	G003SB040	**2.4**	J	01/15/02		
	G003SB041	0.44	J	01/15/02		
	G003SB047	0.83	J	03/27/02		
	G003SB054	0.14	=	03/27/02		
	G003SB055	0.4	=	03/27/02		
	G003SB056	**9.2**	=	03/27/02		
	G003SB057	0.88	=	03/27/02		
	G003SB058	0.56	=	03/27/02		
	G003SB071	1.3	=	05/15/02		
	G003SB072	1.5	J	05/13/02		
	G003SB073	0.36	=	05/15/02		
	G003SB075	0.42	J	05/15/02		
	G003SB077	0.59	=	05/15/02		
	G003SB078	1.1	=	05/15/02		
	G003SB079	**5.9**	=	05/15/02		
	G003SB080	0.11	=	05/15/02		
	G003SB081	0.74	=	05/15/02		
	G003SB085	0.49	=	06/13/02		
	G003SB088	0.11	=	06/13/02		
	G003SB090	**4.7**	=	06/13/02		

TABLE 4-1
Organic Compounds Detected in Surface Soil - Additional Investigation
RFI Report Addendum/IM Completion Report/CMS Work Plan, SWMU 3, Zone G, Charleston Naval Complex

Analyte	Sample Location	Concentration (mg/kg)	Qualifier	Date Collected	EPA Region III RBC [a] (HI=0.1)	SSL [b] (DAF=10)
Chlordane [c]	G003SB091	1.8	=	06/13/02	1.8	5
	G003SB093	0.24	J	07/25/02		
	G003SB102	0.11	J	12/06/02		
Dieldrin [c]	G003SB021	0.00064	J	11/29/01	0.04	0.002
	G003SB026	**0.41**	J	11/29/01		
	G003SB032	**0.027**	J	11/28/01		
	G003SB033	**0.12**	J	11/29/01		
	G003SB039	**0.016**	J	01/15/02		
	G003SB040	**0.0098**	J	01/15/02		
	G003SB041	**0.021**	=	01/15/02		
	G003SB042	**0.0066**	J	01/15/02		
	G003SB047	**0.029**	J	03/27/02		
	G003SB049	**0.059**	=	03/27/02		
	G003SB051	**0.022**	J	03/27/02		
	G003SB052	**0.04**	J	03/27/02		
	G003SB054	**0.0047**	J	03/27/02		
	G003SB055	**0.02**	=	03/27/02		
	G003SB056	**0.56**	J	03/27/02		
	G003SB057	**0.015**	J	03/27/02		
	G003SB058	**0.012**	J	03/27/02		
	G003SB068	**0.0023**	J	05/13/02		
	G003SB069	0.00091	J	05/13/02		
	G003SB071	**0.0042**	J	05/15/02		
	G003SB072	**0.02**	J	05/13/02		
	G003SB073	**0.068**	=	05/15/02		
	G003SB074	0.00071	J	05/13/02		
	G003SB075	**0.016**	J	05/15/02		
	G003SB076	**0.78**	=	05/15/02		
	G003SB077	**0.061**	=	05/15/02		

TABLE 4-1
Organic Compounds Detected in Surface Soil - Additional Investigation
RFI Report Addendum/IM Completion Report/CMS Work Plan, SWMU 3, Zone G, Charleston Naval Complex

Analyte	Sample Location	Concentration (mg/kg)	Qualifier	Date Collected	EPA Region III RBC [a] (HI=0.1)	SSL [b] (DAF=10)
Dieldrin [c]	G003SB078	**0.035**	=	05/15/02	0.04	0.002
	G003SB079	**0.44**	=	05/15/02		
	G003SB080	**0.014**	=	05/15/02		
	G003SB081	**0.0043**	J	05/15/02		
	G003SB085	0.00095	J	06/13/02		
	G003SB088	**0.0057**	=	06/13/02		
	G003SB090	**0.085**	=	06/13/02		
	G003SB091	**0.039**	=	06/13/02		
	G003SB093	**0.0071**	J	07/25/02		
	G003SB097	**0.012**	J	07/25/02		
	G003SB099	**0.055**	J	12/06/02		
	G003SB100	**0.014**	J	12/06/02		
	G003SB101	**0.011**	J	12/06/02		
	G003SB102	**0.0051**	J	12/06/02		
	G003SB103	0.00036	J	12/06/02		
	G003SB104	0.0014	J	12/06/02		
Endosulfan I	G003SB039	0.021	J	01/15/02	47	9
	G003SB042	0.0016	J	01/15/02		
	G003SB080	0.00058	J	05/15/02		
	G003SB085	0.0032	=	06/13/02		
Endosulfan II	G003SB080	0.0024	J	05/15/02	47	9
	G003SB093	0.0013	J	07/25/02		
Endosulfan Sulfate	G003SB022	0.001	J	11/29/01	47	9
	G003SB024	0.00089	J	11/29/01		
	G003SB104	0.0023	J	12/06/02		
Endrin	G003SB076	0.012	J	05/15/02	2.3	0.5
Endrin Aldehyde	G003SB021	0.001	J	11/29/01	2.3	0.5
	G003SB091	0.0028	J	06/13/02		

TABLE 4-1
Organic Compounds Detected in Surface Soil - Additional Investigation
RFI Report Addendum/IM Completion Report/CMS Work Plan, SWMU 3, Zone G, Charleston Naval Complex

Analyte	Sample Location	Concentration (mg/kg)	Qualifier	Date Collected	EPA Region III RBC [a] (HI=0.1)	SSL [b] (DAF=10)
Endrin Ketone	G003SB024	0.00093	J	11/29/01	2.3	0.5
	G003SB027	0.0014	J	11/29/01		
	G003SB076	0.0073	J	05/15/02		
	G003SB096	0.0022	J	07/25/02		
	G003SB103	0.0024	J	12/06/02		
Gamma-BHC (Lindane) [c]	G003SB057	0.0022	J	03/27/02	0.49	0.0045
	G003SB071	**0.07**	=	05/15/02		
Gamma-chlordane [c]	G003SB013	0.0056	J	07/30/99	1.8	5
	G003SB015	0.023	J	12/17/99		
	G003SB021	0.0042	=	11/29/01		
	G003SB024	0.00067	J	11/29/01		
	G003SB026	**19**	=	11/29/01		
	G003SB027	0.00074	J	11/29/01		
	G003SB028	0.32	J	11/29/01		
	G003SB029	0.026	J	11/29/01		
	G003SB031	0.0044	J	11/29/01		
	G003SB032	0.077	=	11/28/01		
	G003SB033	0.18	=	11/29/01		
	G003SB034	0.23	=	11/29/01		
	G003SB036	0.0003	J	11/29/01		
	G003SB039	0.48	=	01/15/02		
	G003SB040	0.4	=	01/15/02		
	G003SB041	0.08	=	01/15/02		
	G003SB042	0.059	=	01/15/02		
	G003SB044	0.079	J	03/27/02		
	G003SB045	0.05	J	03/27/02		
	G003SB046	0.00088	J	03/27/02		
	G003SB047	0.16	J	03/27/02		
	G003SB049	0.027	J	03/27/02		

TABLE 4-1
Organic Compounds Detected in Surface Soil - Additional Investigation
RFI Report Addendum/IM Completion Report/CMS Work Plan, SWMU 3, Zone G, Charleston Naval Complex

Analyte	Sample Location	Concentration (mg/kg)	Qualifier	Date Collected	EPA Region III RBC [a] (HI=0.1)	SSL [b] (DAF=10)
Gamma-chlordane [c]	G003SB051	0.098	=	03/27/02	1.8	5
	G003SB052	0.13	=	03/27/02		
	G003SB053	0.00046	J	03/28/02		
	G003SB054	0.032	=	03/27/02		
	G003SB055	0.077	=	03/27/02		
	G003SB056	**2.1**	=	03/27/02		
	G003SB057	0.22	=	03/27/02		
	G003SB058	0.11	=	03/27/02		
	G003SB067	0.11	J	03/27/02		
	G003SB068	0.005	J	05/13/02		
	G003SB069	0.0073	=	05/13/02		
	G003SB070	0.00038	J	05/15/02		
	G003SB071	0.15	=	05/15/02		
	G003SB072	0.26	J	05/13/02		
	G003SB073	0.07	=	05/15/02		
	G003SB074	0.0027	J	05/13/02		
	G003SB075	0.054	J	05/15/02		
	G003SB076	0.051	=	05/15/02		
	G003SB077	0.097	=	05/15/02		
	G003SB078	0.15	=	05/15/02		
	G003SB079	1.2	=	05/15/02		
	G003SB080	0.019	=	05/15/02		
	G003SB081	0.1	=	05/15/02		
	G003SB085	0.053	=	06/13/02		
	G003SB088	0.023	=	06/13/02		
	G003SB090	1.3	=	06/13/02		
	G003SB091	0.4	=	06/13/02		
	G003SB093	0.042	J	07/25/02		
	G003SB095	0.0098	J	07/25/02		
	G003SB097	0.051	=	07/25/02		

TABLE 4-1
Organic Compounds Detected in Surface Soil - Additional Investigation
RFI Report Addendum/IM Completion Report/CMS Work Plan, SWMU 3, Zone G, Charleston Naval Complex

Analyte	Sample Location	Concentration (mg/kg)	Qualifier	Date Collected	EPA Region III RBC [a] (HI=0.1)	SSL [b] (DAF=10)
Gamma-chlordane [c]	G003SB098	0.00043	J	09/27/02	1.8	5
	G003SB102	0.018	=	12/06/02		
	G003SB103	0.0031	J	12/06/02		
	G003SB104	0.018	=	12/06/02		
Heptachlor [c]	G003SB026	**1.6**	J	11/29/01	0.14	11.5
	G003SB040	0.044	=	01/15/02		
	G003SB055	0.0061	J	03/27/02		
	G003SB071	0.0095	J	05/15/02		
	G003SB073	0.0051	J	05/15/02		
	G003SB078	0.0028	J	05/15/02		
	G003SB079	0.027	=	05/15/02		
	G003SB081	0.024	=	05/15/02		
	G003SB085	0.00056	J	06/13/02		
	G003SB091	0.0024	J	06/13/02		
	G003SB104	0.00078	J	12/06/02		
Heptachlor Epoxide [c]	G003SB015	0.049	J	12/17/99	0.07	0.37
	G003SB019	0.0025	=	01/27/00		
	G003SB021	0.0087	=	11/29/01		
	G003SB022	0.00014	J	11/29/01		
	G003SB023	0.0031	J	11/29/01		
	G003SB024	0.00029	J	11/29/01		
	G003SB031	0.0022	J	11/29/01		
	G003SB039	0.019	J	01/15/02		
	G003SB040	0.0087	J	01/15/02		
	G003SB041	0.0026	J	01/15/02		
	G003SB042	0.00098	J	01/15/02		
	G003SB047	0.0067	J	03/27/02		
	G003SB049	0.0063	J	03/27/02		
	G003SB051	0.0038	J	03/27/02		

TABLE 4-1
Organic Compounds Detected in Surface Soil - Additional Investigation
RFI Report Addendum/IM Completion Report/CMS Work Plan, SWMU 3, Zone G, Charleston Naval Complex

Analyte	Sample Location	Concentration (mg/kg)	Qualifier	Date Collected	EPA Region III RBC [a] (HI=0.1)	SSL [b] (DAF=10)
Heptachlor Epoxide [c]	G003SB052	0.014	J	03/27/02	0.07	0.37
	G003SB054	0.0048	J	03/27/02		
	G003SB055	0.0047	J	03/27/02		
	G003SB056	**0.11**	J	03/27/02		
	G003SB057	0.0074	J	03/27/02		
	G003SB069	0.0035	=	05/13/02		
	G003SB072	0.0078	=	05/13/02		
	G003SB074	0.00039	J	05/13/02		
	G003SB075	0.0051	J	05/15/02		
	G003SB077	0.0046	J	05/15/02		
	G003SB078	0.0062	J	05/15/02		
	G003SB079	**0.63**	=	05/15/02		
	G003SB080	0.031	=	05/15/02		
	G003SB081	0.01	=	05/15/02		
	G003SB085	0.017	=	06/13/02		
	G003SB088	0.00066	J	06/13/02		
	G003SB090	**0.36**	=	06/13/02		
	G003SB091	**0.12**	=	06/13/02		
	G003SB093	0.013	J	07/25/02		
	G003SB097	0.0088	J	07/25/02		
	G003SB098	0.00013	J	09/27/02		
	G003SB102	0.0082	=	12/06/02		
	G003SB103	0.00094	J	12/06/02		
	G003SB104	0.021	=	12/06/02		
Methoxychlor	G003SB103	0.004	J	12/06/02	39	80
p,p'-DDD [c]	G003SB012	**5.9**	=	07/28/99	2.7	8
	G003SB013	0.3	J	07/30/99		
	G003SB016	**17**	=	01/27/00		
	G003SB017	0.77	=	01/27/00		

TABLE 4-1
Organic Compounds Detected in Surface Soil - Additional Investigation
RFI Report Addendum/IM Completion Report/CMS Work Plan, SWMU 3, Zone G, Charleston Naval Complex

Analyte	Sample Location	Concentration (mg/kg)	Qualifier	Date Collected	EPA Region III RBC [a] (HI=0.1)	SSL [b] (DAF=10)
p,p'-DDD [c]	G003SB018	**310**	=	01/27/00	2.7	8
	G003SB019	0.017	J	01/27/00		
	G003SB020	0.066	=	01/27/00		
	G003SB021	0.0036	J	11/29/01		
	G003SB023	0.022	J	11/29/01		
	G003SB025	0.58	=	11/29/01		
	G003SB027	0.0013	J	11/29/01		
	G003SB028	**7.6**	=	11/29/01		
	G003SB029	0.7	=	11/29/01		
	G003SB030	0.25	=	11/29/01		
	G003SB031	0.052	=	11/29/01		
	G003SB032	0.055	J	11/28/01		
	G003SB033	0.14	J	11/29/01		
	G003SB034	1	J	11/29/01		
	G003SB035	0.29	J	11/29/01		
	G003SB036	0.00076	J	11/29/01		
	G003SB039	0.37	J	01/15/02		
	G003SB041	0.0039	J	01/15/02		
	G003SB042	0.19	J	01/15/02		
	G003SB043	0.28	=	03/27/02		
	G003SB044	**2.8**	=	03/27/02		
	G003SB045	0.69	=	03/27/02		
	G003SB046	0.0023	J	03/27/02		
	G003SB047	0.14	J	03/27/02		
	G003SB048	**10**	=	03/27/02		
	G003SB049	0.016	J	03/27/02		
	G003SB051	0.018	J	03/27/02		
	G003SB052	0.1	=	03/27/02		
	G003SB054	0.002	J	03/27/02		
	G003SB056	1.6	=	03/27/02		

TABLE 4-1
Organic Compounds Detected in Surface Soil - Additional Investigation
RFI Report Addendum/IM Completion Report/CMS Work Plan, SWMU 3, Zone G, Charleston Naval Complex

Analyte	Sample Location	Concentration (mg/kg)	Qualifier	Date Collected	EPA Region III RBC [a] (HI=0.1)	SSL [b] (DAF=10)
p,p'-DDD [c]	G003SB057	0.11	=	03/27/02	2.7	8
	G003SB058	0.024	J	03/27/02		
	G003SB067	0.6	J	03/27/02		
	G003SB068	0.019	J	05/13/02		
	G003SB069	0.0041	J	05/13/02		
	G003SB070	0.013	=	05/15/02		
	G003SB071	0.17	=	05/15/02		
	G003SB072	0.74	=	05/13/02		
	G003SB073	0.67	=	05/15/02		
	G003SB074	0.002	J	05/13/02		
	G003SB075	0.26	J	05/15/02		
	G003SB076	0.054	J	05/15/02		
	G003SB077	0.098	=	05/15/02		
	G003SB078	0.027	J	05/15/02		
	G003SB079	0.3	J	05/15/02		
	G003SB086	0.62	=	06/13/02		
	G003SB088	0.0034	J	06/13/02		
	G003SB090	0.11	=	06/13/02		
	G003SB091	0.039	=	06/13/02		
	G003SB093	0.0022	J	07/25/02		
	G003SB094	1.1	=	07/25/02		
	G003SB095	0.04	J	07/25/02		
	G003SB096	0.0019	J	07/25/02		
	G003SB097	0.058	J	07/25/02		
	G003SB102	0.0083	J	12/06/02		
	G003SB104	0.0065	=	12/06/02		
p,p'-DDE [c]	G003SB011	0.072	=	07/28/99	1.9	27
	G003SB012	1.1	J	07/28/99		
	G003SB013	0.15	J	07/30/99		

TABLE 4-1
Organic Compounds Detected in Surface Soil - Additional Investigation
RFI Report Addendum/IM Completion Report/CMS Work Plan, SWMU 3, Zone G, Charleston Naval Complex

Analyte	Sample Location	Concentration (mg/kg)	Qualifier	Date Collected	EPA Region III RBC [a] (HI=0.1)	SSL [b] (DAF=10)
p,p'-DDE [c]	G003SB015	0.77	=	12/17/99	1.9	27
	G003SB016	**3.6**	=	01/27/00		
	G003SB017	0.41	=	01/27/00		
	G003SB018	**44**	=	01/27/00		
	G003SB019	0.13	=	01/27/00		
	G003SB020	0.056	=	01/27/00		
	G003SB021	0.082	=	11/29/01		
	G003SB022	0.069	=	11/29/01		
	G003SB023	0.6	J	11/29/01		
	G003SB024	0.071	=	11/29/01		
	G003SB025	0.25	J	11/29/01		
	G003SB027	0.0091	=	11/29/01		
	G003SB028	**3.4**	J	11/29/01		
	G003SB029	0.15	J	11/29/01		
	G003SB030	0.038	J	11/29/01		
	G003SB031	0.35	=	11/29/01		
	G003SB032	0.19	J	11/28/01		
	G003SB033	0.26	=	11/29/01		
	G003SB034	**4.3**	=	11/29/01		
	G003SB035	0.12	J	11/29/01		
	G003SB036	0.0087	J	11/29/01		
	G003SB037	0.021	=	03/27/02		
	G003SB038	0.0051	J	03/27/02		
	G003SB039	0.3	=	01/15/02		
	G003SB040	0.035	J	01/15/02		
	G003SB041	0.0087	J	01/15/02		
	G003SB042	0.03	=	01/15/02		
	G003SB043	0.27	=	03/27/02		
	G003SB044	**5.5**	=	03/27/02		

TABLE 4-1
Organic Compounds Detected in Surface Soil - Additional Investigation
RFI Report Addendum/IM Completion Report/CMS Work Plan, SWMU 3, Zone G, Charleston Naval Complex

Analyte	Sample Location	Concentration (mg/kg)	Qualifier	Date Collected	EPA Region III RBC [a] (HI=0.1)	SSL [b] (DAF=10)
p,p'-DDE [c]	G003SB045	0.2	J	03/27/02	1.9	27
	G003SB046	0.011	J	03/27/02		
	G003SB047	0.12	J	03/27/02		
	G003SB048	**3.5**	=	03/27/02		
	G003SB049	0.36	=	03/27/02		
	G003SB051	0.59	=	03/27/02		
	G003SB052	0.33	=	03/27/02		
	G003SB053	0.0019	J	03/28/02		
	G003SB054	0.2	=	03/27/02		
	G003SB055	0.024	=	03/27/02		
	G003SB056	**2.7**	=	03/27/02		
	G003SB057	0.14	=	03/27/02		
	G003SB058	0.17	J	03/27/02		
	G003SB059	0.00072	J	03/28/02		
	G003SB067	1.4	=	03/27/02		
	G003SB068	0.29	=	05/13/02		
	G003SB069	0.086	=	05/13/02		
	G003SB070	0.048	=	05/15/02		
	G003SB071	0.1	=	05/15/02		
	G003SB072	0.45	J	05/13/02		
	G003SB073	**2**	=	05/15/02		
	G003SB074	0.11	=	05/13/02		
	G003SB075	0.073	J	05/15/02		
	G003SB076	0.14	=	05/15/02		
	G003SB077	0.58	=	05/15/02		
	G003SB078	0.21	=	05/15/02		
	G003SB079	1.1	=	05/15/02		
	G003SB080	0.034	=	05/15/02		
	G003SB081	0.044	=	05/15/02		
	G003SB085	0.021	=	06/13/02		

TABLE 4-1
Organic Compounds Detected in Surface Soil - Additional Investigation
RFI Report Addendum/IM Completion Report/CMS Work Plan, SWMU 3, Zone G, Charleston Naval Complex

Analyte	Sample Location	Concentration (mg/kg)	Qualifier	Date Collected	EPA Region III RBC [a] (HI=0.1)	SSL [b] (DAF=10)
p,p'-DDE [c]	G003SB086	0.46	=	06/13/02	1.9	27
	G003SB088	0.11	=	06/13/02		
	G003SB089	0.0021	J	06/13/02		
	G003SB090	1.1	=	06/13/02		
	G003SB091	0.63	=	06/13/02		
	G003SB093	0.034	J	07/25/02		
	G003SB094	0.94	J	07/25/02		
	G003SB095	0.15	J	07/25/02		
	G003SB096	0.064	J	07/25/02		
	G003SB097	0.37	J	07/25/02		
	G003SB098	0.0025	J	09/27/02		
	G003SB102	0.23	=	12/06/02		
	G003SB103	0.07	=	12/06/02		
	G003SB104	0.098	=	12/06/02		
p,p'-DDT [c]	G003SB011	0.071	J	07/28/99	1.9	16
	G003SB012	**78**	=	07/28/99		
	G003SB013	0.96	=	07/30/99		
	G003SB015	0.22	=	12/17/99		
	G003SB016	**200**	=	01/27/00		
	G003SB017	**7.4**	=	01/27/00		
	G003SB018	**2,500**	=	01/27/00		
	G003SB019	0.34	=	01/27/00		
	G003SB020	0.36	=	01/27/00		
	G003SB021	0.037	J	11/29/01		
	G003SB022	0.018	=	11/29/01		
	G003SB023	0.26	J	11/29/01		
	G003SB024	0.024	=	11/29/01		
	G003SB025	**4.8**	=	11/29/01		
	G003SB027	0.012	=	11/29/01		

TABLE 4-1
Organic Compounds Detected in Surface Soil - Additional Investigation
RFI Report Addendum/IM Completion Report/CMS Work Plan, SWMU 3, Zone G, Charleston Naval Complex

Analyte	Sample Location	Concentration (mg/kg)	Qualifier	Date Collected	EPA Region III RBC [a] (HI=0.1)	SSL [b] (DAF=10)
p,p'-DDT [c]	G003SB028	**81**	=	11/29/01	1.9	16
	G003SB029	**4.7**	=	11/29/01		
	G003SB030	1	=	11/29/01		
	G003SB031	0.27	=	11/29/01		
	G003SB032	1.3	J	11/28/01		
	G003SB033	**2.4**	J	11/29/01		
	G003SB034	**36**	J	11/29/01		
	G003SB035	**14**	=	11/29/01		
	G003SB036	0.0093	J	11/29/01		
	G003SB037	0.0056	=	03/27/02		
	G003SB038	0.0026	J	03/27/02		
	G003SB039	0.26	=	01/15/02		
	G003SB040	0.067	=	01/15/02		
	G003SB041	0.061	=	01/15/02		
	G003SB042	0.28	=	01/15/02		
	G003SB043	**2**	=	03/27/02		
	G003SB044	**15**	=	03/27/02		
	G003SB045	**5.4**	=	03/27/02		
	G003SB046	0.016	J	03/27/02		
	G003SB047	0.68	J	03/27/02		
	G003SB048	**68**	=	03/27/02		
	G003SB049	0.16	=	03/27/02		
	G003SB051	0.1	=	03/27/02		
	G003SB052	0.71	=	03/27/02		
	G003SB053	0.0017	J	03/28/02		
	G003SB054	0.11	=	03/27/02		
	G003SB055	0.064	J	03/27/02		
	G003SB056	**10**	J	03/27/02		
	G003SB057	0.51	J	03/27/02		

TABLE 4-1
Organic Compounds Detected in Surface Soil - Additional Investigation
RFI Report Addendum/IM Completion Report/CMS Work Plan, SWMU 3, Zone G, Charleston Naval Complex

Analyte	Sample Location	Concentration (mg/kg)	Qualifier	Date Collected	EPA Region III RBC [a] (HI=0.1)	SSL [b] (DAF=10)
p,p'-DDT [c]	G003SB058	0.11	=	03/27/02	1.9	16
	G003SB059	0.0065	J	03/28/02		
	G003SB067	**12**	=	03/27/02		
	G003SB068	0.36	J	05/13/02		
	G003SB069	0.067	J	05/13/02		
	G003SB070	0.29	J	05/15/02		
	G003SB071	1.1	J	05/15/02		
	G003SB072	**7.3**	J	05/13/02		
	G003SB073	**13**	J	05/15/02		
	G003SB074	0.04	J	05/13/02		
	G003SB075	**3.1**	J	05/15/02		
	G003SB076	0.67	=	05/15/02		
	G003SB077	0.95	=	05/15/02		
	G003SB078	0.62	=	05/15/02		
	G003SB079	1.1	=	05/15/02		
	G003SB080	0.034	=	05/15/02		
	G003SB081	0.1	J	05/15/02		
	G003SB085	0.1	=	06/13/02		
	G003SB086	**3.6**	=	06/13/02		
	G003SB088	0.075	=	06/13/02		
	G003SB089	0.0035	=	06/13/02		
	G003SB090	0.41	=	06/13/02		
	G003SB091	0.5	=	06/13/02		
	G003SB093	0.024	J	07/25/02		
	G003SB094	**6.6**	=	07/25/02		
	G003SB095	0.62	J	07/25/02		
	G003SB096	0.017	=	07/25/02		
	G003SB097	0.18	=	07/25/02		
	G003SB098	0.003	=	09/27/02		

TABLE 4-1
Organic Compounds Detected in Surface Soil - Additional Investigation
RFI Report Addendum/IM Completion Report/CMS Work Plan, SWMU 3, Zone G, Charleston Naval Complex

Analyte	Sample Location	Concentration (mg/kg)	Qualifier	Date Collected	EPA Region III RBC [a] (HI=0.1)	SSL [b] (DAF=10)
p,p'-DDT [c]	G003SB102	0.079	=	12/06/02	1.9	16
	G003SB103	0.042	=	12/06/02		
	G003SB104	0.084	=	12/06/02		
PCBs						
Aroclor-1260 [c]	G003SB021	0.019	J	11/29/01	0.32	0.21

All values are presented in units of milligrams per kilogram (mg/kg).

Concentrations in bold and outlined within the table represent exceedances of the screening criteria.

[a] U.S. EPA Region III risk based concentrations (RBCs) for non-carcinogenic compounds are based on a hazard index (HI) of 0.1.

[b] Soil screening levels (SSLs) are based on a dilution attenuation factor (DAF) of 1 for volatile organic compounds (VOCs), and DAF=10 for other compounds.

[c] Compound is classified as a carcinogen.

= Indicates that the analyte was detected at the concentration shown.

J Indicates an estimated value. One or more quality control (QC) parameters were outside control limits or the value was detected below the laboratory's quantification limit.

NA Not applicable/not available

TABLE 4-2
Organic Compounds Detected in Subsurface Soil - Additional Investigations
RFI Report Addendum/IM Completion Report/CMS Work Plan, SWMU 3, Zone G, Charleston Naval complex

Analyte	Sample Location	Concentration (mg/kg)	Qualifier	Date Collected	SSL [a] (DAF=10)
VOCs					
Acetone	G003SB021	0.09	J	11/29/01	0.08
	G003SB022	0.1	J	11/29/01	
	G003SB024	0.41	J	11/29/01	
	G003SB025	0.18	J	11/29/01	
	G003SB026	0.082	J	11/29/01	
	G003SB029	0.05	J	11/29/01	
	G003SB030	0.11	J	11/29/01	
	G003SB031	0.041	J	11/29/01	
	G003SB032	0.15	J	11/28/01	
	G003SB033	0.031	J	11/29/01	
	G003SB034	0.42	J	11/29/01	
	G003SB035	0.14	J	11/29/01	
	G003SB036	0.029	J	11/29/01	
	G003SB051	0.054	J	03/28/02	
	G003SB053	0.09	J	03/28/02	
Methyl ethyl ketone (2-Butanone)	G003SB022	0.0062	J	11/29/01	NA
	G003SB023	0.0062	J	11/29/01	
	G003SB024	0.0055	J	11/29/01	
	G003SB026	0.0055	J	11/29/01	
	G003SB029	0.0063	J	11/29/01	
	G003SB030	0.0095	J	11/29/01	
	G003SB032	0.017	=	11/28/01	
	G003SB035	0.0088	J	11/29/01	
	G003SB042	0.0094	J	01/15/02	
	G003SB053	0.009	J	03/28/02	
PCE	G003SB040	**0.0054**	=	01/15/02	0.003
	G003SB041	**0.027**	=	01/15/02	
	G003SB042	**0.0071**	J	01/15/02	

TABLE 4-2
Organic Compounds Detected in Subsurface Soil - Additional Investigations
RFI Report Addendum/IM Completion Report/CMS Work Plan, SWMU 3, Zone G, Charleston Naval complex

Analyte	Sample Location	Concentration (mg/kg)	Qualifier	Date Collected	SSL [a] (DAF=10)
PCE	G003SB051	**0.013**	=	03/28/02	0.003
	G003SB052	**0.0037**	J	03/27/02	
Toluene	G003SB039	0.0049	J	01/15/02	0.6
	G003SB041	0.0024	J	01/15/02	
	G003SB042	0.0052	J	01/15/02	
TCE	G003SB052	**0.031**	=	03/27/02	0.003
	G003SB054	**0.03**	=	03/27/02	
	G003SB055	**0.036**	=	03/27/02	
	G003SB056	**0.043**	=	03/27/02	
	G003SB057	**0.028**	=	03/27/02	
	G003SB058	**0.021**	=	03/27/02	
Pesticides					
Aldrin	G003SB026	0.00093	J	11/29/01	0.25
Alpha-chlordane	G003SB026	0.016	J	11/29/01	5
	G003SB028	0.0014	J	11/29/01	
	G003SB032	0.061	=	11/28/01	
	G003SB033	0.0048	J	11/29/01	
	G003SB036	0.00042	J	11/29/01	
	G003SB039	0.015	J	01/15/02	
	G003SB040	0.098	J	01/15/02	
	G003SB041	0.001	J	01/15/02	
	G003SB042	0.0014	J	01/15/02	
	G003SB051	0.0016	J	03/28/02	
	G003SB052	0.031	=	03/27/02	
	G003SB054	0.0006	J	03/27/02	
	G003SB056	0.028	=	03/27/02	
	G003SB057	0.0028	J	03/27/02	
	G003SB058	0.016	=	03/27/02	
	G003SB060	1	J	03/27/02	

TABLE 4-2
Organic Compounds Detected in Subsurface Soil - Additional Investigations
RFI Report Addendum/IM Completion Report/CMS Work Plan, SWMU 3, Zone G, Charleston Naval complex

Analyte	Sample Location	Concentration (mg/kg)	Qualifier	Date Collected	SSL [a] (DAF=10)
Alpha-chlordane	G003SB064	**21**	J	03/27/02	5
	G003SB066	0.02	J	03/27/02	
	G003SB069	0.012	=	05/13/02	
	G003SB071	0.029	=	05/15/02	
	G003SB072	0.062	=	05/15/02	
	G003SB073	0.028	J	05/15/02	
	G003SB075	0.005	J	05/15/02	
	G003SB076	0.0027	J	05/15/02	
	G003SB077	0.0049	J	05/15/02	
	G003SB077	0.0012	J	05/15/02	
	G003SB078	0.0057	J	05/15/02	
	G003SB078	0.0018	J	05/15/02	
	G003SB079	0.82	=	05/15/02	
	G003SB080	0.018	J	05/15/02	
	G003SB081	1	=	05/15/02	
	G003SB082	3.3	=	05/15/02	
	G003SB083	0.008	J	05/15/02	
	G003SB088	0.0014	J	06/13/02	
	G003SB090	0.04	J	06/13/02	
	G003SB091	0.035	J	06/13/02	
	G003SB092	0.0017	J	06/13/02	
Beta-BHC (Beta Hexachlorocyclohexane)	G003SB081	**0.017**	J	05/15/02	0.0015
	G003SB082	**0.29**	J	05/15/02	
	G003SB090	**0.0023**	J	06/13/02	
Chlordane	G003SB026	0.17	=	11/29/01	5
	G003SB033	0.031	J	11/29/01	
	G003SB039	0.054	J	01/15/02	
	G003SB040	0.63	J	01/15/02	
	G003SB051	0.011	J	03/28/02	

TABLE 4-2
Organic Compounds Detected in Subsurface Soil - Additional Investigations
RFI Report Addendum/IM Completion Report/CMS Work Plan, SWMU 3, Zone G, Charleston Naval complex

Analyte	Sample Location	Concentration (mg/kg)	Qualifier	Date Collected	SSL [a] (DAF=10)
Chlordane	G003SB052	0.16	J	03/27/02	5
	G003SB056	0.11	=	03/27/02	
	G003SB057	0.012	J	03/27/02	
	G003SB060	4.8	J	03/27/02	
	G003SB064	**130**	=	03/27/02	
	G003SB071	0.26	J	05/15/02	
	G003SB072	0.47	=	05/15/02	
	G003SB075	0.04	J	05/15/02	
	G003SB077	0.036	=	05/15/02	
	G003SB078	0.016	=	05/15/02	
	G003SB078	0.043	=	05/15/02	
	G003SB079	**5.4**	=	05/15/02	
	G003SB080	0.095	=	05/15/02	
	G003SB081	**7.5**	=	05/15/02	
	G003SB082	**26**	=	05/15/02	
	G003SB083	0.048	=	05/15/02	
	G003SB090	0.45	=	06/13/02	
	G003SB091	0.16	=	06/13/02	
	G003SB092	0.032	=	06/13/02	
Delta-BHC (Delta Hexachlorocyclohexane)	G003SB082	0.16	=	05/15/02	NA
Dieldrin	G003SB026	0.00048	J	11/29/01	0.002
	G003SB032	**0.048**	J	11/28/01	
	G003SB033	**0.0072**	=	11/29/01	
	G003SB036	0.0017	J	11/29/01	
	G003SB039	0.00069	J	01/15/02	
	G003SB040	**0.0026**	J	01/15/02	
	G003SB048	**0.003**	J	03/27/02	
	G003SB051	0.00062	J	03/28/02	
	G003SB052	**0.0026**	J	03/27/02	

TABLE 4-2
Organic Compounds Detected in Subsurface Soil - Additional Investigations
RFI Report Addendum/IM Completion Report/CMS Work Plan, SWMU 3, Zone G, Charleston Naval complex

Analyte	Sample Location	Concentration (mg/kg)	Qualifier	Date Collected	SSL [a] (DAF=10)
Dieldrin	G003SB056	**0.005**	J	03/27/02	0.002
	G003SB064	**0.58**	J	03/27/02	
	G003SB066	**0.005**	J	03/27/02	
	G003SB069	**0.003**	J	05/13/02	
	G003SB072	**0.01**	J	05/15/02	
	G003SB073	**0.046**	J	05/15/02	
	G003SB076	**0.026**	=	05/15/02	
	G003SB077	0.0005	J	05/15/02	
	G003SB077	0.0018	J	05/15/02	
	G003SB078	0.0007	J	05/15/02	
	G003SB078	0.0017	J	05/15/02	
	G003SB079	**0.11**	=	05/15/02	
	G003SB080	**0.0055**	J	05/15/02	
	G003SB081	**0.067**	J	05/15/02	
	G003SB082	**0.53**	J	05/15/02	
	G003SB083	0.002	J	05/15/02	
	G003SB088	0.0009	J	06/13/02	
	G003SB090	**0.0021**	J	06/13/02	
	G003SB091	**0.0029**	J	06/13/02	
	G003SB092	**0.004**	=	06/13/02	
Endosulfan I	G003SB039	0.00031	J	01/15/02	9
	G003SB079	0.029	=	05/15/02	
	G003SB090	0.0036	J	06/13/02	
Endosulfan Sulfate	G003SB090	0.0034	J	06/13/02	9
Endrin	G003SB081	0.028	=	05/15/02	0.5
	G003SB082	0.084	J	05/15/02	
Endrin Aldehyde	G003SB077	0.00081	J	05/15/02	0.5
	G003SB088	0.00056	J	06/13/02	
	G003SB091	0.001	J	06/13/02	

TABLE 4-2
Organic Compounds Detected in Subsurface Soil - Additional Investigations
RFI Report Addendum/IM Completion Report/CMS Work Plan, SWMU 3, Zone G, Charleston Naval complex

Analyte	Sample Location	Concentration (mg/kg)	Qualifier	Date Collected	SSL [a] (DAF=10)
Endrin Ketone	G003SB033	0.00074	J	11/29/01	0.5
	G003SB080	0.00096	J	05/15/02	
	G003SB081	0.009	J	05/15/02	
Gamma-BHC (Lindane)	G003SB056	0.00047	J	03/27/02	0.0045
	G003SB058	0.0032	J	03/27/02	
	G003SB071	**0.019**	=	05/15/02	
	G003SB073	0.0034	J	05/15/02	
	G003SB081	**0.05**	J	05/15/02	
	G003SB082	**1.5**	=	05/15/02	
Gamma-chlordane	G003SB026	0.014	=	11/29/01	5
	G003SB028	0.001	J	11/29/01	
	G003SB029	0.00037	J	11/29/01	
	G003SB031	0.00039	J	11/29/01	
	G003SB032	0.077	=	11/28/01	
	G003SB033	0.0048	=	11/29/01	
	G003SB036	0.00078	J	11/29/01	
	G003SB039	0.0088	J	01/15/02	
	G003SB040	0.099	=	01/15/02	
	G003SB041	0.00087	J	01/15/02	
	G003SB042	0.0012	J	01/15/02	
	G003SB051	0.0017	=	03/28/02	
	G003SB052	0.029	=	03/27/02	
	G003SB054	0.00037	J	03/27/02	
	G003SB055	0.00043	J	03/27/02	
	G003SB056	0.02	=	03/27/02	
	G003SB057	0.0026	=	03/27/02	
	G003SB058	0.025	=	03/27/02	
	G003SB060	0.87	J	03/27/02	
	G003SB064	**25**	=	03/27/02	
	G003SB065	0.00028	J	03/28/02	

TABLE 4-2
Organic Compounds Detected in Subsurface Soil - Additional Investigations
RFI Report Addendum/IM Completion Report/CMS Work Plan, SWMU 3, Zone G, Charleston Naval complex

Analyte	Sample Location	Concentration (mg/kg)	Qualifier	Date Collected	SSL [a] (DAF=10)
Gamma-chlordane	G003SB066	0.023	=	03/27/02	5
	G003SB068	0.0034	J	05/13/02	
	G003SB069	0.032	=	05/13/02	
	G003SB071	0.03	=	05/15/02	
	G003SB072	0.073	=	05/15/02	
	G003SB073	0.099	=	05/15/02	
	G003SB077	0.0055	=	05/15/02	
	G003SB078	0.002	=	05/15/02	
	G003SB078	0.0061	=	05/15/02	
	G003SB079	0.53	=	05/15/02	
	G003SB080	0.014	=	05/15/02	
	G003SB081	0.96	=	05/15/02	
	G003SB082	2.3	=	05/15/02	
	G003SB083	0.0091	=	05/15/02	
	G003SB084	0.00025	J	05/13/02	
	G003SB088	0.0041	=	06/13/02	
	G003SB090	0.04	=	06/13/02	
	G003SB091	0.034	=	06/13/02	
	G003SB092	0.0011	J	06/13/02	
	G003SB094	0.038	J	07/25/02	
Heptachlor	G003SB026	0.0011	J	11/29/01	11.5
	G003SB040	0.01	=	01/15/02	
	G003SB052	0.00058	J	03/27/02	
	G003SB064	3.1	=	03/27/02	
	G003SB071	0.00057	J	05/15/02	
	G003SB072	0.0034	J	05/15/02	
	G003SB073	0.0047	J	05/15/02	
	G003SB081	0.088	=	05/15/02	
	G003SB082	0.1	J	05/15/02	
	G003SB090	0.00053	J	06/13/02	

TABLE 4-2
Organic Compounds Detected in Subsurface Soil - Additional Investigations
RFI Report Addendum/IM Completion Report/CMS Work Plan, SWMU 3, Zone G, Charleston Naval complex

Analyte	Sample Location	Concentration (mg/kg)	Qualifier	Date Collected	SSL [a] (DAF=10)
Heptachlor Epoxide	G003SB026	0.0031	J	11/29/01	0.35
	G003SB032	0.0033	J	11/28/01	
	G003SB033	0.00015	J	11/29/01	
	G003SB036	0.00014	J	11/29/01	
	G003SB039	0.00062	J	01/15/02	
	G003SB040	0.0022	J	01/15/02	
	G003SB052	0.0012	J	03/27/02	
	G003SB056	0.0028	J	03/27/02	
	G003SB066	0.0015	J	03/27/02	
	G003SB069	0.015	=	05/13/02	
	G003SB072	0.0055	J	05/15/02	
	G003SB077	0.001	J	05/15/02	
	G003SB077	0.00027	J	05/15/02	
	G003SB079	0.18	=	05/15/02	
	G003SB080	0.0093	=	05/15/02	
	G003SB082	0.32	J	05/15/02	
	G003SB090	0.023	=	06/13/02	
	G003SB091	0.0099	=	06/13/02	
	G003SB092	0.0023	J	06/13/02	
p,p'-DDD	G003SB012	6.1	=	07/28/99	8
	G003SB013	0.0076	J	07/30/99	
	G003SB016	0.02	=	01/27/00	
	G003SB017	0.074	=	01/27/00	
	G003SB018	0.19	=	01/27/00	
	G003SB019	0.0081	=	01/27/00	
	G003SB027	0.0012	J	11/29/01	
	G003SB028	0.0056	J	11/29/01	
	G003SB029	0.0015	J	11/29/01	
	G003SB030	0.025	=	11/29/01	
	G003SB031	0.00079	J	11/29/01	

TABLE 4-2
Organic Compounds Detected in Subsurface Soil - Additional Investigations
RFI Report Addendum/IM Completion Report/CMS Work Plan, SWMU 3, Zone G, Charleston Naval complex

Analyte	Sample Location	Concentration (mg/kg)	Qualifier	Date Collected	SSL [a] (DAF=10)
p,p'-DDD	G003SB032	0.0089	J	11/28/01	8
	G003SB033	0.00089	J	11/29/01	
	G003SB034	0.068	J	11/29/01	
	G003SB035	0.18	J	11/29/01	
	G003SB036	0.0014	J	11/29/01	
	G003SB041	0.00042	J	01/15/02	
	G003SB042	0.0048	J	01/15/02	
	G003SB044	0.26	J	03/27/02	
	G003SB048	0.024	=	03/27/02	
	G003SB052	0.012	=	03/27/02	
	G003SB056	0.0021	J	03/27/02	
	G003SB057	0.0015	J	03/27/02	
	G003SB058	0.063	=	03/27/02	
	G003SB059	0.027	J	03/28/02	
	G003SB060	0.61	J	03/27/02	
	G003SB061	**14**	J	03/27/02	
	G003SB062	0.028	J	03/27/02	
	G003SB063	0.0089	J	03/27/02	
	G003SB066	0.0049	J	03/27/02	
	G003SB067	0.0018	J	03/27/02	
	G003SB068	0.037	=	05/13/02	
	G003SB069	0.018	=	05/13/02	
	G003SB070	0.0013	J	05/15/02	
	G003SB071	0.011	=	05/15/02	
	G003SB072	0.053	=	05/15/02	
	G003SB073	6.8	=	05/15/02	
	G003SB075	0.021	J	05/15/02	
	G003SB076	0.013	J	05/15/02	
	G003SB077	0.0016	J	05/15/02	
	G003SB077	0.00052	J	05/15/02	

TABLE 4-2
Organic Compounds Detected in Subsurface Soil - Additional Investigations
RFI Report Addendum/IM Completion Report/CMS Work Plan, SWMU 3, Zone G, Charleston Naval complex

Analyte	Sample Location	Concentration (mg/kg)	Qualifier	Date Collected	SSL [a] (DAF=10)
p,p'-DDD	G003SB078	0.00051	J	05/15/02	8
	G003SB078	0.0019	J	05/15/02	
	G003SB079	0.0089	J	05/15/02	
	G003SB082	0.81	J	05/15/02	
	G003SB083	0.0069	J	05/15/02	
	G003SB084	0.0042	=	05/13/02	
	G003SB090	0.0046	J	06/13/02	
	G003SB094	0.69	=	07/25/02	
	G003SB095	0.0013	J	07/25/02	
	G003SB095	0.0011	J	07/25/02	
p,p'-DDE	G003SB021	0.00042	J	11/29/01	27
	G003SB022	0.0036	=	11/29/01	
	G003SB023	0.0038	=	11/29/01	
	G003SB024	0.0004	J	11/29/01	
	G003SB026	0.00051	J	11/29/01	
	G003SB027	0.0029	=	11/29/01	
	G003SB028	0.0045	=	11/29/01	
	G003SB029	0.0023	J	11/29/01	
	G003SB030	0.0064	=	11/29/01	
	G003SB031	0.0072	J	11/29/01	
	G003SB032	0.049	J	11/28/01	
	G003SB033	0.012	J	11/29/01	
	G003SB034	0.019	J	11/29/01	
	G003SB035	0.04	J	11/29/01	
	G003SB036	0.01	=	11/29/01	
	G003SB039	0.013	J	01/15/02	
	G003SB040	0.0085	J	01/15/02	
	G003SB042	0.0026	J	01/15/02	
	G003SB044	0.26	=	03/27/02	
	G003SB048	0.0073	J	03/27/02	

TABLE 4-2
Organic Compounds Detected in Subsurface Soil - Additional Investigations
RFI Report Addendum/IM Completion Report/CMS Work Plan, SWMU 3, Zone G, Charleston Naval complex

Analyte	Sample Location	Concentration (mg/kg)	Qualifier	Date Collected	SSL [a] (DAF=10)
p,p'-DDE	G003SB049	0.0012	J	03/27/02	27
	G003SB051	0.0046	=	03/28/02	
	G003SB052	0.025	=	03/27/02	
	G003SB053	0.00037	J	03/28/02	
	G003SB056	0.019	=	03/27/02	
	G003SB057	0.0029	J	03/27/02	
	G003SB058	0.013	J	03/27/02	
	G003SB059	0.11	=	03/28/02	
	G003SB060	2.3	J	03/27/02	
	G003SB061	4.5	J	03/27/02	
	G003SB062	0.014	J	03/27/02	
	G003SB063	0.0046	J	03/27/02	
	G003SB066	0.097	=	03/27/02	
	G003SB067	0.0054	=	03/27/02	
	G003SB068	0.53	=	05/13/02	
	G003SB069	0.3	=	05/13/02	
	G003SB070	0.0015	J	05/15/02	
	G003SB070	0.0018	J	05/15/02	
	G003SB071	0.012	J	05/15/02	
	G003SB072	0.17	=	05/15/02	
	G003SB073	1.7	J	05/15/02	
	G003SB074	0.0048	=	05/13/02	
	G003SB075	0.0079	J	05/15/02	
	G003SB076	0.019	=	05/15/02	
	G003SB077	0.0069	=	05/15/02	
	G003SB077	0.033	=	05/15/02	
	G003SB078	0.0026	J	05/15/02	
	G003SB078	0.0088	=	05/15/02	
	G003SB079	0.073	J	05/15/02	
	G003SB080	0.031	J	05/15/02	

TABLE 4-2
Organic Compounds Detected in Subsurface Soil - Additional Investigations
RFI Report Addendum/IM Completion Report/CMS Work Plan, SWMU 3, Zone G, Charleston Naval complex

Analyte	Sample Location	Concentration (mg/kg)	Qualifier	Date Collected	SSL [a] (DAF=10)
p,p'-DDE	G003SB081	0.059	=	05/15/02	27
	G003SB082	3.2	J	05/15/02	
	G003SB083	0.016	=	05/15/02	
	G003SB084	0.0077	=	05/13/02	
	G003SB087	0.00053	J	06/13/02	
	G003SB088	0.013	=	06/13/02	
	G003SB090	0.039	=	06/13/02	
	G003SB091	0.086	=	06/13/02	
	G003SB092	0.0016	J	06/13/02	
	G003SB094	0.76	J	07/25/02	
	G003SB095	0.0033	J	07/25/02	
	G003SB095	0.0026	J	07/25/02	
p,p'-DDT	G003SB011	0.02	J	07/28/99	16
	G003SB012	**73**	=	07/28/99	
	G003SB013	0.027	=	07/30/99	
	G003SB016	0.24	=	01/27/00	
	G003SB017	0.34	=	01/27/00	
	G003SB018	3.7	=	01/27/00	
	G003SB019	0.18	=	01/27/00	
	G003SB020	0.039	=	01/27/00	
	G003SB022	0.0011	J	11/29/01	
	G003SB023	0.0026	J	11/29/01	
	G003SB025	0.00058	J	11/29/01	
	G003SB027	0.033	=	11/29/01	
	G003SB028	0.095	=	11/29/01	
	G003SB029	0.044	=	11/29/01	
	G003SB030	0.16	=	11/29/01	
	G003SB031	0.0099	=	11/29/01	
	G003SB032	0.2	J	11/28/01	
	G003SB033	0.046	=	11/29/01	

TABLE 4-2
Organic Compounds Detected in Subsurface Soil - Additional Investigations
RFI Report Addendum/IM Completion Report/CMS Work Plan, SWMU 3, Zone G, Charleston Naval complex

Analyte	Sample Location	Concentration (mg/kg)	Qualifier	Date Collected	SSL [a] (DAF=10)
p,p'-DDT	G003SB034	3.5	=	11/29/01	16
	G003SB035	3.3	J	11/29/01	
	G003SB036	0.076	J	11/29/01	
	G003SB039	0.0064	=	01/15/02	
	G003SB040	0.012	J	01/15/02	
	G003SB041	0.0087	=	01/15/02	
	G003SB042	0.011	=	01/15/02	
	G003SB044	2.8	=	03/27/02	
	G003SB048	0.18	=	03/27/02	
	G003SB049	0.00075	J	03/27/02	
	G003SB051	0.0035	=	03/28/02	
	G003SB052	0.094	=	03/27/02	
	G003SB054	0.0013	J	03/27/02	
	G003SB055	0.0022	J	03/27/02	
	G003SB056	0.25	J	03/27/02	
	G003SB057	0.0035	J	03/27/02	
	G003SB058	0.42	=	03/27/02	
	G003SB059	1	=	03/28/02	
	G003SB060	**53**	J	03/27/02	
	G003SB061	**310**	=	03/27/02	
	G003SB062	1.5	J	03/27/02	
	G003SB063	0.2	=	03/27/02	
	G003SB066	0.16	=	03/27/02	
	G003SB067	0.04	=	03/27/02	
	G003SB068	0.36	J	05/13/02	
	G003SB069	0.35	J	05/13/02	
	G003SB070	0.0091	J	05/15/02	
	G003SB070	0.023	J	05/15/02	
	G003SB071	0.11	J	05/15/02	
	G003SB072	0.86	J	05/15/02	

TABLE 4-2
Organic Compounds Detected in Subsurface Soil - Additional Investigations
RFI Report Addendum/IM Completion Report/CMS Work Plan, SWMU 3, Zone G, Charleston Naval complex

Analyte	Sample Location	Concentration (mg/kg)	Qualifier	Date Collected	SSL [a] (DAF=10)
p,p'-DDT	G003SB073	**31**	J	05/15/02	16
	G003SB074	0.0018	J	05/13/02	
	G003SB075	0.2	=	05/15/02	
	G003SB076	0.12	=	05/15/02	
	G003SB077	0.01	=	05/15/02	
	G003SB077	0.042	=	05/15/02	
	G003SB078	0.015	=	05/15/02	
	G003SB078	0.038	=	05/15/02	
	G003SB079	0.18	=	05/15/02	
	G003SB080	0.026	J	05/15/02	
	G003SB081	0.53	=	05/15/02	
	G003SB082	**23**	J	05/15/02	
	G003SB083	0.08	=	05/15/02	
	G003SB084	0.071	J	05/13/02	
	G003SB087	0.0031	=	06/13/02	
	G003SB088	0.013	=	06/13/02	
	G003SB090	0.015	=	06/13/02	
	G003SB091	0.042	=	06/13/02	
	G003SB092	0.0046	=	06/13/02	
	G003SB094	3.7	=	07/25/02	
	G003SB095	0.037	J	07/25/02	
	G003SB095	0.028	J	07/25/02	

All values are presented in units of milligrams per kilogram (mg/kg).

Concentrations in bold and outlined within the table represent exceedances of the screening criteria.

[a] Soil screening levels (SSLs) are based on a dilution-attenuation factor (DAF) of 1 for VOCs and DAF=or other compounds.

= Indicates that the analyte was detected at the concentration shown.

J Indicates an estimated value. One or more quality control (QC) parameters were outside control limits or the value was detected below the laboratory's quantification limit.

NA Not applicable/not available

TABLE 4-3
Organic Compounds Detected in Groundwater - Additional Investigation
RFI Report Addendum/IM Completion Report/CMS Work Plan, SWMU 3, Zone G, Charleston Naval Complex

Analyte	Sample Location	Concentration (µg/L)	Qualifier	Date Collected	MCL	EPA Region III Tap Water RBC [a] (HI=0.1)
VOCs						
Toluene	G003GW001	0.54	J	10/08/02	1,000	NA
Pesticides						
Alpha-BHC (Alpha-Hexachlorocyclohexane) [c]	G003GW007	**0.013**	J	10/08/02	NA	0.011
Alpha-chlordane [c]	G003GW005	0.01	J	10/08/02	2	NA
	G003GW007	0.029	J	10/08/02		
Beta-BHC (Beta-Hexachlorocyclohexane) [c]	G003GW005	0.0075	J	10/08/02	NA	0.037
	G003GW007	0.023	J	10/08/02		
	G003GW008	0.0087	J	10/08/02		
Delta-BHC (Delta-Hexachlorocyclohexane) [c]	G003GW007	**0.017**	J	10/08/02	NA	0.011
Dieldrin [c]	G003GW005	**0.061**	J	10/08/02	NA	0.0042
	G003GW007	**0.67**	=	10/08/02		
Endosulfan I	G003GW005	0.014	J	10/08/02	NA	220
Endosulfan II	G003GW005	0.018	J	10/08/02	NA	220
	G003GW007	0.041	J	10/08/02		
Endrin Aldehyde	G003GW006	0.032	J	10/08/02	2	NA
Endrin Ketone	G003GW007	0.035	J	10/08/02	2	NA
Gamma-BHC (Lindane) [c]	G003GW006	0.011	J	10/08/02	0.2	NA
Gamma-chlordane [c]	G003GW005	0.075	J	10/08/02	2	NA
	G003GW007	0.04	=	10/08/02		
Heptachlor [c]	G003GW006	0.0061	J	10/08/02	0.4	NA
Heptachlor Epoxide [c]	G003GW004	0.02	J	10/08/02	0.2	NA
	G003GW005	0.086	J	10/08/02		
	G003GW006	**0.21**	J	10/08/02		

TABLE 4-3
Organic Compounds Detected in Groundwater - Additional Investigation
RFI Report Addendum/IM Completion Report/CMS Work Plan, SWMU 3, Zone G, Charleston Naval Complex

Analyte	Sample Location	Concentration (µg/L)	Qualifier	Date Collected	MCL	EPA Region III Tap Water RBC [a] (HI=0.1)
Heptachlor Epoxide [c]	G003GW007	0.13	J	10/08/02	0.2	NA
	G003GW008	0.014	J	10/08/02		
p,p'-DDD [c]	G003GW005	**1**	J	10/08/02	NA	0.28
	G003GW006	0.13	J	10/08/02		
p,p'-DDE [c]	G003GW005	**0.21**	=	10/08/02	NA	0.2
	G003GW006	0.058	J	10/08/02		
p,p'-DDT [c]	G003GW005	**1.2**	=	10/08/02	NA	0.2
	G003GW006	**1.6**	J	10/08/02		

[a] U.S. EPA Region III risk-based concentrations (RBCs) with a hazard index (HI)=0.1 for noncarcinogens.

[c] = Indicates that the compound is classified as a carcinogen.

= Indicates that the analyte was detected at the concentration shown.

J Indicates an estimated value. One or more quality control (QC) parameters were outside control limits or the value was detected below the laboratory's quantification limit.

NA Not applicable/not available

TABLE 4-4
Inorganic Compounds Detected in Groundwater - Additional Investigation
RFI Report Addendum/IM Completion Report/CMS Work Plan, SWMU 3, Zone G, Charleston Naval Complex

Analyte	Sample Location	Concentration (µg/L)	Qualifier	Date Collected	MCL	EPA Region III Tap Water RBC [a] (HI=0.1)	Zone G Range of Background Concentrations	
							Minimum	Maximum
Aluminum	G003GW001	202	=	05/15/97	NA	3,700	136	1,770
	G003GW001	590	=	09/16/97				
	G003GW001	212	=	12/02/97				
	G003GW001	467	=	04/21/98				
	G003GW001	890	J	10/08/02				
	G003GW002	109	=	05/15/97				
	G003GW002	35.9	J	09/16/97				
	G003GW002	251	=	12/02/97				
	G003GW002	365	=	04/22/98				
	G003GW002	490	J	10/08/02				
	G003GW003	741	J	06/18/97				
	G003GW003	966	=	09/17/97				
	G003GW003	**5,310**	=	12/03/97				
	G003GW003	**5,910**	=	04/21/98				
	G003GW009	740	J	10/08/02				
Arsenic [c]	G003GW003	3.2	J	12/03/97	50	NA	8	166
	G003GW008	5.2	J	10/08/02				
Barium	G003GW001	29.1	=	05/15/97	2,000	NA	14	937
	G003GW001	24.3	=	09/16/97				
	G003GW001	24.2	=	12/02/97				
	G003GW001	23.6	=	04/21/98				
	G003GW002	18	=	05/15/97				
	G003GW002	15.8	=	09/16/97				
	G003GW002	12.6	=	12/02/97				
	G003GW002	13.9	=	04/22/98				
	G003GW003	20.2	=	06/18/97				
	G003GW003	19.8	=	09/17/97				
	G003GW003	31	=	12/03/97				

TABLE 4-4
Inorganic Compounds Detected in Groundwater - Additional Investigation
RFI Report Addendum/IM Completion Report/CMS Work Plan, SWMU 3, Zone G, Charleston Naval Complex

Analyte	Sample Location	Concentration (μg/L)	Qualifier	Date Collected	MCL	EPA Region III Tap Water RBC [a] (HI=0.1)	Zone G Range of Background Concentrations	
							Minimum	Maximum
Barium	G003GW003	26.3	=	04/21/98	2,000	NA	14	937
Beryllium	G003GW001	0.2	J	05/15/97	4	NA	NA	NA
	G003GW002	0.37	J	05/15/97				
	G003GW004	0.35	J	10/08/02				
	G003GW006	0.51	J	10/08/02				
	G003GW009	0.76	J	10/08/02				
Calcium	G003GW001	47,800	=	05/15/97	NA/EN	NA/EN	85,600	294,000
	G003GW001	46,500	=	09/16/97				
	G003GW001	49,300	=	12/02/97				
	G003GW001	56,000	=	04/21/98				
	G003GW002	3,430	=	05/15/97				
	G003GW002	21,900	=	09/16/97				
	G003GW002	12,600	=	12/02/97				
	G003GW002	20,000	=	04/22/98				
	G003GW003	27,800	=	06/18/97				
	G003GW003	32400	=	09/17/97				
	G003GW003	29,400	=	12/03/97				
	G003GW003	25,000	=	04/21/98				
Chromium, Total	G003GW001	1.2	J	09/16/97	100	NA	2	14
	G003GW003	2.1	J	09/17/97				
	G003GW003	9.8	J	12/03/97				
	G003GW003	10.9	=	04/21/98				
Cobalt	G003GW002	2.6	J	05/15/97	NA	220	1.2	8
	G003GW003	1.1	J	06/18/97				
	G003GW003	1.2	J	12/03/97				
	G003GW003	1.5	J	04/21/98				
	G003GW004	7.9	J	10/08/02				

TABLE 4-4
Inorganic Compounds Detected in Groundwater - Additional Investigation
RFI Report Addendum/IM Completion Report/CMS Work Plan, SWMU 3, Zone G, Charleston Naval Complex

Analyte	Sample Location	Concentration (µg/L)	Qualifier	Date Collected	MCL	EPA Region III Tap Water RBC [a] (HI=0.1)	Zone G Range of Background Concentrations	
							Minimum	Maximum
Cobalt	G003GW006	9.1	J	10/08/02	NA	220	1.2	8
	G003GW007	2.3	J	10/08/02				
	G003GW008	3.4	J	10/08/02				
	G003GW009	16	J	10/08/02				
Copper	G003GW001	64.8	=	05/15/97	1,300	NA	12	87
	G003GW003	1.4	J	06/18/97				
	G003GW003	2	J	09/17/97				
	G003GW003	2.3	J	12/03/97				
Iron	G003GW001	371	=	05/15/97	NA	1,100	2,000	35,700
	G003GW001	448	=	09/16/97				
	G003GW001	209	=	12/02/97				
	G003GW001	414	=	04/21/98				
	G003GW001	870	J	10/08/02				
	G003GW002	66.3	J	05/15/97				
	G003GW002	41.7	J	09/16/97				
	G003GW002	266	=	12/02/97				
	G003GW002	411	=	04/22/98				
	G003GW002	530	J	10/08/02				
	G003GW003	606	=	06/18/97				
	G003GW003	973	=	09/17/97				
	G003GW003	6,340	=	12/03/97				
	G003GW003	6,110	=	04/21/98				
	G003GW005	220	J	10/08/02				
	G003GW007	93	J	10/08/02				
	G003GW008	2,300	J	10/08/02				
	G003GW009	160	J	10/08/02				
Lead	G003GW003	1.1	J	12/03/97	15	NA	6	52
Magnesium	G003GW001	8,680	=	05/15/97	NA/EN	NA/EN	70,100	533,000

TABLE 4-4
Inorganic Compounds Detected in Groundwater - Additional Investigation
RFI Report Addendum/IM Completion Report/CMS Work Plan, SWMU 3, Zone G, Charleston Naval Complex

Analyte	Sample Location	Concentration (µg/L)	Qualifier	Date Collected	MCL	EPA Region III Tap Water RBC [a] (HI=0.1)	Zone G Range of Background Concentrations	
							Minimum	Maximum
Magnesium	G003GW001	3,370	=	09/16/97	NA/EN	NA/EN	70,100	533,000
	G003GW001	4,080	=	12/02/97				
	G003GW001	3,880	=	04/21/98				
	G003GW001	3,600	J	10/08/02				
	G003GW002	1,000	=	05/15/97				
	G003GW002	1,860	=	09/16/97				
	G003GW002	1,720	=	12/02/97				
	G003GW002	2,520	=	04/22/98				
	G003GW003	3,770	=	06/18/97				
	G003GW003	6,710	=	09/17/97				
	G003GW003	4,560	=	12/03/97				
	G003GW003	3,810	=	04/21/98				
Manganese	G003GW001	80.9	=	05/15/97	NA	73	149	7,980
	G003GW001	8.7	J	09/16/97				
	G003GW001	3.7	J	12/02/97				
	G003GW001	8	J	04/21/98				
	G003GW001	12	J	10/08/02				
	G003GW002	107	=	05/15/97				
	G003GW002	33.7	=	09/16/97				
	G003GW002	38.1	=	12/02/97				
	G003GW002	39.4	=	04/22/98				
	G003GW002	9.6	J	10/08/02				
	G003GW003	46.6	=	06/18/97				
	G003GW003	24.8	=	09/17/97				
	G003GW003	46.9	=	12/03/97				
	G003GW003	58.7	=	04/21/98				
	G003GW004	150	=	10/08/02				
	G003GW005	25	=	10/08/02				

TABLE 4-4
Inorganic Compounds Detected in Groundwater - Additional Investigation
RFI Report Addendum/IM Completion Report/CMS Work Plan, SWMU 3, Zone G, Charleston Naval Complex

Analyte	Sample Location	Concentration (µg/L)	Qualifier	Date Collected	MCL	EPA Region III Tap Water RBC [a] (HI=0.1)	Zone G Range of Background Concentrations	
							Minimum	Maximum
Manganese	G003GW006	270	=	10/08/02	NA	73	149	7,980
	G003GW007	100	=	10/08/02				
	G003GW008	520	=	10/08/02				
	G003GW009	650	=	10/08/02				
Mercury	G003GW001	0.28	=	09/16/97	2	NA	0.14	0.17
Nickel	G003GW002	1.2	J	05/15/97	NA	73	1.2	20
	G003GW003	2.2	J	09/17/97				
	G003GW003	1.8	J	04/21/98				
Potassium	G003GW001	737	J	05/15/97	NA/EN	NA/EN	15,400	180,000
	G003GW001	1,590	J	09/16/97				
	G003GW001	1,450	J	12/02/97				
	G003GW001	1,730	=	04/21/98				
	G003GW002	331	J	04/22/98				
	G003GW003	1,670	J	06/18/97				
	G003GW003	1,950	J	09/17/97				
	G003GW003	1,370	J	12/03/97				
	G003GW003	1,410	=	04/21/98				
Selenium	G003GW001	4.6	J	12/02/97	50	NA	4	4
Sodium	G003GW001	19,200	=	05/15/97	NA/EN	NA/EN	NA	NA
	G003GW001	9,100	=	09/16/97				
	G003GW001	7,560	=	04/21/98				
	G003GW002	9,020	=	05/15/97				
	G003GW002	18,200	=	09/16/97				
	G003GW002	10,600	=	04/22/98				
	G003GW003	17,400	J	06/18/97				
	G003GW003	36,300	=	09/17/97				
	G003GW003	29,800	=	04/21/98				

TABLE 4-4
Inorganic Compounds Detected in Groundwater - Additional Investigation
RFI Report Addendum/IM Completion Report/CMS Work Plan, SWMU 3, Zone G, Charleston Naval Complex

Analyte	Sample Location	Concentration (µg/L)	Qualifier	Date Collected	MCL	EPA Region III Tap Water RBC [a] (HI=0.1)	Zone G Range of Background Concentrations	
							Minimum	Maximum
Vanadium	G003GW001	1.3	J	05/15/97	NA	26	3	30
	G003GW001	1.2	J	09/16/97				
	G003GW003	2	J	06/18/97				
	G003GW003	2.2	J	09/17/97				
	G003GW003	15.7	J	12/03/97				
	G003GW003	15	=	04/21/98				
Zinc	G003GW001	3.4	J	10/08/02	NA	1,100	18	124
	G003GW002	45.4	=	12/02/97				
	G003GW003	59.8	=	06/18/97				
	G003GW003	22.2	=	09/17/97				
	G003GW003	12.8	J	12/03/97				
	G003GW003	13.1	J	04/21/98				
	G003GW005	4.6	J	10/08/02				
	G003GW009	6.2	J	10/08/02				

All values are presented in units of micrograms per liter (µg/L).

Concentrations in bold and outlined within the table represent exceedances of maximum contaminant levels (MCLs), or U.S. EPA Region III risk-based concentrations (RBCs) where MCLs are not available, and the Zone G range of background concentrations.

[a] U.S. EPA Region III risk-based concentrations (RBCs) with a hazard index (HI)=0.1 for noncarcinogens.

[c] = Indicates that the compound is classified as a carcinogen.

= Indicates that the analyte was detected at the concentration shown.

EN Essential nutrient

J Indicates an estimated value. One or more quality control (QC) parameters were outside control limits or the value was detected below the laboratory's quantification limit.

NA Not applicable/not available

NOTE: Original figure created in color

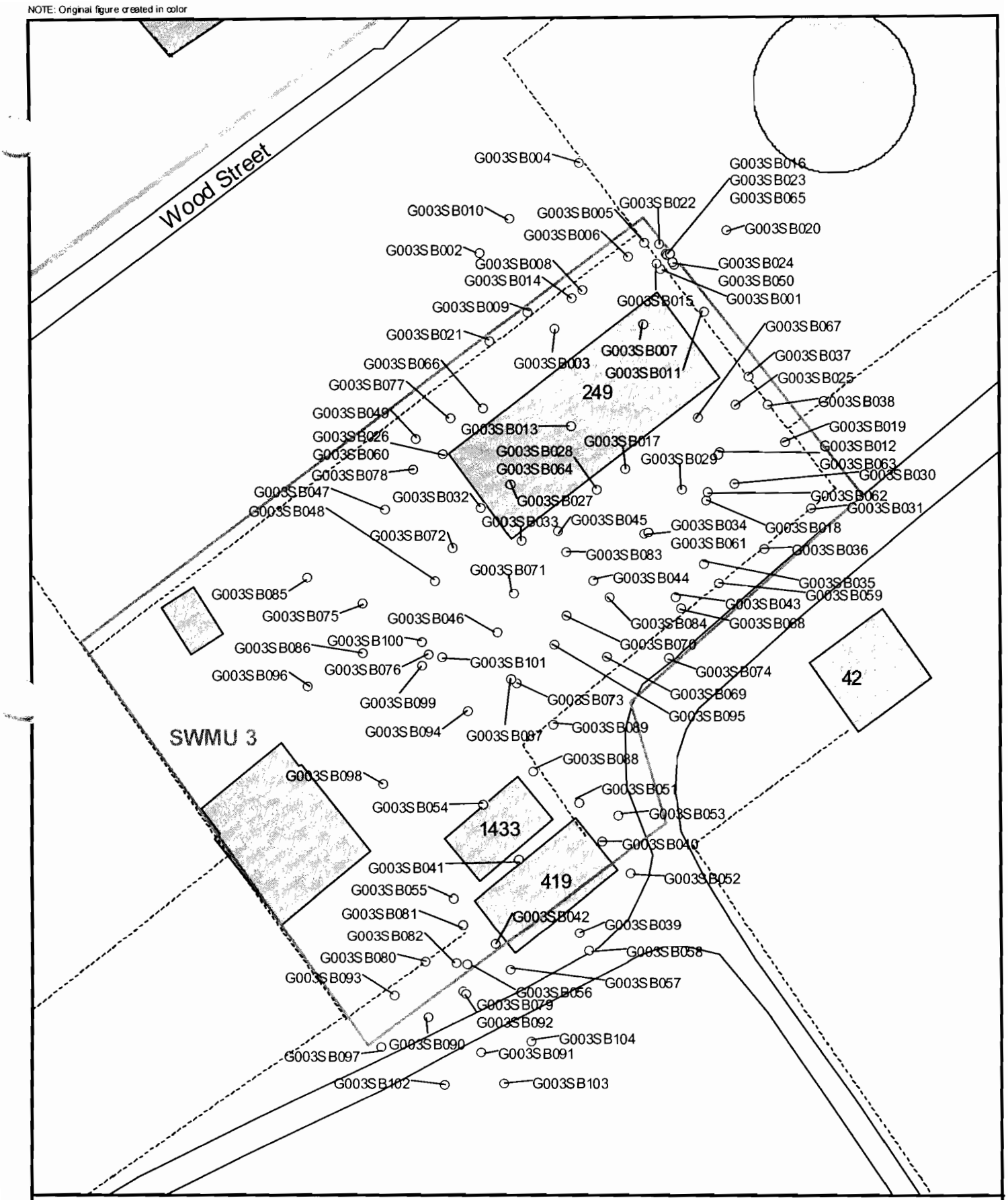

Soil Sample Location
Fence
Roads
SWMU 3
Buildings
Zone Boundary

N

0 40 80 Feet

1 inch = 50 feet

Figure 4-1
Soil Sample Locations
SWMU 3, Zone G
Charleston Naval Complex

CH2MHILL

File Path: C:\18gis\Projects\Zone_G\SWMU3\apr\swmu3.apr. Date: 09 Jan 2003 10:26. User: NMOUDRY. * Figure 4-1 Soil Sample Locations

NOTE: Original figure created in color

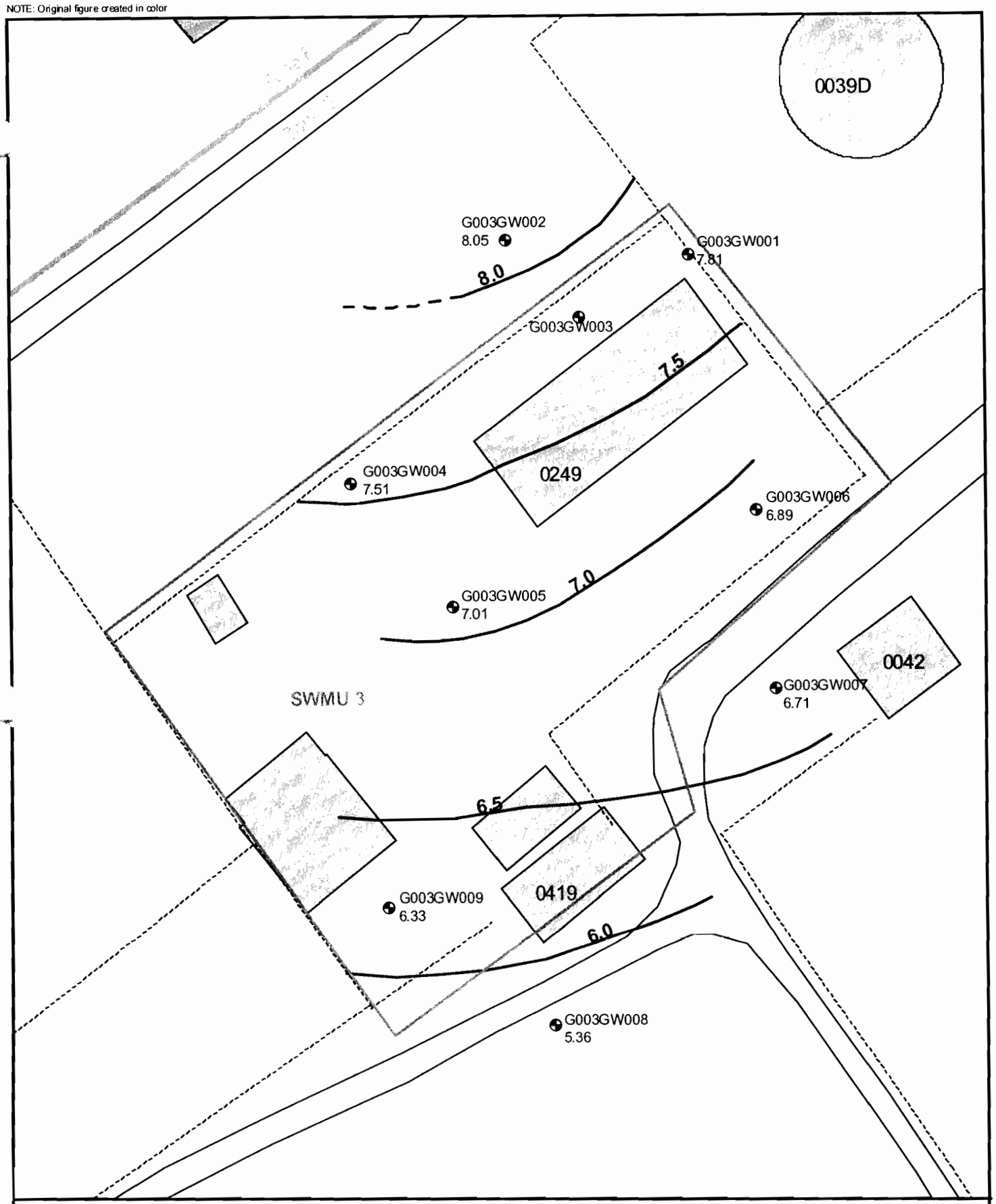

10/29/2002 Gauging Event

Known Groundwater Contour (feet above msl)

Inferred Groundwater Contour (feet above msl)

Groundwater Well

Fence

Roads

Buildings

Zone Boundary

SWMU 3

N

0 40 80 Feet

1 inch = 50 feet

Figure 4-2
Groundwater Monitor Wells and Contours
SWMU 3, Zone G
Charleston Naval Complex

CH2MHILL

File Path. C:\18gis\Projects\Zone_G\SWMU3\apr\swmu3.apr. Date: 26 Nov 2002 10:46. User: NMOUDRY. Figure 4-1 Groundwater Contours

NOTE: Original figure created in color

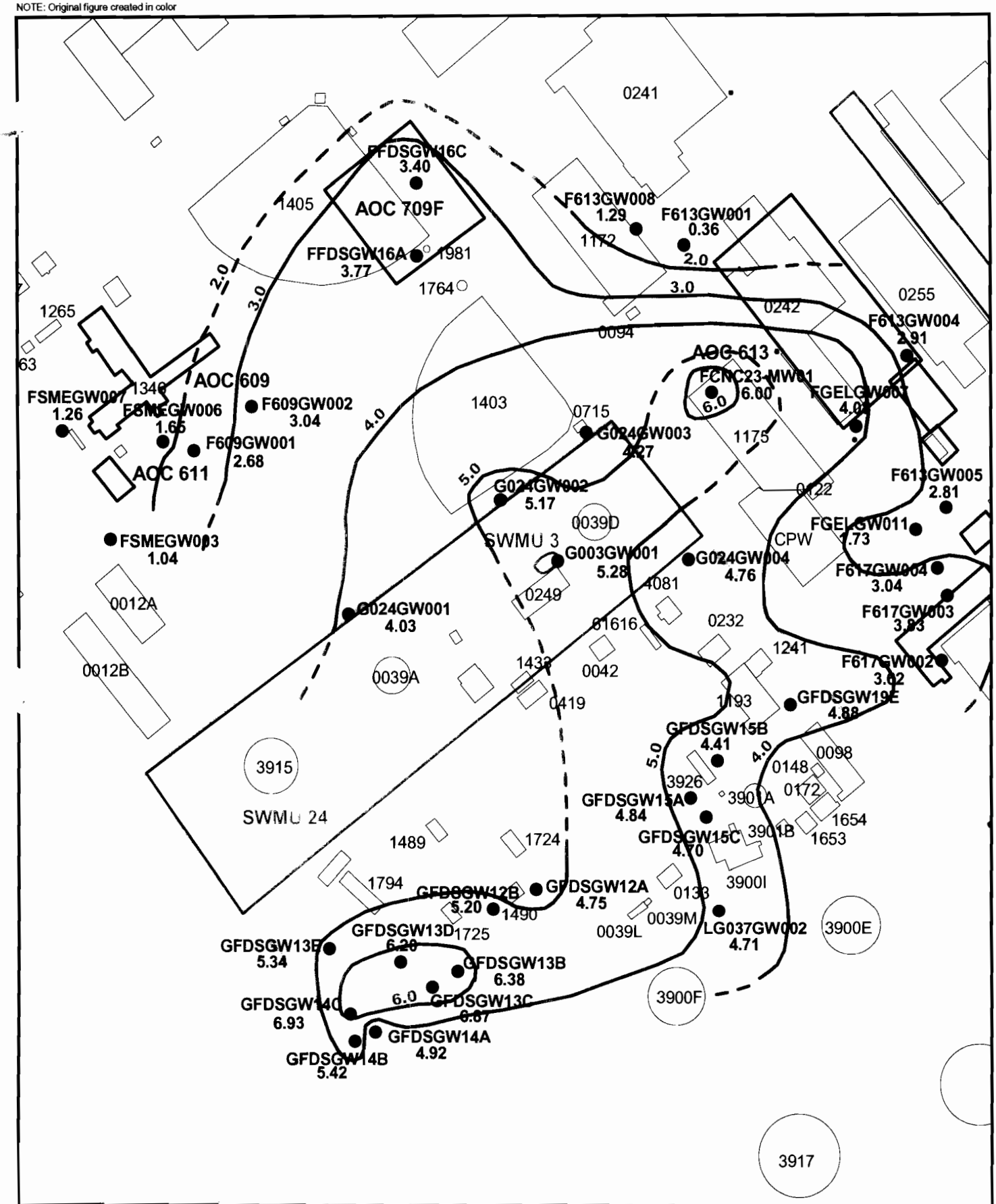

- Groundwater Well (ft/msl) - 3/28/02
- GW Shallow Contours (ft/msl) - 3/28/02 - inferred
- GW Shallow Contours (ft/msl) - 3/28/02 - known
- AOC Boundary
- SWMU Boundary
- Buildings
- Zone Boundary

N

0 200 400 Feet

1 inch = 233.333 feet

Figure 4-3
Shallow Groundwater Potentiometric Surface
SWMU 24, Zone G
Charleston Naval Complex

CH2MHILL

Section 5.0

5.0 COPC/COC Refinement

5.1 Introduction

This section discusses chemicals that were identified in the *Zone G RFI Report, Revision 0* (EnSafe, 1998a) as COCs (see Section 2.0 of this report). This section also addresses COPCs identified in subsequent sampling and screening (see Section 4.0). Some of the initially identified COCs/COPCs are not considered final COCs based on the rationale presented in this section. Additionally, this section rescreens VOCs detected in the RFI soil samples against a SSL based on a DAF=1. The COCs/COPCs requiring further evaluation are listed below by media.

Surface Soil COCs	
Acetone	Heptachlor Epoxide
Benzene	DDD
Chlordane	DDE
Alpha-chlordane	DDT
Gamma-chlordane	Aroclor-1248
Dieldrin	Manganese
Heptachlor	

Subsurface Soil COCs	
PCE	Alpha-chlordane
TCE	Gamma-chlordane
Beta-BHC	Dieldrin
Gamma-BHC	DDD
Chlordane	DDT

Groundwater COCs	
Alpha-BHC	DDT
Delta-BHC	Aluminum
Dieldrin	Beryllium
Heptachlor Epoxide	Chromium
DDD	Thallium
DDE	Vanadium

This section describes how final COCs for SWMU 3 were addressed in the IMs conducted by the DET and CH2M-Jones, and demonstrates that the residual concentrations of chemicals

remaining in soil at the site are protective of human health and the environment, and are within acceptable levels to allow for industrial land use of this site.

During the IM clean soil from off site replaced the contaminated soil that was removed, and included many sample locations that had contaminated soil. Thus, a reassessment of soil contamination can be made replacing all samples removed by excavation with analytical results from the clean fill material. A few RFI sample locations where no removal actions were conducted were resampled. The most recent results for these locations are considered representative of current site conditions. Figure 5-1 presents the sample locations and the boundaries of the IM excavations.

Tables 5-1 and 5-2 present the detected concentrations of COCs/COPCs in surface and subsurface soil, respectively. Tables 5-3 and 5-4 present the analytical results for surface soil and subsurface soil COCs/COPCs, respectively, that remained after the completion of the IMs. Table 5-5 presents the site-specific SSLs calculated for subsurface soil COPCs. Tables 5-6 and 5-7 present detections of organic and inorganic COCs/COPCs, respectively, in groundwater.

This section also reevaluates the presence of VOCs that were detected, and reported, during the RFI. The purpose of the reevaluation is to determine if VOC concentrations observed in the RFI samples pose a threat to shallow groundwater. In this section, VOCs detected in RFI samples are screened against a SSL based on a DAF=1.

5.2 Soil COCs

5.2.1 Surface Soil

The *Zone G RFI Report, Revision 0* identified manganese, 4,4'-DDE, Aroclor-1248, heptachlor, alpha-chlordane, and gamma-chlordane as COCs in surface soil under the unrestricted (i.e., residential) land use scenario for the site. Aroclor-1248, heptachlor, alpha-chlordane, and gamma-chlordane were identified as surface soils COCs based on industrial land use. No compounds were identified in surface soil that represent a threat to shallow groundwater. As discussed in Section 4.0, alpha-chlordane, chlordane, dieldrin, gamma-chlordane, heptachlor, heptachlor epoxide, DDD, DDE, and DDT are identified as surface soil COPCs based on protection of human health. Acetone, benzene, alpha-chlordane, chlordane, dieldrin, gamma-chlordane, heptachlor epoxide, DDD, and DDT are identified as surface soil COPCs based on protection of shallow groundwater. These previously identified COCs and COPCs are evaluated further below to determine if they are considered COCs under current screening criteria established for the CNC.

Many of the identified COCs/COPCs were targeted for removal during the IM completed at the site. The MCSs identified for these COCs/COPCs were presented in the Phase II IMWP (CH2M-Jones, 2002a). Generally, the MCSs were the industrial or residential RBCs, SSLs, or anthropogenic background levels. In some cases the generic SSLs used as MCSs were replaced by site-specific SSLs as described below.

Residual concentrations of previously identified surface soil COCs/COPCs are compared first to the range of Zone G background concentrations (for inorganics) and anthropogenic background levels. Samples that exceed the background screening levels are then compared to RBCs. If individual sample results indicate that the compound is present above its EPA Region III residential RBC, an exposure concentration (UCL_{95}) was calculated and compared to the RBC. For compounds that potentially pose a leaching threat, analytical results were compared to generic SSLs (DAF=10). If individual sample results indicated that the compound is present above its generic SSL, a site-specific SSL was calculated and compared to the analytical results. If individual samples results exceed the site-specific SSL, mean concentrations were calculated and compared to the site-specific SSL. Analytical results for samples that were removed during the IMs conducted at the site were replaced with the analytical results from the fill material for the UCL_{95} and mean concentration calculations.

SWMU 3 is planned for continued industrial land use. Therefore, industrial RBCs are appropriate screening criteria. However, CH2M-Jones included residential RBCs as target MCSs at the site so that, if practicable, the site could be remediated to unrestricted land use standards during the IM. Half-acre exposure areas were established to be consistent with this objective. The site is approximately 1 acre in size. Therefore, the site was divided into two ½-acre exposure areas. Figure 5-1 presents the boundary of the exposure areas and the soil borings in each area.

Compounds with residual concentrations above their RBCs were evaluated to determine where the exceedances occurred. If the exceedances were limited to one exposure area, then the exposure concentration (UCL_{95}) was calculated for that area only. If exceedances of the RBC occurred in both exposure areas, exposure concentrations were individually calculated for each area.

Acetone

Acetone was not targeted for removal during either IM conducted at the site. Table 5-1 presents the detected concentrations of acetone at SWMU 3. As can be seen in the table, although acetone was not targeted during the IMs, several locations where acetone was

detected, including one location where it was detected above its SSL, were removed during the IMs conducted at the site. Table 5-3 presents the residual acetone concentrations.

Residual concentrations of acetone are all below the residential RBC (HI=0.1) of 780,000 μg/kg (see Table 5-3). A total of 23 surface soil samples were analyzed for acetone, and one residual surface soil sample had a reported concentration above its SSL (DAF=1) of 800 μg/kg. Because acetone is considered a common laboratory contaminant by the EPA (EPA, 1989) the location where acetone was reported above its SSL was resampled. Soil boring G003SB050 was advanced at this location. The results from the more recent sample were below the SSL for acetone. Based on this discussion, residual concentrations of acetone are all below the SSL.

Because residual concentrations of acetone are all below the residential RBC and SSL, acetone is not considered a COC in surface soil at SWMU 3.

Benzene

Benzene was not targeted for removal during either IM conducted at the site. Table 5-1 presents the detected concentrations of benzene at SWMU 3. Benzene was detected in one sample collected at SWMU 3. The detected concentration exceeded its SSL. The location of this sample was not removed during the IMs conducted at the site. Table 5-3 presents the residual benzene concentrations.

Residual concentrations of benzene are all below the residential RBC of 12,000 μg/kg (see Table 5-3). A total of 23 surface soil samples were analyzed for benzene, and one residual surface soil sample had a reported concentration above its SSL (DAF=1) of 3.4 μg/kg. The location of the benzene detection was also the location where acetone (residual) was detected above its SSL. The sample collected at soil boring G003SB050 to determine the present acetone concentration was also analyzed for benzene. Benzene was not detected in the recent sample. The more recent benzene datum was substituted for the historic benzene concentration at soil boring G003SB024. Following the substitution, benzene was not detected at any residual sample location at SWMU 3.

Because benzene is not present in the residual samples at SWMU 3, benzene is not considered a COC in surface soil at the site.

Chlordane

Chlordane was targeted for removal during both IMs conducted at the site. Table 5-1 presents the detected concentrations of chlordane at SWMU 3. As can be seen in the table, several locations where chlordane was detected, including three locations where it was

detected above its RBC and SSL, were removed during the IMs conducted at the site. Figure 5-2 shows the locations where the pesticides chlordane, alpha-chlordane, and gamma-chlordane were sampled and detected. Table 5-3 presents the residual chlordane concentrations.

Residual concentrations of chlordane are all below the residential RBC of 1,800 $\mu g/kg$ except at one location (see Table 5-3). All locations that had reported chlordane concentrations above its SSL were removed during the IMs. Therefore, existing concentrations of chlordane do not represent a significant leaching threat.

A total of 69 samples were analyzed for chlordane. In order to evaluate the residual risk associated with the presence of chlordane at SWMU 3, an exposure concentration (UCL_{95}) was calculated. Because the only sample that contained chlordane above its RBC is in the southern exposure area, the UCL_{95} calculation included only the samples from this area. A summary of the UCL_{95} calculation and the data that were included in the calculation are included in Appendix E.

The residual exposure concentration (UCL_{95}) was calculated to be 453 $\mu g/kg$, which is below the RBC for chlordane. Therefore, chlordane is not considered a COC in surface soil at SWMU 3.

Alpha-Chlordane

Alpha-chlordane was targeted for removal during both IMs conducted at the site. Table 5-1 presents the detected concentrations of alpha-chlordane at SWMU 3. As can be seen in the table, the three locations where it was detected above its RBC and/or SSL were removed during the IMs conducted at the site. Figure 5-2 shows the locations where the pesticides chlordane, alpha-chlordane, and gamma-chlordane were sampled and detected. Table 5-3 presents the residual alpha-chlordane concentrations.

Residual concentrations of alpha-chlordane are all below the residential RBC (1,800 $\mu g/kg$) and SSL (5,000 $\mu g/kg$, see Table 5-3). All locations that had reported alpha-chlordane concentrations above its RBC and SSL were removed during the IMs.

Because residual concentrations of alpha-chlordane are all below screening criteria, it is not considered a COC in surface soil at SWMU 3.

Gamma-Chlordane

Gamma-chlordane was targeted for removal during both IMs conducted at the site. Table 5-1 presents the detected concentrations of gamma-chlordane at SWMU 3. As can be seen in

the table, the three locations where it was detected above its RBC and/or SSL were removed during the IMs conducted at the site. Figure 5-2 shows the locations where the pesticides chlordane, alpha-chlordane, and gamma-chlordane were sampled and detected. Table 5-3 presents the residual gamma-chlordane concentrations.

Residual concentrations of gamma-chlordane are all below the residential RBC (1,800 μg/kg) and SSL (5,000 μg/kg, see Table 5-3). All locations that had reported gamma-chlordane concentrations above its RBC and SSL were removed during the IMs.

Because residual concentrations of gamma-chlordane are all below screening criteria, it is not considered a COC in surface soil at SWMU 3.

Dieldrin

Dieldrin was targeted for removal during both IMs conducted at the site. Table 5-1 presents the detected concentrations of dieldrin at SWMU 3. As can be seen in the table, ten locations where dieldrin was detected above its RBC and SSL were removed during the IMs conducted at the site. Figure 5-3 shows the locations where the pesticide dieldrin was sampled and detected. Table 5-3 presents the residual dieldrin concentrations.

Residual concentrations of dieldrin are all at or below the residential RBC of 40 μg/kg except at three locations (see Table 5-3).

A total of 91 samples were analyzed for dieldrin. In order to evaluate the residual risk associated with the presence of dieldrin at SWMU 3, an exposure concentration (UCL_{95}) was calculated. The UCL_{95} was calculated for both north and south exposure areas. A summary of the UCL_{95} calculations and the data that were included in the calculation are included in Appendix E.

The residual exposure concentration (UCL_{95}) was calculated to be 8.13 μg/kg for the north area and 15.1 μg/kg for the south area. The exposure concentrations are both below the residential RBC for dieldrin (40 μg/kg).

The average concentration (arithmetic mean) of dieldrin was calculated to be 5.5 μg/kg for the north area (surface soil) and 11.1 μg/kg for the south area to evaluate the threat of dieldrin leaching to groundwater. A summary of the data and calculations are included in Appendix E. The area average dieldrin concentrations do not exceed the site-specific SSL of 11.1 μg/kg. Based on these data, dieldrin is not identified as a surface soil COC at SWMU 3.

Heptachlor

Heptachlor was targeted for removal during both IMs conducted at the site. Table 5-1 presents the detected concentrations of heptachlor at SWMU 3. As can be seen in the table the three locations where it was detected above its RBC were removed during the IMs conducted at the site. No samples contained heptachlor above its SSL. Figure 5-4 shows the locations where the pesticides heptachlor and heptachlor epoxide were sampled and detected. Table 5-3 presents the residual heptachlor concentrations.

Residual concentrations of heptachlor are all below the residential RBC (140 μg/kg) and SSL (11,500 μg/kg, see Table 5-3). All locations that had reported heptachlor concentrations above its residential RBC were removed during the IMs.

Because residual concentrations of heptachlor are all below screening criteria, it is not considered a surface soil COC at SWMU 3.

Heptachlor Epoxide

Heptachlor epoxide was targeted for removal during both IMs conducted at the site. Table 5-1 presents the detected concentrations of heptachlor epoxide at SWMU 3. As can be seen in the table several locations where heptachlor epoxide was detected, including three locations where it was detected above its SSL and/or RBC, were removed during the IMs conducted at the site. Figure 5-4 shows the locations where the pesticides heptachlor and heptachlor epoxide were sampled and detected. Table 5-3 presents the residual heptachlor epoxide concentrations.

Residual concentrations of heptachlor epoxide are all below the residential RBC of 70 μg/kg except at one location (G003SB091, 120 μg/kg; see Table 5-3). All locations that had reported heptachlor epoxide concentrations above its SSL were removed during the IMs. Therefore residual concentrations of heptachlor epoxide do not represent a significant leaching threat.

A total of 88 samples were analyzed for heptachlor epoxide. In order to evaluate the residual risk associated with the presence of heptachlor epoxide at SWMU 3, an exposure concentration (UCL_{95}) was calculated. Because the only sample that contained heptachlor epoxide above its RBC is in the southern exposure area, the UCL_{95} calculation included only the samples from this area. A summary of the UCL_{95} calculation and the data that were included in the calculation are included in Appendix E.

The residual exposure concentration (UCL_{95}) was calculated to be 32.2 μg/kg, which is below the residential RBC for heptachlor epoxide. Therefore, heptachlor epoxide is not considered a surface soil COC at SWMU 3.

p,p'-DDD

DDD was targeted for removal during both IMs conducted at the site. Table 5-1 presents the detected concentrations of DDD at SWMU 3. As can be seen in the table all six locations where DDD was detected above its RBC and/or SSL were removed during the IMs conducted at the site. Figure 5-5 shows the locations where the pesticides DDD, DDE, and DDT were sampled and detected. Table 5-3 presents the residual DDD concentrations.

Residual concentrations of DDD are all below the residential RBC (2,700 μg/kg) and SSL (8,000 μg/kg, see Table 5-3). All locations that had reported DDD concentrations above its RBC and/or SSL were removed during the IMs.

Because residual concentrations of DDD are all below screening criteria, it is not considered a surface soil COC at SWMU 3.

p,p'-DDE

DDE was targeted for removal during both IMs conducted at the site. Table 5-1 presents the detected concentrations of DDE at SWMU 3. As can be seen in the table all nine locations where DDE was detected above its RBC and/or SSL were removed during the IMs conducted at the site. Figure 5-5 shows the locations where the pesticides DDD, DDE, and DDT were sampled and detected. Table 5-3 presents the residual DDE concentrations.

Residual concentrations of DDE are all below the residential RBC (1,900 μg/kg) and SSL (27,000 μg/kg, see Table 5-3). All locations that had reported DDE concentrations above its RBC and/or SSL were removed during the IMs.

Because residual concentrations of DDE are all below screening criteria, it is not considered a surface soil COC at SWMU 3.

p,p'-DDT

DDT was targeted for removal during both IMs conducted at the site. Table 5-1 presents the detected concentrations of DDT at SWMU 3. As can be seen in the table several locations where DDT was detected, including 18 locations where it was detected above its SSL and/or RBC, were removed during the IMs conducted at the site. Figure 5-5 shows the locations where the pesticides DDD, DDE, and DDT were sampled and detected. Table 5-3 presents the residual DDT concentrations.

Residual concentrations of DDT are all below the residential RBC of 1,900 μg/kg except at three locations (see Table 5-3). All locations that had reported DDT concentrations above its

SSL were removed during the IMs. Therefore, residual DDT concentrations do not represent a significant leaching threat.

A total of 88 samples were analyzed for DDT. In order to evaluate the residual risk associated with the presence of DDT at SWMU 3, exposure concentrations (UCL_{95}) were calculated. Because the samples that contained DDT above its RBC were in both exposure areas, the UCL_{95} was calculated for both areas. A summary of the UCL_{95} calculations and the data that were included in the calculations are included in Appendix E.

The residual exposure concentration (UCL_{95}) was calculated to be 279 μg/kg for the north area and 863 μg/kg for the south area. The exposure concentrations are both below the residential RBC for DDT. Based on these data, DDT is not identified as a surface soil COC at SWMU 3.

Aroclor-1248

Aroclor-1248 was targeted for removal during the DET's IM conducted at the site. It was not targeted during the 2002 IM. Table 5-1 presents the detected concentrations of Aroclor-1248 at SWMU 3. As can be seen in the table Aroclor-1248 was detected in one sample. The detected concentration was above the RBC and SSL for Aroclor-1248. The location of the detection was removed during the DET's IM conducted at the site. Figure 5-6 shows the locations where the PCB Aroclor-1248 was sampled and detected. Table 5-3 presents the residual Aroclor-1248 concentrations.

Aroclor-1248 was only detected in a single sample, whose location was removed during an IM conducted at the site. Therefore, residual concentrations of Aroclor-1248 are all below the residential RBC (320 μg/kg) and SSL (205 μg/kg, see Table 5-3).

Because residual concentrations of Aroclor-1248 are all below screening criteria, it is not considered a surface soil COC at SWMU 3.

Manganese

Manganese was identified as a COC in the *Zone G RFI Report, Revision 0* based on exceedances of the RBC (HI=0.1) of 180,000 μg/kg. One sample also exceeded the BRC used in the Zone G RFI. However, the analytical results for manganese were all within the Zone G range of background concentrations. Therefore, the detected concentrations of manganese are consistent with background levels. Based on this information, manganese is not considered a surface soil COC at SWMU 3.

5.2.2 Subsurface Soil

The *Zone G RFI Report, Revision 0* did not identify any subsurface soil COCs at SWMU 3. As discussed in Section 4.0 of this RFI Report Addendum, during the additional investigations conducted at the site PCE, TCE, alpha-chlordane, beta-BHC, chlordane, dieldrin, gamma-BHC, gamma-chlordane, DDD, and DDT were identified as COPCs in subsurface soil. These COPCs are evaluated further below to determine if they are considered COCs under current practices at the CNC.

Residual concentrations of previously identified surface soil COPCs are compared to their respective generic SSLs. Generic SSLs for VOCs are based on a DAF=1. SSLs for all other compounds are based on a DAF=10. If individual sample results indicate that the compound is present above its SSL, site-specific SSLs were calculated and compared to the analytical results. SSLs were calculated for both a paved and unpaved scenario. The unpaved SSL was selected based on site conditions. If individual samples results exceed the site-specific SSL, mean concentrations were calculated and compared to the site-specific SSL. Analytical results for samples that were removed during the IMs conducted at the site were replaced with the analytical results from the fill material for the mean concentration calculation. Additionally, samples where the compound was not detected, but the reported value was above the maximum detected concentrations, were eliminated from statistical data sets in accordance with EPA guidance (EPA, 1989). Each compound identified as a COPC is discussed below.

PCE

Residual concentrations of PCE in subsurface soil samples are below the generic SSL (DAF=1) for all but five samples (see Table 5-4). Because individual sample results exceed the generic SSL, a site-specific SSL was calculated for PCE. The SSL calculation is presented in Table 5-5 and is consistent with the *EPA Soil Screening Guidance: User's Guide* (EPA, 1996a) and the *EPA Soil Screening Guidance: Technical Background Document* (EPA, 1996b). The calculated site-specific SSL for PCE was calculated to be 148.7 μg/kg.

Residual concentrations of PCE are all below the site-specific SSL. Therefore, existing concentrations of PCE do not represent a significant leaching hazard. PCE is not identified as a subsurface soil COC.

TCE

Residual concentrations of TCE in subsurface soil samples are below the generic SSL (DAF=1) for all but six samples (see Table 5-4). Because individual sample results exceed the

generic SSL, a site-specific SSL was calculated. The SSL calculation is presented in Table 5-5 and is consistent with the *EPA Soil Screening Guidance: User's Guide* (EPA, 1996a) and the *EPA Soil Screening Guidance: Technical Background Document* (EPA, 1996b). The calculated site-specific SSL for TCE was calculated to be 58.7 $\mu g/kg$.

Residual concentrations of TCE are all below the site-specific SSL. Therefore, existing concentrations of TCE do not represent a significant leaching hazard. TCE is not identified as a subsurface soil COC.

Beta-BHC

Residual subsurface soil concentrations of beta-BHC are all below its generic SSL (DAF=10, see Table 5-4). Figure 5-7 shows the locations where beta-BHCs were sampled and detected. Individual sample results did not exceed the generic SSL, therefore a site-specific SSL was not calculated for beta-BHC and it was not identified as a subsurface soil COC.

Gamma-BHC

Residual concentrations of gamma-BHC in subsurface soil samples are below the generic SSL (DAF=1) for all but one sample (see Table 5-4). Because individual sample results exceed the generic SSL, a site-specific SSL was calculated. Figure 5-7 shows the locations where gamma-BHCs were sampled and detected. The SSL calculation is presented in Table 5-5 and is consistent with the *EPA Soil Screening Guidance: User's Guide* (EPA, 1996a) and the *EPA Soil Screening Guidance: Technical Background Document* (EPA, 1996b). The calculated site-specific SSL for gamma-BHC was calculated to be 28.4 $\mu g/kg$.

Residual concentrations of gamma-BHC are all below the site-specific SSL. Therefore, existing concentrations of gamma-BHC do not represent a significant leaching hazard. Gamma-BHC is not identified as a subsurface soil COC.

Chlordane

Residual subsurface soil concentrations of chlordane are all below its generic SSL (DAF=10, see Table 5-4). Figure 5-8 shows the locations where chlordane was sampled and detected. Individual sample results did not exceed the generic SSL, therefore a site-specific SSL was not calculated for chlordane and it was not identified as a COC.

Alpha-Chlordane

Residual subsurface soil concentrations of alpha-chlordane are all below its generic SSL (DAF=10, see Table 5-4). Figure 5-8 shows the locations where alpha-chlordane was

sampled and detected. Individual sample results did not exceed the generic SSL, therefore a site-specific SSL was not calculated for alpha-chlordane and it was not identified as a COC.

Gamma-Chlordane

Residual subsurface soil concentrations of gamma-chlordane are all below its generic SSL (DAF=10, see Table 5-4). Figure 5-8 shows the locations where gamma-chlordane was sampled and detected. Individual sample results did not exceed the generic SSL, therefore a site-specific SSL was not calculated for gamma-chlordane and it was not identified as a COC.

Dieldrin

Residual concentrations of dieldrin in subsurface soil samples are below the generic SSL (DAF=1) for all but 11 samples (see Table 5-4). Figure 5-9 shows the locations where dieldrin was sampled and detected. Because individual sample results exceed the generic SSL, a site-specific SSL was calculated. The SSL calculation is presented in Table 5-5 and is consistent with the *EPA Soil Screening Guidance: User's Guide* (EPA, 1996a) and the *EPA Soil Screening Guidance: Technical Background Document* (EPA, 1996b). The calculated site-specific SSL for dieldrin was calculated to be 11.1 μg/kg.

Two residual subsurface soil samples contained dieldrin at concentrations that exceed its site-specific SSL. Therefore, the mean dieldrin concentrations were calculated for SWMU 3. Because the samples that contained dieldrin above its SSL were in both exposure areas, a mean concentration was calculated for each area. A summary of the mean concentration calculations and the data that were included in the calculations are included in Appendix E.

The residual mean concentration was calculated to be 3.3 μg/kg for the north area and 3.0 μg/kg for the south area. The mean concentrations are both below the site-specific SSL for dieldrin. Based on these data, dieldrin is not identified as a COC at SWMU 3.

Dieldrin has been detected in shallow groundwater at concentrations that exceed its tap water RBC (an MCL is not available for dieldrin). These exceedances are likely the result of dieldrin soil concentrations that have been removed. Because the mean residual concentration of dieldrin is now below the site-specific SSL existing dieldrin concentrations likely do not represent a significant leaching hazard. Therefore dieldrin is not identified as a subsurface soil COC.

DDD

Residual subsurface soil concentrations of DDD are all below its generic SSL (DAF=10, see Table 5-4). Figure 5-10 shows the locations where DDD was sampled and detected. Individual sample results did not exceed the generic SSL, therefore a site-specific SSL was not calculated for DDD and it was not identified as a COC.

DDT

Residual subsurface soil concentrations of DDT are all below its generic SSL (DAF=10, see Table 5-4). Figure 5-10 shows the locations where DDT was sampled and detected. Individual sample results did not exceed the generic SSL, therefore a site-specific SSL was not calculated for DDT and it was not identified as a COC.

5.3 Groundwater COCs

The *Zone G RFI Report, Revision 0* identified aluminum, beryllium, chromium, thallium, and vanadium as shallow groundwater COCs based on an unrestricted (i.e., residential) land use scenario for the site. No organic compounds were detected in groundwater samples reported in the Zone G RFI. As discussed in Section 4.0, alpha-BHC, delta-BHC, dieldrin, heptachlor epoxide, DDD, DDE, DDT, and aluminum were identified as COPCs in groundwater as a result of the additional sampling. These COCs/COPCs are evaluated further below to determine if they are considered COCs under current practices at the CNC. Each of these compounds is discussed below. Tables 5-6 and 5-7 present the organic and inorganic COPCs, respectively, that were detected in site groundwater.

5.3.1 Pesticides

As discussed in Section 4.0, pesticides were not detected in groundwater samples until the most recent groundwater sampling event at this site. For the groundwater samples collected during the October 2002 event, alpha-BHC, delta-BHC, dieldrin, heptachlor epoxide, DDD, DDE, and DDT were detected at concentrations that exceeded their MCLs (or RBCs in the absence of an MCL) in at least one sample. All of the pesticide detections occurred in the newly installed monitoring wells. Only one round of groundwater samples has been collected from these monitoring wells (G003GW004 through G003GW009), therefore historical data are not available.

Pesticides are generally not very soluble in water and they tend to sorb strongly to soil particles. Therefore, detections of pesticides in groundwater are more likely to result from the presence of suspended solids in the sample than to be present in the dissolved phase.

Groundwater quality data collected in the field included turbidity measurements. Some of the earlier RFI turbidity data could not be recovered. Table 5-8 presents the available field groundwater quality measurements. Turbidity measurements in Table 5-8 are the last recorded measurement for each monitoring well. It should be noted that some turbidity measurements from some wells fluctuated during purging. Therefore, the final turbidity measurement may not be representative of the turbidity in the analytical sample.

Alpha-BHC

Alpha-BHC was identified as a COPC based its detection above its RBC (an MCL is not available for alpha-BHC) in a single sample collected from monitoring well G003GW007 (see Table 5-6). Because alpha-BHC was detected above its screening criteria, it is identified as a COC in SWMU 3 groundwater.

Delta-BHC

Delta-BHC was identified as a COPC based on its detection above its RBC (an MCL is not available for delta-BHC) in a single sample collected from monitoring well G003GW007 (see Table 5-6). Because delta-BHC was detected above screening criteria, it is identified as a COC in SWMU 3 groundwater.

Dieldrin

Dieldrin was identified as a COPC based on its detection above its RBC (an MCL is not available for dieldrin)in a two samples collected from monitoring wells G005GW005 and G003GW007 (see Table 5-6). Because dieldrin was detected above screening criteria, it is identified as a COC in SWMU 3 groundwater.

Heptachlor epoxide

Heptachlor epoxide was identified as a COPC based on its detection above its MCL in one sample collected from monitoring well G005GW006 (see Table 5-6). Because heptachlor epoxide was detected above screening criteria, it is identified as a COPC in SWMU 3 groundwater.

DDD

DDD was identified as a COPC based on its detection above its RBC (an MCL is not available for DDD) in a one sample collected from monitoring well G005GW005 (see Table 5-6). Because DDD was detected above screening criteria, it is identified as a COC in SWMU 3 groundwater.

DDE

DDE was identified as a COPC based on its detection above its RBC (an MCL is not available for DDE) in one sample collected from site monitoring wells. It was detected above its RBC in the sample collected from monitoring well G005GW005 (see Table 5-6). Because DDE was detected above screening criteria, it is identified as a COC in SWMU 3 groundwater.

DDT

DDT was identified as a COPC based on two samples where it was detected above its RBC (an MCL is not available for DDT). The samples where the exceedances were noted were collected from monitoring wells G005GW005 and G003GW006 (see Table 5-6). Because DDT was detected above screening criteria, it is identified as a COC in SWMU 3 groundwater.

5.3.2 Inorganics

As previously discussed, groundwater quality data was collected in the field during each sampling event, although some of the early data could not be recovered. Table 5-8 presents the available field groundwater quality measurements. Turbidity measurements in Table 5-8 are the last recorded measurement for each monitoring well and may not represent the turbidity in the sample due to fluctuation of the turbidity property during purging.

Aluminum

Aluminum was identified as a COC in the *Zone G RFI Report, Revision 0* based on exceedances of the RBC (HI=0.1, an MCL is not available for aluminum) of 3,700 μg/L in two first round samples. Detected concentrations of aluminum in two samples collected from monitoring well G003GW003 after completion of the RFI also exceeded its RBC based on a HI=0.1. As a screening criterion, analytical results are initially compared to RBCs based on a HI=0.1. Because aluminum is the only noncarcinogenic COC at SWMU 3 (see discussions below) the appropriate screening criterion for aluminum is its RBC based on a HI=1.0 (37,000 μg/kg). No groundwater samples collected at SWMU 3 contained aluminum at a concentration that exceeded its RBC based on an HI=1.0 (see Table 5-7). Based on these data, aluminum is not identified as a COC.

Additionally, three of the four samples that exhibited aluminum concentrations above the RBC (HI=0.1) were collected from monitoring well G003SB003, which was abandoned following the DET's IM in 1998. Field records show that this well was generally pumped dry during purging. During purging, turbidity readings were generally at, or near, the measurement device's upper limit throughout purging. The field team evidently returned

the next day to collect the sample without additional purging. According to the field records, turbidity at the time of sampling was generally significantly lower than the initial turbidity measurement made during purging. Because the well was pumped dry, initial turbidity readings collected during purging would be expected to be similar to turbidity readings collected at the time of sample collection. These readings differ by as much as three orders of magnitude, compromising the confidence in the field turbidity data. Therefore, suspended solids may have been present in the samples from this monitoring well at higher than recorded levels and could be the cause of the elevated aluminum concentrations. These data further support eliminating aluminum as a COC.

Beryllium

Beryllium was identified as a COC in the *Zone G RFI Report, Revision 0* based on exceedances of the RBC of 0.016 μg/L (subsequent to submission of the RFI, EPA revised the RBC for beryllium to 73 μg/L). No samples contained beryllium at concentrations that exceed its MCL (see Table 5-7). Therefore, beryllium is not considered a COC at SWMU 3.

Chromium

Chromium was identified as a COC in the *Zone G RFI Report, Revision 0* based on exceedances of the RBC of 18 μg/L. No samples contained chromium at concentrations that exceed its MCL of 100 μg/L (see Table 5-78). Therefore, chromium is not considered a COC at SWMU 3.

Thallium

Thallium was identified as a COC in the *Zone G RFI Report, Revision 0* based on exceedances of the RBC of 0.29 μg/L. Thallium was detected above its RBC and MCL in the first round samples collected from monitoring wells G003GW001, G003GW002, and G003GW003. Five additional rounds of samples were subsequently collected from monitoring wells G003GW001 and G003GW002. Four additional rounds of samples were subsequently collected from monitoring well G003GW003. Thallium was not detected in any of the samples collected after the first round in any of these monitoring wells (see Table 5-7).

Turbidity measurements were made during each sampling event, however data from each sampling event were not available. Available field water quality data are presented in Table 5-8. As can be seen in Table 5-8, a turbidity measurement was available for a single monitoring well (G003GW002) during the first sampling event. The recorded turbidity measurement for monitoring well G003GW002 was 25 nephelometric turbidity units (NTUs). Latter sampling events exhibited turbidity levels below 10 NTUs, which is similar

to turbidity readings in the other site monitoring wells. Because turbidity levels are comparable for each sampling event where turbidity data are available, it is possible that turbidity was elevated in all three monitoring wells where thallium was detected above its MCL during the first sampling event. Based on this information, detected concentrations of thallium in the early sampling rounds was likely due to turbidity or anomalous. Therefore, thallium is not considered a COC at SWMU 3.

Vanadium

Vanadium was identified as a COC in the *Zone G RFI Report, Revision 0* based on exceedances of the RBC of 26 μg/L. An MCL is not available for vanadium. Vanadium was detected above its RBC in the first round samples collected from monitoring wells G003GW001 and G003GW003. Five additional rounds of samples were subsequently collected from monitoring well G003GW001 and four additional rounds of samples were collected from monitoring well G003GW003. Vanadium was not detected above its RBC in any of the samples collected after the first round of sampling in these monitoring wells (see Table 5-7).

As previously discussed, available data suggest that the first round samples contained elevated levels of suspended solids (turbidity). Therefore, detected concentrations of vanadium in the early sampling rounds were likely due to turbidity or anomalous. Based on these data, vanadium is not considered a COC at SWMU 3.

5.4 Rescreening of VOCs Using an SSL (DAF=1)

VOCs were not targeted for analysis in most of the RFI soil samples. One duplicate sample was collected and analyzed for the Appendix IX suite of parameters, which include an expanded list of VOCs. One VOC, acrolein, was detected in the duplicate surface soil sample collected at soil boring G003SB007. It was detected at a concentration of 2 J μg/kg. The detected concentration is estimated and near the detection limit, as indicated by the "J" qualifier.

A SSL is not available for acrolein in the Soil Screening Guidance (EPA, 1996). The EPA Region III RBC Table (October, 2000) lists an SSL of 0.01 μg/kg (DAF=1). The Region III SSLs are based on groundwater meeting RBCs rather than MCLs. However, since an MCL and a SSL are not available from the EPA, the Region III SSL based on a DAF of 1 is used for comparison.

The detected concentration of acrolein is above the EPA Region III SSL. However, because the detected concentration is estimated and near the detection limit, and the historical activities at the site do not indicate that this chemical was used, the detection of acrolein is considered anomalous.

Acrolein was analyzed for in 2,053 samples at the CNC (excluding 86 matrix spike samples). Of the samples that were analyzed for acrolein, 397 were laboratory quality control (QC) samples and 638 were site soil samples. Acrolein was detected in 19 Laboratory QC (2 J to 590 μg/kg) and 3 site soil samples (2 J to 89 J μg/kg). The frequency of detection in Laboratory QC samples is 4.8 percent and 0.47 percent in site samples. The frequency of false-positive results would be expected to be similar to the frequency of detection in the Laboratory QC samples. The fact that the frequency of detection in site samples is an order of magnitude less than that of the Laboratory QC samples suggests that the site detections were likely false-positives or anomalous.

Based on the discussion presented above, the single detection of acrolein at a concentration above its SSL, but below its residential RBC (160,000 μg/kg) is considered anomalous. Therefore acrolein is not identified as a COC at SWMU 3.

TABLE 5-1
COCs/COPCs Detected in Surface Soil
RFI Report Addendum/IM Completion Report/CMS Work Plan, SWMU 3, Zone G, Charleston Naval Complex

Analyte	Sample Location	Notes	Concentration (µg/kg)	Qualifier	Date Collected	EPA Region III RBC [a] Residential (HI=0.1)	EPA Region III RBC [a] Industrial (HI=0.1)	SSL [b] (DAF=10)	Zone G Range of Background Concentrations
VOCs									
Acetone	G003SB021		140	J	11/29/01	780,000	20,000,000	800	NA
	G003SB023	Removed	120	J	11/29/01				
	G003SB024		**24,000**	J	11/29/01				
	G003SB025	Removed	120	J	11/29/01				
	G003SB026	Removed	120	J	11/29/01				
	G003SB029	Removed	560	J	11/29/01				
	G003SB030	Removed	**1,000**	J	11/29/01				
	G003SB031		310	J	11/29/01				
	G003SB034	Removed	280	J	11/29/01				
	G003SB035	Removed	150	J	11/29/01				
	G003SB036		200	J	11/29/01				
	G003SB050		260	J	03/28/02				
Benzene [c]	G003SB024		**3.4**	J	11/29/01	12,000	100,000	2	NA
Pesticides									
Alpha-chlordane [d]	G003SB002		4.9	=	11/12/96	1,800	16,000	5,000	NA
	G003SB003	Removed (DET)	**16,000**	=	11/12/96				

TABLE 5-1
COCs/COPCs Detected in Surface Soil
RFI Report Addendum/IM Completion Report/CMS Work Plan, SWMU 3, Zone G, Charleston Naval Complex

Analyte	Sample Location	Notes	Concentration (µg/kg)	Qualifier	Date Collected	EPA Region III RBC [a] Residential (HI=0.1)	EPA Region III RBC [a] Industrial (HI=0.1)	SSL [b] (DAF=10)	Zone G Range of Background Concentrations
Alpha-chlordane [d]	G003SB007		2.4	J	10/08/96	1,800	16,000	5,000	NA
	G003SB008	Removed (DET)	420	J	09/26/96				
	G003SB009		21	J	09/26/96				
	G003SB013		7.1	J	07/30/99				
	G003SB015		17	J	12/17/99				
	G003SB021		3.5	=	11/29/01				
	G003SB026	Removed	**17,000**	J	11/29/01				
	G003SB027		0.33	J	11/29/01				
	G003SB031		3.1	J	11/29/01				
	G003SB032	Removed	69	=	11/28/01				
	G003SB033	Removed	300	=	11/29/01				
	G003SB034	Removed	130	=	11/29/01				
	G003SB039		750	=	01/15/02				
	G003SB040		380	=	01/15/02				
	G003SB041		120	=	01/15/02				
	G003SB042		52	J	01/15/02				
	G003SB045	Removed	65	J	03/27/02				

TABLE 5-1
COCs/COPCs Detected in Surface Soil
RFI Report Addendum/IM Completion Report/CMS Work Plan, SWMU 3, Zone G, Charleston Naval Complex

Analyte	Sample Location	Notes	Concentration (µg/kg)	Qualifier	Date Collected	EPA Region III RBC [a] Residential (HI=0.1)	EPA Region III RBC [a] Industrial (HI=0.1)	SSL [b] (DAF=10)	Zone G Range of Background Concentrations
Alpha-chlordane [d]	G003SB046		0.46	J	03/27/02	1,800	16,000	5,000	NA
	G003SB047		160	J	03/27/02				
	G003SB049		34	=	03/27/02				
	G003SB051		85	=	03/27/02				
	G003SB052		170	=	03/27/02				
	G003SB053		0.46	J	03/28/02				
	G003SB054		44	=	03/27/02				
	G003SB055		75	J	03/27/02				
	G003SB056	Removed	**2,000**	J	03/27/02				
	G003SB057		220	J	03/27/02				
	G003SB058		99	J	03/27/02				
	G003SB068		3.3	J	05/13/02				
	G003SB069		2.9	=	05/13/02				
	G003SB071		150	=	05/15/02				
	G003SB072	Removed	270	J	05/13/02				
	G003SB073	Removed	46	=	05/15/02				
	G003SB074		1.9	J	05/13/02				
	G003SB075		52	J	05/15/02				

TABLE 5-1
COCs/COPCs Detected in Surface Soil
RFI Report Addendum/IM Completion Report/CMS Work Plan, SWMU 3, Zone G, Charleston Naval Complex

Analyte	Sample Location	Notes	Concentration (µg/kg)	Qualifier	Date Collected	EPA Region III RBC [a] Residential (HI=0.1)	EPA Region III RBC [a] Industrial (HI=0.1)	SSL [b] (DAF=10)	Zone G Range of Background Concentrations
Alpha-chlordane [d]	G003SB076	Removed	65	=	05/15/02	1,800	16,000	5,000	NA
	G003SB077		80	J	05/15/02				
	G003SB078		140	J	05/15/02				
	G003SB079	Removed	1,000	=	05/15/02				
	G003SB080		34	=	05/15/02				
	G003SB081	Removed	65	=	05/15/02				
	G003SB085		53	J	06/13/02				
	G003SB086		6.1	J	06/13/02				
	G003SB088		20	J	06/13/02				
	G003SB090	Removed	910	J	06/13/02				
	G003SB091		400	J	06/13/02				
	G003SB093		45	J	07/25/02				
	G003SB097		39	J	07/25/02				
	G003SB098		0.39	J	09/27/02				
	G003SB102		24	J	12/06/02				
	G003SB103		2.4	J	12/06/02				
	G003SB104		16	J	12/06/02				
Chlordane [c]	G003SB026	Removed	**140,000**	=	11/29/01	1,800	16,000	5,000	NA

TABLE 5-1
COCs/COPCs Detected in Surface Soil
RFI Report Addendum/IM Completion Report/CMS Work Plan, SWMU 3, Zone G, Charleston Naval Complex

Analyte	Sample Location	Notes	Concentration (µg/kg)	Qualifier	Date Collected	EPA Region III RBC [a] Residential (HI=0.1)	EPA Region III RBC [a] Industrial (HI=0.1)	SSL [b] (DAF=10)	Zone G Range of Background Concentrations
Chlordane [c]	G003SB040		**2,400**	J	01/15/02	1,800	16,000	5,000	NA
	G003SB041		440	J	01/15/02				
	G003SB047		830	J	03/27/02				
	G003SB054		140	=	03/27/02				
	G003SB055		400	=	03/27/02				
	G003SB056	Removed	**9,200**	=	03/27/02				
	G003SB057		880	=	03/27/02				
	G003SB058		560	=	03/27/02				
	G003SB071		1,300	=	05/15/02				
	G003SB072	Removed	1,500	J	05/13/02				
	G003SB073	Removed	360	=	05/15/02				
	G003SB075		420	J	05/15/02				
	G003SB077		590	=	05/15/02				
	G003SB078		1,100	=	05/15/02				
	G003SB079	Removed	**5,900**	=	05/15/02				
	G003SB080		110	=	05/15/02				
	G003SB081	Removed	740	=	05/15/02				
	G003SB085		490	=	06/13/02				

TABLE 5-1
COCs/COPCs Detected in Surface Soil
RFI Report Addendum/IM Completion Report/CMS Work Plan, SWMU 3, Zone G, Charleston Naval Complex

Analyte	Sample Location	Notes	Concentration (µg/kg)	Qualifier	Date Collected	EPA Region III RBC [a] Residential (HI=0.1)	EPA Region III RBC [a] Industrial (HI=0.1)	SSL [b] (DAF=10)	Zone G Range of Background Concentrations
Chlordane [c]	G003SB088		110	=	06/13/02	1,800	16,000	5,000	NA
	G003SB090	Removed	**4,700**	=	06/13/02				
	G003SB091		1,800	=	06/13/02				
	G003SB093		240	J	07/25/02				
	G003SB102		110	J	12/06/02				
Dieldrin [c]	G003SB007		**4**	=	10/08/96	40	360	2	0.5 - 300
	G003SB009		**12**	=	09/26/96				
	G003SB021		0.64	J	11/29/01				
	G003SB026	Removed	**410**	J	11/29/01				
	G003SB032	Removed	**27**	J	11/28/01				
	G003SB033	Removed	**120**	J	11/29/01				
	G003SB039		**16**	J	01/15/02				
	G003SB040		**9.8**	J	01/15/02				
	G003SB041		**21**	=	01/15/02				
	G003SB042		**6.6**	J	01/15/02				
	G003SB047		**29**	J	03/27/02				
	G003SB049		**59**	=	03/27/02				

TABLE 5-1
COCs/COPCs Detected in Surface Soil
RFI Report Addendum/IM Completion Report/CMS Work Plan, SWMU 3, Zone G, Charleston Naval Complex

Analyte	Sample Location	Notes	Concentration (µg/kg)	Qualifier	Date Collected	EPA Region III RBC [a] Residential (HI=0.1)	EPA Region III RBC [a] Industrial (HI=0.1)	SSL [b] (DAF=10)	Zone G Range of Background Concentrations
Dieldrin [c]	G003SB051		**22**	J	03/27/02	40	360	2	0.5 - 300
	G003SB052		**40**	J	03/27/02				
	G003SB054		**4.7**	J	03/27/02				
	G003SB055		**20**	=	03/27/02				
	G003SB056	Removed	**560**	J	03/27/02				
	G003SB057		**15**	J	03/27/02				
	G003SB058		**12**	J	03/27/02				
	G003SB068		**2.3**	J	05/13/02				
	G003SB069		0.91	J	05/13/02				
	G003SB071		**4.2**	J	05/15/02				
	G003SB072	Removed	**20**	J	05/13/02				
	G003SB073	Removed	**68**	=	05/15/02				
	G003SB074		0.71	J	05/13/02				
	G003SB075		**16**	J	05/15/02				
	G003SB076	Removed	**780**	=	05/15/02				
	G003SB077		**61**	=	05/15/02				
	G003SB078		**35**	=	05/15/02				

TABLE 5-1
COCs/COPCs Detected in Surface Soil
RFI Report Addendum/IM Completion Report/CMS Work Plan, SWMU 3, Zone G, Charleston Naval Complex

Analyte	Sample Location	Notes	Concentration (µg/kg)	Qualifier	Date Collected	EPA Region III RBC [a] Residential (HI=0.1)	EPA Region III RBC [a] Industrial (HI=0.1)	SSL [b] (DAF=10)	Zone G Range of Background Concentrations
Dieldrin [c]	G003SB079	Removed	**440**	=	05/15/02	40	360	2	0.5 - 300
	G003SB080		**14**	=	05/15/02				
	G003SB081	Removed	**4.3**	J	05/15/02				
	G003SB085		0.95	J	06/13/02				
	G003SB088		**5.7**	=	06/13/02				
	G003SB090	Removed	**85**	=	06/13/02				
	G003SB091		**39**	=	06/13/02				
	G003SB093		**7.1**	J	07/25/02				
	G003SB097		**12**	J	07/25/02				
	G003SB099		**55**	J	12/06/02				
	G003SB100		**14**	J	12/06/02				
	G003SB101		**11**	J	12/06/02				
	G003SB102		**5.1**	J	12/06/02				
	G003SB103		0.36	J	12/06/02				
	G003SB104		1.4	J	12/06/02				
Gamma-chlordane [d]	G003SB002		5.9	=	11/12/96	1,800	16,000	5,000	NA

TABLE 5-1
COCs/COPCs Detected in Surface Soil
RFI Report Addendum/IM Completion Report/CMS Work Plan, SWMU 3, Zone G, Charleston Naval Complex

Analyte	Sample Location	Notes	Concentration (µg/kg)	Qualifier	Date Collected	EPA Region III RBC [a] Residential (HI=0.1)	EPA Region III RBC [a] Industrial (HI=0.1)	SSL [b] (DAF=10)	Zone G Range of Background Concentrations
Gamma-chlordane [d]	G003SB003	Removed (DET)	**22,000**	=	11/12/96	1,800	16,000	5,000	NA
	G003SB006		1.7	=	09/26/96				
	G003SB007		2.7	=	10/08/96				
	G003SB008	Removed (DET)	510	=	09/26/96				
	G003SB009		21	=	09/26/96				
	G003SB013		5.6	J	07/30/99				
	G003SB015		23	J	12/17/99				
	G003SB021		4.2	=	11/29/01				
	G003SB024		0.67	J	11/29/01				
	G003SB026	Removed	**19,000**	=	11/29/01				
	G003SB027		0.74	J	11/29/01				
	G003SB028	Removed	320	J	11/29/01				
	G003SB029	Removed	26	J	11/29/01				
	G003SB031		4.4	J	11/29/01				
	G003SB032	Removed	77	=	11/28/01				
	G003SB033	Removed	180	=	11/29/01				
	G003SB034	Removed	230	=	11/29/01				

TABLE 5-1
COCs/COPCs Detected in Surface Soil
RFI Report Addendum/IM Completion Report/CMS Work Plan, SWMU 3, Zone G, Charleston Naval Complex

						EPA Region III RBC [a]			
Analyte	**Sample Location**	**Notes**	**Concentration (µg/kg)**	**Qualifier**	**Date Collected**	**Residential (HI=0.1)**	**Industrial (HI=0.1)**	**SSL [b] (DAF=10)**	**Zone G Range of Background Concentrations**
Gamma-chlordane [d]	G003SB036		0.3	J	11/29/01	1,800	16,000	5,000	NA
	G003SB039		480	=	01/15/02				
	G003SB040		400	=	01/15/02				
	G003SB041		80	=	01/15/02				
	G003SB042		59	=	01/15/02				
	G003SB044	Removed	79	J	03/27/02				
	G003SB045	Removed	50	J	03/27/02				
	G003SB046		0.88	J	03/27/02				
	G003SB047		160	J	03/27/02				
	G003SB049		27	J	03/27/02				
	G003SB051		98	=	03/27/02				
	G003SB052		130	=	03/27/02				
	G003SB053		0.46	J	03/28/02				
	G003SB054		32	=	03/27/02				
	G003SB055		77	=	03/27/02				
	G003SB056	Removed	**2 100**	=	03/27/02				
	G003SB057		220	=	03/27/02				
	G003SB058		110	=	03/27/02				

TABLE 5-1
COCs/COPCs Detected in Surface Soil
RFI Report Addendum/IM Completion Report/CMS Work Plan, SWMU 3, Zone G, Charleston Naval Complex

						EPA Region III RBC [a]			
Analyte	**Sample Location**	**Notes**	**Concentration (µg/kg)**	**Qualifier**	**Date Collected**	**Residential (HI=0.1)**	**Industrial (HI=0.1)**	**SSL [b] (DAF=10)**	**Zone G Range of Background Concentrations**
Gamma-chlordane [d]	G003SB067	Removed	110	J	03/27/02	1,800	16,000	5,000	NA
	G003SB068		5	J	05/13/02				
	G003SB069		7.3	=	05/13/02				
	G003SB070		0.38	J	05/15/02				
	G003SB071		150	=	05/15/02				
	G003SB072	Removed	260	J	05/13/02				
	G003SB073	Removed	70	=	05/15/02				
	G003SB074		2.7	J	05/13/02				
	G003SB075		54	J	05/15/02				
	G003SB076	Removed	51	=	05/15/02				
	G003SB077		97	=	05/15/02				
	G003SB078		150	=	05/15/02				
	G003SB079	Removed	1 200	=	05/15/02				
	G003SB080		19	=	05/15/02				
	G003SB081	Removed	100	=	05/15/02				
	G003SB085		53	=	06/13/02				
	G003SB088		23	=	06/13/02				
	G003SB090	Removed	1 300	=	06/13/02				

TABLE 5-1
COCs/COPCs Detected in Surface Soil
RFI Report Addendum/IM Completion Report/CMS Work Plan, SWMU 3, Zone G, Charleston Naval Complex

Analyte	Sample Location	Notes	Concentration (µg/kg)	Qualifier	Date Collected	EPA Region III RBC [a] Residential (HI=0.1)	EPA Region III RBC [a] Industrial (HI=0.1)	SSL [b] (DAF=10)	Zone G Range of Background Concentrations
Gamma-chlordane [d]	G003SB091		400	=	06/13/02	1,800	16,000	5,000	NA
	G003SB093		42	J	07/25/02				
	G003SB095		9.8	J	07/25/02				
	G003SB097		51	=	07/25/02				
	G003SB098		0.43	J	09/27/02				
	G003SB102		18	=	12/06/02				
	G003SB103		3.1	J	12/06/02				
	G003SB104		18	=	12/06/02				
Heptachlor [c]	G003SB003	Removed (DET)	**520**	=	11/12/96	140	1,300	11,500	NA
	G003SB007		3	J	10/08/96				
	G003SB008	Removed (DET)	**210**	=	09/26/96				
	G003SB026	Removed	**1,600**	J	11/29/01				
	G003SB040		44	=	01/15/02				
	G003SB055		6.1	J	03/27/02				
	G003SB071		9.5	J	05/15/02				
	G003SB073	Removed	5.1	J	05/15/02				

TABLE 5-1
COCs/COPCs Detected in Surface Soil
RFI Report Addendum/IM Completion Report/CMS Work Plan, SWMU 3, Zone G, Charleston Naval Complex

Analyte	Sample Location	Notes	Concentration (µg/kg)	Qualifier	Date Collected	EPA Region III RBC [a] Residential (HI=0.1)	EPA Region III RBC [a] Industrial (HI=0.1)	SSL [b] (DAF=10)	Zone G Range of Background Concentrations
Heptachlor [c]	G003SB078		2.8	J	05/15/02	140	1,300	11,500	NA
	G003SB079	Removed	27	=	05/15/02				
	G003SB081	Removed	24	=	05/15/02				
	G003SB085		0.56	J	06/13/02				
	G003SB091		2.4	J	06/13/02				
	G003SB104		0.78	J	12/06/02				
Heptachlor Epoxide [c]	G003SB002		3.1	=	11/12/96	70	630	350	NA
	G003SB009		5.9	=	09/26/96				
	G003SB015		49	J	12/17/99				
	G003SB019		2.5	=	01/27/00				
	G003SB021		8.7	=	11/29/01				
	G003SB022		0.14	J	11/29/01				
	G003SB023	Removed	3.1	J	11/29/01				
	G003SB024		0.29	J	11/29/01				
	G003SB031		2.2	J	11/29/01				
	G003SB039		19	J	01/15/02				
	G003SB040		8.7	J	01/15/02				
	G003SB041		2.6	J	01/15/02				

TABLE 5-1
COCs/COPCs Detected in Surface Soil
RFI Report Addendum/IM Completion Report/CMS Work Plan, SWMU 3, Zone G, Charleston Naval Complex

Analyte	Sample Location	Notes	Concentration (µg/kg)	Qualifier	Date Collected	EPA Region III RBC [a] Residential (HI=0.1)	EPA Region III RBC [a] Industrial (HI=0.1)	SSL [b] (DAF=10)	Zone G Range of Background Concentrations
Heptachlor Epoxide [c]	G003SB042		0.98	J	01/15/02	70	630	350	NA
	G003SB047		6.7	J	03/27/02				
	G003SB049		6.3	J	03/27/02				
	G003SB051		3.8	J	03/27/02				
	G003SB052		14	J	03/27/02				
	G003SB054		4.8	J	03/27/02				
	G003SB055		4.7	J	03/27/02				
	G003SB056	Removed	**110**	J	03/27/02				
	G003SB057		7.4	J	03/27/02				
	G003SB069		3.5	=	05/13/02				
	G003SB072	Removed	7.8	=	05/13/02				
	G003SB074		0.39	J	05/13/02				
	G003SB075		5.1	J	05/15/02				
	G003SB077		4.6	J	05/15/02				
	G003SB078		6.2	J	05/15/02				
	G003SB079	Removed	**630**	=	05/15/02				
	G003SB080		31	=	05/15/02				
	G003SB081	Removed	10	=	05/15/02				

TABLE 5-1
COCs/COPCs Detected in Surface Soil
RFI Report Addendum/IM Completion Report/CMS Work Plan, SWMU 3, Zone G, Charleston Naval Complex

Analyte	Sample Location	Notes	Concentration (µg/kg)	Qualifier	Date Collected	EPA Region III RBC [a] Residential (HI=0.1)	EPA Region III RBC [a] Industrial (HI=0.1)	SSL [b] (DAF=10)	Zone G Range of Background Concentrations
Heptachlor Epoxide [c]	G003SB085		17	=	06/13/02	70	630	350	NA
	G003SB088		0.66	J	06/13/02				
	G003SB090	Removed	**360**	=	06/13/02				
	G003SB091		**120**	=	06/13/02				
	G003SB093		13	J	07/25/02				
	G003SB097		8.8	J	07/25/02				
	G003SB098		0.13	J	09/27/02				
	G003SB102		8.2	=	12/06/02				
	G003SB103		0.94	J	12/06/02				
	G003SB104		21	=	12/06/02				
p,p'-DDD [c]	G003SB003	Removed (DET)	420	J	11/12/96	2,700	24,000	8,000	NA
	G003SB012	Removed	**5,900**	=	07/28/99				
	G003SB013		300	J	07/30/99				
	G003SB016	Removed	**17,000**	=	01/27/00				
	G003SB017	Removed	770	=	01/27/00				
	G003SB018	Removed	**310,000**	=	01/27/00				
	G003SB019		17	J	01/27/00				

TABLE 5-1
COCs/COPCs Detected in Surface Soil
RFI Report Addendum/IM Completion Report/CMS Work Plan, SWMU 3, Zone G, Charleston Naval Complex

						EPA Region III RBC [a]			
Analyte	**Sample Location**	**Notes**	**Concentration (µg/kg)**	**Qualifier**	**Date Collected**	**Residential (HI=0.1)**	**Industrial (HI=0.1)**	**SSL [b] (DAF=10)**	**Zone G Range of Background Concentrations**
p,p'-DDD [c]	G003SB020		66	=	01/27/00	2,700	24,000	8,000	NA
	G003SB021		3.6	J	11/29/01				
	G003SB023	Removed	22	J	11/29/01				
	G003SB025	Removed	580	=	11/29/01				
	G003SB027		1.3	J	11/29/01				
	G003SB028	Removed	**7,600**	=	11/29/01				
	G003SB029	Removed	700	=	11/29/01				
	G003SB030	Removed	250	=	11/29/01				
	G003SB031		52	=	11/29/01				
	G003SB032	Removed	55	J	11/28/01				
	G003SB033	Removed	140	J	11/29/01				
	G003SB034	Removed	1,000	J	11/29/01				
	G003SB035	Removed	290	J	11/29/01				
	G003SB036		0.76	J	11/29/01				
	G003SB039		370	J	01/15/02				
	G003SB041		3.9	J	01/15/02				
	G003SB042		190	J	01/15/02				
	G003SB043	Removed	280	=	03/27/02				

TABLE 5-1
COCs/COPCs Detected in Surface Soil
RFI Report Addendum/IM Completion Report/CMS Work Plan, SWMU 3, Zone G, Charleston Naval Complex

Analyte	Sample Location	Notes	Concentration (µg/kg)	Qualifier	Date Collected	EPA Region III RBC [a] Residential (HI=0.1)	EPA Region III RBC [a] Industrial (HI=0.1)	SSL [b] (DAF=10)	Zone G Range of Background Concentrations
p,p'-DDD [c]	G003SB044	Removed	**2,800**	=	03/27/02	2,700	24,000	8,000	NA
	G003SB045	Removed	690	=	03/27/02				
	G003SB046		2.3	J	03/27/02				
	G003SB047		140	J	03/27/02				
	G003SB048	Removed	**10,000**	=	03/27/02				
	G003SB049		16	J	03/27/02				
	G003SB051		18	J	03/27/02				
	G003SB052		100	=	03/27/02				
	G003SB054		2	J	03/27/02				
	G003SB056	Removed	1,600	=	03/27/02				
	G003SB057		110	=	03/27/02				
	G003SB058		24	J	03/27/02				
	G003SB067	Removed	600	J	03/27/02				
	G003SB068		19	J	05/13/02				
	G003SB069		4.1	J	05/13/02				
	G003SB070		13	=	05/15/02				
	G003SB071		170	=	05/15/02				
	G003SB072	Removed	740	=	05/13/02				

TABLE 5-1
COCs/COPCs Detected in Surface Soil
RFI Report Addendum/IM Completion Report/CMS Work Plan, SWMU 3, Zone G, Charleston Naval Complex

						EPA Region III RBC [a]			
Analyte	**Sample Location**	**Notes**	**Concentration (µg/kg)**	**Qualifier**	**Date Collected**	**Residential (HI=0.1)**	**Industrial (HI=0.1)**	**SSL [b] (DAF=10)**	**Zone G Range of Background Concentrations**
p,p'-DDD [c]	G003SB073	Removed	670	=	05/15/02	2,700	24,000	8,000	NA
	G003SB074		2	J	05/13/02				
	G003SB075		260	J	05/15/02				
	G003SB076	Removed	54	J	05/15/02				
	G003SB077		98	=	05/15/02				
	G003SB078		27	J	05/15/02				
	G003SB079	Removed	300	J	05/15/02				
	G003SB086		620	=	06/13/02				
	G003SB088		3.4	J	06/13/02				
	G003SB090	Removed	110	=	06/13/02				
	G003SB091		39	=	06/13/02				
	G003SB093		2.2	J	07/25/02				
	G003SB094		1,100	=	07/25/02				
	G003SB095		40	J	07/25/02				
	G003SB096		1.9	J	07/25/02				
	G003SB097		58	J	07/25/02				
	G003SB102		8.3	J	12/06/02				
	G003SB104		6.5	=	12/06/02				

TABLE 5-1
COCs/COPCs Detected in Surface Soil
RFI Report Addendum/IM Completion Report/CMS Work Plan, SWMU 3, Zone G, Charleston Naval Complex

Analyte	Sample Location	Notes	Concentration (µg/kg)	Qualifier	Date Collected	EPA Region III RBC [a] Residential (HI=0.1)	EPA Region III RBC [a] Industrial (HI=0.1)	SSL [b] (DAF=10)	Zone G Range of Background Concentrations
p,p'-DDE [c]	G003SB001		3.5	=	08/29/96	1,900	17,000	27,000	NA
	G003SB002		81	=	11/12/96				
	G003SB003	Removed (DET)	**2,600**	J	11/12/96				
	G003SB004		3.8	=	09/26/96				
	G003SB005		25	=	09/26/96				
	G003SB006		5	=	09/26/96				
	G003SB007		12	=	10/08/96				
	G003SB009		200	=	09/26/96				
	G003SB010		21	=	09/26/96				
	G003SB011		72	=	07/28/99				
	G003SB012	Removed	1,100	J	07/28/99				
	G003SB013		150	J	07/30/99				
	G003SB015		770	=	12/17/99				
	G003SB016	Removed	**3,600**	=	01/27/00				
	G003SB017	Removed	410	=	01/27/00				
	G003SB018	Removed	**44,000**	=	01/27/00				
	G003SB019		130	=	01/27/00				

TABLE 5-1
COCs/COPCs Detected in Surface Soil
RFI Report Addendum/IM Completion Report/CMS Work Plan, SWMU 3, Zone G, Charleston Naval Complex

Analyte	Sample Location	Notes	Concentration (µg/kg)	Qualifier	Date Collected	EPA Region III RBC [a] Residential (HI=0.1)	EPA Region III RBC [a] Industrial (HI=0.1)	SSL [b] (DAF=10)	Zone G Range of Background Concentrations
p,p'-DDE [c]	G003SB020		56	=	01/27/00	1,900	17,000	27,000	NA
	G003SB021		82	=	11/29/01				
	G003SB022		69	=	11/29/01				
	G003SB023	Removed	600	J	11/29/01				
	G003SB024		71	=	11/29/01				
	G003SB025	Removed	250	J	11/29/01				
	G003SB027		9.1	=	11/29/01				
	G003SB028	Removed	**3,400**	J	11/29/01				
	G003SB029	Removed	150	J	11/29/01				
	G003SB030	Removed	38	J	11/29/01				
	G003SB031		350	=	11/29/01				
	G003SB032	Removed	190	J	11/28/01				
	G003SB033	Removed	260	=	11/29/01				
	G003SB034	Removed	**4,300**	=	11/29/01				
	G003SB035	Removed	120	J	11/29/01				
	G003SB036		8.7	J	11/29/01				
	G003SB037		21	=	03/27/02				
	G003SB038		5.1	J	03/27/02				

TABLE 5-1
COCs/COPCs Detected in Surface Soil
RFI Report Addendum/IM Completion Report/CMS Work Plan, SWMU 3, Zone G, Charleston Naval Complex

Analyte	Sample Location	Notes	Concentration (µg/kg)	Qualifier	Date Collected	EPA Region III RBC [a] Residential (HI=0.1)	EPA Region III RBC [a] Industrial (HI=0.1)	SSL [b] (DAF=10)	Zone G Range of Background Concentrations
p,p'-DDE [c]	G003SB039		300	=	01/15/02	1,900	17,000	27,000	NA
	G003SB040		35	J	01/15/02				
	G003SB041		8.7	J	01/15/02				
	G003SB042		30	=	01/15/02				
	G003SB043	Removed	270	=	03/27/02				
	G003SB044	Removed	**5,500**	=	03/27/02				
	G003SB045	Removed	200	J	03/27/02				
	G003SB046		11	J	03/27/02				
	G003SB047		120	J	03/27/02				
	G003SB048	Removed	**3,500**	=	03/27/02				
	G003SB049		360	=	03/27/02				
	G003SB051		590	=	03/27/02				
	G003SB052		330	=	03/27/02				
	G003SB053		1.9	J	03/28/02				
	G003SB054		200	=	03/27/02				
	G003SB055		24	=	03/27/02				
	G003SB056	Removed	**2,700**	=	03/27/02				
	G003SB057		140	=	03/27/02				

TABLE 5-1
COCs/COPCs Detected in Surface Soil
RFI Report Addendum/IM Completion Report/CMS Work Plan, SWMU 3, Zone G, Charleston Naval Complex

Analyte	Sample Location	Notes	Concentration (µg/kg)	Qualifier	Date Collected	EPA Region III RBC [a] Residential (HI=0.1)	EPA Region III RBC [a] Industrial (HI=0.1)	SSL [b] (DAF=10)	Zone G Range of Background Concentrations
p,p'-DDE [c]	G003SB058		170	J	03/27/02	1,900	17,000	27,000	NA
	G003SB059		0.72	J	03/28/02				
	G003SB067	Removed	1,400	=	03/27/02				
	G003SB068		290	=	05/13/02				
	G003SB069		86	=	05/13/02				
	G003SB070		48	=	05/15/02				
	G003SB071		100	=	05/15/02				
	G003SB072	Removed	450	J	05/13/02				
	G003SB073	Removed	**2,000**	=	05/15/02				
	G003SB074		110	=	05/13/02				
	G003SB075		73	J	05/15/02				
	G003SB076	Removed	140	=	05/15/02				
	G003SB077		580	=	05/15/02				
	G003SB078		210	=	05/15/02				
	G003SB079	Removed	1,100	=	05/15/02				
	G003SB080		34	=	05/15/02				
	G003SB081	Removed	44	=	05/15/02				
	G003SB085		21	=	06/13/02				

TABLE 5-1
COCs/COPCs Detected in Surface Soil
RFI Report Addendum/IM Completion Report/CMS Work Plan, SWMU 3, Zone G, Charleston Naval Complex

Analyte	Sample Location	Notes	Concentration (µg/kg)	Qualifier	Date Collected	EPA Region III RBC [a] Residential (HI=0.1)	EPA Region III RBC [a] Industrial (HI=0.1)	SSL [b] (DAF=10)	Zone G Range of Background Concentrations
p,p'-DDE [c]	G003SB086		460	=	06/13/02	1,900	17,000	27,000	NA
	G003SB088		110	=	06/13/02				
	G003SB089		2.1	J	06/13/02				
	G003SB090	Removed	1,100	=	06/13/02				
	G003SB091		630	=	06/13/02				
	G003SB093		34	J	07/25/02				
	G003SB094		940	J	07/25/02				
	G003SB095		150	J	07/25/02				
	G003SB096		64	J	07/25/02				
	G003SB097		370	J	07/25/02				
	G003SB098		2.5	J	09/27/02				
	G003SB102		230	=	12/06/02				
	G003SB103		70	=	12/06/02				
	G003SB104		98	=	12/06/02				
p,p'-DDT [c]	G003SB002		65	=	11/12/96	1,900	17,000	16,000	NA
	G003SB003	Removed (DET)	570	J	11/12/96				
	G003SB004		3.6	=	09/26/96				

TABLE 5-1
COCs/COPCs Detected in Surface Soil
RFI Report Addendum/IM Completion Report/CMS Work Plan, SWMU 3, Zone G, Charleston Naval Complex

Analyte	Sample Location	Notes	Concentration (µg/kg)	Qualifier	Date Collected	EPA Region III RBC [a] Residential (HI=0.1)	EPA Region III RBC [a] Industrial (HI=0.1)	SSL [b] (DAF=10)	Zone G Range of Background Concentrations
p,p'-DDT [c]	G003SB005		19	=	09/26/96	1,900	17,000	16,000	NA
	G003SB006		5.7	=	09/26/96				
	G003SB007		94	=	10/08/96				
	G003SB008	Removed (DET)	82	J	09/26/96				
	G003SB009		180	=	09/26/96				
	G003SB010		20	J	09/26/96				
	G003SB011		71	J	07/28/99				
	G003SB012	Removed	**78,000**	=	07/28/99				
	G003SB013		960	=	07/30/99				
	G003SB015		220	=	12/17/99				
	G003SB016	Removed	**200,000**	=	01/27/00				
	G003SB017	Removed	**7,400**	=	01/27/00				
	G003SB018	Removed	**2,500,000**	=	01/27/00				
	G003SB019		340	=	01/27/00				
	G003SB020		360	=	01/27/00				
	G003SB021		37	J	11/29/01				
	G003SB022		18	=	11/29/01				

TABLE 5-1
COCs/COPCs Detected in Surface Soil
RFI Report Addendum/IM Completion Report/CMS Work Plan, SWMU 3, Zone G, Charleston Naval Complex

						EPA Region III RBC [a]			
Analyte	**Sample Location**	**Notes**	**Concentration (µg/kg)**	**Qualifier**	**Date Collected**	**Residential (HI=0.1)**	**Industrial (HI=0.1)**	**SSL [b] (DAF=10)**	**Zone G Range of Background Concentrations**
p,p'-DDT [c]	G003SB023	Removed	260	J	11/29/01	1,900	17,000	16,000	NA
	G003SB024		24	=	11/29/01				
	G003SB025	Removed	**4,800**	=	11/29/01				
	G003SB027		12	=	11/29/01				
	G003SB028	Removed	**81,000**	=	11/29/01				
	G003SB029	Removed	**4,700**	=	11/29/01				
	G003SB030	Removed	1,000	=	11/29/01				
	G003SB031		270	=	11/29/01				
	G003SB032	Removed	1,300	J	11/28/01				
	G003SB033	Removed	**2,400**	J	11/29/01				
	G003SB034	Removed	**36,000**	J	11/29/01				
	G003SB035	Removed	**14,000**	=	11/29/01				
	G003SB036		9.3	J	11/29/01				
	G003SB037		5.6	=	03/27/02				
	G003SB038		2.6	J	03/27/02				
	G003SB039		260	=	01/15/02				
	G003SB040		67	=	01/15/02				
	G003SB041		61	=	01/15/02				

TABLE 5-1
COCs/COPCs Detected in Surface Soil
RFI Report Addendum/IM Completion Report/CMS Work Plan, SWMU 3, Zone G, Charleston Naval Complex

Analyte	Sample Location	Notes	Concentration (µg/kg)	Qualifier	Date Collected	EPA Region III RBC [a] Residential (HI=0.1)	EPA Region III RBC [a] Industrial (HI=0.1)	SSL [b] (DAF=10)	Zone G Range of Background Concentrations
p,p'-DDT [c]	G003SB042		280	=	01/15/02	1,900	17,000	16,000	NA
	G003SB043	Removed	**2,000**	=	03/27/02				
	G003SB044	Removed	**15,000**	=	03/27/02				
	G003SB045	Removed	**5,400**	=	03/27/02				
	G003SB046		16	J	03/27/02				
	G003SB047		680	J	03/27/02				
	G003SB048	Removed	**68,000**	=	03/27/02				
	G003SB049		160	=	03/27/02				
	G003SB051		100	=	03/27/02				
	G003SB052		710	=	03/27/02				
	G003SB053		1.7	J	03/28/02				
	G003SB054		110	=	03/27/02				
	G003SB055		64	J	03/27/02				
	G003SB056	Removed	**10,000**	J	03/27/02				
	G003SB057		510	J	03/27/02				
	G003SB058		110	=	03/27/02				
	G003SB059		6.5	J	03/28/02				
	G003SB067	Removed	**12,000**	=	03/27/02				

TABLE 5-1
COCs/COPCs Detected in Surface Soil
RFI Report Addendum/IM Completion Report/CMS Work Plan, SWMU 3, Zone G, Charleston Naval Complex

						EPA Region III RBC [a]			
Analyte	**Sample Location**	**Notes**	**Concentration (μg/kg)**	**Qualifier**	**Date Collected**	**Residential (HI=0.1)**	**Industrial (HI=0.1)**	**SSL [b] (DAF=10)**	**Zone G Range of Background Concentrations**
p,p'-DDT [c]	G003SB068		360	J	05/13/02	1,900	17,000	16,000	NA
	G003SB069		67	J	05/13/02				
	G003SB070		290	J	05/15/02				
	G003SB071		1,100	J	05/15/02				
	G003SB072	Removed	**7,300**	J	05/13/02				
	G003SB073	Removed	**13,000**	J	05/15/02				
	G003SB074		40	J	05/13/02				
	G003SB075		**3,100**	J	05/15/02				
	G003SB076	Removed	670	=	05/15/02				
	G003SB077		950	=	05/15/02				
	G003SB078		620	=	05/15/02				
	G003SB079	Removed	1,100	=	05/15/02				
	G003SB080		34	=	05/15/02				
	G003SB081	Removed	100	J	05/15/02				
	G003SB085		100	=	06/13/02				
	G003SB086		**3,600**	=	06/13/02				
	G003SB088		75	=	06/13/02				
	G003SB089		3.5	=	06/13/02				

TABLE 5-1
COCs/COPCs Detected in Surface Soil
RFI Report Addendum/IM Completion Report/CMS Work Plan, SWMU 3, Zone G, Charleston Naval Complex

Analyte	Sample Location	Notes	Concentration (µg/kg)	Qualifier	Date Collected	EPA Region III RBC [a] Residential (HI=0.1)	EPA Region III RBC [a] Industrial (HI=0.1)	SSL [b] (DAF=10)	Zone G Range of Background Concentrations
p,p'-DDT [C]	G003SB090	Removed	410	=	06/13/02	1,900	17,000	16,000	NA
	G003SB091		500	=	06/13/02				
	G003SB093		24	J	07/25/02				
	G003SB094		**6,600**	=	07/25/02				
	G003SB095		620	J	07/25/02				
	G003SB096		17	=	07/25/02				
	G003SB097		180	=	07/25/02				
	G003SB098		3	=	09/27/02				
	G003SB102		79	=	12/06/02				
	G003SB103		42	=	12/06/02				
	G003SB104		84	=	12/06/02				
PCBs									
Aroclor-1248 [C]	G003SB003	Removed (DET)	**28,000**	J	11/12/96	320	2,900	205	NA
Metals									
Manganese	G003SB010		16,000	=	09/26/96	180,000	4,100,000	475,000	39,000 - 359,000
	G003SB009		118,000	=	09/26/96				
	G003SB008	Removed (DET)	210,000	=	09/26/96				

TABLE 5-1
COCs/COPCs Detected in Surface Soil
RFI Report Addendum/IM Completion Report/CMS Work Plan, SWMU 3, Zone G, Charleston Naval Complex

						EPA Region III RBC [a]			
Analyte	**Sample Location**	**Notes**	**Concentration (µg/kg)**	**Qualifier**	**Date Collected**	**Residential (HI=0.1)**	**Industrial (HI=0.1)**	**SSL [b] (DAF=10)**	**Zone G Range of Background Concentrations**
Manganese	G003SB007		12,200	J	10/08/96	180,000	4,100,000	475,000	39,000 - 359,000
	G003SB006		207,000	=	09/26/96				
	G003SB005		341,000	=	09/26/96				
	G003SB004		194,000	=	09/26/96				
	G003SB003	Removed (DET)	183,000	=	08/28/96				
	G003SB002		193,000	=	08/28/96				
	G003SB001		61,800	J	08/29/96				

The "Notes" column indicates whether or not the sample was removed during the Interim Measure (IM) performed at the site.

All values are presented in units of micrograms per kilogram (µg/kg).

Concentrations in bold and outlined within the table represent exceedances of the screening criteria.

[a] U.S. EPA Region III risk-based concentrations (RBCs) with a hazard index (HI)=0.1 for noncarcinogens.

[b] Soil screening levels (SSLs) are based on a dilution attenuation factor (DAF) of 1 for VOCs and DAF=10 for other compounds.

[c] The compound is listed as a carcinogen.

[d] Chlordane (carcinogen) is used as a surrogate value for alpha-chlordane, gamma-chlordane.

= Indicates that the analyte was detected at the concentration shown.

DET Environmental Detachment Charleston

J Indicates an estimated value. One or more quality control (QC) parameters were outside control limits or the value was detected below the laboratory's quantification limit.

NA Not applicable/not available

TABLE 5-2
COCs/COPCs Detected in Subsurface Soil
RFI Report Addendum/IM Completion Report/CMS Work Plan, SWMU 3, Zone G, Charleston Naval Complex

Analyte	Sample Location	Date Collected	Notes	Concentration (µg/kg)	Qualifier	SSL [a] (DAF=10)
VOCs						
PCE	G003SB040	01/15/02		**5.4**	=	3
	G003SB041	01/15/02		**27**	=	
	G003SB042	01/15/02		**7.1**	J	
	G003SB051	03/28/02		**13**	=	
	G003SB052	03/27/02		**3.7**	J	
TCE	G003SB052	03/27/02		**31**	=	
	G003SB054	03/27/02		**30**	=	
	G003SB055	03/27/02		**36**	=	
	G003SB056	03/27/02		**43**	=	
	G003SB057	03/27/02		**28**	=	
	G003SB058	03/27/02		**21**	=	
Pesticides						
Alpha-chlordane [b]	G003SB003	11/12/96		5.5	J	5,000
	G003SB008	09/26/96		35	J	
	G003SB009	09/26/96		85	J	
	G003SB026	11/29/01		16	J	
	G003SB028	11/29/01		1.4	J	
	G003SB032	11/28/01		61	=	
	G003SB033	11/29/01		4.8	J	
	G003SB036	11/29/01		0.42	J	
	G003SB039	01/15/02		15	J	
	G003SB040	01/15/02		98	J	
	G003SB041	01/15/02		1	J	
	G003SB042	01/15/02		1.4	J	
	G003SB051	03/28/02		1.6	J	
	G003SB052	03/27/02		31	=	
	G003SB054	03/27/02		0.6	J	
	G003SB056	03/27/02		28	=	
	G003SB057	03/27/02		2.8	J	

TABLE 5-2
COCs/COPCs Detected in Subsurface Soil
RFI Report Addendum/IM Completion Report/CMS Work Plan, SWMU 3, Zone G, Charleston Naval Complex

Analyte	Sample Location	Date Collected	Notes	Concentration (µg/kg)	Qualifier	SSL [a] (DAF=10)
Alpha-chlordane [b]	G003SB058	03/27/02		16	=	5,000
	G003SB060	03/27/02	Removed	1,000	J	
	G003SB064	03/27/02	Removed	**21,000**	J	
	G003SB066	03/27/02		20	J	
	G003SB069	05/13/02		12	=	
	G003SB071	05/15/02		29	=	
	G003SB072	05/15/02		62	=	
	G003SB073	05/15/02	Removed	28	J	
	G003SB075	05/15/02		5	J	
	G003SB076	05/15/02		2.7	J	
	G003SB077	05/15/02		4.9	J	
	G003SB077	05/15/02		1.2	J	
	G003SB078	05/15/02		5.7	J	
	G003SB078	05/15/02		1.8	J	
	G003SB079	05/15/02	Removed	820	=	
	G003SB080	05/15/02		18	J	
	G003SB081	05/15/02	Removed	1,000	=	
	G003SB082	05/15/02	Removed	3,300	=	
	G003SB083	05/15/02		8	J	
	G003SB088	06/13/02		1.4	J	
	G003SB090	06/13/02	Removed	40	J	
	G003SB091	06/13/02		35	J	
	G003SB092	06/13/02		1.7	J	
Beta-BHC (Beta-Hexachlorocyclohexane)	G003SB081	05/15/02	Removed	**17**	J	1.5
	G003SB082	05/15/02	Removed	**290**	J	
	G003SB090	06/13/02	Removed	**2.3**	J	
Chlordane	G003SB026	11/29/01		170	=	5,000
	G003SB033	11/29/01		31	J	
	G003SB039	01/15/02		54	J	

TABLE 5-2
COCs/COPCs Detected in Subsurface Soil
RFI Report Addendum/IM Completion Report/CMS Work Plan, SWMU 3, Zone G, Charleston Naval Complex

Analyte	Sample Location	Date Collected	Notes	Concentration (µg/kg)	Qualifier	SSL [a] (DAF=10)
Chlordane	G003SB040	01/15/02		630	J	5,000
	G003SB051	03/28/02		11	J	
	G003SB052	03/27/02		160	J	
	G003SB056	03/27/02		110	=	
	G003SB057	03/27/02		12	J	
	G003SB060	03/27/02	Removed	4,800	J	
	G003SB064	03/27/02	Removed	**130,000**	=	
	G003SB071	05/15/02		260	J	
	G003SB072	05/15/02		470	=	
	G003SB075	05/15/02		40	J	
	G003SB077	05/15/02		36	=	
	G003SB078	05/15/02		43	=	
	G003SB078	05/15/02		16	=	
	G003SB079	05/15/02	Removed	**5,400**	=	
	G003SB080	05/15/02		95	=	
	G003SB081	05/15/02	Removed	**7,500**	=	
	G003SB082	05/15/02	Removed	**26,000**	=	
	G003SB083	05/15/02		48	=	
	G003SB090	06/13/02	Removed	450	=	
	G003SB091	06/13/02		160	=	
	G003SB092	06/13/02		32	=	
Dieldrin	G003SB026	11/29/01		0.48	J	2
	G003SB032	11/28/01		**48**	J	
	G003SB033	11/29/01		**7.2**	=	
	G003SB036	11/29/01		1.7	J	
	G003SB039	01/15/02		0.69	J	
	G003SB040	01/15/02		**2.6**	J	
	G003SB048	03/27/02		**3**	J	
	G003SB051	03/28/02		0.62	J	

TABLE 5-2
COCs/COPCs Detected in Subsurface Soil
RFI Report Addendum/IM Completion Report/CMS Work Plan, SWMU 3, Zone G, Charleston Naval Complex

Analyte	Sample Location	Date Collected	Notes	Concentration (µg/kg)	Qualifier	SSL [a] (DAF=10)
Dieldrin	G003SB052	03/27/02		**2.6**	J	2
	G003SB056	03/27/02		5	J	
	G003SB064	03/27/02	Removed	**580**	J	
	G003SB066	03/27/02		**5**	J	
	G003SB069	05/13/02		**3**	J	
	G003SB072	05/15/02		**10**	J	
	G003SB073	05/15/02	Removed	**46**	J	
	G003SB076	05/15/02		**26**	=	
	G003SB077	05/15/02		1.8	J	
	G003SB077	05/15/02		0.5	J	
	G003SB078	05/15/02		1.7	J	
	G003SB078	05/15/02		0.7	J	
	G003SB079	05/15/02	Removed	**110**	=	
	G003SB080	05/15/02		**5.5**	J	
	G003SB081	05/15/02	Removed	**67**	J	
	G003SB082	05/15/02	Removed	**530**	J	
	G003SB083	05/15/02		2	J	
	G003SB088	06/13/02		0.9	J	
	G003SB090	06/13/02	Removed	**2.1**	J	
	G003SB091	06/13/02		**2.9**	J	
	G003SB092	06/13/02		**4**	=	
Gamma-BHC (Lindane)	G003SB056	03/27/02		0.47	J	4.5
	G003SB058	03/27/02		3.2	J	
	G003SB071	05/15/02		**19**	=	
	G003SB073	05/15/02	Removed	3.4	J	
	G003SB081	05/15/02	Removed	**50**	J	
	G003SB082	05/15/02	Removed	**1,500**	=	
Gamma-chlordane [b]	G003SB003	11/12/96		6.1	J	5,000
	G003SB008	09/26/96		40	=	

TABLE 5-2
COCs/COPCs Detected in Subsurface Soil
RFI Report Addendum/IM Completion Report/CMS Work Plan, SWMU 3, Zone G, Charleston Naval Complex

Analyte	Sample Location	Date Collected	Notes	Concentration (µg/kg)	Qualifier	SSL [a] (DAF=10)
Gamma-chlordane [b]	G003SB009	09/26/96		110	=	5,000
	G003SB026	11/29/01		14	=	
	G003SB028	11/29/01		1	J	
	G003SB029	11/29/01		0.37	J	
	G003SB031	11/29/01		0.39	J	
	G003SB032	11/28/01		77	=	
	G003SB033	11/29/01		4.8	=	
	G003SB036	11/29/01		0.78	J	
	G003SB039	01/15/02		8.8	J	
	G003SB040	01/15/02		99	=	
	G003SB041	01/15/02		0.87	J	
	G003SB042	01/15/02		1.2	J	
	G003SB051	03/28/02		1.7	=	
	G003SB052	03/27/02		29	=	
	G003SB054	03/27/02		0.37	J	
	G003SB055	03/27/02		0.43	J	
	G003SB056	03/27/02		20	=	
	G003SB057	03/27/02		2.6	=	
	G003SB058	03/27/02		25	=	
	G003SB060	03/27/02	Removed	870	J	
	G003SB064	03/27/02	Removed	**25,000**	=	
	G003SB065	03/28/02	Removed	0.28	J	
	G003SB066	03/27/02		23	=	
	G003SB068	05/13/02		3.4	J	
	G003SB069	05/13/02		32	=	
	G003SB071	05/15/02		30	=	
	G003SB072	05/15/02		73	=	
	G003SB073	05/15/02	Removed	99	=	
	G003SB077	05/15/02		5.5	=	
	G003SB078	05/15/02		6.1	=	

TABLE 5-2
COCs/COPCs Detected in Subsurface Soil
RFI Report Addendum/IM Completion Report/CMS Work Plan, SWMU 3, Zone G, Charleston Naval Complex

Analyte	Sample Location	Date Collected	Notes	Concentration (µg/kg)	Qualifier	SSL [a] (DAF=10)
Gamma-chlordane [b]	G003SB078	05/15/02		2	=	5,000
	G003SB079	05/15/02	Removed	530	=	
	G003SB080	05/15/02		14	=	
	G003SB081	05/15/02	Removed	960	=	
	G003SB082	05/15/02	Removed	2,300	=	
	G003SB083	05/15/02		9.1	=	
	G003SB084	05/13/02		0.25	J	
	G003SB088	06/13/02		4.1	=	
	G003SB090	06/13/02	Removed	40	=	
	G003SB091	06/13/02		34	=	
	G003SB092	06/13/02		1.1	J	
	G003SB094	07/25/02		38	J	
p,p'-DDD	G003SB012	07/28/99	Removed	6,100	=	8,000
	G003SB013	07/30/99		7.6	J	
	G003SB016	01/27/00		20	=	
	G003SB017	01/27/00		74	=	
	G003SB018	01/27/00		190	=	
	G003SB019	01/27/00		8.1	=	
	G003SB027	11/29/01		1.2	J	
	G003SB028	11/29/01		5.6	J	
	G003SB029	11/29/01		1.5	J	
	G003SB030	11/29/01		25	=	
	G003SB031	11/29/01		0.79	J	
	G003SB032	11/28/01		8.9	J	
	G003SB033	11/29/01		0.89	J	
	G003SB034	11/29/01		68	J	
	G003SB035	11/29/01		180	J	
	G003SB036	11/29/01		1.4	J	
	G003SB041	01/15/02		0.42	J	
	G003SB042	01/15/02		4.8	J	

TABLE 5-2
COCs/COPCs Detected in Subsurface Soil
RFI Report Addendum/IM Completion Report/CMS Work Plan, SWMU 3, Zone G, Charleston Naval Complex

Analyte	Sample Location	Date Collected	Notes	Concentration (µg/kg)	Qualifier	SSL [a] (DAF=10)
p,p'-DDD	G003SB044	03/27/02		260	J	8,000
	G003SB048	03/27/02		24	=	
	G003SB052	03/27/02		12	=	
	G003SB056	03/27/02		2.1	J	
	G003SB057	03/27/02		1.5	J	
	G003SB058	03/27/02		63	=	
	G003SB059	03/28/02		27	J	
	G003SB060	03/27/02	Removed	610	J	
	G003SB061	03/27/02	Removed	**14,000**	J	
	G003SB062	03/27/02		28	J	
	G003SB063	03/27/02		8.9	J	
	G003SB066	03/27/02		4.9	J	
	G003SB067	03/27/02		1.8	J	
	G003SB068	05/13/02		37	=	
	G003SB069	05/13/02		18	=	
	G003SB070	05/15/02		1.3	J	
	G003SB071	05/15/02		11	=	
	G003SB072	05/15/02		53	=	
	G003SB073	05/15/02	Removed	6,800	=	
	G003SB075	05/15/02		21	J	
	G003SB076	05/15/02		13	J	
	G003SB077	05/15/02		1.6	J	
	G003SB077	05/15/02		0.52	J	
	G003SB078	05/15/02		1.9	J	
	G003SB078	05/15/02		0.51	J	
	G003SB079	05/15/02	Removed	8.9	J	
	G003SB082	05/15/02	Removed	810	J	
	G003SB083	05/15/02		6.9	J	
	G003SB084	05/13/02		4.2	=	
	G003SB090	06/13/02	Removed	4.6	J	

TABLE 5-2
COCs/COPCs Detected in Subsurface Soil
RFI Report Addendum/IM Completion Report/CMS Work Plan, SWMU 3, Zone G, Charleston Naval Complex

Analyte	Sample Location	Date Collected	Notes	Concentration (µg/kg)	Qualifier	SSL [a] (DAF=10)
p,p'-DDD	G003SB094	07/25/02		690	=	8,000
	G003SB095	07/25/02		1.1	J	
	G003SB095	07/25/02		1.3	J	
p,p'-DDT	G003SB008	09/26/96		12	=	16,000
	G003SB009	09/26/96		250	=	
	G003SB011	07/28/99		20	J	
	G003SB012	07/28/99	Removed	**73,000**	=	
	G003SB013	07/30/99		27	=	
	G003SB016	01/27/00		240	=	
	G003SB017	01/27/00		340	=	
	G003SB018	01/27/00		3,700	=	
	G003SB019	01/27/00		180	=	
	G003SB020	01/27/00		39	=	
	G003SB022	11/29/01		1.1	J	
	G003SB023	11/29/01		2.6	J	
	G003SB025	11/29/01		0.58	J	
	G003SB027	11/29/01		33	=	
	G003SB028	11/29/01		95	=	
	G003SB029	11/29/01		44	=	
	G003SB030	11/29/01		160	=	
	G003SB031	11/29/01		9.9	=	
	G003SB032	11/28/01		200	J	
	G003SB033	11/29/01		46	=	
	G003SB034	11/29/01		3,500	=	
	G003SB035	11/29/01		3,300	J	
	G003SB036	11/29/01		76	J	
	G003SB039	01/15/02		6.4	=	
	G003SB040	01/15/02		12	J	
	G003SB041	01/15/02		8.7	=	
	G003SB042	01/15/02		11	=	

TABLE 5-2
COCs/COPCs Detected in Subsurface Soil
RFI Report Addendum/IM Completion Report/CMS Work Plan, SWMU 3, Zone G, Charleston Naval Complex

Analyte	Sample Location	Date Collected	Notes	Concentration (µg/kg)	Qualifier	SSL [a] (DAF=10)
p,p'-DDT	G003SB044	03/27/02		2,800	=	16,000
	G003SB048	03/27/02		180	=	
	G003SB049	03/27/02		0.75	J	
	G003SB051	03/28/02		3.5	=	
	G003SB052	03/27/02		94	=	
	G003SB054	03/27/02		1.3	J	
	G003SB055	03/27/02		2.2	J	
	G003SB056	03/27/02		250	J	
	G003SB057	03/27/02		3.5	J	
	G003SB058	03/27/02		420	=	
	G003SB059	03/28/02		1,000	=	
	G003SB060	03/27/02	Removed	**53,000**	J	
	G003SB061	03/27/02	Removed	**310,000**	=	
	G003SB062	03/27/02		1,500	J	
	G003SB063	03/27/02		200	=	
	G003SB066	03/27/02		160	=	
	G003SB067	03/27/02		40	=	
	G003SB068	05/13/02		360	J	
	G003SB069	05/13/02		350	J	
	G003SB070	05/15/02		9.1	J	
	G003SB070	05/15/02		23	J	
	G003SB071	05/15/02		110	J	
	G003SB072	05/15/02		860	J	
	G003SB073	05/15/02	Removed	**31,000**	J	
	G003SB074	05/13/02		1.8	J	
	G003SB075	05/15/02		200	=	
	G003SB076	05/15/02		120	=	
	G003SB077	05/15/02		42	=	
	G003SB077	05/15/02		10	=	
	G003SB078	05/15/02		38	=	

TABLE 5-2
COCs/COPCs Detected in Subsurface Soil
RFI Report Addendum/IM Completion Report/CMS Work Plan, SWMU 3, Zone G, Charleston Naval Complex

Analyte	Sample Location	Date Collected	Notes	Concentration (µg/kg)	Qualifier	SSL [a] (DAF=10)
p,p'-DDT	G003SB078	05/15/02		15	=	16,000
	G003SB079	05/15/02	Removed	180	=	
	G003SB080	05/15/02		26	J	
	G003SB081	05/15/02	Removed	530	=	
	G003SB082	05/15/02	Removed	**23,000**	J	
	G003SB083	05/15/02		80	=	
	G003SB084	05/13/02		71	J	
	G003SB087	06/13/02		3.1	=	
	G003SB088	06/13/02		13	=	
	G003SB090	06/13/02	Removed	15	=	
	G003SB091	06/13/02		42	=	
	G003SB092	06/13/02		4.6	=	
	G003SB094	07/25/02		3,700	=	
	G003SB095	07/25/02		28	J	
	G003SB095	07/25/02		37	J	

The "Notes" column indicates whether or not the sample was removed during the Interim Measure (IM) performed at the site.

All values are presented in units of micrograms per kilogram (µg/kg).

Concentrations in bold and outlined within the table represent exceedances of the screening criteria.

[a] Soil screening levels (SSLs) are based on a dilution attenuation factor (DAF) of 1 for volatile organic compounds (VOCs), and DAF=10 for other compounds.

[b] Chlordane (carcinogen) is used as a surrogate value for alpha-chlordane, gamma-chlordane.

= Indicates that the analyte was detected at the concentration shown.

DET Environmental Detachment Charleston

J Indicates an estimated value. One or more quality control (QC) parameters were outside control limits or the value was detected below the laboratory's quantification limit.

NA Not applicable/not available

TABLE 5-3
Residual COC/COPC Concentrations in Surface Soil
RFI Report Addendum/IM Completion Report/CMS Work Plan, SWMU 3, Zone G, Charleston Naval Complex

Analyte	Sample Location	Concentration (µg/kg)	Qualifier	Date Collected	EPA Region III RBC [a] Residential (HI=0.1)	EPA Region III RBC [a] Industrial (HI=0.1)	SSL [b] (DAF=10)	Zone G Background Concentrations
VOCs								
Acetone	G003SB021	140	J	11/29/01	780,000	20,000,000	800	NA
	G003SB022	54	UJ	11/29/01				
	G003SB024	**24,000**	J	11/29/01				
	G003SB027	57	UJ	11/29/01				
	G003SB031	310	J	11/29/01				
	G003SB036	200	J	11/29/01				
	G003SB039	11	UJ	01/15/02				
	G003SB040	81	UJ	01/15/02				
	G003SB041	28	UJ	01/15/02				
	G003SB042	42	UJ	01/15/02				
	G003SB050	260	J	03/28/02				
Benzene [c]	G003SB021	4.9	U	11/29/01	12,000	100,000	2	NA
	G003SB022	5.1	U	11/29/01				
	G003SB024	**3.4**	J	11/29/01				
	G003SB027	6.2	U	11/29/01				
	G003SB031	5.1	U	11/29/01				

TABLE 5-3
Residual COC/COPC Concentrations in Surface Soil
RFI Report Addendum/IM Completion Report/CMS Work Plan, SWMU 3, Zone G, Charleston Naval Complex

Analyte	Sample Location	Concentration (µg/kg)	Qualifier	Date Collected	EPA Region III RBC [a] Residential (HI=0.1)	EPA Region III RBC [a] Industrial (HI=0.1)	SSL [b] (DAF=10)	Zone G Background Concentrations
Benzene [c]	G003SB036	4.7	U	11/29/01	12,000	100,000	2	NA
	G003SB039	5.7	U	01/15/02				
	G003SB040	5.4	U	01/15/02				
	G003SB041	4.8	U	01/15/02				
	G003SB042	5.6	U	01/15/02				
	G003SB050	5.7	U	03/28/02				
Pesticides								
Alpha-chlordane [d]	G003SB001	1.4	U	08/29/96	1,800	16,000	5,000	NA
	G003SB001	1.4	U	11/12/96				
	G003SB002	4.9	=	11/12/96				
	G003SB004	1.4	U	09/26/96				
	G003SB005	1.4	U	09/26/96				
	G003SB006	1.4	U	09/26/96				
	G003SB007	2.4	J	10/08/96				
	G003SB009	21	J	09/26/96				
	G003SB010	1.4	U	09/26/96				
	G003SB011	1.4	U	07/28/99				
	G003SB013	7.1	J	07/30/99				

TABLE 5-3
Residual COC/COPC Concentrations in Surface Soil
RFI Report Addendum/IM Completion Report/CMS Work Plan, SWMU 3, Zone G, Charleston Naval Complex

Analyte	Sample Location	Concentration (µg/kg)	Qualifier	Date Collected	EPA Region III RBC [a] Residential (HI=0.1)	EPA Region III RBC [a] Industrial (HI=0.1)	SSL [b] (DAF=10)	Zone G Background Concentrations
Alpha-chlordane [d]	G003SB015	17	J	12/17/99	1,800	16,000	5,000	NA
	G003SB019	1.5	U	01/27/00				
	G003SB020	15	U	01/27/00				
	G003SB021	3.5	=	11/29/01				
	G003SB022	1.4	U	11/29/01				
	G003SB024	1.4	U	11/29/01				
	G003SB027	0.33	J	11/29/01				
	G003SB031	3.1	J	11/29/01				
	G003SB036	1.4	UJ	11/29/01				
	G003SB037	2.8	U	03/27/02				
	G003SB038	2.9	U	03/27/02				
	G003SB039	750	=	01/15/02				
	G003SB040	380	=	01/15/02				
	G003SB041	120	=	01/15/02				
	G003SB042	52	J	01/15/02				
	G003SB046	0.46	J	03/27/02				
	G003SB047	160	J	03/27/02				
	G003SB049	34	=	03/27/02				

TABLE 5-3
Residual COC/COPC Concentrations in Surface Soil
RFI Report Addendum/IM Completion Report/CMS Work Plan, SWMU 3, Zone G, Charleston Naval Complex

Analyte	Sample Location	Concentration (µg/kg)	Qualifier	Date Collected	EPA Region III RBC [a] Residential (HI=0.1)	EPA Region III RBC [a] Industrial (HI=0.1)	SSL [b] (DAF=10)	Zone G Background Concentrations
Alpha-chlordane [d]	G003SB051	85	=	03/27/02	1,800	16,000	5,000	NA
	G003SB052	170	=	03/27/02				
	G003SB053	0.46	J	03/28/02				
	G003SB054	44	=	03/27/02				
	G003SB055	75	J	03/27/02				
	G003SB057	220	J	03/27/02				
	G003SB058	99	J	03/27/02				
	G003SB059	1.5	U	03/28/02				
	G003SB068	3.3	J	05/13/02				
	G003SB069	2.9	=	05/13/02				
	G003SB070	1.5	U	05/15/02				
	G003SB071	150	=	05/15/02				
	G003SB074	1.9	J	05/13/02				
	G003SB075	52	J	05/15/02				
	G003SB077	80	J	05/15/02				
	G003SB078	140	J	05/15/02				
	G003SB080	34	=	05/15/02				
	G003SB085	53	J	06/13/02				

TABLE 5-3
Residual COC/COPC Concentrations in Surface Soil
RFI Report Addendum/IM Completion Report/CMS Work Plan, SWMU 3, Zone G, Charleston Naval Complex

Analyte	Sample Location	Concentration (µg/kg)	Qualifier	Date Collected	EPA Region III RBC [a] Residential (HI=0.1)	EPA Region III RBC [a] Industrial (HI=0.1)	SSL [b] (DAF=10)	Zone G Background Concentrations
Alpha-chlordane [d]	G003SB086	6.1	J	06/13/02	1,800	16,000	5,000	NA
	G003SB088	20	J	06/13/02				
	G003SB089	1.4	U	06/13/02				
	G003SB091	400	J	06/13/02				
	G003SB093	45	J	07/25/02				
	G003SB094	280	U	07/25/02				
	G003SB095	15	UJ	07/25/02				
	G003SB096	1.4	U	07/25/02				
	G003SB097	39	J	07/25/02				
	G003SB098	0.39	J	09/27/02				
	G003SB102	24	J	12/06/02				
	G003SB103	2.4	J	12/06/02				
	G003SB104	16	J	12/06/02				
Chlordane [c]	G003SB015	370	U	12/17/99	1,800	16,000	5,000	NA
	G003SB021	29	U	11/29/01				
	G003SB022	14	U	11/29/01				
	G003SB024	14	U	11/29/01				
	G003SB027	14	U	11/29/01				

TABLE 5-3
Residual COC/COPC Concentrations in Surface Soil
RFI Report Addendum/IM Completion Report/CMS Work Plan, SWMU 3, Zone G, Charleston Naval Complex

Analyte	Sample Location	Concentration (µg/kg)	Qualifier	Date Collected	EPA Region III RBC [a] Residential (HI=0.1)	EPA Region III RBC [a] Industrial (HI=0.1)	SSL [b] (DAF=10)	Zone G Background Concentrations
Chlordane [c]	G003SB031	70	U	11/29/01	1,800	16,000	5,000	NA
	G003SB036	14	UJ	11/29/01				
	G003SB037	28	UJ	03/27/02				
	G003SB038	29	UJ	03/27/02				
	G003SB039	640	UJ	01/15/02				
	G003SB040	**2,400**	J	01/15/02				
	G003SB041	440	J	01/15/02				
	G003SB042	60	UJ	01/15/02				
	G003SB046	14	UJ	03/27/02				
	G003SB047	830	J	03/27/02				
	G003SB049	87	UJ	03/27/02				
	G003SB051	150	UJ	03/27/02				
	G003SB052	280	UJ	03/27/02				
	G003SB053	15	U	03/28/02				
	G003SB054	140	=	03/27/02				
	G003SB055	400	=	03/27/02				
	G003SB057	880	=	03/27/02				
	G003SB058	560	=	03/27/02				

TABLE 5-3
Residual COC/COPC Concentrations in Surface Soil
RFI Report Addendum/IM Completion Report/CMS Work Plan, SWMU 3, Zone G, Charleston Naval Complex

					EPA Region III RBC [a]			
Analyte	**Sample Location**	**Concentration (µg/kg)**	**Qualifier**	**Date Collected**	**Residential (HI=0.1)**	**Industrial (HI=0.1)**	**SSL [b] (DAF=10)**	**Zone G Background Concentrations**
Chlordane [c]	G003SB059	15	U	03/28/02	1,800	16,000	5,000	NA
	G003SB068	58	U	05/13/02				
	G003SB069	28	U	05/13/02				
	G003SB070	15	U	05/15/02				
	G003SB071	1,300	=	05/15/02				
	G003SB074	28	U	05/13/02				
	G003SB075	420	J	05/15/02				
	G003SB077	590	=	05/15/02				
	G003SB078	1,100	=	05/15/02				
	G003SB080	110	=	05/15/02				
	G003SB085	490	=	06/13/02				
	G003SB086	270	U	06/13/02				
	G003SB088	110	=	06/13/02				
	G003SB089	14	U	06/13/02				
	G003SB091	1,800	=	06/13/02				
	G003SB093	240	J	07/25/02				
	G003SB094	2,800	UJ	07/25/02				
	G003SB095	150	UJ	07/25/02				

TABLE 5-3
Residual COC/COPC Concentrations in Surface Soil
RFI Report Addendum/IM Completion Report/CMS Work Plan, SWMU 3, Zone G, Charleston Naval Complex

					EPA Region III RBC [a]			
Analyte	**Sample Location**	**Concentration (µg/kg)**	**Qualifier**	**Date Collected**	**Residential (HI=0.1)**	**Industrial (HI=0.1)**	**SSL [b] (DAF=10)**	**Zone G Background Concentrations**
Chlordane [c]	G003SB096	14	UJ	07/25/02	1,800	16,000	5,000	NA
	G003SB097	150	U	07/25/02				
	G003SB098	14	U	09/27/02				
	G003SB102	110	J	12/06/02				
	G003SB103	16	U	12/06/02				
	G003SB104	30	UJ	12/06/02				
Dieldrin [c]	G003SB001	2.8	U	08/29/96	40	360	11.1 site-specific [e]	0.5 - 300
	G003SB001	2.6	U	11/12/96				
	G003SB002	5.9	U	11/12/96				
	G003SB004	2.7	U	09/26/96				
	G003SB005	2.7	U	09/26/96				
	G003SB006	2.7	U	09/26/96				
	G003SB007	4	=	10/08/96				
	G003SB009	**12**	=	09/26/96				
	G003SB010	2.7	U	09/26/96				
	G003SB011	2.7	U	07/28/99				
	G003SB013	2.6	U	07/30/99				

TABLE 5-3
Residual COC/COPC Concentrations in Surface Soil
RFI Report Addendum/IM Completion Report/CMS Work Plan, SWMU 3, Zone G, Charleston Naval Complex

					EPA Region III RBC [a]			
Analyte	**Sample Location**	**Concentration (µg/kg)**	**Qualifier**	**Date Collected**	**Residential (HI=0.1)**	**Industrial (HI=0.1)**	**SSL [b] (DAF=10)**	**Zone G Background Concentrations**
Dieldrin [c]	G003SB015	3.7	U	12/17/99	40	360	11.1 site-specific [e]	0.5 - 300
	G003SB019	2.9	U	01/27/00				
	G003SB020	29	U	01/27/00				
	G003SB021	0.64	J	11/29/01				
	G003SB022	2.6	U	11/29/01				
	G003SB024	2.6	U	11/29/01				
	G003SB027	2.8	U	11/29/01				
	G003SB031	13	U	11/29/01				
	G003SB036	2.7	UJ	11/29/01				
	G003SB037	5.5	U	03/27/02				
	G003SB038	5.6	U	03/27/02				
	G003SB039	**16**	J	01/15/02				
	G003SB040	9.8	J	01/15/02				
	G003SB041	**21**	=	01/15/02				
	G003SB042	6.6	J	01/15/02				
	G003SB046	2.6	U	03/27/02				
	G003SB047	**29**	J	03/27/02				

TABLE 5-3
Residual COC/COPC Concentrations in Surface Soil
RFI Report Addendum/IM Completion Report/CMS Work Plan, SWMU 3, Zone G, Charleston Naval Complex

					EPA Region III RBC [a]			
Analyte	**Sample Location**	**Concentration (µg/kg)**	**Qualifier**	**Date Collected**	**Residential (HI=0.1)**	**Industrial (HI=0.1)**	**SSL [b] (DAF=10)**	**Zone G Background Concentrations**
Dieldrin [c]	G003SB049	**59**	=	03/27/02	40	360	11.1 site-specific [e]	0.5 - 300
	G003SB051	**22**	J	03/27/02				
	G003SB052	**40**	J	03/27/02				
	G003SB053	2.8	U	03/28/02				
	G003SB054	4.7	J	03/27/02				
	G003SB055	**20**	=	03/27/02				
	G003SB057	**15**	J	03/27/02				
	G003SB058	**12**	J	03/27/02				
	G003SB059	2.9	U	03/28/02				
	G003SB068	2.3	J	05/13/02				
	G003SB069	0.91	J	05/13/02				
	G003SB070	2.9	U	05/15/02				
	G003SB071	4.2	J	05/15/02				
	G003SB074	0.71	J	05/13/02				
	G003SB075	**16**	J	05/15/02				
	G003SB077	**61**	=	05/15/02				
	G003SB078	**35**	=	05/15/02				

TABLE 5-3
Residual COC/COPC Concentrations in Surface Soil
RFI Report Addendum/IM Completion Report/CMS Work Plan, SWMU 3, Zone G, Charleston Naval Complex

					EPA Region III RBC [a]			
Analyte	**Sample Location**	**Concentration (µg/kg)**	**Qualifier**	**Date Collected**	**Residential (HI=0.1)**	**Industrial (HI=0.1)**	**SSL [b] (DAF=10)**	**Zone G Background Concentrations**
Dieldrin [c]	G003SB080	**14**	=	05/15/02	40	360	11.1 site-specific [e]	0.5 - 300
	G003SB085	0.95	J	06/13/02				
	G003SB086	53	U	06/13/02				
	G003SB088	5.7	=	06/13/02				
	G003SB089	2.6	U	06/13/02				
	G003SB091	**39**	=	06/13/02				
	G003SB093	7.1	J	07/25/02				
	G003SB094	540	U	07/25/02				
	G003SB095	28	UJ	07/25/02				
	G003SB096	2.7	U	07/25/02				
	G003SB097	**12**	J	07/25/02				
	G003SB098	2.7	U	09/27/02				
	G003SB099	**55**	J	12/06/02				
	G003SB100	**14**	J	12/06/02				
	G003SB101	11	J	12/06/02				
	G003SB102	5.1	J	12/06/02				
	G003SB103	0.36	J	12/06/02				

TABLE 5-3
Residual COC/COPC Concentrations in Surface Soil
RFI Report Addendum/IM Completion Report/CMS Work Plan, SWMU 3, Zone G, Charleston Naval Complex

					EPA Region III RBC [a]			
Analyte	**Sample Location**	**Concentration (µg/kg)**	**Qualifier**	**Date Collected**	**Residential (HI=0.1)**	**Industrial (HI=0.1)**	**SSL [b] (DAF=10)**	**Zone G Background Concentrations**
Dieldrin [c]	G003SB104	1.4	J	12/06/02	40	360	11.1 site-specific [e]	0.5 - 300
Gamma-chlordane [d]	G003SB001	1.4	U	08/29/96	1,800	16,000	5,000	NA
	G003SB001	1.4	U	11/12/96				
	G003SB002	5.9	=	11/12/96				
	G003SB004	1.4	U	09/26/96				
	G003SB005	1.4	U	09/26/96				
	G003SB006	1.7	=	09/26/96				
	G003SB007	2.7	=	10/08/96				
	G003SB009	21	=	09/26/96				
	G003SB010	1.4	U	09/26/96				
	G003SB011	1.4	U	07/28/99				
	G003SB013	5.6	J	07/30/99				
	G003SB015	23	J	12/17/99				
	G003SB019	2	U	01/27/00				
	G003SB020	15	U	01/27/00				
	G003SB021	4.2	=	11/29/01				
	G003SB022	1.4	U	11/29/01				

TABLE 5-3
Residual COC/COPC Concentrations in Surface Soil
RFI Report Addendum/IM Completion Report/CMS Work Plan, SWMU 3, Zone G, Charleston Naval Complex

Analyte	Sample Location	Concentration (µg/kg)	Qualifier	Date Collected	EPA Region III RBC [a] Residential (HI=0.1)	EPA Region III RBC [a] Industrial (HI=0.1)	SSL [b] (DAF=10)	Zone G Background Concentrations
Gamma-chlordane [d]	G003SB024	0.67	J	11/29/01	1,800	16,000	5,000	NA
	G003SB027	0.74	J	11/29/01				
	G003SB031	4.4	J	11/29/01				
	G003SB036	0.3	J	11/29/01				
	G003SB037	2.8	U	03/27/02				
	G003SB038	2.9	U	03/27/02				
	G003SB039	480	=	01/15/02				
	G003SB040	400	=	01/15/02				
	G003SB041	80	=	01/15/02				
	G003SB042	59	=	01/15/02				
	G003SB046	0.88	J	03/27/02				
	G003SB047	160	J	03/27/02				
	G003SB049	27	J	03/27/02				
	G003SB051	98	=	03/27/02				
	G003SB052	130	=	03/27/02				
	G003SB053	0.46	J	03/28/02				
	G003SB054	32	=	03/27/02				
	G003SB055	77	=	03/27/02				

TABLE 5-3
Residual COC/COPC Concentrations in Surface Soil
RFI Report Addendum/IM Completion Report/CMS Work Plan, SWMU 3, Zone G, Charleston Naval Complex

Analyte	Sample Location	Concentration (µg/kg)	Qualifier	Date Collected	EPA Region III RBC [a] Residential (HI=0.1)	EPA Region III RBC [a] Industrial (HI=0.1)	SSL [b] (DAF=10)	Zone G Background Concentrations
Gamma-chlordane [d]	G003SB057	220	=	03/27/02	1,800	16,000	5,000	NA
	G003SB058	110	=	03/27/02				
	G003SB059	1.5	U	03/28/02				
	G003SB068	5	J	05/13/02				
	G003SB069	7.3	=	05/13/02				
	G003SB070	0.38	J	05/15/02				
	G003SB071	150	=	05/15/02				
	G003SB074	2.7	J	05/13/02				
	G003SB075	54	J	05/15/02				
	G003SB077	97	=	05/15/02				
	G003SB078	150	=	05/15/02				
	G003SB080	19	=	05/15/02				
	G003SB085	53	=	06/13/02				
	G003SB086	27	U	06/13/02				
	G003SB088	23	=	06/13/02				
	G003SB089	1.4	U	06/13/02				
	G003SB091	400	=	06/13/02				
	G003SB093	42	J	07/25/02				

TABLE 5-3
Residual COC/COPC Concentrations in Surface Soil
RFI Report Addendum/IM Completion Report/CMS Work Plan, SWMU 3, Zone G, Charleston Naval Complex

					EPA Region III RBC [a]			
Analyte	**Sample Location**	**Concentration (µg/kg)**	**Qualifier**	**Date Collected**	**Residential (HI=0.1)**	**Industrial (HI=0.1)**	**SSL [b] (DAF=10)**	**Zone G Background Concentrations**
Gamma-chlordane [d]	G003SB094	280	U	07/25/02	1,800	16,000	5,000	NA
	G003SB095	9.8	J	07/25/02				
	G003SB096	1.4	U	07/25/02				
	G003SB097	51	=	07/25/02				
	G003SB098	0.43	J	09/27/02				
	G003SB102	18	=	12/06/02				
	G003SB103	3.1	J	12/06/02				
	G003SB104	18	=	12/06/02				
Heptachlor [c]	G003SB001	1.4	U	08/29/96	140	1,300	11,500	NA
	G003SB001	1.4	U	11/12/96				
	G003SB002	1.5	U	11/12/96				
	G003SB004	1.4	U	09/26/96				
	G003SB005	1.4	U	09/26/96				
	G003SB006	1.4	U	09/26/96				
	G003SB007	3	J	10/08/96				
	G003SB009	1.4	U	09/26/96				
	G003SB010	1.4	U	09/26/96				
	G003SB011	1.4	U	07/28/99				

TABLE 5-3
Residual COC/COPC Concentrations in Surface Soil
RFI Report Addendum/IM Completion Report/CMS Work Plan, SWMU 3, Zone G, Charleston Naval Complex

Analyte	Sample Location	Concentration (µg/kg)	Qualifier	Date Collected	EPA Region III RBC [a] Residential (HI=0.1)	EPA Region III RBC [a] Industrial (HI=0.1)	SSL [b] (DAF=10)	Zone G Background Concentrations
Heptachlor [c]	G003SB013	1.4	U	07/30/99	140	1,300	11,500	NA
	G003SB015	1.9	U	12/17/99				
	G003SB019	1.5	U	01/27/00				
	G003SB020	15	U	01/27/00				
	G003SB021	2.9	U	11/29/01				
	G003SB022	1.4	U	11/29/01				
	G003SB024	1.4	U	11/29/01				
	G003SB027	1.4	U	11/29/01				
	G003SB031	7	U	11/29/01				
	G003SB036	1.4	UJ	11/29/01				
	G003SB037	2.8	U	03/27/02				
	G003SB038	2.9	U	03/27/02				
	G003SB039	64	U	01/15/02				
	G003SB040	44	=	01/15/02				
	G003SB041	5.8	U	01/15/02				
	G003SB042	6	U	01/15/02				
	G003SB046	1.4	U	03/27/02				
	G003SB047	15	U	03/27/02				

TABLE 5-3
Residual COC/COPC Concentrations in Surface Soil
RFI Report Addendum/IM Completion Report/CMS Work Plan, SWMU 3, Zone G, Charleston Naval Complex

Analyte	Sample Location	Concentration (µg/kg)	Qualifier	Date Collected	EPA Region III RBC [a] Residential (HI=0.1)	EPA Region III RBC [a] Industrial (HI=0.1)	SSL [b] (DAF=10)	Zone G Background Concentrations
Heptachlor [c]	G003SB049	8.7	U	03/27/02	140	1,300	11,500	NA
	G003SB051	15	U	03/27/02				
	G003SB052	28	U	03/27/02				
	G003SB053	1.5	U	03/28/02				
	G003SB054	5.6	U	03/27/02				
	G003SB055	6.1	J	03/27/02				
	G003SB057	15	U	03/27/02				
	G003SB058	5.8	U	03/27/02				
	G003SB059	1.5	U	03/28/02				
	G003SB068	5.8	U	05/13/02				
	G003SB069	2.8	U	05/13/02				
	G003SB070	1.5	U	05/15/02				
	G003SB071	9.5	J	05/15/02				
	G003SB074	2.8	U	05/13/02				
	G003SB075	5.5	U	05/15/02				
	G003SB077	15	U	05/15/02				
	G003SB078	2.8	J	05/15/02				
	G003SB080	3.6	U	05/15/02				

TABLE 5-3
Residual COC/COPC Concentrations in Surface Soil
RFI Report Addendum/IM Completion Report/CMS Work Plan, SWMU 3, Zone G, Charleston Naval Complex

					EPA Region III RBC [a]			
Analyte	**Sample Location**	**Concentration (µg/kg)**	**Qualifier**	**Date Collected**	**Residential (HI=0.1)**	**Industrial (HI=0.1)**	**SSL [b] (DAF=10)**	**Zone G Background Concentrations**
Heptachlor [c]	G003SB085	0.56	J	06/13/02	140	1,300	11,500	NA
	G003SB086	27	U	06/13/02				
	G003SB088	2.8	U	06/13/02				
	G003SB089	1.4	U	06/13/02				
	G003SB091	2.4	J	06/13/02				
	G003SB093	3.1	UJ	07/25/02				
	G003SB094	280	UJ	07/25/02				
	G003SB095	15	UJ	07/25/02				
	G003SB096	1.4	UJ	07/25/02				
	G003SB097	15	U	07/25/02				
	G003SB098	1.4	U	09/27/02				
	G003SB102	7.9	U	12/04/02				
	G003SB103	1.6	U	12/05/02				
	G003SB104	0.78	J	12/06/02				
Heptachlor Epoxide [c]	G003SB001	1.4	U	08/29/96	70	630	350	NA
	G003SB001	1.4	U	11/12/96				
	G003SB002	3.1	=	11/12/96				
	G003SB004	1.4	U	09/26/96				

TABLE 5-3
Residual COC/COPC Concentrations in Surface Soil
RFI Report Addendum/IM Completion Report/CMS Work Plan, SWMU 3, Zone G, Charleston Naval Complex

Analyte	Sample Location	Concentration (µg/kg)	Qualifier	Date Collected	EPA Region III RBC [a] Residential (HI=0.1)	EPA Region III RBC [a] Industrial (HI=0.1)	SSL [b] (DAF=10)	Zone G Background Concentrations
Heptachlor Epoxide [c]	G003SB005	1.4	U	09/26/96	70	630	350	NA
	G003SB006	1.4	U	09/26/96				
	G003SB007	1.4	U	10/08/96				
	G003SB009	5.9	=	09/26/96				
	G003SB010	1.4	U	09/26/96				
	G003SB011	1.4	U	07/28/99				
	G003SB013	1.4	U	07/30/99				
	G003SB015	49	J	12/17/99				
	G003SB019	2.5	=	01/27/00				
	G003SB020	15	U	01/27/00				
	G003SB021	8.7	=	11/29/01				
	G003SB022	0.14	J	11/29/01				
	G003SB024	0.29	J	11/29/01				
	G003SB027	1.4	U	11/29/01				
	G003SB031	2.2	J	11/29/01				
	G003SB036	1.4	UJ	11/29/01				
	G003SB037	2.8	U	03/27/02				
	G003SB038	2.9	U	03/27/02				

TABLE 5-3
Residual COC/COPC Concentrations in Surface Soil
RFI Report Addendum/IM Completion Report/CMS Work Plan, SWMU 3, Zone G, Charleston Naval Complex

Analyte	Sample Location	Concentration (µg/kg)	Qualifier	Date Collected	EPA Region III RBC [a] Residential (HI=0.1)	EPA Region III RBC [a] Industrial (HI=0.1)	SSL [b] (DAF=10)	Zone G Background Concentrations
Heptachlor Epoxide [c]	G003SB039	19	J	01/15/02	70	630	350	NA
	G003SB040	8.7	J	01/15/02				
	G003SB041	2.6	J	01/15/02				
	G003SB042	0.98	J	01/15/02				
	G003SB046	1.4	U	03/27/02				
	G003SB047	6.7	J	03/27/02				
	G003SB049	6.3	J	03/27/02				
	G003SB051	3.8	J	03/27/02				
	G003SB052	14	J	03/27/02				
	G003SB053	1.5	U	03/28/02				
	G003SB054	4.8	J	03/27/02				
	G003SB055	4.7	J	03/27/02				
	G003SB057	7.4	J	03/27/02				
	G003SB058	5.8	U	03/27/02				
	G003SB059	1.5	U	03/28/02				
	G003SB068	5.8	U	05/13/02				
	G003SB069	3.5	=	05/13/02				
	G003SB070	1.5	U	05/15/02				

TABLE 5-3
Residual COC/COPC Concentrations in Surface Soil
RFI Report Addendum/IM Completion Report/CMS Work Plan, SWMU 3, Zone G, Charleston Naval Complex

Analyte	Sample Location	Concentration (µg/kg)	Qualifier	Date Collected	EPA Region III RBC [a] Residential (HI=0.1)	EPA Region III RBC [a] Industrial (HI=0.1)	SSL [b] (DAF=10)	Zone G Background Concentrations
Heptachlor Epoxide [c]	G003SB071	14	U	05/15/02	70	630	350	NA
	G003SB074	0.39	J	05/13/02				
	G003SB075	5.1	J	05/15/02				
	G003SB077	4.6	J	05/15/02				
	G003SB078	6.2	J	05/15/02				
	G003SB080	31	=	05/15/02				
	G003SB085	17	=	06/13/02				
	G003SB086	27	U	06/13/02				
	G003SB088	0.66	J	06/13/02				
	G003SB089	1.4	U	06/13/02				
	G003SB091	**120**	=	06/13/02				
	G003SB093	13	J	07/25/02				
	G003SB094	280	U	07/25/02				
	G003SB095	15	UJ	07/25/02				
	G003SB096	1.4	U	07/25/02				
	G003SB097	8.8	J	07/25/02				
	G003SB098	0.13	J	09/27/02				
	G003SB102	8.2	=	12/06/02				

TABLE 5-3
Residual COC/COPC Concentrations in Surface Soil
RFI Report Addendum/IM Completion Report/CMS Work Plan, SWMU 3, Zone G, Charleston Naval Complex

					EPA Region III RBC [a]			
Analyte	**Sample Location**	**Concentration (µg/kg)**	**Qualifier**	**Date Collected**	**Residential (HI=0.1)**	**Industrial (HI=0.1)**	**SSL [b] (DAF=10)**	**Zone G Background Concentrations**
Heptachlor Epoxide [c]	G003SB103	0.94	J	12/06/02	70	630	350	NA
	G003SB104	21	=	12/06/02				
p,p'-DDD [c]	G003SB001	2.8	U	08/29/96	2,700	24,000	8,000	NA
	G003SB001	2.6	U	11/12/96				
	G003SB002	4.8	U	11/12/96				
	G003SB004	2.7	U	09/26/96				
	G003SB005	2.7	U	09/26/96				
	G003SB006	2.7	U	09/26/96				
	G003SB007	13	U	10/08/96				
	G003SB009	7.4	U	09/26/96				
	G003SB010	2.7	U	09/26/96				
	G003SB011	2.7	U	07/28/99				
	G003SB013	300	J	07/30/99				
	G003SB015	3.7	U	12/17/99				
	G003SB019	17	J	01/27/00				
	G003SB020	66	=	01/27/00				
	G003SB021	3.6	J	11/29/01				
	G003SB022	2.6	U	11/29/01				

TABLE 5-3
Residual COC/COPC Concentrations in Surface Soil
RFI Report Addendum/IM Completion Report/CMS Work Plan, SWMU 3, Zone G, Charleston Naval Complex

					EPA Region III RBC [a]			
Analyte	**Sample Location**	**Concentration (µg/kg)**	**Qualifier**	**Date Collected**	**Residential (HI=0.1)**	**Industrial (HI=0.1)**	**SSL [b] (DAF=10)**	**Zone G Background Concentrations**
p,p'-DDD [c]	G003SB024	2.6	U	11/29/01	2,700	24,000	8,000	NA
	G003SB027	1.3	J	11/29/01				
	G003SB031	52	=	11/29/01				
	G003SB036	0.76	J	11/29/01				
	G003SB037	5.5	U	03/27/02				
	G003SB038	5.6	U	03/27/02				
	G003SB039	370	J	01/15/02				
	G003SB040	62	U	01/15/02				
	G003SB041	3.9	J	01/15/02				
	G003SB042	190	J	01/15/02				
	G003SB046	2.3	J	03/27/02				
	G003SB047	140	J	03/27/02				
	G003SB049	16	J	03/27/02				
	G003SB051	18	J	03/27/02				
	G003SB052	100	=	03/27/02				
	G003SB053	2.8	U	03/28/02				
	G003SB054	2	J	03/27/02				
	G003SB055	11	U	03/27/02				

TABLE 5-3
Residual COC/COPC Concentrations in Surface Soil
RFI Report Addendum/IM Completion Report/CMS Work Plan, SWMU 3, Zone G, Charleston Naval Complex

					EPA Region III RBC [a]			
Analyte	**Sample Location**	**Concentration (µg/kg)**	**Qualifier**	**Date Collected**	**Residential (HI=0.1)**	**Industrial (HI=0.1)**	**SSL [b] (DAF=10)**	**Zone G Background Concentrations**
p,p'-DDD [c]	G003SB057	110	=	03/27/02	2,700	24,000	8,000	NA
	G003SB058	24	J	03/27/02				
	G003SB059	2.9	U	03/28/02				
	G003SB068	19	J	05/13/02				
	G003SB069	4.1	J	05/13/02				
	G003SB070	13	=	05/15/02				
	G003SB071	170	=	05/15/02				
	G003SB074	2	J	05/13/02				
	G003SB075	260	J	05/15/02				
	G003SB077	98	=	05/15/02				
	G003SB078	27	J	05/15/02				
	G003SB080	6.9	U	05/15/02				
	G003SB085	5.5	U	06/13/02				
	G003SB086	620	=	06/13/02				
	G003SB088	3.4	J	06/13/02				
	G003SB089	2.6	U	06/13/02				
	G003SB091	39	=	06/13/02				
	G003SB093	2.2	J	07/25/02				

TABLE 5-3
Residual COC/COPC Concentrations in Surface Soil
RFI Report Addendum/IM Completion Report/CMS Work Plan, SWMU 3, Zone G, Charleston Naval Complex

					EPA Region III RBC [a]			
Analyte	**Sample Location**	**Concentration (µg/kg)**	**Qualifier**	**Date Collected**	**Residential (HI=0.1)**	**Industrial (HI=0.1)**	**SSL [b] (DAF=10)**	**Zone G Background Concentrations**
p,p'-DDD [c]	G003SB094	1100	=	07/25/02	2,700	24,000	8,000	NA
	G003SB095	40	J	07/25/02				
	G003SB096	1.9	J	07/25/02				
	G003SB097	58	J	07/25/02				
	G003SB098	2.7	U	09/27/02				
	G003SB102	8.3	J	12/06/02				
	G003SB103	3	U	12/05/02				
	G003SB104	6.5	=	12/06/02				
p,p'-DDE [c]	G003SB001	3.5	=	08/29/96	1,900	17,000	27,000	NA
	G003SB001	2.6	U	11/12/96				
	G003SB002	81	=	11/12/96				
	G003SB004	3.8	=	09/26/96				
	G003SB005	25	=	09/26/96				
	G003SB006	5	=	09/26/96				
	G003SB007	12	=	10/08/96				
	G003SB009	200	=	09/26/96				
	G003SB010	21	=	09/26/96				
	G003SB011	72	=	07/28/99				

TABLE 5-3
Residual COC/COPC Concentrations in Surface Soil
RFI Report Addendum/IM Completion Report/CMS Work Plan, SWMU 3, Zone G, Charleston Naval Complex

					EPA Region III RBC [a]			
Analyte	**Sample Location**	**Concentration (µg/kg)**	**Qualifier**	**Date Collected**	**Residential (HI=0.1)**	**Industrial (HI=0.1)**	**SSL [b] (DAF=10)**	**Zone G Background Concentrations**
p,p'-DDE [c]	G003SB013	150	J	07/30/99	1,900	17,000	27,000	NA
	G003SB015	770	=	12/17/99				
	G003SB019	130	=	01/27/00				
	G003SB020	56	=	01/27/00				
	G003SB021	82	=	11/29/01				
	G003SB022	69	=	11/29/01				
	G003SB024	71	=	11/29/01				
	G003SB027	9.1	=	11/29/01				
	G003SB031	350	=	11/29/01				
	G003SB036	8.7	J	11/29/01				
	G003SB037	21	=	03/27/02				
	G003SB038	5.1	J	03/27/02				
	G003SB039	300	=	01/15/02				
	G003SB040	35	J	01/15/02				
	G003SB041	8.7	J	01/15/02				
	G003SB042	30	=	01/15/02				
	G003SB046	11	J	03/27/02				
	G003SB047	120	J	03/27/02				

TABLE 5-3
Residual COC/COPC Concentrations in Surface Soil
RFI Report Addendum/IM Completion Report/CMS Work Plan, SWMU 3, Zone G, Charleston Naval Complex

					EPA Region III RBC [a]			
Analyte	**Sample Location**	**Concentration (µg/kg)**	**Qualifier**	**Date Collected**	**Residential (HI=0.1)**	**Industrial (HI=0.1)**	**SSL [b] (DAF=10)**	**Zone G Background Concentrations**
p,p'-DDE [c]	G003SB049	360	=	03/27/02	1,900	17,000	27,000	NA
	G003SB051	590	=	03/27/02				
	G003SB052	330	=	03/27/02				
	G003SB053	1.9	J	03/28/02				
	G003SB054	200	=	03/27/02				
	G003SB055	24	=	03/27/02				
	G003SB057	140	=	03/27/02				
	G003SB058	170	J	03/27/02				
	G003SB059	0.72	J	03/28/02				
	G003SB068	290	=	05/13/02				
	G003SB069	86	=	05/13/02				
	G003SB070	48	=	05/15/02				
	G003SB071	100	=	05/15/02				
	G003SB074	110	=	05/13/02				
	G003SB075	73	J	05/15/02				
	G003SB077	580	=	05/15/02				
	G003SB078	210	=	05/15/02				
	G003SB080	34	=	05/15/02				

TABLE 5-3
Residual COC/COPC Concentrations in Surface Soil
RFI Report Addendum/IM Completion Report/CMS Work Plan, SWMU 3, Zone G, Charleston Naval Complex

Analyte	Sample Location	Concentration (µg/kg)	Qualifier	Date Collected	EPA Region III RBC [a] Residential (HI=0.1)	EPA Region III RBC [a] Industrial (HI=0.1)	SSL [b] (DAF=10)	Zone G Background Concentrations
p,p'-DDE [C]	G003SB085	21	=	06/13/02	1,900	17,000	27,000	NA
	G003SB086	460	=	06/13/02				
	G003SB088	110	=	06/13/02				
	G003SB089	2.1	J	06/13/02				
	G003SB091	630	=	06/13/02				
	G003SB093	34	J	07/25/02				
	G003SB094	940	J	07/25/02				
	G003SB095	150	J	07/25/02				
	G003SB096	64	J	07/25/02				
	G003SB097	370	J	07/25/02				
	G003SB098	2.5	J	09/27/02				
	G003SB102	230	=	12/06/02				
	G003SB103	70	=	12/06/02				
	G003SB104	98	=	12/06/02				
p,p'-DDT [C]	G003SB001	2.8	U	08/29/96	1,900	17,000	16,000	NA
	G003SB001	2.6	U	11/12/96				
	G003SB002	65	=	11/12/96				
	G003SB004	3.6	=	09/26/96				

TABLE 5-3
Residual COC/COPC Concentrations in Surface Soil
RFI Report Addendum/IM Completion Report/CMS Work Plan, SWMU 3, Zone G, Charleston Naval Complex

Analyte	Sample Location	Concentration (µg/kg)	Qualifier	Date Collected	EPA Region III RBC [a] Residential (HI=0.1)	EPA Region III RBC [a] Industrial (HI=0.1)	SSL [b] (DAF=10)	Zone G Background Concentrations
p,p'-DDT [c]	G003SB005	19	=	09/26/96	1,900	17,000	16,000	NA
	G003SB006	5.7	=	09/26/96				
	G003SB007	94	=	10/08/96				
	G003SB009	180	=	09/26/96				
	G003SB010	20	J	09/26/96				
	G003SB011	71	J	07/28/99				
	G003SB013	960	=	07/30/99				
	G003SB015	220	=	12/17/99				
	G003SB019	340	=	01/27/00				
	G003SB020	360	=	01/27/00				
	G003SB021	37	J	11/29/01				
	G003SB022	18	=	11/29/01				
	G003SB024	24	=	11/29/01				
	G003SB027	12	=	11/29/01				
	G003SB031	270	=	11/29/01				
	G003SB036	9.3	J	11/29/01				
	G003SB037	5.6	=	03/27/02				
	G003SB038	2.6	J	03/27/02				

TABLE 5-3
Residual COC/COPC Concentrations in Surface Soil
RFI Report Addendum/IM Completion Report/CMS Work Plan, SWMU 3, Zone G, Charleston Naval Complex

					EPA Region III RBC [a]			
Analyte	**Sample Location**	**Concentration (µg/kg)**	**Qualifier**	**Date Collected**	**Residential (HI=0.1)**	**Industrial (HI=0.1)**	**SSL [b] (DAF=10)**	**Zone G Background Concentrations**
p,p'-DDT [c]	G003SB039	260	=	01/15/02	1,900	17,000	16,000	NA
	G003SB040	67	=	01/15/02				
	G003SB041	61	=	01/15/02				
	G003SB042	280	=	01/15/02				
	G003SB046	16	J	03/27/02				
	G003SB047	680	J	03/27/02				
	G003SB049	160	=	03/27/02				
	G003SB051	100	=	03/27/02				
	G003SB052	710	=	03/27/02				
	G003SB053	1.7	J	03/28/02				
	G003SB054	110	=	03/27/02				
	G003SB055	64	J	03/27/02				
	G003SB057	510	J	03/27/02				
	G003SB058	110	=	03/27/02				
	G003SB059	6.5	J	03/28/02				
	G003SB068	360	J	05/13/02				
	G003SB069	67	J	05/13/02				
	G003SB070	290	J	05/15/02				

TABLE 5-3
Residual COC/COPC Concentrations in Surface Soil
RFI Report Addendum/IM Completion Report/CMS Work Plan, SWMU 3, Zone G, Charleston Naval Complex

					EPA Region III RBC [a]			
Analyte	**Sample Location**	**Concentration (µg/kg)**	**Qualifier**	**Date Collected**	**Residential (HI=0.1)**	**Industrial (HI=0.1)**	**SSL [b] (DAF=10)**	**Zone G Background Concentrations**
p,p'-DDT [c]	G003SB071	1,100	J	05/15/02	1,900	17,000	16,000	NA
	G003SB074	40	J	05/13/02				
	G003SB075	**3,100**	J	05/15/02				
	G003SB077	950	=	05/15/02				
	G003SB078	620	=	05/15/02				
	G003SB080	34	=	05/15/02				
	G003SB085	100	=	06/13/02				
	G003SB086	**3,600**	=	06/13/02				
	G003SB088	75	=	06/13/02				
	G003SB089	3.5	=	06/13/02				
	G003SB091	500	=	06/13/02				
	G003SB093	24	J	07/25/02				
	G003SB094	**6,600**	=	07/25/02				
	G003SB095	620	J	07/25/02				
	G003SB096	17	=	07/25/02				
	G003SB097	180	=	07/25/02				
	G003SB098	3	=	09/27/02				
	G003SB102	79	=	12/06/02				

TABLE 5-3
Residual COC/COPC Concentrations in Surface Soil
RFI Report Addendum/IM Completion Report/CMS Work Plan, SWMU 3, Zone G, Charleston Naval Complex

					EPA Region III RBC [a]			
Analyte	**Sample Location**	**Concentration (µg/kg)**	**Qualifier**	**Date Collected**	**Residential (HI=0.1)**	**Industrial (HI=0.1)**	**SSL [b] (DAF=10)**	**Zone G Background Concentrations**
p,p'-DDT [c]	G003SB103	42	=	12/06/02	1,900	17,000	16,000	NA
	G003SB104	84	=	12/06/02				
PCBs								
Aroclor-1248 [c]	G003SB001	35	U	11/12/96	320	2,900	205	NA
	G003SB001	37	U	08/29/96				
	G003SB002	37	U	11/12/96				
	G003SB004	36	U	09/26/96				
	G003SB005	36	U	09/26/96				
	G003SB006	35	U	09/26/96				
	G003SB007	36	U	10/08/96				
	G003SB009	34	U	09/26/96				
	G003SB010	36	U	09/26/96				
	G003SB011	30	U	07/28/99				
	G003SB013	35	U	07/30/99				
	G003SB021	73	U	11/29/01				
Metals								
Manganese	G003SB001	61,800	J	08/29/96	180,000	4,100,000	475,000	39,000 - 359,000
	G003SB002	193,000	=	08/28/96				

TABLE 5-3
Residual COC/COPC Concentrations in Surface Soil
RFI Report Addendum/IM Completion Report/CMS Work Plan, SWMU 3, Zone G, Charleston Naval Complex

					EPA Region III RBC [a]			
Analyte	**Sample Location**	**Concentration (µg/kg)**	**Qualifier**	**Date Collected**	**Residential (HI=0.1)**	**Industrial (HI=0.1)**	**SSL [b] (DAF=10)**	**Zone G Background Concentrations**
Manganese	G003SB004	194,000	=	09/26/96	180,000	4,100,000	475,000	39,000 - 359,000
	G003SB005	341,000	=	09/26/96				
	G003SB006	207,000	=	09/26/96				
	G003SB007	12,200	J	10/08/96				
	G003SB009	118,000	=	09/26/96				
	G003SB010	160,000	=	09/26/96				

All values are presented in units of micrograms per kilogram (µg/kg).

Concentrations in bold and outlined within the table represent exceedances of the screening criteria.

[a] U.S. EPA Region III risk-based concentrations (RBCs) with a hazard index (HI)=0.1 for noncarcinogens.

[b] Soil screening levels (SSLs) are based on a dilution attenuation factor (DAF) of 1 for VOCs and DAF=10 for other compounds.

[c] The compound is listed as a carcinogen.

[d] Chlordane (carcinogen) is used as a surrogate value for alpha-chlordane, gamma-chlordane.

[e] Site-specific SSL used for dieldrin.

= Indicates that the analyte was detected at the concentration shown.

J Indicates an estimated value. One or more quality control (QC) parameters were outside control limits or the value was detected below the laboratory's quantification limit.

NA Not applicable/not available

U Indicates that the analyte was analyzed for but not detected above the method detection limit (MDL).

TABLE 5-4
Residual COC/COPC Concentrations in Subsurface Soil
RFI Report Addendum/IM Completion Report/CMS Work Plan, SWMU 3, Zone G, Charleston Naval Complex

Analyte	Sample Location	Concentration (µg/kg)	Qualifier	Date Collected	SSL [a] (DAF=10)
VOCs					
PCE	G003SB021	4.5	U	11/29/01	148.7 site-specific
	G003SB022	5.1	U	11/29/01	
	G003SB023	4.8	U	11/29/01	
	G003SB024	4.7	U	11/29/01	
	G003SB025	4.5	U	11/29/01	
	G003SB026	5.2	U	11/29/01	
	G003SB027	4.6	U	11/29/01	
	G003SB028	4.8	U	11/29/01	
	G003SB029	5	U	11/29/01	
	G003SB030	4.7	U	11/29/01	
	G003SB031	3.3	U	11/29/01	
	G003SB032	5.2	U	11/28/01	
	G003SB033	4.9	U	11/29/01	
	G003SB034	5.6	U	11/29/01	
	G003SB035	4.9	U	11/29/01	
	G003SB036	4.6	U	11/29/01	
	G003SB039	5	U	01/15/02	
	G003SB040	5.4	=	01/15/02	
	G003SB041	27	=	01/15/02	
	G003SB042	7.1	J	01/15/02	
	G003SB051	13	=	03/28/02	
	G003SB052	3.7	J	03/27/02	
	G003SB053	5.3	U	03/28/02	
	G003SB054	6.3	U	03/27/02	
	G003SB055	6.2	U	03/27/02	
	G003SB056	6	U	03/27/02	
	G003SB057	6.4	U	03/27/02	
	G003SB058	6	U	03/27/02	

TABLE 5-4
Residual COC/COPC Concentrations in Subsurface Soil
RFI Report Addendum/IM Completion Report/CMS Work Plan, SWMU 3, Zone G, Charleston Naval Complex

Analyte	Sample Location	Concentration (µg/kg)	Qualifier	Date Collected	SSL [a] (DAF=10)
TCE	G003SB021	4.5	U	11/29/01	58.7 site-specific
	G003SB022	5.1	U	11/29/01	
	G003SB023	4.8	U	11/29/01	
	G003SB024	4.7	U	11/29/01	
	G003SB025	4.5	U	11/29/01	
	G003SB026	5.2	U	11/29/01	
	G003SB027	4.6	U	11/29/01	
	G003SB028	4.8	U	11/29/01	
	G003SB029	5	U	11/29/01	
	G003SB030	4.7	U	11/29/01	
	G003SB031	3.3	U	11/29/01	
	G003SB032	5.2	U	11/28/01	
	G003SB033	4.9	U	11/29/01	
	G003SB034	5.6	U	11/29/01	
	G003SB035	4.9	U	11/29/01	
	G003SB036	4.6	U	11/29/01	
	G003SB039	5	U	01/15/02	
	G003SB040	5	U	01/15/02	
	G003SB041	5	U	01/15/02	
	G003SB042	7.8	U	01/15/02	
	G003SB051	5.2	U	03/28/02	
	G003SB052	31	=	03/27/02	
	G003SB053	5.3	U	03/28/02	
	G003SB054	30	=	03/27/02	
	G003SB055	36	=	03/27/02	
	G003SB056	43	=	03/27/02	
	G003SB057	28	=	03/27/02	
	G003SB058	21	=	03/27/02	
Pesticides					
Alpha-chlordane [b]	G003SB001	1.5	U	08/29/96	5,000

TABLE 5-4
Residual COC/COPC Concentrations in Subsurface Soil
RFI Report Addendum/IM Completion Report/CMS Work Plan, SWMU 3, Zone G, Charleston Naval Complex

Analyte	Sample Location	Concentration (µg/kg)	Qualifier	Date Collected	SSL [a] (DAF=10)
Alpha-chlordane [b]	G003SB001	1.4	U	11/12/96	5,000
	G003SB002	1.4	U	11/12/96	
	G003SB003	5.5	J	11/12/96	
	G003SB004	1.5	U	09/26/96	
	G003SB005	1.7	U	09/26/96	
	G003SB006	1.5	U	09/26/96	
	G003SB008	35	J	09/26/96	
	G003SB009	85	J	09/26/96	
	G003SB010	1.5	U	09/26/96	
	G003SB011	1.4	U	07/28/99	
	G003SB013	1.4	U	07/30/99	
	G003SB014	1.4	U	07/28/99	
	G003SB015	1.9	U	12/17/99	
	G003SB016	1.4	U	01/27/00	
	G003SB017	14	U	01/27/00	
	G003SB018	15	U	01/27/00	
	G003SB019	1.5	U	01/27/00	
	G003SB020	1.5	U	01/27/00	
	G003SB021	1.5	U	11/29/01	
	G003SB022	1.4	U	11/29/01	
	G003SB023	1.4	U	11/29/01	
	G003SB024	1.4	U	11/29/01	
	G003SB025	1.5	U	11/29/01	
	G003SB026	16	J	11/29/01	
	G003SB027	1.4	U	11/29/01	
	G003SB028	1.4	J	11/29/01	
	G003SB029	1.4	U	11/29/01	
	G003SB030	3	U	11/29/01	
	G003SB031	1.4	U	11/29/01	
	G003SB032	61	=	11/28/01	

TABLE 5-4
Residual COC/COPC Concentrations in Subsurface Soil
RFI Report Addendum/IM Completion Report/CMS Work Plan, SWMU 3, Zone G, Charleston Naval Complex

Analyte	Sample Location	Concentration (µg/kg)	Qualifier	Date Collected	SSL [a] (DAF=10)
Alpha- chlordane [b]	G003SB033	4.8	J	11/29/01	5,000
	G003SB034	61	U	11/29/01	
	G003SB035	150	U	11/29/01	
	G003SB036	0.42	J	11/29/01	
	G003SB037	1.5	UJ	03/27/02	
	G003SB038	1.5	U	03/27/02	
	G003SB039	15	J	01/15/02	
	G003SB040	98	J	01/15/02	
	G003SB041	1	J	01/15/02	
	G003SB042	1.4	J	01/15/02	
	G003SB044	60	U	03/27/02	
	G003SB048	5.8	U	03/27/02	
	G003SB049	1.6	UJ	03/27/02	
	G003SB051	1.6	J	03/28/02	
	G003SB052	31	=	03/27/02	
	G003SB053	1.4	U	03/28/02	
	G003SB054	0.6	J	03/27/02	
	G003SB055	1.6	U	03/27/02	
	G003SB056	28	=	03/27/02	
	G003SB057	2.8	J	03/27/02	
	G003SB058	16	=	03/27/02	
	G003SB059	28	U	03/28/02	
	G003SB062	36	U	03/27/02	
	G003SB063	6.1	U	03/27/02	
	G003SB066	20	J	03/27/02	
	G003SB067	1.5	U	03/27/02	
	G003SB068	14	U	05/13/02	
	G003SB069	12	=	05/13/02	
	G003SB070	1.5	U	05/15/02	
	G003SB070	1.5	U	05/15/02	

TABLE 5-4
Residual COC/COPC Concentrations in Subsurface Soil
RFI Report Addendum/IM Completion Report/CMS Work Plan, SWMU 3, Zone G, Charleston Naval Complex

Analyte	Sample Location	Concentration (µg/kg)	Qualifier	Date Collected	SSL [a] (DAF=10)
Alpha-chlordane [b]	G003SB071	29	=	05/15/02	5,000
	G003SB072	62	=	05/15/02	
	G003SB074	1.4	U	05/13/02	
	G003SB075	5	J	05/15/02	
	G003SB076	2.7	J	05/15/02	
	G003SB077	4.9	J	05/15/02	
	G003SB077	1.2	J	05/15/02	
	G003SB078	5.7	J	05/15/02	
	G003SB078	1.8	J	05/15/02	
	G003SB080	18	J	05/15/02	
	G003SB083	8	J	05/15/02	
	G003SB084	1.5	U	05/13/02	
	G003SB087	1.5	U	06/13/02	
	G003SB088	1.4	J	06/13/02	
	G003SB089	1.4	U	06/13/02	
	G003SB091	35	J	06/13/02	
	G003SB092	1.7	J	06/13/02	
	G003SB094	150	U	07/25/02	
	G003SB095	1.5	UJ	07/25/02	
	G003SB095	1.5	UJ	07/25/02	
Beta-BHC (Beta-Hexachlorocyclohexane)	G003SB001	1.4	U	11/12/96	1.5
	G003SB001	1.5	U	08/29/96	
	G003SB002	1.4	U	11/12/96	
	G003SB003	1.5	U	11/12/96	
	G003SB004	1.5	U	09/26/96	
	G003SB005	1.7	U	09/26/96	
	G003SB006	1.5	U	09/26/96	
	G003SB008	1.5	U	09/26/96	
	G003SB009	1.5	U	09/26/96	

TABLE 5-4
Residual COC/COPC Concentrations in Subsurface Soil
RFI Report Addendum/IM Completion Report/CMS Work Plan, SWMU 3, Zone G, Charleston Naval Complex

Analyte	Sample Location	Concentration (µg/kg)	Qualifier	Date Collected	SSL [a] (DAF=10)
Beta-BHC (Beta-Hexachlorocyclohexane)	G003SB010	1.5	U	09/26/96	1.5
	G003SB011	1.4	U	07/28/99	
	G003SB013	1.4	U	07/30/99	
	G003SB014	1.4	U	07/28/99	
	G003SB015	1.9	U	12/17/99	
	G003SB016	1.4	U	01/27/00	
	G003SB017	14	U	01/27/00	
	G003SB018	15	U	01/27/00	
	G003SB019	1.5	U	01/27/00	
	G003SB020	1.5	U	01/27/00	
	G003SB021	1.5	U	11/29/01	
	G003SB022	1.4	U	11/29/01	
	G003SB023	1.4	U	11/29/01	
	G003SB024	1.4	U	11/29/01	
	G003SB025	1.5	U	11/29/01	
	G003SB026	1.4	U	11/29/01	
	G003SB027	1.4	U	11/29/01	
	G003SB028	1.5	U	11/29/01	
	G003SB029	1.4	U	11/29/01	
	G003SB030	3	U	11/29/01	
	G003SB031	1.4	U	11/29/01	
	G003SB032	28	U	11/28/01	
	G003SB033	1.4	U	11/29/01	
	G003SB034	61	U	11/29/01	
	G003SB035	150	U	11/29/01	
	G003SB036	1.5	U	11/29/01	
	G003SB037	1.5	UJ	03/27/02	
	G003SB038	1.5	U	03/27/02	
	G003SB039	1.5	U	01/15/02	
	G003SB040	6.3	U	01/15/02	

TABLE 5-4
Residual COC/COPC Concentrations in Subsurface Soil
RFI Report Addendum/IM Completion Report/CMS Work Plan, SWMU 3, Zone G, Charleston Naval Complex

Analyte	Sample Location	Concentration (µg/kg)	Qualifier	Date Collected	SSL [a] (DAF=10)
Beta-BHC (Beta-Hexachlorocyclohexane)	G003SB041	1.5	U	01/15/02	1.5
	G003SB042	2.1	U	01/15/02	
	G003SB044	60	U	03/27/02	
	G003SB048	5.8	U	03/27/02	
	G003SB049	1.6	UJ	03/27/02	
	G003SB051	1.5	U	03/28/02	
	G003SB052	3.1	U	03/27/02	
	G003SB053	1.4	U	03/28/02	
	G003SB054	1.5	U	03/27/02	
	G003SB055	1.6	U	03/27/02	
	G003SB056	6.3	U	03/27/02	
	G003SB057	1.6	U	03/27/02	
	G003SB058	16	U	03/27/02	
	G003SB059	28	U	03/28/02	
	G003SB062	36	U	03/27/02	
	G003SB063	6.1	U	03/27/02	
	G003SB066	5.8	U	03/27/02	
	G003SB067	1.5	U	03/27/02	
	G003SB068	14	U	05/13/02	
	G003SB069	7.3	U	05/13/02	
	G003SB070	1.5	U	05/15/02	
	G003SB070	1.5	U	05/15/02	
	G003SB071	1.4	U	05/15/02	
	G003SB072	7.1	U	05/15/02	
	G003SB074	1.4	U	05/13/02	
	G003SB075	5.6	U	05/15/02	
	G003SB076	5.4	U	05/15/02	
	G003SB077	1.4	U	05/15/02	
	G003SB077	1.5	U	05/15/02	
	G003SB078	1.4	U	05/15/02	

TABLE 5-4
Residual COC/COPC Concentrations in Subsurface Soil
RFI Report Addendum/IM Completion Report/CMS Work Plan, SWMU 3, Zone G, Charleston Naval Complex

Analyte	Sample Location	Concentration (µg/kg)	Qualifier	Date Collected	SSL [a] (DAF=10)
Beta-BHC (Beta-Hexachlorocyclohexane)	G003SB078	1.4	U	05/15/02	1.5
	G003SB080	1.4	U	05/15/02	
	G003SB083	2.9	U	05/15/02	
	G003SB084	1.5	U	05/13/02	
	G003SB087	1.5	U	06/13/02	
	G003SB088	1.4	U	06/13/02	
	G003SB089	1.4	U	06/13/02	
	G003SB091	3	U	06/13/02	
	G003SB092	1.5	U	06/13/02	
	G003SB094	150	U	07/25/02	
	G003SB095	1.5	UJ	07/25/02	
	G003SB095	1.5	UJ	07/25/02	
Chlordane	G003SB015	380	U	12/17/99	5,000
	G003SB021	15	U	11/29/01	
	G003SB022	14	U	11/29/01	
	G003SB023	14	U	11/29/01	
	G003SB024	14	U	11/29/01	
	G003SB025	15	U	11/29/01	
	G003SB026	170	=	11/29/01	
	G003SB027	14	U	11/29/01	
	G003SB028	15	U	11/29/01	
	G003SB029	14	U	11/29/01	
	G003SB030	30	U	11/29/01	
	G003SB031	14	UJ	11/29/01	
	G003SB032	280	U	11/28/01	
	G003SB033	31	J	11/29/01	
	G003SB034	610	U	11/29/01	
	G003SB035	1,500	U	11/29/01	
	G003SB036	15	U	11/29/01	

TABLE 5-4
Residual COC/COPC Concentrations in Subsurface Soil
RFI Report Addendum/IM Completion Report/CMS Work Plan, SWMU 3, Zone G, Charleston Naval Complex

Analyte	Sample Location	Concentration (µg/kg)	Qualifier	Date Collected	SSL [a] (DAF=10)
Chlordane	G003SB037	15	UJ	03/27/02	5,000
	G003SB038	15	UJ	03/27/02	
	G003SB039	54	J	01/15/02	
	G003SB040	630	J	01/15/02	
	G003SB041	15	UJ	01/15/02	
	G003SB042	21	UJ	01/15/02	
	G003SB044	600	UJ	03/27/02	
	G003SB048	58	UJ	03/27/02	
	G003SB049	16	UJ	03/27/02	
	G003SB051	11	J	03/28/02	
	G003SB052	160	J	03/27/02	
	G003SB053	14	UJ	03/28/02	
	G003SB054	15	U	03/27/02	
	G003SB055	16	U	03/27/02	
	G003SB056	110	=	03/27/02	
	G003SB057	12	J	03/27/02	
	G003SB058	160	UJ	03/27/02	
	G003SB059	280	U	03/28/02	
	G003SB062	360	U	03/27/02	
	G003SB063	61	U	03/27/02	
	G003SB066	58	U	03/27/02	
	G003SB067	15	UJ	03/27/02	
	G003SB068	140	U	05/13/02	
	G003SB069	73	U	05/13/02	
	G003SB070	15	U	05/15/02	
	G003SB070	15	U	05/15/02	
	G003SB071	260	J	05/15/02	
	G003SB072	470	=	05/15/02	
	G003SB074	14	U	05/13/02	
	G003SB075	40	J	05/15/02	

TABLE 5-4
Residual COC/COPC Concentrations in Subsurface Soil
RFI Report Addendum/IM Completion Report/CMS Work Plan, SWMU 3, Zone G, Charleston Naval Complex

Analyte	Sample Location	Concentration (µg/kg)	Qualifier	Date Collected	SSL [a] (DAF=10)
Chlordane	G003SB076	54	U	05/15/02	5,000
	G003SB077	36	=	05/15/02	
	G003SB077	15	U	05/15/02	
	G003SB078	43	=	05/15/02	
	G003SB078	16	=	05/15/02	
	G003SB080	95	=	05/15/02	
	G003SB083	48	=	05/15/02	
	G003SB084	15	U	05/13/02	
	G003SB087	15	U	06/13/02	
	G003SB088	14	U	06/13/02	
	G003SB089	14	U	06/13/02	
	G003SB091	160	=	06/13/02	
	G003SB092	32	=	06/13/02	
	G003SB094	1,500	UJ	07/25/02	
	G003SB095	15	UJ	07/25/02	
	G003SB095	15	UJ	07/25/02	
Dieldrin	G003SB001	2.8	U	08/29/96	11.1 site-specific
	G003SB001	2.8	U	11/12/96	
	G003SB002	2.7	U	11/12/96	
	G003SB003	2.9	U	11/12/96	
	G003SB004	2.9	U	09/26/96	
	G003SB005	3.3	U	09/26/96	
	G003SB006	2.9	U	09/26/96	
	G003SB008	2.9	U	09/26/96	
	G003SB009	7.2	U	09/26/96	
	G003SB010	2.9	U	09/26/96	
	G003SB011	2.7	U	07/28/99	
	G003SB013	2.7	U	07/30/99	
	G003SB014	2.7	U	07/28/99	
	G003SB015	3.8	U	12/17/99	

TABLE 5-4
Residual COC/COPC Concentrations in Subsurface Soil
RFI Report Addendum/IM Completion Report/CMS Work Plan, SWMU 3, Zone G, Charleston Naval Complex

Analyte	Sample Location	Concentration (µg/kg)	Qualifier	Date Collected	SSL [a] (DAF=10)
Dieldrin	G003SB016	2.8	U	01/27/00	11.1 site-specific
	G003SB017	28	U	01/27/00	
	G003SB018	28	U	01/27/00	
	G003SB019	2.9	U	01/27/00	
	G003SB020	2.9	U	01/27/00	
	G003SB021	2.8	U	11/29/01	
	G003SB022	2.6	U	11/29/01	
	G003SB023	2.7	U	11/29/01	
	G003SB024	2.7	U	11/29/01	
	G003SB025	2.8	U	11/29/01	
	G003SB026	0.48	J	11/29/01	
	G003SB027	2.8	U	11/29/01	
	G003SB028	2.9	U	11/29/01	
	G003SB029	2.7	U	11/29/01	
	G003SB030	5.8	U	11/29/01	
	G003SB031	2.6	U	11/29/01	
	G003SB032	**48**	J	11/28/01	
	G003SB033	7.2	=	11/29/01	
	G003SB034	120	U	11/29/01	
	G003SB035	280	U	11/29/01	
	G003SB036	1.7	J	11/29/01	
	G003SB037	3	UJ	03/27/02	
	G003SB038	3	U	03/27/02	
	G003SB039	0.69	J	01/15/02	
	G003SB040	2.6	J	01/15/02	
	G003SB041	2.9	U	01/15/02	
	G003SB042	4	U	01/15/02	
	G003SB044	120	U	03/27/02	
	G003SB048	3	J	03/27/02	
	G003SB049	3.2	UJ	03/27/02	

TABLE 5-4
Residual COC/COPC Concentrations in Subsurface Soil
RFI Report Addendum/IM Completion Report/CMS Work Plan, SWMU 3, Zone G, Charleston Naval Complex

Analyte	Sample Location	Concentration (µg/kg)	Qualifier	Date Collected	SSL [a] (DAF=10)
Dieldrin	G003SB051	0.62	J	03/28/02	11.1 site-specific
	G003SB052	2.6	J	03/27/02	
	G003SB053	2.8	U	03/28/02	
	G003SB054	2.9	U	03/27/02	
	G003SB055	3	U	03/27/02	
	G003SB056	5	J	03/27/02	
	G003SB057	3.1	U	03/27/02	
	G003SB058	30	U	03/27/02	
	G003SB059	55	U	03/28/02	
	G003SB062	69	U	03/27/02	
	G003SB063	12	U	03/27/02	
	G003SB066	5	J	03/27/02	
	G003SB067	2.9	U	03/27/02	
	G003SB068	27	U	05/13/02	
	G003SB069	3	J	05/13/02	
	G003SB070	2.9	U	05/15/02	
	G003SB070	2.9	U	05/15/02	
	G003SB071	2.6	U	05/15/02	
	G003SB072	10	J	05/15/02	
	G003SB074	2.8	U	05/13/02	
	G003SB075	11	U	05/15/02	
	G003SB076	**26**	=	05/15/02	
	G003SB077	1.8	J	05/15/02	
	G003SB077	0.5	J	05/15/02	
	G003SB078	1.7	J	05/15/02	
	G003SB078	0.7	J	05/15/02	
	G003SB080	5.5	J	05/15/02	
	G003SB083	2	J	05/15/02	
	G003SB084	2.8	U	05/13/02	
	G003SB087	3	U	06/13/02	

TABLE 5-4
Residual COC/COPC Concentrations in Subsurface Soil
RFI Report Addendum/IM Completion Report/CMS Work Plan, SWMU 3, Zone G, Charleston Naval Complex

Analyte	Sample Location	Concentration (µg/kg)	Qualifier	Date Collected	SSL [a] (DAF=10)
Dieldrin	G003SB088	0.9	J	06/13/02	11.1 site-specific
	G003SB089	2.7	U	06/13/02	
	G003SB091	2.9	J	06/13/02	
	G003SB092	4	=	06/13/02	
	G003SB094	280	U	07/25/02	
	G003SB095	3	UJ	07/25/02	
Gamma-BHC (Lindane)	G003SB001	1.4	U	11/12/96	28.4 site-specific
	G003SB001	1.5	U	08/29/96	
	G003SB002	1.4	U	11/12/96	
	G003SB003	1.5	U	11/12/96	
	G003SB004	1.5	U	09/26/96	
	G003SB005	1.7	U	09/26/96	
	G003SB006	1.5	U	09/26/96	
	G003SB008	1.5	U	09/26/96	
	G003SB009	1.5	U	09/26/96	
	G003SB010	1.5	U	09/26/96	
	G003SB011	1.4	U	07/28/99	
	G003SB013	1.4	U	07/30/99	
	G003SB014	1.4	U	07/28/99	
	G003SB015	1.9	U	12/17/99	
	G003SB016	1.4	U	01/27/00	
	G003SB017	14	U	01/27/00	
	G003SB018	15	U	01/27/00	
	G003SB019	1.5	U	01/27/00	
	G003SB020	1.5	U	01/27/00	
	G003SB021	1.5	U	11/29/01	
	G003SB022	1.4	U	11/29/01	
	G003SB023	1.4	U	11/29/01	
	G003SB024	1.4	U	11/29/01	
	G003SB025	1.5	U	11/29/01	

TABLE 5-4
Residual COC/COPC Concentrations in Subsurface Soil
RFI Report Addendum/IM Completion Report/CMS Work Plan, SWMU 3, Zone G, Charleston Naval Complex

Analyte	Sample Location	Concentration (µg/kg)	Qualifier	Date Collected	SSL [a] (DAF=10)
Gamma-BHC (Lindane)	G003SB026	1.4	UJ	11/29/01	$28.4_{\text{site-specific}}$
	G003SB027	1.4	U	11/29/01	
	G003SB028	1.5	UJ	11/29/01	
	G003SB029	1.4	U	11/29/01	
	G003SB030	3	U	11/29/01	
	G003SB031	1.4	UJ	11/29/01	
	G003SB032	28	U	11/28/01	
	G003SB033	1.4	UJ	11/29/01	
	G003SB034	61	U	11/29/01	
	G003SB035	150	U	11/29/01	
	G003SB036	1.5	U	11/29/01	
	G003SB037	1.5	UJ	03/27/02	
	G003SB038	1.5	U	03/27/02	
	G003SB039	1.5	U	01/15/02	
	G003SB040	6.3	U	01/15/02	
	G003SB041	1.5	U	01/15/02	
	G003SB042	2.1	U	01/15/02	
	G003SB044	60	U	03/27/02	
	G003SB048	5.8	U	03/27/02	
	G003SB049	1.6	UJ	03/27/02	
	G003SB051	1.5	U	03/28/02	
	G003SB052	3.1	U	03/27/02	
	G003SB053	1.4	U	03/28/02	
	G003SB054	1.5	U	03/27/02	
	G003SB055	1.6	U	03/27/02	
	G003SB056	0.47	J	03/27/02	
	G003SB057	1.6	UJ	03/27/02	
	G003SB058	3.2	J	03/27/02	
	G003SB059	28	U	03/28/02	
	G003SB062	36	UJ	03/27/02	

TABLE 5-4
Residual COC/COPC Concentrations in Subsurface Soil
RFI Report Addendum/IM Completion Report/CMS Work Plan, SWMU 3, Zone G, Charleston Naval Complex

Analyte	Sample Location	Concentration (µg/kg)	Qualifier	Date Collected	SSL [a] (DAF=10)
Gamma-BHC (Lindane)	G003SB063	6.1	U	03/27/02	$28.4_{\text{site-specific}}$
	G003SB066	5.8	U	03/27/02	
	G003SB067	1.5	U	03/27/02	
	G003SB068	14	U	05/13/02	
	G003SB069	7.3	U	05/13/02	
	G003SB070	1.5	U	05/15/02	
	G003SB070	1.5	U	05/15/02	
	G003SB071	19	=	05/15/02	
	G003SB072	7.1	U	05/15/02	
	G003SB074	1.4	U	05/13/02	
	G003SB075	5.6	U	05/15/02	
	G003SB076	5.4	U	05/15/02	
	G003SB077	1.4	U	05/15/02	
	G003SB077	1.5	U	05/15/02	
	G003SB078	1.4	U	05/15/02	
	G003SB078	1.4	U	05/15/02	
	G003SB080	1.4	U	05/15/02	
	G003SB083	2.9	U	05/15/02	
	G003SB084	1.5	U	05/13/02	
	G003SB087	1.5	U	06/13/02	
	G003SB088	1.4	U	06/13/02	
	G003SB089	1.4	U	06/13/02	
	G003SB091	3	U	06/13/02	
	G003SB092	1.5	U	06/13/02	
	G003SB094	150	UJ	07/25/02	
	G003SB095	1.5	UJ	07/25/02	
	G003SB095	1.5	UJ	07/25/02	
Gamma-chlordane [b]	G003SB001	1.5	U	08/29/96	5,000
	G003SB001	1.4	U	11/12/96	
	G003SB002	1.4	U	11/12/96	

TABLE 5-4
Residual COC/COPC Concentrations in Subsurface Soil
RFI Report Addendum/IM Completion Report/CMS Work Plan, SWMU 3, Zone G, Charleston Naval Complex

Analyte	Sample Location	Concentration (µg/kg)	Qualifier	Date Collected	SSL [a] (DAF=10)
Gamma-chlordane [b]	G003SB003	6.1	J	11/12/96	5,000
	G003SB004	1.5	U	09/26/96	
	G003SB005	1.7	U	09/26/96	
	G003SB006	1.5	U	09/26/96	
	G003SB008	40	=	09/26/96	
	G003SB009	110	=	09/26/96	
	G003SB010	1.5	U	09/26/96	
	G003SB011	1.4	U	07/28/99	
	G003SB013	1.4	U	07/30/99	
	G003SB014	2.4	U	07/28/99	
	G003SB015	1.9	U	12/17/99	
	G003SB016	1.4	U	01/27/00	
	G003SB017	14	U	01/27/00	
	G003SB018	15	U	01/27/00	
	G003SB019	1.5	U	01/27/00	
	G003SB020	1.5	U	01/27/00	
	G003SB021	1.5	U	11/29/01	
	G003SB022	1.4	U	11/29/01	
	G003SB023	1.4	U	11/29/01	
	G003SB024	1.4	U	11/29/01	
	G003SB025	1.5	U	11/29/01	
	G003SB026	14	=	11/29/01	
	G003SB027	1.4	U	11/29/01	
	G003SB028	1	J	11/29/01	
	G003SB029	0.37	J	11/29/01	
	G003SB030	3	U	11/29/01	
	G003SB031	0.39	J	11/29/01	
	G003SB032	77	=	11/28/01	
	G003SB033	4.8	=	11/29/01	
	G003SB034	61	U	11/29/01	

TABLE 5-4
Residual COC/COPC Concentrations in Subsurface Soil
RFI Report Addendum/IM Completion Report/CMS Work Plan, SWMU 3, Zone G, Charleston Naval Complex

Analyte	Sample Location	Concentration (µg/kg)	Qualifier	Date Collected	SSL [a] (DAF=10)
Gamma-chlordane [b]	G003SB035	150	U	11/29/01	5,000
	G003SB036	0.78	J	11/29/01	
	G003SB037	1.5	UJ	03/27/02	
	G003SB038	1.5	U	03/27/02	
	G003SB039	8.8	J	01/15/02	
	G003SB040	99	=	01/15/02	
	G003SB041	0.87	J	01/15/02	
	G003SB042	1.2	J	01/15/02	
	G003SB044	60	U	03/27/02	
	G003SB048	5.8	U	03/27/02	
	G003SB049	1.6	UJ	03/27/02	
	G003SB051	1.7	=	03/28/02	
	G003SB052	29	=	03/27/02	
	G003SB053	1.4	U	03/28/02	
	G003SB054	0.37	J	03/27/02	
	G003SB055	0.43	J	03/27/02	
	G003SB056	20	=	03/27/02	
	G003SB057	2.6	=	03/27/02	
	G003SB058	25	=	03/27/02	
	G003SB059	28	U	03/28/02	
	G003SB062	36	U	03/27/02	
	G003SB063	6.1	U	03/27/02	
	G003SB066	23	=	03/27/02	
	G003SB067	1.5	U	03/27/02	
	G003SB068	3.4	J	05/13/02	
	G003SB069	32	=	05/13/02	
	G003SB070	1.5	U	05/15/02	
	G003SB070	1.5	U	05/15/02	
	G003SB071	30	=	05/15/02	
	G003SB072	73	=	05/15/02	

TABLE 5-4
Residual COC/COPC Concentrations in Subsurface Soil
RFI Report Addendum/IM Completion Report/CMS Work Plan, SWMU 3, Zone G, Charleston Naval Complex

Analyte	Sample Location	Concentration (µg/kg)	Qualifier	Date Collected	SSL [a] (DAF=10)
Gamma-chlordane [b]	G003SB074	1.4	U	05/13/02	5,000
	G003SB075	5.6	U	05/15/02	
	G003SB076	5.4	U	05/15/02	
	G003SB077	5.5	=	05/15/02	
	G003SB077	1.5	U	05/15/02	
	G003SB078	6.1	=	05/15/02	
	G003SB078	2	=	05/15/02	
	G003SB080	14	=	05/15/02	
	G003SB083	9.1	=	05/15/02	
	G003SB084	0.25	J	05/13/02	
	G003SB087	1.5	U	06/13/02	
	G003SB088	4.1	=	06/13/02	
	G003SB089	1.4	U	06/13/02	
	G003SB091	34	=	06/13/02	
	G003SB092	1.1	J	06/13/02	
	G003SB094	38	J	07/25/02	
	G003SB095	1.5	UJ	07/25/02	
	G003SB095	1.5	UJ	07/25/02	
p,p'-DDD	G003SB001	2.8	U	08/29/96	8,000
	G003SB001	2.8	U	11/12/96	
	G003SB002	2.7	U	11/12/96	
	G003SB003	2.9	U	11/12/96	
	G003SB004	2.9	U	09/26/96	
	G003SB005	3.3	U	09/26/96	
	G003SB006	2.9	U	09/26/96	
	G003SB008	2.9	U	09/26/96	
	G003SB009	23	U	09/26/96	
	G003SB010	2.9	U	09/26/96	
	G003SB011	2.7	U	07/28/99	
	G003SB013	7.6	J	07/30/99	

TABLE 5-4
Residual COC/COPC Concentrations in Subsurface Soil
RFI Report Addendum/IM Completion Report/CMS Work Plan, SWMU 3, Zone G, Charleston Naval Complex

Analyte	Sample Location	Concentration (µg/kg)	Qualifier	Date Collected	SSL [a] (DAF=10)
p,p'-DDD	G003SB014	2.7	U	07/28/99	8,000
	G003SB015	3.8	U	12/17/99	
	G003SB016	20	=	01/27/00	
	G003SB017	74	=	01/27/00	
	G003SB018	190	=	01/27/00	
	G003SB019	8.1	=	01/27/00	
	G003SB020	2.9	U	01/27/00	
	G003SB021	2.8	U	11/29/01	
	G003SB022	2.6	U	11/29/01	
	G003SB023	2.7	U	11/29/01	
	G003SB024	2.7	U	11/29/01	
	G003SB025	2.8	U	11/29/01	
	G003SB026	2.8	U	11/29/01	
	G003SB027	1.2	J	11/29/01	
	G003SB028	5.6	J	11/29/01	
	G003SB029	1.5	J	11/29/01	
	G003SB030	25	=	11/29/01	
	G003SB031	0.79	J	11/29/01	
	G003SB032	8.9	J	11/28/01	
	G003SB033	0.89	J	11/29/01	
	G003SB034	68	J	11/29/01	
	G003SB035	180	J	11/29/01	
	G003SB036	1.4	J	11/29/01	
	G003SB037	3	UJ	03/27/02	
	G003SB038	3	U	03/27/02	
	G003SB039	2.8	U	01/15/02	
	G003SB040	12	U	01/15/02	
	G003SB041	0.42	J	01/15/02	
	G003SB042	4.8	J	01/15/02	
	G003SB044	260	J	03/27/02	

TABLE 5-4
Residual COC/COPC Concentrations in Subsurface Soil
RFI Report Addendum/IM Completion Report/CMS Work Plan, SWMU 3, Zone G, Charleston Naval Complex

Analyte	Sample Location	Concentration (µg/kg)	Qualifier	Date Collected	SSL [a] (DAF=10)
p,p'-DDD	G003SB048	24	=	03/27/02	8,000
	G003SB049	3.2	UJ	03/27/02	
	G003SB051	2.9	U	03/28/02	
	G003SB052	12	=	03/27/02	
	G003SB053	2.8	U	03/28/02	
	G003SB054	2.9	U	03/27/02	
	G003SB055	3	U	03/27/02	
	G003SB056	2.1	J	03/27/02	
	G003SB057	1.5	J	03/27/02	
	G003SB058	63	=	03/27/02	
	G003SB059	27	J	03/28/02	
	G003SB062	28	J	03/27/02	
	G003SB063	8.9	J	03/27/02	
	G003SB066	4.9	J	03/27/02	
	G003SB067	1.8	J	03/27/02	
	G003SB068	37	=	05/13/02	
	G003SB069	18	=	05/13/02	
	G003SB070	2.9	U	05/15/02	
	G003SB070	1.3	J	05/15/02	
	G003SB071	11	=	05/15/02	
	G003SB072	53	=	05/15/02	
	G003SB074	2.8	U	05/13/02	
	G003SB075	21	J	05/15/02	
	G003SB076	13	J	05/15/02	
	G003SB077	1.6	J	05/15/02	
	G003SB077	0.52	J	05/15/02	
	G003SB078	1.9	J	05/15/02	
	G003SB078	0.51	J	05/15/02	
	G003SB080	2.7	U	05/15/02	
	G003SB083	6.9	J	05/15/02	

TABLE 5-4
Residual COC/COPC Concentrations in Subsurface Soil
RFI Report Addendum/IM Completion Report/CMS Work Plan, SWMU 3, Zone G, Charleston Naval Complex

Analyte	Sample Location	Concentration (µg/kg)	Qualifier	Date Collected	SSL [a] (DAF=10)
p,p'-DDD	G003SB084	4.2	=	05/13/02	8,000
	G003SB087	3	U	06/13/02	
	G003SB088	2.8	U	06/13/02	
	G003SB089	2.7	U	06/13/02	
	G003SB091	5.7	U	06/13/02	
	G003SB092	2.9	U	06/13/02	
	G003SB094	690	=	07/25/02	
	G003SB095	1.1	J	07/25/02	
	G003SB095	1.3	J	07/25/02	
p,p'-DDT	G003SB001	2.8	U	08/29/96	16,000
	G003SB001	2.8	U	11/12/96	
	G003SB002	2.7	U	11/12/96	
	G003SB003	2.9	U	11/12/96	
	G003SB004	2.9	U	09/26/96	
	G003SB005	3.3	U	09/26/96	
	G003SB006	2.9	U	09/26/96	
	G003SB008	12	=	09/26/96	
	G003SB009	250	=	09/26/96	
	G003SB010	2.9	U	09/26/96	
	G003SB011	20	J	07/28/99	
	G003SB013	27	=	07/30/99	
	G003SB014	2.7	U	07/28/99	
	G003SB015	3.8	U	12/17/99	
	G003SB016	240	=	01/27/00	
	G003SB017	340	=	01/27/00	
	G003SB018	3,700	=	01/27/00	
	G003SB019	180	=	01/27/00	
	G003SB020	39	=	01/27/00	
	G003SB021	2.8	U	11/29/01	
	G003SB022	1.1	J	11/29/01	

TABLE 5-4
Residual COC/COPC Concentrations in Subsurface Soil
RFI Report Addendum/IM Completion Report/CMS Work Plan, SWMU 3, Zone G, Charleston Naval Complex

Analyte	Sample Location	Concentration (µg/kg)	Qualifier	Date Collected	SSL [a] (DAF=10)
p,p'-DDT	G003SB023	2.6	J	11/29/01	16,000
	G003SB024	2.7	U	11/29/01	
	G003SB025	0.58	J	11/29/01	
	G003SB026	2.8	U	11/29/01	
	G003SB027	33	=	11/29/01	
	G003SB028	95	=	11/29/01	
	G003SB029	44	=	11/29/01	
	G003SB030	160	=	11/29/01	
	G003SB031	9.9	=	11/29/01	
	G003SB032	200	J	11/28/01	
	G003SB033	46	=	11/29/01	
	G003SB034	3,500	=	11/29/01	
	G003SB035	3,300	J	11/29/01	
	G003SB036	76	J	11/29/01	
	G003SB037	3	UJ	03/27/02	
	G003SB038	3	U	03/27/02	
	G003SB039	6.4	=	01/15/02	
	G003SB040	12	J	01/15/02	
	G003SB041	8.7	=	01/15/02	
	G003SB042	11	=	01/15/02	
	G003SB044	2,800	=	03/27/02	
	G003SB048	180	=	03/27/02	
	G003SB049	0.75	J	03/27/02	
	G003SB051	3.5	=	03/28/02	
	G003SB052	94	=	03/27/02	
	G003SB053	2.8	U	03/28/02	
	G003SB054	1.3	J	03/27/02	
	G003SB055	2.2	J	03/27/02	
	G003SB056	250	J	03/27/02	
	G003SB057	3.5	J	03/27/02	

TABLE 5-4
Residual COC/COPC Concentrations in Subsurface Soil
RFI Report Addendum/IM Completion Report/CMS Work Plan, SWMU 3, Zone G, Charleston Naval Complex

Analyte	Sample Location	Concentration (µg/kg)	Qualifier	Date Collected	SSL [a] (DAF=10)
p,p'-DDT	G003SB058	420	=	03/27/02	16,000
	G003SB059	1,000	=	03/28/02	
	G003SB062	1,500	J	03/27/02	
	G003SB063	200	=	03/27/02	
	G003SB066	160	=	03/27/02	
	G003SB067	40	=	03/27/02	
	G003SB068	360	J	05/13/02	
	G003SB069	350	J	05/13/02	
	G003SB070	9.1	J	05/15/02	
	G003SB070	23	J	05/15/02	
	G003SB071	110	J	05/15/02	
	G003SB072	860	J	05/15/02	
	G003SB074	1.8	J	05/13/02	
	G003SB075	200	=	05/15/02	
	G003SB076	120	=	05/15/02	
	G003SB077	42	=	05/15/02	
	G003SB077	10	=	05/15/02	
	G003SB078	38	=	05/15/02	
	G003SB078	15	=	05/15/02	
	G003SB080	26	J	05/15/02	
	G003SB083	80	=	05/15/02	
	G003SB084	71	J	05/13/02	
	G003SB087	3.1	=	06/13/02	
	G003SB088	13	=	06/13/02	
	G003SB089	2.7	U	06/13/02	
	G003SB091	42	=	06/13/02	
	G003SB092	4.6	=	06/13/02	
	G003SB094	3,700	=	07/25/02	
	G003SB095	28	J	07/25/02	
	G003SB095	37	J	07/25/02	

TABLE 5-4
Residual COC/COPC Concentrations in Subsurface Soil
RFI Report Addendum/IM Completion Report/CMS Work Plan, SWMU 3, Zone G, Charleston Naval Complex

Analyte	Sample Location	Concentration (μg/kg)	Qualifier	Date Collected	SSL [a] (DAF=10)

All values are presented in units of micrograms per kilogram (μg/kg).

Concentrations in bold and outlined within the table represent exceedances of the screening criteria.

[a] Soil screening levels (SSLs) are based on a dilution attenuation factor (DAF) of 1 for VOCs and DAF=10 for other compounds.

[b] Chlordane (carcinogen) is used as a surrogate value for alpha-chlordane, gamma-chlordane.

= Indicates that the analyte was detected at the concentration shown.

J Indicates an estimated value. One or more quality control (QC) parameters were outside control limits or the value was detected below the laboratory's quantification limit.

NA Not applicable/not available

U Indicates that the analyte was analyzed for but not detected above the method detection limit (MDL).

Table 5-5
Soil Screening Level (SSL) Calculations
RFI Report Addendum/IM Completion Report/CMS Work Plan, SWMU 3, Zone G, Charleston Naval Complex

							Parameter	gamma-BHC	dieldrin	TCE	PCE
Chemical Specific Input Parameters											
Cw =	Target groundwater concentration MCL (mg/L)							2.00E-04	4.20E-06	5.00E-03	5.00E-03
H =	Henry's Law Constant, dimensionless							5.74E-04	6.19E-04	4.22E-01	7.54E-01
Kd =	Soil-water sorption coefficient (cm3 water / g soil = L/kg) = Koc x foc where							1.76E+01	3.32E+02	1.23E+00	3.45E+00
	koc = organic carbon-water sorption coefficient, (cm3 (ml) water) / (g soluble organic carbon)							1.35E+03	2.55E+04	9.43E+01	2.65E+02
	foc = Fraction of organic content, dimensionless						0.013				
Site Specific Input Parameters											
Sw =	Width of Source Parallel to Groundwater Flow Direction		(impacted soil zone)	100.6 m		330 ft					
da =	Aquifer Thickness			9.8 m		32 ft					
d =	Groundwater Mixing Zone thickness	(paved)	1.1E+01	9.8 m		32.0 ft					
		(unpaved)	1.2E+01	9.8 m		32.0 ft					
i =	Groundwater Gradient				2.2E-02	(unitless)					
Ks =	Saturated Hydraulic Conductivity			445.0 m/yr		1460.0 ft/yr					
θw =	Volumetric Water Content of Soil Pore Space			0.3 cm^3_{vapor}/cm^3_{soil}		0.3 in^3_{vapor}/in^3_{soil}					
θv =	Volumetric Vapor Content of Soil Pore Space			0.15 cm^3_{vapor}/cm^3_{soil}		0.15 in^3_{vapor}/in^3_{soil}					
ρs =	Soil Bulk Density			1.5 g/cm^3		93.64 lb_m/ft^3					
qi =	Water Infiltration Rate	(paved)		0.0086 m/yr		0.0283 ft/yr					
		(unpaved)		0.1372 m/yr		0.4500 ft/yr					
	Partition Term, Cw/Csoil, (L/kg)							1.78E+01	3.32E+02	1.47E+00	3.72E+00
	Dilution Term, dimensionless	(paved)						1.12E+02	1.12E+02	1.12E+02	1.12E+02
		(unpaved)						7.99E+00	7.99E+00	7.99E+00	7.99E+00
	Csoil/Cw =Partition term * Dilution term (mg/kg / mg/L) = L/kg	(paved)						1.99E+03	3.72E+04	1.64E+02	4.17E+02
		(unpaved)						1.42E+02	2.65E+03	1.17E+01	2.97E+01
Calculated Site Specific Target Level for Soil											
	C_{soil} calculated source soil concentration (SSL, mg/kg) Cw*(partion term)*(dilution term)						(paved)	0.3977	0.1561	0.8224	2.0842
							(unpaved)	0.0284	0.0111	0.0587	0.1487

$$\frac{C_{soil}}{C_w} = \left(\frac{\theta_w + K_d\rho_s + H\theta_v}{\rho_s}\right)\left(\frac{K_d i d + q_i S_w}{q_i S_w}\right)$$

Cwt is the MCL from EPA National Drinking Water Standards (March 2001)or US EPA Region III RBCs (October, 2000).
H from Table 36 of the Soil Screening Guidance; Technical Background Document (EPA, 1996).
Kd = koc x foc.
koc from Table 39 of the Soil Screening Guidance; Technical Background Document (EPA, 1996)
foc calculated as the mean foc from TOC measurements from Zone G.
Sw Estimated as the longest dimension of SWMU 3 (330 ft).
d is calculated as $d = (0.0112\ L^2)^{0.5} + da\{1 - e^{[-L\ qi/Ks\ da]}\}$ or da, whichever is less.
da is based on the groundwater elevation in the GIS (12 ft msl) - the top of Ashley elevation (-20 ft, GIS).
i Calculated from data in the GIS ([12-10]/90=0.02, CH2MHill, 2001)
Ks Based on CH2MHill's hydraulic conductivity theme in the GIS (4 ft/d).
θw is the default value presented in the Soil Screening Guidance: User's Guide (EPA, 1996)
θv is calculated as total porosity (0.45, assumed) - θw (0.3) = 0.15.
ρs is the default value presented in the Soil Screening Guidance: User's Guide (EPA, 1996)
qi is a derived value (5.4 in/yr) based on annual precipitation, evapo-transportation, and runoff coefficient values for the Charleston area.

TABLE 5-6
Organic COPCs Detected in Groundwater
RFI Report Addendum/IM Completion Report/CMS Work Plan, SWMU 3, Zone G, Charleston Naval Complex

Analyte	Sample Location	Concentration (µg/L)	Qualifier	Date Collected	MCL	EPA Region III RBC [a] (HI=0.1)
Pesticides						
Alpha-BHC (Alpha-Hexachlorocyclohexane) [C]	G003GW007	**0.013**	J	10/08/02	NA	0.011
Delta-BHC (Delta-Hexachlorocyclohexane) [C]	G003GW007	**0.017**	J	10/08/02	NA	0.011[b]
Dieldrin [C]	G003GW005	**0.061**	J	10/08/02	NA	0.0042
	G003GW007	**0.67**	=	10/08/02		
Heptachlor Epoxide [c]	G003GW004	0.02	J	10/08/02	0.2	NA
	G003GW005	0.086	J	10/08/02		
	G003GW006	**0.21**	J	10/08/02		
	G003GW007	0.13	J	10/08/02		
	G003GW008	0.014	J	10/08/02		
p,p'-DDD [C]	G003GW005	**1**	J	10/08/02	NA	0.28
	G003GW006	0.13	J	10/08/02		
p,p'-DDE [C]	G003GW005	**0.21**	=	10/08/02	NA	0.2
	G003GW006	0.058	J	10/08/02		
p,p'-DDT [C]	G003GW005	**1.2**	=	10/08/02	NA	0.2
	G003GW006	**1.6**	J	10/08/02		

All values are presented in units of micrograms per liter (µg/L).

Concentrations in bold and outlined within the table represent exceedances of the screening criteria.

[a] U.S. EPA Region III risk-based concentrations (RBCs) with a hazard index (HI)=0.1 for noncarcinogens.

[b] Alpha-BHC (carcinogen) is used as a surrogate value for delta-BHC.

[C] The compound is listed as a carcinogen.

= Indicates that the analyte was detected at the concentration shown.

J Indicates an estimated value. One or more quality control (QC) parameters were outside control limits or the value was detected below the laboratory's quantification limit.

NA Not applicable/not available

TABLE 5-7
Inorganic COPCs Detected in Groundwater
RFI Report Addendum/IM Completion Report/CMS Work Plan, SWMU 3, Zone G, Charleston Naval Complex

Analyte	Sample Location	Concentration (µg/L)	Qualifier	Date Collected	MCL	EPA Region III RBC [a] (HI=0.1)	Zone G Range of Background Concentrations Min	Max
Aluminum	G003GW001	**9,930**	=	11/20/96	NA	3,700	136	1,770
	G003GW001	202	=	05/15/97				
	G003GW001	590	=	09/16/97				
	G003GW001	212	=	12/02/97				
	G003GW001	467	=	04/21/98				
	G003GW001	890	J	10/08/02				
	G003GW002	2,410	=	11/21/96				
	G003GW002	109	=	05/15/97				
	G003GW002	35.9	J	09/16/97				
	G003GW002	251	=	12/02/97				
	G003GW002	365	=	04/22/98				
	G003GW002	490	J	10/08/02				
	G003GW003	**15,200**	=	11/20/96				
	G003GW003	741	J	06/18/97				
	G003GW003	966	=	09/17/97				
	G003GW003	**5,310**	=	12/03/97				
	G003GW003	**5,910**	=	04/21/98				
	G003GW009	740	J	10/08/02				
Beryllium	G003GW001	1.1	J	11/20/96	4	NA	NA	NA
	G003GW001	0.2	J	05/15/97				
	G003GW002	0.54	J	11/21/96				
	G003GW002	0.37	J	05/15/97				
	G003GW003	1.1	J	11/20/96				
	G003GW004	0.35	J	10/08/02				
	G003GW006	0.51	J	10/08/02				
	G003GW009	0.76	J	10/08/02				
Chromium, Total	G003GW001	20.4	=	11/20/96	100	NA	2	14

TABLE 5-7
Inorganic COPCs Detected in Groundwater
RFI Report Addendum/IM Completion Report/CMS Work Plan, SWMU 3, Zone G, Charleston Naval Complex

Analyte	Sample Location	Concentration (µg/L)	Qualifier	Date Collected	MCL	EPA Region III RBC [a] (HI=0.1)	Zone G Range of Background Concentrations Min	Max
Chromium, Total	G003GW001	1	U	05/15/97	100	NA	2	14
	G003GW001	1.2	J	09/16/97				
	G003GW002	5.6	J	11/21/96				
	G003GW003	31.6	=	11/20/96				
	G003GW003	2.1	J	09/17/97				
	G003GW003	9.8	J	12/03/97				
	G003GW003	10.9	=	04/21/98				
	G003GW004	0.85	U	10/08/02				
	G003GW005	0.85	U	10/08/02				
	G003GW006	1.7	U	10/08/02				
	G003GW007	0.85	U	10/08/02				
	G003GW008	0.85	U	10/08/02				
	G003GW009	0.85	U	10/08/02				
Manganese	G003GW001	8	J	04/21/98	NA	73	149	7,980
	G003GW001	12	J	10/08/02				
	G003GW002	39.4	=	04/22/98				
	G003GW002	9.6	J	10/08/02				
	G003GW003	58.7	=	04/21/98				
	G003GW004	150	=	10/08/02				
	G003GW005	25	=	10/08/02				
	G003GW006	270	=	10/08/02				
	G003GW007	100	=	10/08/02				
	G003GW008	520	=	10/08/02				
	G003GW009	650	=	10/08/02				
Thallium	G003GW001	**3.5**	J	11/20/96	2	NA	NA	NA
	G003GW001	5	U	05/15/97				
	G003GW001	5	U	09/16/97				

TABLE 5-7
Inorganic COPCs Detected in Groundwater
RFI Report Addendum/IM Completion Report/CMS Work Plan, SWMU 3, Zone G, Charleston Naval Complex

Analyte	Sample Location	Concentration (µg/L)	Qualifier	Date Collected	MCL	EPA Region III RBC [a] (HI=0.1)	Zone G Range of Background Concentrations Min	Max
Thallium	G003GW001	5	U	12/02/97	2	NA	NA	NA
	G003GW001	5.5	U	04/21/98				
	G003GW001	2.5	U	10/08/02				
	G003GW002	**2.9**	J	11/21/96				
	G003GW002	5	U	05/15/97				
	G003GW002	5	U	09/16/97				
	G003GW002	5	U	12/02/97				
	G003GW002	5.5	U	04/22/98				
	G003GW002	2.5	U	10/08/02				
	G003GW003	**2.8**	J	11/20/96				
	G003GW003	5	U	06/18/97				
	G003GW003	5	U	09/17/97				
	G003GW003	5	U	12/03/97				
	G003GW003	5.5	U	04/21/98				
	G003GW004	2.5	U	10/08/02				
	G003GW005	2.5	U	10/08/02				
	G003GW006	2.5	U	10/08/02				
	G003GW007	2.5	U	10/08/02				
	G003GW008	2.5	U	10/08/02				
	G003GW009	2.5	U	10/08/02				
Vanadium	G003GW001	**31.4**	J	11/20/96	NA	26	3	30
	G003GW001	1.3	J	05/15/97				
	G003GW001	1.2	J	09/16/97				
	G003GW001	1.1	U	12/02/97				
	G003GW001	1.6	U	04/21/98				
	G003GW001	3	U	10/08/02				
	G003GW002	6.9	U	11/21/96				
	G003GW002	1.1	U	05/15/97				

TABLE 5-7
Inorganic COPCs Detected in Groundwater
RFI Report Addendum/IM Completion Report/CMS Work Plan, SWMU 3, Zone G, Charleston Naval Complex

Analyte	Sample Location	Concentration (µg/L)	Qualifier	Date Collected	MCL	EPA Region III RBC [a] (HI=0.1)	Zone G Range of Background Concentrations Min	Max
Vanadium	G003GW002	1.1	U	09/16/97	NA	26	3	30
	G003GW002	1.1	U	12/02/97				
	G003GW002	1.7	U	04/22/98				
	G003GW002	2.2	U	10/08/02				
	G003GW003	**46.7**	J	11/20/96				
	G003GW003	2	J	06/18/97				
	G003GW003	2.2	J	09/17/97				
	G003GW003	15.7	J	12/03/97				
	G003GW003	15	=	04/21/98				
	G003GW004	1.1	U	10/08/02				
	G003GW005	1.1	U	10/08/02				
	G003GW006	1.1	U	10/08/02				
	G003GW007	1.8	U	10/08/02				
	G003GW008	1.1	U	10/08/02				
	G003GW009	1.8	U	10/08/02				

All values are presented in units of micrograms per liter (µg/L).

Concentrations in bold and outlined within the table represent exceedances of the screening criteria.

[a] U.S. EPA Region III risk-based concentrations (RBCs) with a hazard index (HI)=0.1 for noncarcinogens.

= Indicates that the analyte was detected at the concentration shown.

J Indicates an estimated value. One or more quality control (QC) parameters were outside control limits or the value was detected below the laboratory's quantification limit.

MCL Maximum contaminant level

NA Not applicable/not available

TABLE 5-8
SWMU 3 Groundwater Field Data
RFI Report Addendum/IM Completion Report/CMS Work Plan, SWMU 3, Zone G, Charleston Naval Complex

Station ID	Sample ID	Date	Turbidity (NTU) Initial	Turbidity (NTU) Min	Turbidity (NTU) Max	Turbidity (NTU) Final	pH (SU)	Conductivity (µS/cm)	Temperature (°C)	Volume Purged (gal)
G003GW001	003GW00101	11/21/1996	NA	NA	NA	NA	NA	NA	NA	NA
	003GW00102	05/15/1997	128	6	216	6	6.44	0.285	21.0	5.25
	003GW00103	09/16/1997	16	0	160	0	6.02	0.295	24.4	6.125
	003GW00104	12/02/1997	50	8	191	8	6.81	0.30	19.4	5.25
	003GW00105	04/21/1998	NA	NA	NA	NA	NA	NA	NA	NA
	003GW001M6	10/08/2002	12	1	12	2.6	5.03	0.33	24.9	4.5
G003GW002	003GW00201	11/21/1996	16	16	25	25	8.42	0.124	20.6	5.5
	003GW00202	05/15/1997	47	5	66	5	4.55	0.087	19.8	6
	003GW00203	09/16/1997	82	0	82	0	5.89	0.28	23.5	7
	003GW00204	12/02/1997	69	7	69	7	5.64	0.129	19.4	4.5
	003GW00205	04/22/1998	NA	NA	NA	NA	NA	NA	NA	NA
	003GW002M6	10/08/2002	0.1	0.1	1.1	1.1	6.1	2.82	24.51	4.5
G003GW003	003GW00301	11/21/1996	NA	NA	NA	NA	NA	NA	NA	NA
	003GW00302	06/18/1997	177	1	999	1	5.28	0.34	23.7	2.25_{dry}
	003GW00303	09/17/1997	0	0	999	0	5.7	0.328	24.7	2.625_{dry}
	003GW00304	12/03/1997	10	1	797	1	5.04	0.318	17.8	1.5_{dry}
	003GW00305	04/21/1998	NA	NA	NA	NA	NA	NA	NA	NA
G003GW004	003GW004M6	10/08/2002	17.5	5.3	19.5	5.3	4.63	0.25	24.9	4.95

TABLE 5-8
SWMU 3 Groundwater Field Data
RFI Report Addendum/IM Completion Report/CMS Work Plan, SWMU 3, Zone G, Charleston Naval Complex

Station ID	Sample ID	Date	Initial	Turbidity (NTU) Min	Turbidity (NTU) Max	Final	pH (SU)	Conductivity (µS/cm)	Temperature (°C)	Volume Purged (gal)
G003GW005	003GW005M6	10/08/2002	5.4	0	8.6	6.1	5.55	2.16	26.23	4.2
G003GW006	003GW006M6	10/08/2002	0	0	0	0	5.33	2.43	27.2	4.1
G003GW007	003GW007M6	10/08/2002	6.7	0	6.7	0	5.05	0.63	29.7	4.0
G003GW008	003GW008M6	10/08/2002	-0.4	-0.4	1.4	1.4	5.66	2.97	25.02	4.15
G003GW009	003GW009M6	10/08/2002	0	0	5.3	5.3	4.4	0.52	25.0	4.3

NTU - nephelometric turbity unit.
SU - standard units.
mS/cm - micro-seimens per centimeter.
°C - degrees celsius.
gal - gallons.
NA - Not available.
$_{dry}$ indicates that the well was pumped dry and sampled the following day to provide opportunity for the well to recharge.

NOTE: Original figure created in color

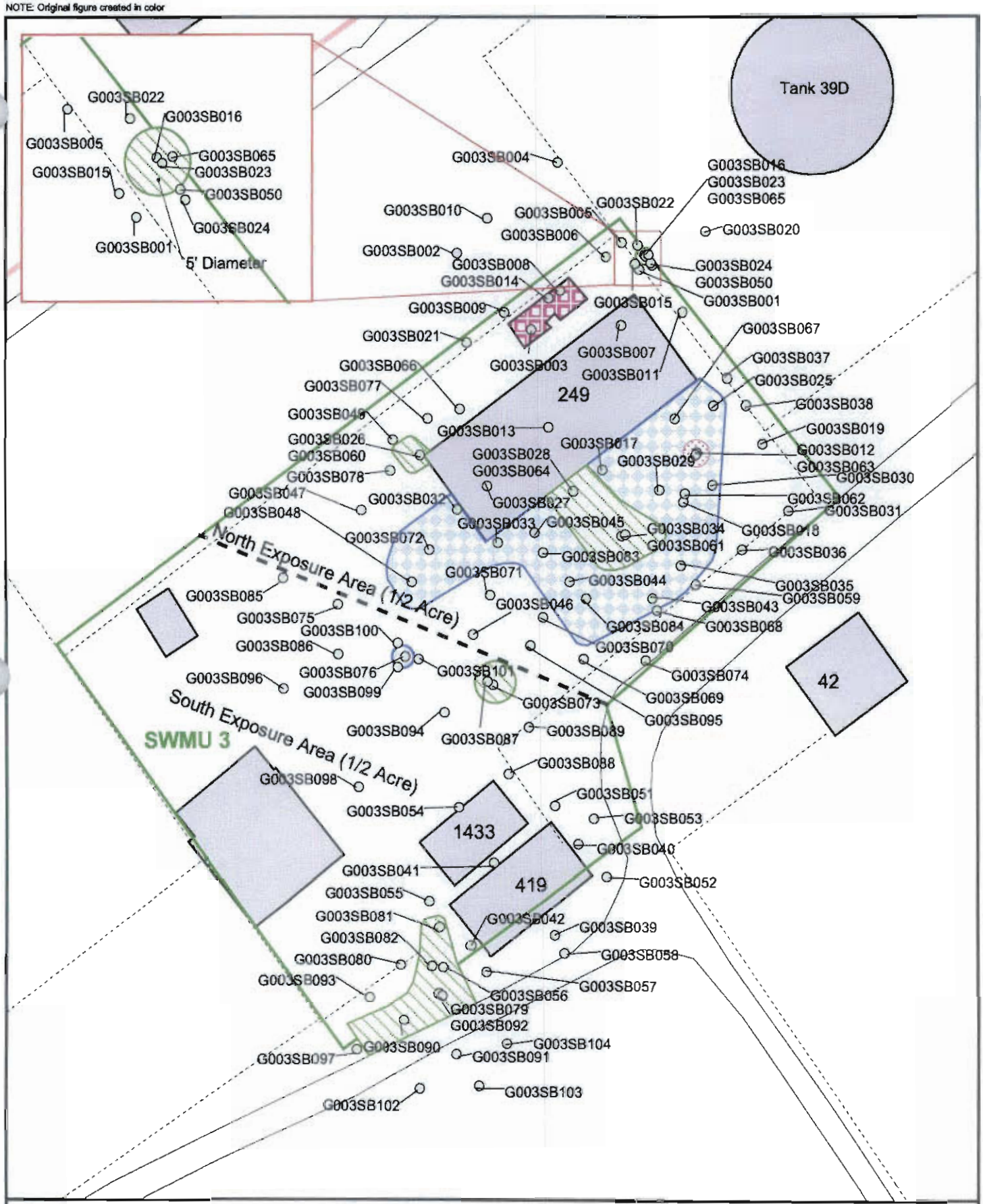

Soil Sample
Fence
DET Excavation (2-ft bls)
5 Foot Excavation Depth
3 Foot Excavation Depth
1 Foot Excavation Depth
Roads
Buildings
Zone Boundary
SWMU 3

N

0 30 60 Feet

1 inch = 50 feet

Figure 5-1
Excavation Areas with Soil Sample Locations
SWMU 3, Zone G
Charleston Naval Complex

CH2MHILL

NOTE: Original figure created in color

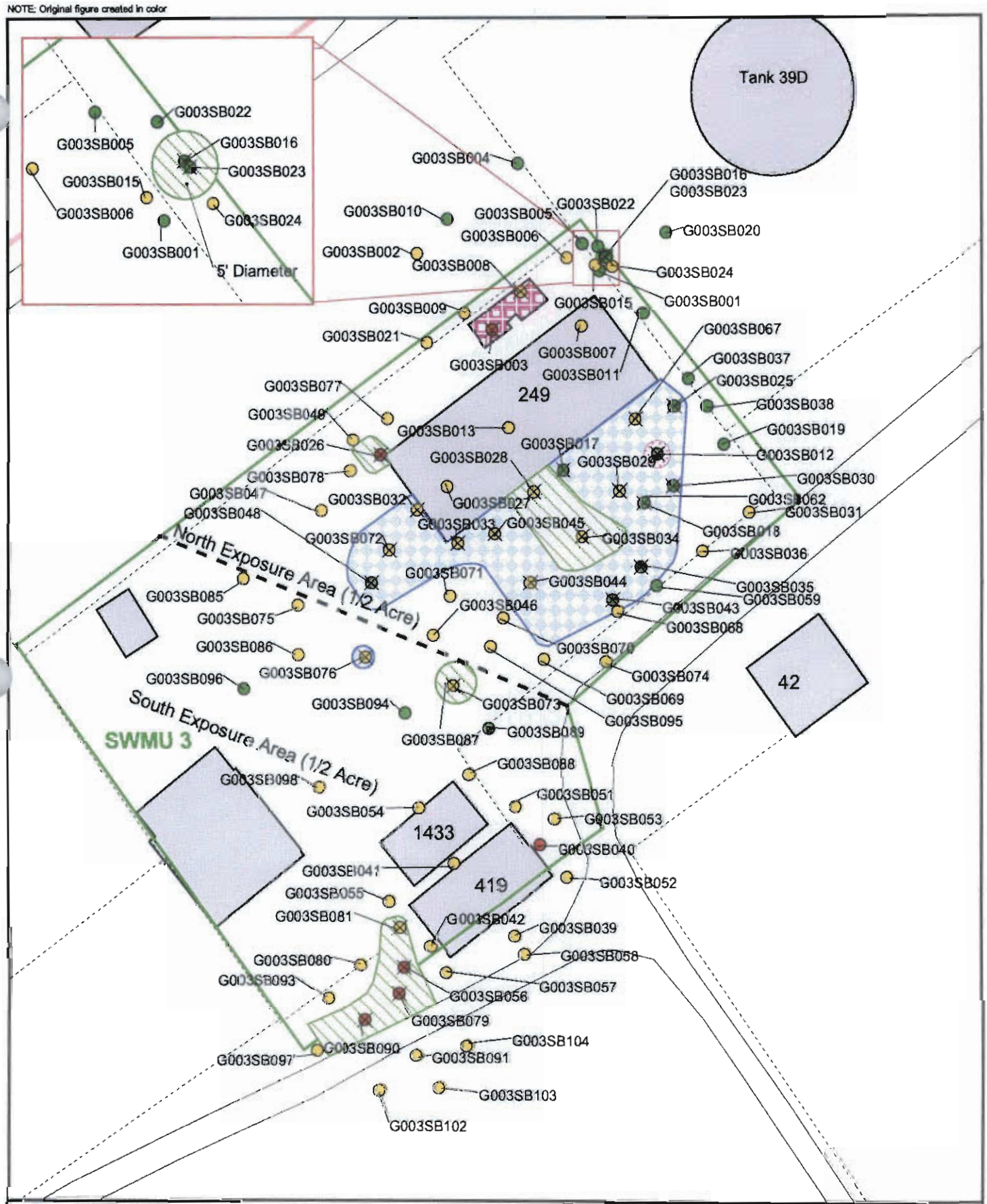

Soil Sample Above Either SSL, RBC, or both
Soil Sample Below SSL and RBC
Soil Sample Non-Detect
X Indicates Removed Sample
Fence
Roads
SWMU 3
Buildings
Zone Boundary
DET Excavation (2-ft bls)
5 Foot Excavation Depth
3 Foot Excavation Depth
1 Foot Excavation Depth

N

0 30 60 Feet

1 inch = 50 feet

Figure 5-2
Chlordane, Alpha-Chlordane, and Gamma-Chlordane Concentrations in Surface Soil
SWMU 3, Zone G
Charleston Naval Complex

CH2MHILL

NOTE: Original figure created in color

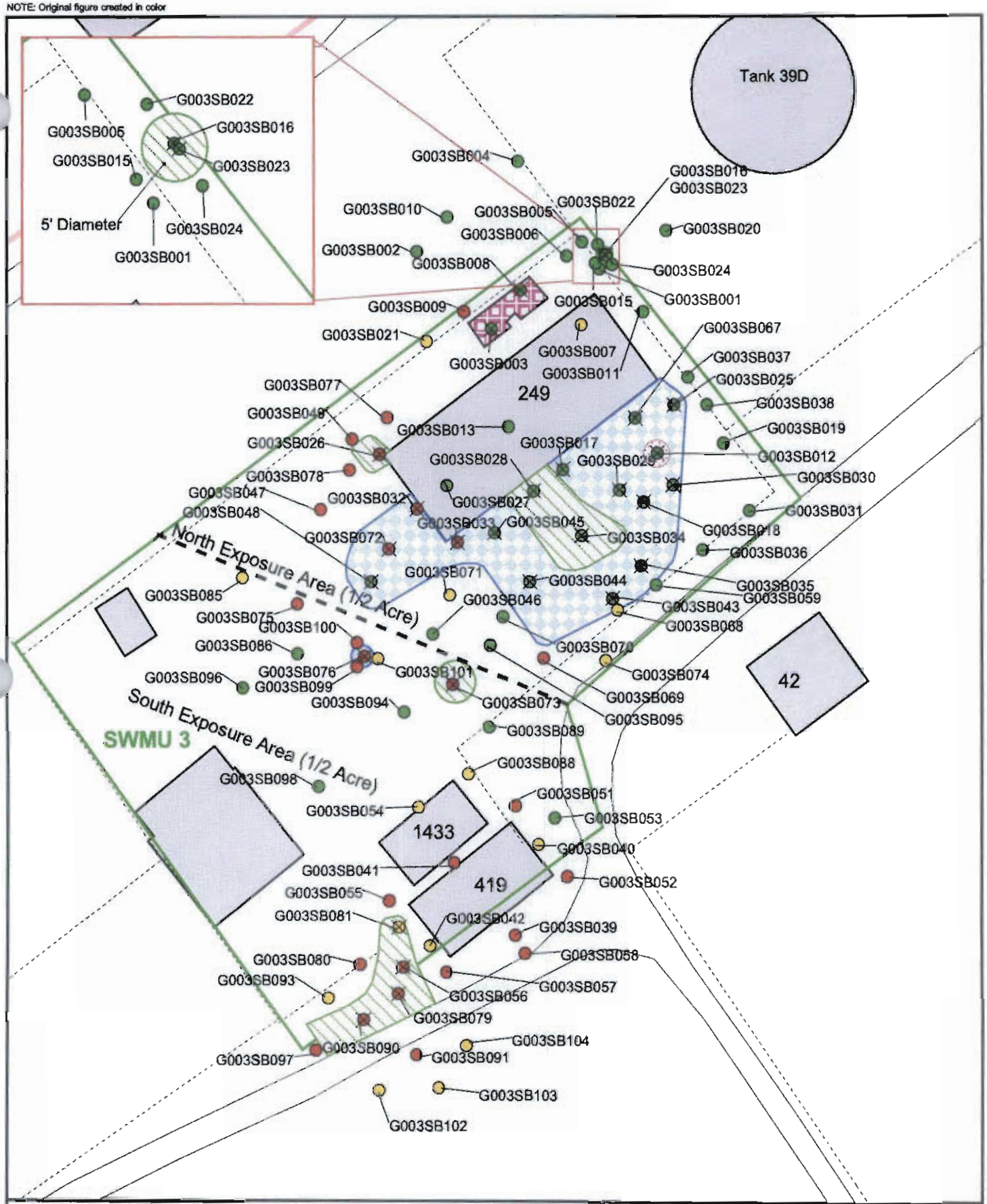

Soil Sample Above Either SSL, RBC, or both
Soil Sample Below SSL and RBC
Soil Sample Non-Detect
X Indicates Removed Sample
Fence
Roads
SWMU 3
Buildings
Zone Boundary
DET Excavation (2-ft bls)
5 Foot Excavation Depth
3 Foot Excavation Depth
1 Foot Excavation Depth

N

0 30 60 Feet

1 inch = 50 feet

Figure 5-3

Dieldrin Concentrations in Surface Soil
SWMU 3, Zone G
Charleston Naval Complex

CH2MHILL

NOTE: Original figure created in color

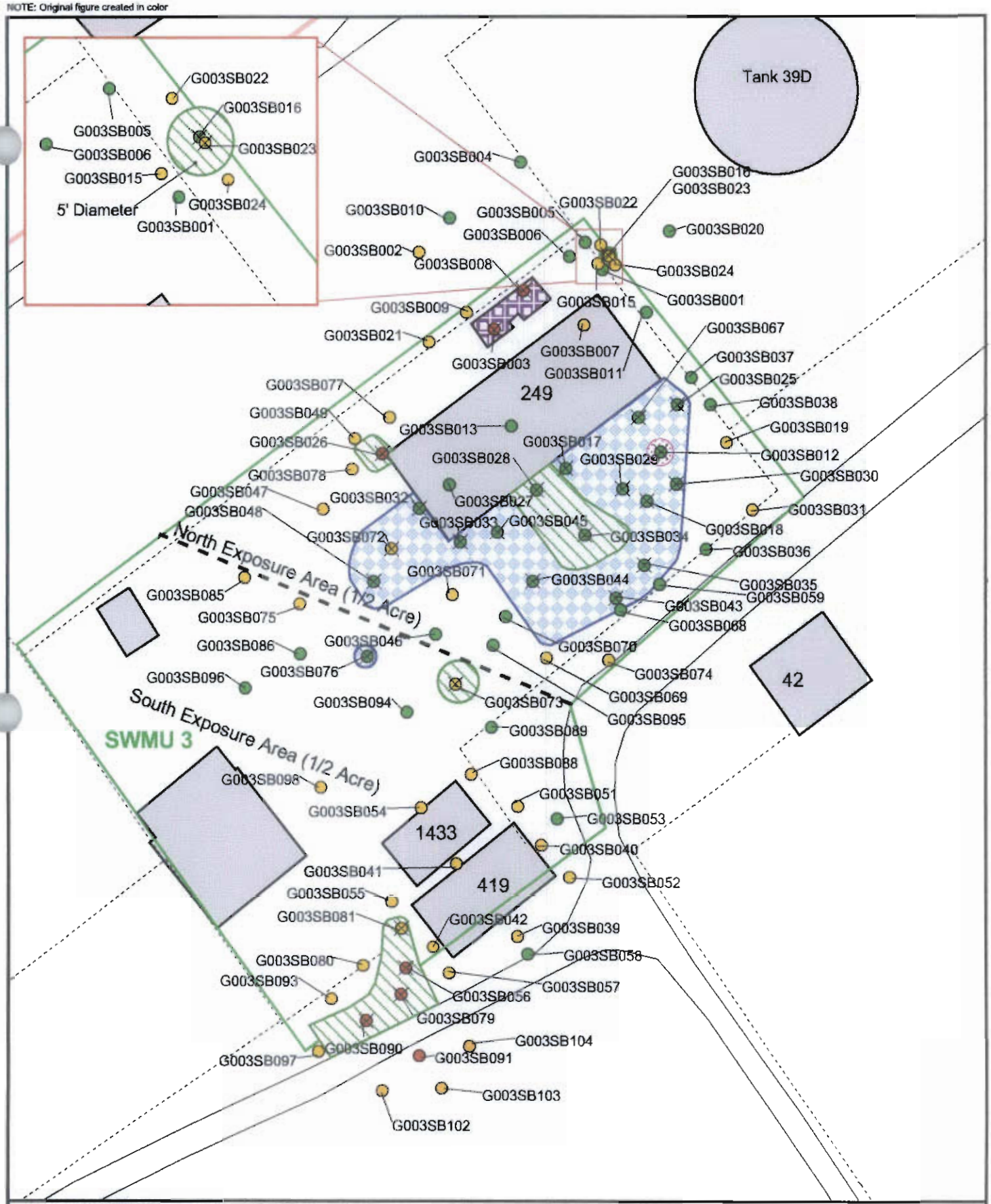

Soil Sample Above Either SSL, RBC, or both
Soil Sample Below SSL and RBC
Soil Sample Non-Detect
X Indicates Removed Sample
Fence
Roads
SWMU 3
Buildings
Zone Boundary
DET Excavation (2-ft bls)
5 Foot Excavation Depth
3 Foot Excavation Depth
1 Foot Excavation Depth

N

0 30 60 Feet

1 inch = 50 feet

Figure 5-4
Heptachlor and Heptachlor Epoxide Concentrations in Surface Soil
SWMU 3, Zone G
Charleston Naval Complex

CH2MHILL

File Path: C:\18gis\Projects\Zone_G\SWMU3\apr\swmu3.apr, Date: 09 Jan 2003 14:43, User: NMCUDRY, * Figure 5-4 Heptachlor

NOTE: Original figure created in color

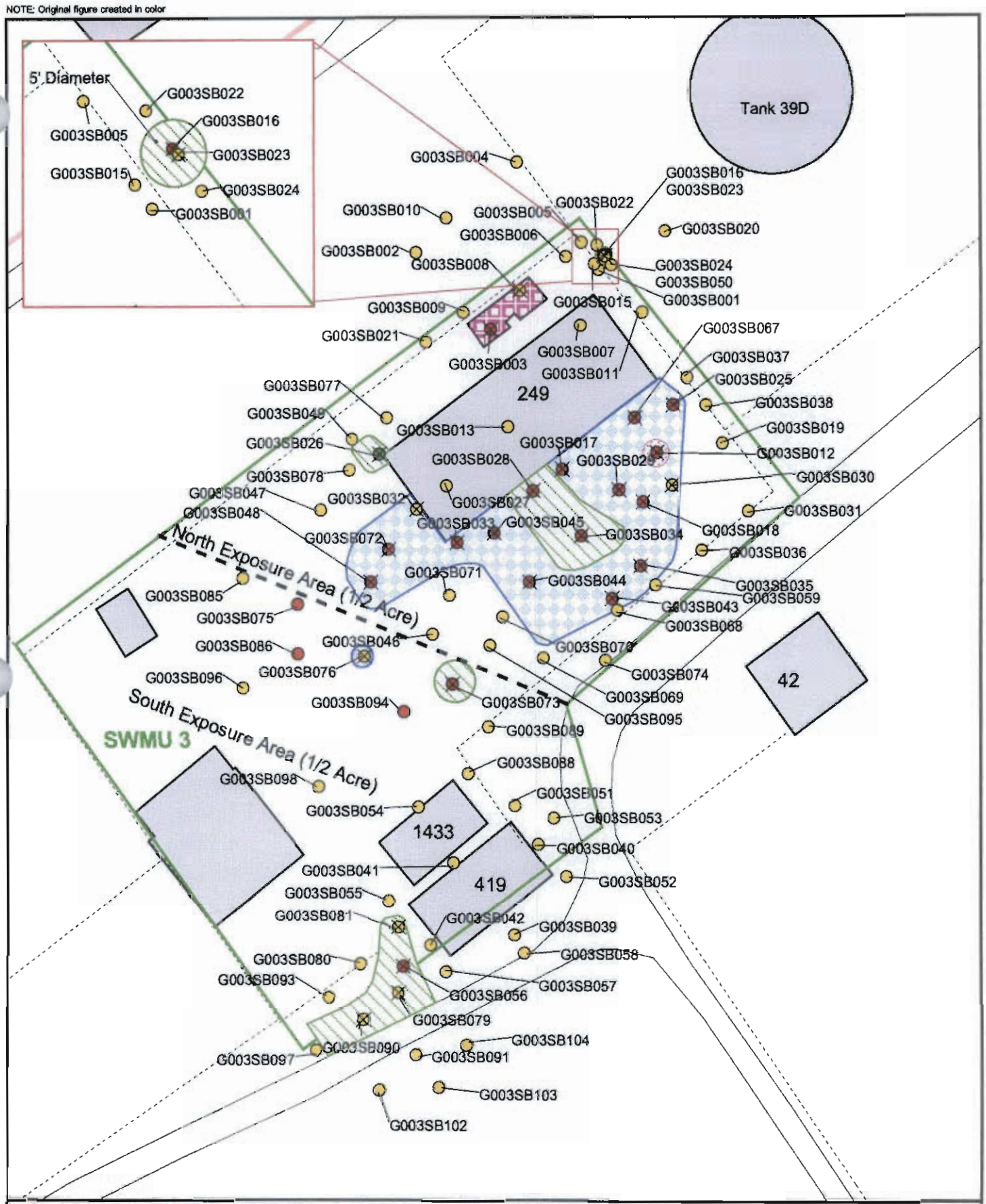

Soil Sample Above Either SSL, RBC, or both
Soil Sample Below SSL and RBC
Soil Sample Non-Detect
X Indicates Removed Sample
Fence
Roads
SWMU 3
Buildings
Zone Boundary
DET Excavation (2-ft bls)
5 Foot Excavation Depth
3 Foot Excavation Depth
1 Foot Excavation Depth

N

0 30 60 Feet

1 inch = 50 feet

Figure 5-5
DDD, DDE, and DDT
Concentrations in Surface Soil
SWMU 3, Zone G
Charleston Naval Complex

CH2MHILL

NOTE: Original figure created in color

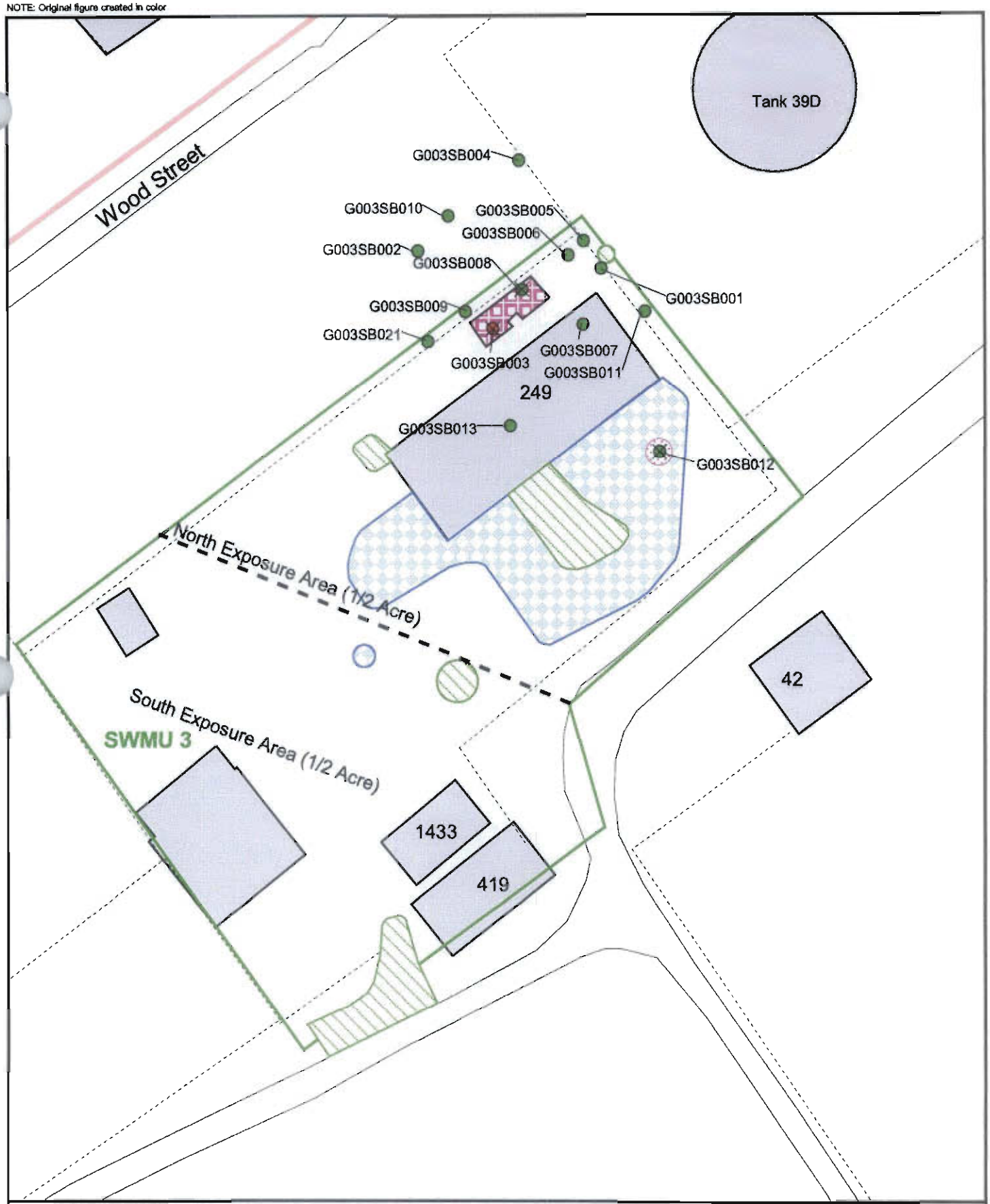

Soil Sample Above Either SSL, RBC, or both
Soil Sample Below SSL and RBC
Soil Sample Non-Detect
X Indicates Removed Sample
Fence
Roads
SWMU 3
Buildings
Zone Boundary
DET Excavation (2-ft bls)
5 Foot Excavation Depth
3 Foot Excavation Depth
1 Foot Excavation Depth

N

0 30 60 Feet

1 inch = 50 feet

Figure 5-6
Aroclor-1248
Concentrations in Surface Soil
SWMU 3, Zone G
Charleston Naval Complex

CH2MHILL

NOTE: Original figure created in color

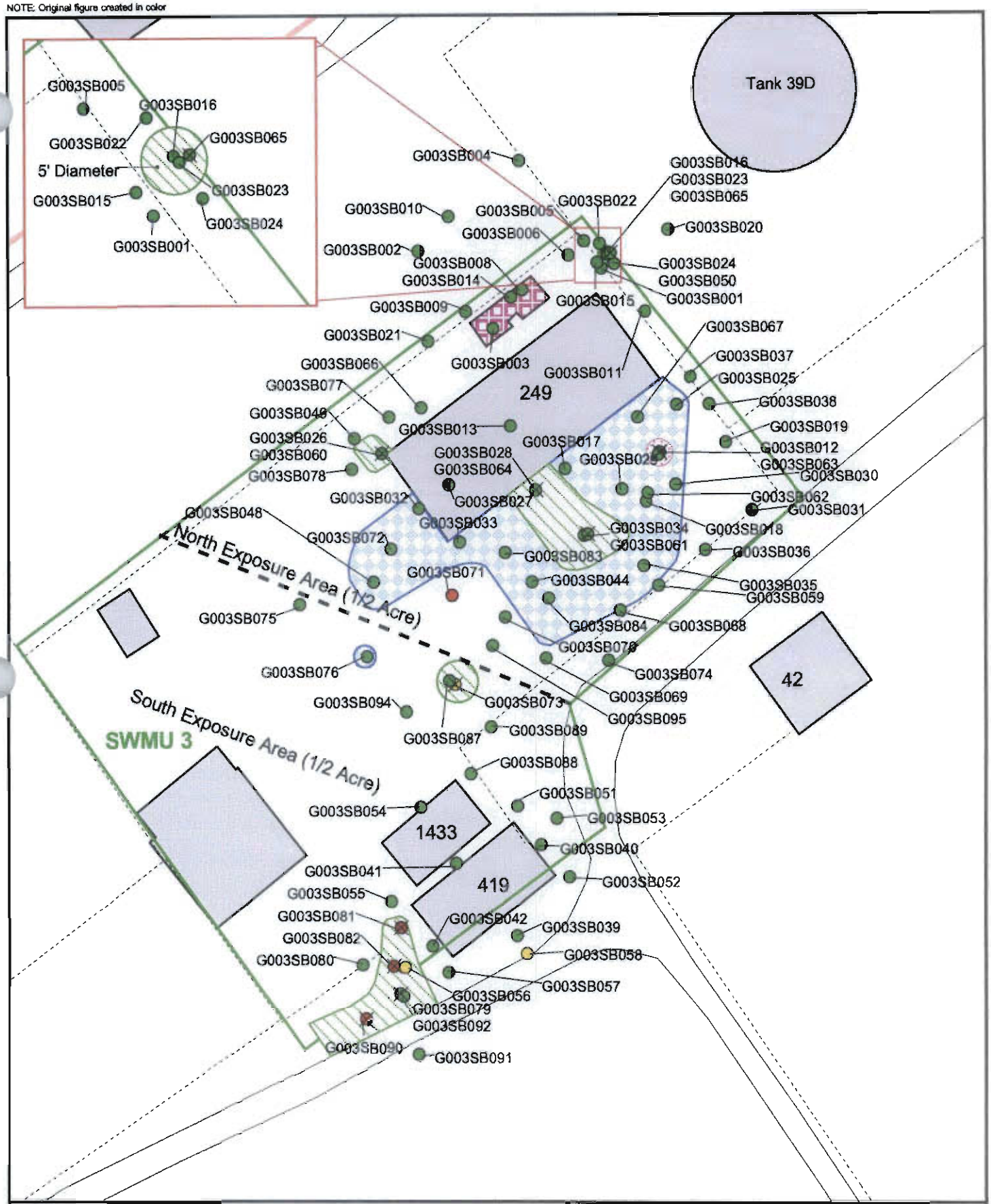

Soil Sample Above SSL
Soil Sample Below SSL
Soil Sample Non-Detect
Indicates Removed Sample
Zone Boundary
SWMU 3
Buildings
Fence
Roads
DET Excavation (2-ft bls)
5 Foot Excavation Depth
3 Foot Excavation Depth
1 Foot Excavation Depth

N

0 30 60 Feet

1 inch = 50 feet

Figure 5-7
Beta-BHC and Gamma-BHC
Concentrations in Subsurface Soil
SWMU 3, Zone G
Charleston Naval Complex

CH2MHILL

NOTE: Original figure created in color

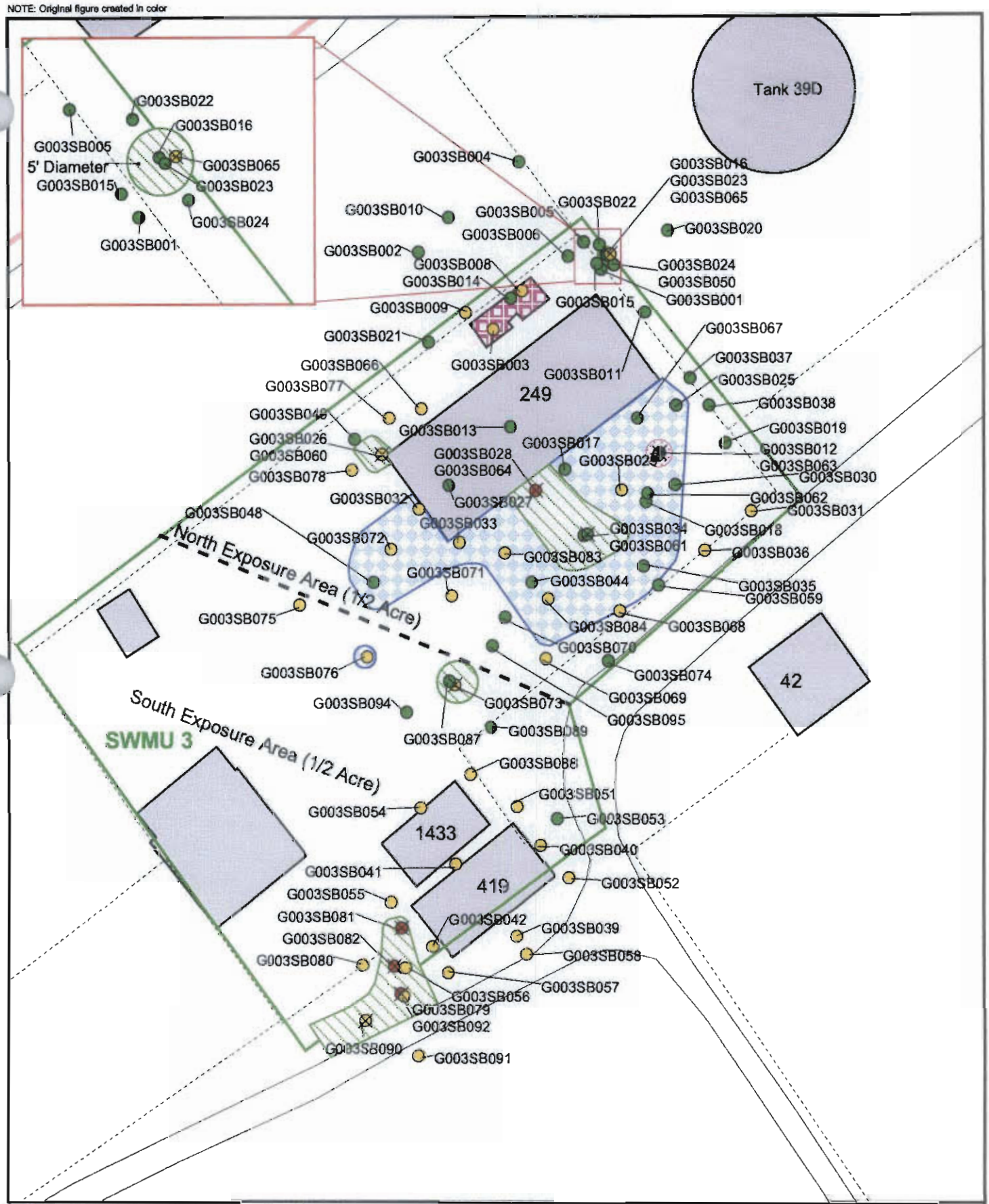

Figure 5-8
Chlordane, Alpha-Chlordane, and Gamma-Chlordane Concentrations in Subsurface Soil
SWMU 3, Zone G
Charleston Naval Complex

CH2MHILL

NOTE: Original figure created in color

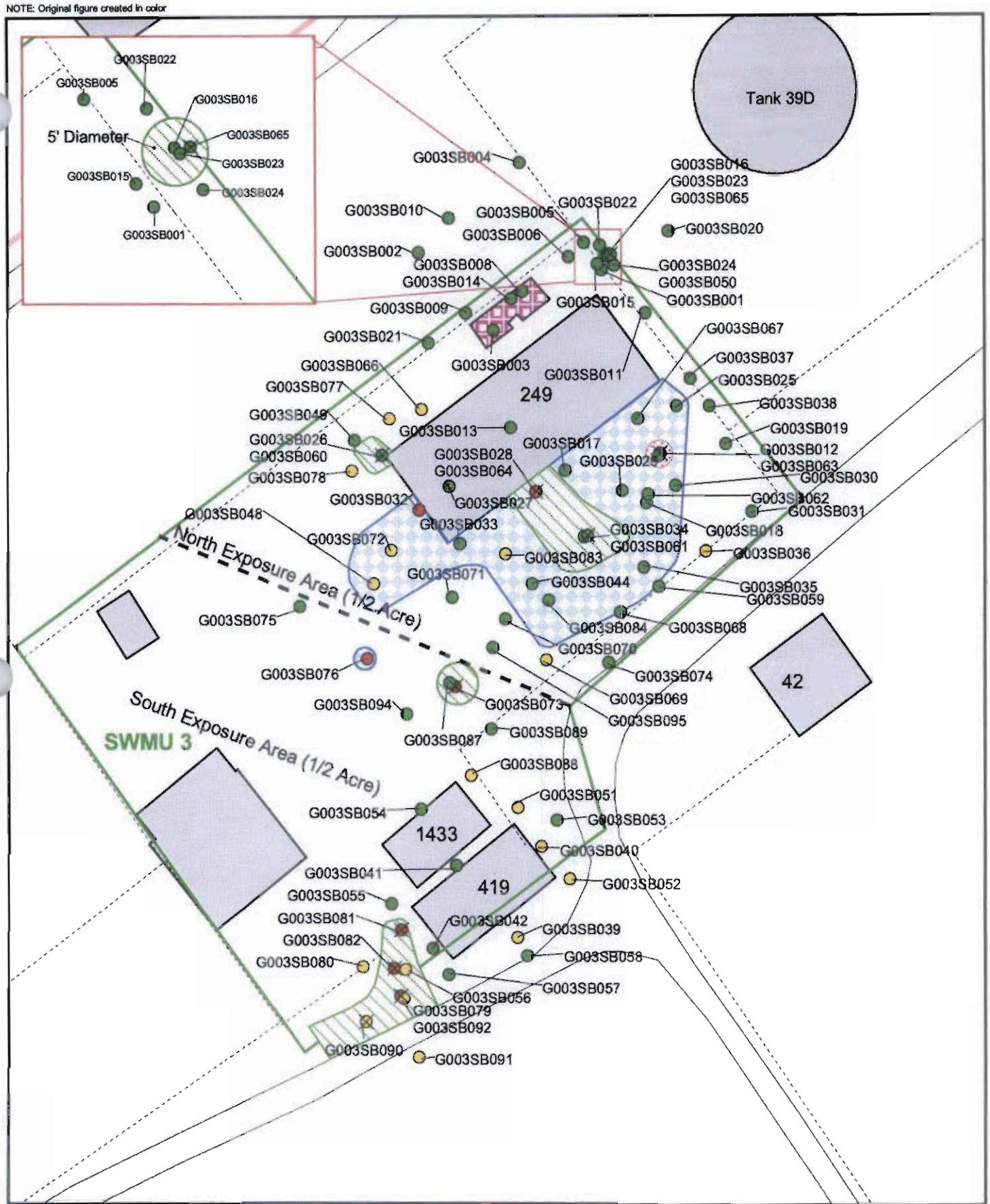

Soil Sample Above SSL
Soil Sample Below SSL
Soil Sample Non-Detect
Indicates Removed Sample
Zone Boundary
SWMU 3
Buildings
Fence
Roads
DET Excavation (2-ft bls)
5 Foot Excavation Depth
3 Foot Excavation Depth
1 Foot Excavation Depth

N

0 30 60 Feet

1 inch = 50 feet

Figure 5-9
Dieldrin Concentrations in Subsurface Soil
SWMU 3, Zone G
Charleston Naval Complex

CH2MHILL

NOTE: Original figure created in color

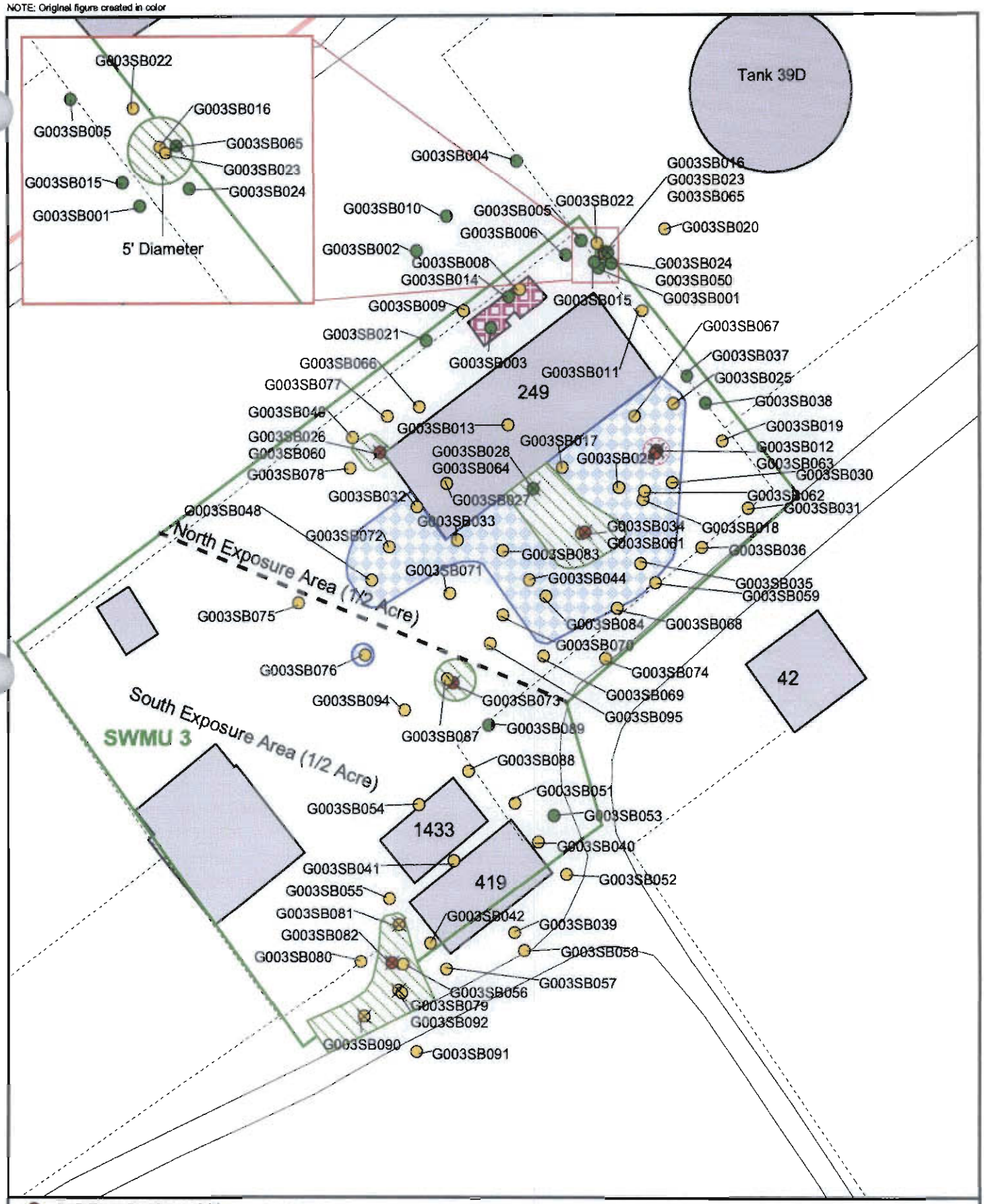

Soil Sample Above SSL
Soil Sample Below SSL
Soil Sample Non-Detect
Indicates Removed Sample
Zone Boundary
SWMU 3
Buildings
Fence
Roads
DET Excavation (2-ft bls)
5 Foot Excavation Depth
3 Foot Excavation Depth
1 Foot Excavation Depth

N

0 30 60 Feet

1 inch = 50 feet

Figure 5-10
DDD and DDT
Concentrations in Subsurface Soil
SWMU 3, Zone G
Charleston Naval Complex

CH2MHILL

Section 6.0

6.0 Summary of Information Related to Site Closeout Issues

6.1 RFI Status

The *Zone G RFI Report, Revision 0* (EnSafe, 1998) addressed SWMU 3 separately from SWMU 24. A CMS was recommended in the RFI report to address surface soil and shallow groundwater at the site. The responses to SCDHEC comments on the RFI report, in regard to SWMU 3 site, are attached as Appendix F. With this report addendum, the RFI is considered to be complete. The remaining subsections address the issues that the BCT agreed to evaluate prior to site closeout.

6.2 Presence of Inorganics in Groundwater

For the purpose of site closeout documentation, the inorganics in groundwater issue refers to the occasional or intermittent detection of metals (primarily arsenic, thallium, and antimony) in groundwater at concentrations above the applicable MCL, preceded or followed by detections of these same metals below the MCL or below the practicable quantitation limit. While several metals were detected in samples from the three original monitoring wells and in the new monitoring wells, no inorganic analyte concentration has exceeded its MCL. Therefore, further evaluation of inorganics in groundwater at this site is not warranted.

6.3 Potential Linkage to Investigated Sanitary Sewers at the CNC (SWMU 37)

There are no data suggesting that there are any impacts to the investigated sanitary sewers from SWMU 3. Therefore, further evaluation of this issue is not warranted.

6.4 Potential Linkage to Investigated Storm Sewers at the CNC (AOC 699)

There are no data suggesting that there have been impacts to the investigated storm sewer system at SWMU 3. After remediation of site soils, no COCs requiring further evaluation

exist in soils at SWMU 3. Based on these findings, further evaluation of this issue is not warranted.

6.5 Potential Linkage to AOC 504, Investigated Railroad Lines at the CNC

There are no railroad lines at SWMU 3. Therefore, no linkage with the railroad lines exists and no further evaluation of this issue is warranted.

6.6 Potential Migration Pathways to Surface Water Bodies at the CNC

The nearest surface water body to SWMU 3 is the Cooper River, which lies approximately 1,400 feet northeast of the site. A storm drain in the parking lot is connected to the storm water system, and discharges into the underground storm sewer adjacent to the site. The point of discharge for this storm sewer line is an outfall into Cooper River at Pier J. Storm sewer discharges to surface water are being evaluated separately by the Navy/EnSafe team. Further evaluation of this issue is not warranted unless data from this separate investigation indicate that SWMU 3 is impacting stormwater.

6.7 Potential Contamination in Oil/Water Separators

There are no oil/water separators (OWSs) associated with SWMU 3 operations. In addition, there is no reference to an OWS at the site in the OWS report, prepared by the Department of the Navy (September 2000). Therefore, further evaluation of this issue is not warranted.

6.8 Land Use Controls (LUCs)

As part of the CMS phase, the applicability of LUCs will be considered.

Section 7.0

7.0 Interim Measure Completion Report

7.1 Pre-excavation Sampling and Contaminant Delineation

During the RFI conducted in 1996 and 1997, 10 soil borings were installed for surface and subsurface soil sampling and analysis. Soil and groundwater samples were analyzed for metals, pesticides, and PCBs. Additional soil borings were completed in early 1997 to further delineate pesticides detected in soils during the first round of soil sampling. In 1998 an IM was conducted by the DET which included removal of 22 yd^3 of pesticide/PCB-contaminated soil to a depth of 2 ft bls on the northwest side of Building 249, around a former transformer pad (see Appendix A).

In October 2001, CH2M-Jones submitted the Phase I IMWP for SWMU 3 proposing collection of soil samples for further delineation of pesticides. After revisions to address SCDHEC comments requiring sampling on the east side of Building 249, the plan was approved and implemented in November 2001. Results of this sampling required collection of samples from four additional borings in January 2002 under a Sampling and Analysis Plan (SAP) to refine the delineation effort for the Phase I soil excavation IM.

The Phase II IMWP was submitted in March 2002, and while the IMWP was under review, a Phase II SAP was implemented, with 15 additional delineation soil borings installed and sampled for pesticides. These results required implementing an addendum to the Phase II SAP in late March 2002, and a Phase III SAP in April 2002, for collection of soil samples from 15 additional borings.

The large amount of new data collected required an addendum to the Phase II IMWP to be submitted, revising the proposed excavation extent, and proposing collection of additional pre-excavation confirmatory samples at eight locations.

The soil excavation was performed July 10 through July 15, 2002, and additional post-excavation samples were required in a Phase IV SAP to address isolated exceedances of the MCSs.

7.2 Technical Approach of the Interim Measure

The 2002 IM at SWMU 3 was intended to address pesticide-impacted soil. The extent of soil removal was determined by the concentrations detected in the pre-excavation delineation

and confirmation samples. Excavation limits were located to include soil criteria exceedances, and were also based upon the locations of former and current buildings. The IM Work Plan proposed that no additional confirmation sampling would be conducted after excavation, since the vertical and horizontal limits of contamination were determined by the pre-excavation delineation sampling. The IM Work Plan proposed that the excavations would be backfilled with clean soil soon after excavation. This approach was presented to SCDHEC and was approved after review of the IM Work Plan.

7.3 Excavation Activities

Limits of the 2002 excavations (corners) based on coordinates from IM work planning were staked in the field in advance. Asphalt removal and excavation began on July 9, 2002, with material temporarily staged on site for transport. On July 10, 2002 trucks began hauling material from the site to the disposal landfill. As trucks returned to the site, they brought clean backfill material from the designated borrow area. Some commercial gravel was also brought to the site and spread on the surface in soft areas to facilitate truck traffic.

The excavation was conducted at three main locations: the former mix-rinse slab area now used as a parking lot on the south side of Building 249; the former Building 1316 footprint on the southwest side of Building 249; and the grassy area immediately west of Building 419 (see Figures 5-1 and 5-2). Also, a small area near the northwest corner and a small area to the southwest of Building 249 (around boring G003SB076) were added based on the results of additional phases of delineation sampling.

A total of 35 dump-truck loads of soil were removed from the site, totaling approximately 865 tons. Twenty-nine loads of clean fill and eight loads of run-of-crusher rock were brought on site for restoration of the parking lot. After backfilling and compacting, the parking lot area was resurfaced with asphalt. Waste transporter manifests and TCLP results are presented in Appendices G and B, respectively.

Airborne particulate emissions were monitored with dust monitors, and readings varied from 0.0 milligrams per cubic meter (mg/m^3) (normal) to 0.06 mg/m^3 (while loading trucks), with background measured at 0.002 mg/m^3 at the excavation.

7.3.1 Former Mix-Rinse Slab Area Excavation (Building 249)

This excavation area was 1 ft deep over most of the parking lot area extending east to the fence line, to remove pesticide-contaminated surface soil. Near the middle of the east wall of Building 249, a 3-ft deep section encompassing soil borings G003SB028 and G003SB061 was

excavated to remove pesticides in subsurface soil. At the northern end of this excavation, soil was removed to a depth of 5 ft from the area surrounding soil borings G003SB012 and G003SB063, due to exceedance of pesticide criteria in the sample from the 3-ft depth at this location.

7.3.2 Former Building 1316 Footprint Excavation

This excavation was comprised of an area on the southwest side of Building 249 approximately 30- by 40-ft in size, excavated to a depth of 1 ft for pesticides in surface soil.

Three smaller excavations were conducted to depths of 3 ft adjacent to this location: one surrounding boring G003SB087 approximately 30 feet to the southeast; one on the southwest corner of Building 249 encompassing boring G003SB026; and one small excavation was made to the south at a depth of one foot bls, encompassing boring 003SB076.

7.3.3 Building 419 (Former 42-A) Excavation

This excavation is located on the southwest side of Building 419, and is bordered to the south by an asphalt pavement drive. An area of approximately 20- by 30-ft was excavated to a depth of 3 ft; the excavation was subsequently extended approximately 30 ft farther west along the asphalt drive based on analytical results.

7.3.4 Waste Characterization Sampling

Previously collected delineation soil samples were used to characterize the material to be excavated and removed from the site. In addition, three TCLP samples were collected and analyzed, one from within each of the three main areas to be excavated (station IDs are G003SA001, G003SA002, and G003SA003). The results were submitted to the waste facility for approval prior to excavation. The analytical results of the TCLP sampling are presented in Appendix B.

Waste storage, handling, characterization and disposal were conducted in accordance with the EPA guidance document, *Management of Remediation Waste Under RCRA* (1998).

7.3.5 Site Restoration

The excavations were backfilled with clean soil soon after the contaminated soil was removed. The Building 249 parking lot was filled, graded, compacted and re-paved to restore the site to original conditions. The other excavation areas were filled, graded and compacted to restore the original site elevations, and seeded to encourage vegetative growth and minimize soil erosion.

Appendix H includes copies of site photos taken during various remediation and site restoration activities at SWMU 3.

Section 8.0

8.0 Recommendations

The information presented in this RFIRA/IMCR/CMSWP supports the conclusion that further investigation is not warranted at SWMU 3, and supports the conclusion that further action is not warranted for SWMU 3 soils.

Site groundwater was evaluated by installing six new monitoring wells, and sampling the new and existing wells in October 2002. Results indicate that with the exception of aluminum, inorganic analytes do not exceed criteria for unrestricted (i.e., residential) land use. The pesticides alpha-BHC, delta-BHC, dieldrin, heptachlor epoxide, DDD, DDE, and DDT were each detected at concentrations that exceeded their MCLs (or residential RBCs in the absence of an MCL) in at least one sample, and are considered to be COCs in shallow groundwater at SWMU 3. A CMS is recommended to address these COCs in shallow site groundwater.

A CMS Work Plan for shallow groundwater at SWMU 3 is presented in Section 9.0 of this RFI Report Addendum.

9.0 CMS Work Plan for SWMU 3 Groundwater

The purpose of this CMS Work Plan is to identify and evaluate potential remedial alternatives for preventing unacceptable exposure to pesticides in shallow groundwater at SWMU 3. A focused CMS will be performed to evaluate (1) long-term shallow groundwater monitoring with LUCs, and (2) shallow groundwater remediation.

9.1 Remedial Action Objectives

Remedial action objectives (RAOs) are medium-specific goals that the remedial actions will be designed to accomplish in order to protect human health and the environment by preventing or reducing exposures under current and future land use conditions. The RAOs identified for shallow groundwater are (1) to prevent ingestion and direct/dermal contact with groundwater having unacceptable carcinogenic risk and noncarcinogenic hazard, and (2) to restore the shallow aquifer to beneficial use conditions.

9.2 Remedial Goal Options and Proposed Media Cleanup Standards

Typically after RAOs have been established and the risk assessment is complete, remedial goal options (RGOs) are developed for each RAO. The RGOs are based on assumptions about a particular land use scenario and include different residual risk levels for comparison. For example, to remediate surface soils to protect an onsite maintenance worker, RGOs might include remediating to anthropogenic background levels or to one of a variety of specific risk levels (such as 1E-06 or 1E-04). For each RGO, a specific MCS is determined for specific chemicals. These MCSs are expressed in conventional concentration units, such as milligrams per kilogram (mg/kg) or milligrams per liter (mg/L), for specific chemicals. Remediating the site to those specific MCSs would be suitable to demonstrate that the RAO has been achieved.

The exposure medium of concern for SWMU 3 is shallow groundwater. Because SWMU 3 is located within a developed area of the CNC and there are no surface water bodies in the immediate vicinity of the site, ecological exposures were not considered necessary for evaluation.

Potential MCSs for achieving RGOs protective of potentially exposed human receptors (e.g., site workers involved in monitoring and maintenance) under the anticipated future land use (industrial) will be presented in the CMS. Remedial alternatives for achieving these potential MCSs will be evaluated and described in the CMS.

The COCs identified in groundwater are DDD, DDE, DDT, alpha-BHC, delta-BHC, dieldrin, and heptchlor epoxide. Proposed MCSs for these chemicals are the EPA Drinking Water Standards (MCLs) (EPA, 2000), or if no MCL is available, the EPA Region III tap water RBCs (EPA, 2000). The table below presents these COCs and their respective MCLs and RBCs.

Chemical	EPA Drinking Water MCL (µg/L)	EPA Tap Water RBC (µg/L)
DDD	NA	0.28
DDE	NA	0.2
DDT	NA	0.2
Alpha-BHC	NA	0.011
Delta-BHC	NA	0.011
Dieldrin	NA	0.0042
Heptachlor Epoxide	0.2	NA

NA – Not Available

9.3 Corrective Measure Technology Focused Evaluation

This focused CMS will evaluate the options for preventing direct contact by future site workers or residents, including LUCs, and groundwater remediation to RBCs or MCLs. Technologies associated with LUCs will be evaluated, including deed restrictions against residential use, and long-term monitoring and maintenance. Technologies associated with groundwater remediation include monitoring with field filtration to eliminate turbidity, in situ groundwater treatment, and groundwater extraction and treatment.

Prior to implementing the CMS, it may be advisable to conduct an additional sampling of the monitoring wells and analyze both filtered and unfiltered groundwater samples to better assess site conditions.

9.4 Focused CMS Approach

This focused CMS will consist of the following three tasks. These tasks will be performed in the order presented below:

1. The corrective measure alternatives described above will be screened using several criteria and decision factors. Other corrective measure alternatives may also be evaluated in the CMS.
2. A preferred corrective measure alternative will be selected for each shallow groundwater.
3. The CMS and preferred corrective measure alternatives will be documented in the CMS report.

9.5 Approach to Evaluating Corrective Measure Alternatives

According to the RCRA permit issued by SCDHEC (SCDHEC, 1998), the alternatives will be evaluated using the following five standards:

1. Protect human health and the environment.
2. Attain MCSs (RGOs).
3. Control the source of releases to minimize future releases that may pose a threat to human health and the environment.
4. Comply with applicable standards for the management of wastes generated by remedial activities.
5. Other factors include (a) long-term reliability and effectiveness; (b) reduction in toxicity, mobility, or volume of wastes; (c) short-term effectiveness; (d) implementability; and (e) cost.

Each of the five criteria is defined in more detail below:

1. **Protect human health and the environment.** The alternatives will be evaluated on the basis of their ability to protect human health and the environment. The ability of an alternative to achieve this standard may or may not be independent of its ability to achieve the other standards. For example, an alternative may be protective of human health, but may not be able to attain the MCSs, if the MCSs are not directly tied to protecting human health.
2. **Attain MCSs (RGOs).** The alternatives will be evaluated on the basis of their ability to achieve the RGOs defined in this CMS Work Plan. Another aspect of this is the time frame to achieve the RGOs. Estimates of the time frame for the alternatives to achieve RGOs will be provided.

3. **Control the source of releases.** This deals with the control of releases of contamination from the source (the area in which the contamination originated). For example, blast media may be considered a source under the unrestricted land use exposure scenario, but be within RGOs under industrial land use.

4. **Comply with applicable standards for the management of wastes.** This deals with the management of wastes derived from implementing the alternatives, e.g., treatment or disposal of excavated material. The removal alternative will be designed to comply with all standards for management of wastes. Consequently, this will not be explicitly included in the detailed evaluation presented in the CMS.

5. **Other factors.** Five other factors must be considered if an alternative is found to meet the four criteria described above. These other factors are as follows:

a. **Long-term reliability and effectiveness**

The alternatives will be evaluated on the basis of their reliability and the potential impact should the alternative fail. In other words, a qualitative assessment will be made as to the chance of the alternative's failing and the consequences of that failure.

b. **Reduction in the toxicity, mobility, or volume of wastes**

Alternatives with technologies that reduce the toxicity, mobility, or volume of the contamination will be generally favored over those that do not. Consequently, a qualitative assessment of this factor will be performed for each alternative.

c. **Short-term effectiveness**

Alternatives will be evaluated on the basis of the risk they create during the implementation of the remedy. Factors that may be considered include fire, explosion, and exposure of workers to hazardous substances.

d. **Implementability**

The alternatives will be evaluated for their implementability by considering any difficulties associated with conducting the alternatives (such as the construction disturbances they may create), operation of the alternatives, and the availability of equipment and resources to implement the technologies comprising the alternatives.

e. **Cost**

A net present value of each alternative will be developed. These cost estimates will be used for the relative evaluation of the alternatives, not to bid or budget the work. The estimates will be based on information available at the time of the CMS and on a

conceptual design of the alternative. They will be "order of magnitude" estimates with a generally expected accuracy of -50 percent to +50 percent for the scope of action described for each alternative. The estimates will be categorized into capital costs and operations and maintenance costs for each alternative.

9.6 Focused CMS Report

The focused CMS report will present the identification, development, and evaluation of potential corrective measures for SWMU 3. A proposed outline of the report, as shown in Table 9-1, provides an example of the report format and content organization.

TABLE 9-1
Outline of Focused CMS Report for SWMU 3
Interim Measure Completion Report and CMS Work Plan, SWMU 3, Zone G, Charleston Naval Complex

Section No.	Section Title
1.0	**Introduction**
1.1	Corrective Measures Study Purpose and Scope
1.2	Report Organization
1.3	Background Information
1.3.1	Facility Description
1.3.2	Site History and Background
1.3.2.1	Nature and Extent of Contamination
1.3.2.2	Summary of Risk Assessment
2.0	**Remedial Goal Options**
3.0	**Detailed Analysis of Focused Alternatives**
3.1	Approach
3.2	Evaluation Criteria
3.3	Description of Groundwater Alternatives [a]
3.3.1	Alternative 1: Land Use Controls and Long-Term Monitoring
3.3.2	Alternative 2: Groundwater Treatment and Long-Term Monitoring
3.4	Comparative Analysis of Groundwater Alternatives
3.4	Comparative Analysis of Groundwater Alternatives
4.0	**Recommended Remedial Alternatives**
5.0	**References**
Appendix A	**Corrective Measure Alternative Cost Estimates[b]**
List of Tables	
List of Figures	

[a] Additional alternatives will be analyzed, if necessary.

[b] Additional appendices will be added, if necessary.

Section 10.0

10.0 References

CH2M-Jones. *Phase I Interim Measure Work Plan, SWMU 3, Zone* G, Charleston Naval Complex. Revision 0. October 2001.

CH2M-Jones. *Phase II Interim Measure Work Plan, SWMU 3, Zone* G, Charleston Naval Complex. Revision 0. March 2002a.

CH2M-Jones. *Sampling and Analysis Plan, SWMU 3, Zone* G, Charleston Naval Complex. March 3, 2002b.

CH2M-Jones. *Phase II Sampling and Analysis Plan, SWMU 3, Zone* G, Charleston Naval Complex. March 19, 2002c.

CH2M-Jones. *Phase III Sampling and Analysis Plan, SWMU 3, Zone* G, Charleston Naval Complex. April 2002d.

CH2M-Jones. *Groundwater Sampling and Analysis Plan, SWMU 3, Zone* G, Charleston Naval Complex. May 2002e.

CH2M-Jones. *Groundwater Sampling and Analysis Plan Addendum*, SWMU 3, Zone G, Charleston Naval Complex. July 2, 2002f.

EnSafe Inc. *Zone G RCRA Facility Investigation Report, Revision 0*. February 20, 1998.

EnSafe Inc. *Zone G RFI Report Workplan Addendum, NAVBASE Charleston*. January 17, 2000.

Environmental Detachment Charleston (Navy Detachment [DET]). *Completion Report, Interim/Stabilization Measure for SWMU 3, Charleston Naval Complex*. September 10, 1998.

Geraghty and Miller. *Confirmation Study - Assessment of Potential Oil and Hazardous Waste Contamination of Soil and Groundwater at the Charleston Naval Shipyard*. 1982.

U.S. Environmental Protection Agency (EPA). *Risk Assessment Guidance for Superfund*. Part A, July 1989.

U.S. Environmental Protection Agency (EPA). *Soil Screening Guidance: User's Guide*. Office of Solid Waste and Emergency Response (OSWER). April 1996a.

U.S. Environmental Protection Agency (EPA). *Soil Screening Guidance: Technical Background Document*. Office of Solid Waste and Emergency Response (OSWER). May 1996b.

Appendix A

COMPLETION REPORT

Interim/Stabilization Measure for SWMU 3

Charleston Naval Complex, Charleston, SC

ENVIRONMENTAL DETACHMENT CHARLESTON

Engineering Branch Head: _____ Date: 9/10/98

Prepared By: _____ Date: 9/14/98

REPORT GENERATED BY:

ENVIRONMENTAL DETACHMENT CHARLESTON

1899 NORTH HOBSON AVENUE

NORTH CHARLESTON, SC 29405

COMPLETION REPORT

INTERIM/STABLIZATION MEASURE FOR
SWMU 3
NAVAL BASE CHARLESTON
CHARLESTON, SC

Prepared for:

DEPARTMENT OF THE NAVY
SOUTHERN DIVISION
NAVAL FACILITIES ENGINEERING COMMAND
CHARLESTON SC

Prepared by:

Supervisor of Shipbuilding, Conversion and Repair,
USN, (SUPSHIP) Portsmouth Va.,
Environmental Detachment Charleston, S.C.
1899 North Hobson Ave.
North Charleston, SC 29405-2106

September 4, 1998

TABLE OF CONTENTS

Section **Page**

Table of Contents ii

List of Appendices iii

Acronyms, Abbreviations and Symbols iv

1. Introduction 1-1
   - 1.1 Installation Restoration Program 1-1
     - 1.1.1 Naval Base Charleston Installation Restoration Program 1-1
   - 1.2 Interim Measures 1-1
   - 1.3 Solid Waste Management Unit 1-1
   - 1.4 Solid Waste Management Unit Interim Measure 1-2

2. Interim Measure Execution 2-1
   - 2.1 Actions Required by Interim Measure Work Plan 2-1
   - 2.2 Observations Noted 2-1
   - 2.3 Plan Modifications and Justification 2-1

3. Interim Measure Outcome 3-1
   - 3.1 Site Conditions Following Completion of Work 3-1

TABLE OF CONTENTS (cont'd)

Section **Page**

4. Sampling 4-1
   - 4.1 Sampling Evolutions and Results 4-1
     - 4.1.1 Field Sampling 4-1
     - 4.1.2 Confirmation Sampling 4-1

5. Waste Generation 5-1
   - 5.1 Hazardous/Potentially Hazardous Waste 5-1
   - 5.2 Non-Hazardous Waste 5-1

Appendix A Site Maps

Appendix B Sample Documentation

Appendix C Photographs

Appendix D Non-Hazardous Waste Manifest

ACRONYMS, ABBREVIATIONS and SYMBOL

CMS	Corrective Measures Study
CY	Cubic Yards
DERP	Defense Environmental Restoration Program
DET	Environmental Detachment Charleston
IM	Interim Measure
PCB	Polychlorinated Biphenyl
ppm	Parts Per Million
RBC	Risk Based Concentrations
RCRA	Resource Conservation and Recovery Act
RFA	RCRA Facility Assessment
RFI	RCRA Facility Investigation
SCDHEC	South Carolina Department of Health and Environmental Control
SWMU	Solid Waste Management Unit
TCLP	Toxicity Characteristic Leaching Procedure

IMCR '98

SWMU 3

1. INTRODUCTION

1.1 INSTALLATION RESTORATION PROGRAM. The purpose of the Department of the Navy Installation Restoration Program is to identify, assess, characterize and clean up or control contamination from past hazardous waste disposal operations and hazardous material spills at Navy and Marine Corps activities. The Defense Environmental Restoration Program (DERP) is codified in the Superfund Amendments and Reauthorization Act Section 211 (10 USC 2701). The IR Program is a component of DERP.

1.1.1 Naval Base Charleston IR Program. At Naval Base Charleston, a Resource Conservation and Recovery Act (RCRA) Facility Assessment (RFA) was prepared which divided the Naval Base into zones and identified Solid Waste Management Units (SWMUs) and Areas of Concern (AOCs) within each zone. The RFA evaluated each SWMU and AOC and determined which sites required further investigation. Based on the RFA, a RCRA Facility Investigation (RFI) work plan has been or is being prepared for each zone containing SWMUs and AOCs requiring further investigation. On completion of the RFI for each Zone, a RFI report will be prepared for that zone. The RFI reports will identify SWMUs and AOCs containing wastes requiring remediation. Eventually, Corrective Measures Studies (CMSs) will be prepared to determine the best means of remediating each site.

1.2 INTERIM MEASURES. Interim Measures (IM) performed as part of the IR Program are intended to eliminate sources of environmental contamination or limit the spread of environmental contaminants prior to the completion of the RFI CMSs.

1.3 SWMU-3. SWMU-3 was previously a pesticide mixing area that originally consisted of a 50' X 25' concrete slab and a small shed, Bldg. 42-A. It is located southwest of Tank 39-D of the waste oil reclamation facility in Zone G. Prior to 1971, equipment for spraying and mixing pesticides was cleaned and rinsed outside the building. The slab and building have since been removed and Bldg. 249 was constructed on top of the site. Figure A-1 of Appendix A illustrates the site. Past

investigations have identified concentrations of Chlordane, Heptachlor, DDE and Polychlorinated Biphenyl (PCB) Aroclor 1248. The RFI sample points and the corresponding excavation area is shown on Figure A-2 of Appendix A.

1.4 SWMU-3 INTERIM MEASURE. During the interval between the RFI and the completion of the CMS, it was decided by Southern Division Naval Facilities Engineering Command that an IM would be performed by Supervisor of Shipbuilding, Conversion and Repair, United States Navy, Portsmouth Va. Environmental Detachment Charleston (DET). The objective of this IM was to excavate and dispose of pesticide and PCB contaminated soil. The excavation was to continue until a sampling program indicated with reasonable confidence that the concentrations of contaminants at the site were less than the residential limits specified by the United States Environmental Protection Agency Region III Risk Based Concentrations (RBCs), dated 1 April 1998 for Chlordane, Heptachlor, and DDE. The clean up level for PCB was < 1 ppm that is the clean soil definition as specified by 40 Code of Federal regulations (CFR) 761.125. This IM is consistent with the ultimate cleanup of the site and is not intended to circumvent the public participation process inherent within environmental cleanup under RCRA authority.

2. INTERIM MEASURE EXECUTION

2.1 ACTIONS REQUIRED BY INTERIM MEASURE WORK PLAN.

- Excavation and disposal of 22 cubic yards (cy) of pesticide and PCB contaminated soil in an area approximately 10' X 30' and 2' in depth.

- Well 003GW003 was abandoned in place in accordance with South Carolina Department of Health and Environmental Control Regulation R.61-71.10.

2.2 OBSERVATIONS NOTED. During the excavation well 003GW001 padhead was damaged. This damage was reported to the Clean Contractor who is addressing monitoring well deficiencies at Charleston Naval Complex.

2.3 PLAN MODIFICATIONS AND JUSTIFICATIONS. South Carolina Department of Heath and Environmental Control (SCDHEC) requested additional tests be taken for VOC and SVOCs. This was a concern since solvents are commonly used when cleaning pesticide equipment and the presence or absence of these constituents has not been adequately determined at this SWMU. Confirmation sampling for this Interim Measure has included analysis for VOC and SVOCs and results can be found in Appendix B.

3 INTERIM MEASURE OUTCOME

3.1 SITE CONDITIONS FOLLOWING COMPLETION OF WORK. Following completion of all site work on 28 July 1998, the DET had removed approximately 22 cy of contaminated soil. The site was backfilled and graded to surrounding area. Site photographs are included in Appendix C.

4. SAMPLING

4.1 SAMPLING EVOLUTIONS AND RESULTS.

4.1.1 Field Sampling. Field sampling consisted of field gas chromatograph testing to determine extent of contamination. This data was used to estimate the scope of work.

4.1.2 Confirmation Sampling. Upon completion of the excavation, grab samples were taken in the sidewalls and the bottom of the excavation to determine if the contaminants had been removed to the levels as described in paragraph 1.4 of this report. Sample locations can be found on Figure B-1 along with laboratory results located in Appendix B.

4.1.3 Waste Characterization Sampling. The pesticide contamination was characterized as non-hazardous. Toxicity Characteristic Leaching Procedure (TCLP) Pesticide Compounds, Appendix IX-Pesticides & PCB analytical results can be found in Appendix B.

5. WASTE GENERATION

5.1 HAZARDOUS / POTENTIALLY HAZARDOUS WASTE. No hazardous waste was generated at this site.

5.2 NON-HAZARDOUS WASTE. The contaminated soil was characterized as non-hazardous and was disposed to a Subtitle D landfill. Waste Manifest are located in Appendix D.

FIGURE A-1
SWMU 3 SITE MAP

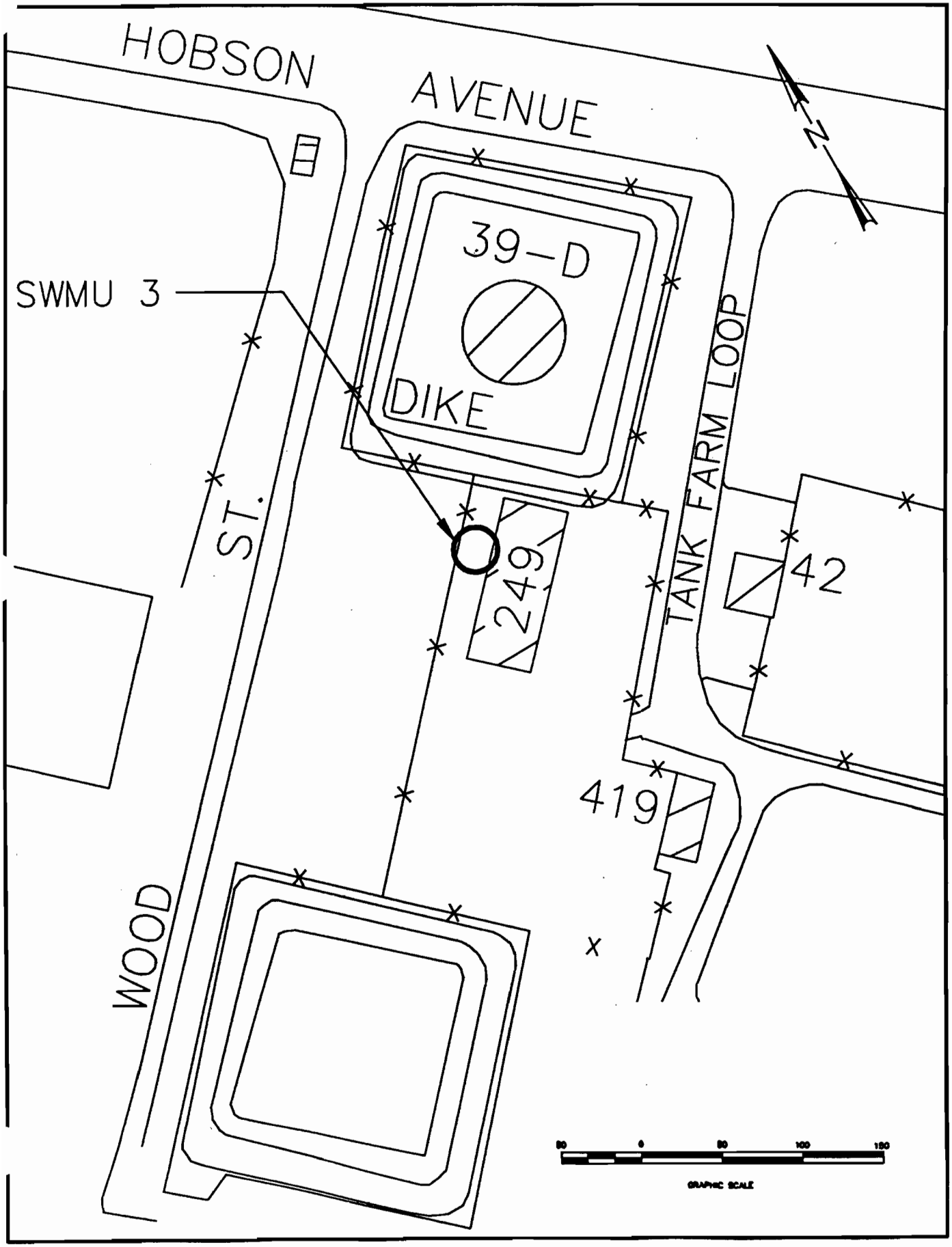

FIGURE A-2

SWMU 3 RFI SAMPLE POINTS & EXCAVATION AREA

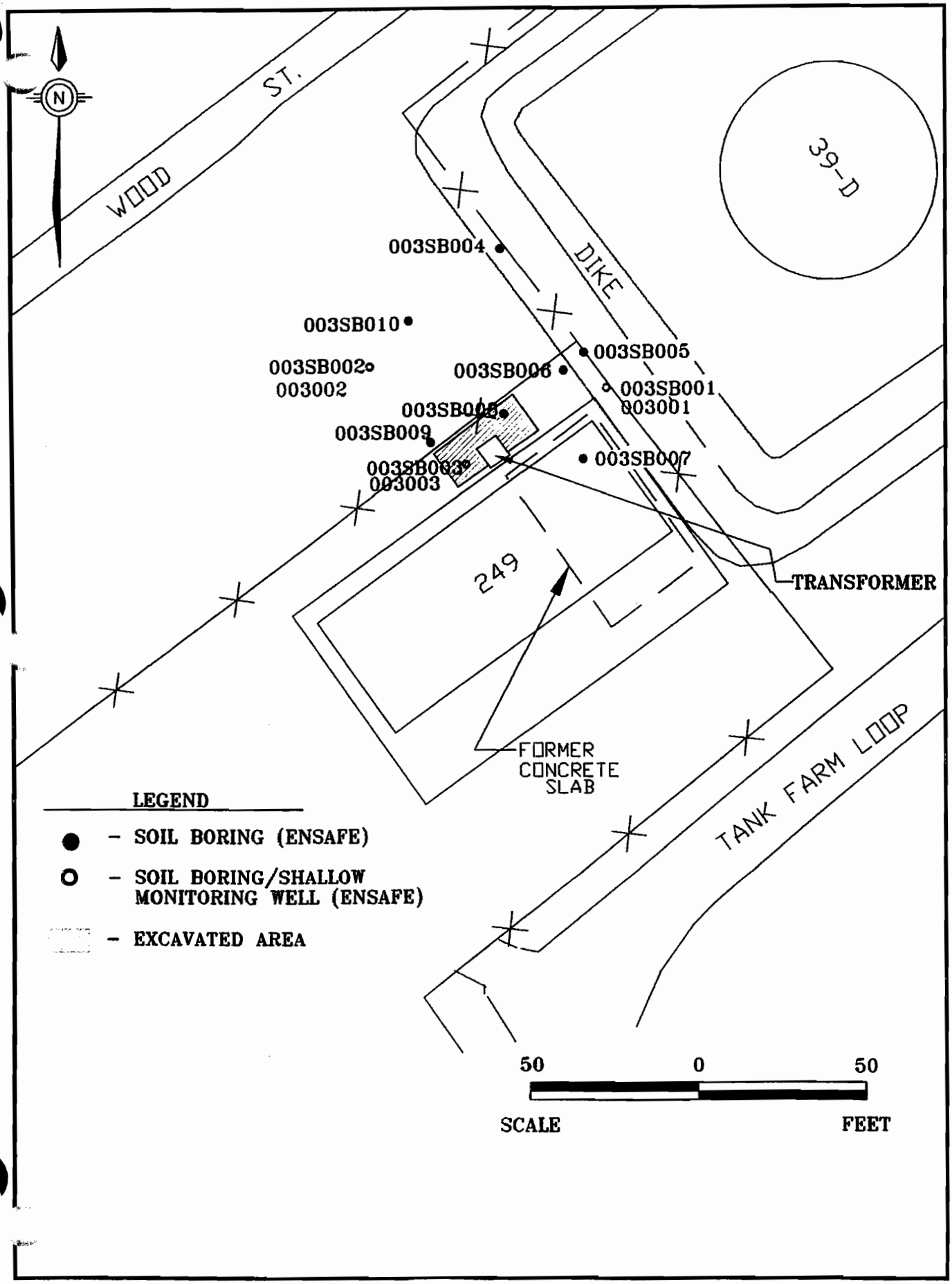

SAMPLE NUMBER	SAMPLE DATE (1998)	SAMPLE ID NUMBER / TEST (S) REQUESTED	STATE PLANE COORDINATES / RESULTS THAT EXCEEDED USEPA RESIDENTIAL RBCs
1	JULY 15	SPORT0755-1 NBCG0003S01101	373463.76 N 2318968.90 E
		DDE, HEPTACLOR ALPHA CLHORDANE GAMMA CHLORANDE PCB AROCLOR 1248	NONE
2	JULY 15	SPORT0755-2 NBCG0003S01201	373456.35 N 2318975.76 E
		DDE, HEPTACLOR ALPHA CLHORDANE GAMMA CHLORANDE PCB AROCLOR 1248	NONE
3	JULY 15	SPORT0755-3 NBCG0003S01301	373451.62 N 2318960.05 E
		DDE, HEPTACLOR ALPHA CLHORDANE GAMMA CHLORANDE PCB AROCLOR 1248	NONE

Table B-1 (5 sheets)

SAMPLE NUMBER	SAMPLE DATE (1998)	SAMPLE ID NUMBER / TEST (S) REQUESTED	STATE PLANE COORDINATES / RESULTS THAT EXCEEDED USEPA RESIDENTIAL RBCs
4	JULY 15	SPORT0755-4 NBCG0003S01401	373437.17 N 2318951.10 E
		DDE, HEPTACLOR ALPHA CLHORDANE GAMMA CHLORANDE PCB AROCLOR 1248	NONE
5	JULY 15	SPORT0755-5 NBCG0003S01501	373446.87 N 2318944.21 E
		DDE, HEPTACLOR ALPHA CLHORDANE GAMMA CHLORANDE PCB AROCLOR 1248	NONE
6	JULY 15	SPORT0755-6 NBCG0003S01601	373456.04 N 2318956.50 E
		DDE, HEPTACLOR ALPHA CLHORDANE GAMMA CHLORANDE PCB AROCLOR 1248	NONE

Table B-1 (5 sheets)

SAMPLE NUMBER	SAMPLE DATE (1998)	SAMPLE ID NUMBER / TEST (S) REQUESTED	STATE PLANE COORDINATES / RESULTS THAT EXCEEDED USEPA RESIDENTIAL RBCs
7	JULY 15	SPORT0755-7 NBCG0003S01701 DDE, HEPTACLOR ALPHA CLHORDANE GAMMA CHLORANDE PCB AROCLOR 1248	373455.34 N 2318963.78 E NONE
8	JULY 15	SPORT0755-8 NBCG0003S01801 DDE, HEPTACLOR ALPHA CLHORDANE GAMMA CHLORANDE PCB AROCLOR 1248	373447.94 N 2318953.87 E NONE

Table B-1 (5 sheets)

SAMPLE NUMBER	SAMPLE DATE (1998)	SAMPLE ID NUMBER TEST (S) REQUESTED	STATE PLANE COORDINATES RESULTS THAT EXCEEDED USEPA RESIDENTIAL RBCs
1	AUGUST 17	SPORT0882-1 NBCG0003S01901 VOA (APP IX), SVOA (APP IX BAN)	373463.76 N 2318968.90 E BENZO (a) PYRENE BENZO (b) FLUORANTHENE
2	AUGUST 17	SPORT0882-2 NBCG0003S02001 VOA (APP IX), SVOA (APP IX BAN)	373456.35 N 2318975.76 E NONE
3	AUGUST 17	SPORTO882-3 NBCG0003S02103 VOA (APP IX), SVOA (APP IX BAN)	373451.62 N 2318960.05 E NONE
4	AUGUST 17	SPORTO882-4 NBCG0003S02201 VOA (APP IX), SVOA (APP IX BAN)	373437.17 N 2318951.10 E NONE

Table B-1 (5 sheets)

SAMPLE NUMBER	SAMPLE DATE (1998)	SAMPLE ID NUMBER / TEST (S) REQUESTED	STATE PLANE COORDINATES / RESULTS THAT EXCEEDED USEPA RESIDENTIAL RBCs
5	AUGUST 17	SPORT0882-5 NBCG0003S02301 VOA (APP IX), SVOA (APP IX BAN)	373446.87 N 2318944.21 E NONE
6	AUGUST 17	SPORT0882-6 NBCG0003S02401 VOA (APP IX), SVOA (APP IX BAN)	373456.04 N 2318956.50 E NONE
7	AUGUST 17	SPORTO882-7 NBCG0003S02503 VOA (APP IX), SVOA (APP IX BAN)	373455.34 N 2318963.78 E NONE
8	AUGUST 17	SPORTO882-8 NBCG0003S02603 VOA (APP IX), SVOA (APP IX BAN)	373447.94 N 2318953.87 E NONE

Table B-1 (5 sheets)

FIGURE B-1

SWMU 3 CONFIRMATORY SAMPLING GRID MAP

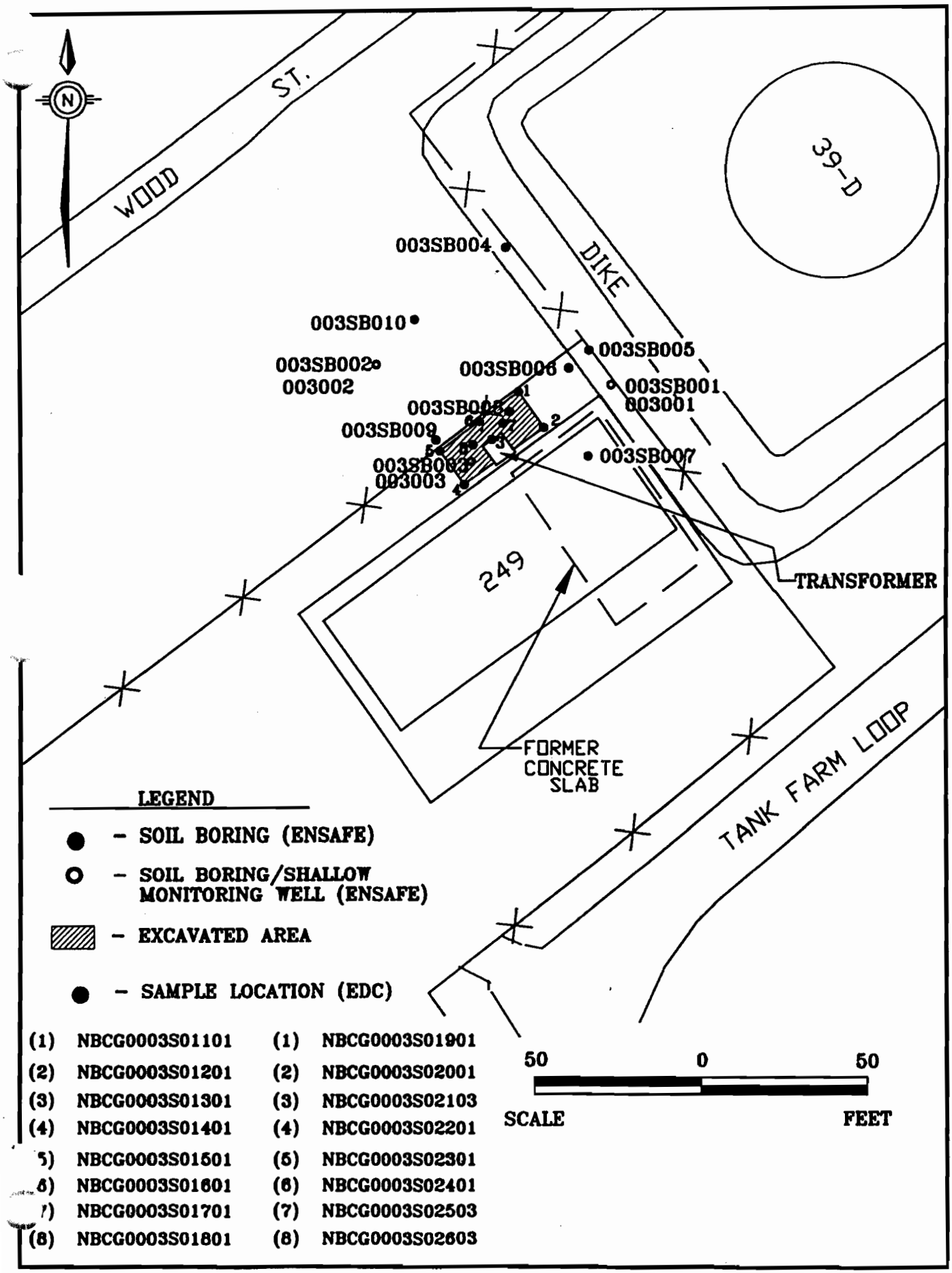

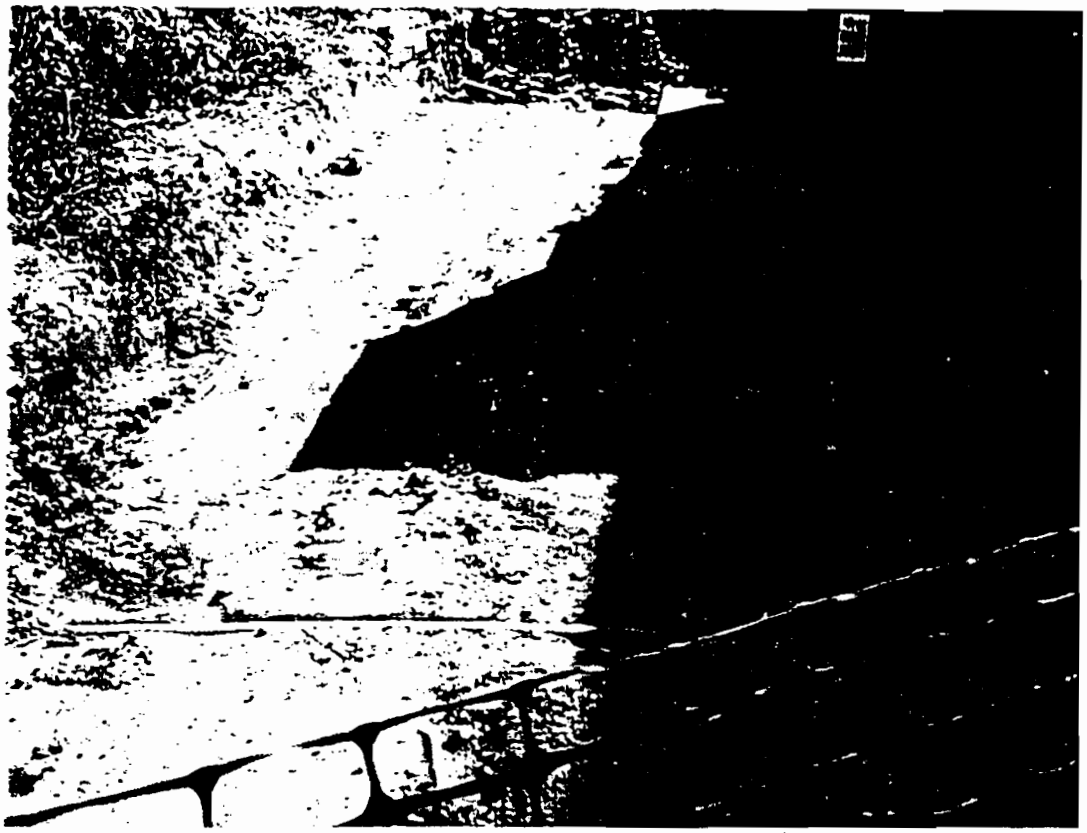

Photo C-1 Site after excavation viewed from west end of excavation

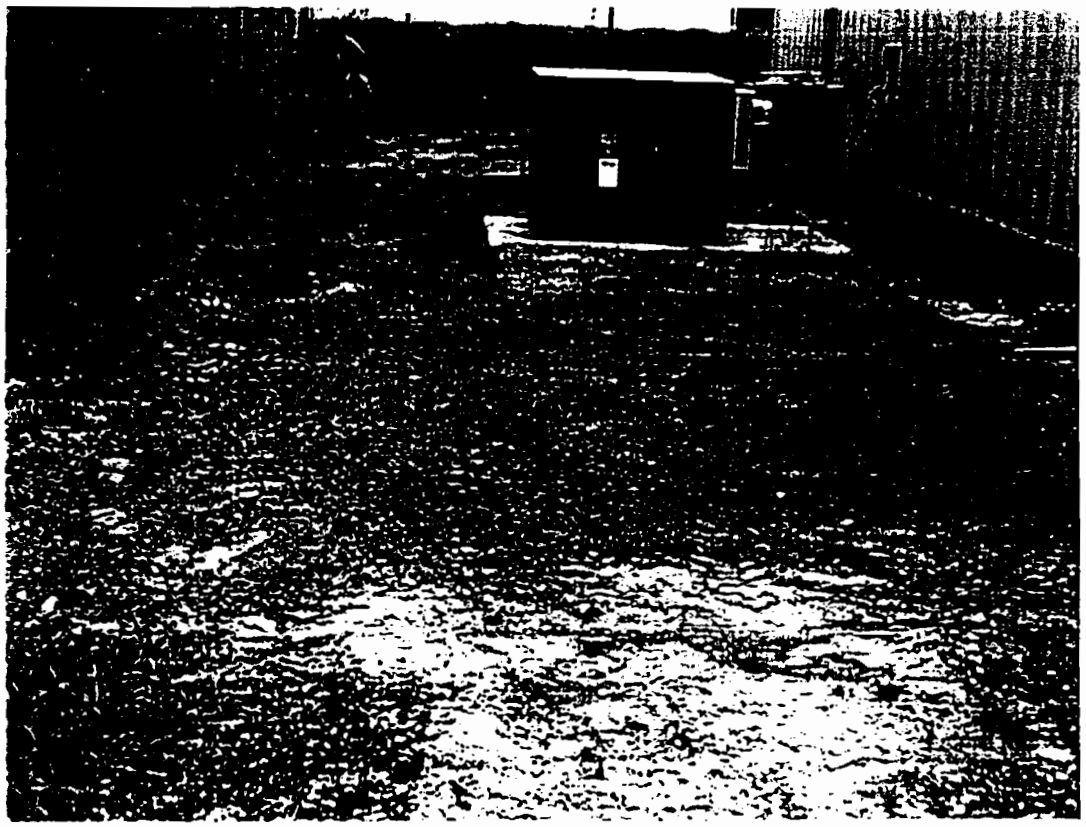

Photo C-2 Work plan complete, excavation filled in, viewed from west end of excavation

	StationID	G003SB021		G003SB021		G003SB021	
	SampleID	003CB02101 (0-1ft)		003SB02101 (0-1ft)		003SB02102 (3-5ft)	
	DateCollected	11/29/2001		11/29/2001		11/29/2001	
	DateExtracted	12/4/2001		12/4/2001		12/4/2001	
	DateAnalyzed	12/4/2001		12/4/2001		12/4/2001	
	SDGNumber	CNC55		CNC55		CNC55	
Parameter	**Units**						
Chloromethane	ug/kg	9.4	U	9.7	U	9	U
Vinyl chloride	ug/kg	9.4	U	9.7	U	9	U
Bromomethane	ug/kg	9.4	U	9.7	U	9	U
Chloroethane	ug/kg	9.4	U	9.7	U	9	U
1,1-Dichloroethene	ug/kg	4.7	U	4.9	U	4.5	U
Acetone	ug/kg	9.4	UJ	140	J	90	J
Carbon Disulfide	ug/kg	4.7	U	4.9	U	4.5	U
Methylene Chloride	ug/kg	4.7	U	4.9	U	4.5	U
trans-1,2-Dichloroethene	ug/kg	4.7	U	4.9	U	4.5	U
1,1-Dichloroethane	ug/kg	4.7	U	4.9	U	4.5	U
Vinyl acetate	ug/kg	9.4	UJ	9.7	UJ	9	UJ
Methyl ethyl ketone (2-Butanone)	ug/kg	9.4	U	14	=	9	U
cis-1,2-Dichloroethylene	ug/kg	4.7	U	4.9	U	4.5	U
1,2-Dichloroethene (total)	ug/kg	4.7	U	4.9	U	4.5	U
Chloroform	ug/kg	4.7	U	4.9	U	4.5	U
1,1,1-Trichloroethane	ug/kg	4.7	U	4.9	U	4.5	U
Carbon Tetrachloride	ug/kg	4.7	U	4.9	U	4.5	U
1,2-Dichloroethane	ug/kg	4.7	U	4.9	U	4.5	U
Benzene	ug/kg	4.7	U	4.9	U	4.5	U
Trichloroethylene (TCE)	ug/kg	4.7	U	4.9	U	4.5	U
1,2-Dichloropropane	ug/kg	4.7	U	4.9	U	4.5	U
Bromodichloromethane	ug/kg	4.7	U	4.9	U	4.5	U
2-Chloroethyl vinyl ether	ug/kg	9.4	R	9.7	R	9	R
cis-1,3-Dichloropropene	ug/kg	4.7	U	4.9	U	4.5	U
Methyl isobutyl ketone (4-Methyl-2-pentanone)	ug/kg	9.4	U	9.7	U	9	U
Toluene	ug/kg	4.7	U	2.3	J	4.5	U
trans-1,3-Dichloropropene	ug/kg	4.7	U	4.9	U	4.5	U
1,1,2-Trichloroethane	ug/kg	4.7	U	4.9	U	4.5	U
2-Hexanone	ug/kg	9.4	U	9.7	U	9	U
Tetrachloroethylene (PCE)	ug/kg	4.7	U	4.9	U	4.5	U

	StationID	G003SB022		G003SB022		G003SB023	
	SampleID	003SB02201 (0-1ft)		003SB02202 (3-5ft)		003SB02301 (0-1ft)	
	DateCollected	11/29/2001		11/29/2001		11/29/2001	
	DateExtracted	12/4/2001		12/4/2001		12/4/2001	
	DateAnalyzed	12/4/2001		12/4/2001		12/4/2001	
	SDGNumber	CNC54		CNC54		CNC54	
Parameter	**Units**						
Chloromethane	ug/kg	10	U	10	U	10	U
Vinyl chloride	ug/kg	10	U	10	U	10	U
Bromomethane	ug/kg	10	U	10	U	10	U
Chloroethane	ug/kg	10	U	10	U	10	U
1,1-Dichloroethene	ug/kg	5.1	U	5.1	U	5.1	U
Acetone	ug/kg	54	UJ	100	J	120	J
Carbon Disulfide	ug/kg	5.1	UJ	5.1	UJ	4.4	J
Methylene Chloride	ug/kg	5.1	U	5.1	U	5.1	U
trans-1,2-Dichloroethene	ug/kg	5.1	U	5.1	U	5.1	U
1,1-Dichloroethane	ug/kg	5.1	U	5.1	U	5.1	U
Vinyl acetate	ug/kg	10	U	10	U	10	U
Methyl ethyl ketone (2-Butanone)	ug/kg	10	U	6.2	J	14	J
cis-1,2-Dichloroethylene	ug/kg	5.1	U	5.1	U	5.1	U
1,2-Dichloroethene (total)	ug/kg	5.1	U	5.1	U	5.1	U
Chloroform	ug/kg	5.1	U	5.1	U	5.1	U
1,1,1-Trichloroethane	ug/kg	5.1	U	5.1	U	5.1	U
Carbon Tetrachloride	ug/kg	5.1	U	5.1	U	5.1	U
1,2-Dichloroethane	ug/kg	5.1	U	5.1	U	5.1	U
Benzene	ug/kg	5.1	U	5.1	U	5.1	U
Trichloroethylene (TCE)	ug/kg	5.1	U	5.1	U	5.1	U
1,2-Dichloropropane	ug/kg	5.1	U	5.1	U	5.1	U
Bromodichloromethane	ug/kg	5.1	U	5.1	U	5.1	U
2-Chloroethyl vinyl ether	ug/kg	10	UJ	10	UJ	10	UJ
cis-1,3-Dichloropropene	ug/kg	5.1	U	5.1	U	5.1	U
Methyl isobutyl ketone (4-Methyl-2-pentanone)	ug/kg	10	U	10	U	10	U
Toluene	ug/kg	5.1	U	5.1	U	5.1	U
trans-1,3-Dichloropropene	ug/kg	5.1	U	5.1	U	5.1	U
1,1,2-Trichloroethane	ug/kg	5.1	U	5.1	U	5.1	U
2-Hexanone	ug/kg	10	U	10	U	10	U
Tetrachloroethylene (PCE)	ug/kg	5.1	U	5.1	U	5.1	U

	StationID	G003SB023		G003SB024		G003SB024	
	SampleID	003SB02302 (3-5ft)		003SB02401 (0-1ft)		003SB02401DL (0-1ft)	
	DateCollected	11/29/2001		11/29/2001		11/29/2001	
	DateExtracted	12/4/2001		12/4/2001		12/7/2001	
	DateAnalyzed	12/4/2001		12/4/2001		12/7/2001	
	SDGNumber	CNC54		CNC54		CNC54	
Parameter	**Units**						
Chloromethane	ug/kg	9.6	U	10	U	420	R
Vinyl chloride	ug/kg	9.6	U	10	U	420	R
Bromomethane	ug/kg	9.6	U	10	U	420	R
Chloroethane	ug/kg	9.6	U	10	U	420	R
1,1-Dichloroethene	ug/kg	4.8	U	5.2	U	210	R
Acetone	ug/kg	78	UJ	3600	R	24000	J
Carbon Disulfide	ug/kg	4.8	UJ	10	J	210	R
Methylene Chloride	ug/kg	4.8	U	5.2	U	110	R
trans-1,2-Dichloroethene	ug/kg	4.8	U	5.2	U	210	R
1,1-Dichloroethane	ug/kg	4.8	U	5.2	U	210	R
Vinyl acetate	ug/kg	9.6	U	10	U	420	R
Methyl ethyl ketone (2-Butanone)	ug/kg	6.2	J	22	J	1100	R
cis-1,2-Dichloroethylene	ug/kg	4.8	U	5.2	U	210	R
1,2-Dichloroethene (total)	ug/kg	4.8	U	5.2	U	210	R
Chloroform	ug/kg	4.8	U	5.2	U	210	R
1,1,1-Trichloroethane	ug/kg	4.8	U	5.2	U	210	R
Carbon Tetrachloride	ug/kg	4.8	U	5.2	U	210	R
1,2-Dichloroethane	ug/kg	4.8	U	5.2	U	210	R
Benzene	ug/kg	4.8	U	3.4	J	210	R
Trichloroethylene (TCE)	ug/kg	4.8	U	5.2	U	210	R
1,2-Dichloropropane	ug/kg	4.8	U	5.2	U	210	R
Bromodichloromethane	ug/kg	4.8	U	5.2	U	210	R
2-Chloroethyl vinyl ether	ug/kg	9.6	UJ	10	UJ	2100	R
cis-1,3-Dichloropropene	ug/kg	4.8	U	5.2	U	210	R
Methyl isobutyl ketone (4-Methyl-2-pentanone)	ug/kg	9.6	U	10	U	1100	R
Toluene	ug/kg	4.8	U	3.1	J	210	R
trans-1,3-Dichloropropene	ug/kg	4.8	U	5.2	U	210	R
1,1,2-Trichloroethane	ug/kg	4.8	U	5.2	U	210	R
2-Hexanone	ug/kg	9.6	U	10	U	1100	R
Tetrachloroethylene (PCE)	ug/kg	4.8	U	5.2	U	210	R

	StationID	G003SB024		G003SB025		G003SB025	
	SampleID	003SB02402 (3-5ft)		003SB02501 (0-1ft)		003SB02502 (3-5ft)	
	DateCollected	11/29/2001		11/29/2001		11/29/2001	
	DateExtracted	12/4/2001		12/4/2001		12/4/2001	
	DateAnalyzed	12/4/2001		12/4/2001		12/4/2001	
	SDGNumber	CNC54		CNC54		CNC54	
Parameter	**Units**						
Chloromethane	ug/kg	9.4	U	9.7	U	9.1	U
Vinyl chloride	ug/kg	9.4	U	9.7	U	9.1	U
Bromomethane	ug/kg	9.4	U	9.7	U	9.1	U
Chloroethane	ug/kg	9.4	U	9.7	U	9.1	U
1,1-Dichloroethene	ug/kg	4.7	U	4.8	U	4.5	U
Acetone	ug/kg	410	J	120	J	180	J
Carbon Disulfide	ug/kg	4.7	UJ	4.8	UJ	4.5	UJ
Methylene Chloride	ug/kg	4.7	U	4.8	U	4.5	U
trans-1,2-Dichloroethene	ug/kg	4.7	U	4.8	U	4.5	U
1,1-Dichloroethane	ug/kg	4.7	U	4.8	U	4.5	U
Vinyl acetate	ug/kg	9.4	U	9.7	U	9.1	U
Methyl ethyl ketone (2-Butanone)	ug/kg	5.5	J	10	J	9.1	U
cis-1,2-Dichloroethylene	ug/kg	4.7	U	4.8	U	4.5	U
1,2-Dichloroethene (total)	ug/kg	4.7	U	4.8	U	4.5	U
Chloroform	ug/kg	4.7	U	4.8	U	4.5	U
1,1,1-Trichloroethane	ug/kg	4.7	U	4.8	U	4.5	U
Carbon Tetrachloride	ug/kg	4.7	U	4.8	U	4.5	U
1,2-Dichloroethane	ug/kg	4.7	U	4.8	U	4.5	U
Benzene	ug/kg	4.7	U	4.8	U	4.5	U
Trichloroethylene (TCE)	ug/kg	4.7	U	4.8	U	4.5	U
1,2-Dichloropropane	ug/kg	4.7	U	4.8	U	4.5	U
Bromodichloromethane	ug/kg	4.7	U	4.8	U	4.5	U
2-Chloroethyl vinyl ether	ug/kg	9.4	UJ	9.7	UJ	9.1	UJ
cis-1,3-Dichloropropene	ug/kg	4.7	U	4.8	U	4.5	U
Methyl isobutyl ketone (4-Methyl-2-pentanone)	ug/kg	9.4	U	9.7	U	9.1	U
Toluene	ug/kg	4.7	U	4.8	U	4.5	U
trans-1,3-Dichloropropene	ug/kg	4.7	U	4.8	U	4.5	U
1,1,2-Trichloroethane	ug/kg	4.7	U	4.8	U	4.5	U
2-Hexanone	ug/kg	9.4	U	9.7	U	9.1	U
Tetrachloroethylene (PCE)	ug/kg	4.7	U	4.8	U	4.5	U

	StationID	G003SB026		G003SB026		G003SB027	
	SampleID	003SB02601 (0-1ft)		003SB02602 (3-5ft)		003SB02701 (0-1ft)	
	DateCollected	11/29/2001		11/29/2001		11/29/2001	
	DateExtracted	12/4/2001		12/4/2001		12/4/2001	
	DateAnalyzed	12/4/2001		12/4/2001		12/4/2001	
	SDGNumber	CNC54		CNC54		CNC54	
Parameter	**Units**						
Chloromethane	ug/kg	9.5	U	10	U	12	U
Vinyl chloride	ug/kg	9.5	U	10	U	12	U
Bromomethane	ug/kg	9.5	U	10	U	12	U
Chloroethane	ug/kg	9.5	U	10	U	12	U
1,1-Dichloroethene	ug/kg	4.7	U	5.2	U	6.2	U
Acetone	ug/kg	120	J	82	J	57	UJ
Carbon Disulfide	ug/kg	4.7	UJ	5.2	UJ	6.2	UJ
Methylene Chloride	ug/kg	4.7	U	5.2	U	6.2	U
trans-1,2-Dichloroethene	ug/kg	4.7	U	5.2	U	6.2	U
1,1-Dichloroethane	ug/kg	4.7	U	5.2	U	6.2	U
Vinyl acetate	ug/kg	9.5	U	10	U	12	U
Methyl ethyl ketone (2-Butanone)	ug/kg	7.8	J	5.5	J	12	U
cis-1,2-Dichloroethylene	ug/kg	4.7	U	5.2	U	6.2	U
1,2-Dichloroethene (total)	ug/kg	4.7	U	5.2	U	6.2	U
Chloroform	ug/kg	4.7	U	5.2	U	6.2	U
1,1,1-Trichloroethane	ug/kg	4.7	U	5.2	U	6.2	U
Carbon Tetrachloride	ug/kg	4.7	U	5.2	U	6.2	U
1,2-Dichloroethane	ug/kg	4.7	U	5.2	U	6.2	U
Benzene	ug/kg	4.7	U	5.2	U	6.2	U
Trichloroethylene (TCE)	ug/kg	4.7	U	5.2	U	6.2	U
1,2-Dichloropropane	ug/kg	4.7	U	5.2	U	6.2	U
Bromodichloromethane	ug/kg	4.7	U	5.2	U	6.2	U
2-Chloroethyl vinyl ether	ug/kg	9.5	UJ	10	UJ	12	UJ
cis-1,3-Dichloropropene	ug/kg	4.7	U	5.2	U	6.2	U
Methyl isobutyl ketone (4-Methyl-2-pentanone)	ug/kg	9.5	U	10	U	12	U
Toluene	ug/kg	4.7	U	5.2	U	6.2	U
trans-1,3-Dichloropropene	ug/kg	4.7	U	5.2	U	6.2	U
1,1,2-Trichloroethane	ug/kg	4.7	U	5.2	U	6.2	U
2-Hexanone	ug/kg	9.5	U	10	U	12	U
Tetrachloroethylene (PCE)	ug/kg	4.7	U	5.2	U	6.2	U

	StationID	G003SB027		G003SB028		G003SB028	
	SampleID	003SB02702 (3-5ft)		003SB02801 (0-1ft)		003SB02802 (3-5ft)	
	DateCollected	11/29/2001		11/29/2001		11/29/2001	
	DateExtracted	12/4/2001		12/4/2001		12/4/2001	
	DateAnalyzed	12/4/2001		12/4/2001		12/4/2001	
	SDGNumber	CNC54		CNC54		CNC54	
Parameter	**Units**						
Chloromethane	ug/kg	9.2	U	12	U	9.5	U
Vinyl chloride	ug/kg	9.2	U	12	U	9.5	U
Bromomethane	ug/kg	9.2	U	12	U	9.5	U
Chloroethane	ug/kg	9.2	U	12	U	9.5	U
1,1-Dichloroethene	ug/kg	4.6	U	6.1	U	4.8	U
Acetone	ug/kg	45	UJ	26	UJ	41	UJ
Carbon Disulfide	ug/kg	4.6	UJ	6.1	UJ	4.8	UJ
Methylene Chloride	ug/kg	4.6	U	6.1	U	4.8	UJ
trans-1,2-Dichloroethene	ug/kg	4.6	U	6.1	U	4.8	U
1,1-Dichloroethane	ug/kg	4.6	U	6.1	U	4.8	U
Vinyl acetate	ug/kg	9.2	U	12	U	9.5	UJ
Methyl ethyl ketone (2-Butanone)	ug/kg	9.2	U	12	U	9.5	U
cis-1,2-Dichloroethylene	ug/kg	4.6	U	6.1	U	4.8	U
1,2-Dichloroethene (total)	ug/kg	4.6	U	6.1	U	4.8	U
Chloroform	ug/kg	4.6	U	6.1	U	4.8	U
1,1,1-Trichloroethane	ug/kg	4.6	U	6.1	U	4.8	U
Carbon Tetrachloride	ug/kg	4.6	U	6.1	U	4.8	U
1,2-Dichloroethane	ug/kg	4.6	U	6.1	U	4.8	U
Benzene	ug/kg	4.6	U	6.1	U	4.8	U
Trichloroethylene (TCE)	ug/kg	4.6	U	6.1	U	4.8	U
1,2-Dichloropropane	ug/kg	4.6	U	6.1	U	4.8	U
Bromodichloromethane	ug/kg	4.6	U	6.1	U	4.8	U
2-Chloroethyl vinyl ether	ug/kg	9.2	UJ	12	UJ	9.5	UJ
cis-1,3-Dichloropropene	ug/kg	4.6	U	6.1	U	4.8	U
Methyl isobutyl ketone (4-Methyl-2-pentanone)	ug/kg	9.2	U	12	U	9.5	U
Toluene	ug/kg	4.6	U	6.1	U	4.8	U
trans-1,3-Dichloropropene	ug/kg	4.6	U	6.1	U	4.8	U
1,1,2-Trichloroethane	ug/kg	4.6	U	6.1	U	4.8	U
2-Hexanone	ug/kg	9.2	U	12	U	9.5	U
Tetrachloroethylene (PCE)	ug/kg	4.6	U	6.1	U	4.8	U

	StationID	G003SB029		G003SB029		G003SB029	
	SampleID	003CB02902 (3-5ft)		003SB02901 (0-1ft)		003SB02902 (3-5ft)	
	DateCollected	11/29/2001		11/29/2001		11/29/2001	
	DateExtracted	12/4/2001		12/5/2001		12/5/2001	
	DateAnalyzed	12/4/2001		12/5/2001		12/5/2001	
	SDGNumber	CNC54		CNC54		CNC54	
Parameter	**Units**						
Chloromethane	ug/kg	10	U	10	U	10	U
Vinyl chloride	ug/kg	10	U	10	U	10	U
Bromomethane	ug/kg	10	U	10	U	10	U
Chloroethane	ug/kg	10	U	10	U	10	U
1,1-Dichloroethene	ug/kg	5.1	U	5.2	U	5	U
Acetone	ug/kg	130	J	560	J	50	J
Carbon Disulfide	ug/kg	5.1	UJ	5.2	UJ	5	UJ
Methylene Chloride	ug/kg	5.1	U	5.2	U	5	U
trans-1,2-Dichloroethene	ug/kg	5.1	U	5.2	U	5	U
1,1-Dichloroethane	ug/kg	5.1	U	5.2	U	5	U
Vinyl acetate	ug/kg	10	U	10	U	10	U
Methyl ethyl ketone (2-Butanone)	ug/kg	9.6	J	8	J	6.3	J
cis-1,2-Dichloroethylene	ug/kg	5.1	U	5.2	U	5	U
1,2-Dichloroethene (total)	ug/kg	5.1	U	5.2	U	5	U
Chloroform	ug/kg	5.1	U	5.2	U	5	U
1,1,1-Trichloroethane	ug/kg	5.1	U	5.2	U	5	U
Carbon Tetrachloride	ug/kg	5.1	U	5.2	U	5	U
1,2-Dichloroethane	ug/kg	5.1	U	5.2	U	5	U
Benzene	ug/kg	5.1	U	5.2	U	5	U
Trichloroethylene (TCE)	ug/kg	5.1	U	5.2	U	5	U
1,2-Dichloropropane	ug/kg	5.1	U	5.2	U	5	U
Bromodichloromethane	ug/kg	5.1	U	5.2	U	5	U
2-Chloroethyl vinyl ether	ug/kg	10	UJ	10	UJ	10	UJ
cis-1,3-Dichloropropene	ug/kg	5.1	U	5.2	U	5	U
Methyl isobutyl ketone (4-Methyl-2-pentanone)	ug/kg	10	U	10	U	10	U
Toluene	ug/kg	5.1	U	5.2	U	5	U
trans-1,3-Dichloropropene	ug/kg	5.1	U	5.2	U	5	U
1,1,2-Trichloroethane	ug/kg	5.1	U	5.2	U	5	U
2-Hexanone	ug/kg	10	U	10	U	10	U
Tetrachloroethylene (PCE)	ug/kg	5.1	U	5.2	U	5	U

	StationID	G003SB030		G003SB030		G003SB031	
	SampleID	003SB03001 (0-1ft)		003SB03002 (3-5ft)		003SB03101 (0-1ft)	
	DateCollected	11/29/2001		11/29/2001		11/29/2001	
	DateExtracted	12/4/2001		12/4/2001		12/5/2001	
	DateAnalyzed	12/4/2001		12/4/2001		12/5/2001	
	SDGNumber	CNC54		CNC54		CNC54	
Parameter	**Units**						
Chloromethane	ug/kg	11	U	9.4	U	10	U
Vinyl chloride	ug/kg	11	U	9.4	U	10	U
Bromomethane	ug/kg	11	U	9.4	U	10	U
Chloroethane	ug/kg	11	U	9.4	U	10	U
1,1-Dichloroethene	ug/kg	5.5	U	4.7	U	5.1	U
Acetone	ug/kg	1000	J	110	J	310	J
Carbon Disulfide	ug/kg	5.5	UJ	4.7	UJ	7.3	J
Methylene Chloride	ug/kg	5.5	U	4.7	U	5.1	U
trans-1,2-Dichloroethene	ug/kg	5.5	U	4.7	U	5.1	U
1,1-Dichloroethane	ug/kg	5.5	U	4.7	U	5.1	U
Vinyl acetate	ug/kg	11	U	9.4	U	10	U
Methyl ethyl ketone (2-Butanone)	ug/kg	11	U	9.5	J	11	=
cis-1,2-Dichloroethylene	ug/kg	5.5	U	4.7	U	5.1	U
1,2-Dichloroethene (total)	ug/kg	5.5	U	4.7	U	5.1	U
Chloroform	ug/kg	5.5	U	4.7	U	5.1	U
1,1,1-Trichloroethane	ug/kg	5.5	U	4.7	U	5.1	U
Carbon Tetrachloride	ug/kg	5.5	U	4.7	U	5.1	U
1,2-Dichloroethane	ug/kg	5.5	U	4.7	U	5.1	U
Benzene	ug/kg	5.5	U	4.7	U	5.1	U
Trichloroethylene (TCE)	ug/kg	5.5	U	4.7	U	5.1	U
1,2-Dichloropropane	ug/kg	5.5	U	4.7	U	5.1	U
Bromodichloromethane	ug/kg	5.5	U	4.7	U	5.1	U
2-Chloroethyl vinyl ether	ug/kg	11	UJ	9.4	UJ	10	UJ
cis-1,3-Dichloropropene	ug/kg	5.5	U	4.7	U	5.1	U
Methyl isobutyl ketone (4-Methyl-2-pentanone)	ug/kg	11	U	9.4	U	10	U
Toluene	ug/kg	5.5	U	4.7	U	5.1	U
trans-1,3-Dichloropropene	ug/kg	5.5	U	4.7	U	5.1	U
1,1,2-Trichloroethane	ug/kg	5.5	U	4.7	U	5.1	U
2-Hexanone	ug/kg	11	U	9.4	U	10	U
Tetrachloroethylene (PCE)	ug/kg	5.5	U	4.7	U	5.1	U

	StationID	G003SB031		G003SB032		G003SB032	
	SampleID	003SB03102 (3-5ft)		003SB03201 (0-1ft)		003SB03202 (3-5ft)	
	DateCollected	11/29/2001		11/28/2001		11/28/2001	
	DateExtracted	12/4/2001		12/4/2001		12/4/2001	
	DateAnalyzed	12/4/2001		12/4/2001		12/4/2001	
	SDGNumber	CNC55		CNC55		CNC55	
Parameter	**Units**						
Chloromethane	ug/kg	6.6	U	10	U	10	U
Vinyl chloride	ug/kg	6.6	U	10	U	10	U
Bromomethane	ug/kg	6.6	U	10	U	10	U
Chloroethane	ug/kg	6.6	U	10	U	10	U
1,1-Dichloroethene	ug/kg	3.3	U	5.3	U	5.2	U
Acetone	ug/kg	41	J	10	UJ	150	J
Carbon Disulfide	ug/kg	3.3	U	5.3	U	5.2	U
Methylene Chloride	ug/kg	3.3	U	5.3	U	5.2	U
trans-1,2-Dichloroethene	ug/kg	3.3	U	5.3	U	5.2	U
1,1-Dichloroethane	ug/kg	3.3	U	5.3	U	5.2	U
Vinyl acetate	ug/kg	6.6	UJ	10	UJ	10	UJ
Methyl ethyl ketone (2-Butanone)	ug/kg	6.6	U	10	U	17	=
cis-1,2-Dichloroethylene	ug/kg	3.3	U	5.3	U	5.2	U
1,2-Dichloroethene (total)	ug/kg	3.3	U	5.3	U	5.2	U
Chloroform	ug/kg	3.3	U	5.3	U	5.2	U
1,1,1-Trichloroethane	ug/kg	3.3	U	5.3	U	5.2	U
Carbon Tetrachloride	ug/kg	3.3	U	5.3	U	5.2	U
1,2-Dichloroethane	ug/kg	3.3	U	5.3	U	5.2	U
Benzene	ug/kg	3.3	U	5.3	U	5.2	U
Trichloroethylene (TCE)	ug/kg	3.3	U	5.3	U	5.2	U
1,2-Dichloropropane	ug/kg	3.3	U	5.3	U	5.2	U
Bromodichloromethane	ug/kg	3.3	U	5.3	U	5.2	U
2-Chloroethyl vinyl ether	ug/kg	6.6	R	10	R	10	R
cis-1,3-Dichloropropene	ug/kg	3.3	U	5.3	U	5.2	U
Methyl isobutyl ketone (4-Methyl-2-pentanone)	ug/kg	6.6	U	10	U	10	U
Toluene	ug/kg	3.3	U	5.3	U	5.2	U
trans-1,3-Dichloropropene	ug/kg	3.3	U	5.3	U	5.2	U
1,1,2-Trichloroethane	ug/kg	3.3	U	5.3	U	5.2	U
2-Hexanone	ug/kg	6.6	U	10	U	10	U
Tetrachloroethylene (PCE)	ug/kg	3.3	U	5.3	U	5.2	U

	StationID	G003SB033		G003SB033		G003SB034	
	SampleID	003SB03301 (0-1ft)		003SB03302 (3-5ft)		003SB03401 (0-1ft)	
	DateCollected	11/29/2001		11/29/2001		11/29/2001	
	DateExtracted	12/4/2001		12/4/2001		12/4/2001	
	DateAnalyzed	12/4/2001		12/4/2001		12/4/2001	
	SDGNumber	CNC55		CNC55		CNC55	
Parameter	**Units**						
Chloromethane	ug/kg	10	U	9.8	U	10	U
Vinyl chloride	ug/kg	10	U	9.8	U	10	U
Bromomethane	ug/kg	10	U	9.8	U	10	U
Chloroethane	ug/kg	10	U	9.8	U	10	U
1,1-Dichloroethene	ug/kg	5.2	U	4.9	U	5.2	U
Acetone	ug/kg	10	UJ	31	J	280	J
Carbon Disulfide	ug/kg	5.2	U	4.9	U	5.2	U
Methylene Chloride	ug/kg	5.2	U	4.9	U	5.2	U
trans-1,2-Dichloroethene	ug/kg	5.2	U	4.9	U	5.2	U
1,1-Dichloroethane	ug/kg	5.2	U	4.9	U	5.2	U
Vinyl acetate	ug/kg	10	UJ	9.8	UJ	10	UJ
Methyl ethyl ketone (2-Butanone)	ug/kg	10	U	9.8	U	10	U
cis-1,2-Dichloroethylene	ug/kg	5.2	U	4.9	U	5.2	U
1,2-Dichloroethene (total)	ug/kg	5.2	U	4.9	U	5.2	U
Chloroform	ug/kg	5.2	U	4.9	U	5.2	U
1,1,1-Trichloroethane	ug/kg	5.2	U	4.9	U	5.2	U
Carbon Tetrachloride	ug/kg	5.2	U	4.9	U	5.2	U
1,2-Dichloroethane	ug/kg	5.2	U	4.9	U	5.2	U
Benzene	ug/kg	5.2	U	4.9	U	5.2	U
Trichloroethylene (TCE)	ug/kg	5.2	U	4.9	U	5.2	U
1,2-Dichloropropane	ug/kg	5.2	U	4.9	U	5.2	U
Bromodichloromethane	ug/kg	5.2	U	4.9	U	5.2	U
2-Chloroethyl vinyl ether	ug/kg	10	R	9.8	R	10	R
cis-1,3-Dichloropropene	ug/kg	5.2	U	4.9	U	5.2	U
Methyl isobutyl ketone (4-Methyl-2-pentanone)	ug/kg	10	U	9.8	U	10	U
Toluene	ug/kg	5.2	U	4.9	U	5.2	U
trans-1,3-Dichloropropene	ug/kg	5.2	U	4.9	U	5.2	U
1,1,2-Trichloroethane	ug/kg	5.2	U	4.9	U	5.2	U
2-Hexanone	ug/kg	10	U	9.8	U	10	U
Tetrachloroethylene (PCE)	ug/kg	5.2	U	4.9	U	5.2	U

	StationID	G003SB034		G003SB035		G003SB035	
	SampleID	003SB03402 (3-5ft)		003SB03501 (0-1ft)		003SB03502 (3-5ft)	
	DateCollected	11/29/2001		11/29/2001		11/29/2001	
	DateExtracted	12/4/2001		12/4/2001		12/4/2001	
	DateAnalyzed	12/4/2001		12/4/2001		12/4/2001	
	SDGNumber	CNC55		CNC55		CNC55	
Parameter	**Units**						
Chloromethane	ug/kg	11	U	10	U	9.8	U
Vinyl chloride	ug/kg	11	U	10	U	9.8	U
Bromomethane	ug/kg	11	U	10	U	9.8	U
Chloroethane	ug/kg	11	U	10	U	9.8	U
1,1-Dichloroethene	ug/kg	5.6	U	5.1	U	4.9	U
Acetone	ug/kg	420	J	150	J	140	J
Carbon Disulfide	ug/kg	5.6	U	5.1	U	4.9	U
Methylene Chloride	ug/kg	5.6	U	5.1	U	4.9	U
trans-1,2-Dichloroethene	ug/kg	5.6	U	5.1	U	4.9	U
1,1-Dichloroethane	ug/kg	5.6	U	5.1	U	4.9	U
Vinyl acetate	ug/kg	11	UJ	10	UJ	9.8	UJ
Methyl ethyl ketone (2-Butanone)	ug/kg	11	U	10	U	8.8	J
cis-1,2-Dichloroethylene	ug/kg	5.6	U	5.1	U	4.9	U
1,2-Dichloroethene (total)	ug/kg	5.6	U	5.1	U	4.9	U
Chloroform	ug/kg	5.6	U	5.1	U	4.9	U
1,1,1-Trichloroethane	ug/kg	5.6	U	5.1	U	4.9	U
Carbon Tetrachloride	ug/kg	5.6	U	5.1	U	4.9	U
1,2-Dichloroethane	ug/kg	5.6	U	5.1	U	4.9	U
Benzene	ug/kg	5.6	U	5.1	U	4.9	U
Trichloroethylene (TCE)	ug/kg	5.6	U	5.1	U	4.9	U
1,2-Dichloropropane	ug/kg	5.6	U	5.1	U	4.9	U
Bromodichloromethane	ug/kg	5.6	U	5.1	U	4.9	U
2-Chloroethyl vinyl ether	ug/kg	11	R	10	R	9.8	R
cis-1,3-Dichloropropene	ug/kg	5.6	U	5.1	U	4.9	U
Methyl isobutyl ketone (4-Methyl-2-pentanone)	ug/kg	11	U	10	U	9.8	U
Toluene	ug/kg	5.6	U	5.1	U	4.9	U
trans-1,3-Dichloropropene	ug/kg	5.6	U	5.1	U	4.9	U
1,1,2-Trichloroethane	ug/kg	5.6	U	5.1	U	4.9	U
2-Hexanone	ug/kg	11	U	10	U	9.8	U
Tetrachloroethylene (PCE)	ug/kg	5.6	U	5.1	U	4.9	U

	StationID	G003SB036		G003SB036	
	SampleID	003SB03601 (0-1ft)		003SB03602 (3-5ft)	
	DateCollected	11/29/2001		11/29/2001	
	DateExtracted	12/4/2001		12/4/2001	
	DateAnalyzed	12/4/2001		12/4/2001	
	SDGNumber	CNC55		CNC55	
Parameter	**Units**				
Chloromethane	ug/kg	9.5	U	9.3	U
Vinyl chloride	ug/kg	9.5	U	9.3	U
Bromomethane	ug/kg	9.5	U	9.3	U
Chloroethane	ug/kg	9.5	U	9.3	U
1,1-Dichloroethene	ug/kg	4.7	U	4.6	U
Acetone	ug/kg	200	J	29	J
Carbon Disulfide	ug/kg	2.2	J	4.6	U
Methylene Chloride	ug/kg	4.7	U	4.6	U
trans-1,2-Dichloroethene	ug/kg	4.7	U	4.6	U
1,1-Dichloroethane	ug/kg	4.7	U	4.6	U
Vinyl acetate	ug/kg	9.5	UJ	9.3	UJ
Methyl ethyl ketone (2-Butanone)	ug/kg	8.1	J	9.3	U
cis-1,2-Dichloroethylene	ug/kg	4.7	U	4.6	U
1,2-Dichloroethene (total)	ug/kg	4.7	U	4.6	U
Chloroform	ug/kg	4.7	U	4.6	U
1,1,1-Trichloroethane	ug/kg	4.7	U	4.6	U
Carbon Tetrachloride	ug/kg	4.7	U	4.6	U
1,2-Dichloroethane	ug/kg	4.7	U	4.6	U
Benzene	ug/kg	4.7	U	4.6	U
Trichloroethylene (TCE)	ug/kg	4.7	U	4.6	U
1,2-Dichloropropane	ug/kg	4.7	U	4.6	U
Bromodichloromethane	ug/kg	4.7	U	4.6	U
2-Chloroethyl vinyl ether	ug/kg	9.5	R	9.3	R
cis-1,3-Dichloropropene	ug/kg	4.7	U	4.6	U
Methyl isobutyl ketone (4-Methyl-2-pentanone)	ug/kg	9.5	U	9.3	U
Toluene	ug/kg	4.7	U	4.6	U
trans-1,3-Dichloropropene	ug/kg	4.7	U	4.6	U
1,1,2-Trichloroethane	ug/kg	4.7	U	4.6	U
2-Hexanone	ug/kg	9.5	U	9.3	U
Tetrachloroethylene (PCE)	ug/kg	4.7	U	4.6	U

	StationID	G003SB021		G003SB021		G003SB021	
	SampleID	003CB02101 (0-1ft)		003SB02101 (0-1ft)		003SB02102 (3-5ft)	
	DateCollected	11/29/2001		11/29/2001		11/29/2001	
	DateExtracted	12/4/2001		12/4/2001		12/4/2001	
	DateAnalyzed	12/4/2001		12/4/2001		12/4/2001	
	SDGNumber	CNC55		CNC55		CNC55	
Parameter	**Units**						
Dibromochloromethane	ug/kg	4.7	U	4.9	U	4.5	U
Chlorobenzene	ug/kg	4.7	U	4.9	U	4.5	U
Ethylbenzene	ug/kg	3.4	J	5.7	=	4.5	U
m+p Xylene	ug/kg	25	=	37	=	4.5	U
o-Xylene	ug/kg	9.6	=	12	=	4.5	U
Xylenes, Total	ug/kg	34	=	49	=	4.5	U
Styrene	ug/kg	4.7	U	4.9	U	4.5	U
Bromoform	ug/kg	4.7	U	4.9	U	4.5	U
1,1,2,2-Tetrachloroethane	ug/kg	4.7	U	4.9	U	4.5	U

	StationID	G003SB022		G003SB022		G003SB023	
	SampleID	003SB02201 (0-1ft)		003SB02202 (3-5ft)		003SB02301 (0-1ft)	
	DateCollected	11/29/2001		11/29/2001		11/29/2001	
	DateExtracted	12/4/2001		12/4/2001		12/4/2001	
	DateAnalyzed	12/4/2001		12/4/2001		12/4/2001	
	SDGNumber	CNC54		CNC54		CNC54	
Parameter	**Units**						
Dibromochloromethane	ug/kg	5.1	U	5.1	U	5.1	U
Chlorobenzene	ug/kg	5.1	U	5.1	U	5.1	U
Ethylbenzene	ug/kg	5.1	U	5.1	U	5.1	U
m+p Xylene	ug/kg	5.1	U	5.1	U	5.1	U
o-Xylene	ug/kg	5.1	U	5.1	U	5.1	U
Xylenes, Total	ug/kg	5.1	U	5.1	U	5.1	U
Styrene	ug/kg	5.1	U	5.1	U	5.1	U
Bromoform	ug/kg	5.1	U	5.1	U	5.1	U
1,1,2,2-Tetrachloroethane	ug/kg	5.1	U	5.1	U	5.1	U

	StationID	G003SB023		G003SB024		G003SB024	
	SampleID	003SB02302 (3-5ft)		003SB02401 (0-1ft)		003SB02401DL (0-1ft)	
	DateCollected	11/29/2001		11/29/2001		11/29/2001	
	DateExtracted	12/4/2001		12/4/2001		12/7/2001	
	DateAnalyzed	12/4/2001		12/4/2001		12/7/2001	
	SDGNumber	CNC54		CNC54		CNC54	
Parameter	**Units**						
Dibromochloromethane	ug/kg	4.8	U	5.2	U	210	R
Chlorobenzene	ug/kg	4.8	U	5.2	U	210	R
Ethylbenzene	ug/kg	4.8	U	2.9	J	210	R
m+p Xylene	ug/kg	4.8	U	5.2	U	210	R
o-Xylene	ug/kg	4.8	U	5.2	U	210	R
Xylenes, Total	ug/kg	4.8	U	5.2	U	210	R
Styrene	ug/kg	4.8	U	5.2	U	210	R
Bromoform	ug/kg	4.8	U	5.2	U	210	R
1,1,2,2-Tetrachloroethane	ug/kg	4.8	U	5.2	U	210	R

	StationID	G003SB024		G003SB025		G003SB025	
	SampleID	003SB02402 (3-5ft)		003SB02501 (0-1ft)		003SB02502 (3-5ft)	
	DateCollected	11/29/2001		11/29/2001		11/29/2001	
	DateExtracted	12/4/2001		12/4/2001		12/4/2001	
	DateAnalyzed	12/4/2001		12/4/2001		12/4/2001	
	SDGNumber	CNC54		CNC54		CNC54	
Parameter	**Units**						
Dibromochloromethane	ug/kg	4.7	U	4.8	U	4.5	U
Chlorobenzene	ug/kg	4.7	U	4.8	U	4.5	U
Ethylbenzene	ug/kg	4.7	U	4.8	U	4.5	U
m+p Xylene	ug/kg	4.7	U	4.8	U	4.5	U
o-Xylene	ug/kg	4.7	U	4.8	U	4.5	U
Xylenes, Total	ug/kg	4.7	U	4.8	U	4.5	U
Styrene	ug/kg	4.7	U	4.8	U	4.5	U
Bromoform	ug/kg	4.7	U	4.8	U	4.5	U
1,1,2,2-Tetrachloroethane	ug/kg	4.7	U	4.8	U	4.5	U

	StationID	G003SB026		G003SB026		G003SB027	
	SampleID	003SB02601 (0-1ft)		003SB02602 (3-5ft)		003SB02701 (0-1ft)	
	DateCollected	11/29/2001		11/29/2001		11/29/2001	
	DateExtracted	12/4/2001		12/4/2001		12/4/2001	
	DateAnalyzed	12/4/2001		12/4/2001		12/4/2001	
	SDGNumber	CNC54		CNC54		CNC54	
Parameter	**Units**						
Dibromochloromethane	ug/kg	4.7	U	5.2	U	6.2	U
Chlorobenzene	ug/kg	4.7	U	5.2	U	6.2	U
Ethylbenzene	ug/kg	4.7	U	5.2	U	6.2	U
m+p Xylene	ug/kg	4.7	U	5.2	U	6.2	U
o-Xylene	ug/kg	4.7	U	5.2	U	6.2	U
Xylenes, Total	ug/kg	4.7	U	5.2	U	6.2	U
Styrene	ug/kg	4.7	U	5.2	U	6.2	U
Bromoform	ug/kg	4.7	U	5.2	U	6.2	U
1,1,2,2-Tetrachloroethane	ug/kg	4.7	U	5.2	U	6.2	U

	StationID	G003SB027		G003SB028		G003SB028	
	SampleID	003SB02702 (3-5ft)		003SB02801 (0-1ft)		003SB02802 (3-5ft)	
	DateCollected	11/29/2001		11/29/2001		11/29/2001	
	DateExtracted	12/4/2001		12/4/2001		12/4/2001	
	DateAnalyzed	12/4/2001		12/4/2001		12/4/2001	
	SDGNumber	CNC54		CNC54		CNC54	
Parameter	**Units**						
Dibromochloromethane	ug/kg	4.6	U	6.1	U	4.8	U
Chlorobenzene	ug/kg	4.6	U	6.1	U	4.8	U
Ethylbenzene	ug/kg	4.6	U	6.1	U	4.8	U
m+p Xylene	ug/kg	4.6	U	6.1	U	4.8	U
o-Xylene	ug/kg	4.6	U	6.1	U	4.8	U
Xylenes, Total	ug/kg	4.6	U	6.1	U	4.8	U
Styrene	ug/kg	4.6	U	6.1	U	4.8	U
Bromoform	ug/kg	4.6	U	6.1	U	4.8	U
1,1,2,2-Tetrachloroethane	ug/kg	4.6	U	6.1	U	4.8	U

	StationID	G003SB029		G003SB029		G003SB029	
	SampleID	003CB02902 (3-5ft)		003SB02901 (0-1ft)		003SB02902 (3-5ft)	
	DateCollected	11/29/2001		11/29/2001		11/29/2001	
	DateExtracted	12/4/2001		12/5/2001		12/5/2001	
	DateAnalyzed	12/4/2001		12/5/2001		12/5/2001	
	SDGNumber	CNC54		CNC54		CNC54	
Parameter	**Units**						
Dibromochloromethane	ug/kg	5.1	U	5.2	U	5	U
Chlorobenzene	ug/kg	5.1	U	5.2	U	5	U
Ethylbenzene	ug/kg	5.1	U	2.2	J	5	U
m+p Xylene	ug/kg	5.1	U	12	=	5	U
o-Xylene	ug/kg	5.1	U	5.2	=	5	U
Xylenes, Total	ug/kg	5.1	U	18	=	5	U
Styrene	ug/kg	5.1	U	5.2	U	5	U
Bromoform	ug/kg	5.1	U	5.2	U	5	U
1,1,2,2-Tetrachloroethane	ug/kg	5.1	U	5.2	U	5	U

	StationID	G003SB030		G003SB030		G003SB031	
	SampleID	003SB03001 (0-1ft)		003SB03002 (3-5ft)		003SB03101 (0-1ft)	
	DateCollected	11/29/2001		11/29/2001		11/29/2001	
	DateExtracted	12/4/2001		12/4/2001		12/5/2001	
	DateAnalyzed	12/4/2001		12/4/2001		12/5/2001	
	SDGNumber	CNC54		CNC54		CNC54	
Parameter	**Units**						
Dibromochloromethane	ug/kg	5.5	U	4.7	U	5.1	U
Chlorobenzene	ug/kg	5.5	U	4.7	U	5.1	U
Ethylbenzene	ug/kg	5.5	U	4.7	U	5.1	U
m+p Xylene	ug/kg	5.5	U	4.7	U	5.1	U
o-Xylene	ug/kg	5.5	U	4.7	U	5.1	U
Xylenes, Total	ug/kg	5.5	U	4.7	U	5.1	U
Styrene	ug/kg	5.5	U	4.7	U	5.1	U
Bromoform	ug/kg	5.5	U	4.7	U	5.1	U
1,1,2,2-Tetrachloroethane	ug/kg	5.5	U	4.7	U	5.1	U

	StationID	G003SB031		G003SB032		G003SB032	
	SampleID	003SB03102 (3-5ft)		003SB03201 (0-1ft)		003SB03202 (3-5ft)	
	DateCollected	11/29/2001		11/28/2001		11/28/2001	
	DateExtracted	12/4/2001		12/4/2001		12/4/2001	
	DateAnalyzed	12/4/2001		12/4/2001		12/4/2001	
	SDGNumber	CNC55		CNC55		CNC55	
Parameter	**Units**						
Dibromochloromethane	ug/kg	3.3	U	5.3	U	5.2	U
Chlorobenzene	ug/kg	3.3	U	5.3	U	5.2	U
Ethylbenzene	ug/kg	3.3	U	5.3	U	5.2	U
m+p Xylene	ug/kg	3.3	U	5.3	U	5.2	U
o-Xylene	ug/kg	3.3	U	5.3	U	5.2	U
Xylenes, Total	ug/kg	3.3	U	5.3	U	5.2	U
Styrene	ug/kg	3.3	U	5.3	U	5.2	U
Bromoform	ug/kg	3.3	U	5.3	U	5.2	U
1,1,2,2-Tetrachloroethane	ug/kg	3.3	U	5.3	U	5.2	U

	StationID	G003SB033		G003SB033		G003SB034	
	SampleID	003SB03301 (0-1ft)		003SB03302 (3-5ft)		003SB03401 (0-1ft)	
	DateCollected	11/29/2001		11/29/2001		11/29/2001	
	DateExtracted	12/4/2001		12/4/2001		12/4/2001	
	DateAnalyzed	12/4/2001		12/4/2001		12/4/2001	
	SDGNumber	CNC55		CNC55		CNC55	
Parameter	**Units**						
Dibromochloromethane	ug/kg	5.2	U	4.9	U	5.2	U
Chlorobenzene	ug/kg	5.2	U	4.9	U	5.2	U
Ethylbenzene	ug/kg	5.2	U	4.9	U	5.2	U
m+p Xylene	ug/kg	5.2	U	4.9	U	5.2	U
o-Xylene	ug/kg	5.2	U	4.9	U	5.2	U
Xylenes, Total	ug/kg	5.2	U	4.9	U	5.2	U
Styrene	ug/kg	5.2	U	4.9	U	5.2	U
Bromoform	ug/kg	5.2	U	4.9	U	5.2	U
1,1,2,2-Tetrachloroethane	ug/kg	5.2	U	4.9	U	5.2	U

	StationID	G003SB034		G003SB035		G003SB035	
	SampleID	003SB03402 (3-5ft)		003SB03501 (0-1ft)		003SB03502 (3-5ft)	
	DateCollected	11/29/2001		11/29/2001		11/29/2001	
	DateExtracted	12/4/2001		12/4/2001		12/4/2001	
	DateAnalyzed	12/4/2001		12/4/2001		12/4/2001	
	SDGNumber	CNC55		CNC55		CNC55	
Parameter	**Units**						
Dibromochloromethane	ug/kg	5.6	U	5.1	U	4.9	U
Chlorobenzene	ug/kg	5.6	U	5.1	U	4.9	U
Ethylbenzene	ug/kg	5.6	U	5.1	U	4.9	U
m+p Xylene	ug/kg	5.6	U	5.1	U	4.9	U
o-Xylene	ug/kg	5.6	U	5.1	U	4.9	U
Xylenes, Total	ug/kg	5.6	U	5.1	U	4.9	U
Styrene	ug/kg	5.6	U	5.1	U	4.9	U
Bromoform	ug/kg	5.6	U	5.1	U	4.9	U
1,1,2,2-Tetrachloroethane	ug/kg	5.6	U	5.1	U	4.9	U

	StationID	G003SB036		G003SB036	
	SampleID	003SB03601 (0-1ft)		003SB03602 (3-5ft)	
	DateCollected	11/29/2001		11/29/2001	
	DateExtracted	12/4/2001		12/4/2001	
	DateAnalyzed	12/4/2001		12/4/2001	
	SDGNumber	CNC55		CNC55	
Parameter	**Units**				
Dibromochloromethane	ug/kg	4.7	U	4.6	U
Chlorobenzene	ug/kg	4.7	U	4.6	U
Ethylbenzene	ug/kg	4.7	U	4.6	U
m+p Xylene	ug/kg	4.7	U	4.6	U
o-Xylene	ug/kg	4.7	U	4.6	U
Xylenes, Total	ug/kg	4.7	U	4.6	U
Styrene	ug/kg	4.7	U	4.6	U
Bromoform	ug/kg	4.7	U	4.6	U
1,1,2,2-Tetrachloroethane	ug/kg	4.7	U	4.6	U

	StationID	G003SB011		G003SB011		G003SB011	
	SampleID	003SB01101 (0-1ft)		003SB01101DL (0-1ft)		003SB01102 (3-5ft)	
	DateCollected	7/28/1999		7/28/1999		7/28/1999	
	DateExtracted	7/30/1999		7/30/1999		7/30/1999	
	DateAnalyzed	8/5/1999		8/24/1999		8/5/1999	
	SDGNumber	39715		39715		39715	
Parameter	**Units**						
Aldrin, SPLP	ug/L						
Aldrin	ug/Kg	1.4	U	14	R	1.4	U
Alpha BHC (alpha hexachlorocyclohexane), SPLP	ug/L						
Alpha BHC (Alpha Hexachlorocyclohexane)	ug/Kg	1.4	U	14	R	1.4	U
Alpha-chlordane, SPLP	ug/L						
Alpha-chlordane	ug/Kg	1.4	U	14	R	1.4	U
Beta BHC (beta hexachlorocyclohexane), SPLP	ug/L						
Beta BHC (Beta Hexachlorocyclohexane)	ug/kg	1.4	U	14	R	1.4	U
Chlordane	ug/kg						
Delta BHC (delta hexachlorocyclohexane), SPLP	ug/L						
Delta BHC (Delta Hexachlorocyclohexane)	ug/kg	1.4	U	14	R	1.4	U
Dieldrin, SPLP	ug/L						
Dieldrin	ug/kg	2.7	U	27	R	2.7	U
Endosulfan I, SPLP	ug/L						
Endosulfan I	ug/kg	1.4	U	14	R	1.4	U
Endosulfan II, SPLP	ug/L						
Endosulfan II	ug/Kg	2.7	U	27	R	2.7	U
Endosulfan Sulfate, SPLP	ug/L						
Endosulfan Sulfate	ug/kg	2.7	U	27	R	2.7	U
Endrin aldehyde, SPLP	ug/L						
Endrin Aldehyde	ug/kg	2.7	U	27	R	2.7	U
Endrin ketone, SPLP	ug/L						
Endrin Ketone	ug/Kg	3	U	27	R	3	U
Endrin, SPLP	ug/L						
Endrin	ug/kg	2.7	U	27	R	2.7	U
Gamma BHC (lindane), SPLP	ug/L						
Gamma BHC (Lindane)	ug/Kg	1.4	U	14	R	1.4	U
Gamma-chlordane, SPLP	ug/L						
Gamma-chlordane	ug/kg	1.4	U	14	R	1.4	U
Heptachlor Epoxide	ug/kg	1.4	U	14	R	1.4	U

	StationID	G003SB011		G003SB012		G003SB012	
	SampleID	003SB01102DL (3-5ft)		003CB01201 (0-1ft)		003CB01201DL (0-1ft)	
	DateCollected	7/28/1999		7/28/1999		7/28/1999	
	DateExtracted	7/30/1999		7/30/1999		8/2/1999	
	DateAnalyzed	8/24/1999		8/5/1999		8/18/1999	
	SDGNumber	39715		39715		39715	
Parameter	**Units**						
Aldrin, SPLP	ug/L						
Aldrin	ug/Kg	14	R	15	U	6000	R
Alpha BHC (alpha hexachlorocyclohexane), SPLP	ug/L						
Alpha BHC (Alpha Hexachlorocyclohexane)	ug/Kg	14	R	15	U	6000	R
Alpha-chlordane, SPLP	ug/L						
Alpha-chlordane	ug/Kg	14	R	15	U	6000	R
Beta BHC (beta hexachlorocyclohexane), SPLP	ug/L						
Beta BHC (Beta Hexachlorocyclohexane)	ug/kg	14	R	15	U	6000	R
Chlordane	ug/kg						
Delta BHC (delta hexachlorocyclohexane), SPLP	ug/L						
Delta BHC (Delta Hexachlorocyclohexane)	ug/kg	14	R	15	U	6000	R
Dieldrin, SPLP	ug/L						
Dieldrin	ug/kg	27	R	29	U	12000	R
Endosulfan I, SPLP	ug/L						
Endosulfan I	ug/kg	14	R	15	U	6000	R
Endosulfan II, SPLP	ug/L						
Endosulfan II	ug/Kg	27	R	29	U	12000	R
Endosulfan Sulfate, SPLP	ug/L						
Endosulfan Sulfate	ug/kg	27	R	29	U	12000	R
Endrin aldehyde, SPLP	ug/L						
Endrin Aldehyde	ug/kg	27	R	29	U	12000	R
Endrin ketone, SPLP	ug/L						
Endrin Ketone	ug/Kg	27	R	29	U	12000	R
Endrin, SPLP	ug/L						
Endrin	ug/kg	27	R	29	U	12000	R
Gamma BHC (lindane), SPLP	ug/L						
Gamma BHC (Lindane)	ug/Kg	14	R	15	U	6000	R
Gamma-chlordane, SPLP	ug/L						
Gamma-chlordane	ug/kg	14	R	28	U	6000	R
Heptachlor Epoxide	ug/kg	14	R	15	U	6000	R

	StationID	G003SB012		G003SB012		G003SB012	
	SampleID	003SB01201 (0-1ft)		003SB01201DL (0-1ft)		003SB01202 (3-5ft)	
	DateCollected	7/28/1999		7/28/1999		7/28/1999	
	DateExtracted	7/30/1999		8/2/1999		7/30/1999	
	DateAnalyzed	8/5/1999		8/18/1999		8/5/1999	
	SDGNumber	39715		39715		39715	
Parameter	**Units**						
Aldrin, SPLP	ug/L						
Aldrin	ug/Kg	14	U	2700	R	14	U
Alpha BHC (alpha hexachlorocyclohexane), SPLP	ug/L						
Alpha BHC (Alpha Hexachlorocyclohexane)	ug/Kg	14	U	2700	R	14	U
Alpha-chlordane, SPLP	ug/L						
Alpha-chlordane	ug/Kg	14	U	2700	R	14	U
Beta BHC (beta hexachlorocyclohexane), SPLP	ug/L						
Beta BHC (Beta Hexachlorocyclohexane)	ug/kg	14	U	2700	R	14	U
Chlordane	ug/kg						
Delta BHC (delta hexachlorocyclohexane), SPLP	ug/L						
Delta BHC (Delta Hexachlorocyclohexane)	ug/kg	14	U	2700	R	14	U
Dieldrin, SPLP	ug/L						
Dieldrin	ug/kg	26	U	5300	R	27	U
Endosulfan I, SPLP	ug/L						
Endosulfan I	ug/kg	14	U	2700	R	14	U
Endosulfan II, SPLP	ug/L						
Endosulfan II	ug/Kg	26	U	5300	R	27	U
Endosulfan Sulfate, SPLP	ug/L						
Endosulfan Sulfate	ug/kg	26	U	5300	R	27	U
Endrin aldehyde, SPLP	ug/L						
Endrin Aldehyde	ug/kg	26	U	5300	R	27	U
Endrin ketone, SPLP	ug/L						
Endrin Ketone	ug/Kg	26	U	5300	R	27	U
Endrin, SPLP	ug/L						
Endrin	ug/kg	26	U	5300	R	27	U
Gamma BHC (lindane), SPLP	ug/L						
Gamma BHC (Lindane)	ug/Kg	14	U	2700	R	14	U
Gamma-chlordane, SPLP	ug/L						
Gamma-chlordane	ug/kg	14	U	2700	R	14	U
Heptachlor Epoxide	ug/kg	14	U	2700	R	14	U

	StationID	G003SB012		G003SB013		G003SB013	
	SampleID	003SB01202DL (3-5ft)		003CB01301 (0-1ft)		003CB01301DL (0-1ft)	
	DateCollected	7/28/1999		7/30/1999		7/30/1999	
	DateExtracted	8/2/1999		8/1/1999		8/1/1999	
	DateAnalyzed	8/18/1999		8/14/1999		8/14/1999	
	SDGNumber	39715		39741		39741	
Parameter	**Units**						
Aldrin, SPLP	ug/L						
Aldrin	ug/Kg	2800	R	1.4	U	28	R
Alpha BHC (alpha hexachlorocyclohexane), SPLP	ug/L						
Alpha BHC (Alpha Hexachlorocyclohexane)	ug/Kg	2800	R	1.4	U	28	R
Alpha-chlordane, SPLP	ug/L						
Alpha-chlordane	ug/Kg	2800	R	6.3	J	28	R
Beta BHC (beta hexachlorocyclohexane), SPLP	ug/L						
Beta BHC (Beta Hexachlorocyclohexane)	ug/kg	2800	R	1.4	U	28	R
Chlordane	ug/kg						
Delta BHC (delta hexachlorocyclohexane), SPLP	ug/L						
Delta BHC (Delta Hexachlorocyclohexane)	ug/kg	2800	R	1.4	U	28	R
Dieldrin, SPLP	ug/L						
Dieldrin	ug/kg	5500	R	2.7	U	54	R
Endosulfan I, SPLP	ug/L						
Endosulfan I	ug/kg	2800	R	6.7	J	28	R
Endosulfan II, SPLP	ug/L						
Endosulfan II	ug/Kg	5500	R	2.7	U	54	R
Endosulfan Sulfate, SPLP	ug/L						
Endosulfan Sulfate	ug/kg	5500	R	2.7	U	54	R
Endrin aldehyde, SPLP	ug/L						
Endrin Aldehyde	ug/kg	5500	R	2.7	U	54	R
Endrin ketone, SPLP	ug/L						
Endrin Ketone	ug/Kg	5500	R	2.7	U	54	R
Endrin, SPLP	ug/L						
Endrin	ug/kg	5500	R	2.7	U	54	R
Gamma BHC (lindane), SPLP	ug/L						
Gamma BHC (Lindane)	ug/Kg	2800	R	1.4	U	28	R
Gamma-chlordane, SPLP	ug/L						
Gamma-chlordane	ug/kg	2800	R	4.9	J	28	R
Heptachlor Epoxide	ug/kg	2800	R	1.4	U	28	R

	StationID	G003SB013		G003SB013		G003SB013	
	SampleID	003SB01301 (0-1ft)		003SB01301DL (0-1ft)		003SB01302 (3-5ft)	
	DateCollected	7/30/1999		7/30/1999		7/30/1999	
	DateExtracted	8/1/1999		8/1/1999		8/1/1999	
	DateAnalyzed	8/14/1999		8/14/1999		8/14/1999	
	SDGNumber	39741		39741		39741	
Parameter	**Units**						
Aldrin, SPLP	ug/L						
Aldrin	ug/Kg	1.4	U	69	R	1.4	U
Alpha BHC (alpha hexachlorocyclohexane), SPLP	ug/L						
Alpha BHC (Alpha Hexachlorocyclohexane)	ug/Kg	1.4	U	69	R	1.4	U
Alpha-chlordane, SPLP	ug/L						
Alpha-chlordane	ug/Kg	7.1	J	69	R	1.4	U
Beta BHC (beta hexachlorocyclohexane), SPLP	ug/L						
Beta BHC (Beta Hexachlorocyclohexane)	ug/kg	1.4	U	69	R	1.4	U
Chlordane	ug/kg						
Delta BHC (delta hexachlorocyclohexane), SPLP	ug/L						
Delta BHC (Delta Hexachlorocyclohexane)	ug/kg	1.4	U	69	R	1.4	U
Dieldrin, SPLP	ug/L						
Dieldrin	ug/kg	2.6	U	130	R	2.7	U
Endosulfan I, SPLP	ug/L						
Endosulfan I	ug/kg	4.7	J	69	R	1.4	U
Endosulfan II, SPLP	ug/L						
Endosulfan II	ug/Kg	2.6	U	130	R	2.7	U
Endosulfan Sulfate, SPLP	ug/L						
Endosulfan Sulfate	ug/kg	2.6	U	130	R	2.7	U
Endrin aldehyde, SPLP	ug/L						
Endrin Aldehyde	ug/kg	2.6	U	130	R	2.7	U
Endrin ketone, SPLP	ug/L						
Endrin Ketone	ug/Kg	2.6	U	130	R	2.7	U
Endrin, SPLP	ug/L						
Endrin	ug/kg	2.6	U	130	R	2.7	U
Gamma BHC (lindane), SPLP	ug/L						
Gamma BHC (Lindane)	ug/Kg	1.4	U	69	R	1.4	U
Gamma-chlordane, SPLP	ug/L						
Gamma-chlordane	ug/kg	5.6	J	69	R	1.4	U
Heptachlor Epoxide	ug/kg	1.4	U	69	R	1.4	U

	StationID	G003SB013		G003SB014		G003SB014	
	SampleID	003SB01302DL (3-5ft)		003SB01402 (3-5ft)		003SB01402 (3-5ft)	
	DateCollected	7/30/1999		7/28/1999		7/28/1999	
	DateExtracted	8/1/1999		7/30/1999		9/11/1999	
	DateAnalyzed	8/11/1999		8/5/1999		9/14/1999	
	SDGNumber	39741		39715		39715	
Parameter	**Units**						
Aldrin, SPLP	ug/L					0.04	R
Aldrin	ug/Kg	14	R	1.4	U		
Alpha BHC (alpha hexachlorocyclohexane), SPLP	ug/L					0.04	R
Alpha BHC (Alpha Hexachlorocyclohexane)	ug/Kg	14	R	1.4	U		
Alpha-chlordane, SPLP	ug/L					0.04	R
Alpha-chlordane	ug/Kg	14	R	1.4	U		
Beta BHC (beta hexachlorocyclohexane), SPLP	ug/L					0.04	R
Beta BHC (Beta Hexachlorocyclohexane)	ug/kg	14	R	1.4	U		
Chlordane	ug/kg						
Delta BHC (delta hexachlorocyclohexane), SPLP	ug/L					0.04	R
Delta BHC (Delta Hexachlorocyclohexane)	ug/kg	14	R	1.4	U		
Dieldrin, SPLP	ug/L					0.08	R
Dieldrin	ug/kg	27	R	2.7	U		
Endosulfan I, SPLP	ug/L					0.04	R
Endosulfan I	ug/kg	14	R	1.4	U		
Endosulfan II, SPLP	ug/L					0.08	R
Endosulfan II	ug/Kg	27	R	2.7	U		
Endosulfan Sulfate, SPLP	ug/L					0.08	R
Endosulfan Sulfate	ug/kg	27	R	2.7	U		
Endrin aldehyde, SPLP	ug/L					0.08	R
Endrin Aldehyde	ug/kg	27	R	2.7	U		
Endrin ketone, SPLP	ug/L					0.08	R
Endrin Ketone	ug/Kg	27	R	3	U		
Endrin, SPLP	ug/L					0.08	R
Endrin	ug/kg	27	R	2.7	U		
Gamma BHC (lindane), SPLP	ug/L					0.04	R
Gamma BHC (Lindane)	ug/Kg	14	R	1.4	U		
Gamma-chlordane, SPLP	ug/L					0.04	R
Gamma-chlordane	ug/kg	14	R	2.4	U		
Heptachlor Epoxide	ug/kg	14	R	1.4	U		

	StationID	G003SB015		G003SB015		G003SB015	
	SampleID	003SB01501 (0-1ft)		003SB01501DL (0-1ft)		003SB01502 (3-5ft)	
	DateCollected	12/17/1999		12/17/1999		12/17/1999	
	DateExtracted	12/21/1999		12/21/1999		12/21/1999	
	DateAnalyzed	12/30/1999		1/3/2000		12/30/1999	
	SDGNumber	EN037		EN037		EN037	
Parameter	**Units**						
Aldrin, SPLP	ug/L						
Aldrin	ug/Kg	1.9	U	3.8	R	1.9	U
Alpha BHC (alpha hexachlorocyclohexane), SPLP	ug/L						
Alpha BHC (Alpha Hexachlorocyclohexane)	ug/Kg	1.9	U	3.8	R	1.9	U
Alpha-chlordane, SPLP	ug/L						
Alpha-chlordane	ug/Kg	17	J	16	R	1.9	U
Beta BHC (beta hexachlorocyclohexane), SPLP	ug/L						
Beta BHC (Beta Hexachlorocyclohexane)	ug/kg	1.9	U	3.8	R	1.9	U
Chlordane	ug/kg	370	U	740	R	380	U
Delta BHC (delta hexachlorocyclohexane), SPLP	ug/L						
Delta BHC (Delta Hexachlorocyclohexane)	ug/kg	1.9	U	3.8	R	1.9	U
Dieldrin, SPLP	ug/L						
Dieldrin	ug/kg	3.7	U	7.4	R	3.8	U
Endosulfan I, SPLP	ug/L						
Endosulfan I	ug/kg	1.9	U	3.8	R	1.9	U
Endosulfan II, SPLP	ug/L						
Endosulfan II	ug/Kg	3.7	U	7.4	R	3.8	U
Endosulfan Sulfate, SPLP	ug/L						
Endosulfan Sulfate	ug/kg	3.7	U	7.4	R	3.8	U
Endrin aldehyde, SPLP	ug/L						
Endrin Aldehyde	ug/kg	3.7	U	7.4	R	3.8	U
Endrin ketone, SPLP	ug/L						
Endrin Ketone	ug/Kg	3.7	U	7.4	R	3.8	U
Endrin, SPLP	ug/L						
Endrin	ug/kg	3.7	U	7.4	R	3.8	U
Gamma BHC (lindane), SPLP	ug/L						
Gamma BHC (Lindane)	ug/Kg	1.9	U	3.8	R	1.9	U
Gamma-chlordane, SPLP	ug/L						
Gamma-chlordane	ug/kg	23	J	30	R	1.9	U
Heptachlor Epoxide	ug/kg	49	J	49	R	1.9	U

	StationID	G003SB016		G003SB016		G003SB016	
	SampleID	003SB01601 (0-1ft)		003SB01601DL (0-1ft)		003SB01602 (3-5ft)	
	DateCollected	1/27/2000		1/27/2000		1/27/2000	
	DateExtracted	1/30/2000		1/30/2000		1/30/2000	
	DateAnalyzed	2/4/2000		2/4/2000		2/4/2000	
	SDGNumber	41892		41892		41892	
Parameter	**Units**						
Aldrin, SPLP	ug/L						
Aldrin	ug/Kg	1500	U	15000	R	1.4	U
Alpha BHC (alpha hexachlorocyclohexane), SPLP	ug/L						
Alpha BHC (Alpha Hexachlorocyclohexane)	ug/Kg	1500	U	15000	R	1.4	U
Alpha-chlordane, SPLP	ug/L						
Alpha-chlordane	ug/Kg	1500	U	15000	R	1.4	U
Beta BHC (beta hexachlorocyclohexane), SPLP	ug/L						
Beta BHC (Beta Hexachlorocyclohexane)	ug/kg	1500	U	15000	R	1.4	U
Chlordane	ug/kg						
Delta BHC (delta hexachlorocyclohexane), SPLP	ug/L						
Delta BHC (Delta Hexachlorocyclohexane)	ug/kg	1500	U	15000	R	1.4	U
Dieldrin, SPLP	ug/L						
Dieldrin	ug/kg	2900	U	29000	R	2.8	U
Endosulfan I, SPLP	ug/L						
Endosulfan I	ug/kg	1500	U	15000	R	1.4	U
Endosulfan II, SPLP	ug/L						
Endosulfan II	ug/Kg	2900	U	29000	R	2.8	U
Endosulfan Sulfate, SPLP	ug/L						
Endosulfan Sulfate	ug/kg	2900	U	29000	R	2.8	U
Endrin aldehyde, SPLP	ug/L						
Endrin Aldehyde	ug/kg	2900	U	29000	R	2.8	U
Endrin ketone, SPLP	ug/L						
Endrin Ketone	ug/Kg	2900	U	29000	R	2.8	U
Endrin, SPLP	ug/L						
Endrin	ug/kg	2900	U	29000	R	2.8	U
Gamma BHC (lindane), SPLP	ug/L						
Gamma BHC (Lindane)	ug/Kg	1500	U	15000	R	1.4	U
Gamma-chlordane, SPLP	ug/L						
Gamma-chlordane	ug/kg	1500	U	15000	R	1.4	U
Heptachlor Epoxide	ug/kg	1500	U	15000	R	1.4	U

	StationID	G003SB016		G003SB017		G003SB017	
	SampleID	003SB01602DL (3-5ft)		003SB01701 (0-1ft)		003SB01701DL (0-1ft)	
	DateCollected	1/27/2000		1/27/2000		1/27/2000	
	DateExtracted	1/30/2000		1/30/2000		1/30/2000	
	DateAnalyzed	2/4/2000		2/4/2000		2/4/2000	
	SDGNumber	41892		41892		41892	
Parameter	**Units**						
Aldrin, SPLP	ug/L						
Aldrin	ug/Kg	14	R	150	U	1500	R
Alpha BHC (alpha hexachlorocyclohexane), SPLP	ug/L						
Alpha BHC (Alpha Hexachlorocyclohexane)	ug/Kg	14	R	150	U	1500	R
Alpha-chlordane, SPLP	ug/L						
Alpha-chlordane	ug/Kg	14	R	150	U	1500	R
Beta BHC (beta hexachlorocyclohexane), SPLP	ug/L						
Beta BHC (Beta Hexachlorocyclohexane)	ug/kg	14	R	150	U	1500	R
Chlordane	ug/kg						
Delta BHC (delta hexachlorocyclohexane), SPLP	ug/L						
Delta BHC (Delta Hexachlorocyclohexane)	ug/kg	14	R	150	U	1500	R
Dieldrin, SPLP	ug/L						
Dieldrin	ug/kg	28	R	280	U	2800	R
Endosulfan I, SPLP	ug/L						
Endosulfan I	ug/kg	14	R	150	U	1500	R
Endosulfan II, SPLP	ug/L						
Endosulfan II	ug/Kg	28	R	280	U	2800	R
Endosulfan Sulfate, SPLP	ug/L						
Endosulfan Sulfate	ug/kg	28	R	280	U	2800	R
Endrin aldehyde, SPLP	ug/L						
Endrin Aldehyde	ug/kg	28	R	280	U	2800	R
Endrin ketone, SPLP	ug/L						
Endrin Ketone	ug/Kg	28	R	280	U	2800	R
Endrin, SPLP	ug/L						
Endrin	ug/kg	28	R	280	U	2800	R
Gamma BHC (lindane), SPLP	ug/L						
Gamma BHC (Lindane)	ug/Kg	14	R	150	U	1500	R
Gamma-chlordane, SPLP	ug/L						
Gamma-chlordane	ug/kg	14	R	150	U	1500	R
Heptachlor Epoxide	ug/kg	14	R	150	U	1500	R

	StationID	G003SB017		G003SB017		G003SB018	
	SampleID	003SB01702 (3-5ft)		003SB01702DL (3-5ft)		003SB01801 (0-1ft)	
	DateCollected	1/27/2000		1/27/2000		1/27/2000	
	DateExtracted	1/30/2000		1/30/2000		1/30/2000	
	DateAnalyzed	2/4/2000		2/4/2000		2/4/2000	
	SDGNumber	41892		41892		41892	
Parameter	**Units**						
Aldrin, SPLP	ug/L						
Aldrin	ug/Kg	14	U	140	R	15000	U
Alpha BHC (alpha hexachlorocyclohexane), SPLP	ug/L						
Alpha BHC (Alpha Hexachlorocyclohexane)	ug/Kg	14	U	140	R	15000	U
Alpha-chlordane, SPLP	ug/L						
Alpha-chlordane	ug/Kg	14	U	140	R	15000	U
Beta BHC (beta hexachlorocyclohexane), SPLP	ug/L						
Beta BHC (Beta Hexachlorocyclohexane)	ug/kg	14	U	140	R	15000	U
Chlordane	ug/kg						
Delta BHC (delta hexachlorocyclohexane), SPLP	ug/L						
Delta BHC (Delta Hexachlorocyclohexane)	ug/kg	14	U	140	R	15000	U
Dieldrin, SPLP	ug/L						
Dieldrin	ug/kg	28	U	280	R	29000	U
Endosulfan I, SPLP	ug/L						
Endosulfan I	ug/kg	14	U	140	R	15000	U
Endosulfan II, SPLP	ug/L						
Endosulfan II	ug/Kg	28	U	280	R	29000	U
Endosulfan Sulfate, SPLP	ug/L						
Endosulfan Sulfate	ug/kg	28	U	280	R	29000	U
Endrin aldehyde, SPLP	ug/L						
Endrin Aldehyde	ug/kg	28	U	280	R	29000	U
Endrin ketone, SPLP	ug/L						
Endrin Ketone	ug/Kg	28	U	280	R	29000	U
Endrin, SPLP	ug/L						
Endrin	ug/kg	28	U	280	R	29000	U
Gamma BHC (lindane), SPLP	ug/L						
Gamma BHC (Lindane)	ug/Kg	14	U	140	R	15000	U
Gamma-chlordane, SPLP	ug/L						
Gamma-chlordane	ug/kg	14	U	140	R	15000	U
Heptachlor Epoxide	ug/kg	14	U	140	R	15000	U

	StationID	G003SB018		G003SB018		G003SB018	
	SampleID	003SB01801DL (0-1ft)		003SB01802 (3-5ft)		003SB01802DL (3-5ft)	
	DateCollected	1/27/2000		1/27/2000		1/27/2000	
	DateExtracted	1/30/2000		1/30/2000		1/30/2000	
	DateAnalyzed	2/8/2000		2/4/2000		2/4/2000	
	SDGNumber	41892		41892		41892	
Parameter	**Units**						
Aldrin, SPLP	ug/L						
Aldrin	ug/Kg	150000	R	15	U	150	R
Alpha BHC (alpha hexachlorocyclohexane), SPLP	ug/L						
Alpha BHC (Alpha Hexachlorocyclohexane)	ug/Kg	150000	R	15	U	150	R
Alpha-chlordane, SPLP	ug/L						
Alpha-chlordane	ug/Kg	150000	R	15	U	150	R
Beta BHC (beta hexachlorocyclohexane), SPLP	ug/L						
Beta BHC (Beta Hexachlorocyclohexane)	ug/kg	150000	R	15	U	150	R
Chlordane	ug/kg						
Delta BHC (delta hexachlorocyclohexane), SPLP	ug/L						
Delta BHC (Delta Hexachlorocyclohexane)	ug/kg	150000	R	15	U	150	R
Dieldrin, SPLP	ug/L						
Dieldrin	ug/kg	290000	R	28	U	280	R
Endosulfan I, SPLP	ug/L						
Endosulfan I	ug/kg	150000	R	15	U	150	R
Endosulfan II, SPLP	ug/L						
Endosulfan II	ug/Kg	290000	R	28	U	280	R
Endosulfan Sulfate, SPLP	ug/L						
Endosulfan Sulfate	ug/kg	290000	R	28	U	280	R
Endrin aldehyde, SPLP	ug/L						
Endrin Aldehyde	ug/kg	290000	R	28	U	280	R
Endrin ketone, SPLP	ug/L						
Endrin Ketone	ug/Kg	290000	R	28	U	280	R
Endrin, SPLP	ug/L						
Endrin	ug/kg	290000	R	28	U	280	R
Gamma BHC (lindane), SPLP	ug/L						
Gamma BHC (Lindane)	ug/Kg	150000	R	15	U	150	R
Gamma-chlordane, SPLP	ug/L						
Gamma-chlordane	ug/kg	150000	R	15	U	150	R
Heptachlor Epoxide	ug/kg	150000	R	15	U	150	R

	StationID	G003SB019		G003SB019		G003SB019	
	SampleID	003SB01901 (0-1ft)		003SB01901DL (0-1ft)		003SB01902 (3-5ft)	
	DateCollected	1/27/2000		1/27/2000		1/27/2000	
	DateExtracted	1/30/2000		1/30/2000		1/30/2000	
	DateAnalyzed	2/4/2000		2/4/2000		2/4/2000	
	SDGNumber	41892		41892		41892	
Parameter	**Units**						
Aldrin, SPLP	ug/L						
Aldrin	ug/Kg	1.5	U	15	R	1.5	U
Alpha BHC (alpha hexachlorocyclohexane), SPLP	ug/L						
Alpha BHC (Alpha Hexachlorocyclohexane)	ug/Kg	1.5	U	15	R	1.5	U
Alpha-chlordane, SPLP	ug/L						
Alpha-chlordane	ug/Kg	1.5	U	15	R	1.5	U
Beta BHC (beta hexachlorocyclohexane), SPLP	ug/L						
Beta BHC (Beta Hexachlorocyclohexane)	ug/kg	1.5	U	15	R	1.5	U
Chlordane	ug/kg						
Delta BHC (delta hexachlorocyclohexane), SPLP	ug/L						
Delta BHC (Delta Hexachlorocyclohexane)	ug/kg	1.5	U	15	R	1.5	U
Dieldrin, SPLP	ug/L						
Dieldrin	ug/kg	2.9	U	29	R	2.9	U
Endosulfan I, SPLP	ug/L						
Endosulfan I	ug/kg	1.5	U	15	R	1.5	U
Endosulfan II, SPLP	ug/L						
Endosulfan II	ug/Kg	2.9	U	29	R	2.9	U
Endosulfan Sulfate, SPLP	ug/L						
Endosulfan Sulfate	ug/kg	2.9	U	29	R	2.9	U
Endrin aldehyde, SPLP	ug/L						
Endrin Aldehyde	ug/kg	2.9	U	29	R	2.9	U
Endrin ketone, SPLP	ug/L						
Endrin Ketone	ug/Kg	2.9	U	29	R	2.9	U
Endrin, SPLP	ug/L						
Endrin	ug/kg	2.9	U	29	R	2.9	U
Gamma BHC (lindane), SPLP	ug/L						
Gamma BHC (Lindane)	ug/Kg	1.5	U	15	R	1.5	U
Gamma-chlordane, SPLP	ug/L						
Gamma-chlordane	ug/kg	2	U	15	R	1.5	U
Heptachlor Epoxide	ug/kg	2.5	=	15	R	1.5	U

	StationID	G003SB019		G003SB020		G003SB020	
	SampleID	003SB01902DL (3-5ft)		003SB02001 (0-1ft)		003SB02001DL (0-1ft)	
	DateCollected	1/27/2000		1/27/2000		1/27/2000	
	DateExtracted	1/30/2000		1/30/2000		1/30/2000	
	DateAnalyzed	2/4/2000		2/4/2000		2/4/2000	
	SDGNumber	41892		41892		41892	
Parameter	**Units**						
Aldrin, SPLP	ug/L						
Aldrin	ug/Kg	15	R	15	U	150	R
Alpha BHC (alpha hexachlorocyclohexane), SPLP	ug/L						
Alpha BHC (Alpha Hexachlorocyclohexane)	ug/Kg	15	R	15	U	150	R
Alpha-chlordane, SPLP	ug/L						
Alpha-chlordane	ug/Kg	15	R	15	U	150	R
Beta BHC (beta hexachlorocyclohexane), SPLP	ug/L						
Beta BHC (Beta Hexachlorocyclohexane)	ug/kg	15	R	15	U	150	R
Chlordane	ug/kg						
Delta BHC (delta hexachlorocyclohexane), SPLP	ug/L						
Delta BHC (Delta Hexachlorocyclohexane)	ug/kg	15	R	15	U	150	R
Dieldrin, SPLP	ug/L						
Dieldrin	ug/kg	29	R	29	U	290	R
Endosulfan I, SPLP	ug/L						
Endosulfan I	ug/kg	15	R	15	U	150	R
Endosulfan II, SPLP	ug/L						
Endosulfan II	ug/Kg	29	R	29	U	290	R
Endosulfan Sulfate, SPLP	ug/L						
Endosulfan Sulfate	ug/kg	29	R	29	U	290	R
Endrin aldehyde, SPLP	ug/L						
Endrin Aldehyde	ug/kg	29	R	29	U	290	R
Endrin ketone, SPLP	ug/L						
Endrin Ketone	ug/Kg	29	R	29	U	290	R
Endrin, SPLP	ug/L						
Endrin	ug/kg	29	R	29	U	290	R
Gamma BHC (lindane), SPLP	ug/L						
Gamma BHC (Lindane)	ug/Kg	15	R	15	U	150	R
Gamma-chlordane, SPLP	ug/L						
Gamma-chlordane	ug/kg	15	R	15	U	150	R
Heptachlor Epoxide	ug/kg	15	R	15	U	150	R

	StationID	G003SB020		G003SB021		G003SB021	
	SampleID	003SB02002 (3-5ft)		003CB02101 (0-1ft)		003SB02101 (0-1ft)	
	DateCollected	1/27/2000		11/29/2001		11/29/2001	
	DateExtracted	1/30/2000		12/12/2001		12/4/2001	
	DateAnalyzed	2/4/2000		12/13/2001		12/11/2001	
	SDGNumber	41892		CNC55		CNC55	
Parameter	**Units**						
Aldrin, SPLP	ug/L						
Aldrin	ug/Kg	1.5	U	1.5	UJ	2.9	U
Alpha BHC (alpha hexachlorocyclohexane), SPLP	ug/L						
Alpha BHC (Alpha Hexachlorocyclohexane)	ug/Kg	1.5	U	1.5	UJ	2.9	U
Alpha-chlordane, SPLP	ug/L						
Alpha-chlordane	ug/Kg	1.5	U	1.5	UJ	3.5	=
Beta BHC (beta hexachlorocyclohexane), SPLP	ug/L						
Beta BHC (Beta Hexachlorocyclohexane)	ug/kg	1.5	U	1.5	UJ	2.9	U
Chlordane	ug/kg			15	UJ	29	U
Delta BHC (delta hexachlorocyclohexane), SPLP	ug/L						
Delta BHC (Delta Hexachlorocyclohexane)	ug/kg	1.5	U	1.5	UJ	2.9	U
Dieldrin, SPLP	ug/L						
Dieldrin	ug/kg	2.9	U	0.66	J	0.64	J
Endosulfan I, SPLP	ug/L						
Endosulfan I	ug/kg	1.5	U	1.5	UJ	2.9	U
Endosulfan II, SPLP	ug/L						
Endosulfan II	ug/Kg	2.9	U	2.9	UJ	5.6	U
Endosulfan Sulfate, SPLP	ug/L						
Endosulfan Sulfate	ug/kg	2.9	U	2.9	UJ	5.6	U
Endrin aldehyde, SPLP	ug/L						
Endrin Aldehyde	ug/kg	2.9	U	2.9	UJ	1	J
Endrin ketone, SPLP	ug/L						
Endrin Ketone	ug/Kg	2.9	U	2.9	UJ	5.6	U
Endrin, SPLP	ug/L						
Endrin	ug/kg	2.9	U	2.9	UJ	5.6	U
Gamma BHC (lindane), SPLP	ug/L						
Gamma BHC (Lindane)	ug/Kg	1.5	U	1.5	UJ	2.9	U
Gamma-chlordane, SPLP	ug/L						
Gamma-chlordane	ug/kg	1.5	U	2.6	J	4.2	=
Heptachlor Epoxide	ug/kg	1.5	U	4.7	J	8.7	=

	StationID	G003SB021		G003SB022		G003SB022	
	SampleID	003SB02102 (3-5ft)		003SB02201 (0-1ft)		003SB02202 (3-5ft)	
	DateCollected	11/29/2001		11/29/2001		11/29/2001	
	DateExtracted	12/4/2001		12/4/2001		12/4/2001	
	DateAnalyzed	12/11/2001		12/6/2001		12/6/2001	
	SDGNumber	CNC55		CNC54		CNC54	
Parameter	**Units**						
Aldrin, SPLP	ug/L						
Aldrin	ug/Kg	1.5	U	1.4	U	1.4	U
Alpha BHC (alpha hexachlorocyclohexane), SPLP	ug/L						
Alpha BHC (Alpha Hexachlorocyclohexane)	ug/Kg	1.5	U	1.4	U	1.4	U
Alpha-chlordane, SPLP	ug/L						
Alpha-chlordane	ug/Kg	1.5	U	1.4	U	1.4	U
Beta BHC (beta hexachlorocyclohexane), SPLP	ug/L						
Beta BHC (Beta Hexachlorocyclohexane)	ug/kg	1.5	U	1.4	U	1.4	U
Chlordane	ug/kg	15	U	14	U	14	U
Delta BHC (delta hexachlorocyclohexane), SPLP	ug/L						
Delta BHC (Delta Hexachlorocyclohexane)	ug/kg	1.5	U	1.4	U	1.4	U
Dieldrin, SPLP	ug/L						
Dieldrin	ug/kg	2.8	U	2.6	U	2.6	U
Endosulfan I, SPLP	ug/L						
Endosulfan I	ug/kg	1.5	U	1.4	U	1.4	U
Endosulfan II, SPLP	ug/L						
Endosulfan II	ug/Kg	2.8	U	2.6	U	2.6	U
Endosulfan Sulfate, SPLP	ug/L						
Endosulfan Sulfate	ug/kg	2.8	U	1	J	2.6	U
Endrin aldehyde, SPLP	ug/L						
Endrin Aldehyde	ug/kg	2.8	U	2.6	U	2.6	U
Endrin ketone, SPLP	ug/L						
Endrin Ketone	ug/Kg	2.8	U	2.6	U	2.6	U
Endrin, SPLP	ug/L						
Endrin	ug/kg	2.8	U	2.6	U	2.6	U
Gamma BHC (lindane), SPLP	ug/L						
Gamma BHC (Lindane)	ug/Kg	1.5	U	1.4	U	1.4	U
Gamma-chlordane, SPLP	ug/L						
Gamma-chlordane	ug/kg	1.5	U	1.4	U	1.4	U
Heptachlor Epoxide	ug/kg	1.5	U	0.14	J	1.4	U

	StationID	G003SB023		G003SB023		G003SB024	
	SampleID	003SB02301 (0-1ft)		003SB02302 (3-5ft)		003SB02401 (0-1ft)	
	DateCollected	11/29/2001		11/29/2001		11/29/2001	
	DateExtracted	12/4/2001		12/4/2001		12/4/2001	
	DateAnalyzed	12/6/2001		12/6/2001		12/6/2001	
	SDGNumber	CNC54		CNC54		CNC54	
Parameter	**Units**						
Aldrin, SPLP	ug/L						
Aldrin	ug/Kg	14	U	1.4	U	1.4	U
Alpha BHC (alpha hexachlorocyclohexane), SPLP	ug/L						
Alpha BHC (Alpha Hexachlorocyclohexane)	ug/Kg	14	U	1.4	U	1.4	U
Alpha-chlordane, SPLP	ug/L						
Alpha-chlordane	ug/Kg	14	U	1.4	U	1.4	U
Beta BHC (beta hexachlorocyclohexane), SPLP	ug/L						
Beta BHC (Beta Hexachlorocyclohexane)	ug/kg	14	U	1.4	U	1.4	U
Chlordane	ug/kg	140	U	14	U	14	U
Delta BHC (delta hexachlorocyclohexane), SPLP	ug/L						
Delta BHC (Delta Hexachlorocyclohexane)	ug/kg	14	U	1.4	U	1.4	U
Dieldrin, SPLP	ug/L						
Dieldrin	ug/kg	27	U	2.7	U	2.6	U
Endosulfan I, SPLP	ug/L						
Endosulfan I	ug/kg	14	U	1.4	U	1.4	U
Endosulfan II, SPLP	ug/L						
Endosulfan II	ug/Kg	27	U	2.7	U	2.6	U
Endosulfan Sulfate, SPLP	ug/L						
Endosulfan Sulfate	ug/kg	27	U	2.7	U	0.89	J
Endrin aldehyde, SPLP	ug/L						
Endrin Aldehyde	ug/kg	27	U	2.7	U	2.6	U
Endrin ketone, SPLP	ug/L						
Endrin Ketone	ug/Kg	27	U	2.7	U	0.93	J
Endrin, SPLP	ug/L						
Endrin	ug/kg	27	U	2.7	U	2.6	U
Gamma BHC (lindane), SPLP	ug/L						
Gamma BHC (Lindane)	ug/Kg	14	U	1.4	U	1.4	U
Gamma-chlordane, SPLP	ug/L						
Gamma-chlordane	ug/kg	14	U	1.4	U	0.67	J
Heptachlor Epoxide	ug/kg	3.1	J	1.4	U	0.29	J

	StationID	G003SB024		G003SB024		G003SB025	
	SampleID	003SB02401DL (0-1ft)		003SB02402 (3-5ft)		003SB02501 (0-1ft)	
	DateCollected	11/29/2001		11/29/2001		11/29/2001	
	DateExtracted	12/4/2001		12/4/2001		12/4/2001	
	DateAnalyzed	12/10/2001		12/6/2001		12/6/2001	
	SDGNumber	CNC54		CNC54		CNC54	
Parameter	**Units**						
Aldrin, SPLP	ug/L						
Aldrin	ug/Kg	2.8	R	1.4	U	140	U
Alpha BHC (alpha hexachlorocyclohexane), SPLP	ug/L						
Alpha BHC (Alpha Hexachlorocyclohexane)	ug/Kg	2.8	R	1.4	U	140	U
Alpha-chlordane, SPLP	ug/L						
Alpha-chlordane	ug/Kg	2.8	R	1.4	U	140	U
Beta BHC (beta hexachlorocyclohexane), SPLP	ug/L						
Beta BHC (Beta Hexachlorocyclohexane)	ug/kg	2.8	R	1.4	U	140	U
Chlordane	ug/kg	28	R	14	U	1400	U
Delta BHC (delta hexachlorocyclohexane), SPLP	ug/L						
Delta BHC (Delta Hexachlorocyclohexane)	ug/kg	1.7	R	1.4	U	140	U
Dieldrin, SPLP	ug/L						
Dieldrin	ug/kg	5.3	R	2.7	U	270	U
Endosulfan I, SPLP	ug/L						
Endosulfan I	ug/kg	2.8	R	1.4	U	140	U
Endosulfan II, SPLP	ug/L						
Endosulfan II	ug/Kg	5.3	R	2.7	U	270	U
Endosulfan Sulfate, SPLP	ug/L						
Endosulfan Sulfate	ug/kg	5.3	R	2.7	U	270	U
Endrin aldehyde, SPLP	ug/L						
Endrin Aldehyde	ug/kg	5.3	R	2.7	U	270	U
Endrin ketone, SPLP	ug/L						
Endrin Ketone	ug/Kg	5.3	R	2.7	U	270	U
Endrin, SPLP	ug/L						
Endrin	ug/kg	5.3	R	2.7	U	270	U
Gamma BHC (lindane), SPLP	ug/L						
Gamma BHC (Lindane)	ug/Kg	2.8	R	1.4	U	140	U
Gamma-chlordane, SPLP	ug/L						
Gamma-chlordane	ug/kg	0.83	R	1.4	U	140	U
Heptachlor Epoxide	ug/kg	0.94	R	1.4	U	140	U

	StationID	G003SB025		G003SB026		G003SB026	
	SampleID	003SB02502 (3-5ft)		003SB02601 (0-1ft)		003SB02602 (3-5ft)	
	DateCollected	11/29/2001		11/29/2001		11/29/2001	
	DateExtracted	12/4/2001		12/4/2001		12/4/2001	
	DateAnalyzed	12/6/2001		12/10/2001		12/10/2001	
	SDGNumber	CNC54		CNC54		CNC54	
Parameter	**Units**						
Aldrin, SPLP	ug/L						
Aldrin	ug/Kg	1.5	U	1500	UJ	0.93	J
Alpha BHC (alpha hexachlorocyclohexane), SPLP	ug/L						
Alpha BHC (Alpha Hexachlorocyclohexane)	ug/Kg	1.5	U	1500	UJ	1.4	UJ
Alpha-chlordane, SPLP	ug/L						
Alpha-chlordane	ug/Kg	1.5	U	17000	J	16	J
Beta BHC (beta hexachlorocyclohexane), SPLP	ug/L						
Beta BHC (Beta Hexachlorocyclohexane)	ug/kg	1.5	U	1500	U	1.4	U
Chlordane	ug/kg	15	U	140000	=	170	=
Delta BHC (delta hexachlorocyclohexane), SPLP	ug/L						
Delta BHC (Delta Hexachlorocyclohexane)	ug/kg	1.5	U	1500	UJ	1.4	UJ
Dieldrin, SPLP	ug/L						
Dieldrin	ug/kg	2.8	U	410	J	0.48	J
Endosulfan I, SPLP	ug/L						
Endosulfan I	ug/kg	1.5	U	1500	U	1.4	U
Endosulfan II, SPLP	ug/L						
Endosulfan II	ug/Kg	2.8	U	2800	U	2.8	U
Endosulfan Sulfate, SPLP	ug/L						
Endosulfan Sulfate	ug/kg	2.8	U	2800	U	2.8	U
Endrin aldehyde, SPLP	ug/L						
Endrin Aldehyde	ug/kg	2.8	U	2800	U	2.8	U
Endrin ketone, SPLP	ug/L						
Endrin Ketone	ug/Kg	2.8	U	2800	U	2.8	U
Endrin, SPLP	ug/L						
Endrin	ug/kg	2.8	U	2800	U	2.8	U
Gamma BHC (lindane), SPLP	ug/L						
Gamma BHC (Lindane)	ug/Kg	1.5	U	1500	UJ	1.4	UJ
Gamma-chlordane, SPLP	ug/L						
Gamma-chlordane	ug/kg	1.5	U	19000	=	14	=
Heptachlor Epoxide	ug/kg	1.5	U	1500	UJ	3.1	J

	StationID	G003SB027		G003SB027		G003SB028	
	SampleID	003SB02701 (0-1ft)		003SB02702 (3-5ft)		003SB02801 (0-1ft)	
	DateCollected	11/29/2001		11/29/2001		11/29/2001	
	DateExtracted	12/4/2001		12/4/2001		12/4/2001	
	DateAnalyzed	12/6/2001		12/6/2001		12/10/2001	
	SDGNumber	CNC54		CNC54		CNC54	
Parameter	**Units**						
Aldrin, SPLP	ug/L						
Aldrin	ug/Kg	1.4	U	1.4	U	1400	UJ
Alpha BHC (alpha hexachlorocyclohexane), SPLP	ug/L						
Alpha BHC (Alpha Hexachlorocyclohexane)	ug/Kg	1.4	U	1.4	U	1400	UJ
Alpha-chlordane, SPLP	ug/L						
Alpha-chlordane	ug/Kg	0.33	J	1.4	U	1400	UJ
Beta BHC (beta hexachlorocyclohexane), SPLP	ug/L						
Beta BHC (Beta Hexachlorocyclohexane)	ug/kg	1.4	U	1.4	U	1400	U
Chlordane	ug/kg	14	U	14	U	14000	U
Delta BHC (delta hexachlorocyclohexane), SPLP	ug/L						
Delta BHC (Delta Hexachlorocyclohexane)	ug/kg	1.4	U	1.4	U	1400	UJ
Dieldrin, SPLP	ug/L						
Dieldrin	ug/kg	2.8	U	2.8	U	2700	U
Endosulfan I, SPLP	ug/L						
Endosulfan I	ug/kg	1.4	U	1.4	U	1400	U
Endosulfan II, SPLP	ug/L						
Endosulfan II	ug/Kg	2.8	U	2.8	U	2700	U
Endosulfan Sulfate, SPLP	ug/L						
Endosulfan Sulfate	ug/kg	2.8	U	2.8	U	2700	U
Endrin aldehyde, SPLP	ug/L						
Endrin Aldehyde	ug/kg	2.8	U	2.8	U	2700	U
Endrin ketone, SPLP	ug/L						
Endrin Ketone	ug/Kg	1.4	J	2.8	U	2700	U
Endrin, SPLP	ug/L						
Endrin	ug/kg	2.8	U	2.8	U	2700	U
Gamma BHC (lindane), SPLP	ug/L						
Gamma BHC (Lindane)	ug/Kg	1.4	U	1.4	U	1400	UJ
Gamma-chlordane, SPLP	ug/L						
Gamma-chlordane	ug/kg	0.74	J	1.4	U	320	J
Heptachlor Epoxide	ug/kg	1.4	U	1.4	U	1400	UJ

	StationID	G003SB028		G003SB028		G003SB028	
	SampleID	003SB02801DL (0-1ft)		003SB02802 (3-5ft)		003SB02802DL (3-5ft)	
	DateCollected	11/29/2001		11/29/2001		11/29/2001	
	DateExtracted	12/4/2001		12/4/2001		12/4/2001	
	DateAnalyzed	12/10/2001		12/7/2001		12/10/2001	
	SDGNumber	CNC54		CNC54		CNC54	
Parameter	**Units**						
Aldrin, SPLP	ug/L						
Aldrin	ug/Kg	2800	R	1.5	U	3	R
Alpha BHC (alpha hexachlorocyclohexane), SPLP	ug/L						
Alpha BHC (Alpha Hexachlorocyclohexane)	ug/Kg	2800	R	1.5	U	3	R
Alpha-chlordane, SPLP	ug/L						
Alpha-chlordane	ug/Kg	2800	R	1.4	J	0.92	R
Beta BHC (beta hexachlorocyclohexane), SPLP	ug/L						
Beta BHC (Beta Hexachlorocyclohexane)	ug/kg	2800	R	1.5	U	3	R
Chlordane	ug/kg	28000	R	15	U	30	R
Delta BHC (delta hexachlorocyclohexane), SPLP	ug/L						
Delta BHC (Delta Hexachlorocyclohexane)	ug/kg	2800	R	1.5	UJ	1.8	R
Dieldrin, SPLP	ug/L						
Dieldrin	ug/kg	5400	R	2.9	U	5.8	R
Endosulfan I, SPLP	ug/L						
Endosulfan I	ug/kg	2800	R	1.5	U	3	R
Endosulfan II, SPLP	ug/L						
Endosulfan II	ug/Kg	5400	R	2.9	U	5.8	R
Endosulfan Sulfate, SPLP	ug/L						
Endosulfan Sulfate	ug/kg	5400	R	2.9	U	5.8	R
Endrin aldehyde, SPLP	ug/L						
Endrin Aldehyde	ug/kg	5400	R	2.9	U	5.8	R
Endrin ketone, SPLP	ug/L						
Endrin Ketone	ug/Kg	5400	R	2.9	UJ	5.8	R
Endrin, SPLP	ug/L						
Endrin	ug/kg	5400	R	2.9	U	5.8	R
Gamma BHC (lindane), SPLP	ug/L						
Gamma BHC (Lindane)	ug/Kg	2800	R	1.5	UJ	3	R
Gamma-chlordane, SPLP	ug/L						
Gamma-chlordane	ug/kg	2800	R	1	J	1.2	R
Heptachlor Epoxide	ug/kg	2800	R	1.5	U	3	R

	StationID	G003SB029		G003SB029		G003SB029	
	SampleID	003CB02902 (3-5ft)		003SB02901 (0-1ft)		003SB02902 (3-5ft)	
	DateCollected	11/29/2001		11/29/2001		11/29/2001	
	DateExtracted	12/4/2001		12/4/2001		12/4/2001	
	DateAnalyzed	12/7/2001		12/7/2001		12/7/2001	
	SDGNumber	CNC54		CNC54		CNC54	
Parameter	**Units**						
Aldrin, SPLP	ug/L						
Aldrin	ug/Kg	1.4	U	140	U	1.4	U
Alpha BHC (alpha hexachlorocyclohexane), SPLP	ug/L						
Alpha BHC (Alpha Hexachlorocyclohexane)	ug/Kg	1.4	U	140	U	1.4	U
Alpha-chlordane, SPLP	ug/L						
Alpha-chlordane	ug/Kg	0.32	J	140	U	1.4	U
Beta BHC (beta hexachlorocyclohexane), SPLP	ug/L						
Beta BHC (Beta Hexachlorocyclohexane)	ug/kg	1.4	U	140	U	1.4	U
Chlordane	ug/kg	14	U	1400	U	14	U
Delta BHC (delta hexachlorocyclohexane), SPLP	ug/L						
Delta BHC (Delta Hexachlorocyclohexane)	ug/kg	1.4	U	140	U	1.4	U
Dieldrin, SPLP	ug/L						
Dieldrin	ug/kg	2.7	U	260	U	2.7	U
Endosulfan I, SPLP	ug/L						
Endosulfan I	ug/kg	1.4	U	140	U	1.4	U
Endosulfan II, SPLP	ug/L						
Endosulfan II	ug/Kg	2.7	U	260	U	2.7	U
Endosulfan Sulfate, SPLP	ug/L						
Endosulfan Sulfate	ug/kg	2.7	U	260	U	2.7	U
Endrin aldehyde, SPLP	ug/L						
Endrin Aldehyde	ug/kg	2.7	U	260	U	2.7	U
Endrin ketone, SPLP	ug/L						
Endrin Ketone	ug/Kg	2.7	U	260	U	2.7	U
Endrin, SPLP	ug/L						
Endrin	ug/kg	2.7	U	260	U	2.7	U
Gamma BHC (lindane), SPLP	ug/L						
Gamma BHC (Lindane)	ug/Kg	1.4	U	140	U	1.4	U
Gamma-chlordane, SPLP	ug/L						
Gamma-chlordane	ug/kg	0.47	J	26	J	0.37	J
Heptachlor Epoxide	ug/kg	1.4	U	140	U	1.4	U

	StationID	G003SB030		G003SB030		G003SB030	
	SampleID	003SB03001 (0-1ft)		003SB03002 (3-5ft)		003SB03002DL (3-5ft)	
	DateCollected	11/29/2001		11/29/2001		11/29/2001	
	DateExtracted	12/4/2001		12/4/2001		12/4/2001	
	DateAnalyzed	12/7/2001		12/7/2001		12/10/2001	
	SDGNumber	CNC54		CNC54		CNC54	
Parameter	**Units**						
Aldrin, SPLP	ug/L						
Aldrin	ug/Kg	36	U	3	U	7.6	R
Alpha BHC (alpha hexachlorocyclohexane), SPLP	ug/L						
Alpha BHC (Alpha Hexachlorocyclohexane)	ug/Kg	36	U	3	U	7.6	R
Alpha-chlordane, SPLP	ug/L						
Alpha-chlordane	ug/Kg	36	U	3	U	7.6	R
Beta BHC (beta hexachlorocyclohexane), SPLP	ug/L						
Beta BHC (Beta Hexachlorocyclohexane)	ug/kg	36	U	3	U	7.6	R
Chlordane	ug/kg	360	U	30	U	76	R
Delta BHC (delta hexachlorocyclohexane), SPLP	ug/L						
Delta BHC (Delta Hexachlorocyclohexane)	ug/kg	36	U	3	U	4.3	R
Dieldrin, SPLP	ug/L						
Dieldrin	ug/kg	70	U	5.8	U	14	R
Endosulfan I, SPLP	ug/L						
Endosulfan I	ug/kg	36	U	3	U	7.6	R
Endosulfan II, SPLP	ug/L						
Endosulfan II	ug/Kg	70	U	5.8	U	14	R
Endosulfan Sulfate, SPLP	ug/L						
Endosulfan Sulfate	ug/kg	70	U	5.8	U	14	R
Endrin aldehyde, SPLP	ug/L						
Endrin Aldehyde	ug/kg	70	U	5.8	U	14	R
Endrin ketone, SPLP	ug/L						
Endrin Ketone	ug/Kg	70	U	5.8	U	14	R
Endrin, SPLP	ug/L						
Endrin	ug/kg	70	U	5.8	U	14	R
Gamma BHC (lindane), SPLP	ug/L						
Gamma BHC (Lindane)	ug/Kg	36	U	3	U	7.6	R
Gamma-chlordane, SPLP	ug/L						
Gamma-chlordane	ug/kg	36	U	3	U	7.6	R
Heptachlor Epoxide	ug/kg	36	U	3	U	7.6	R

	StationID	G003SB031		G003SB031		G003SB032	
	SampleID	003SB03101 (0-1ft)		003SB03102 (3-5ft)		003SB03201 (0-1ft)	
	DateCollected	11/29/2001		11/29/2001		11/28/2001	
	DateExtracted	12/13/2001		12/12/2001		12/4/2001	
	DateAnalyzed	12/14/2001		12/13/2001		12/11/2001	
	SDGNumber	CNC54		CNC55		CNC55	
Parameter	**Units**						
Aldrin, SPLP	ug/L						
Aldrin	ug/Kg	7	U	1.4	UJ	28	U
Alpha BHC (alpha hexachlorocyclohexane), SPLP	ug/L						
Alpha BHC (Alpha Hexachlorocyclohexane)	ug/Kg	7	U	1.4	UJ	28	U
Alpha-chlordane, SPLP	ug/L						
Alpha-chlordane	ug/Kg	3.1	J	1.4	U	69	=
Beta BHC (beta hexachlorocyclohexane), SPLP	ug/L						
Beta BHC (Beta Hexachlorocyclohexane)	ug/kg	7	U	1.4	U	28	U
Chlordane	ug/kg	70	U	14	UJ	280	U
Delta BHC (delta hexachlorocyclohexane), SPLP	ug/L						
Delta BHC (Delta Hexachlorocyclohexane)	ug/kg	7	U	1.4	UJ	28	U
Dieldrin, SPLP	ug/L						
Dieldrin	ug/kg	13	U	2.6	U	27	J
Endosulfan I, SPLP	ug/L						
Endosulfan I	ug/kg	7	U	1.4	U	28	U
Endosulfan II, SPLP	ug/L						
Endosulfan II	ug/Kg	13	U	2.6	U	55	U
Endosulfan Sulfate, SPLP	ug/L						
Endosulfan Sulfate	ug/kg	13	U	2.6	U	55	U
Endrin aldehyde, SPLP	ug/L						
Endrin Aldehyde	ug/kg	13	U	2.6	U	55	U
Endrin ketone, SPLP	ug/L						
Endrin Ketone	ug/Kg	13	U	2.6	U	55	U
Endrin, SPLP	ug/L						
Endrin	ug/kg	13	U	2.6	U	55	U
Gamma BHC (lindane), SPLP	ug/L						
Gamma BHC (Lindane)	ug/Kg	7	U	1.4	UJ	28	U
Gamma-chlordane, SPLP	ug/L						
Gamma-chlordane	ug/kg	4.4	J	0.39	J	77	=
Heptachlor Epoxide	ug/kg	2.2	J	1.4	U	28	U

	StationID	G003SB032		G003SB033		G003SB033	
	SampleID	003SB03202 (3-5ft)		003SB03301 (0-1ft)		003SB03302 (3-5ft)	
	DateCollected	11/28/2001		11/29/2001		11/29/2001	
	DateExtracted	12/4/2001		12/4/2001		12/12/2001	
	DateAnalyzed	12/11/2001		12/15/2001		12/13/2001	
	SDGNumber	CNC55		CNC55		CNC55	
Parameter	**Units**						
Aldrin, SPLP	ug/L						
Aldrin	ug/Kg	28	U	70	UJ	1.4	UJ
Alpha BHC (alpha hexachlorocyclohexane), SPLP	ug/L						
Alpha BHC (Alpha Hexachlorocyclohexane)	ug/Kg	28	U	70	UJ	1.4	UJ
Alpha-chlordane, SPLP	ug/L						
Alpha-chlordane	ug/Kg	61	=	300	=	4.8	J
Beta BHC (beta hexachlorocyclohexane), SPLP	ug/L						
Beta BHC (Beta Hexachlorocyclohexane)	ug/kg	28	U	70	U	1.4	U
Chlordane	ug/kg	280	U	700	UJ	31	J
Delta BHC (delta hexachlorocyclohexane), SPLP	ug/L						
Delta BHC (Delta Hexachlorocyclohexane)	ug/kg	28	U	70	UJ	1.4	UJ
Dieldrin, SPLP	ug/L						
Dieldrin	ug/kg	48	J	120	J	7.2	=
Endosulfan I, SPLP	ug/L						
Endosulfan I	ug/kg	28	U	70	U	1.4	U
Endosulfan II, SPLP	ug/L						
Endosulfan II	ug/Kg	53	U	130	U	2.7	U
Endosulfan Sulfate, SPLP	ug/L						
Endosulfan Sulfate	ug/kg	53	U	130	U	2.7	U
Endrin aldehyde, SPLP	ug/L						
Endrin Aldehyde	ug/kg	53	U	130	U	2.7	U
Endrin ketone, SPLP	ug/L						
Endrin Ketone	ug/Kg	53	U	130	U	0.74	J
Endrin, SPLP	ug/L						
Endrin	ug/kg	53	U	130	U	2.7	U
Gamma BHC (lindane), SPLP	ug/L						
Gamma BHC (Lindane)	ug/Kg	28	U	70	UJ	1.4	UJ
Gamma-chlordane, SPLP	ug/L						
Gamma-chlordane	ug/kg	77	=	180	=	4.8	=
Heptachlor Epoxide	ug/kg	3.3	J	70	U	0.15	J

	StationID	G003SB034		G003SB034		G003SB034	
	SampleID	003SB03401 (0-1ft)		003SB03401DL (0-1ft)		003SB03402 (3-5ft)	
	DateCollected	11/29/2001		11/29/2001		11/29/2001	
	DateExtracted	12/4/2001		12/4/2001		12/4/2001	
	DateAnalyzed	12/11/2001		12/15/2001		12/11/2001	
	SDGNumber	CNC55		CNC55		CNC55	
Parameter	**Units**						
Aldrin, SPLP	ug/L						
Aldrin	ug/Kg	69	U	1400	R	61	U
Alpha BHC (alpha hexachlorocyclohexane), SPLP	ug/L						
Alpha BHC (Alpha Hexachlorocyclohexane)	ug/Kg	69	U	1400	R	61	U
Alpha-chlordane, SPLP	ug/L						
Alpha-chlordane	ug/Kg	130	=	1400	R	61	U
Beta BHC (beta hexachlorocyclohexane), SPLP	ug/L						
Beta BHC (Beta Hexachlorocyclohexane)	ug/kg	69	U	1400	R	61	U
Chlordane	ug/kg	690	U	14000	R	610	U
Delta BHC (delta hexachlorocyclohexane), SPLP	ug/L						
Delta BHC (Delta Hexachlorocyclohexane)	ug/kg	69	U	1400	R	61	U
Dieldrin, SPLP	ug/L						
Dieldrin	ug/kg	130	U	2600	R	120	U
Endosulfan I, SPLP	ug/L						
Endosulfan I	ug/kg	69	U	1400	R	61	U
Endosulfan II, SPLP	ug/L						
Endosulfan II	ug/Kg	130	U	2600	R	120	U
Endosulfan Sulfate, SPLP	ug/L						
Endosulfan Sulfate	ug/kg	130	U	2600	R	120	U
Endrin aldehyde, SPLP	ug/L						
Endrin Aldehyde	ug/kg	130	U	2600	R	120	U
Endrin ketone, SPLP	ug/L						
Endrin Ketone	ug/Kg	130	U	2600	R	120	U
Endrin, SPLP	ug/L						
Endrin	ug/kg	130	U	2600	R	120	U
Gamma BHC (lindane), SPLP	ug/L						
Gamma BHC (Lindane)	ug/Kg	69	U	1400	R	61	U
Gamma-chlordane, SPLP	ug/L						
Gamma-chlordane	ug/kg	230	=	1400	R	61	U
Heptachlor Epoxide	ug/kg	69	U	1400	R	61	U

	StationID	G003SB034		G003SB035		G003SB035	
	SampleID	003SB03402DL (3-5ft)		003SB03501 (0-1ft)		003SB03501DL (0-1ft)	
	DateCollected	11/29/2001		11/29/2001		11/29/2001	
	DateExtracted	12/4/2001		12/4/2001		12/4/2001	
	DateAnalyzed	12/11/2001		12/11/2001		12/13/2001	
	SDGNumber	CNC55		CNC55		CNC55	
Parameter	**Units**						
Aldrin, SPLP	ug/L						
Aldrin	ug/Kg	150	R	140	U	550	R
Alpha BHC (alpha hexachlorocyclohexane), SPLP	ug/L						
Alpha BHC (Alpha Hexachlorocyclohexane)	ug/Kg	150	R	140	U	550	R
Alpha-chlordane, SPLP	ug/L						
Alpha-chlordane	ug/Kg	150	R	140	U	550	R
Beta BHC (beta hexachlorocyclohexane), SPLP	ug/L						
Beta BHC (Beta Hexachlorocyclohexane)	ug/kg	150	R	140	U	550	R
Chlordane	ug/kg	1500	R	1400	U	5500	R
Delta BHC (delta hexachlorocyclohexane), SPLP	ug/L						
Delta BHC (Delta Hexachlorocyclohexane)	ug/kg	150	R	140	U	550	R
Dieldrin, SPLP	ug/L						
Dieldrin	ug/kg	290	R	260	U	1100	R
Endosulfan I, SPLP	ug/L						
Endosulfan I	ug/kg	150	R	140	U	550	R
Endosulfan II, SPLP	ug/L						
Endosulfan II	ug/Kg	290	R	260	U	1100	R
Endosulfan Sulfate, SPLP	ug/L						
Endosulfan Sulfate	ug/kg	290	R	260	U	1100	R
Endrin aldehyde, SPLP	ug/L						
Endrin Aldehyde	ug/kg	290	R	260	U	1100	R
Endrin ketone, SPLP	ug/L						
Endrin Ketone	ug/Kg	290	R	260	U	1100	R
Endrin, SPLP	ug/L						
Endrin	ug/kg	290	R	260	U	1100	R
Gamma BHC (lindane), SPLP	ug/L						
Gamma BHC (Lindane)	ug/Kg	150	R	140	U	550	R
Gamma-chlordane, SPLP	ug/L						
Gamma-chlordane	ug/kg	150	R	140	U	550	R
Heptachlor Epoxide	ug/kg	150	R	140	U	550	R

	StationID	G003SB035		G003SB036		G003SB036	
	SampleID	003SB03502 (3-5ft)		003SB03601 (0-1ft)		003SB03602 (3-5ft)	
	DateCollected	11/29/2001		11/29/2001		11/29/2001	
	DateExtracted	12/4/2001		12/12/2001		12/4/2001	
	DateAnalyzed	12/11/2001		12/13/2001		12/11/2001	
	SDGNumber	CNC55		CNC55		CNC55	
Parameter	**Units**						
Aldrin, SPLP	ug/L						
Aldrin	ug/Kg	150	U	1.4	UJ	1.5	U
Alpha BHC (alpha hexachlorocyclohexane), SPLP	ug/L						
Alpha BHC (Alpha Hexachlorocyclohexane)	ug/Kg	150	U	1.4	UJ	1.5	U
Alpha-chlordane, SPLP	ug/L						
Alpha-chlordane	ug/Kg	150	U	1.4	UJ	0.42	J
Beta BHC (beta hexachlorocyclohexane), SPLP	ug/L						
Beta BHC (Beta Hexachlorocyclohexane)	ug/kg	150	U	1.4	UJ	1.5	U
Chlordane	ug/kg	1500	U	14	UJ	15	U
Delta BHC (delta hexachlorocyclohexane), SPLP	ug/L						
Delta BHC (Delta Hexachlorocyclohexane)	ug/kg	150	U	1.4	UJ	1.5	U
Dieldrin, SPLP	ug/L						
Dieldrin	ug/kg	280	U	2.7	UJ	1.7	J
Endosulfan I, SPLP	ug/L						
Endosulfan I	ug/kg	150	U	1.4	UJ	1.5	U
Endosulfan II, SPLP	ug/L						
Endosulfan II	ug/Kg	280	U	2.7	UJ	2.9	U
Endosulfan Sulfate, SPLP	ug/L						
Endosulfan Sulfate	ug/kg	280	U	2.7	UJ	2.9	U
Endrin aldehyde, SPLP	ug/L						
Endrin Aldehyde	ug/kg	280	U	2.7	UJ	2.9	U
Endrin ketone, SPLP	ug/L						
Endrin Ketone	ug/Kg	280	U	2.7	UJ	2.9	U
Endrin, SPLP	ug/L						
Endrin	ug/kg	280	U	2.7	UJ	2.9	U
Gamma BHC (lindane), SPLP	ug/L						
Gamma BHC (Lindane)	ug/Kg	150	U	1.4	UJ	1.5	U
Gamma-chlordane, SPLP	ug/L						
Gamma-chlordane	ug/kg	150	U	0.3	J	0.78	J
Heptachlor Epoxide	ug/kg	150	U	1.4	UJ	0.14	J

	StationID	G003SB011		G003SB011		G003SB011	
	SampleID	003SB01101 (0-1ft)		003SB01101DL (0-1ft)		003SB01102 (3-5ft)	
	DateCollected	7/28/1999		7/28/1999		7/28/1999	
	DateExtracted	7/30/1999		7/30/1999		7/30/1999	
	DateAnalyzed	8/5/1999		8/24/1999		8/5/1999	
	SDGNumber	39715		39715		39715	
Parameter	**Units**						
Heptachlor, SPLP	ug/L						
Heptachlor	ug/kg	1.4	U	14	R	1.4	U
Heptochlor epoxide, SPLP	ug/L						
Methoxychlor, SPLP	ug/L						
Methoxychlor	ug/Kg	14	U	140	R	14	U
p,p'-DDD, SPLP	ug/L						
p,p'-DDD	ug/Kg	2.7	U	27	R	2.7	U
p,p'-DDE, SPLP	ug/L						
p,p'-DDE	ug/Kg	72	=	72	R	2.7	U
p,p'-DDT, SPLP	ug/L						
p,p'-DDT	ug/Kg	71	J	71	R	20	J
Toxaphene, SPLP	ug/L						
Toxaphene	ug/Kg	88	U	880	R	91	U

	StationID	G003SB011		G003SB012		G003SB012	
	SampleID	003SB01102DL (3-5ft)		003CB01201 (0-1ft)		003CB01201DL (0-1ft)	
	DateCollected	7/28/1999		7/28/1999		7/28/1999	
	DateExtracted	7/30/1999		7/30/1999		8/2/1999	
	DateAnalyzed	8/24/1999		8/5/1999		8/18/1999	
	SDGNumber	39715		39715		39715	
Parameter	**Units**						
Heptachlor, SPLP	ug/L						
Heptachlor	ug/kg	14	R	15	U	6000	R
Heptochlor epoxide, SPLP	ug/L						
Methoxychlor, SPLP	ug/L						
Methoxychlor	ug/Kg	140	R	150	U	60000	R
p,p'-DDD, SPLP	ug/L						
p,p'-DDD	ug/Kg	27	R	1900	J	12000	R
p,p'-DDE, SPLP	ug/L						
p,p'-DDE	ug/Kg	27	R	3200	J	12000	R
p,p'-DDT, SPLP	ug/L						
p,p'-DDT	ug/Kg	27	R	100000	=	100000	R
Toxaphene, SPLP	ug/L						
Toxaphene	ug/Kg	910	R	960	U	380000	R

	StationID	G003SB012		G003SB012		G003SB012	
	SampleID	003SB01201 (0-1ft)		003SB01201DL (0-1ft)		003SB01202 (3-5ft)	
	DateCollected	7/28/1999		7/28/1999		7/28/1999	
	DateExtracted	7/30/1999		8/2/1999		7/30/1999	
	DateAnalyzed	8/5/1999		8/18/1999		8/5/1999	
	SDGNumber	39715		39715		39715	
Parameter	**Units**						
Heptachlor, SPLP	ug/L						
Heptachlor	ug/kg	14	U	2700	R	14	U
Heptochlor epoxide, SPLP	ug/L						
Methoxychlor, SPLP	ug/L						
Methoxychlor	ug/Kg	140	U	27000	R	140	U
p,p'-DDD, SPLP	ug/L						
p,p'-DDD	ug/Kg	5900	=	5900	R	6100	=
p,p'-DDE, SPLP	ug/L						
p,p'-DDE	ug/Kg	1100	J	5300	R	1500	J
p,p'-DDT, SPLP	ug/L						
p,p'-DDT	ug/Kg	78000	=	78000	R	73000	=
Toxaphene, SPLP	ug/L						
Toxaphene	ug/Kg	880	U	180000	R	910	U

	StationID	G003SB012		G003SB013		G003SB013	
	SampleID	003SB01202DL (3-5ft)		003CB01301 (0-1ft)		003CB01301DL (0-1ft)	
	DateCollected	7/28/1999		7/30/1999		7/30/1999	
	DateExtracted	8/2/1999		8/1/1999		8/1/1999	
	DateAnalyzed	8/18/1999		8/14/1999		8/14/1999	
	SDGNumber	39715		39741		39741	
Parameter	**Units**						
Heptachlor, SPLP	ug/L						
Heptachlor	ug/kg	2800	R	1.4	U	28	R
Heptochlor epoxide, SPLP	ug/L						
Methoxychlor, SPLP	ug/L						
Methoxychlor	ug/Kg	28000	R	14	U	280	R
p,p'-DDD, SPLP	ug/L						
p,p'-DDD	ug/Kg	6100	R	200	J	200	R
p,p'-DDE, SPLP	ug/L						
p,p'-DDE	ug/Kg	5500	R	110	=	110	R
p,p'-DDT, SPLP	ug/L						
p,p'-DDT	ug/Kg	73000	R	790	=	790	R
Toxaphene, SPLP	ug/L						
Toxaphene	ug/Kg	180000	R	90	U	1800	R

	StationID	G003SB013		G003SB013		G003SB013	
	SampleID	003SB01301 (0-1ft)		003SB01301DL (0-1ft)		003SB01302 (3-5ft)	
	DateCollected	7/30/1999		7/30/1999		7/30/1999	
	DateExtracted	8/1/1999		8/1/1999		8/1/1999	
	DateAnalyzed	8/14/1999		8/14/1999		8/14/1999	
	SDGNumber	39741		39741		39741	
Parameter	**Units**						
Heptachlor, SPLP	ug/L						
Heptachlor	ug/kg	1.4	U	69	R	1.4	U
Heptochlor epoxide, SPLP	ug/L						
Methoxychlor, SPLP	ug/L						
Methoxychlor	ug/Kg	14	U	690	R	14	U
p,p'-DDD, SPLP	ug/L						
p,p'-DDD	ug/Kg	300	J	300	R	7.6	J
p,p'-DDE, SPLP	ug/L						
p,p'-DDE	ug/Kg	150	J	130	R	2.7	U
p,p'-DDT, SPLP	ug/L						
p,p'-DDT	ug/Kg	960	=	960	R	27	=
Toxaphene, SPLP	ug/L						
Toxaphene	ug/Kg	88	U	4400	R	88	U

	StationID	G003SB013		G003SB014		G003SB014	
	SampleID	003SB01302DL (3-5ft)		003SB01402 (3-5ft)		003SB01402 (3-5ft)	
	DateCollected	7/30/1999		7/28/1999		7/28/1999	
	DateExtracted	8/1/1999		7/30/1999		9/11/1999	
	DateAnalyzed	8/11/1999		8/5/1999		9/14/1999	
	SDGNumber	39741		39715		39715	
Parameter	**Units**						
Heptachlor, SPLP	ug/L					0.04	R
Heptachlor	ug/kg	14	R	1.4	U		
Heptochlor epoxide, SPLP	ug/L					0.04	R
Methoxychlor, SPLP	ug/L					0.38	R
Methoxychlor	ug/Kg	140	R	14	U		
p,p'-DDD, SPLP	ug/L					0.08	R
p,p'-DDD	ug/Kg	27	R	2.7	U		
p,p'-DDE, SPLP	ug/L					0.08	R
p,p'-DDE	ug/Kg	27	R	2.7	U		
p,p'-DDT, SPLP	ug/L					0.08	R
p,p'-DDT	ug/Kg	27	R	2.7	U		
Toxaphene, SPLP	ug/L					2.5	R
Toxaphene	ug/Kg	880	R	90	U		

	StationID	G003SB015		G003SB015		G003SB015	
	SampleID	003SB01501 (0-1ft)		003SB01501DL (0-1ft)		003SB01502 (3-5ft)	
	DateCollected	12/17/1999		12/17/1999		12/17/1999	
	DateExtracted	12/21/1999		12/21/1999		12/21/1999	
	DateAnalyzed	12/30/1999		1/3/2000		12/30/1999	
	SDGNumber	EN037		EN037		EN037	
Parameter	**Units**						
Heptachlor, SPLP	ug/L						
Heptachlor	ug/kg	1.9	U	3.8	R	1.9	U
Heptochlor epoxide, SPLP	ug/L						
Methoxychlor, SPLP	ug/L						
Methoxychlor	ug/Kg	19	U	38	R	19	U
p,p'-DDD, SPLP	ug/L						
p,p'-DDD	ug/Kg	3.7	U	7.4	R	3.8	U
p,p'-DDE, SPLP	ug/L						
p,p'-DDE	ug/Kg	770	=	730	R	3.8	U
p,p'-DDT, SPLP	ug/L						
p,p'-DDT	ug/Kg	220	=	220	R	3.8	U
Toxaphene, SPLP	ug/L						
Toxaphene	ug/Kg	190	U	380	R	190	U

	StationID	G003SB016		G003SB016		G003SB016	
	SampleID	003SB01601 (0-1ft)		003SB01601DL (0-1ft)		003SB01602 (3-5ft)	
	DateCollected	1/27/2000		1/27/2000		1/27/2000	
	DateExtracted	1/30/2000		1/30/2000		1/30/2000	
	DateAnalyzed	2/4/2000		2/4/2000		2/4/2000	
	SDGNumber	41892		41892		41892	
Parameter	**Units**						
Heptachlor, SPLP	ug/L						
Heptachlor	ug/kg	1500	U	15000	R	1.4	U
Heptochlor epoxide, SPLP	ug/L						
Methoxychlor, SPLP	ug/L						
Methoxychlor	ug/Kg	15000	U	150000	R	14	U
p,p'-DDD, SPLP	ug/L						
p,p'-DDD	ug/Kg	17000	=	36000	R	20	=
p,p'-DDE, SPLP	ug/L						
p,p'-DDE	ug/Kg	3600	=	29000	R	8.2	=
p,p'-DDT, SPLP	ug/L						
p,p'-DDT	ug/Kg	200000	=	200000	R	240	=
Toxaphene, SPLP	ug/L						
Toxaphene	ug/Kg	98000	U	980000	R	93	U

	StationID	G003SB016		G003SB017		G003SB017	
	SampleID	003SB01602DL (3-5ft)		003SB01701 (0-1ft)		003SB01701DL (0-1ft)	
	DateCollected	1/27/2000		1/27/2000		1/27/2000	
	DateExtracted	1/30/2000		1/30/2000		1/30/2000	
	DateAnalyzed	2/4/2000		2/4/2000		2/4/2000	
	SDGNumber	41892		41892		41892	
Parameter	**Units**						
Heptachlor, SPLP	ug/L						
Heptachlor	ug/kg	14	R	150	U	1500	R
Heptochlor epoxide, SPLP	ug/L						
Methoxychlor, SPLP	ug/L						
Methoxychlor	ug/Kg	140	R	1500	U	15000	R
p,p'-DDD, SPLP	ug/L						
p,p'-DDD	ug/Kg	33	R	770	=	2800	R
p,p'-DDE, SPLP	ug/L						
p,p'-DDE	ug/Kg	28	R	410	=	2800	R
p,p'-DDT, SPLP	ug/L						
p,p'-DDT	ug/Kg	240	R	7400	=	7400	R
Toxaphene, SPLP	ug/L						
Toxaphene	ug/Kg	930	R	9400	U	94000	R

	StationID	G003SB017		G003SB017		G003SB018	
	SampleID	003SB01702 (3-5ft)		003SB01702DL (3-5ft)		003SB01801 (0-1ft)	
	DateCollected	1/27/2000		1/27/2000		1/27/2000	
	DateExtracted	1/30/2000		1/30/2000		1/30/2000	
	DateAnalyzed	2/4/2000		2/4/2000		2/4/2000	
	SDGNumber	41892		41892		41892	
Parameter	**Units**						
Heptachlor, SPLP	ug/L						
Heptachlor	ug/kg	14	U	140	R	15000	U
Heptochlor epoxide, SPLP	ug/L						
Methoxychlor, SPLP	ug/L						
Methoxychlor	ug/Kg	140	U	1400	R	150000	U
p,p'-DDD, SPLP	ug/L						
p,p'-DDD	ug/Kg	74	=	280	R	310000	=
p,p'-DDE, SPLP	ug/L						
p,p'-DDE	ug/Kg	28	U	280	R	44000	=
p,p'-DDT, SPLP	ug/L						
p,p'-DDT	ug/Kg	340	=	340	R	2500000	=
Toxaphene, SPLP	ug/L						
Toxaphene	ug/Kg	930	U	9300	R	950000	U

	StationID	G003SB018		G003SB018		G003SB018	
	SampleID	003SB01801DL (0-1ft)		003SB01802 (3-5ft)		003SB01802DL (3-5ft)	
	DateCollected	1/27/2000		1/27/2000		1/27/2000	
	DateExtracted	1/30/2000		1/30/2000		1/30/2000	
	DateAnalyzed	2/8/2000		2/4/2000		2/4/2000	
	SDGNumber	41892		41892		41892	
Parameter	**Units**						
Heptachlor, SPLP	ug/L						
Heptachlor	ug/kg	150000	R	15	U	150	R
Heptochlor epoxide, SPLP	ug/L						
Methoxychlor, SPLP	ug/L						
Methoxychlor	ug/Kg	1500000	R	150	U	1500	R
p,p'-DDD, SPLP	ug/L						
p,p'-DDD	ug/Kg	290000	R	190	=	570	R
p,p'-DDE, SPLP	ug/L						
p,p'-DDE	ug/Kg	290000	R	60	=	280	R
p,p'-DDT, SPLP	ug/L						
p,p'-DDT	ug/Kg	2500000	R	3700	=	3700	R
Toxaphene, SPLP	ug/L						
Toxaphene	ug/Kg	9500000	R	940	U	9400	R

	StationID	G003SB019		G003SB019		G003SB019	
	SampleID	003SB01901 (0-1ft)		003SB01901DL (0-1ft)		003SB01902 (3-5ft)	
	DateCollected	1/27/2000		1/27/2000		1/27/2000	
	DateExtracted	1/30/2000		1/30/2000		1/30/2000	
	DateAnalyzed	2/4/2000		2/4/2000		2/4/2000	
	SDGNumber	41892		41892		41892	
Parameter	**Units**						
Heptachlor, SPLP	ug/L						
Heptachlor	ug/kg	1.5	U	15	R	1.5	U
Heptochlor epoxide, SPLP	ug/L						
Methoxychlor, SPLP	ug/L						
Methoxychlor	ug/Kg	15	U	150	R	15	U
p,p'-DDD, SPLP	ug/L						
p,p'-DDD	ug/Kg	17	J	29	R	8.1	=
p,p'-DDE, SPLP	ug/L						
p,p'-DDE	ug/Kg	130	=	130	R	2.9	U
p,p'-DDT, SPLP	ug/L						
p,p'-DDT	ug/Kg	340	=	340	R	180	=
Toxaphene, SPLP	ug/L						
Toxaphene	ug/Kg	95	U	950	R	95	U

	StationID	G003SB019		G003SB020		G003SB020	
	SampleID	003SB01902DL (3-5ft)		003SB02001 (0-1ft)		003SB02001DL (0-1ft)	
	DateCollected	1/27/2000		1/27/2000		1/27/2000	
	DateExtracted	1/30/2000		1/30/2000		1/30/2000	
	DateAnalyzed	2/4/2000		2/4/2000		2/4/2000	
	SDGNumber	41892		41892		41892	
Parameter	**Units**						
Heptachlor, SPLP	ug/L						
Heptachlor	ug/kg	15	R	15	U	150	R
Heptochlor epoxide, SPLP	ug/L						
Methoxychlor, SPLP	ug/L						
Methoxychlor	ug/Kg	150	R	150	U	1500	R
p,p'-DDD, SPLP	ug/L						
p,p'-DDD	ug/Kg	29	R	66	=	290	R
p,p'-DDE, SPLP	ug/L						
p,p'-DDE	ug/Kg	29	R	56	=	290	R
p,p'-DDT, SPLP	ug/L						
p,p'-DDT	ug/Kg	180	R	360	=	360	R
Toxaphene, SPLP	ug/L						
Toxaphene	ug/Kg	950	R	950	U	9500	R

	StationID	G003SB020		G003SB021		G003SB021	
	SampleID	003SB02002 (3-5ft)		003CB02101 (0-1ft)		003SB02101 (0-1ft)	
	DateCollected	1/27/2000		11/29/2001		11/29/2001	
	DateExtracted	1/30/2000		12/12/2001		12/4/2001	
	DateAnalyzed	2/4/2000		12/13/2001		12/11/2001	
	SDGNumber	41892		CNC55		CNC55	
Parameter	**Units**						
Heptachlor, SPLP	ug/L						
Heptachlor	ug/kg	1.5	U	1.5	UJ	2.9	U
Heptochlor epoxide, SPLP	ug/L						
Methoxychlor, SPLP	ug/L						
Methoxychlor	ug/Kg	15	U	15	UJ	29	U
p,p'-DDD, SPLP	ug/L						
p,p'-DDD	ug/Kg	2.9	U	1.7	J	3.6	J
p,p'-DDE, SPLP	ug/L						
p,p'-DDE	ug/Kg	2.9	U	56	J	82	=
p,p'-DDT, SPLP	ug/L						
p,p'-DDT	ug/Kg	39	=	27	J	37	J
Toxaphene, SPLP	ug/L						
Toxaphene	ug/Kg	98	U	95	UJ	180	U

	StationID	G003SB021		G003SB022		G003SB022	
	SampleID	003SB02102 (3-5ft)		003SB02201 (0-1ft)		003SB02202 (3-5ft)	
	DateCollected	11/29/2001		11/29/2001		11/29/2001	
	DateExtracted	12/4/2001		12/4/2001		12/4/2001	
	DateAnalyzed	12/11/2001		12/6/2001		12/6/2001	
	SDGNumber	CNC55		CNC54		CNC54	
Parameter	**Units**						
Heptachlor, SPLP	ug/L						
Heptachlor	ug/kg	1.5	UJ	1.4	U	1.4	U
Heptochlor epoxide, SPLP	ug/L						
Methoxychlor, SPLP	ug/L						
Methoxychlor	ug/Kg	15	U	14	U	14	U
p,p'-DDD, SPLP	ug/L						
p,p'-DDD	ug/Kg	2.8	U	2.6	U	2.6	U
p,p'-DDE, SPLP	ug/L						
p,p'-DDE	ug/Kg	0.42	J	69	=	3.6	=
p,p'-DDT, SPLP	ug/L						
p,p'-DDT	ug/Kg	2.8	U	18	=	1.1	J
Toxaphene, SPLP	ug/L						
Toxaphene	ug/Kg	94	U	87	U	87	U

	StationID	G003SB023		G003SB023		G003SB024	
	SampleID	003SB02301 (0-1ft)		003SB02302 (3-5ft)		003SB02401 (0-1ft)	
	DateCollected	11/29/2001		11/29/2001		11/29/2001	
	DateExtracted	12/4/2001		12/4/2001		12/4/2001	
	DateAnalyzed	12/6/2001		12/6/2001		12/6/2001	
	SDGNumber	CNC54		CNC54		CNC54	
Parameter	**Units**						
Heptachlor, SPLP	ug/L						
Heptachlor	ug/kg	14	U	1.4	U	1.4	U
Heptochlor epoxide, SPLP	ug/L						
Methoxychlor, SPLP	ug/L						
Methoxychlor	ug/Kg	140	U	14	U	14	U
p,p'-DDD, SPLP	ug/L						
p,p'-DDD	ug/Kg	22	J	2.7	U	2.6	U
p,p'-DDE, SPLP	ug/L						
p,p'-DDE	ug/Kg	600	J	3.8	=	74	R
p,p'-DDT, SPLP	ug/L						
p,p'-DDT	ug/Kg	260	J	2.6	J	24	=
Toxaphene, SPLP	ug/L						
Toxaphene	ug/Kg	890	U	89	U	88	U

	StationID	G003SB024		G003SB024		G003SB025	
	SampleID	003SB02401DL (0-1ft)		003SB02402 (3-5ft)		003SB02501 (0-1ft)	
	DateCollected	11/29/2001		11/29/2001		11/29/2001	
	DateExtracted	12/4/2001		12/4/2001		12/4/2001	
	DateAnalyzed	12/10/2001		12/6/2001		12/6/2001	
	SDGNumber	CNC54		CNC54		CNC54	
Parameter	**Units**						
Heptachlor, SPLP	ug/L						
Heptachlor	ug/kg	2.8	R	1.4	U	140	U
Heptochlor epoxide, SPLP	ug/L						
Methoxychlor, SPLP	ug/L						
Methoxychlor	ug/Kg	28	R	14	U	1400	U
p,p'-DDD, SPLP	ug/L						
p,p'-DDD	ug/Kg	5.3	R	2.7	U	580	=
p,p'-DDE, SPLP	ug/L						
p,p'-DDE	ug/Kg	71	=	0.4	J	250	J
p,p'-DDT, SPLP	ug/L						
p,p'-DDT	ug/Kg	28	R	2.7	U	4800	=
Toxaphene, SPLP	ug/L						
Toxaphene	ug/Kg	180	R	90	U	9000	U

	StationID	G003SB025		G003SB026		G003SB026	
	SampleID	003SB02502 (3-5ft)		003SB02601 (0-1ft)		003SB02602 (3-5ft)	
	DateCollected	11/29/2001		11/29/2001		11/29/2001	
	DateExtracted	12/4/2001		12/4/2001		12/4/2001	
	DateAnalyzed	12/6/2001		12/10/2001		12/10/2001	
	SDGNumber	CNC54		CNC54		CNC54	
Parameter	**Units**						
Heptachlor, SPLP	ug/L						
Heptachlor	ug/kg	1.5	U	1600	J	1.1	J
Heptochlor epoxide, SPLP	ug/L						
Methoxychlor, SPLP	ug/L						
Methoxychlor	ug/Kg	15	U	15000	U	14	U
p,p'-DDD, SPLP	ug/L						
p,p'-DDD	ug/Kg	2.8	U	2800	U	2.8	U
p,p'-DDE, SPLP	ug/L						
p,p'-DDE	ug/Kg	2.8	U	2800	UJ	0.51	J
p,p'-DDT, SPLP	ug/L						
p,p'-DDT	ug/Kg	0.58	J	2800	U	2.8	U
Toxaphene, SPLP	ug/L						
Toxaphene	ug/Kg	93	U	94000	U	92	U

	StationID	G003SB027		G003SB027		G003SB028	
	SampleID	003SB02701 (0-1ft)		003SB02702 (3-5ft)		003SB02801 (0-1ft)	
	DateCollected	11/29/2001		11/29/2001		11/29/2001	
	DateExtracted	12/4/2001		12/4/2001		12/4/2001	
	DateAnalyzed	12/6/2001		12/6/2001		12/10/2001	
	SDGNumber	CNC54		CNC54		CNC54	
Parameter	**Units**						
Heptachlor, SPLP	ug/L						
Heptachlor	ug/kg	1.4	U	1.4	U	1400	UJ
Heptochlor epoxide, SPLP	ug/L						
Methoxychlor, SPLP	ug/L						
Methoxychlor	ug/Kg	14	U	14	U	14000	U
p,p'-DDD, SPLP	ug/L						
p,p'-DDD	ug/Kg	1.3	J	1.2	J	7600	=
p,p'-DDE, SPLP	ug/L						
p,p'-DDE	ug/Kg	9.1	=	2.9	=	3400	J
p,p'-DDT, SPLP	ug/L						
p,p'-DDT	ug/Kg	12	=	33	=	93000	R
Toxaphene, SPLP	ug/L						
Toxaphene	ug/Kg	92	U	92	U	89000	U

	StationID	G003SB028		G003SB028		G003SB028	
	SampleID	003SB02801DL (0-1ft)		003SB02802 (3-5ft)		003SB02802DL (3-5ft)	
	DateCollected	11/29/2001		11/29/2001		11/29/2001	
	DateExtracted	12/4/2001		12/4/2001		12/4/2001	
	DateAnalyzed	12/10/2001		12/7/2001		12/10/2001	
	SDGNumber	CNC54		CNC54		CNC54	
Parameter	**Units**						
Heptachlor, SPLP	ug/L						
Heptachlor	ug/kg	2800	R	1.5	U	3	R
Heptochlor epoxide, SPLP	ug/L						
Methoxychlor, SPLP	ug/L						
Methoxychlor	ug/Kg	28000	R	15	U	30	R
p,p'-DDD, SPLP	ug/L						
p,p'-DDD	ug/Kg	7900	R	5.6	J	5.7	R
p,p'-DDE, SPLP	ug/L						
p,p'-DDE	ug/Kg	2500	R	4.5	=	5.1	R
p,p'-DDT, SPLP	ug/L						
p,p'-DDT	ug/Kg	81000	=	98	R	95	=
Toxaphene, SPLP	ug/L						
Toxaphene	ug/Kg	180000	R	96	U	190	R

	StationID	G003SB029		G003SB029		G003SB029	
	SampleID	003CB02902 (3-5ft)		003SB02901 (0-1ft)		003SB02902 (3-5ft)	
	DateCollected	11/29/2001		11/29/2001		11/29/2001	
	DateExtracted	12/4/2001		12/4/2001		12/4/2001	
	DateAnalyzed	12/7/2001		12/7/2001		12/7/2001	
	SDGNumber	CNC54		CNC54		CNC54	
Parameter	**Units**						
Heptachlor, SPLP	ug/L						
Heptachlor	ug/kg	1.4	U	140	U	1.4	U
Heptochlor epoxide, SPLP	ug/L						
Methoxychlor, SPLP	ug/L						
Methoxychlor	ug/Kg	14	U	1400	U	14	U
p,p'-DDD, SPLP	ug/L						
p,p'-DDD	ug/Kg	1.4	J	700	=	1.5	J
p,p'-DDE, SPLP	ug/L						
p,p'-DDE	ug/Kg	3	=	150	J	2.3	J
p,p'-DDT, SPLP	ug/L						
p,p'-DDT	ug/Kg	38	=	4700	=	44	=
Toxaphene, SPLP	ug/L						
Toxaphene	ug/Kg	89	U	8700	U	90	U

	StationID	G003SB030		G003SB030		G003SB030	
	SampleID	003SB03001 (0-1ft)		003SB03002 (3-5ft)		003SB03002DL (3-5ft)	
	DateCollected	11/29/2001		11/29/2001		11/29/2001	
	DateExtracted	12/4/2001		12/4/2001		12/4/2001	
	DateAnalyzed	12/7/2001		12/7/2001		12/10/2001	
	SDGNumber	CNC54		CNC54		CNC54	
Parameter	**Units**						
Heptachlor, SPLP	ug/L						
Heptachlor	ug/kg	36	U	3	U	7.6	R
Heptochlor epoxide, SPLP	ug/L						
Methoxychlor, SPLP	ug/L						
Methoxychlor	ug/Kg	360	U	30	U	76	R
p,p'-DDD, SPLP	ug/L						
p,p'-DDD	ug/Kg	250	=	25	=	20	R
p,p'-DDE, SPLP	ug/L						
p,p'-DDE	ug/Kg	38	J	6.4	=	4.8	R
p,p'-DDT, SPLP	ug/L						
p,p'-DDT	ug/Kg	1000	=	160	R	160	=
Toxaphene, SPLP	ug/L						
Toxaphene	ug/Kg	2300	U	190	U	480	R

	StationID	G003SB031		G003SB031		G003SB032	
	SampleID	003SB03101 (0-1ft)		003SB03102 (3-5ft)		003SB03201 (0-1ft)	
	DateCollected	11/29/2001		11/29/2001		11/28/2001	
	DateExtracted	12/13/2001		12/12/2001		12/4/2001	
	DateAnalyzed	12/14/2001		12/13/2001		12/11/2001	
	SDGNumber	CNC54		CNC55		CNC55	
Parameter	**Units**						
Heptachlor, SPLP	ug/L						
Heptachlor	ug/kg	7	U	1.4	U	28	U
Heptochlor epoxide, SPLP	ug/L						
Methoxychlor, SPLP	ug/L						
Methoxychlor	ug/Kg	70	UJ	14	U	280	U
p,p'-DDD, SPLP	ug/L						
p,p'-DDD	ug/Kg	52	=	0.79	J	55	J
p,p'-DDE, SPLP	ug/L						
p,p'-DDE	ug/Kg	350	=	7.2	J	190	J
p,p'-DDT, SPLP	ug/L						
p,p'-DDT	ug/Kg	270	=	9.9	=	1300	J
Toxaphene, SPLP	ug/L						
Toxaphene	ug/Kg	450	U	88	U	1800	U

	StationID	G003SB032		G003SB033		G003SB033	
	SampleID	003SB03202 (3-5ft)		003SB03301 (0-1ft)		003SB03302 (3-5ft)	
	DateCollected	11/28/2001		11/29/2001		11/29/2001	
	DateExtracted	12/4/2001		12/4/2001		12/12/2001	
	DateAnalyzed	12/11/2001		12/15/2001		12/13/2001	
	SDGNumber	CNC55		CNC55		CNC55	
Parameter	**Units**						
Heptachlor, SPLP	ug/L						
Heptachlor	ug/kg	28	U	70	U	1.4	U
Heptochlor epoxide, SPLP	ug/L						
Methoxychlor, SPLP	ug/L						
Methoxychlor	ug/Kg	280	U	700	U	14	U
p,p'-DDD, SPLP	ug/L						
p,p'-DDD	ug/Kg	8.9	J	140	J	0.89	J
p,p'-DDE, SPLP	ug/L						
p,p'-DDE	ug/Kg	49	J	260	=	12	J
p,p'-DDT, SPLP	ug/L						
p,p'-DDT	ug/Kg	200	J	2400	J	46	=
Toxaphene, SPLP	ug/L						
Toxaphene	ug/Kg	1800	U	4500	U	91	U

	StationID	G003SB034		G003SB034		G003SB034	
	SampleID	003SB03401 (0-1ft)		003SB03401DL (0-1ft)		003SB03402 (3-5ft)	
	DateCollected	11/29/2001		11/29/2001		11/29/2001	
	DateExtracted	12/4/2001		12/4/2001		12/4/2001	
	DateAnalyzed	12/11/2001		12/15/2001		12/11/2001	
	SDGNumber	CNC55		CNC55		CNC55	
Parameter	**Units**						
Heptachlor, SPLP	ug/L						
Heptachlor	ug/kg	69	U	1400	R	61	U
Heptochlor epoxide, SPLP	ug/L						
Methoxychlor, SPLP	ug/L						
Methoxychlor	ug/Kg	690	U	14000	R	610	U
p,p'-DDD, SPLP	ug/L						
p,p'-DDD	ug/Kg	1000	J	3000	R	68	J
p,p'-DDE, SPLP	ug/L						
p,p'-DDE	ug/Kg	3600	R	4300	=	19	J
p,p'-DDT, SPLP	ug/L						
p,p'-DDT	ug/Kg	30000	R	36000	J	3500	R
Toxaphene, SPLP	ug/L						
Toxaphene	ug/Kg	4400	U	88000	R	3900	U

	StationID	G003SB034		G003SB035		G003SB035	
	SampleID	003SB03402DL (3-5ft)		003SB03501 (0-1ft)		003SB03501DL (0-1ft)	
	DateCollected	11/29/2001		11/29/2001		11/29/2001	
	DateExtracted	12/4/2001		12/4/2001		12/4/2001	
	DateAnalyzed	12/11/2001		12/11/2001		12/13/2001	
	SDGNumber	CNC55		CNC55		CNC55	
Parameter	**Units**						
Heptachlor, SPLP	ug/L						
Heptachlor	ug/kg	150	R	140	U	550	R
Heptochlor epoxide, SPLP	ug/L						
Methoxychlor, SPLP	ug/L						
Methoxychlor	ug/Kg	1500	R	1400	U	5500	R
p,p'-DDD, SPLP	ug/L						
p,p'-DDD	ug/Kg	160	R	290	J	760	R
p,p'-DDE, SPLP	ug/L						
p,p'-DDE	ug/Kg	290	R	120	J	1100	R
p,p'-DDT, SPLP	ug/L						
p,p'-DDT	ug/Kg	3500	=	17000	R	14000	=
Toxaphene, SPLP	ug/L						
Toxaphene	ug/Kg	9800	R	8800	U	35000	R

	StationID	G003SB035		G003SB036		G003SB036	
	SampleID	003SB03502 (3-5ft)		003SB03601 (0-1ft)		003SB03602 (3-5ft)	
	DateCollected	11/29/2001		11/29/2001		11/29/2001	
	DateExtracted	12/4/2001		12/12/2001		12/4/2001	
	DateAnalyzed	12/11/2001		12/13/2001		12/11/2001	
	SDGNumber	CNC55		CNC55		CNC55	
Parameter	**Units**						
Heptachlor, SPLP	ug/L						
Heptachlor	ug/kg	150	U	1.4	UJ	1.5	U
Heptochlor epoxide, SPLP	ug/L						
Methoxychlor, SPLP	ug/L						
Methoxychlor	ug/Kg	1500	U	14	UJ	15	U
p,p'-DDD, SPLP	ug/L						
p,p'-DDD	ug/Kg	180	J	0.76	J	1.4	J
p,p'-DDE, SPLP	ug/L						
p,p'-DDE	ug/Kg	40	J	8.7	J	10	=
p,p'-DDT, SPLP	ug/L						
p,p'-DDT	ug/Kg	3300	J	9.3	J	76	J
Toxaphene, SPLP	ug/L						
Toxaphene	ug/Kg	9400	U	91	UJ	95	U

	StationID	G003SB011		G003SB011		G003SB011		G003SB011	
	SampleID	003SB01101 (0-1ft)		003SB01101DL (0-1ft)		003SB01102 (3-5ft)		003SB01102DL (3-5ft)	
	DateCollected	7/28/1999		7/28/1999		7/28/1999		7/28/1999	
	DateExtracted	7/30/1999		7/30/1999		7/30/1999		7/30/1999	
	DateAnalyzed	8/5/1999		8/24/1999		8/5/1999		8/24/1999	
	SDGNumber	39715		39715		39715		39715	
Parameter	**Units**								
PCB-1016 (Arochlor 1016), SPLP	ug/L								
PCB-1016 (Arochlor 1016)	ug/kg	30	U	30	R	35	U	35	R
PCB-1221 (Arochlor 1221), SPLP	ug/L								
PCB-1221 (Arochlor 1221)	ug/Kg	30	U	30	R	35	U	35	R
PCB-1232 (Arochlor 1232), SPLP	ug/L								
PCB-1232 (Arochlor 1232)	ug/Kg	30	U	30	R	35	U	35	R
PCB-1242 (Arochlor 1242), SPLP	ug/L								
PCB-1242 (Arochlor 1242)	ug/kg	30	U	30	R	35	U	35	R
PCB-1248 (Arochlor 1248), SPLP	ug/L								
PCB-1248 (Arochlor 1248)	ug/Kg	30	U	30	R	35	U	35	R
PCB-1254 (Arochlor 1254), SPLP	ug/L								
PCB-1254 (Arochlor 1254)	ug/Kg	30	U	30	R	35	U	35	R
PCB-1260 (Arochlor 1260), SPLP	ug/L								
PCB-1260 (Arochlor 1260)	ug/Kg	30	U	30	R	35	U	35	R

	StationID	G003SB012		G003SB012		G003SB012		G003SB012	
	SampleID	003CB01201 (0-1ft)		003CB01201DL (0-1ft)		003SB01201 (0-1ft)		003SB01201DL (0-1ft)	
	DateCollected	7/28/1999		7/28/1999		7/28/1999		7/28/1999	
	DateExtracted	7/30/1999		8/2/1999		7/30/1999		8/2/1999	
	DateAnalyzed	8/5/1999		8/18/1999		8/5/1999		8/18/1999	
	SDGNumber	39715		39715		39715		39715	
Parameter	**Units**								
PCB-1016 (Arochlor 1016), SPLP	ug/L								
PCB-1016 (Arochlor 1016)	ug/kg	38	U	38	R	39	U	39	R
PCB-1221 (Arochlor 1221), SPLP	ug/L								
PCB-1221 (Arochlor 1221)	ug/Kg	38	U	38	R	39	U	39	R
PCB-1232 (Arochlor 1232), SPLP	ug/L								
PCB-1232 (Arochlor 1232)	ug/Kg	38	U	38	R	39	U	39	R
PCB-1242 (Arochlor 1242), SPLP	ug/L								
PCB-1242 (Arochlor 1242)	ug/kg	38	U	38	R	39	U	39	R
PCB-1248 (Arochlor 1248), SPLP	ug/L								
PCB-1248 (Arochlor 1248)	ug/Kg	38	U	38	R	39	U	39	R
PCB-1254 (Arochlor 1254), SPLP	ug/L								
PCB-1254 (Arochlor 1254)	ug/Kg	38	U	38	R	39	U	39	R
PCB-1260 (Arochlor 1260), SPLP	ug/L								
PCB-1260 (Arochlor 1260)	ug/Kg	38	U	38	R	39	U	39	R

	StationID	G003SB012		G003SB012		G003SB013		G003SB013	
	SampleID	003SB01202 (3-5ft)		003SB01202DL (3-5ft)		003CB01301 (0-1ft)		003CB01301DL (0-1ft)	
	DateCollected	7/28/1999		7/28/1999		7/30/1999		7/30/1999	
	DateExtracted	7/30/1999		8/2/1999		8/1/1999		8/1/1999	
	DateAnalyzed	8/5/1999		8/18/1999		8/14/1999		8/14/1999	
	SDGNumber	39715		39715		39741		39741	
Parameter	**Units**								
PCB-1016 (Arochlor 1016), SPLP	ug/L								
PCB-1016 (Arochlor 1016)	ug/kg	36	U	36	R	36	U	36	R
PCB-1221 (Arochlor 1221), SPLP	ug/L								
PCB-1221 (Arochlor 1221)	ug/Kg	36	U	36	R	36	U	36	R
PCB-1232 (Arochlor 1232), SPLP	ug/L								
PCB-1232 (Arochlor 1232)	ug/Kg	36	U	36	R	36	U	36	R
PCB-1242 (Arochlor 1242), SPLP	ug/L								
PCB-1242 (Arochlor 1242)	ug/kg	36	U	36	R	36	U	36	R
PCB-1248 (Arochlor 1248), SPLP	ug/L								
PCB-1248 (Arochlor 1248)	ug/Kg	36	U	36	R	36	U	36	R
PCB-1254 (Arochlor 1254), SPLP	ug/L								
PCB-1254 (Arochlor 1254)	ug/Kg	36	U	36	R	36	U	36	R
PCB-1260 (Arochlor 1260), SPLP	ug/L								
PCB-1260 (Arochlor 1260)	ug/Kg	36	U	36	R	36	U	36	R

	StationID	G003SB013		G003SB013		G003SB013		G003SB013	
	SampleID	003SB01301 (0-1ft)		003SB01301DL (0-1ft)		003SB01302 (3-5ft)		003SB01302DL (3-5ft)	
	DateCollected	7/30/1999		7/30/1999		7/30/1999		7/30/1999	
	DateExtracted	8/1/1999		8/1/1999		8/1/1999		8/1/1999	
	DateAnalyzed	8/14/1999		8/14/1999		8/14/1999		8/11/1999	
	SDGNumber	39741		39741		39741		39741	
Parameter	**Units**								
PCB-1016 (Arochlor 1016), SPLP	ug/L								
PCB-1016 (Arochlor 1016)	ug/kg	35	U	35	R	35	U	35	R
PCB-1221 (Arochlor 1221), SPLP	ug/L								
PCB-1221 (Arochlor 1221)	ug/Kg	35	U	35	R	35	U	35	R
PCB-1232 (Arochlor 1232), SPLP	ug/L								
PCB-1232 (Arochlor 1232)	ug/Kg	35	U	35	R	35	U	35	R
PCB-1242 (Arochlor 1242), SPLP	ug/L								
PCB-1242 (Arochlor 1242)	ug/kg	35	U	35	R	35	U	35	R
PCB-1248 (Arochlor 1248), SPLP	ug/L								
PCB-1248 (Arochlor 1248)	ug/Kg	35	U	35	R	35	U	35	R
PCB-1254 (Arochlor 1254), SPLP	ug/L								
PCB-1254 (Arochlor 1254)	ug/Kg	35	U	35	R	35	U	35	R
PCB-1260 (Arochlor 1260), SPLP	ug/L								
PCB-1260 (Arochlor 1260)	ug/Kg	35	U	35	R	35	U	35	R

	StationID	G003SB014		G003SB014		G003SB021		G003SB021	
	SampleID	003SB01402 (3-5ft)		003SB01402 (3-5ft)		003CB02101 (0-1ft)		003SB02101 (0-1ft)	
	DateCollected	7/28/1999		7/28/1999		11/29/2001		11/29/2001	
	DateExtracted	7/30/1999		9/11/1999		12/12/2001		12/4/2001	
	DateAnalyzed	8/5/1999		9/14/1999		12/13/2001		12/11/2001	
	SDGNumber	39715		39715		CNC55		CNC55	
Parameter	**Units**								
PCB-1016 (Arochlor 1016), SPLP	ug/L			1.3	R				
PCB-1016 (Arochlor 1016)	ug/kg	35	U			38	UJ	73	U
PCB-1221 (Arochlor 1221), SPLP	ug/L			1.3	R				
PCB-1221 (Arochlor 1221)	ug/Kg	35	U			38	UJ	73	U
PCB-1232 (Arochlor 1232), SPLP	ug/L			1.3	R				
PCB-1232 (Arochlor 1232)	ug/Kg	35	U			38	UJ	73	U
PCB-1242 (Arochlor 1242), SPLP	ug/L			1.3	R				
PCB-1242 (Arochlor 1242)	ug/kg	35	U			38	UJ	73	U
PCB-1248 (Arochlor 1248), SPLP	ug/L			1.3	R				
PCB-1248 (Arochlor 1248)	ug/Kg	35	U			38	UJ	73	U
PCB-1254 (Arochlor 1254), SPLP	ug/L			1.3	R				
PCB-1254 (Arochlor 1254)	ug/Kg	35	U			77	UJ	150	U
PCB-1260 (Arochlor 1260), SPLP	ug/L			1.3	R				
PCB-1260 (Arochlor 1260)	ug/Kg	35	U			77	UJ	19	J

	StationID	G003SB021	
	SampleID	003SB02102 (3-5ft)	
	DateCollected	11/29/2001	
	DateExtracted	12/4/2001	
	DateAnalyzed	12/11/2001	
	SDGNumber	CNC55	
Parameter	**Units**		
PCB-1016 (Arochlor 1016), SPLP	ug/L		
PCB-1016 (Arochlor 1016)	ug/kg	38	U
PCB-1221 (Arochlor 1221), SPLP	ug/L		
PCB-1221 (Arochlor 1221)	ug/Kg	38	U
PCB-1232 (Arochlor 1232), SPLP	ug/L		
PCB-1232 (Arochlor 1232)	ug/Kg	38	U
PCB-1242 (Arochlor 1242), SPLP	ug/L		
PCB-1242 (Arochlor 1242)	ug/kg	38	U
PCB-1248 (Arochlor 1248), SPLP	ug/L		
PCB-1248 (Arochlor 1248)	ug/Kg	38	U
PCB-1254 (Arochlor 1254), SPLP	ug/L		
PCB-1254 (Arochlor 1254)	ug/Kg	76	U
PCB-1260 (Arochlor 1260), SPLP	ug/L		
PCB-1260 (Arochlor 1260)	ug/Kg	76	U

	StationID	G003SB014	
	SampleID	003SB01402 (3-5ft)	
	DateCollected	7/28/1999	
	DateExtracted	9/23/1999	
	DateAnalyzed	9/27/1999	
	SDGNumber	39715	
Parameter	**Units**		
Total Organic Carbon	mg/Kg	2180	=

	StationID	G003SB039		G003SB039		G003SB040	
	SampleID	003SB03901 (0-1ft)		003SB03902 (3-5ft)		003SB04001 (0-1ft)	
	DateCollected	1/15/2002		1/15/2002		1/15/2002	
	DateExtracted	1/22/2002		1/22/2002		1/22/2002	
	DateAnalyzed	1/22/2002		1/22/2002		1/22/2002	
	SDGNumber	CNC62		CNC62		CNC62	
Parameter	**Units**						
Chloromethane	ug/kg	11	U	10	U	11	U
Vinyl chloride	ug/kg	11	U	10	U	11	U
Bromomethane	ug/kg	11	U	10	U	11	U
Chloroethane	ug/kg	11	U	10	U	11	U
1,1-Dichloroethene	ug/kg	5.7	U	5	U	5.4	U
Acetone	ug/kg	11	UJ	66	UJ	81	UJ
Carbon Disulfide	ug/kg	5.7	U	5	U	5.4	U
Methylene Chloride	ug/kg	5.7	U	5	U	5.4	U
trans-1,2-Dichloroethene	ug/kg	5.7	U	5	U	5.4	U
1,1-Dichloroethane	ug/kg	5.7	U	5	U	5.4	U
Vinyl acetate	ug/kg	11	U	10	U	11	U
Methyl ethyl ketone (2-Butanone)	ug/kg	11	U	10	U	11	U
cis-1,2-Dichloroethylene	ug/kg	5.7	U	5	U	5.4	U
1,2-Dichloroethene (total)	ug/kg	5.7	U	5	U	5.4	U
Chloroform	ug/kg	5.7	U	5	U	5.4	U
1,1,1-Trichloroethane	ug/kg	5.7	U	5	U	5.4	U
Carbon Tetrachloride	ug/kg	5.7	U	5	U	5.4	U
1,2-Dichloroethane	ug/kg	5.7	U	5	U	5.4	U
Benzene	ug/kg	5.7	U	5	U	5.4	U
Trichloroethylene (TCE)	ug/kg	5.7	U	5	U	5.4	U
1,2-Dichloropropane	ug/kg	5.7	U	5	U	5.4	U
Bromodichloromethane	ug/kg	5.7	U	5	U	5.4	U
2-Chloroethyl vinyl ether	ug/kg	11	UJ	10	UJ	11	UJ
cis-1,3-Dichloropropene	ug/kg	5.7	U	5	U	5.4	U
Methyl isobutyl ketone (4-Methyl-2-pentanone)	ug/kg	11	U	10	U	11	U
Toluene	ug/kg	5.1	J	4.9	J	4.6	J
trans-1,3-Dichloropropene	ug/kg	5.7	U	5	U	5.4	U
1,1,2-Trichloroethane	ug/kg	5.7	U	5	U	5.4	U
2-Hexanone	ug/kg	11	U	10	U	11	U
Tetrachloroethylene (PCE)	ug/kg	5.7	U	5	U	5.4	U

	StationID	G003SB040		G003SB041		G003SB041	
	SampleID	003SB04002 (3-5ft)		003CB04102 (3-5ft)		003SB04101 (0-1ft)	
	DateCollected	1/15/2002		1/15/2002		1/15/2002	
	DateExtracted	1/22/2002		1/22/2002		1/22/2002	
	DateAnalyzed	1/22/2002		1/22/2002		1/22/2002	
	SDGNumber	CNC62		CNC62		CNC62	
Parameter	**Units**						
Chloromethane	ug/kg	10	U	11	U	9.6	U
Vinyl chloride	ug/kg	10	U	11	U	9.6	U
Bromomethane	ug/kg	10	U	11	U	9.6	U
Chloroethane	ug/kg	10	U	11	U	9.6	U
1,1-Dichloroethene	ug/kg	5	U	5.3	U	4.8	U
Acetone	ug/kg	49	UJ	64	UJ	28	UJ
Carbon Disulfide	ug/kg	5	U	5.3	U	4.8	U
Methylene Chloride	ug/kg	5	U	5.3	U	4.8	U
trans-1,2-Dichloroethene	ug/kg	5	U	5.3	U	4.8	U
1,1-Dichloroethane	ug/kg	5	U	5.3	U	4.8	U
Vinyl acetate	ug/kg	10	U	11	U	9.6	U
Methyl ethyl ketone (2-Butanone)	ug/kg	10	U	11	U	9.6	U
cis-1,2-Dichloroethylene	ug/kg	5	U	5.3	U	4.8	U
1,2-Dichloroethene (total)	ug/kg	5	U	5.3	U	4.8	U
Chloroform	ug/kg	5	U	5.3	U	4.8	U
1,1,1-Trichloroethane	ug/kg	5	U	5.3	U	4.8	U
Carbon Tetrachloride	ug/kg	5	U	5.3	U	4.8	U
1,2-Dichloroethane	ug/kg	5	U	5.3	U	4.8	U
Benzene	ug/kg	5	U	5.3	U	4.8	U
Trichloroethylene (TCE)	ug/kg	5	U	5.3	U	4.8	U
1,2-Dichloropropane	ug/kg	5	U	5.3	U	4.8	U
Bromodichloromethane	ug/kg	5	U	5.3	U	4.8	U
2-Chloroethyl vinyl ether	ug/kg	10	UJ	11	UJ	9.6	UJ
cis-1,3-Dichloropropene	ug/kg	5	U	5.3	U	4.8	U
Methyl isobutyl ketone (4-Methyl-2-pentanone)	ug/kg	10	U	11	U	9.6	U
Toluene	ug/kg	5	U	2.1	J	2	J
trans-1,3-Dichloropropene	ug/kg	5	U	5.3	U	4.8	U
1,1,2-Trichloroethane	ug/kg	5	U	5.3	U	4.8	U
2-Hexanone	ug/kg	10	U	11	U	9.6	U
Tetrachloroethylene (PCE)	ug/kg	5.4	=	12	=	4.8	U

	StationID	G003SB041		G003SB042		G003SB042	
	SampleID	003SB04102 (3-5ft)		003SB04201 (0-1ft)		003SB04202 (3-5ft)	
	DateCollected	1/15/2002		1/15/2002		1/15/2002	
	DateExtracted	1/22/2002		1/22/2002		1/22/2002	
	DateAnalyzed	1/22/2002		1/22/2002		1/22/2002	
	SDGNumber	CNC62		CNC62		CNC62	
Parameter	**Units**						
Chloromethane	ug/kg	9.9	U	11	U	16	U
Vinyl chloride	ug/kg	9.9	U	11	U	16	U
Bromomethane	ug/kg	9.9	U	11	U	16	U
Chloroethane	ug/kg	9.9	U	11	U	16	U
1,1-Dichloroethene	ug/kg	5	U	5.6	U	7.8	U
Acetone	ug/kg	66	UJ	42	UJ	190	UJ
Carbon Disulfide	ug/kg	5	U	5.6	U	7.8	U
Methylene Chloride	ug/kg	5	U	5.6	U	7.8	U
trans-1,2-Dichloroethene	ug/kg	5	U	5.6	U	7.8	U
1,1-Dichloroethane	ug/kg	5	U	5.6	U	7.8	U
Vinyl acetate	ug/kg	9.9	U	11	U	16	U
Methyl ethyl ketone (2-Butanone)	ug/kg	9.9	U	11	U	9.4	J
cis-1,2-Dichloroethylene	ug/kg	5	U	5.6	U	7.8	U
1,2-Dichloroethene (total)	ug/kg	5	U	5.6	U	7.8	U
Chloroform	ug/kg	5	U	5.6	U	7.8	U
1,1,1-Trichloroethane	ug/kg	5	U	5.6	U	7.8	U
Carbon Tetrachloride	ug/kg	5	U	5.6	U	7.8	U
1,2-Dichloroethane	ug/kg	5	U	5.6	U	7.8	U
Benzene	ug/kg	5	U	5.6	U	7.8	U
Trichloroethylene (TCE)	ug/kg	5	U	5.6	U	7.8	U
1,2-Dichloropropane	ug/kg	5	U	5.6	U	7.8	U
Bromodichloromethane	ug/kg	5	U	5.6	U	7.8	U
2-Chloroethyl vinyl ether	ug/kg	9.9	UJ	11	UJ	16	UJ
cis-1,3-Dichloropropene	ug/kg	5	U	5.6	U	7.8	U
Methyl isobutyl ketone (4-Methyl-2-pentanone)	ug/kg	9.9	U	11	U	16	U
Toluene	ug/kg	2.4	J	4.8	J	5.2	J
trans-1,3-Dichloropropene	ug/kg	5	U	5.6	U	7.8	U
1,1,2-Trichloroethane	ug/kg	5	U	5.6	U	7.8	U
2-Hexanone	ug/kg	9.9	U	11	U	16	U
Tetrachloroethylene (PCE)	ug/kg	27	=	5.6	U	7.1	J

	StationID	G003SB050		G003SB051		G003SB052	
	SampleID	003SB05001 (0-1ft)		003SB05102 (3-5ft)		003CB05202 (3-5ft)	
	DateCollected	3/28/2002		3/28/2002		3/27/2002	
	DateExtracted	4/9/2002		4/9/2002		4/9/2002	
	DateAnalyzed	4/9/2002		4/9/2002		4/9/2002	
	SDGNumber	CNC84		CNC84		CNC81	
Parameter	**Units**						
Chloromethane	ug/kg	11	U	10	U	10	U
Vinyl chloride	ug/kg	11	U	10	U	10	U
Bromomethane	ug/kg	5.1	J	10	U	10	U
Chloroethane	ug/kg	11	U	10	U	10	U
1,1-Dichloroethene	ug/kg	5.7	U	5.2	U	5.3	U
Acetone	ug/kg	260	J	54	J	10	U
Carbon Disulfide	ug/kg	5.7	U	5.2	U	5.3	U
Methylene Chloride	ug/kg	5.7	U	5.2	U	5.3	U
trans-1,2-Dichloroethene	ug/kg	5.7	U	5.2	U	5.3	U
1,1-Dichloroethane	ug/kg	5.7	U	5.2	U	5.3	U
Vinyl acetate	ug/kg	11	U	10	U	10	U
Methyl ethyl ketone (2-Butanone)	ug/kg	29	J	10	U	10	U
cis-1,2-Dichloroethylene	ug/kg	5.7	U	5.2	U	5.3	U
1,2-Dichloroethene (total)	ug/kg	5.7	U	5.2	U	5.3	U
Chloroform	ug/kg	5.7	U	5.2	U	5.3	U
1,1,1-Trichloroethane	ug/kg	5.7	U	5.2	U	5.3	U
Carbon Tetrachloride	ug/kg	5.7	U	5.2	U	5.3	U
1,2-Dichloroethane	ug/kg	5.7	U	5.2	U	5.3	U
Benzene	ug/kg	5.7	U	5.2	U	5.3	U
Trichloroethylene (TCE)	ug/kg	5.7	U	5.2	U	18	=
1,2-Dichloropropane	ug/kg	5.7	U	5.2	U	5.3	U
Bromodichloromethane	ug/kg	5.7	U	5.2	U	5.3	U
2-Chloroethyl vinyl ether	ug/kg	11	U	10	U	10	U
cis-1,3-Dichloropropene	ug/kg	5.7	U	5.2	U	5.3	U
Methyl isobutyl ketone (4-Methyl-2-pentanone)	ug/kg	11	U	10	U	10	U
Toluene	ug/kg	5.7	U	5.2	U	5.3	U
trans-1,3-Dichloropropene	ug/kg	5.7	U	5.2	U	5.3	U
1,1,2-Trichloroethane	ug/kg	5.7	U	5.2	U	5.3	U
2-Hexanone	ug/kg	11	U	10	U	10	U
Tetrachloroethylene (PCE)	ug/kg	5.7	U	13	=	5.3	U

	StationID	G003SB052		G003SB053		G003SB054	
	SampleID	003SB05202 (3-5ft)		003SB05302 (3-5ft)		003SB05402 (3-5ft)	
	DateCollected	3/27/2002		3/28/2002		3/27/2002	
	DateExtracted	4/9/2002		4/9/2002		4/9/2002	
	DateAnalyzed	4/9/2002		4/9/2002		4/9/2002	
	SDGNumber	CNC81		CNC84		CNC81	
Parameter	**Units**						
Chloromethane	ug/kg	11	U	11	U	13	U
Vinyl chloride	ug/kg	11	U	11	U	13	U
Bromomethane	ug/kg	11	U	11	U	13	U
Chloroethane	ug/kg	11	U	11	U	13	U
1,1-Dichloroethene	ug/kg	5.7	U	5.3	U	6.3	U
Acetone	ug/kg	11	U	90	J	13	U
Carbon Disulfide	ug/kg	5.7	U	5.3	U	6.3	U
Methylene Chloride	ug/kg	5.7	U	5.3	U	6.3	U
trans-1,2-Dichloroethene	ug/kg	5.7	U	5.3	U	6.3	U
1,1-Dichloroethane	ug/kg	5.7	U	5.3	U	6.3	U
Vinyl acetate	ug/kg	11	U	11	U	13	U
Methyl ethyl ketone (2-Butanone)	ug/kg	11	U	9	J	13	U
cis-1,2-Dichloroethylene	ug/kg	5.7	U	5.3	U	6.3	U
1,2-Dichloroethene (total)	ug/kg	5.7	U	5.3	U	6.3	U
Chloroform	ug/kg	5.7	U	5.3	U	6.3	U
1,1,1-Trichloroethane	ug/kg	5.7	U	5.3	U	6.3	U
Carbon Tetrachloride	ug/kg	5.7	U	5.3	U	6.3	U
1,2-Dichloroethane	ug/kg	5.7	U	5.3	U	6.3	U
Benzene	ug/kg	5.7	U	5.3	U	6.3	U
Trichloroethylene (TCE)	ug/kg	31	=	5.3	U	30	=
1,2-Dichloropropane	ug/kg	5.7	U	5.3	U	6.3	U
Bromodichloromethane	ug/kg	5.7	U	5.3	U	6.3	U
2-Chloroethyl vinyl ether	ug/kg	11	U	11	U	13	U
cis-1,3-Dichloropropene	ug/kg	5.7	U	5.3	U	6.3	U
Methyl isobutyl ketone (4-Methyl-2-pentanone)	ug/kg	11	U	11	U	13	U
Toluene	ug/kg	5.7	U	5.3	U	6.3	U
trans-1,3-Dichloropropene	ug/kg	5.7	U	5.3	U	6.3	U
1,1,2-Trichloroethane	ug/kg	5.7	U	5.3	U	6.3	U
2-Hexanone	ug/kg	11	U	11	U	13	U
Tetrachloroethylene (PCE)	ug/kg	3.7	J	5.3	U	6.3	U

	StationID	G003SB055		G003SB056		G003SB057	
	SampleID	003SB05502 (3-5ft)		003SB05602 (3-5ft)		003SB05702 (3-5ft)	
	DateCollected	3/27/2002		3/27/2002		3/27/2002	
	DateExtracted	4/9/2002		4/10/2002		4/9/2002	
	DateAnalyzed	4/9/2002		4/10/2002		4/9/2002	
	SDGNumber	CNC81		CNC81		CNC81	
Parameter	**Units**						
Chloromethane	ug/kg	12	U	12	U	13	U
Vinyl chloride	ug/kg	12	U	12	U	13	U
Bromomethane	ug/kg	12	U	12	U	13	U
Chloroethane	ug/kg	12	U	12	U	13	U
1,1-Dichloroethene	ug/kg	6.2	U	6	U	6.4	U
Acetone	ug/kg	12	U	12	U	13	U
Carbon Disulfide	ug/kg	6.2	U	6	U	6.4	U
Methylene Chloride	ug/kg	6.2	U	6	U	6.4	U
trans-1,2-Dichloroethene	ug/kg	6.2	U	6	U	6.4	U
1,1-Dichloroethane	ug/kg	6.2	U	6	U	6.4	U
Vinyl acetate	ug/kg	12	U	12	U	13	U
Methyl ethyl ketone (2-Butanone)	ug/kg	12	U	12	U	13	U
cis-1,2-Dichloroethylene	ug/kg	6.2	U	6	U	6.4	U
1,2-Dichloroethene (total)	ug/kg	6.2	U	6	U	6.4	U
Chloroform	ug/kg	6.2	U	6	U	6.4	U
1,1,1-Trichloroethane	ug/kg	6.2	U	6	U	6.4	U
Carbon Tetrachloride	ug/kg	6.2	U	6	U	6.4	U
1,2-Dichloroethane	ug/kg	6.2	U	6	U	6.4	U
Benzene	ug/kg	6.2	U	6	U	6.4	U
Trichloroethylene (TCE)	ug/kg	36	=	43	=	28	=
1,2-Dichloropropane	ug/kg	6.2	U	6	U	6.4	U
Bromodichloromethane	ug/kg	6.2	U	6	U	6.4	U
2-Chloroethyl vinyl ether	ug/kg	12	U	12	U	13	U
cis-1,3-Dichloropropene	ug/kg	6.2	U	6	U	6.4	U
Methyl isobutyl ketone (4-Methyl-2-pentanone)	ug/kg	12	U	12	U	13	U
Toluene	ug/kg	6.2	U	6	U	6.4	U
trans-1,3-Dichloropropene	ug/kg	6.2	U	6	U	6.4	U
1,1,2-Trichloroethane	ug/kg	6.2	U	6	U	6.4	U
2-Hexanone	ug/kg	12	U	12	U	13	U
Tetrachloroethylene (PCE)	ug/kg	6.2	U	6	U	6.4	U

	StationID	G003SB058	
	SampleID	003SB05802 (3-5ft)	
	DateCollected	3/27/2002	
	DateExtracted	4/9/2002	
	DateAnalyzed	4/9/2002	
	SDGNumber	CNC81	
Parameter	**Units**		
Chloromethane	ug/kg	12	U
Vinyl chloride	ug/kg	12	U
Bromomethane	ug/kg	12	U
Chloroethane	ug/kg	12	U
1,1-Dichloroethene	ug/kg	6	U
Acetone	ug/kg	12	U
Carbon Disulfide	ug/kg	6	U
Methylene Chloride	ug/kg	6	U
trans-1,2-Dichloroethene	ug/kg	6	U
1,1-Dichloroethane	ug/kg	6	U
Vinyl acetate	ug/kg	12	U
Methyl ethyl ketone (2-Butanone)	ug/kg	12	U
cis-1,2-Dichloroethylene	ug/kg	6	U
1,2-Dichloroethene (total)	ug/kg	6	U
Chloroform	ug/kg	6	U
1,1,1-Trichloroethane	ug/kg	6	U
Carbon Tetrachloride	ug/kg	6	U
1,2-Dichloroethane	ug/kg	6	U
Benzene	ug/kg	6	U
Trichloroethylene (TCE)	ug/kg	21	=
1,2-Dichloropropane	ug/kg	6	U
Bromodichloromethane	ug/kg	6	U
2-Chloroethyl vinyl ether	ug/kg	12	U
cis-1,3-Dichloropropene	ug/kg	6	U
Methyl isobutyl ketone (4-Methyl-2-pentanone)	ug/kg	12	U
Toluene	ug/kg	6	U
trans-1,3-Dichloropropene	ug/kg	6	U
1,1,2-Trichloroethane	ug/kg	6	U
2-Hexanone	ug/kg	12	U
Tetrachloroethylene (PCE)	ug/kg	6	U

	StationID	G003SB039		G003SB039		G003SB040	
	SampleID	003SB03901 (0-1ft)		003SB03902 (3-5ft)		003SB04001 (0-1ft)	
	DateCollected	1/15/2002		1/15/2002		1/15/2002	
	DateExtracted	1/22/2002		1/22/2002		1/22/2002	
	DateAnalyzed	1/22/2002		1/22/2002		1/22/2002	
	SDGNumber	CNC62		CNC62		CNC62	
Parameter	**Units**						
Dibromochloromethane	ug/kg	5.7	U	5	U	5.4	U
Chlorobenzene	ug/kg	5.7	U	5	U	5.4	U
Ethylbenzene	ug/kg	5.7	U	5	U	5.4	U
m+p Xylene	ug/kg	5.7	U	5	U	5.4	U
o-Xylene	ug/kg	5.7	U	5	U	5.4	U
Xylenes, Total	ug/kg	5.7	U	5	U	5.4	U
Styrene	ug/kg	5.7	U	5	U	5.4	U
Bromoform	ug/kg	5.7	U	5	U	5.4	U
1,1,2,2-Tetrachloroethane	ug/kg	5.7	U	5	U	5.4	U
1,3-Dichlorobenzene	ug/kg	5.7	U	5	U	5.4	U
1,4-Dichlorobenzene	ug/kg	5.7	U	5	U	5.4	U
1,2-Dichlorobenzene	ug/kg	5.7	U	5	U	5.4	U
1,2,4-Trichlorobenzene	ug/kg	5.7	U	5	U	5.4	U
1,2,3-Trichlorobenzene	ug/kg	5.7	U	5	U	5.4	U

	StationID	G003SB040		G003SB041		G003SB041	
	SampleID	003SB04002 (3-5ft)		003CB04102 (3-5ft)		003SB04101 (0-1ft)	
	DateCollected	1/15/2002		1/15/2002		1/15/2002	
	DateExtracted	1/22/2002		1/22/2002		1/22/2002	
	DateAnalyzed	1/22/2002		1/22/2002		1/22/2002	
	SDGNumber	CNC62		CNC62		CNC62	
Parameter	**Units**						
Dibromochloromethane	ug/kg	5	U	5.3	U	4.8	U
Chlorobenzene	ug/kg	5	U	5.3	U	4.8	U
Ethylbenzene	ug/kg	5	U	5.3	U	4.8	U
m+p Xylene	ug/kg	5	U	5.3	U	4.8	U
o-Xylene	ug/kg	5	U	5.3	U	4.8	U
Xylenes, Total	ug/kg	5	U	5.3	U	4.8	U
Styrene	ug/kg	5	U	5.3	U	4.8	U
Bromoform	ug/kg	5	U	5.3	U	4.8	U
1,1,2,2-Tetrachloroethane	ug/kg	5	U	5.3	U	4.8	U
1,3-Dichlorobenzene	ug/kg	5	U	5.3	U	4.8	U
1,4-Dichlorobenzene	ug/kg	5	U	5.3	U	4.8	U
1,2-Dichlorobenzene	ug/kg	5	U	5.3	U	4.8	U
1,2,4-Trichlorobenzene	ug/kg	5	U	5.3	U	4.8	U
1,2,3-Trichlorobenzene	ug/kg	5	U	5.3	U	4.8	U

	StationID	G003SB041		G003SB042		G003SB042	
	SampleID	003SB04102 (3-5ft)		003SB04201 (0-1ft)		003SB04202 (3-5ft)	
	DateCollected	1/15/2002		1/15/2002		1/15/2002	
	DateExtracted	1/22/2002		1/22/2002		1/22/2002	
	DateAnalyzed	1/22/2002		1/22/2002		1/22/2002	
	SDGNumber	CNC62		CNC62		CNC62	
Parameter	**Units**						
Dibromochloromethane	ug/kg	5	U	5.6	U	7.8	U
Chlorobenzene	ug/kg	5	U	5.6	U	7.8	U
Ethylbenzene	ug/kg	5	U	5.6	U	7.8	U
m+p Xylene	ug/kg	5	U	5.6	U	7.8	U
o-Xylene	ug/kg	5	U	5.6	U	7.8	U
Xylenes, Total	ug/kg	5	U	5.6	U	7.8	U
Styrene	ug/kg	5	U	5.6	U	7.8	U
Bromoform	ug/kg	5	U	5.6	U	7.8	U
1,1,2,2-Tetrachloroethane	ug/kg	5	U	5.6	U	7.8	U
1,3-Dichlorobenzene	ug/kg	5	U	5.6	U	7.8	U
1,4-Dichlorobenzene	ug/kg	5	U	5.6	U	7.8	U
1,2-Dichlorobenzene	ug/kg	5	U	5.6	U	7.8	U
1,2,4-Trichlorobenzene	ug/kg	5	U	5.6	U	7.8	U
1,2,3-Trichlorobenzene	ug/kg	5	U	5.6	U	7.8	U

	StationID	G003SB050		G003SB051		G003SB052	
	SampleID	003SB05001 (0-1ft)		003SB05102 (3-5ft)		003CB05202 (3-5ft)	
	DateCollected	3/28/2002		3/28/2002		3/27/2002	
	DateExtracted	4/9/2002		4/9/2002		4/9/2002	
	DateAnalyzed	4/9/2002		4/9/2002		4/9/2002	
	SDGNumber	CNC84		CNC84		CNC81	
Parameter	**Units**						
Dibromochloromethane	ug/kg	5.7	U	5.2	U	5.3	U
Chlorobenzene	ug/kg	5.7	U	5.2	U	5.3	U
Ethylbenzene	ug/kg	5.7	U	5.2	U	5.3	U
m+p Xylene	ug/kg	5.7	U	5.2	U	5.3	U
o-Xylene	ug/kg	5.7	U	5.2	U	5.3	U
Xylenes, Total	ug/kg	5.7	U	5.2	U	5.3	U
Styrene	ug/kg	5.7	U	5.2	U	5.3	U
Bromoform	ug/kg	5.7	U	5.2	U	5.3	U
1,1,2,2-Tetrachloroethane	ug/kg	5.7	U	5.2	U	5.3	U
1,3-Dichlorobenzene	ug/kg	5.7	U	5.2	U	5.3	U
1,4-Dichlorobenzene	ug/kg	5.7	U	5.2	U	5.3	U
1,2-Dichlorobenzene	ug/kg	5.7	U	5.2	U	5.3	U
1,2,4-Trichlorobenzene	ug/kg	5.7	U	5.2	U	5.3	U
1,2,3-Trichlorobenzene	ug/kg	5.7	UJ	5.2	UJ	5.3	UJ

	StationID	G003SB052		G003SB053		G003SB054	
	SampleID	003SB05202 (3-5ft)		003SB05302 (3-5ft)		003SB05402 (3-5ft)	
	DateCollected	3/27/2002		3/28/2002		3/27/2002	
	DateExtracted	4/9/2002		4/9/2002		4/9/2002	
	DateAnalyzed	4/9/2002		4/9/2002		4/9/2002	
	SDGNumber	CNC81		CNC84		CNC81	
Parameter	**Units**						
Dibromochloromethane	ug/kg	5.7	U	5.3	U	6.3	U
Chlorobenzene	ug/kg	5.7	U	5.3	U	6.3	U
Ethylbenzene	ug/kg	5.7	U	5.3	U	6.3	U
m+p Xylene	ug/kg	5.7	U	5.3	U	6.3	U
o-Xylene	ug/kg	5.7	U	5.3	U	6.3	U
Xylenes, Total	ug/kg	5.7	U	5.3	U	6.3	U
Styrene	ug/kg	5.7	U	5.3	U	6.3	U
Bromoform	ug/kg	5.7	U	5.3	U	6.3	U
1,1,2,2-Tetrachloroethane	ug/kg	5.7	U	5.3	U	6.3	U
1,3-Dichlorobenzene	ug/kg	5.7	U	5.3	U	6.3	U
1,4-Dichlorobenzene	ug/kg	5.7	U	5.3	U	6.3	U
1,2-Dichlorobenzene	ug/kg	5.7	U	5.3	U	6.3	U
1,2,4-Trichlorobenzene	ug/kg	5.7	U	5.3	U	6.3	UJ
1,2,3-Trichlorobenzene	ug/kg	5.7	UJ	5.3	UJ	6.3	U

	StationID	G003SB055		G003SB056		G003SB057	
	SampleID	003SB05502 (3-5ft)		003SB05602 (3-5ft)		003SB05702 (3-5ft)	
	DateCollected	3/27/2002		3/27/2002		3/27/2002	
	DateExtracted	4/9/2002		4/10/2002		4/9/2002	
	DateAnalyzed	4/9/2002		4/10/2002		4/9/2002	
	SDGNumber	CNC81		CNC81		CNC81	
Parameter	**Units**						
Dibromochloromethane	ug/kg	6.2	U	6	U	6.4	U
Chlorobenzene	ug/kg	6.2	U	6	U	6.4	U
Ethylbenzene	ug/kg	6.2	U	6	U	6.4	U
m+p Xylene	ug/kg	6.2	U	6	U	6.4	U
o-Xylene	ug/kg	6.2	U	6	U	6.4	U
Xylenes, Total	ug/kg	6.2	U	6	U	6.4	U
Styrene	ug/kg	6.2	U	6	U	6.4	U
Bromoform	ug/kg	6.2	U	6	U	6.4	U
1,1,2,2-Tetrachloroethane	ug/kg	6.2	U	6	U	6.4	U
1,3-Dichlorobenzene	ug/kg	6.2	U	6	U	6.4	U
1,4-Dichlorobenzene	ug/kg	6.2	U	6	U	6.4	U
1,2-Dichlorobenzene	ug/kg	6.2	U	6	U	6.4	U
1,2,4-Trichlorobenzene	ug/kg	6.2	U	6	U	6.4	U
1,2,3-Trichlorobenzene	ug/kg	6.2	UJ	6	UJ	6.4	UJ

	StationID	G003SB058	
	SampleID	003SB05802 (3-5ft)	
	DateCollected	3/27/2002	
	DateExtracted	4/9/2002	
	DateAnalyzed	4/9/2002	
	SDGNumber	CNC81	
Parameter	**Units**		
Dibromochloromethane	ug/kg	6	U
Chlorobenzene	ug/kg	6	U
Ethylbenzene	ug/kg	6	U
m+p Xylene	ug/kg	6	U
o-Xylene	ug/kg	6	U
Xylenes, Total	ug/kg	6	U
Styrene	ug/kg	6	U
Bromoform	ug/kg	6	U
1,1,2,2-Tetrachloroethane	ug/kg	6	U
1,3-Dichlorobenzene	ug/kg	6	U
1,4-Dichlorobenzene	ug/kg	6	U
1,2-Dichlorobenzene	ug/kg	6	U
1,2,4-Trichlorobenzene	ug/kg	6	U
1,2,3-Trichlorobenzene	ug/kg	6	UJ

	StationID	G003SB037		G003SB037		G003SB038	
	SampleID	003SB03701 (0-1ft)		003SB03702 (3-5ft)		003CB03801 (0-1ft)	
	DateCollected	3/27/2002		3/27/2002		3/27/2002	
	DateExtracted	4/2/2002		4/2/2002		4/2/2002	
	DateAnalyzed	4/4/2002		4/4/2002		4/4/2002	
	SDGNumber	CNC82		CNC82		CNC82	
Parameter	**Units**						
Aldrin	ug/kg	2.8	U	1.5	UJ	2.8	U
Alpha BHC (Alpha Hexachlorocyclohexane)	ug/kg	2.8	U	1.5	UJ	2.8	U
Alpha-chlordane	ug/kg	2.8	U	1.5	UJ	2.8	U
Beta BHC (Beta Hexachlorocyclohexane)	ug/kg	2.8	U	1.5	UJ	2.8	U
Chlordane	ug/kg	28	UJ	15	UJ	28	UJ
Delta BHC (Delta Hexachlorocyclohexane)	ug/kg	2.8	U	1.5	UJ	2.8	U
Dieldrin	ug/kg	5.5	U	3	UJ	5.5	U
Endosulfan I	ug/kg	2.8	U	1.5	UJ	2.8	U
Endosulfan II	ug/kg	5.5	U	3	UJ	5.5	U
Endosulfan Sulfate	ug/kg	5.5	U	3	UJ	5.5	U
Endrin Aldehyde	ug/kg	5.5	U	3	UJ	5.5	U
Endrin Ketone	ug/kg	5.5	U	3	UJ	5.5	U
Endrin	ug/kg	5.5	U	3	UJ	5.5	U
Gamma BHC (Lindane)	ug/kg	2.8	U	1.5	UJ	2.8	U
Gamma-chlordane	ug/kg	2.8	U	1.5	UJ	2.8	U
Heptachlor Epoxide	ug/kg	2.8	U	1.5	UJ	2.8	U
Heptachlor	ug/kg	2.8	U	1.5	UJ	2.8	U
Methoxychlor	ug/kg	28	UJ	15	UJ	28	UJ
p,p'-DDD	ug/kg	5.5	U	3	UJ	5.5	U
p,p'-DDE	ug/kg	21	=	3	UJ	3.9	J
p,p'-DDT	ug/kg	5.6	=	3	UJ	2	J
Toxaphene	ug/kg	180	U	99	UJ	180	U

	StationID	G003SB038		G003SB038		G003SB039	
	SampleID	003SB03801 (0-1ft)		003SB03802 (3-5ft)		003SB03901 (0-1ft)	
	DateCollected	3/27/2002		3/27/2002		1/15/2002	
	DateExtracted	4/2/2002		4/2/2002		1/17/2002	
	DateAnalyzed	4/4/2002		4/4/2002		1/23/2002	
	SDGNumber	CNC82		CNC82		CNC62	
Parameter	**Units**						
Aldrin	ug/kg	2.9	U	1.5	U	64	U
Alpha BHC (Alpha Hexachlorocyclohexane)	ug/kg	2.9	U	1.5	U	64	U
Alpha-chlordane	ug/kg	2.9	U	1.5	U	750	=
Beta BHC (Beta Hexachlorocyclohexane)	ug/kg	2.9	U	1.5	U	64	U
Chlordane	ug/kg	29	UJ	15	UJ	640	UJ
Delta BHC (Delta Hexachlorocyclohexane)	ug/kg	2.9	U	1.5	U	64	U
Dieldrin	ug/kg	5.6	U	3	U	16	J
Endosulfan I	ug/kg	2.9	U	1.5	U	21	J
Endosulfan II	ug/kg	5.6	U	3	U	120	U
Endosulfan Sulfate	ug/kg	5.6	U	3	U	120	U
Endrin Aldehyde	ug/kg	5.6	U	3	U	120	U
Endrin Ketone	ug/kg	5.6	U	3	U	120	U
Endrin	ug/kg	5.6	U	3	U	120	U
Gamma BHC (Lindane)	ug/kg	2.9	U	1.5	U	64	U
Gamma-chlordane	ug/kg	2.9	U	1.5	U	480	=
Heptachlor Epoxide	ug/kg	2.9	U	1.5	U	19	J
Heptachlor	ug/kg	2.9	U	1.5	U	64	U
Methoxychlor	ug/kg	29	UJ	15	UJ	640	U
p,p'-DDD	ug/kg	5.6	U	3	U	370	J
p,p'-DDE	ug/kg	5.1	J	3	U	300	=
p,p'-DDT	ug/kg	2.6	J	3	U	260	=
Toxaphene	ug/kg	180	U	99	U	4100	U

	StationID	G003SB039		G003SB040		G003SB040	
	SampleID	003SB03902 (3-5ft)		003SB04001 (0-1ft)		003SB04002 (3-5ft)	
	DateCollected	1/15/2002		1/15/2002		1/15/2002	
	DateExtracted	1/17/2002		1/17/2002		1/17/2002	
	DateAnalyzed	1/22/2002		1/22/2002		1/23/2002	
	SDGNumber	CNC62		CNC62		CNC62	
Parameter	**Units**						
Aldrin	ug/kg	1.5	U	32	U	6.3	U
Alpha BHC (Alpha Hexachlorocyclohexane)	ug/kg	1.5	U	32	U	6.3	U
Alpha-chlordane	ug/kg	15	J	380	=	98	J
Beta BHC (Beta Hexachlorocyclohexane)	ug/kg	1.5	U	32	U	6.3	U
Chlordane	ug/kg	54	J	2400	J	630	J
Delta BHC (Delta Hexachlorocyclohexane)	ug/kg	1.5	U	32	U	6.3	U
Dieldrin	ug/kg	0.69	J	9.8	J	2.6	J
Endosulfan I	ug/kg	0.31	J	32	U	6.3	U
Endosulfan II	ug/kg	2.8	U	62	U	12	U
Endosulfan Sulfate	ug/kg	2.8	U	62	U	12	U
Endrin Aldehyde	ug/kg	2.8	U	62	U	12	U
Endrin Ketone	ug/kg	2.8	U	62	U	12	U
Endrin	ug/kg	2.8	U	62	U	12	U
Gamma BHC (Lindane)	ug/kg	1.5	U	32	U	6.3	U
Gamma-chlordane	ug/kg	8.8	J	400	=	99	=
Heptachlor Epoxide	ug/kg	0.62	J	8.7	J	2.2	J
Heptachlor	ug/kg	1.5	UJ	44	=	10	=
Methoxychlor	ug/kg	15	UJ	320	U	63	U
p,p'-DDD	ug/kg	2.8	U	62	U	12	U
p,p'-DDE	ug/kg	13	J	35	J	8.5	J
p,p'-DDT	ug/kg	6.4	=	67	=	12	J
Toxaphene	ug/kg	93	U	2100	U	400	U

	StationID	G003SB041		G003SB041		G003SB041	
	SampleID	003CB04102 (3-5ft)		003SB04101 (0-1ft)		003SB04102 (3-5ft)	
	DateCollected	1/15/2002		1/15/2002		1/15/2002	
	DateExtracted	1/17/2002		1/17/2002		1/17/2002	
	DateAnalyzed	1/22/2002		1/22/2002		1/22/2002	
	SDGNumber	CNC62		CNC62		CNC62	
Parameter	**Units**						
Aldrin	ug/kg	1.5	U	5.8	U	1.5	U
Alpha BHC (Alpha Hexachlorocyclohexane)	ug/kg	1.5	U	5.8	U	1.5	U
Alpha-chlordane	ug/kg	1.6	=	120	=	1	J
Beta BHC (Beta Hexachlorocyclohexane)	ug/kg	1.5	U	5.8	U	1.5	U
Chlordane	ug/kg	15	UJ	440	J	15	UJ
Delta BHC (Delta Hexachlorocyclohexane)	ug/kg	1.5	U	5.8	U	1.5	U
Dieldrin	ug/kg	2.9	U	21	=	2.9	U
Endosulfan I	ug/kg	1.5	U	5.8	U	1.5	U
Endosulfan II	ug/kg	2.9	U	11	U	2.9	U
Endosulfan Sulfate	ug/kg	2.9	U	11	U	2.9	U
Endrin Aldehyde	ug/kg	2.9	U	11	U	2.9	U
Endrin Ketone	ug/kg	2.9	U	11	U	2.9	U
Endrin	ug/kg	2.9	U	11	U	2.9	U
Gamma BHC (Lindane)	ug/kg	1.5	U	5.8	U	1.5	U
Gamma-chlordane	ug/kg	1.6	=	80	=	0.87	J
Heptachlor Epoxide	ug/kg	1.5	U	2.6	J	1.5	U
Heptachlor	ug/kg	1.5	U	5.8	U	1.5	U
Methoxychlor	ug/kg	15	U	58	U	15	U
p,p'-DDD	ug/kg	2.9	U	3.9	J	0.42	J
p,p'-DDE	ug/kg	0.31	J	8.7	J	2.9	U
p,p'-DDT	ug/kg	1	J	61	=	8.7	=
Toxaphene	ug/kg	95	U	370	U	95	U

	StationID	G003SB042		G003SB042		G003SB043	
	SampleID	003SB04201 (0-1ft)		003SB04202 (3-5ft)		003SB04301 (0-1ft)	
	DateCollected	1/15/2002		1/15/2002		3/27/2002	
	DateExtracted	1/17/2002		1/17/2002		4/2/2002	
	DateAnalyzed	1/23/2002		1/22/2002		4/4/2002	
	SDGNumber	CNC62		CNC62		CNC82	
Parameter	**Units**						
Aldrin	ug/kg	6	U	2.1	U	70	U
Alpha BHC (Alpha Hexachlorocyclohexane)	ug/kg	6	U	2.1	U	70	U
Alpha-chlordane	ug/kg	52	J	1.4	J	70	U
Beta BHC (Beta Hexachlorocyclohexane)	ug/kg	6	U	2.1	U	70	U
Chlordane	ug/kg	60	UJ	21	UJ	700	UJ
Delta BHC (Delta Hexachlorocyclohexane)	ug/kg	6	U	2.1	U	70	U
Dieldrin	ug/kg	6.6	J	4	U	130	U
Endosulfan I	ug/kg	1.6	J	2.1	U	70	U
Endosulfan II	ug/kg	11	U	4	U	130	U
Endosulfan Sulfate	ug/kg	11	U	4	U	130	U
Endrin Aldehyde	ug/kg	11	U	4	U	130	U
Endrin Ketone	ug/kg	11	U	4	U	130	U
Endrin	ug/kg	11	U	4	U	130	U
Gamma BHC (Lindane)	ug/kg	6	U	2.1	U	70	U
Gamma-chlordane	ug/kg	59	=	1.2	J	70	U
Heptachlor Epoxide	ug/kg	0.98	J	2.1	U	70	U
Heptachlor	ug/kg	6	U	2.1	U	70	U
Methoxychlor	ug/kg	60	U	21	U	700	UJ
p,p'-DDD	ug/kg	190	J	4.8	J	280	=
p,p'-DDE	ug/kg	30	=	2.6	J	270	=
p,p'-DDT	ug/kg	280	=	11	=	2000	=
Toxaphene	ug/kg	380	U	130	U	4500	U

	StationID	G003SB044		G003SB044		G003SB045	
	SampleID	003SB04401 (0-1ft)		003SB04402 (3-5ft)		003SB04501 (0-1ft)	
	DateCollected	3/27/2002		3/27/2002		3/27/2002	
	DateExtracted	4/2/2002		4/2/2002		4/2/2002	
	DateAnalyzed	4/4/2002		4/4/2002		4/4/2002	
	SDGNumber	CNC82		CNC82		CNC82	
Parameter	**Units**						
Aldrin	ug/kg	340	U	60	U	140	U
Alpha BHC (Alpha Hexachlorocyclohexane)	ug/kg	340	U	60	U	140	U
Alpha-chlordane	ug/kg	340	U	60	U	65	J
Beta BHC (Beta Hexachlorocyclohexane)	ug/kg	340	U	60	U	140	U
Chlordane	ug/kg	3400	UJ	600	UJ	1400	UJ
Delta BHC (Delta Hexachlorocyclohexane)	ug/kg	340	U	60	U	140	U
Dieldrin	ug/kg	660	U	120	U	270	U
Endosulfan I	ug/kg	340	U	60	U	140	U
Endosulfan II	ug/kg	660	U	120	U	270	U
Endosulfan Sulfate	ug/kg	660	U	120	U	270	U
Endrin Aldehyde	ug/kg	660	U	120	U	270	U
Endrin Ketone	ug/kg	660	U	120	U	270	U
Endrin	ug/kg	660	U	120	U	270	U
Gamma BHC (Lindane)	ug/kg	340	U	60	U	140	U
Gamma-chlordane	ug/kg	79	J	60	U	50	J
Heptachlor Epoxide	ug/kg	340	U	60	U	140	U
Heptachlor	ug/kg	340	U	60	U	140	U
Methoxychlor	ug/kg	3400	UJ	600	UJ	1400	UJ
p,p'-DDD	ug/kg	2800	=	260	J	690	=
p,p'-DDE	ug/kg	5500	=	260	=	200	J
p,p'-DDT	ug/kg	15000	=	2800	=	5400	=
Toxaphene	ug/kg	22000	U	3900	U	9000	U

	StationID	G003SB046		G003SB047		G003SB048	
	SampleID	003SB04601 (0-1ft)		003SB04701 (0-1ft)		003SB04801 (0-1ft)	
	DateCollected	3/27/2002		3/27/2002		3/27/2002	
	DateExtracted	4/2/2002		4/2/2002		4/2/2002	
	DateAnalyzed	4/4/2002		4/4/2002		4/4/2002	
	SDGNumber	CNC82		CNC82		CNC82	
Parameter	**Units**						
Aldrin	ug/kg	1.4	U	15	U	1400	U
Alpha BHC (Alpha Hexachlorocyclohexane)	ug/kg	1.4	U	15	U	1400	U
Alpha-chlordane	ug/kg	0.46	J	160	J	1400	U
Beta BHC (Beta Hexachlorocyclohexane)	ug/kg	1.4	U	15	U	1400	U
Chlordane	ug/kg	14	UJ	830	J	14000	UJ
Delta BHC (Delta Hexachlorocyclohexane)	ug/kg	1.4	U	15	U	1400	U
Dieldrin	ug/kg	2.6	U	29	J	2700	U
Endosulfan I	ug/kg	1.4	U	15	U	1400	U
Endosulfan II	ug/kg	2.6	U	28	U	2700	U
Endosulfan Sulfate	ug/kg	2.6	U	28	U	2700	U
Endrin Aldehyde	ug/kg	2.6	U	28	U	2700	U
Endrin Ketone	ug/kg	2.6	U	28	U	2700	U
Endrin	ug/kg	2.6	U	28	U	2700	U
Gamma BHC (Lindane)	ug/kg	1.4	U	15	U	1400	U
Gamma-chlordane	ug/kg	0.88	J	160	J	1400	U
Heptachlor Epoxide	ug/kg	1.4	U	6.7	J	1400	U
Heptachlor	ug/kg	1.4	U	15	U	1400	U
Methoxychlor	ug/kg	14	UJ	150	UJ	14000	UJ
p,p'-DDD	ug/kg	2.3	J	140	J	10000	=
p,p'-DDE	ug/kg	11	J	120	J	3500	=
p,p'-DDT	ug/kg	16	J	680	J	68000	=
Toxaphene	ug/kg	86	U	940	U	90000	U

	StationID	G003SB048		G003SB049		G003SB049	
	SampleID	003SB04802 (3-5ft)		003SB04901 (0-1ft)		003SB04902 (3-5ft)	
	DateCollected	3/27/2002		3/27/2002		3/27/2002	
	DateExtracted	4/2/2002		4/2/2002		4/2/2002	
	DateAnalyzed	4/4/2002		4/4/2002		4/4/2002	
	SDGNumber	CNC82		CNC82		CNC82	
Parameter	**Units**						
Aldrin	ug/kg	5.8	U	8.7	U	1.6	UJ
Alpha BHC (Alpha Hexachlorocyclohexane)	ug/kg	5.8	U	8.7	U	1.6	UJ
Alpha-chlordane	ug/kg	5.8	U	34	=	1.6	UJ
Beta BHC (Beta Hexachlorocyclohexane)	ug/kg	5.8	U	8.7	U	1.6	UJ
Chlordane	ug/kg	58	UJ	87	UJ	16	UJ
Delta BHC (Delta Hexachlorocyclohexane)	ug/kg	5.8	U	8.7	U	1.6	UJ
Dieldrin	ug/kg	3	J	59	=	3.2	UJ
Endosulfan I	ug/kg	5.8	U	8.7	U	1.6	UJ
Endosulfan II	ug/kg	11	U	17	U	3.2	UJ
Endosulfan Sulfate	ug/kg	11	U	17	U	3.2	UJ
Endrin Aldehyde	ug/kg	11	U	17	U	3.2	UJ
Endrin Ketone	ug/kg	11	U	17	U	3.2	UJ
Endrin	ug/kg	11	U	17	U	3.2	UJ
Gamma BHC (Lindane)	ug/kg	5.8	U	8.7	U	1.6	UJ
Gamma-chlordane	ug/kg	5.8	U	27	J	1.6	UJ
Heptachlor Epoxide	ug/kg	5.8	U	6.3	J	1.6	UJ
Heptachlor	ug/kg	5.8	U	8.7	U	1.6	UJ
Methoxychlor	ug/kg	58	UJ	87	UJ	16	UJ
p,p'-DDD	ug/kg	24	=	16	J	3.2	UJ
p,p'-DDE	ug/kg	7.3	J	360	=	1.2	J
p,p'-DDT	ug/kg	180	=	160	=	0.75	J
Toxaphene	ug/kg	370	U	550	U	100	UJ

	StationID	G003SB051		G003SB051		G003SB052	
	SampleID	003SB05101 (0-1ft)		003SB05102 (3-5ft)		003CB05202 (3-5ft)	
	DateCollected	3/27/2002		3/28/2002		3/27/2002	
	DateExtracted	4/2/2002		4/8/2002		4/2/2002	
	DateAnalyzed	4/4/2002		4/9/2002		4/8/2002	
	SDGNumber	CNC82		CNC84		CNC82	
Parameter	**Units**						
Aldrin	ug/kg	15	U	1.5	U	74	U
Alpha BHC (Alpha Hexachlorocyclohexane)	ug/kg	15	U	1.5	U	74	U
Alpha-chlordane	ug/kg	85	=	1.6	J	210	=
Beta BHC (Beta Hexachlorocyclohexane)	ug/kg	15	U	1.5	U	74	U
Chlordane	ug/kg	150	UJ	11	J	1100	=
Delta BHC (Delta Hexachlorocyclohexane)	ug/kg	15	U	1.5	U	74	U
Dieldrin	ug/kg	22	J	0.62	J	140	U
Endosulfan I	ug/kg	15	U	1.5	U	74	U
Endosulfan II	ug/kg	28	U	2.9	U	140	U
Endosulfan Sulfate	ug/kg	28	U	2.9	U	140	U
Endrin Aldehyde	ug/kg	28	U	2.9	U	140	U
Endrin Ketone	ug/kg	28	U	2.9	U	140	U
Endrin	ug/kg	28	U	2.9	UJ	140	U
Gamma BHC (Lindane)	ug/kg	15	U	1.5	U	74	U
Gamma-chlordane	ug/kg	98	=	1.7	=	210	=
Heptachlor Epoxide	ug/kg	3.8	J	1.5	U	7	J
Heptachlor	ug/kg	15	U	1.5	U	74	U
Methoxychlor	ug/kg	150	UJ	15	U	740	UJ
p,p'-DDD	ug/kg	18	J	2.9	U	220	=
p,p'-DDE	ug/kg	590	=	4.6	=	150	=
p,p'-DDT	ug/kg	100	=	3.5	=	3200	J
Toxaphene	ug/kg	930	U	96	U	4700	U

	StationID	G003SB052		G003SB052		G003SB053	
	SampleID	003SB05201 (0-1ft)		003SB05202 (3-5ft)		003SB05301 (0-1ft)	
	DateCollected	3/27/2002		3/27/2002		3/28/2002	
	DateExtracted	4/2/2002		4/2/2002		4/2/2002	
	DateAnalyzed	4/4/2002		4/4/2002		4/4/2002	
	SDGNumber	CNC82		CNC82		CNC83	
Parameter	**Units**						
Aldrin	ug/kg	28	U	3.1	U	1.5	U
Alpha BHC (Alpha Hexachlorocyclohexane)	ug/kg	28	U	3.1	U	1.5	U
Alpha-chlordane	ug/kg	170	=	31	=	0.46	J
Beta BHC (Beta Hexachlorocyclohexane)	ug/kg	28	U	3.1	U	1.5	U
Chlordane	ug/kg	280	UJ	160	J	15	U
Delta BHC (Delta Hexachlorocyclohexane)	ug/kg	28	U	3.1	U	1.5	U
Dieldrin	ug/kg	40	J	2.6	J	2.8	U
Endosulfan I	ug/kg	28	U	3.1	U	1.5	U
Endosulfan II	ug/kg	54	U	6	U	2.8	U
Endosulfan Sulfate	ug/kg	54	U	6	U	2.8	U
Endrin Aldehyde	ug/kg	54	U	6	U	2.8	U
Endrin Ketone	ug/kg	54	U	6	U	2.8	U
Endrin	ug/kg	54	U	6	U	2.8	U
Gamma BHC (Lindane)	ug/kg	28	U	3.1	U	1.5	U
Gamma-chlordane	ug/kg	130	=	29	=	0.46	J
Heptachlor Epoxide	ug/kg	14	J	1.2	J	1.5	U
Heptachlor	ug/kg	28	U	0.58	J	1.5	U
Methoxychlor	ug/kg	280	UJ	31	UJ	15	U
p,p'-DDD	ug/kg	100	=	12	=	2.8	U
p,p'-DDE	ug/kg	330	=	25	=	1.9	J
p,p'-DDT	ug/kg	710	=	94	=	1.7	J
Toxaphene	ug/kg	1800	U	200	U	94	U

	StationID	G003SB053		G003SB054		G003SB054	
	SampleID	003SB05302 (3-5ft)		003SB05401 (0-1ft)		003SB05402 (3-5ft)	
	DateCollected	3/28/2002		3/27/2002		3/27/2002	
	DateExtracted	4/8/2002		4/2/2002		4/2/2002	
	DateAnalyzed	4/9/2002		4/4/2002		4/4/2002	
	SDGNumber	CNC84		CNC83		CNC83	
Parameter	**Units**						
Aldrin	ug/kg	1.4	U	5.6	U	1.5	U
Alpha BHC (Alpha Hexachlorocyclohexane)	ug/kg	1.4	U	5.6	U	1.5	U
Alpha-chlordane	ug/kg	1.4	U	44	=	0.6	J
Beta BHC (Beta Hexachlorocyclohexane)	ug/kg	1.4	U	5.6	U	1.5	U
Chlordane	ug/kg	14	UJ	140	=	15	U
Delta BHC (Delta Hexachlorocyclohexane)	ug/kg	1.4	U	5.6	U	1.5	U
Dieldrin	ug/kg	2.8	U	4.7	J	2.9	U
Endosulfan I	ug/kg	1.4	U	5.6	U	1.5	U
Endosulfan II	ug/kg	2.8	U	11	U	2.9	U
Endosulfan Sulfate	ug/kg	2.8	U	11	U	2.9	U
Endrin Aldehyde	ug/kg	2.8	U	11	U	2.9	U
Endrin Ketone	ug/kg	2.8	U	11	U	2.9	U
Endrin	ug/kg	2.8	UJ	11	U	2.9	U
Gamma BHC (Lindane)	ug/kg	1.4	U	5.6	U	1.5	U
Gamma-chlordane	ug/kg	1.4	U	32	=	0.37	J
Heptachlor Epoxide	ug/kg	1.4	U	4.8	J	1.5	U
Heptachlor	ug/kg	1.4	U	5.6	U	1.5	U
Methoxychlor	ug/kg	14	U	56	U	15	U
p,p'-DDD	ug/kg	2.8	U	2	J	2.9	U
p,p'-DDE	ug/kg	0.37	J	200	=	2.9	U
p,p'-DDT	ug/kg	2.8	U	110	=	1.3	J
Toxaphene	ug/kg	92	U	360	U	98	U

	StationID	G003SB055		G003SB055		G003SB056	
	SampleID	003SB05501 (0-1ft)		003SB05502 (3-5ft)		003SB05601 (0-1ft)	
	DateCollected	3/27/2002		3/27/2002		3/27/2002	
	DateExtracted	4/2/2002		4/2/2002		4/2/2002	
	DateAnalyzed	4/5/2002		4/4/2002		4/5/2002	
	SDGNumber	CNC83		CNC83		CNC83	
Parameter	**Units**						
Aldrin	ug/kg	5.7	U	1.6	U	310	U
Alpha BHC (Alpha Hexachlorocyclohexane)	ug/kg	5.7	UJ	1.6	U	310	UJ
Alpha-chlordane	ug/kg	75	J	1.6	U	2000	J
Beta BHC (Beta Hexachlorocyclohexane)	ug/kg	5.7	U	1.6	U	310	U
Chlordane	ug/kg	400	=	16	U	9200	=
Delta BHC (Delta Hexachlorocyclohexane)	ug/kg	5.7	UJ	1.6	U	310	UJ
Dieldrin	ug/kg	20	=	3	U	560	J
Endosulfan I	ug/kg	5.7	U	1.6	U	310	U
Endosulfan II	ug/kg	11	U	3	U	600	U
Endosulfan Sulfate	ug/kg	11	U	3	U	600	U
Endrin Aldehyde	ug/kg	11	U	3	U	600	U
Endrin Ketone	ug/kg	11	U	3	U	600	U
Endrin	ug/kg	11	U	3	U	600	U
Gamma BHC (Lindane)	ug/kg	5.7	UJ	1.6	U	310	UJ
Gamma-chlordane	ug/kg	77	=	0.43	J	2100	=
Heptachlor Epoxide	ug/kg	4.7	J	1.6	U	110	J
Heptachlor	ug/kg	6.1	J	1.6	U	310	U
Methoxychlor	ug/kg	57	U	16	U	3100	U
p,p'-DDD	ug/kg	11	U	3	U	1600	=
p,p'-DDE	ug/kg	24	=	3	U	2700	=
p,p'-DDT	ug/kg	64	J	2.2	J	10000	J
Toxaphene	ug/kg	360	U	100	U	20000	U

	StationID	G003SB056		G003SB057		G003SB057	
	SampleID	003SB05602 (3-5ft)		003SB05701 (0-1ft)		003SB05702 (3-5ft)	
	DateCollected	3/27/2002		3/27/2002		3/27/2002	
	DateExtracted	4/2/2002		4/2/2002		4/2/2002	
	DateAnalyzed	4/5/2002		4/5/2002		4/5/2002	
	SDGNumber	CNC83		CNC83		CNC83	
Parameter	**Units**						
Aldrin	ug/kg	6.3	U	15	U	1.6	U
Alpha BHC (Alpha Hexachlorocyclohexane)	ug/kg	6.3	UJ	15	UJ	1.6	UJ
Alpha-chlordane	ug/kg	28	=	220	J	2.8	J
Beta BHC (Beta Hexachlorocyclohexane)	ug/kg	6.3	U	15	U	1.6	U
Chlordane	ug/kg	110	=	880	=	12	J
Delta BHC (Delta Hexachlorocyclohexane)	ug/kg	6.3	UJ	15	UJ	1.6	UJ
Dieldrin	ug/kg	5	J	15	J	3.1	U
Endosulfan I	ug/kg	6.3	U	15	U	1.6	U
Endosulfan II	ug/kg	12	U	29	U	3.1	U
Endosulfan Sulfate	ug/kg	12	U	29	U	3.1	U
Endrin Aldehyde	ug/kg	12	U	29	U	3.1	U
Endrin Ketone	ug/kg	12	U	29	U	3.1	U
Endrin	ug/kg	12	U	29	U	3.1	U
Gamma BHC (Lindane)	ug/kg	0.47	J	2.2	J	1.6	UJ
Gamma-chlordane	ug/kg	20	=	220	=	2.6	=
Heptachlor Epoxide	ug/kg	2.8	J	7.4	J	1.6	U
Heptachlor	ug/kg	6.3	U	15	U	1.6	U
Methoxychlor	ug/kg	63	U	150	U	16	U
p,p'-DDD	ug/kg	2.1	J	110	=	1.5	J
p,p'-DDE	ug/kg	19	=	140	=	2.9	J
p,p'-DDT	ug/kg	250	J	510	J	3.5	J
Toxaphene	ug/kg	400	U	960	U	100	U

	StationID	G003SB058		G003SB058		G003SB059	
	SampleID	003SB05801 (0-1ft)		003SB05802 (3-5ft)		003SB05901 (0-1ft)	
	DateCollected	3/27/2002		3/27/2002		3/28/2002	
	DateExtracted	4/8/2002		4/2/2002		4/2/2002	
	DateAnalyzed	4/10/2002		4/4/2002		4/5/2002	
	SDGNumber	CNC83		CNC82		CNC83	
Parameter	**Units**						
Aldrin	ug/kg	5.8	U	16	U	1.5	U
Alpha BHC (Alpha Hexachlorocyclohexane)	ug/kg	5.8	U	16	U	1.5	UJ
Alpha-chlordane	ug/kg	99	J	16	=	1.5	U
Beta BHC (Beta Hexachlorocyclohexane)	ug/kg	5.8	U	16	U	1.5	U
Chlordane	ug/kg	560	=	160	UJ	15	U
Delta BHC (Delta Hexachlorocyclohexane)	ug/kg	5.8	UJ	16	U	1.5	UJ
Dieldrin	ug/kg	12	J	30	U	2.9	U
Endosulfan I	ug/kg	5.8	UJ	16	U	1.5	U
Endosulfan II	ug/kg	11	U	30	U	2.9	U
Endosulfan Sulfate	ug/kg	11	U	30	U	2.9	U
Endrin Aldehyde	ug/kg	11	U	30	U	2.9	U
Endrin Ketone	ug/kg	11	U	30	U	2.9	U
Endrin	ug/kg	11	U	30	U	2.9	U
Gamma BHC (Lindane)	ug/kg	5.8	U	3.2	J	1.5	UJ
Gamma-chlordane	ug/kg	110	=	25	=	1.5	U
Heptachlor Epoxide	ug/kg	5.8	U	16	U	1.5	U
Heptachlor	ug/kg	5.8	U	16	U	1.5	U
Methoxychlor	ug/kg	58	U	160	UJ	15	U
p,p'-DDD	ug/kg	24	J	63	=	2.9	U
p,p'-DDE	ug/kg	170	J	13	J	0.72	J
p,p'-DDT	ug/kg	110	=	420	=	6.5	J
Toxaphene	ug/kg	370	U	1000	U	95	U

	StationID	G003SB059		G003SB060		G003SB061	
	SampleID	003SB05902 (3-5ft)		003SB06003 (1-2ft)		003SB06103 (1-2ft)	
	DateCollected	3/28/2002		3/27/2002		3/27/2002	
	DateExtracted	4/2/2002		4/2/2002		4/2/2002	
	DateAnalyzed	4/9/2002		4/5/2002		4/8/2002	
	SDGNumber	CNC83		CNC83		CNC83	
Parameter	**Units**						
Aldrin	ug/kg	28	U	1400	U	14000	U
Alpha BHC (Alpha Hexachlorocyclohexane)	ug/kg	28	U	1400	UJ	14000	U
Alpha-chlordane	ug/kg	28	U	1000	J	14000	U
Beta BHC (Beta Hexachlorocyclohexane)	ug/kg	28	U	1400	U	14000	U
Chlordane	ug/kg	280	U	4800	J	140000	U
Delta BHC (Delta Hexachlorocyclohexane)	ug/kg	28	U	1400	UJ	14000	U
Dieldrin	ug/kg	55	U	2700	U	27000	U
Endosulfan I	ug/kg	28	U	1400	U	14000	U
Endosulfan II	ug/kg	55	U	2700	U	27000	U
Endosulfan Sulfate	ug/kg	55	U	2700	U	27000	U
Endrin Aldehyde	ug/kg	55	U	2700	U	27000	U
Endrin Ketone	ug/kg	55	U	2700	U	27000	U
Endrin	ug/kg	55	U	2700	U	27000	U
Gamma BHC (Lindane)	ug/kg	28	U	1400	UJ	14000	U
Gamma-chlordane	ug/kg	28	U	870	J	14000	U
Heptachlor Epoxide	ug/kg	28	U	1400	U	14000	U
Heptachlor	ug/kg	28	U	1400	U	14000	U
Methoxychlor	ug/kg	280	U	14000	U	140000	U
p,p'-DDD	ug/kg	27	J	610	J	14000	J
p,p'-DDE	ug/kg	110	=	2300	J	4500	J
p,p'-DDT	ug/kg	1000	=	53000	J	310000	=
Toxaphene	ug/kg	1800	U	91000	U	910000	U

	StationID	G003SB062		G003SB063		G003SB064	
	SampleID	003SB06203 (1-2ft)		003SB06304 (5-6ft)		003SB06403 (1-2ft)	
	DateCollected	3/27/2002		3/27/2002		3/27/2002	
	DateExtracted	4/2/2002		4/2/2002		4/2/2002	
	DateAnalyzed	4/5/2002		4/4/2002		4/5/2002	
	SDGNumber	CNC83		CNC83		CNC83	
Parameter	**Units**						
Aldrin	ug/kg	36	U	6.1	U	1400	U
Alpha BHC (Alpha Hexachlorocyclohexane)	ug/kg	36	UJ	6.1	U	1400	UJ
Alpha-chlordane	ug/kg	36	U	6.1	U	21000	J
Beta BHC (Beta Hexachlorocyclohexane)	ug/kg	36	U	6.1	U	1400	U
Chlordane	ug/kg	360	U	61	U	130000	=
Delta BHC (Delta Hexachlorocyclohexane)	ug/kg	36	UJ	6.1	U	1400	U
Dieldrin	ug/kg	69	U	12	U	580	J
Endosulfan I	ug/kg	36	U	6.1	U	1400	U
Endosulfan II	ug/kg	69	U	12	U	2800	U
Endosulfan Sulfate	ug/kg	69	U	12	U	2800	U
Endrin Aldehyde	ug/kg	69	U	12	U	2800	U
Endrin Ketone	ug/kg	69	U	12	U	2800	U
Endrin	ug/kg	69	U	12	U	2800	U
Gamma BHC (Lindane)	ug/kg	36	UJ	6.1	U	1400	UJ
Gamma-chlordane	ug/kg	36	U	6.1	U	25000	=
Heptachlor Epoxide	ug/kg	36	U	6.1	U	1400	U
Heptachlor	ug/kg	36	U	6.1	U	3100	=
Methoxychlor	ug/kg	360	U	61	U	14000	U
p,p'-DDD	ug/kg	28	J	8.9	J	2800	U
p,p'-DDE	ug/kg	14	J	4.6	J	2800	U
p,p'-DDT	ug/kg	1500	J	200	=	2800	U
Toxaphene	ug/kg	2300	U	390	U	92000	U

	StationID	G003SB065		G003SB065		G003SB066	
	SampleID	003CB06503 (1-2ft)		003SB06503 (1-2ft)		003SB06603 (1-2ft)	
	DateCollected	3/28/2002		3/28/2002		3/27/2002	
	DateExtracted	4/2/2002		4/2/2002		4/2/2002	
	DateAnalyzed	4/5/2002		4/4/2002		4/9/2002	
	SDGNumber	CNC83		CNC83		CNC83	
Parameter	**Units**						
Aldrin	ug/kg	1.4	U	1.4	U	5.8	U
Alpha BHC (Alpha Hexachlorocyclohexane)	ug/kg	1.4	UJ	1.4	U	5.8	U
Alpha-chlordane	ug/kg	1.4	U	1.4	U	20	J
Beta BHC (Beta Hexachlorocyclohexane)	ug/kg	1.4	U	1.4	U	5.8	U
Chlordane	ug/kg	14	U	14	U	58	U
Delta BHC (Delta Hexachlorocyclohexane)	ug/kg	1.4	UJ	1.4	U	5.8	U
Dieldrin	ug/kg	2.6	U	2.6	U	5	J
Endosulfan I	ug/kg	1.4	U	1.4	U	5.8	U
Endosulfan II	ug/kg	2.6	U	2.6	U	11	U
Endosulfan Sulfate	ug/kg	2.6	U	2.6	U	11	U
Endrin Aldehyde	ug/kg	2.6	U	2.6	U	11	U
Endrin Ketone	ug/kg	2.6	U	2.6	U	11	U
Endrin	ug/kg	2.6	U	2.6	U	11	U
Gamma BHC (Lindane)	ug/kg	1.4	UJ	1.4	U	5.8	U
Gamma-chlordane	ug/kg	1.4	U	0.28	J	23	=
Heptachlor Epoxide	ug/kg	1.4	U	1.4	U	1.5	J
Heptachlor	ug/kg	1.4	U	1.4	U	5.8	U
Methoxychlor	ug/kg	14	U	14	U	58	U
p,p'-DDD	ug/kg	2.6	U	2.6	U	4.9	J
p,p'-DDE	ug/kg	2.6	U	2.6	U	97	=
p,p'-DDT	ug/kg	2.6	U	2.6	U	160	=
Toxaphene	ug/kg	88	U	88	U	370	U

	StationID	G003SB067		G003SB067		G003SB068	
	SampleID	003SB06701 (0-1ft)		003SB06702 (3-5ft)		003SB06801 (0-1ft)	
	DateCollected	3/27/2002		3/27/2002		5/13/2002	
	DateExtracted	4/2/2002		4/2/2002		5/20/2002	
	DateAnalyzed	4/10/2002		4/4/2002		5/21/2002	
	SDGNumber	CNC84		CNC84		CNC109	
Parameter	**Units**						
Aldrin	ug/kg	280	U	1.5	U	5.8	U
Alpha BHC (Alpha Hexachlorocyclohexane)	ug/kg	280	U	1.5	U	5.8	U
Alpha-chlordane	ug/kg	280	U	1.5	U	3.3	J
Beta BHC (Beta Hexachlorocyclohexane)	ug/kg	280	U	1.5	U	5.8	U
Chlordane	ug/kg	2800	UJ	15	UJ	58	U
Delta BHC (Delta Hexachlorocyclohexane)	ug/kg	280	U	1.5	U	5.8	U
Dieldrin	ug/kg	540	U	2.9	U	2.3	J
Endosulfan I	ug/kg	280	U	1.5	U	5.8	U
Endosulfan II	ug/kg	540	U	2.9	U	11	U
Endosulfan Sulfate	ug/kg	540	U	2.9	U	11	U
Endrin Aldehyde	ug/kg	540	U	2.9	U	11	U
Endrin Ketone	ug/kg	540	U	2.9	U	11	U
Endrin	ug/kg	540	UJ	2.9	U	11	U
Gamma BHC (Lindane)	ug/kg	280	U	1.5	U	5.8	U
Gamma-chlordane	ug/kg	110	J	1.5	U	5	J
Heptachlor Epoxide	ug/kg	280	U	1.5	U	5.8	U
Heptachlor	ug/kg	280	U	1.5	U	5.8	U
Methoxychlor	ug/kg	2800	U	15	U	58	U
p,p'-DDD	ug/kg	600	J	1.8	J	19	J
p,p'-DDE	ug/kg	1400	=	5.4	=	290	=
p,p'-DDT	ug/kg	12000	=	40	=	360	R
Toxaphene	ug/kg	18000	U	95	U	370	U

	StationID	G003SB068		G003SB068		G003SB069	
	SampleID	003SB06801DL (0-1ft)		003SB06803 (1-2ft)		003CB06901 (0-1ft)	
	DateCollected	5/13/2002		5/13/2002		5/13/2002	
	DateExtracted	5/20/2002		5/20/2002		5/20/2002	
	DateAnalyzed	5/22/2002		5/21/2002		5/21/2002	
	SDGNumber	CNC109		CNC109		CNC109	
Parameter	**Units**						
Aldrin	ug/kg	14	R	14	U	2.9	U
Alpha BHC (Alpha Hexachlorocyclohexane)	ug/kg	14	R	14	U	2.9	U
Alpha-chlordane	ug/kg	3.9	R	14	U	2.8	J
Beta BHC (Beta Hexachlorocyclohexane)	ug/kg	14	R	14	U	2.9	U
Chlordane	ug/kg	140	R	140	U	29	U
Delta BHC (Delta Hexachlorocyclohexane)	ug/kg	14	R	14	U	2.9	U
Dieldrin	ug/kg	28	R	27	U	0.57	J
Endosulfan I	ug/kg	14	R	14	U	2.9	U
Endosulfan II	ug/kg	28	R	27	U	5.6	U
Endosulfan Sulfate	ug/kg	28	R	27	U	5.6	U
Endrin Aldehyde	ug/kg	28	R	27	U	5.6	U
Endrin Ketone	ug/kg	28	R	27	U	5.6	U
Endrin	ug/kg	28	R	27	U	5.6	U
Gamma BHC (Lindane)	ug/kg	14	R	14	U	2.9	U
Gamma-chlordane	ug/kg	6.6	R	3.4	J	6.5	=
Heptachlor Epoxide	ug/kg	14	R	14	U	3.5	=
Heptachlor	ug/kg	14	R	14	U	2.9	U
Methoxychlor	ug/kg	140	R	140	U	29	U
p,p'-DDD	ug/kg	26	R	37	=	4	J
p,p'-DDE	ug/kg	340	R	530	=	82	=
p,p'-DDT	ug/kg	360	J	360	J	64	J
Toxaphene	ug/kg	920	R	910	U	190	U

	StationID	G003SB069		G003SB069		G003SB070	
	SampleID	003SB06901 (0-1ft)		003SB06903 (1-2ft)		003SB07001 (0-1ft)	
	DateCollected	5/13/2002		5/13/2002		5/15/2002	
	DateExtracted	5/20/2002		5/20/2002		5/20/2002	
	DateAnalyzed	5/21/2002		5/21/2002		5/21/2002	
	SDGNumber	CNC109		CNC109		CNC109	
Parameter	**Units**						
Aldrin	ug/kg	2.8	U	7.3	U	1.5	U
Alpha BHC (Alpha Hexachlorocyclohexane)	ug/kg	2.8	U	7.3	U	1.5	U
Alpha-chlordane	ug/kg	2.9	=	12	=	1.5	U
Beta BHC (Beta Hexachlorocyclohexane)	ug/kg	2.8	U	7.3	U	1.5	U
Chlordane	ug/kg	28	U	73	U	15	U
Delta BHC (Delta Hexachlorocyclohexane)	ug/kg	2.8	U	7.3	U	1.5	U
Dieldrin	ug/kg	0.91	J	3	J	2.9	U
Endosulfan I	ug/kg	2.8	U	7.3	U	1.5	U
Endosulfan II	ug/kg	5.5	U	14	U	2.9	U
Endosulfan Sulfate	ug/kg	5.5	U	14	U	2.9	U
Endrin Aldehyde	ug/kg	5.5	U	14	U	2.9	U
Endrin Ketone	ug/kg	5.5	U	14	U	2.9	U
Endrin	ug/kg	5.5	U	14	U	2.9	U
Gamma BHC (Lindane)	ug/kg	2.8	U	7.3	U	1.5	U
Gamma-chlordane	ug/kg	7.3	=	32	=	0.38	J
Heptachlor Epoxide	ug/kg	3.5	=	15	=	1.5	U
Heptachlor	ug/kg	2.8	U	7.3	U	1.5	U
Methoxychlor	ug/kg	28	U	73	U	15	U
p,p'-DDD	ug/kg	4.1	J	18	=	13	=
p,p'-DDE	ug/kg	86	=	300	=	48	=
p,p'-DDT	ug/kg	67	J	350	J	340	R
Toxaphene	ug/kg	180	U	470	U	95	U

	StationID	G003SB070		G003SB070		G003SB070	
	SampleID	003SB07001DL (0-1ft)		003SB07002 (3-5ft)		003SB07003 (1-2ft)	
	DateCollected	5/15/2002		5/15/2002		5/15/2002	
	DateExtracted	5/20/2002		5/20/2002		5/20/2002	
	DateAnalyzed	5/22/2002		5/21/2002		5/21/2002	
	SDGNumber	CNC109		CNC109		CNC109	
Parameter	**Units**						
Aldrin	ug/kg	15	R	1.5	U	1.5	U
Alpha BHC (Alpha Hexachlorocyclohexane)	ug/kg	15	R	1.5	U	1.5	U
Alpha-chlordane	ug/kg	15	R	1.5	U	1.5	U
Beta BHC (Beta Hexachlorocyclohexane)	ug/kg	15	R	1.5	U	1.5	U
Chlordane	ug/kg	150	R	15	U	15	U
Delta BHC (Delta Hexachlorocyclohexane)	ug/kg	15	R	1.5	U	1.5	U
Dieldrin	ug/kg	29	R	2.9	U	2.9	U
Endosulfan I	ug/kg	15	R	1.5	U	1.5	U
Endosulfan II	ug/kg	29	R	2.9	U	2.9	U
Endosulfan Sulfate	ug/kg	29	R	2.9	U	2.9	U
Endrin Aldehyde	ug/kg	29	R	2.9	U	2.9	U
Endrin Ketone	ug/kg	29	R	2.9	U	2.9	U
Endrin	ug/kg	29	R	2.9	U	2.9	U
Gamma BHC (Lindane)	ug/kg	15	R	1.5	U	1.5	U
Gamma-chlordane	ug/kg	15	R	1.5	U	1.5	U
Heptachlor Epoxide	ug/kg	15	R	1.5	U	1.5	U
Heptachlor	ug/kg	15	R	1.5	U	1.5	U
Methoxychlor	ug/kg	150	R	15	U	15	U
p,p'-DDD	ug/kg	26	R	1.3	J	2.9	U
p,p'-DDE	ug/kg	52	R	1.8	J	1.5	J
p,p'-DDT	ug/kg	290	J	23	J	9.1	J
Toxaphene	ug/kg	950	R	95	U	98	U

	StationID	G003SB071		G003SB071		G003SB071	
	SampleID	003SB07101 (0-1ft)		003SB07101DL (0-1ft)		003SB07103 (1-2ft)	
	DateCollected	5/15/2002		5/15/2002		5/15/2002	
	DateExtracted	5/20/2002		5/20/2002		5/20/2002	
	DateAnalyzed	5/21/2002		5/22/2002		5/21/2002	
	SDGNumber	CNC109		CNC109		CNC109	
Parameter	**Units**						
Aldrin	ug/kg	14	U	34	R	1.4	U
Alpha BHC (Alpha Hexachlorocyclohexane)	ug/kg	14	U	34	R	1.4	U
Alpha-chlordane	ug/kg	150	=	120	R	29	=
Beta BHC (Beta Hexachlorocyclohexane)	ug/kg	14	U	34	R	1.4	U
Chlordane	ug/kg	1300	=	1100	R	260	J
Delta BHC (Delta Hexachlorocyclohexane)	ug/kg	14	U	34	R	1.4	U
Dieldrin	ug/kg	4.2	J	66	R	2.6	U
Endosulfan I	ug/kg	14	U	34	R	1.4	U
Endosulfan II	ug/kg	26	U	66	R	2.6	U
Endosulfan Sulfate	ug/kg	26	U	66	R	2.6	U
Endrin Aldehyde	ug/kg	26	U	66	R	2.6	U
Endrin Ketone	ug/kg	26	U	66	R	2.6	U
Endrin	ug/kg	26	U	66	R	2.6	U
Gamma BHC (Lindane)	ug/kg	70	=	56	R	19	=
Gamma-chlordane	ug/kg	150	=	130	R	30	=
Heptachlor Epoxide	ug/kg	14	U	34	R	1.4	U
Heptachlor	ug/kg	9.5	J	34	R	0.57	J
Methoxychlor	ug/kg	140	U	340	R	14	U
p,p'-DDD	ug/kg	170	=	170	R	11	=
p,p'-DDE	ug/kg	100	=	93	R	12	J
p,p'-DDT	ug/kg	1400	R	1100	J	150	R
Toxaphene	ug/kg	870	U	2200	R	88	U

	StationID	G003SB071		G003SB073		G003SB073	
	SampleID	003SB07103DL (1-2ft)		003CB07303 (1-2ft)		003CB07303DL (1-2ft)	
	DateCollected	5/15/2002		5/15/2002		5/15/2002	
	DateExtracted	5/20/2002		5/20/2002		5/20/2002	
	DateAnalyzed	5/22/2002		5/21/2002		5/22/2002	
	SDGNumber	CNC109		CNC109		CNC109	
Parameter	**Units**						
Aldrin	ug/kg	5.5	R	14	U	1400	R
Alpha BHC (Alpha Hexachlorocyclohexane)	ug/kg	5.5	R	14	U	1400	R
Alpha-chlordane	ug/kg	27	R	75	=	1400	R
Beta BHC (Beta Hexachlorocyclohexane)	ug/kg	5.5	R	14	U	1400	R
Chlordane	ug/kg	240	R	140	U	14000	R
Delta BHC (Delta Hexachlorocyclohexane)	ug/kg	5.5	R	14	U	1400	R
Dieldrin	ug/kg	11	R	110	=	2700	R
Endosulfan I	ug/kg	5.5	R	14	U	1400	R
Endosulfan II	ug/kg	11	R	27	U	2700	R
Endosulfan Sulfate	ug/kg	11	R	27	U	2700	R
Endrin Aldehyde	ug/kg	11	R	27	U	2700	R
Endrin Ketone	ug/kg	11	R	27	U	2700	R
Endrin	ug/kg	11	R	27	U	2700	R
Gamma BHC (Lindane)	ug/kg	16	R	14	U	1400	R
Gamma-chlordane	ug/kg	28	R	160	=	1400	R
Heptachlor Epoxide	ug/kg	5.5	R	14	U	1400	R
Heptachlor	ug/kg	5.5	R	8.7	J	1400	R
Methoxychlor	ug/kg	55	R	140	U	14000	R
p,p'-DDD	ug/kg	12	R	6000	R	6400	=
p,p'-DDE	ug/kg	11	R	3700	R	2900	=
p,p'-DDT	ug/kg	110	J	37000	R	45000	J
Toxaphene	ug/kg	350	R	890	U	89000	R

	StationID	G003SB078		G003SB090		G003SB095	
	SampleID	003CB07802 (3-5ft)		003CB09003 (1-3ft)		003CB09503 (1-3ft)	
	DateCollected	5/15/2002		6/13/2002		7/25/2002	
	DateExtracted	5/20/2002		6/17/2002		7/30/2002	
	DateAnalyzed	5/23/2002		6/20/2002		8/10/2002	
	SDGNumber	CNC110		CNC115		CNC133	
Parameter	**Units**						
Aldrin	ug/kg	1.4	U	3	U	1.5	R
Alpha BHC (Alpha Hexachlorocyclohexane)	ug/kg	1.4	U	3	U	1.5	R
Alpha-chlordane	ug/kg	1.9	J	34	J	1.5	R
Beta BHC (Beta Hexachlorocyclohexane)	ug/kg	1.4	U	3	U	1.5	R
Chlordane	ug/kg	15	=	260	=	15	R
Delta BHC (Delta Hexachlorocyclohexane)	ug/kg	1.4	U	3	U	1.5	R
Dieldrin	ug/kg	0.71	J	2	J	2.8	R
Endosulfan I	ug/kg	1.4	U	1.3	J	1.5	R
Endosulfan II	ug/kg	2.8	U	5.7	U	2.8	R
Endosulfan Sulfate	ug/kg	2.8	U	5.7	U	2.8	R
Endrin Aldehyde	ug/kg	2.8	U	5.7	U	2.8	R
Endrin Ketone	ug/kg	2.8	U	5.7	U	2.8	R
Endrin	ug/kg	2.8	U	5.7	U	2.8	R
Gamma BHC (Lindane)	ug/kg	1.4	U	3	U	1.5	R
Gamma-chlordane	ug/kg	1.9	=	39	=	1.5	R
Heptachlor Epoxide	ug/kg	1.4	U	16	=	1.5	R
Heptachlor	ug/kg	1.4	U	3	U	0.25	R
Methoxychlor	ug/kg	14	U	30	U	15	R
p,p'-DDD	ug/kg	2.8	U	4.8	J	0.95	R
p,p'-DDE	ug/kg	2.7	J	41	=	2.2	R
p,p'-DDT	ug/kg	10	=	13	J	21	R
Toxaphene	ug/kg	92	U	190	U	93	R

	StationID	G003SB095		G003SB100	
	SampleID	003CB09503RE (-ft)		003CB10001 (0-1ft)	
	DateCollected	7/25/2002		12/6/2002	
	DateExtracted	8/13/2002		12/9/2002	
	DateAnalyzed	8/15/2002		12/10/2002	
	SDGNumber	CNC133		CNC152	
Parameter	**Units**				
Aldrin	ug/kg	1.5	UJ		
Alpha BHC (Alpha Hexachlorocyclohexane)	ug/kg	1.5	UJ		
Alpha-chlordane	ug/kg	1.5	UJ		
Beta BHC (Beta Hexachlorocyclohexane)	ug/kg	1.5	UJ		
Chlordane	ug/kg	15	UJ		
Delta BHC (Delta Hexachlorocyclohexane)	ug/kg	1.5	UJ		
Dieldrin	ug/kg	2.8	UJ	16	J
Endosulfan I	ug/kg	1.5	UJ		
Endosulfan II	ug/kg	2.8	UJ		
Endosulfan Sulfate	ug/kg	2.8	UJ		
Endrin Aldehyde	ug/kg	2.8	UJ		
Endrin Ketone	ug/kg	2.8	UJ		
Endrin	ug/kg	2.8	UJ		
Gamma BHC (Lindane)	ug/kg	1.5	UJ		
Gamma-chlordane	ug/kg	1.5	UJ		
Heptachlor Epoxide	ug/kg	1.5	UJ		
Heptachlor	ug/kg	1.5	UJ		
Methoxychlor	ug/kg	15	UJ		
p,p'-DDD	ug/kg	1.3	J		
p,p'-DDE	ug/kg	3.3	J		
p,p'-DDT	ug/kg	37	J		
Toxaphene	ug/kg	93	UJ		

	StationID	G003SB072		G003SB072		G003SB072	
	SampleID	003SB07201 (0-1ft)		003SB07201DL (0-1ft)		003SB07203 (1-2ft)	
	DateCollected	5/13/2002		5/13/2002		5/15/2002	
	DateExtracted	5/20/2002		5/20/2002		5/20/2002	
	DateAnalyzed	5/21/2002		5/22/2002		5/21/2002	
	SDGNumber	CNC109		CNC109		CNC109	
Parameter	**Units**						
Aldrin	ug/kg	5.6	U	280	R	7.1	U
Alpha BHC (Alpha Hexachlorocyclohexane)	ug/kg	5.6	U	280	R	7.1	U
Alpha-chlordane	ug/kg	210	R	270	J	62	=
Beta BHC (Beta Hexachlorocyclohexane)	ug/kg	5.6	U	280	R	7.1	U
Chlordane	ug/kg	1500	J	2800	R	470	=
Delta BHC (Delta Hexachlorocyclohexane)	ug/kg	5.6	U	280	R	7.1	U
Dieldrin	ug/kg	20	J	540	R	10	J
Endosulfan I	ug/kg	5.6	U	280	R	7.1	U
Endosulfan II	ug/kg	11	U	540	R	14	U
Endosulfan Sulfate	ug/kg	11	U	540	R	14	U
Endrin Aldehyde	ug/kg	11	U	540	R	14	U
Endrin Ketone	ug/kg	11	U	540	R	14	U
Endrin	ug/kg	11	U	540	R	14	U
Gamma BHC (Lindane)	ug/kg	5.6	U	280	R	7.1	U
Gamma-chlordane	ug/kg	220	R	260	J	73	=
Heptachlor Epoxide	ug/kg	7.8	=	280	R	5.5	J
Heptachlor	ug/kg	5.6	U	280	R	3.4	J
Methoxychlor	ug/kg	56	U	2800	R	71	U
p,p'-DDD	ug/kg	450	R	740	=	53	=
p,p'-DDE	ug/kg	390	R	450	J	170	=
p,p'-DDT	ug/kg	7300	R	7300	J	860	R
Toxaphene	ug/kg	360	U	18000	R	450	U

	StationID	G003SB072		G003SB073		G003SB073	
	SampleID	003SB07203DL (1-2ft)		003SB07301 (0-1ft)		003SB07301DL (0-1ft)	
	DateCollected	5/15/2002		5/15/2002		5/15/2002	
	DateExtracted	5/20/2002		5/20/2002		5/20/2002	
	DateAnalyzed	5/22/2002		5/21/2002		5/22/2002	
	SDGNumber	CNC109		CNC109		CNC109	
Parameter	**Units**						
Aldrin	ug/kg	28	R	27	U	270	R
Alpha BHC (Alpha Hexachlorocyclohexane)	ug/kg	28	R	27	U	270	R
Alpha-chlordane	ug/kg	73	R	46	=	49	R
Beta BHC (Beta Hexachlorocyclohexane)	ug/kg	28	R	27	U	270	R
Chlordane	ug/kg	550	R	360	=	2700	R
Delta BHC (Delta Hexachlorocyclohexane)	ug/kg	28	R	27	U	270	R
Dieldrin	ug/kg	13	R	68	=	86	R
Endosulfan I	ug/kg	28	R	27	U	270	R
Endosulfan II	ug/kg	54	R	53	U	530	R
Endosulfan Sulfate	ug/kg	54	R	53	U	530	R
Endrin Aldehyde	ug/kg	54	R	53	U	530	R
Endrin Ketone	ug/kg	54	R	53	U	530	R
Endrin	ug/kg	54	R	53	U	530	R
Gamma BHC (Lindane)	ug/kg	28	R	27	U	270	R
Gamma-chlordane	ug/kg	88	R	70	=	84	R
Heptachlor Epoxide	ug/kg	5.4	R	27	U	270	R
Heptachlor	ug/kg	28	R	5.1	J	270	R
Methoxychlor	ug/kg	280	R	270	U	2700	R
p,p'-DDD	ug/kg	79	R	670	=	1100	R
p,p'-DDE	ug/kg	200	R	1600	R	2000	=
p,p'-DDT	ug/kg	860	J	11000	R	13000	J
Toxaphene	ug/kg	1800	R	1700	U	17000	R

	StationID	G003SB073		G003SB073		G003SB074	
	SampleID	003SB07303 (1-2ft)		003SB07303DL (1-2ft)		003SB07401 (0-1ft)	
	DateCollected	5/15/2002		5/15/2002		5/13/2002	
	DateExtracted	5/20/2002		5/20/2002		5/20/2002	
	DateAnalyzed	5/21/2002		5/22/2002		5/21/2002	
	SDGNumber	CNC109		CNC109		CNC109	
Parameter	**Units**						
Aldrin	ug/kg	28	U	1400	R	2.8	U
Alpha BHC (Alpha Hexachlorocyclohexane)	ug/kg	28	U	1400	R	2.8	U
Alpha-chlordane	ug/kg	28	J	1400	R	1.9	J
Beta BHC (Beta Hexachlorocyclohexane)	ug/kg	28	U	1400	R	2.8	U
Chlordane	ug/kg	280	U	14000	R	28	U
Delta BHC (Delta Hexachlorocyclohexane)	ug/kg	28	U	1400	R	2.8	U
Dieldrin	ug/kg	46	J	2700	R	0.71	J
Endosulfan I	ug/kg	28	U	1400	R	2.8	U
Endosulfan II	ug/kg	54	U	2700	R	5.4	U
Endosulfan Sulfate	ug/kg	54	U	2700	R	5.4	U
Endrin Aldehyde	ug/kg	54	U	2700	R	5.4	U
Endrin Ketone	ug/kg	54	U	2700	R	5.4	U
Endrin	ug/kg	54	U	2700	R	5.4	U
Gamma BHC (Lindane)	ug/kg	3.4	J	1400	R	2.8	U
Gamma-chlordane	ug/kg	99	=	1400	R	2.7	J
Heptachlor Epoxide	ug/kg	28	U	1400	R	0.39	J
Heptachlor	ug/kg	4.7	J	1400	R	2.8	U
Methoxychlor	ug/kg	280	U	14000	R	28	U
p,p'-DDD	ug/kg	6600	R	6800	=	2	J
p,p'-DDE	ug/kg	1900	R	1700	J	110	=
p,p'-DDT	ug/kg	40000	R	31000	J	40	J
Toxaphene	ug/kg	1800	U	90000	R	180	U

	StationID	G003SB074		G003SB075		G003SB075	
	SampleID	003SB07403 (1-2ft)		003SB07501 (0-1ft)		003SB07501DL (0-1ft)	
	DateCollected	5/13/2002		5/15/2002		5/15/2002	
	DateExtracted	5/20/2002		5/20/2002		5/20/2002	
	DateAnalyzed	5/21/2002		5/21/2002		5/22/2002	
	SDGNumber	CNC109		CNC109		CNC109	
Parameter	**Units**						
Aldrin	ug/kg	1.4	U	5.5	U	140	R
Alpha BHC (Alpha Hexachlorocyclohexane)	ug/kg	1.4	U	5.5	U	140	R
Alpha-chlordane	ug/kg	1.4	U	52	J	55	R
Beta BHC (Beta Hexachlorocyclohexane)	ug/kg	1.4	U	5.5	U	140	R
Chlordane	ug/kg	14	U	420	J	1400	R
Delta BHC (Delta Hexachlorocyclohexane)	ug/kg	1.4	U	5.5	U	140	R
Dieldrin	ug/kg	2.8	U	16	J	260	R
Endosulfan I	ug/kg	1.4	U	5.5	U	140	R
Endosulfan II	ug/kg	2.8	U	10	U	260	R
Endosulfan Sulfate	ug/kg	2.8	U	10	U	260	R
Endrin Aldehyde	ug/kg	2.8	U	10	U	260	R
Endrin Ketone	ug/kg	2.8	U	10	U	260	R
Endrin	ug/kg	2.8	U	10	U	260	R
Gamma BHC (Lindane)	ug/kg	1.4	U	5.5	U	140	R
Gamma-chlordane	ug/kg	1.4	U	54	J	52	R
Heptachlor Epoxide	ug/kg	1.4	U	5.1	J	140	R
Heptachlor	ug/kg	1.4	U	5.5	U	140	R
Methoxychlor	ug/kg	14	U	55	U	1400	R
p,p'-DDD	ug/kg	2.8	U	260	J	220	R
p,p'-DDE	ug/kg	4.8	=	73	J	75	R
p,p'-DDT	ug/kg	1.8	J	4100	R	3100	J
Toxaphene	ug/kg	92	U	350	U	8700	R

	StationID	G003SB075		G003SB076		G003SB076	
	SampleID	003SB07503 (1-2ft)		003SB07601 (0-1ft)		003SB07601DL (0-1ft)	
	DateCollected	5/15/2002		5/15/2002		5/15/2002	
	DateExtracted	5/20/2002		5/20/2002		5/20/2002	
	DateAnalyzed	5/23/2002		5/23/2002		5/23/2002	
	SDGNumber	CNC110		CNC110		CNC110	
Parameter	**Units**						
Aldrin	ug/kg	5.6	U	14	U	27	R
Alpha BHC (Alpha Hexachlorocyclohexane)	ug/kg	5.6	U	14	U	27	R
Alpha-chlordane	ug/kg	5	J	65	=	38	R
Beta BHC (Beta Hexachlorocyclohexane)	ug/kg	5.6	U	14	U	27	R
Chlordane	ug/kg	40	J	140	U	270	R
Delta BHC (Delta Hexachlorocyclohexane)	ug/kg	5.6	U	14	U	27	R
Dieldrin	ug/kg	11	U	810	R	780	=
Endosulfan I	ug/kg	5.6	U	14	U	27	R
Endosulfan II	ug/kg	11	U	26	U	52	R
Endosulfan Sulfate	ug/kg	11	U	26	U	52	R
Endrin Aldehyde	ug/kg	11	U	26	U	52	R
Endrin Ketone	ug/kg	11	U	7.3	J	52	R
Endrin	ug/kg	11	U	12	J	52	R
Gamma BHC (Lindane)	ug/kg	5.6	U	14	U	27	R
Gamma-chlordane	ug/kg	5.6	U	51	=	41	R
Heptachlor Epoxide	ug/kg	5.6	U	14	U	27	R
Heptachlor	ug/kg	5.6	U	14	U	27	R
Methoxychlor	ug/kg	56	U	140	U	270	R
p,p'-DDD	ug/kg	21	J	54	J	42	R
p,p'-DDE	ug/kg	7.9	J	140	=	120	R
p,p'-DDT	ug/kg	200	=	670	=	640	R
Toxaphene	ug/kg	360	U	860	U	1700	R

	StationID	G003SB076		G003SB077		G003SB077	
	SampleID	003SB07603 (1-2ft)		003SB07701 (0-1ft)		003SB07701DL (0-1ft)	
	DateCollected	5/15/2002		5/15/2002		5/15/2002	
	DateExtracted	5/20/2002		5/20/2002		5/20/2002	
	DateAnalyzed	5/23/2002		5/23/2002		5/23/2002	
	SDGNumber	CNC110		CNC110		CNC110	
Parameter	**Units**						
Aldrin	ug/kg	5.4	U	15	U	29	R
Alpha BHC (Alpha Hexachlorocyclohexane)	ug/kg	5.4	U	15	U	29	R
Alpha-chlordane	ug/kg	2.7	J	80	J	76	R
Beta BHC (Beta Hexachlorocyclohexane)	ug/kg	5.4	U	15	U	29	R
Chlordane	ug/kg	54	U	590	=	570	R
Delta BHC (Delta Hexachlorocyclohexane)	ug/kg	5.4	U	15	U	29	R
Dieldrin	ug/kg	26	=	61	=	58	R
Endosulfan I	ug/kg	5.4	U	15	U	29	R
Endosulfan II	ug/kg	10	U	28	U	56	R
Endosulfan Sulfate	ug/kg	10	U	28	U	56	R
Endrin Aldehyde	ug/kg	10	U	28	U	56	R
Endrin Ketone	ug/kg	10	U	28	U	56	R
Endrin	ug/kg	10	U	28	U	56	R
Gamma BHC (Lindane)	ug/kg	5.4	U	15	U	29	R
Gamma-chlordane	ug/kg	5.4	U	97	=	92	R
Heptachlor Epoxide	ug/kg	5.4	U	4.6	J	6.9	R
Heptachlor	ug/kg	5.4	U	15	U	29	R
Methoxychlor	ug/kg	54	U	150	U	290	R
p,p'-DDD	ug/kg	13	J	98	=	91	R
p,p'-DDE	ug/kg	19	=	580	=	600	R
p,p'-DDT	ug/kg	120	=	1000	R	950	=
Toxaphene	ug/kg	340	U	930	U	1900	R

	StationID	G003SB077		G003SB077		G003SB078	
	SampleID	003SB07702 (3-5ft)		003SB07703 (1-2ft)		003SB07801 (0-1ft)	
	DateCollected	5/15/2002		5/15/2002		5/15/2002	
	DateExtracted	5/20/2002		5/20/2002		5/20/2002	
	DateAnalyzed	5/23/2002		5/23/2002		5/23/2002	
	SDGNumber	CNC110		CNC110		CNC110	
Parameter	**Units**						
Aldrin	ug/kg	1.5	U	1.4	U	7.1	U
Alpha BHC (Alpha Hexachlorocyclohexane)	ug/kg	1.5	U	1.4	U	7.1	U
Alpha-chlordane	ug/kg	1.2	J	4.9	J	140	J
Beta BHC (Beta Hexachlorocyclohexane)	ug/kg	1.5	U	1.4	U	7.1	U
Chlordane	ug/kg	15	U	36	=	1100	=
Delta BHC (Delta Hexachlorocyclohexane)	ug/kg	1.5	U	1.4	U	7.1	U
Dieldrin	ug/kg	0.5	J	1.8	J	35	=
Endosulfan I	ug/kg	1.5	U	1.4	U	7.1	U
Endosulfan II	ug/kg	2.8	U	2.7	U	14	U
Endosulfan Sulfate	ug/kg	2.8	U	2.7	U	14	U
Endrin Aldehyde	ug/kg	2.8	U	0.81	J	14	U
Endrin Ketone	ug/kg	2.8	U	2.7	U	14	U
Endrin	ug/kg	2.8	U	2.7	U	14	U
Gamma BHC (Lindane)	ug/kg	1.5	U	1.4	U	7.1	U
Gamma-chlordane	ug/kg	1.5	U	5.5	=	150	=
Heptachlor Epoxide	ug/kg	0.27	J	1	J	6.2	J
Heptachlor	ug/kg	1.5	U	1.4	U	2.8	J
Methoxychlor	ug/kg	15	U	14	U	71	U
p,p'-DDD	ug/kg	0.52	J	1.6	J	27	J
p,p'-DDE	ug/kg	6.9	=	33	=	210	=
p,p'-DDT	ug/kg	10	=	42	=	700	R
Toxaphene	ug/kg	93	U	89	U	450	U

	StationID	G003SB078		G003SB078		G003SB078	
	SampleID	003SB07801DL (0-1ft)		003SB07802 (3-5ft)		003SB07803 (1-2ft)	
	DateCollected	5/15/2002		5/15/2002		5/15/2002	
	DateExtracted	5/20/2002		5/20/2002		5/20/2002	
	DateAnalyzed	5/23/2002		5/23/2002		5/23/2002	
	SDGNumber	CNC110		CNC110		CNC110	
Parameter	**Units**						
Aldrin	ug/kg	28	R	1.4	U	1.4	U
Alpha BHC (Alpha Hexachlorocyclohexane)	ug/kg	28	R	1.4	U	1.4	U
Alpha-chlordane	ug/kg	130	R	1.8	J	5.7	J
Beta BHC (Beta Hexachlorocyclohexane)	ug/kg	28	R	1.4	U	1.4	U
Chlordane	ug/kg	960	R	16	=	43	=
Delta BHC (Delta Hexachlorocyclohexane)	ug/kg	28	R	1.4	U	1.4	U
Dieldrin	ug/kg	29	R	0.7	J	1.7	J
Endosulfan I	ug/kg	28	R	1.4	U	1.4	U
Endosulfan II	ug/kg	54	R	2.7	U	2.7	U
Endosulfan Sulfate	ug/kg	54	R	2.7	U	2.7	U
Endrin Aldehyde	ug/kg	54	R	2.7	U	2.7	U
Endrin Ketone	ug/kg	54	R	2.7	U	2.7	U
Endrin	ug/kg	54	R	2.7	U	2.7	U
Gamma BHC (Lindane)	ug/kg	28	R	1.4	U	1.4	U
Gamma-chlordane	ug/kg	130	R	2	=	6.1	=
Heptachlor Epoxide	ug/kg	28	R	1.4	U	1.4	U
Heptachlor	ug/kg	28	R	1.4	U	1.4	U
Methoxychlor	ug/kg	280	R	14	U	14	U
p,p'-DDD	ug/kg	20	R	0.51	J	1.9	J
p,p'-DDE	ug/kg	170	R	2.6	J	8.8	=
p,p'-DDT	ug/kg	620	=	15	=	38	=
Toxaphene	ug/kg	1800	R	91	U	89	U

	StationID	G003SB079		G003SB079		G003SB079	
	SampleID	003SB07901 (0-1ft)		003SB07901DL (0-1ft)		003SB07903 (1-2ft)	
	DateCollected	5/15/2002		5/15/2002		5/15/2002	
	DateExtracted	5/20/2002		5/20/2002		5/20/2002	
	DateAnalyzed	5/23/2002		5/23/2002		5/23/2002	
	SDGNumber	CNC110		CNC110		CNC110	
Parameter	**Units**						
Aldrin	ug/kg	14	U	71	R	15	U
Alpha BHC (Alpha Hexachlorocyclohexane)	ug/kg	14	U	71	R	15	U
Alpha-chlordane	ug/kg	860	R	1000	=	650	R
Beta BHC (Beta Hexachlorocyclohexane)	ug/kg	14	U	71	R	15	U
Chlordane	ug/kg	5900	=	5600	R	5400	=
Delta BHC (Delta Hexachlorocyclohexane)	ug/kg	14	U	71	R	15	U
Dieldrin	ug/kg	440	=	290	R	110	=
Endosulfan I	ug/kg	14	U	71	R	29	=
Endosulfan II	ug/kg	27	U	140	R	29	U
Endosulfan Sulfate	ug/kg	27	U	140	R	29	U
Endrin Aldehyde	ug/kg	27	U	140	R	29	U
Endrin Ketone	ug/kg	27	U	140	R	29	U
Endrin	ug/kg	27	U	140	R	29	U
Gamma BHC (Lindane)	ug/kg	14	U	71	R	15	U
Gamma-chlordane	ug/kg	1400	R	1200	=	650	R
Heptachlor Epoxide	ug/kg	850	R	630	=	180	=
Heptachlor	ug/kg	27	=	24	R	15	U
Methoxychlor	ug/kg	140	U	710	R	150	U
p,p'-DDD	ug/kg	300	J	130	R	8.9	J
p,p'-DDE	ug/kg	1300	R	1100	=	73	J
p,p'-DDT	ug/kg	1400	R	1100	=	180	=
Toxaphene	ug/kg	900	U	4500	R	960	U

	StationID	G003SB079		G003SB080		G003SB080	
	SampleID	003SB07903DL (1-2ft)		003SB08001 (0-1ft)		003SB08003 (1-2ft)	
	DateCollected	5/15/2002		5/15/2002		5/15/2002	
	DateExtracted	5/20/2002		5/20/2002		5/20/2002	
	DateAnalyzed	5/23/2002		5/23/2002		5/28/2002	
	SDGNumber	CNC110		CNC110		CNC110	
Parameter	**Units**						
Aldrin	ug/kg	60	R	3.6	U	1.4	U
Alpha BHC (Alpha Hexachlorocyclohexane)	ug/kg	60	R	3.6	U	1.4	U
Alpha-chlordane	ug/kg	820	=	34	=	18	J
Beta BHC (Beta Hexachlorocyclohexane)	ug/kg	60	R	3.6	U	1.4	U
Chlordane	ug/kg	4500	R	110	=	95	=
Delta BHC (Delta Hexachlorocyclohexane)	ug/kg	60	R	3.6	U	1.4	U
Dieldrin	ug/kg	72	R	14	=	5.5	J
Endosulfan I	ug/kg	19	R	0.58	J	1.4	U
Endosulfan II	ug/kg	120	R	2.4	J	2.7	U
Endosulfan Sulfate	ug/kg	120	R	6.9	U	2.7	U
Endrin Aldehyde	ug/kg	120	R	6.9	U	2.7	U
Endrin Ketone	ug/kg	120	R	6.9	U	0.96	J
Endrin	ug/kg	120	R	6.9	U	2.7	U
Gamma BHC (Lindane)	ug/kg	60	R	3.6	U	1.4	U
Gamma-chlordane	ug/kg	530	=	19	=	14	=
Heptachlor Epoxide	ug/kg	130	R	31	=	9.3	=
Heptachlor	ug/kg	60	R	3.6	U	1.4	U
Methoxychlor	ug/kg	600	R	36	U	14	U
p,p'-DDD	ug/kg	120	R	6.9	U	2.7	U
p,p'-DDE	ug/kg	69	R	34	=	31	J
p,p'-DDT	ug/kg	130	R	34	=	26	J
Toxaphene	ug/kg	3900	R	230	U	91	U

	StationID	G003SB081		G003SB081		G003SB081	
	SampleID	003SB08101 (0-1ft)		003SB08103 (1-2ft)		003SB08103DL (1-2ft)	
	DateCollected	5/15/2002		5/15/2002		5/15/2002	
	DateExtracted	5/20/2002		5/20/2002		5/20/2002	
	DateAnalyzed	5/28/2002		5/28/2002		5/28/2002	
	SDGNumber	CNC110		CNC110		CNC110	
Parameter	**Units**						
Aldrin	ug/kg	5.6	U	7.1	U	71	R
Alpha BHC (Alpha Hexachlorocyclohexane)	ug/kg	5.6	U	7.1	U	71	R
Alpha-chlordane	ug/kg	65	=	800	R	1000	=
Beta BHC (Beta Hexachlorocyclohexane)	ug/kg	5.6	U	17	J	71	R
Chlordane	ug/kg	740	=	6900	R	7500	=
Delta BHC (Delta Hexachlorocyclohexane)	ug/kg	5.6	U	7.1	U	71	R
Dieldrin	ug/kg	4.3	J	67	J	56	R
Endosulfan I	ug/kg	5.6	U	7.1	U	71	R
Endosulfan II	ug/kg	11	U	14	U	140	R
Endosulfan Sulfate	ug/kg	11	U	14	U	140	R
Endrin Aldehyde	ug/kg	11	U	14	U	140	R
Endrin Ketone	ug/kg	11	U	9	J	140	R
Endrin	ug/kg	11	U	28	=	27	R
Gamma BHC (Lindane)	ug/kg	5.6	U	50	J	40	R
Gamma-chlordane	ug/kg	100	=	740	R	960	=
Heptachlor Epoxide	ug/kg	10	=	7.1	U	71	R
Heptachlor	ug/kg	24	=	88	=	110	R
Methoxychlor	ug/kg	56	U	71	U	710	R
p,p'-DDD	ug/kg	11	U	14	U	140	R
p,p'-DDE	ug/kg	44	=	59	=	55	R
p,p'-DDT	ug/kg	100	J	510	R	530	=
Toxaphene	ug/kg	360	U	460	U	4600	R

	StationID	G003SB082		G003SB082		G003SB083	
	SampleID	003SB08203 (1-2ft)		003SB08203DL (1-2ft)		003SB08303 (1-2ft)	
	DateCollected	5/15/2002		5/15/2002		5/15/2002	
	DateExtracted	5/20/2002		5/20/2002		5/20/2002	
	DateAnalyzed	5/28/2002		5/28/2002		5/28/2002	
	SDGNumber	CNC110		CNC110		CNC110	
Parameter	**Units**						
Aldrin	ug/kg	76	U	760	R	2.9	U
Alpha BHC (Alpha Hexachlorocyclohexane)	ug/kg	76	U	760	R	2.9	U
Alpha-chlordane	ug/kg	2700	R	3300	=	8	J
Beta BHC (Beta Hexachlorocyclohexane)	ug/kg	290	J	760	R	2.9	U
Chlordane	ug/kg	26000	=	18000	R	48	=
Delta BHC (Delta Hexachlorocyclohexane)	ug/kg	160	=	760	R	2.9	U
Dieldrin	ug/kg	530	J	450	R	2	J
Endosulfan I	ug/kg	76	U	760	R	2.9	U
Endosulfan II	ug/kg	140	U	1400	R	5.6	U
Endosulfan Sulfate	ug/kg	140	U	1400	R	5.6	U
Endrin Aldehyde	ug/kg	140	U	1400	R	5.6	U
Endrin Ketone	ug/kg	140	U	1400	R	5.6	U
Endrin	ug/kg	84	J	1400	R	5.6	U
Gamma BHC (Lindane)	ug/kg	1500	=	750	R	2.9	U
Gamma-chlordane	ug/kg	2900	R	2300	=	9.1	=
Heptachlor Epoxide	ug/kg	320	J	180	R	2.9	U
Heptachlor	ug/kg	100	J	760	R	2.9	U
Methoxychlor	ug/kg	760	U	7600	R	29	U
p,p'-DDD	ug/kg	810	J	330	R	6.9	J
p,p'-DDE	ug/kg	3200	J	2300	R	16	=
p,p'-DDT	ug/kg	23000	R	23000	J	80	=
Toxaphene	ug/kg	4800	U	48000	R	180	U

	StationID	G003SB084		G003SB084		G003SB085	
	SampleID	003SB08403 (1-2ft)		003SB08403DL (1-2ft)		003SB08501 (0-1ft)	
	DateCollected	5/13/2002		5/13/2002		6/13/2002	
	DateExtracted	5/20/2002		5/20/2002		6/17/2002	
	DateAnalyzed	5/21/2002		5/22/2002		6/20/2002	
	SDGNumber	CNC109		CNC109		CNC115	
Parameter	**Units**						
Aldrin	ug/kg	1.5	U	3	R	2.8	U
Alpha BHC (Alpha Hexachlorocyclohexane)	ug/kg	1.5	U	3	R	2.8	U
Alpha-chlordane	ug/kg	1.5	U	3	R	53	J
Beta BHC (Beta Hexachlorocyclohexane)	ug/kg	1.5	U	3	R	2.8	U
Chlordane	ug/kg	15	U	30	R	490	=
Delta BHC (Delta Hexachlorocyclohexane)	ug/kg	1.5	U	3	R	2.8	U
Dieldrin	ug/kg	2.8	U	5.7	R	0.95	J
Endosulfan I	ug/kg	1.5	U	3	R	3.2	=
Endosulfan II	ug/kg	2.8	U	5.7	R	5.5	U
Endosulfan Sulfate	ug/kg	2.8	U	5.7	R	5.5	U
Endrin Aldehyde	ug/kg	2.8	U	5.7	R	5.5	U
Endrin Ketone	ug/kg	2.8	U	5.7	R	5.5	U
Endrin	ug/kg	2.8	U	5.7	R	5.5	U
Gamma BHC (Lindane)	ug/kg	1.5	U	3	R	2.8	U
Gamma-chlordane	ug/kg	0.25	J	3	R	53	=
Heptachlor Epoxide	ug/kg	1.5	U	3	R	17	=
Heptachlor	ug/kg	1.5	U	3	R	0.56	J
Methoxychlor	ug/kg	15	U	30	R	28	U
p,p'-DDD	ug/kg	4.2	=	4.2	R	5.5	U
p,p'-DDE	ug/kg	7.7	=	7.2	R	21	=
p,p'-DDT	ug/kg	85	R	71	J	100	=
Toxaphene	ug/kg	94	U	190	R	180	U

	StationID	G003SB086		G003SB086		G003SB087	
	SampleID	003SB08601 (0-1ft)		003SB08601DL (0-1ft)		003SB08702 (3-5ft)	
	DateCollected	6/13/2002		6/13/2002		6/13/2002	
	DateExtracted	6/17/2002		6/17/2002		6/17/2002	
	DateAnalyzed	6/20/2002		6/20/2002		6/20/2002	
	SDGNumber	CNC115		CNC115		CNC115	
Parameter	**Units**						
Aldrin	ug/kg	27	U	140	R	1.5	U
Alpha BHC (Alpha Hexachlorocyclohexane)	ug/kg	27	U	140	R	1.5	U
Alpha-chlordane	ug/kg	6.1	J	140	R	1.5	U
Beta BHC (Beta Hexachlorocyclohexane)	ug/kg	27	U	140	R	1.5	U
Chlordane	ug/kg	270	U	1400	R	15	U
Delta BHC (Delta Hexachlorocyclohexane)	ug/kg	27	U	140	R	1.5	U
Dieldrin	ug/kg	53	U	260	R	3	U
Endosulfan I	ug/kg	27	U	140	R	1.5	U
Endosulfan II	ug/kg	53	U	260	R	3	U
Endosulfan Sulfate	ug/kg	53	U	260	R	3	U
Endrin Aldehyde	ug/kg	53	U	260	R	3	U
Endrin Ketone	ug/kg	53	U	260	R	3	U
Endrin	ug/kg	53	U	260	R	3	U
Gamma BHC (Lindane)	ug/kg	27	U	140	R	1.5	U
Gamma-chlordane	ug/kg	27	U	140	R	1.5	U
Heptachlor Epoxide	ug/kg	27	U	140	R	1.5	U
Heptachlor	ug/kg	27	U	140	R	1.5	U
Methoxychlor	ug/kg	270	U	1400	R	15	U
p,p'-DDD	ug/kg	620	=	670	R	3	U
p,p'-DDE	ug/kg	460	=	380	R	0.53	J
p,p'-DDT	ug/kg	4100	R	3600	=	3.1	=
Toxaphene	ug/kg	1700	U	8700	R	99	U

	StationID	G003SB088		G003SB088		G003SB089	
	SampleID	003SB08801 (0-1ft)		003SB08803 (1-3ft)		003SB08901 (0-1ft)	
	DateCollected	6/13/2002		6/13/2002		6/13/2002	
	DateExtracted	6/17/2002		6/17/2002		6/17/2002	
	DateAnalyzed	6/20/2002		6/20/2002		6/20/2002	
	SDGNumber	CNC115		CNC115		CNC115	
Parameter	**Units**						
Aldrin	ug/kg	2.8	U	1.4	U	1.4	U
Alpha BHC (Alpha Hexachlorocyclohexane)	ug/kg	2.8	U	1.4	U	1.4	U
Alpha-chlordane	ug/kg	20	J	1.4	J	1.4	U
Beta BHC (Beta Hexachlorocyclohexane)	ug/kg	2.8	U	1.4	U	1.4	U
Chlordane	ug/kg	110	=	14	U	14	U
Delta BHC (Delta Hexachlorocyclohexane)	ug/kg	2.8	U	1.4	U	1.4	U
Dieldrin	ug/kg	5.7	=	0.9	J	2.6	U
Endosulfan I	ug/kg	2.8	U	1.4	U	1.4	U
Endosulfan II	ug/kg	5.4	U	2.8	U	2.6	U
Endosulfan Sulfate	ug/kg	5.4	U	2.8	U	2.6	U
Endrin Aldehyde	ug/kg	5.4	U	0.56	J	2.6	U
Endrin Ketone	ug/kg	5.4	U	2.8	U	2.6	U
Endrin	ug/kg	5.4	U	2.8	U	2.6	U
Gamma BHC (Lindane)	ug/kg	2.8	U	1.4	U	1.4	U
Gamma-chlordane	ug/kg	23	=	4.1	=	1.4	U
Heptachlor Epoxide	ug/kg	0.66	J	1.4	U	1.4	U
Heptachlor	ug/kg	2.8	U	1.4	U	1.4	U
Methoxychlor	ug/kg	28	U	14	U	14	U
p,p'-DDD	ug/kg	3.4	J	2.8	U	2.6	U
p,p'-DDE	ug/kg	110	=	13	=	2.1	J
p,p'-DDT	ug/kg	75	=	13	=	3.5	=
Toxaphene	ug/kg	180	U	92	U	88	U

	StationID	G003SB089		G003SB090		G003SB090	
	SampleID	003SB08903 (1-3ft)		003SB09001 (0-1ft)		003SB09001DL (0-1ft)	
	DateCollected	6/13/2002		6/13/2002		6/13/2002	
	DateExtracted	6/17/2002		6/17/2002		6/17/2002	
	DateAnalyzed	6/20/2002		6/20/2002		6/20/2002	
	SDGNumber	CNC115		CNC115		CNC115	
Parameter	**Units**						
Aldrin	ug/kg	1.4	U	15	U	75	R
Alpha BHC (Alpha Hexachlorocyclohexane)	ug/kg	1.4	U	15	U	75	R
Alpha-chlordane	ug/kg	1.4	U	840	R	910	J
Beta BHC (Beta Hexachlorocyclohexane)	ug/kg	1.4	U	15	U	75	R
Chlordane	ug/kg	14	U	4700	=	5100	R
Delta BHC (Delta Hexachlorocyclohexane)	ug/kg	1.4	U	15	U	75	R
Dieldrin	ug/kg	2.7	U	85	=	71	R
Endosulfan I	ug/kg	1.4	U	15	U	75	R
Endosulfan II	ug/kg	2.7	U	29	U	140	R
Endosulfan Sulfate	ug/kg	2.7	U	29	U	140	R
Endrin Aldehyde	ug/kg	2.7	U	29	U	140	R
Endrin Ketone	ug/kg	2.7	U	29	U	140	R
Endrin	ug/kg	2.7	U	29	U	140	R
Gamma BHC (Lindane)	ug/kg	1.4	U	15	U	75	R
Gamma-chlordane	ug/kg	1.4	U	1200	R	1300	=
Heptachlor Epoxide	ug/kg	1.4	U	390	R	360	=
Heptachlor	ug/kg	1.4	U	15	U	75	R
Methoxychlor	ug/kg	14	U	150	U	750	R
p,p'-DDD	ug/kg	2.7	U	110	=	120	R
p,p'-DDE	ug/kg	2.7	U	1200	R	1100	=
p,p'-DDT	ug/kg	2.7	U	410	=	380	R
Toxaphene	ug/kg	89	U	950	U	4800	R

	StationID	G003SB090		G003SB091		G003SB091	
	SampleID	003SB09003 (1-3ft)		003SB09101 (0-1ft)		003SB09101DL (0-1ft)	
	DateCollected	6/13/2002		6/13/2002		6/13/2002	
	DateExtracted	6/17/2002		6/17/2002		6/17/2002	
	DateAnalyzed	6/20/2002		6/20/2002		6/20/2002	
	SDGNumber	CNC115		CNC115		CNC115	
Parameter	**Units**						
Aldrin	ug/kg	3	U	14	U	35	R
Alpha BHC (Alpha Hexachlorocyclohexane)	ug/kg	3	U	14	U	35	R
Alpha-chlordane	ug/kg	40	J	400	R	400	J
Beta BHC (Beta Hexachlorocyclohexane)	ug/kg	2.3	J	14	U	35	R
Chlordane	ug/kg	450	=	1800	=	1800	R
Delta BHC (Delta Hexachlorocyclohexane)	ug/kg	3	U	14	U	35	R
Dieldrin	ug/kg	2.1	J	39	=	58	R
Endosulfan I	ug/kg	3.6	J	14	U	35	R
Endosulfan II	ug/kg	5.7	U	27	U	68	R
Endosulfan Sulfate	ug/kg	3.4	J	27	U	68	R
Endrin Aldehyde	ug/kg	5.7	U	2.8	J	68	R
Endrin Ketone	ug/kg	5.7	U	27	U	68	R
Endrin	ug/kg	5.7	U	27	U	68	R
Gamma BHC (Lindane)	ug/kg	3	U	14	U	35	R
Gamma-chlordane	ug/kg	40	=	430	R	400	=
Heptachlor Epoxide	ug/kg	23	=	120	=	100	R
Heptachlor	ug/kg	0.53	J	2.4	J	35	R
Methoxychlor	ug/kg	30	U	140	U	350	R
p,p'-DDD	ug/kg	4.6	J	39	=	68	R
p,p'-DDE	ug/kg	39	=	630	=	540	R
p,p'-DDT	ug/kg	15	=	500	=	450	R
Toxaphene	ug/kg	190	U	900	U	2200	R

	StationID	G003SB091		G003SB092		G003SB093	
	SampleID	003SB09103 (1-3ft)		003SB09202 (3-5ft)		003SB09301 (0-1ft)	
	DateCollected	6/13/2002		6/13/2002		7/25/2002	
	DateExtracted	6/17/2002		6/17/2002		7/30/2002	
	DateAnalyzed	6/20/2002		6/20/2002		8/10/2002	
	SDGNumber	CNC115		CNC115		CNC133	
Parameter	**Units**						
Aldrin	ug/kg	3	U	1.5	U	1.5	R
Alpha BHC (Alpha Hexachlorocyclohexane)	ug/kg	3	U	1.5	U	1.5	R
Alpha-chlordane	ug/kg	35	J	1.7	J	29	R
Beta BHC (Beta Hexachlorocyclohexane)	ug/kg	3	U	1.5	U	1.5	R
Chlordane	ug/kg	160	=	32	=	160	R
Delta BHC (Delta Hexachlorocyclohexane)	ug/kg	3	U	1.5	U	1.5	R
Dieldrin	ug/kg	2.9	J	4	=	4.2	R
Endosulfan I	ug/kg	3	U	1.5	U	1.5	R
Endosulfan II	ug/kg	5.7	U	2.9	U	3	R
Endosulfan Sulfate	ug/kg	5.7	U	2.9	U	3	R
Endrin Aldehyde	ug/kg	1	J	2.9	U	0.91	R
Endrin Ketone	ug/kg	5.7	U	2.9	U	3	R
Endrin	ug/kg	5.7	U	2.9	U	3	R
Gamma BHC (Lindane)	ug/kg	3	U	1.5	U	1.5	R
Gamma-chlordane	ug/kg	34	=	1.1	J	29	R
Heptachlor Epoxide	ug/kg	9.9	=	2.3	J	8	R
Heptachlor	ug/kg	3	U	1.5	U	0.41	R
Methoxychlor	ug/kg	30	U	15	U	15	R
p,p'-DDD	ug/kg	5.7	U	2.9	U	0.64	R
p,p'-DDE	ug/kg	86	=	1.6	J	18	R
p,p'-DDT	ug/kg	42	=	4.6	=	15	R
Toxaphene	ug/kg	190	U	98	U	99	R

	StationID	G003SB093		G003SB094		G003SB094	
	SampleID	003SB09301RE (0-1ft)		003SB09401 (0-1ft)		003SB09403 (1-3ft)	
	DateCollected	7/25/2002		7/25/2002		7/25/2002	
	DateExtracted	8/13/2002		7/30/2002		7/30/2002	
	DateAnalyzed	8/15/2002		8/11/2002		8/11/2002	
	SDGNumber	CNC133		CNC133		CNC133	
Parameter	**Units**						
Aldrin	ug/kg	3.1	UJ	280	U	150	U
Alpha BHC (Alpha Hexachlorocyclohexane)	ug/kg	3.1	UJ	280	U	150	U
Alpha-chlordane	ug/kg	45	J	280	U	150	U
Beta BHC (Beta Hexachlorocyclohexane)	ug/kg	3.1	UJ	280	U	150	U
Chlordane	ug/kg	240	J	2800	UJ	1500	UJ
Delta BHC (Delta Hexachlorocyclohexane)	ug/kg	3.1	UJ	280	UJ	150	UJ
Dieldrin	ug/kg	7.1	J	540	U	280	U
Endosulfan I	ug/kg	3.1	UJ	280	U	150	U
Endosulfan II	ug/kg	1.3	J	540	U	280	U
Endosulfan Sulfate	ug/kg	6	UJ	540	U	280	U
Endrin Aldehyde	ug/kg	6	UJ	540	U	280	U
Endrin Ketone	ug/kg	6	UJ	540	U	280	U
Endrin	ug/kg	6	UJ	540	U	280	U
Gamma BHC (Lindane)	ug/kg	3.1	UJ	280	UJ	150	UJ
Gamma-chlordane	ug/kg	42	J	280	U	38	J
Heptachlor Epoxide	ug/kg	13	J	280	U	150	U
Heptachlor	ug/kg	3.1	UJ	280	UJ	150	UJ
Methoxychlor	ug/kg	31	UJ	2800	UJ	1500	UJ
p,p'-DDD	ug/kg	2.2	J	1100	=	690	=
p,p'-DDE	ug/kg	34	J	940	J	760	J
p,p'-DDT	ug/kg	24	J	6600	=	3700	=
Toxaphene	ug/kg	200	UJ	18000	U	9300	U

	StationID	G003SB095		G003SB095		G003SB095	
	SampleID	003SB09501 (0-1ft)		003SB09501RE (0-1ft)		003SB09503 (1-3ft)	
	DateCollected	7/25/2002		7/25/2002		7/25/2002	
	DateExtracted	7/30/2002		8/13/2002		7/30/2002	
	DateAnalyzed	8/10/2002		8/21/2002		8/10/2002	
	SDGNumber	CNC133		CNC133		CNC133	
Parameter	**Units**						
Aldrin	ug/kg	7.3	R	15	UJ	1.5	R
Alpha BHC (Alpha Hexachlorocyclohexane)	ug/kg	7.3	R	15	UJ	1.5	R
Alpha-chlordane	ug/kg	7.3	R	15	UJ	1.5	R
Beta BHC (Beta Hexachlorocyclohexane)	ug/kg	7.3	R	15	UJ	1.5	R
Chlordane	ug/kg	73	R	150	UJ	15	R
Delta BHC (Delta Hexachlorocyclohexane)	ug/kg	7.3	R	15	UJ	1.5	R
Dieldrin	ug/kg	14	R	28	UJ	3	R
Endosulfan I	ug/kg	7.3	R	15	UJ	1.5	R
Endosulfan II	ug/kg	14	R	28	UJ	3	R
Endosulfan Sulfate	ug/kg	14	R	28	UJ	3	R
Endrin Aldehyde	ug/kg	14	R	28	UJ	3	R
Endrin Ketone	ug/kg	14	R	28	UJ	3	R
Endrin	ug/kg	14	R	28	UJ	3	R
Gamma BHC (Lindane)	ug/kg	7.3	R	15	UJ	1.5	R
Gamma-chlordane	ug/kg	2.8	R	9.8	J	1.5	R
Heptachlor Epoxide	ug/kg	7.3	R	15	UJ	1.5	R
Heptachlor	ug/kg	7.3	R	15	UJ	1.5	R
Methoxychlor	ug/kg	73	R	150	UJ	15	R
p,p'-DDD	ug/kg	14	R	40	J	0.74	R
p,p'-DDE	ug/kg	51	R	150	J	1.8	R
p,p'-DDT	ug/kg	330	R	620	J	16	R
Toxaphene	ug/kg	470	R	930	UJ	99	R

	StationID	G003SB095		G003SB096		G003SB097	
	SampleID	003SB09503RE (-ft)		003SB09601 (0-1ft)		003SB09701 (0-1ft)	
	DateCollected	7/25/2002		7/25/2002		7/25/2002	
	DateExtracted	8/13/2002		7/30/2002		7/30/2002	
	DateAnalyzed	8/15/2002		8/10/2002		8/12/2002	
	SDGNumber	CNC133		CNC133		CNC133	
Parameter	**Units**						
Aldrin	ug/kg	1.5	UJ	1.4	U	15	U
Alpha BHC (Alpha Hexachlorocyclohexane)	ug/kg	1.5	UJ	1.4	U	15	U
Alpha-chlordane	ug/kg	1.5	UJ	1.4	U	39	J
Beta BHC (Beta Hexachlorocyclohexane)	ug/kg	1.5	UJ	1.4	U	15	U
Chlordane	ug/kg	15	UJ	14	UJ	150	U
Delta BHC (Delta Hexachlorocyclohexane)	ug/kg	1.5	UJ	1.4	UJ	15	U
Dieldrin	ug/kg	3	UJ	2.7	U	12	J
Endosulfan I	ug/kg	1.5	UJ	1.4	U	15	U
Endosulfan II	ug/kg	3	UJ	2.7	U	29	U
Endosulfan Sulfate	ug/kg	3	UJ	2.7	U	29	U
Endrin Aldehyde	ug/kg	3	UJ	2.7	U	29	U
Endrin Ketone	ug/kg	3	UJ	2.2	J	29	U
Endrin	ug/kg	3	UJ	2.7	U	29	U
Gamma BHC (Lindane)	ug/kg	1.5	UJ	1.4	UJ	15	UJ
Gamma-chlordane	ug/kg	1.5	UJ	1.4	U	51	=
Heptachlor Epoxide	ug/kg	1.5	UJ	1.4	U	8.8	J
Heptachlor	ug/kg	1.5	UJ	1.4	UJ	15	U
Methoxychlor	ug/kg	15	UJ	14	UJ	150	U
p,p'-DDD	ug/kg	1.1	J	1.9	J	58	J
p,p'-DDE	ug/kg	2.6	J	64	J	370	J
p,p'-DDT	ug/kg	28	J	17	=	180	=
Toxaphene	ug/kg	99	UJ	91	U	950	U

	StationID	G003SB098		G003SB099		G003SB100	
	SampleID	003SB09801 (0-1ft)		003SB09901 (0-1ft)		003SB10001 (0-1ft)	
	DateCollected	9/27/2002		12/6/2002		12/6/2002	
	DateExtracted	9/30/2002		12/9/2002		12/9/2002	
	DateAnalyzed	10/1/2002		12/10/2002		12/10/2002	
	SDGNumber	CNC147		CNC152		CNC152	
Parameter	**Units**						
Aldrin	ug/kg	1.4	U				
Alpha BHC (Alpha Hexachlorocyclohexane)	ug/kg	1.4	UJ				
Alpha-chlordane	ug/kg	0.39	J				
Beta BHC (Beta Hexachlorocyclohexane)	ug/kg	1.4	U				
Chlordane	ug/kg	14	U				
Delta BHC (Delta Hexachlorocyclohexane)	ug/kg	1.4	UJ				
Dieldrin	ug/kg	2.7	U	55	J	14	J
Endosulfan I	ug/kg	1.4	U				
Endosulfan II	ug/kg	2.7	U				
Endosulfan Sulfate	ug/kg	2.7	U				
Endrin Aldehyde	ug/kg	2.7	U				
Endrin Ketone	ug/kg	2.7	U				
Endrin	ug/kg	2.7	U				
Gamma BHC (Lindane)	ug/kg	1.4	U				
Gamma-chlordane	ug/kg	0.43	J				
Heptachlor Epoxide	ug/kg	0.13	J				
Heptachlor	ug/kg	1.4	U				
Methoxychlor	ug/kg	14	UJ				
p,p'-DDD	ug/kg	2.7	U				
p,p'-DDE	ug/kg	2.5	J				
p,p'-DDT	ug/kg	3	=				
Toxaphene	ug/kg	91	U				

	StationID	G003SB101		G003SB102		G003SB103	
	SampleID	003SB10101 (0-1ft)		003SB10201 (0-1ft)		003SB10301 (0-1ft)	
	DateCollected	12/6/2002		12/6/2002		12/6/2002	
	DateExtracted	12/9/2002		12/9/2002		12/9/2002	
	DateAnalyzed	12/10/2002		12/10/2002		12/10/2002	
	SDGNumber	CNC152		CNC152		CNC152	
Parameter	**Units**						
Aldrin	ug/kg			7.9	U	1.6	U
Alpha BHC (Alpha Hexachlorocyclohexane)	ug/kg			7.9	U	1.6	U
Alpha-chlordane	ug/kg			24	J	2.4	J
Beta BHC (Beta Hexachlorocyclohexane)	ug/kg			7.9	U	1.6	U
Chlordane	ug/kg			110	J	16	U
Delta BHC (Delta Hexachlorocyclohexane)	ug/kg			7.9	U	1.6	U
Dieldrin	ug/kg	11	J	5.1	J	0.36	J
Endosulfan I	ug/kg			7.9	U	1.6	U
Endosulfan II	ug/kg			15	U	3	U
Endosulfan Sulfate	ug/kg			15	U	3	U
Endrin Aldehyde	ug/kg			15	U	3	U
Endrin Ketone	ug/kg			15	U	2.4	J
Endrin	ug/kg			15	U	3	U
Gamma BHC (Lindane)	ug/kg			7.9	U	1.6	U
Gamma-chlordane	ug/kg			18	=	3.1	J
Heptachlor Epoxide	ug/kg			8.2	=	0.94	J
Heptachlor	ug/kg			7.9	U	1.6	U
Methoxychlor	ug/kg			79	UJ	4	J
p,p'-DDD	ug/kg			8.3	J	3	U
p,p'-DDE	ug/kg			230	=	86	R
p,p'-DDT	ug/kg			79	=	42	=
Toxaphene	ug/kg			510	U	100	U

	StationID	G003SB103		G003SB104	
	SampleID	003SB10301DL (0-1ft)		003SB10401 (0-1ft)	
	DateCollected	12/6/2002		12/6/2002	
	DateExtracted	12/9/2002		12/9/2002	
	DateAnalyzed	12/13/2002		12/13/2002	
	SDGNumber	CNC152		CNC152	
Parameter	**Units**				
Aldrin	ug/kg	3.1	R	3	UJ
Alpha BHC (Alpha Hexachlorocyclohexane)	ug/kg	3.1	R	3	UJ
Alpha-chlordane	ug/kg	2.3	R	16	J
Beta BHC (Beta Hexachlorocyclohexane)	ug/kg	3.1	R	3	U
Chlordane	ug/kg	31	R	30	UJ
Delta BHC (Delta Hexachlorocyclohexane)	ug/kg	3.1	R	3	UJ
Dieldrin	ug/kg	6	R	1.4	J
Endosulfan I	ug/kg	3.1	R	3	U
Endosulfan II	ug/kg	6	R	5.8	U
Endosulfan Sulfate	ug/kg	1.7	R	2.3	J
Endrin Aldehyde	ug/kg	6	R	5.8	U
Endrin Ketone	ug/kg	6	R	5.8	U
Endrin	ug/kg	6	R	5.8	U
Gamma BHC (Lindane)	ug/kg	3.1	R	3	U
Gamma-chlordane	ug/kg	4.4	R	18	=
Heptachlor Epoxide	ug/kg	0.81	R	21	=
Heptachlor	ug/kg	3.1	R	0.78	J
Methoxychlor	ug/kg	5.3	R	30	U
p,p'-DDD	ug/kg	6	R	6.5	=
p,p'-DDE	ug/kg	70	=	98	=
p,p'-DDT	ug/kg	40	R	84	=
Toxaphene	ug/kg	200	R	190	U

	StationID	G003GW001		G003GW001		G003GW001		G003GW001	
	SampleID	003GW00104		003GW00105		003GW001M6		003GW001M6	
	DateCollected	12/2/1997		4/21/1998		10/8/2002		10/8/2002	
	DateExtracted	12/10/1997		4/29/1998		10/11/2002		10/16/2002	
	DateAnalyzed	12/12/1997		5/14/1998		10/14/2002		10/18/2002	
	SDGNumber	32020		ECZG02		CNC148		CNC148	
Parameter	**Units**								
Tin (Sn)	ug/L	14	U	3.4	U				
Aluminum	mg/l							0.89	J
Aluminum	ug/L	212	=	467	=				
Antimony	mg/l							0.0025	U
Antimony	ug/L	3.6	U	5	U				
Arsenic	mg/l							0.0016	U
Arsenic	ug/L	2.1	U	3.3	U				
Barium	mg/l							0.03	U
Barium	ug/L	24.2	=	23.6	=				
Beryllium	mg/l							0.00027	U
Beryllium	ug/L	0.2	U	0.29	U				
Cadmium	mg/l							0.00036	U
Cadmium	ug/L	0.3	U	0.3	U				
Calcium	mg/l							56	U
Calcium	ug/L	49300	=	56000	=				
Chromium, Total	mg/l							0.0014	U
Chromium, Total	ug/L	1.9	U	0.93	U				
Cobalt	mg/l							0.0007	U
Cobalt	ug/L	0.8	U	0.9	U				
Copper	mg/l							0.001	U
Copper	ug/L	1.4	U	0.6	U				
Iron	mg/l							0.87	J
Iron	ug/L	209	=	414	=				
Lead	mg/l							0.00075	U
Lead	ug/L	0.9	UJ	1.7	U				
Magnesium	mg/l							3.6	J
Magnesium	ug/L	4080	=	3880	=				
Manganese	mg/l							0.012	J
Manganese	ug/L	3.7	J	8	J				
Nickel	mg/l							0.0024	U

	StationID	G003GW002		G003GW002		G003GW002		G003GW002	
	SampleID	003GW00204		003GW00205		003GW002M6		003GW002M6	
	DateCollected	12/2/1997		4/22/1998		10/8/2002		10/8/2002	
	DateExtracted	12/10/1997		4/29/1998		10/11/2002		10/16/2002	
	DateAnalyzed	12/12/1997		5/14/1998		10/14/2002		10/18/2002	
	SDGNumber	32020		ECZG02		CNC148		CNC148	
Parameter	**Units**								
Tin (Sn)	ug/L	14	U	3.4	U				
Aluminum	mg/l							0.49	J
Aluminum	ug/L	251	=	365	=				
Antimony	mg/l							0.0025	U
Antimony	ug/L	1.6	U	5	U				
Arsenic	mg/l							0.0016	U
Arsenic	ug/L	2.1	U	3.3	U				
Barium	mg/l							0.027	U
Barium	ug/L	12.6	=	13.9	=				
Beryllium	mg/l							0.00027	U
Beryllium	ug/L	0.2	U	0.34	U				
Cadmium	mg/l							0.00036	U
Cadmium	ug/L	0.3	U	0.3	U				
Calcium	mg/l							73	U
Calcium	ug/L	12600	=	20000	=				
Chromium, Total	mg/l							0.0012	U
Chromium, Total	ug/L	2	U	1.1	U				
Cobalt	mg/l							0.0007	U
Cobalt	ug/L	0.8	U	0.9	U				
Copper	mg/l							0.0011	U
Copper	ug/L	1.4	U	0.6	U				
Iron	mg/l							0.53	J
Iron	ug/L	266	=	411	=				
Lead	mg/l							0.00075	U
Lead	ug/L	0.9	UJ	1.7	U				
Magnesium	mg/l							4.2	U
Magnesium	ug/L	1720	=	2520	=				
Manganese	mg/l							0.0096	J
Manganese	ug/L	38.1	=	39.4	=				
Nickel	mg/l							0.0024	U

	StationID	G003GW003		G003GW003		G003GW004		G003GW004	
	SampleID	003GW00304		003GW00305		003GW004M6		003GW004M6	
	DateCollected	12/3/1997		4/21/1998		10/8/2002		10/8/2002	
	DateExtracted	12/10/1997		4/29/1998		10/11/2002		10/16/2002	
	DateAnalyzed	12/13/1997		5/14/1998		10/14/2002		10/18/2002	
	SDGNumber	32020		ECZG02		CNC148		CNC148	
Parameter	Units								
Tin (Sn)	ug/L	14	U	3.4	U				
Aluminum	mg/l							0.048	UJ
Aluminum	ug/L	5310	=	5910	=				
Antimony	mg/l							0.0025	U
Antimony	ug/L	1.7	U	5	U				
Arsenic	mg/l							0.0016	U
Arsenic	ug/L	3.2	J	3.3	U				
Barium	mg/l							0.05	U
Barium	ug/L	31	=	26.3	=				
Beryllium	mg/l							0.00035	J
Beryllium	ug/L	0.2	U	0.54	U				
Cadmium	mg/l							0.00036	U
Cadmium	ug/L	0.3	U	0.3	U				
Calcium	mg/l							26	U
Calcium	ug/L	29400	=	25000	=				
Chromium, Total	mg/l							0.00085	U
Chromium, Total	ug/L	9.8	J	10.9	=				
Cobalt	mg/l							0.0079	J
Cobalt	ug/L	1.2	J	1.5	J				
Copper	mg/l							0.0008	U
Copper	ug/L	2.3	J	1.5	U				
Iron	mg/l							0.032	UJ
Iron	ug/L	6340	=	6110	=				
Lead	mg/l							0.00075	U
Lead	ug/L	1.1	J	1.7	U				
Magnesium	mg/l							3.7	U
Magnesium	ug/L	4560	=	3810	=				
Manganese	mg/l							0.15	=
Manganese	ug/L	46.9	=	58.7	=				
Nickel	mg/l							0.0024	U

	StationID	G003GW005		G003GW005		G003GW006		G003GW006	
	SampleID	003GW005M6		003GW005M6		003GW006M6		003GW006M6	
	DateCollected	10/8/2002		10/8/2002		10/8/2002		10/8/2002	
	DateExtracted	10/11/2002		10/16/2002		10/11/2002		10/16/2002	
	DateAnalyzed	10/14/2002		10/18/2002		10/14/2002		10/18/2002	
	SDGNumber	CNC148		CNC148		CNC148		CNC148	
Parameter	Units								
Tin (Sn)	ug/L								
Aluminum	mg/l			0.2	UJ			0.093	UJ
Aluminum	ug/L								
Antimony	mg/l			0.0025	U			0.0025	U
Antimony	ug/L								
Arsenic	mg/l			0.0016	U			0.0016	U
Arsenic	ug/L								
Barium	mg/l			0.038	U			0.049	U
Barium	ug/L								
Beryllium	mg/l			0.00027	U			0.00051	J
Beryllium	ug/L								
Cadmium	mg/l			0.00036	U			0.00036	U
Cadmium	ug/L								
Calcium	mg/l			33	U			29	U
Calcium	ug/L								
Chromium, Total	mg/l			0.00085	U			0.0017	U
Chromium, Total	ug/L								
Cobalt	mg/l			0.0007	U			0.0091	J
Cobalt	ug/L								
Copper	mg/l			0.00079	U			0.00056	U
Copper	ug/L								
Iron	mg/l			0.22	J			0.027	UJ
Iron	ug/L								
Lead	mg/l			0.00075	U			0.00075	U
Lead	ug/L								
Magnesium	mg/l			3.8	U			7	U
Magnesium	ug/L								
Manganese	mg/l			0.025	=			0.27	=
Manganese	ug/L								
Nickel	mg/l			0.0024	U			0.0027	U

	StationID	G003GW007		G003GW007		G003GW008		G003GW008	
	SampleID	003GW007M6		003GW007M6		003GW008M6		003GW008M6	
	DateCollected	10/8/2002		10/8/2002		10/8/2002		10/8/2002	
	DateExtracted	10/11/2002		10/16/2002		10/11/2002		10/16/2002	
	DateAnalyzed	10/14/2002		10/18/2002		10/14/2002		10/19/2002	
	SDGNumber	CNC148		CNC148		CNC148		CNC148	
Parameter	Units								
Tin (Sn)	ug/L								
Aluminum	mg/l			0.076	UJ			0.032	UJ
Aluminum	ug/L								
Antimony	mg/l			0.0025	U			0.0025	U
Antimony	ug/L								
Arsenic	mg/l			0.0016	U			0.0052	J
Arsenic	ug/L								
Barium	mg/l			0.068	U			0.028	U
Barium	ug/L								
Beryllium	mg/l			0.00027	U			0.00027	U
Beryllium	ug/L								
Cadmium	mg/l			0.00036	U			0.00036	U
Cadmium	ug/L								
Calcium	mg/l			82	U			35	U
Calcium	ug/L								
Chromium, Total	mg/l			0.00085	U			0.00085	U
Chromium, Total	ug/L								
Cobalt	mg/l			0.0023	J			0.0034	J
Cobalt	ug/L								
Copper	mg/l			0.001	U			0.002	U
Copper	ug/L								
Iron	mg/l			0.093	J			2.3	J
Iron	ug/L								
Lead	mg/l			0.00075	U			0.00075	U
Lead	ug/L								
Magnesium	mg/l			9.8	U			7.1	U
Magnesium	ug/L								
Manganese	mg/l			0.1	=			0.52	=
Manganese	ug/L								
Nickel	mg/l			0.0024	U			0.0024	U

	StationID	G003GW009		G003GW009	
	SampleID	003GW009M6		003GW009M6	
	DateCollected	10/8/2002		10/8/2002	
	DateExtracted	10/11/2002		10/16/2002	
	DateAnalyzed	10/14/2002		10/18/2002	
	SDGNumber	CNC148		CNC148	
Parameter	Units				
Tin (Sn)	ug/L				
Aluminum	mg/l			0.74	J
Aluminum	ug/L				
Antimony	mg/l			0.0025	U
Antimony	ug/L				
Arsenic	mg/l			0.0016	U
Arsenic	ug/L				
Barium	mg/l			0.047	U
Barium	ug/L				
Beryllium	mg/l			0.00076	J
Beryllium	ug/L				
Cadmium	mg/l			0.00036	U
Cadmium	ug/L				
Calcium	mg/l			32	U
Calcium	ug/L				
Chromium, Total	mg/l			0.00085	U
Chromium, Total	ug/L				
Cobalt	mg/l			0.016	J
Cobalt	ug/L				
Copper	mg/l			0.00092	U
Copper	ug/L				
Iron	mg/l			0.16	J
Iron	ug/L				
Lead	mg/l			0.00075	U
Lead	ug/L				
Magnesium	mg/l			12	U
Magnesium	ug/L				
Manganese	mg/l			0.65	=
Manganese	ug/L				
Nickel	mg/l			0.005	U

	StationID	G003GW001		G003GW001		G003GW001		G003GW001	
	SampleID	003GW00104		003GW00105		003GW001M6		003GW001M6	
	DateCollected	12/2/1997		4/21/1998		10/8/2002		10/8/2002	
	DateExtracted	12/10/1997		4/29/1998		10/11/2002		10/16/2002	
	DateAnalyzed	12/12/1997		5/14/1998		10/14/2002		10/18/2002	
	SDGNumber	32020		ECZG02		CNC148		CNC148	
Parameter	**Units**								
Nickel	ug/L	1.3	U	1.1	U				
Potassium	mg/l							3.2	U
Potassium	ug/L	1450	J	1730	=				
Selenium	mg/l							0.0021	U
Selenium	ug/L	4.6	J	4.1	U				
Silver	mg/l							0.00095	U
Silver	ug/L	1	UJ	1.1	UJ				
Sodium	mg/l							3.3	U
Sodium	ug/L	8620	U	7560	=				
Thallium	mg/l							0.0025	U
Thallium	ug/L	5	U	5.5	U				
Vanadium	mg/l							0.003	U
Vanadium	ug/L	1.1	U	1.6	U				
Zinc	mg/l							0.0034	J
Zinc	ug/L	5.8	U	3.3	U				
Mercury	mg/l					0.000072	U		
Mercury	ug/L	0.1	U	0.1	U				

	StationID	G003GW002		G003GW002		G003GW002		G003GW002	
	SampleID	003GW00204		003GW00205		003GW002M6		003GW002M6	
	DateCollected	12/2/1997		4/22/1998		10/8/2002		10/8/2002	
	DateExtracted	12/10/1997		4/29/1998		10/11/2002		10/16/2002	
	DateAnalyzed	12/12/1997		5/14/1998		10/14/2002		10/18/2002	
	SDGNumber	32020		ECZG02		CNC148		CNC148	
Parameter	Units								
Nickel	ug/L	2.1	U	1.1	U				
Potassium	mg/l							0.24	U
Potassium	ug/L	560	U	331	J				
Selenium	mg/l							0.0021	U
Selenium	ug/L	3.4	U	4.1	U				
Silver	mg/l							0.00095	U
Silver	ug/L	1	UJ	1.1	UJ				
Sodium	mg/l							13	U
Sodium	ug/L	12300	U	10600	=				
Thallium	mg/l							0.0025	U
Thallium	ug/L	5	U	5.5	U				
Vanadium	mg/l							0.0022	U
Vanadium	ug/L	1.1	U	1.7	U				
Zinc	mg/l							0.003	U
Zinc	ug/L	45.4	=	1.3	U				
Mercury	mg/l					0.000072	U		
Mercury	ug/L	0.1	U	0.1	U				

	StationID	G003GW003		G003GW003		G003GW004		G003GW004	
	SampleID	003GW00304		003GW00305		003GW004M6		003GW004M6	
	DateCollected	12/3/1997		4/21/1998		10/8/2002		10/8/2002	
	DateExtracted	12/10/1997		4/29/1998		10/11/2002		10/16/2002	
	DateAnalyzed	12/13/1997		5/14/1998		10/14/2002		10/18/2002	
	SDGNumber	32020		ECZG02		CNC148		CNC148	
Parameter	**Units**								
Nickel	ug/L	3.4	U	1.8	J				
Potassium	mg/l							0.54	U
Potassium	ug/L	1370	J	1410	=				
Selenium	mg/l							0.0021	U
Selenium	ug/L	3.4	U	4.1	U				
Silver	mg/l							0.00095	U
Silver	ug/L	1	UJ	1.1	UJ				
Sodium	mg/l							5.6	U
Sodium	ug/L	18400	U	29800	=				
Thallium	mg/l							0.0025	U
Thallium	ug/L	5	U	5.5	U				
Vanadium	mg/l							0.0011	U
Vanadium	ug/L	15.7	J	15	=				
Zinc	mg/l							0.003	U
Zinc	ug/L	12.8	J	13.1	J				
Mercury	mg/l					0.000072	U		
Mercury	ug/L	0.1	U	0.1	U				

	StationID	G003GW005		G003GW005		G003GW006		G003GW006	
	SampleID	003GW005M6		003GW005M6		003GW006M6		003GW006M6	
	DateCollected	10/8/2002		10/8/2002		10/8/2002		10/8/2002	
	DateExtracted	10/11/2002		10/16/2002		10/11/2002		10/16/2002	
	DateAnalyzed	10/14/2002		10/18/2002		10/14/2002		10/18/2002	
	SDGNumber	CNC148		CNC148		CNC148		CNC148	
Parameter	**Units**								
Nickel	ug/L								
Potassium	mg/l			0.96	U			0.77	U
Potassium	ug/L								
Selenium	mg/l			0.0024	U			0.0021	U
Selenium	ug/L								
Silver	mg/l			0.00095	U			0.00095	U
Silver	ug/L								
Sodium	mg/l			17	U			19	U
Sodium	ug/L								
Thallium	mg/l			0.0025	U			0.0025	U
Thallium	ug/L								
Vanadium	mg/l			0.0011	U			0.0011	U
Vanadium	ug/L								
Zinc	mg/l			0.0046	J			0.003	U
Zinc	ug/L								
Mercury	mg/l	0.000072	U			0.000072	U		
Mercury	ug/L								

	StationID	G003GW007		G003GW007		G003GW008		G003GW008	
	SampleID	003GW007M6		003GW007M6		003GW008M6		003GW008M6	
	DateCollected	10/8/2002		10/8/2002		10/8/2002		10/8/2002	
	DateExtracted	10/11/2002		10/16/2002		10/11/2002		10/16/2002	
	DateAnalyzed	10/14/2002		10/18/2002		10/14/2002		10/19/2002	
	SDGNumber	CNC148		CNC148		CNC148		CNC148	
Parameter	**Units**								
Nickel	ug/L								
Potassium	mg/l			1.7	U			2.2	U
Potassium	ug/L								
Selenium	mg/l			0.0021	U			0.0021	U
Selenium	ug/L								
Silver	mg/l			0.00095	U			0.00095	U
Silver	ug/L								
Sodium	mg/l			23	U			65	U
Sodium	ug/L								
Thallium	mg/l			0.0025	U			0.0025	U
Thallium	ug/L								
Vanadium	mg/l			0.0018	U			0.0011	U
Vanadium	ug/L								
Zinc	mg/l			0.003	U			0.003	U
Zinc	ug/L								
Mercury	mg/l	0.000072	U			0.000072	U		
Mercury	ug/L								

	StationID	G003GW009		G003GW009	
	SampleID	003GW009M6		003GW009M6	
	DateCollected	10/8/2002		10/8/2002	
	DateExtracted	10/11/2002		10/16/2002	
	DateAnalyzed	10/14/2002		10/18/2002	
	SDGNumber	CNC148		CNC148	
Parameter	**Units**				
Nickel	ug/L				
Potassium	mg/l			1.9	U
Potassium	ug/L				
Selenium	mg/l			0.0025	U
Selenium	ug/L				
Silver	mg/l			0.00095	U
Silver	ug/L				
Sodium	mg/l			39	U
Sodium	ug/L				
Thallium	mg/l			0.0025	U
Thallium	ug/L				
Vanadium	mg/l			0.0018	U
Vanadium	ug/L				
Zinc	mg/l			0.0062	J
Zinc	ug/L				
Mercury	mg/l	0.000072	U		
Mercury	ug/L				

	StationID	G003GW001		G003GW001		G003GW002		G003GW002	
	SampleID	003GW00104		003GW001M6		003GW00204		003GW002M6	
	DateCollected	12/2/1997		10/8/2002		12/2/1997		10/8/2002	
	DateExtracted	12/5/1997		10/10/2002		12/5/1997		10/10/2002	
	DateAnalyzed	12/10/1997		10/14/2002		12/10/1997		10/14/2002	
	SDGNumber	32020		CNC148		32020		CNC148	
Parameter	**Units**								
Aldrin	ug/L	0.04	U	0.04	U	0.04	U	0.04	U
Alpha BHC (Alpha Hexachlorocyclohexane)	ug/l	0.04	U	0.04	U	0.04	U	0.04	U
Alpha-chlordane	ug/l	0.04	U	0.04	U	0.04	U	0.04	U
Beta BHC (Beta Hexachlorocyclohexane)	ug/L	0.04	U	0.04	U	0.04	U	0.04	U
Chlordane	ug/l			0.4	U			0.4	U
Delta BHC (Delta Hexachlorocyclohexane)	ug/l	0.04	U	0.04	U	0.04	U	0.04	U
Dieldrin	ug/l	0.08	U	0.08	U	0.08	U	0.08	U
Endosulfan I	ug/L	0.04	U	0.04	U	0.04	U	0.04	U
Endosulfan II	ug/L	0.08	U	0.08	U	0.08	U	0.08	U
Endosulfan Sulfate	ug/l	0.08	U	0.08	U	0.08	U	0.08	U
Endrin Aldehyde	ug/l	0.08	U	0.08	U	0.08	U	0.08	U
Endrin Ketone	ug/l	0.08	U	0.08	U	0.08	U	0.08	U
Endrin	ug/l	0.08	U	0.08	U	0.08	U	0.08	U
Gamma BHC (Lindane)	ug/l	0.04	U	0.04	U	0.04	U	0.04	U
Gamma-chlordane	ug/L	0.04	U	0.04	U	0.04	U	0.04	U
Heptachlor Epoxide	ug/L	0.04	U	0.04	U	0.04	U	0.04	U
Heptachlor	ug/l	0.04	U	0.04	U	0.04	U	0.04	U
Methoxychlor	ug/l	0.38	U	0.38	U	0.38	U	0.38	U
p,p'-DDD	ug/l	0.08	U	0.08	U	0.08	U	0.08	U
p,p'-DDE	ug/l	0.08	U	0.08	U	0.08	U	0.08	U
p,p'-DDT	ug/l	0.08	U	0.08	U	0.08	U	0.08	U
Toxaphene	ug/l	2.5	U	2.5	U	2.5	U	2.5	U

	StationID	G003GW003		G003GW004		G003GW005		G003GW005	
	SampleID	003GW00304		003GW004M6		003GW005M6		003GW005M6DL	
	DateCollected	12/3/1997		10/8/2002		10/8/2002		10/8/2002	
	DateExtracted	12/5/1997		10/10/2002		10/10/2002		10/10/2002	
	DateAnalyzed	12/10/1997		10/14/2002		10/14/2002		10/21/2002	
	SDGNumber	32020		CNC148		CNC148		CNC148	
Parameter	**Units**								
Aldrin	ug/L	0.04	UJ	0.04	U	0.04	U	0.2	R
Alpha BHC (Alpha Hexachlorocyclohexane)	ug/l	0.04	UJ	0.04	U	0.04	U	0.2	R
Alpha-chlordane	ug/l	0.04	UJ	0.04	U	0.01	J	0.2	R
Beta BHC (Beta Hexachlorocyclohexane)	ug/L	0.04	UJ	0.04	U	0.0075	J	0.2	R
Chlordane	ug/l			0.4	U	0.4	U	2	R
Delta BHC (Delta Hexachlorocyclohexane)	ug/l	0.04	UJ	0.04	U	0.04	U	0.2	R
Dieldrin	ug/l	0.08	UJ	0.08	U	0.061	J	0.062	R
Endosulfan I	ug/L	0.04	UJ	0.04	U	0.014	J	0.2	R
Endosulfan II	ug/L	0.08	UJ	0.08	U	0.018	J	0.4	R
Endosulfan Sulfate	ug/l	0.08	UJ	0.08	U	0.08	U	0.4	R
Endrin Aldehyde	ug/l	0.08	UJ	0.08	U	0.08	U	0.4	R
Endrin Ketone	ug/l	0.08	UJ	0.08	U	0.08	U	0.4	R
Endrin	ug/l	0.08	UJ	0.08	U	0.08	U	0.4	R
Gamma BHC (Lindane)	ug/l	0.04	UJ	0.04	U	0.04	U	0.2	R
Gamma-chlordane	ug/L	0.04	UJ	0.04	U	0.044	R	0.075	J
Heptachlor Epoxide	ug/L	0.04	UJ	0.02	J	0.051	R	0.086	J
Heptachlor	ug/l	0.04	UJ	0.04	U	0.04	U	0.2	R
Methoxychlor	ug/l	0.38	UJ	0.38	U	0.38	U	1.9	R
p,p'-DDD	ug/l	0.08	UJ	0.08	U	1	J	0.96	R
p,p'-DDE	ug/l	0.08	UJ	0.08	U	0.21	=	0.24	R
p,p'-DDT	ug/l	0.08	UJ	0.08	U	1.2	=	1.4	R
Toxaphene	ug/l	2.5	UJ	2.5	U	2.5	U	12	R

	StationID	G003GW006		G003GW006		G003GW007	
	SampleID	003GW006M6		003GW006M6DL		003GW007M6	
	DateCollected	10/8/2002		10/8/2002		10/8/2002	
	DateExtracted	10/10/2002		10/10/2002		10/10/2002	
	DateAnalyzed	10/14/2002		10/22/2002		10/14/2002	
	SDGNumber	CNC148		CNC148		CNC148	
Parameter	**Units**						
Aldrin	ug/L	0.04	U	0.4	R	0.04	U
Alpha BHC (Alpha Hexachlorocyclohexane)	ug/l	0.04	U	0.4	R	0.013	J
Alpha-chlordane	ug/l	0.04	U	0.4	R	0.029	J
Beta BHC (Beta Hexachlorocyclohexane)	ug/L	0.04	U	0.4	R	0.023	J
Chlordane	ug/l	0.4	U	4	R	0.4	U
Delta BHC (Delta Hexachlorocyclohexane)	ug/l	0.04	U	0.4	R	0.017	J
Dieldrin	ug/l	0.08	U	0.8	R	0.67	=
Endosulfan I	ug/L	0.04	U	0.4	R	0.04	U
Endosulfan II	ug/L	0.08	U	0.8	R	0.041	J
Endosulfan Sulfate	ug/l	0.08	U	0.8	R	0.08	U
Endrin Aldehyde	ug/l	0.032	J	0.8	R	0.08	U
Endrin Ketone	ug/l	0.08	U	0.8	R	0.035	J
Endrin	ug/l	0.08	U	0.8	R	0.08	U
Gamma BHC (Lindane)	ug/l	0.011	J	0.4	R	0.04	U
Gamma-chlordane	ug/L	0.04	U	0.4	R	0.04	=
Heptachlor Epoxide	ug/L	0.04	R	0.21	J	0.39	R
Heptachlor	ug/l	0.0061	J	0.4	R	0.04	U
Methoxychlor	ug/l	0.38	U	3.8	R	0.38	U
p,p'-DDD	ug/l	0.13	J	0.8	R	0.08	U
p,p'-DDE	ug/l	0.058	J	0.8	R	0.08	U
p,p'-DDT	ug/l	1.6	J	2	R	0.08	U
Toxaphene	ug/l	2.5	U	25	R	2.5	U

	StationID	G003GW007		G003GW008		G003GW009	
	SampleID	003GW007M6DL		003GW008M6		003GW009M6	
	DateCollected	10/8/2002		10/8/2002		10/8/2002	
	DateExtracted	10/10/2002		10/10/2002		10/10/2002	
	DateAnalyzed	10/21/2002		10/14/2002		10/14/2002	
	SDGNumber	CNC148		CNC148		CNC148	
Parameter	Units						
Aldrin	ug/L	0.2	R	0.04	U	0.04	U
Alpha BHC (Alpha Hexachlorocyclohexane)	ug/l	0.2	R	0.04	U	0.04	U
Alpha-chlordane	ug/l	0.2	R	0.04	U	0.04	U
Beta BHC (Beta Hexachlorocyclohexane)	ug/L	0.2	R	0.0087	J	0.04	U
Chlordane	ug/l	2	R	0.4	U	0.4	U
Delta BHC (Delta Hexachlorocyclohexane)	ug/l	0.2	R	0.04	U	0.04	U
Dieldrin	ug/l	0.57	R	0.08	U	0.08	U
Endosulfan I	ug/L	0.081	R	0.04	U	0.04	U
Endosulfan II	ug/L	0.4	R	0.08	U	0.08	U
Endosulfan Sulfate	ug/l	0.4	R	0.08	U	0.08	U
Endrin Aldehyde	ug/l	0.4	R	0.08	U	0.08	U
Endrin Ketone	ug/l	0.4	R	0.08	U	0.08	U
Endrin	ug/l	0.4	R	0.08	U	0.08	U
Gamma BHC (Lindane)	ug/l	0.2	R	0.04	U	0.04	U
Gamma-chlordane	ug/L	0.037	R	0.04	U	0.04	U
Heptachlor Epoxide	ug/L	0.13	J	0.014	J	0.04	U
Heptachlor	ug/l	0.2	R	0.04	U	0.04	U
Methoxychlor	ug/l	1.9	R	0.38	U	0.38	U
p,p'-DDD	ug/l	0.4	R	0.08	U	0.08	U
p,p'-DDE	ug/l	0.4	R	0.08	U	0.08	U
p,p'-DDT	ug/l	0.4	R	0.08	U	0.08	U
Toxaphene	ug/l	12	R	2.5	U	2.5	U

	StationID	G003GW001		G003GW002		G003GW003	
	SampleID	003GW00105		003GW00205		003GW00305	
	DateCollected	4/21/1998		4/22/1998		4/21/1998	
	DateExtracted	4/27/1998		4/27/1998		4/27/1998	
	DateAnalyzed	5/9/1998		5/9/1998		5/9/1998	
	SDGNumber	ECZG02		ECZG02		ECZG02	
Parameter	Units						
2,2'-Oxybis(1-chloro)propane	ug/L	10	U	10	U	10	U
4-Methylphenol (p-Cresol)	ug/L	10	U	10	U	10	U
N-Nitrosodiphenylamine	ug/L	10	U	10	U	10	U
Phenol	ug/L	10	U	10	U	10	U
bis(2-Chloroethyl) ether (2-Chloroethyl Ether)	ug/L	10	U	10	U	10	U
2-Chlorophenol	ug/L	10	U	10	U	10	U
1,3-Dichlorobenzene	ug/L	10	U	10	U	10	U
1,4-Dichlorobenzene	ug/L	10	U	10	U	10	U
Benzyl alcohol	ug/L	10	U	10	U	10	U
1,2-Dichlorobenzene	ug/L	10	U	10	U	10	U
2-Methylphenol (o-Cresol)	ug/L	10	U	10	U	10	U
N-Nitrosodi-n-propylamine	ug/L	10	U	10	U	10	U
Hexachloroethane	ug/L	10	U	10	U	10	U
Nitrobenzene	ug/L	10	U	10	U	10	U
Isophorone	ug/L	10	U	10	U	10	U
2-Nitrophenol	ug/L	10	U	10	U	10	U
2,4-Dimethylphenol	ug/L	10	U	10	U	10	U
bis(2-Chloroethoxy) Methane	ug/L	10	U	10	U	10	U
2,4-Dichlorophenol	ug/L	10	U	10	U	10	U
Benzoic acid	ug/L	50	U	50	U	50	U
Naphthalene	ug/L	10	U	10	U	10	U
4-Chloroaniline	ug/L	10	U	10	U	10	U
Hexachlorobutadiene	ug/L	10	U	10	U	10	U
4-Chloro-3-methylphenol	ug/L	10	U	10	U	10	U
2-Methylnaphthalene	ug/L	10	U	10	U	10	U
Hexachlorocyclopentadiene	ug/L	10	U	10	U	10	U
2,4,6-Trichlorophenol	ug/L	10	U	10	U	10	U
2,4,5-Trichlorophenol	ug/L	50	U	50	U	50	U
2-Chloronaphthalene	ug/L	10	U	10	U	10	U
2-Nitroaniline	ug/L	50	U	50	U	50	U

	StationID	G003GW001		G003GW002		G003GW003	
	SampleID	003GW00105		003GW00205		003GW00305	
	DateCollected	4/21/1998		4/22/1998		4/21/1998	
	DateExtracted	4/27/1998		4/27/1998		4/27/1998	
	DateAnalyzed	5/9/1998		5/9/1998		5/9/1998	
	SDGNumber	ECZG02		ECZG02		ECZG02	
Parameter	**Units**						
3-Nitroaniline	ug/L	50	U	50	U	50	U
Dimethyl Phthalate	ug/L	10	U	10	U	10	U
2,6-Dinitrotoluene	ug/L	10	U	10	U	10	U
Acenaphthylene	ug/L	10	U	10	U	10	U
Acenaphthene	ug/L	10	U	10	U	10	U
2,4-Dinitrophenol	ug/L	50	UJ	50	UJ	50	UJ
Dibenzofuran	ug/L	10	U	10	U	10	U
2,4-Dinitrotoluene	ug/L	10	U	10	U	10	U
Diethyl Phthalate	ug/L	10	U	10	U	10	U
4-Nitrophenol	ug/L	50	U	50	U	50	U
Fluorene	ug/L	10	U	10	U	10	U
4-Chlorophenyl Phenyl Ether	ug/L	10	U	10	U	10	U
4,6-Dinitro-2-methylphenol	ug/L	50	UJ	50	UJ	50	UJ
4-Nitroaniline	ug/L	50	U	50	U	50	U
4-Bromophenyl Phenyl Ether	ug/L	10	U	10	U	10	U
Hexachlorobenzene	ug/L	10	U	10	U	10	U
Pentachlorophenol	ug/L	50	U	50	U	50	U
Phenanthrene	ug/L	10	U	10	U	10	U
Anthracene	ug/L	10	U	10	U	10	U
Di-n-butyl Phthalate	ug/L	10	U	10	U	10	U
Fluoranthene	ug/L	10	U	10	U	10	U
Pyrene	ug/L	10	U	10	U	10	U
Benzyl Butyl Phthalate	ug/L	10	U	10	U	10	U
Benzo(a)Anthracene	ug/L	10	U	10	U	10	U
3,3'-Dichlorobenzidine	ug/L	20	U	20	U	20	U
Chrysene	ug/L	10	U	10	U	10	U
bis(2-Ethylhexyl) Phthalate	ug/L	10	U	10	U	10	U
Di-n-octylphthalate	ug/L	10	U	10	U	10	U
Benzo(b)Fluoranthene	ug/L	10	U	10	U	10	U
Benzo(k)Fluoranthene	ug/L	10	U	10	U	10	U

	StationID	G003GW001		G003GW002		G003GW003	
	SampleID	003GW00105		003GW00205		003GW00305	
	DateCollected	4/21/1998		4/22/1998		4/21/1998	
	DateExtracted	4/27/1998		4/27/1998		4/27/1998	
	DateAnalyzed	5/9/1998		5/9/1998		5/9/1998	
	SDGNumber	ECZG02		ECZG02		ECZG02	
Parameter	**Units**						
Benzo(a)Pyrene	ug/L	10	U	10	U	10	U
Indeno(1,2,3-c,d)pyrene	ug/L	10	U	10	U	10	U
Dibenz(a,h)anthracene	ug/L	10	U	10	U	10	U
Benzo(g,h,i)Perylene	ug/L	10	U	10	U	10	U

	StationID	G003GW001		G003GW001		G003GW001		G003GW002	
	SampleID	003GW00105		003GW00105		003GW001M6		003GW00205	
	DateCollected	4/21/1998		4/21/1998		10/8/2002		4/22/1998	
	DateExtracted			4/27/1998		10/15/2002			
	DateAnalyzed	4/27/1998		5/9/1998		10/15/2002		4/27/1998	
	SDGNumber	ECZG02		ECZG02		CNC148		ECZG02	
Parameter	**Units**								
m-Xylene	ug/l					5	U		
1,2,4-Trichlorobenzene	ug/L			10	U				
Chloromethane	ug/l	1	U			10	U	1	U
Vinyl chloride	ug/l	1	U			10	U	1	U
Bromomethane	ug/l	1	UJ			10	U	1	U
Chloroethane	ug/l	1	U			10	U	1	U
1,1-Dichloroethene	ug/L	1	U			5	U	1	U
Acetone	ug/l	10	U			10	U	10	U
Carbon Disulfide	ug/L	1	U			5	U	1	UJ
Methylene Chloride	ug/l	5	U			5	U	5	U
trans-1,2-Dichloroethene	ug/l					5	U		
1,1-Dichloroethane	ug/l	1	U			5	U	1	U
Vinyl acetate	ug/l	2	U			10	U	2	U
Methyl ethyl ketone (2-Butanone)	ug/L	10	U			10	U	10	U
cis-1,2-Dichloroethylene	ug/l					5	U		
1,2-Dichloroethene (total)	ug/l	1	U			5	U	1	U
Chloroform	ug/l	1	U			5	U	1	U
1,1,1-Trichloroethane	ug/l	1	U			5	U	1	U
Carbon Tetrachloride	ug/l	1	U			5	U	1	U
1,2-Dichloroethane	ug/l	1	U			5	U	1	U
Benzene	ug/l	1	U			5	U	1	U
Trichloroethylene (TCE)	ug/l	1	U			5	U	1	U
1,2-Dichloropropane	ug/l	1	U			5	U	1	U
Bromodichloromethane	ug/l	1	U			5	U	1	U
2-Chloroethyl vinyl ether	ug/l	10	U			10	U	10	U
cis-1,3-Dichloropropene	ug/l	1	U			5	U	1	U
Methyl isobutyl ketone (4-Methyl-2-pentai	ug/l	10	U			10	U	10	U
Toluene	ug/L	1	U			0.54	J	1	U
trans-1,3-Dichloropropene	ug/L	1	U			5	U	1	U
1,1,2-Trichloroethane	ug/l	1	U			5	U	1	U

	StationID	G003GW002		G003GW002		G003GW003		G003GW003	
	SampleID	003GW00205		003GW002M6		003GW00305		003GW00305	
	DateCollected	4/22/1998		10/8/2002		4/21/1998		4/21/1998	
	DateExtracted	4/27/1998		10/15/2002				4/27/1998	
	DateAnalyzed	5/9/1998		10/15/2002		4/27/1998		5/9/1998	
	SDGNumber	ECZG02		CNC148		ECZG02		ECZG02	
Parameter	**Units**								
m-Xylene	ug/l			5	U				
1,2,4-Trichlorobenzene	ug/L	10	U					10	U
Chloromethane	ug/l			10	U	1	U		
Vinyl chloride	ug/l			10	U	1	U		
Bromomethane	ug/l			10	U	1	UJ		
Chloroethane	ug/l			10	U	1	U		
1,1-Dichloroethene	ug/L			5	U	1	U		
Acetone	ug/l			10	U	10	U		
Carbon Disulfide	ug/L			5	U	1	U		
Methylene Chloride	ug/l			5	U	5	U		
trans-1,2-Dichloroethene	ug/l			5	U				
1,1-Dichloroethane	ug/l			5	U	1	U		
Vinyl acetate	ug/l			10	U	2	U		
Methyl ethyl ketone (2-Butanone)	ug/L			10	U	10	U		
cis-1,2-Dichloroethylene	ug/l			5	U				
1,2-Dichloroethene (total)	ug/l			5	U	1	U		
Chloroform	ug/l			5	U	1	U		
1,1,1-Trichloroethane	ug/l			5	U	1	U		
Carbon Tetrachloride	ug/l			5	U	1	U		
1,2-Dichloroethane	ug/l			5	U	1	U		
Benzene	ug/l			5	U	1	U		
Trichloroethylene (TCE)	ug/l			5	U	1	U		
1,2-Dichloropropane	ug/l			5	U	1	U		
Bromodichloromethane	ug/l			5	U	1	U		
2-Chloroethyl vinyl ether	ug/l			10	U	10	U		
cis-1,3-Dichloropropene	ug/l			5	U	1	U		
Methyl isobutyl ketone (4-Methyl-2-pentai	ug/l			10	U	10	U		
Toluene	ug/L			5	U	1	U		
trans-1,3-Dichloropropene	ug/L			5	U	1	U		
1,1,2-Trichloroethane	ug/l			5	U	1	U		

	StationID	G003GW004		G003GW005		G003GW006		G003GW007	
	SampleID	003GW004M6		003GW005M6		003GW006M6		003GW007M6	
	DateCollected	10/8/2002		10/8/2002		10/8/2002		10/8/2002	
	DateExtracted	10/15/2002		10/16/2002		10/16/2002		10/16/2002	
	DateAnalyzed	10/15/2002		10/16/2002		10/16/2002		10/16/2002	
	SDGNumber	CNC148		CNC148		CNC148		CNC148	
Parameter	Units								
m-Xylene	ug/l	5	U	5	U	5	U	5	U
1,2,4-Trichlorobenzene	ug/L								
Chloromethane	ug/l	10	U	10	U	10	U	10	U
Vinyl chloride	ug/l	10	U	10	U	10	U	10	U
Bromomethane	ug/l	10	U	10	U	10	U	10	U
Chloroethane	ug/l	10	U	10	U	10	U	10	U
1,1-Dichloroethene	ug/L	5	U	5	U	5	U	5	U
Acetone	ug/l	10	U	10	U	10	U	10	U
Carbon Disulfide	ug/L	5	U	5	U	5	U	5	U
Methylene Chloride	ug/l	5	U	5	U	5	U	5	U
trans-1,2-Dichloroethene	ug/l	5	U	5	U	5	U	5	U
1,1-Dichloroethane	ug/l	5	U	5	U	5	U	5	U
Vinyl acetate	ug/l	10	U	10	U	10	U	10	U
Methyl ethyl ketone (2-Butanone)	ug/L	10	U	10	U	10	U	10	U
cis-1,2-Dichloroethylene	ug/l	5	U	5	U	5	U	5	U
1,2-Dichloroethene (total)	ug/l	5	U	5	U	5	U	5	U
Chloroform	ug/l	5	U	5	U	5	U	5	U
1,1,1-Trichloroethane	ug/l	5	U	5	U	5	U	5	U
Carbon Tetrachloride	ug/l	5	U	5	U	5	U	5	U
1,2-Dichloroethane	ug/l	5	U	5	U	5	U	5	U
Benzene	ug/l	5	U	5	U	5	U	5	U
Trichloroethylene (TCE)	ug/l	5	U	5	U	5	U	5	U
1,2-Dichloropropane	ug/l	5	U	5	U	5	U	5	U
Bromodichloromethane	ug/l	5	U	5	U	5	U	5	U
2-Chloroethyl vinyl ether	ug/l	10	U	10	U	10	U	10	U
cis-1,3-Dichloropropene	ug/l	5	U	5	U	5	U	5	U
Methyl isobutyl ketone (4-Methyl-2-pentai	ug/l	10	U	10	U	10	U	10	U
Toluene	ug/L	5	U	5	U	5	U	5	U
trans-1,3-Dichloropropene	ug/L	5	U	5	U	5	U	5	U
1,1,2-Trichloroethane	ug/l	5	U	5	U	5	U	5	U

	StationID	G003GW008		G003GW009	
	SampleID	003GW008M6		003GW009M6	
	DateCollected	10/8/2002		10/8/2002	
	DateExtracted	10/16/2002		10/16/2002	
	DateAnalyzed	10/16/2002		10/16/2002	
	SDGNumber	CNC148		CNC148	
Parameter	**Units**				
m-Xylene	ug/l	5	U	5	U
1,2,4-Trichlorobenzene	ug/L				
Chloromethane	ug/l	10	U	10	U
Vinyl chloride	ug/l	10	U	10	U
Bromomethane	ug/l	10	U	10	U
Chloroethane	ug/l	10	U	10	U
1,1-Dichloroethene	ug/L	5	U	5	U
Acetone	ug/l	10	U	10	U
Carbon Disulfide	ug/L	5	U	5	U
Methylene Chloride	ug/l	5	U	5	U
trans-1,2-Dichloroethene	ug/l	5	U	5	U
1,1-Dichloroethane	ug/l	5	U	5	U
Vinyl acetate	ug/l	10	U	10	U
Methyl ethyl ketone (2-Butanone)	ug/L	10	U	10	U
cis-1,2-Dichloroethylene	ug/l	5	U	5	U
1,2-Dichloroethene (total)	ug/l	5	U	5	U
Chloroform	ug/l	5	U	5	U
1,1,1-Trichloroethane	ug/l	5	U	5	U
Carbon Tetrachloride	ug/l	5	U	5	U
1,2-Dichloroethane	ug/l	5	U	5	U
Benzene	ug/l	5	U	5	U
Trichloroethylene (TCE)	ug/l	5	U	5	U
1,2-Dichloropropane	ug/l	5	U	5	U
Bromodichloromethane	ug/l	5	U	5	U
2-Chloroethyl vinyl ether	ug/l	10	U	10	U
cis-1,3-Dichloropropene	ug/l	5	U	5	U
Methyl isobutyl ketone (4-Methyl-2-pentai	ug/l	10	U	10	U
Toluene	ug/L	5	U	5	U
trans-1,3-Dichloropropene	ug/L	5	U	5	U
1,1,2-Trichloroethane	ug/l	5	U	5	U

	StationID	G003GW001		G003GW001		G003GW001		G003GW002	
	SampleID	003GW00105		003GW00105		003GW001M6		003GW00205	
	DateCollected	4/21/1998		4/21/1998		10/8/2002		4/22/1998	
	DateExtracted			4/27/1998		10/15/2002			
	DateAnalyzed	4/27/1998		5/9/1998		10/15/2002		4/27/1998	
	SDGNumber	ECZG02		ECZG02		CNC148		ECZG02	
Parameter	**Units**								
2-Hexanone	ug/l	10	U			10	U	10	U
Tetrachloroethylene (PCE)	ug/l	1	U			5	U	1	U
Dibromochloromethane	ug/l	1	U			5	U	1	U
Chlorobenzene	ug/l	1	U			5	U	1	U
Ethylbenzene	ug/l	1	U			5	U	1	U
o-Xylene	ug/l					5	U		
Xylenes, Total	ug/l	2	U			5	U	2	U
Styrene	ug/l	1	U			5	U	1	U
Bromoform	ug/L	1	U			5	U	1	U
1,1,2,2-Tetrachloroethane	ug/l	1	U			5	U	1	U
1,3-Dichlorobenzene	ug/l					5	U		
1,4-Dichlorobenzene	ug/l					5	U		
1,2-Dichlorobenzene	ug/l					5	U		
1,2,4-Trichlorobenzene	ug/l					5	U		
1,2,3-Trichlorobenzene	ug/l					5	U		

	StationID	G003GW002		G003GW002		G003GW003		G003GW003	
	SampleID	003GW00205		003GW002M6		003GW00305		003GW00305	
	DateCollected	4/22/1998		10/8/2002		4/21/1998		4/21/1998	
	DateExtracted	4/27/1998		10/15/2002				4/27/1998	
	DateAnalyzed	5/9/1998		10/15/2002		4/27/1998		5/9/1998	
	SDGNumber	ECZG02		CNC148		ECZG02		ECZG02	
Parameter	**Units**								
2-Hexanone	ug/l			10	U	10	U		
Tetrachloroethylene (PCE)	ug/l			5	U	1	U		
Dibromochloromethane	ug/l			5	U	1	U		
Chlorobenzene	ug/l			5	U	1	U		
Ethylbenzene	ug/l			5	U	1	U		
o-Xylene	ug/l			5	U				
Xylenes, Total	ug/l			5	U	2	U		
Styrene	ug/l			5	U	1	U		
Bromoform	ug/L			5	U	1	U		
1,1,2,2-Tetrachloroethane	ug/l			5	U	1	U		
1,3-Dichlorobenzene	ug/l			5	U				
1,4-Dichlorobenzene	ug/l			5	U				
1,2-Dichlorobenzene	ug/l			5	U				
1,2,4-Trichlorobenzene	ug/l			5	U				
1,2,3-Trichlorobenzene	ug/l			5	U				

	StationID	G003GW004		G003GW005		G003GW006		G003GW007	
	SampleID	003GW004M6		003GW005M6		003GW006M6		003GW007M6	
	DateCollected	10/8/2002		10/8/2002		10/8/2002		10/8/2002	
	DateExtracted	10/15/2002		10/16/2002		10/16/2002		10/16/2002	
	DateAnalyzed	10/15/2002		10/16/2002		10/16/2002		10/16/2002	
	SDGNumber	CNC148		CNC148		CNC148		CNC148	
Parameter	**Units**								
2-Hexanone	ug/l	10	U	10	U	10	U	10	U
Tetrachloroethylene (PCE)	ug/l	5	U	5	U	5	U	5	U
Dibromochloromethane	ug/l	5	U	5	U	5	U	5	U
Chlorobenzene	ug/l	5	U	5	U	5	U	5	U
Ethylbenzene	ug/l	5	U	5	U	5	U	5	U
o-Xylene	ug/l	5	U	5	U	5	U	5	U
Xylenes, Total	ug/l	5	U	5	U	5	U	5	U
Styrene	ug/l	5	U	5	U	5	U	5	U
Bromoform	ug/L	5	U	5	U	5	U	5	U
1,1,2,2-Tetrachloroethane	ug/l	5	U	5	U	5	U	5	U
1,3-Dichlorobenzene	ug/l	5	U	5	U	5	U	5	U
1,4-Dichlorobenzene	ug/l	5	U	5	U	5	U	5	U
1,2-Dichlorobenzene	ug/l	5	U	5	U	5	U	5	U
1,2,4-Trichlorobenzene	ug/l	5	U	5	U	5	U	5	U
1,2,3-Trichlorobenzene	ug/l	5	U	5	U	5	U	5	U

	StationID	G003GW008		G003GW009	
	SampleID	003GW008M6		003GW009M6	
	DateCollected	10/8/2002		10/8/2002	
	DateExtracted	10/16/2002		10/16/2002	
	DateAnalyzed	10/16/2002		10/16/2002	
	SDGNumber	CNC148		CNC148	
Parameter	**Units**				
2-Hexanone	ug/l	10	U	10	U
Tetrachloroethylene (PCE)	ug/l	5	U	5	U
Dibromochloromethane	ug/l	5	U	5	U
Chlorobenzene	ug/l	5	U	5	U
Ethylbenzene	ug/l	5	U	5	U
o-Xylene	ug/l	5	U	5	U
Xylenes, Total	ug/l	5	U	5	U
Styrene	ug/l	5	U	5	U
Bromoform	ug/L	5	U	5	U
1,1,2,2-Tetrachloroethane	ug/l	5	U	5	U
1,3-Dichlorobenzene	ug/l	5	U	5	U
1,4-Dichlorobenzene	ug/l	5	U	5	U
1,2-Dichlorobenzene	ug/l	5	U	5	U
1,2,4-Trichlorobenzene	ug/l	5	U	5	U
1,2,3-Trichlorobenzene	ug/l	5	U	5	U

	StationID	G003SA001		G003SA002		G003SA003		G003VA001	
	SampleID	003SA001M3		003SA002M3		003SA003M3		003VA001MW	
	DateCollected	6/13/2002		6/13/2002		6/13/2002		12/6/2002	
	DateExtracted	6/17/2002		6/17/2002		6/17/2002		12/10/2002	
	DateAnalyzed	6/19/2002		6/19/2002		6/19/2002		12/13/2002	
	SDGNumber	CNC116		CNC116		CNC116		CNC153	
Parameter	**Units**								
Chlordane, TCLP	mg/l	0.02	U	0.02	U	0.02	U	0.02	U
Endrin, TCLP	mg/l	0.002	U	0.002	U	0.002	U	0.002	U
Gamma BHC (Lindane), TCLP	mg/l	0.002	U	0.002	U	0.002	U	0.002	U
Heptachlor Epoxide, TCLP	mg/l	0.002	U	0.002	U	0.002	U	0.002	U
Heptachlor, TCLP	mg/l	0.002	U	0.002	U	0.002	U	0.002	U
Methoxychlor, TCLP	mg/l	0.02	U	0.02	U	0.02	U	0.02	U
Toxaphene, TCLP	mg/l	0.1	U	0.1	U	0.1	U	0.1	U

Appendix C

Data Validation Summary - Charleston Naval Complex – Zone G, SWMU 3

TO: William Elliott/CH2M HILL/GNA

FROM: Amy Juchem/CH2M HILL/GNA
Herb Kelly/CH2M HILL/GNA

DATE: November 20, 2002

The purpose of this memorandum is to present the results of the data validation process for the groundwater samples collected at Zone G, SWMU 3. The samples were collected on October 8, 2002.

The specific samples and analytical fractions reviewed are summarized below in Table 1.

The Quality Control areas that were reviewed and the resulting findings are documented within each subsection that follows. This data was validated for compliance with the analytical method requirements. This process also included a review of the data to assess the accuracy, precision, and completeness based upon procedures described in the guidance documents such as the Environmental Protection Agency (EPA) *National Functional Guidelines for Inorganic Data Review (EPA 1994) and National Functional Guidelines for Organic Data Review (EPA 1999)*. Quality assurance/quality control (QA/QC) summary forms and data reports were reviewed.

Samples were submitted to Severn Trent Services, STL Savannah Laboratories, Inc., in Savannah, Georgia for the following analyses: SW-846 8260 Volatile Organic Compounds (VOC), SW-846 8081 Pesticides, and Metals following SW-846 6010/7000 Series methodology.

Sample results that were not within the acceptance limits were appended with a qualifying flag, which consisted of a single- or double-letter code that indicated a possible problem with the data. The qualifying flags originated during the data review and validation processes. These also include the secondary, or the two-digit "sub-qualifier" flags. The secondary qualifiers provide the reasoning behind the assignment of a qualifier flag to the data. The secondary qualifiers are presented and defined below.

Attachment 1 lists the changes in data qualifiers, due to the validation process.

The following primary flags were used to qualify the data:

[=] Detected. The analyte was analyzed for and detected at the concentration shown.

[J] Estimated. The analyte was present but the reported value may not be accurate or precise.

[U] Undetected. The analyte was analyzed for but not detected above the method detection limit.

[UJ] Detection limit estimated. The analyte was analyzed for but qualified as not detected; the result is estimated.

[R] Rejected. The data is not useable.

Secondary Data Validation Qualifiers

Code	Definition
2S	Second Source
BL	Blank
BD	Blank Spike/Blank Spike Duplicate or (LCS/LCSD) Precision
BS	Blank Spike/LCS
CC	Continuing Calibration Verification
DL	Dilution
FD	Field Duplicate
HT	Holding Time
IB	In-Between (metals - B's → J's)
IC	Initial Calibration
IS	Internal Standard
LD	Lab Duplicate
LR	Concentration exceeded Linear Range
MD	MS/MSD or LCS/LCSD Precision
MS	Matrix Spike/Matrix Spike Duplicate
OT	Other (see DV worksheet)
PD	Pesticide Degradation
PS	Post Spike
RE	Re-extraction/Re-analysis
SD	Serial Dilution
SS	Spiked Surrogate
TD	Total vs Dissolved
TN	Tune

Table 1 - Chemical Analytical Methods – Field and Quality Control Samples

Site	Location	Sample ID	Lab Sample ID	Matrix	Sample Type	LR Type	Date Collected	VOC SW8260B	Pesticides SW8081A	Metals SW6010B	Mercury SW7470A
CNC148	G003GW001	003GW001M6	S247268*1	WG	N		10/08/02	X	X	X	X
CNC148	G003GW002	003GW002M6	S247268*2	WG	N		10/08/02	X	X	X	X
CNC148	G003GW002	003HW002M6	S247268*3	WG	FD		10/08/02	X	X	X	X
CNC148	G003GW004	003GW004M6	S247268*4	WG	N		10/08/02	X	X	X	X
CNC148	G003GW005	003GW005M6	S247268*5	WG	N		10/08/02	X	X	X	X
CNC148	G003GW005	003GW005M6DL	S247268*5DL	WG	LR	DL	10/08/02		X		
CNC148	G003GW006	003GW006M6	S247268*6	WG	N		10/08/02	X	X	X	X
CNC148	G003GW006	003GW006M6DL	S247268*6DL	WG	LR	DL	10/08/02		X		
CNC148	G003GW007	003GW007M6	S247268*7	WG	N		10/08/02	X	X	X	X
CNC148	G003GW007	003GW007M6DL	S247268*7DL	WG	LR	DL	10/08/02		X		
CNC148	G003GW008	003GW008M6	S247268*8	WG	N		10/08/02	X	X	X	X
CNC148	G003GW009	003GW009M6	S247268*9	WG	N		10/08/02	X	X	X	X
CNC148	G003GW009	003GW009M6MS	S247268*19	WG	MS		10/08/02	X	X	X	X
CNC148	G003GW009	003GW009M6SD	S247268*21	WG	SD		10/08/02	X	X	X	X
CNC148	FIELDQC	003EW001M6	S247268*10	WQ	EB		10/08/02	X	X	X	X
CNC148	FIELDQC	003TW001M6	S247268*11	WQ	TB		10/08/02	X			
CNC148	LABQC	4726812LB	S247268*12	WQ	LB			X	X	X	X
CNC148	LABQC	4726813BS	S247268*13	WQ	BS			X	X	X	X

SDG	Station ID	Sample ID	Lab sample ID	Matrix	Sample Type	LR Type	Date Collected	VOC SW8260B	Pesticides SW8081A	Metals SW6010B	Mercury SW7470A

MATRIX CODE

WG – Ground Water Samples
WQ – Water QC Samples

SAMPLE TYPE CODE

EB - Equipment Blank
TB - Trip Blank
FD - Field Duplicate
LR - Laboratory Replicate
MS - Matrix Spike
SD - Matrix Spike Duplicate
LB – Laboratory Blank
BS – Laboratory Blank Spike
N - Native Sample

LR TYPE CODE

DL - Dilution

ANALYSIS CODE

VOC - Volatile Organic Carbons

Organic Parameters

Quality Control Review

The following list represents the QA/QC measures that were reviewed during the data quality evaluation procedure for organic data.

- **Holding Times** – The holding times are evaluated to verify that samples were extracted and analyzed within holding times.
- **Blank samples** – Method blanks and equipment blanks, were provided for this project. Blank samples enable the reviewer to determine if an analyte may be attributed to sampling or laboratory procedures, rather than environmental contamination from site activities.
- **Surrogate Recoveries** – Surrogate Compounds are added to each sample and the recoveries are used to monitor lab performance and possible matrix interference.
- **Lab Control Sample (LCS)** – This sample is a "controlled matrix", either laboratory reagent water or Ottawa sand, in which target compounds have been added prior to extraction/analysis. The recoveries serve as a monitor of the overall performance of each step during the analysis, including sample preparation.
- **Field Duplicate Samples** – These samples are collected to determine precision between a native and its duplicate. This information can only be determined when target compounds are detected.
- **Matrix Spike/Matrix Spike Duplicate (MS/MSD) Samples** – Spike recovery is used to evaluate potential matrix interferences, as well as accuracy. Precision information is also determined by calculating the reproducibility between the recoveries of each spiked parameter.
- **GC/MS Tuning** – The mass spectrum of the tuning compound is evaluated for method compliance. The criteria are established to verify the proper mass assignment and mass resolution.
- **Initial Calibration** – The initial calibration ensures that the instrument is capable of producing acceptable qualitative and quantitative data for the compounds of interest.
- **Continuing Calibration** – The continuing calibration checks satisfactory performance of the instrument and its predicted response to the target compounds.
- **Internal Standards** – The internal standards (retention time and response) are evaluated for method compliance. The internal standards are used in quantitation of the target parameters and monitor the instrument sensitivity and response for stability during each analysis.
- **Confirmation** – If GCMS methodology is not initially used for analysis, SW-846 method 8000 requires confirmation when the composition of samples is not well characterized.

Therefore, even when the identification has been confirmed on a dissimilar column or detector, the agreement of the quantitative results on both columns is evaluated. For Pesticide and PCB analyses covered in this report, confirmation was performed using a dissimilar analytical column. The laboratory analyzed samples with a gas chromatograph (GC) utilizing simultaneous primary and confirmation data acquisition. Per SW-86 method 8000, 40% RPD criteria was used as the acceptance limit.

Volatile Organic Compounds

The QA/QC parameters for the Volatile Organic Compound analyses by method SW-846 8260 for all of the samples were within acceptable control limits, except as noted below.

Surrogate, Matrix Spike, Matrix Spike Duplicate, and Laboratory Control Spike Recoveries and Relative Percent Differences (RPDs)

All surrogate, matrix spike (MS), matrix spike duplicate (MSD), and laboratory control spike (LCS) recoveries and relative percent differences (RPDs) were within acceptable quality control limits, except as noted in Table 2.

TABLE 2
Surrogate, MS/MSD and LCS/LCSD Recoveries and RPDs Out of QC Limits: VOCs
Charleston Naval Complex, Zone G, SWMU 3, Charleston, SC

CNC148	003GW009M6 MS/MSD	Bromomethane	136* / 144*	70-130	003GW009M6	Detects only – J (no flags applied – all non-detects)
CNC148	2A1015MBLCS	Bromomethane	158*	70-130	CNC148 – All	Detects only – J (no flags applied – all non-detects)
		Chloroethane	136*	70-130		
* - out of control limits						

Initial and Continuing Calibration Criteria

All initial calibration criteria and continuing calibration criteria were met, except as listed in Table 3.

TABLE 3
Exceptions to Initial Calibration Criteria and Continuing Calibration Criteria: VOC
Charleston Naval Complex, Zone G, SWMU 3, Charleston, SC

MSA5973-CCAL-10/15/02, 2007	Bromomethane	23.2% high	CNC148 - All

Flags were applied to the compounds in the associated samples in the following manner:

- When the percent difference (%D) was high in the continuing calibration standards, detected compounds were flagged "J", as estimated. Non-detected compounds were not flagged.

Organochlorine Pesticides

The QA/QC parameters for the Organochlorine Pesticides analyses by method SW-846 8081 for all of the samples were within acceptable control limits, except as noted below.

Surrogate, Matrix Spike and Matrix Spike Duplicate Recoveries and Relative Percent Differences (RPDs)

All surrogate, matrix spike (MS), matrix spike duplicate (MSD), laboratory control spike (LCS), and laboratory control spike duplicate (LCSD) recoveries and relative percent differences (RPDs) were within acceptable quality control limits, except as noted in Table 4.

TABLE 4
Surrogate and MS/MSD Recoveries and RPDs Out of QC Limits: Pesticides
Charleston Naval Complex, Zone G, SWMU 3, Charleston, SC

CNC148	003GW009M6 MS/MSD	Heptachlor epoxide			38*	31	003GW009M6	Detects – J; Non-Detects – UJ
* - out of control limits								

- Additionally, Heptachlor epoxide was rejected in the undiluted samples 003GW005M6, 003GW006M6, and 003GW007M6, and gamma-chlordane was also rejected in 003GW005M6. Due to the interfering peaks from the sample matrix, the lab determined that it was necessary to clean the extracts with copper and dilute them before reanalysis. Professional judgement was used to determine that the diluted sample results for these analytes would provide the most accurate results and would be reported. The undiluted sample results were qualified as 'R-RE', and the diluted results were reported.

Initial and Continuing Calibration Criteria

All initial and continuing calibration criteria were met except as noted in Table 5.

TABLE 5
Exceptions to Initial Calibration Criteria and Continuing Calibration Criteria: Pesticides
Charleston Naval Complex, Zone G, SWMU 3, Charleston, SC

[illegible]	[illegible]	[illegible]	[illegible]
SGIECD1#1-CCAL-10/14/02, 1009	Endrin ketone	16.1% high	S247268*1-10
SGIECD1#1-CCAL-10/14/02, 1857	4,4'-DDD	19.1% high	S247268*1-10
	Endrin ketone	19.5% high	
SGMECD1#1-CCAL-10/21/02, 1046	Alpha-BHC	16.8% low	S247268*5DL, 7DL
	4,4'-DDD	15.7% low	
	Methoxychlor	40.8% low	
SGMECD1#2-CCAL-10/21/02, 1046	Endosulfan sulfate	18.2% high	S247268*5DL, 7DL
	Methoxychlor	23.7% low	
SGMECD1#1-CCAL-10/21/02, 1920	Alpha-BHC	17.0% low	S247268*5DL, 7DL
	Methoxychlor	24.1% low	
SGMECD1#2-CCAL-10/21/02, 1920	Endosulfan sulfate	16.6% high	S247268*5DL, 7DL
SGMECD1#1-CCAL-10/22/02, 0936	Alpha-BHC	16.3% low	S247268*6DL
	Methoxychlor	25.3% low	
SGMECD1#2-CCAL-10/22/02, 0936	Endosulfan sulfate	17.0% high	S247268*6DL
SGMECD1#1-CCAL-10/22/02, 1247	Alpha-BHC	17.3% low	S247268*6DL
	Methoxychlor	15.7% high	
SGMECD1#2-CCAL-10/22/02, 1247	Endosulfan sulfate	16.4% high	S247268*6DL

Flags were applied to the compounds in the associated samples in the following manner:

- When the percent difference (%D) was low in the continuing calibration standards, detected compounds were flagged "J" and non-detected compounds were flagged "UJ", as estimated.
- When the percent difference (%D) was high in the continuing calibration standard, detected compounds were flagged "J", as estimated. Non-detected compounds were not flagged.

Second Column Confirmation

The second column confirmation percent difference (%D) for some detected parameters, exceeded the 40 %D criteria. Those results were flagged "J", as estimated. The laboratory reported the lower of the two concentrations. The individual samples and specific compounds that were flagged, are listed in Table 6 below.

TABLE 6
Second Column Confirmation out of Criteria: Pesticides
Charleston Naval Complex, Zone G, SWMU 3, Charleston, SC

CNC148	S247268*5	003GW005M6	Beta-BHC
CNC148	S247268*5	003GW005M6	Alpha-Chlordane
CNC148	S247268*5	003GW005M6	Endosulfan I
CNC148	S247268*5DL	003GW005M6DL	Heptachlor epoxide
CNC148	S247268*6	003GW006M6	Gamma-BHC
CNC148	S247268*6	003GW006M6	Heptachlor
CNC148	S247268*6	003GW006M6	4,4'-DDT
CNC148	S247268*6	003GW006M6	Endrin aldehyde
CNC148	S247268*7	003GW007M6	Alpha-BHC
CNC148	S247268*7	003GW007M6	Heptachlor epoxide
CNC148	S247268*7	003GW007M6	Alpha-Chlordane
CNC148	S247268*7DL	003GW007M6DL	Heptachlor epoxide
CNC148	S247268*7DL	003GW007M6DL	Gamma-Chlordane
CNC148	S247268*7DL	003GW007M6DL	Endosulfan I
CNC148	S247268*8	003GW008M6	Heptachlor epoxide

Inorganic Parameters

Quality Control Review

The following list represents the QA/QC measures that are typically reviewed during the data quality evaluation procedure for inorganic parameters.

- **Holding Times** – The holding times are evaluated to verify that samples were extracted and analyzed within holding times.
- **Blank samples** – Sample preparation, initial calibration blanks/continuing calibration blanks, and equipment blanks were provided for this project. Blank samples enable the reviewer to determine if an analyte may be attributed to sampling or laboratory procedures, rather than environmental contamination from site activities.
- **Lab Control Sample (LCS)** – This sample is a "controlled matrix", in which target parameters have been added prior to digestion/analysis. The recoveries serve as a monitor of the overall performance of each step during the analysis, including sample preparation.
- **Field Duplicate Samples** – These samples are collected to determine precision between a native and its duplicate. This information can only be determined when target compounds are detected.
- **Pre/Post Digestion Spike (MS/MSD)** – Spike recovery is used to evaluate potential matrix interferences, as well as accuracy. Precision information is also determined by calculating the reproducibility between the recoveries of each spiked parameter.
- **ICP Interference Check Sample** – This sample verifies the lab's interelement and background correction factors.
- **Initial Calibration Verification** – This parameter ensures that the instrument is capable of producing acceptable quantitative data for the target analyte list to be measured.
- **Continuing Calibration Verification** – This one-point, mid-range parameter establishes that the initial calibration is still valid by checking the performance of the instrument on a continual basis.
- **ICP Serial Dilution** – The serial dilution of samples quantitated by ICP determines whether or not significant physical or chemical interferences exist due to the sample matrix.

Metals Analyses

The QA/QC parameters for the Metals analyses for all of the samples were within acceptable control limits, except as noted below.

Blanks

The Metals target parameters detected in blank samples are listed in Table 7.

TABLE 7
Blank Contamination: Metals
Charleston Naval Complex, Zone G, SWMU 3, Charleston, SC

[illegible]	[illegible]	[illegible]	[illegible]	[illegible]	[illegible]	[illegible]	[illegible]
CNC148	CCB		CCB	Aluminum	40.6	ug/L	0.203 mg/L
CNC148	CCB		CCB	Barium	1.86	ug/L	0.0093 mg/L
CNC148	CCB		CCB	Calcium	63.9	ug/L	0.3195 mg/L
CNC148	CCB		CCB	Chromium	1.88	ug/L	0.0094 mg/L
CNC148	CCB		CCB	Copper	2.91	ug/L	0.01455 mg/L
CNC148	CCB		CCB	Manganese	1.73	ug/L	0.00865 mg/L
CNC148	CCB		CCB	Selenium	5.02	ug/L	0.0251 mg/L
CNC148	CCB		CCB	Thallium	5.33	ug/L	0.02665 mg/L
CNC148	CCB		CCB	Vanadium	2.31	ug/L	0.01155 mg/L
CNC148	S247268*10	003EW001M6	EB	Barium	0.019	mg/L	0.095 mg/L
CNC148	S247268*10	003EW001M6	EB	Calcium	21.0	mg/L	105.0 mg/L
CNC148	S247268*10	003EW001M6	EB	Copper	0.00056	mg/L	0.0028 mg/L
CNC148	S247268*10	003EW001M6	EB	Iron	0.010	mg/L	0.05 mg/L
CNC148	S247268*10	003EW001M6	EB	Magnesium	2.9	mg/L	14.5 mg/L
CNC148	S247268*10	003EW001M6	EB	Manganese	0.00078	mg/L	0.0039 mg/L
CNC148	S247268*10	003EW001M6	EB	Nickel	0.011	mg/L	0.055 mg/L
CNC148	S247268*10	003EW001M6	EB	Potassium	3.6	mg/L	18.0 mg/L
CNC148	S247268*10	003EW001M6	EB	Selenium	0.0026	mg/L	0.013 mg/L
CNC148	S247268*10	003EW001M6	EB	Sodium	26.0	mg/L	130.0 mg/L
CNC148	S247268*10	003EW001M6	EB	Vanadium	0.0019	mg/L	0.0095 mg/L

If a target parameter was reported in a field sample, and the concentration was below the level determined to be due to blank contamination (5 times the concentration in the associated QC blank samples), it was flagged as "U", not detected. Initial and continuing calibration blanks were also evaluated for possible contamination.

The results qualified due to blank contamination are listed in Attachment 1.

Recoveries – Matrix Spike/Matrix Spike Duplicate (MS/MSD) and Laboratory Control Sample (LCS)

All Matrix Spike (MS), Matrix Spike Duplicate (MSD) and Laboratory Control Sample (LCS) recoveries were within acceptable quality control limits, except as noted in Table 8 below.

TABLE 8
MS/MSD Recoveries and RPDs Out of QC Limits: Metals
Charleston Naval Complex, Zone G, SWMU 3, Charleston, SC

CNC148	003GW009M6 MS/MSD	Aluminum	216* / 116	80-120	41.8*	20	CNC148 - All	Detects – J; Non-Detects – UJ
		Iron	305* / 137*	80-120	66.5*	20		
		Potassium	122* / 118	80-120			CNC148 - All	Detects Only - J

* - out of control limits

Rejected Data

All of the rejected data listed in Attachment 1 were associated with re-runs and dilutions (there can only be a single valid result per parameter per sample). No other data was rejected such that there is not a valid result for that parameter in each sample.

Conclusion

A review of the analytical data submitted regarding the investigation of SWMU 3 in Zone G at the Charleston Naval Complex, Charleston, South Carolina by CH2M HILL has been completed. An overall evaluation of the data indicates that the sample handling, shipment, and analytical procedures have been adequately completed, and that the analytical results should be considered usable as qualified.

The analytical data had minor QC concerns as indicated above, however, it did not affect data usability for those specific results. The validation review demonstrated that the analytical systems were generally in control and the data results can be used in the decision making process.

Attachment 1 - Changed Qualifiers and Results
Zone G, SWMU 3 - Data Validation

Parameter Class	Analytical Method	Parameter	SDG	Sample ID	Lab Sample ID	Matrix	Lab Result	Lab Qual	Final Result	Final Qual	Units	Reasons
METAL	SW6010B	ALUMINUM	CNC148	003GW001M6	S247268*1	WG	0.89	N	0.89	J	mg/l	MD
METAL	SW6010B	ALUMINUM	CNC148	003GW002M6	S247268*2	WG	0.49	N	0.49	J	mg/l	MD
METAL	SW6010B	ALUMINUM	CNC148	003HW002M6	S247268*3	WG	0.11	BN	0.11	UJ	mg/l	BL, MD
METAL	SW6010B	ALUMINUM	CNC148	003GW004M6	S247268*4	WG	0.048	BN	0.048	UJ	mg/l	BL, MD
METAL	SW6010B	ALUMINUM	CNC148	003GW005M6	S247268*5	WG	0.2	N	0.2	UJ	mg/l	BL, MD
METAL	SW6010B	ALUMINUM	CNC148	003GW006M6	S247268*6	WG	0.093	BN	0.093	UJ	mg/l	BL, MD
METAL	SW6010B	ALUMINUM	CNC148	003GW007M6	S247268*7	WG	0.076	BN	0.076	UJ	mg/l	BL, MD
METAL	SW6010B	ALUMINUM	CNC148	003GW008M6	S247268*8	WG	0.032	BN	0.032	UJ	mg/l	BL, MD
METAL	SW6010B	ALUMINUM	CNC148	003GW009M6	S247268*9	WG	0.74	N	0.74	J	mg/l	MD
METAL	SW6010B	ARSENIC	CNC148	003GW008M6	S247268*8	WG	0.005	B	0.005	J	mg/l	IB
METAL	SW6010B	BARIUM	CNC148	003GW001M6	S247268*1	WG	0.03	B	0.03	U	mg/l	BL
METAL	SW6010B	BARIUM	CNC148	003GW002M6	S247268*2	WG	0.027	B	0.027	U	mg/l	BL
METAL	SW6010B	BARIUM	CNC148	003HW002M6	S247268*3	WG	0.025	B	0.025	U	mg/l	BL
METAL	SW6010B	BARIUM	CNC148	003GW004M6	S247268*4	WG	0.05	B	0.05	U	mg/l	BL
METAL	SW6010B	BARIUM	CNC148	003GW005M6	S247268*5	WG	0.038	B	0.038	U	mg/l	BL
METAL	SW6010B	BARIUM	CNC148	003GW006M6	S247268*6	WG	0.049	B	0.049	U	mg/l	BL
METAL	SW6010B	BARIUM	CNC148	003GW007M6	S247268*7	WG	0.068	B	0.068	U	mg/l	BL
METAL	SW6010B	BARIUM	CNC148	003GW008M6	S247268*8	WG	0.028	B	0.028	U	mg/l	BL
METAL	SW6010B	BARIUM	CNC148	003GW009M6	S247268*9	WG	0.047	B	0.047	U	mg/l	BL
METAL	SW6010B	BERYLLIUM	CNC148	003GW004M6	S247268*4	WG	4E-04	B	4E-04	J	mg/l	IB
METAL	SW6010B	BERYLLIUM	CNC148	003GW006M6	S247268*6	WG	5E-04	B	5E-04	J	mg/l	IB
METAL	SW6010B	BERYLLIUM	CNC148	003GW009M6	S247268*9	WG	8E-04	B	8E-04	J	mg/l	IB
METAL	SW6010B	CALCIUM	CNC148	003GW001M6	S247268*1	WG	56	=	56	U	mg/l	BL
METAL	SW6010B	CALCIUM	CNC148	003GW002M6	S247268*2	WG	73	=	73	U	mg/l	BL
METAL	SW6010B	CALCIUM	CNC148	003HW002M6	S247268*3	WG	71	=	71	U	mg/l	BL
METAL	SW6010B	CALCIUM	CNC148	003GW004M6	S247268*4	WG	26	=	26	U	mg/l	BL
METAL	SW6010B	CALCIUM	CNC148	003GW005M6	S247268*5	WG	33	=	33	U	mg/l	BL
METAL	SW6010B	CALCIUM	CNC148	003GW006M6	S247268*6	WG	29	=	29	U	mg/l	BL
METAL	SW6010B	CALCIUM	CNC148	003GW007M6	S247268*7	WG	82	=	82	U	mg/l	BL
METAL	SW6010B	CALCIUM	CNC148	003GW008M6	S247268*8	WG	35	=	35	U	mg/l	BL
METAL	SW6010B	CALCIUM	CNC148	003GW009M6	S247268*9	WG	32	=	32	U	mg/l	BL

Parameter Class	Analytical Method	Parameter	Site	Sample ID	Lab Sample ID	Matrix	Lab Result	Lab Qual	Final Result	Final Qual	Units	Reasons
METAL	SW6010B	CHROMIUM, TOTAL	CNC148	003GW001M6	S247268*1	WG	0.001	B	0.001	U	mg/l	BL
METAL	SW6010B	CHROMIUM, TOTAL	CNC148	003GW002M6	S247268*2	WG	0.001	B	0.001	U	mg/l	BL
METAL	SW6010B	CHROMIUM, TOTAL	CNC148	003GW006M6	S247268*6	WG	0.002	B	0.002	U	mg/l	BL
METAL	SW6010B	COBALT	CNC148	003GW004M6	S247268*4	WG	0.008	B	0.008	J	mg/l	IB
METAL	SW6010B	COBALT	CNC148	003GW006M6	S247268*6	WG	0.009	B	0.009	J	mg/l	IB
METAL	SW6010B	COBALT	CNC148	003GW007M6	S247268*7	WG	0.002	B	0.002	J	mg/l	IB
METAL	SW6010B	COBALT	CNC148	003GW008M6	S247268*8	WG	0.003	B	0.003	J	mg/l	IB
METAL	SW6010B	COBALT	CNC148	003GW009M6	S247268*9	WG	0.016	B	0.016	J	mg/l	IB
METAL	SW6010B	COPPER	CNC148	003GW001M6	S247268*1	WG	0.001	B	0.001	U	mg/l	BL
METAL	SW6010B	COPPER	CNC148	003GW002M6	S247268*2	WG	0.001	B	0.001	U	mg/l	BL
METAL	SW6010B	COPPER	CNC148	003HW002M6	S247268*3	WG	0.001	B	0.001	U	mg/l	BL
METAL	SW6010B	COPPER	CNC148	003GW004M6	S247268*4	WG	8E-04	B	8E-04	U	mg/l	BL
METAL	SW6010B	COPPER	CNC148	003GW005M6	S247268*5	WG	8E-04	B	8E-04	U	mg/l	BL
METAL	SW6010B	COPPER	CNC148	003GW006M6	S247268*6	WG	6E-04	B	6E-04	U	mg/l	BL
METAL	SW6010B	COPPER	CNC148	003GW007M6	S247268*7	WG	0.001	B	0.001	U	mg/l	BL
METAL	SW6010B	COPPER	CNC148	003GW008M6	S247268*8	WG	0.002	B	0.002	U	mg/l	BL
METAL	SW6010B	COPPER	CNC148	003GW009M6	S247268*9	WG	9E-04	B	9E-04	U	mg/l	BL
METAL	SW6010B	IRON	CNC148	003GW001M6	S247268*1	WG	0.87	N	0.87	J	mg/l	MS, MD
METAL	SW6010B	IRON	CNC148	003GW002M6	S247268*2	WG	0.53	N	0.53	J	mg/l	MS, MD
METAL	SW6010B	IRON	CNC148	003HW002M6	S247268*3	WG	0.13	N	0.13	J	mg/l	MS, MD
METAL	SW6010B	IRON	CNC148	003GW004M6	S247268*4	WG	0.032	BN	0.032	UJ	mg/l	BL, MD
METAL	SW6010B	IRON	CNC148	003GW005M6	S247268*5	WG	0.22	N	0.22	J	mg/l	MS, MD
METAL	SW6010B	IRON	CNC148	003GW006M6	S247268*6	WG	0.027	BN	0.027	UJ	mg/l	BL, MD
METAL	SW6010B	IRON	CNC148	003GW007M6	S247268*7	WG	0.093	BN	0.093	J	mg/l	MS, MD
METAL	SW6010B	IRON	CNC148	003GW008M6	S247268*8	WG	2.3	N	2.3	J	mg/l	MS, MD
METAL	SW6010B	IRON	CNC148	003GW009M6	S247268*9	WG	0.16	N	0.16	J	mg/l	MS, MD
METAL	SW6010B	MAGNESIUM	CNC148	003GW001M6	S247268*1	WG	3.6	B	3.6	J	mg/l	IB
METAL	SW6010B	MAGNESIUM	CNC148	003GW002M6	S247268*2	WG	4.2	B	4.2	U	mg/l	BL
METAL	SW6010B	MAGNESIUM	CNC148	003HW002M6	S247268*3	WG	4.1	B	4.1	U	mg/l	BL
METAL	SW6010B	MAGNESIUM	CNC148	003GW004M6	S247268*4	WG	3.7	B	3.7	U	mg/l	BL
METAL	SW6010B	MAGNESIUM	CNC148	003GW005M6	S247268*5	WG	3.8	B	3.8	U	mg/l	BL

Attachment 1 - Changed Qualifiers and Results
Zone G, SWMU 3 - Data Validation

Parameter Class	Analytical Method	Parameter	SDG	Sample ID	Lab Sample ID	Matrix	Lab Result	Lab Qual	Final Result	Final Qual	Units	Reasons
METAL	SW6010B	MAGNESIUM	CNC148	003GW006M6	S247268*6	WG	7	=	7	U	mg/l	BL
METAL	SW6010B	MAGNESIUM	CNC148	003GW007M6	S247268*7	WG	9.8	=	9.8	U	mg/l	BL
METAL	SW6010B	MAGNESIUM	CNC148	003GW008M6	S247268*8	WG	7.1	=	7.1	U	mg/l	BL
METAL	SW6010B	MAGNESIUM	CNC148	003GW009M6	S247268*9	WG	12	=	12	U	mg/l	BL
METAL	SW6010B	MANGANESE	CNC148	003GW001M6	S247268*1	WG	0.012	B	0.012	J	mg/l	IB
METAL	SW6010B	MANGANESE	CNC148	003GW002M6	S247268*2	WG	0.01	B	0.01	J	mg/l	IB
METAL	SW6010B	MANGANESE	CNC148	003HW002M6	S247268*3	WG	0.009	B	0.009	U	mg/l	BL
METAL	SW6010B	NICKEL	CNC148	003GW006M6	S247268*6	WG	0.003	B	0.003	U	mg/l	BL
METAL	SW6010B	NICKEL	CNC148	003GW009M6	S247268*9	WG	0.005	B	0.005	U	mg/l	BL
METAL	SW6010B	POTASSIUM	CNC148	003GW001M6	S247268*1	WG	3.2	BN	3.2	U	mg/l	BL
METAL	SW6010B	POTASSIUM	CNC148	003GW002M6	S247268*2	WG	0.24	BN	0.24	U	mg/l	BL
METAL	SW6010B	POTASSIUM	CNC148	003HW002M6	S247268*3	WG	0.2	BN	0.2	U	mg/l	BL
METAL	SW6010B	POTASSIUM	CNC148	003GW004M6	S247268*4	WG	0.54	BN	0.54	U	mg/l	BL
METAL	SW6010B	POTASSIUM	CNC148	003GW005M6	S247268*5	WG	0.96	BN	0.96	U	mg/l	BL
METAL	SW6010B	POTASSIUM	CNC148	003GW006M6	S247268*6	WG	0.77	BN	0.77	U	mg/l	BL
METAL	SW6010B	POTASSIUM	CNC148	003GW007M6	S247268*7	WG	1.7	BN	1.7	U	mg/l	BL
METAL	SW6010B	POTASSIUM	CNC148	003GW008M6	S247268*8	WG	2.2	BN	2.2	U	mg/l	BL
METAL	SW6010B	POTASSIUM	CNC148	003GW009M6	S247268*9	WG	1.9	BN	1.9	U	mg/l	BL
METAL	SW6010B	SELENIUM	CNC148	003GW005M6	S247268*5	WG	0.002	B	0.002	U	mg/l	BL
METAL	SW6010B	SELENIUM	CNC148	003GW009M6	S247268*9	WG	0.003	B	0.003	U	mg/l	BL
METAL	SW6010B	SODIUM	CNC148	003GW001M6	S247268*1	WG	3.3	B	3.3	U	mg/l	BL
METAL	SW6010B	SODIUM	CNC148	003GW002M6	S247268*2	WG	13	=	13	U	mg/l	BL
METAL	SW6010B	SODIUM	CNC148	003HW002M6	S247268*3	WG	13	=	13	U	mg/l	BL
METAL	SW6010B	SODIUM	CNC148	003GW004M6	S247268*4	WG	5.6	=	5.6	U	mg/l	BL
METAL	SW6010B	SODIUM	CNC148	003GW005M6	S247268*5	WG	17	=	17	U	mg/l	BL
METAL	SW6010B	SODIUM	CNC148	003GW006M6	S247268*6	WG	19	=	19	U	mg/l	BL
METAL	SW6010B	SODIUM	CNC148	003GW007M6	S247268*7	WG	23	=	23	U	mg/l	BL
METAL	SW6010B	SODIUM	CNC148	003GW008M6	S247268*8	WG	65	=	65	U	mg/l	BL
METAL	SW6010B	SODIUM	CNC148	003GW009M6	S247268*9	WG	39	=	39	U	mg/l	BL
METAL	SW6010B	VANADIUM	CNC148	003GW001M6	S247268*1	WG	0.003	B	0.003	U	mg/l	BL
METAL	SW6010B	VANADIUM	CNC148	003GW002M6	S247268*2	WG	0.002	B	0.002	U	mg/l	BL

Parameter Class	Analytical Method	Analyte	SDG	Sample ID	Lab Sample ID	Matrix	Lab Result	Lab Qual	Final Result	Final Qual	Units	Reasons
METAL	SW6010B	VANADIUM	CNC148	003HW002M6	S247268*3	WG	0.001	B	0.001	U	mg/l	BL
METAL	SW6010B	VANADIUM	CNC148	003GW007M6	S247268*7	WG	0.002	B	0.002	U	mg/l	BL
METAL	SW6010B	VANADIUM	CNC148	003GW009M6	S247268*9	WG	0.002	B	0.002	U	mg/l	BL
METAL	SW6010B	ZINC	CNC148	003GW001M6	S247268*1	WG	0.003	B	0.003	J	mg/l	IB
METAL	SW6010B	ZINC	CNC148	003GW005M6	S247268*5	WG	0.005	B	0.005	J	mg/l	IB
METAL	SW6010B	ZINC	CNC148	003GW009M6	S247268*9	WG	0.006	B	0.006	J	mg/l	IB
PEST	SW8081A	ALDRIN	CNC148	003GW005M6DL	S247268*5DL	WG	0.2	U	0.2	R	ug/l	DL
PEST	SW8081A	ALDRIN	CNC148	003GW006M6DL	S247268*6DL	WG	0.4	U	0.4	R	ug/l	DL
PEST	SW8081A	ALDRIN	CNC148	003GW007M6DL	S247268*7DL	WG	0.2	U	0.2	R	ug/l	DL
PEST	SW8081A	ALPHA BHC	CNC148	003GW005M6DL	S247268*5DL	WG	0.2	UYY	0.2	R	ug/l	DL
PEST	SW8081A	ALPHA BHC	CNC148	003GW006M6DL	S247268*6DL	WG	0.4	UYY	0.4	R	ug/l	DL
PEST	SW8081A	ALPHA BHC	CNC148	003GW007M6	S247268*7	WG	0.013	JPYY	0.013	J	ug/l	2C
PEST	SW8081A	ALPHA BHC	CNC148	003GW007M6DL	S247268*7DL	WG	0.2	JPYY	0.2	R	ug/l	DL
PEST	SW8081A	ALPHA-CHLORDANE	CNC148	003GW005M6	S247268*5	WG	0.01	JP	0.01	J	ug/l	2C
PEST	SW8081A	ALPHA-CHLORDANE	CNC148	003GW005M6DL	S247268*5DL	WG	0.2	U	0.2	R	ug/l	DL
PEST	SW8081A	ALPHA-CHLORDANE	CNC148	003GW006M6DL	S247268*6DL	WG	0.4	U	0.4	R	ug/l	DL
PEST	SW8081A	ALPHA-CHLORDANE	CNC148	003GW007M6	S247268*7	WG	0.029	JP	0.029	J	ug/l	2C
PEST	SW8081A	ALPHA-CHLORDANE	CNC148	003GW007M6DL	S247268*7DL	WG	0.2	U	0.2	R	ug/l	DL
PEST	SW8081A	BETA BHC	CNC148	003GW005M6	S247268*5	WG	0.008	JP	0.008	J	ug/l	2C
PEST	SW8081A	BETA BHC	CNC148	003GW005M6DL	S247268*5DL	WG	0.2	U	0.2	R	ug/l	DL
PEST	SW8081A	BETA BHC	CNC148	003GW006M6DL	S247268*6DL	WG	0.4	U	0.4	R	ug/l	DL
PEST	SW8081A	BETA BHC	CNC148	003GW007M6DL	S247268*7DL	WG	0.2	J	0.2	R	ug/l	DL
PEST	SW8081A	Chlordane	CNC148	003GW005M6DL	S247268*5DL	WG	2	U	2	R	ug/l	DL
PEST	SW8081A	Chlordane	CNC148	003GW006M6DL	S247268*6DL	WG	4	U	4	R	ug/l	DL
PEST	SW8081A	Chlordane	CNC148	003GW007M6DL	S247268*7DL	WG	2	U	2	R	ug/l	DL
PEST	SW8081A	DELTA BHC	CNC148	003GW005M6DL	S247268*5DL	WG	0.2	U	0.2	R	ug/l	DL
PEST	SW8081A	DELTA BHC	CNC148	003GW006M6DL	S247268*6DL	WG	0.4	U	0.4	R	ug/l	DL
PEST	SW8081A	DELTA BHC	CNC148	003GW007M6DL	S247268*7DL	WG	0.2	J	0.2	R	ug/l	DL
PEST	SW8081A	DIELDRIN	CNC148	003GW005M6DL	S247268*5DL	WG	0.062	DJ	0.062	R	ug/l	DL
PEST	SW8081A	DIELDRIN	CNC148	003GW006M6DL	S247268*6DL	WG	0.8	U	0.8	R	ug/l	DL
PEST	SW8081A	DIELDRIN	CNC148	003GW007M6DL	S247268*7DL	WG	0.57	D	0.57	R	ug/l	DL

Attachment 1 - Changed Qualifiers and Results
Zone G, SWMU 3 - Data Validation

Parameter Class	Analytical Method	Parameter	SDG	Sample ID	Lab Sample ID	Matrix	Lab Result	Lab Qual	Final Result	Final Qual	Units	Reasons
PEST	SW8081A	ENDOSULFAN I	CNC148	003GW005M6	S247268*5	WG	0.014	JP	0.014	J	ug/l	2C
PEST	SW8081A	ENDOSULFAN I	CNC148	003GW005M6DL	S247268*5DL	WG	0.2	U	0.2	R	ug/l	DL
PEST	SW8081A	ENDOSULFAN I	CNC148	003GW006M6DL	S247268*6DL	WG	0.4	U	0.4	R	ug/l	DL
PEST	SW8081A	ENDOSULFAN I	CNC148	003GW007M6DL	S247268*7DL	WG	0.081	DJP	0.081	R	ug/l	DL
PEST	SW8081A	ENDOSULFAN II	CNC148	003GW005M6DL	S247268*5DL	WG	0.4	U	0.4	R	ug/l	DL
PEST	SW8081A	ENDOSULFAN II	CNC148	003GW006M6DL	S247268*6DL	WG	0.8	U	0.8	R	ug/l	DL
PEST	SW8081A	ENDOSULFAN II	CNC148	003GW007M6DL	S247268*7DL	WG	0.4	U	0.4	R	ug/l	DL
PEST	SW8081A	ENDOSULFAN SULFATE	CNC148	003GW005M6DL	S247268*5DL	WG	0.4	U	0.4	R	ug/l	DL
PEST	SW8081A	ENDOSULFAN SULFATE	CNC148	003GW006M6DL	S247268*6DL	WG	0.8	U	0.8	R	ug/l	DL
PEST	SW8081A	ENDOSULFAN SULFATE	CNC148	003GW007M6DL	S247268*7DL	WG	0.4	U	0.4	R	ug/l	DL
PEST	SW8081A	ENDRIN	CNC148	003GW005M6DL	S247268*5DL	WG	0.4	U	0.4	R	ug/l	DL
PEST	SW8081A	ENDRIN	CNC148	003GW006M6DL	S247268*6DL	WG	0.8	U	0.8	R	ug/l	DL
PEST	SW8081A	ENDRIN	CNC148	003GW007M6DL	S247268*7DL	WG	0.4	U	0.4	R	ug/l	DL
PEST	SW8081A	ENDRIN ALDEHYDE	CNC148	003GW005M6DL	S247268*5DL	WG	0.4	U	0.4	R	ug/l	DL
PEST	SW8081A	ENDRIN ALDEHYDE	CNC148	003GW006M6	S247268*6	WG	0.032	JP	0.032	J	ug/l	2C
PEST	SW8081A	ENDRIN ALDEHYDE	CNC148	003GW006M6DL	S247268*6DL	WG	0.8	U	0.8	R	ug/l	DL
PEST	SW8081A	ENDRIN ALDEHYDE	CNC148	003GW007M6DL	S247268*7DL	WG	0.4	U	0.4	R	ug/l	DL
PEST	SW8081A	ENDRIN KETONE	CNC148	003GW005M6DL	S247268*5DL	WG	0.4	U	0.4	R	ug/l	DL
PEST	SW8081A	ENDRIN KETONE	CNC148	003GW006M6DL	S247268*6DL	WG	0.8	U	0.8	R	ug/l	DL
PEST	SW8081A	ENDRIN KETONE	CNC148	003GW007M6	S247268*7	WG	0.035	J	0.035	J	ug/l	CC
PEST	SW8081A	ENDRIN KETONE	CNC148	003GW007M6DL	S247268*7DL	WG	0.4	U	0.4	R	ug/l	DL
PEST	SW8081A	GAMMA BHC (LINDANE)	CNC148	003GW005M6DL	S247268*5DL	WG	0.2	U	0.2	R	ug/l	DL
PEST	SW8081A	GAMMA BHC (LINDANE)	CNC148	003GW006M6	S247268*6	WG	0.011	JP	0.011	J	ug/l	2C
PEST	SW8081A	GAMMA BHC (LINDANE)	CNC148	003GW006M6DL	S247268*6DL	WG	0.4	U	0.4	R	ug/l	DL
PEST	SW8081A	GAMMA BHC (LINDANE)	CNC148	003GW007M6DL	S247268*7DL	WG	0.2	U	0.2	R	ug/l	DL
PEST	SW8081A	GAMMA-CHLORDANE	CNC148	003GW005M6	S247268*5	WG	0.044	ZZ	0.044	R	ug/l	RE
PEST	SW8081A	GAMMA-CHLORDANE	CNC148	003GW006M6DL	S247268*6DL	WG	0.4	U	0.4	R	ug/l	DL
PEST	SW8081A	GAMMA-CHLORDANE	CNC148	003GW007M6DL	S247268*7DL	WG	0.037	DJP	0.037	R	ug/l	DL
PEST	SW8081A	HEPTACHLOR	CNC148	003GW005M6DL	S247268*5DL	WG	0.2	U	0.2	R	ug/l	DL
PEST	SW8081A	HEPTACHLOR	CNC148	003GW006M6	S247268*6	WG	0.006	JP	0.006	J	ug/l	2C
PEST	SW8081A	HEPTACHLOR	CNC148	003GW006M6DL	S247268*6DL	WG	0.4	U	0.4	R	ug/l	DL

Parameter Class	Analytical Method	Parameter	SDG	Sample ID	Lab Sample ID	Matrix	Lab Result	Lab Qual	Final Result	Final Qual	Units	Reasons
PEST	SW8081A	HEPTACHLOR	CNC148	003GW007M6DL	S247268*7DL	WG	0.2	U	0.2	R	ug/l	DL
PEST	SW8081A	HEPTACHLOR EPOXIDE	CNC148	003GW005M6	S247268*5	WG	0.051	ZZ	0.051	R	ug/l	RE
PEST	SW8081A	HEPTACHLOR EPOXIDE	CNC148	003GW005M6DL	S247268*5DL	WG	0.086	DJP	0.086	J	ug/l	2C
PEST	SW8081A	HEPTACHLOR EPOXIDE	CNC148	003GW006M6	S247268*6	WG	0.04	U	0.04	R	ug/l	RE
PEST	SW8081A	HEPTACHLOR EPOXIDE	CNC148	003GW007M6	S247268*7	WG	0.39	P	0.39	R	ug/l	RE
PEST	SW8081A	HEPTACHLOR EPOXIDE	CNC148	003GW007M6DL	S247268*7DL	WG	0.13	DJP	0.13	J	ug/l	2C
PEST	SW8081A	HEPTACHLOR EPOXIDE	CNC148	003GW008M6	S247268*8	WG	0.014	JP	0.014	J	ug/l	2C
PEST	SW8081A	METHOXYCHLOR	CNC148	003GW005M6DL	S247268*5DL	WG	1.9	U	1.9	R	ug/l	DL
PEST	SW8081A	METHOXYCHLOR	CNC148	003GW006M6DL	S247268*6DL	WG	3.8	U	3.8	R	ug/l	DL
PEST	SW8081A	METHOXYCHLOR	CNC148	003GW007M6DL	S247268*7DL	WG	1.9	U	1.9	R	ug/l	DL
PEST	SW8081A	p,p'-DDD	CNC148	003GW005M6	S247268*5	WG	1	=	1	J	ug/l	CC
PEST	SW8081A	p,p'-DDD	CNC148	003GW005M6DL	S247268*5DL	WG	0.96	D	0.96	R	ug/l	DL
PEST	SW8081A	p,p'-DDD	CNC148	003GW006M6	S247268*6	WG	0.13	=	0.13	J	ug/l	CC
PEST	SW8081A	p,p'-DDD	CNC148	003GW006M6DL	S247268*6DL	WG	0.8	U	0.8	R	ug/l	DL
PEST	SW8081A	p,p'-DDD	CNC148	003GW007M6DL	S247268*7DL	WG	0.4	U	0.4	R	ug/l	DL
PEST	SW8081A	p,p'-DDE	CNC148	003GW005M6DL	S247268*5DL	WG	0.24	DJ	0.24	R	ug/l	DL
PEST	SW8081A	p,p'-DDE	CNC148	003GW006M6DL	S247268*6DL	WG	0.8	U	0.8	R	ug/l	DL
PEST	SW8081A	p,p'-DDE	CNC148	003GW007M6DL	S247268*7DL	WG	0.4	U	0.4	R	ug/l	DL
PEST	SW8081A	p,p'-DDT	CNC148	003GW005M6DL	S247268*5DL	WG	1.4	D	1.4	R	ug/l	DL
PEST	SW8081A	p,p'-DDT	CNC148	003GW006M6	S247268*6	WG	1.6	P	1.6	J	ug/l	2C
PEST	SW8081A	p,p'-DDT	CNC148	003GW006M6DL	S247268*6DL	WG	2	D	2	R	ug/l	DL
PEST	SW8081A	p,p'-DDT	CNC148	003GW007M6DL	S247268*7DL	WG	0.4	U	0.4	R	ug/l	DL
PEST	SW8081A	TOXAPHENE	CNC148	003GW005M6DL	S247268*5DL	WG	12	U	12	R	ug/l	DL
PEST	SW8081A	TOXAPHENE	CNC148	003GW006M6DL	S247268*6DL	WG	25	U	25	R	ug/l	DL
PEST	SW8081A	TOXAPHENE	CNC148	003GW007M6DL	S247268*7DL	WG	12	U	12	R	ug/l	DL

Data Validation Summary - Charleston Naval Complex – Zone G, SWMU 3 - Soils

TO: William Elliott/CH2M HILL/GNA

FROM: Amy Juchem/CH2M HILL/GNA
Herb Kelly/CH2M HILL/GNA

DATE: December 3, 2002

The purpose of this memorandum is to present the results of the data validation process for the soil samples collected at Zone G, SWMU 3. The samples were collected between the dates of November 28, 2001 and September 27, 2002.

The specific samples and analytical fractions reviewed are summarized below in Table 1.

The Quality Control areas that were reviewed and the resulting findings are documented within each subsection that follows. This data was validated for compliance with the analytical method requirements. This process also included a review of the data to assess the accuracy, precision, and completeness based upon procedures described in the guidance documents such as the Environmental Protection Agency (EPA) *National Functional Guidelines for Inorganic Data Review (EPA 1994) and National Functional Guidelines for Organic Data Review (EPA 1999)*. Quality assurance/quality control (QA/QC) summary forms and data reports were reviewed.

Samples were submitted to Severn Trent Services, STL Savannah Laboratories, Inc., in Savannah, Georgia for the following analyses: SW-846 8260 Volatile Organic Compounds (VOC), SW-846 8081 Pesticides, and SW-846 8082 Polychlorinated Biphenyls (PCBs).

Sample results that were not within the acceptance limits were appended with a qualifying flag, which consisted of a single- or double-letter code that indicated a possible problem with the data. The qualifying flags originated during the data review and validation processes. These also include the secondary, or the two-digit "sub-qualifier" flags. The secondary qualifiers provide the reasoning behind the assignment of a qualifier flag to the data. The secondary qualifiers are presented and defined below.

Attachment 1 lists the changes in data qualifiers, due to the validation process.

The following primary flags were used to qualify the data:

[=] Detected. The analyte was analyzed for and detected at the concentration shown.

[J] Estimated. The analyte was present but the reported value may not be accurate or precise.

[U] Undetected. The analyte was analyzed for but not detected above the method detection limit.

[UJ] Detection limit estimated. The analyte was analyzed for but qualified as not detected; the result is estimated.

[R] Rejected. The data is not useable.

Secondary Data Validation Qualifiers

Code	Definition
2S	Second Source
BL	Blank
BD	Blank Spike/Blank Spike Duplicate or (LCS/LCSD) Precision
BS	Blank Spike/LCS
CC	Continuing Calibration Verification
DL	Dilution
FD	Field Duplicate
HT	Holding Time
IB	In-Between (metals - B's → J's)
IC	Initial Calibration
IS	Internal Standard
LD	Lab Duplicate
LR	Concentration exceeded Linear Range
MD	MS/MSD or LCS/LCSD Precision
MS	Matrix Spike/Matrix Spike Duplicate
OT	Other (see DV worksheet)
PD	Pesticide Degradation
PS	Post Spike
RE	Re-extraction/Re-analysis
SD	Serial Dilution
SS	Spiked Surrogate
TN	Tune

Table 1 - Chemical Analytical Methods – Field and Quality Control Samples

[illegible]	[illegible]	[illegible]	[illegible]	[illegible]	[illegible]	[illegible]	[illegible]	[illegible]	[illegible]	[illegible]	[illegible]	[illegible]
CNC54	G003SB022	003SB02201	S117739*1	SO	N		0	1	11/29/01	X	X	
CNC54	G003SB022	003SB02202	S117739*2	SO	N		3	5	11/29/01	X	X	
CNC54	G003SB023	003SB02301	S117739*3	SO	N		0	1	11/29/01	X	X	
CNC54	G003SB023	003SB02302	S117739*4	SO	N		3	5	11/29/01	X	X	
CNC54	G003SB024	003SB02401	S117739*5	SO	N		0	1	11/29/01	X	X	
CNC54	G003SB024	003SB02401DL	S117739*5*DL	SO	LR	DL	0	1	11/29/01	X	X	
CNC54	G003SB024	003SB02402	S117739*6	SO	N		3	5	11/29/01	X	X	
CNC54	G003SB025	003SB02501	S117739*7	SO	N		0	1	11/29/01	X	X	
CNC54	G003SB025	003SB02502	S117739*8	SO	N		3	5	11/29/01	X	X	
CNC54	G003SB026	003SB02601	S117739*9	SO	N		0	1	11/29/01	X	X	
CNC54	G003SB026	003SB02602	S117739*10	SO	N		3	5	11/29/01	X	X	
CNC54	G003SB027	003SB02701	S117739*11	SO	N		0	1	11/29/01	X	X	
CNC54	G003SB027	003SB02702	S117739*12	SO	N		3	5	11/29/01	X	X	
CNC54	G003SB028	003SB02801	S117739*13	SO	N		0	1	11/29/01	X	X	
CNC54	G003SB028	003SB02801DL	S117739*13*DL	SO	LR	DL	0	1	11/29/01		X	
CNC54	G003SB028	003SB02802	S117739*14	SO	N		3	5	11/29/01	X	X	
CNC54	G003SB028	003SB02802DL	S117739*14*DL	SO	LR	DL	3	5	11/29/01		X	
CNC54	G003SB029	003SB02901	S117739*15	SO	N		0	1	11/29/01	X	X	
CNC54	G003SB029	003SB02902	S117739*16	SO	N		3	5	11/29/01	X	X	
CNC54	G003SB029	003CB02902	S117739*17	SO	FD		3	5	11/29/01	X	X	
CNC54	G003SB030	003SB03001	S117739*18	SO	N		0	1	11/29/01	X	X	

Site	Station ID	Sample ID	Lab Sample ID	Matrix	Sample Type	QC Type	Upper Depth	Lower Depth	Date Collected	VOC SW8260	Pesticides SW8081	PCBs SW8082
CNC54	G003SB030	003SB03002	S117739*19	SO	N		3	5	11/29/01	X	X	
CNC54	G003SB030	003SB03002DL	S117739*19*DL	SO	LR	DL	3	5	11/29/01		X	
CNC54	G003SB031	003SB03101	S117739*20	SO	N		0	1	11/29/01	X	X	
CNC54	LABQC	1773921LB	S117739*21	SQ	LB					X	X	
CNC54	LABQC	1773922BS	S117739*22	SQ	BS					X	X	
CNC54	G003SB028	003SB02802MS	S117739*28	SO	MS		3	5	11/29/01	X	X	
CNC54	G003SB028	003SB02802SD	S117739*30	SO	SD		3	5	11/29/01	X	X	
CNC54	LABQC	1773935LB	S117739*35	SQ	LB					X	X	
CNC54	LABQC	1773936BS	S117739*36	SQ	BS					X	X	
CNC54	LABQC	1773938LB	S117739*38	SQ	LB					X		
CNC54	LABQC	1773939BS	S117739*39	SQ	BS					X		
CNC55	G003SB031	003SB03102	S117739A*1	SO	N		3	5	11/29/01	X	X	
CNC55	G003SB032	003SB03201	S117739A*2	SO	N		0	1	11/28/01	X	X	
CNC55	G003SB032	003SB03202	S117739A*3	SO	N		3	5	11/28/01	X	X	
CNC55	G003SB033	003SB03301	S117739A*4	SO	N		0	1	11/29/01	X	X	
CNC55	G003SB033	003SB03302	S117739A*5	SO	N		3	5	11/29/01	X	X	
CNC55	G003SB034	003SB03401	S117739A*6	SO	N		0	1	11/29/01	X	X	
CNC55	G003SB034	003SB03401DL	S117739A*6*DL	SO	LR	DL	0	1	11/29/01		X	
CNC55	G003SB034	003SB03402	S117739A*7	SO	N		3	5	11/29/01	X	X	
CNC55	G003SB034	003SB03402DL	S117739A*7*DL	SO	LR	DL	3	5	11/29/01		X	
CNC55	G003SB035	003SB03501	S117739A*8	SO	N		0	1	11/29/01	X	X	
CNC55	G003SB035	003SB03501DL	S117739A*8*DL	SO	LR	DL	0	1	11/29/01		X	
CNC55	G003SB035	003SB03502	S117739A*9	SO	N		3	5	11/29/01	X	X	

CNC55	G003SB036	003SB03601	S117739A*10	SO	N		0	1	11/29/01	X	X	
CNC55	G003SB036	003SB03602	S117739A*11	SO	N		3	5	11/29/01	X	X	
CNC55	G003SB021	003SB02101	S117739A*12	SO	N		0	1	11/29/01	X	X	X
CNC55	G003SB021	003CB02101	S117739A*13	SO	FD		0	1	11/29/01	X	X	X
CNC55	G003SB021	003SB02102	S117739A*14	SO	N		3	5	11/29/01	X	X	X
CNC55	FIELDQC	003EB021L1	S117739A*15	WQ	EB				11/28/01	X	X	X
CNC55	FIELDQC	003TB021L1	S117739A*16	WQ	TB				11/28/01	X		
CNC55	LABQC	17739A17LB	S117739A*17	SQ	LB					X	X	X
CNC55	LABQC	17739A18BS	S117739A*18	SQ	BS					X	X	X
CNC55	LABQC	17739A24LB	S117739A*24	WQ	LB					X	X	X
CNC55	LABQC	17739A25BS	S117739A*25	WQ	BS					X	X	X
CNC62	G003SB039	003SB03901	S240294*1	SO	N		0	1	01/15/02	X	X	
CNC62	G003SB039	003SB03902	S240294*2	SO	N		3	5	01/15/02	X	X	
CNC62	G003SB040	003SB04001	S240294*3	SO	N		0	1	01/15/02	X	X	
CNC62	G003SB040	003SB04002	S240294*4	SO	N		3	5	01/15/02	X	X	
CNC62	G003SB041	003SB04101	S240294*5	SO	N		0	1	01/15/02	X	X	
CNC62	G003SB041	003SB04102	S240294*6	SO	N		3	5	01/15/02	X	X	
CNC62	G003SB041	003CB04102	S240294*7	SO	FD		3	5	01/15/02	X	X	
CNC62	G003SB042	003SB04201	S240294*8	SO	N		0	1	01/15/02	X	X	
CNC62	G003SB042	003SB04202	S240294*9	SO	N		3	5	01/15/02	X	X	
CNC62	FIELDQC	003EB039M1	S240294*10	WQ	EB				01/15/02	X	X	
CNC62	FIELDQC	003TB039M1	S240294*11	WQ	TB				01/15/02	X		
CNC62	LABQC	4029412LB	S240294*12	SQ	LB					X	X	

Site	Station ID	Sample ID	Laboratory Sample ID	Matrix	Sample Type	Lab Type	Upper Depth	Lower Depth	Date Collected	VOC Summary	Pesticides Summary	PCBs Summary
CNC62	LABQC	4029413BS	S240294*13	SQ	BS					X	X	
CNC62	LABQC	4029419LB	S240294*19	WQ	LB					X	X	
CNC62	LABQC	4029420BS	S240294*20	WQ	BS					X	X	
CNC81	G003SB052	003SB05202	S242159*1	SO	N		3	5	03/27/02	X		
CNC81	G003SB052	003CB05202	S242159*2	SO	FD		3	5	03/27/02	X		
CNC81	G003SB054	003SB05402	S242159*3	SO	N		3	5	03/27/02	X		
CNC81	G003SB055	003SB05502	S242159*4	SO	N		3	5	03/27/02	X		
CNC81	G003SB056	003SB05602	S242159*5	SO	N		3	5	03/27/02	X		
CNC81	G003SB057	003SB05702	S242159*6	SO	N		3	5	03/27/02	X		
CNC81	G003SB058	003SB05802	S242159*7	SO	N		3	5	03/27/02	X		
CNC81	FIELDQC	003EB037M1	S242159*8	WQ	EB				03/27/02	X		
CNC81	FIELDQC	003TB037M1	S242159*9	WQ	TB				03/27/02	X		
CNC81	LABQC	4215910LB	S242159*10	SQ	LB					X		
CNC81	LABQC	4215911BS	S242159*11	SQ	BS					X		
CNC81	G003SB058	003SB05802MS	S242159*17	SO	MS		3	5	03/27/02	X		
CNC81	G003SB058	003SB05802SD	S242159*19	SO	SD		3	5	03/27/02	X		
CNC81	LABQC	4215924LB	S242159*24	WQ	LB					X		
CNC81	LABQC	4215925BS	S242159*25	WQ	BS					X		
CNC81	LABQC	4215931LB	S242159*31	WQ	LB					X		
CNC81	LABQC	4215932BS	S242159*32	WQ	BS					X		
CNC82	G003SB037	003SB03701	S242223*1	SO	N		0	1	03/27/02		X	
CNC82	G003SB037	003SB03702	S242223*2	SO	N		3	5	03/27/02		X	
CNC82	G003SB038	003SB03801	S242223*3	SO	N		0	1	03/27/02		X	

CNC82	G003SB038	003CB03801	S242223*4	SO	FD		0	1	03/27/02		X	
CNC82	G003SB038	003SB03802	S242223*5	SO	N		3	5	03/27/02		X	
CNC82	G003SB043	003SB04301	S242223*6	SO	N		0	1	03/27/02		X	
CNC82	G003SB044	003SB04401	S242223*7	SO	N		0	1	03/27/02		X	
CNC82	G003SB044	003SB04402	S242223*8	SO	N		3	5	03/27/02		X	
CNC82	G003SB045	003SB04501	S242223*9	SO	N		0	1	03/27/02		X	
CNC82	G003SB046	003SB04601	S242223*10	SO	N		0	1	03/27/02		X	
CNC82	G003SB047	003SB04701	S242223*11	SO	N		0	1	03/27/02		X	
CNC82	G003SB048	003SB04801	S242223*12	SO	N		0	1	03/27/02		X	
CNC82	G003SB048	003SB04802	S242223*13	SO	N		3	5	03/27/02		X	
CNC82	G003SB049	003SB04901	S242223*14	SO	N		0	1	03/27/02		X	
CNC82	G003SB049	003SB04902	S242223*15	SO	N		3	5	03/27/02		X	
CNC82	G003SB051	003SB05101	S242223*16	SO	N		0	1	03/27/02		X	
CNC82	G003SB052	003SB05201	S242223*17	SO	N		0	1	03/27/02		X	
CNC82	G003SB052	003SB05202	S242223*18	SO	N		3	5	03/27/02		X	
CNC82	G003SB052	003CB05202	S242223*19	SO	FD		3	5	03/27/02		X	
CNC82	G003SB058	003SB05802	S242223*20	SO	N		3	5	03/27/02		X	
CNC82	LABQC	4222321LB	S242223*21	SQ	LB						X	
CNC82	LABQC	4222322BS	S242223*22	SQ	BS						X	
CNC82	G003SB058	003SB05802MS	S242223*28	SO	MS		3	5	03/27/02		X	
CNC82	G003SB058	003SB05802SD	S242223*30	SO	SD		3	5	03/27/02		X	
CNC83	G003SB053	003SB05301	S242223A*1	SO	N		0	1	03/28/02		X	
CNC83	G003SB054	003SB05401	S242223A*2	SO	N		0	1	03/27/02		X	

SDG	Station ID	Sample ID	Lab Sample ID	Matrix	Sample Type	Lab Type	Upper Depth	Lower Depth	Date Collected	VOC SW8260	Pesticides SW8081	PCBs SW8082
CNC83	G003SB054	003SB05402	S242223A*3	SO	N		3	5	03/27/02		X	
CNC83	G003SB055	003SB05501	S242223A*4	SO	N		0	1	03/27/02		X	
CNC83	G003SB055	003SB05502	S242223A*5	SO	N		3	5	03/27/02		X	
CNC83	G003SB056	003SB05601	S242223A*6	SO	N		0	1	03/27/02		X	
CNC83	G003SB056	003SB05602	S242223A*7	SO	N		3	5	03/27/02		X	
CNC83	G003SB057	003SB05701	S242223A*8	SO	N		0	1	03/27/02		X	
CNC83	G003SB057	003SB05702	S242223A*9	SO	N		3	5	03/27/02		X	
CNC83	G003SB058	003SB05801	S242223A*10	SO	N		0	1	03/27/02		X	
CNC83	G003SB059	003SB05901	S242223A*11	SO	N		0	1	03/28/02		X	
CNC83	G003SB059	003SB05902	S242223A*12	SO	N		3	5	03/28/02		X	
CNC83	G003SB060	003SB06003	S242223A*13	SO	N		1	2	03/27/02		X	
CNC83	G003SB061	003SB06103	S242223A*14	SO	N		1	2	03/27/02		X	
CNC83	G003SB062	003SB06203	S242223A*15	SO	N		1	2	03/27/02		X	
CNC83	G003SB063	003SB06304	S242223A*16	SO	N		5	6	03/27/02		X	
CNC83	G003SB064	003SB06403	S242223A*17	SO	N		1	2	03/27/02		X	
CNC83	G003SB065	003SB06503	S242223A*18	SO	N		1	2	03/28/02		X	
CNC83	G003SB065	003CB06503	S242223A*19	SO	FD		1	2	03/28/02		X	
CNC83	G003SB066	003SB06603	S242223A*20	SO	N		1	2	03/27/02		X	
CNC83	LABQC	42223A21LB	S242223A*21	SQ	LB						X	
CNC83	LABQC	42223A22BS	S242223A*22	SQ	BS						X	
CNC83	G003SB062	003SB06203MS	S242223A*28	SO	MS		3	5	03/27/02		X	
CNC83	G003SB062	003SB06203SD	S242223A*30	SO	SD		3	5	03/27/02		X	
CNC83	LABQC	42223A35LB	S242223A*35	SQ	LB						X	

CNC83	LABQC	42223A36BS	S242223A*36	SQ	BS						X	
CNC84	G003SB050	003SB05001	S242223B*1	SO	N		0	1	03/28/02	X		
CNC84	G003SB051	003SB05102	S242223B*2	SO	N		3	5	03/28/02	X	X	
CNC84	G003SB053	003SB05302	S242223B*3	SO	N		3	5	03/28/02	X	X	
CNC84	G003SB067	003SB06701	S242223B*4	SO	N		0	1	03/27/02		X	
CNC84	G003SB067	003SB06702	S242223B*5	SO	N		3	5	03/27/02		X	
CNC84	FIELDQC	003EB037M1	S242223B*6	WQ	EB				03/27/02		X	
CNC84	LABQC	003EB037M1RE	S242223B*6*RE	WQ	LR	RE			03/27/02		X	
CNC84	FIELDQC	003EB038M1	S242223B*7	WQ	EB				03/28/02	X	X	
CNC84	FIELDQC	003TB038M1	S242223B*8	WQ	TB				03/28/02	X		
CNC84	LABQC	42223B9LB	S242223B*9	SQ	LB					X	X	
CNC84	LABQC	42223B10BS	S242223B*10	SQ	BS					X	X	
CNC84	LABQC	42223B16LB	S242223B*16	WQ	LB					X	X	
CNC84	LABQC	42223B17BS	S242223B*17	WQ	BS					X	X	
CNC84	LABQC	42223B23LB	S242223B*23	WQ	LB						X	
CNC84	LABQC	42223B24BS	S242223B*24	WQ	BS						X	
CNC84	LABQC	42223B26LB	S242223B*26	SQ	LB						X	
CNC84	LABQC	42223B27BS	S242223B*27	SQ	BS						X	
CNC84	LABQC	42223B29LB	S242223B*29	SQ	LB					X		
CNC84	LABQC	42223B30BS	S242223B*30	SQ	BS					X		
CNC109	G003SB068	003SB06801	S243436*1	SO	N		0	1	05/13/02		X	
CNC109	G003SB068	003SB06801DL	S243436*1*DL	SO	LR	DL	0	1	05/13/02		X	
CNC109	G003SB068	003SB06803	S243436*2	SO	N		1	2	05/13/02		X	

Site	Sample	Sample ID	Lab Sample ID	Matrix	Sample Type	QC Type	Upper Depth	Lower Depth	Date Collected	VOC SW8260	Pesticides SW8081	PCBs SW8082
CNC109	G003SB069	003SB06901	S243436*3	SO	N		0	1	05/13/02		X	
CNC109	G003SB069	003CB06901	S243436*4	SO	FD		0	1	05/13/02		X	
CNC109	G003SB069	003SB06903	S243436*5	SO	N		1	2	05/13/02		X	
CNC109	G003SB070	003SB07001	S243436*6	SO	N		0	1	05/15/02		X	
CNC109	G003SB070	003SB07001DL	S243436*6*DL	SO	LR	DL	0	1	05/15/02		X	
CNC109	G003SB070	003SB07002	S243436*7	SO	N		3	5	05/15/02		X	
CNC109	G003SB070	003SB07003	S243436*8	SO	N		1	2	05/15/02		X	
CNC109	G003SB071	003SB07101	S243436*9	SO	N		0	1	05/15/02		X	
CNC109	G003SB071	003SB07101DL	S243436*9*DL	SO	LR	DL	0	1	05/15/02		X	
CNC109	G003SB071	003SB07103	S243436*10	SO	N		1	2	05/15/02		X	
CNC109	G003SB071	003SB07103DL	S243436*10*DL	SO	LR	DL	1	2	05/15/02		X	
CNC109	G003SB072	003SB07201	S243436*11	SO	N		0	1	05/13/02		X	
CNC109	G003SB072	003SB07201DL	S243436*11*DL	SO	LR	DL	0	1	05/13/02		X	
CNC109	G003SB072	003SB07203	S243436*12	SO	N		1	2	05/15/02		X	
CNC109	G003SB072	003SB07203DL	S243436*12*DL	SO	LR	DL	1	2	05/15/02		X	
CNC109	G003SB073	003SB07301	S243436*13	SO	N		0	1	05/15/02		X	
CNC109	G003SB073	003SB07301DL	S243436*13*DL	SO	LR	DL	0	1	05/15/02		X	
CNC109	G003SB073	003SB07303	S243436*14	SO	N		1	2	05/15/02		X	
CNC109	G003SB073	003SB07303DL	S243436*14*DL	SO	LR	DL	1	2	05/15/02		X	
CNC109	G003SB073	003CB07303	S243436*15	SO	FD		1	2	05/15/02		X	
CNC109	G003SB073	003CB07303DL	S243436*15*DL	SO	FD	DL	1	2	05/15/02		X	
CNC109	G003SB074	003SB07401	S243436*16	SO	N		0	1	05/13/02		X	
CNC109	G003SB074	003SB07403	S243436*17	SO	N		1	2	05/13/02		X	

CNC109	G003SB075	003SB07501	S243436*18	SO	N		0	1	05/15/02		X	
CNC109	G003SB075	003SB07501DL	S243436*18*DL	SO	LR	DL	0	1	05/15/02		X	
CNC109	G003SB084	003SB08403	S243436*19	SO	N		1	2	05/13/02		X	
CNC109	G003SB084	003SB08403DL	S243436*19*DL	SO	LR	DL	1	2	05/13/02		X	
CNC109	FIELDQC	003EB068M2	S243436*20	WQ	EB				05/13/02		X	
CNC109	LABQC	4343621LB	S243436*21	SQ	LB						X	
CNC109	LABQC	4343622BS	S243436*22	SQ	BS						X	
CNC109	G003SB075	003SB07501MS	S243436*28	SO	MS		0	1	05/15/02		X	
CNC109	G003SB075	003SB07501SD	S243436*30	SO	SD		0	1	05/15/02		X	
CNC109	LABQC	4343635LB	S243436*35	WQ	LB						X	
CNC109	LABQC	4343636BS	S243436*36	WQ	BS						X	
CNC110	G003SB075	003SB07503	S243436A*1	SO	N		1	2	05/15/02		X	
CNC110	G003SB076	003SB07601	S243436A*2	SO	N		0	1	05/15/02		X	
CNC110	G003SB076	003SB07601DL	S243436A*2*DL	SO	LR	DL	0	1	05/15/02		X	
CNC110	G003SB076	003SB07603	S243436A*3	SO	N		1	2	05/15/02		X	
CNC110	G003SB077	003SB07701	S243436A*4	SO	N		0	1	05/15/02		X	
CNC110	G003SB077	003SB07701DL	S243436A*4*DL	SO	LR	DL	0	1	05/15/02		X	
CNC110	G003SB077	003SB07702	S243436A*5	SO	N		3	5	05/15/02		X	
CNC110	G003SB077	003SB07703	S243436A*6	SO	N		1	2	05/15/02		X	
CNC110	G003SB078	003SB07801	S243436A*7	SO	N		0	1	05/15/02		X	
CNC110	G003SB078	003SB07801DL	S243436A*7*DL	SO	LR	DL	0	1	05/15/02		X	
CNC110	G003SB078	003SB07802	S243436A*8	SO	N		3	5	05/15/02		X	
CNC110	G003SB078	003CB07802	S243436A*9	SO	FD		3	5	05/15/02		X	

SDG	Station ID	Sample ID	Lab Sample ID	Matrix	Sample Type	QA Type	Upper Depth	Lower Depth	Date Collected	VOC SW8260	Pesticides SW8081	PCBs SW8082
CNC110	G003SB078	003SB07803	S243436A*10	SO	N		1	2	05/15/02		X	
CNC110	G003SB079	003SB07901	S243436A*11	SO	N		0	1	05/15/02		X	
CNC110	G003SB079	003SB07901DL	S243436A*11*DL	SO	LR	DL	0	1	05/15/02		X	
CNC110	G003SB079	003SB07903	S243436A*12	SO	N		1	2	05/15/02		X	
CNC110	G003SB079	003SB07903DL	S243436A*12*DL	SO	LR	DL	1	2	05/15/02		X	
CNC110	G003SB080	003SB08001	S243436A*13	SO	N		0	1	05/15/02		X	
CNC110	G003SB080	003SB08003	S243436A*14	SO	N		1	2	05/15/02		X	
CNC110	G003SB081	003SB08101	S243436A*15	SO	N		0	1	05/15/02		X	
CNC110	G003SB081	003SB08103	S243436A*16	SO	N		1	2	05/15/02		X	
CNC110	G003SB081	003SB08103DL	S243436A*16*DL	SO	LR	DL	1	2	05/15/02		X	
CNC110	G003SB082	003SB08203	S243436A*17	SO	N		1	2	05/15/02		X	
CNC110	G003SB082	003SB08203DL	S243436A*17*DL	SO	LR	DL	1	2	05/15/02		X	
CNC110	G003SB083	003SB08303	S243436A*18	SO	N		1	2	05/15/02		X	
CNC110	FIELDQC	003EB069M2	S243436A*19	WQ	EB				05/15/02		X	
CNC110	FIELDQC	003EB070M2	S243436A*20	WQ	EB				05/15/02		X	
CNC110	LABQC	43436A21LB	S243436A*21	SQ	LB						X	
CNC110	LABQC	43436A22BS	S243436A*22	SQ	BS						X	
CNC110	G003SB082	003SB08203MS	S243436A*28	SO	MS		3	5	05/15/02		X	
CNC110	G003SB082	003SB08203SD	S243436A*30	SO	SD		3	5	05/15/02		X	
CNC110	LABQC	43436A35LB	S243436A*35	WQ	LB						X	
CNC110	LABQC	43436A36BS	S243436A*36	WQ	BS						X	
CNC115	G003SB085	003SB08501	S244137*1	SO	N		0	1	06/13/02		X	
CNC115	G003SB086	003SB08601	S244137*2	SO	N		0	1	06/13/02		X	

CNC115	G003SB086	003SB08601DL	S244137*2*DL	SO	LR	DL	0	1	06/13/02		X	
CNC115	G003SB087	003SB08702	S244137*3	SO	N		3	5	06/13/02		X	
CNC115	G003SB088	003SB08801	S244137*4	SO	N		0	1	06/13/02		X	
CNC115	G003SB088	003SB08803	S244137*5	SO	N		1	3	06/13/02		X	
CNC115	G003SB089	003SB08901	S244137*6	SO	N		0	1	06/13/02		X	
CNC115	G003SB089	003SB08903	S244137*7	SO	N		1	3	06/13/02		X	
CNC115	G003SB090	003SB09001	S244137*8	SO	N		0	1	06/13/02		X	
CNC115	G003SB090	003SB09001DL	S244137*8*DL	SO	LR	DL	0	1	06/13/02		X	
CNC115	G003SB090	003SB09003	S244137*9	SO	N		1	3	06/13/02		X	
CNC115	G003SB090	003CB09003	S244137*10	SO	FD		1	3	06/13/02		X	
CNC115	G003SB091	003SB09101	S244137*11	SO	N		0	1	06/13/02		X	
CNC115	G003SB091	003SB09101DL	S244137*11*DL	SO	LR	DL	0	1	06/13/02		X	
CNC115	G003SB091	003SB09103	S244137*12	SO	N		1	3	06/13/02		X	
CNC115	G003SB092	003SB09202	S244137*13	SO	N		3	5	06/13/02		X	
CNC115	FIELDQC	003EB085M3	S244137*14	WQ	EB				06/13/02		X	
CNC115	LABQC	4413715LB	S244137*15	SQ	LB						X	
CNC115	LABQC	4413716BS	S244137*16	SQ	BS						X	
CNC115	G003SB086	003SB08601MS	S244137*22	SO	MS		0	1	06/13/02		X	
CNC115	G003SB086	003SB08601SD	S244137*24	SO	SD		0	1	06/13/02		X	
CNC115	LABQC	4413729LB	S244137*29	WQ	LB						X	
CNC115	LABQC	4413730BS	S244137*30	WQ	BS						X	
CNC133	G003SB093	003SB09301	S245320*1	SO	N		0	1	07/25/02		X	
CNC133	G003SB093	003SB09301RE	S245320*1*RE	SO	LR	RE	0	1	07/25/02		X	

Site	Station ID	Sample ID	Lab Sample ID	Matrix	Sample Type	QC Type	Upper Depth	Lower Depth	Sample Collected	Data Qualifiers	Not Reported	Rejected
CNC133	G003SB094	003SB09401	S245320*2	SO	N		0	1	07/25/02		X	
CNC133	G003SB094	003SB09403	S245320*3	SO	N		1	3	07/25/02		X	
CNC133	G003SB095	003SB09501	S245320*4	SO	N		0	1	07/25/02		X	
CNC133	G003SB095	003SB09501RE	S245320*4*RE	SO	LR	RE	0	1	07/25/02		X	
CNC133	G003SB095	003SB09503	S245320*5	SO	N		1	3	07/25/02		X	
CNC133	G003SB095	003SB09503RE	S245320*5*RE	SO	LR	RE			07/25/02		X	
CNC133	G003SB095	003CB09503	S245320*6	SO	FD		1	3	07/25/02		X	
CNC133	G003SB095	003CB09503RE	S245320*6*RE	SO	LR	RE			07/25/02		X	
CNC133	G003SB096	003SB09601	S245320*7	SO	N		0	1	07/25/02		X	
CNC133	G003SB097	003SB09701	S245320*8	SO	N		0	1	07/25/02		X	
CNC133	FIELDQC	003EB093M4	S245320*9	WQ	EB				07/25/02		X	
CNC133	LABQC	4532010LB	S245320*10	SQ	LB						X	
CNC133	LABQC	4532011BS	S245320*11	SQ	BS						X	
CNC133	LABQC	4532017LB	S245320*17	WQ	LB						X	
CNC133	LABQC	4532018BS	S245320*18	WQ	BS						X	
CNC133	LABQC	4532024LB	S245320*24	SQ	LB						X	
CNC133	LABQC	4532025BS	S245320*25	SQ	BS						X	
CNC147	G003SB098	003SB09801	S247015*1	SO	N		0	1	09/27/02		X	
CNC147	LABQC	470152LB	S247015*2	SQ	LB						X	
CNC147	LABQC	470153BS	S247015*3	SQ	BS						X	

MATRIX CODE

SO – Soil
SQ – Soil QC Samples
WQ – Water QC Samples

SAMPLE TYPE CODE

EB - Equipment Blank
TB - Trip Blank
LB – Laboratory Blank
BS – Blank Spike
FD - Field Duplicate
LR - Laboratory Replicate
MS - Matrix Spike
SD - Matrix Spike Duplicate
N - Native Sample

LR TYPE CODE

DL – Dilution
RE - Reanalysis

ANALYSIS CODE

VOC - Volatile Organic Carbons
PCBs - Polychlorinated Biphenyls

Organic Parameters

Quality Control Review

The following list represents the QA/QC measures that were reviewed during the data quality evaluation procedure for organic data.

- **Holding Times** – The holding times are evaluated to verify that samples were extracted and analyzed within holding times.
- **Blank samples** – Method blanks, equipment blanks, and trip blanks, were provided for this project. Blank samples enable the reviewer to determine if an analyte may be attributed to sampling or laboratory procedures, rather than environmental contamination from site activities.
- **Surrogate Recoveries** – Surrogate Compounds are added to each sample and the recoveries are used to monitor lab performance and possible matrix interference.
- **Lab Control Sample (LCS)** – This sample is a "controlled matrix", either laboratory reagent water or Ottawa sand, in which target compounds have been added prior to extraction/analysis. The recoveries serve as a monitor of the overall performance of each step during the analysis, including sample preparation.
- **Matrix Spike/Matrix Spike Duplicate (MS/MSD) Samples** – Spike recovery is used to evaluate potential matrix interferences, as well as accuracy. Precision information is also determined by calculating the reproducibility between the recoveries of each spiked parameter.
- **Field Duplicate Samples** – These samples are collected to determine precision between a native and its duplicate. This information can only be determined when target compounds are detected.
- **GC/MS Tuning** – The mass spectrum of the tuning compound is evaluated for method compliance. The criteria are established to verify the proper mass assignment and mass resolution.
- **Initial Calibration** – The initial calibration ensures that the instrument is capable of producing acceptable qualitative and quantitative data for the compounds of interest.
- **Continuing Calibration** – The continuing calibration checks satisfactory performance of the instrument and its predicted response to the target compounds.
- **Confirmation** – If GCMS methodology is not initially used for analysis, SW-846 method 8000 requires confirmation when the composition of samples is not well characterized. Therefore, even when the identification has been confirmed on a dissimilar column or detector, the agreement of the quantitative results on both columns is evaluated. For Pesticide and PCB analyses covered in this report, confirmation was performed using a dissimilar analytical column. The laboratory analyzed samples with a gas

chromatograph (GC) utilizing simultaneous primary and confirmation data acquisition. Per SW-86 method 8000, 40% RPD criteria was used as the acceptance limit.

- **Internal Standards** – The internal standards (retention time and response) are evaluated for method compliance. The internal standards are used in quantitation of the target parameters and monitor the instrument sensitivity and response for stability during each analysis.

Volatile Organic Compounds

The QA/QC parameters for the Volatile Organic Compound analyses by method SW-846 8260 for all of the samples were within acceptable control limits, except as noted below.

Blank Contamination

All laboratory, equipment, and trip blank samples were free of contamination, except as listed in Table 2.

TABLE 2
Blank Contamination: VOCs
Charleston Naval Complex, Zone G, SWMU 3, Charleston, SC

CNC54	S117739*21	11773921LB	LB	Acetone	8.1	ug/Kg	81.0 ug/Kg	S117739*1-14, 17-19
CNC54	S117739*35	11773935LB	LB	Methylene Chloride	160	ug/Kg	1600.0 ug/Kg	S117739*5DL
CNC54	S117739*35	11773935LB	LB	Toluene	98	ug/Kg	490.0 ug/Kg	S117739*5DL
CNC54	S117739*35	11773935LB	LB	Chlorobenzene	100	ug/Kg	500.0 ug/Kg	S117739*5DL
CNC62	S240294*10	003EB039M1	EB	Acetone	130	ug/L	1300.0 ug/Kg	S240294*1-9
CNC81	S242159*10	24215910LB	LB	1,2,3-Trichlorobenzene	1.8	ug/Kg	9.0 ug/Kg	S242159*9
CNC81	S242159*24	24215924LB	LB	1,2,3-Trichlorobenzene	1.6	ug/Kg	8.0 ug/Kg	S242159*1-4, 6, 7
CNC81	S242159*31	24215931LB	LB	1,2,3-Trichlorobenzene	1.7	ug/Kg	9.0 ug/Kg	S242159*5, 8
CNC81	S242159*31	24215931LB	LB	2-Butanone	3.4	ug/Kg	34.0 ug/Kg	S242159*5, 8
CNC81	S242159*31	24215931LB	LB	Toluene	3.0	ug/Kg	15.0 ug/Kg	S242159*5, 8
CNC81	S242159*9	003TB037M1	TB	Acetone	5.6	ug/L	56.0 ug/Kg	S242159*1-9
CNC84	S242223B*9	242223B9LB	LB	1,2,3-Trichlorobenzene	1.6	ug/Kg	8.0 ug/Kg	S242223B*1-3, 8
CNC84	S242223B*16	242223B16LB	LB	1,2,3-Trichlorobenzene	1.7	ug/Kg	9.0 ug/Kg	S242223B*7
CNC84	S242223B*16	242223B16LB	LB	2-Butanone	3.4	ug/Kg	34.0 ug/Kg	S242223B*7
CNC84	S242223B*16	242223B16LB	LB	Toluene	3.0	ug/Kg	15.0 ug/Kg	S242223B*7

If a target parameter determined to be a common contaminant was reported in a field sample, and the concentration was below the level determined to be due to blank contamination, the following actions were taken:

- If the concentration was above the reporting limit, the numeric result was unchanged, but it was flagged "U", as undetected.
- If the concentration was below the reporting limit, the numeric result was changed to the value of the reporting limit, and it was flagged "U", as undetected.

Surrogate, Matrix Spike, Matrix Spike Duplicate, Laboratory Control Spike, and Laboratory Control Spike Duplicate Recoveries and Relative Percent Differences (RPDs)

All surrogate, matrix spike (MS), matrix spike duplicate (MSD), and laboratory control spike (LCS), and laboratory control spike duplicate (LCSD) recoveries and relative percent differences (RPDs) were within acceptable quality control limits, except as noted in Table 3.

TABLE 3
Surrogate, MS/MSD and LCS/LCSD Recoveries and RPDs Out of QC Limits: VOCs
Charleston Naval Complex, Zone G, SWMU 3, Charleston, SC

CNC54	003SB02802 MS/MSD	Bromomethane	161* / 156*	70-130			S117739*14	Detects – J; Non-Detects – UJ
		Methylene Chloride	86 / 56*	70-130	48*	20		
		Vinyl Acetate	67* / 61*	70-130				
		2-Chloroethyl vinyl ether	0* / 0*	70-130				
		4-Methyl-2-pentanone	120 / 147*	70-130				
		2-Hexanone	120 / 137*	70-130				
CNC54	17739922BS LCS	Acetone	132*	70-130			S117739*1-14, 17-19	Detects – J; Non-Detects – UJ
CNC54	17739936BS LCS	Acetone	140*	70-130			S117739*15, 16, 20	Detects – J; Non-Detects – UJ
CNC54	17739939BS LCS	Acetone	68*	70-130			S117739*5DL	Detects – J; Non-Detects – UJ
		Vinyl Acetate	29*	70-130				
		2-Chloroethyl vinyl ether	0*	70-130				
		Bromoform	64*	70-130				
		1,1,2,2-Tetrachloroethane	67*	70-130				
CNC55	17739A18BS LCS/LCSD	Vinyl Acetate	44* / 45*	70-130			S117739A*1-15	Detects – J; Non-Detects – UJ

ABLE 3
Surrogate, MS/MSD and LCS/LCSD Recoveries and RPDs Out of QC Limits: VOCs
Charleston Naval Complex, Zone G, SWMU 3, Charleston, SC

[illegible]	[illegible]	[illegible]	[illegible]	[illegible]	[illegible]	[illegible]	[illegible]	[illegible]
CNC55	17739A18BS LCS/LCSD	2-Chloroethyl vinyl ether	0* / 0*	70-130			S117739A*1-15	Detects – J; Non-Detects – R
CNC55	17739A25BS LCS	Bromomethane	240*	70-130			S117739A*16	Detects – J; Non-Detects – UJ
		Vinyl Acetate	68*	70-130				
		2-Chloroethyl vinyl ether	0*	70-130				
CNC62	4029413BS LCS	Trans-1,2-Dichloroethene	198*	70-130			S240294*1-9	Detects Only – J
CNC62	4029413BS LCS	1,2-Dichloroethene (total)	150*	70-130			S240294*1-9	Detects Only – J
CNC62	4029420BS LCS	Trans-1,2-Dichloroethene	188*	70-130			S240294*10, 11	Detects Only – J
		1,2-Dichloroethene (total)	140*	70-130				
CNC81	4215911BS LCS	Bromomethane	176*	70-130			S242159*9	Detects Only – J
		Trans-1,2-Dichloroethene	136*	70-130				
		1,1-Dichloroethane	166*	70-130				
		Vinyl acetate	200*	70-130				
CNC81	4215925BS LCS	1,1-Dichloroethane	178*	70-130			S242159*1-4, 6, 7	Detects Only – J
		Vinyl acetate	240*	70-130				
		2-Butanone	140*	70-130				
		1,2,3-Trichlorobenzene	135*	70-130				
CNC81	4215932BS LCS	Acetone	150*	70-130			S242159*5, 8	Detects Only – J
		1,1-Dichloroethane	176*	70-130				
		Vinyl acetate	220*	70-130				
		2-Butanone	147*	70-130				
		4-Methyl-2-pentanone	140*	70-130				
		2-Hexanone	140*	70-130				
		1,2,3-Trichlorobenzene	139*	70-130				
CNC84	42223B10BS LCS	Acetone	150*	70-130			S24223B*1, 2, 3, 8	Detects Only – J
		1,1-Dichloroethane	178*	70-130				
		Vinyl acetate	240*	70-130				
		2-Butanone	140*	70-130				

TABLE 3
Surrogate, MS/MSD and LCS/LCSD Recoveries and RPDs Out of QC Limits: VOCs
Charleston Naval Complex, Zone G, SWMU 3, Charleston, SC

[illegible]	[illegible]	[illegible]	[illegible]	[illegible]	[illegible]	[illegible]	[illegible]	[illegible]
CNC84	42223B10BS LCS	1,2,3-Trichlorobenzene	135*	70-130			S24223B*1, 2, 3, 8	Detects Only – J
CNC84	42223B17BS LCS	Acetone	150*	70-130			S24223B*7	Detects Only – J
		1,1-Dichloroethane	176*	70-130				
		Vinyl acetate	220*	70-130				
		2-Butanone	147*	70-130				
		4-Methyl-2-pentanone	140*	70-130				
		2-Hexanone	140*	70-130				
		1,2,3-Trichlorobenzene	139*	70-130				
* - out of control limits								

Field Duplicate Samples

All Field Duplicate Samples were within acceptable quality control limits, except as noted in Table 4 below. Non-homogeneity in soil matrices is often the reason for poor precision between the native and field duplicate samples. No flags are applied due to Field Duplicate precision.

TABLE 4
Field Duplicate RPDs Out of QC Limits: VOCs
Charleston Naval Complex, Zone G, SWMU 3, Charleston, SC

[illegible]	[illegible]	[illegible]	[illegible]	[illegible]	[illegible]	[illegible]
CNC55	003SB02101 / 003CB02101	Acetone	140 µg/Kg	9.4 µg/Kg	200*	35
		m,p-Xylene	37 µg/Kg	25 µg/Kg	38.7*	35
		Xylene (total)	49 µg/Kg	34 µg/Kg	36.1*	35
CNC62	003SB04102 / 003CB04102	Tetrachloroethene	27 µg/Kg	12 µg/Kg	76.9*	35
* - out of control limits						

Initial and Continuing Calibration Criteria

All initial calibration criteria and continuing calibration criteria were met, except as listed in Table 5 below.

TABLE 5
Exceptions to Initial Calibration Criteria and Continuing Calibration Criteria: VOCs
Charleston Naval Complex, Zone G, SWMU 3, Charleston, SC

[illegible]	[illegible]	[illegible]	[illegible]
MSL5972–ICAL–11/30/01, 17:09	Acetone	R^2=0.988	S117739*1-20
	Carbon disulfide	R^2=0.986	
	2-Chloroethyl vinyl ether	No response	
MSL5972-CCAL-12/04/01, 10:17	Acetone	63.4% high	S117739*1-14, 17-19
	2-Butanone	20.6% high	
MSL5972-CCAL-12/05/01, 10:45	Bromomethane	77.1% high	S117739*15, 16, 20
	Acetone	25.5% high	
MSP5973-CCAL-12/07/01, 03:27	Chloromethane	27.6% high	S117739*5DL
	Bromomethane	28.5% low	
	Acetone	23.5% low	
	2-Chloroethyl vinyl ether	70.5% low	
	Bromoform	27.5% low	
	1,1,2,2-Tetrachloroethane	25.4% low	
MSM5972-ICAL-11/29/01, 16:54	2-Chloroethyl vinyl ether	No response	S117739A*1-16
MSM5972-CCAL-12/04/01, 09:41	Vinyl Acetate	62.0% low	S117739A*1-15
	2-Chloroethyl vinyl ether	No response; RRF = 0.008	
MSM5972-CCAL-12/04/01, 09:41	Acetone	RRF = 0.041	S117739A*1-15
MSM5972-CCAL-12/07/01, 05:36	Bromomethane	45.1% low	S117739A*16
	Chloroethane	81.8% low	
	Acetone	23.4% low	
	Methylene Chloride	21.3% low	
	1,1-Dichloroethane	47.2% high	
	Vinyl Acetate	22.3% high	

TABLE 5
Exceptions to Initial Calibration Criteria and Continuing Calibration Criteria: VOCs
Charleston Naval Complex, Zone G, SWMU 3, Charleston, SC

[illegible]	[illegible]	[illegible]	[illegible]
MSM5972-CCAL-12/07/01, 05:36	Chlorobenzene	29.3% high	S117739A*16
	Acetone	RRF = 0.031	
	2-Chloroethyl vinyl ether	RRF = 0.010	
MSM5972-ICAL-01/22/02, 12:26	2-Chloroethyl vinyl ether	RRF = 0.0359	S240294*1-11
MSM5972-CCAL-01/22/02, 14:12	Acetone	RRF = 0.0493 and 31.9% high	S240294*1-9
	Trans-1,2-Dichloroethene	109.4% high	
	2-Chloroethyl vinyl ether	RRF = 0.037	
	1,2-Dichloroethene (total)	58.6% high	
MSM5972-CCAL-01/24/02, 09:33	Acetone	RRF = 0.039	S240294*10, 11
MSM5972-CCAL-01/24/02, 09:33	Trans-1,2-Dichloroethene	82.5% high	S240294*10, 11
	2-Chloroethyl vinyl ether	RRF = 0.036	
	Tetrachloroethene	22.3% low	
	Dibromochloromethane	20.9% low	
	Bromoform	32.1% low	
	1,4-Dichlorobenzene	20.2% low	
	1,2-Dichlorobenzene	23.4% low	
	1,2,4-Trichlorobenzene	22.5% low	
	1,2,3-Trichlorobenzene	20.1% low	
	1,2-Dichloroethene (total)	38.0% high	
MSM5972-ICAL-04/02/02, 0925	1,2,3-Trichlorobenzene	18.4% RSD	CNC81 – All, CNC84 - All
MSM5972-CCAL-04/08/02, 2113	Acetone	47.6% high	S242159*9
	Trans-1,2-Dichloroethene	47.9% high	
	1,1-Dichloroethane	72.7% high	
	Vinyl Acetate	136.5% high	
	2-Butanone	24.1% high	
	4-Methyl-2-pentanone	20.2% high	

TABLE 5
Exceptions to Initial Calibration Criteria and Continuing Calibration Criteria: VOCs
Charleston Naval Complex, Zone G, SWMU 3, Charleston, SC

MSM5972-CCAL-04/08/02, 2113	1,2,3-Trichlorobenzene	26.4% high	S242159*9
	1,2-Dichloroethene (total)	25.6% high	
MSM5972-CCAL-04/09/02, 0956	Acetone	43.1% high	S242159*1-4, 6, 7
	1,1-Dichloroethane	78.8% high	
	Vinyl acetate	141.0% high	
	2-Butanone	28.0% high	
	4-Methyl-2-pentanone	24.1% high	
MSM5972-CCAL-04/10/02, 0934	Acetone	58.0% high	S242159*5, 8, S242223B*7
	Trans-1,2-Dichloroethene	29.1% high	
	1,1-Dichloroethane	77.4% high	
	Vinyl acetate	127.1% high	
	2-Butanone	38.9% high	
	4-Methyl-2-pentanone	26.6% high	
	2-Hexanone	25.0% high	
	Bromoform	25.7% high	
	1,1,2,2-Tetrachloroethane	22.5% high	
	1,2,3-Trichlorobenzene	30.5% low	
MSM5972-CCAL-04/09/02, 0946	Acetone	43.1% high	S242223B*1, 2, 3, 8
	Vinyl acetate	141.0% high	
	2-Butanone	28.0% high	
	4-Methyl-2-pentanone	24.1% high	

Flags were applied to the compounds in the associated samples in the following manner:

- When the percent Relative Standard Deviation (%RSD) or correlation coefficient (R^2) was out in the initial calibration, all associated samples were qualified. Detected compounds were flagged "J" and non-detected compounds were flagged "UJ", as estimated.
- When the percent difference (%D) was low in the continuing calibration standards, detected compounds were flagged "J" and non-detected compounds were flagged "UJ", as estimated.

- When the percent difference (%D) was high in the continuing calibration standards, detected compounds were flagged "J", as estimated. Non-detected compounds were not flagged.
- When the Average Relative Response Factor (RRF) was low in the initial calibration, detected compounds were flagged "J", and non-detected compounds were flagged "UJ", as estimated.
- When the Relative Response Factor (RRF) was low in the continuing calibration, detected compounds were flagged "J", and non-detected compounds were flagged "UJ", as estimated.
- In extreme cases where the RRF was significantly low or there was no response, detected compounds were flagged "J", as estimated, and non-detected compounds were qualified "R", as rejected.

Organochlorine Pesticides

The QA/QC parameters for the Organochlorine Pesticides analyses by method SW-846 8081 for all of the samples were within acceptable control limits, except as noted below.

Holding Times

All holding times were met except for S245320*1RE, 4RE, 5RE, and 6RE. These samples were re-extracted, due to low surrogate recoveries in the original analysis, 5 days beyond holding time. The reanalyses were reported and qualified as estimated (J/UJ).

Blank Contamination

All laboratory, equipment, and trip blank samples were free of contamination, except as listed in Table 6.

TABLE 6
Blank Contamination: Pesticides
Charleston Naval Complex, Zone G, SWMU 3, Charleston, SC

CNC110	S243436A*19	003EB069M2	EB	Gamma-Chlordane	0.011	ug/L	1.8 ug/Kg	CNC110 – All
CNC110	S243436A*20	003EB070M2	EB	Gamma-Chlordane	0.0079	ug/L	1.3 ug/Kg	CNC110 - All
CNC147	S247015*2	470152LB	LB	Heptachlor	0.27	ug/Kg	1.4 ug/Kg	CNC147 - All

If a target parameter determined to be a common contaminant was reported in a field sample, and the concentration was below the level determined to be due to blank contamination, the following actions were taken:

- If the concentration was above the reporting limit, the numeric result was unchanged, but it was flagged "U", as undetected.

- If the concentration was below the reporting limit, the numeric result was changed to the value of the reporting limit, and it was flagged "U", as undetected.

Surrogate, Matrix Spike, Matrix Spike Duplicate, Laboratory Control Spike, and Laboratory Control Spike Duplicate Recoveries and Relative Percent Differences (RPDs)

All surrogate, matrix spike (MS), matrix spike duplicate (MSD), laboratory control spike (LCS), and laboratory control spike duplicate (LCSD) recoveries and relative percent differences (RPDs) were within acceptable quality control limits, except as noted in Table 7.

TABLE 7
Surrogate, MS/MSD, and LCS/LCSD Recoveries and RPDs Out of QC Limits: Pesticides
Charleston Naval Complex, Zone G, SWMU 3, Charleston, SC

CNC54	003SB02802 MS/MSD	Gamma-BHC	42* / 39*	46-127			S117739*14	Detects – J; Non-Detects – UJ
		Delta-BHC	10* / 5*	10-142				
		Endrin Ketone	97 / 69	29-112	34*	31		
CNC55	003SB03601	Tetrachloro-m-xylene	46* / 47*	60-150			S117739A*10	Detects – J; Non-Detects – UJ
		Decachlorobiphenyl	56* / 61	60-150				
CNC55	003CB02101	Tetrachloro-m-xylene	42* / 41*	60-150			S117739A*13	Detects – J; Non-Detects – UJ
		Decachlorobiphenyl	58* / 58*	60-150				
CNC55	003SB02102 MS/MSD	Heptachlor	68 / 32	35-130	74*	31	S117739A*14	Detects – J; Non-Detects – UJ
CNC62	003SB03902 MS/MSD	Gamma-Chlordane	140* / 0*	34-121	200*	40	S240294*2	Detects – J; Non-Detects – UJ
		Heptachlor	70 / 97	35-130	32*	31		
		Alpha-Chlordane	189* / 0*	45-140	200*	40		
		4,4-DDE	53 / 0*	34-121	200*	25		
		Methoxychlor	21* / 23*	24-152				
CNC82	003SB03702	Tetrachloro-m-xylene	16* / 21*	60-150			S242223*2	Detects – J; Non-Detects – UJ
		Decachlorobiphenyl	60 / 50*	60-150				
CNC82	003SB04902	Tetrachloro-m-xylene	28* / 35*	60-150			S242223*15	Detects – J; Non-Detects – UJ
		Decachlorobiphenyl	71 / 57*	60-150				
CNC84	42223B24BS LCS	Endrin ketone	150*	20-146			S242223B*6RE	Detects Only - J
		Endrin aldehyde	155*	42-122				

TABLE 7
Surrogate, MS/MSD, and LCS/LCSD Recoveries and RPDs Out of QC Limits: Pesticides
Charleston Naval Complex, Zone G, SWMU 3, Charleston, SC

[illegible]	[illegible]	[illegible]	[illegible]	[illegible]	[illegible]	[illegible]	[illegible]	[illegible]
CNC84	42223B17BS LCS	Endrin ketone	127*	29-112			S242223B*4, 5	Detects Only - J
CNC84	42223B27BS LCS	Endrin ketone	127*	29-112			S242223B*2, 3	Detects Only - J
CNC109	003SB07501 MS/MSD	Endosulfan I	154* / 151*	10-141			S243436*18	Detects Only - J
		Endrin aldehyde	200* / 171*	10-130				
CNC109	4343622BS LCS	Endrin ketone	116*	29-112			S243436*1-19, 1DL, 6DL, 9DL, 10DL-15DL, 18DL, 19DL	Detects Only - J
CNC133	4532011BS LCS	Gamma-BHC	39*	46-127			S245320*1-8	Detects – J; Non-Detects – UJ
		4,4'-DDE	33*	34-121				
CNC133	4532018BS LCS	Gamma-BHC	33*	46-127			S245320*1RE, 4RE, 5RE, 6RE	Detects – J; Non-Detects – UJ

* - out of control limits

Field Duplicate Samples

All Field Duplicate Samples were within acceptable quality control limits, except as noted in Table 8 below. Non-homogeneity in soil matrices is often the reason for poor precision between the native and field duplicate samples. No flags are applied due to Field Duplicate precision.

TABLE 8
Field Duplicate RPDs Out of QC Limits: Pesticides
Charleston Naval Complex, Zone G, SWMU 3, Charleston, SC

[illegible]	[illegible]	[illegible]	[illegible]	[illegible]	[illegible]	[illegible]
CNC55	003SB02101 / 003CB02101	Heptachlor epoxide	8.7 µg/Kg	4.7 µg/Kg	59.7*	35
		Gamma-Chlordane	4.2 µg/Kg	2.6 µg/Kg	47.0*	35
		Alpha-Chlordane	3.5 µg/Kg	1.5 µg/Kg	200.0*	35
		4,4'-DDE	82.0 µg/Kg	56.0 µg/Kg	37.6*	35
CNC62	003SB04102 / 003CB04102	4,4'-DDT	8.7 µg/Kg	1.0 µg/Kg	158.7*	35

TABLE 8
Field Duplicate RPDs Out of QC Limits: Pesticides
Charleston Naval Complex, Zone G, SWMU 3, Charleston, SC

CNC109	003SB07303 / 003CB07303	Gamma-Chlordane	99 µg/Kg	160 µg/Kg	47.1*	35
		Alpha-Chlordane	28 µg/Kg	75 µg/Kg	91.3*	35
		Dieldrin	46 µg/Kg	110 µg/Kg	82.0*	35
		4,4'-DDE	1700 µg/Kg	2900 µg/Kg	52.2*	35
		4,4'-DDT	31000 µg/Kg	45000 µg/Kg	36.8*	35
CNC110	003SB07802 / 003CB07802	4,4'-DDT	15 µg/Kg	10 µg/Kg	40*	35
CNC115	003SB09003 / 003CB09003	Heptachlor epoxide	23 µg/Kg	16 µg/Kg	35.9*	35
		Chlordane	450 µg/Kg	260 µg/Kg	53.5*	35

* - out of control limits

Initial and Continuing Calibration Criteria

All initial and continuing calibration criteria were met except as noted in Table 9.

TABLE 9
Exceptions to Initial Calibration Criteria and Continuing Calibration Criteria: Pesticides
Charleston Naval Complex, Zone G, SWMU 3, Charleston, SC

SGMECD1-CCAL-12/06/01, 16:11	Endosulfan I	17.7% high	S117739*1-8, 11, 12, 14-19
SGMECD1-CCAL-12/07/01, 06:05	Endrin	15.9% high	S117739*1-8, 11, 12, 14-19
	Endosulfan II	16.8% high	
	Endosulfan Sulfate	27.8% high	
	Endrin Ketone	27.6% high	
SGMECD2-CCAL-12/07/01, 06:05	Heptachlor Epoxide	15.1% high	S117739*1-8, 11, 12, 14-19
	Endosulfan II	15.2% high	
SGMECD1-CCAL-12/10/01, 23:38	Alpha-BHC	20.0% low	S117739*9, 10, 13, 5DL, 13DL, 14DL, 19DL
	Gamma-BHC	20.0% low	
	Heptachlor	16.5% low	

TABLE 9
Exceptions to Initial Calibration Criteria and Continuing Calibration Criteria: Pesticides
Charleston Naval Complex, Zone G, SWMU 3, Charleston, SC

[illegible]	[illegible]	[illegible]	[illegible]
SGMECD1-CCAL-12/10/01, 23:38	Delta-BHC	17.1% low	S117739*9, 10, 13, 5DL, 13DL, 14DL, 19DL
	Aldrin	20.2% low	
SGMECD1-CCAL-12/10/01, 23:38	Heptachlor Epoxide	18.1% low	S117739*9, 10, 13, 5DL, 13DL, 14DL, 19DL
	Alpha-Chlordane	15.8% low	
	4,4'-DDE	16.7% low	
SGMECD2-CCAL-12/10/01, 23:38	Aldrin	20.6% low	S117739*9, 10, 13, 5DL, 13DL, 14DL, 19DL
	Gamma-Chlordane	16.2% low	
	Endrin	18.6% low	
SGMECD1-CCAL-12/13/01, 16:14	Methoxychlor	22.0% low	S117739*20
SGMECD2-CCAL-12/13/01, 16:14	Methoxychlor	16.5% low	S117739*20
SGJECD2-CCAL-12/11/01, 16:11	4,4'-DDD	20.1% high	S117739A*2, 3, 6-9, 11, 12, 14, 15, 7DL
	Endosulfan II	16.0% high	
	4,4'-DDT	29.9% high	
	Endrin Aldehyde	22.0% high	
	Endosulfan Sulfate	22.1% high	
	Endrin Ketone	21.1% high	
SGMECD1-CCAL-12/13/01, 16:14	Alpha-BHC	24.0% low	S117739A*1, 5, 10, 13, 8DL
	Gamma-BHC	17.3% low	
	Heptachlor	19.9% high	
	Delta-BHC	21.9% low	
	Aldrin	19.2% low	
	4,4'DDE	16.9% low	
	Endosulfan II	19.9% high	
	Endrin Aldehyde	28.1% high	
SGMECD2-CCAL-12/13/01, 16:14	Heptachlor	23.7% high	S117739A*1, 5, 10, 13, 8DL
	Endosulfan II	17.0% high	
	Endrin Aldehyde	25.0% high	

TABLE 9
Exceptions to Initial Calibration Criteria and Continuing Calibration Criteria: Pesticides
Charleston Naval Complex, Zone G, SWMU 3, Charleston, SC

SGMECD2-CCAL-12/13/01, 16:14	Endrin Ketone	21.8% high	S117739A*1, 5, 10, 13, 8DL
SGMECD1-CCAL-12/14/01, 04:21	Alpha-BHC	21.8% low	S117739A*1, 5, 10, 13, 8DL
SGMECD1-CCAL-12/14/01, 04:21	Gamma-BHC	16.6% low	S117739A*1, 5, 10, 13, 8DL
	Heptachlor	24.2% high	
SGMECD1-CCAL-12/14/01, 04:21	Delta-BHC	19.4% low	S117739A*1, 5, 10, 13, 8DL
	Aldrin	18.4% low	
	Endosulfan II	24.0% high	
	Endrin Aldehyde	19.3% high	
	Methoxychlor	21.6% high	
	Endrin Ketone	17.1% high	
	Chlordane	15.3% low	
SGMECD2-CCAL-12/14/01, 04:21	Heptachlor	30.6% high	S117739A*1, 5, 10, 13, 8DL
	Dieldrin	18.0% high	
	Endrin	28.5% high	
	Endosulfan II	25.9% high	
	4,4'-DDT	19.3% high	
	Endrin Aldehyde	28.6% high	
	Methoxychlor	24.9% high	
	Endrin Ketone	31.0% high	
SGMECD1-CCAL-12/14/01, 19:23	Alpha-BHC	24.6% low	S117739A*4, 6DL
	Gamma-BHC	18.4% low	
	Heptachlor	16.1% high	
	Delta-BHC	19.0% low	
	Aldrin	19.8% low	
	Dieldrin	18.8% high	
	Endosulfan II	34.2% high	
	Endrin Aldehyde	16.3% high	

TABLE 9
Exceptions to Initial Calibration Criteria and Continuing Calibration Criteria: Pesticides
Charleston Naval Complex, Zone G, SWMU 3, Charleston, SC

[illegible]	[illegible]	[illegible]	[illegible]
SGMECD1-CCAL-12/14/01, 19:23	Endrin Ketone	28.5% high	S117739A*4, 6DL
	Chlordane	17.5% low	
SGMECD2-CCAL-12/14/01, 19:23	Heptachlor	21.0% high	S117739A*4, 6DL
	Endosulfan I	18.7% high	
SGMECD2-CCAL-12/14/01, 19:23	Dieldrin	21.3% high	S117739A*4, 6DL
	Endrin	21.5% high	
SGMECD2-CCAL-12/14/01, 19:23	Endosulfan II	31.2% high	S117739A*4, 6DL
	Endrin Aldehyde	29.2% high	
	Endosulfan Sulfate	15.8% high	
	Methoxychlor	19.2% high	
	Endrin Ketone	37.1% high	
	Chlordane	15.0% low	
SGMECD1-CCAL-12/15/01, 05:43	Alpha-BHC	20.9% low	S117739A*4, 6DL
	Gamma-BHC	15.6% low	
	Heptachlor	19.9% high	
	Delta-BHC	17.3% low	
	Aldrin	17.1% low	
	Dieldrin	17.7% high	
	Endosulfan II	32.0% high	
	Endrin Aldehyde	29.2% high	
	Methoxychlor	18.7% high	
	Endrin Ketone	25.2% high	
	Chlordane	16.5% low	
SGMECD2-CCAL-12/15/01, 05:43	Heptachlor	25.7% high	S117739A*4, 6DL
	Endosulfan I	17.3% high	
	Dieldrin	24.7% high	
	Endrin	28.0% high	
	Endosulfan II	32.4% high	
	4,4'-DDT	17.8% high	

TABLE 9
Exceptions to Initial Calibration Criteria and Continuing Calibration Criteria: Pesticides
Charleston Naval Complex, Zone G, SWMU 3, Charleston, SC

SGMECD2-CCAL-12/15/01, 05:43	Endrin Aldehyde	33.0% high	S117739A*4, 6DL
	Endosulfan Sulfate	18.5% high	
	Methoxychlor	25.1% high	
	Endrin Ketone	40.2% high	
SGMECD1-CCAL-01/22/02, 15:25	Chlordane	15.8% low	S240294*2, 3, 5, 6, 7, 9, 10
SGMECD1-CCAL-01/23/02, 02:46	Methoxychlor	17.8% high	S240294*1-10
SGMECD1-CCAL-01/23/02, 14:03	Chlordane	18.8% low	S240294*1, 4, 8
SGMECD2-CCAL-01/23/02, 11:25	Endrin	16.4% high	S240294*1, 4, 8
SGMECD1-CCAL-01/23/02, 20:03	4,4'-DDD	17.9% high	S240294*1, 4, 8
	Endosulfan II	36.4% high	
	Endrin Aldehyde	16.0% high	
	Endosulfan Sulfate	17.9% high	
	Methoxychlor	26.8% high	
	Endrin Ketone	21.7% high	
	Chlordane	17.6% low	
SGMECD2-CCAL-01/23/02, 20:03	4,4'-DDD	19.8% high	S240294*1, 4, 8
	Endosulfan II	16.2% high	
	Endosulfan Sulfate	17.4% high	
	Endrin Ketone	23.1% high	
SGJECD1-CCAL-04/04/02, 1225	Methoxychlor	16.3% low	S242223*1-18, 20
SGJECD1-CCAL-04/04/02, 1323	Chlordane	18.8% low	S242223*1-18, 20
SGJECD1-CCAL-04/05/02, 0155	4,4'-DDT	22.7% low	S242223*1-18, 20
	Methoxychlor	23.4% low	
SGJECD1-CCAL-04/05/02, 0310	Chlordane	20.0% low	S242223*1-18, 20

TABLE 9
Exceptions to Initial Calibration Criteria and Continuing Calibration Criteria: Pesticides
Charleston Naval Complex, Zone G, SWMU 3, Charleston, SC

[illegible] Date	[illegible]	[illegible]	[illegible]
SGJECD2-CCAL-04/05/02, 0155	Heptachlor	19.6% low	S242223*1-18, 20
	Delta-BHC	22.7% low	
	4,4'-DDT	23.9% low	
	Methoxychlor	21.9% low	
SGJECD1-CCAL-04/08/02, 1016	4,4'-DDT	17.6% low	S242223*19
	Methoxychlor	23.4% low	
SGJECD2-CCAL-04/08/02, 1016	Heptachlor	16.8% low	S242223*19
	4,4'-DDT	18.1% low	
	Methoxychlor	21.5% low	
SGJECD1-CCAL-04/08/02, 1726	4,4'-DDT	15.5% low	S242223*19
	Methoxychlor	20.0% low	
SGJECD1-CCAL-04/08/02, 1751	Chlordane	15.5% low	S242223*19
SGJECD2-CCAL-04/08/02, 1726	Methoxychlor	16.4% low	S242223*19
SGRECD1-CCAL-04/04/02, 1121	Heptachlor	15.1% high	S242223A*1,2,3,5,16,18
	Dieldrin	16.0% high	
	Endrin	24.0% high	
SGRECD2-CCAL-04/04/02, 1121	Endrin	19.4% high	S242223A*1,2,3,5,16,18
	4,4'-DDT	17.5% high	
SGRECD1-CCAL-04/05/02, 0210	Heptachlor	16.0% high	S242223A*1,2,3,5,16,18
	Aldrin	19.5% high	
	Heptachlor epoxide	15.9% high	
	Dieldrin	21.9% high	
	Endosulfan II	22.7% high	
	Endosulfan sulfate	16.3% high	
SGRECD2-CCAL-04/05/02, 0210	Heptachlor	17.7% high	S242223A*1,2,3,5,16,18
	Dieldrin	18.1% high	
	4,4'-DDD	19.0% high	

TABLE 9
Exceptions to Initial Calibration Criteria and Continuing Calibration Criteria: Pesticides
Charleston Naval Complex, Zone G, SWMU 3, Charleston, SC

SGRECD2-CCAL-04/05/02, 0210	Endrin ketone	19.4% high	S242223A*1,2,3,5,16,18
SGRECD1-CCAL-04/05/02, 1445	Alpha-BHC	23.1% low	S242223A*4,6,7,8,9,11,13, 15,17,19
	Gamma-BHC	19.4% low	
	Delta-BHC	22.4% low	
SGRECD2-CCAL-04/05/02, 1445	Alpha-BHC	22.6% low	S242223A*4,6,7,8,9,11,13, 15,17,19
	Delta-BHC	21.1% low	
SGRECD1-CCAL-04/05/02, 2236	Alpha-BHC	16.3% low	S242223A*4,6,7,8,9,11,13, 15,17,19
	Heptachlor	20.1% high	
	Endrin	26.1% high	
	Endosulfan II	15.8% high	
	4,4'-DDT	15.5% high	
	Methoxychlor	40.8% high	
SGRECD2-CCAL-04/05/02, 2236	Alpha-BHC	15.6% low	S242223A*4,6,7,8,9,11,13, 15,17,19
	Heptachlor	18.4% high	
	Endrin	24.2% high	
	4,4'-DDT	19.3% high	
	Methoxychlor	27.9% high	
SGRECD1-CCAL-04/09/02, 0213	Dieldrin	21.9% high	S242223A*12,14,20
	Endrin	17.5% high	
	4,4'-DDD	24.0% high	
	Methoxychlor	56.7% high	
	Endrin ketone	16.3% high	
SGRECD1-CCAL-04/09/02, 0235	Chlordane	15.9% low	S242223A*12,14,20
SGRECD2-CCAL-04/09/02, 0213	Dieldrin	20.5% high	S242223A*12,14,20
	Endrin	15.2% high	
	4,4'-DDD	19.4% high	
	Methoxychlor	24.1% high	

TABLE 9
Exceptions to Initial Calibration Criteria and Continuing Calibration Criteria: Pesticides
Charleston Naval Complex, Zone G, SWMU 3, Charleston, SC

[illegible]	[illegible]	[illegible]	[illegible]
SGRECD2-CCAL-04/09/02, 0213	Endrin ketone	20.4% high	S242223A*12,14,20
SGRECD1-CCAL-04/10/02, 1143	Delta-BHC	15.4% low	S242223A*10
	Endosulfan I	15.5% low	
	4,4'-DDE	15.7% low	
SGRECD1-CCAL-04/10/02, 1638	4,4'-DDE	19.6% low	S242223A*10
	Methoxychlor	26.6% high	
SGRECD2-CCAL-04/10/02, 1638	Heptachlor	16.0% low	S242223A*10
SGIECD1-CCAL-04/04/02, 0847	Endrin aldehyde	15.8% high	S242223B*5, 6, 7
SGIECD1-CCAL-04/04/02, 1937	Endrin aldehyde	20.6% high	S242223B*5, 6, 7
	Endrin ketone	21.2% high	
SGIECD2-CCAL-04/04/02, 1937	Heptachlor	18.0% high	S242223B*5, 6, 7
	Endrin aldehyde	15.1% high	
	Endrin ketone	17.0% high	
SGIECD1-CCAL-04/09/02, 1035	Endrin	18.7% low	S242223B*2, 3, 6RE
	Endrin aldehyde	19.1% high	
	Endrin ketone	15.9% high	
SGIECD2-CCAL-04/09/02, 1035	Endrin	20.7% low	S242223B*2, 3, 6RE
	Methoxychlor	15.6% low	
SGIECD2-CCAL-04/09/02, 1035	Chlordane	18.3% low	S242223B*2, 3, 6RE
SGIECD1-CCAL-04/09/02, 2158	Endrin aldehyde	20.2% high	S242223B*2, 3, 6RE
	Endrin ketone	23.1% high	
SGIECD2-CCAL-04/09/02, 2158	Heptachlor	25.4% high	S242223B*2, 3, 6RE
	Endosulfan II	15.2% high	
	Endrin aldehyde	21.8% high	
	Endrin ketone	18.7% high	
SGIECD2-CCAL-04/09/02, 2158	Chlordane	17.3% low	S242223B*2-7, 6RE

TABLE 9
Exceptions to Initial Calibration Criteria and Continuing Calibration Criteria: Pesticides
Charleston Naval Complex, Zone G, SWMU 3, Charleston, SC

SGIECD1-CCAL-04/10/02, 1424	Endrin aldehyde	28.3% high	S242223B*4
	Endrin ketone	27.4% high	
SGIECD2-CCAL-04/10/02, 1424	Endrin	17.7% low	S242223B*4
	Endrin aldehyde	25.0% high	
	Endrin ketone	16.5% high	
SGIECD1-CCAL-04/10/02, 2240	Endrin	19.3% low	S242223B*4
	Endrin aldehyde	33.3% high	
	Endrin ketone	30.5% high	
SGIECD2-CCAL-04/10/02, 2240	Heptachlor	17.3% high	S242223B*4
	Endrin	22.8% low	
	Endosulfan II	18.2% high	
	Endrin aldehyde	35.2% high	
	Endrin ketone	25.6% high	
SGJECD1-CCAL-05/21/02, 0955	4,4'-DDT	19.4% high	S243436*1-19
	Methoxychlor	21.9% high	
SGJECD2-CCAL-05/21/02, 0955	4,4'-DDT	31.0% high	S243436*1-19
	Endosulfan sulfate	15.3% high	
	Methoxychlor	30.5% high	
	Endrin ketone	21.7% high	
SGJECD1-CCAL-05/22/02, 0207	Endrin aldehyde	22.0% high	S243436*1-19
	Endosulfan sulfate	20.9% high	
	Methoxychlor	16.1% high	
	Endrin ketone	27.2% high	
SGJECD2-CCAL-05/22/02, 0207	4,4'-DDT	15.1% high	S243436*1-19
	Endrin aldehyde	18.2% high	
	Endosulfan sulfate	16.9% high	
	Methoxychlor	16.5% high	
	Endrin ketone	26.1% high	

TABLE 9
Exceptions to Initial Calibration Criteria and Continuing Calibration Criteria: Pesticides
Charleston Naval Complex, Zone G, SWMU 3, Charleston, SC

[illegible]	[illegible]	[illegible]	[illegible]
SGJECD1-CCAL-05/22/02, 1559	Endosulfan II	16.9% high	S243436*20, 1DL, 6DL, 9DL-15DL, 18DL, 19DL
	4,4'-DDT	21.5% high	
	Endosulfan sulfate	18.3% high	
	Methoxychlor	23.7% high	
	Endrin ketone	17.7% high	
SGJECD2-CCAL-05/22/02, 1559	4,4'-DDT	17.4% high	S243436*20, 1DL, 6DL, 9DL-15DL, 18DL, 19DL
	Methoxychlor	18.8% high	
SGJECD1-CCAL-05/23/02, 0221	Endrin	15.8% low	S243436*20, 1DL, 6DL, 9DL-15DL, 18DL, 19DL
	Endrin aldehyde	29.5% high	
	Endrin ketone	24.9% high	
SGJECD2-CCAL-05/23/02, 0221	Endrin	16.7% low	S243436*20, 1DL, 6DL, 9DL-15DL, 18DL, 19DL
	Endrin aldehyde	29.2% high	
	Endrin ketone	25.4% high	
SGRECD2-CCAL-05/23/02, 1257	Methoxychlor	19.8% high	S243436A*1-13, 19, 20, 2DL, 4DL, 7DL, 11DL, 12DL
SGRECD1-CCAL-05/23/02, 1603	Endrin	16.3% high	S243436A*14-18, 16DL, 17DL
	Endrin aldehyde	15.8% high	
SGRECD2-CCAL-05/23/02, 1603	Endosulfan II	17.3% high	S243436A*14-18, 16DL, 17DL
	Methoxychlor	34.3% high	
SGRECD1-CCAL-05/29/02, 0124	4,4'-DDE	20.3% high	S243436A*14-18, 16DL, 17DL
	Dieldrin	16.2% high	
	Endrin	17.1% high	
	4,4'-DDD	15.3% high	
	Endosulfan II	15.4% high	
	4,4'-DDT	18.0% high	
	Methoxychlor	20.4% high	
SGRECD2-CCAL-05/29/02, 0124	Methoxychlor	37.4% high	S243436A*14-18, 16DL, 17DL

TABLE 9
Exceptions to Initial Calibration Criteria and Continuing Calibration Criteria: Pesticides
Charleston Naval Complex, Zone G, SWMU 3, Charleston, SC

[illegible]	[illegible]	[illegible]	[illegible]
SGRECD2-CCAL-05/29/02, 0124	Endrin ketone	15.4% high	S243436A*14-18, 16DL, 17DL
SGMECD2-CCAL-06/20/02, 0848	Chlordane	24.1% high	S244137*2DL, 8DL, 11DL
SGMECD1-CCAL-06/20/02, 1315	Endrin ketone	15.4% high	S244137*2DL, 8DL, 11DL
SGMECD2-CCAL-06/20/02, 1315	Endrin aldehyde	18.3% low	S244137*2DL, 8DL, 11DL
	Chlordane	18.8% high	
SGRECD1-CCAL-08/10/02, 1232	Heptachlor	30.9% low	S245320*1,4,5,6
	Delta-BHC	16.9% low	
	4,4'-DDE	22.5% low	
SGRECD1-CCAL-08/10/02, 1316	Chlordane	24.5% low	S245320*1,4,5,6
SGRECD2-CCAL-08/10/02, 1232	Alpha-BHC	19.8% low	S245320*1,4,5,6
	Heptachlor	29.5% low	
	Delta-BHC	21.9% low	
SGRECD2-CCAL-08/10/02, 1316	Chlordane	15.4% low	S245320*1,4,5,6
SGRECD1-CCAL-08/10/02, 2126	Heptachlor	25.0% low	S245320*1-7, 9
	Delta-BHC	18.3% low	
	4,4'-DDE	24.9% low	
	Methoxychlor	24.2% low	
SGRECD1-CCAL-08/10/02, 2210	Chlordane	19.0% low	S245320*1-7, 9
SGRECD2-CCAL-08/10/02, 2126	Alpha-BHC	18.4% low	S245320*1-7, 9
	Heptachlor	17.2% low	
	Delta-BHC	19.1% low	
SGRECD1-CCAL-08/12/02, 1755	4,4'-DDE	21.1% low	S245320*8
	Dieldrin	17.6% high	
	Endrin	16.9% high	
	Methoxychlor	21.9% high	

TABLE 9
Exceptions to Initial Calibration Criteria and Continuing Calibration Criteria: Pesticides
Charleston Naval Complex, Zone G, SWMU 3, Charleston, SC

[illegible]	[illegible]	[illegible]	[illegible]
SGRECD1-CCAL-08/12/02, 1755	Endrin ketone	18.7% high	S245320*8
SGRECD2-CCAL-08/12/02, 1755	Alpha-BHC	16.1% low	S245320*8
	Delta-BHC	16.5% low	
	4,4'-DDE	15.4% high	
	Dieldrin	16.4% high	
	Endrin	18.7% high	
	Endosulfan II	18.5% high	
SGRECD2-CCAL-08/12/02, 1839	Chlordane	21.6% high	S245320*8
SGRECD1-CCAL-08/13/02, 0347	4,4'-DDE	25.2% low	S245320*8
	Methoxychlor	27.2% high	
SGRECD2-CCAL-08/13/02, 0347	Alpha-BHC	18.1% low	S245320*8
	Delta-BHC	18.1% low	
	Endrin	15.5% high	
	4,4'-DDD	16.0% high	
SGRECD1-CCAL-08/15/02, 1841	Alpha-BHC	16.6% low	S245320*1RE, 5RE, 6RE
	Delta-BHC	23.3% low	
	4,4'-DDE	35.5% low	
	4,4'-DDD	16.6% low	
	Endosulfan II	18.9% low	
	4,4'-DDT	19.8% low	
SGRECD1-CCAL-08/15/02, 1925	Chlordane	29.5% low	S245320*1RE, 5RE, 6RE
SGRECD2-CCAL-08/15/02, 1841	Alpha-BHC	20.8% low	S245320*1RE, 5RE, 6RE
	Delta-BHC	24.9% low	
SGRECD2-CCAL-08/15/02, 1925	Chlordane	27.0% low	S245320*1RE, 5RE, 6RE
SGRECD1-CCAL-08/15/02, 2348	Alpha-BHC	15.7% low	S245320*1RE, 5RE, 6RE
	Delta-BHC	18.2% low	

TABLE 9
Exceptions to Initial Calibration Criteria and Continuing Calibration Criteria: Pesticides
Charleston Naval Complex, Zone G, SWMU 3, Charleston, SC

SGRECD1-CCAL-08/15/02, 2348	4,4'-DDE	25.7% low	S245320*1RE, 5RE, 6RE
SGRECD1-CCAL-08/16/02, 0032	Chlordane	18.8% low	S245320*1RE, 5RE, 6RE
SGRECD2-CCAL-08/15/02, 2348	Alpha-BHC	21.2% low	S245320*1RE, 5RE, 6RE
	Delta-BHC	20.8% low	
	Dieldrin	15.4% high	
SGRECD2-CCAL-08/16/02, 0032	Chlordane	16.0% low	S245320*1RE, 5RE, 6RE
SGRECD2-CCAL-08/21/02, 0707	Delta-BHC	18.1% low	S245320*4RE
	Alpha-Chlordane	15.1% low	
	Endosulfan I	15.4% low	
	4,4'-DDT	19.6% low	
SGRECD2-CCAL-08/21/02, 1314	4,4'-DDT	21.3% low	S245320*4RE
	Methoxychlor	18.9% low	
SGMECD1-CCAL-10/01/02, 1000	Alpha-BHC	19.6% low	S247015*1
	Delta-BHC	19.4% low	
	Methoxychlor	16.0% low	
	Endrin ketone	15.3% high	
SGMECD2-CCAL-10/01/02, 1047	Chlordane	25.9% high	S247015*1
SGMECD1-CCAL-10/01/02, 1953	Alpha-BHC	19.8% low	S247015*1
	Delta-BHC	19.1% low	
	4,4'-DDD	16.5% high	
	4,4'-DDT	19.4% low	
SGMECD2-CCAL-10/01/02, 1953	4,4'-DDD	16.4% high	S247015*1
	Methoxychlor	17.3% low	
SGMECD2-CCAL-10/01/02, 2040	Chlordane	18.8% high	S247015*1

Flags were applied to the compounds in the associated samples in the following manner:

- When the percent difference (%D) was low in the continuing calibration standards, detected compounds were flagged "J" and non-detected compounds were flagged "UJ", as estimated.
- When the percent difference (%D) was high in the continuing calibration standard, detected compounds were flagged "J", as estimated. Non-detected compounds were not flagged.

Second Column Confirmation

The second column confirmation percent difference (%D) for some detected parameters, exceeded the 40 %D criteria. Those results were flagged "J", as estimated. The laboratory reported the lower of the two concentrations. The individual samples and specific compounds that were flagged, are listed in Table 10 below.

TABLE 10
Second Column Confirmation out of Criteria: Pesticides
Charleston Naval Complex, Zone G, SWMU 3, Charleston, SC

[illegible]	[illegible]	[illegible]	[illegible]
CNC54	S117739*1	003SB02201	ENDOSULFAN SULFATE
CNC54	S117739*1	003SB02201	HEPTACHLOR EPOXIDE
CNC54	S117739*3	003SB02301	HEPTACHLOR EPOXIDE
CNC54	S117739*3	003SB02301	4,4'-DDD
CNC54	S117739*3	003SB02301	4,4'-DDT
CNC54	S117739*5	003SB02401	HEPTACHLOR EPOXIDE
CNC54	S117739*8	003SB02502	4,4'-DDT
CNC54	S117739*9	003SB02601	ALPHA-CHLORDANE
CNC54	S117739*10	003SB02602	ALDRIN
CNC54	S117739*10	003SB02602	ALPHA-CHLORDANE
CNC54	S117739*10	003SB02602	DIELDRIN
CNC54	S117739*10	003SB02602	HEPTACHLOR EPOXIDE
CNC54	S117739*10	003SB02602	4,4'-DDE
CNC54	S117739*11	003SB02701	ALPHA-CHLORDANE
CNC54	S117739*11	003SB02701	ENDRIN KETONE
CNC54	S117739*11	003SB02701	4,4'-DDD
CNC54	S117739*12	003SB02702	4,4'-DDD
CNC54	S117739*14	003SB02802	4,4'-DDD

TABLE 10
Second Column Confirmation out of Criteria: Pesticides
Charleston Naval Complex, Zone G, SWMU 3, Charleston, SC

CNC54	S117739*16	003SB02902	4,4'-DDD
CNC54	S117739*17	003CB02902	ALPHA-CHLORDANE
CNC54	S117739*17	003CB02902	4,4'-DDD
CNC54	S117739*20	003SB03101	GAMMA-CHLORDANE
CNC54	S117739*20	003SB03101	HEPTACHLOR EPOXIDE
CNC55	S117739A*2	003SB03201	4,4'-DDD
CNC55	S117739A*3	003SB03202	HEPTACHLOR EPOXIDE
CNC55	S117739A*3	003SB03202	4,4'-DDD
CNC55	S117739A*4	003SB03301	4,4'-DDD
CNC55	S117739A*5	003SB03302	ALPHA-CHLORDANE
CNC55	S117739A*5	003SB03302	ENDRIN KETONE
CNC55	S117739A*5	003SB03302	HEPTACHLOR EPOXIDE
CNC55	S117739A*5	003SB03302	4,4'-DDD
CNC55	S117739A*7	003SB03402	4,4'-DDD
CNC55	S117739A*8	003SB03501	4,4'-DDD
CNC55	S117739A*9	003SB03502	4,4'-DDD
CNC55	S117739A*10	003SB03601	GAMMA-CHLORDANE
CNC55	S117739A*11	003SB03602	HEPTACHLOR EPOXIDE
CNC55	S117739A*11	003SB03602	4,4'-DDD
CNC55	S117739A*12	003SB02101	DIELDRIN
CNC55	S117739A*12	003SB02101	ENDRIN ALDEHYDE
CNC55	S117739A*13	003CB02101	DIELDRIN
CNC62	S240294*1	003SB03901	DIELDRIN
CNC62	S240294*1	003SB03901	HEPTACHLOR EPOXIDE
CNC62	S240294*2	003SB03902	DIELDRIN
CNC62	S240294*2	003SB03902	ENDOSULFAN I
CNC62	S240294*2	003SB03902	HEPTACHLOR EPOXIDE
CNC62	S240294*3	003SB04001	DIELDRIN
CNC62	S240294*3	003SB04001	HEPTACHLOR EPOXIDE

TABLE 10
Second Column Confirmation out of Criteria: Pesticides
Charleston Naval Complex, Zone G, SWMU 3, Charleston, SC

[illegible]	[illegible]	[illegible]	[illegible]
CNC62	S240294*4	003SB04002	ALPHA-CHLORDANE
CNC62	S240294*4	003SB04002	DIELDRIN
CNC62	S240294*4	003SB04002	HEPTACHLOR EPOXIDE
CNC62	S240294*5	003SB04101	HEPTACHLOR EPOXIDE
CNC62	S240294*5	003SB04101	4,4'-DDD
CNC62	S240294*6	003SB04102	4,4'-DDD
CNC62	S240294*7	003CB04102	4,4'-DDT
CNC62	S240294*8	003SB04201	ALPHA-CHLORDANE
CNC62	S240294*8	003SB04201	HEPTACHLOR EPOXIDE
CNC62	S240294*9	003SB04202	4,4'-DDD
CNC82	S242223*7	003SB04401	GAMMA-CHLORDANE
CNC82	S242223*8	003SB04402	4,4'-DDD
CNC82	S242223*9	003SB04501	GAMMA-CHLORDANE
CNC82	S242223*10	003SB04601	GAMMA-CHLORDANE
CNC82	S242223*11	003SB04701	HEPTACHLOR EPOXIDE
CNC82	S242223*11	003SB04701	ALPHA-CHLORDANE
CNC82	S242223*11	003SB04701	DIELDRIN
CNC82	S242223*11	003SB04701	4,4'-DDD
CNC82	S242223*11	003SB04701	4,4'-DDT
CNC82	S242223*11	003SB04701	CHLORDANE
CNC82	S242223*14	003SB04901	HEPTACHLOR EPOXIDE
CNC82	S242223*14	003SB04901	GAMMA-CHLORDANE
CNC82	S242223*14	003SB04901	4,4'-DDD
CNC82	S242223*16	003SB05101	HEPTACHLOR EPOXIDE
CNC82	S242223*18	003SB05202	HEPTACHLOR EPOXIDE
CNC82	S242223*19	003CB05202	HEPTACHLOR EPOXIDE
CNC83	S242223A*1	003SB05301	GAMMA-CHLORDANE
CNC83	S242223A*1	003SB05301	ALPHA-CHLORDANE
CNC83	S242223A*1	003SB05301	4,4'-DDE

TABLE 10
Second Column Confirmation out of Criteria: Pesticides
Charleston Naval Complex, Zone G, SWMU 3, Charleston, SC

CNC83	S242223A*2	003SB05401	HEPTACHLOR EPOXIDE
CNC83	S242223A*2	003SB05401	4,4'-DDD
CNC83	S242223A*3	003SB05402	GAMMA-CHLORDANE
CNC83	S242223A*3	003SB05402	4,4'-DDT
CNC83	S242223A*4	003SB05501	HEPTACHLOR EPOXIDE
CNC83	S242223A*4	003SB05501	ALPHA-CHLORDANE
CNC83	S242223A*5	003SB05502	GAMMA-CHLORDANE
CNC83	S242223A*6	003SB05601	HEPTACHLOR EPOXIDE
CNC83	S242223A*6	003SB05601	ALPHA-CHLORDANE
CNC83	S242223A*7	003SB05602	HEPTACHLOR EPOXIDE
CNC83	S242223A*7	003SB05602	4,4'-DDD
CNC83	S242223A*8	003SB05701	HEPTACHLOR EPOXIDE
CNC83	S242223A*8	003SB05701	ALPHA-CHLORDANE
CNC83	S242223A*8	003SB05701	DIELDRIN
CNC83	S242223A*9	003SB05702	ALPHA-CHLORDANE
CNC83	S242223A*10	003SB05801	ALPHA-CHLORDANE
CNC83	S242223A*10	003SB05801	DIELDRIN
CNC83	S242223A*10	003SB05801	4,4'-DDD
CNC83	S242223A*12	003SB05902	4,4'-DDD
CNC83	S242223A*13	003SB06003	4,4'-DDD
CNC83	S242223A*15	003SB06203	4,4'-DDD
CNC83	S242223A*17	003SB06403	ALPHA-CHLORDANE
CNC83	S242223A*17	003SB06403	DIELDRIN
CNC83	S242223A*18	003SB06503	GAMMA-CHLORDANE
CNC83	S242223A*20	003SB06603	HEPTACHLOR EPOXIDE
CNC83	S242223A*20	003SB06603	ALPHA-CHLORDANE
CNC84	S242223B*2	003SB05102	ALPHA-CHLORDANE
CNC84	S242223B*4	003SB06701	4,4'-DDD
CNC84	S242223B*5	003SB06702	4,4'-DDD

TABLE 10
Second Column Confirmation out of Criteria: Pesticides
Charleston Naval Complex, Zone G, SWMU 3, Charleston, SC

[illegible]	[illegible]	[illegible]	[illegible]
CNC109	S243436*1	003SB06801	GAMMA-CHLORDANE
CNC109	S243436*1	003SB06801	4,4'-DDD
CNC109	S243436*1DL	003SB06801	GAMMA-CHLORDANE
CNC109	S243436*1DL	003SB06801	4,4'-DDD
CNC109	S243436*2	003SB06803	GAMMA-CHLORDANE
CNC109	S243436*4	003CB06901	DIELDRIN
CNC109	S243436*6	003SB07001	GAMMA-CHLORDANE
CNC109	S243436*10	003SB07103	4,4'-DDE
CNC109	S243436*10	003SB07103	4,4'-DDT
CNC109	S243436*10	003SB07103	CHLORDANE
CNC109	S243436*11	003SB07201	GAMMA-CHLORDANE
CNC109	S243436*11	003SB07201	ALPHA-CHLORDANE
CNC109	S243436*11	003SB07201	4,4'-DDD
CNC109	S243436*11	003SB07201	4,4'-DDE
CNC109	S243436*11	003SB07201	4,4'-DDT
CNC109	S243436*11	003SB07201	DIELDRIN
CNC109	S243436*11	003SB07201	CHLORDANE
CNC109	S243436*12	003SB07203	HEPTACHLOR EPOXIDE
CNC109	S243436*12DL	003SB07203	HEPTACHLOR EPOXIDE
CNC109	S243436*13DL	003SB07301	ALPHA-CHLORDANE
CNC109	S243436*14	003SB07303	ALPHA-CHLORDANE
CNC109	S243436*14	003SB07303	DIELDRIN
CNC109	S243436*15	003CB07303	4,4'-DDT
CNC109	S243436*16	003SB07401	HEPTACHLOR EPOXIDE
CNC109	S243436*16	003SB07401	GAMMA-CHLORDANE
CNC109	S243436*16	003SB07401	4,4'-DDD
CNC109	S243436*18	003SB07501	HEPTACHLOR EPOXIDE
CNC109	S243436*18	003SB07501	GAMMA-CHLORDANE
CNC109	S243436*18	003SB07501	ALPHA-CHLORDANE

TABLE 10
Second Column Confirmation out of Criteria: Pesticides
Charleston Naval Complex, Zone G, SWMU 3, Charleston, SC

[illegible]	[illegible]	[illegible]	[illegible]
CNC109	S243436*18	003SB07501	4,4'-DDD
CNC109	S243436*18	003SB07501	4,4'-DDE
CNC109	S243436*18	003SB07501	4,4'-DDT
CNC109	S243436*18	003SB07501	DIELDRIN
CNC109	S243436*18	003SB07501	CHLORDANE
CNC109	S243436*18DL	003SB07501	4,4'-DDD
CNC109	S243436*19	003SB08403	GAMMA-CHLORDANE
CNC110	S243436A*1	003SB07503	4,4'-DDD
CNC110	S243436A*1	003SB07503	CHLORDANE
CNC110	S243436A*2	003SB07601	4,4'-DDD
CNC110	S243436A*2	003SB07601	ENDRIN KETONE
CNC110	S243436A*2DL	003SB07601	ALPHA-CHLORDANE
CNC110	S243436A*2DL	003SB07601	4,4'-DDD
CNC110	S243436A*3	003SB07603	GAMMA-CHLORDANE
CNC110	S243436A*3	003SB07603	ALPHA-CHLORDANE
CNC110	S243436A*3	003SB07603	4,4'-DDD
CNC110	S243436A*4	003SB07701	HEPTACHLOR EPOXIDE
CNC110	S243436A*4	003SB07701	ALPHA-CHLORDANE
CNC110	S243436A*4DL	003SB07701	HEPTACHLOR EPOXIDE
CNC110	S243436A*4DL	003SB07701	ALPHA-CHLORDANE
CNC110	S243436A*5	003SB07702	HEPTACHLOR EPOXIDE
CNC110	S243436A*5	003SB07702	ALPHA-CHLORDANE
CNC110	S243436A*5	003SB07702	4,4'-DDD
CNC110	S243436A*6	003SB07703	HEPTACHLOR EPOXIDE
CNC110	S243436A*6	003SB07703	ALPHA-CHLORDANE
CNC110	S243436A*6	003SB07703	4,4'-DDD
CNC110	S243436A*6	003SB07703	ENDRIN ALDEHYDE
CNC110	S243436A*7	003SB07801	HEPTACHLOR EPOXIDE
CNC110	S243436A*7	003SB07801	ALPHA-CHLORDANE

TABLE 10
Second Column Confirmation out of Criteria: Pesticides
Charleston Naval Complex, Zone G, SWMU 3, Charleston, SC

Site	Lab Sample ID	Sample ID	Target Analyte
CNC110	S243436A*7	003SB07801	4,4'-DDD
CNC110	S243436A*7DL	003SB07801	ALPHA-CHLORDANE
CNC110	S243436A*7DL	003SB07801	4,4'-DDD
CNC110	S243436A*8	003SB07802	ALPHA-CHLORDANE
CNC110	S243436A*8	003SB07802	4,4'-DDD
CNC110	S243436A*9	003CB07802	ALPHA-CHLORDANE
CNC110	S243436A*10	003SB07803	ALPHA-CHLORDANE
CNC110	S243436A*10	003SB07803	4,4'-DDD
CNC110	S243436A*11	003SB07901	4,4'-DDD
CNC110	S243436A*11	003SB07901	4,4'-DDE
CNC110	S243436A*11DL	003SB07901	4,4'-DDD
CNC110	S243436A*12	003SB07903	ALPHA-CHLORDANE
CNC110	S243436A*12	003SB07903	4,4'-DDD
CNC110	S243436A*12	003SB07903	4,4'-DDE
CNC110	S243436A*13	003SB08001	ENDOSULFAN I
CNC110	S243436A*13	003SB08001	ENDOSULFAN II
CNC110	S243436A*14	003SB08003	ALPHA-CHLORDANE
CNC110	S243436A*16	003SB08103	GAMMA-BHC
CNC110	S243436A*16	003SB08103	BETA-BHC
CNC110	S243436A*16	003SB08103	DIELDRIN
CNC110	S243436A*16	003SB08103	ENDRIN KETONE
CNC110	S243436A*16	003SB08103	CHLORDANE
CNC110	S243436A*16DL	003SB08103	ENDRIN
CNC110	S243436A*17	003SB08203	BETA-BHC
CNC110	S243436A*17	003SB08203	HEPTACHLOR
CNC110	S243436A*17	003SB08203	HEPTACHLOR EPOXIDE
CNC110	S243436A*17	003SB08203	ALPHA-CHLORDANE
CNC110	S243436A*17	003SB08203	DIELDRIN
CNC110	S243436A*17	003SB08203	ENDRIN

TABLE 10
Second Column Confirmation out of Criteria: Pesticides
Charleston Naval Complex, Zone G, SWMU 3, Charleston, SC

CNC110	S243436A*17DL	003SB08203	HEPTACHLOR EPOXIDE
CNC110	S243436A*17DL	003SB08203	4,4'-DDD
CNC110	S243436A*18	003SB08303	ALPHA-CHLORDANE
CNC110	S243436A*18	003SB08303	4,4'-DDD
CNC115	S244137*1	003SB08501	HEPTACHLOR
CNC115	S244137*1	003SB08501	ALPHA-CHLORDANE
CNC115	S244137*1	003SB08501	DIELDRIN
CNC115	S244137*2	003SB08601	ALPHA-CHLORDANE
CNC115	S244137*4	003SB08801	HEPTACHLOR EPOXIDE
CNC115	S244137*4	003SB08801	ALPHA-CHLORDANE
CNC115	S244137*4	003SB08801	4,4'-DDD
CNC115	S244137*5	003SB08803	ALPHA-CHLORDANE
CNC115	S244137*5	003SB08803	ENDRIN ALDEHYDE
CNC115	S244137*8	003SB09001	ALPHA-CHLORDANE
CNC115	S244137*8DL	003SB09001	ALPHA-CHLORDANE
CNC115	S244137*9	003SB09003	ALPHA-CHLORDANE
CNC115	S244137*9	003SB09003	HEPTACHLOR
CNC115	S244137*9	003SB09003	ENDOSULFAN I
CNC115	S244137*9	003SB09003	DIELDRIN
CNC115	S244137*10	003CB09003	ALPHA-CHLORDANE
CNC115	S244137*10	003CB09003	ENDOSULFAN I
CNC115	S244137*10	003CB09003	DIELDRIN
CNC115	S244137*10	003CB09003	ENDOSULFAN II
CNC115	S244137*10	003CB09003	4,4'-DDT
CNC115	S244137*11	003SB09101	ALPHA-CHLORDANE
CNC115	S244137*11	003SB09101	ENDRIN ALDEHYDE
CNC115	S244137*11DL	003SB09101	ALPHA-CHLORDANE
CNC115	S244137*12	003SB09103	ALPHA-CHLORDANE
CNC115	S244137*12	003SB09103	DIELDRIN

TABLE 10
Second Column Confirmation out of Criteria: Pesticides
Charleston Naval Complex, Zone G, SWMU 3, Charleston, SC

Site	Sample ID	Sample ID	Analyte
CNC115	S244137*12	003SB09103	ENDRIN ALDEHYDE
CNC115	S244137*13	003SB09202	HEPTACHLOR EPOXIDE
CNC115	S244137*13	003SB09202	GAMMA-CHLORDANE
CNC115	S244137*13	003SB09202	ALPHA-CHLORDANE
CNC115	S244137*13	003SB09202	4,4'-DDE
CNC133	S245320*1	003SB09301	ALPHA-CHLORDANE
CNC133	S245320*1	003SB09301	4,4'-DDD
CNC133	S245320*1RE	003SB09301	ALPHA-CHLORDANE
CNC133	S245320*3	003SB09403	GAMMA-CHLORDANE
CNC133	S245320*4	003SB09501	4,4'-DDE
CNC133	S245320*4	003SB09501	4,4'-DDD
CNC133	S245320*4RE	003SB09501	4,4'-DDD
CNC133	S245320*5	003SB09503	4,4'-DDD
CNC133	S245320*5RE	003SB09503	4,4'-DDD
CNC133	S245320*6	003CB09503	4,4'-DDD
CNC133	S245320*6RE	003CB09503	4,4'-DDD
CNC133	S245320*8	003SB09701	HEPTACHLOR EPOXIDE
CNC133	S245320*8	003SB09701	ALPHA-CHLORDANE
CNC147	S247015*1	003SB09801	HEPTACHLOR EPOXIDE
CNC147	S247015*1	003SB09801	ALPHA-CHLORDANE
CNC147	S247015*1	003SB09801	GAMMA-CHLORDANE

Internal Standards

All internal standard (IS) retention times and area responses were within criteria, except as listed in Table 11.

TABLE 11
Internal Standard Area out of Criteria: Pesticides
Charleston Naval Complex, Zone G, SWMU 3, Charleston, SC

[illegible]	[illegible]	[illegible]	[illegible]
CNC54	S117739*3	Bromonitrobenzene – 95% high	Detects Only-J
CNC55	S117739A*9	Bromonitrobenzene – 53% high	Detects Only-J
CNC82	S242223*10	Bromonitrobenzene – 51% high	Detects Only-J
CNC82	S242223*11	Bromonitrobenzene – 88% high	Detects Only-J

Polychlorinated Biphenyls

The QA/QC parameters for the Polychlorinated Biphenyls analyses by method SW-846 8082 for all of the samples were within acceptable control limits, except as noted below.

Surrogate, Laboratory Control Spike, and Laboratory Control spike Duplicate Recoveries

All surrogate, matrix spike (MS), matrix spike duplicate (MSD), laboratory control spike (LCS), and laboratory control spike duplicate (LCSD) recoveries were within acceptable quality control limits, except as noted below.

- Tetrachloro-m-xylene recoveries in several samples in SDG CNC55 were slightly below the program lower control limit of 60% recovery. The case narrative states that many of these were due to dilutions or matrix interferences. All recoveries for Decachlorobiphenyl were within recovery limits with the exception of sample CNC55-#13 which was below the lower control limit. Flags were only applied to sample CNC55-#13 for low surrogate recovery. Detected compounds were flagged "J" and non-detected compounds were flagged "UJ", as estimated

Initial and Continuing Calibration Criteria

All initial and continuing calibration criteria were met except as noted in Table 12.

TABLE 12
Exceptions to Initial Calibration Criteria and Continuing Calibration Criteria: PCBs
Charleston Naval Complex, Zone G, SWMU 3, Charleston, SC

[illegible]	[illegible]	[illegible]	[illegible]
SGJECD2-CCAL-12/11/01, 16:34	Aroclor-1260	20.7% high	S117739A*12, 14, 15

TABLE 12
Exceptions to Initial Calibration Criteria and Continuing Calibration Criteria: PCBs
Charleston Naval Complex, Zone G, SWMU 3, Charleston, SC

Instrument/Calibration Date	Analyte	[illegible]	Associated Samples
SGMECD1-CCAL-12/13/01, 16:41	Aroclor-1016	16.3% low	S117739A*13

Flags were applied to the compounds in the associated samples in the following manner:

- When the percent difference (%D) was low in the continuing calibration standards, detected compounds were flagged "J" and non-detected compounds were flagged "UJ", as estimated.
- When the percent difference was high, detected compounds were flagged "J", as estimated. Non-detected compounds were not flagged.

Second Column Confirmation

The second column confirmation percent difference (%D) for one detected parameter, Arochlor-1260 in sample CNC55-#12, exceeded the 40 %D criteria. This result was flagged "J", as estimated. The laboratory reported the lower of the two concentrations.

Rejected Data

The majority of rejected data were associated with re-runs and dilutions (there can only be a single valid result per sample per target). However, there were selected results qualified as "R", rejected, due to associated QC parameters out of criteria. The rejected data are summarized in Table 13 below.

TABLE 13
Data Qualification Summary: Rejected Data
Charleston Naval Complex, Zone G, SWMU 3, Charleston, SC

[illegible]									
CNC55	003CB02101	VOA	2-Chloroethyl vinyl ether	9.4	UJ	9.4	R	ug/kg	IC, CC, BS
CNC55	003SB02101	VOA	2-Chloroethyl vinyl ether	9.7	UJ	9.7	R	ug/kg	IC, CC, BS
CNC55	003SB02102	VOA	2-Chloroethyl vinyl ether	9	UJ	9	R	ug/kg	IC, CC, BS
CNC55	003SB03102	VOA	2-Chloroethyl vinyl ether	6.6	UJ	6.6	R	ug/kg	IC, CC, BS
CNC55	003SB03201	VOA	2-Chloroethyl vinyl ether	10	UJ	10	R	ug/kg	IC, CC, BS
CNC55	003SB03202	VOA	2-Chloroethyl vinyl ether	10	UJ	10	R	ug/kg	IC, CC, BS

TABLE 13
Data Qualification Summary: Rejected Data
Charleston Naval Complex, Zone G, SWMU 3, Charleston, SC

[illegible]	[illegible]	[illegible]	[illegible]	[illegible]	[illegible]	[illegible]	[illegible]	[illegible]	[illegible]
CNC55	003SB03301	VOA	2-Chloroethyl vinyl ether	10	UJ	10	R	ug/kg	IC, CC, BS
CNC55	003SB03302	VOA	2-Chloroethyl vinyl ether	9.8	UJ	9.8	R	ug/kg	IC, CC, BS
CNC55	003SB03401	VOA	2-Chloroethyl vinyl ether	10	UJ	10	R	ug/kg	IC, CC, BS
CNC55	003SB03402	VOA	2-Chloroethyl vinyl ether	11	UJ	11	R	ug/kg	IC, CC, BS
CNC55	003SB03501	VOA	2-Chloroethyl vinyl ether	10	UJ	10	R	ug/kg	IC, CC, BS
CNC55	003SB03502	VOA	2-Chloroethyl vinyl ether	9.8	UJ	9.8	R	ug/kg	IC, CC, BS
CNC55	003SB03601	VOA	2-Chloroethyl vinyl ether	9.5	UJ	9.5	R	ug/kg	IC, CC, BS
CNC55	003SB03602	VOA	2-Chloroethyl vinyl ether	9.3	UJ	9.3	R	ug/kg	IC, CC, BS

Conclusion

A review of the analytical data submitted regarding the investigation of SWMU 3 in Zone G at the Charleston Naval Complex, Charleston, South Carolina by CH2M HILL has been completed. An overall evaluation of the data indicates that the sample handling, shipment, and analytical procedures have been adequately completed, and that the analytical results should be considered usable as qualified.

The analytical data had some QC concerns as noted above, including the rejection of selected results for 2-chloroethylvinyl ether, that affected data usability for that parameter. However, the validation review demonstrated that the analytical systems were generally in control and the data results can be used in the decision making process.

Attachment 1 - Changed Qualifiers and Results
Zone G, SWMU 3, Soils - Data Validation

Parameter Class	Analytical Method	Parameter	SDG	Sample ID	Lab Sample ID	Matrix	Lab Result	Lab Qual	Final Result	Final Qual	Units	Reasons
PCB	SW8082	PCB-1016 (AROCHLOR 1016)	CNC55	003CB02101	S117739A*13	SO	38	U	38	UJ	ug/kg	CC, SS
PCB	SW8082	PCB-1221 (AROCHLOR 1221)	CNC55	003CB02101	S117739A*13	SO	38	U	38	UJ	ug/kg	SS
PCB	SW8082	PCB-1232 (AROCHLOR 1232)	CNC55	003CB02101	S117739A*13	SO	38	U	38	UJ	ug/kg	SS
PCB	SW8082	PCB-1242 (AROCHLOR 1242)	CNC55	003CB02101	S117739A*13	SO	38	U	38	UJ	ug/kg	SS
PCB	SW8082	PCB-1248 (AROCHLOR 1248)	CNC55	003CB02101	S117739A*13	SO	38	U	38	UJ	ug/kg	SS
PCB	SW8082	PCB-1254 (AROCHLOR 1254)	CNC55	003CB02101	S117739A*13	SO	77	U	77	UJ	ug/kg	SS
PCB	SW8082	PCB-1260 (AROCHLOR 1260)	CNC55	003SB02101	S117739A*12	SO	19	JP	19	J	ug/kg	CC, 2C
PCB	SW8082	PCB-1260 (AROCHLOR 1260)	CNC55	003CB02101	S117739A*13	SO	77	U	77	UJ	ug/kg	SS
PEST	SW8081	ALDRIN	CNC54	003SB02602	S117739*10	SO	0.93	JP	0.93	J	ug/kg	CC, 2C
PEST	SW8081	ALDRIN	CNC54	003SB02801	S117739*13	SO	1400	U	1400	UJ	ug/kg	CC
PEST	SW8081	ALDRIN	CNC54	003SB02801DL	S117739*13*DL	SO	2800	U	2800	R	ug/kg	DL
PEST	SW8081	ALDRIN	CNC54	003SB02802DL	S117739*14*DL	SO	3	U	3	R	ug/kg	DL
PEST	SW8081	ALDRIN	CNC54	003SB03002DL	S117739*19*DL	SO	7.6	U	7.6	R	ug/kg	DL
PEST	SW8081	ALDRIN	CNC54	003SB02401DL	S117739*5*DL	SO	2.8	U	2.8	R	ug/kg	DL
PEST	SW8081	ALDRIN	CNC54	003SB02601	S117739*9	SO	1500	U	1500	UJ	ug/kg	CC
PEST	SW8081	ALDRIN	CNC55	003SB03102	S117739A*1	SO	1.4	U	1.4	UJ	ug/kg	CC
PEST	SW8081	ALDRIN	CNC55	003SB03601	S117739A*10	SO	1.4	U	1.4	UJ	ug/kg	CC, SS
PEST	SW8081	ALDRIN	CNC55	003CB02101	S117739A*13	SO	1.5	U	1.5	UJ	ug/kg	CC, SS
PEST	SW8081	ALDRIN	CNC55	003SB03301	S117739A*4	SO	70	U	70	UJ	ug/kg	CC
PEST	SW8081	ALDRIN	CNC55	003SB03302	S117739A*5	SO	1.4	U	1.4	UJ	ug/kg	CC
PEST	SW8081	ALDRIN	CNC55	003SB03401DL	S117739A*6*DL	SO	1400	U	1400	R	ug/kg	DL
PEST	SW8081	ALDRIN	CNC55	003SB03402DL	S117739A*7*DL	SO	150	U	150	R	ug/kg	DL
PEST	SW8081	ALDRIN	CNC55	003SB03501DL	S117739A*8*DL	SO	550	U	550	R	ug/kg	DL
PEST	SW8081	ALDRIN	CNC82	003SB04902	S242223*15	SO	1.6	U	1.6	UJ	ug/kg	SS
PEST	SW8081	ALDRIN	CNC82	003SB03702	S242223*2	SO	1.5	U	1.5	UJ	ug/kg	SS
PEST	SW8081	ALDRIN	CNC84	003EB037M1RE	S242223B*6*RE	WG	0.04	U	0.04	R	ug/l	RE
PEST	SW8081	ALDRIN	CNC109	003SB06801DL	S243436*1*DL	SO	14	U	14	R	ug/kg	DL
PEST	SW8081	ALDRIN	CNC109	003SB07103DL	S243436*10*DL	SO	5.5	U	5.5	R	ug/kg	DL
PEST	SW8081	ALDRIN	CNC109	003SB07201DL	S243436*11*DL	SO	280	U	280	R	ug/kg	DL
PEST	SW8081	ALDRIN	CNC109	003SB07203DL	S243436*12*DL	SO	28	U	28	R	ug/kg	DL
PEST	SW8081	ALDRIN	CNC109	003SB07301DL	S243436*13*DL	SO	270	U	270	R	ug/kg	DL
PEST	SW8081	ALDRIN	CNC109	003SB07303DL	S243436*14*DL	SO	1400	U	1400	R	ug/kg	DL
PEST	SW8081	ALDRIN	CNC109	003CB07303DL	S243436*15*DL	SO	1400	U	1400	R	ug/kg	DL
PEST	SW8081	ALDRIN	CNC109	003SB07501DL	S243436*18*DL	SO	140	U	140	R	ug/kg	DL
PEST	SW8081	ALDRIN	CNC109	003SB[illegible]03DL	S243436*19*DL	SO	3	U	3	R	ug[illegible]	DL

Parameter Class	Analytical Method	Parameter	SDG	Sample ID	Lab Sample ID	Matrix	Lab Result	Lab Qual	Final Result	Final Qual	Units	Reasons
PEST	SW8081	ALDRIN	CNC109	003SB07001DL	S243436*6*DL	SO	15	U	15	R	ug/kg	DL
PEST	SW8081	ALDRIN	CNC109	003SB07101DL	S243436*9*DL	SO	34	U	34	R	ug/kg	DL
PEST	SW8081	ALDRIN	CNC110	003SB07901DL	S243436A*11*DL	SO	71	U	71	R	ug/kg	DL
PEST	SW8081	ALDRIN	CNC110	003SB07903DL	S243436A*12*DL	SO	60	U	60	R	ug/kg	DL
PEST	SW8081	ALDRIN	CNC110	003SB08103DL	S243436A*16*DL	SO	71	U	71	R	ug/kg	DL
PEST	SW8081	ALDRIN	CNC110	003SB08203DL	S243436A*17*DL	SO	760	U	760	R	ug/kg	DL
PEST	SW8081	ALDRIN	CNC110	003SB07601DL	S243436A*2*DL	SO	27	U	27	R	ug/kg	DL
PEST	SW8081	ALDRIN	CNC110	003SB07701DL	S243436A*4*DL	SO	29	U	29	R	ug/kg	DL
PEST	SW8081	ALDRIN	CNC110	003SB07801DL	S243436A*7*DL	SO	28	U	28	R	ug/kg	DL
PEST	SW8081	ALDRIN	CNC115	003SB09101DL	S244137*11*DL	SO	35	U	35	R	ug/kg	DL
PEST	SW8081	ALDRIN	CNC115	003SB08601DL	S244137*2*DL	SO	140	U	140	R	ug/kg	DL
PEST	SW8081	ALDRIN	CNC115	003SB09001DL	S244137*8*DL	SO	75	U	75	R	ug/kg	DL
PEST	SW8081	ALDRIN	CNC133	003SB09301	S245320*1	SO	1.5	U	1.5	R	ug/kg	RE
PEST	SW8081	ALDRIN	CNC133	003SB09301RE	S245320*1*RE	SO	3.1	U	3.1	UJ	ug/kg	HT
PEST	SW8081	ALDRIN	CNC133	003SB09501	S245320*4	SO	7.3	U	7.3	R	ug/kg	RE
PEST	SW8081	ALDRIN	CNC133	003SB09501RE	S245320*4*RE	SO	15	U	15	UJ	ug/kg	HT
PEST	SW8081	ALDRIN	CNC133	003SB09503	S245320*5	SO	1.5	U	1.5	R	ug/kg	RE
PEST	SW8081	ALDRIN	CNC133	003SB09503RE	S245320*5*RE	SO	1.5	U	1.5	UJ	ug/kg	HT
PEST	SW8081	ALDRIN	CNC133	003CB09503	S245320*6	SO	1.5	U	1.5	R	ug/kg	RE
PEST	SW8081	ALDRIN	CNC133	003CB09503RE	S245320*6*RE	SO	1.5	U	1.5	UJ	ug/kg	HT
PEST	SW8081	ALPHA BHC	CNC54	003SB02602	S117739*10	SO	1.4	U	1.4	UJ	ug/kg	CC
PEST	SW8081	ALPHA BHC	CNC54	003SB02801	S117739*13	SO	1400	U	1400	UJ	ug/kg	CC
PEST	SW8081	ALPHA BHC	CNC54	003SB02801DL	S117739*13*DL	SO	2800	U	2800	R	ug/kg	DL
PEST	SW8081	ALPHA BHC	CNC54	003SB02802DL	S117739*14*DL	SO	3	U	3	R	ug/kg	DL
PEST	SW8081	ALPHA BHC	CNC54	003SB03002DL	S117739*19*DL	SO	7.6	U	7.6	R	ug/kg	DL
PEST	SW8081	ALPHA BHC	CNC54	003SB02401DL	S117739*5*DL	SO	2.8	U	2.8	R	ug/kg	DL
PEST	SW8081	ALPHA BHC	CNC54	003SB02601	S117739*9	SO	1500	U	1500	UJ	ug/kg	CC
PEST	SW8081	ALPHA BHC	CNC55	003SB03102	S117739A*1	SO	1.4	U	1.4	UJ	ug/kg	CC
PEST	SW8081	ALPHA BHC	CNC55	003SB03601	S117739A*10	SO	1.4	U	1.4	UJ	ug/kg	CC, SS
PEST	SW8081	ALPHA BHC	CNC55	003CB02101	S117739A*13	SO	1.5	U	1.5	UJ	ug/kg	CC, SS
PEST	SW8081	ALPHA BHC	CNC55	003SB03301	S117739A*4	SO	70	U	70	UJ	ug/kg	CC
PEST	SW8081	ALPHA BHC	CNC55	003SB03302	S117739A*5	SO	1.4	U	1.4	UJ	ug/kg	CC
PEST	SW8081	ALPHA BHC	CNC55	003SB03401DL	S117739A*6*DL	SO	1400	U	1400	R	ug/kg	DL
PEST	SW8081	ALPHA BHC	CNC55	003SB03402DL	S117739A*7*DL	SO	150	U	150	R	ug/kg	DL
PEST	SW8081	ALPHA BHC	CNC55	003SB03501DL	S117739A*8*DL	SO	550	U	550	R	ug/kg	DL

Attachment 1 - Changed Qualifiers and Results
Zone G, SWMU 3, Soils - Data Validation

Parameter Class	Analytical Method	Parameter	SDG	Sample ID	Lab Sample ID	Matrix	Lab Result	Lab Qual	Final Result	Final Qual	Units	Reasons
PEST	SW8081	ALPHA BHC	CNC82	003SB04902	S242223*15	SO	1.6	U	1.6	UJ	ug/kg	SS
PEST	SW8081	ALPHA BHC	CNC82	003SB03702	S242223*2	SO	1.5	U	1.5	UJ	ug/kg	SS
PEST	SW8081	ALPHA BHC	CNC83	003SB05901	S242223A*11	SO	1.5	U	1.5	UJ	ug/kg	CC
PEST	SW8081	ALPHA BHC	CNC83	003SB06003	S242223A*13	SO	1400	U	1400	UJ	ug/kg	CC
PEST	SW8081	ALPHA BHC	CNC83	003SB06203	S242223A*15	SO	36	U	36	UJ	ug/kg	CC
PEST	SW8081	ALPHA BHC	CNC83	003SB06403	S242223A*17	SO	1400	U	1400	UJ	ug/kg	CC
PEST	SW8081	ALPHA BHC	CNC83	003CB06503	S242223A*19	SO	1.4	U	1.4	UJ	ug/kg	CC
PEST	SW8081	ALPHA BHC	CNC83	003SB05501	S242223A*4	SO	5.7	U	5.7	UJ	ug/kg	CC
PEST	SW8081	ALPHA BHC	CNC83	003SB05601	S242223A*6	SO	310	U	310	UJ	ug/kg	CC
PEST	SW8081	ALPHA BHC	CNC83	003SB05602	S242223A*7	SO	6.3	U	6.3	UJ	ug/kg	CC
PEST	SW8081	ALPHA BHC	CNC83	003SB05701	S242223A*8	SO	15	U	15	UJ	ug/kg	CC
PEST	SW8081	ALPHA BHC	CNC83	003SB05702	S242223A*9	SO	1.6	U	1.6	UJ	ug/kg	CC
PEST	SW8081	ALPHA BHC	CNC84	003EB037M1RE	S242223B*6*RE	WG	0.04	U	0.04	R	ug/l	RE
PEST	SW8081	ALPHA BHC	CNC109	003SB06801DL	S243436*1*DL	SO	14	U	14	R	ug/kg	DL
PEST	SW8081	ALPHA BHC	CNC109	003SB07103DL	S243436*10*DL	SO	5.5	U	5.5	R	ug/kg	DL
PEST	SW8081	ALPHA BHC	CNC109	003SB07201DL	S243436*11*DL	SO	280	U	280	R	ug/kg	DL
PEST	SW8081	ALPHA BHC	CNC109	003SB07203DL	S243436*12*DL	SO	28	U	28	R	ug/kg	DL
PEST	SW8081	ALPHA BHC	CNC109	003SB07301DL	S243436*13*DL	SO	270	U	270	R	ug/kg	DL
PEST	SW8081	ALPHA BHC	CNC109	003SB07303DL	S243436*14*DL	SO	1400	U	1400	R	ug/kg	DL
PEST	SW8081	ALPHA BHC	CNC109	003CB07303DL	S243436*15*DL	SO	1400	U	1400	R	ug/kg	DL
PEST	SW8081	ALPHA BHC	CNC109	003SB07501DL	S243436*18*DL	SO	140	U	140	R	ug/kg	DL
PEST	SW8081	ALPHA BHC	CNC109	003SB08403DL	S243436*19*DL	SO	3	U	3	R	ug/kg	DL
PEST	SW8081	ALPHA BHC	CNC109	003SB07001DL	S243436*6*DL	SO	15	U	15	R	ug/kg	DL
PEST	SW8081	ALPHA BHC	CNC109	003SB07101DL	S243436*9*DL	SO	34	U	34	R	ug/kg	DL
PEST	SW8081	ALPHA BHC	CNC110	003SB07901DL	S243436A*11*DL	SO	71	U	71	R	ug/kg	DL
PEST	SW8081	ALPHA BHC	CNC110	003SB07903DL	S243436A*12*DL	SO	60	U	60	R	ug/kg	DL
PEST	SW8081	ALPHA BHC	CNC110	003SB08103DL	S243436A*16*DL	SO	71	U	71	R	ug/kg	DL
PEST	SW8081	ALPHA BHC	CNC110	003SB08203DL	S243436A*17*DL	SO	760	U	760	R	ug/kg	DL
PEST	SW8081	ALPHA BHC	CNC110	003SB07601DL	S243436A*2*DL	SO	27	U	27	R	ug/kg	DL
PEST	SW8081	ALPHA BHC	CNC110	003SB07701DL	S243436A*4*DL	SO	29	U	29	R	ug/kg	DL
PEST	SW8081	ALPHA BHC	CNC110	003SB07801DL	S243436A*7*DL	SO	28	U	28	R	ug/kg	DL
PEST	SW8081	ALPHA BHC	CNC115	003SB09101DL	S244137*11*DL	SO	35	U	35	R	ug/kg	DL
PEST	SW8081	ALPHA BHC	CNC115	003SB08601DL	S244137*2*DL	SO	140	U	140	R	ug/kg	DL
PEST	SW8081	ALPHA BHC	CNC115	003SB09001DL	S244137*8*DL	SO	75	U	75	R	ug/kg	DL
PEST	SW8081	ALPHA BHC	CNC133	003SB09301	S245320*1	SO	1.5	U	1.5	R	ug/kg	RE

Parameter Class	Analytical Method	Analyte	SDG	Sample ID	Lab sample ID	Matrix	Lab Result	Lab Qual	Final Result	Final Qual	Units	Reasons
PEST	SW8081	ALPHA BHC	CNC133	003SB09301RE	S245320*1*RE	SO	3.1	U	3.1	UJ	ug/kg	HT,CC
PEST	SW8081	ALPHA BHC	CNC133	003SB09501	S245320*4	SO	7.3	U	7.3	R	ug/kg	RE
PEST	SW8081	ALPHA BHC	CNC133	003SB09501RE	S245320*4*RE	SO	15	U	15	UJ	ug/kg	HT
PEST	SW8081	ALPHA BHC	CNC133	003SB09503	S245320*5	SO	1.5	U	1.5	R	ug/kg	RE
PEST	SW8081	ALPHA BHC	CNC133	003SB09503RE	S245320*5*RE	SO	1.5	U	1.5	UJ	ug/kg	HT,CC
PEST	SW8081	ALPHA BHC	CNC133	003CB09503	S245320*6	SO	1.5	U	1.5	R	ug/kg	RE
PEST	SW8081	ALPHA BHC	CNC133	003CB09503RE	S245320*6*RE	SO	1.5	U	1.5	UJ	ug/kg	HT,CC
PEST	SW8081	ALPHA BHC	CNC147	003SB09801	S247015*1	SO	1.4	U	1.4	UJ	ug/kg	CC
PEST	SW8081	ALPHA-CHLORDANE	CNC54	003SB02602	S117739*10	SO	16	P	16	J	ug/kg	CC, 2C
PEST	SW8081	ALPHA-CHLORDANE	CNC54	003SB02701	S117739*11	SO	0.33	JP	0.33	J	ug/kg	2C
PEST	SW8081	ALPHA-CHLORDANE	CNC54	003SB02801	S117739*13	SO	1400	U	1400	UJ	ug/kg	CC
PEST	SW8081	ALPHA-CHLORDANE	CNC54	003SB02801DL	S117739*13*DL	SO	2800	U	2800	R	ug/kg	DL
PEST	SW8081	ALPHA-CHLORDANE	CNC54	003SB02802DL	S117739*14*DL	SO	0.92	DJP	0.92	R	ug/kg	DL
PEST	SW8081	ALPHA-CHLORDANE	CNC54	003CB02902	S117739*17	SO	0.32	JP	0.32	J	ug/kg	2C
PEST	SW8081	ALPHA-CHLORDANE	CNC54	003SB03002DL	S117739*19*DL	SO	7.6	U	7.6	R	ug/kg	DL
PEST	SW8081	ALPHA-CHLORDANE	CNC54	003SB02401DL	S117739*5*DL	SO	2.8	U	2.8	R	ug/kg	DL
PEST	SW8081	ALPHA-CHLORDANE	CNC54	003SB02601	S117739*9	SO	17000	P	17000	J	ug/kg	CC, 2C
PEST	SW8081	ALPHA-CHLORDANE	CNC55	003SB03601	S117739A*10	SO	1.4	U	1.4	UJ	ug/kg	SS
PEST	SW8081	ALPHA-CHLORDANE	CNC55	003CB02101	S117739A*13	SO	1.5	U	1.5	UJ	ug/kg	SS
PEST	SW8081	ALPHA-CHLORDANE	CNC55	003SB03302	S117739A*5	SO	4.8	P	4.8	J	ug/kg	2C
PEST	SW8081	ALPHA-CHLORDANE	CNC55	003SB03401DL	S117739A*6*DL	SO	1400	U	1400	R	ug/kg	DL
PEST	SW8081	ALPHA-CHLORDANE	CNC55	003SB03402DL	S117739A*7*DL	SO	150	U	150	R	ug/kg	DL
PEST	SW8081	ALPHA-CHLORDANE	CNC55	003SB03501DL	S117739A*8*DL	SO	550	U	550	R	ug/kg	DL
PEST	SW8081	ALPHA-CHLORDANE	CNC62	003SB03902	S240294*2	SO	15	=	15	J	ug/kg	MD
PEST	SW8081	ALPHA-CHLORDANE	CNC62	003SB04002	S240294*4	SO	98	P	98	J	ug/kg	2C
PEST	SW8081	ALPHA-CHLORDANE	CNC62	003SB04201	S240294*8	SO	52	P	52	J	ug/kg	2C
PEST	SW8081	ALPHA-CHLORDANE	CNC82	003SB04601	S242223*10	SO	0.46	J	0.46	J	ug/kg	IS
PEST	SW8081	ALPHA-CHLORDANE	CNC82	003SB04701	S242223*11	SO	160	P	160	J	ug/kg	2C, IS
PEST	SW8081	ALPHA-CHLORDANE	CNC82	003SB04902	S242223*15	SO	1.6	U	1.6	UJ	ug/kg	SS
PEST	SW8081	ALPHA-CHLORDANE	CNC82	003SB03702	S242223*2	SO	1.5	U	1.5	UJ	ug/kg	SS
PEST	SW8081	ALPHA-CHLORDANE	CNC83	003SB05301	S242223A*1	SO	0.46	JP	0.46	J	ug/kg	2C
PEST	SW8081	ALPHA-CHLORDANE	CNC83	003SB05801	S242223A*10	SO	99	P	99	J	ug/kg	2C
PEST	SW8081	ALPHA-CHLORDANE	CNC83	003SB06403	S242223A*17	SO	21000	P	21000	J	ug/kg	2C
PEST	SW8081	ALPHA-CHLORDANE	CNC83	003SB06603	S242223A*20	SO	20	P	20	J	ug/kg	2C
PEST	SW8081	ALPHA-CHLORDANE	CNC83	003SB05501	S242223A*4	SO	75	P	75	J	ug/kg	2C

Attachment 1 - Changed Qualifiers and Results
Zone G, SWMU 3, Soils - Data Validation

Parameter Class	Analytical Method	Parameter	SDG	Sample ID	Lab Sample ID	Matrix	Lab Result	Lab Qual	Final Result	Final Qual	Units	Reasons
PEST	SW8081	ALPHA-CHLORDANE	CNC83	003SB05601	S242223A*6	SO	2000	P	2000	J	ug/kg	2C
PEST	SW8081	ALPHA-CHLORDANE	CNC83	003SB05701	S242223A*8	SO	220	P	220	J	ug/kg	2C
PEST	SW8081	ALPHA-CHLORDANE	CNC83	003SB05702	S242223A*9	SO	2.8	P	2.8	J	ug/kg	2C
PEST	SW8081	ALPHA-CHLORDANE	CNC84	003SB05102	S242223B*2	SO	1.6	P	1.6	J	ug/kg	2C
PEST	SW8081	ALPHA-CHLORDANE	CNC84	003EB037M1RE	S242223B*6*RE	WG	0.04	U	0.04	R	ug/l	RE
PEST	SW8081	ALPHA-CHLORDANE	CNC109	003SB06801DL	S243436*1*DL	SO	3.9	DJ	3.9	R	ug/kg	DL
PEST	SW8081	ALPHA-CHLORDANE	CNC109	003SB07103DL	S243436*10*DL	SO	27	D	27	R	ug/kg	DL
PEST	SW8081	ALPHA-CHLORDANE	CNC109	003SB07201	S243436*11	SO	210	EP	210	R	ug/kg	LR
PEST	SW8081	ALPHA-CHLORDANE	CNC109	003SB07201DL	S243436*11*DL	SO	270	DJ	270	J	ug/kg	DL
PEST	SW8081	ALPHA-CHLORDANE	CNC109	003SB07203DL	S243436*12*DL	SO	73	D	73	R	ug/kg	DL
PEST	SW8081	ALPHA-CHLORDANE	CNC109	003SB07301DL	S243436*13*DL	SO	49	DJP	49	R	ug/kg	DL
PEST	SW8081	ALPHA-CHLORDANE	CNC109	003SB07303	S243436*14	SO	28	JP	28	J	ug/kg	2C
PEST	SW8081	ALPHA-CHLORDANE	CNC109	003SB07303DL	S243436*14*DL	SO	1400	U	1400	R	ug/kg	DL
PEST	SW8081	ALPHA-CHLORDANE	CNC109	003CB07303DL	S243436*15*DL	SO	1400	U	1400	R	ug/kg	DL
PEST	SW8081	ALPHA-CHLORDANE	CNC109	003SB07501	S243436*18	SO	52	P	52	J	ug/kg	2C
PEST	SW8081	ALPHA-CHLORDANE	CNC109	003SB07501DL	S243436*18*DL	SO	55	DJ	55	R	ug/kg	DL
PEST	SW8081	ALPHA-CHLORDANE	CNC109	003SB08403DL	S243436*19*DL	SO	3	U	3	R	ug/kg	DL
PEST	SW8081	ALPHA-CHLORDANE	CNC109	003SB07001DL	S243436*6*DL	SO	15	U	15	R	ug/kg	DL
PEST	SW8081	ALPHA-CHLORDANE	CNC109	003SB07101DL	S243436*9*DL	SO	120	D	120	R	ug/kg	DL
PEST	SW8081	ALPHA-CHLORDANE	CNC110	003SB07803	S243436A*10	SO	5.7	P	5.7	J	ug/kg	2C
PEST	SW8081	ALPHA-CHLORDANE	CNC110	003SB07901	S243436A*11	SO	860	E	860	R	ug/kg	LR
PEST	SW8081	ALPHA-CHLORDANE	CNC110	003SB07903	S243436A*12	SO	650	EP	650	R	ug/kg	LR
PEST	SW8081	ALPHA-CHLORDANE	CNC110	003SB08003	S243436A*14	SO	18	P	18	J	ug/kg	2C
PEST	SW8081	ALPHA-CHLORDANE	CNC110	003SB08103	S243436A*16	SO	800	E	800	R	ug/kg	LR
PEST	SW8081	ALPHA-CHLORDANE	CNC110	003SB08203	S243436A*17	SO	2700	EP	2700	R	ug/kg	LR
PEST	SW8081	ALPHA-CHLORDANE	CNC110	003SB08303	S243436A*18	SO	8	P	8	J	ug/kg	2C
PEST	SW8081	ALPHA-CHLORDANE	CNC110	003SB07601DL	S243436A*2*DL	SO	38	DP	38	R	ug/kg	DL
PEST	SW8081	ALPHA-CHLORDANE	CNC110	003SB07603	S243436A*3	SO	2.7	JP	2.7	J	ug/kg	2C
PEST	SW8081	ALPHA-CHLORDANE	CNC110	003SB07701	S243436A*4	SO	80	P	80	J	ug/kg	2C
PEST	SW8081	ALPHA-CHLORDANE	CNC110	003SB07701DL	S243436A*4*DL	SO	76	DP	76	R	ug/kg	DL
PEST	SW8081	ALPHA-CHLORDANE	CNC110	003SB07702	S243436A*5	SO	1.2	JP	1.2	J	ug/kg	2C
PEST	SW8081	ALPHA-CHLORDANE	CNC110	003SB07703	S243436A*6	SO	4.9	P	4.9	J	ug/kg	2C
PEST	SW8081	ALPHA-CHLORDANE	CNC110	003SB07801	S243436A*7	SO	140	P	140	J	ug/kg	2C
PEST	SW8081	ALPHA-CHLORDANE	CNC110	003SB07801DL	S243436A*7*DL	SO	130	DP	130	R	ug/kg	DL
PEST	SW8081	ALPHA-CHLORDANE	CNC110	003SB07802	S243436A*8	SO	1.8	P	1.8	J	ug/l	2C

Parameter Class	Analytical Method	Analyte	Site	Sample ID	Lab Sample ID	Matrix	Lab Result	Lab Qual	Final Result	Final Qual	Units	Reasons
PEST	SW8081	ALPHA-CHLORDANE	CNC110	003CB07802	S243436A*9	SO	1.9	P	1.9	J	ug/kg	2C
PEST	SW8081	ALPHA-CHLORDANE	CNC115	003SB08501	S244137*1	SO	53	P	53	J	ug/kg	2C
PEST	SW8081	ALPHA-CHLORDANE	CNC115	003CB09003	S244137*10	SO	34	P	34	J	ug/kg	2C
PEST	SW8081	ALPHA-CHLORDANE	CNC115	003SB09101	S244137*11	SO	400	EP	400	R	ug/kg	LR
PEST	SW8081	ALPHA-CHLORDANE	CNC115	003SB09101DL	S244137*11*DL	SO	400	DP	400	J	ug/kg	2C
PEST	SW8081	ALPHA-CHLORDANE	CNC115	003SB09103	S244137*12	SO	35	P	35	J	ug/kg	2C
PEST	SW8081	ALPHA-CHLORDANE	CNC115	003SB09202	S244137*13	SO	1.7	P	1.7	J	ug/kg	2C
PEST	SW8081	ALPHA-CHLORDANE	CNC115	003SB08601	S244137*2	SO	6.1	JP	6.1	J	ug/kg	2C
PEST	SW8081	ALPHA-CHLORDANE	CNC115	003SB08601DL	S244137*2*DL	SO	140	U	140	R	ug/kg	DL
PEST	SW8081	ALPHA-CHLORDANE	CNC115	003SB08801	S244137*4	SO	20	P	20	J	ug/kg	2C
PEST	SW8081	ALPHA-CHLORDANE	CNC115	003SB08803	S244137*5	SO	1.4	JP	1.4	J	ug/kg	2C
PEST	SW8081	ALPHA-CHLORDANE	CNC115	003SB09001	S244137*8	SO	840	EP	840	R	ug/kg	LR
PEST	SW8081	ALPHA-CHLORDANE	CNC115	003SB09001DL	S244137*8*DL	SO	910	DP	910	J	ug/kg	2C
PEST	SW8081	ALPHA-CHLORDANE	CNC115	003SB09003	S244137*9	SO	40	P	40	J	ug/kg	2C
PEST	SW8081	ALPHA-CHLORDANE	CNC133	003SB09301	S245320*1	SO	29	P	29	R	ug/kg	RE
PEST	SW8081	ALPHA-CHLORDANE	CNC133	003SB09301RE	S245320*1*RE	SO	45	P	45	J	ug/kg	HT,2C
PEST	SW8081	ALPHA-CHLORDANE	CNC133	003SB09501	S245320*4	SO	7.3	U	7.3	R	ug/kg	RE
PEST	SW8081	ALPHA-CHLORDANE	CNC133	003SB09501RE	S245320*4*RE	SO	15	U	15	UJ	ug/kg	HT
PEST	SW8081	ALPHA-CHLORDANE	CNC133	003SB09503	S245320*5	SO	1.5	U	1.5	R	ug/kg	RE
PEST	SW8081	ALPHA-CHLORDANE	CNC133	003SB09503RE	S245320*5*RE	SO	1.5	U	1.5	UJ	ug/kg	HT
PEST	SW8081	ALPHA-CHLORDANE	CNC133	003CB09503	S245320*6	SO	1.5	U	1.5	R	ug/kg	RE
PEST	SW8081	ALPHA-CHLORDANE	CNC133	003CB09503RE	S245320*6*RE	SO	1.5	U	1.5	UJ	ug/kg	HT
PEST	SW8081	ALPHA-CHLORDANE	CNC133	003SB09701	S245320*8	SO	39	P	39	J	ug/kg	2C
PEST	SW8081	ALPHA-CHLORDANE	CNC147	003SB09801	S247015*1	SO	0.39	JP	0.39	J	ug/kg	2C
PEST	SW8081	BETA BHC	CNC54	003SB02801DL	S117739*13*DL	SO	2800	U	2800	R	ug/kg	DL
PEST	SW8081	BETA BHC	CNC54	003SB02802DL	S117739*14*DL	SO	3	U	3	R	ug/kg	DL
PEST	SW8081	BETA BHC	CNC54	003SB03002DL	S117739*19*DL	SO	7.6	U	7.6	R	ug/kg	DL
PEST	SW8081	BETA BHC	CNC54	003SB02401DL	S117739*5*DL	SO	2.8	U	2.8	R	ug/kg	DL
PEST	SW8081	BETA BHC	CNC55	003SB03601	S117739A*10	SO	1.4	U	1.4	UJ	ug/kg	SS
PEST	SW8081	BETA BHC	CNC55	003CB02101	S117739A*13	SO	1.5	U	1.5	UJ	ug/kg	SS
PEST	SW8081	BETA BHC	CNC55	003SB03401DL	S117739A*6*DL	SO	1400	U	1400	R	ug/kg	DL
PEST	SW8081	BETA BHC	CNC55	003SB03402DL	S117739A*7*DL	SO	150	U	150	R	ug/kg	DL
PEST	SW8081	BETA BHC	CNC55	003SB03501DL	S117739A*8*DL	SO	550	U	550	R	ug/kg	DL
PEST	SW8081	BETA BHC	CNC82	003SB04902	S242223*15	SO	1.6	U	1.6	UJ	ug/kg	SS
PEST	SW8081	BETA BHC	CNC82	003SB03702	S242223*2	SO	1.5	U	1.5	UJ	ug/kg	SS

Attachment 1 - Changed Qualifiers and Results
Zone G, SWMU 3, Soils - Data Validation

Parameter Class	Analytical Method	Parameter	SDG	Sample ID	Lab Sample ID	Matrix	Lab Result	Lab Qual	Final Result	Final Qual	Units	Reasons
PEST	SW8081	BETA BHC	CNC84	003EB037M1RE	S242223B*6*RE	WG	0.04	U	0.04	R	ug/l	RE
PEST	SW8081	BETA BHC	CNC109	003SB06801DL	S243436*1*DL	SO	14	U	14	R	ug/kg	DL
PEST	SW8081	BETA BHC	CNC109	003SB07103DL	S243436*10*DL	SO	5.5	U	5.5	R	ug/kg	DL
PEST	SW8081	BETA BHC	CNC109	003SB07201DL	S243436*11*DL	SO	280	U	280	R	ug/kg	DL
PEST	SW8081	BETA BHC	CNC109	003SB07203DL	S243436*12*DL	SO	28	U	28	R	ug/kg	DL
PEST	SW8081	BETA BHC	CNC109	003SB07301DL	S243436*13*DL	SO	270	U	270	R	ug/kg	DL
PEST	SW8081	BETA BHC	CNC109	003SB07303DL	S243436*14*DL	SO	1400	U	1400	R	ug/kg	DL
PEST	SW8081	BETA BHC	CNC109	003CB07303DL	S243436*15*DL	SO	1400	U	1400	R	ug/kg	DL
PEST	SW8081	BETA BHC	CNC109	003SB07501DL	S243436*18*DL	SO	140	U	140	R	ug/kg	DL
PEST	SW8081	BETA BHC	CNC109	003SB08403DL	S243436*19*DL	SO	3	U	3	R	ug/kg	DL
PEST	SW8081	BETA BHC	CNC109	003SB07001DL	S243436*6*DL	SO	15	U	15	R	ug/kg	DL
PEST	SW8081	BETA BHC	CNC109	003SB07101DL	S243436*9*DL	SO	34	U	34	R	ug/kg	DL
PEST	SW8081	BETA BHC	CNC110	003SB07901DL	S243436A*11*DL	SO	71	U	71	R	ug/kg	DL
PEST	SW8081	BETA BHC	CNC110	003SB07903DL	S243436A*12*DL	SO	60	U	60	R	ug/kg	DL
PEST	SW8081	BETA BHC	CNC110	003SB08103	S243436A*16	SO	17	P	17	J	ug/kg	2C
PEST	SW8081	BETA BHC	CNC110	003SB08103DL	S243436A*16*DL	SO	71	U	71	R	ug/kg	DL
PEST	SW8081	BETA BHC	CNC110	003SB08203	S243436A*17	SO	290	P	290	J	ug/kg	2C
PEST	SW8081	BETA BHC	CNC110	003SB08203DL	S243436A*17*DL	SO	760	U	760	R	ug/kg	DL
PEST	SW8081	BETA BHC	CNC110	003SB07601DL	S243436A*2*DL	SO	27	U	27	R	ug/kg	DL
PEST	SW8081	BETA BHC	CNC110	003SB07701DL	S243436A*4*DL	SO	29	U	29	R	ug/kg	DL
PEST	SW8081	BETA BHC	CNC110	003SB07801DL	S243436A*7*DL	SO	28	U	28	R	ug/kg	DL
PEST	SW8081	BETA BHC	CNC115	003SB09101DL	S244137*11*DL	SO	35	U	35	R	ug/kg	DL
PEST	SW8081	BETA BHC	CNC115	003SB08601DL	S244137*2*DL	SO	140	U	140	R	ug/kg	DL
PEST	SW8081	BETA BHC	CNC115	003SB09001DL	S244137*8*DL	SO	75	U	75	R	ug/kg	DL
PEST	SW8081	BETA BHC	CNC133	003SB09301	S245320*1	SO	1.5	U	1.5	R	ug/kg	RE
PEST	SW8081	BETA BHC	CNC133	003SB09301RE	S245320*1*RE	SO	3.1	U	3.1	UJ	ug/kg	HT
PEST	SW8081	BETA BHC	CNC133	003SB09501	S245320*4	SO	7.3	U	7.3	R	ug/kg	RE
PEST	SW8081	BETA BHC	CNC133	003SB09501RE	S245320*4*RE	SO	15	U	15	UJ	ug/kg	HT
PEST	SW8081	BETA BHC	CNC133	003SB09503	S245320*5	SO	1.5	U	1.5	R	ug/kg	RE
PEST	SW8081	BETA BHC	CNC133	003SB09503RE	S245320*5*RE	SO	1.5	U	1.5	UJ	ug/kg	HT
PEST	SW8081	BETA BHC	CNC133	003CB09503	S245320*6	SO	1.5	U	1.5	R	ug/kg	RE
PEST	SW8081	BETA BHC	CNC133	003CB09503RE	S245320*6*RE	SO	1.5	U	1.5	UJ	ug/kg	HT
PEST	SW8081	Chlordane	CNC54	003SB02801DL	S117739*13*DL	SO	28000	U	28000	R	ug/kg	DL
PEST	SW8081	Chlordane	CNC54	003SB02802DL	S117739*14*DL	SO	30	U	30	R	ug/kg	DL
PEST	SW8081	Chlordane	CNC54	003SB[illegible]02DL	S117739*19*DL	SO	76	U	76	R	ug/[illegible]	DL

Parameter Class	Analytical Method	Parameter	Station	Sample ID	Lab Sample ID	Matrix	Lab Result	Lab Qual	Final Result	Final Qual	Units	Reasons
PEST	SW8081	Chlordane	CNC54	003SB02401DL	S117739*5*DL	SO	28	U	28	R	ug/kg	DL
PEST	SW8081	Chlordane	CNC55	003SB03102	S117739A*1	SO	14	U	14	UJ	ug/kg	CC
PEST	SW8081	Chlordane	CNC55	003SB03601	S117739A*10	SO	14	U	14	UJ	ug/kg	SS
PEST	SW8081	Chlordane	CNC55	003CB02101	S117739A*13	SO	15	U	15	UJ	ug/kg	SS
PEST	SW8081	Chlordane	CNC55	003SB03301	S117739A*4	SO	700	U	700	UJ	ug/kg	CC
PEST	SW8081	Chlordane	CNC55	003SB03302	S117739A*5	SO	31	=	31	J	ug/kg	CC
PEST	SW8081	Chlordane	CNC55	003SB03401DL	S117739A*6*DL	SO	14000	U	14000	R	ug/kg	DL
PEST	SW8081	Chlordane	CNC55	003SB03402DL	S117739A*7*DL	SO	1500	U	1500	R	ug/kg	DL
PEST	SW8081	Chlordane	CNC55	003SB03501DL	S117739A*8*DL	SO	5500	U	5500	R	ug/kg	DL
PEST	SW8081	Chlordane	CNC62	003SB03901	S240294*1	SO	640	U	640	UJ	ug/kg	CC
PEST	SW8081	Chlordane	CNC62	003SB03902	S240294*2	SO	54	=	54	J	ug/kg	CC
PEST	SW8081	Chlordane	CNC62	003SB04001	S240294*3	SO	2400	=	2400	J	ug/kg	CC
PEST	SW8081	Chlordane	CNC62	003SB04002	S240294*4	SO	630	=	630	J	ug/kg	CC
PEST	SW8081	Chlordane	CNC62	003SB04101	S240294*5	SO	440	=	440	J	ug/kg	CC
PEST	SW8081	Chlordane	CNC62	003SB04102	S240294*6	SO	15	U	15	UJ	ug/kg	CC
PEST	SW8081	Chlordane	CNC62	003CB04102	S240294*7	SO	15	U	15	UJ	ug/kg	CC
PEST	SW8081	Chlordane	CNC62	003SB04201	S240294*8	SO	60	U	60	UJ	ug/kg	CC
PEST	SW8081	Chlordane	CNC62	003SB04202	S240294*9	SO	21	U	21	UJ	ug/kg	CC
PEST	SW8081	Chlordane	CNC82	003SB03701	S242223*1	SO	28	U	28	UJ	ug/kg	CC
PEST	SW8081	Chlordane	CNC82	003SB04601	S242223*10	SO	14	U	14	UJ	ug/kg	CC
PEST	SW8081	Chlordane	CNC82	003SB04701	S242223*11	SO	830	P	830	J	ug/kg	2C, IS, CC
PEST	SW8081	Chlordane	CNC82	003SB04801	S242223*12	SO	14000	U	14000	UJ	ug/kg	CC
PEST	SW8081	Chlordane	CNC82	003SB04802	S242223*13	SO	58	U	58	UJ	ug/kg	CC
PEST	SW8081	Chlordane	CNC82	003SB04901	S242223*14	SO	87	U	87	UJ	ug/kg	CC
PEST	SW8081	Chlordane	CNC82	003SB04902	S242223*15	SO	16	U	16	UJ	ug/kg	CC, SS
PEST	SW8081	Chlordane	CNC82	003SB05101	S242223*16	SO	150	U	150	UJ	ug/kg	CC
PEST	SW8081	Chlordane	CNC82	003SB05201	S242223*17	SO	280	U	280	UJ	ug/kg	CC
PEST	SW8081	Chlordane	CNC82	003SB05202	S242223*18	SO	160	=	160	J	ug/kg	CC
PEST	SW8081	Chlordane	CNC82	003SB03702	S242223*2	SO	15	U	15	UJ	ug/kg	CC, SS
PEST	SW8081	Chlordane	CNC82	003SB05802	S242223*20	SO	160	U	160	UJ	ug/kg	CC
PEST	SW8081	Chlordane	CNC82	003SB03801	S242223*3	SO	29	U	29	UJ	ug/kg	CC
PEST	SW8081	Chlordane	CNC82	003CB03801	S242223*4	SO	28	U	28	UJ	ug/kg	CC
PEST	SW8081	Chlordane	CNC82	003SB03802	S242223*5	SO	15	U	15	UJ	ug/kg	CC
PEST	SW8081	Chlordane	CNC82	003SB04301	S242223*6	SO	700	U	700	UJ	ug/kg	CC
PEST	SW8081	Chlordane	CNC82	003SB04401	S242223*7	SO	3400	U	3400	UJ	ug/kg	CC

Attachment 1 - Changed Qualifiers and Results
Zone G, SWMU 3, Soils - Data Validation

Parameter Class	Analytical Method	Parameter	SDG	Sample ID	Lab Sample ID	Matrix	Lab Result	Lab Qual	Final Result	Final Qual	Units	Reasons
PEST	SW8081	Chlordane	CNC82	003SB04402	S242223*8	SO	600	U	600	UJ	ug/kg	CC
PEST	SW8081	Chlordane	CNC82	003SB04501	S242223*9	SO	1400	U	1400	UJ	ug/kg	CC
PEST	SW8081	Chlordane	CNC84	003SB05102	S242223B*2	SO	11	J	11	J	ug/kg	CC
PEST	SW8081	Chlordane	CNC84	003SB05302	S242223B*3	SO	14	U	14	UJ	ug/kg	CC
PEST	SW8081	Chlordane	CNC84	003SB06701	S242223B*4	SO	2800	U	2800	UJ	ug/kg	CC
PEST	SW8081	Chlordane	CNC84	003SB06702	S242223B*5	SO	15	U	15	UJ	ug/kg	CC
PEST	SW8081	Chlordane	CNC84	003EB037M1RE	S242223B*6*RE	WG	0.4	U	0.4	R	ug/l	RE
PEST	SW8081	Chlordane	CNC109	003SB06801DL	S243436*1*DL	SO	140	U	140	R	ug/kg	DL
PEST	SW8081	Chlordane	CNC109	003SB07103	S243436*10	SO	260	P	260	J	ug/kg	2C
PEST	SW8081	Chlordane	CNC109	003SB07103DL	S243436*10*DL	SO	240	D	240	R	ug/kg	DL
PEST	SW8081	Chlordane	CNC109	003SB07201	S243436*11	SO	1500	P	1500	J	ug/kg	2C
PEST	SW8081	Chlordane	CNC109	003SB07201DL	S243436*11*DL	SO	2800	U	2800	R	ug/kg	DL
PEST	SW8081	Chlordane	CNC109	003SB07203DL	S243436*12*DL	SO	550	D	550	R	ug/kg	DL
PEST	SW8081	Chlordane	CNC109	003SB07301DL	S243436*13*DL	SO	2700	U	2700	R	ug/kg	DL
PEST	SW8081	Chlordane	CNC109	003SB07303DL	S243436*14*DL	SO	14000	U	14000	R	ug/kg	DL
PEST	SW8081	Chlordane	CNC109	003CB07303DL	S243436*15*DL	SO	14000	U	14000	R	ug/kg	DL
PEST	SW8081	Chlordane	CNC109	003SB07501	S243436*18	SO	420	P	420	J	ug/kg	2C
PEST	SW8081	Chlordane	CNC109	003SB07501DL	S243436*18*DL	SO	1400	U	1400	R	ug/kg	DL
PEST	SW8081	Chlordane	CNC109	003SB08403DL	S243436*19*DL	SO	30	U	30	R	ug/kg	DL
PEST	SW8081	Chlordane	CNC109	003SB07001DL	S243436*6*DL	SO	150	U	150	R	ug/kg	DL
PEST	SW8081	Chlordane	CNC109	003SB07101DL	S243436*9*DL	SO	1100	D	1100	R	ug/kg	DL
PEST	SW8081	Chlordane	CNC110	003SB07503	S243436A*1	SO	40	JP	40	J	ug/kg	2C
PEST	SW8081	Chlordane	CNC110	003SB07901DL	S243436A*11*DL	SO	5600	D	5600	R	ug/kg	DL
PEST	SW8081	Chlordane	CNC110	003SB07903DL	S243436A*12*DL	SO	4500	D	4500	R	ug/kg	DL
PEST	SW8081	Chlordane	CNC110	003SB08103	S243436A*16	SO	6900	EP	6900	R	ug/kg	LR
PEST	SW8081	Chlordane	CNC110	003SB08203DL	S243436A*17*DL	SO	18000	D	18000	R	ug/kg	DL
PEST	SW8081	Chlordane	CNC110	003SB07601DL	S243436A*2*DL	SO	270	U	270	R	ug/kg	DL
PEST	SW8081	Chlordane	CNC110	003SB07701DL	S243436A*4*DL	SO	570	D	570	R	ug/kg	DL
PEST	SW8081	Chlordane	CNC110	003SB07801DL	S243436A*7*DL	SO	960	D	960	R	ug/kg	DL
PEST	SW8081	Chlordane	CNC115	003SB09101DL	S244137*11*DL	SO	1800	D	1800	R	ug/kg	DL
PEST	SW8081	Chlordane	CNC115	003SB08601DL	S244137*2*DL	SO	1400	U	1400	R	ug/kg	DL
PEST	SW8081	Chlordane	CNC115	003SB09001DL	S244137*8*DL	SO	5100	D	5100	R	ug/kg	DL
PEST	SW8081	Chlordane	CNC133	003SB09301	S245320*1	SO	160	=	160	R	ug/kg	RE
PEST	SW8081	Chlordane	CNC133	003SB09301RE	S245320*1*RE	SO	240	=	240	J	ug/kg	HT,CC
PEST	SW8081	Chlordane	CNC133	003SB09401	S245320*2	SO	2800	U	2800	UJ	ug/kg	CC

Parameter Class	Method	Analyte	SDG	Sample ID	Lab Sample ID	Matrix	Lab Result	Lab Qual	Final Result	Final Qual	Units	Reasons
PEST	SW8081	Chlordane	CNC133	003SB09403	S245320*3	SO	1500	U	1500	UJ	ug/kg	CC
PEST	SW8081	Chlordane	CNC133	003SB09501	S245320*4	SO	73	U	73	R	ug/kg	RE
PEST	SW8081	Chlordane	CNC133	003SB09501RE	S245320*4*RE	SO	150	U	150	UJ	ug/kg	HT
PEST	SW8081	Chlordane	CNC133	003SB09503	S245320*5	SO	15	U	15	R	ug/kg	RE
PEST	SW8081	Chlordane	CNC133	003SB09503RE	S245320*5*RE	SO	15	U	15	UJ	ug/kg	HT,CC
PEST	SW8081	Chlordane	CNC133	003CB09503	S245320*6	SO	15	U	15	R	ug/kg	RE
PEST	SW8081	Chlordane	CNC133	003CB09503RE	S245320*6*RE	SO	15	U	15	UJ	ug/kg	HT,CC
PEST	SW8081	Chlordane	CNC133	003SB09601	S245320*7	SO	14	U	14	UJ	ug/kg	CC
PEST	SW8081	DELTA BHC	CNC54	003SB02602	S117739*10	SO	1.4	U	1.4	UJ	ug/kg	CC
PEST	SW8081	DELTA BHC	CNC54	003SB02801	S117739*13	SO	1400	U	1400	UJ	ug/kg	CC
PEST	SW8081	DELTA BHC	CNC54	003SB02801DL	S117739*13*DL	SO	2800	U	2800	R	ug/kg	DL
PEST	SW8081	DELTA BHC	CNC54	003SB02802	S117739*14	SO	1.5	U	1.5	UJ	ug/kg	MS
PEST	SW8081	DELTA BHC	CNC54	003SB02802DL	S117739*14*DL	SO	1.8	DJP	1.8	R	ug/kg	DL
PEST	SW8081	DELTA BHC	CNC54	003SB03002DL	S117739*19*DL	SO	4.3	DJ	4.3	R	ug/kg	DL
PEST	SW8081	DELTA BHC	CNC54	003SB02401DL	S117739*5*DL	SO	1.7	DJP	1.7	R	ug/kg	DL
PEST	SW8081	DELTA BHC	CNC54	003SB02601	S117739*9	SO	1500	U	1500	UJ	ug/kg	CC
PEST	SW8081	DELTA BHC	CNC55	003SB03102	S117739A*1	SO	1.4	U	1.4	UJ	ug/kg	CC
PEST	SW8081	DELTA BHC	CNC55	003SB03601	S117739A*10	SO	1.4	U	1.4	UJ	ug/kg	CC, SS
PEST	SW8081	DELTA BHC	CNC55	003CB02101	S117739A*13	SO	1.5	U	1.5	UJ	ug/kg	CC, SS
PEST	SW8081	DELTA BHC	CNC55	003SB03301	S117739A*4	SO	70	U	70	UJ	ug/kg	CC
PEST	SW8081	DELTA BHC	CNC55	003SB03302	S117739A*5	SO	1.4	U	1.4	UJ	ug/kg	CC
PEST	SW8081	DELTA BHC	CNC55	003SB03401DL	S117739A*6*DL	SO	1400	U	1400	R	ug/kg	DL
PEST	SW8081	DELTA BHC	CNC55	003SB03402DL	S117739A*7*DL	SO	150	U	150	R	ug/kg	DL
PEST	SW8081	DELTA BHC	CNC55	003SB03501DL	S117739A*8*DL	SO	550	U	550	R	ug/kg	DL
PEST	SW8081	DELTA BHC	CNC82	003SB04902	S242223*15	SO	1.6	U	1.6	UJ	ug/kg	SS
PEST	SW8081	DELTA BHC	CNC82	003SB03702	S242223*2	SO	1.5	U	1.5	UJ	ug/kg	SS
PEST	SW8081	DELTA BHC	CNC83	003SB05801	S242223A*10	SO	5.8	U	5.8	UJ	ug/kg	CC
PEST	SW8081	DELTA BHC	CNC83	003SB05901	S242223A*11	SO	1.5	U	1.5	UJ	ug/kg	CC
PEST	SW8081	DELTA BHC	CNC83	003SB06003	S242223A*13	SO	1400	U	1400	UJ	ug/kg	CC
PEST	SW8081	DELTA BHC	CNC83	003SB06203	S242223A*15	SO	36	U	36	UJ	ug/kg	CC
PEST	SW8081	DELTA BHC	CNC83	003CB06503	S242223A*19	SO	1.4	U	1.4	UJ	ug/kg	CC
PEST	SW8081	DELTA BHC	CNC83	003SB05501	S242223A*4	SO	5.7	U	5.7	UJ	ug/kg	CC
PEST	SW8081	DELTA BHC	CNC83	003SB05601	S242223A*6	SO	310	U	310	UJ	ug/kg	CC
PEST	SW8081	DELTA BHC	CNC83	003SB05602	S242223A*7	SO	6.3	U	6.3	UJ	ug/kg	CC
PEST	SW8081	DELTA BHC	CNC83	003SB05701	S242223A*8	SO	15	U	15	UJ	ug/kg	CC

Attachment 1 - Changed Qualifiers and Results
Zone G, SWMU 3, Soils - Data Validation

Parameter Class	Analytical Method	Parameter	SDG	Sample ID	Lab Sample ID	Matrix	Lab Result	Lab Qual	Final Result	Final Qual	Units	Reasons
PEST	SW8081	DELTA BHC	CNC83	003SB05702	S242223A*9	SO	1.6	U	1.6	UJ	ug/kg	CC
PEST	SW8081	DELTA BHC	CNC84	003EB037M1RE	S242223B*6*RE	WG	0.04	U	0.04	R	ug/l	RE
PEST	SW8081	DELTA BHC	CNC109	003SB06801DL	S243436*1*DL	SO	14	U	14	R	ug/kg	DL
PEST	SW8081	DELTA BHC	CNC109	003SB07103DL	S243436*10*DL	SO	5.5	U	5.5	R	ug/kg	DL
PEST	SW8081	DELTA BHC	CNC109	003SB07201DL	S243436*11*DL	SO	280	U	280	R	ug/kg	DL
PEST	SW8081	DELTA BHC	CNC109	003SB07203DL	S243436*12*DL	SO	28	U	28	R	ug/kg	DL
PEST	SW8081	DELTA BHC	CNC109	003SB07301DL	S243436*13*DL	SO	270	U	270	R	ug/kg	DL
PEST	SW8081	DELTA BHC	CNC109	003SB07303DL	S243436*14*DL	SO	1400	U	1400	R	ug/kg	DL
PEST	SW8081	DELTA BHC	CNC109	003CB07303DL	S243436*15*DL	SO	1400	U	1400	R	ug/kg	DL
PEST	SW8081	DELTA BHC	CNC109	003SB07501DL	S243436*18*DL	SO	140	U	140	R	ug/kg	DL
PEST	SW8081	DELTA BHC	CNC109	003SB08403DL	S243436*19*DL	SO	3	U	3	R	ug/kg	DL
PEST	SW8081	DELTA BHC	CNC109	003SB07001DL	S243436*6*DL	SO	15	U	15	R	ug/kg	DL
PEST	SW8081	DELTA BHC	CNC109	003SB07101DL	S243436*9*DL	SO	34	U	34	R	ug/kg	DL
PEST	SW8081	DELTA BHC	CNC110	003SB07901DL	S243436A*11*DL	SO	71	U	71	R	ug/kg	DL
PEST	SW8081	DELTA BHC	CNC110	003SB07903DL	S243436A*12*DL	SO	60	U	60	R	ug/kg	DL
PEST	SW8081	DELTA BHC	CNC110	003SB08103DL	S243436A*16*DL	SO	71	U	71	R	ug/kg	DL
PEST	SW8081	DELTA BHC	CNC110	003SB08203DL	S243436A*17*DL	SO	760	U	760	R	ug/kg	DL
PEST	SW8081	DELTA BHC	CNC110	003SB07601DL	S243436A*2*DL	SO	27	U	27	R	ug/kg	DL
PEST	SW8081	DELTA BHC	CNC110	003SB07701DL	S243436A*4*DL	SO	29	U	29	R	ug/kg	DL
PEST	SW8081	DELTA BHC	CNC110	003SB07801DL	S243436A*7*DL	SO	28	U	28	R	ug/kg	DL
PEST	SW8081	DELTA BHC	CNC115	003SB09101DL	S244137*11*DL	SO	35	U	35	R	ug/kg	DL
PEST	SW8081	DELTA BHC	CNC115	003SB08601DL	S244137*2*DL	SO	140	U	140	R	ug/kg	DL
PEST	SW8081	DELTA BHC	CNC115	003SB09001DL	S244137*8*DL	SO	75	U	75	R	ug/kg	DL
PEST	SW8081	DELTA BHC	CNC133	003SB09301	S245320*1	SO	1.5	U	1.5	R	ug/kg	RE
PEST	SW8081	DELTA BHC	CNC133	003SB09301RE	S245320*1*RE	SO	3.1	U	3.1	UJ	ug/kg	HT,CC
PEST	SW8081	DELTA BHC	CNC133	003SB09401	S245320*2	SO	280	U	280	UJ	ug/kg	CC
PEST	SW8081	DELTA BHC	CNC133	003SB09403	S245320*3	SO	150	U	150	UJ	ug/kg	CC
PEST	SW8081	DELTA BHC	CNC133	003SB09501	S245320*4	SO	7.3	U	7.3	R	ug/kg	RE
PEST	SW8081	DELTA BHC	CNC133	003SB09501RE	S245320*4*RE	SO	15	U	15	UJ	ug/kg	HT
PEST	SW8081	DELTA BHC	CNC133	003SB09503	S245320*5	SO	1.5	U	1.5	R	ug/kg	RE
PEST	SW8081	DELTA BHC	CNC133	003SB09503RE	S245320*5*RE	SO	1.5	U	1.5	UJ	ug/kg	HT,CC
PEST	SW8081	DELTA BHC	CNC133	003CB09503	S245320*6	SO	1.5	U	1.5	R	ug/kg	RE
PEST	SW8081	DELTA BHC	CNC133	003CB09503RE	S245320*6*RE	SO	1.5	U	1.5	UJ	ug/kg	HT,CC
PEST	SW8081	DELTA BHC	CNC133	003SB09601	S245320*7	SO	1.4	U	1.4	UJ	ug/kg	CC
PEST	SW8081	DELTA BHC	CNC147	003SB[illegible]01	S247015*1	SO	1.4	U	1.4	UJ	ug/[illegible]	CC

Parameter Class	Analytical Method	Parameter	SDG	Sample ID	Lab Sample ID	Matrix	Lab Result	Lab Qual	Final Result	Final Qual	Units	Reasons
PEST	SW8081	DIELDRIN	CNC54	003SB02602	S117739*10	SO	0.48	JP	0.48	J	ug/kg	2C
PEST	SW8081	DIELDRIN	CNC54	003SB02801DL	S117739*13*DL	SO	5400	U	5400	R	ug/kg	DL
PEST	SW8081	DIELDRIN	CNC54	003SB02802DL	S117739*14*DL	SO	5.8	U	5.8	R	ug/kg	DL
PEST	SW8081	DIELDRIN	CNC54	003SB03002DL	S117739*19*DL	SO	14	U	14	R	ug/kg	DL
PEST	SW8081	DIELDRIN	CNC54	003SB02401DL	S117739*5*DL	SO	5.3	U	5.3	R	ug/kg	DL
PEST	SW8081	DIELDRIN	CNC55	003SB03601	S117739A*10	SO	2.7	U	2.7	UJ	ug/kg	SS
PEST	SW8081	DIELDRIN	CNC55	003SB02101	S117739A*12	SO	0.64	JP	0.64	J	ug/kg	2C
PEST	SW8081	DIELDRIN	CNC55	003CB02101	S117739A*13	SO	0.66	JP	0.66	J	ug/kg	2C, SS
PEST	SW8081	DIELDRIN	CNC55	003SB03301	S117739A*4	SO	120	J	120	J	ug/kg	CC
PEST	SW8081	DIELDRIN	CNC55	003SB03401DL	S117739A*6*DL	SO	2600	U	2600	R	ug/kg	DL
PEST	SW8081	DIELDRIN	CNC55	003SB03402DL	S117739A*7*DL	SO	290	U	290	R	ug/kg	DL
PEST	SW8081	DIELDRIN	CNC55	003SB03501DL	S117739A*8*DL	SO	1100	U	1100	R	ug/kg	DL
PEST	SW8081	DIELDRIN	CNC62	003SB03901	S240294*1	SO	16	JP	16	J	ug/kg	2C
PEST	SW8081	DIELDRIN	CNC62	003SB03902	S240294*2	SO	0.69	JP	0.69	J	ug/kg	2C
PEST	SW8081	DIELDRIN	CNC62	003SB04001	S240294*3	SO	9.8	JP	9.8	J	ug/kg	2C
PEST	SW8081	DIELDRIN	CNC62	003SB04002	S240294*4	SO	2.6	JP	2.6	J	ug/kg	2C
PEST	SW8081	DIELDRIN	CNC82	003SB04701	S242223*11	SO	29	P	29	J	ug/kg	2C, IS
PEST	SW8081	DIELDRIN	CNC82	003SB04902	S242223*15	SO	3.2	U	3.2	UJ	ug/kg	SS
PEST	SW8081	DIELDRIN	CNC82	003SB03702	S242223*2	SO	3	U	3	UJ	ug/kg	SS
PEST	SW8081	DIELDRIN	CNC83	003SB05801	S242223A*10	SO	12	P	12	J	ug/kg	2C
PEST	SW8081	DIELDRIN	CNC83	003SB06403	S242223A*17	SO	580	JP	580	J	ug/kg	2C
PEST	SW8081	DIELDRIN	CNC83	003SB05401	S242223A*2	SO	4.7	J	4.7	J	ug/kg	CC
PEST	SW8081	DIELDRIN	CNC83	003SB06603	S242223A*20	SO	5	J	5	J	ug/kg	CC
PEST	SW8081	DIELDRIN	CNC83	003SB05701	S242223A*8	SO	15	JP	15	J	ug/kg	2C
PEST	SW8081	DIELDRIN	CNC84	003EB037M1RE	S242223B*6*RE	WG	0.08	U	0.08	R	ug/l	RE
PEST	SW8081	DIELDRIN	CNC109	003SB06801DL	S243436*1*DL	SO	28	U	28	R	ug/kg	DL
PEST	SW8081	DIELDRIN	CNC109	003SB07103DL	S243436*10*DL	SO	11	U	11	R	ug/kg	DL
PEST	SW8081	DIELDRIN	CNC109	003SB07201	S243436*11	SO	20	P	20	J	ug/kg	2C
PEST	SW8081	DIELDRIN	CNC109	003SB07201DL	S243436*11*DL	SO	540	U	540	R	ug/kg	DL
PEST	SW8081	DIELDRIN	CNC109	003SB07203DL	S243436*12*DL	SO	13	DJ	13	R	ug/kg	DL
PEST	SW8081	DIELDRIN	CNC109	003SB07301DL	S243436*13*DL	SO	86	DJ	86	R	ug/kg	DL
PEST	SW8081	DIELDRIN	CNC109	003SB07303	S243436*14	SO	46	JP	46	J	ug/kg	2C
PEST	SW8081	DIELDRIN	CNC109	003SB07303DL	S243436*14*DL	SO	2700	U	2700	R	ug/kg	DL
PEST	SW8081	DIELDRIN	CNC109	003CB07303DL	S243436*15*DL	SO	2700	U	2700	R	ug/kg	DL
PEST	SW8081	DIELDRIN	CNC109	003SB07501	S243436*18	SO	16	P	16	J	ug/kg	2C

Attachment 1 - Changed Qualifiers and Results
Zone G, SWMU 3, Soils - Data Validation

Parameter Class	Analytical Method	Parameter	SDG	Sample ID	Lab Sample ID	Matrix	Lab Result	Lab Qual	Final Result	Final Qual	Units	Reasons
PEST	SW8081	DIELDRIN	CNC109	003SB07501DL	S243436*18*DL	SO	260	U	260	R	ug/kg	DL
PEST	SW8081	DIELDRIN	CNC109	003SB08403DL	S243436*19*DL	SO	5.7	U	5.7	R	ug/kg	DL
PEST	SW8081	DIELDRIN	CNC109	003CB06901	S243436*4	SO	0.57	JP	0.57	J	ug/kg	2C
PEST	SW8081	DIELDRIN	CNC109	003SB07001DL	S243436*6*DL	SO	29	U	29	R	ug/kg	DL
PEST	SW8081	DIELDRIN	CNC109	003SB07101DL	S243436*9*DL	SO	66	U	66	R	ug/kg	DL
PEST	SW8081	DIELDRIN	CNC110	003SB07901DL	S243436A*11*DL	SO	290	D	290	R	ug/kg	DL
PEST	SW8081	DIELDRIN	CNC110	003SB07903DL	S243436A*12*DL	SO	72	DJ	72	R	ug/kg	DL
PEST	SW8081	DIELDRIN	CNC110	003SB08003	S243436A*14	SO	5.5	=	5.5	J	ug/kg	CC
PEST	SW8081	DIELDRIN	CNC110	003SB08103	S243436A*16	SO	67	P	67	J	ug/kg	2C
PEST	SW8081	DIELDRIN	CNC110	003SB08103DL	S243436A*16*DL	SO	56	DJ	56	R	ug/kg	DL
PEST	SW8081	DIELDRIN	CNC110	003SB08203	S243436A*17	SO	530	P	530	J	ug/kg	2C
PEST	SW8081	DIELDRIN	CNC110	003SB08203DL	S243436A*17*DL	SO	450	DJ	450	R	ug/kg	DL
PEST	SW8081	DIELDRIN	CNC110	003SB07601	S243436A*2	SO	810	E	810	R	ug/kg	LR
PEST	SW8081	DIELDRIN	CNC110	003SB07701DL	S243436A*4*DL	SO	58	D	58	R	ug/kg	DL
PEST	SW8081	DIELDRIN	CNC110	003SB07801DL	S243436A*7*DL	SO	29	DJ	29	R	ug/kg	DL
PEST	SW8081	DIELDRIN	CNC115	003SB08501	S244137*1	SO	0.95	JP	0.95	J	ug/kg	2C
PEST	SW8081	DIELDRIN	CNC115	003CB09003	S244137*10	SO	2	JP	2	J	ug/kg	2C
PEST	SW8081	DIELDRIN	CNC115	003SB09101DL	S244137*11*DL	SO	58	DJ	58	R	ug/kg	DL
PEST	SW8081	DIELDRIN	CNC115	003SB09103	S244137*12	SO	2.9	JP	2.9	J	ug/kg	2C
PEST	SW8081	DIELDRIN	CNC115	003SB08601DL	S244137*2*DL	SO	260	U	260	R	ug/kg	DL
PEST	SW8081	DIELDRIN	CNC115	003SB09001DL	S244137*8*DL	SO	71	DJ	71	R	ug/kg	DL
PEST	SW8081	DIELDRIN	CNC115	003SB09003	S244137*9	SO	2.1	JP	2.1	J	ug/kg	2C
PEST	SW8081	DIELDRIN	CNC133	003SB09301	S245320*1	SO	4.2	=	4.2	R	ug/kg	RE
PEST	SW8081	DIELDRIN	CNC133	003SB09301RE	S245320*1*RE	SO	7.1	=	7.1	J	ug/kg	HT
PEST	SW8081	DIELDRIN	CNC133	003SB09501	S245320*4	SO	14	U	14	R	ug/kg	RE
PEST	SW8081	DIELDRIN	CNC133	003SB09501RE	S245320*4*RE	SO	28	U	28	UJ	ug/kg	HT
PEST	SW8081	DIELDRIN	CNC133	003SB09503	S245320*5	SO	3	U	3	R	ug/kg	RE
PEST	SW8081	DIELDRIN	CNC133	003SB09503RE	S245320*5*RE	SO	3	U	3	UJ	ug/kg	HT
PEST	SW8081	DIELDRIN	CNC133	003CB09503	S245320*6	SO	2.8	U	2.8	R	ug/kg	RE
PEST	SW8081	DIELDRIN	CNC133	003CB09503RE	S245320*6*RE	SO	2.8	U	2.8	UJ	ug/kg	HT
PEST	SW8081	DIELDRIN	CNC133	003SB09701	S245320*8	SO	12	J	12	J	ug/kg	CC
PEST	SW8081	ENDOSULFAN I	CNC54	003SB02801DL	S117739*13*DL	SO	2800	U	2800	R	ug/kg	DL
PEST	SW8081	ENDOSULFAN I	CNC54	003SB02802DL	S117739*14*DL	SO	3	U	3	R	ug/kg	DL
PEST	SW8081	ENDOSULFAN I	CNC54	003SB03002DL	S117739*19*DL	SO	7.6	U	7.6	R	ug/kg	DL
PEST	SW8081	ENDOSULFAN I	CNC54	003SB[illegible]01DL	S117739*5*DL	SO	2.8	U	2.8	R	ug/[illegible]	DL

Parameter Class	Analytical Method	Parameter	SDG	Sample ID	Lab Sample ID	Matrix	Lab Result	Lab Qual	Final Result	Final Qual	Units	Reasons
PEST	SW8081	ENDOSULFAN I	CNC55	003SB03601	S117739A*10	SO	1.4	U	1.4	UJ	ug/kg	SS
PEST	SW8081	ENDOSULFAN I	CNC55	003CB02101	S117739A*13	SO	1.5	U	1.5	UJ	ug/kg	SS
PEST	SW8081	ENDOSULFAN I	CNC55	003SB03401DL	S117739A*6*DL	SO	1400	U	1400	R	ug/kg	DL
PEST	SW8081	ENDOSULFAN I	CNC55	003SB03402DL	S117739A*7*DL	SO	150	U	150	R	ug/kg	DL
PEST	SW8081	ENDOSULFAN I	CNC55	003SB03501DL	S117739A*8*DL	SO	550	U	550	R	ug/kg	DL
PEST	SW8081	ENDOSULFAN I	CNC62	003SB03902	S240294*2	SO	0.31	JP	0.31	J	ug/kg	2C
PEST	SW8081	ENDOSULFAN I	CNC82	003SB04902	S242223*15	SO	1.6	U	1.6	UJ	ug/kg	SS
PEST	SW8081	ENDOSULFAN I	CNC82	003SB03702	S242223*2	SO	1.5	U	1.5	UJ	ug/kg	SS
PEST	SW8081	ENDOSULFAN I	CNC83	003SB05801	S242223A*10	SO	5.8	U	5.8	UJ	ug/kg	CC
PEST	SW8081	ENDOSULFAN I	CNC84	003EB037M1RE	S242223B*6*RE	WG	0.04	U	0.04	R	ug/l	RE
PEST	SW8081	ENDOSULFAN I	CNC109	003SB06801DL	S243436*1*DL	SO	14	U	14	R	ug/kg	DL
PEST	SW8081	ENDOSULFAN I	CNC109	003SB07103DL	S243436*10*DL	SO	5.5	U	5.5	R	ug/kg	DL
PEST	SW8081	ENDOSULFAN I	CNC109	003SB07201DL	S243436*11*DL	SO	280	U	280	R	ug/kg	DL
PEST	SW8081	ENDOSULFAN I	CNC109	003SB07203DL	S243436*12*DL	SO	28	U	28	R	ug/kg	DL
PEST	SW8081	ENDOSULFAN I	CNC109	003SB07301DL	S243436*13*DL	SO	270	U	270	R	ug/kg	DL
PEST	SW8081	ENDOSULFAN I	CNC109	003SB07303DL	S243436*14*DL	SO	1400	U	1400	R	ug/kg	DL
PEST	SW8081	ENDOSULFAN I	CNC109	003CB07303DL	S243436*15*DL	SO	1400	U	1400	R	ug/kg	DL
PEST	SW8081	ENDOSULFAN I	CNC109	003SB07501DL	S243436*18*DL	SO	140	U	140	R	ug/kg	DL
PEST	SW8081	ENDOSULFAN I	CNC109	003SB08403DL	S243436*19*DL	SO	3	U	3	R	ug/kg	DL
PEST	SW8081	ENDOSULFAN I	CNC109	003SB07001DL	S243436*6*DL	SO	15	U	15	R	ug/kg	DL
PEST	SW8081	ENDOSULFAN I	CNC109	003SB07101DL	S243436*9*DL	SO	34	U	34	R	ug/kg	DL
PEST	SW8081	ENDOSULFAN I	CNC110	003SB07901DL	S243436A*11*DL	SO	71	U	71	R	ug/kg	DL
PEST	SW8081	ENDOSULFAN I	CNC110	003SB07903DL	S243436A*12*DL	SO	19	DJ	19	R	ug/kg	DL
PEST	SW8081	ENDOSULFAN I	CNC110	003SB08001	S243436A*13	SO	0.58	JP	0.58	J	ug/kg	2C
PEST	SW8081	ENDOSULFAN I	CNC110	003SB08103DL	S243436A*16*DL	SO	71	U	71	R	ug/kg	DL
PEST	SW8081	ENDOSULFAN I	CNC110	003SB08203DL	S243436A*17*DL	SO	760	U	760	R	ug/kg	DL
PEST	SW8081	ENDOSULFAN I	CNC110	003SB07601DL	S243436A*2*DL	SO	27	U	27	R	ug/kg	DL
PEST	SW8081	ENDOSULFAN I	CNC110	003SB07701DL	S243436A*4*DL	SO	29	U	29	R	ug/kg	DL
PEST	SW8081	ENDOSULFAN I	CNC110	003SB07801DL	S243436A*7*DL	SO	28	U	28	R	ug/kg	DL
PEST	SW8081	ENDOSULFAN I	CNC115	003CB09003	S244137*10	SO	1.3	JP	1.3	J	ug/kg	2C
PEST	SW8081	ENDOSULFAN I	CNC115	003SB09101DL	S244137*11*DL	SO	35	U	35	R	ug/kg	DL
PEST	SW8081	ENDOSULFAN I	CNC115	003SB08601DL	S244137*2*DL	SO	140	U	140	R	ug/kg	DL
PEST	SW8081	ENDOSULFAN I	CNC115	003SB09001DL	S244137*8*DL	SO	75	U	75	R	ug/kg	DL
PEST	SW8081	ENDOSULFAN I	CNC115	003SB09003	S244137*9	SO	3.6	P	3.6	J	ug/kg	2C
PEST	SW8081	ENDOSULFAN I	CNC133	003SB09301	S245320*1	SO	1.5	U	1.5	R	ug/kg	RE

Attachment 1 - Changed Qualifiers and Results
Zone G, SWMU 3, Soils - Data Validation

Parameter Class	Analytical Method	Parameter	SDG	Sample ID	Lab Sample ID	Matrix	Lab Result	Lab Qual	Final Result	Final Qual	Units	Reasons
PEST	SW8081	ENDOSULFAN I	CNC133	003SB09301RE	S245320*1*RE	SO	3.1	U	3.1	UJ	ug/kg	HT
PEST	SW8081	ENDOSULFAN I	CNC133	003SB09501	S245320*4	SO	7.3	U	7.3	R	ug/kg	RE
PEST	SW8081	ENDOSULFAN I	CNC133	003SB09501RE	S245320*4*RE	SO	15	U	15	UJ	ug/kg	HT
PEST	SW8081	ENDOSULFAN I	CNC133	003SB09503	S245320*5	SO	1.5	U	1.5	R	ug/kg	RE
PEST	SW8081	ENDOSULFAN I	CNC133	003SB09503RE	S245320*5*RE	SO	1.5	U	1.5	UJ	ug/kg	HT,CC
PEST	SW8081	ENDOSULFAN I	CNC133	003CB09503	S245320*6	SO	1.5	U	1.5	R	ug/kg	RE
PEST	SW8081	ENDOSULFAN I	CNC133	003CB09503RE	S245320*6*RE	SO	1.5	U	1.5	UJ	ug/kg	HT
PEST	SW8081	ENDOSULFAN II	CNC54	003SB02801DL	S117739*13*DL	SO	5400	U	5400	R	ug/kg	DL
PEST	SW8081	ENDOSULFAN II	CNC54	003SB02802DL	S117739*14*DL	SO	5.8	U	5.8	R	ug/kg	DL
PEST	SW8081	ENDOSULFAN II	CNC54	003SB03002DL	S117739*19*DL	SO	14	U	14	R	ug/kg	DL
PEST	SW8081	ENDOSULFAN II	CNC54	003SB02401DL	S117739*5*DL	SO	5.3	U	5.3	R	ug/kg	DL
PEST	SW8081	ENDOSULFAN II	CNC55	003SB03601	S117739A*10	SO	2.7	U	2.7	UJ	ug/kg	SS
PEST	SW8081	ENDOSULFAN II	CNC55	003CB02101	S117739A*13	SO	2.9	U	2.9	UJ	ug/kg	SS
PEST	SW8081	ENDOSULFAN II	CNC55	003SB03401DL	S117739A*6*DL	SO	2600	U	2600	R	ug/kg	DL
PEST	SW8081	ENDOSULFAN II	CNC55	003SB03402DL	S117739A*7*DL	SO	290	U	290	R	ug/kg	DL
PEST	SW8081	ENDOSULFAN II	CNC55	003SB03501DL	S117739A*8*DL	SO	1100	U	1100	R	ug/kg	DL
PEST	SW8081	ENDOSULFAN II	CNC82	003SB04902	S242223*15	SO	3.2	U	3.2	UJ	ug/kg	SS
PEST	SW8081	ENDOSULFAN II	CNC82	003SB03702	S242223*2	SO	3	U	3	UJ	ug/kg	SS
PEST	SW8081	ENDOSULFAN II	CNC84	003EB037M1RE	S242223B*6*RE	WG	0.08	U	0.08	R	ug/l	RE
PEST	SW8081	ENDOSULFAN II	CNC109	003SB06801DL	S243436*1*DL	SO	28	U	28	R	ug/kg	DL
PEST	SW8081	ENDOSULFAN II	CNC109	003SB07103DL	S243436*10*DL	SO	11	U	11	R	ug/kg	DL
PEST	SW8081	ENDOSULFAN II	CNC109	003SB07201DL	S243436*11*DL	SO	540	U	540	R	ug/kg	DL
PEST	SW8081	ENDOSULFAN II	CNC109	003SB07203DL	S243436*12*DL	SO	54	U	54	R	ug/kg	DL
PEST	SW8081	ENDOSULFAN II	CNC109	003SB07301DL	S243436*13*DL	SO	530	U	530	R	ug/kg	DL
PEST	SW8081	ENDOSULFAN II	CNC109	003SB07303DL	S243436*14*DL	SO	2700	U	2700	R	ug/kg	DL
PEST	SW8081	ENDOSULFAN II	CNC109	003CB07303DL	S243436*15*DL	SO	2700	U	2700	R	ug/kg	DL
PEST	SW8081	ENDOSULFAN II	CNC109	003SB07501DL	S243436*18*DL	SO	260	U	260	R	ug/kg	DL
PEST	SW8081	ENDOSULFAN II	CNC109	003SB08403DL	S243436*19*DL	SO	5.7	U	5.7	R	ug/kg	DL
PEST	SW8081	ENDOSULFAN II	CNC109	003SB07001DL	S243436*6*DL	SO	29	U	29	R	ug/kg	DL
PEST	SW8081	ENDOSULFAN II	CNC109	003SB07101DL	S243436*9*DL	SO	66	U	66	R	ug/kg	DL
PEST	SW8081	ENDOSULFAN II	CNC110	003SB07901DL	S243436A*11*DL	SO	140	U	140	R	ug/kg	DL
PEST	SW8081	ENDOSULFAN II	CNC110	003SB07903DL	S243436A*12*DL	SO	120	U	120	R	ug/kg	DL
PEST	SW8081	ENDOSULFAN II	CNC110	003SB08001	S243436A*13	SO	2.4	JP	2.4	J	ug/kg	2C
PEST	SW8081	ENDOSULFAN II	CNC110	003SB08103DL	S243436A*16*DL	SO	140	U	140	R	ug/kg	DL
PEST	SW8081	ENDOSULFAN II	CNC110	003SB08203DL	S243436A*17*DL	SO	1400	U	1400	R	ug/kg	DL

Parameter Class	Analytical Method	Parameter	Site	Sample ID	Lab Sample ID	Matrix	Lab Result	Lab Qual	Final Result	Final Qual	Units	Reasons
PEST	SW8081	ENDOSULFAN II	CNC110	003SB07601DL	S243436A*2*DL	SO	52	U	52	R	ug/kg	DL
PEST	SW8081	ENDOSULFAN II	CNC110	003SB07701DL	S243436A*4*DL	SO	56	U	56	R	ug/kg	DL
PEST	SW8081	ENDOSULFAN II	CNC110	003SB07801DL	S243436A*7*DL	SO	54	U	54	R	ug/kg	DL
PEST	SW8081	ENDOSULFAN II	CNC115	003SB09101DL	S244137*11*DL	SO	68	U	68	R	ug/kg	DL
PEST	SW8081	ENDOSULFAN II	CNC115	003SB08601DL	S244137*2*DL	SO	260	U	260	R	ug/kg	DL
PEST	SW8081	ENDOSULFAN II	CNC115	003SB09001DL	S244137*8*DL	SO	140	U	140	R	ug/kg	DL
PEST	SW8081	ENDOSULFAN II	CNC133	003SB09301	S245320*1	SO	3	U	3	R	ug/kg	RE
PEST	SW8081	ENDOSULFAN II	CNC133	003SB09301RE	S245320*1*RE	SO	1.3	J	1.3	J	ug/kg	HT,CC
PEST	SW8081	ENDOSULFAN II	CNC133	003SB09501	S245320*4	SO	14	U	14	R	ug/kg	RE
PEST	SW8081	ENDOSULFAN II	CNC133	003SB09501RE	S245320*4*RE	SO	28	U	28	UJ	ug/kg	HT
PEST	SW8081	ENDOSULFAN II	CNC133	003SB09503	S245320*5	SO	3	U	3	R	ug/kg	RE
PEST	SW8081	ENDOSULFAN II	CNC133	003SB09503RE	S245320*5*RE	SO	3	U	3	UJ	ug/kg	HT
PEST	SW8081	ENDOSULFAN II	CNC133	003CB09503	S245320*6	SO	2.8	U	2.8	R	ug/kg	RE
PEST	SW8081	ENDOSULFAN II	CNC133	003CB09503RE	S245320*6*RE	SO	2.8	U	2.8	UJ	ug/kg	HT,CC
PEST	SW8081	ENDOSULFAN SULFATE	CNC54	003SB02201	S117739*1	SO	1	JP	1	J	ug/kg	CC, 2C
PEST	SW8081	ENDOSULFAN SULFATE	CNC54	003SB02801DL	S117739*13*DL	SO	5400	U	5400	R	ug/kg	DL
PEST	SW8081	ENDOSULFAN SULFATE	CNC54	003SB02802DL	S117739*14*DL	SO	5.8	U	5.8	R	ug/kg	DL
PEST	SW8081	ENDOSULFAN SULFATE	CNC54	003SB03002DL	S117739*19*DL	SO	14	U	14	R	ug/kg	DL
PEST	SW8081	ENDOSULFAN SULFATE	CNC54	003SB02401	S117739*5	SO	0.89	J	0.89	J	ug/kg	CC
PEST	SW8081	ENDOSULFAN SULFATE	CNC54	003SB02401DL	S117739*5*DL	SO	5.3	U	5.3	R	ug/kg	DL
PEST	SW8081	ENDOSULFAN SULFATE	CNC55	003SB03601	S117739A*10	SO	2.7	U	2.7	UJ	ug/kg	SS
PEST	SW8081	ENDOSULFAN SULFATE	CNC55	003CB02101	S117739A*13	SO	2.9	U	2.9	UJ	ug/kg	SS
PEST	SW8081	ENDOSULFAN SULFATE	CNC55	003SB03401DL	S117739A*6*DL	SO	2600	U	2600	R	ug/kg	DL
PEST	SW8081	ENDOSULFAN SULFATE	CNC55	003SB03402DL	S117739A*7*DL	SO	290	U	290	R	ug/kg	DL
PEST	SW8081	ENDOSULFAN SULFATE	CNC55	003SB03501DL	S117739A*8*DL	SO	1100	U	1100	R	ug/kg	DL
PEST	SW8081	ENDOSULFAN SULFATE	CNC82	003SB04902	S242223*15	SO	3.2	U	3.2	UJ	ug/kg	SS
PEST	SW8081	ENDOSULFAN SULFATE	CNC82	003SB03702	S242223*2	SO	3	U	3	UJ	ug/kg	SS
PEST	SW8081	ENDOSULFAN SULFATE	CNC84	003EB037M1RE	S242223B*6*RE	WG	0.08	U	0.08	R	ug/l	RE
PEST	SW8081	ENDOSULFAN SULFATE	CNC109	003SB06801DL	S243436*1*DL	SO	28	U	28	R	ug/kg	DL
PEST	SW8081	ENDOSULFAN SULFATE	CNC109	003SB07103DL	S243436*10*DL	SO	11	U	11	R	ug/kg	DL
PEST	SW8081	ENDOSULFAN SULFATE	CNC109	003SB07201DL	S243436*11*DL	SO	540	U	540	R	ug/kg	DL
PEST	SW8081	ENDOSULFAN SULFATE	CNC109	003SB07203DL	S243436*12*DL	SO	54	U	54	R	ug/kg	DL
PEST	SW8081	ENDOSULFAN SULFATE	CNC109	003SB07301DL	S243436*13*DL	SO	530	U	530	R	ug/kg	DL
PEST	SW8081	ENDOSULFAN SULFATE	CNC109	003SB07303DL	S243436*14*DL	SO	2700	U	2700	R	ug/kg	DL
PEST	SW8081	ENDOSULFAN SULFATE	CNC109	003CB07303DL	S243436*15*DL	SO	2700	U	2700	R	ug/kg	DL

Attachment 1 - Changed Qualifiers and Results
Zone G, SWMU 3, Soils - Data Validation

Parameter Class	Analytical Method	Parameter	SDG	Sample ID	Lab Sample ID	Matrix	Lab Result	Lab Qual	Final Result	Final Qual	Units	Reasons
PEST	SW8081	ENDOSULFAN SULFATE	CNC109	003SB07501DL	S243436*18*DL	SO	260	U	260	R	ug/kg	DL
PEST	SW8081	ENDOSULFAN SULFATE	CNC109	003SB08403DL	S243436*19*DL	SO	5.7	U	5.7	R	ug/kg	DL
PEST	SW8081	ENDOSULFAN SULFATE	CNC109	003SB07001DL	S243436*6*DL	SO	29	U	29	R	ug/kg	DL
PEST	SW8081	ENDOSULFAN SULFATE	CNC109	003SB07101DL	S243436*9*DL	SO	66	U	66	R	ug/kg	DL
PEST	SW8081	ENDOSULFAN SULFATE	CNC110	003SB07901DL	S243436A*11*DL	SO	140	U	140	R	ug/kg	DL
PEST	SW8081	ENDOSULFAN SULFATE	CNC110	003SB07903DL	S243436A*12*DL	SO	120	U	120	R	ug/kg	DL
PEST	SW8081	ENDOSULFAN SULFATE	CNC110	003SB08103DL	S243436A*16*DL	SO	140	U	140	R	ug/kg	DL
PEST	SW8081	ENDOSULFAN SULFATE	CNC110	003SB08203DL	S243436A*17*DL	SO	1400	U	1400	R	ug/kg	DL
PEST	SW8081	ENDOSULFAN SULFATE	CNC110	003SB07601DL	S243436A*2*DL	SO	52	U	52	R	ug/kg	DL
PEST	SW8081	ENDOSULFAN SULFATE	CNC110	003SB07701DL	S243436A*4*DL	SO	56	U	56	R	ug/kg	DL
PEST	SW8081	ENDOSULFAN SULFATE	CNC110	003SB07801DL	S243436A*7*DL	SO	54	U	54	R	ug/kg	DL
PEST	SW8081	ENDOSULFAN SULFATE	CNC115	003SB09101DL	S244137*11*DL	SO	68	U	68	R	ug/kg	DL
PEST	SW8081	ENDOSULFAN SULFATE	CNC115	003SB08601DL	S244137*2*DL	SO	260	U	260	R	ug/kg	DL
PEST	SW8081	ENDOSULFAN SULFATE	CNC115	003SB09001DL	S244137*8*DL	SO	140	U	140	R	ug/kg	DL
PEST	SW8081	ENDOSULFAN SULFATE	CNC133	003SB09301	S245320*1	SO	3	U	3	R	ug/kg	RE
PEST	SW8081	ENDOSULFAN SULFATE	CNC133	003SB09301RE	S245320*1*RE	SO	6	U	6	UJ	ug/kg	HT
PEST	SW8081	ENDOSULFAN SULFATE	CNC133	003SB09501	S245320*4	SO	14	U	14	R	ug/kg	RE
PEST	SW8081	ENDOSULFAN SULFATE	CNC133	003SB09501RE	S245320*4*RE	SO	28	U	28	UJ	ug/kg	HT
PEST	SW8081	ENDOSULFAN SULFATE	CNC133	003SB09503	S245320*5	SO	3	U	3	R	ug/kg	RE
PEST	SW8081	ENDOSULFAN SULFATE	CNC133	003SB09503RE	S245320*5*RE	SO	3	U	3	UJ	ug/kg	HT
PEST	SW8081	ENDOSULFAN SULFATE	CNC133	003CB09503	S245320*6	SO	2.8	U	2.8	R	ug/kg	RE
PEST	SW8081	ENDOSULFAN SULFATE	CNC133	003CB09503RE	S245320*6*RE	SO	2.8	U	2.8	UJ	ug/kg	HT
PEST	SW8081	ENDRIN	CNC54	003SB02801DL	S117739*13*DL	SO	5400	U	5400	R	ug/kg	DL
PEST	SW8081	ENDRIN	CNC54	003SB02802DL	S117739*14*DL	SO	5.8	U	5.8	R	ug/kg	DL
PEST	SW8081	ENDRIN	CNC54	003SB03002DL	S117739*19*DL	SO	14	U	14	R	ug/kg	DL
PEST	SW8081	ENDRIN	CNC54	003SB02401DL	S117739*5*DL	SO	5.3	U	5.3	R	ug/kg	DL
PEST	SW8081	ENDRIN	CNC55	003SB03601	S117739A*10	SO	2.7	U	2.7	UJ	ug/kg	SS
PEST	SW8081	ENDRIN	CNC55	003CB02101	S117739A*13	SO	2.9	U	2.9	UJ	ug/kg	SS
PEST	SW8081	ENDRIN	CNC55	003SB03401DL	S117739A*6*DL	SO	2600	U	2600	R	ug/kg	DL
PEST	SW8081	ENDRIN	CNC55	003SB03402DL	S117739A*7*DL	SO	290	U	290	R	ug/kg	DL
PEST	SW8081	ENDRIN	CNC55	003SB03501DL	S117739A*8*DL	SO	1100	U	1100	R	ug/kg	DL
PEST	SW8081	ENDRIN	CNC82	003SB04902	S242223*15	SO	3.2	U	3.2	UJ	ug/kg	SS
PEST	SW8081	ENDRIN	CNC82	003SB03702	S242223*2	SO	3	U	3	UJ	ug/kg	SS
PEST	SW8081	ENDRIN	CNC84	003SB05102	S242223B*2	SO	2.9	U	2.9	UJ	ug/kg	CC
PEST	SW8081	ENDRIN	CNC84	003SB05302	S242223B*3	SO	2.8	U	2.8	UJ	ug/	CC

Parameter Class	Analytical Method	Parameter	SDG	Sample ID	Lab Sample ID	Matrix	Lab Result	Lab Qual	Final Result	Final Qual	Units	Reasons
PEST	SW8081	ENDRIN	CNC84	003SB06701	S242223B*4	SO	540	U	540	UJ	ug/kg	CC
PEST	SW8081	ENDRIN	CNC84	003EB037M1RE	S242223B*6*RE	WG	0.08	U	0.08	R	ug/l	RE
PEST	SW8081	ENDRIN	CNC109	003SB06801DL	S243436*1*DL	SO	28	U	28	R	ug/kg	DL
PEST	SW8081	ENDRIN	CNC109	003SB07103DL	S243436*10*DL	SO	11	U	11	R	ug/kg	DL
PEST	SW8081	ENDRIN	CNC109	003SB07201DL	S243436*11*DL	SO	540	U	540	R	ug/kg	DL
PEST	SW8081	ENDRIN	CNC109	003SB07203DL	S243436*12*DL	SO	54	U	54	R	ug/kg	DL
PEST	SW8081	ENDRIN	CNC109	003SB07301DL	S243436*13*DL	SO	530	U	530	R	ug/kg	DL
PEST	SW8081	ENDRIN	CNC109	003SB07303DL	S243436*14*DL	SO	2700	U	2700	R	ug/kg	DL
PEST	SW8081	ENDRIN	CNC109	003CB07303DL	S243436*15*DL	SO	2700	U	2700	R	ug/kg	DL
PEST	SW8081	ENDRIN	CNC109	003SB07501DL	S243436*18*DL	SO	260	U	260	R	ug/kg	DL
PEST	SW8081	ENDRIN	CNC109	003SB08403DL	S243436*19*DL	SO	5.7	U	5.7	R	ug/kg	DL
PEST	SW8081	ENDRIN	CNC109	003SB07001DL	S243436*6*DL	SO	29	U	29	R	ug/kg	DL
PEST	SW8081	ENDRIN	CNC109	003SB07101DL	S243436*9*DL	SO	66	U	66	R	ug/kg	DL
PEST	SW8081	ENDRIN	CNC110	003SB07901DL	S243436A*11*DL	SO	140	U	140	R	ug/kg	DL
PEST	SW8081	ENDRIN	CNC110	003SB07903DL	S243436A*12*DL	SO	120	U	120	R	ug/kg	DL
PEST	SW8081	ENDRIN	CNC110	003SB08103DL	S243436A*16*DL	SO	27	DJP	27	R	ug/kg	DL
PEST	SW8081	ENDRIN	CNC110	003SB08203	S243436A*17	SO	84	JP	84	J	ug/kg	2C
PEST	SW8081	ENDRIN	CNC110	003SB08203DL	S243436A*17*DL	SO	1400	U	1400	R	ug/kg	DL
PEST	SW8081	ENDRIN	CNC110	003SB07601DL	S243436A*2*DL	SO	52	U	52	R	ug/kg	DL
PEST	SW8081	ENDRIN	CNC110	003SB07701DL	S243436A*4*DL	SO	56	U	56	R	ug/kg	DL
PEST	SW8081	ENDRIN	CNC110	003SB07801DL	S243436A*7*DL	SO	54	U	54	R	ug/kg	DL
PEST	SW8081	ENDRIN	CNC115	003SB09101DL	S244137*11*DL	SO	68	U	68	R	ug/kg	DL
PEST	SW8081	ENDRIN	CNC115	003SB08601DL	S244137*2*DL	SO	260	U	260	R	ug/kg	DL
PEST	SW8081	ENDRIN	CNC115	003SB09001DL	S244137*8*DL	SO	140	U	140	R	ug/kg	DL
PEST	SW8081	ENDRIN	CNC133	003SB09301	S245320*1	SO	3	U	3	R	ug/kg	RE
PEST	SW8081	ENDRIN	CNC133	003SB09301RE	S245320*1*RE	SO	6	U	6	UJ	ug/kg	HT
PEST	SW8081	ENDRIN	CNC133	003SB09501	S245320*4	SO	14	U	14	R	ug/kg	RE
PEST	SW8081	ENDRIN	CNC133	003SB09501RE	S245320*4*RE	SO	28	U	28	UJ	ug/kg	HT
PEST	SW8081	ENDRIN	CNC133	003SB09503	S245320*5	SO	3	U	3	R	ug/kg	RE
PEST	SW8081	ENDRIN	CNC133	003SB09503RE	S245320*5*RE	SO	3	U	3	UJ	ug/kg	HT
PEST	SW8081	ENDRIN	CNC133	003CB09503	S245320*6	SO	2.8	U	2.8	R	ug/kg	RE
PEST	SW8081	ENDRIN	CNC133	003CB09503RE	S245320*6*RE	SO	2.8	U	2.8	UJ	ug/kg	HT
PEST	SW8081	ENDRIN ALDEHYDE	CNC54	003SB02801DL	S117739*13*DL	SO	5400	U	5400	R	ug/kg	DL
PEST	SW8081	ENDRIN ALDEHYDE	CNC54	003SB02802DL	S117739*14*DL	SO	5.8	U	5.8	R	ug/kg	DL
PEST	SW8081	ENDRIN ALDEHYDE	CNC54	003SB03002DL	S117739*19*DL	SO	14	U	14	R	ug/kg	DL

Attachment 1 - Changed Qualifiers and Results
Zone G, SWMU 3, Soils - Data Validation

Parameter Class	Analytical Method	Parameter	SDG	Sample ID	Lab Sample ID	Matrix	Lab Result	Lab Qual	Final Result	Final Qual	Units	Reasons
PEST	SW8081	ENDRIN ALDEHYDE	CNC54	003SB02401DL	S117739*5*DL	SO	5.3	U	5.3	R	ug/kg	DL
PEST	SW8081	ENDRIN ALDEHYDE	CNC55	003SB03601	S117739A*10	SO	2.7	U	2.7	UJ	ug/kg	SS
PEST	SW8081	ENDRIN ALDEHYDE	CNC55	003SB02101	S117739A*12	SO	1	JP	1	J	ug/kg	CC, 2C
PEST	SW8081	ENDRIN ALDEHYDE	CNC55	003CB02101	S117739A*13	SO	2.9	U	2.9	UJ	ug/kg	SS
PEST	SW8081	ENDRIN ALDEHYDE	CNC55	003SB03401DL	S117739A*6*DL	SO	2600	U	2600	R	ug/kg	DL
PEST	SW8081	ENDRIN ALDEHYDE	CNC55	003SB03402DL	S117739A*7*DL	SO	290	U	290	R	ug/kg	DL
PEST	SW8081	ENDRIN ALDEHYDE	CNC55	003SB03501DL	S117739A*8*DL	SO	1100	U	1100	R	ug/kg	DL
PEST	SW8081	ENDRIN ALDEHYDE	CNC82	003SB04902	S242223*15	SO	3.2	U	3.2	UJ	ug/kg	SS
PEST	SW8081	ENDRIN ALDEHYDE	CNC82	003SB03702	S242223*2	SO	3	U	3	UJ	ug/kg	SS
PEST	SW8081	ENDRIN ALDEHYDE	CNC84	003EB037M1RE	S242223B*6*RE	WG	0.08	U	0.08	R	ug/l	RE
PEST	SW8081	ENDRIN ALDEHYDE	CNC109	003SB06801DL	S243436*1*DL	SO	28	U	28	R	ug/kg	DL
PEST	SW8081	ENDRIN ALDEHYDE	CNC109	003SB07103DL	S243436*10*DL	SO	11	U	11	R	ug/kg	DL
PEST	SW8081	ENDRIN ALDEHYDE	CNC109	003SB07201DL	S243436*11*DL	SO	540	U	540	R	ug/kg	DL
PEST	SW8081	ENDRIN ALDEHYDE	CNC109	003SB07203DL	S243436*12*DL	SO	54	U	54	R	ug/kg	DL
PEST	SW8081	ENDRIN ALDEHYDE	CNC109	003SB07301DL	S243436*13*DL	SO	530	U	530	R	ug/kg	DL
PEST	SW8081	ENDRIN ALDEHYDE	CNC109	003SB07303DL	S243436*14*DL	SO	2700	U	2700	R	ug/kg	DL
PEST	SW8081	ENDRIN ALDEHYDE	CNC109	003CB07303DL	S243436*15*DL	SO	2700	U	2700	R	ug/kg	DL
PEST	SW8081	ENDRIN ALDEHYDE	CNC109	003SB07501DL	S243436*18*DL	SO	260	U	260	R	ug/kg	DL
PEST	SW8081	ENDRIN ALDEHYDE	CNC109	003SB08403DL	S243436*19*DL	SO	5.7	U	5.7	R	ug/kg	DL
PEST	SW8081	ENDRIN ALDEHYDE	CNC109	003SB07001DL	S243436*6*DL	SO	29	U	29	R	ug/kg	DL
PEST	SW8081	ENDRIN ALDEHYDE	CNC109	003SB07101DL	S243436*9*DL	SO	66	U	66	R	ug/kg	DL
PEST	SW8081	ENDRIN ALDEHYDE	CNC110	003SB07901DL	S243436A*11*DL	SO	140	U	140	R	ug/kg	DL
PEST	SW8081	ENDRIN ALDEHYDE	CNC110	003SB07903DL	S243436A*12*DL	SO	120	U	120	R	ug/kg	DL
PEST	SW8081	ENDRIN ALDEHYDE	CNC110	003SB08103DL	S243436A*16*DL	SO	140	U	140	R	ug/kg	DL
PEST	SW8081	ENDRIN ALDEHYDE	CNC110	003SB08203DL	S243436A*17*DL	SO	1400	U	1400	R	ug/kg	DL
PEST	SW8081	ENDRIN ALDEHYDE	CNC110	003SB07601DL	S243436A*2*DL	SO	52	U	52	R	ug/kg	DL
PEST	SW8081	ENDRIN ALDEHYDE	CNC110	003SB07701DL	S243436A*4*DL	SO	56	U	56	R	ug/kg	DL
PEST	SW8081	ENDRIN ALDEHYDE	CNC110	003SB07801DL	S243436A*7*DL	SO	54	U	54	R	ug/kg	DL
PEST	SW8081	ENDRIN ALDEHYDE	CNC115	003SB09101	S244137*11	SO	2.8	JP	2.8	J	ug/kg	2C
PEST	SW8081	ENDRIN ALDEHYDE	CNC115	003SB09101DL	S244137*11*DL	SO	68	U	68	R	ug/kg	DL
PEST	SW8081	ENDRIN ALDEHYDE	CNC115	003SB09103	S244137*12	SO	1	JP	1	J	ug/kg	2C
PEST	SW8081	ENDRIN ALDEHYDE	CNC115	003SB08601DL	S244137*2*DL	SO	260	U	260	R	ug/kg	DL
PEST	SW8081	ENDRIN ALDEHYDE	CNC115	003SB08803	S244137*5	SO	0.56	JP	0.56	J	ug/kg	2C
PEST	SW8081	ENDRIN ALDEHYDE	CNC115	003SB09001DL	S244137*8*DL	SO	140	U	140	R	ug/kg	DL
PEST	SW8081	ENDRIN ALDEHYDE	CNC133	003SB[illegible]01	S245320*1	SO	0.91	J	0.91	R	ug/[illegible]	RE

Parameter Class	Analytical Method	Parameter	SDG	Sample ID	Lab Sample ID	Matrix	Lab Result	Lab Qual	Final Result	Final Qual	Units	Reasons
PEST	SW8081	ENDRIN ALDEHYDE	CNC133	003SB09301RE	S245320*1*RE	SO	6	U	6	UJ	ug/kg	HT
PEST	SW8081	ENDRIN ALDEHYDE	CNC133	003SB09501	S245320*4	SO	14	U	14	R	ug/kg	RE
PEST	SW8081	ENDRIN ALDEHYDE	CNC133	003SB09501RE	S245320*4*RE	SO	28	U	28	UJ	ug/kg	HT
PEST	SW8081	ENDRIN ALDEHYDE	CNC133	003SB09503	S245320*5	SO	3	U	3	R	ug/kg	RE
PEST	SW8081	ENDRIN ALDEHYDE	CNC133	003SB09503RE	S245320*5*RE	SO	3	U	3	UJ	ug/kg	HT
PEST	SW8081	ENDRIN ALDEHYDE	CNC133	003CB09503	S245320*6	SO	2.8	U	2.8	R	ug/kg	RE
PEST	SW8081	ENDRIN ALDEHYDE	CNC133	003CB09503RE	S245320*6*RE	SO	2.8	U	2.8	UJ	ug/kg	HT
PEST	SW8081	ENDRIN KETONE	CNC54	003SB02701	S117739*11	SO	1.4	JP	1.4	J	ug/kg	2C
PEST	SW8081	ENDRIN KETONE	CNC54	003SB02801DL	S117739*13*DL	SO	5400	U	5400	R	ug/kg	DL
PEST	SW8081	ENDRIN KETONE	CNC54	003SB02802	S117739*14	SO	2.9	U	2.9	UJ	ug/kg	MD
PEST	SW8081	ENDRIN KETONE	CNC54	003SB02802DL	S117739*14*DL	SO	5.8	U	5.8	R	ug/kg	DL
PEST	SW8081	ENDRIN KETONE	CNC54	003SB03002DL	S117739*19*DL	SO	14	U	14	R	ug/kg	DL
PEST	SW8081	ENDRIN KETONE	CNC54	003SB02401	S117739*5	SO	0.93	J	0.93	J	ug/kg	CC
PEST	SW8081	ENDRIN KETONE	CNC54	003SB02401DL	S117739*5*DL	SO	5.3	U	5.3	R	ug/kg	DL
PEST	SW8081	ENDRIN KETONE	CNC55	003SB03601	S117739A*10	SO	2.7	U	2.7	UJ	ug/kg	SS
PEST	SW8081	ENDRIN KETONE	CNC55	003CB02101	S117739A*13	SO	2.9	U	2.9	UJ	ug/kg	SS
PEST	SW8081	ENDRIN KETONE	CNC55	003SB03302	S117739A*5	SO	0.74	JP	0.74	J	ug/kg	CC, 2C
PEST	SW8081	ENDRIN KETONE	CNC55	003SB03401DL	S117739A*6*DL	SO	2600	U	2600	R	ug/kg	DL
PEST	SW8081	ENDRIN KETONE	CNC55	003SB03402DL	S117739A*7*DL	SO	290	U	290	R	ug/kg	DL
PEST	SW8081	ENDRIN KETONE	CNC55	003SB03501DL	S117739A*8*DL	SO	1100	U	1100	R	ug/kg	DL
PEST	SW8081	ENDRIN KETONE	CNC82	003SB04902	S242223*15	SO	3.2	U	3.2	UJ	ug/kg	SS
PEST	SW8081	ENDRIN KETONE	CNC82	003SB03702	S242223*2	SO	3	U	3	UJ	ug/kg	SS
PEST	SW8081	ENDRIN KETONE	CNC84	003EB037M1RE	S242223B*6*RE	WG	0.08	U	0.08	R	ug/l	RE
PEST	SW8081	ENDRIN KETONE	CNC109	003SB06801DL	S243436*1*DL	SO	28	U	28	R	ug/kg	DL
PEST	SW8081	ENDRIN KETONE	CNC109	003SB07103DL	S243436*10*DL	SO	11	U	11	R	ug/kg	DL
PEST	SW8081	ENDRIN KETONE	CNC109	003SB07201DL	S243436*11*DL	SO	540	U	540	R	ug/kg	DL
PEST	SW8081	ENDRIN KETONE	CNC109	003SB07203DL	S243436*12*DL	SO	54	U	54	R	ug/kg	DL
PEST	SW8081	ENDRIN KETONE	CNC109	003SB07301DL	S243436*13*DL	SO	530	U	530	R	ug/kg	DL
PEST	SW8081	ENDRIN KETONE	CNC109	003SB07303DL	S243436*14*DL	SO	2700	U	2700	R	ug/kg	DL
PEST	SW8081	ENDRIN KETONE	CNC109	003CB07303DL	S243436*15*DL	SO	2700	U	2700	R	ug/kg	DL
PEST	SW8081	ENDRIN KETONE	CNC109	003SB07501DL	S243436*18*DL	SO	260	U	260	R	ug/kg	DL
PEST	SW8081	ENDRIN KETONE	CNC109	003SB08403DL	S243436*19*DL	SO	5.7	U	5.7	R	ug/kg	DL
PEST	SW8081	ENDRIN KETONE	CNC109	003SB07001DL	S243436*6*DL	SO	29	U	29	R	ug/kg	DL
PEST	SW8081	ENDRIN KETONE	CNC109	003SB07101DL	S243436*9*DL	SO	66	U	66	R	ug/kg	DL
PEST	SW8081	ENDRIN KETONE	CNC110	003SB07901DL	S243436A*11*DL	SO	140	U	140	R	ug/kg	DL

Attachment 1 - Changed Qualifiers and Results
Zone G, SWMU 3, Soils - Data Validation

Parameter Class	Analytical Method	Parameter	SDG	Sample ID	Lab Sample ID	Matrix	Lab Result	Lab Qual	Final Result	Final Qual	Units	Reasons
PEST	SW8081	ENDRIN KETONE	CNC110	003SB07903DL	S243436A*12*DL	SO	120	U	120	R	ug/kg	DL
PEST	SW8081	ENDRIN KETONE	CNC110	003SB08003	S243436A*14	SO	0.96	J	0.96	J	ug/kg	CC
PEST	SW8081	ENDRIN KETONE	CNC110	003SB08103	S243436A*16	SO	9	JP	9	J	ug/kg	2C,CC
PEST	SW8081	ENDRIN KETONE	CNC110	003SB08103DL	S243436A*16*DL	SO	140	U	140	R	ug/kg	DL
PEST	SW8081	ENDRIN KETONE	CNC110	003SB08203DL	S243436A*17*DL	SO	1400	U	1400	R	ug/kg	DL
PEST	SW8081	ENDRIN KETONE	CNC110	003SB07601	S243436A*2	SO	7.3	JP	7.3	J	ug/kg	2C
PEST	SW8081	ENDRIN KETONE	CNC110	003SB07601DL	S243436A*2*DL	SO	52	U	52	R	ug/kg	DL
PEST	SW8081	ENDRIN KETONE	CNC110	003SB07701DL	S243436A*4*DL	SO	56	U	56	R	ug/kg	DL
PEST	SW8081	ENDRIN KETONE	CNC110	003SB07801DL	S243436A*7*DL	SO	54	U	54	R	ug/kg	DL
PEST	SW8081	ENDRIN KETONE	CNC115	003SB09101DL	S244137*11*DL	SO	68	U	68	R	ug/kg	DL
PEST	SW8081	ENDRIN KETONE	CNC115	003SB08601DL	S244137*2*DL	SO	260	U	260	R	ug/kg	DL
PEST	SW8081	ENDRIN KETONE	CNC115	003SB09001DL	S244137*8*DL	SO	140	U	140	R	ug/kg	DL
PEST	SW8081	ENDRIN KETONE	CNC133	003SB09301	S245320*1	SO	3	U	3	R	ug/kg	RE
PEST	SW8081	ENDRIN KETONE	CNC133	003SB09301RE	S245320*1*RE	SO	6	U	6	UJ	ug/kg	HT
PEST	SW8081	ENDRIN KETONE	CNC133	003SB09501	S245320*4	SO	14	U	14	R	ug/kg	RE
PEST	SW8081	ENDRIN KETONE	CNC133	003SB09501RE	S245320*4*RE	SO	28	U	28	UJ	ug/kg	HT
PEST	SW8081	ENDRIN KETONE	CNC133	003SB09503	S245320*5	SO	3	U	3	R	ug/kg	RE
PEST	SW8081	ENDRIN KETONE	CNC133	003SB09503RE	S245320*5*RE	SO	3	U	3	UJ	ug/kg	HT
PEST	SW8081	ENDRIN KETONE	CNC133	003CB09503	S245320*6	SO	2.8	U	2.8	R	ug/kg	RE
PEST	SW8081	ENDRIN KETONE	CNC133	003CB09503RE	S245320*6*RE	SO	2.8	U	2.8	UJ	ug/kg	HT
PEST	SW8081	GAMMA BHC (LINDANE)	CNC54	003SB02602	S117739*10	SO	1.4	U	1.4	UJ	ug/kg	CC
PEST	SW8081	GAMMA BHC (LINDANE)	CNC54	003SB02801	S117739*13	SO	1400	U	1400	UJ	ug/kg	CC
PEST	SW8081	GAMMA BHC (LINDANE)	CNC54	003SB02801DL	S117739*13*DL	SO	2800	U	2800	R	ug/kg	DL
PEST	SW8081	GAMMA BHC (LINDANE)	CNC54	003SB02802	S117739*14	SO	1.5	U	1.5	UJ	ug/kg	MS
PEST	SW8081	GAMMA BHC (LINDANE)	CNC54	003SB02802DL	S117739*14*DL	SO	3	U	3	R	ug/kg	DL
PEST	SW8081	GAMMA BHC (LINDANE)	CNC54	003SB03002DL	S117739*19*DL	SO	7.6	U	7.6	R	ug/kg	DL
PEST	SW8081	GAMMA BHC (LINDANE)	CNC54	003SB02401DL	S117739*5*DL	SO	2.8	U	2.8	R	ug/kg	DL
PEST	SW8081	GAMMA BHC (LINDANE)	CNC54	003SB02601	S117739*9	SO	1500	U	1500	UJ	ug/kg	CC
PEST	SW8081	GAMMA BHC (LINDANE)	CNC55	003SB03102	S117739A*1	SO	1.4	U	1.4	UJ	ug/kg	CC
PEST	SW8081	GAMMA BHC (LINDANE)	CNC55	003SB03601	S117739A*10	SO	1.4	U	1.4	UJ	ug/kg	CC, SS
PEST	SW8081	GAMMA BHC (LINDANE)	CNC55	003CB02101	S117739A*13	SO	1.5	U	1.5	UJ	ug/kg	CC, SS
PEST	SW8081	GAMMA BHC (LINDANE)	CNC55	003SB03301	S117739A*4	SO	70	U	70	UJ	ug/kg	CC
PEST	SW8081	GAMMA BHC (LINDANE)	CNC55	003SB03302	S117739A*5	SO	1.4	U	1.4	UJ	ug/kg	CC
PEST	SW8081	GAMMA BHC (LINDANE)	CNC55	003SB03401DL	S117739A*6*DL	SO	1400	U	1400	R	ug/kg	DL
PEST	SW8081	GAMMA BHC (LINDANE)	CNC55	003SB03402DL	S117739A*7*DL	SO	150	U	150	R	ug/	DL

Parameter Class	Analytical Method	Parameter	SDG	Sample ID	Lab Sample ID	Matrix	Lab Result	Lab Qual	Final Result	Final Qual	Units	Reasons
PEST	SW8081	GAMMA BHC (LINDANE)	CNC55	003SB03501DL	S117739A*8*DL	SO	550	U	550	R	ug/kg	DL
PEST	SW8081	GAMMA BHC (LINDANE)	CNC82	003SB04902	S242223*15	SO	1.6	U	1.6	UJ	ug/kg	SS
PEST	SW8081	GAMMA BHC (LINDANE)	CNC82	003SB03702	S242223*2	SO	1.5	U	1.5	UJ	ug/kg	SS
PEST	SW8081	GAMMA BHC (LINDANE)	CNC83	003SB05901	S242223A*11	SO	1.5	U	1.5	UJ	ug/kg	CC
PEST	SW8081	GAMMA BHC (LINDANE)	CNC83	003SB06003	S242223A*13	SO	1400	U	1400	UJ	ug/kg	CC
PEST	SW8081	GAMMA BHC (LINDANE)	CNC83	003SB06203	S242223A*15	SO	36	U	36	UJ	ug/kg	CC
PEST	SW8081	GAMMA BHC (LINDANE)	CNC83	003SB06403	S242223A*17	SO	1400	U	1400	UJ	ug/kg	CC
PEST	SW8081	GAMMA BHC (LINDANE)	CNC83	003CB06503	S242223A*19	SO	1.4	U	1.4	UJ	ug/kg	CC
PEST	SW8081	GAMMA BHC (LINDANE)	CNC83	003SB05501	S242223A*4	SO	5.7	U	5.7	UJ	ug/kg	CC
PEST	SW8081	GAMMA BHC (LINDANE)	CNC83	003SB05601	S242223A*6	SO	310	U	310	UJ	ug/kg	CC
PEST	SW8081	GAMMA BHC (LINDANE)	CNC83	003SB05702	S242223A*9	SO	1.6	U	1.6	UJ	ug/kg	CC
PEST	SW8081	GAMMA BHC (LINDANE)	CNC84	003EB037M1RE	S242223B*6*RE	WG	0.04	U	0.04	R	ug/l	RE
PEST	SW8081	GAMMA BHC (LINDANE)	CNC109	003SB06801DL	S243436*1*DL	SO	14	U	14	R	ug/kg	DL
PEST	SW8081	GAMMA BHC (LINDANE)	CNC109	003SB07103DL	S243436*10*DL	SO	16	D	16	R	ug/kg	DL
PEST	SW8081	GAMMA BHC (LINDANE)	CNC109	003SB07201DL	S243436*11*DL	SO	280	U	280	R	ug/kg	DL
PEST	SW8081	GAMMA BHC (LINDANE)	CNC109	003SB07203DL	S243436*12*DL	SO	28	U	28	R	ug/kg	DL
PEST	SW8081	GAMMA BHC (LINDANE)	CNC109	003SB07301DL	S243436*13*DL	SO	270	U	270	R	ug/kg	DL
PEST	SW8081	GAMMA BHC (LINDANE)	CNC109	003SB07303DL	S243436*14*DL	SO	1400	U	1400	R	ug/kg	DL
PEST	SW8081	GAMMA BHC (LINDANE)	CNC109	003CB07303DL	S243436*15*DL	SO	1400	U	1400	R	ug/kg	DL
PEST	SW8081	GAMMA BHC (LINDANE)	CNC109	003SB07501DL	S243436*18*DL	SO	140	U	140	R	ug/kg	DL
PEST	SW8081	GAMMA BHC (LINDANE)	CNC109	003SB08403DL	S243436*19*DL	SO	3	U	3	R	ug/kg	DL
PEST	SW8081	GAMMA BHC (LINDANE)	CNC109	003SB07001DL	S243436*6*DL	SO	15	U	15	R	ug/kg	DL
PEST	SW8081	GAMMA BHC (LINDANE)	CNC109	003SB07101DL	S243436*9*DL	SO	56	D	56	R	ug/kg	DL
PEST	SW8081	GAMMA BHC (LINDANE)	CNC110	003SB07901DL	S243436A*11*DL	SO	71	U	71	R	ug/kg	DL
PEST	SW8081	GAMMA BHC (LINDANE)	CNC110	003SB07903DL	S243436A*12*DL	SO	60	U	60	R	ug/kg	DL
PEST	SW8081	GAMMA BHC (LINDANE)	CNC110	003SB08103	S243436A*16	SO	50	P	50	J	ug/kg	2C
PEST	SW8081	GAMMA BHC (LINDANE)	CNC110	003SB08103DL	S243436A*16*DL	SO	40	DJ	40	R	ug/kg	DL
PEST	SW8081	GAMMA BHC (LINDANE)	CNC110	003SB08203DL	S243436A*17*DL	SO	750	DJ	750	R	ug/kg	DL
PEST	SW8081	GAMMA BHC (LINDANE)	CNC110	003SB07601DL	S243436A*2*DL	SO	27	U	27	R	ug/kg	DL
PEST	SW8081	GAMMA BHC (LINDANE)	CNC110	003SB07701DL	S243436A*4*DL	SO	29	U	29	R	ug/kg	DL
PEST	SW8081	GAMMA BHC (LINDANE)	CNC110	003SB07801DL	S243436A*7*DL	SO	28	U	28	R	ug/kg	DL
PEST	SW8081	GAMMA BHC (LINDANE)	CNC115	003SB09101DL	S244137*11*DL	SO	35	U	35	R	ug/kg	DL
PEST	SW8081	GAMMA BHC (LINDANE)	CNC115	003SB08601DL	S244137*2*DL	SO	140	U	140	R	ug/kg	DL
PEST	SW8081	GAMMA BHC (LINDANE)	CNC115	003SB09001DL	S244137*8*DL	SO	75	U	75	R	ug/kg	DL
PEST	SW8081	GAMMA BHC (LINDANE)	CNC133	003SB09301	S245320*1	SO	1.5	U	1.5	R	ug/kg	RE

Attachment 1 - Changed Qualifiers and Results
Zone G, SWMU 3, Soils - Data Validation

Parameter Class	Analytical Method	Parameter	SDG	Sample ID	Lab Sample ID	Matrix	Lab Result	Lab Qual	Final Result	Final Qual	Units	Reasons
PEST	SW8081	GAMMA BHC (LINDANE)	CNC133	003SB09301RE	S245320*1*RE	SO	3.1	U	3.1	UJ	ug/kg	HT,BS
PEST	SW8081	GAMMA BHC (LINDANE)	CNC133	003SB09401	S245320*2	SO	280	U	280	UJ	ug/kg	BS
PEST	SW8081	GAMMA BHC (LINDANE)	CNC133	003SB09403	S245320*3	SO	150	U	150	UJ	ug/kg	BS
PEST	SW8081	GAMMA BHC (LINDANE)	CNC133	003SB09501	S245320*4	SO	7.3	U	7.3	R	ug/kg	RE
PEST	SW8081	GAMMA BHC (LINDANE)	CNC133	003SB09501RE	S245320*4*RE	SO	15	U	15	UJ	ug/kg	HT,BS
PEST	SW8081	GAMMA BHC (LINDANE)	CNC133	003SB09503	S245320*5	SO	1.5	U	1.5	R	ug/kg	RE
PEST	SW8081	GAMMA BHC (LINDANE)	CNC133	003SB09503RE	S245320*5*RE	SO	1.5	U	1.5	UJ	ug/kg	HT,BS
PEST	SW8081	GAMMA BHC (LINDANE)	CNC133	003CB09503	S245320*6	SO	1.5	U	1.5	R	ug/kg	RE
PEST	SW8081	GAMMA BHC (LINDANE)	CNC133	003CB09503RE	S245320*6*RE	SO	1.5	U	1.5	UJ	ug/kg	HT,BS
PEST	SW8081	GAMMA BHC (LINDANE)	CNC133	003SB09601	S245320*7	SO	1.4	U	1.4	UJ	ug/kg	BS
PEST	SW8081	GAMMA BHC (LINDANE)	CNC133	003SB09701	S245320*8	SO	15	U	15	UJ	ug/kg	BS
PEST	SW8081	GAMMA-CHLORDANE	CNC54	003SB02801DL	S117739*13*DL	SO	2800	U	2800	R	ug/kg	DL
PEST	SW8081	GAMMA-CHLORDANE	CNC54	003SB02802DL	S117739*14*DL	SO	1.2	DJP	1.2	R	ug/kg	DL
PEST	SW8081	GAMMA-CHLORDANE	CNC54	003SB03002DL	S117739*19*DL	SO	7.6	U	7.6	R	ug/kg	DL
PEST	SW8081	GAMMA-CHLORDANE	CNC54	003SB03101	S117739*20	SO	4.4	JP	4.4	J	ug/kg	2C
PEST	SW8081	GAMMA-CHLORDANE	CNC54	003SB02401DL	S117739*5*DL	SO	0.83	DJ	0.83	R	ug/kg	DL
PEST	SW8081	GAMMA-CHLORDANE	CNC55	003SB03601	S117739A*10	SO	0.3	JP	0.3	J	ug/kg	2C, SS
PEST	SW8081	GAMMA-CHLORDANE	CNC55	003CB02101	S117739A*13	SO	2.6	=	2.6	J	ug/kg	SS
PEST	SW8081	GAMMA-CHLORDANE	CNC55	003SB03401DL	S117739A*6*DL	SO	1400	U	1400	R	ug/kg	DL
PEST	SW8081	GAMMA-CHLORDANE	CNC55	003SB03402DL	S117739A*7*DL	SO	150	U	150	R	ug/kg	DL
PEST	SW8081	GAMMA-CHLORDANE	CNC55	003SB03501DL	S117739A*8*DL	SO	550	U	550	R	ug/kg	DL
PEST	SW8081	GAMMA-CHLORDANE	CNC62	003SB03902	S240294*2	SO	8.8	=	8.8	J	ug/kg	MD
PEST	SW8081	GAMMA-CHLORDANE	CNC82	003SB04601	S242223*10	SO	0.88	JP	0.88	J	ug/kg	2C
PEST	SW8081	GAMMA-CHLORDANE	CNC82	003SB04701	S242223*11	SO	160	=	160	J	ug/kg	IS
PEST	SW8081	GAMMA-CHLORDANE	CNC82	003SB04901	S242223*14	SO	27	P	27	J	ug/kg	2C
PEST	SW8081	GAMMA-CHLORDANE	CNC82	003SB04902	S242223*15	SO	1.6	U	1.6	UJ	ug/kg	SS
PEST	SW8081	GAMMA-CHLORDANE	CNC82	003SB03702	S242223*2	SO	1.5	U	1.5	UJ	ug/kg	SS
PEST	SW8081	GAMMA-CHLORDANE	CNC82	003SB04401	S242223*7	SO	79	JP	79	J	ug/kg	2C
PEST	SW8081	GAMMA-CHLORDANE	CNC82	003SB04501	S242223*9	SO	50	JP	50	J	ug/kg	2C
PEST	SW8081	GAMMA-CHLORDANE	CNC83	003SB05301	S242223A*1	SO	0.46	JP	0.46	J	ug/kg	2C
PEST	SW8081	GAMMA-CHLORDANE	CNC83	003SB06503	S242223A*18	SO	0.28	JP	0.28	J	ug/kg	2C
PEST	SW8081	GAMMA-CHLORDANE	CNC83	003SB05402	S242223A*3	SO	0.37	JP	0.37	J	ug/kg	2C
PEST	SW8081	GAMMA-CHLORDANE	CNC83	003SB05502	S242223A*5	SO	0.43	JP	0.43	J	ug/kg	2C
PEST	SW8081	GAMMA-CHLORDANE	CNC84	003EB037M1RE	S242223B*6*RE	WG	0.04	U	0.04	R	ug/l	RE
PEST	SW8081	GAMMA-CHLORDANE	CNC109	003SB[illegible]01	S243436*1	SO	5	JP	5	J	ug/[illegible]	2C

Parameter Class	Analytical Method	Parameter	SDG	Sample ID	Lab Sample ID	Matrix	Lab Result	Lab Qual	Final Result	Final Qual	Units	Reasons
PEST	SW8081	GAMMA-CHLORDANE	CNC109	003SB06801DL	S243436*1*DL	SO	6.6	DJP	6.6	R	ug/kg	DL
PEST	SW8081	GAMMA-CHLORDANE	CNC109	003SB07103DL	S243436*10*DL	SO	28	D	28	R	ug/kg	DL
PEST	SW8081	GAMMA-CHLORDANE	CNC109	003SB07201	S243436*11	SO	220	EP	220	R	ug/kg	LR
PEST	SW8081	GAMMA-CHLORDANE	CNC109	003SB07201DL	S243436*11*DL	SO	260	DJ	260	J	ug/kg	DL
PEST	SW8081	GAMMA-CHLORDANE	CNC109	003SB07203DL	S243436*12*DL	SO	88	D	88	R	ug/kg	DL
PEST	SW8081	GAMMA-CHLORDANE	CNC109	003SB07301DL	S243436*13*DL	SO	84	DJ	84	R	ug/kg	DL
PEST	SW8081	GAMMA-CHLORDANE	CNC109	003SB07303DL	S243436*14*DL	SO	1400	U	1400	R	ug/kg	DL
PEST	SW8081	GAMMA-CHLORDANE	CNC109	003CB07303DL	S243436*15*DL	SO	1400	U	1400	R	ug/kg	DL
PEST	SW8081	GAMMA-CHLORDANE	CNC109	003SB07401	S243436*16	SO	2.7	JP	2.7	J	ug/kg	2C
PEST	SW8081	GAMMA-CHLORDANE	CNC109	003SB07501	S243436*18	SO	54	P	54	J	ug/kg	2C
PEST	SW8081	GAMMA-CHLORDANE	CNC109	003SB07501DL	S243436*18*DL	SO	52	DJ	52	R	ug/kg	DL
PEST	SW8081	GAMMA-CHLORDANE	CNC109	003SB08403	S243436*19	SO	0.25	JP	0.25	J	ug/kg	2C
PEST	SW8081	GAMMA-CHLORDANE	CNC109	003SB08403DL	S243436*19*DL	SO	3	U	3	R	ug/kg	DL
PEST	SW8081	GAMMA-CHLORDANE	CNC109	003SB06803	S243436*2	SO	3.4	JP	3.4	J	ug/kg	2C
PEST	SW8081	GAMMA-CHLORDANE	CNC109	003SB07001	S243436*6	SO	0.38	JP	0.38	J	ug/kg	2C
PEST	SW8081	GAMMA-CHLORDANE	CNC109	003SB07001DL	S243436*6*DL	SO	15	U	15	R	ug/kg	DL
PEST	SW8081	GAMMA-CHLORDANE	CNC109	003SB07101DL	S243436*9*DL	SO	130	D	130	R	ug/kg	DL
PEST	SW8081	GAMMA-CHLORDANE	CNC110	003SB07503	S243436A*1	SO	5.6	=	5.6	U	ug/kg	BL
PEST	SW8081	GAMMA-CHLORDANE	CNC110	003SB07901	S243436A*11	SO	1400	E	1400	R	ug/kg	LR
PEST	SW8081	GAMMA-CHLORDANE	CNC110	003SB07903	S243436A*12	SO	650	E	650	R	ug/kg	LR
PEST	SW8081	GAMMA-CHLORDANE	CNC110	003SB08103	S243436A*16	SO	740	E	740	R	ug/kg	LR
PEST	SW8081	GAMMA-CHLORDANE	CNC110	003SB08203	S243436A*17	SO	2900	E	2900	R	ug/kg	LR
PEST	SW8081	GAMMA-CHLORDANE	CNC110	003SB07601DL	S243436A*2*DL	SO	41	D	41	R	ug/kg	DL
PEST	SW8081	GAMMA-CHLORDANE	CNC110	003SB07603	S243436A*3	SO	2.8	JP	5.4	U	ug/kg	BL
PEST	SW8081	GAMMA-CHLORDANE	CNC110	003SB07701DL	S243436A*4*DL	SO	92	D	92	R	ug/kg	DL
PEST	SW8081	GAMMA-CHLORDANE	CNC110	003SB07702	S243436A*5	SO	1.4	J	1.5	U	ug/kg	BL
PEST	SW8081	GAMMA-CHLORDANE	CNC110	003SB07801DL	S243436A*7*DL	SO	130	D	130	R	ug/kg	DL
PEST	SW8081	GAMMA-CHLORDANE	CNC115	003SB09101	S244137*11	SO	430	E	430	R	ug/kg	LR
PEST	SW8081	GAMMA-CHLORDANE	CNC115	003SB09202	S244137*13	SO	1.1	JP	1.1	J	ug/kg	2C
PEST	SW8081	GAMMA-CHLORDANE	CNC115	003SB08601DL	S244137*2*DL	SO	140	U	140	R	ug/kg	DL
PEST	SW8081	GAMMA-CHLORDANE	CNC115	003SB09001	S244137*8	SO	1200	E	1200	R	ug/kg	LR
PEST	SW8081	GAMMA-CHLORDANE	CNC133	003SB09301	S245320*1	SO	29	=	29	R	ug/kg	RE
PEST	SW8081	GAMMA-CHLORDANE	CNC133	003SB09301RE	S245320*1*RE	SO	42	=	42	J	ug/kg	HT
PEST	SW8081	GAMMA-CHLORDANE	CNC133	003SB09403	S245320*3	SO	38	JP	38	J	ug/kg	2C
PEST	SW8081	GAMMA-CHLORDANE	CNC133	003SB09501	S245320*4	SO	2.8	J	2.8	R	ug/kg	RE

Attachment 1 - Changed Qualifiers and Results
Zone G, SWMU 3, Soils - Data Validation

Parameter Class	Analytical Method	Parameter	SDG	Sample ID	Lab Sample ID	Matrix	Lab Result	Lab Qual	Final Result	Final Qual	Units	Reasons
PEST	SW8081	GAMMA-CHLORDANE	CNC133	003SB09501RE	S245320*4*RE	SO	9.8	J	9.8	J	ug/kg	HT
PEST	SW8081	GAMMA-CHLORDANE	CNC133	003SB09503	S245320*5	SO	1.5	U	1.5	R	ug/kg	RE
PEST	SW8081	GAMMA-CHLORDANE	CNC133	003SB09503RE	S245320*5*RE	SO	1.5	U	1.5	UJ	ug/kg	HT
PEST	SW8081	GAMMA-CHLORDANE	CNC133	003CB09503	S245320*6	SO	1.5	U	1.5	R	ug/kg	RE
PEST	SW8081	GAMMA-CHLORDANE	CNC133	003CB09503RE	S245320*6*RE	SO	1.5	U	1.5	UJ	ug/kg	HT
PEST	SW8081	GAMMA-CHLORDANE	CNC147	003SB09801	S247015*1	SO	0.43	JP	0.43	J	ug/kg	2C
PEST	SW8081	HEPTACHLOR	CNC54	003SB02602	S117739*10	SO	1.1	J	1.1	J	ug/kg	CC
PEST	SW8081	HEPTACHLOR	CNC54	003SB02801	S117739*13	SO	1400	U	1400	UJ	ug/kg	CC
PEST	SW8081	HEPTACHLOR	CNC54	003SB02801DL	S117739*13*DL	SO	2800	U	2800	R	ug/kg	DL
PEST	SW8081	HEPTACHLOR	CNC54	003SB02802DL	S117739*14*DL	SO	3	U	3	R	ug/kg	DL
PEST	SW8081	HEPTACHLOR	CNC54	003SB03002DL	S117739*19*DL	SO	7.6	U	7.6	R	ug/kg	DL
PEST	SW8081	HEPTACHLOR	CNC54	003SB02401DL	S117739*5*DL	SO	2.8	U	2.8	R	ug/kg	DL
PEST	SW8081	HEPTACHLOR	CNC54	003SB02601	S117739*9	SO	1600	=	1600	J	ug/kg	CC
PEST	SW8081	HEPTACHLOR	CNC55	003SB03601	S117739A*10	SO	1.4	U	1.4	UJ	ug/kg	SS
PEST	SW8081	HEPTACHLOR	CNC55	003CB02101	S117739A*13	SO	1.5	U	1.5	UJ	ug/kg	SS
PEST	SW8081	HEPTACHLOR	CNC55	003SB02102	S117739A*14	SO	1.5	U	1.5	UJ	ug/kg	MD
PEST	SW8081	HEPTACHLOR	CNC55	003SB03401DL	S117739A*6*DL	SO	1400	U	1400	R	ug/kg	DL
PEST	SW8081	HEPTACHLOR	CNC55	003SB03402DL	S117739A*7*DL	SO	150	U	150	R	ug/kg	DL
PEST	SW8081	HEPTACHLOR	CNC55	003SB03501DL	S117739A*8*DL	SO	550	U	550	R	ug/kg	DL
PEST	SW8081	HEPTACHLOR	CNC62	003SB03902	S240294*2	SO	1.5	U	1.5	UJ	ug/kg	MD
PEST	SW8081	HEPTACHLOR	CNC82	003SB04902	S242223*15	SO	1.6	U	1.6	UJ	ug/kg	SS
PEST	SW8081	HEPTACHLOR	CNC82	003SB03702	S242223*2	SO	1.5	U	1.5	UJ	ug/kg	SS
PEST	SW8081	HEPTACHLOR	CNC83	003SB05501	S242223A*4	SO	6.1	=	6.1	J	ug/kg	CC
PEST	SW8081	HEPTACHLOR	CNC84	003EB037M1RE	S242223B*6*RE	WG	0.04	U	0.04	R	ug/l	RE
PEST	SW8081	HEPTACHLOR	CNC109	003SB06801DL	S243436*1*DL	SO	14	U	14	R	ug/kg	DL
PEST	SW8081	HEPTACHLOR	CNC109	003SB07103DL	S243436*10*DL	SO	5.5	U	5.5	R	ug/kg	DL
PEST	SW8081	HEPTACHLOR	CNC109	003SB07201DL	S243436*11*DL	SO	280	U	280	R	ug/kg	DL
PEST	SW8081	HEPTACHLOR	CNC109	003SB07203DL	S243436*12*DL	SO	28	U	28	R	ug/kg	DL
PEST	SW8081	HEPTACHLOR	CNC109	003SB07301DL	S243436*13*DL	SO	270	U	270	R	ug/kg	DL
PEST	SW8081	HEPTACHLOR	CNC109	003SB07303DL	S243436*14*DL	SO	1400	U	1400	R	ug/kg	DL
PEST	SW8081	HEPTACHLOR	CNC109	003CB07303DL	S243436*15*DL	SO	1400	U	1400	R	ug/kg	DL
PEST	SW8081	HEPTACHLOR	CNC109	003SB07501DL	S243436*18*DL	SO	140	U	140	R	ug/kg	DL
PEST	SW8081	HEPTACHLOR	CNC109	003SB08403DL	S243436*19*DL	SO	3	U	3	R	ug/kg	DL
PEST	SW8081	HEPTACHLOR	CNC109	003SB07001DL	S243436*6*DL	SO	15	U	15	R	ug/kg	DL
PEST	SW8081	HEPTACHLOR	CNC109	003SB07101DL	S243436*9*DL	SO	34	U	34	R	ug/l	DL

Parameter Class	Analytical Method	Parameter	SDG	Sample ID	Lab Sample ID	Matrix	Lab Result	Lab Qual	Final Result	Final Qual	Units	Reasons
PEST	SW8081	HEPTACHLOR	CNC110	003SB07901DL	S243436A*11*DL	SO	24	DJ	24	R	ug/kg	DL
PEST	SW8081	HEPTACHLOR	CNC110	003SB07903DL	S243436A*12*DL	SO	60	U	60	R	ug/kg	DL
PEST	SW8081	HEPTACHLOR	CNC110	003SB08103DL	S243436A*16*DL	SO	110	D	110	R	ug/kg	DL
PEST	SW8081	HEPTACHLOR	CNC110	003SB08203	S243436A*17	SO	100	P	100	J	ug/kg	2C
PEST	SW8081	HEPTACHLOR	CNC110	003SB08203DL	S243436A*17*DL	SO	760	U	760	R	ug/kg	DL
PEST	SW8081	HEPTACHLOR	CNC110	003SB07601DL	S243436A*2*DL	SO	27	U	27	R	ug/kg	DL
PEST	SW8081	HEPTACHLOR	CNC110	003SB07701DL	S243436A*4*DL	SO	29	U	29	R	ug/kg	DL
PEST	SW8081	HEPTACHLOR	CNC110	003SB07801DL	S243436A*7*DL	SO	28	U	28	R	ug/kg	DL
PEST	SW8081	HEPTACHLOR	CNC115	003SB08501	S244137*1	SO	0.56	JP	0.56	J	ug/kg	2C
PEST	SW8081	HEPTACHLOR	CNC115	003SB09101DL	S244137*11*DL	SO	35	U	35	R	ug/kg	DL
PEST	SW8081	HEPTACHLOR	CNC115	003SB08601DL	S244137*2*DL	SO	140	U	140	R	ug/kg	DL
PEST	SW8081	HEPTACHLOR	CNC115	003SB09001DL	S244137*8*DL	SO	75	U	75	R	ug/kg	DL
PEST	SW8081	HEPTACHLOR	CNC115	003SB09003	S244137*9	SO	0.53	JP	0.53	J	ug/kg	2C
PEST	SW8081	HEPTACHLOR	CNC133	003SB09301	S245320*1	SO	0.41	J	0.41	R	ug/kg	RE
PEST	SW8081	HEPTACHLOR	CNC133	003SB09301RE	S245320*1*RE	SO	3.1	U	3.1	UJ	ug/kg	HT
PEST	SW8081	HEPTACHLOR	CNC133	003SB09401	S245320*2	SO	280	U	280	UJ	ug/kg	CC
PEST	SW8081	HEPTACHLOR	CNC133	003SB09403	S245320*3	SO	150	U	150	UJ	ug/kg	CC
PEST	SW8081	HEPTACHLOR	CNC133	003SB09501	S245320*4	SO	7.3	U	7.3	R	ug/kg	RE
PEST	SW8081	HEPTACHLOR	CNC133	003SB09501RE	S245320*4*RE	SO	15	U	15	UJ	ug/kg	HT
PEST	SW8081	HEPTACHLOR	CNC133	003SB09503	S245320*5	SO	1.5	U	1.5	R	ug/kg	RE
PEST	SW8081	HEPTACHLOR	CNC133	003SB09503RE	S245320*5*RE	SO	1.5	U	1.5	UJ	ug/kg	HT
PEST	SW8081	HEPTACHLOR	CNC133	003CB09503	S245320*6	SO	0.25	J	0.25	R	ug/kg	RE
PEST	SW8081	HEPTACHLOR	CNC133	003CB09503RE	S245320*6*RE	SO	1.5	U	1.5	UJ	ug/kg	HT
PEST	SW8081	HEPTACHLOR	CNC133	003SB09601	S245320*7	SO	1.4	U	1.4	UJ	ug/kg	CC
PEST	SW8081	HEPTACHLOR EPOXIDE	CNC54	003SB02201	S117739*1	SO	0.14	JP	0.14	J	ug/kg	2C
PEST	SW8081	HEPTACHLOR EPOXIDE	CNC54	003SB02602	S117739*10	SO	3.1	P	3.1	J	ug/kg	CC, 2C
PEST	SW8081	HEPTACHLOR EPOXIDE	CNC54	003SB02801	S117739*13	SO	1400	U	1400	UJ	ug/kg	CC
PEST	SW8081	HEPTACHLOR EPOXIDE	CNC54	003SB02801DL	S117739*13*DL	SO	2800	U	2800	R	ug/kg	DL
PEST	SW8081	HEPTACHLOR EPOXIDE	CNC54	003SB02802DL	S117739*14*DL	SO	3	U	3	R	ug/kg	DL
PEST	SW8081	HEPTACHLOR EPOXIDE	CNC54	003SB03002DL	S117739*19*DL	SO	7.6	U	7.6	R	ug/kg	DL
PEST	SW8081	HEPTACHLOR EPOXIDE	CNC54	003SB03101	S117739*20	SO	2.2	JP	2.2	J	ug/kg	2C
PEST	SW8081	HEPTACHLOR EPOXIDE	CNC54	003SB02301	S117739*3	SO	3.1	JP	3.1	J	ug/kg	2C, IS
PEST	SW8081	HEPTACHLOR EPOXIDE	CNC54	003SB02401	S117739*5	SO	0.29	JP	0.29	J	ug/kg	2C
PEST	SW8081	HEPTACHLOR EPOXIDE	CNC54	003SB02401DL	S117739*5*DL	SO	0.94	DJ	0.94	R	ug/kg	DL
PEST	SW8081	HEPTACHLOR EPOXIDE	CNC54	003SB02601	S117739*9	SO	1500	U	1500	UJ	ug/kg	CC

Attachment 1 - Changed Qualifiers and Results
Zone G, SWMU 3, Soils - Data Validation

Parameter Class	Analytical Method	Parameter	SDG	Sample ID	Lab Sample ID	Matrix	Lab Result	Lab Qual	Final Result	Final Qual	Units	Reasons
PEST	SW8081	HEPTACHLOR EPOXIDE	CNC55	003SB03601	S117739A*10	SO	1.4	U	1.4	UJ	ug/kg	SS
PEST	SW8081	HEPTACHLOR EPOXIDE	CNC55	003SB03602	S117739A*11	SO	0.14	JP	0.14	J	ug/kg	2C
PEST	SW8081	HEPTACHLOR EPOXIDE	CNC55	003CB02101	S117739A*13	SO	4.7	=	4.7	J	ug/kg	SS
PEST	SW8081	HEPTACHLOR EPOXIDE	CNC55	003SB03202	S117739A*3	SO	3.3	JP	3.3	J	ug/kg	2C
PEST	SW8081	HEPTACHLOR EPOXIDE	CNC55	003SB03302	S117739A*5	SO	0.15	JP	0.15	J	ug/kg	2C
PEST	SW8081	HEPTACHLOR EPOXIDE	CNC55	003SB03401DL	S117739A*6*DL	SO	1400	U	1400	R	ug/kg	DL
PEST	SW8081	HEPTACHLOR EPOXIDE	CNC55	003SB03402DL	S117739A*7*DL	SO	150	U	150	R	ug/kg	DL
PEST	SW8081	HEPTACHLOR EPOXIDE	CNC55	003SB03501DL	S117739A*8*DL	SO	550	U	550	R	ug/kg	DL
PEST	SW8081	HEPTACHLOR EPOXIDE	CNC62	003SB03901	S240294*1	SO	19	JP	19	J	ug/kg	2C
PEST	SW8081	HEPTACHLOR EPOXIDE	CNC62	003SB03902	S240294*2	SO	0.62	JP	0.62	J	ug/kg	2C
PEST	SW8081	HEPTACHLOR EPOXIDE	CNC62	003SB04001	S240294*3	SO	8.7	JP	8.7	J	ug/kg	2C
PEST	SW8081	HEPTACHLOR EPOXIDE	CNC62	003SB04002	S240294*4	SO	2.2	JP	2.2	J	ug/kg	2C
PEST	SW8081	HEPTACHLOR EPOXIDE	CNC62	003SB04101	S240294*5	SO	2.6	JP	2.6	J	ug/kg	2C
PEST	SW8081	HEPTACHLOR EPOXIDE	CNC62	003SB04201	S240294*8	SO	0.98	JP	0.98	J	ug/kg	2C
PEST	SW8081	HEPTACHLOR EPOXIDE	CNC82	003SB04701	S242223*11	SO	6.7	JP	6.7	J	ug/kg	2C, IS
PEST	SW8081	HEPTACHLOR EPOXIDE	CNC82	003SB04901	S242223*14	SO	6.3	JP	6.3	J	ug/kg	2C
PEST	SW8081	HEPTACHLOR EPOXIDE	CNC82	003SB04902	S242223*15	SO	1.6	U	1.6	UJ	ug/kg	SS
PEST	SW8081	HEPTACHLOR EPOXIDE	CNC82	003SB05101	S242223*16	SO	3.8	JP	3.8	J	ug/kg	2C
PEST	SW8081	HEPTACHLOR EPOXIDE	CNC82	003SB05202	S242223*18	SO	1.2	JP	1.2	J	ug/kg	2C
PEST	SW8081	HEPTACHLOR EPOXIDE	CNC82	003CB05202	S242223*19	SO	7	JP	7	J	ug/kg	2C
PEST	SW8081	HEPTACHLOR EPOXIDE	CNC82	003SB03702	S242223*2	SO	1.5	U	1.5	UJ	ug/kg	SS
PEST	SW8081	HEPTACHLOR EPOXIDE	CNC83	003SB05401	S242223A*2	SO	4.8	JP	4.8	J	ug/kg	2C
PEST	SW8081	HEPTACHLOR EPOXIDE	CNC83	003SB06603	S242223A*20	SO	1.5	JP	1.5	J	ug/kg	2C
PEST	SW8081	HEPTACHLOR EPOXIDE	CNC83	003SB05501	S242223A*4	SO	4.7	JP	4.7	J	ug/kg	2C
PEST	SW8081	HEPTACHLOR EPOXIDE	CNC83	003SB05601	S242223A*6	SO	110	JP	110	J	ug/kg	2C
PEST	SW8081	HEPTACHLOR EPOXIDE	CNC83	003SB05602	S242223A*7	SO	2.8	JP	2.8	J	ug/kg	2C
PEST	SW8081	HEPTACHLOR EPOXIDE	CNC83	003SB05701	S242223A*8	SO	7.4	JP	7.4	J	ug/kg	2C
PEST	SW8081	HEPTACHLOR EPOXIDE	CNC84	003EB037M1RE	S242223B*6*RE	WG	0.04	U	0.04	R	ug/l	RE
PEST	SW8081	HEPTACHLOR EPOXIDE	CNC109	003SB06801DL	S243436*1*DL	SO	14	U	14	R	ug/kg	DL
PEST	SW8081	HEPTACHLOR EPOXIDE	CNC109	003SB07103DL	S243436*10*DL	SO	5.5	U	5.5	R	ug/kg	DL
PEST	SW8081	HEPTACHLOR EPOXIDE	CNC109	003SB07201DL	S243436*11*DL	SO	280	U	280	R	ug/kg	DL
PEST	SW8081	HEPTACHLOR EPOXIDE	CNC109	003SB07203	S243436*12	SO	5.5	JP	5.5	J	ug/kg	2C
PEST	SW8081	HEPTACHLOR EPOXIDE	CNC109	003SB07203DL	S243436*12*DL	SO	5.4	DJP	5.4	R	ug/kg	DL
PEST	SW8081	HEPTACHLOR EPOXIDE	CNC109	003SB07301DL	S243436*13*DL	SO	270	U	270	R	ug/kg	DL
PEST	SW8081	HEPTACHLOR EPOXIDE	CNC109	003SB07303DL	S243436*14*DL	SO	1400	U	1400	R	ug/kg	DL

Parameter Class	Analytical Method	Analyte	Site	Sample ID	Lab Sample ID	Matrix	Lab Result	Lab Qual	Final Result	Final Qual	Units	Reasons
PEST	SW8081	HEPTACHLOR EPOXIDE	CNC109	003CB07303DL	S243436*15*DL	SO	1400	U	1400	R	ug/kg	DL
PEST	SW8081	HEPTACHLOR EPOXIDE	CNC109	003SB07401	S243436*16	SO	0.39	JP	0.39	J	ug/kg	2C
PEST	SW8081	HEPTACHLOR EPOXIDE	CNC109	003SB07501	S243436*18	SO	5.1	JP	5.1	J	ug/kg	2C
PEST	SW8081	HEPTACHLOR EPOXIDE	CNC109	003SB07501DL	S243436*18*DL	SO	140	U	140	R	ug/kg	DL
PEST	SW8081	HEPTACHLOR EPOXIDE	CNC109	003SB08403DL	S243436*19*DL	SO	3	U	3	R	ug/kg	DL
PEST	SW8081	HEPTACHLOR EPOXIDE	CNC109	003SB07001DL	S243436*6*DL	SO	15	U	15	R	ug/kg	DL
PEST	SW8081	HEPTACHLOR EPOXIDE	CNC109	003SB07101DL	S243436*9*DL	SO	34	U	34	R	ug/kg	DL
PEST	SW8081	HEPTACHLOR EPOXIDE	CNC110	003SB07901	S243436A*11	SO	850	E	850	R	ug/kg	LR
PEST	SW8081	HEPTACHLOR EPOXIDE	CNC110	003SB07903DL	S243436A*12*DL	SO	130	D	130	R	ug/kg	DL
PEST	SW8081	HEPTACHLOR EPOXIDE	CNC110	003SB08103DL	S243436A*16*DL	SO	71	U	71	R	ug/kg	DL
PEST	SW8081	HEPTACHLOR EPOXIDE	CNC110	003SB08203	S243436A*17	SO	320	P	320	J	ug/kg	2C
PEST	SW8081	HEPTACHLOR EPOXIDE	CNC110	003SB08203DL	S243436A*17*DL	SO	180	DJP	180	R	ug/kg	DL
PEST	SW8081	HEPTACHLOR EPOXIDE	CNC110	003SB07601DL	S243436A*2*DL	SO	27	U	27	R	ug/kg	DL
PEST	SW8081	HEPTACHLOR EPOXIDE	CNC110	003SB07701	S243436A*4	SO	4.6	JP	4.6	J	ug/kg	2C
PEST	SW8081	HEPTACHLOR EPOXIDE	CNC110	003SB07701DL	S243436A*4*DL	SO	6.9	DJP	6.9	R	ug/kg	DL
PEST	SW8081	HEPTACHLOR EPOXIDE	CNC110	003SB07702	S243436A*5	SO	0.27	JP	0.27	J	ug/kg	2C
PEST	SW8081	HEPTACHLOR EPOXIDE	CNC110	003SB07703	S243436A*6	SO	1	JP	1	J	ug/kg	2C
PEST	SW8081	HEPTACHLOR EPOXIDE	CNC110	003SB07801	S243436A*7	SO	6.2	JP	6.2	J	ug/kg	2C
PEST	SW8081	HEPTACHLOR EPOXIDE	CNC110	003SB07801DL	S243436A*7*DL	SO	28	U	28	R	ug/kg	DL
PEST	SW8081	HEPTACHLOR EPOXIDE	CNC115	003SB09101DL	S244137*11*DL	SO	100	D	100	R	ug/kg	DL
PEST	SW8081	HEPTACHLOR EPOXIDE	CNC115	003SB09202	S244137*13	SO	2.3	P	2.3	J	ug/kg	2C
PEST	SW8081	HEPTACHLOR EPOXIDE	CNC115	003SB08601DL	S244137*2*DL	SO	140	U	140	R	ug/kg	DL
PEST	SW8081	HEPTACHLOR EPOXIDE	CNC115	003SB08801	S244137*4	SO	0.66	JP	0.66	J	ug/kg	2C
PEST	SW8081	HEPTACHLOR EPOXIDE	CNC115	003SB09001	S244137*8	SO	390	E	390	R	ug/kg	LR
PEST	SW8081	HEPTACHLOR EPOXIDE	CNC133	003SB09301	S245320*1	SO	8	=	8	R	ug/kg	RE
PEST	SW8081	HEPTACHLOR EPOXIDE	CNC133	003SB09301RE	S245320*1*RE	SO	13	=	13	J	ug/kg	HT
PEST	SW8081	HEPTACHLOR EPOXIDE	CNC133	003SB09501	S245320*4	SO	7.3	U	7.3	R	ug/kg	RE
PEST	SW8081	HEPTACHLOR EPOXIDE	CNC133	003SB09501RE	S245320*4*RE	SO	15	U	15	UJ	ug/kg	HT
PEST	SW8081	HEPTACHLOR EPOXIDE	CNC133	003SB09503	S245320*5	SO	1.5	U	1.5	R	ug/kg	RE
PEST	SW8081	HEPTACHLOR EPOXIDE	CNC133	003SB09503RE	S245320*5*RE	SO	1.5	U	1.5	UJ	ug/kg	HT
PEST	SW8081	HEPTACHLOR EPOXIDE	CNC133	003CB09503	S245320*6	SO	1.5	U	1.5	R	ug/kg	RE
PEST	SW8081	HEPTACHLOR EPOXIDE	CNC133	003CB09503RE	S245320*6*RE	SO	1.5	U	1.5	UJ	ug/kg	HT
PEST	SW8081	HEPTACHLOR EPOXIDE	CNC133	003SB09701	S245320*8	SO	8.8	JP	8.8	J	ug/kg	2C
PEST	SW8081	HEPTACHLOR EPOXIDE	CNC147	003SB09801	S247015*1	SO	0.13	JP	0.13	J	ug/kg	2C
PEST	SW8081	METHOXYCHLOR	CNC54	003SB02801DL	S117739*13*DL	SO	28000	U	28000	R	ug/kg	DL

Attachment 1 - Changed Qualifiers and Results
Zone G, SWMU 3, Soils - Data Validation

Parameter Class	Analytical Method	Parameter	SDG	Sample ID	Lab Sample ID	Matrix	Lab Result	Lab Qual	Final Result	Final Qual	Units	Reasons
PEST	SW8081	METHOXYCHLOR	CNC54	003SB02802DL	S117739*14*DL	SO	30	U	30	R	ug/kg	DL
PEST	SW8081	METHOXYCHLOR	CNC54	003SB03002DL	S117739*19*DL	SO	76	U	76	R	ug/kg	DL
PEST	SW8081	METHOXYCHLOR	CNC54	003SB03101	S117739*20	SO	70	U	70	UJ	ug/kg	CC
PEST	SW8081	METHOXYCHLOR	CNC54	003SB02401DL	S117739*5*DL	SO	28	U	28	R	ug/kg	DL
PEST	SW8081	METHOXYCHLOR	CNC55	003SB03601	S117739A*10	SO	14	U	14	UJ	ug/kg	SS
PEST	SW8081	METHOXYCHLOR	CNC55	003CB02101	S117739A*13	SO	15	U	15	UJ	ug/kg	SS
PEST	SW8081	METHOXYCHLOR	CNC55	003SB03401DL	S117739A*6*DL	SO	14000	U	14000	R	ug/kg	DL
PEST	SW8081	METHOXYCHLOR	CNC55	003SB03402DL	S117739A*7*DL	SO	1500	U	1500	R	ug/kg	DL
PEST	SW8081	METHOXYCHLOR	CNC55	003SB03501DL	S117739A*8*DL	SO	5500	U	5500	R	ug/kg	DL
PEST	SW8081	METHOXYCHLOR	CNC62	003SB03902	S240294*2	SO	15	U	15	UJ	ug/kg	MS
PEST	SW8081	METHOXYCHLOR	CNC82	003SB03701	S242223*1	SO	28	U	28	UJ	ug/kg	CC
PEST	SW8081	METHOXYCHLOR	CNC82	003SB04601	S242223*10	SO	14	U	14	UJ	ug/kg	CC
PEST	SW8081	METHOXYCHLOR	CNC82	003SB04701	S242223*11	SO	150	U	150	UJ	ug/kg	CC
PEST	SW8081	METHOXYCHLOR	CNC82	003SB04801	S242223*12	SO	14000	U	14000	UJ	ug/kg	CC
PEST	SW8081	METHOXYCHLOR	CNC82	003SB04802	S242223*13	SO	58	U	58	UJ	ug/kg	CC
PEST	SW8081	METHOXYCHLOR	CNC82	003SB04901	S242223*14	SO	87	U	87	UJ	ug/kg	CC
PEST	SW8081	METHOXYCHLOR	CNC82	003SB04902	S242223*15	SO	16	U	16	UJ	ug/kg	CC, SS
PEST	SW8081	METHOXYCHLOR	CNC82	003SB05101	S242223*16	SO	150	U	150	UJ	ug/kg	CC
PEST	SW8081	METHOXYCHLOR	CNC82	003SB05201	S242223*17	SO	280	U	280	UJ	ug/kg	CC
PEST	SW8081	METHOXYCHLOR	CNC82	003SB05202	S242223*18	SO	31	U	31	UJ	ug/kg	CC
PEST	SW8081	METHOXYCHLOR	CNC82	003CB05202	S242223*19	SO	740	U	740	UJ	ug/kg	CC
PEST	SW8081	METHOXYCHLOR	CNC82	003SB03702	S242223*2	SO	15	U	15	UJ	ug/kg	CC, SS
PEST	SW8081	METHOXYCHLOR	CNC82	003SB05802	S242223*20	SO	160	U	160	UJ	ug/kg	CC
PEST	SW8081	METHOXYCHLOR	CNC82	003SB03801	S242223*3	SO	29	U	29	UJ	ug/kg	CC
PEST	SW8081	METHOXYCHLOR	CNC82	003CB03801	S242223*4	SO	28	U	28	UJ	ug/kg	CC
PEST	SW8081	METHOXYCHLOR	CNC82	003SB03802	S242223*5	SO	15	U	15	UJ	ug/kg	CC
PEST	SW8081	METHOXYCHLOR	CNC82	003SB04301	S242223*6	SO	700	U	700	UJ	ug/kg	CC
PEST	SW8081	METHOXYCHLOR	CNC82	003SB04401	S242223*7	SO	3400	U	3400	UJ	ug/kg	CC
PEST	SW8081	METHOXYCHLOR	CNC82	003SB04402	S242223*8	SO	600	U	600	UJ	ug/kg	CC
PEST	SW8081	METHOXYCHLOR	CNC82	003SB04501	S242223*9	SO	1400	U	1400	UJ	ug/kg	CC
PEST	SW8081	METHOXYCHLOR	CNC84	003EB037M1RE	S242223B*6*RE	WG	0.38	U	0.38	R	ug/l	RE
PEST	SW8081	METHOXYCHLOR	CNC109	003SB06801DL	S243436*1*DL	SO	140	U	140	R	ug/kg	DL
PEST	SW8081	METHOXYCHLOR	CNC109	003SB07103DL	S243436*10*DL	SO	55	U	55	R	ug/kg	DL
PEST	SW8081	METHOXYCHLOR	CNC109	003SB07201DL	S243436*11*DL	SO	2800	U	2800	R	ug/kg	DL
PEST	SW8081	METHOXYCHLOR	CNC109	003SB07303DL	S243436*12*DL	SO	280	U	280	R	ug/	DL

Parameter Class	Analytical Method	Parameter	Site	Sample ID	Lab Sample ID	Matrix	Lab Result	Lab Qual	Final Result	Final Qual	Units	Reasons
PEST	SW8081	METHOXYCHLOR	CNC109	003SB07301DL	S243436*13*DL	SO	2700	U	2700	R	ug/kg	DL
PEST	SW8081	METHOXYCHLOR	CNC109	003SB07303DL	S243436*14*DL	SO	14000	U	14000	R	ug/kg	DL
PEST	SW8081	METHOXYCHLOR	CNC109	003CB07303DL	S243436*15*DL	SO	14000	U	14000	R	ug/kg	DL
PEST	SW8081	METHOXYCHLOR	CNC109	003SB07501DL	S243436*18*DL	SO	1400	U	1400	R	ug/kg	DL
PEST	SW8081	METHOXYCHLOR	CNC109	003SB08403DL	S243436*19*DL	SO	30	U	30	R	ug/kg	DL
PEST	SW8081	METHOXYCHLOR	CNC109	003SB07001DL	S243436*6*DL	SO	150	U	150	R	ug/kg	DL
PEST	SW8081	METHOXYCHLOR	CNC109	003SB07101DL	S243436*9*DL	SO	340	U	340	R	ug/kg	DL
PEST	SW8081	METHOXYCHLOR	CNC110	003SB07901DL	S243436A*11*DL	SO	710	U	710	R	ug/kg	DL
PEST	SW8081	METHOXYCHLOR	CNC110	003SB07903DL	S243436A*12*DL	SO	600	U	600	R	ug/kg	DL
PEST	SW8081	METHOXYCHLOR	CNC110	003SB08103DL	S243436A*16*DL	SO	710	U	710	R	ug/kg	DL
PEST	SW8081	METHOXYCHLOR	CNC110	003SB08203DL	S243436A*17*DL	SO	7600	U	7600	R	ug/kg	DL
PEST	SW8081	METHOXYCHLOR	CNC110	003SB07601DL	S243436A*2*DL	SO	270	U	270	R	ug/kg	DL
PEST	SW8081	METHOXYCHLOR	CNC110	003SB07701DL	S243436A*4*DL	SO	290	U	290	R	ug/kg	DL
PEST	SW8081	METHOXYCHLOR	CNC110	003SB07801DL	S243436A*7*DL	SO	280	U	280	R	ug/kg	DL
PEST	SW8081	METHOXYCHLOR	CNC115	003SB09101DL	S244137*11*DL	SO	350	U	350	R	ug/kg	DL
PEST	SW8081	METHOXYCHLOR	CNC115	003SB08601DL	S244137*2*DL	SO	1400	U	1400	R	ug/kg	DL
PEST	SW8081	METHOXYCHLOR	CNC115	003SB09001DL	S244137*8*DL	SO	750	U	750	R	ug/kg	DL
PEST	SW8081	METHOXYCHLOR	CNC133	003SB09301	S245320*1	SO	15	U	15	R	ug/kg	RE
PEST	SW8081	METHOXYCHLOR	CNC133	003SB09301RE	S245320*1*RE	SO	31	U	31	UJ	ug/kg	HT
PEST	SW8081	METHOXYCHLOR	CNC133	003SB09401	S245320*2	SO	2800	U	2800	UJ	ug/kg	CC
PEST	SW8081	METHOXYCHLOR	CNC133	003SB09403	S245320*3	SO	1500	U	1500	UJ	ug/kg	CC
PEST	SW8081	METHOXYCHLOR	CNC133	003SB09501	S245320*4	SO	73	U	73	R	ug/kg	RE
PEST	SW8081	METHOXYCHLOR	CNC133	003SB09501RE	S245320*4*RE	SO	150	U	150	UJ	ug/kg	HT
PEST	SW8081	METHOXYCHLOR	CNC133	003SB09503	S245320*5	SO	15	U	15	R	ug/kg	RE
PEST	SW8081	METHOXYCHLOR	CNC133	003SB09503RE	S245320*5*RE	SO	15	U	15	UJ	ug/kg	HT
PEST	SW8081	METHOXYCHLOR	CNC133	003CB09503	S245320*6	SO	15	U	15	R	ug/kg	RE
PEST	SW8081	METHOXYCHLOR	CNC133	003CB09503RE	S245320*6*RE	SO	15	U	15	UJ	ug/kg	HT
PEST	SW8081	METHOXYCHLOR	CNC133	003SB09601	S245320*7	SO	14	U	14	UJ	ug/kg	CC
PEST	SW8081	METHOXYCHLOR	CNC147	003SB09801	S247015*1	SO	14	U	14	UJ	ug/kg	CC
PEST	SW8081	p,p'-DDD	CNC54	003SB02701	S117739*11	SO	1.3	JP	1.3	J	ug/kg	2C
PEST	SW8081	p,p'-DDD	CNC54	003SB02702	S117739*12	SO	1.2	JP	1.2	J	ug/kg	2C
PEST	SW8081	p,p'-DDD	CNC54	003SB02801DL	S117739*13*DL	SO	7900	D	7900	R	ug/kg	DL
PEST	SW8081	p,p'-DDD	CNC54	003SB02802	S117739*14	SO	5.6	P	5.6	J	ug/kg	2C
PEST	SW8081	p,p'-DDD	CNC54	003SB02802DL	S117739*14*DL	SO	5.7	DJP	5.7	R	ug/kg	DL
PEST	SW8081	p,p'-DDD	CNC54	003SB02902	S117739*16	SO	1.5	JP	1.5	J	ug/kg	2C

Attachment 1 - Changed Qualifiers and Results
Zone G, SWMU 3, Soils - Data Validation

Parameter Class	Analytical Method	Parameter	SDG	Sample ID	Lab Sample ID	Matrix	Lab Result	Lab Qual	Final Result	Final Qual	Units	Reasons
PEST	SW8081	p,p'-DDD	CNC54	003CB02902	S117739*17	SO	1.4	JP	1.4	J	ug/kg	2C
PEST	SW8081	p,p'-DDD	CNC54	003SB03002DL	S117739*19*DL	SO	20	D	20	R	ug/kg	DL
PEST	SW8081	p,p'-DDD	CNC54	003SB02301	S117739*3	SO	22	JP	22	J	ug/kg	2C, IS
PEST	SW8081	p,p'-DDD	CNC54	003SB02401DL	S117739*5*DL	SO	5.3	U	5.3	R	ug/kg	DL
PEST	SW8081	p,p'-DDD	CNC55	003SB03601	S117739A*10	SO	0.76	J	0.76	J	ug/kg	SS
PEST	SW8081	p,p'-DDD	CNC55	003SB03602	S117739A*11	SO	1.4	JP	1.4	J	ug/kg	CC, 2C
PEST	SW8081	p,p'-DDD	CNC55	003SB02101	S117739A*12	SO	3.6	J	3.6	J	ug/kg	CC
PEST	SW8081	p,p'-DDD	CNC55	003CB02101	S117739A*13	SO	1.7	J	1.7	J	ug/kg	SS
PEST	SW8081	p,p'-DDD	CNC55	003SB03201	S117739A*2	SO	55	P	55	J	ug/kg	2C
PEST	SW8081	p,p'-DDD	CNC55	003SB03202	S117739A*3	SO	8.9	JP	8.9	J	ug/kg	CC, 2C
PEST	SW8081	p,p'-DDD	CNC55	003SB03301	S117739A*4	SO	140	P	140	J	ug/kg	2C
PEST	SW8081	p,p'-DDD	CNC55	003SB03302	S117739A*5	SO	0.89	JP	0.89	J	ug/kg	2C
PEST	SW8081	p,p'-DDD	CNC55	003SB03401	S117739A*6	SO	1000	=	1000	J	ug/kg	CC
PEST	SW8081	p,p'-DDD	CNC55	003SB03401DL	S117739A*6*DL	SO	3000	D	3000	R	ug/kg	DL
PEST	SW8081	p,p'-DDD	CNC55	003SB03402	S117739A*7	SO	68	JP	68	J	ug/kg	CC, 2C
PEST	SW8081	p,p'-DDD	CNC55	003SB03402DL	S117739A*7*DL	SO	160	DJ	160	R	ug/kg	DL
PEST	SW8081	p,p'-DDD	CNC55	003SB03501	S117739A*8	SO	290	P	290	J	ug/kg	CC, 2C
PEST	SW8081	p,p'-DDD	CNC55	003SB03501DL	S117739A*8*DL	SO	760	DJ	760	R	ug/kg	DL
PEST	SW8081	p,p'-DDD	CNC55	003SB03502	S117739A*9	SO	180	JP	180	J	ug/kg	CC, 2C, IS
PEST	SW8081	p,p'-DDD	CNC62	003SB03901	S240294*1	SO	370	=	370	J	ug/kg	CC
PEST	SW8081	p,p'-DDD	CNC62	003SB04101	S240294*5	SO	3.9	JP	3.9	J	ug/kg	2C
PEST	SW8081	p,p'-DDD	CNC62	003SB04102	S240294*6	SO	0.42	JP	0.42	J	ug/kg	2C
PEST	SW8081	p,p'-DDD	CNC62	003SB04201	S240294*8	SO	190	=	190	J	ug/kg	CC
PEST	SW8081	p,p'-DDD	CNC62	003SB04202	S240294*9	SO	4.8	P	4.8	J	ug/kg	2C
PEST	SW8081	p,p'-DDD	CNC82	003SB04601	S242223*10	SO	2.3	J	2.3	J	ug/kg	IS
PEST	SW8081	p,p'-DDD	CNC82	003SB04701	S242223*11	SO	140	P	140	J	ug/kg	2C, IS
PEST	SW8081	p,p'-DDD	CNC82	003SB04901	S242223*14	SO	16	JP	16	J	ug/kg	2C
PEST	SW8081	p,p'-DDD	CNC82	003SB04902	S242223*15	SO	3.2	U	3.2	UJ	ug/kg	SS
PEST	SW8081	p,p'-DDD	CNC82	003SB03702	S242223*2	SO	3	U	3	UJ	ug/kg	SS
PEST	SW8081	p,p'-DDD	CNC82	003SB04402	S242223*8	SO	260	P	260	J	ug/kg	2C
PEST	SW8081	p,p'-DDD	CNC83	003SB05801	S242223A*10	SO	24	P	24	J	ug/kg	2C
PEST	SW8081	p,p'-DDD	CNC83	003SB05902	S242223A*12	SO	27	JP	27	J	ug/kg	2C, CC
PEST	SW8081	p,p'-DDD	CNC83	003SB06003	S242223A*13	SO	610	JP	610	J	ug/kg	2C
PEST	SW8081	p,p'-DDD	CNC83	003SB06103	S242223A*14	SO	14000	J	14000	J	ug/kg	CC
PEST	SW8081	p,p'-DDD	CNC83	003SB06203	S242223A*15	SO	28	JP	28	J	ug/kg	2C

Parameter Class	Analytical Method	Parameter	SDG	Sample ID	Lab Sample ID	Matrix	Lab Result	Lab Qual	Final Result	Final Qual	Units	Reasons
PEST	SW8081	p,p'-DDD	CNC83	003SB06304	S242223A*16	SO	8.9	J	8.9	J	ug/kg	CC
PEST	SW8081	p,p'-DDD	CNC83	003SB05401	S242223A*2	SO	2	JP	2	J	ug/kg	2C
PEST	SW8081	p,p'-DDD	CNC83	003SB06603	S242223A*20	SO	4.9	J	4.9	J	ug/kg	CC
PEST	SW8081	p,p'-DDD	CNC83	003SB05602	S242223A*7	SO	2.1	JP	2.1	J	ug/kg	2C
PEST	SW8081	p,p'-DDD	CNC84	003SB06701	S242223B*4	SO	600	P	600	J	ug/kg	2C
PEST	SW8081	p,p'-DDD	CNC84	003SB06702	S242223B*5	SO	1.8	JP	1.8	J	ug/kg	2C
PEST	SW8081	p,p'-DDD	CNC84	003EB037M1RE	S242223B*6*RE	WG	0.08	U	0.08	R	ug/l	RE
PEST	SW8081	p,p'-DDD	CNC109	003SB06801	S243436*1	SO	19	P	19	J	ug/kg	2C
PEST	SW8081	p,p'-DDD	CNC109	003SB06801DL	S243436*1*DL	SO	26	DJP	26	R	ug/kg	DL
PEST	SW8081	p,p'-DDD	CNC109	003SB07103DL	S243436*10*DL	SO	12	D	12	R	ug/kg	DL
PEST	SW8081	p,p'-DDD	CNC109	003SB07201	S243436*11	SO	450	EP	450	R	ug/kg	LR
PEST	SW8081	p,p'-DDD	CNC109	003SB07203DL	S243436*12*DL	SO	79	D	79	R	ug/kg	DL
PEST	SW8081	p,p'-DDD	CNC109	003SB07301DL	S243436*13*DL	SO	1100	D	1100	R	ug/kg	DL
PEST	SW8081	p,p'-DDD	CNC109	003SB07303	S243436*14	SO	6600	E	6600	R	ug/kg	LR
PEST	SW8081	p,p'-DDD	CNC109	003CB07303	S243436*15	SO	6000	E	6000	R	ug/kg	LR
PEST	SW8081	p,p'-DDD	CNC109	003SB07401	S243436*16	SO	2	JP	2	J	ug/kg	2C
PEST	SW8081	p,p'-DDD	CNC109	003SB07501	S243436*18	SO	260	P	260	J	ug/kg	2C
PEST	SW8081	p,p'-DDD	CNC109	003SB07501DL	S243436*18*DL	SO	220	DJP	220	R	ug/kg	DL
PEST	SW8081	p,p'-DDD	CNC109	003SB08403DL	S243436*19*DL	SO	4.2	DJ	4.2	R	ug/kg	DL
PEST	SW8081	p,p'-DDD	CNC109	003SB07001DL	S243436*6*DL	SO	26	DJ	26	R	ug/kg	DL
PEST	SW8081	p,p'-DDD	CNC109	003SB07101DL	S243436*9*DL	SO	170	D	170	R	ug/kg	DL
PEST	SW8081	p,p'-DDD	CNC110	003SB07503	S243436A*1	SO	21	P	21	J	ug/kg	2C
PEST	SW8081	p,p'-DDD	CNC110	003SB07803	S243436A*10	SO	1.9	JP	1.9	J	ug/kg	2C
PEST	SW8081	p,p'-DDD	CNC110	003SB07901	S243436A*11	SO	300	P	300	J	ug/kg	2C
PEST	SW8081	p,p'-DDD	CNC110	003SB07901DL	S243436A*11*DL	SO	130	DJP	130	R	ug/kg	DL
PEST	SW8081	p,p'-DDD	CNC110	003SB07903	S243436A*12	SO	8.9	JP	8.9	J	ug/kg	2C
PEST	SW8081	p,p'-DDD	CNC110	003SB07903DL	S243436A*12*DL	SO	120	U	120	R	ug/kg	DL
PEST	SW8081	p,p'-DDD	CNC110	003SB08103DL	S243436A*16*DL	SO	140	U	140	R	ug/kg	DL
PEST	SW8081	p,p'-DDD	CNC110	003SB08203	S243436A*17	SO	810	=	810	J	ug/kg	CC
PEST	SW8081	p,p'-DDD	CNC110	003SB08203DL	S243436A*17*DL	SO	330	DJP	330	R	ug/kg	DL
PEST	SW8081	p,p'-DDD	CNC110	003SB08303	S243436A*18	SO	6.9	P	6.9	J	ug/kg	2C
PEST	SW8081	p,p'-DDD	CNC110	003SB07601	S243436A*2	SO	54	P	54	J	ug/kg	2C
PEST	SW8081	p,p'-DDD	CNC110	003SB07601DL	S243436A*2*DL	SO	42	DJP	42	R	ug/kg	DL
PEST	SW8081	p,p'-DDD	CNC110	003SB07603	S243436A*3	SO	13	P	13	J	ug/kg	2C
PEST	SW8081	p,p'-DDD	CNC110	003SB07701DL	S243436A*4*DL	SO	91	D	91	R	ug/kg	DL

Attachment 1 - Changed Qualifiers and Results
Zone G, SWMU 3, Soils - Data Validation

Parameter Class	Analytical Method	Parameter	SDG	Sample ID	Lab Sample ID	Matrix	Lab Result	Lab Qual	Final Result	Final Qual	Units	Reasons
PEST	SW8081	p,p'-DDD	CNC110	003SB07702	S243436A*5	SO	0.52	JP	0.52	J	ug/kg	2C
PEST	SW8081	p,p'-DDD	CNC110	003SB07703	S243436A*6	SO	1.6	JP	1.6	J	ug/kg	2C
PEST	SW8081	p,p'-DDD	CNC110	003SB07801	S243436A*7	SO	27	P	27	J	ug/kg	2C
PEST	SW8081	p,p'-DDD	CNC110	003SB07801DL	S243436A*7*DL	SO	20	DJP	20	R	ug/kg	DL
PEST	SW8081	p,p'-DDD	CNC110	003SB07802	S243436A*8	SO	0.51	JP	0.51	J	ug/kg	2C
PEST	SW8081	p,p'-DDD	CNC115	003SB09101DL	S244137*11*DL	SO	68	U	68	R	ug/kg	DL
PEST	SW8081	p,p'-DDD	CNC115	003SB08601DL	S244137*2*DL	SO	670	D	670	R	ug/kg	DL
PEST	SW8081	p,p'-DDD	CNC115	003SB08801	S244137*4	SO	3.4	JP	3.4	J	ug/kg	2C
PEST	SW8081	p,p'-DDD	CNC115	003SB09001DL	S244137*8*DL	SO	120	DJ	120	R	ug/kg	DL
PEST	SW8081	p,p'-DDD	CNC133	003SB09301	S245320*1	SO	0.64	JP	0.64	R	ug/kg	RE
PEST	SW8081	p,p'-DDD	CNC133	003SB09301RE	S245320*1*RE	SO	2.2	J	2.2	J	ug/kg	CC
PEST	SW8081	p,p'-DDD	CNC133	003SB09501	S245320*4	SO	14	JP	14	R	ug/kg	RE
PEST	SW8081	p,p'-DDD	CNC133	003SB09501RE	S245320*4*RE	SO	40	P	40	J	ug/kg	HT,2C
PEST	SW8081	p,p'-DDD	CNC133	003SB09503	S245320*5	SO	0.74	JP	0.74	R	ug/kg	RE
PEST	SW8081	p,p'-DDD	CNC133	003SB09503RE	S245320*5*RE	SO	1.1	JP	1.1	J	ug/kg	HT,2C,CC
PEST	SW8081	p,p'-DDD	CNC133	003CB09503	S245320*6	SO	0.95	JP	0.95	R	ug/kg	RE
PEST	SW8081	p,p'-DDD	CNC133	003CB09503RE	S245320*6*RE	SO	1.3	JP	1.3	J	ug/kg	HT,2C,CC
PEST	SW8081	p,p'-DDD	CNC133	003SB09701	S245320*8	SO	58	=	58	J	ug/kg	CC
PEST	SW8081	p,p'-DDE	CNC54	003SB02602	S117739*10	SO	0.51	JP	0.51	J	ug/kg	CC, 2C
PEST	SW8081	p,p'-DDE	CNC54	003SB02801	S117739*13	SO	3400	=	3400	J	ug/kg	CC
PEST	SW8081	p,p'-DDE	CNC54	003SB02801DL	S117739*13*DL	SO	2500	DJP	2500	R	ug/kg	DL
PEST	SW8081	p,p'-DDE	CNC54	003SB02802DL	S117739*14*DL	SO	5.1	DJ	5.1	R	ug/kg	DL
PEST	SW8081	p,p'-DDE	CNC54	003SB03002DL	S117739*19*DL	SO	4.8	DJ	4.8	R	ug/kg	DL
PEST	SW8081	p,p'-DDE	CNC54	003SB02301	S117739*3	SO	600	=	600	J	ug/kg	IS
PEST	SW8081	p,p'-DDE	CNC54	003SB02401	S117739*5	SO	74	E	74	R	ug/kg	LR
PEST	SW8081	p,p'-DDE	CNC54	003SB02601	S117739*9	SO	2800	U	2800	UJ	ug/kg	CC
PEST	SW8081	p,p'-DDE	CNC55	003SB03102	S117739A*1	SO	7.2	=	7.2	J	ug/kg	CC
PEST	SW8081	p,p'-DDE	CNC55	003SB03601	S117739A*10	SO	8.7	=	8.7	J	ug/kg	CC, SS
PEST	SW8081	p,p'-DDE	CNC55	003CB02101	S117739A*13	SO	56	=	56	J	ug/kg	CC, SS
PEST	SW8081	p,p'-DDE	CNC55	003SB03201	S117739A*2	SO	190	=	190	J	ug/kg	CC
PEST	SW8081	p,p'-DDE	CNC55	003SB03302	S117739A*5	SO	12	=	12	J	ug/kg	CC
PEST	SW8081	p,p'-DDE	CNC55	003SB03401	S117739A*6	SO	3600	E	3600	R	ug/kg	LR
PEST	SW8081	p,p'-DDE	CNC55	003SB03402DL	S117739A*7*DL	SO	290	U	290	R	ug/kg	DL
PEST	SW8081	p,p'-DDE	CNC55	003SB03501DL	S117739A*8*DL	SO	1100	U	1100	R	ug/kg	DL
PEST	SW8081	p,p'-DDE	CNC55	003SB03[illegible]02	S117739A*9	SO	40	J	40	J	ug/[illegible]	IS

Parameter Class	Analytical Method	Analyte	Sites	Sample ID	Lab Sample ID	Matrix	Lab Result	Lab Qual	Final Result	Final Qual	Units	Reasons
PEST	SW8081	p,p'-DDE	CNC62	003SB03902	S240294*2	SO	13	=	13	J	ug/kg	MD
PEST	SW8081	p,p'-DDE	CNC82	003SB04601	S242223*10	SO	11	=	11	J	ug/kg	IS
PEST	SW8081	p,p'-DDE	CNC82	003SB04701	S242223*11	SO	120	=	120	J	ug/kg	IS
PEST	SW8081	p,p'-DDE	CNC82	003SB04902	S242223*15	SO	1.2	J	1.2	J	ug/kg	SS
PEST	SW8081	p,p'-DDE	CNC82	003SB03702	S242223*2	SO	3	U	3	UJ	ug/kg	SS
PEST	SW8081	p,p'-DDE	CNC83	003SB05301	S242223A*1	SO	1.9	JP	1.9	J	ug/kg	2C
PEST	SW8081	p,p'-DDE	CNC83	003SB05801	S242223A*10	SO	170	=	170	J	ug/kg	CC
PEST	SW8081	p,p'-DDE	CNC84	003EB037M1RE	S242223B*6*RE	WG	0.08	U	0.08	R	ug/l	RE
PEST	SW8081	p,p'-DDE	CNC109	003SB06801DL	S243436*1*DL	SO	340	D	340	R	ug/kg	DL
PEST	SW8081	p,p'-DDE	CNC109	003SB07103	S243436*10	SO	12	P	12	J	ug/kg	2C
PEST	SW8081	p,p'-DDE	CNC109	003SB07103DL	S243436*10*DL	SO	11	D	11	R	ug/kg	DL
PEST	SW8081	p,p'-DDE	CNC109	003SB07201	S243436*11	SO	390	EP	390	R	ug/kg	LR
PEST	SW8081	p,p'-DDE	CNC109	003SB07201DL	S243436*11*DL	SO	450	DJ	450	J	ug/kg	DL
PEST	SW8081	p,p'-DDE	CNC109	003SB07203DL	S243436*12*DL	SO	200	D	200	R	ug/kg	DL
PEST	SW8081	p,p'-DDE	CNC109	003SB07301	S243436*13	SO	1600	E	1600	R	ug/kg	LR
PEST	SW8081	p,p'-DDE	CNC109	003SB07303	S243436*14	SO	1900	E	1900	R	ug/kg	LR
PEST	SW8081	p,p'-DDE	CNC109	003SB07303DL	S243436*14*DL	SO	1700	DJ	1700	J	ug/kg	DL
PEST	SW8081	p,p'-DDE	CNC109	003CB07303	S243436*15	SO	3700	E	3700	R	ug/kg	LR
PEST	SW8081	p,p'-DDE	CNC109	003SB07501	S243436*18	SO	73	P	73	J	ug/kg	2C
PEST	SW8081	p,p'-DDE	CNC109	003SB07501DL	S243436*18*DL	SO	75	DJ	75	R	ug/kg	DL
PEST	SW8081	p,p'-DDE	CNC109	003SB08403DL	S243436*19*DL	SO	7.2	D	7.2	R	ug/kg	DL
PEST	SW8081	p,p'-DDE	CNC109	003SB07001DL	S243436*6*DL	SO	52	D	52	R	ug/kg	DL
PEST	SW8081	p,p'-DDE	CNC109	003SB07101DL	S243436*9*DL	SO	93	D	93	R	ug/kg	DL
PEST	SW8081	p,p'-DDE	CNC110	003SB07901	S243436A*11	SO	1300	EP	1300	R	ug/kg	LR
PEST	SW8081	p,p'-DDE	CNC110	003SB07903	S243436A*12	SO	73	P	73	J	ug/kg	2C
PEST	SW8081	p,p'-DDE	CNC110	003SB07903DL	S243436A*12*DL	SO	69	DJ	69	R	ug/kg	DL
PEST	SW8081	p,p'-DDE	CNC110	003SB08003	S243436A*14	SO	31	=	31	J	ug/kg	2C
PEST	SW8081	p,p'-DDE	CNC110	003SB08103DL	S243436A*16*DL	SO	55	DJ	55	R	ug/kg	DL
PEST	SW8081	p,p'-DDE	CNC110	003SB08203	S243436A*17	SO	3200	=	3200	J	ug/kg	CC
PEST	SW8081	p,p'-DDE	CNC110	003SB08203DL	S243436A*17*DL	SO	2300	D	2300	R	ug/kg	DL
PEST	SW8081	p,p'-DDE	CNC110	003SB07601DL	S243436A*2*DL	SO	120	D	120	R	ug/kg	DL
PEST	SW8081	p,p'-DDE	CNC110	003SB07701DL	S243436A*4*DL	SO	600	D	600	R	ug/kg	DL
PEST	SW8081	p,p'-DDE	CNC110	003SB07801DL	S243436A*7*DL	SO	170	D	170	R	ug/kg	DL
PEST	SW8081	p,p'-DDE	CNC115	003SB09101DL	S244137*11*DL	SO	540	D	540	R	ug/kg	DL
PEST	SW8081	p,p'-DDE	CNC115	003SB09202	S244137*13	SO	1.6	JP	1.6	J	ug/kg	2C

Attachment 1 - Changed Qualifiers and Results
Zone G, SWMU 3, Soils - Data Validation

Parameter Class	Analytical Method	Parameter	SDG	Sample ID	Lab Sample ID	Matrix	Lab Result	Lab Qual	Final Result	Final Qual	Units	Reasons
PEST	SW8081	p,p'-DDE	CNC115	003SB08601DL	S244137*2*DL	SO	380	D	380	R	ug/kg	DL
PEST	SW8081	p,p'-DDE	CNC115	003SB09001	S244137*8	SO	1200	E	1200	R	ug/kg	LR
PEST	SW8081	p,p'-DDE	CNC133	003SB09301	S245320*1	SO	18	=	18	R	ug/kg	RE
PEST	SW8081	p,p'-DDE	CNC133	003SB09301RE	S245320*1*RE	SO	34	=	34	J	ug/kg	HT
PEST	SW8081	p,p'-DDE	CNC133	003SB09401	S245320*2	SO	940	=	940	J	ug/kg	BS
PEST	SW8081	p,p'-DDE	CNC133	003SB09403	S245320*3	SO	760	=	760	J	ug/kg	BS
PEST	SW8081	p,p'-DDE	CNC133	003SB09501	S245320*4	SO	51	P	51	R	ug/kg	RE
PEST	SW8081	p,p'-DDE	CNC133	003SB09501RE	S245320*4*RE	SO	150	=	150	J	ug/kg	HT
PEST	SW8081	p,p'-DDE	CNC133	003SB09503	S245320*5	SO	1.8	J	1.8	R	ug/kg	RE
PEST	SW8081	p,p'-DDE	CNC133	003SB09503RE	S245320*5*RE	SO	2.6	J	2.6	J	ug/kg	HT
PEST	SW8081	p,p'-DDE	CNC133	003CB09503	S245320*6	SO	2.2	J	2.2	R	ug/kg	RE
PEST	SW8081	p,p'-DDE	CNC133	003CB09503RE	S245320*6*RE	SO	3.3	=	3.3	J	ug/kg	HT
PEST	SW8081	p,p'-DDE	CNC133	003SB09601	S245320*7	SO	64	=	64	J	ug/kg	BS
PEST	SW8081	p,p'-DDE	CNC133	003SB09701	S245320*8	SO	370	=	370	J	ug/kg	CC,BS
PEST	SW8081	p,p'-DDT	CNC54	003SB02801	S117739*13	SO	93000	E	93000	R	ug/kg	LR
PEST	SW8081	p,p'-DDT	CNC54	003SB02802	S117739*14	SO	98	E	98	R	ug/kg	LR
PEST	SW8081	p,p'-DDT	CNC54	003SB03002	S117739*19	SO	160	E	160	R	ug/kg	LR
PEST	SW8081	p,p'-DDT	CNC54	003SB02301	S117739*3	SO	260	P	260	J	ug/kg	2C, IS
PEST	SW8081	p,p'-DDT	CNC54	003SB02401DL	S117739*5*DL	SO	28	D	28	R	ug/kg	DL
PEST	SW8081	p,p'-DDT	CNC54	003SB02502	S117739*8	SO	0.58	JP	0.58	J	ug/kg	2C
PEST	SW8081	p,p'-DDT	CNC55	003SB03601	S117739A*10	SO	9.3	=	9.3	J	ug/kg	SS
PEST	SW8081	p,p'-DDT	CNC55	003SB03602	S117739A*11	SO	76	=	76	J	ug/kg	CC
PEST	SW8081	p,p'-DDT	CNC55	003SB02101	S117739A*12	SO	37	=	37	J	ug/kg	CC
PEST	SW8081	p,p'-DDT	CNC55	003CB02101	S117739A*13	SO	27	=	27	J	ug/kg	SS
PEST	SW8081	p,p'-DDT	CNC55	003SB03201	S117739A*2	SO	1300	=	1300	J	ug/kg	CC
PEST	SW8081	p,p'-DDT	CNC55	003SB03202	S117739A*3	SO	200	=	200	J	ug/kg	CC
PEST	SW8081	p,p'-DDT	CNC55	003SB03301	S117739A*4	SO	2400	=	2400	J	ug/kg	CC
PEST	SW8081	p,p'-DDT	CNC55	003SB03401	S117739A*6	SO	30000	EP	30000	R	ug/kg	LR
PEST	SW8081	p,p'-DDT	CNC55	003SB03401DL	S117739A*6*DL	SO	36000	D	36000	J	ug/kg	CC
PEST	SW8081	p,p'-DDT	CNC55	003SB03402	S117739A*7	SO	3500	E	3500	R	ug/kg	LR
PEST	SW8081	p,p'-DDT	CNC55	003SB03501	S117739A*8	SO	17000	E	17000	R	ug/kg	LR
PEST	SW8081	p,p'-DDT	CNC55	003SB03502	S117739A*9	SO	3300	=	3300	J	ug/kg	CC, IS
PEST	SW8081	p,p'-DDT	CNC62	003CB04102	S240294*7	SO	1	JP	1	J	ug/kg	2C
PEST	SW8081	p,p'-DDT	CNC82	003SB04601	S242223*10	SO	16	=	16	J	ug/kg	IS
PEST	SW8081	p,p'-DDT	CNC82	003SB04701	S242223*11	SO	680	P	680	J	ug/kg	2C, IS

Parameter Class	Analytical Method	Parameter	SDG	Sample ID	Lab Sample ID	Matrix	Lab Result	Lab Qual	Final Result	Final Qual	Units	Reasons
PEST	SW8081	p,p'-DDT	CNC82	003SB04902	S242223*15	SO	0.75	J	0.75	J	ug/kg	SS
PEST	SW8081	p,p'-DDT	CNC82	003CB05202	S242223*19	SO	3200	=	3200	J	ug/kg	CC
PEST	SW8081	p,p'-DDT	CNC82	003SB03702	S242223*2	SO	3	U	3	UJ	ug/kg	SS
PEST	SW8081	p,p'-DDT	CNC83	003SB05901	S242223A*11	SO	6.5	=	6.5	J	ug/kg	CC
PEST	SW8081	p,p'-DDT	CNC83	003SB06003	S242223A*13	SO	53000	=	53000	J	ug/kg	CC
PEST	SW8081	p,p'-DDT	CNC83	003SB06203	S242223A*15	SO	1500	=	1500	J	ug/kg	CC
PEST	SW8081	p,p'-DDT	CNC83	003SB05402	S242223A*3	SO	1.3	JP	1.3	J	ug/kg	2C, CC
PEST	SW8081	p,p'-DDT	CNC83	003SB05501	S242223A*4	SO	64	=	64	J	ug/kg	CC
PEST	SW8081	p,p'-DDT	CNC83	003SB05601	S242223A*6	SO	10000	=	10000	J	ug/kg	CC
PEST	SW8081	p,p'-DDT	CNC83	003SB05602	S242223A*7	SO	250	=	250	J	ug/kg	CC
PEST	SW8081	p,p'-DDT	CNC83	003SB05701	S242223A*8	SO	510	=	510	J	ug/kg	CC
PEST	SW8081	p,p'-DDT	CNC83	003SB05702	S242223A*9	SO	3.5	=	3.5	J	ug/kg	CC
PEST	SW8081	p,p'-DDT	CNC84	003EB037M1RE	S242223B*6*RE	WG	0.08	U	0.08	R	ug/l	RE
PEST	SW8081	p,p'-DDT	CNC109	003SB06801	S243436*1	SO	360	E	360	R	ug/kg	LR
PEST	SW8081	p,p'-DDT	CNC109	003SB06801DL	S243436*1*DL	SO	360	D	360	J	ug/kg	CC
PEST	SW8081	p,p'-DDT	CNC109	003SB07103	S243436*10	SO	150	EP	150	R	ug/kg	LR
PEST	SW8081	p,p'-DDT	CNC109	003SB07103DL	S243436*10*DL	SO	110	D	110	J	ug/kg	CC
PEST	SW8081	p,p'-DDT	CNC109	003SB07201	S243436*11	SO	7300	EP	7300	R	ug/kg	LR
PEST	SW8081	p,p'-DDT	CNC109	003SB07201DL	S243436*11*DL	SO	7300	D	7300	J	ug/kg	CC
PEST	SW8081	p,p'-DDT	CNC109	003SB07203	S243436*12	SO	860	E	860	R	ug/kg	LR
PEST	SW8081	p,p'-DDT	CNC109	003SB07203DL	S243436*12*DL	SO	860	D	860	J	ug/kg	CC
PEST	SW8081	p,p'-DDT	CNC109	003SB07301	S243436*13	SO	11000	E	11000	R	ug/kg	LR
PEST	SW8081	p,p'-DDT	CNC109	003SB07301DL	S243436*13*DL	SO	13000	D	13000	J	ug/kg	CC
PEST	SW8081	p,p'-DDT	CNC109	003SB07303	S243436*14	SO	40000	E	40000	R	ug/kg	LR
PEST	SW8081	p,p'-DDT	CNC109	003SB07303DL	S243436*14*DL	SO	31000	D	31000	J	ug/kg	CC
PEST	SW8081	p,p'-DDT	CNC109	003CB07303	S243436*15	SO	37000	EP	37000	R	ug/kg	LR
PEST	SW8081	p,p'-DDT	CNC109	003CB07303DL	S243436*15*DL	SO	45000	D	45000	J	ug/kg	CC
PEST	SW8081	p,p'-DDT	CNC109	003SB07401	S243436*16	SO	40	=	40	J	ug/kg	CC
PEST	SW8081	p,p'-DDT	CNC109	003SB07403	S243436*17	SO	1.8	J	1.8	J	ug/kg	CC
PEST	SW8081	p,p'-DDT	CNC109	003SB07501	S243436*18	SO	4100	EP	4100	R	ug/kg	LR
PEST	SW8081	p,p'-DDT	CNC109	003SB07501DL	S243436*18*DL	SO	3100	D	3100	J	ug/kg	CC
PEST	SW8081	p,p'-DDT	CNC109	003SB08403	S243436*19	SO	85	E	85	R	ug/kg	LR
PEST	SW8081	p,p'-DDT	CNC109	003SB08403DL	S243436*19*DL	SO	71	D	71	J	ug/kg	CC
PEST	SW8081	p,p'-DDT	CNC109	003SB06803	S243436*2	SO	360	=	360	J	ug/kg	CC
PEST	SW8081	p,p'-DDT	CNC109	003SB06901	S243436*3	SO	67	=	67	J	ug/kg	CC

Attachment 1 - Changed Qualifiers and Results
Zone G, SWMU 3, Soils - Data Validation

Parameter Class	Analytical Method	Parameter	SDG	Sample ID	Lab Sample ID	Matrix	Lab Result	Lab Qual	Final Result	Final Qual	Units	Reasons
PEST	SW8081	p,p'-DDT	CNC109	003CB06901	S243436*4	SO	64	=	64	J	ug/kg	CC
PEST	SW8081	p,p'-DDT	CNC109	003SB06903	S243436*5	SO	350	=	350	J	ug/kg	CC
PEST	SW8081	p,p'-DDT	CNC109	003SB07001	S243436*6	SO	340	E	340	R	ug/kg	LR
PEST	SW8081	p,p'-DDT	CNC109	003SB07001DL	S243436*6*DL	SO	290	D	290	J	ug/kg	CC
PEST	SW8081	p,p'-DDT	CNC109	003SB07002	S243436*7	SO	23	=	23	J	ug/kg	CC
PEST	SW8081	p,p'-DDT	CNC109	003SB07003	S243436*8	SO	9.1	=	9.1	J	ug/kg	CC
PEST	SW8081	p,p'-DDT	CNC109	003SB07101	S243436*9	SO	1400	E	1400	R	ug/kg	LR
PEST	SW8081	p,p'-DDT	CNC109	003SB07101DL	S243436*9*DL	SO	1100	D	1100	J	ug/kg	CC
PEST	SW8081	p,p'-DDT	CNC110	003SB07901	S243436A*11	SO	1400	E	1400	R	ug/kg	LR
PEST	SW8081	p,p'-DDT	CNC110	003SB07903DL	S243436A*12*DL	SO	130	D	130	R	ug/kg	DL
PEST	SW8081	p,p'-DDT	CNC110	003SB08003	S243436A*14	SO	26	=	26	J	ug/kg	CC
PEST	SW8081	p,p'-DDT	CNC110	003SB08101	S243436A*15	SO	100	=	100	J	ug/kg	CC
PEST	SW8081	p,p'-DDT	CNC110	003SB08103	S243436A*16	SO	510	E	510	R	ug/kg	LR
PEST	SW8081	p,p'-DDT	CNC110	003SB08203	S243436A*17	SO	23000	E	23000	R	ug/kg	LR
PEST	SW8081	p,p'-DDT	CNC110	003SB08203DL	S243436A*17*DL	SO	23000	D	23000	J	ug/kg	CC
PEST	SW8081	p,p'-DDT	CNC110	003SB07601DL	S243436A*2*DL	SO	640	D	640	R	ug/kg	DL
PEST	SW8081	p,p'-DDT	CNC110	003SB07701	S243436A*4	SO	1000	E	1000	R	ug/kg	LR
PEST	SW8081	p,p'-DDT	CNC110	003SB07801	S243436A*7	SO	700	E	700	R	ug/kg	LR
PEST	SW8081	p,p'-DDT	CNC115	003CB09003	S244137*10	SO	13	P	13	J	ug/kg	2C
PEST	SW8081	p,p'-DDT	CNC115	003SB09101DL	S244137*11*DL	SO	450	D	450	R	ug/kg	DL
PEST	SW8081	p,p'-DDT	CNC115	003SB08601	S244137*2	SO	4100	E	4100	R	ug/kg	LR
PEST	SW8081	p,p'-DDT	CNC115	003SB09001DL	S244137*8*DL	SO	380	D	380	R	ug/kg	DL
PEST	SW8081	p,p'-DDT	CNC133	003SB09301	S245320*1	SO	15	=	15	R	ug/kg	RE
PEST	SW8081	p,p'-DDT	CNC133	003SB09301RE	S245320*1*RE	SO	24	=	24	J	ug/kg	HT,CC
PEST	SW8081	p,p'-DDT	CNC133	003SB09501	S245320*4	SO	330	=	330	R	ug/kg	RE
PEST	SW8081	p,p'-DDT	CNC133	003SB09501RE	S245320*4*RE	SO	620	=	620	J	ug/kg	HT,CC
PEST	SW8081	p,p'-DDT	CNC133	003SB09503	S245320*5	SO	16	=	16	R	ug/kg	RE
PEST	SW8081	p,p'-DDT	CNC133	003SB09503RE	S245320*5*RE	SO	28	=	28	J	ug/kg	HT
PEST	SW8081	p,p'-DDT	CNC133	003CB09503	S245320*6	SO	21	=	21	R	ug/kg	RE
PEST	SW8081	p,p'-DDT	CNC133	003CB09503RE	S245320*6*RE	SO	37	=	37	J	ug/kg	HT
PEST	SW8081	TOXAPHENE	CNC54	003SB02801DL	S117739*13*DL	SO	180000	U	180000	R	ug/kg	DL
PEST	SW8081	TOXAPHENE	CNC54	003SB02802DL	S117739*14*DL	SO	190	U	190	R	ug/kg	DL
PEST	SW8081	TOXAPHENE	CNC54	003SB03002DL	S117739*19*DL	SO	480	U	480	R	ug/kg	DL
PEST	SW8081	TOXAPHENE	CNC54	003SB02401DL	S117739*5*DL	SO	180	U	180	R	ug/kg	DL
PEST	SW8081	TOXAPHENE	CNC55	003SB03[illegible]	S117739A*10	SO	91	U	91	UJ	ug/k[illegible]	[illegible]S

Parameter Class	Analytical Method	Analyte	SDG	Sample ID	Lab Sample ID	Matrix	Lab Result	Lab Qual	Final Result	Final Qual	Units	Reasons
PEST	SW8081	TOXAPHENE	CNC55	003CB02101	S117739A*13	SO	95	U	95	UJ	ug/kg	SS
PEST	SW8081	TOXAPHENE	CNC55	003SB03401DL	S117739A*6*DL	SO	88000	U	88000	R	ug/kg	DL
PEST	SW8081	TOXAPHENE	CNC55	003SB03402DL	S117739A*7*DL	SO	9800	U	9800	R	ug/kg	DL
PEST	SW8081	TOXAPHENE	CNC55	003SB03501DL	S117739A*8*DL	SO	35000	U	35000	R	ug/kg	DL
PEST	SW8081	TOXAPHENE	CNC82	003SB04902	S242223*15	SO	100	U	100	UJ	ug/kg	SS
PEST	SW8081	TOXAPHENE	CNC82	003SB03702	S242223*2	SO	99	U	99	UJ	ug/kg	SS
PEST	SW8081	TOXAPHENE	CNC84	003EB037M1RE	S242223B*6*RE	WG	2.5	U	2.5	R	ug/l	RE
PEST	SW8081	TOXAPHENE	CNC109	003SB06801DL	S243436*1*DL	SO	920	U	920	R	ug/kg	DL
PEST	SW8081	TOXAPHENE	CNC109	003SB07103DL	S243436*10*DL	SO	350	U	350	R	ug/kg	DL
PEST	SW8081	TOXAPHENE	CNC109	003SB07201DL	S243436*11*DL	SO	18000	U	18000	R	ug/kg	DL
PEST	SW8081	TOXAPHENE	CNC109	003SB07203DL	S243436*12*DL	SO	1800	U	1800	R	ug/kg	DL
PEST	SW8081	TOXAPHENE	CNC109	003SB07301DL	S243436*13*DL	SO	17000	U	17000	R	ug/kg	DL
PEST	SW8081	TOXAPHENE	CNC109	003SB07303DL	S243436*14*DL	SO	90000	U	90000	R	ug/kg	DL
PEST	SW8081	TOXAPHENE	CNC109	003CB07303DL	S243436*15*DL	SO	89000	U	89000	R	ug/kg	DL
PEST	SW8081	TOXAPHENE	CNC109	003SB07501DL	S243436*18*DL	SO	8700	U	8700	R	ug/kg	DL
PEST	SW8081	TOXAPHENE	CNC109	003SB08403DL	S243436*19*DL	SO	190	U	190	R	ug/kg	DL
PEST	SW8081	TOXAPHENE	CNC109	003SB07001DL	S243436*6*DL	SO	950	U	950	R	ug/kg	DL
PEST	SW8081	TOXAPHENE	CNC109	003SB07101DL	S243436*9*DL	SO	2200	U	2200	R	ug/kg	DL
PEST	SW8081	TOXAPHENE	CNC110	003SB07901DL	S243436A*11*DL	SO	4500	U	4500	R	ug/kg	DL
PEST	SW8081	TOXAPHENE	CNC110	003SB07903DL	S243436A*12*DL	SO	3900	U	3900	R	ug/kg	DL
PEST	SW8081	TOXAPHENE	CNC110	003SB08103DL	S243436A*16*DL	SO	4600	U	4600	R	ug/kg	DL
PEST	SW8081	TOXAPHENE	CNC110	003SB08203DL	S243436A*17*DL	SO	48000	U	48000	R	ug/kg	DL
PEST	SW8081	TOXAPHENE	CNC110	003SB07601DL	S243436A*2*DL	SO	1700	U	1700	R	ug/kg	DL
PEST	SW8081	TOXAPHENE	CNC110	003SB07701DL	S243436A*4*DL	SO	1900	U	1900	R	ug/kg	DL
PEST	SW8081	TOXAPHENE	CNC110	003SB07801DL	S243436A*7*DL	SO	1800	U	1800	R	ug/kg	DL
PEST	SW8081	TOXAPHENE	CNC115	003SB09101DL	S244137*11*DL	SO	2200	U	2200	R	ug/kg	DL
PEST	SW8081	TOXAPHENE	CNC115	003SB08601DL	S244137*2*DL	SO	8700	U	8700	R	ug/kg	DL
PEST	SW8081	TOXAPHENE	CNC115	003SB09001DL	S244137*8*DL	SO	4800	U	4800	R	ug/kg	DL
PEST	SW8081	TOXAPHENE	CNC133	003SB09301	S245320*1	SO	99	U	99	R	ug/kg	RE
PEST	SW8081	TOXAPHENE	CNC133	003SB09301RE	S245320*1*RE	SO	200	U	200	UJ	ug/kg	HT
PEST	SW8081	TOXAPHENE	CNC133	003SB09501	S245320*4	SO	470	U	470	R	ug/kg	RE
PEST	SW8081	TOXAPHENE	CNC133	003SB09501RE	S245320*4*RE	SO	930	U	930	UJ	ug/kg	HT
PEST	SW8081	TOXAPHENE	CNC133	003SB09503	S245320*5	SO	99	U	99	R	ug/kg	RE
PEST	SW8081	TOXAPHENE	CNC133	003SB09503RE	S245320*5*RE	SO	99	U	99	UJ	ug/kg	HT
PEST	SW8081	TOXAPHENE	CNC133	003CB09503	S245320*6	SO	93	U	93	R	ug/kg	RE

Attachment 1 - Changed Qualifiers and Results
Zone G, SWMU 3, Soils - Data Validation

Parameter Class	Analytical Method	Parameter	SDG	Sample ID	Lab Sample ID	Matrix	Lab Result	Lab Qual	Final Result	Final Qual	Units	Reasons
PEST	SW8081	TOXAPHENE	CNC133	003CB09503RE	S245320*6*RE	SO	93	U	93	UJ	ug/kg	HT
VOA	SW8260	1,1,1-TRICHLOROETHANE	CNC54	003SB02401DL	S117739*5*DL	SO	210	U	210	R	ug/kg	DL
VOA	SW8260	1,1,2,2-TETRACHLOROETHANE	CNC54	003SB02401DL	S117739*5*DL	SO	210	U	210	R	ug/kg	DL
VOA	SW8260	1,1,2-TRICHLOROETHANE	CNC54	003SB02401DL	S117739*5*DL	SO	210	U	210	R	ug/kg	DL
VOA	SW8260	1,1-DICHLOROETHANE	CNC54	003SB02401DL	S117739*5*DL	SO	210	U	210	R	ug/kg	DL
VOA	SW8260	1,1-DICHLOROETHENE	CNC54	003SB02401DL	S117739*5*DL	SO	210	U	210	R	ug/kg	DL
VOA	SW8260	1,2,3-Trichlorobenzene	CNC81	003SB05202	S242159*1	SO	5.7	U	5.7	UJ	ug/kg	IC
VOA	SW8260	1,2,3-Trichlorobenzene	CNC81	003CB05202	S242159*2	SO	5.3	U	5.3	UJ	ug/kg	IC
VOA	SW8260	1,2,3-Trichlorobenzene	CNC81	003SB05502	S242159*4	SO	6.2	U	6.2	UJ	ug/kg	IC
VOA	SW8260	1,2,3-Trichlorobenzene	CNC81	003SB05602	S242159*5	SO	6	U	6	UJ	ug/kg	IC, CC
VOA	SW8260	1,2,3-Trichlorobenzene	CNC81	003SB05702	S242159*6	SO	6.4	U	6.4	UJ	ug/kg	IC
VOA	SW8260	1,2,3-Trichlorobenzene	CNC81	003SB05802	S242159*7	SO	6	U	6	UJ	ug/kg	IC
VOA	SW8260	1,2,3-Trichlorobenzene	CNC84	003SB05001	S242223B*1	SO	5.7	U	5.7	UJ	ug/kg	IC
VOA	SW8260	1,2,3-Trichlorobenzene	CNC84	003SB05102	S242223B*2	SO	5.2	U	5.2	UJ	ug/kg	IC
VOA	SW8260	1,2,3-Trichlorobenzene	CNC84	003SB05302	S242223B*3	SO	5.3	U	5.3	UJ	ug/kg	IC
VOA	SW8260	1,2,4-TRICHLOROBENZENE	CNC81	003SB05402	S242159*3	SO	6.3	U	6.3	UJ	ug/kg	IC
VOA	SW8260	1,2-DICHLOROETHANE	CNC54	003SB02401DL	S117739*5*DL	SO	210	U	210	R	ug/kg	DL
VOA	SW8260	1,2-Dichloroethene (total)	CNC54	003SB02401DL	S117739*5*DL	SO	210	U	210	R	ug/kg	DL
VOA	SW8260	1,2-DICHLOROPROPANE	CNC54	003SB02401DL	S117739*5*DL	SO	210	U	210	R	ug/kg	DL
VOA	SW8260	2-Chloroethyl vinyl ether	CNC54	003SB02201	S117739*1	SO	10	UJ	10	UJ	ug/kg	IC
VOA	SW8260	2-Chloroethyl vinyl ether	CNC54	003SB02602	S117739*10	SO	10	UJ	10	UJ	ug/kg	IC
VOA	SW8260	2-Chloroethyl vinyl ether	CNC54	003SB02701	S117739*11	SO	12	UJ	12	UJ	ug/kg	IC
VOA	SW8260	2-Chloroethyl vinyl ether	CNC54	003SB02702	S117739*12	SO	9.2	UJ	9.2	UJ	ug/kg	IC
VOA	SW8260	2-Chloroethyl vinyl ether	CNC54	003SB02801	S117739*13	SO	12	UJ	12	UJ	ug/kg	IC
VOA	SW8260	2-Chloroethyl vinyl ether	CNC54	003SB02802	S117739*14	SO	9.5	UJ	9.5	UJ	ug/kg	MS, IC
VOA	SW8260	2-Chloroethyl vinyl ether	CNC54	003SB02901	S117739*15	SO	10	UJ	10	UJ	ug/kg	IC
VOA	SW8260	2-Chloroethyl vinyl ether	CNC54	003SB02902	S117739*16	SO	10	UJ	10	UJ	ug/kg	IC
VOA	SW8260	2-Chloroethyl vinyl ether	CNC54	003CB02902	S117739*17	SO	10	UJ	10	UJ	ug/kg	IC
VOA	SW8260	2-Chloroethyl vinyl ether	CNC54	003SB03001	S117739*18	SO	11	UJ	11	UJ	ug/kg	IC
VOA	SW8260	2-Chloroethyl vinyl ether	CNC54	003SB03002	S117739*19	SO	9.4	UJ	9.4	UJ	ug/kg	IC
VOA	SW8260	2-Chloroethyl vinyl ether	CNC54	003SB02202	S117739*2	SO	10	UJ	10	UJ	ug/kg	IC
VOA	SW8260	2-Chloroethyl vinyl ether	CNC54	003SB03101	S117739*20	SO	10	UJ	10	UJ	ug/kg	IC
VOA	SW8260	2-Chloroethyl vinyl ether	CNC54	003SB02301	S117739*3	SO	10	UJ	10	UJ	ug/kg	IC
VOA	SW8260	2-Chloroethyl vinyl ether	CNC54	003SB02302	S117739*4	SO	9.6	UJ	9.6	UJ	ug/kg	IC
VOA	SW8260	2-Chloroethyl vinyl ether	CNC54	003SB02401	S117739*5	SO	10	UJ	10	UJ	ug/kg	IC

Parameter Class	Analytical Method	Analyte	Node	Sample ID	Lab sample ID	Matrix	Lab Result	Lab Qual	Final Result	Final Qual	Units	Reasons
VOA	SW8260	2-Chloroethyl vinyl ether	CNC54	003SB02401DL	S117739*5*DL	SO	2100	UJ	2100	R	ug/kg	DL
VOA	SW8260	2-Chloroethyl vinyl ether	CNC54	003SB02402	S117739*6	SO	9.4	UJ	9.4	UJ	ug/kg	IC
VOA	SW8260	2-Chloroethyl vinyl ether	CNC54	003SB02501	S117739*7	SO	9.7	UJ	9.7	UJ	ug/kg	IC
VOA	SW8260	2-Chloroethyl vinyl ether	CNC54	003SB02502	S117739*8	SO	9.1	UJ	9.1	UJ	ug/kg	IC
VOA	SW8260	2-Chloroethyl vinyl ether	CNC54	003SB02601	S117739*9	SO	9.5	UJ	9.5	UJ	ug/kg	IC
VOA	SW8260	2-Chloroethyl vinyl ether	CNC55	003SB03102	S117739A*1	SO	6.6	UJ	6.6	R	ug/kg	IC, CC, BS
VOA	SW8260	2-Chloroethyl vinyl ether	CNC55	003SB03601	S117739A*10	SO	9.5	UJ	9.5	R	ug/kg	IC, CC, BS
VOA	SW8260	2-Chloroethyl vinyl ether	CNC55	003SB03602	S117739A*11	SO	9.3	UJ	9.3	R	ug/kg	IC, CC, BS
VOA	SW8260	2-Chloroethyl vinyl ether	CNC55	003SB02101	S117739A*12	SO	9.7	UJ	9.7	R	ug/kg	IC, CC, BS
VOA	SW8260	2-Chloroethyl vinyl ether	CNC55	003CB02101	S117739A*13	SO	9.4	UJ	9.4	R	ug/kg	IC, CC, BS
VOA	SW8260	2-Chloroethyl vinyl ether	CNC55	003SB02102	S117739A*14	SO	9	UJ	9	R	ug/kg	IC, CC, BS
VOA	SW8260	2-Chloroethyl vinyl ether	CNC55	003SB03201	S117739A*2	SO	10	UJ	10	R	ug/kg	IC, CC, BS
VOA	SW8260	2-Chloroethyl vinyl ether	CNC55	003SB03202	S117739A*3	SO	10	UJ	10	R	ug/kg	IC, CC, BS
VOA	SW8260	2-Chloroethyl vinyl ether	CNC55	003SB03301	S117739A*4	SO	10	UJ	10	R	ug/kg	IC, CC, BS
VOA	SW8260	2-Chloroethyl vinyl ether	CNC55	003SB03302	S117739A*5	SO	9.8	UJ	9.8	R	ug/kg	IC, CC, BS
VOA	SW8260	2-Chloroethyl vinyl ether	CNC55	003SB03401	S117739A*6	SO	10	UJ	10	R	ug/kg	IC, CC, BS
VOA	SW8260	2-Chloroethyl vinyl ether	CNC55	003SB03402	S117739A*7	SO	11	UJ	11	R	ug/kg	IC, CC, BS
VOA	SW8260	2-Chloroethyl vinyl ether	CNC55	003SB03501	S117739A*8	SO	10	UJ	10	R	ug/kg	IC, CC, BS
VOA	SW8260	2-Chloroethyl vinyl ether	CNC55	003SB03502	S117739A*9	SO	9.8	UJ	9.8	R	ug/kg	IC, CC, BS
VOA	SW8260	2-Chloroethyl vinyl ether	CNC62	003SB03901	S240294*1	SO	11	U	11	UJ	ug/kg	IC, CC
VOA	SW8260	2-Chloroethyl vinyl ether	CNC62	003SB03902	S240294*2	SO	10	U	10	UJ	ug/kg	IC, CC
VOA	SW8260	2-Chloroethyl vinyl ether	CNC62	003SB04001	S240294*3	SO	11	U	11	UJ	ug/kg	IC, CC
VOA	SW8260	2-Chloroethyl vinyl ether	CNC62	003SB04002	S240294*4	SO	10	U	10	UJ	ug/kg	IC, CC
VOA	SW8260	2-Chloroethyl vinyl ether	CNC62	003SB04101	S240294*5	SO	9.6	U	9.6	UJ	ug/kg	IC, CC
VOA	SW8260	2-Chloroethyl vinyl ether	CNC62	003SB04102	S240294*6	SO	9.9	U	9.9	UJ	ug/kg	IC, CC
VOA	SW8260	2-Chloroethyl vinyl ether	CNC62	003CB04102	S240294*7	SO	11	U	11	UJ	ug/kg	IC, CC
VOA	SW8260	2-Chloroethyl vinyl ether	CNC62	003SB04201	S240294*8	SO	11	U	11	UJ	ug/kg	IC, CC
VOA	SW8260	2-Chloroethyl vinyl ether	CNC62	003SB04202	S240294*9	SO	16	U	16	UJ	ug/kg	IC, CC
VOA	SW8260	2-HEXANONE	CNC54	003SB02401DL	S117739*5*DL	SO	1100	U	1100	R	ug/kg	DL
VOA	SW8260	ACETONE	CNC54	003SB02201	S117739*1	SO	54	B	54	UJ	ug/kg	BL, IC
VOA	SW8260	ACETONE	CNC54	003SB02602	S117739*10	SO	82	B	82	J	ug/kg	BS, IC, CC
VOA	SW8260	ACETONE	CNC54	003SB02701	S117739*11	SO	57	B	57	UJ	ug/kg	BL, IC
VOA	SW8260	ACETONE	CNC54	003SB02702	S117739*12	SO	45	B	45	UJ	ug/kg	BL, IC
VOA	SW8260	ACETONE	CNC54	003SB02801	S117739*13	SO	26	B	26	UJ	ug/kg	BL, IC
VOA	SW8260	ACETONE	CNC54	003SB02802	S117739*14	SO	41	B	41	UJ	ug/kg	BL, IC

Attachment 1 - Changed Qualifiers and Results
Zone G, SWMU 3, Soils - Data Validation

Parameter Class	Analytical Method	Parameter	SDG	Sample ID	Lab Sample ID	Matrix	Lab Result	Lab Qual	Final Result	Final Qual	Units	Reasons
VOA	SW8260	ACETONE	CNC54	003SB02901	S117739*15	SO	560	=	560	J	ug/kg	BS, IC, CC
VOA	SW8260	ACETONE	CNC54	003SB02902	S117739*16	SO	50	=	50	J	ug/kg	BS, IC, CC
VOA	SW8260	ACETONE	CNC54	003CB02902	S117739*17	SO	130	B	130	J	ug/kg	BS, IC, CC
VOA	SW8260	ACETONE	CNC54	003SB03001	S117739*18	SO	1000	B	1000	J	ug/kg	BS, IC, CC
VOA	SW8260	ACETONE	CNC54	003SB03002	S117739*19	SO	110	B	110	J	ug/kg	BS, IC, CC
VOA	SW8260	ACETONE	CNC54	003SB02202	S117739*2	SO	100	B	100	J	ug/kg	BS, IC, CC
VOA	SW8260	ACETONE	CNC54	003SB03101	S117739*20	SO	310	B	310	J	ug/kg	BS, IC, CC
VOA	SW8260	ACETONE	CNC54	003SB02301	S117739*3	SO	120	B	120	J	ug/kg	IC, CC
VOA	SW8260	ACETONE	CNC54	003SB02302	S117739*4	SO	78	B	78	UJ	ug/kg	BL, IC
VOA	SW8260	ACETONE	CNC54	003SB02401	S117739*5	SO	3600	EB	3600	R	ug/kg	LR
VOA	SW8260	ACETONE	CNC54	003SB02401DL	S117739*5*DL	SO	24000	D	24000	J	ug/kg	CC, BS
VOA	SW8260	ACETONE	CNC54	003SB02402	S117739*6	SO	410	B	410	J	ug/kg	BS, IC, CC
VOA	SW8260	ACETONE	CNC54	003SB02501	S117739*7	SO	120	B	120	J	ug/kg	BS, IC, CC
VOA	SW8260	ACETONE	CNC54	003SB02502	S117739*8	SO	180	B	180	J	ug/kg	BS, IC, CC
VOA	SW8260	ACETONE	CNC54	003SB02601	S117739*9	SO	120	B	120	J	ug/kg	BS, IC, CC
VOA	SW8260	ACETONE	CNC55	003SB03102	S117739A*1	SO	41	=	41	J	ug/kg	CC
VOA	SW8260	ACETONE	CNC55	003SB03601	S117739A*10	SO	200	=	200	J	ug/kg	CC
VOA	SW8260	ACETONE	CNC55	003SB03602	S117739A*11	SO	29	=	29	J	ug/kg	CC
VOA	SW8260	ACETONE	CNC55	003SB02101	S117739A*12	SO	140	=	140	J	ug/kg	CC
VOA	SW8260	ACETONE	CNC55	003CB02101	S117739A*13	SO	9.4	U	9.4	UJ	ug/kg	CC
VOA	SW8260	ACETONE	CNC55	003SB02102	S117739A*14	SO	90	=	90	J	ug/kg	CC
VOA	SW8260	ACETONE	CNC55	003SB03201	S117739A*2	SO	10	U	10	UJ	ug/kg	CC
VOA	SW8260	ACETONE	CNC55	003SB03202	S117739A*3	SO	150	=	150	J	ug/kg	CC
VOA	SW8260	ACETONE	CNC55	003SB03301	S117739A*4	SO	10	U	10	UJ	ug/kg	CC
VOA	SW8260	ACETONE	CNC55	003SB03302	S117739A*5	SO	31	=	31	J	ug/kg	CC
VOA	SW8260	ACETONE	CNC55	003SB03401	S117739A*6	SO	280	=	280	J	ug/kg	CC
VOA	SW8260	ACETONE	CNC55	003SB03402	S117739A*7	SO	420	=	420	J	ug/kg	CC
VOA	SW8260	ACETONE	CNC55	003SB03501	S117739A*8	SO	150	=	150	J	ug/kg	CC
VOA	SW8260	ACETONE	CNC55	003SB03502	S117739A*9	SO	140	=	140	J	ug/kg	CC
VOA	SW8260	ACETONE	CNC62	003SB03901	S240294*1	SO	11	U	11	UJ	ug/kg	CC
VOA	SW8260	ACETONE	CNC62	003SB03902	S240294*2	SO	66	=	66	UJ	ug/kg	BL, CC
VOA	SW8260	ACETONE	CNC62	003SB04001	S240294*3	SO	81	=	81	UJ	ug/kg	BL, CC
VOA	SW8260	ACETONE	CNC62	003SB04002	S240294*4	SO	49	=	49	UJ	ug/kg	BL, CC
VOA	SW8260	ACETONE	CNC62	003SB04101	S240294*5	SO	28	=	28	UJ	ug/kg	BL, CC
VOA	SW8260	ACETONE	CNC62	003SB04102	S240294*6	SO	66	=	66	UJ	ug/k	BL, CC

Parameter Class	Analytical Method	Analyte	Select	Sample ID	Lab Sample ID	Matrix	Lab Result	Lab Qual	Final Result	Final Qual	Units	Reasons
VOA	SW8260	ACETONE	CNC62	003CB04102	S240294*7	SO	64	=	64	UJ	ug/kg	BL, CC
VOA	SW8260	ACETONE	CNC62	003SB04201	S240294*8	SO	42	=	42	UJ	ug/kg	BL, CC
VOA	SW8260	ACETONE	CNC62	003SB04202	S240294*9	SO	190	=	190	UJ	ug/kg	BL, CC
VOA	SW8260	ACETONE	CNC81	003SB05202	S242159*1	SO	9.6	J	11	U	ug/kg	BL
VOA	SW8260	ACETONE	CNC81	003SB05402	S242159*3	SO	7.4	J	13	U	ug/kg	BL
VOA	SW8260	ACETONE	CNC81	003SB05502	S242159*4	SO	7.5	J	12	U	ug/kg	BL
VOA	SW8260	ACETONE	CNC81	003SB05802	S242159*7	SO	8.5	J	12	U	ug/kg	BL
VOA	SW8260	ACETONE	CNC84	003SB05001	S242223B*1	SO	260	=	260	J	ug/kg	CC, BS
VOA	SW8260	ACETONE	CNC84	003SB05102	S242223B*2	SO	54	=	54	J	ug/kg	CC, BS
VOA	SW8260	ACETONE	CNC84	003SB05302	S242223B*3	SO	90	=	90	J	ug/kg	CC, BS
VOA	SW8260	BENZENE	CNC54	003SB02401DL	S117739*5*DL	SO	210	U	210	R	ug/kg	DL
VOA	SW8260	BROMODICHLOROMETHANE	CNC54	003SB02401DL	S117739*5*DL	SO	210	U	210	R	ug/kg	DL
VOA	SW8260	BROMOFORM	CNC54	003SB02401DL	S117739*5*DL	SO	210	U	210	R	ug/kg	DL
VOA	SW8260	BROMOMETHANE	CNC54	003SB02401DL	S117739*5*DL	SO	420	U	420	R	ug/kg	DL
VOA	SW8260	CARBON DISULFIDE	CNC54	003SB02201	S117739*1	SO	5.1	U	5.1	UJ	ug/kg	IC
VOA	SW8260	CARBON DISULFIDE	CNC54	003SB02602	S117739*10	SO	5.2	U	5.2	UJ	ug/kg	IC
VOA	SW8260	CARBON DISULFIDE	CNC54	003SB02701	S117739*11	SO	6.2	U	6.2	UJ	ug/kg	IC
VOA	SW8260	CARBON DISULFIDE	CNC54	003SB02702	S117739*12	SO	4.6	U	4.6	UJ	ug/kg	IC
VOA	SW8260	CARBON DISULFIDE	CNC54	003SB02801	S117739*13	SO	6.1	U	6.1	UJ	ug/kg	IC
VOA	SW8260	CARBON DISULFIDE	CNC54	003SB02802	S117739*14	SO	4.8	U	4.8	UJ	ug/kg	IC
VOA	SW8260	CARBON DISULFIDE	CNC54	003SB02901	S117739*15	SO	5.2	U	5.2	UJ	ug/kg	IC
VOA	SW8260	CARBON DISULFIDE	CNC54	003SB02902	S117739*16	SO	5	U	5	UJ	ug/kg	IC
VOA	SW8260	CARBON DISULFIDE	CNC54	003CB02902	S117739*17	SO	5.1	U	5.1	UJ	ug/kg	IC
VOA	SW8260	CARBON DISULFIDE	CNC54	003SB03001	S117739*18	SO	5.5	U	5.5	UJ	ug/kg	IC
VOA	SW8260	CARBON DISULFIDE	CNC54	003SB03002	S117739*19	SO	4.7	U	4.7	UJ	ug/kg	IC
VOA	SW8260	CARBON DISULFIDE	CNC54	003SB02202	S117739*2	SO	5.1	U	5.1	UJ	ug/kg	IC
VOA	SW8260	CARBON DISULFIDE	CNC54	003SB03101	S117739*20	SO	7.3	=	7.3	J	ug/kg	IC
VOA	SW8260	CARBON DISULFIDE	CNC54	003SB02301	S117739*3	SO	4.4	J	4.4	J	ug/kg	IC
VOA	SW8260	CARBON DISULFIDE	CNC54	003SB02302	S117739*4	SO	4.8	U	4.8	UJ	ug/kg	IC
VOA	SW8260	CARBON DISULFIDE	CNC54	003SB02401	S117739*5	SO	10	=	10	J	ug/kg	IC
VOA	SW8260	CARBON DISULFIDE	CNC54	003SB02401DL	S117739*5*DL	SO	210	U	210	R	ug/kg	DL
VOA	SW8260	CARBON DISULFIDE	CNC54	003SB02402	S117739*6	SO	4.7	U	4.7	UJ	ug/kg	IC
VOA	SW8260	CARBON DISULFIDE	CNC54	003SB02501	S117739*7	SO	4.8	U	4.8	UJ	ug/kg	IC
VOA	SW8260	CARBON DISULFIDE	CNC54	003SB02502	S117739*8	SO	4.5	U	4.5	UJ	ug/kg	IC
VOA	SW8260	CARBON DISULFIDE	CNC54	003SB02601	S117739*9	SO	4.7	U	4.7	UJ	ug/kg	IC

Attachment 1 - Changed Qualifiers and Results
Zone G, SWMU 3, Soils - Data Validation

Parameter Class	Analytical Method	Parameter	SDG	Sample ID	Lab Sample ID	Matrix	Lab Result	Lab Qual	Final Result	Final Qual	Units	Reasons
VOA	SW8260	CARBON TETRACHLORIDE	CNC54	003SB02401DL	S117739*5*DL	SO	210	U	210	R	ug/kg	DL
VOA	SW8260	CHLOROBENZENE	CNC54	003SB02401DL	S117739*5*DL	SO	210	U	210	R	ug/kg	DL
VOA	SW8260	CHLOROETHANE	CNC54	003SB02401DL	S117739*5*DL	SO	420	U	420	R	ug/kg	DL
VOA	SW8260	CHLOROFORM	CNC54	003SB02401DL	S117739*5*DL	SO	210	U	210	R	ug/kg	DL
VOA	SW8260	CHLOROMETHANE	CNC54	003SB02401DL	S117739*5*DL	SO	420	U	420	R	ug/kg	DL
VOA	SW8260	cis-1,2-DICHLOROETHYLENE	CNC54	003SB02401DL	S117739*5*DL	SO	210	U	210	R	ug/kg	DL
VOA	SW8260	cis-1,3-DICHLOROPROPENE	CNC54	003SB02401DL	S117739*5*DL	SO	210	U	210	R	ug/kg	DL
VOA	SW8260	DIBROMOCHLOROMETHANE	CNC54	003SB02401DL	S117739*5*DL	SO	210	U	210	R	ug/kg	DL
VOA	SW8260	ETHYLBENZENE	CNC54	003SB02401DL	S117739*5*DL	SO	210	U	210	R	ug/kg	DL
VOA	SW8260	m+p Xylene	CNC54	003SB02401DL	S117739*5*DL	SO	210	U	210	R	ug/kg	DL
VOA	SW8260	2-BUTANONE (MEK)	CNC54	003SB02602	S117739*10	SO	5.5	J	5.5	J	ug/kg	CC
VOA	SW8260	2-BUTANONE (MEK)	CNC54	003CB02902	S117739*17	SO	9.6	J	9.6	J	ug/kg	CC
VOA	SW8260	2-BUTANONE (MEK)	CNC54	003SB03002	S117739*19	SO	9.5	=	9.5	J	ug/kg	CC
VOA	SW8260	2-BUTANONE (MEK)	CNC54	003SB02202	S117739*2	SO	6.2	J	6.2	J	ug/kg	CC
VOA	SW8260	2-BUTANONE (MEK)	CNC54	003SB02301	S117739*3	SO	14	=	14	J	ug/kg	CC
VOA	SW8260	2-BUTANONE (MEK)	CNC54	003SB02302	S117739*4	SO	6.2	J	6.2	J	ug/kg	CC
VOA	SW8260	2-BUTANONE (MEK)	CNC54	003SB02401	S117739*5	SO	22	=	22	J	ug/kg	CC
VOA	SW8260	2-BUTANONE (MEK)	CNC54	003SB02401DL	S117739*5*DL	SO	1100	U	1100	R	ug/kg	DL
VOA	SW8260	2-BUTANONE (MEK)	CNC54	003SB02402	S117739*6	SO	5.5	J	5.5	J	ug/kg	CC
VOA	SW8260	2-BUTANONE (MEK)	CNC54	003SB02501	S117739*7	SO	10	=	10	J	ug/kg	CC
VOA	SW8260	2-BUTANONE (MEK)	CNC54	003SB02601	S117739*9	SO	7.8	J	7.8	J	ug/kg	CC
VOA	SW8260	2-BUTANONE (MEK)	CNC84	003SB05001	S242223B*1	SO	29	=	29	J	ug/kg	CC, BS
VOA	SW8260	2-BUTANONE (MEK)	CNC84	003SB05302	S242223B*3	SO	9	J	9	J	ug/kg	CC, BS
VOA	SW8260	4-METHYL-2-PENTANONE (MIBK)	CNC54	003SB02401DL	S117739*5*DL	SO	1100	U	1100	R	ug/kg	DL
VOA	SW8260	METHYLENE CHLORIDE	CNC54	003SB02802	S117739*14	SO	4.8	U	4.8	UJ	ug/kg	MD
VOA	SW8260	METHYLENE CHLORIDE	CNC54	003SB02401DL	S117739*5*DL	SO	110	DBJ	110	R	ug/kg	DL
VOA	SW8260	o-Xylene	CNC54	003SB02401DL	S117739*5*DL	SO	210	U	210	R	ug/kg	DL
VOA	SW8260	STYRENE	CNC54	003SB02401DL	S117739*5*DL	SO	210	U	210	R	ug/kg	DL
VOA	SW8260	TETRACHLOROETHYLENE(PCE)	CNC54	003SB02401DL	S117739*5*DL	SO	210	U	210	R	ug/kg	DL
VOA	SW8260	TOLUENE	CNC54	003SB02401DL	S117739*5*DL	SO	210	U	210	R	ug/kg	DL
VOA	SW8260	trans-1,2-DICHLOROETHENE	CNC54	003SB02401DL	S117739*5*DL	SO	210	U	210	R	ug/kg	DL
VOA	SW8260	trans-1,3-DICHLOROPROPENE	CNC54	003SB02401DL	S117739*5*DL	SO	210	U	210	R	ug/kg	DL
VOA	SW8260	TRICHLOROETHYLENE (TCE)	CNC54	003SB02401DL	S117739*5*DL	SO	210	U	210	R	ug/kg	DL
VOA	SW8260	Vinyl acetate	CNC54	003SB02802	S117739*14	SO	9.5	U	9.5	UJ	ug/kg	MS
VOA	SW8260	Vinyl acetate	CNC54	003SB02401DL	S117739*5*DL	SO	420	U	420	R	ug/kg	DL

Attachment 1 - Changed Qualifiers and Results
Zone G, SWMU [illegible] Soils - Data Validation

Parameter Class	Analytical Method	Parameter	Stpc	Sample ID	Lab Sample ID	Matrix	Lab Result	Lab Qual	Final Result	Final Qual	Units	Reasons
VOA	SW8260	Vinyl acetate	CNC55	003SB03102	S117739A*1	SO	6.6	U	6.6	UJ	ug/kg	CC, BS
VOA	SW8260	Vinyl acetate	CNC55	003SB03601	S117739A*10	SO	9.5	U	9.5	UJ	ug/kg	CC, BS
VOA	SW8260	Vinyl acetate	CNC55	003SB03602	S117739A*11	SO	9.3	U	9.3	UJ	ug/kg	CC, BS
VOA	SW8260	Vinyl acetate	CNC55	003SB02101	S117739A*12	SO	9.7	U	9.7	UJ	ug/kg	CC, BS
VOA	SW8260	Vinyl acetate	CNC55	003CB02101	S117739A*13	SO	9.4	U	9.4	UJ	ug/kg	CC, BS
VOA	SW8260	Vinyl acetate	CNC55	003SB02102	S117739A*14	SO	9	U	9	UJ	ug/kg	CC, BS
VOA	SW8260	Vinyl acetate	CNC55	003SB03201	S117739A*2	SO	10	U	10	UJ	ug/kg	CC, BS
VOA	SW8260	Vinyl acetate	CNC55	003SB03202	S117739A*3	SO	10	U	10	UJ	ug/kg	CC, BS
VOA	SW8260	Vinyl acetate	CNC55	003SB03301	S117739A*4	SO	10	U	10	UJ	ug/kg	CC, BS
VOA	SW8260	Vinyl acetate	CNC55	003SB03302	S117739A*5	SO	9.8	U	9.8	UJ	ug/kg	CC, BS
VOA	SW8260	Vinyl acetate	CNC55	003SB03401	S117739A*6	SO	10	U	10	UJ	ug/kg	CC, BS
VOA	SW8260	Vinyl acetate	CNC55	003SB03402	S117739A*7	SO	11	U	11	UJ	ug/kg	CC, BS
VOA	SW8260	Vinyl acetate	CNC55	003SB03501	S117739A*8	SO	10	U	10	UJ	ug/kg	CC, BS
VOA	SW8260	Vinyl acetate	CNC55	003SB03502	S117739A*9	SO	9.8	U	9.8	UJ	ug/kg	CC, BS
VOA	SW8260	VINYL CHLORIDE	CNC54	003SB02401DL	S117739*5*DL	SO	420	U	420	R	ug/kg	DL
VOA	SW8260	XYLENES, TOTAL	CNC54	003SB02401DL	S117739*5*DL	SO	210	U	210	R	ug/kg	DL

Data Validation Summary - Charleston Naval Complex – Zone G, SWMU 3 - Soils

TO: Jim Edens/CH2M HILL/GNA

FROM: Amy Juchem/CH2M HILL/GNA
Herb Kelly/CH2M HILL/GNA

DATE: January 14, 2003

The purpose of this memorandum is to present the results of the data validation process for the soil samples collected at Zone G, SWMU 3. The samples were collected on December 6, 2002.

The specific samples and analytical fractions reviewed are summarized below in Table 1.

The Quality Control areas that were reviewed and the resulting findings are documented within each subsection that follows. This data was validated for compliance with the analytical method requirements. This process also included a review of the data to assess the accuracy, precision, and completeness based upon procedures described in the guidance documents such as the Environmental Protection Agency (EPA) *National Functional Guidelines for Inorganic Data Review (EPA 2002) and National Functional Guidelines for Organic Data Review (EPA 1999)*. Quality assurance/quality control (QA/QC) summary forms and data reports were reviewed.

Samples were submitted to Severn Trent Services, STL Savannah Laboratories, Inc., in Savannah, Georgia for the following analyses: SW-846 8081 Pesticides.

Sample results that were not within the acceptance limits were appended with a qualifying flag, which consisted of a single- or double-letter code that indicated a possible problem with the data. The qualifying flags originated during the data review and validation processes. These also include the secondary, or the two-digit "sub-qualifier" flags. The secondary qualifiers provide the reasoning behind the assignment of a qualifier flag to the data. The secondary qualifiers are presented and defined below.

Attachment 1 lists the changes in data qualifiers, due to the validation process.

The following primary flags were used to qualify the data:

[=] Detected. The analyte was analyzed for and detected at the concentration shown.

[J] Estimated. The analyte was present but the reported value may not be accurate or precise.

[U] Undetected. The analyte was analyzed for but not detected above the method detection limit.

[UJ] Detection limit estimated. The analyte was analyzed for but qualified as not detected; the result is estimated.

[R] Rejected. The data is not useable.

Secondary Data Validation Qualifiers

Code	Definition
2S	Second Source
2C	Second Column Confirmation
BL	Blank
BD	Blank Spike/Blank Spike Duplicate or (LCS/LCSD) Precision
BS	Blank Spike/LCS
CC	Continuing Calibration Verification
DL	Dilution
FD	Field Duplicate
HT	Holding Time
IB	In-Between (metals – B's → J's)
IC	Initial Calibration
IS	Internal Standard
LD	Lab Duplicate
LR	Concentration exceeded Linear Range
MD	MS/MSD or LCS/LCSD Precision
MS	Matrix Spike/Matrix Spike Duplicate
OT	Other (see DV worksheet)
PD	Pesticide Degradation
PS	Post Spike
RE	Re-extraction/Re-analysis
SD	Serial Dilution
SS	Spiked Surrogate
TD	Total vs Dissolved
TN	Tune

Table 1 - Chemical Analytical Methods – Field and Quality Control Samples

CNC152	G003SB102	003SB10201	S248834*1	SO	N		0	1	12/06/02	X
CNC152	G003SB103	003SB10301	S248834*2	SO	N		0	1	12/06/02	X
CNC152	G003SB103	003SB10301DL	S248834*2*DL	SO	LR	DL	0	1	12/06/02	X
CNC152	G003SB104	003SB10401	S248834*3	SO	N		0	1	12/06/02	X
CNC152	G003SB099	003SB09901	S248834*4	SO	N		0	1	12/06/02	X
CNC152	G003SB100	003SB10001	S248834*5	SO	N		0	1	12/06/02	X
CNC152	G003SB100	003CB10001	S248834*6	SO	N		0	1	12/06/02	X
CNC152	G003SB101	003SB10101	S248834*7	SO	N		0	1	12/06/02	X
CNC152	FIELDQC	003EB099M6	S248834*8	WQ	EB				12/06/02	X
CNC152	LABQC	488349LB	S248834*9	SQ	LB					X
CNC152	LABQC	4883410BS	S248834*10	SQ	BS					X
CNC152	LABQC	4883416LB	S248834*16	WQ	LB					X
152	LABQC	4883417BS	S248834*17	WQ	BS					X

MATRIX CODE

SO – Soil
SQ – Soil QC Samples
WQ – Water QC Samples

SAMPLE TYPE CODE

EB - Equipment Blank
LB – Laboratory Blank
BS – Blank Spike
LR - Laboratory Replicate
N - Native Sample

LR TYPE CODE

DL – Dilution

Organic Parameters

Quality Control Review

The following list represents the QA/QC measures that were reviewed during the data quality evaluation procedure for organic data.

- **Holding Times** – The holding times are evaluated to verify that samples were extracted and analyzed within holding times.
- **Blank samples** – Method blanks and equipment blanks were provided for this project. Blank samples enable the reviewer to determine if an analyte may be attributed to sampling or laboratory procedures, rather than environmental contamination from site activities.
- **Surrogate Recoveries** – Surrogate Compounds are added to each sample and the recoveries are used to monitor lab performance and possible matrix interference.
- **Lab Control Sample (LCS)** – This sample is a "controlled matrix", either laboratory reagent water or Ottawa sand, in which target compounds have been added prior to extraction/analysis. The recoveries serve as a monitor of the overall performance of each step during the analysis, including sample preparation.
- **Matrix Spike/Matrix Spike Duplicate (MS/MSD) Samples** – Spike recovery is used to evaluate potential matrix interferences, as well as accuracy. Precision information is also determined by calculating the reproducibility between the recoveries of each spiked parameter.
- **Field Duplicate Samples** – These samples are collected to determine precision between a native and its duplicate. This information can only be determined when target compounds are detected.
- **GC/MS Tuning** – The mass spectrum of the tuning compound is evaluated for method compliance. The criteria are established to verify the proper mass assignment and mass resolution.
- **Initial Calibration** – The initial calibration ensures that the instrument is capable of producing acceptable qualitative and quantitative data for the compounds of interest.
- **Continuing Calibration** – The continuing calibration checks satisfactory performance of the instrument and its predicted response to the target compounds.
- **Confirmation** – If GCMS methodology is not initially used for analysis, SW-846 method 8000 requires confirmation when the composition of samples is not well characterized. Therefore, even when the identification has been confirmed on a dissimilar column or detector, the agreement of the quantitative results on both columns is evaluated. For Pesticide and PCB analyses covered in this report, confirmation was performed using a dissimilar analytical column. The laboratory analyzed samples with a gas

chromatograph (GC) utilizing simultaneous primary and confirmation data acquisition. Per SW-86 method 8000, 40% RPD criteria was used as the acceptance limit.

- **Internal Standards** – The internal standards (retention time and response) are evaluated for method compliance. The internal standards are used in quantitation of the target parameters and monitor the instrument sensitivity and response for stability during each analysis.

Organochlorine Pesticides

The QA/QC parameters for the Organochlorine Pesticides analyses by method SW-846 8081 for all of the samples were within acceptable control limits, except as noted below.

Surrogate, Matrix Spike, Matrix Spike Duplicate, and Laboratory Control Spike Recoveries and Relative Percent Differences (RPDs)

All surrogate, matrix spike (MS), matrix spike duplicate (MSD), and laboratory control spike (LCS) recoveries and relative percent differences (RPDs) were within acceptable quality control limits, except as noted in Table 2.

TABLE 2
Surrogate, MS/MSD, and LCS Recoveries Out of QC Limits: Pesticides
Charleston Naval Complex, Zone G, SWMU 3, Charleston, SC

CNC152	003SB09901	Tetrachloro-m-xylene	15* / 58*	60-150	003SB09901	Detects – J; Non-Detects – UJ
		Decachlorobiphenyl	18* / 58*	60-150		
CNC152	003SB10001	Tetrachloro-m-xylene	11* / 56*	60-150	003SB10001	Detects – J; Non-Detects – UJ
		Decachlorobiphenyl	13* / 50*	60-150		
CNC152	003CB10001	Tetrachloro-m-xylene	10* / 54*	60-150	003CB10001	Detects – J; Non-Detects – UJ
		Decachlorobiphenyl	13* / 55*	60-150		
CNC152	003SB10101	Tetrachloro-m-xylene	32* / 54*	60-150	003SB10101	Detects – J; Non-Detects – UJ
		Decachlorobiphenyl	36* / 50*	60-150		
* - out of control limits						

Initial and Continuing Calibration Criteria

All initial and continuing calibration criteria were met except as noted in Table 3.

TABLE 3
Exceptions to Initial Calibration Criteria and Continuing Calibration Criteria: Pesticides
Charleston Naval Complex, Zone G, SWMU 3, Charleston, SC

[illegible]	[illegible]	[illegible]	[illegible]
SGMECD1-CCAL-12/10/02, 0917	Methoxychlor	22.8% low	S248834*1,2,4,5,6,7
SGMECD1-CCAL-12/13/02, 0834	Alpha-BHC	20.0% low	S248834*2DL, 3
	Delta-BHC	16.7% low	
	Aldrin	16.9% low	
	Chlordane	20.6% low	
SGMECD1-CCAL-12/13/02, 1937	Alpha-BHC	15.8% low	S248834*2DL, 3
	Endrin aldehyde	20.4% low	
	Chlordane	17.2% low	
SGMECD2-CCAL-12/13/02, 1937	Endrin	15.8% high	S248834*2DL, 3

Flags were applied to the compounds in the associated samples in the following manner:

- When the percent difference (%D) was low in the continuing calibration standards, detected compounds were flagged "J" and non-detected compounds were flagged "UJ", as estimated.
- When the percent difference (%D) was high in the continuing calibration standard, detected compounds were flagged "J", as estimated. Non-detected compounds were not flagged.

Second Column Confirmation

The second column confirmation percent difference (%D) for some detected parameters, exceeded the 40 %D criteria. Those results were flagged "J", as estimated. The laboratory reported the lower of the two concentrations. The individual samples and specific compounds that were flagged, are listed in Table 4 below.

TABLE 4
Second Column Confirmation out of Criteria: Pesticides
Charleston Naval Complex, Zone G, SWMU 3, Charleston, SC

CNC152	S248834*1	003SB10201	Alpha-Chlordane
CNC152	S248834*1	003SB10201	Dieldrin
CNC152	S248834*1	003SB10201	4,4'-DDD
CNC152	S248834*1	003SB10201	Chlordane
CNC152	S248834*2	003SB10301	Heptachlor epoxide
CNC152	S248834*2	003SB10301	Gamma-Chlordane
CNC152	S248834*2	003SB10301	Alpha-Chlordane
CNC152	S248834*2	003SB10301	Dieldrin
CNC152	S248834*2	003SB10301	Methoxychlor
CNC152	S248834*2DL	003SB10301DL	Alpha-Chlordane
CNC152	S248834*3	003SB10401	Heptachlor
CNC152	S248834*3	003SB10401	Alpha-Chlordane
CNC152	S248834*3	003SB10401	Dieldrin
CNC152	S248834*4	003SB09901	Heptachlor epoxide
CNC152	S248834*4	003SB09901	Gamma-Chlordane
CNC152	S248834*4	003SB09901	4,4'-DDE
CNC152	S248834*4	003SB09901	Dieldrin
CNC152	S248834*4	003SB09901	4,4'-DDD
CNC152	S248834*4	003SB09901	4,4'-DDT
CNC152	S248834*4	003SB09901	Chlordane
CNC152	S248834*5	003SB10001	Dieldrin
CNC152	S248834*6	003CB10001	Dieldrin

Rejected Data

All of the rejected data listed in Attachment 1 were associated with re-runs and dilutions (there can only be a single valid result per parameter per sample). No other data was rejected such that there is not a valid result for that parameter in each sample.

Conclusion

A review of the analytical data submitted regarding the investigation of SWMU 3 in Zone G at the Charleston Naval Complex, Charleston, South Carolina by CH2M HILL has been completed. An overall evaluation of the data indicates that the sample handling, shipment, and analytical procedures have been adequately completed, and that the analytical results should be considered usable as qualified.

The analytical data had minor QC concerns as indicated above, however, it did not affect data usability for those specific results. The validation review demonstrated that the analytical systems were generally in control and the data results can be used in the decision making process.

Attachment 1 - Changed Qualifiers and Results
Zone G, SWMU [illegible] Soils - Data Validation

Parameter Class	Analytical Method	Parameter	Site	Sample ID	Lab sample ID	Matrix	Lab Result	Lab Qual	Final Result	Final Qual	Units	Reasons
PEST	SW8081A	ALDRIN	CNC152	003SB10301DL	S248834*2*DL	SO	3.1	U	3.1	R	ug/kg	DL
PEST	SW8081A	ALDRIN	CNC152	003SB10401	S248834*3	SO	3	U	3	UJ	ug/kg	CC
PEST	SW8081A	ALPHA BHC	CNC152	003SB10301DL	S248834*2*DL	SO	3.1	U	3.1	R	ug/kg	DL
PEST	SW8081A	ALPHA BHC	CNC152	003SB10401	S248834*3	SO	3	U	3	UJ	ug/kg	CC
PEST	SW8081A	ALPHA-CHLORDANE	CNC152	003SB10201	S248834*1	SO	24	P	24	J	ug/kg	2C
PEST	SW8081A	ALPHA-CHLORDANE	CNC152	003SB10301	S248834*2	SO	2.4	P	2.4	J	ug/kg	2C
PEST	SW8081A	ALPHA-CHLORDANE	CNC152	003SB10301DL	S248834*2*DL	SO	2.3	DJP	2.3	R	ug/kg	DL
PEST	SW8081A	ALPHA-CHLORDANE	CNC152	003SB10401	S248834*3	SO	16	P	16	J	ug/kg	2C
PEST	SW8081A	BETA BHC	CNC152	003SB10301DL	S248834*2*DL	SO	3.1	U	3.1	R	ug/kg	DL
PEST	SW8081A	Chlordane	CNC152	003SB10201	S248834*1	SO	110	P	110	J	ug/kg	2C
PEST	SW8081A	Chlordane	CNC152	003SB10301DL	S248834*2*DL	SO	31	U	31	R	ug/kg	DL
PEST	SW8081A	Chlordane	CNC152	003SB10401	S248834*3	SO	30	U	30	UJ	ug/kg	CC
PEST	SW8081A	DELTA BHC	CNC152	003SB10301DL	S248834*2*DL	SO	3.1	U	3.1	R	ug/kg	DL
PEST	SW8081A	DELTA BHC	CNC152	003SB10401	S248834*3	SO	3	U	3	UJ	ug/kg	CC
PEST	SW8081A	DIELDRIN	CNC152	003SB10201	S248834*1	SO	5.1	JP	5.1	J	ug/kg	2C
PEST	SW8081A	DIELDRIN	CNC152	003SB10301	S248834*2	SO	0.36	JP	0.36	J	ug/kg	2C
PEST	SW8081A	DIELDRIN	CNC152	003SB10301DL	S248834*2*DL	SO	6	U	6	R	ug/kg	DL
PEST	SW8081A	DIELDRIN	CNC152	003SB10401	S248834*3	SO	1.4	JP	1.4	J	ug/kg	2C
PEST	SW8081A	DIELDRIN	CNC152	003SB09901	S248834*4	SO	55	PZZ	55	J	ug/kg	2C,SS
PEST	SW8081A	DIELDRIN	CNC152	003SB10001	S248834*5	SO	14	PZZ	14	J	ug/kg	2C,SS
PEST	SW8081A	DIELDRIN	CNC152	003CB10001	S248834*6	SO	16	PZZ	16	J	ug/kg	2C,SS
PEST	SW8081A	DIELDRIN	CNC152	003SB10101	S248834*7	SO	11	ZZ	11	J	ug/kg	SS
PEST	SW8081A	ENDOSULFAN I	CNC152	003SB10301DL	S248834*2*DL	SO	3.1	U	3.1	R	ug/kg	DL
PEST	SW8081A	ENDOSULFAN II	CNC152	003SB10301DL	S248834*2*DL	SO	6	U	6	R	ug/kg	DL
PEST	SW8081A	ENDOSULFAN SULFATE	CNC152	003SB10301DL	S248834*2*DL	SO	1.7	DJ	1.7	R	ug/kg	DL
PEST	SW8081A	ENDRIN	CNC152	003SB10301DL	S248834*2*DL	SO	6	U	6	R	ug/kg	DL
PEST	SW8081A	ENDRIN ALDEHYDE	CNC152	003SB10301DL	S248834*2*DL	SO	6	U	6	R	ug/kg	DL
PEST	SW8081A	ENDRIN KETONE	CNC152	003SB10301DL	S248834*2*DL	SO	6	U	6	R	ug/kg	DL
PEST	SW8081A	GAMMA BHC (LINDANE)	CNC152	003SB10301DL	S248834*2*DL	SO	3.1	U	3.1	R	ug/kg	DL
PEST	SW8081A	GAMMA-CHLORDANE	CNC152	003SB10301	S248834*2	SO	3.1	P	3.1	J	ug/kg	2C
PEST	SW8081A	GAMMA-CHLORDANE	CNC152	003SB10301DL	S248834*2*DL	SO	4.4	D	4.4	R	ug/kg	DL
PEST	SW8081A	HEPTACHLOR	CNC152	003SB10301DL	S248834*2*DL	SO	3.1	U	3.1	R	ug/kg	DL

Attachment 1 - Changed Qualifiers and Results
Zone G, SWMU 3, Soils - Data Validation

Parameter Class	Analytical Method	Parameter	SDG	Sample ID	Lab Sample ID	Matrix	Lab Result	Lab Qual	Final Result	Final Qual	Units	Reasons
PEST	SW8081A	HEPTACHLOR	CNC152	003SB10401	S248834*3	SO	0.78	JP	0.78	J	ug/kg	2C
PEST	SW8081A	HEPTACHLOR EPOXIDE	CNC152	003SB10301	S248834*2	SO	0.94	JP	0.94	J	ug/kg	2C
PEST	SW8081A	HEPTACHLOR EPOXIDE	CNC152	003SB10301DL	S248834*2*DL	SO	0.81	DJ	0.81	R	ug/kg	DL
PEST	SW8081A	METHOXYCHLOR	CNC152	003SB10201	S248834*1	SO	79	U	79	UJ	ug/kg	CC
PEST	SW8081A	METHOXYCHLOR	CNC152	003SB10301	S248834*2	SO	4	JP	4	J	ug/kg	2C
PEST	SW8081A	METHOXYCHLOR	CNC152	003SB10301DL	S248834*2*DL	SO	5.3	DJ	5.3	R	ug/kg	DL
PEST	SW8081A	p,p'-DDD	CNC152	003SB10201	S248834*1	SO	8.3	JP	8.3	J	ug/kg	2C
PEST	SW8081A	p,p'-DDD	CNC152	003SB10301DL	S248834*2*DL	SO	6	U	6	R	ug/kg	DL
PEST	SW8081A	p,p'-DDE	CNC152	003SB10301	S248834*2	SO	86	E	86	R	ug/kg	LR
PEST	SW8081A	p,p'-DDT	CNC152	003SB10301DL	S248834*2*DL	SO	40	D	40	R	ug/kg	DL
PEST	SW8081A	TOXAPHENE	CNC152	003SB10301DL	S248834*2*DL	SO	200	U	200	R	ug/kg	DL

CH2M HILL Chain of Custody/ Laboratory Analysis Form

COC Tracking #: **ZG003-112701-01** page 1 of 4

Laboratory:	STL
Project Name:	Charleston Navy Complex
Site Name:	Zone G, SWMU 3
Project Number:	158814.PM.04
TAT:	7 day result, 14 day package
Project Manager:	Tom Beisel/ATL
Level:	Level 3
Address:	GNV: 3011 SW Williston Rd., Gainesville, FL 32605
	ATL: 115 Perimeter Center Place NE, Suite 700, Atlanta, GA 30346-1278
Send Report To:	see last page of COC
EDD:	CNC format

Lab Batch/SDG:

Sample ID	Sample Description	Depth Begin	Depth End	Date & Time Collected	Matrix	# of containers	VOCs (SW8260B) 3 - 5g Encore	Pesticides (SW8081A) 1 - 4 ounce jar	PCBs (SW8082) 1 - 4 ounce jar	VOCs (SW8260B) 3 - 40mL vial, HCl	Pesticides (SW8081A) 2 - 1L amber	PCBs (SW8082) 2 - 1L amber						Comments
003SB02101	G003SB021	0	1	11-29-01 / 1305	SO	4	X	X	X									
003CB02101	G003SB021	0	1	11-29-01 / 1307	SO	4	X	X	X									
003SB02102	G003SB021	3	5	11-29-01 / 1310	SO	4	X	X	X									
003SB02201	G003SB022	0	1	11-29-01 / 1315	SO	4	X	X										
003SB02202	G003SB022	3	5	11-29-01 / 1317	SO	4	X	X										
003SB02301	G003SB023	0	1	11-29-01 / 1320	SO	4	X	X										
003SB02302	G003SB023	3	5	11-29-01 / 1325	SO	4	X	X										
003SB02401	G003SB024	0	1	11-29-01 / 1330	SO	4	X	X										
003SB02402	G003SB024	3	5	11-29-01 / 1335	SO	4	X	X										
003SB02501	G003SB025	0	1	11-29-01 / 1030	SO	4	X	X										
003SB02502	G003SB025	3	5	11-29-01 / 1031	SO	4	X	X										
003SB02601	G003SB026	0	1	11-28-01 / 1155	SO	4	X	X										
003SB02602	G003SB026	3	5	11-28-01 / 1200	SO	4	X	X										
003SB02701	G003SB027	0	1	11-28-01 / 1140	SO	4	X	X										
003SB02702	G003SB027	3	5	11-28-01 / 1145	SO	4	X	X										
003SB02801	G003SB028	0	1	11-29-01 / 1010	SO	4	X	X										
003SB02802	G003SB028	3	5	11-29-01 / 1015	SO	4	X	X										
003SB02802MS	G003SB028	3	5	11-29-01 / 1016	SO	4	X	X										MS
003SB02802SD	G003SB028	3	5	11-29-01 / 1017	SO	4	X	X										MSD
003SB02901	G003SB029	0	1	11-29-01 / 1025	SO	4	X	X										

RUSH!

Sampled By: Chris Blundy Date/Time: 11-28 / 11-29 Relinquished by: Chris Blundy Date/Time: 11-29-01 / 1600

Additional Samplers: Mark Yarbourgh Sean Smith

Received By Lab: [signature] Date/Time: 11-30-01 9:25 Relinquished by: Date/Time

Received By: Date/Time Shipped Via: UPS FedEx Hand Other Tracking#:

Remarks: Temperature:

Receipt Exceptions: (SI-17739)

CH2M HILL Chain of Custody/ Laboratory Analysis Form

COC Tracking #: **ZG003-112701-01**

Laboratory: STL

Project Name: Charleston Navy Complex

Site Name:

Project Number: 158814.PM.04

TAT:

Project Manager: Tom Beisel/ATL

Level: Level 3

Address: GNV: 3011 SW Williston Rd., Gainesville, FL 32605

ATL: 115 Perimeter Center Place NE, Suite 700, Atlanta, GA 30346-1278

Send Report To: see last page of COC

EDD: CNC format

Lab Batch/SDG:

Sample ID	Sample Description	Depth Begin	Depth End	Date & Time Collected	Matrix	# of containers	VOCs (SW8260B)	Pesticides (SW8081A)	PCBs (SW8082)	VOCs (SW8260B)	Pesticides (SW8081A)	PCBs (SW8082)						Comments
							3 - 5g Encore	1 - 4 ounce jar		3 - 40mL vial, HCl	2 - 1L amber							
003SB02902	G003SB029	3	5	11-29-01/ 1026	SO	4	X	X										
003CB02902	G003SB029	3	5	11-29-01/ 1027	SO	4	X	X										
003SB03001	G003SB030	0	1	11-29-01/ 1050	SO	4	X	X										
003SB03002	G003SB030	3	5	11-29-01/ 1052	SO	4	X	X										
003SB03101	G003SB031	0	1	11-29-01/ 1045	SO	4	X	X										
003SB03102••	G003SB031	3	5	11-29-01/ 1047	SO	4	X	X										
003SB03201••	G003SB032	0	1	11-28-01/ 1210	SO	4	X	X										
003SB03202••	G003SB032	3	5	11-28-01/ 1215	SO	4	X	X										
003SB03301••	G003SB033	0	1	11-29-01/ 1000	SO	4	X	X										
003SB03302••	G003SB033	3	5	11-29-01/ 1005	SO	4	X	X										
003SB03401••	G003SB034	0	1	11-29-01/ 1110	SO	4	X	X										
003SB03402••	G003SB034	3	5	11-29-01/ 1113	SO	4	X	X										
003SB03501••	G003SB035	0	1	11-29-01/ 1115	SO	4	X	X										
003SB03502••	G003SB035	3	5	11-29-01/ 1116	SO	4	X	X										
003SB03601••	G003SB036	0	1	11-29-01/ 1135	SO	4	X	X										
003SB03602••	G003SB036	3	5	11-29-01/ 1140	SO	4	X	X										
003SB03701	G003SB037	0	1		SO		X	X										
003SB03702	G003SB037	3	5		SO		X	X										
003SB03801	G003SB038	0	1		SO		X	X										
003CB03801	G003SB038	0	1		SO		X	X										

Sampled By: CB

Date/Time:

Relinquished by: [signature]

Date/Time: 11-29-01/ 1600

Additional Samplers: MY, SS.

Received By Lab:

Date/Time:

Relinquished by:

Date/Time:

Received By:

Date/Time:

Shipped Via: UPS FedEx Hand Other Tracking#:

Remarks:

Temperatu

Receipt Exceptions:

CH2M HILL Chain of Custody/ Laboratory Analysis Form

COC Tracking #: **ZG003-112701-01** page 3 of 4

Laboratory: STL

Project Name: Charleston Navy Complex

Site Name:

Project Number: 158814.PM.04

TAT:

Project Manager: Tom Beisel/ATL

Level: Level 3

Address: GNV: 3011 SW Williston Rd., Gainesville, FL 32605

ATL: 115 Perimeter Center Place NE, Suite 700, Atlanta, GA 30346-1278

Send Report To: see last page of COC

EDD: CNC format

Lab Batch/SDG:

Sample ID	Sample Description	Depth Begin	Depth End	Date & Time Collected	Matrix	# of containers	VOCs (SW8260B) 3 - 5g Encore	Pesticides (SW8081A) 1 - 4 ounce jar	PCBs (SW8082) 1 - 4 ounce jar	VOCs (SW8260B) 3 - 40mL vial, HCl	Pesticides (SW8081A) 2 - 1L amber	PCBs (SW8082) 2 - 1L amber						Comments
003SB03802	G003SB038	3	5		SO		X	X										
003EB021L1	G003EB021			11-29-01/1135	SQ					X	X	X						EB
003TB021L1	G003TB021			Lab	SQ					X								TB
003EB022L1	G003EB022			11-29-01/1340	SQ													EB
003TB022L1	G003TB022			Lab	SQ													TB

Sampled By: CB

Date/Time:

Relinquished by: [signature] Date/Time: 11-29-01/1600

Additional Samplers: MY, SG

Received By Lab: Date/Time:

Relinquished by: Date/Time:

Received By: Date/Time:

Shipped Via: UPS FedEx Hand Other Tracking#:

Remarks:

Temperature:

Receipt Exceptions:

CH2M HILL Chain of Custody/ Laboratory Analysis Form

COC Tracking #: **ZG003-011002-01** page 1 of 2

Laboratory:	STL
Project Name:	Charleston Navy Complex
Site Name:	Zone G, SWMU 3
Project Number:	158814.PM.04
TAT:	1-QTAT-14
Project Manager:	Tom Beisel
QA Level:	level 3
Address:	GNV: 3011 SW Williston Rd., Gainesville, FL 32605
	ATL: 115 Perimeter Center Place NE, Suite 700, Atlanta, GA 30346-1278
Send Report To:	see last page of COC
EDD:	CNC format

Lab Batch/SDG:

Sample ID	Station ID	Sample Description	Depth Begin	Depth End	Date & Time Collected	Matrix	# of containers	VOCs (SW8260B)	Pesticides (SW8081)	VOCs (SW8260B)	Pesticides (SW8081)							Comments
								3 - 5g Encores	1 - 4 ounce jar	3 - 40mL Vial	2 - 1L Ambers							
003SB03901	G003SB039	~~1-15-02~~ AO	0	1	1-15-02/1055	SO	4	X	X									
003SB03902	G003SB039	~~1-15-02~~ AO	3	5	1-15-02/1100	SO	4	X	X									
003SB04001	G003SB040	~~1-15-02~~ AO	0	1	1-15-02/1115	SO	4	X	X									
003SB04002	G003SB040	~~1-15-02~~ AO	3	5	1-15-02/1120	SO	4	X	X									
003SB04101	G003SB041		0	1	1-15-02/1130	SO	4	X	X									
003SB04102	G003SB041		3	5	1-15-02/1140	SO	4	X	X									
003CB04102	G003SB041		3	5	1-15-02/1145	SO	4	X	X									
003SB04201	G003SB042		0	1	1-15-02/1150	SO	4	X	X									
003SB04202	G003SB042		3	5	1-15-02/1200	SO	4	X	X									
003EB039M1	G003EB039				1-15-02/1210	SQ	5	~~X~~	~~X~~	X	X							EB
003TB039M1	G003TB039				Lab Supplied	SQ	3	~~X~~		X								TB

RCRA Site

Sampling Complete

Sampled By: Andrew O'Connor Date/Time: 1-15-02

Relinquished by: [signature] Date/Time: 1-15-02/1600

Additional Samplers: Chris Blundy, C. Diaz

Received By Lab: [signature] Date/Time: 1-16-02/9:06

Relinquished by: Date/Time

Received By: Date/Time

Shipped Via: UPS FedEx Hand Other Tracking#:

Remarks: Fo[illegible]sults to Bill Elliot 352-333-7886 & Herb Kelly 352-271-4811

Temperature:

Receipt Exceptions:

40294

CH2M HILL Chain of Custody/ Laboratory Analysis Form

COC Tracking #: **ZG003-032202-01** page 1 of 4

Laboratory: STL

Project Name: Charleston Navy Complex

Site Name: Zone G, SWMU 3

Project Number: 158814.PM.04

TAT: 1-QTAT-14

Project Manager: Tom Beisel

QA Level: level 3

Address: GNV: 3011 SW Williston Rd., Gainesville, FL 32605

ATL: 115 Perimeter Center Place NE, Suite 700, Atlanta, GA 30346-1278

Send Report To: see last page of COC

EDD: CNC format

Lab Batch/SDG:

Sample ID	Station ID	Sample Description	Depth Begin	Depth End	Date & Time Collected	Matrix	# of containers	VOCs (SW8260B) 3 - 5g encores + 1 2 oz jar	Pesticides (SW8081) 1 - 4 ounce jar	VOCs (SW8260B) 3 - 40mL vial	Pesticides (SW8081) 2 - 1L amber							Comments
003SB03701	G003SB037		0	1		SO			X									
003SB03702	G003SB037		3	5		SO			X									
003SB03801	G003SB038		0	1		SO			X									
003CB03801	G003SB038		0	1		SO			X									
003SB03802	G003SB038		3	5		SO			X									
003SB04301	G003SB043		0	1		SO			X									
003SB04401	G003SB044		0	1		SO			X									
003SB04402	G003SB044		3	5		SO			X									
003SB04501	G003SB045		0	1		SO			X									
003SB04601	G003SB046		0	1		SO			X									
003SB04701	G003SB047		0	1		SO			X									
003SB04801	G003SB048		0	1		SO			X									
003SB04802	G003SB048		3	5		SO			X									
003SB04901	G003SB049		0	1		SO			X									
003SB04902	G003SB049		3	5		SO			X									
003SB05001	G003SB050		0	1	~~3-27~~	SO		X										
003SB05101	G003SB051		0	1		SO			X									
003SB05102	G003SB051		3	5		SO		X	X									
003SB05201	G003SB052		0	1		SO			X									
003SB05202	G003SB052		3	5	3-27-02 1740	SO	4	X	X									

Sampled By: [signature] Date/Time 3/27/02 1800

Relinquished by: [signature] Date/Time 3/27/02 1850

Additional Samplers: Ryan Bikes, Larry Gates

Received By Lab: [signature] Date/Time 03-28-02

Relinquished by: Date/Time

Received By: Date/Time 8:38

Shipped Via: UPS ~~FedEx~~ Hand Other Tracking#: 833321867768

Remarks: Fax results to Bill Elliot 352-333-7886 & Herb Kelly 352-271-4811

Temperature:

Receipt Exceptions:

CH2M HILL Chain of Custody/ Laboratory Analysis Form

Laboratory: STL

Project Name: Charleston Navy Complex

Site Name: Zone G, SWMU 3

Project Number: 158814.PM.04

TAT: 1-QTAT-14

Project Manager: Tom Beisel

QA Level: level 3

Address: GNV: 3011 SW Williston Rd., Gainesville, FL 32605

ATL: 115 Perimeter Center Place NE, Suite 700, Atlanta, GA 30346-1278

Send Report To: see last page of COC

EDD: CNC format

Lab Batch/SDG:

Sample ID	Station ID	Sample Description	Depth Begin	Depth End	Date & Time Collected	Matrix	# of containers	VOCs (SW8260B) 3 - 5g Encores	Pesticides (SW8081) 1 - 4 ounce jar	VOCs (SW8260B) 3 - 40mL vial	Pesticides (SW8081) 2 - 1L amber							Comments
003CB05202	G003SB052		3	5	3.27.02 1740	SO	4	X	[redacted]									
003SB05301	G003SB053		0	1		SO			X									
003SB05302	G003SB053		3	5		SO		X	X									
003SB05401	G003SB054		0	1		SO			X									
003SB05402	G003SB054		3	5	3-27-02 1530	SO	4	X	[redacted]									
003SB05501	G003SB055		0	1		SO			X									
003SB05502	G003SB055		3	5	3.27.02 1540	SO	4	X	[redacted]									
003SB05601	G003SB056		0	1		SO			X									
003SB05602	G003SB056		3	5	3.27.02 1615	SO	4	X	[redacted]									
003SB05701	G003SB057		0	1		SO			X									
003SB05702	G003SB057		3	5	3.27.02 1630	SO	4	X	[redacted]									
003SB05801	G003SB058		0	1		SO			X									
003SB05802	G003SB058		3	5	3.27.02 1655	SO	4	X	[redacted]									
003SB05802MS	G003SB058		3	5	3.27.02 1655	SO	4	X	X									MS
003SB05802SD	G003SB058		3	5	3.27.02 1655	SO	4	X	X									MSD
003SB05901	G003SB059		0	1		SO			X									
003SB05902	G003SB059		3	5		SO			X									
003SB06003	G003SB060		1	2		SO			X									
003SB06103	G003SB061		1	2		SO			X									
003SB06203	G003SB062		1	2		SO			X									

Sampled By: [signature] Date/Time: 3/27/02 1800

Relinquished by: [signature] Date/Time: 3/27/02 1850

Additional Samplers:

Received By Lab: [signature] Date/Time: 3-28-02

Relinquished by: Date/Time:

Received By: Date/Time: 8:38

Shipped Via: UPS ~~FedEx~~ Hand Other Tracking#:

Remarks: Fax results to Bill Elliot 352-333-7886 & Herb Kelly 352-271-4811

Temperature:

Receipt Exceptions:

(SQ, 42159)

CH2M HILL Chain of Custody/ Laboratory Analysis Form

COC Tracking #: ZG003-032202-01 page 3 of

Laboratory:	STL		
Project Name:	Charleston Navy Complex	Site Name:	Zone G, SWMU 3
Project Number:	158814.PM.04	TAT:	1-QTAT-14
Project Manager:	Tom Beisel	QA Level:	level 3
Address:	GNV: 3011 SW Williston Rd., Gainesville, FL 32605		
	ATL: 115 Perimeter Center Place NE, Suite 700, Atlanta, GA 30346-1278		
Send Report To:	see last page of COC	EDD:	CNC format

Lab Batch/S

Sample ID	Station ID	Sample Description	Depth Begin	Depth End	Date & Time Collected	Matrix	# of containers	VOCs (SW8260B) 3 - 5g Encores	Pesticides (SW8081) 1 - 4 ounce jar	VOCs (SW8260B) 3 - 40mL vial	Pesticides (SW8081) 2 - 1L amber	Commen
003SB06203MS	G003SB062		1	2		SO			X			MS
003SB06203SD	G003SB062		1	2		SO			X			MSD
003SB06304	G003SB063		5	6		SO			X			
003SB06403	G003SB064		1	2		SO			X			
003SB06503	G003SB065		1	2		SO			X			
003CB06503	G003SB065		1	2		SO			X			
003SB06603	G003SB066		1	2		SO			X			
003SB06701	G003SB067		0	1		SO			X			
003SB06702	G003SB067		3	5		SO			X			
003EB037M1	G003EB037				3.27.02 1750	SQ	3			X	X	EB
003TB037M1	G003TB037				3.27.02 —	SQ	3			X		TB
003EB038M1	G003EB038					SQ				X	X	EB
003TB038M1	G003TB038					SQ				X		TB

Sampled By: [signature] Date/Time 3/27/02 1800 Relinquished by: [signature] Date/Time 3/271

Additional Samplers:

Received By Lab: [signature] Date/Time 3-28-02 Relinquished by: Date/Time

Received By: Date/Time 8:38 Shipped Via: UPS FedEx Hand Other Tracking#:

Remarks: Fax results to Bill Elliot 352-333-7886 & Herb Kelly 352-271-4811 Temperature:

Receipt Exceptions:

000004

Laboratory:	STL
Project Name:	Charleston Navy Complex
Site Name:	Zone G, SWMU 3
Project Number:	158814.PM.04
TAT:	1-QTAT-14
Project Manager:	Tom Beisel
QA Level:	level 3
Address:	GNV: 3011 SW Williston Rd., Gainesville, FL 32605
	ATL: 115 Perimeter Center Place NE, Suite 700, Atlanta, GA 30346-1278
Send Report To:	see last page of COC
EDD:	CNC format

Lab Batch/SDG: _____

Sample ID	Station ID	Sample Description	Depth Begin	Depth End	Date & Time Collected	Matrix	# of containers	VOCs (SW8260B) 3 - 5g encores + 1 2 oz jar	Pesticides (SW8081) 1 - 4 ounce jar	VOCs (SW8260B) 3 - 40mL vial	Pesticides (SW8081) 2 - 1L amber							Comments
003SB03701	G003SB037		0	1	3-27-02 0935	SO	1		X									
003SB03702	G003SB037		3	5	3-27-02 0950	SO	1		X									
003SB03801	G003SB038		0	1	3-27-02 0958	SO	1		X									
003CB03801	G003SB038		0	1	3-27-02 —	SO	1		X									
003SB03802	G003SB038		3	5	3-27-02 1005	SO	1		X									
003SB04301	G003SB043		0	1	3-27-02 1030	SO	1		X									
003SB04401	G003SB044		0	1	3-27-02 1030	SO	1		X									
003SB04402	G003SB044		3	5	3-27-02 1040	SO	1		X									
003SB04501	G003SB045		0	1	3-27-02 1055	SO	1		X									
003SB04601	G003SB046		0	1	3-27-02 1100	SO	1		X									
003SB04701	G003SB047		0	1	3-27-02 1120	SO	1		X									
003SB04801	G003SB048		0	1	3-27-02 1135	SO	1		X									
003SB04802	G003SB048		3	5	3-27-02 1140	SO	1		X									
003SB04901	G003SB049		0	1	3-27-02 1155	SO	1		X									
003SB04902	G003SB049		3	5	3-27-02 1205	SO	1		X									
003SB05001	G003SB050		0	1	3-28-02 1055	SO	4	X										
003SB05101	G003SB051		0	1	3-27-02 1730	SO	1		X									
003SB05102	G003SB051		3	5	~~3-27-02 1740~~ 3-28-02 1025	SO	4	X	X									Time + Date entered per T. Savey
003SB05201	G003SB052		0	1	3-27-02 1730	SO	1		X									
003SB05202	G003SB052		3	5	3-27-02 1740	SO	1	X	X									5242223

Sampled By: Guy D Hillis Date/Time: 3/27-28/02 Relinquished by: Guy D Hillis Date/Time: 3/28/02 1800

Additional Samplers: Ryan Bitely, Darryl Gates

Received By Lab: K Conner Date/Time: 3/29/02 120 Relinquished by: _____ Date/Time: _____

Received By: _____ Date/Time: _____ Shipped Via: UPS ~~FedEx~~ Hand Other Tracking#: _____

Remarks: Fax results to Bill Elliot 352-333-7886 & Herb Kelly 352-271-4811 Temperature: _____

Receipt Exceptions: _____

Laboratory:	STL
Project Name:	Charleston Navy Complex
Site Name:	Zone G, SWMU 3
Project Number:	158814.PM.04
TAT:	1-QTAT-14
Project Manager:	Tom Beisel
QA Level:	level 3
Address:	GNV: 3011 SW Williston Rd., Gainesville, FL 32605
	ATL: 115 Perimeter Center Place NE, Suite 700, Atlanta, GA 30346-1278
Send Report To:	see last page of COC
EDD:	CNC format

Lab Batch/SDG: _____

Sample ID	Station ID	Sample Description	Depth Begin	Depth End	Date & Time Collected	Matrix	# of containers	VOCs (SW8260B) 3 - 5g Encores	Pesticides (SW8081) 1 - 4 ounce jar	VOCs (SW8260B) 3 - 40mL vial	Pesticides (SW8081) 2 - 1L amber							Comments
003CB05202	G003SB052		3	5	3.27.02 1740	SO	1	X	X									
003SB05301	G003SB053		0	1	3-28-02 0930	SO	1		X									
003SB05302	G003SB053		3	5	3-28-02 0940	SO	5	X	X									
003SB05401	G003SB054		0	1	3.27.02 1520	SO	1		X									
003SB05402	G003SB054		3	5	3.27.02 1530	SO	1	X	X									
003SB05501	G003SB055		0	1	3.27.02 1500	SO	1		X									
003SB05502	G003SB055		3	5	3.27.02 1510	SO	1	X	X									
003SB05601	G003SB056		0	1	3.27.02 1605	SO	1		X									
003SB05602	G003SB056		3	5	3.27.02 1615	SO	1	X	X									
003SB05701	G003SB057		0	1	3.27.02 1620	SO	1		X									
003SB05702	G003SB057		3	5	3.27.02 1630	SO	1	X	X									
003SB05801	G003SB058		0	1	3.27.02 1650	SO	1		X									
003SB05802	G003SB058		3	5	3.27.02 1655	SO	1	X	X									
003SB05802MS	G003SB058		3	5	3.27.02 1655	SO	1	X	X									MS
003SB05802SD	G003SB058		3	5	3.27.02 1655	SO	1	X	X									MSD
003SB05901	G003SB059		0	1	3.28.02 0920	SO	1		X									
003SB05902	G003SB059		3	5	3.28.02 0930	SO	1		X									
003SB06003	G003SB060		1	2	3.27.02 1315	SO	1		X									
003SB06103	G003SB061		1	2	3.27.02 1330	SO	1		X									
003SB06203	G003SB062		1	2	3.27.02 1345	SO	1		X									S242223

Sampled By: Guy D Willis Date/Time: 3/27-28/02

Relinquished by: Guy D Willis Date/Time: 3/28/02 1800

Additional Samplers: Ryan Bitely, Darryl Bates

Received By Lab: K Comer Date/Time: 3/29/02 120

Relinquished by: _____ Date/Time: _____

Received By: _____ Date/Time: _____

Shipped Via: UPS FedEx Hand Other Tracking#: _____

Remarks: **Fax results to Bill Elliot 352-333-7886 & Herb Kelly 352-271-4811**

Temperature: _____

Receipt Exceptions: _____

Laboratory:	STL
Project Name:	Charleston Navy Complex
Site Name:	Zone G, SWMU 3
Project Number:	158814.PM.04
TAT:	1-QTAT-14
Project Manager:	Tom Beisel
QA Level:	level 3
Address:	GNV: 3011 SW Williston Rd., Gainesville, FL 32605
	ATL: 115 Perimeter Center Place NE, Suite 700, Atlanta, GA 30346-1278
Send Report To:	see last page of COC
EDD:	CNC format

Lab Batch/SDG:

Sample ID	Station ID	Sample Description	Depth Begin	Depth End	Date & Time Collected	Matrix	# of containers	VOCs (SW8260B) 3 - 5g Encores	Pesticides (SW8081) 1 - 4 ounce jar	VOCs (SW8260B) 3 - 40mL vial	Pesticides (SW8081) 2 - 1L amber							Comments
003SB06203MS	G003SB062		1	2	3.27.02 1345	SO	1		X									MS
003SB06203SD	G003SB062		1	2	3.27.02 1345	SO	1		X									MSD
003SB06304	G003SB063		5	6	3.27.02 1415	SO	1		X									
003SB06403	G003SB064		1	2	3.27.02 1305	SO	1		X									
003SB06503	G003SB065		1	2	3-28.02 1110	SO	1		X									
003CB06503	G003SB065		1	2	3-28-02 1110	SO	1		X									
003SB06603	G003SB066		1	2	3-27.02 1220	SO	1		X									
003SB06701	G003SB067		0	1	3.27.02 1435	SO	1		X									
003SB06702	G003SB067		3	5	3.27.02 1445	SO	1		X									
003EB037M1	G003EB037				3.27.02 1750	SQ	2			[illegible]	X							EB
003TB037M1	G003TB037				3.27.02 —	SQ	3			X								TB Not shipped per T. Carey [illegible] 4/1/02
003EB038M1	G003EB038				3.28.02 1130	SQ	5			X	X							EB
003TB038M1	G003TB038				3.28.02	SQ	3			X								TB
																		S242223

Sampled By: Greg D Willis Date/Time: 3/27 28/02

Relinquished by: Greg D Willis Date/Time: 3/28/02 1800

Additional Samplers: Ryan Bitely, Darryl Gates

Received By Lab: K Comm Date/Time: 3/29/02 120

Relinquished by: Date/Time:

Received By: Date/Time:

Shipped Via: UPS FedEx Hand Other Tracking#:

Remarks: Fax results to Bill Elliot 352-333-7886 & Herb Kelly 352-271-4811

Temperature:

Receipt Exceptions:

CH2M HILL Chain of Custody/ Laboratory Analysis Form

Laboratory: STL

Project Name: Charleston Navy Complex

Site Name: Zone G, SWMU 3

Project Number: 158814.PM.04

TAT: 1-QTAT-14

Project Manager: Tom Beisel

QA Level: level 3

Address: GNV: 3011 SW Williston Rd., Gainesville, FL 32605

ATL: 115 Perimeter Center Place NE, Suite 700, Atlanta, GA 30346-1278

Send Report To: see last page of COC

EDD: CNC format

Lab Batch/SDG:

RECEIVED MAY 30 2002

Sample ID	Station ID	Sample Description	Depth Begin	Depth End	Date & Time Collected	Matrix	# of containers	Pesticides (SW8081) 1 - 4 ounce jar	Pesticides (SW8081) 2 - 1L amber									Comments
003SB06801	G003SB068		0	1	5-13-02/1450	SO	1	X										
003SB06803	G003SB068		1	2	5-13-02/1455	SO	1	X										
003SB06901	G003SB069		0	1	5-13-02/1520	SO	1	X										
003CB06901	G003SB069		0	1	5-13-02/1520	SO	1	X										
003SB06903	G003SB069		1	2	5-13-02/1525	SO	1	X										
003SB07001	G003SB070		0	1	5-15-02/0830	SO	1	X										
003SB07002	G003SB070		3	5	5-15-02/0840	SO	1	X										
003SB07003	G003SB070		1	2	5-15-02/0835	SO	1	X										
003SB07101	G003SB071		0	1	5-15-02/0855	SO	1	X										
003SB07103	G003SB071		1	2	5-15-02/0900	SO	1	X										
003SB07201	G003SB072		0	1	5-15-02/1110	SO	1	X										
003SB07203	G003SB072		1	2	5-15-02/1120	SO	1	X										
003SB07301	G003SB073		0	1	5-15-02/0930	SO	1	X										
003SB07303	G003SB073		1	2	5-15-02/0935	SO	1	X										
003CB07303	G003SB073		1	2	5-15-02/0935	SO	1	X										
003SB07401	G003SB074		0	1	5-13-02/1530	SO	1	X										
003SB07403	G003SB074		1	2	5-13-02/1535	SO	1	X										
003SB07501	G003SB075		0	1	5-15-02/1030	SO	1	X										
003SB07501MS	G003SB075		0	1	5-15-02/1030	SO	1	X										MS
003SB07501SD	G003SB075		0	1	5-15-02/1030	SO	1	X										MSD

Sampled By: Andrew O'Connor & A. Stokes Date/Time: 5-13 & 5-15-02

Relinquished by: [signature] Date/Time: 5-16-02/1600

Additional Samplers: C. Deas

Received By Lab: [signature] Date/Time: 5-17-02

Relinquished by: Date/Time

Received By: [signature] Date/Time: 915

Shipped Via: UPS FedEx Hand Other Tracking#:

Remarks: Fax results to David Lane 352-271-4846.

Temperature:

Receipt Exceptions:

(5243436)

Laboratory: STL

Project Name: Charleston Navy Complex

Site Name: Zone G, SWMU 3

Project Number: 158814.PM.04

TAT: 1-QTAT-14

Project Manager: Tom Beisel

QA Level: level 3

Address: GNV: 3011 SW Williston Rd., Gainesville, FL 32605

ATL: 115 Perimeter Center Place NE, Suite 700, Atlanta, GA 30346-1278

Send Report To: see last page of COC

EDD: CNC format

Lab Batch/SDG:

Sample ID	Station ID	Sample Description	Depth Begin	Depth End	Date & Time Collected	Matrix	# of containers	Pesticides (SW8081) 1 - 4 ounce jar	Pesticides (SW8081) 2 - 1L amber	Comments
003SB08403	G003SB084		1	2	5-13-02/1440	SO	1	X		
003EB068M2	G003EB068				5-13-02/1537	SQ	2		X	EB
003EB069M2	G003EB069				5-15-02/1545	SQ	2		X	EB
003EB070M2	G003EB070				5-15-02/0845	SQ	2		X	EB

Sampled By A. Overman & A. Stokes Date/Time 5-13 : 5-15-02

Relinquished by: [signature] Date/Time 5-16-02/1600

Additional Samplers:

Received By Lab: [signature] Date/Time

Relinquished by: Date/Time

Received By: Date/Time

Shipped Via: UPS FedEx Hand Other Tracking#:

Remarks: Fax results to David Lane 352-271-4846.

Temperature:

Receipt Exceptions:

13436

2M HILL Chain of Custody/ Laboratory Analysis Form

Laboratory: STL

Project Name: Charleston Navy Complex

Site Name: Zone G, SWMU 3

Project Number: 158814.PM.04

TAT: 1-QTAT-14

Project Manager: Tom Beisel

QA Level: level 3

Address: GNV: 3011 SW Williston Rd., Gainesville, FL 32605

ATL: 115 Perimeter Center Place NE, Suite 700, Atlanta, GA 30346-1278

Send Report To: see last page of COC

EDD: CNC format

Lab Batch/SDG:

Sample ID	Station ID	Sample Description	Depth Begin	Depth End	Date & Time Collected	Matrix	# of containers	Pesticides (SW8081) 1 - 4 ounce jar	Pesticides (SW8081) 2 - 1L amber									Comments
003SB07503	G003SB075		1	2	5-15-02/1040	SO	1	X										
003SB07601	G003SB076		0	1	5-15-02/1000	SO	1	X										
003SB07603	G003SB076		1	2	5-15-02/1005	SO	1	X										
003SB07701	G003SB077		0	1	5-15-02/1200	SO	1	X										
003SB07702	G003SB077		3	5	5-15-02/1210	SO	1	X										
003SB07703	G003SB077		1	2	5-15-02/1205	SO	1	X										
003SB07801	G003SB078		0	1	5-15-02/1140	SO	1	X										
003SB07802	G003SB078		3	5	5-15-02/1150	SO	1	X										
003CB07802	G003SB078		3	5	5-15-02/1150	SO	1	X										
003SB07803	G003SB078		1	2	5-15-02/1145	SO	1	X										
003SB07901	G003SB079		0	1	5-15-02/1530	SO	1	X										
003SB07903	G003SB079		1	2	5-15-02/1535	SO	1	X										
003SB08001	G003SB080		0	1	5-15-02/1515	SO	1	X										
003SB08003	G003SB080		1	2	5-15-02/1520	SO	1	X										
003SB08101	G003SB081		0	1	5-15-02/1455	SO	1	X										
003SB08103	G003SB081		1	2	5-15-02/1500	SO	1	X										
003SB08203	G003SB082		1	2	5-15-02/1510	SO	1	X										
003SB08203MS	G003SB082		1	2	5-15-02/1510	SO	1	X										MS
003SB08203SD	G003SB082		1	2	5-15-02/1510	SO	1	X										MSD
003SB08303	G003SB083		1	2	5-13-02/1430	SO	1	X										

Sampled By Andrew O'Connor & Aaron Stokes Date/Time 5-13 & 5-15-02

Relinquished by: [signature] Date/Time 5-16-02/1600

Additional Samplers:

Received By Lab: [signature] Date/Time

Relinquished by: Date/Time

Received By: [signature] Date/Time

Shipped Via: UPS FedEx Hand Other Tracking#:

Remarks: Fax results to David Lane 352-271-4846.

Temperature:

Receipt Exceptions: 82-48436

2

CH2M HILL Chain of Custody/ Laboratory Analysis Form

COC Tracking #: **ZG003-032202-01** page 3 of 4

aboratory: STL

roject Name: Charleston Navy Complex

Site Name: Zone G, SWMU 3

Project Number: 158814.PM.04

TAT: 1-QTAT-14

Project Manager: Tom Beisel

QA Level: level 3

Address: GNV: 3011 SW Williston Rd., Gainesville, FL 32605

ATL: 115 Perimeter Center Place NE, Suite 700, Atlanta, GA 30346-1278

Send Report To: see last page of COC

EDD: CNC format

Lab Batch/SDG:

Sample ID	Station ID	Sample Description	Depth Begin	Depth End	Date & Time Collected	Matrix	# of containers	Pesticides (SW8081) 1 - 4 ounce jar	Pesticides (SW8081) 2 - 1L amber	Comments
003SB08403	G003SB084		1	2	5-13-02/1440	SO	1	X		
003EB068M2	G003EB068				5-13-02/1537	SQ	2		X	EB
003EB069M2	G003EB069				5-15-02/1545	SQ	2		X	EB
003EB070M2	G003EB070				5-15-02/0845	SQ	2		X	EB

ampled By A. Owens / A. Stokes Date/Time 5-13 : 5-15-02

Relinquished by: Date/Time 5-16-02/1600

dditional Samplers:

eceived By Lab: Date/Time

Relinquished by: Date/Time

eceived By: Date/Time

Shipped Via: UPS FedEx Hand Other Tracking#:

emarks: Fax results to David Lane 352-271-4846.

Temperature:

Receipt Exceptions:

CH2M HILL Chain of Custody/ Laboratory Analysis Form

COC Tracking #: ZG003-061002-0 page 1 of 2

Laboratory:	~~MCGEL~~ STL
Project Name:	Charleston Navy Complex
Site Name:	Zone G, SWMU 3
Project Number:	158814.PM.04
TAT:	1-QTAT-3
Project Manager:	Tom Beisel
QA Level:	level 3
Address:	GNV: 3011 SW Williston Rd., Gainesville, FL 32605
	ATL: 115 Perimeter Center Place NE, Suite 700, Atlanta, GA 30346-1278
Send Report To:	see last page of COC
EDD:	CNC format

Lab Batch/SDG:

Sample ID	Station ID	Sample Description	Depth Begin	Depth End	Date & Time Collected	Matrix	# of containers	PCBs (SW8082) 1 - 4 ounce jar	Pesticides (SW8081A)	PAHs (SW8270C)	PCBs (SW8082) 2 - 1L amber	Pesticides (SW8081A)	PAHs (SW8270C) 2 - 1L amber	Arsenic (SW6010B) 1 - 4 ounce jar	Arsenic (SW6010B) 1 - 0.5L HDPE, HNO3			Comments
003SB08501	G003SB085		0	1	6-13-02/0945	SO	1		X									
003SB08601	G003SB086		0	1	6-13-02/0955	SO	1		X									samples
003SB08601MS	G003SB086		0	1	6-13-02/0955	SO	1		X									complete
003SB08601SD	G003SB086		0	1	6-13-02/0955	SO	1		X									
003SB08702	G003SB087		3	5	6-13-02/1030	SO	1		X									
003SB08801	G003SB088		0	1	6-13-02/1040	SO	1		X									
003SB08803	G003SB088		1	3	6-13-02/1045	SO	1		X									
003SB08901	G003SB089		0	1	6-13-02/1100	SO	1		X									
003SB08903	G003SB089		1	3	6-13-02/1105	SO	1		X									
003SB09001	G003SB090		0	1	6-13-02/1120	SO	1		X									RCRA Site
003SB09003	G003SB090		1	3	6-13-02/1125	SO	1		X									
003CB09003	G003SB090		1	3	6-13-02/1125	SO	1		X									
003SB09101	G003SB091		0	1	6-13-02/1145	SO	1		X									
003SB09103	G003SB091		1	3	6-13-02/1150	SO	1		X									
003SB09202	G003SB092		3	5	6-13-02/1159	SO	1		X									
003EB085M3	G003EB085				~~6-13-02~~/1205	SQ	2					X						EB

RUSH!

Sampled By: ANDREW O'CONOR Date/Time: 6-13-02 Relinquished by: [signature] Date/Time: 6-13-02/16

Additional Samplers: C. DEAS D. DEAS

Received By Lab: [signature] Date/Time: ~~061302~~ Relinquished by: Date/Time:

Received By: Date/Time: 061402 0903 Shipped Via: UPS FedEx Hand Other Tracking#:

Remarks: Fax results to David Lane 352-271-4846. Temperature:

Receipt Exceptions: 5244137

CH2M HILL Chain of Custody/ Laboratory Analysis Form

COC Tracking #: **ZG003-071202-01** page 1 of 2

Laboratory: STL

Project Name: Charleston Navy Complex

Site Name: Zone G, SWMU 3

Project Number: 158814.PM.04

TAT: call Herb Kelly

Project Manager: Tom Beisel

QA Level: level 3

Address: GNV: 3011 SW Williston Rd., Gainesville, FL 32605

ATL: 115 Perimeter Center Place NE, Suite 700, Atlanta, GA 30346-1278

Send Report To: see last page of COC

EDD: CNC format

Lab Batch/SDG:

Sample ID	Station ID	Sample Description	Depth Begin	Depth End	Date & Time Collected	Matrix	# of containers	PCBs (SW8082) 1 - 4 ounce jar	Pesticides (SW8081A)	PAHs (SW8270C)	PCBs (SW8082) 2 - 1L amber	Pesticides (SW8081A)	PAHs (SW8270C) 2 - 1L amber	Arsenic (SW6010B) 1 - 4 ounce jar	Arsenic (SW6010B) 1 - 0.5L HDPE, HNO3			Comments
003SB09301	G003SB093		0	1	7-25-02/ 1050	SO	1		X									
003SB09401	G003SB094		0	1	7-25-02/ 0942	SO	1		X								*	RCRA
003SB09403	G003SB094		1	3	7-25-02/ 0947	SO	1		X									
003SB09501	G003SB095		0	1	7-25-02/ 1015	SO	1		X								*	SAMPLES
003SB09503	G003SB095		1	3	7-25-02/ 1020	SO	1		X									COMPOSITE
003CB09503	G003SB095		1	3	7-25-02/ 1022	SO	1		X									
003SB09601	G003SB096		0	1	7-25-02/ 0930	SO	1		X									
003SB09701	G003SB097		0	1	7-25-02/ 1040	SO	1		X									
003EB093M4	G003EB093				7-25-02/ 1055	SQ	1					X						EB

Sampled By: A. O'CONOR

Date/Time: 7-25-02

Relinquished by: [signature]

Date/Time: 7-25-02/1500

Additional Samplers: A. STOKES

Received By Lab: [signature]

Date/Time: 7-26-02

Relinquished by:

Date/Time

Received By: [signature]

Date/Time: 9:12

Shipped Via: UPS FedEx Hand Other Tracking#:

Remarks: Fax results to David Lane 352-271-4846.

Temperature:

Report Exceptions:

(52-45320)

CH2M HILL Chain of Custody/ Laboratory Analysis Form

3-day if Possible

COC Tracking #: ZG003-082602-01 page 1 of 2

Laboratory: STL

Project Name: Charleston Navy Complex

Site Name: Zone G, SWMU 3

Project Number: 158814.PM.04

TAT: 14 days

Project Manager: Tom Beisel

QA Level: level 3

Address: GNV: 3011 SW Williston Rd., Gainesville, FL 32605

ATL: 115 Perimeter Center Place NE, Suite 700, Atlanta, GA 30346-1278

Send Report To: see last page of COC

EDD: CNC format

Lab Batch/SDG:

Sample ID	Station ID	Sample Description	Depth Begin	Depth End	Date & Time Collected	Matrix	# of containers	PCBs (SW8082) 1 - 4 ounce jar	Pesticides (SW8081A)	PAHs (SW8270C)	PCBs (SW8082) 2 - 1L amber	Pesticides (SW8081A)	PAHs (SW8270C) 2 - 1L amber	Arsenic (SW6010B) 1 - 4 ounce jar	Arsenic (SW6010B) 1 - 0.5L HDPE, HNO3			Comments
003SB09801	G003SB098		0	1	9.27.02/0810	SO	1		X									
~~003EB098M5~~	~~G003EB098~~					~~SQ~~						X						~~EB~~ pci/BC

RUSH!

RCRA Site

Sampled By ANDREW O'CONOR

Date/Time 9.27.02

Relinquished by: [signature]

Date/Time 9/27/02/1500

Additional Samplers:

Received By Lab: [signature]

Date/Time 09.28.02/1023

Relinquished by:

Date/Time

2

Data Validation Summary - Charleston Naval Complex – Zone G, SWMU 3

TO: William Elliott/ CH2M HILL/GNA

FROM: Amy Juchem/CH2M HILL/GNA
Herb Kelly/CH2M HILL/GNA

DATE: February 12, 2003

The purpose of this memorandum is to present the results of the data validation process for the soil samples collected at Zone G, SWMU 3. The samples were collected on June 11 to June 13, 2002 and December 6, 2002

The specific samples and analytical fractions reviewed are summarized below in Table 1.

The Quality Control areas that were reviewed and the resulting findings are documented within each subsection that follows. This data was validated for compliance with the analytical method requirements. This process also included a review of the data to assess the accuracy, precision, and completeness based upon procedures described in the guidance documents such as the Environmental Protection Agency (EPA) *National Functional Guidelines for Inorganic Data Review (EPA 2002) and National Functional Guidelines for Organic Data Review (EPA 1999)*. Quality assurance/quality control (QA/QC) summary forms and data reports were reviewed.

Samples were submitted to Severn Trent Services, STL Savannah Laboratories, Inc., in Savannah, Georgia for the following analyses: Toxicity Characteristic Leaching Procedure (TCLP) followed by analysis of Pesticides by SW-846 Method 8081A and Polychlorinated Biphenyls (PCBs) by SW-846 Method 8082.

Sample results that were not within the acceptance limits were appended with a qualifying flag, which consisted of a single- or double-letter code that indicated a possible problem with the data. The qualifying flags originated during the data review and validation processes. These also include the secondary, or the two-digit "sub-qualifier" flags. The secondary qualifiers provide the reasoning behind the assignment of a qualifier flag to the data. The secondary qualifiers are presented and defined below.

The following primary flags were used to qualify the data:

[=] Detected. The analyte was analyzed for and detected at the concentration shown.

[J] Estimated. The analyte was present but the reported value may not be accurate or precise.

[U] Undetected. The analyte was analyzed for but not detected above the method detection limit.

[UJ] Detection limit estimated. The analyte was analyzed for but qualified as not detected; the result is estimated.

[R] Rejected. The data is not useable.

Secondary Data Validation Qualifiers

Code	Definition
2S	Second Source
2C	Second Column Confirmation
BL	Blank
BD	Blank Spike/Blank Spike Duplicate or (LCS/LCSD) Precision
BS	Blank Spike/LCS
CC	Continuing Calibration Verification
DL	Dilution
FD	Field Duplicate
HT	Holding Time
IB	In-Between (metals – B's → J's)
IC	Initial Calibration
IS	Internal Standard
LD	Lab Duplicate
LR	Concentration exceeded Linear Range
MD	MS/MSD or LCS/LCSD Precision
MS	Matrix Spike/Matrix Spike Duplicate
OT	Other (see DV worksheet)
PD	Pesticide Degradation
PS	Post Spike
RE	Re-extraction/Re-analysis
SD	Serial Dilution
SS	Spiked Surrogate
TD	Total vs Dissolved
TN	Tune

Table 1 - Chemical Analytical Methods – Field and Quality Control Samples

Site	Station ID	Sample ID	Lab Sample ID	Matrix	Sample Type	Date Collected	TCLP Pesticides SW846	TCLP Herbicides SW846
CNC116	G003SA001	003SA001M3	S244137A*1	SO	N	06/13/02	X	
CNC116	G003SA002	003SA002M3	S244137A*2	SO	N	06/13/02	X	
CNC116	G003SA003	003SA003M3	S244137A*3	SO	N	06/13/02	X	
CNC116	G006SA001	006SA001M3	S244146*1	SO	N	06/11/02	X	X
CNC153	G003VA001	003VA001MW	S248834A*1	SO	N	12/06/02	X	
CNC116	LABQC	TCLP Extraction Blank	S2CNC116*1	WQ	LB		X	X
CNC116	LABQC	CNC1162BS	S2CNC116*2	WQ	BS		X	X
CNC153	LABQC	48834A3LB	S248834A*2	WQ	LB		X	
CNC153	LABQC	48834A3BS	S248834A*3	WQ	BS		X	

MATRIX CODE

SO – Soil
WQ – Water QC Samples

SAMPLE TYPE CODE

LB – Laboratory Blank
BS – Blank Spike
N - Native Sample

ANALYSIS CODE

PCBs – Polychlorinated Biphenyls

Organic Parameters

Quality Control Review

The following list represents the QA/QC measures that were reviewed during the data quality evaluation procedure for organic data.

- **Holding Times** – The holding times are evaluated to verify that samples were extracted and analyzed within holding times.
- **Blank samples** – Method blanks were provided for this project. Blank samples enable the reviewer to determine if an analyte may be attributed to sampling or laboratory procedures, rather than environmental contamination from site activities.
- **Surrogate Recoveries** – Surrogate Compounds are added to each sample and the recoveries are used to monitor lab performance and possible matrix interference.
- **Lab Control Sample (LCS)** – This sample is a "controlled matrix", either laboratory reagent water or Ottawa sand, in which target compounds have been added prior to extraction/analysis. The recoveries serve as a monitor of the overall performance of each step during the analysis, including sample preparation.
- **Matrix Spike/Matrix Spike Duplicate (MS/MSD) Samples** – Spike recovery is used to evaluate potential matrix interferences, as well as accuracy. Precision information is also determined by calculating the reproducibility between the recoveries of each spiked parameter.
- **Field Duplicate Samples** – These samples are collected to determine precision between a native and its duplicate. This information can only be determined when target compounds are detected.
- **GC/MS Tuning** – The mass spectrum of the tuning compound is evaluated for method compliance. The criteria are established to verify the proper mass assignment and mass resolution.
- **Initial Calibration** – The initial calibration ensures that the instrument is capable of producing acceptable qualitative and quantitative data for the compounds of interest.
- **Continuing Calibration** – The continuing calibration checks satisfactory performance of the instrument and its predicted response to the target compounds.
- **Confirmation** – If GCMS methodology is not initially used for analysis, SW-846 method 8000 requires confirmation when the composition of samples is not well characterized. Therefore, even when the identification has been confirmed on a dissimilar column or detector, the agreement of the quantitative results on both columns is evaluated. For Pesticide and PCB analyses covered in this report, confirmation was performed using a dissimilar analytical column. The laboratory analyzed samples with a gas chromatograph (GC) utilizing simultaneous primary and confirmation data acquisition. Per SW-86 method 8000, 40% RPD criteria was used as the acceptance limit.

- **Internal Standards** – The internal standards (retention time and response) are evaluated for method compliance. The internal standards are used in quantitation of the target parameters and monitor the instrument sensitivity and response for stability during each analysis.

Organochlorine Pesticides

The QA/QC parameters for the Organochlorine Pesticides analyses by method SW-846 8081 for all of the samples were within acceptable control limits.

Polychlorinated Biphenyls

The QA/QC parameters for the Polychlorinated Biphenyls analyses by method SW-846 8082 for all of the samples were within acceptable control limits.

Rejected Data

No data was rejected based upon the validation process.

Conclusion

A review of the analytical data submitted regarding the investigation of SWMU 3 in Zone G at the Charleston Naval Complex, Charleston, South Carolina by CH2M HILL has been completed. An overall evaluation of the data indicates that the sample handling, shipment, and analytical procedures have been adequately completed, and that the analytical results are usable.

The validation review demonstrated that the analytical systems were generally in control and the data results can be used in the decision making process.

CH2M HILL Chain of Custody/ Laboratory Analysis Form

COC Tracking #: **ZG003-120202-01** page of 2

Laboratory:	STL		
Project Name:	Charleston Navy Complex	**Site Name:**	Zone G, SWMU 3
Project Number:	158814.PM.04	**TAT:**	rush #549
Project Manager:	Tom Beisel	**QA Level:**	level 3
Address:	GNV: 3011 SW Williston Rd., Gainesville, FL 32605		
	ATL: 115 Perimeter Center Place NE, Suite 700, Atlanta, GA 30346-1278		
Send Report To:	see last page of COC	**EDD:**	CNC format

Lab Batch/SDG:

Sample ID	Station ID	Sample Description	Depth Begin	Depth End	Date & Time Collected	Matrix	# of containers	TCLP Pesticides (1311/8081A) 1 - 8 ounce jar	Pesticides (SW8081A) * 1 - 4 ounce jar	Pesticides (SW8081A) ** 1 - 4 ounce jar	Pesticides (SW8081A) ** 2 - 1L amber	Comments
003SB09901	G003SB099	confirmation sample	0	1	12/6/02 1035	SO	1		X			
003SB10001	G003SB100	confirmation sample	0	1	12/6/02 1045	SO	1		X			
003CB10001	G003SB100	confirmation sample	0	1	12/6/02 1045	SO	1		X			
003SB10101	G003SB101	confirmation sample	0	1	12/6/02 1040	SO	1		X			
003SB10201	G003SB102	delineation sample	0	1	12/6/02 1020	SO	1			X		
003SB10301	G003SB103	delineation sample	0	1	12/6/02 1015	SO	1			X		
003SB10401	G003SB104	delineation sample	0	1	12/6/02 1010	SO	1			X		
003EB099M6	G003EB099				12/6/02 1050	SO	2				X	EB
003VA001MW ✓	G003VA001	waste characterization			12/6/02 1050	SO	1	X				

S248834

Sampled By: Charlie Deas Date/Time: 12/6/02 1100 Relinquished by: [signature] Date/Time: 12/6/02 1130

Additional Samplers:

Received By Lab: Thomas Dunn Date/Time: 12/7/02 16:00 Relinquished by: Date/Time

Received By: Date/Time Shipped Via: UPS FedEx Hand Other Tracking#:

Remarks: Fax results to David Lane 352-271-4846 and Herb Kelly. Temperature:

Receipt Exceptions:

CH2M HILL Chain of Custody/ Laboratory Analysis Form

COC Tracking #: **ZF607-022202-01** page 1 of 2 3

Laboratory:	STL		
Project Name:	Charleston Navy Complex	**Site Name:**	Zone F, AOC 607
Project Number:	158814.PM.04	**TAT:**	1-QTAT-3
Project Manager:	Tom Beisel/ATL	**evel:**	Level 3
Address:	GNV: 3011 SW Williston Rd., Gainesville, FL 32605		
	CHS: 1849 Ave F, N. Charleston, SC 29406		
Send Report To:	see back of COC	**EDD:**	CNC format

Lab Batch/SDG:

Sample ID	Sample Description	Depth Begin	Depth End	Date & Time Collected	Matrix	# of containers	pesticides TCLP sw8081A 1-4 oz. Jar										Comments
							~~X~~										
003SA001M3	G003SA001			6-13-02/1420	SQ	1	X										TCLP
003SA002M3	G003SA002			6-13-02/1500	SQ	1	X										TCLP
003SA003M3	G003SA003			6-13-02/1515	SQ	1	X										TCLP

RUSH!

Sampled By A. O'Connor Date/Time 6-13-02 Relinquished by: [signature] Date/Time 6-13-02/1600

Additional Samplers: J. Degs, G. DeAS

Received By Lab: [signature] Date/Time 061302 Relinquished by: Date/Time

Receipt Exceptions: 061402 09-3

CH... HILL Chain of Custody/ Laboratory Analysis Form

COC Tracking #: **ZG006-060702-01** 2 of 2

Laboratory:	GEL
Project Name:	Charleston Navy Complex
Site Name:	Zone G, SWMU 6
Project Number:	158814.PM.04
TAT:	1-QTAT-7
Project Manager:	Tom Beisel
QA Level:	level 3
Address:	GNV: 3011 SW Williston Rd., Gainesville, FL 32605
	ATL: 115 Perimeter Center Place NE, Suite 700, Atlanta, GA 30346-1278
Send Report To:	see last page of COC
EDD:	CNC format

Lab Batch/SDG: 61902.

Sample ID	Station ID	Sample Description	Depth Begin	Depth End	Date & Time Collected	Matrix	# of containers	PCBs (SW8082) 1 - 4 ounce jar	Pesticides (SW8081A)	PAHs (SW8270C) 1 - 4 ounce jar	PCBs (SW8082) 2 - 1L amber	Pesticides (SW8081A)	PAHs (SW8270C) 2 - 1L amber	Arsenic (SW6010B) 1 - 4 ounce jar	Arsenic (SW6010B) 1 - 0.5L HDPE, HNO3			Comments
006SB04701	G006SB047	delineate & confirm	0	1		SO			X	X								
006SB04703	G006SB047	delineate & confirm	1	2		SO			X	X								
006SB04703MS	G006SB047	delineate & confirm	1	2		SO			X	X								MS
006SB04703SD	G006SB047	delineate & confirm	1	2		SO			X	X								MSD
006EB035M3	G006EB035					SQ					X	X	X		X			EB
006SA001M3	G006SA001	TCLP			6-11-02/1620	SQ	1	X	X									
	G006SB049					SO												
	G006SB049					SO												
	G006SB050					SO												
	G006SB050					SO												
	G006SB052					SO												
	G006SB052					SO												
	G006SB053					SO												
	G006SB053					SO												
	G006SB054					SO												
	G006SB054					SO												

RUSH!

Sampled By: Date/Time:

Relinquished by: Date/Time 1745 6-11-02

Additional Samplers:

Received By Lab: Date/Time 6-11-02 1745

Relinquished by: Date/Time 6.13.02 1126

Received By: Date/Time 6-14-02 9:03

Shipped Via: UPS FedEx Hand Other Tracking#: 5244146

Remarks: Fax results to David Lane 352-271-4846.

Temperature:

Receipt Exceptions:

HEARTLAND
ENVIRONMENTAL SERVICES, INC.

Data Validation Report

SDG#:	32020
Date:	January 14, 1998
Client Name:	EnSafe
Project/Site Name:	Charleston - Zone G
Date Sampled:	December 2-5, 1998
Number of Samples:	23 Aqueous Sample(s) with 0 MS/MSD(s)
Laboratory:	Southwest Laboratory of Oklahoma
Validation Guidance:	National Functional Guidelines for Organic and Inorganic Data, February, 1994
QA/QC Level:	EPA DQO Level III
Method(s) Utilized:	SW846 Third Edition
Analytical Fractions:	Volatiles, Semivolatiles, Pesticide/PCB's, Metals

Analytical data in this report were screened to determine usability of results and also to determine contractual compliance relative to these requirements and deliverables. This screening assumes analytical results are correct as reported and merely provides an interpretation of the reported quality control results. A minimum of 10% of all laboratory calculations have been verified as part of this validation. All instrument output, i.e. spectra, chromatograms, etc., for each sample have been carefully reviewed. The end-user is urged to review the Specific Findings and associated Data Qualifications presented in this report. Annotated Form 1s or spreadsheets for all samples reviewed are included after the Data Assessment Narratives. Form 1s for MS/MSD samples or spreadsheets are not annotated.

The release of this Data Validation Report is authorized by the following signature:

for Kimberly S. Shopp — 14 January 1998

Paul B. Humburg, President — Date

4127 Plaza 94 South · St. Charles, MO 63304
(314) 936-1332 · Fax (314) 936-1335

SDG# 32020

Samples and Fractions Reviewed

Sample Identifications — Analytical Fractions

ENSAFE ID	MATRIX	VOA		SVOA		P/P		TAL	
003GW00104	WATER					X		X	
003DW00104	WATER	X		X		X		X	
003EW00104	WATER	X		X		X		X	
003FW00104	WATER	X		X		X		X	
003GW00204	WATER					X		X	
003HW00204	WATER					X		X	
006GW00104	WATER	X		X		X		X	
003TW00204	WATER	X							
003GW00304	WATER					X		X	
006GW00304	WATER	X		X		X		X	
006GW00404	WATER	X		X		X		X	
006HW00404	WATER	X		X		X		X	
006TW00404	WATER	X							
006GW00204	WATER	X		X		X		X	
006GW00504	WATER	X		X		X		X	
006GW00604	WATER	X		X		X		X	
006GW00704	WATER	X		X		X		X	
006TW00604	WATER	X							
120GW00104	WATER	X		X		X		X	
120GW00204	WATER	X		X		X		X	
120GW00304	WATER	X		X		X		X	
120HW00304	WATER	X		X		X		X	
120TW00304	WATER	X							
Total Billable Samples (Water/Soil)		19	0	15	0	19	0	19	0

VOA= SW846 Volatiles
SVOA= SW846 Semivolatiles
P/P= SW846 Pesticide/PCB's
TAL= SW846 Metals

DATA ASSESSMENT AND NARRATIVE

VOLATILE ORGANICS

General

The organic findings offered in this screening report assumes that all analytical results are correct as reported and is based upon the examination of the reported holding times, blank analysis results, surrogate and matrix spike recoveries, GC/MS performance, tuning results, calibration results and internal standard areas. This report was prepared in compliance relative to the analytical and deliverable requirements specified in the U.S. EPA SW846, Method 8260 with CLP deliverables; the National Functional Guidelines for Organic Data Review, February 1994, and DQO Level III. All comments made within this report should be considered when examining the analytical results. Please refer the specific findings found in each category to the Summary of Data Qualifications table.

SDG # 32020

A validation was performed on the Volatile Data from SDG 32020. The data was evaluated based on the following parameters.

*	•	Data Completeness
*	•	Holding Times
*	•	GC/MS Tuning
	•	Calibrations
*	•	Internal Standard Performance
*	•	Blanks
*	•	Surrogate Recoveries
*	•	Matrix Spike/Matrix Spike Duplicate
*	•	Field Duplicates
*	•	Compound Identification /Quantitation

* - All criteria were met for this parameter

Continuing calibrations

The continuing calibrations that were analyzed with this data package exhibited %Ds that were not within %D continuing calibration criteria. All RRFs were within calibration criteria.

Continuing Calibrations (continued)

Specific Finding:

The continuing calibration, I25631, contained compounds with %Ds greater than 50% D but less than 90% D. For the samples and non compliant compounds listed below, qualify all positive results as estimated (J) and all non detects as estimated (UJ).

006GW00504	acetone (-58.8)
006GW00604	
006GW00704	
006GW00204	

The continuing calibration, K22153, contained compounds with %Ds greater than 50% D but less than 90% D. For the samples and non compliant compounds listed below, qualify all positive results as estimated (J) and all non detects as estimated (UJ).

120GW00304	methylene chloride (-68.1)
120HW00304	

The continuing calibration, K22153, contained compounds with %Ds greater than 90% D. For the samples and non compliant compounds listed below, qualify all positive results as estimated (J) and reject all non detects (UR).

120GW00304	vinyl acetate (350.0)
120HW00304	xylene (total) (219.0)

The continuing calibration, UL3438, contained compounds with RRFs less than 0.05. For the samples and non compliant compounds listed below, qualify all positive results as estimated (J) and reject all non detects (UR).

006GW00104	acetone

The continuing calibration, UL3503, contained compounds with RRFs less than 0.05. For the samples and non compliant compounds listed below, qualify all positive results as estimated (J) and reject all non detects (UR).

120GW00104	acetone
120GW00204	

QC Blanks

The QC blanks associated with these samples exhibited contamination and the samples required qualifications. The end-user should note that the action levels indicated for the blank analysis may not involve the same weights, volumes,dilution factors, or percent moisture as the assocoiated samples. These factors must be taken into consideration when applying the 5X or 10X criteria to field samples.

Associated blank	Compound	Conc.	Action level
006TW00604	methylene chloride	1J	10

Samples	Compound	Qualification
006GW00704	methylene chloride	CRQL

System Performance and Overall Assessment

The laboratory did not encounter any large problems. The data as presented requires qualifications.

GLOSSARY OF DATA QUALIFIERS

QUALIFICATION CODES

U = Not detected

J = Estimated value

UJ = Reported quantitation limit is qualified as estimated

UR = Result is rejected and unusable

METHOD BLANK QUALIFICATION CODES

CRQL =	The sample result for the blank contaminant is less than the sample CRQL and is less than 10X the method blank value. The sample result for the blank contaminant is rejected and the CRQL for that analyte is reported.
U =	The sample result for the blank contaminant is greater than the sample CRQL and is less than 10X the method blank value. The sample result for the blank contaminant is qualified as non detected at the analyte value reported.
No Action =	The sample result for the blank contaminant is greater than the sample CRQL and is greater than 10X the method blank value. The sample result for the blank contaminant is not qualified with any blank qualifiers.

The specific findings will be noted in numerical form on the Form Is in this data validation report. These specific finding footnotes will reflect the conclusions found in the data validation process that resulted in the qualification of the data.

SUMMARY OF DATA QUALIFICATIONS

SAMPLE ID	ANALYTE ID	DL	QL
006GW00504 006GW00604 006GW00704 006GW00204	acetone (-58.8)	+/-	J/UJ
120GW00304 120HW00304	methylene chloride (-68.1)	+/-	J/UJ
120GW00304 120HW00304	vinyl acetate (350.0) xylene (total) (219.0)	+/-	J/UR
006GW00104	acetone	+/-	J/UR
120GW00104 120GW00204	acetone	+/-	J/UR
006GW00704	methylene chloride	+	CRQL

* DL denotes the Form I qualifier supplied by the laboratory
QL denotes the qualifier used by the data validation firm
\+ in the DL column denotes a positive result
\- in the DL column denotes a non detect result

DATA ASSESSMENT AND NARRATIVE

SEMIVOLATILE ORGANICS

General

The organic findings offered in this screening report assumes that all analytical results are correct as reported and is based upon the examination of the reported holding times, blank analysis results, surrogate and matrix spike recoveries, GC/MS performance, tuning results, calibration results and internal standard areas. This report was prepared in compliance relative to the analytical and deliverable requirements specified in the U.S. EPA SW846, Method 8270 with CLP deliverables; National Functional Guidelines for Organic Data Review, February 1994, and DQO Level III. All comments made within this report should be considered when examining the analytical results (Form I's).

SDG # 32020

A validation was performed on the Semivolatile Data from SDG 32020. The data was evaluated based on the following parameters.

*	•	Data Completeness
*	•	Holding Times
*	•	GC/MS Tuning
*	•	Calibrations
*	•	Internal Standard Performance
	•	Blanks
*	•	Surrogate Recoveries
*	•	Matrix Spike/Matrix Spike Duplicate
*	•	Field Duplicates
	•	Compound Identification /Quantitation

* - All criteria were met for this parameter

QC Blanks

The QC blanks associated with these samples exhibited contamination and the samples required qualifications. The end-user should note that the action levels indicated for the blank analysis may not involve the same weights, volumes,dilution factors, or percent moisture as the assocoiated samples. These factors must be taken into consideration when applying the 5X or 10X criteria to field samples.

QC Blanks (continued)

Associated blank	Compound	Conc.	Action level
006EW00104	bis(2-ethylhexyl) phthalate	14 ug/L	140 ug/L
006FW00104	bis(2-ethylhexyl) phthalate	1J ug/L	10 ug/L

Samples	Compound	Qualification
006GW00104 006GW00204 006HW00404 006GW00504 006GW00604	bis(2-ethylhexyl) phthalate	CRQL
006GW00704 120GW00204 120HW00304	bis(2-ethylhexyl) phthalate	U

Compound Identification/Quantitation

For sample 006GW00404, replace the E-flagged results with the D-flagged results in the diluted sample. For the diluted sample 006GW00404DL, do not use any results except for the D-flagged results with corresponding E-flagged results in the original sample analysis.

System Performance and Overall Assessment

The laboratory did not encounter any large problems. The data as presented required qualifications.

GLOSSARY OF DATA QUALIFIERS

QUALIFICATION CODES

U = Not detected

J = Estimated value

UJ = Reported quantitation limit is qualified as estimated

R = Result is rejected and unusable

D= Result value is based on the dilution analysis

METHOD BLANK QUALIFICATION CODES

CRQL = The sample result for the blank contaminant is less than the sample CRQL and is less than 10X the method blank value. The sample result for the blank contaminant is rejected and the CRQL for that analyte is reported.

U = The sample result for the blank contaminant is greater than the sample CRQL and is less than 10X the method blank value. The sample result for the blank contaminant is qualified as non detected at the analyte value reported.

No Action = The sample result for the blank contaminant is greater than the sample CRQL and is greater than 10X the method blank value. The sample result for the blank contaminant is not qualified with any blank qualifiers.

The specific findings will be noted in numerical form on the Form Is in this data validation report. These specific finding footnotes will reflect the conclusions found in the data validation process that resulted in the qualification of the data.

SUMMARY OF DATA QUALIFICATIONS

SAMPLE ID	ANALYTE ID	DL	QL
006GW00104 006GW00204 006HW00404 006GW00504 006GW00604	bis(2-ethylhexyl) phthalate	+	CRQL
006GW00704 120GW00204 120HW00304	bis(2-ethylhexyl) phthalate	+	U
006GW00404	E-flagged results	+	D
006GW00404DL	All results except D-flagged results	+/-	Do not use

* DL denotes the Form I qualifier supplied by the laboratory
QL denotes the qualifier used by the data validation firm
+ in the DL column denotes a positive result
- in the DL column denotes a non detect result

DATA ASSESSMENT NARRATIVE

PESTICIDE/AROCLORS

General

The organic findings offered in this screening report assumes that all analytical results are correct as reported and is based upon the examination of the reported holding times, blank analysis results, surrogate and matrix spike recoveries, GC performance, and calibration results. This report was prepared in compliance relative to the analytical and deliverable requirements specified in the SW846 Method 8081; the National Functional Guidelines for Organic Data Validation, February 1994; and DQO Level III requirements. All comments made within this report should be considered when examining the analytical results. Please refer the specific findings found in each category to the Summary of Data Qualification table.

SDG # 32020B

A validation was performed on the Pesticide/Aroclor Data from SDG 32020B. The data was evaluated based on the following parameters:

*	•	Data Completeness
*	•	Holding Times
*	•	GC Performance
*	•	Calibration
*	•	Blanks
	•	Surrogate Recoveries
*	•	Matrix Spike/Matrix Spike Duplicates
*	•	Field Duplicates
*	•	Compound Identification
*	•	Compound Quantitation

* - All criteria were met for this parameter.

Method Deviations

The method requires that all target compounds, with the exception of several PCBs, be analyzed with a five (5) point calibration curve. The laboratory analyzed a single point curve for Toxaphene. No positive results were reported for this compound, therefore the data did not require qualification.

Surrogate Recoveries

The samples listed below exhibited low DCB recoveries during the pesticide analysis. The positive pesticide results are qualified as estimated, J, and the non-detect pesticide results are qualified as estimated, UJ.

Sample ID	Surrogate	% Recovery
003GW00304	DCB-1/DCB-2	42%/34%
006GW00404	DCB-2	51%
006GW00204	DCB-1/DCB-2	40%/39%
006GW00504	DCB-2	51%
006GW00604	DCB-1/DCB-2	46%/46%
006GW00704	DCB-1/DCB-2	46%/47%
120GW00104	DCB-1/DCB-2	34%/35%
120GW00204	DCB-1/DCB-2	48%/47%
120GW00304	DCB-1/DCB-2	49%/50%
120HW00304	DCB-1/DCB-2	39%/39%

Surrogate Recoveries, Continued

The samples listed below exhibited low TCX and/or DCB recoveries during the PCB analysis. The positive PCB results are qualified as estimated, J, and the non-detect PCB results are qualified as estimated, UJ.

Sample ID	Surrogate	% Recovery
006GW00204	DCB-1/DCB-2	35%/44%
006GW00504	DCB-1/DCB-2	37%/37%
006GW00604	DCB-1/DCB-2	33%/33%
006GW00704	DCB-1/DCB-2	42%/42%
120GW00104	TCX-2 DCB-1/DCB-2	32% 24%/24%
120GW00204	DCB-1/DCB-2	42%/43%
120GW00304	DCB-1/DCB-2	37%/37%
120HW00304	DCB-1/DCB-2	33%/34%
006GW00104	TCX-1/TCX-2 DCB-1/DCB-2	31%/33% 38%/36%
006GW00304	DCB-1	45%
006GW00404	DCB-1/DCB-2	38%/36%
006HW00404	TCX-1/TCX-2 DCB-1/DCB-2	29%/28% 39%/37%

System Performance and Overall Assessment

The data required qualifications.

GLOSSARY OF DATA QUALIFIERS

QUALIFICATION CODES

U = Not detected

J = Estimated value

UJ = Reported quantitation limit is qualified as estimated

NJ = Result is considered presumptively present at an estimated concentration

UR = Result is rejected and unusable

D = Result value is based on dilution analysis

METHOD BLANK QUALIFICATION CODES

CRQL = The sample result for the blank contaminant is less than the sample CRQL and is less than 5X the method blank value. The sample result for the blank contaminant is rejected and the CRQL for that compound is reported.

U = The sample result for the blank contaminant is greater than the sample CRQL and is less than 5X the method blank value. The sample result for the blank contaminant is qualified as non detected at the compound value reported.

No Action = The sample result for the blank contaminant is greater than the sample CRQL and is greater than 5X the method blank value. The sample result for the blank contaminant is not qualified with any blank qualifiers.

SUMMARY OF DATA QUALIFICATIONS

SAMPLE ID	COMPOUND ID	DL	QL
003GW00304	All pesticides	+/-	J/UJ
006GW00404			
006GW00204			
006GW00504			
006GW00604			
006GW00704			
120GW00104			
120GW00204			
120GW00304			
120HW00304			
006GW00204	All PCBs	+/-	J/UJ
006GW00504			
006GW00604			
006GW00704			
120GW00104			
120GW00204			
120GW00304			
120HW00304			
006GW00104			
006GW00304			
006GW00404			
006HW00404			

* DL denotes the Form I qualifier supplied by the laboratory
QL denotes the qualifier used by the data validation firm
\+ in the DL column denotes a positive result
\- in the DL column denotes a non-detect result

DATA ASSESSMENT NARRATIVE
METALS

General

The inorganic findings offered in this screening report assumes that all analytical results are correct as reported and is based upon the examination of the reported holding times, blank analysis results, matrix spike and LCS recoveries, matrix duplicates and calibration results. This report was prepared in compliance relative to the analytical and deliverable requirements specified in the SW 846 Appendix IX Methods; the Functional Guidelines for Inorganic Data Validation, February 1994, and DQO Level III requirements. All comments made within this report should be considered when examining the analytical results. Please refer the specific findings found in each category to the Summary of Data Qualification table.

SDG # 32020

A validation was performed on the Metals Data from SDG 32020. The data was evaluated based on the following parameters.

*	•	Data Completeness
*	•	Holding Times
*	•	Calibrations
	•	Blanks
*	•	Interferences
*	•	Matrix Spike Recovery
*	•	Matrix Duplicates
	•	Field Duplicates
*	•	Laboratory Control Samples
*	•	Serial Dilutions

* - All criteria were met for this parameter.

Preparation and Field Blanks

The preparation blank exhibited contamination for the following elements.

Elements	Conc.	Samples affected
Sodium	75.6 ug/l	no impact

The calibration blank exhibited contamination for the following elements.

Elements	Conc.	Samples affected
Antimony	4.6 ug/l	all water samples below 23.0 ug/l

The field blanks exhibited contamination for the following elements.

Elements	Conc.	Samples affected
Aluminum	12.2 ug/l	all water samples below 61.0 ug/l
Barium	0.57 ug/l	no impact
Calcium	48.1 ug/l	no impact
Chromium	1.6 ug/l	all water samples below 8.0 ug/l
Iron	21.2 ug/l	no impact
Manganese	0.55 ug/l	no impact
Nickel	3.8 ug/l	all water samples below 19.0 ug/l
Sodium	21400 ug/l	all water samples below 107000 ug/l

The USEPA requires that all sample values below five times the preparation, field, DI or calibration blank contamination be qualified as non-detect, "U".

The preparation blank exhibited negative bias for the following elements.

Elements	Conc.	Samples affected
Lead	-1.54 ug/l	all water samples below 15.4 ug/l
Silver	-1.74 ug/l	all water samples below 17.4 ug/l

This reviewer qualifies all positive and non-detect results below ten times the negative bias as estimated, "J" or "UJ".

Field Duplicate Results

The RPD for samples 066GW00404 and 006HW00404 for Aluminum (98%) was greater than 35%. All positive and non-detect results are qualified as estimated, "J" or "UJ".

"B" Qualifier

All sample results left with a "B" qualifier after all other qualifications, will be qualified with a "J" qualifier in place of the "B" per Ensafe's request.

SUMMARY OF DATA QUALIFICATIONS

Sample ID	Analyte	DL	QL
All water samples below 23.0 ug/l	Sb.	+	U
All water samples below 61.0 ug/l	Al.		
All water samples below 8.0 ug/l	Cr.		
All water samples below 19.0 ug/l	Ni.		
All water samples below 107000 ug/l	Na.		
All water samples below 15.4 ug/l	Pb.	+/U	J/UJ
All water samples below 17.4 ug/l	Ag.		
006GW00404 and 006HW00404	Al.	+/U	J/UJ
All "B" results	all analytes	B	J

CAV 11/9/98

CHARLESTON - ZONE G
CHARLESTON ZONE G QUARTERLY GW
SDG# 32020

SW846-VOA						
SAMPLE ID ------->	003-E-W001-04	003-F-W001-04	003-D-W001-04	003-T-W002-04	006-G-W001-04	006-G-W002-04
ORIGINAL ID ----->	003EW00104	003FW00104	003DW00104	003TW00204	006GW00104	006GW00204
LAB SAMPLE ID --->	32020.03	32020.04	32020.02	32020.08	32020.07	32055.01
ID FROM REPORT -->	003EW00104	003FW00104	003DW00104	003TW00204	006GW00104	006GW00204
SAMPLE DATE ----->	12/02/97	12/02/97	12/02/97	12/02/97	12/02/97	12/04/97
DATE ANALYZED --->	12/04/97	12/04/97	12/04/97	12/04/97	12/04/97	12/09/97
MATRIX ---------->	Water	Water	Water	Water	Water	Water
UNITS ---------->	UG/L B	UG/L B	UG/L B	UG/L B	UG/L A	UG/L A
CAS # Parameter	32020	32020	32020	32020	32020	32020
74-87-3 Chloromethane	5. U	5. U	5. U	5. U	5. U	5. U
74-83-9 Bromomethane	5. U	5. U	5. U	5. U	5. U	5. U
75-01-4 Vinyl chloride	5. U	5. U	5. U	5. U	5. U	5. U
75-00-3 Chloroethane	5. U	5. U	5. U	5. U	5. U	5. U
75-09-2 Methylene chloride	5. U	5. U	5. U	5. U	5. U	5 ~~1.~~ U
67-64-1 Acetone	5. U	5. U	5. U	5. U	~~5. UR~~	5.
75-15-0 Carbon disulfide	5. U	5. U	5. U	5. U	5. U	5. U
75-35-4 1,1-Dichloroethene	5. U	5. U	5. U	5. U	5. U	5. U
75-34-3 1,1-Dichloroethane	5. U	5. U	5. U	5. U	5. U	5. U
540-59-0 1,2-Dichloroethene (total)	5. U	5. U	5. U	5. U	5. U	5. U
67-66-3 Chloroform	5.	5.	5.	2. J	5. U	5. U
107-06-2 1,2-Dichloroethane	5. U	5. U	5. U	5. U	5. U	5. U
78-93-3 2-Butanone (MEK)	5. U	5. U	5. U	5. U	5. U	5. U
71-55-6 1,1,1-Trichloroethane	5. U	5. U	5. U	5. U	5. U	5. U
56-23-5 Carbon tetrachloride	5. U	5. U	5. U	5. U	5. U	5. U
75-27-4 Bromodichloromethane	1. J	1. J	1. J	5. U	5. U	5. U
78-87-5 1,2-Dichloropropane	5. U	5. U	5. U	5. U	5. U	5. U
10061-01-5 cis-1,3-Dichloropropene	5. U	5. U	5. U	5. U	5. U	5. U
79-01-6 Trichloroethene	5. U	5. U	5. U	5. U	5. U	5. U
124-48-1 Dibromochloromethane	5. U	5. U	5. U	5. U	5. U	5. U
79-00-5 1,1,2-Trichloroethane	5. U	5. U	5. U	5. U	5. U	5. U
71-43-2 Benzene	5. U	5. U	5. U	5. U	5. U	5. U
10061-02-6 trans-1,3-Dichloropropene	5. U	5. U	5. U	5. U	5. U	5. U
75-25-2 Bromoform	5. U	5. U	5. U	5. U	5. U	5. U
108-10-1 4-Methyl-2-Pentanone (MIBK)	5. U	5. U	5. U	5. U	5. U	5. U
591-78-6 2-Hexanone	5. U	5. U	5. U	5. U	5. U	5. U
127-18-4 Tetrachloroethene	5. U	5. U	5. U	5. U	5. U	5. U
79-34-5 1,1,2,2-Tetrachloroethane	5. U	5. U	5. U	5. U	5. U	5. U
108-88-3 Toluene	5. U	5. U	5. U	5. U	5. U	5. U
108-90-7 Chlorobenzene	5. U	5. U	5. U	5. U	5. U	5. U
100-41-4 Ethylbenzene	5. U	5. U	5. U	5. U	5. U	5. U
100-42-5 Styrene	5. U	5. U	5. U	5. U	5. U	5. U
1330-20-7 Xylene (Total)	5. U	5. U	5. U	5. U	5. U	5. U
108-05-4 Vinyl acetate	5. U	5. U	5. U	5. U	5. U	5. U
110-75-8 2-Chloroethyl vinyl ether	5. U	5. U	5. U	5. U	5. U	5. U

CHARLESTON - ZONE G
CHARLESTON ZONE G QUARTERLY GW
SDG# 32020

SW846-VOA	SAMPLE ID ------->	006-G-W003-04	006-G-W004-04	006-H-W004-04	006-T-W004-04	006-G-W005-04	006-G-W006-04
	ORIGINAL ID ----->	006GW00304	006GW00404	006HW00404	006TW00404	006GW00504	006GW00604
	LAB SAMPLE ID --->	32043.02	32043.03	32043.04	32043.05	32055.02	32055.03
	ID FROM REPORT -->	006GW00304	006GW00404	006HW00404	006TW00404	006GW00504	006GW00604
	SAMPLE DATE ----->	12/03/97	12/03/97	12/03/97	12/03/97	12/04/97	12/04/97
	DATE ANALYZED --->	12/05/97	12/05/97	12/05/97	12/05/97	12/09/97	12/09/97
	MATRIX ---------->	Water	Water	Water	Water	Water	Water
	UNITS ---------->	UG/L A	UG/L A	UG/L A	UG/L B	UG/L A	UG/L A
CAS #	Parameter	32020	32020	32020	32020	32020	32020
74-87-3	Chloromethane	5. U	5. U	5. U	5. U	5. U	5. U
74-83-9	Bromomethane	5. U	5. U	5. U	5. U	5. U	5. U
75-01-4	Vinyl chloride	5. U	5. U	5. U	5. U	5. U	5. U
75-00-3	Chloroethane	5. U	5. U	5. U	5. U	5. U	5. U
75-09-2	Methylene chloride	5. U	5. U	5. U	5. U	5 1. UJ	5 2. UJ
67-64-1	Acetone	5. U	5. U	5. U	5. U	5. UJ	5. UJ
75-15-0	Carbon disulfide	5. U	5. U	5. U	5. U	5. U	5. U
75-35-4	1,1-Dichloroethene	5. U	5. U	5. U	5. U	5. U	5. U
75-34-3	1,1-Dichloroethane	5. U	5. U	5. U	5. U	5. U	5. U
540-59-0	1,2-Dichloroethene (total)	5. U	5. U	5. U	5. U	5. U	5. U
67-66-3	Chloroform	5. U	5. U	5. U	2. J	5. U	5. U
107-06-2	1,2-Dichloroethane	5. U	5. U	5. U	5. U	5. U	5. U
78-93-3	2-Butanone (MEK)	5. U	5. U	5. U	5. U	5. U	5. U
71-55-6	1,1,1-Trichloroethane	5. U	5. U	5. U	5. U	5. U	5. U
56-23-5	Carbon tetrachloride	5. U	5. U	5. U	5. U	5. U	5. U
75-27-4	Bromodichloromethane	5. U	5. U	5. U	5. U	5. U	5. U
78-87-5	1,2-Dichloropropane	5. U	5. U	5. U	5. U	5. U	5. U
10061-01-5	cis-1,3-Dichloropropene	5. U	5. U	5. U	5. U	5. U	5. U
79-01-6	Trichloroethene	5. U	5. U	5. U	5. U	5. U	5. U
124-48-1	Dibromochloromethane	5. U	5. U	5. U	5. U	5. U	5. U
79-00-5	1,1,2-Trichloroethane	5. U	5. U	5. U	5. U	5. U	5. U
71-43-2	Benzene	5. U	5. U	5. U	5. U	5. U	5. U
10061-02-6	trans-1,3-Dichloropropene	5. U	5. U	5. U	5. U	5. U	5. U
75-25-2	Bromoform	5. U	5. U	5. U	5. U	2. J	5. U
108-10-1	4-Methyl-2-Pentanone (MIBK)	5. U	5. U	5. U	5. U	5. U	5. U
591-78-6	2-Hexanone	5. U	5. U	5. U	5. U	5. U	5. U
127-18-4	Tetrachloroethene	5. U	5. U	5. U	5. U	5. U	5. U
79-34-5	1,1,2,2-Tetrachloroethane	5. U	5. U	5. U	5. U	5. U	5. U
108-88-3	Toluene	5. U	5. U	5. U	5. U	5. U	5. U
108-90-7	Chlorobenzene	5. U	5. U	5. U	5. U	5. U	5. U
100-41-4	Ethylbenzene	5. U	5. U	5. U	5. U	5. U	5. U
100-42-5	Styrene	5. U	5. U	5. U	5. U	5. U	5. U
1330-20-7	Xylene (Total)	5. U	5. U	5. U	5. U	1. J	5. U
108-05-4	Vinyl acetate	5. U	5. U	5. U	5. U	5. U	5. U
110-75-8	2-Chloroethyl vinyl ether	5. U	5. U	5. U	5. U	5. U	5. U

CHARLESTON - ZONE G
CHARLESTON ZONE G QUARTERLY GW
SDG# 32020

SW846-VOA						
SAMPLE ID ------->	006-T-W006-04	006-G-W007-04	120-G-W001-04	120-G-W002-04	120-G-W003-04	120-H-W003-04
ORIGINAL ID ----->	006TW00604	006GW00704	120GW00104	120GW00204	120GW00304	120HW00304
LAB SAMPLE ID --->	32055.05	32055.04	32082.01	32082.02	32082.03	32082.04
ID FROM REPORT -->	006TW00604	006GW00704	120GW00104	120GW00204	120GW00304	120HW00304
SAMPLE DATE ----->	12/04/97	12/04/97	12/05/97	12/05/97	12/05/97	12/05/97
DATE ANALYZED --->	12/09/97	12/09/97	12/09/97	12/09/97	12/11/97	12/11/97
MATRIX ---------->	Water	Water	Water	Water	Water	Water
UNITS ---------->	UG/L B	UG/L A	UG/L A	UG/L A	UG/L A	UG/L A
CAS # Parameter	32020	32020	32020	32020	32020	32020
74-87-3 Chloromethane	5. U	5. U	5. U	5. U	5. U	5. U
74-83-9 Bromomethane	5. U	5. U	5. U	5. U	5. U	5. U
75-01-4 Vinyl chloride	5. U	5. U	5. U	5. U	5. U	5. U
75-00-3 Chloroethane	5. U	5. U	5. U	5. U	5. U	5. U
75-09-2 Methylene chloride	2. J	~~2.~~ ~~J~~ U	5. U	5. U	5. UJ	5. UJ
67-64-1 Acetone	5. U	5. UJ	~~5.~~ UR	~~5.~~ UR	8. U	6. U
75-15-0 Carbon disulfide	5. U	5. U	5. U	5. U	5. U	5. U
75-35-4 1,1-Dichloroethene	5. U	5. U	5. U	5. U	5. U	5. U
75-34-3 1,1-Dichloroethane	5. U	5. U	5. U	5. U	5. U	5. U
540-59-0 1,2-Dichloroethene (total)	5. U	5. U	5. U	5. U	5. U	5. U
67-66-3 Chloroform	1. J	5. U	5. U	5. U	5. U	5. U
107-06-2 1,2-Dichloroethane	5. U	5. U	5. U	5. U	5. U	5. U
78-93-3 2-Butanone (MEK)	5. U	5. U	5. U	5. U	5. U	5. U
71-55-6 1,1,1-Trichloroethane	5. U	5. U	5. U	5. U	5. U	5. U
56-23-5 Carbon tetrachloride	5. U	5. U	5. U	5. U	5. U	5. U
75-27-4 Bromodichloromethane	5. U	5. U	5. U	5. U	5. U	5. U
78-87-5 1,2-Dichloropropane	5. U	5. U	5. U	5. U	5. U	5. U
10061-01-5 cis-1,3-Dichloropropene	5. U	5. U	5. U	5. U	5. U	5. U
79-01-6 Trichloroethene	5. U	5. U	5. U	5. U	5. U	5. U
124-48-1 Dibromochloromethane	5. U	5. U	5. U	5. U	5. U	5. U
79-00-5 1,1,2-Trichloroethane	5. U	5. U	5. U	5. U	5. U	5. U
71-43-2 Benzene	5. U	5. U	5. U	5. U	5. U	5. U
10061-02-6 trans-1,3-Dichloropropene	5. U	5. U	5. U	5. U	5. U	5. U
75-25-2 Bromoform	5. U	5. U	5. U	5. U	5. U	5. U
108-10-1 4-Methyl-2-Pentanone (MIBK)	5. U	5. U	5. U	5. U	5. U	5. U
591-78-6 2-Hexanone	5. U	5. U	5. U	5. U	5. U	5. U
127-18-4 Tetrachloroethene	5. U	5. U	5. U	5. U	5. U	5. U
79-34-5 1,1,2,2-Tetrachloroethane	5. U	5. U	5. U	5. U	5. U	5. U
108-88-3 Toluene	5. U	5. U	5. U	5. U	5. U	5. U
108-90-7 Chlorobenzene	5. U	5. U	5. U	5. U	5. U	5. U
100-41-4 Ethylbenzene	5. U	5. U	5. U	5. U	5. U	5. U
100-42-5 Styrene	5. U	5. U	5. U	5. U	5. U	5. U
1330-20-7 Xylene (Total)	5. U	5. U	5. U	5. U	~~5.~~ UR	~~5.~~ UR
108-05-4 Vinyl acetate	5. U	5. U	5. U	5. U	~~5.~~ UR	~~5.~~ UR
110-75-8 2-Chloroethyl vinyl ether	5. U	5. U	5. U	5. U	5. U	5. U

022

CHARLESTON - ZONE G
CHARLESTON ZONE G QUARTERLY GW
SDG# 32020

SW846-VOA	SAMPLE ID ------->	120-T-W003-04	BLK-0-2020-10	BLK-0-2020-11	BLK-0-2020-12	BLK-0-2020-13	BLK-0-2020-14
	ORIGINAL ID ----->	120TW00304	VBLK1	VBLK2	VBLK3	VBLK4	VBLK5
	LAB SAMPLE ID --->	32082.05	VBLK1	VBLK2	VBLK3	VBLK4	VBLK5
	ID FROM REPORT -->	120TW00304	VBLK1	VBLK2	VBLK3	VBLK4	VBLK5
	SAMPLE DATE ----->	12/05/97					
	DATE ANALYZED --->	12/11/97	12/04/97	12/05/97	12/09/97	12/09/97	12/11/97
	MATRIX ---------->	Water	Water	Water	Water	Water	Water
	UNITS ---------->	UG/L B	UG/L D	UG/L D	UG/L D	UG/L D	UG/L D
CAS #	Parameter	32020	32020	32020	32020	32020	32020
74-87-3	Chloromethane	5. U	5. U	5. U	5. U	5. U	5. U
74-83-9	Bromomethane	5. U	5. U	5. U	5. U	5. U	5. U
75-01-4	Vinyl chloride	5. U	5. U	5. U	5. U	5. U	5. U
75-00-3	Chloroethane	5. U	5. U	5. U	5. U	5. U	5. U
75-09-2	Methylene chloride	5. U	5. U	5. U	5. U	5. U	5. U
67-64-1	Acetone	5. U	5. U	5. U	5. U	5. U	5. U
75-15-0	Carbon disulfide	5. U	5. U	5. U	5. U	5. U	5. U
75-35-4	1,1-Dichloroethene	5. U	5. U	5. U	5. U	5. U	5. U
75-34-3	1,1-Dichloroethane	5. U	5. U	5. U	5. U	5. U	5. U
540-59-0	1,2-Dichloroethene (total)	5. U	5. U	5. U	5. U	5. U	5. U
67-66-3	Chloroform	5. U	5. U	5. U	5. U	5. U	5. U
107-06-2	1,2-Dichloroethane	5. U	5. U	5. U	5. U	5. U	5. U
78-93-3	2-Butanone (MEK)	5. U	5. U	5. U	5. U	5. U	5. U
71-55-6	1,1,1-Trichloroethane	5. U	5. U	5. U	5. U	5. U	5. U
56-23-5	Carbon tetrachloride	5. U	5. U	5. U	5. U	5. U	5. U
75-27-4	Bromodichloromethane	5. U	5. U	5. U	5. U	5. U	5. U
78-87-5	1,2-Dichloropropane	5. U	5. U	5. U	5. U	5. U	5. U
10061-01-5	cis-1,3-Dichloropropene	5. U	5. U	5. U	5. U	5. U	5. U
79-01-6	Trichloroethene	5. U	5. U	5. U	5. U	5. U	5. U
124-48-1	Dibromochloromethane	5. U	5. U	5. U	5. U	5. U	5. U
79-00-5	1,1,2-Trichloroethane	5. U	5. U	5. U	5. U	5. U	5. U
71-43-2	Benzene	5. U	5. U	5. U	5. U	5. U	5. U
10061-02-6	trans-1,3-Dichloropropene	5. U	5. U	5. U	5. U	5. U	5. U
75-25-2	Bromoform	5. U	5. U	5. U	5. U	5. U	5. U
108-10-1	4-Methyl-2-Pentanone (MIBK)	5. U	5. U	5. U	5. U	5. U	5. U
591-78-6	2-Hexanone	5. U	5. U	5. U	5. U	5. U	5. U
127-18-4	Tetrachloroethene	5. U	5. U	5. U	5. U	5. U	5. U
79-34-5	1,1,2,2-Tetrachloroethane	5. U	5. U	5. U	5. U	5. U	5. U
108-88-3	Toluene	5. U	5. U	5. U	5. U	5. U	5. U
108-90-7	Chlorobenzene	5. U	5. U	5. U	5. U	5. U	5. U
100-41-4	Ethylbenzene	5. U	5. U	5. U	5. U	5. U	5. U
100-42-5	Styrene	5. U	5. U	5. U	5. U	5. U	5. U
1330-20-7	Xylene (Total)	5. U	5. U	5. U	5. U	5. U	5. U
108-05-4	Vinyl acetate	5. U	5. U	5. U	5. U	5. U	5. U
110-75-8	2-Chloroethyl vinyl ether	5. U	5. U	5. U	5. U	5. U	5. U

023

*** Lab Results - Unvalidated Data - Do NOT Cite ***

1/19/98

CHARLESTON - ZONE G
CHARLESTON ZONE G QUARTERLY GW
SDG# 32020

SW846-SVOA													
	SAMPLE ID ------->	003-E-W001-04		003-F-W001-04		003-D-W001-04		006-G-W001-04		006-G-W002-04		006-G-W003-04	
	ORIGINAL ID ----->	003EW00104		003FW00104		003DW00104		006GW00104		006GW00204		006GW00304	
	LAB SAMPLE ID --->	32020.03		32020.04		32020.02		32020.07		32055.01		32043.02	
	ID FROM REPORT -->	003EW00104		003FW00104		003DW00104		006GW00104		006GW00204		006GW00304	
	SAMPLE DATE ----->	12/02/97		12/02/97		12/02/97		12/02/97		12/04/97		12/03/97	
	DATE EXTRACTED -->	12/03/97		12/03/97		12/03/97		12/03/97		12/08/97		12/05/97	
	DATE ANALYZED --->	12/10/97		12/10/97		12/10/97		12/10/97		12/23/97		12/10/97	
	MATRIX ---------->	Water		Water		Water		Water		Water		Water	
	UNITS ---------->	UG/L	B	UG/L	B	UG/L	B	UG/L	A	UG/L	A	UG/L	A
CAS #	Parameter	32020		32020		32020		32020		32020		32020	
108-95-2	Phenol	10.	U	10.	U	10.	U	10.	U	10.	U	10.	U
111-44-4	bis(2-Chloroethyl)ether	10.	U	10.	U	10.	U	10.	U	10.	U	10.	U
95-57-8	2-Chlorophenol	10.	U	10.	U	10.	U	10.	U	10.	U	10.	U
541-73-1	1,3-Dichlorobenzene	10.	U	10.	U	10.	U	10.	U	10.	U	10.	U
106-46-7	1,4-Dichlorobenzene	10.	U	10.	U	10.	U	10.	U	10.	U	10.	U
100-51-6	Benzyl alcohol	10.	U	10.	U	10.	U	10.	U	10.	U	10.	U
95-50-1	1,2-Dichlorobenzene	10.	U	10.	U	10.	U	10.	U	10.	U	10.	U
95-48-7	2-Methylphenol (o-Cresol)	10.	U	10.	U	10.	U	10.	U	10.	U	10.	U
108-60-1	2,2'-oxybis(1-Chloropropane)	10.	U	10.	U	10.	U	10.	U	10.	U	10.	U
106-44-5	4-Methylphenol (p-Cresol)	10.	U	10.	U	10.	U	10.	U	10.	U	10.	U
621-64-7	N-Nitroso-di-n-propylamine	10.	U	10.	U	10.	U	10.	U	10.	U	10.	U
67-72-1	Hexachloroethane	10.	U	10.	U	10.	U	10.	U	10.	U	10.	U
98-95-3	Nitrobenzene	10.	U	10.	U	10.	U	10.	U	10.	U	10.	U
78-59-1	Isophorone	10.	U	10.	U	10.	U	10.	U	10.	U	10.	U
88-75-5	2-Nitrophenol	10.	U	10.	U	10.	U	10.	U	10.	U	10.	U
105-67-9	2,4-Dimethylphenol	10.	U	10.	U	10.	U	10.	U	10.	U	10.	U
65-85-0	Benzoic acid	50.	U	50.	U	50.	U	50.	U	50.	U	53.	U
111-91-1	bis(2-Chloroethoxy)methane	10.	U	10.	U	10.	U	10.	U	10.	U	10.	U
120-83-2	2,4-Dichlorophenol	10.	U	10.	U	10.	U	10.	U	10.	U	10.	U
120-82-1	1,2,4-Trichlorobenzene	10.	U	10.	U	10.	U	10.	U	10.	U	10.	U
91-20-3	Naphthalene	10.	U	10.	U	10.	U	10.	U	10.	U	10.	U
106-47-8	4-Chloroaniline	10.	U	10.	U	10.	U	10.	U	10.	U	10.	U
87-68-3	Hexachlorobutadiene	10.	U	10.	U	10.	U	10.	U	10.	U	10.	U
59-50-7	4-Chloro-3-methylphenol	10.	U	10.	U	10.	U	10.	U	10.	U	10.	U
91-57-6	2-Methylnaphthalene	10.	U	10.	U	10.	U	10.	U	10.	U	10.	U
77-47-4	Hexachlorocyclopentadiene	10.	U	10.	U	10.	U	10.	U	10.	U	10.	U
88-06-2	2,4,6-Trichlorophenol	10.	U	10.	U	10.	U	10.	U	10.	U	10.	U
95-95-4	2,4,5-Trichlorophenol	50.	U	50.	U	50.	U	50.	U	50.	U	53.	U
91-58-7	2-Chloronaphthalene	10.	U	10.	U	10.	U	10.	U	10.	U	10.	U
88-74-4	2-Nitroaniline	50.	U	50.	U	50.	U	50.	U	50.	U	53.	U
131-11-3	Dimethyl phthalate	10.	U	10.	U	10.	U	10.	U	10.	U	10.	U
208-96-8	Acenaphthylene	10.	U	10.	U	10.	U	10.	U	10.	U	10.	U
606-20-2	2,6-Dinitrotoluene	10.	U	10.	U	10.	U	10.	U	10.	U	10.	U
99-09-2	3-Nitroaniline	50.	U	50.	U	50.	U	50.	U	50.	U	53.	U
83-32-9	Acenaphthene	10.	U	10.	U	10.	U	10.	U	10.	U	10.	U
51-28-5	2,4-Dinitrophenol	50.	U	50.	U	50.	U	50.	U	50.	U	[illegible]	U

WA 11450

CHARLESTON - ZONE G
CHARLESTON ZONE G QUARTERLY GW
SDG# 32020

SW846-SVOA	SAMPLE ID ------->	003-E-W001-04	003-F-W001-04	003-D-W001-04	006-G-W001-04	006-G-W002-04	006-G-W003-04
	ORIGINAL ID ----->	003EW00104	003FW00104	003DW00104	006GW00104	006GW00204	006GW00304
	LAB SAMPLE ID --->	32020.03	32020.04	32020.02	32020.07	32055.01	32043.02
	ID FROM REPORT -->	003EW00104	003FW00104	003DW00104	006GW00104	006GW00204	006GW00304
	SAMPLE DATE ----->	12/02/97	12/02/97	12/02/97	12/02/97	12/04/97	12/03/97
	DATE EXTRACTED -->	12/03/97	12/03/97	12/03/97	12/03/97	12/08/97	12/05/97
	DATE ANALYZED --->	12/10/97	12/10/97	12/10/97	12/10/97	12/23/97	12/10/97
	MATRIX ---------->	Water	Water	Water	Water	Water	Water
	UNITS ---------->	UG/L B	UG/L B	UG/L B	UG/L A	UG/L A	UG/L A
CAS #	Parameter	32020	32020	32020	32020	32020	32020
100-02-7	4-Nitrophenol	50. U	50. U	50. U	50. U	50. U	53. U
132-64-9	Dibenzofuran	10. U	10. U	10. U	10. U	10. U	10. U
121-14-2	2,4-Dinitrotoluene	10. U	10. U	10. U	10. U	10. U	10. U
84-66-2	Diethylphthalate	10. U	10. U	10. U	10. U	10. U	10. U
7005-72-3	4-Chlorophenylphenylether	10. U	10. U	10. U	10. U	10. U	10. U
86-73-7	Fluorene	10. U	10. U	10. U	10. U	10. U	10. U
100-01-6	4-Nitroaniline	50. U	50. U	50. U	50. U	50. U	53. U
534-52-1	2-Methyl-4,6-Dinitrophenol	50. U	50. U	50. U	50. U	50. U	53. U
86-30-6	N-Nitrosodiphenylamine	10. U	10. U	10. U	10. U	10. U	10. U
101-55-3	4-Bromophenyl-phenylether	10. U	10. U	10. U	10. U	10. U	10. U
118-74-1	Hexachlorobenzene	10. U	10. U	10. U	10. U	10. U	10. U
87-86-5	Pentachlorophenol	50. U	50. U	50. U	50. U	50. U	53. U
85-01-8	Phenanthrene	10. U	10. U	10. U	10. U	10. U	10. U
120-12-7	Anthracene	10. U	10. U	10. U	10. U	10. U	10. U
84-74-2	Di-n-butylphthalate	10. U	10. U	10. U	10. U	10. U	10. U
206-44-0	Fluoranthene	10. U	10. U	10. U	10. U	10. U	10. U
129-00-0	Pyrene	10. U	10. U	10. U	10. U	10. U	10. U
85-68-7	Butylbenzylphthalate	10. U	10. U	10. U	10. U	10. U	10. U
91-94-1	3,3'-Dichlorobenzidine	20. U	20. U	20. U	20. U	20. U	21. U
56-55-3	Benzo(a)anthracene	10. U	10. U	10. U	10. U	10. U	10. U
218-01-9	Chrysene	10. U	10. U	10. U	10. U	10. U	10. U
117-81-7	bis(2-Ethylhexyl)phthalate (BEHP)	14.	1. J	10. U	10 ~~2.~~ 4	10 ~~6.~~ 4	10. U
117-84-0	Di-n-octyl phthalate	10. U	10. U	10. U	10. U	10. U	10. U
205-99-2	Benzo(b)fluoranthene	10. U	10. U	10. U	10. U	10. U	10. U
207-08-9	Benzo(k)fluoranthene	10. U	10. U	10. U	10. U	10. U	10. U
50-32-8	Benzo(a)pyrene	10. U	10. U	10. U	10. U	10. U	10. U
193-39-5	Indeno(1,2,3-cd)pyrene	10. U	10. U	10. U	10. U	10. U	10. U
53-70-3	Dibenz(a,h)anthracene	10. U	10. U	10. U	10. U	10. U	10. U
191-24-2	Benzo(g,h,i)perylene	10. U	10. U	10. U	10. U	10. U	10. U

025

CHARLESTON - ZONE G
CHARLESTON ZONE G QUARTERLY GW
SDG# 32020

SW846-SVOA						
SAMPLE ID ------->	006-G-W004-04	006-G-W004-04 DL	006-H-W004-04	006-G-W005-04	006-G-W006-04	006-G-W007-04
ORIGINAL ID ----->	006GW00404	006GW00404	006HW00404	006GW00504	006GW00604	006GW00704
LAB SAMPLE ID --->	32043.03	32043.03	32043.04	32055.02	32055.03	32055.04
ID FROM REPORT -->	006GW00404	006GW00404	006HW00404	006GW00504	006GW00604	006GW00704
SAMPLE DATE ----->	12/03/97	12/03/97	12/03/97	12/04/97	12/04/97	12/04/97
DATE EXTRACTED -->	12/05/97	12/05/97	12/05/97	12/08/97	12/08/97	12/08/97
DATE ANALYZED --->	12/10/97	12/22/97	12/10/97	12/23/97	12/23/97	12/23/97
MATRIX ---------->	Water	Water	Water	Water	Water	Water
UNITS ---------->	UG/L A	UG/L C	UG/L A	UG/L A	UG/L A	UG/L A
CAS # Parameter	32020	32020	32020	32020	32020	32020
108-95-2 Phenol	11. U	56. U UR	11. U	10. U	10. U	10. U
111-44-4 bis(2-Chloroethyl)ether	11. U	56. U	11. U	10. U	10. U	10. U
95-57-8 2-Chlorophenol	11. U	56. U	11. U	10. U	10. U	10. U
541-73-1 1,3-Dichlorobenzene	11. U	56. U	11. U	10. U	10. U	10. U
106-46-7 1,4-Dichlorobenzene	11. U	56. U	11. U	10. U	10. U	10. U
100-51-6 Benzyl alcohol	11. U	56. U	11. U	10. U	10. U	10. U
95-50-1 1,2-Dichlorobenzene	11. U	56. U	11. U	10. U	10. U	10. U
95-48-7 2-Methylphenol (o-Cresol)	11. U	56. U	11. U	10. U	10. U	10. U
108-60-1 2,2'-oxybis(1-Chloropropane)	11. U	56. U	11. U	10. U	10. U	10. U
106-44-5 4-Methylphenol (p-Cresol)	11. U	56. U	11. U	10. U	10. U	10. U
621-64-7 N-Nitroso-di-n-propylamine	11. U	56. U	11. U	10. U	10. U	10. U
67-72-1 Hexachloroethane	11. U	56. U	11. U	10. U	10. U	10. U
98-95-3 Nitrobenzene	11. U	56. U	11. U	10. U	10. U	10. U
78-59-1 Isophorone	11. U	56. U	11. U	10. U	10. U	10. U
88-75-5 2-Nitrophenol	11. U	56. U	11. U	10. U	10. U	10. U
105-67-9 2,4-Dimethylphenol	11. U	56. U	11. U	10. U	10. U	10. U
65-85-0 Benzoic acid	56. U	280. U	56. U	50. U	50. U	50. U
111-91-1 bis(2-Chloroethoxy)methane	11. U	56. U	11. U	10. U	10. U	10. U
120-83-2 2,4-Dichlorophenol	11. U	56. U	11. U	10. U	10. U	10. U
120-82-1 1,2,4-Trichlorobenzene	11. U	56. U	11. U	10. U	10. U	10. U
91-20-3 Naphthalene	11. U	56. U	11. U	10. U	10. U	10. U
106-47-8 4-Chloroaniline	11. U	56. U	11. U	10. U	10. U	10. U
87-68-3 Hexachlorobutadiene	11. U	56. U	11. U	10. U	10. U	10. U
59-50-7 4-Chloro-3-methylphenol	11. U	56. U	11. U	10. U	10. U	10. U
91-57-6 2-Methylnaphthalene	11. U	56. U	11. U	10. U	10. U	10. U
77-47-4 Hexachlorocyclopentadiene	11. U	56. U	11. U	10. U	10. U	10. U
88-06-2 2,4,6-Trichlorophenol	11. U	56. U	11. U	10. U	10. U	10. U
95-95-4 2,4,5-Trichlorophenol	56. U	280. U	56. U	50. U	50. U	50. U
91-58-7 2-Chloronaphthalene	11. U	56. U	11. U	10. U	10. U	10. U
88-74-4 2-Nitroaniline	56. U	280. U	56. U	50. U	50. U	50. U
131-11-3 Dimethyl phthalate	11. U	56. U	11. U	10. U	10. U	10. U
208-96-8 Acenaphthylene	11. U	56. U	11. U	10. U	10. U	10. U
606-20-2 2,6-Dinitrotoluene	11. U	56. U	11. U	10. U	10. U	10. U
99-09-2 3-Nitroaniline	56. U	280. U	56. U	50. U	50. U	50. U
83-32-9 Acenaphthene	2. J	56. U	2. J	2. J	10. U	10. U
51-[illegible]5 2,4-Dinitrophenol	56. U	280. U	56. U	50. U	50. U	[illegible]. U

026

CHARLESTON - ZONE G
CHARLESTON ZONE G QUARTERLY GW
SDG# 32020

SW846-SVOA													
	SAMPLE ID ------->	006-G-W004-04		006-G-W004-04 DL		006-H-W004-04		006-G-W005-04		006-G-W006-04		006-G-W007-04	
	ORIGINAL ID ----->	006GW00404		006GW00404		006HW00404		006GW00504		006GW00604		006GW00704	
	LAB SAMPLE ID --->	32043.03		32043.03		32043.04		32055.02		32055.03		32055.04	
	ID FROM REPORT -->	006GW00404		006GW00404		006HW00404		006GW00504		006GW00604		006GW00704	
	SAMPLE DATE ----->	12/03/97		12/03/97		12/03/97		12/04/97		12/04/97		12/04/97	
	DATE EXTRACTED -->	12/05/97		12/05/97		12/05/97		12/08/97		12/08/97		12/08/97	
	DATE ANALYZED --->	12/10/97		12/22/97		12/10/97		12/23/97		12/23/97		12/23/97	
	MATRIX ---------->	Water		Water		Water		Water		Water		Water	
	UNITS ---------->	UG/L	A	UG/L	C	UG/L	A	UG/L	A	UG/L	A	UG/L	A
CAS #	Parameter	32020		32020		32020		32020		32020		32020	
100-02-7	4-Nitrophenol	56.	U	280.	U UR	56.	U	50.	U	50.	U	50.	U
132-64-9	Dibenzofuran	11.	U	56.	U	11.	U	10.	U	10.	U	10.	U
121-14-2	2,4-Dinitrotoluene	11.	U	56.	U	11.	U	10.	U	10.	U	10.	U
84-66-2	Diethylphthalate	11.	U	56.	U	11.	U	10.	U	10.	U	10.	U
7005-72-3	4-Chlorophenylphenylether	11.	U	56.	U	11.	U	10.	U	10.	U	10.	U
86-73-7	Fluorene	11.	U	56.	U	11.	U	2.	J	10.	U	10.	U
100-01-6	4-Nitroaniline	56.	U	280.	U	56.	U	50.	U	50.	U	50.	U
534-52-1	2-Methyl-4,6-Dinitrophenol	56.	U	280.	U	56.	U	50.	U	50.	U	50.	U
86-30-6	N-Nitrosodiphenylamine	11.	U	56.	U	11.	U	10.	U	10.	U	10.	U
101-55-3	4-Bromophenyl-phenylether	11.	U	56.	U	11.	U	10.	U	10.	U	10.	U
118-74-1	Hexachlorobenzene	11.	U	56.	U	11.	U	10.	U	10.	U	10.	U
87-86-5	Pentachlorophenol	56.	U	280.	U	56.	U	50.	U	50.	U	50.	U
85-01-8	Phenanthrene	11.	U	56.	U	11.	U	4.	J	10.	U	10.	U
120-12-7	Anthracene	11.	U	56.	U	11.	U	10.	U	10.	U	10.	U
84-74-2	Di-n-butylphthalate	11.	U	56.	U	11.	U	10.	U	10.	U	10.	U
206-44-0	Fluoranthene	11.	U	56.	U	11.	U	10.	U	10.	U	10.	U
129-00-0	Pyrene	11.	U	56.	U	11.	U	10.	U	10.	U	10.	U
85-68-7	Butylbenzylphthalate	10.	J	16.	JD	11.	U	10.	U	10.	U	10.	U
91-94-1	3,3'-Dichlorobenzidine	22.	U	110.	U	22.	U	20.	U	20.	U	20.	U
56-55-3	Benzo(a)anthracene	11.	U	56.	U	11.	U	10.	U	10.	U	10.	U
218-01-9	Chrysene	11.	U	56.	U	11.	U	10.	U	10.	U	10.	U
117-81-7	bis(2-Ethylhexyl)phthalate (BEHP)	430 ~~440.~~	~~E~~	430.	D	11 ~~1.~~	~~J~~ U	10 ~~8.~~	~~J~~ U	10 ~~7.~~	~~J~~ U	17.	U
117-84-0	Di-n-octyl phthalate	11.	U	56.	U	11.	U	10.	U	10.	U	10.	U
205-99-2	Benzo(b)fluoranthene	11.	U	56.	U	11.	U	10.	U	10.	U	10.	U
207-08-9	Benzo(k)fluoranthene	11.	U	56.	U	11.	U	10.	U	10.	U	10.	U
50-32-8	Benzo(a)pyrene	11.	U	56.	U	11.	U	10.	U	10.	U	10.	U
193-39-5	Indeno(1,2,3-cd)pyrene	11.	U	56.	U	11.	U	10.	U	10.	U	10.	U
53-70-3	Dibenz(a,h)anthracene	11.	U	56.	U	11.	U	10.	U	10.	U	10.	U
191-24-2	Benzo(g,h,i)perylene	11.	U	56.	U	11.	U	10.	U	10.	U	10.	U

027

CHARLESTON - ZONE G
CHARLESTON ZONE G QUARTERLY GW
SDG# 32020

SW846-SVOA													
	SAMPLE ID ------->	120-G-W001-04		120-G-W002-04		120-G-W003-04		120-H-W003-04		BLK-0-2020-07		BLK-0-2020-08	
	ORIGINAL ID ----->	120GW00104		120GW00204		120GW00304		120HW00304		SBLK1		SBLK2	
	LAB SAMPLE ID --->	32082.01		32082.02		32082.03		32082.04		SBLK1		SBLK2	
	ID FROM REPORT -->	120GW00104		120GW00204		120GW00304		120HW00304		SBLK1		SBLK2	
	SAMPLE DATE ----->	12/05/97		12/05/97		12/05/97		12/05/97					
	DATE EXTRACTED -->	12/08/97		12/08/97		12/08/97		12/08/97		12/03/97		12/05/97	
	DATE ANALYZED --->	12/23/97		12/23/97		12/23/97		12/23/97		12/10/97		12/10/97	
	MATRIX ---------->	Water		Water		Water		Water		Water		Water	
	UNITS ---------->	UG/L	A	UG/L	A	UG/L	A	UG/L	A	UG/L	D	UG/L	D
CAS #	Parameter	32020		32020		32020		32020		32020		32020	
108-95-2	Phenol	10.	U	10.	U	10.	U	10.	U	10.	U	10.	U
111-44-4	bis(2-Chloroethyl)ether	10.	U	10.	U	10.	U	10.	U	10.	U	10.	U
95-57-8	2-Chlorophenol	10.	U	10.	U	10.	U	10.	U	10.	U	10.	U
541-73-1	1,3-Dichlorobenzene	10.	U	10.	U	10.	U	10.	U	10.	U	10.	U
106-46-7	1,4-Dichlorobenzene	10.	U	10.	U	10.	U	10.	U	10.	U	10.	U
100-51-6	Benzyl alcohol	10.	U	10.	U	10.	U	10.	U	10.	U	10.	U
95-50-1	1,2-Dichlorobenzene	10.	U	10.	U	10.	U	10.	U	10.	U	10.	U
95-48-7	2-Methylphenol (o-Cresol)	10.	U	10.	U	10.	U	10.	U	10.	U	10.	U
108-60-1	2,2'-oxybis(1-Chloropropane)	10.	U	10.	U	10.	U	10.	U	10.	U	10.	U
106-44-5	4-Methylphenol (p-Cresol)	10.	U	10.	U	10.	U	10.	U	10.	U	10.	U
621-64-7	N-Nitroso-di-n-propylamine	10.	U	10.	U	10.	U	10.	U	10.	U	10.	U
67-72-1	Hexachloroethane	10.	U	10.	U	10.	U	10.	U	10.	U	10.	U
98-95-3	Nitrobenzene	10.	U	10.	U	10.	U	10.	U	10.	U	10.	U
78-59-1	Isophorone	10.	U	10.	U	10.	U	10.	U	10.	U	10.	U
88-75-5	2-Nitrophenol	10.	U	10.	U	10.	U	10.	U	10.	U	10.	U
105-67-9	2,4-Dimethylphenol	10.	U	10.	U	10.	U	10.	U	10.	U	10.	U
65-85-0	Benzoic acid	50.	U	50.	U	50.	U	50.	U	50.	U	50.	U
111-91-1	bis(2-Chloroethoxy)methane	10.	U	10.	U	10.	U	10.	U	10.	U	10.	U
120-83-2	2,4-Dichlorophenol	10.	U	10.	U	10.	U	10.	U	10.	U	10.	U
120-82-1	1,2,4-Trichlorobenzene	10.	U	10.	U	10.	U	10.	U	10.	U	10.	U
91-20-3	Naphthalene	10.	U	10.	U	10.	U	10.	U	10.	U	10.	U
106-47-8	4-Chloroaniline	10.	U	10.	U	10.	U	10.	U	10.	U	10.	U
87-68-3	Hexachlorobutadiene	10.	U	10.	U	10.	U	10.	U	10.	U	10.	U
59-50-7	4-Chloro-3-methylphenol	10.	U	10.	U	10.	U	10.	U	10.	U	10.	U
91-57-6	2-Methylnaphthalene	10.	U	10.	U	10.	U	10.	U	10.	U	10.	U
77-47-4	Hexachlorocyclopentadiene	10.	U	10.	U	10.	U	10.	U	10.	U	10.	U
88-06-2	2,4,6-Trichlorophenol	10.	U	10.	U	10.	U	10.	U	10.	U	10.	U
95-95-4	2,4,5-Trichlorophenol	50.	U	50.	U	50.	U	50.	U	50.	U	50.	U
91-58-7	2-Chloronaphthalene	10.	U	10.	U	10.	U	10.	U	10.	U	10.	U
88-74-4	2-Nitroaniline	50.	U	50.	U	50.	U	50.	U	50.	U	50.	U
131-11-3	Dimethyl phthalate	10.	U	10.	U	10.	U	10.	U	10.	U	10.	U
208-96-8	Acenaphthylene	10.	U	10.	U	10.	U	10.	U	10.	U	10.	U
606-20-2	2,6-Dinitrotoluene	10.	U	10.	U	10.	U	10.	U	10.	U	10.	U
99-09-2	3-Nitroaniline	50.	U	50.	U	50.	U	50.	U	50.	U	50.	U
83-32-9	Acenaphthene	10.	U	3.	J	10.	U	10.	U	10.	U	10.	U
51-28-5	2,4-Dinitrophenol	50.	U	50.	U	50.	U	50.	U	50.	U		U

CHARLESTON - ZONE G
CHARLESTON ZONE G QUARTERLY GW
SDG# 32020

SW846-SVOA													
	SAMPLE ID ------->	120-G-W001-04		120-G-W002-04		120-G-W003-04		120-H-W003-04		BLK-0-2020-07		BLK-0-2020-08	
	ORIGINAL ID ----->	120GW00104		120GW00204		120GW00304		120HW00304		SBLK1		SBLK2	
	LAB SAMPLE ID --->	32082.01		32082.02		32082.03		32082.04		SBLK1		SBLK2	
	ID FROM REPORT -->	120GW00104		120GW00204		120GW00304		120HW00304		SBLK1		SBLK2	
	SAMPLE DATE ----->	12/05/97		12/05/97		12/05/97		12/05/97					
	DATE EXTRACTED -->	12/08/97		12/08/97		12/08/97		12/08/97		12/03/97		12/05/97	
	DATE ANALYZED --->	12/23/97		12/23/97		12/23/97		12/23/97		12/10/97		12/10/97	
	MATRIX ---------->	Water		Water		Water		Water		Water		Water	
	UNITS ---------->	UG/L	A	UG/L	A	UG/L	A	UG/L	A	UG/L	D	UG/L	D
CAS #	Parameter	32020		32020		32020		32020		32020		32020	
100-02-7	4-Nitrophenol	50.	U	50.	U	50.	U	50.	U	50.	U	50.	U
132-64-9	Dibenzofuran	10.	U	10.	U	10.	U	10.	U	10.	U	10.	U
121-14-2	2,4-Dinitrotoluene	10.	U	10.	U	10.	U	10.	U	10.	U	10.	U
84-66-2	Diethylphthalate	10.	U	10.	U	10.	U	10.	U	10.	U	10.	U
7005-72-3	4-Chlorophenylphenylether	10.	U	10.	U	10.	U	10.	U	10.	U	10.	U
86-73-7	Fluorene	10.	U	10.	U	10.	U	10.	U	10.	U	10.	U
100-01-6	4-Nitroaniline	50.	U	50.	U	50.	U	50.	U	50.	U	50.	U
534-52-1	2-Methyl-4,6-Dinitrophenol	50.	U	50.	U	50.	U	50.	U	50.	U	50.	U
86-30-6	N-Nitrosodiphenylamine	10.	U	10.	U	10.	U	10.	U	10.	U	10.	U
101-55-3	4-Bromophenyl-phenylether	10.	U	10.	U	10.	U	10.	U	10.	U	10.	U
118-74-1	Hexachlorobenzene	10.	U	10.	U	10.	U	10.	U	10.	U	10.	U
87-86-5	Pentachlorophenol	50.	U	50.	U	50.	U	50.	U	50.	U	50.	U
85-01-8	Phenanthrene	10.	U	10.	U	10.	U	10.	U	10.	U	10.	U
120-12-7	Anthracene	10.	U	10.	U	10.	U	10.	U	10.	U	10.	U
84-74-2	Di-n-butylphthalate	10.	U	10.	U	10.	U	10.	U	10.	U	10.	U
206-44-0	Fluoranthene	10.	U	10.	U	10.	U	10.	U	10.	U	10.	U
129-00-0	Pyrene	10.	U	10.	U	10.	U	10.	U	10.	U	10.	U
85-68-7	Butylbenzylphthalate	10.	U	10.	U	10.	U	10.	U	10.	U	10.	U
91-94-1	3,3'-Dichlorobenzidine	20.	U	20.	U	20.	U	20.	U	20.	U	20.	U
56-55-3	Benzo(a)anthracene	10.	U	10.	U	10.	U	10.	U	10.	U	10.	U
218-01-9	Chrysene	10.	U	10.	U	10.	U	10.	U	10.	U	10.	U
117-81-7	bis(2-Ethylhexyl)phthalate (BEHP)	10.	U	43.	U	10.	U	22.	U	10.	U	10.	U
117-84-0	Di-n-octyl phthalate	10.	U	10.	U	10.	U	10.	U	10.	U	10.	U
205-99-2	Benzo(b)fluoranthene	10.	U	10.	U	10.	U	10.	U	10.	U	10.	U
207-08-9	Benzo(k)fluoranthene	10.	U	10.	U	10.	U	10.	U	10.	U	10.	U
50-32-8	Benzo(a)pyrene	10.	U	10.	U	10.	U	10.	U	10.	U	10.	U
193-39-5	Indeno(1,2,3-cd)pyrene	10.	U	10.	U	10.	U	10.	U	10.	U	10.	U
53-70-3	Dibenz(a,h)anthracene	10.	U	10.	U	10.	U	10.	U	10.	U	10.	U
191-24-2	Benzo(g,h,i)perylene	10.	U	10.	U	10.	U	10.	U	10.	U	10.	U

CHARLESTON - ZONE G
CHARLESTON ZONE G QUARTERLY GW
SDG# 32020

SW846-SVOA			
	SAMPLE ID ------->	BLK-0-2020-09	
	ORIGINAL ID ----->	SBLK3	
	LAB SAMPLE ID --->	SBLK3	
	ID FROM REPORT -->	SBLK3	
	SAMPLE DATE ----->		
	DATE EXTRACTED -->	12/08/97	
	DATE ANALYZED --->	12/23/97	
	MATRIX ---------->	Water	
	UNITS ---------->	UG/L	D
CAS #	Parameter	32020	
108-95-2	Phenol	10.	U
111-44-4	bis(2-Chloroethyl)ether	10.	U
95-57-8	2-Chlorophenol	10.	U
541-73-1	1,3-Dichlorobenzene	10.	U
106-46-7	1,4-Dichlorobenzene	10.	U
100-51-6	Benzyl alcohol	10.	U
95-50-1	1,2-Dichlorobenzene	10.	U
95-48-7	2-Methylphenol (o-Cresol)	10.	U
108-60-1	2,2'-oxybis(1-Chloropropane)	10.	U
106-44-5	4-Methylphenol (p-Cresol)	10.	U
621-64-7	N-Nitroso-di-n-propylamine	10.	U
67-72-1	Hexachloroethane	10.	U
98-95-3	Nitrobenzene	10.	U
78-59-1	Isophorone	10.	U
88-75-5	2-Nitrophenol	10.	U
105-67-9	2,4-Dimethylphenol	10.	U
65-85-0	Benzoic acid	50.	U
111-91-1	bis(2-Chloroethoxy)methane	10.	U
120-83-2	2,4-Dichlorophenol	10.	U
120-82-1	1,2,4-Trichlorobenzene	10.	U
91-20-3	Naphthalene	10.	U
106-47-8	4-Chloroaniline	10.	U
87-68-3	Hexachlorobutadiene	10.	U
59-50-7	4-Chloro-3-methylphenol	10.	U
91-57-6	2-Methylnaphthalene	10.	U
77-47-4	Hexachlorocyclopentadiene	10.	U
88-06-2	2,4,6-Trichlorophenol	10.	U
95-95-4	2,4,5-Trichlorophenol	50.	U
91-58-7	2-Chloronaphthalene	10.	U
88-74-4	2-Nitroaniline	50.	U
131-11-3	Dimethyl phthalate	10.	U
208-96-8	Acenaphthylene	10.	U
606-20-2	2,6-Dinitrotoluene	10.	U
99-09-2	3-Nitroaniline	50.	U
83-32-9	Acenaphthene	10.	U
51-28-5	2,4-Dinitrophenol	50.	U

CHARLESTON - ZONE G
CHARLESTON ZONE G QUARTERLY GW
SDG# 32020

SW846-SVOA

SAMPLE ID ------->	BLK-0-2020-09
ORIGINAL ID ----->	SBLK3
LAB SAMPLE ID --->	SBLK3
ID FROM REPORT -->	SBLK3
SAMPLE DATE ----->	
DATE EXTRACTED -->	12/08/97
DATE ANALYZED --->	12/23/97
MATRIX ---------->	Water
UNITS ----------->	UG/L D

CAS #	Parameter	32020	
100-02-7	4-Nitrophenol	50.	U
132-64-9	Dibenzofuran	10.	U
121-14-2	2,4-Dinitrotoluene	10.	U
84-66-2	Diethylphthalate	10.	U
7005-72-3	4-Chlorophenylphenylether	10.	U
86-73-7	Fluorene	10.	U
100-01-6	4-Nitroaniline	50.	U
534-52-1	2-Methyl-4,6-Dinitrophenol	50.	U
86-30-6	N-Nitrosodiphenylamine	10.	U
101-55-3	4-Bromophenyl-phenylether	10.	U
118-74-1	Hexachlorobenzene	10.	U
87-86-5	Pentachlorophenol	50.	U
85-01-8	Phenanthrene	10.	U
120-12-7	Anthracene	10.	U
84-74-2	Di-n-butylphthalate	10.	U
206-44-0	Fluoranthene	10.	U
129-00-0	Pyrene	10.	U
85-68-7	Butylbenzylphthalate	10.	U
91-94-1	3,3'-Dichlorobenzidine	20.	U
56-55-3	Benzo(a)anthracene	10.	U
218-01-9	Chrysene	10.	U
117-81-7	bis(2-Ethylhexyl)phthalate (BEHP)	10.	U
117-84-0	Di-n-octyl phthalate	10.	U
205-99-2	Benzo(b)fluoranthene	10.	U
207-08-9	Benzo(k)fluoranthene	10.	U
50-32-8	Benzo(a)pyrene	10.	U
193-39-5	Indeno(1,2,3-cd)pyrene	10.	U
53-70-3	Dibenz(a,h)anthracene	10.	U
191-24-2	Benzo(g,h,i)perylene	10.	U

031

07/31/98

CAW 1/19/98

CHARLESTON - ZONE G
CHARLESTON ZONE G QUARTERLY GW
SDG# 32020

SW846-PEST						
SAMPLE ID ------->	003-G-W001-04	003-E-W001-04	003-F-W001-04	003-D-W001-04	003-G-W002-04	003-H-W002-04
ORIGINAL ID ----->	003GW00104	003EW00104	003FW00104	003DW00104	003GW00204	003HW00204
LAB SAMPLE ID --->	32020.01	32020.03	32020.04	32020.02	32020.05	32020.06
ID FROM REPORT -->	003GW00104	003EW00104	003FW00104	003DW00104	003GW00204	003HW00204
SAMPLE DATE ----->	12/02/97	12/02/97	12/02/97	12/02/97	12/02/97	12/02/97
DATE EXTRACTED -->	12/05/97	12/05/97	12/05/97	12/05/97	12/05/97	12/05/97
DATE ANALYZED --->	12/10/97	12/11/97	12/11/97	12/11/97	12/10/97	12/10/97
MATRIX ---------->	Water	Water	Water	Water	Water	Water
UNITS ---------->	UG/L A	UG/L B	UG/L B	UG/L B	UG/L A	UG/L A
CAS # Parameter	32020	32020	32020	32020	32020	32020
319-84-6 alpha-BHC	0.04 U	0.04 U	0.04 U	0.04 U	0.04 U	0.04 U
319-85-7 beta-BHC	0.04 U	0.04 U	0.04 U	0.04 U	0.04 U	0.04 U
319-86-8 delta-BHC	0.04 U	0.04 U	0.04 U	0.04 U	0.04 U	0.04 U
58-89-9 gamma-BHC (Lindane)	0.04 U	0.04 U	0.04 U	0.04 U	0.04 U	0.04 U
76-44-8 Heptachlor	0.04 U	0.04 U	0.04 U	0.04 U	0.04 U	0.04 U
309-00-2 Aldrin	0.04 U	0.04 U	0.04 U	0.04 U	0.04 U	0.04 U
1024-57-3 Heptachlor epoxide	0.04 U	0.04 U	0.04 U	0.04 U	0.04 U	0.04 U
959-98-8 Endosulfan I	0.04 U	0.04 U	0.04 U	0.04 U	0.04 U	0.04 U
60-57-1 Dieldrin	0.08 U	0.08 U	0.08 U	0.08 U	0.08 U	0.08 U
72-55-9 4,4'-DDE	0.08 U	0.08 U	0.08 U	0.08 U	0.08 U	0.08 U
72-20-8 Endrin	0.08 U	0.08 U	0.08 U	0.08 U	0.08 U	0.08 U
33213-65-9 Endosulfan II	0.08 U	0.08 U	0.08 U	0.08 U	0.08 U	0.08 U
72-54-8 4,4'-DDD	0.08 U	0.08 U	0.08 U	0.08 U	0.08 U	0.08 U
1031-07-8 Endosulfan sulfate	0.08 U	0.08 U	0.08 U	0.08 U	0.08 U	0.08 U
50-29-3 4,4'-DDT	0.08 U	0.08 U	0.08 U	0.08 U	0.08 U	0.08 U
72-43-5 Methoxychlor	0.38 U	0.38 U	0.38 U	0.38 U	0.38 U	0.38 U
53494-70-5 Endrin ketone	0.08 U	0.08 U	0.08 U	0.08 U	0.08 U	0.08 U
7421-93-4 Endrin aldehyde	0.08 U	0.08 U	0.08 U	0.08 U	0.08 U	0.08 U
5103-71-9 alpha-Chlordane	0.04 U	0.04 U	0.04 U	0.04 U	0.04 U	0.04 U
5103-74-2 gamma-Chlordane	0.04 U	0.04 U	0.04 U	0.04 U	0.04 U	0.04 U
8001-35-2 Toxaphene	2.5 U	2.5 U	2.5 U	2.5 U	2.5 U	2.5 U
12674-11-2 Aroclor-1016	??????????	1. U	1. U	1. U	??????????	??????????
11104-28-2 Aroclor-1221	??????????	1. U	1. U	1. U	??????????	??????????
11141-16-5 Aroclor-1232	??????????	1. U	1. U	1. U	??????????	??????????
53469-21-9 Aroclor-1242	??????????	1. U	1. U	1. U	??????????	??????????
12672-29-6 Aroclor-1248	??????????	1. U	1. U	1. U	??????????	??????????
11097-69-1 Aroclor-1254	??????????	2. U	2. U	2. U	??????????	??????????
11096-82-5 Aroclor-1260	??????????	2. U	2. U	2. U	??????????	??????????

EK 1/11/98

CHARLESTON - ZONE G
CHARLESTON ZONE G QUARTERLY GW
SDG# 32020

SW846-PEST						
SAMPLE ID ------->	003-G-W003-04	006-G-W001-04	006-G-W002-04	006-G-W003-04	006-G-W004-04	006-H-W004-04
ORIGINAL ID ----->	003GW00304	006GW00104	006GW00204	006GW00304	006GW00404	006HW00404
LAB SAMPLE ID --->	32043.01	32020.07	32055.01	32043.02	32043.03	32043.04
ID FROM REPORT -->	003GW00304	006GW00104	006GW00204	006GW00304	006GW00404	006HW00404
SAMPLE DATE ----->	12/03/97	12/02/97	12/04/97	12/03/97	12/03/97	12/03/97
DATE EXTRACTED -->	12/05/97	12/05/97	12/08/97	12/05/97	12/05/97	12/05/97
DATE ANALYZED --->	12/10/97	12/11/97	12/14/97	12/11/97	12/11/97	12/11/97
MATRIX ---------->	Water	Water	Water	Water	Water	Water
UNITS ---------->	UG/L A	UG/L A	UG/L A	UG/L A	UG/L A	UG/L A

CAS #	Parameter	32020	32020	32020	32020	32020	32020
319-84-6	alpha-BHC	0.04 U UJ	0.04 U	0.04 U UJ	0.04 U	0.04 U UJ	0.04 U
319-85-7	beta-BHC	0.04 U	0.04 U	0.04 U	0.04 U	0.04 U	0.04 U
319-86-8	delta-BHC	0.04 U	0.04 U	0.04 U	0.04 U	0.04 U	0.04 U
58-89-9	gamma-BHC (Lindane)	0.04 U	0.04 U	0.04 U	0.04 U	0.04 U	0.04 U
76-44-8	Heptachlor	0.04 U	0.04 U	0.04 U	0.04 U	0.04 U	0.04 U
309-00-2	Aldrin	0.04 U	0.04 U	0.04 U	0.04 U	0.04 U	0.04 U
1024-57-3	Heptachlor epoxide	0.04 U	0.04 U	0.04 U	0.04 U	0.04 U	0.04 U
959-98-8	Endosulfan I	0.04 U	0.04 U	0.04 U	0.04 U	0.04 U	0.04 U
60-57-1	Dieldrin	0.08 U	0.08 U	0.08 U	0.08 U	0.08 U	0.08 U
72-55-9	4,4'-DDE	0.08 U	0.08 U	0.08 U	0.08 U	0.08 U	0.08 U
72-20-8	Endrin	0.08 U	0.08 U	0.08 U	0.08 U	0.08 U	0.08 U
33213-65-9	Endosulfan II	0.08 U	0.08 U	0.08 U	0.08 U	0.08 U	0.08 U
72-54-8	4,4'-DDD	0.08 U	0.08 U	0.08 U	0.08 U	0.08 U	0.08 U
1031-07-8	Endosulfan sulfate	0.08 U	0.08 U	0.08 U	0.08 U	0.08 U	0.08 U
50-29-3	4,4'-DDT	0.08 U	0.08 U	0.08 U	0.08 U	0.08 U	0.08 U
72-43-5	Methoxychlor	0.38 U	0.38 U	0.38 U	0.38 U	0.38 U	0.38 U
53494-70-5	Endrin ketone	0.08 U	0.08 U	0.08 U	0.08 U	0.08 U	0.08 U
7421-93-4	Endrin aldehyde	0.08 U	0.08 U	0.08 U	0.08 U	0.08 U	0.08 U
5103-71-9	alpha-Chlordane	0.04 U	0.04 U	0.04 U	0.04 U	0.04 U	0.04 U
5103-74-2	gamma-Chlordane	0.04 U	0.04 U	0.04 U	0.04 U	0.04 U	0.04 U
8001-35-2	Toxaphene	2.5 U	2.5 U	2.5 U	2.5 U	2.5 U	2.5 U
12674-11-2	Aroclor-1016	??????????	1. U UJ	1. U	1. U UJ	1. U	1. U UJ
11104-28-2	Aroclor-1221	??????????	1. U	1. U	1. U	1. U	1. U
11141-16-5	Aroclor-1232	??????????	1. U	1. U	1. U	1. U	1. U
53469-21-9	Aroclor-1242	??????????	1. U	1. U	1. U	1. U	1. U
12672-29-6	Aroclor-1248	??????????	1. U	1. U	1. U	1. U	1. U
11097-69-1	Aroclor-1254	??????????	2. U	2. U	2. U	2. U	2. U
11096-82-5	Aroclor-1260	??????????	2. U	2. U	2. U	2. U	2. U

01 1/11/98

033

CHARLESTON - ZONE G
CHARLESTON ZONE G QUARTERLY GW
SDG# 32020

SW846-PEST						
SAMPLE ID ------->	006-G-W005-04	006-G-W006-04	006-G-W007-04	120-G-W001-04	120-G-W002-04	120-G-W003-04
ORIGINAL ID ----->	006GW00504	006GW00604	006GW00704	120GW00104	120GW00204	120GW00304
LAB SAMPLE ID --->	32055.02	32055.03	32055.04	32082.01	32082.02	32082.03
ID FROM REPORT -->	006GW00504	006GW00604	006GW00704	120GW00104	120GW00204	120GW00304
SAMPLE DATE ----->	12/04/97	12/04/97	12/04/97	12/05/97	12/05/97	12/05/97
DATE EXTRACTED -->	12/08/97	12/08/97	12/08/97	12/08/97	12/08/97	12/08/97
DATE ANALYZED --->	12/14/97	12/14/97	12/14/97	12/14/97	12/14/97	12/14/97
MATRIX ---------->	Water	Water	Water	Water	Water	Water
UNITS ---------->	UG/L A	UG/L A	UG/L A	UG/L A	UG/L A	UG/L A
CAS # Parameter	32020	32020	32020	32020	32020	32020
319-84-6 alpha-BHC	0.04 U UJ	0.04 U UJ	0.04 U UJ	0.04 U UJ	0.04 U UJ	0.04 U UJ
319-85-7 beta-BHC	0.04 U	0.04 U	0.04 U	0.04 U	0.04 U	0.04 U
319-86-8 delta-BHC	0.04 U	0.04 U	0.04 U	0.04 U	0.04 U	0.04 U
58-89-9 gamma-BHC (Lindane)	0.04 U	0.04 U	0.04 U	0.04 U	0.04 U	0.04 U
76-44-8 Heptachlor	0.04 U	0.04 U	0.04 U	0.04 U	0.04 U	0.04 U
309-00-2 Aldrin	0.04 U	0.04 U	0.04 U	0.04 U	0.04 U	0.04 U
1024-57-3 Heptachlor epoxide	0.04 U	0.04 U	0.04 U	0.04 U	0.04 U	0.04 U
959-98-8 Endosulfan I	0.04 U	0.04 U	0.04 U	0.04 U	0.04 U	0.04 U
60-57-1 Dieldrin	0.08 U	0.08 U	0.08 U	0.08 U	0.08 U	0.08 U
72-55-9 4,4'-DDE	0.08 U	0.08 U	0.08 U	0.08 U	0.08 U	0.08 U
72-20-8 Endrin	0.08 U	0.08 U	0.08 U	0.08 U	0.08 U	0.08 U
33213-65-9 Endosulfan II	0.08 U	0.08 U	0.08 U	0.08 U	0.08 U	0.08 U
72-54-8 4,4'-DDD	0.08 U	0.08 U	0.08 U	0.08 U	0.08 U	0.08 U
1031-07-8 Endosulfan sulfate	0.08 U	0.08 U	0.08 U	0.08 U	0.08 U	0.08 U
50-29-3 4,4'-DDT	0.08 U	0.08 U	0.08 U	0.08 U	0.08 U	0.08 U
72-43-5 Methoxychlor	0.38 U	0.38 U	0.38 U	0.38 U	0.38 U	0.38 U
53494-70-5 Endrin ketone	0.08 U	0.08 U	0.08 U	0.08 U	0.08 U	0.08 U
7421-93-4 Endrin aldehyde	0.08 U	0.08 U	0.08 U	0.08 U	0.08 U	0.08 U
5103-71-9 alpha-Chlordane	0.04 U	0.04 U	0.04 U	0.04 U	0.04 U	0.04 U
5103-74-2 gamma-Chlordane	0.04 U	0.04 U	0.04 U	0.04 U	0.04 U	0.04 U
8001-35-2 Toxaphene	2.5 U	2.5 U	2.5 U	2.5 U	2.5 U	2.5 U
12674-11-2 Aroclor-1016	1. U	1. U	1. U	1. U	1. U	1. U
11104-28-2 Aroclor-1221	1. U	1. U	1. U	1. U	1. U	1. U
11141-16-5 Aroclor-1232	1. U	1. U	1. U	1. U	1. U	1. U
53469-21-9 Aroclor-1242	1. U	1. U	1. U	1. U	1. U	1. U
12672-29-6 Aroclor-1248	1. U	1. U	1. U	1. U	1. U	1. U
11097-69-1 Aroclor-1254	2. U	2. U	2. U	2. U	2. U	2. U
11096-82-5 Aroclor-1260	2. U	2. U	2. U	2. U	2. U	2. U

CHARLESTON - ZONE G
CHARLESTON ZONE G QUARTERLY GW
SDG# 32020

SW846-PEST													
	SAMPLE ID ------->	120-H-W003-04		BLK-0-2020-01		BLK-0-2020-02		BLK-0-2020-03		BLK-0-2020-04			
	ORIGINAL ID ----->	120HW00304		BL1205WA		BL1205WA1		BL1208WA		BL1208WA1			
	LAB SAMPLE ID --->	32082.04		BL1205WA		BL1205WA1		BL1208WA		BL1208WA1			
	ID FROM REPORT -->	120HW00304		BL1205WA		BL1205WA1		BL1208WA		BL1208WA1			
	SAMPLE DATE ----->	12/05/97											
	DATE EXTRACTED -->	12/08/97		12/05/97		12/05/97		12/08/97		12/08/97			
	DATE ANALYZED --->	12/14/97		12/10/97		12/11/97		12/13/97		12/13/97			
	MATRIX ---------->	Water		Water		Water		Water		Water			
	UNITS ---------->	UG/L	A	UG/L	D	UG/L	D	UG/L	D	UG/L	D		
CAS #	Parameter	32020		32020		32020		32020		32020			
319-84-6	alpha-BHC	0.04	U UJ	0.04	U	??????????		0.04	U	??????????			
319-85-7	beta-BHC	0.04	U	0.04	U	??????????		0.04	U	??????????			
319-86-8	delta-BHC	0.04	U	0.04	U	??????????		0.04	U	??????????			
58-89-9	gamma-BHC (Lindane)	0.04	U	0.04	U	??????????		0.04	U	??????????			
76-44-8	Heptachlor	0.04	U	0.04	U	??????????		0.04	U	??????????			
309-00-2	Aldrin	0.04	U	0.04	U	??????????		0.04	U	??????????			
1024-57-3	Heptachlor epoxide	0.04	U	0.04	U	??????????		0.04	U	??????????			
959-98-8	Endosulfan I	0.04	U	0.04	U	??????????		0.04	U	??????????			
60-57-1	Dieldrin	0.08	U	0.08	U	??????????		0.08	U	??????????			
72-55-9	4,4'-DDE	0.08	U	0.08	U	??????????		0.08	U	??????????			
72-20-8	Endrin	0.08	U	0.08	U	??????????		0.08	U	??????????			
33213-65-9	Endosulfan II	0.08	U	0.08	U	??????????		0.08	U	??????????			
72-54-8	4,4'-DDD	0.08	U	0.08	U	??????????		0.08	U	??????????			
1031-07-8	Endosulfan sulfate	0.08	U	0.08	U	??????????		0.08	U	??????????			
50-29-3	4,4'-DDT	0.08	U	0.08	U	??????????		0.08	U	??????????			
72-43-5	Methoxychlor	0.38	U	0.38	U	??????????		0.38	U	??????????			
53494-70-5	Endrin ketone	0.08	U	0.08	U	??????????		0.08	U	??????????			
7421-93-4	Endrin aldehyde	0.08	U	0.08	U	??????????		0.08	U	??????????			
5103-71-9	alpha-Chlordane	0.04	U	0.04	U	??????????		0.04	U	??????????			
5103-74-2	gamma-Chlordane	0.04	U	0.04	U	??????????		0.04	U	??????????			
8001-35-2	Toxaphene	2.5	U	2.5	U	??????????		2.5	U	??????????			
12674-11-2	Aroclor-1016	1.	U	??????????		1.	U	??????????		1.	U		
11104-28-2	Aroclor-1221	1.	U	??????????		1.	U	??????????		1.	U		
11141-16-5	Aroclor-1232	1.	U	??????????		1.	U	??????????		1.	U		
53469-21-9	Aroclor-1242	1.	U	??????????		1.	U	??????????		1.	U		
12672-29-6	Aroclor-1248	1.	U	??????????		1.	U	??????????		1.	U		
11097-69-1	Aroclor-1254	2.	U	??????????		2.	U	??????????		2.	U		
11096-82-5	Aroclor-1260	2.	U	??????????		2.	U	??????????		2.	U		

LM 1/11/98

035

DATALCP3
01/09/98

CH 1/19/98

CHARLESTON - ZONE G
CHARLESTON ZONE G QUARTERLY GW
SDG# 32020

SW846-META													
	SAMPLE ID ------->	003-G-W001-04		003-E-W001-04		003-F-W001-04		003-D-W001-04		003-G-W002-04		003-H-W002-04	
	ORIGINAL ID ----->	003GW00104		003EW00104		003FW00104		003DW00104		003GW00204		003HW00204	
	LAB SAMPLE ID --->	32020.01		32020.03		32020.04		32020.02		32020.05		32020.06	
	ID FROM REPORT -->	003GW00104		003EW00104		003FW00104		003DW00104		003GW00204		003HW00204	
	SAMPLE DATE ----->	12/02/97		12/02/97		12/02/97		12/02/97		12/02/97		12/02/97	
	DATE EXTRACTED -->	12/10/97		12/10/97		12/10/97		12/10/97		12/10/97		12/10/97	
	DATE ANALYZED --->	12/12/97		12/12/97		12/12/97		12/12/97		12/12/97		12/13/97	
	MATRIX ---------->	Water		Water		Water		Water		Water		Water	
	UNITS ---------->	UG/L	A	UG/L	B	UG/L	B	UG/L	B	UG/L	A	UG/L	A
CAS #	Parameter	32020		32020		32020		32020		32020		32020	
7429-90-5	Aluminum (Al)	212.		8.	U	12.2	B	8.	U	251.		261.	
7440-36-0	Antimony (Sb)	3.6	~~B~~ U	1.6	U	2.3	B	1.6	U	1.6	U	1.6	U
7440-38-2	Arsenic (As)	2.1	U	2.1	U	2.1	U	2.3	B	2.1	U	2.1	U
7440-39-3	Barium (Ba)	24.2		0.57	B	0.41	B	0.54	B	12.6		12.3	
7440-41-7	Beryllium (Be)	0.2	U	0.2	U	0.2	U	0.2	U	0.2	U	0.2	U
7440-43-9	Cadmium (Cd)	0.3	U	0.3	U	0.3	U	0.3	U	0.3	U	0.3	U
7440-70-2	Calcium (Ca)	49300.		48.1	B	43.	U	43.	U	12600.		11500.	
7440-47-3	Chromium (Cr)	1.9	~~B~~ U	1.	U	1.	U	1.6	B	2.	~~B~~ U	1.2	~~B~~ U
7440-48-4	Cobalt (Co)	0.8	U	0.8	U	0.8	U	0.8	U	0.8	U	0.9	~~B~~ J
7440-50-8	Copper (Cu)	1.4	U	1.4	U	1.4	U	1.4	U	1.4	U	1.5	~~B~~ J
7439-89-6	Iron (Fe)	209.		21.2	B	20.	U	20.	U	266.		263.	
7439-92-1	Lead (Pb)	0.9	~~U~~ UJ	0.9	U	0.9	U	0.9	U	0.9	~~U~~ UJ	0.9	~~U~~ UJ
7439-95-4	Magnesium (Mg)	4080.		43.	U	43.	U	43.	U	1720.		1670.	
7439-96-5	Manganese (Mn)	3.7	~~B~~ J	0.55	B	0.3	U	0.55	B	38.1		39.3	
7439-97-6	Mercury (Hg)	0.1	U	0.1	U	0.1	U	0.1	U	0.1	U	0.1	U
7440-02-0	Nickel (Ni)	1.3	~~B~~ U	2.3	B	0.92	B	1.8	B	2.1	~~B~~ U	2.8	~~B~~ U
7440-09-7	Potassium (K)	1450.	~~B~~ J	560.	U	560.	U	560.	U	560.	U	560.	U
7782-49-2	Selenium (Se)	4.6	~~B~~ J	3.4	U	3.4	U	3.4	U	3.4	U	3.4	U
7440-22-4	Silver (Ag)	1.	~~B~~ UJ	1.	U	1.	U	1.	U	1.	~~U~~ UJ	1.	~~U~~ UJ
7440-23-5	Sodium (Na)	8620.	U	21400.		19200.		18800.		12300.	U	12300.	U
7440-28-0	Thallium (Tl)	5.	U	5.	U	5.	U	5.	U	5.	U	5.	U
7440-31-5	Tin (Sn)	14.	U	14.	U	14.	U	14.	U	14.	U	14.	U
7440-62-2	Vanadium (V)	1.1	U	1.1	U	1.1	U	1.1	U	1.1	U	1.4	~~B~~ J
7440-66-6	Zinc (Zn)	5.8	U	5.8	U	5.8	U	5.8	U	45.4		5.8	U

PBH 1/14/98

036

CHARLESTON - ZONE G
CHARLESTON ZONE G QUARTERLY GW
SDG# 32020

SW846-META	SAMPLE ID ------->	003-G-W003-04	006-G-W001-04	006-G-W002-04	006-G-W003-04	006-G-W004-04	006-H-W004-04
	ORIGINAL ID ----->	003GW00304	006GW00104	006GW00204	006GW00304	006GW00404	006HW00404
	LAB SAMPLE ID --->	32043.01	32020.07	32055.01	32043.02	32043.03	32043.04
	ID FROM REPORT -->	003GW00304	006GW00104	006GW00204	006GW00304	006GW00404	006HW00404
	SAMPLE DATE ----->	12/03/97	12/02/97	12/04/97	12/03/97	12/03/97	12/03/97
	DATE EXTRACTED -->	12/10/97	12/10/97	12/10/97	12/10/97	12/10/97	12/10/97
	DATE ANALYZED --->	12/13/97	12/13/97	12/13/97	12/13/97	12/13/97	12/13/97
	MATRIX ---------->	Water	Water	Water	Water	Water	Water
	UNITS ---------->	UG/L A	UG/L A	UG/L A	UG/L A	UG/L A	UG/L A
CAS #	Parameter	32020	32020	32020	32020	32020	32020
7429-90-5	Aluminum (Al)	5310.	49.2 B U	643.	367.	542. J	186. J
7440-36-0	Antimony (Sb)	1.7 B U	2.4 B U	1.6 U	1.9 B U	1.6 U	1.6 U
7440-38-2	Arsenic (As)	3.2 B J	2.9 B J	5.8 B J	154.	6.9 B J	5.5 B J
7440-39-3	Barium (Ba)	31.	31.3	41.3	184.	287.	298.
7440-41-7	Beryllium (Be)	0.2 U	0.2 U	0.41 B J	0.2 U	0.2 U	0.2 U
7440-43-9	Cadmium (Cd)	0.3 U	0.3 U	0.3 U	0.3 U	0.3 U	0.3 U
7440-70-2	Calcium (Ca)	29400.	140000.	154000.	154000.	207000.	221000.
7440-47-3	Chromium (Cr)	9.8 B J	1.6 B U	1.9 B U	1.5 B U	1.2 B U	1. U
7440-48-4	Cobalt (Co)	1.2 B J	0.8 U	1.2 B J	0.8 U	0.8 U	1. B J
7440-50-8	Copper (Cu)	2.3 B J	2. B J	1.4 U	1.4 U	1.4 U	1.4 U
7439-89-6	Iron (Fe)	6340.	2150.	14900.	30900.	44800.	45600.
7439-92-1	Lead (Pb)	1.1 B J	0.9 U J	0.9 U J	0.9 U J	0.9 U J	0.9 U J
7439-95-4	Magnesium (Mg)	4560.	125000.	577000.	73200.	318000.	379000.
7439-96-5	Manganese (Mn)	46.9	995.	551.	862.	600.	653.
7439-97-6	Mercury (Hg)	0.1 U	0.1 U	0.1 U	0.1 U	0.1 U	0.1 U
7440-02-0	Nickel (Ni)	3.4 B U	5.8 B U	1.6 B U	1.2 B U	3. B U	1.2 B U
7440-09-7	Potassium (K)	1370. B J	47000.	208000.	35300.	111000.	132000.
7782-49-2	Selenium (Se)	3.4 U	3.4 U	3.4 U	3.4 U	3.4 U	3.4 U
7440-22-4	Silver (Ag)	1. U J	1. U J	1. U J	1. U J	1. U J	1. U J
7440-23-5	Sodium (Na)	18400. U	950000.	5500000.	771000.	2890000.	3380000.
7440-28-0	Thallium (Tl)	5. U	5. U	5. U	6.8 B J	7.1 B J	5. U
7440-31-5	Tin (Sn)	14. U	14. U	14. U	14. U	14. U	14. U
7440-62-2	Vanadium (V)	15.7 B J	2.9 B J	3.4 B J	1.5 B J	3.4 B J	3.6 B J
7440-66-6	Zinc (Zn)	12.8 B J	9.1 B J	5.8 U	12.9 B J	5.8 U	5.8 U

PBH 1/14/98

037

CHARLESTON - ZONE G
CHARLESTON ZONE G QUARTERLY GW
SDG# 32020

SW846-META	SAMPLE ID ------->	006-G-W005-04	006-G-W006-04	006-G-W007-04	120-G-W001-04	120-G-W002-04	120-G-W003-04
	ORIGINAL ID ----->	006GW00504	006GW00604	006GW00704	120GW00104	120GW00204	120GW00304
	LAB SAMPLE ID --->	32055.02	32055.03	32055.04	32082.01	32082.02	32082.03
	ID FROM REPORT -->	006GW00504	006GW00604	006GW00704	120GW00104	120GW00204	120GW00304
	SAMPLE DATE ----->	12/04/97	12/04/97	12/04/97	12/05/97	12/05/97	12/05/97
	DATE EXTRACTED -->	12/10/97	12/10/97	12/10/97	12/10/97	12/10/97	12/10/97
	DATE ANALYZED --->	12/13/97	12/13/97	12/12/97	12/12/97	12/12/97	12/12/97
	MATRIX ---------->	Water	Water	Water	Water	Water	Water
	UNITS ---------->	UG/L A	UG/L A	UG/L A	UG/L A	UG/L A	UG/L
CAS #	Parameter	32020	32020	32020	32020	32020	32020
7429-90-5	Aluminum (Al)	249.	79.4 B J	11.4 B U	231.	56.4 B U	493.
7440-36-0	Antimony (Sb)	2.2 B U	1.6 U	2.5 B U	2.1 B U	1.6 U	1.6 B U
7440-38-2	Arsenic (As)	3.2 B J	17.	10.5	60.4	11.9	57.7
7440-39-3	Barium (Ba)	51.6	37.1	14.	14.4	13.9	143.
7440-41-7	Beryllium (Be)	0.41 B J	0.29 B J	0.2 U	0.2 U	0.2 U	0.2 U
7440-43-9	Cadmium (Cd)	0.3 U	0.3 U	0.3 U	0.3 U	0.3 U	0.3 U
7440-70-2	Calcium (Ca)	161000.	120000.	94900.	53700.	78300.	88000.
7440-47-3	Chromium (Cr)	1.5 B U	1. U	1. U	1.6 B U	1. U	1.8 B U
7440-48-4	Cobalt (Co)	2.2 B J	0.93 B J	0.8 U	0.8 U	0.8 U	1.2 B J
7440-50-8	Copper (Cu)	1.4 U	1.4 U	1.5 B J	2.2 B J	1.4 U	1.6 B J
7439-89-6	Iron (Fe)	16500.	11200.	5650.	9610.	6890.	9900.
7439-92-1	Lead (Pb)	0.9 B U J	0.9 B U J	0.9 B U J	0.9 B U J	0.9 B U J	0.9 B U J
7439-95-4	Magnesium (Mg)	639000.	559000.	145000.	27700.	38800.	26500.
7439-96-5	Manganese (Mn)	461.	136.	780.	324.	646.	223.
7439-97-6	Mercury (Hg)	0.1 U	0.1 U	0.1 U	0.1 U	0.1 U	0.1 U
7440-02-0	Nickel (Ni)	3.7 B U	1.5 B U	1.9 B U	7.5 B U	1.7 B U	15.6 B U
7440-09-7	Potassium (K)	216000.	189000.	63700.	14900.	22900.	19400.
7782-49-2	Selenium (Se)	3.4 U	3.4 U	3.4 U	3.4 U	3.4 U	3.4 U
7440-22-4	Silver (Ag)	1. B U J	1. B U J	1. B U J	1. B U J	1. B U J	1. B U J
7440-23-5	Sodium (Na)	5560000.	4990000.	1060000.	124000.	217000.	144000.
7440-28-0	Thallium (Tl)	5. U	5. U	5. U	5. U	5. U	5. U
7440-31-5	Tin (Sn)	14. U	14. U	14. U	14. U	14. U	14. U
7440-62-2	Vanadium (V)	3.9 B J	2.9 B J	2.4 B J	1.6 B J	2.2 B J	2. B J
7440-66-6	Zinc (Zn)	5.8 U	5.8 U	5.8 U	7.8 B J	5.8 U	316.

1/14/98

CHARLESTON - ZONE G
CHARLESTON ZONE G QUARTERLY GW
SDG# 32020

SW846-META							
	SAMPLE ID ------->	120-H-W003-04		BLK-0-2020-05		BLK-0-2020-06	
	ORIGINAL ID ----->	120HW00304		PBWH		PBWI	
	LAB SAMPLE ID --->	32082.04		PBWH		PBWI	
	ID FROM REPORT -->	120HW00304		PBWH		PBWI	
	SAMPLE DATE ----->	12/05/97					
	DATE EXTRACTED -->	12/10/97		12/17/97		12/10/97	
	DATE ANALYZED --->	12/12/97		12/17/97		12/12/97	
	MATRIX ---------->	Water		Water		Water	
	UNITS ---------->	UG/L	A	UG/L	D	UG/L	D
CAS #	Parameter	32020		32020		32020	
7429-90-5	Aluminum (Al)	417.		??????????		8.	U
7440-36-0	Antimony (Sb)	2.1	~~B~~ U	??????????		1.6	U
7440-38-2	Arsenic (As)	56.7		??????????		2.1	U
7440-39-3	Barium (Ba)	145.		??????????		0.3	U
7440-41-7	Beryllium (Be)	0.2	U	??????????		0.2	U
7440-43-9	Cadmium (Cd)	0.3	U	??????????		0.3	U
7440-70-2	Calcium (Ca)	90600.		??????????		43.	U
7440-47-3	Chromium (Cr)	1.2	~~B~~ U	??????????		1.	U
7440-48-4	Cobalt (Co)	1.6	~~B~~ J	??????????		0.8	U
7440-50-8	Copper (Cu)	1.7	~~B~~ J	??????????		1.4	U
7439-89-6	Iron (Fe)	10100.		??????????		20.	U
7439-92-1	Lead (Pb)	0.9	~~U~~ UJ	??????????		1.5	B
7439-95-4	Magnesium (Mg)	27500.		??????????		43.	U
7439-96-5	Manganese (Mn)	228.		??????????		0.3	U
7439-97-6	Mercury (Hg)	0.1	U	0.1	U	??????????	
7440-02-0	Nickel (Ni)	15.2	~~B~~ U	??????????		0.7	U
7440-09-7	Potassium (K)	19600.		??????????		560.	U
7782-49-2	Selenium (Se)	3.7	~~B~~ J	??????????		3.4	U
7440-22-4	Silver (Ag)	1.	~~U~~ UJ	??????????		1.7	B
7440-23-5	Sodium (Na)	140000.		??????????		75.6	B
7440-28-0	Thallium (Tl)	5.	U	??????????		5.	U
7440-31-5	Tin (Sn)	14.	U	??????????		14.	U
7440-62-2	Vanadium (V)	1.8	~~B~~ J	??????????		1.1	U
7440-66-6	Zinc (Zn)	236.		??????????		5.8	U

PBW 1/14/98

HEARTLAND
ENVIRONMENTAL SERVICES, INC.

Data Validation Report

SDG#:	ECZG02
Date:	June 9, 1998
Client Name:	EnSafe
Project/Site Name:	Charleston - Zone F & G
Date Sampled:	April 20-22, 1998
Number of Samples:	16 Aqueous Sample(s) with 0 MS/MSD(s)
Laboratory:	Savannah Laboratories
Validation Guidance:	National Functional Guidelines for Organic and Inorganic Data, February, 1994
QA/QC Level:	EPA DQO Level III
Method(s) Utilized:	SW846 Third Edition
Analytical Fractions:	Volatiles, Semivolatiles, Metals

Analytical data in this report were screened to determine usability of results and also to determine contractual compliance relative to these requirements and deliverables. This screening assumes analytical results are correct as reported and merely provides an interpretation of the reported quality control results. A minimum of 10% of all laboratory calculations have been verified as part of this validation. All instrument output, i.e. spectra, chromatograms, etc., for each sample have been carefully reviewed. The end-user is urged to review the Specific Findings and associated Data Qualifications presented in this report. Annotated Form 1s or spreadsheets for all samples reviewed are included after the Data Assessment Narratives. Form 1s for MS/MSD samples or spreadsheets are not annotated.

The release of this Data Validation Report is authorized by the following signature:

Craig G. Searson
for Paul B. Humburg, President

6-15-98.
Date

SDG# ECZG02

Samples and Fractions Reviewed

Sample Identifications | Analytical Fractions

ENSAFE ID	MATRIX	VOA		SVOA		TAL	
FDSGW16A03	WATER	X		X		X	
FDSTW16A03	WATER	X					
FDSGW16B03	WATER	X		X		X	
FDSGW16C03	WATER	X		X		X	
003GW00105	WATER	X		X		X	
003TW00105	WATER	X					
003GW00205	WATER	X		X		X	
003HW00205	WATER	X		X		X	
003GW00305	WATER	X		X		X	
024GW00101	WATER	X		X		X	
024GW00201	WATER	X		X		X	
024TW00201	WATER	X					
024EW00201	WATER	X		X		X	
024DW00201	WATER	X		X		X	
024GW00301	WATER	X		X		X	
GELGW01405	WATER	X		X		X	
Total Billable Samples (Water/Soil)		16	0	13	0	13	0

VOA= SW846 Volatiles
SVOA= SW846 Semivolatiles
TAL= SW846 Metals

DATA ASSESSMENT AND NARRATIVE

VOLATILE ORGANICS

General

The organic findings offered in this screening report assumes that all analytical results are correct as reported and is based upon the examination of the reported holding times, blank analysis results, surrogate and matrix spike recoveries, GC/MS performance, tuning results, calibration results and internal standard areas. This report was prepared in compliance relative to the analytical and deliverable requirements specified in the U.S. EPA SW846 8260; the National Functional Guidelines for Organic Data Review, and DQO Level III. All comments made within this report should be considered when examining the analytical results.

SDG # ECZG02

A validation was performed on the Volatile Data from SDG ECZG02. The data was evaluated based on the following parameters.

* Data Completeness
* Holding Times
* GC/MS Tuning
  Calibrations
* Internal Standard Performance
* Blanks
* Surrogate Recoveries
* Laboratory Control Samples
* Field Duplicates
* Compound Identification /Quantitation

* - All criteria were met for this parameter

Continuing Calibration

The continuing calibration, BQ230, contained compounds with %Ds greater than 50% and less than 90%. For the samples and non-compliant compounds listed below, qualify all positive results as estimated (J) and non detects as estimated (UJ).

FDS-G-W16C-03	bromomethane (50.4%)
FDS-G-W16B-03	
024-G-W003-01	
024-G-W002-01	
003-G-W001-05	
003-G-W003-05	

The continuing calibration, BQ245, contained compounds with %Ds greater than 25% and less than 50%. For the samples and non-compliant compounds listed below, qualify all positive results as estimated (J).

024-G-W001-01	tetrachloroethene (33.2%)

The continuing calibration, BQ245, contained compounds with %Ds greater than 50% and less than 90%. For the samples and non-compliant compounds listed below, qualify all positive results as estimated (J) and non detects as estimated (UJ).

GEL-G-W014-05	carbon disulfide (85.9%)
003-G-W002-05	
003-H-W002-05	
024-G-W001-01	
FDS-G-W16A-03	

System Performance and Overall Assessment

The data as presented requires qualifications.

GLOSSARY OF DATA QUALIFIERS

QUALIFICATION CODES

U = Not detected

J = Estimated value

UJ = Reported quantitation limit is qualified as estimated

UR = Result is rejected and unusable

D = Result value is based on dilution analysis

METHOD BLANK QUALIFICATION CODES

CRQL = The sample result for the blank contaminant is less than the sample CRQL and is less than 10X the method blank value. The sample result for the blank contaminant is rejected and the CRQL for that compound is reported.

U = The sample result for the blank contaminant is greater than the sample CRQL and is less than 10X the method blank value. The sample result for the blank contaminant is qualified as non detected at the compound value reported.

No Action = The sample result for the blank contaminant is greater than the sample CRQL and is greater than 10X the method blank value. The sample result for the blank contaminant is not qualified with any blank qualifiers.

SUMMARY OF DATA QUALIFICATIONS

SAMPLE ID	COMPOUND ID	DL	QL
FDS-G-W16C-03	bromomethane	+/-	J/UJ
FDS-G-W16B-03			
024-G-W003-01			
024-G-W002-01			
003-G-W001-05			
003-G-W003-05			
024-G-W001-01	tetrachloroethene	+	J
GEL-G-W014-05	carbon disulfide	+/-	J/UJ
003-G-W002-05			
003-H-W002-05			
024-G-W001-01			
FDS-G-W16A-03			

* DL denotes the Form I qualifier supplied by the laboratory
QL denotes the qualifier used by the data validation firm
+ in the DL column denotes a positive result
- in the DL column denotes a non detect result

DATA ASSESSMENT AND NARRATIVE

SEMIVOLATILE ORGANICS

General

The organic findings offered in this screening report assumes that all analytical results are correct as reported and is based upon the examination of the reported holding times, blank analysis results, surrogate and matrix spike recoveries, GC/MS performance, tuning results, calibration results and internal standard areas. This report was prepared in compliance relative to the analytical and deliverable requirements specified in the U.S. EPA SW846 8270; the National Functional Guidelines for Organic Data Review, and DQO Level III. All comments made within this report should be considered when examining the analytical results.

SDG # ECZG02

A validation was performed on the Semivolatile Data from SDG ECZG02. The data was evaluated based on the following parameters.

* Data Completeness
* Holding Times
* GC/MS Tuning
  Calibrations
* Internal Standard Performance
* Blanks
* Surrogate Recoveries
* Laboratory Control Samples
* Field Duplicates
* Compound Identification /Quantitation

* - All criteria were met for this parameter

Continuing Calibrations

The continuing calibration, KQ090, contained compounds with %Ds greater than 50% and less than 90%. For the samples and non-compliant compounds listed below, qualify all positive results as estimated (J) and non detects as estimated (UJ).

FDS-G-W16C-03	2,4-dinitrophenol (52.3%)
FDS-G-W16B-03	4,6-dinito-2-methylphenol (85.1%)
024-G-W003-01	
024-G-W002-01	
003-G-W001-05	
003-G-W003-05	
GEL-G-W014-05	
003-G-W002-05	
003-H-W002-05	
024-G-W001-01	

The continuing calibration, KQ095, contained compounds with %Ds greater than 50% and less than 90%. For the samples and non-compliant compounds listed below, qualify all positive results as estimated (J) and non detects as estimated (UJ).

FDS-G-W16A-03	4,6-dinito-2-methylphenol (66.0%)

System Performance and Overall Assessment

The data as presented requires qualifications.

GLOSSARY OF DATA QUALIFIERS

QUALIFICATION CODES

U = Not detected

J = Estimated value

UJ = Reported quantitation limit is qualified as estimated

UR = Result is rejected and unusable

D = Result value is based on dilution analysis

METHOD BLANK QUALIFICATION CODES

CRQL = The sample result for the blank contaminant is less than the sample CRQL and is less than 10X the method blank value. The sample result for the blank contaminant is rejected and the CRQL for that compound is reported.

U = The sample result for the blank contaminant is greater than the sample CRQL and is less than 10X the method blank value. The sample result for the blank contaminant is qualified as non detected at the compound value reported.

No Action = The sample result for the blank contaminant is greater than the sample CRQL and is greater than 10X the method blank value. The sample result for the blank contaminant is not qualified with any blank qualifiers.

SUMMARY OF DATA QUALIFICATIONS

SAMPLE ID	COMPOUND ID	DL	QL
FDS-G-W16C-03	2,4-dinitrophenol	+/-	J/UJ
FDS-G-W16B-03	4,6-dinito-2-methylphenol		
024-G-W003-01			
024-G-W002-01			
003-G-W001-05			
003-G-W003-05			
GEL-G-W014-05			
003-G-W002-05			
003-H-W002-05			
024-G-W001-01			
FDS-G-W16A-03	4,6-dinito-2-methylphenol	+/-	J/UJ

* DL denotes the Form I qualifier supplied by the laboratory
QL denotes the qualifier used by the data validation firm
+ in the DL column denotes a positive result
- in the DL column denotes a non detect result

DATA ASSESSMENT NARRATIVE
METALS

General

The inorganic findings offered in this screening report assumes that all analytical results are correct as reported and is based upon the examination of the reported holding times, blank analysis results, matrix spike and LCS recoveries, matrix duplicates and calibration results. This report was prepared in compliance relative to the analytical and deliverable requirements specified in the SW846 Methods; the Functional Guidelines for Inorganic Data Validation, February 1994, and DQO Level III requirements. All comments made within this report should be considered when examining the analytical results. Please refer the specific findings found in each category to the Summary of Data Qualification table.

SDGs # ECZG02

A validation was performed on the Metals Data from SDG ECZG02. The data was evaluated based on the following parameters.

*	•	Data Completeness
*	•	Holding Times
*	•	Calibrations
	•	Blanks
*	•	Interferences
*	•	Matrix Spike Recovery
*	•	Matrix Duplicates
*	•	Field Duplicates
*	•	Laboratory Control Samples
*	•	Serial Dilutions

* - All criteria were met for this parameter.

Preparation and Field Blanks

The preparation blanks exhibited contamination for the following elements.

Elements	Conc.	Samples affected
Beryllium	0.21 ug/l	all water samples below 1.05 ug/l
Iron	16.2 ug/l	no impact
Magnesium	10.5 ug/l	no impact
Potassium	17.9 ug/l	no impact
Selenium	5.29 ug/l	no impact
Zinc	2.05 ug/l	all water samples below 10.1 ug/l

The calibration blanks exhibited contamination for the following elements.

Elements	Conc.	Samples affected
Barium	1.4 ug/l	no impact
Calcium	15.2 ug/l	no impact
Chromium	0.9 ug/l	all water samples below 4.5 ug/l
Copper	1.8 ug/l	all water samples below 9.0 ug/l
Iron	30.8 ug/l	no impact
Magnesium	22.4 ug/l	no impact
Manganese	1.3 ug/l	no impact
Thallium	6.2 ug/l	no impact
Vanadium	1.6 ug/l	all water samples below 8.0 ug/l

The USEPA requires that all sample values below five times the preparation or calibration blank contamination be qualified as non-detect, "U".

The preparation and calibration blanks exhibited negative bias for the following elements.

Elements	Conc.	Samples affected
Aluminum	-15.6 ug/l	all water samples below 156 ug/l
Silver	-1.51 ug/l	all water samples below 15.1 ug/l
Sodium	-6.08 ug/l	no impact

This reviewer qualifies all samples results below ten times the negative bias as estimated, "J" or "UJ".

All sample results left with a "B" qualifier after all other qualifications, will be qualified with a "J" qualifier in place of the "B". Value is below the CRDL but greater than the IDL.

SUMMARY OF DATA QUALIFICATIONS

Sample ID	Analyte	DL	QL
all water samples below 1.05 ug/l	Be.	+	U
all water samples below 4.5 ug/l	Cr.		
all water samples below 8.0 ug/l	V.		
all water samples below 10.1 ug/l	Zn.		
all water samples below 156 ug/l	Al.	+/U	J/UJ
all water samples below 15.1 ug/l	Ag.		
all "B" results	all analytes	B	J

HEARTLAND ESI VOA 1 HESI94.1

MULTI-MEDIA VOLATILE ORGANIC FRACTION

CASE NUMBER: _____ SDG NUMBER: EC2G02

LABORATORY: Savannah Labs

CLIENT: EnSafe PROJECT: Charleston Zone F+G

REVIEWER: LM DATE: 6-8-98 Rel 98-7

QA/QC LEVEL

- ☐ NEESA C
- ☐ NEESA D
- ☒ DQO LEVEL III
- ☐ DQO LEVEL IV
- ☐ _____

Statement Of Work (SOW)

- ☐ CLP 3/90
- ☐ CLP 2/88
- ☐ SW846 8240
- ☐ SW846 8240 Appendix IX
- ☒ 8260

ANALYSIS MODIFICATIONS: _____

BLANK SUMMARY
SEMIVOLATILE ORGANIC FRACTION

1. Blank qualification guidelines:

   a) If a compound is found in the blank but not in the sample, no action is taken.

   b) Any compound (other than listed below) detected in the sample, which was also detected in the associated blank, must be qualified by elevating the limit of detection or adjusting the limit of detection to the sample result, when the sample concentration is less than five (5) times the blank concentration. For the following four (4) compounds, the results are qualified by elevating the limit of detection or adjusting the limit of detection to the sample result, when the sample concentration is less than ten (10) times the blank concentration.

      Common laboratory contaminants: phthalates

   c) The reviewer should take note that the blank analysis may not involve the same weights, volumes or dilution factors as associated samples. These factors must be taken into consideration when applying the 5X and 10X criteria.

   d) In addition, the reviewer must review the trip blanks, rinseate blanks and field blanks (if they were submitted with the data package) and all associated samples. Apply the same data validation guidelines used in assessing the method blanks.

   e) Qualification/Action codes:

      U - The sample result is greater than the CRQL and less than ten times (10X) the blank value. Cross out the "B" flag and qualify the sample result with a "U".

      CRQL - The sample result is less than the CRQL and less than ten times (10X) the blank value. Reject the sample result, cross out the "B" flag, and report the CRQL.

      No Action - The sample result is greater than the CRQL and greater than ten times (10X) the blank value.

HEARTLAND ESI SVOA 21 HESI94.1

FIELD DUPLICATE SAMPLE SUMMARY
SEMIVOLATILE ORGANIC FRACTION

Sample ID: 003-G-W002-05 **Dupliacte Sample ID:** 003-H-W002-05

Matrix: aqueous / non aqueous **Units:** ug/L ug/Kg

Compound Name	Sample Concentration	Duplicate Concentration	RPD	Action

Water RPDs < 20% RPD

Soil RPDs < 35% RPD

Comments:

HEARTLAND ESI SVOA 23 HESI94.1

SAMPLE RESULT VERIFICATION
SEMIVOLATILE ORGANIC FRACTION

1. Were the sample results reported within the calibration range? Yes No

2. Were the percent moistures reported? Yes No NR

3. Were the data reported on a dry weight basis? Yes No NR

4. Did the GC/MS RIC and TIC exhibit interferences, off scale peaks or elevated baseline? Yes No

5. Did the data contain elevated detection limits that could not be accounted for? Yes No

6. Were any computational or transcription errors found? Yes No

Specific Comments: _____

Reviewer: L Maschhoff **Date:** 6/8/98

HEARTLAND ESI SVOA 1 HESI94.1

MULTI-MEDIA SEMIVOLATILE ORGANIC FRACTION

CASE NUMBER: _____ SDG NUMBER: ECZG02

LABORATORY: Savannah Labs

CLIENT: EnSafe PROJECT: Charleston Zone F+G Rel 98-7

REVIEWER: UM DATE: 6-8-98

QA/QC LEVEL

- ☐ NEESA C
- ☐ NEESA D
- ☒ DQO LEVEL III
- ☐ DQO LEVEL IV
- ☐ _____

Statement Of Work (SOW)

- ☐ CLP 3/90
- ☐ CLP 2/88
- ☒ SW846 8270
- ☐ SW846 8270 Appendix IX
- ☐ _____

ANALYSIS MODIFICATIONS: _____

SEMIVOLATILE HOLDING TIMES

	Water	soil	Analysis
CLP:	7 days from sampling	14 days from sampling	40 days from VTSR
SW846:	7 days from sampling	14 days from sampling	40 days from VTSR
Region I:	5 days from VTSR	7 days from VTSR	40 days from VTSR
Region III:	7 days from sampling	7 days from sampling	40 days from VTSR
NYSDEC:	5 days form VTSR	5 days from VTSR	40 days From VTSR

1. Were the holding times met for the all semivolatile samples? YES NO

If yes, complete the following form for all samples that exceeded holding times.

EPA SAMPLE NO.	MATRIX	VTSR OR DATE SAMPLED	DATE OF EXTRACTION / ANALYSIS	DA	Action

Action: DA - The number of days that the holding time was exceeded.

DA ≤ 5: Qualify all positive results as estimated (J).

DA > 5 ≤ 15: Qualify all positive results as estimated (J) and all non detects estimated (UJ).

DA > 15: Qualify all positive results estimated (J) and reject all non detects.

BLANK SUMMARY
SEMIVOLATILE ORGANIC FRACTION

1. Blank qualification guidelines:

   a) If a compound is found in the blank but not in the sample, no action is taken.

   b) Any compound (other than listed below) detected in the sample, which was also detected in the associated blank, must be qualified by elevating the limit of detection or adjusting the limit of detection to the sample result, when the sample concentration is less than five (5) times the blank concentration. For the following four (4) compounds, the results are qualified by elevating the limit of detection or adjusting the limit of detection to the sample result, when the sample concentration is less than ten (10) times the blank concentration.

      Common laboratory contaminants: phthalates

   c) The reviewer should take note that the blank analysis may not involve the same weights, volumes or dilution factors as associated samples. These factors must be taken into consideration when applying the 5X and 10X criteria.

   d) In addition, the reviewer must review the trip blanks, rinseate blanks and field blanks (if they were submitted with the data package) and all associated samples. Apply the same data validation guidelines used in assessing the method blanks.

   e) Qualification/Action codes:

      U - The sample result is greater than the CRQL and less than ten times (10X) the blank value. Cross out the "B" flag and qualify the sample result with a "U".

      CRQL - The sample result is less than the CRQL and less than ten times (10X) the blank value. Reject the sample result, cross out the "B" flag, and report the CRQL.

      No Action - The sample result is greater than the CRQL and greater than ten times (10X) the blank value.

HEARTLAND ESI SVOA 16 HESI94.1

BLANK SUMMARY - TCL SUMMARY
SEMIVOLATILE ORGANIC FRACTION

☐ Method Blank ☒ Rinseate Blank ☐ Field Blank ☐ Other

Sample ID: 024-E-W002-01 File ID: _____

COMPOUND	CONCENTRATION	CRQL

EPA SAMPLE ID				

UA 6898

HEARTLAND ESI SVOA 16 HESI94.1

BLANK SUMMARY - TCL SUMMARY
SEMIVOLATILE ORGANIC FRACTION

☐ Method Blank ☐ Rinseate Blank ☐ Field Blank ☒ Other DI

Sample ID: 024-D-W002-01 File ID: _____

COMPOUND	CONCENTRATION	CRQL

EPA SAMPLE ID				

JM 6/8/98

HEARTLAND ESI SVOA 21 HESI94.1

FIELD DUPLICATE SAMPLE SUMMARY
SEMIVOLATILE ORGANIC FRACTION

Sample ID: 003-G-W002-05 Dupliacte Sample ID: 003-H-W002-05

Matrix: aqueous / non aqueous Units: ug/L ug/Kg

Compound Name	Sample Concentration	Duplicate Concentration	RPD	Action

Water RPDs < 20% RPD

Soil RPDs < 35% RPD

Comments:

HEARTLAND ESI SVOA 23 HESI94.1

SAMPLE RESULT VERIFICATION
SEMIVOLATILE ORGANIC FRACTION

1. Were the sample results reported within the calibration range? Yes No

2. Were the percent moistures reported? Yes No NR

3. Were the data reported on a dry weight basis? Yes No NR

4. Did the GC/MS RIC and TIC exhibit interferences, off scale peaks or elevated baseline? Yes No

5. Did the data contain elevated detection limits that could not be accounted for? Yes No

6. Were any computational or transcription errors found? Yes No

Specific Comments: _____

Reviewer: L Maschkoff Date: 6/8/98

CHARLESTON - ZONE G
CHARLESTON ZONE G QUARTERLY GW
SDG# ECZG02

META													
	SAMPLE ID ------->	024-E-W002-01		024-D-W002-01		024-G-W003-01		BLK-O-ZG02-01		GEL-G-W014-05			
	ORIGINAL ID ----->	024EW00201		024DW00201		024GW00301		MBLANK1		GELGW01405			
	LAB SAMPLE ID --->	S882258*1		S882258*2		S882228*3		S8ECZG02*1		S882285*1			
	ID FROM REPORT -->	024EW00201		024DW00201		024GW00301		MBLANK1		GELGW01405			
	SAMPLE DATE ----->	04/21/98		04/21/98		04/20/98				04/22/98			
	DATE EXTRACTED -->	04/29/98		04/29/98		04/29/98		04/29/98		04/29/98			
	DATE ANALYZED --->	05/14/98		05/14/98		05/14/98		05/14/98		05/14/98			
	MATRIX ---------->	Water		Water		Water		Water		Water			
	UNITS ---------->	UG/L	B	UG/L	B	UG/L	A	UG/L	D	UG/L	A		
CAS #	Parameter	ECZG02		ECZG02		ECZG02		ECZG02		ECZG02			
-90-5	Aluminum (Al)	11.7	U	11.7	U	14.3	~~B~~ J	-15.6	B	1970.			
-36-0	Antimony (Sb)	5.	U	5.	U	5.	U	5.	U	5.	U		
-38-2	Arsenic (As)	3.3	U	3.3	U	10.5		3.3	U	41.8			
-39-3	Barium (Ba)	0.4	U	0.4	U	39.		0.4	U	43.6			
-41-7	Beryllium (Be)	0.24	B	0.27	B	0.25	~~B~~ U	0.21	B	0.36	~~B~~ U		
-43-9	Cadmium (Cd)	0.3	U	0.3	U	0.3	U	0.3	U	1.3	~~B~~ J		
-70-2	Calcium (Ca)	12.7	U	12.7	U	37700.		12.7	U	122000.			
-47-3	Chromium (Cr)	0.7	U	0.7	U	0.7	U	0.7	U	5.4	~~B~~ J		
-48-4	Cobalt (Co)	0.9	U	0.9	U	0.9	U	0.9	U	5.	~~B~~ J		
-50-8	Copper (Cu)	0.6	U	0.6	U	0.6	U	0.6	U	3.7	~~B~~ U		
-89-6	Iron (Fe)	15.5	U	15.5	U	3710.		16.2	B	33300.			
-92-1	Lead (Pb)	1.7	U	1.7	U	1.7	U	1.7	U	3.9	~~B~~ J		
-95-4	Magnesium (Mg)	6.6	U	6.6	U	8180.		10.5	B	41900.			
-96-5	Manganese (Mn)	0.63	B	0.6	U	114.		0.6	U	689.			
-97-6	Mercury (Hg)	0.1	U	0.1	U	0.1	U	0.1	U	0.1	U		
-02-0	Nickel (Ni)	1.1	U	1.1	U	1.1	U	1.1	U	1.4	~~B~~ J		
-09-7	Potassium (K)	14.2	U	22.9	B	3600.		17.9	B	25700.			
-49-2	Selenium (Se)	4.1	U	4.1	U	4.1	U	5.3	B	4.1	U		
-22-4	Silver (Ag)	1.1	U	1.1	U	1.1	~~B~~ UJ	-1.5	B	1.1	~~B~~ UJ		
-23-5	Sodium (Na)	12.6	B	2.7	B	46600.		-6.1	B	156000.			
-28-0	Thallium (Tl)	5.5	U	5.5	U	5.5	U	5.5	U	5.5	U		
-31-5	Tin (Sn)	3.4	U	3.4	U	3.4	U	3.4	U	3.4	U		
-62-2	Vanadium (V)	0.7	U	0.7	U	0.7	U	0.7	U	5.7	~~B~~ U		
-66-6	Zinc (Zn)	1.	B	0.4	U	1.5	~~B~~ U	2.1	B	39.			

8/9/98

*** Lab Results - Unvalidated Data - Do NOT Cite ***

CHARLESTON - ZONE G
CHARLESTON ZONE G QUARTERLY GW
SDG# ECZG02

ETA																								
	SAMPLE ID ------->	003-G-W001-05			003-G-W002-05			003-H-W002-05			003-G-W003-05			024-G-W001-01			024-G-W002-01		
	ORIGINAL ID ----->	003GW00105			003GW00205			003HW00205			003GW00305			024GW00101			024GW00201		
	LAB SAMPLE ID --->	S882258*3			S882285*2			S882285*3			S882258*4			S882285*4			S882228*4		
	ID FROM REPORT -->	003GW00105			003GW00205			003HW00205			003GW00305			024GW00101			024GW00201		
	SAMPLE DATE ----->	04/21/98			04/22/98			04/22/98			04/21/98			04/22/98			04/20/98		
	DATE EXTRACTED -->	04/29/98			04/29/98			04/29/98			04/29/98			04/29/98			04/29/98		
	DATE ANALYZED --->	05/14/98			05/14/98			05/14/98			05/14/98			05/14/98			05/14/98		
	MATRIX ---------->	Water			Water			Water			Water			Water			Water		
	UNITS ---------->	UG/L		A	UG/L		A	UG/L		A	UG/L		A	UG/L		A	UG/L		A
AS #	Parameter	ECZG02			ECZG02			ECZG02			ECZG02			ECZG02			ECZG02		
90-5	Aluminum (Al)	467.			365.			365.			5910.			429.			123.	R	J
36-0	Antimony (Sb)	5.	U		5.	U		7.1	R	J	5.	U		5.	U		5.	U	
38-2	Arsenic (As)	3.3	U		3.3	U		3.3	U		3.3	U		47.2			6.5	R	J
39-3	Barium (Ba)	23.6			13.9			13.7			26.3			26.6			10.7		
41-7	Beryllium (Be)	0.29	R	U	0.34	R	U	0.37	R	U	0.54	R	U	0.33	R	U	0.31	R	U
43-9	Cadmium (Cd)	0.3	U		0.3	U		0.3	U		0.3	U		0.3	U		0.3	U	
70-2	Calcium (Ca)	56000.			20000.			20300.			25000.			21300.			3150.		
47-3	Chromium (Cr)	0.93	R	U	1.1	R	U	1.1	R	U	10.9			0.99	R	U	0.7	U	
48-4	Cobalt (Co)	0.9	U		0.9	U		0.95	R	J	1.5	R	J	2.2	R	J	2.2	R	J
50-8	Copper (Cu)	0.6	U		0.6	U		1.6	R	U	1.5	R	U	0.67	R	U	0.6	U	
89-6	Iron (Fe)	414.			411.			396.			6110.			4340.			2100.		
92-1	Lead (Pb)	1.7	U		1.7	U		1.7	U		1.7	U		1.7	U		1.7	U	
95-4	Magnesium (Mg)	3880.			2520.			2530.			3810.			15100.			1530.		
96-5	Manganese (Mn)	8.	R	J	39.4			36.4			58.7			203.			70.5		
97-6	Mercury (Hg)	0.1	U		0.1	U		0.1	U		0.1	U		0.1	U		0.1	U	
02-0	Nickel (Ni)	1.1	U		1.1	U		1.1	U		1.8	R	J	1.1	U		1.1	U	
09-7	Potassium (K)	1730.			331.	R	J	350.	R	J	1410.			13700.			611.	R	J
49-2	Selenium (Se)	4.1	U		4.1	U		4.1	U		4.1	U		4.1	U		4.1	U	
22-4	Silver (Ag)	1.1	R	UJ	1.1	R	UJ	1.1	R	UJ	1.1	R	UJ	1.1	R	UJ	1.1	R	UJ
23-5	Sodium (Na)	7560.			10600.			10500.			29800.			344000.			27300.		
28-0	Thallium (Tl)	5.5	U		5.5	U		5.5	U		5.5	U		5.5	U		5.5	U	
31-5	Tin (Sn)	3.4	U		3.4	U		3.4	U		3.4	U		3.4	U		3.4	U	
62-2	Vanadium (V)	1.6	R	U	1.7	R	U	1.5	R	U	15.			2.5	R	U	0.79	R	U
66-6	Zinc (Zn)	3.3	R	U	1.3	R	U	0.89	R	U	13.1	R	J	7.9	R	U	1.6	R	U

6/9/98

CHARLESTON - ZONE F
CHARLESTON ZONE F GW (ONLY)
SDG# ECZG02

VOA											
	SAMPLE ID ------->	FDS-G-W16A-03		FDS-T-W16A-03		FDS-G-W16B-03		FDS-G-W16C-03			
	ORIGINAL ID ----->	FDSGW16A03		FDSTW16A03		FDSGW16B03		FDSGW16C03			
	LAB SAMPLE ID --->	S882285*5		S882285*6		S882228*2		S882228*1			
	ID FROM REPORT -->	FDSGW16A03		FDSTW16A03		FDSGW16B03		FDSGW16C03			
	SAMPLE DATE ----->	04/22/98		04/21/98		04/20/98		04/20/98			
	DATE ANALYZED --->	04/27/98		04/27/98		04/27/98		04/27/98			
	MATRIX ---------->	Water		Water		Water		Water			
	UNITS ---------->	UG/L	A	UG/L	B	UG/L	A	UG/L	A		
CAS #	Parameter	ECZG02		ECZG02		ECZG02		ECZG02			
-87-3	Chloromethane	1.	U	1.	U	1.	U	1.	U		
-83-9	Bromomethane	1.	U	1.	U	1.	~~U~~ UJ	1.	~~U~~ UJ		
-01-4	Vinyl chloride	1.	U	1.	U	1.	U	1.	U		
-00-3	Chloroethane	1.	U	1.	U	1.	U	1.	U		
-35-4	1,1-Dichloroethene	1.	U	1.	U	1.	U	1.	U		
-09-2	Methylene chloride	5.	U	5.	U	5.	U	5.	U		
-34-3	1,1-Dichloroethane	1.	U	1.	U	1.	U	1.	U		
-66-3	Chloroform	1.	U	1.	U	1.	U	1.	U		
-55-6	1,1,1-Trichloroethane	1.	U	1.	U	1.	U	1.	U		
-23-5	Carbon tetrachloride	1.	U	1.	U	1.	U	1.	U		
-43-2	Benzene	1.	U	1.	U	1.	U	1.	U		
-06-2	1,2-Dichloroethane	1.	U	1.	U	1.	U	1.	U		
-01-6	Trichloroethene	1.	U	1.	U	1.	U	1.	U		
-87-5	1,2-Dichloropropane	1.	U	1.	U	1.	U	1.	U		
-27-4	Bromodichloromethane	1.	U	1.	U	1.	U	1.	U		
-88-3	Toluene	1.	U	1.	U	1.	U	1.	U		
-00-5	1,1,2-Trichloroethane	1.	U	1.	U	1.	U	1.	U		
-18-4	Tetrachloroethene	1.	U	1.	U	1.	U	1.	U		
-48-1	Dibromochloromethane	1.	U	1.	U	1.	U	1.	U		
-90-7	Chlorobenzene	1.	U	1.	U	1.	U	1.	U		
-41-4	Ethylbenzene	1.	U	1.	U	1.	U	1.	U		
-42-5	Styrene	1.	U	1.	U	1.	U	1.	U		
-25-2	Bromoform	1.	U	1.	U	1.	U	1.	U		
-34-5	1,1,2,2-Tetrachloroethane	1.	U	1.	U	1.	U	1.	U		
-64-1	Acetone	10.	U	10.	U	10.	U	10.	U		
-15-0	Carbon disulfide	1.	~~U~~ UJ	1.	U	1.	U	1.	U		
-05-4	Vinyl acetate	2.	U	2.	U	2.	U	2.	U		
-93-3	2-Butanone (MEK)	10.	U	10.	U	10.	U	10.	U		
-75-8	2-Chloroethyl vinyl ether	10.	U	10.	U	10.	U	10.	U		
-10-1	4-Methyl-2-Pentanone (MIBK)	10.	U	10.	U	10.	U	10.	U		
-01-5	cis-1,3-Dichloropropene	1.	U	1.	U	1.	U	1.	U		
-02-6	trans-1,3-Dichloropropene	1.	U	1.	U	1.	U	1.	U		
-78-6	2-Hexanone	10.	U	10.	U	10.	U	10.	U		
-20-7	Xylene (Total)	2.	U	2.	U	2.	U	2.	U		
-59-0	1,2-Dichloroethene (total)	1.	U	1.	U	1.	U	1.	U		

MM 6/10/98

CHARLESTON - ZONE G
CHARLESTON ZONE G QUARTERLY GW
SDG# ECZG02

VOA						
SAMPLE ID ------->	003-G-W001-05	003-G-W002-05	003-H-W002-05	003-G-W003-05	024-G-W001-01	024-G-W002-01
ORIGINAL ID ----->	003GW00105	003GW00205	003HW00205	003GW00305	024GW00101	024GW00201
LAB SAMPLE ID --->	S882258*3	S882285*2	S882285*3	S882258*4	S882285*4	S882228*4
ID FROM REPORT -->	003GW00105	003GW00205	003HW00205	003GW00305	024GW00101	024GW00201
SAMPLE DATE ----->	04/21/98	04/22/98	04/22/98	04/21/98	04/22/98	04/20/98
DATE EXTRACTED -->	04/27/98	04/27/98	04/27/98	04/27/98	04/27/98	04/27/98
DATE ANALYZED --->	05/09/98	05/09/98	05/09/98	05/09/98	05/09/98	05/09/98
MATRIX ---------->	Water	Water	Water	Water	Water	Water
UNITS ---------->	UG/L A	UG/L A	UG/L A	UG/L A	UG/L A	UG/L A

AS #	Parameter	ECZG02	ECZG02	ECZG02	ECZG02	ECZG02	ECZG02
95-2	Phenol	10. U	10. U	10. U	10. U	10. U	10. U
44-4	bis(2-Chloroethyl)ether	10. U	10. U	10. U	10. U	10. U	10. U
57-8	2-Chlorophenol	10. U	10. U	10. U	10. U	10. U	10. U
73-1	1,3-Dichlorobenzene	10. U	10. U	10. U	10. U	10. U	10. U
46-7	1,4-Dichlorobenzene	10. U	10. U	10. U	10. U	10. U	10. U
51-6	Benzyl alcohol	10. U	10. U	10. U	10. U	10. U	10. U
50-1	1,2-Dichlorobenzene	10. U	10. U	10. U	10. U	10. U	10. U
48-7	2-Methylphenol (o-Cresol)	10. U	10. U	10. U	10. U	10. U	10. U
60-1	2,2'-oxybis(1-Chloropropane)	10. U	10. U	10. U	10. U	10. U	10. U
44-5	4-Methylphenol (p-Cresol)	10. U	10. U	10. U	10. U	10. U	10. U
64-7	N-Nitroso-di-n-propylamine	10. U	10. U	10. U	10. U	10. U	10. U
72-1	Hexachloroethane	10. U	10. U	10. U	10. U	10. U	10. U
95-3	Nitrobenzene	10. U	10. U	10. U	10. U	10. U	10. U
59-1	Isophorone	10. U	10. U	10. U	10. U	10. U	10. U
75-5	2-Nitrophenol	10. U	10. U	10. U	10. U	10. U	10. U
67-9	2,4-Dimethylphenol	10. U	10. U	10. U	10. U	10. U	10. U
83-2	2,4-Dichlorophenol	10. U	10. U	10. U	10. U	10. U	10. U
82-1	1,2,4-Trichlorobenzene	10. U	10. U	10. U	10. U	10. U	10. U
20-3	Naphthalene	10. U	10. U	10. U	10. U	10. U	10. U
47-8	4-Chloroaniline	10. U	10. U	10. U	10. U	10. U	10. U
68-3	Hexachlorobutadiene	10. U	10. U	10. U	10. U	10. U	10. U
91-1	bis(2-Chloroethoxy)methane	10. U	10. U	10. U	10. U	10. U	10. U
85-0	Benzoic acid	50. U	50. U	50. U	50. U	50. U	50. U
50-7	4-Chloro-3-methylphenol	10. U	10. U	10. U	10. U	10. U	10. U
57-6	2-Methylnaphthalene	10. U	10. U	10. U	10. U	10. U	10. U
47-4	Hexachlorocyclopentadiene	10. U	10. U	10. U	10. U	10. U	10. U
06-2	2,4,6-Trichlorophenol	10. U	10. U	10. U	10. U	10. U	10. U
95-4	2,4,5-Trichlorophenol	50. U	50. U	50. U	50. U	50. U	50. U
58-7	2-Chloronaphthalene	10. U	10. U	10. U	10. U	10. U	10. U
74-4	2-Nitroaniline	50. U	50. U	50. U	50. U	50. U	50. U
11-3	Dimethyl phthalate	10. U	10. U	10. U	10. U	10. U	10. U
96-8	Acenaphthylene	10. U	10. U	10. U	10. U	10. U	10. U
20-2	2,6-Dinitrotoluene	10. U	10. U	10. U	10. U	10. U	10. U
09-2	3-Nitroaniline	50. U	50. U	50. U	50. U	50. U	50. U
32-9	Acenaphthene	10. U	10. U	10. U	10. U	10. U	10. U
28-5	2,4-Dinitrophenol	50. UJ	50. UJ	50. UJ	50. UJ	50. UJ	50. UJ

MM 6/10/98

CHARLESTON - ZONE G
CHARLESTON ZONE G QUARTERLY GW
SDG# ECZG02

SVOA													
	SAMPLE ID ------->	003-G-W001-05		003-G-W002-05		003-H-W002-05		003-G-W003-05		024-G-W001-01		024-G-W002-01	
	ORIGINAL ID ----->	003GW00105		003GW00205		003HW00205		003GW00305		024GW00101		024GW00201	
	LAB SAMPLE ID --->	S882258*3		S882285*2		S882285*3		S882258*4		S882285*4		S882228*4	
	ID FROM REPORT -->	003GW00105		003GW00205		003HW00205		003GW00305		024GW00101		024GW00201	
	SAMPLE DATE ----->	04/21/98		04/22/98		04/22/98		04/21/98		04/22/98		04/20/98	
	DATE EXTRACTED -->	04/27/98		04/27/98		04/27/98		04/27/98		04/27/98		04/27/98	
	DATE ANALYZED --->	05/09/98		05/09/98		05/09/98		05/09/98		05/09/98		05/09/98	
	MATRIX ---------->	Water		Water		Water		Water		Water		Water	
	UNITS ---------->	UG/L	A	UG/L	A	UG/L	A	UG/L	A	UG/L	A	UG/L	A
CAS #	Parameter	ECZG02		ECZG02		ECZG02		ECZG02		ECZG02		ECZG02	
-02-7	4-Nitrophenol	50.	U	50.	U	50.	U	50.	U	50.	U	50.	U
-64-9	Dibenzofuran	10.	U	10.	U	10.	U	10.	U	10.	U	10.	U
-14-2	2,4-Dinitrotoluene	10.	U	10.	U	10.	U	10.	U	10.	U	10.	U
-66-2	Diethylphthalate	10.	U	10.	U	10.	U	10.	U	10.	U	10.	U
-72-3	4-Chlorophenylphenylether	10.	U	10.	U	10.	U	10.	U	10.	U	10.	U
-73-7	Fluorene	10.	U	10.	U	10.	U	10.	U	10.	U	10.	U
-01-6	4-Nitroaniline	50.	U	50.	U	50.	U	50.	U	50.	U	50.	U
-52-1	2-Methyl-4,6-Dinitrophenol	50.	UJ	50.	UJ	50.	UJ	50.	UJ	50.	UJ	50.	UJ
-30-6	N-Nitrosodiphenylamine	10.	U	10.	U	10.	U	10.	U	10.	U	10.	U
-55-3	4-Bromophenyl-phenylether	10.	U	10.	U	10.	U	10.	U	10.	U	10.	U
-74-1	Hexachlorobenzene	10.	U	10.	U	10.	U	10.	U	10.	U	10.	U
-86-5	Pentachlorophenol	50.	U	50.	U	50.	U	50.	U	50.	U	50.	U
-01-8	Phenanthrene	10.	U	10.	U	10.	U	10.	U	10.	U	10.	U
-12-7	Anthracene	10.	U	10.	U	10.	U	10.	U	10.	U	10.	U
-74-2	Di-n-butylphthalate	10.	U	10.	U	10.	U	10.	U	10.	U	10.	U
-44-0	Fluoranthene	10.	U	10.	U	10.	U	10.	U	10.	U	10.	U
-00-0	Pyrene	10.	U	10.	U	10.	U	10.	U	10.	U	10.	U
-68-7	Butylbenzylphthalate	10.	U	10.	U	10.	U	10.	U	10.	U	10.	U
-94-1	3,3'-Dichlorobenzidine	20.	U	20.	U	20.	U	20.	U	20.	U	20.	U
-55-3	Benzo(a)anthracene	10.	U	10.	U	10.	U	10.	U	10.	U	10.	U
-01-9	Chrysene	10.	U	10.	U	10.	U	10.	U	10.	U	10.	U
-81-7	bis(2-Ethylhexyl)phthalate (BEHP)	10.	U	10.	U	10.	U	10.	U	10.	U	10.	U
-84-0	Di-n-octyl phthalate	10.	U	10.	U	10.	U	10.	U	10.	U	10.	U
-99-2	Benzo(b)fluoranthene	10.	U	10.	U	10.	U	10.	U	10.	U	10.	U
-08-9	Benzo(k)fluoranthene	10.	U	10.	U	10.	U	10.	U	10.	U	10.	U
32-8	Benzo(a)pyrene	10.	U	10.	U	10.	U	10.	U	10.	U	10.	U
39-5	Indeno(1,2,3-cd)pyrene	10.	U	10.	U	10.	U	10.	U	10.	U	10.	U
70-3	Dibenz(a,h)anthracene	10.	U	10.	U	10.	U	10.	U	10.	U	10.	U
24-2	Benzo(g,h,i)perylene	10.	U	10.	U	10.	U	10.	U	10.	U	10.	U

MA 1.1098

CHARLESTON - ZONE G
CHARLESTON ZONE G QUARTERLY GW
SDG# ECZG02

VOA																			
	SAMPLE ID ------->	024-E-W002-01			024-D-W002-01			024-G-W003-01			BLK-0-ZG02-01			BLK-0-ZG02-05			GEL-G-W014-05		
	ORIGINAL ID ----->	024EW00201			024DW00201			024GW00301			MBLANK1			MBLANK2			GELGW01405		
	LAB SAMPLE ID --->	S882258*1			S882258*2			S882228*3			S8ECZG02*1			S8ECZG02*2			S882285*1		
	ID FROM REPORT -->	024EW00201			024DW00201			024GW00301			MBLANK1			MBLANK2			GELGW01405		
	SAMPLE DATE ----->	04/21/98			04/21/98			04/20/98									04/22/98		
	DATE EXTRACTED -->	04/27/98			04/27/98			04/27/98			04/27/98			04/27/98			04/27/98		
	DATE ANALYZED --->	05/09/98			05/09/98			05/09/98			05/09/98			05/09/98			05/09/98		
	MATRIX ---------->	Water			Water			Water			Water			Water			Water		
	UNITS ---------->	UG/L		B	UG/L		B	UG/L		A	UG/L		D	UG/L		D	UG/L		A
AS #	Parameter	ECZG02			ECZG02			ECZG02			ECZG02			ECZG02			ECZG02		
95-2	Phenol	10.	U		10.	U		10.	U		10.	U		10.	U		10.	U	
44-4	bis(2-Chloroethyl)ether	10.	U		10.	U		10.	U		10.	U		10.	U		10.	U	
57-8	2-Chlorophenol	10.	U		10.	U		10.	U		10.	U		10.	U		10.	U	
73-1	1,3-Dichlorobenzene	10.	U		10.	U		10.	U		10.	U		10.	U		10.	U	
46-7	1,4-Dichlorobenzene	10.	U		10.	U		10.	U		10.	U		10.	U		10.	U	
51-6	Benzyl alcohol	10.	U		10.	U		10.	U		10.	U		10.	U		10.	U	
50-1	1,2-Dichlorobenzene	10.	U		10.	U		10.	U		10.	U		10.	U		10.	U	
48-7	2-Methylphenol (o-Cresol)	10.	U		10.	U		10.	U		10.	U		10.	U		10.	U	
60-1	2,2'-oxybis(1-Chloropropane)	10.	U		10.	U		10.	U		10.	U		10.	U		10.	U	
44-5	4-Methylphenol (p-Cresol)	10.	U		10.	U		10.	U		10.	U		10.	U		10.	U	
64-7	N-Nitroso-di-n-propylamine	10.	U		10.	U		10.	U		10.	U		10.	U		10.	U	
72-1	Hexachloroethane	10.	U		10.	U		10.	U		10.	U		10.	U		10.	U	
95-3	Nitrobenzene	10.	U		10.	U		10.	U		10.	U		10.	U		10.	U	
59-1	Isophorone	10.	U		10.	U		10.	U		10.	U		10.	U		10.	U	
75-5	2-Nitrophenol	10.	U		10.	U		10.	U		10.	U		10.	U		10.	U	
67-9	2,4-Dimethylphenol	10.	U		10.	U		10.	U		10.	U		10.	U		10.	U	
83-2	2,4-Dichlorophenol	10.	U		10.	U		10.	U		10.	U		10.	U		10.	U	
82-1	1,2,4-Trichlorobenzene	10.	U		10.	U		10.	U		10.	U		10.	U		10.	U	
20-3	Naphthalene	10.	U		10.	U		10.	U		10.	U		10.	U		10.	U	
47-8	4-Chloroaniline	10.	U		10.	U		10.	U		10.	U		10.	U		10.	U	
68-3	Hexachlorobutadiene	10.	U		10.	U		10.	U		10.	U		10.	U		10.	U	
91-1	bis(2-Chloroethoxy)methane	10.	U		10.	U		10.	U		10.	U		10.	U		10.	U	
85-0	Benzoic acid	50.	U		50.	U		50.	U		50.	U		50.	U		50.	U	
50-7	4-Chloro-3-methylphenol	10.	U		10.	U		10.	U		10.	U		10.	U		10.	U	
57-6	2-Methylnaphthalene	10.	U		10.	U		10.	U		10.	U		10.	U		16.		
47-4	Hexachlorocyclopentadiene	10.	U		10.	U		10.	U		10.	U		10.	U		10.	U	
06-2	2,4,6-Trichlorophenol	10.	U		10.	U		10.	U		10.	U		10.	U		10.	U	
95-4	2,4,5-Trichlorophenol	50.	U		50.	U		50.	U		50.	U		50.	U		50.	U	
58-7	2-Chloronaphthalene	10.	U		10.	U		10.	U		10.	U		10.	U		10.	U	
74-4	2-Nitroaniline	50.	U		50.	U		50.	U		50.	U		50.	U		50.	U	
11-3	Dimethyl phthalate	10.	U		10.	U		10.	U		10.	U		10.	U		10.	U	
96-8	Acenaphthylene	10.	U		10.	U		10.	U		10.	U		10.	U		10.	U	
20-2	2,6-Dinitrotoluene	10.	U		10.	U		10.	U		10.	U		10.	U		10.	U	
09-2	3-Nitroaniline	50.	U		50.	U		50.	U		50.	U		50.	U		50.	U	
32-9	Acenaphthene	10.	U		10.	U		10.	U		10.	U		10.	U		10.	U	
28-5	2,4-Dinitrophenol	50.	U		50.	U		50.	UJ		50.	U		50.	U		50.	UJ	

MM 6/10/98

CHARLESTON - ZONE G
CHARLESTON ZONE G QUARTERLY GW
SDG# ECZG02

SVOA						
SAMPLE ID ------->	024-E-W002-01	024-D-W002-01	024-G-W003-01	BLK-O-ZG02-01	BLK-O-ZG02-05	GEL-G-W014-05
ORIGINAL ID ----->	024EW00201	024DW00201	024GW00301	MBLANK1	MBLANK2	GELGW01405
LAB SAMPLE ID --->	S882258*1	S882258*2	S882228*3	S8ECZG02*1	S8ECZG02*2	S882285*1
ID FROM REPORT -->	024EW00201	024DW00201	024GW00301	MBLANK1	MBLANK2	GELGW01405
SAMPLE DATE ----->	04/21/98	04/21/98	04/20/98			04/22/98
DATE EXTRACTED -->	04/27/98	04/27/98	04/27/98	04/27/98	04/27/98	04/27/98
DATE ANALYZED --->	05/09/98	05/09/98	05/09/98	05/09/98	05/09/98	05/09/98
MATRIX ---------->	Water	Water	Water	Water	Water	Water
UNITS ---------->	UG/L B	UG/L B	UG/L A	UG/L D	UG/L D	UG/L A

CAS #	Parameter	ECZG02		ECZG02		ECZG02		ECZG02		ECZG02		ECZG02	
-02-7	4-Nitrophenol	50.	U	50.	U	50.	U	50.	U	50.	U	50.	U
-64-9	Dibenzofuran	10.	U	10.	U	10.	U	10.	U	10.	U	10.	U
-14-2	2,4-Dinitrotoluene	10.	U	10.	U	10.	U	10.	U	10.	U	10.	U
-66-2	Diethylphthalate	10.	U	10.	U	10.	U	10.	U	10.	U	10.	U
-72-3	4-Chlorophenylphenylether	10.	U	10.	U	10.	U	10.	U	10.	U	10.	U
-73-7	Fluorene	10.	U	10.	U	10.	U	10.	U	10.	U	11.	
-01-6	4-Nitroaniline	50.	U	50.	U	50.	U	50.	U	50.	U	50.	U
-52-1	2-Methyl-4,6-Dinitrophenol	50.	U	50.	U	50.	U UJ	50.	U	50.	U	50.	U UJ
-30-6	N-Nitrosodiphenylamine	10.	U	10.	U	10.	U	10.	U	10.	U	10.	U
-55-3	4-Bromophenyl-phenylether	10.	U	10.	U	10.	U	10.	U	10.	U	10.	U
-74-1	Hexachlorobenzene	10.	U	10.	U	10.	U	10.	U	10.	U	10.	U
-86-5	Pentachlorophenol	50.	U	50.	U	50.	U	50.	U	50.	U	50.	U
-01-8	Phenanthrene	10.	U	10.	U	10.	U	10.	U	10.	U	7.3	J
-12-7	Anthracene	10.	U	10.	U	10.	U	10.	U	10.	U	10.	U
-74-2	Di-n-butylphthalate	10.	U	10.	U	10.	U	10.	U	10.	U	10.	U
-44-0	Fluoranthene	10.	U	10.	U	10.	U	10.	U	10.	U	10.	U
-00-0	Pyrene	10.	U	10.	U	10.	U	10.	U	10.	U	10.	U
-68-7	Butylbenzylphthalate	10.	U	10.	U	10.	U	10.	U	10.	U	10.	U
-94-1	3,3'-Dichlorobenzidine	20.	U	20.	U	20.	U	20.	U	20.	U	20.	U
-55-3	Benzo(a)anthracene	10.	U	10.	U	10.	U	10.	U	10.	U	10.	U
-01-9	Chrysene	10.	U	10.	U	10.	U	10.	U	10.	U	10.	U
-81-7	bis(2-Ethylhexyl)phthalate (BEHP)	10.	U	10.	U	10.	U	10.	U	10.	U	7.7	J
-84-0	Di-n-octyl phthalate	10.	U	10.	U	10.	U	10.	U	10.	U	10.	U
-99-2	Benzo(b)fluoranthene	10.	U	10.	U	10.	U	10.	U	10.	U	10.	U
-08-9	Benzo(k)fluoranthene	10.	U	10.	U	10.	U	10.	U	10.	U	10.	U
-32-8	Benzo(a)pyrene	10.	U	10.	U	10.	U	10.	U	10.	U	10.	U
-39-5	Indeno(1,2,3-cd)pyrene	10.	U	10.	U	10.	U	10.	U	10.	U	10.	U
-70-3	Dibenz(a,h)anthracene	10.	U	10.	U	10.	U	10.	U	10.	U	10.	U
-24-2	Benzo(g,h,i)perylene	10.	U	10.	U	10.	U	10.	U	10.	U	10.	U

MM 6/10/98

>3
98

CAu
6/17/98

CHARLESTON - ZONE F
CHARLESTON ZONE F GW (ONLY)
SDG# ECZG02

META										
	SAMPLE ID ------->	FDS-G-W16A-03		FDS-G-W16B-03		FDS-G-W16C-03				
	ORIGINAL ID ----->	FDSGW16A03		FDSGW16B03		FDSGW16C03				
	LAB SAMPLE ID --->	S882285*5		S882228*2		S882228*1				
	ID FROM REPORT -->	FDSGW16A03		FDSGW16B03		FDSGW16C03				
	SAMPLE DATE ----->	04/22/98		04/20/98		04/20/98				
	DATE EXTRACTED -->	04/29/98		04/29/98		04/29/98				
	DATE ANALYZED --->	05/14/98		05/14/98		05/14/98				
	MATRIX ---------->	Water		Water		Water				
	UNITS ---------->	UG/L	A	UG/L	A	UG/L	A			
CAS #	Parameter	ECZG02		ECZG02		ECZG02				
-90-5	Aluminum (Al)	1200.		91.2	~~B~~ J	160.	~~B~~ J			
-36-0	Antimony (Sb)	5.	U	5.	U	5.	U			
-38-2	Arsenic (As)	9.8	~~B~~ J	254.		29.6				
-39-3	Barium (Ba)	25.		94.9		64.4				
-41-7	Beryllium (Be)	0.37	~~B~~ U	0.28	~~B~~ U	0.37	~~B~~ U			
-43-9	Cadmium (Cd)	0.3	U	0.35	~~B~~ J	0.55	~~B~~ J			
-70-2	Calcium (Ca)	193000.		185000.		317000.				
-47-3	Chromium (Cr)	3.4	~~B~~ U	0.86	~~B~~ U	2.4	~~B~~ U			
-48-4	Cobalt (Co)	0.9	U	0.9	U	0.9	U			
-50-8	Copper (Cu)	1.5	~~B~~ U	1.1	~~B~~ U	1.4	~~B~~ U			
-89-6	Iron (Fe)	13000.		53200.		34000.				
-92-1	Lead (Pb)	1.7	U	1.7	U	1.7	U			
-95-4	Magnesium (Mg)	50400.		112000.		378000.				
-96-5	Manganese (Mn)	596.		1140.		1040.				
-97-6	Mercury (Hg)	0.1	U	0.1	U	0.1	U			
-02-0	Nickel (Ni)	1.5	~~B~~ J	1.1	U	1.1	U			
-09-7	Potassium (K)	19700.		54000.		142000.				
-49-2	Selenium (Se)	4.1	U	4.1	U	4.1	U			
-22-4	Silver (Ag)	1.1	~~U~~ UJ	1.1	~~U~~ UJ	1.1	~~U~~ UJ			
-23-5	Sodium (Na)	70200.		825000.		2530000.				
-28-0	Thallium (Tl)	5.5	U	5.5	U	5.5	U			
-31-5	Tin (Sn)	3.4	U	3.4	U	3.4	U			
-62-2	Vanadium (V)	3.7	~~B~~ U	1.6	~~B~~ U	3.	~~B~~ U			
-66-6	Zinc (Zn)	1.2	~~B~~ U	0.4	U	0.4	U			

PBH 6/9/98

CHARLESTON - ZONE F
CHARLESTON ZONE F GW (ONLY)
SDG# ECZG02

SVOA										
	SAMPLE ID ------->	FDS-G-W16A-03		FDS-G-W16B-03		FDS-G-W16C-03				
	ORIGINAL ID ----->	FDSGW16A03		FDSGW16B03		FDSGW16C03				
	LAB SAMPLE ID --->	S882285*5		S882228*2		S882228*1				
	ID FROM REPORT -->	FDSGW16A03		FDSGW16B03		FDSGW16C03				
	SAMPLE DATE ----->	04/22/98		04/20/98		04/20/98				
	DATE EXTRACTED -->	04/27/98		04/27/98		04/27/98				
	DATE ANALYZED --->	05/12/98		05/09/98		05/09/98				
	MATRIX ---------->	Water		Water		Water				
	UNITS ---------->	UG/L	A	UG/L	A	UG/L	A			
CAS #	Parameter	ECZG02		ECZG02		ECZG02				
-02-7	4-Nitrophenol	50.	U	50.	U	50.	U			
-64-9	Dibenzofuran	10.	U	10.	U	10.	U			
-14-2	2,4-Dinitrotoluene	10.	U	10.	U	10.	U			
-66-2	Diethylphthalate	10.	U	10.	U	10.	U			
-72-3	4-Chlorophenylphenylether	10.	U	10.	U	10.	U			
-73-7	Fluorene	10.	U	10.	U	10.	U			
-01-6	4-Nitroaniline	50.	U	50.	U	50.	U			
-52-1	2-Methyl-4,6-Dinitrophenol	50.	~~U~~ UJ	50.	~~U~~ UJ	50.	~~U~~ UJ			
-30-6	N-Nitrosodiphenylamine	10.	U	10.	U	10.	U			
-55-3	4-Bromophenyl-phenylether	10.	U	10.	U	10.	U			
-74-1	Hexachlorobenzene	10.	U	10.	U	10.	U			
-86-5	Pentachlorophenol	50.	U	50.	U	50.	U			
-01-8	Phenanthrene	10.	U	10.	U	10.	U			
-12-7	Anthracene	10.	U	10.	U	10.	U			
-74-2	Di-n-butylphthalate	10.	U	10.	U	10.	U			
-44-0	Fluoranthene	10.	U	10.	U	10.	U			
-00-0	Pyrene	10.	U	10.	U	10.	U			
-68-7	Butylbenzylphthalate	10.	U	10.	U	10.	U			
-94-1	3,3'-Dichlorobenzidine	20.	U	20.	U	20.	U			
-55-3	Benzo(a)anthracene	10.	U	10.	U	10.	U			
-01-9	Chrysene	10.	U	10.	U	10.	U			
-81-7	bis(2-Ethylhexyl)phthalate (BEHP)	10.	U	10.	U	10.	U			
-84-0	Di-n-octyl phthalate	10.	U	10.	U	10.	U			
-99-2	Benzo(b)fluoranthene	10.	U	10.	U	10.	U			
-08-9	Benzo(k)fluoranthene	10.	U	10.	U	10.	U			
-32-8	Benzo(a)pyrene	10.	U	10.	U	10.	U			
-39-5	Indeno(1,2,3-cd)pyrene	10.	U	10.	U	10.	U			
-70-3	Dibenz(a,h)anthracene	10.	U	10.	U	10.	U			
-24-2	Benzo(g,h,i)perylene	10.	U	10.	U	10.	U			

IMG1098

CAW 6/17/98

CHARLESTON - ZONE F
CHARLESTON ZONE F GW (ONLY)
SDG# ECZG02

SVOA										
	SAMPLE ID ------->	FDS-G-W16A-03		FDS-G-W16B-03		FDS-G-W16C-03				
	ORIGINAL ID ----->	FDSGW16A03		FDSGW16B03		FDSGW16C03				
	LAB SAMPLE ID --->	S882285*5		S882228*2		S882228*1				
	ID FROM REPORT -->	FDSGW16A03		FDSGW16B03		FDSGW16C03				
	SAMPLE DATE ----->	04/22/98		04/20/98		04/20/98				
	DATE EXTRACTED -->	04/27/98		04/27/98		04/27/98				
	DATE ANALYZED --->	05/12/98		05/09/98		05/09/98				
	MATRIX ---------->	Water		Water		Water				
	UNITS ---------->	UG/L	A	UG/L	A	UG/L	A			
CAS #	Parameter	ECZG02		ECZG02		ECZG02				
-95-2	Phenol	10.	U	10.	U	10.	U			
-44-4	bis(2-Chloroethyl)ether	10.	U	10.	U	10.	U			
-57-8	2-Chlorophenol	10.	U	10.	U	10.	U			
-73-1	1,3-Dichlorobenzene	10.	U	10.	U	10.	U			
-46-7	1,4-Dichlorobenzene	10.	U	10.	U	10.	U			
-51-6	Benzyl alcohol	10.	U	10.	U	10.	U			
-50-1	1,2-Dichlorobenzene	10.	U	10.	U	10.	U			
-48-7	2-Methylphenol (o-Cresol)	10.	U	10.	U	10.	U			
-60-1	2,2'-oxybis(1-Chloropropane)	10.	U	10.	U	10.	U			
-44-5	4-Methylphenol (p-Cresol)	10.	U	10.	U	10.	U			
-64-7	N-Nitroso-di-n-propylamine	10.	U	10.	U	10.	U			
-72-1	Hexachloroethane	10.	U	10.	U	10.	U			
-95-3	Nitrobenzene	10.	U	10.	U	10.	U			
-59-1	Isophorone	10.	U	10.	U	10.	U			
-75-5	2-Nitrophenol	10.	U	10.	U	10.	U			
-67-9	2,4-Dimethylphenol	10.	U	10.	U	10.	U			
-83-2	2,4-Dichlorophenol	10.	U	10.	U	10.	U			
-82-1	1,2,4-Trichlorobenzene	10.	U	10.	U	10.	U			
-20-3	Naphthalene	10.	U	10.	U	10.	U			
-47-8	4-Chloroaniline	10.	U	10.	U	10.	U			
-68-3	Hexachlorobutadiene	10.	U	10.	U	10.	U			
-91-1	bis(2-Chloroethoxy)methane	10.	U	10.	U	10.	U			
-85-0	Benzoic acid	50.	U	50.	U	50.	U			
-50-7	4-Chloro-3-methylphenol	10.	U	10.	U	10.	U			
-57-6	2-Methylnaphthalene	10.	U	10.	U	10.	U			
-47-4	Hexachlorocyclopentadiene	10.	U	10.	U	10.	U			
-06-2	2,4,6-Trichlorophenol	10.	U	10.	U	10.	U			
-95-4	2,4,5-Trichlorophenol	50.	U	50.	U	50.	U			
-58-7	2-Chloronaphthalene	10.	U	10.	U	10.	U			
-74-4	2-Nitroaniline	50.	U	50.	U	50.	U			
-11-3	Dimethyl phthalate	10.	U	10.	U	10.	U			
-96-8	Acenaphthylene	10.	U	10.	U	10.	U			
-20-2	2,6-Dinitrotoluene	10.	U	10.	U	10.	U			
-09-2	3-Nitroaniline	50.	U	50.	U	50.	U			
-32-9	Acenaphthene	10.	U	10.	U	10.	U			
-28-5	2,4-Dinitrophenol	50.	U	50.	~~U~~ UJ	50.	~~U~~ UJ			

MM 6/10/98

CHARLESTON - ZONE G
CHARLESTON ZONE G QUARTERLY GW
SDG# ECZG02

_VOA					
	SAMPLE ID ------->	BLK-0-ZG02-05		GEL-G-W014-05	
	ORIGINAL ID ----->	MBLANK2		GELGW01405	
	LAB SAMPLE ID --->	S8ECZG02*2		S882285*1	
	ID FROM REPORT -->	MBLANK2		GELGW01405	
	SAMPLE DATE ----->			04/22/98	
	DATE ANALYZED --->	04/27/98		04/27/98	
	MATRIX ---------->	Water		Water	
	UNITS ---------->	UG/L	D	UG/L	A
CAS #	Parameter	ECZG02		ECZG02	
-87-3	Chloromethane	1.	U	1.	U
-83-9	Bromomethane	1.	U	1.	U
-01-4	Vinyl chloride	1.	U	1.	U
-00-3	Chloroethane	1.	U	1.	U
-35-4	1,1-Dichloroethene	1.	U	1.	U
-09-2	Methylene chloride	5.	U	5.	U
-34-3	1,1-Dichloroethane	1.	U	1.	U
-66-3	Chloroform	1.	U	1.	U
-55-6	1,1,1-Trichloroethane	1.	U	1.	U
-23-5	Carbon tetrachloride	1.	U	1.	U
-43-2	Benzene	1.	U	1.	U
-06-2	1,2-Dichloroethane	1.	U	1.	U
-01-6	Trichloroethene	1.	U	1.	U
-87-5	1,2-Dichloropropane	1.	U	1.	U
-27-4	Bromodichloromethane	1.	U	1.	U
-88-3	Toluene	1.	U	1.	U
-00-5	1,1,2-Trichloroethane	1.	U	1.	U
-18-4	Tetrachloroethene	1.	U	1.	U
-48-1	Dibromochloromethane	1.	U	1.	U
-90-7	Chlorobenzene	1.	U	1.	U
-41-4	Ethylbenzene	1.	U	1.	U
-42-5	Styrene	1.	U	1.	U
-25-2	Bromoform	1.	U	1.	U
-34-5	1,1,2,2-Tetrachloroethane	1.	U	1.	U
-64-1	Acetone	10.	U	10.	U
-15-0	Carbon disulfide	1.	U	1.	UUJ
-05-4	Vinyl acetate	2.	U	2.	U
-93-3	2-Butanone (MEK)	10.	U	10.	U
-75-8	2-Chloroethyl vinyl ether	10.	U	10.	U
-10-1	4-Methyl-2-Pentanone (MIBK)	10.	U	10.	U
-01-5	cis-1,3-Dichloropropene	1.	U	1.	U
-02-6	trans-1,3-Dichloropropene	1.	U	1.	U
-78-6	2-Hexanone	10.	U	10.	U
-20-7	Xylene (Total)	2.	U	2.	U
-59-0	1,2-Dichloroethene (total)	1.	U	1.	U

TM 6/10/98

CHARLESTON - ZONE G
CHARLESTON ZONE G QUARTERLY GW
SDG# ECZG02

VOA	SAMPLE ID ------->	024-G-W002-01	024-T-W002-01	024-E-W002-01	024-D-W002-01	024-G-W003-01	BLK-D-ZG02-01
	ORIGINAL ID ----->	024GW00201	024TW00201	024EW00201	024DW00201	024GW00301	MBLANK1
	LAB SAMPLE ID --->	S882228*4	S882228*5	S882258*1	S882258*2	S882228*3	S8ECZG02*1
	ID FROM REPORT -->	024GW00201	024TW00201	024EW00201	024DW00201	024GW00301	MBLANK1
	SAMPLE DATE ----->	04/20/98	04/20/98	04/21/98	04/21/98	04/20/98	
	DATE ANALYZED --->	04/27/98	04/27/98	04/27/98	04/27/98	04/27/98	04/27/98
	MATRIX ---------->	Water	Water	Water	Water	Water	Water
	UNITS ---------->	UG/L A	UG/L B	UG/L B	UG/L B	UG/L A	UG/L D
CAS #	Parameter	ECZG02	ECZG02	ECZG02	ECZG02	ECZG02	ECZG02
-87-3	Chloromethane	1. U	1. U	1. U	1. U	1. U	1. U
-83-9	Bromomethane	1. ~~U~~ UJ	1. U	1. U	1. U	1. ~~U~~ UJ	1. U
-01-4	Vinyl chloride	1. U	1. U	1. U	1. U	1. U	1. U
-00-3	Chloroethane	1. U	1. U	1. U	1. U	1. U	1. U
-35-4	1,1-Dichloroethene	1. U	1. U	1. U	1. U	1. U	1. U
-09-2	Methylene chloride	5. U	5. U	5. U	5. U	5. U	5. U
-34-3	1,1-Dichloroethane	1. U	1. U	1. U	1. U	1. U	1. U
-66-3	Chloroform	1. U	1. U	1. U	1. U	1. U	1. U
-55-6	1,1,1-Trichloroethane	1. U	1. U	1. U	1. U	1. U	1. U
-23-5	Carbon tetrachloride	1. U	1. U	1. U	1. U	1. U	1. U
-43-2	Benzene	1. U	1. U	1. U	1. U	1. U	1. U
-06-2	1,2-Dichloroethane	1. U	1. U	1. U	1. U	1. U	1. U
-01-6	Trichloroethene	1. U	1. U	1. U	1. U	1. U	1. U
-87-5	1,2-Dichloropropane	1. U	1. U	1. U	1. U	1. U	1. U
-27-4	Bromodichloromethane	1. U	1. U	1. U	1. U	1. U	1. U
-88-3	Toluene	1. U	1. U	1. U	1. U	1. U	1. U
-00-5	1,1,2-Trichloroethane	1. U	1. U	1. U	1. U	1. U	1. U
-18-4	Tetrachloroethene	1. U	1. U	1. U	1. U	1. U	1. U
-48-1	Dibromochloromethane	1. U	1. U	1. U	1. U	1. U	1. U
-90-7	Chlorobenzene	1. U	1. U	1. U	1. U	1. U	1. U
-41-4	Ethylbenzene	1. U	1. U	1. U	1. U	1. U	1. U
-42-5	Styrene	1. U	1. U	1. U	1. U	1. U	1. U
-25-2	Bromoform	1. U	1. U	1. U	1. U	1. U	1. U
-34-5	1,1,2,2-Tetrachloroethane	1. U	1. U	1. U	1. U	1. U	1. U
-64-1	Acetone	10. U	10. U	10. U	10. U	10. U	10. U
-15-0	Carbon disulfide	1. U	1. U	1. U	1. U	1. U	1. U
-05-4	Vinyl acetate	2. U	2. U	2. U	2. U	2. U	2. U
-93-3	2-Butanone (MEK)	10. U	10. U	10. U	10. U	10. U	10. U
-75-8	2-Chloroethyl vinyl ether	10. U	10. U	10. U	10. U	10. U	10. U
-10-1	4-Methyl-2-Pentanone (MIBK)	10. U	10. U	10. U	10. U	10. U	10. U
-01-5	cis-1,3-Dichloropropene	1. U	1. U	1. U	1. U	1. U	1. U
-02-6	trans-1,3-Dichloropropene	1. U	1. U	1. U	1. U	1. U	1. U
-78-6	2-Hexanone	10. U	10. U	10. U	10. U	10. U	10. U
-20-7	Xylene (Total)	2. U	2. U	2. U	2. U	2. U	2. U
-59-0	1,2-Dichloroethene (total)	1. U	1. U	1. U	1. U	1. U	1. U

6/17/98

CHARLESTON - ZONE G
CHARLESTON ZONE G QUARTERLY GW
SDG# ECZG02

_VOA													
	SAMPLE ID ------->	003-G-W001-05		003-T-W001-05		003-G-W002-05		003-H-W002-05		003-G-W003-05		024-G-W001-01	
	ORIGINAL ID ----->	003GW00105		003TW00105		003GW00205		003HW00205		003GW00305		024GW00101	
	LAB SAMPLE ID -->	S882258*3		S882258*5		S882285*2		S882285*3		S882258*4		S882285*4	
	ID FROM REPORT -->	003GW00105		003TW00105		003GW00205		003HW00205		003GW00305		024GW00101	
	SAMPLE DATE ----->	04/21/98		04/21/98		04/22/98		04/22/98		04/21/98		04/22/98	
	DATE ANALYZED --->	04/27/98		04/27/98		04/27/98		04/27/98		04/27/98		04/27/98	
	MATRIX ---------->	Water		Water		Water		Water		Water		Water	
	UNITS ---------->	UG/L	A	UG/L	B	UG/L	A	UG/L	A	UG/L	A	UG/L	A
CAS #	Parameter	ECZG02		ECZG02		ECZG02		ECZG02		ECZG02		ECZG02	
4-87-3	Chloromethane	1.	U	1.	U	1.	U	1.	U	1.	U	1.	U
4-83-9	Bromomethane	1.	~~U~~ UJ	1.	U	1.	U	1.	U	1.	~~U~~ UJ	1.	U
5-01-4	Vinyl chloride	1.	U	1.	U	1.	U	1.	U	1.	U	1.	U
5-00-3	Chloroethane	1.	U	1.	U	1.	U	1.	U	1.	U	1.	U
5-35-4	1,1-Dichloroethene	1.	U	1.	U	1.	U	1.	U	1.	U	1.	U
5-09-2	Methylene chloride	5.	U	5.	U	5.	U	5.	U	5.	U	5.	U
5-34-3	1,1-Dichloroethane	1.	U	1.	U	1.	U	1.	U	1.	U	1.	U
7-66-3	Chloroform	1.	U	1.	U	1.	U	1.	U	1.	U	1.	U
1-55-6	1,1,1-Trichloroethane	1.	U	1.	U	1.	U	1.	U	1.	U	1.	U
6-23-5	Carbon tetrachloride	1.	U	1.	U	1.	U	1.	U	1.	U	1.	U
1-43-2	Benzene	1.	U	1.	U	1.	U	1.	U	1.	U	1.	U
7-06-2	1,2-Dichloroethane	1.	U	1.	U	1.	U	1.	U	1.	U	1.	U
9-01-6	Trichloroethene	1.	U	1.	U	1.	U	1.	U	1.	U	1.	U
8-87-5	1,2-Dichloropropane	1.	U	1.	U	1.	U	1.	U	1.	U	1.	U
5-27-4	Bromodichloromethane	1.	U	1.	U	1.	U	1.	U	1.	U	1.	U
8-88-3	Toluene	1.	U	1.	U	1.	U	1.	U	1.	U	1.	U
9-00-5	1,1,2-Trichloroethane	1.	U	1.	U	1.	U	1.	U	1.	U	1.	U
7-18-4	Tetrachloroethene	1.	U	1.	U	1.	U	1.	U	1.	U	0.87	~~U~~ J
4-48-1	Dibromochloromethane	1.	U	1.	U	1.	U	1.	U	1.	U	1.	U
8-90-7	Chlorobenzene	1.	U	1.	U	1.	U	1.	U	1.	U	1.	U
0-41-4	Ethylbenzene	1.	U	1.	U	1.	U	1.	U	1.	U	1.	U
0-42-5	Styrene	1.	U	1.	U	1.	U	1.	U	1.	U	1.	U
5-25-2	Bromoform	1.	U	1.	U	1.	U	1.	U	1.	U	1.	U
9-34-5	1,1,2,2-Tetrachloroethane	1.	U	1.	U	1.	U	1.	U	1.	U	1.	U
7-64-1	Acetone	10.	U	10.	U	10.	U	10.	U	10.	U	10.	U
5-15-0	Carbon disulfide	1.	U	1.	U	1.	~~U~~ UJ	1.	~~U~~ UJ	1.	U	1.	~~U~~ UJ
3-05-4	Vinyl acetate	2.	U	2.	U	2.	U	2.	U	2.	U	2.	U
3-93-3	2-Butanone (MEK)	10.	U	10.	U	10.	U	10.	U	10.	U	10.	U
0-75-8	2-Chloroethyl vinyl ether	10.	U	10.	U	10.	U	10.	U	10.	U	10.	U
3-10-1	4-Methyl-2-Pentanone (MIBK)	10.	U	10.	U	10.	U	10.	U	10.	U	10.	U
1-01-5	cis-1,3-Dichloropropene	1.	U	1.	U	1.	U	1.	U	1.	U	1.	U
1-02-6	trans-1,3-Dichloropropene	1.	U	1.	U	1.	U	1.	U	1.	U	1.	
1-78-6	2-Hexanone	10.	U	10.	U	10.	U	10.	U	10.	U	10.	
1-20-7	Xylene (Total)	2.	U	2.	U	2.	U	2.	U	2.	U	2.	
1-59-0	1,2-Dichloroethene (total)	1.	U	1.	U	1.	U	1.	U	1.	U	1.	U

HEARTLAND
ENVIRONMENTAL SERVICES, INC.

MULTI-MEDIA VOLATILE ORGANIC FRACTION

CASE/SDG NUMBER:	32020
LABORATORY:	SWL-TULSA
CLIENT:	ENSAFE
PROJECT:	CHARLESTON ZONE G
REVIEWER:	Daniel J. Heil, A.V.P.
DATE:	January 14, 1998
QA/QC LEVEL:	LEVEL III
STATEMENT OF WORK:	SW846 8260
ANALYSIS MODIFICATIONS:	CLP DELIVERABLES
NUMBER OF SAMPLES:	19
SAMPLE MATRIX:	WATER
NUMBER OF MS/MSDs:	1

MULTI-MEDIA VOLATILE ORGANIC FRACTION

HOLDING TIMES

CLP/SW846:		14 days from date of sampling (If properly preserved)
Region I	:	10 days from VTsR
Region III	:	14 days from date of sampling (If properly preserved)
NYSDEC	:	7 days from date VTSR

Action: DA - The number of days that the holding time was exceeded.

DA ≤ 5:	Qualify all positive results as estimated (J).
DA > 5 ≤ 15:	Qualify all positive results as estimated (J) and all non detects estimated (UJ).
DA > 15:	Qualify all positive results estimated (J) and reject all non detects.

All associated samples met holding time requirements for analysis. No qualifications are required.

MULTI-MEDIA VOLATILE ORGANIC FRACTION INTERNAL STANDARD AREA SUMMARY

Is the EICP area for each internal standard in all associated field samples, QC samples, and blanks within - 50% and + 100% of the respective internal standard EICP areas **(Yes/No)?** YES

If no, the non compliant internal standards have been circled in red.

If the EICP area of one (1) or more internal standard is less than -50%:

- Positive results for those compounds that are quantified using the particular internal standard are flagged as estimated (J).
- Non detected for that fraction are flagged with the sample quantitation limit classified as estimated (UJ).

If the EICP area of one (1) or more internal standards is greater than +100%:

- Positive results for those compounds that are quantified using the particular internal standard are flagged as estimated (J).

The internal standard area form 8's or equivalent have been included.

MULTI-MEDIA VOLATILE ORGANIC FRACTION BLANK SUMMARY

1. Blank qualification guidelines:

   a) If a compound is found in the blank but not in the sample, no action is taken.

   b) Any compound (other than the four (4) listed below) detected in the sample, which was also detected in the associated blank, must be qualified by elevating the limit of detection or adjusting the limit of detection to the sample result, when the sample concentration is less than five (5) times the blank concentration. For the following four (4) compounds, the results are qualified by elevating the limit of detection or adjusting the limit of detection to the sample result, when the sample concentration is less than ten (10) times the blank concentration.

      Common laboratory contaminants: methylene chloride
      acetone
      2-butanone

   c) The reviewer should take note that the blank analysis may not involve the same weights, volumes or dilution factors as associated samples. These factors must be taken into consideration when applying the 5X and 10X criteria.

   d) In addition, the reviewer must review the trip blanks, rinseate blanks and field blanks (if they were submitted with the data package) and all associated samples. Apply the same data validation guidelines used in assessing the method blanks.

   e) Qualification/Action codes:

      U - The sample result is greater than the CRQL and less than ten times (10X) the blank value. Cross out the "B" flag and qualify the sample result with a "U".

      CRQL - The sample result is less than the CRQL and less than ten times (10X) the blank value. Reject the sample result, cross out the "B" flag, and report the CRQL.

      No Action - The sample result is greater than the CRQL and greater than ten times (10X) the blank value.

MULTI-MEDIA VOLATILE ORGANIC FRACTION
BLANK SUMMARY - TCL SUMMARY

Type of Blank: RINSEATE Matrix: WATER

Sample ID: 003EW00104 File ID:

# Compound	Concentration	CRQL	Action Level
1. chloroform	5	5	25
2.			
3.			
4.			
5.			
6.			
7.			
8.			
9.			
10.			

	1	2	3	4	5	6	7	8	9	10
Sample ID:										

NONE OF THE ASSOCIATED SAMPLES EXHIBITED SIMILAR CONTAMINATION.

HEARTLAND ESI VOA **HESI96.1**

MULTI-MEDIA VOLATILE ORGANIC FRACTION
BLANK SUMMARY - TCL SUMMARY

Type of Blank: FIELD Matrix: WATER

Sample ID: 003FW00104 File ID:

# Compound	Concentration	CRQL	Action Level
1. chloroform	5	5	25
2.			
3.			
4.			
5.			
6.			
7.			
8.			
9.			
10.			

	1	2	3	4	5	6	7	8	9	10
Sample ID:										

NONE OF THE ASSOCIATED SAMPLES EXHIBITED SIMILAR CONTAMINATION.

HEARTLAND ESI VOA **HESI96.1**

MULTI-MEDIA VOLATILE ORGANIC FRACTION
BLANK SUMMARY - TCL SUMMARY

Type of Blank: DI Matrix: WATER

Sample ID: 003DW00104 File ID:

# Compound	Concentration	CRQL	Action Level
1. chloroform	5	5	25
2.			
3.			
4.			
5.			
6.			
7.			
8.			
9.			
10.			

	1	2	3	4	5	6	7	8	9	10
Sample ID:										

NONE OF THE ASSOCIATED SAMPLES EXHIBITED SIMILAR CONTAMINATION.

MULTI-MEDIA VOLATILE ORGANIC FRACTION
BLANK SUMMARY - TCL SUMMARY

Type of Blank: TRIP Matrix: WATER

Sample ID: 006TW00404 File ID:

# Compound	Concentration	CRQL	Action Level
1. chloroform	2J	5	10
2.			
3.			
4.			
5.			
6.			
7.			
8.			
9.			
10.			

	1	2	3	4	5	6	7	8	9	10
Sample ID:										

NONE OF THE ASSOCIATED SAMPLES EXHIBITED SIMILAR CONTAMINATION.

HEARTLAND ESI VOA **HESI96.1**

MULTI-MEDIA VOLATILE ORGANIC FRACTION
BLANK SUMMARY - TCL SUMMARY

Type of Blank: TRIP Matrix: WATER

Sample ID: 003TW00204 File ID:

# Compound	Concentration	CRQL	Action Level
1. chloroform	2J	5	10
2.			
3.			
4.			
5.			
6.			
7.			
8.			
9.			
10.			

	1	2	3	4	5	6	7	8	9	10
Sample ID:										

NONE OF THE ASSOCIATED SAMPLES EXHIBITED SIMILAR CONTAMINATION.

HEARTLAND ESI VOA **HESI96.1**

MULTI-MEDIA VOLATILE ORGANIC FRACTION
BLANK SUMMARY - TCL SUMMARY

Type of Blank: TRIP Matrix: WATER

Sample ID: 006TW00604 File ID:

# Compound	Concentration	CRQL	Action Level
1. methylene chloride	2J	5	20
2. chloroform	1J	5	5
3.			
4.			
5.			
6.			
7.			
8.			
9.			
10.			

Sample ID:	1	2	3	4	5	6	7	8	9	10
006GW00704	CRQL									

MULTI-MEDIA VOLATILE ORGANIC FRACTION
BLANK SUMMARY - TCL SUMMARY

Type of Blank: TRIP Matrix: WATER

Sample ID: 120TW00304 File ID:

# Compound	Concentration	CRQL	Action Level
1. NONE			
2.			
3.			
4.			
5.			
6.			
7.			
8.			
9.			
10.			

	1	2	3	4	5	6	7	8	9	10
Sample ID:										

ALL ASSOCIATED SAMPLES

MULTI-MEDIA VOLATILE ORGANIC FRACTION
FIELD DUPLICATE SAMPLE SUMMARY

Sample ID: 006GW00404 **Dupliacte Sample ID:** 006HW00404

Water: **RPD > 30%** **Soil:** **RPD > 50%**

Compound	Sample Conc.	Dup. Sample Conc.	RPD
			??
			??
			??
			??
			??
			??
			??
			??
			??
			??
			??
			??
			??
			??
			??
			??
			??
			??

Comments: No qualifications are required.

HEARTLAND ESI VOA HESI96.1

MULTI-MEDIA VOLATILE ORGANIC FRACTION
FIELD DUPLICATE SAMPLE SUMMARY

Sample ID: 120GW00304 **Dupliacte Sample ID:** 120HW00304

Water: **RPD > 30%** **Soil:** **RPD > 50%**

Compound	Sample Conc.	Dup. Sample Conc.	RPD
acetone	8	6	29
			??
			??
			??
			??
			??
			??
			??
			??
			??
			??
			??
			??
			??
			??
			??
			??
			??

Comments: No qualifications are required.

MULTI-MEDIA VOLATILE ORGANIC FRACTION SAMPLE RESULT VERIFICATION

1. Were the sample results reported within the calibration range (YES/NO)? YES

2. Was the percent moisture reported for all soil samples (YES/NO/NA)? NO

3. Was the data reported on a dry weight basis (YES/NO/NA)? NO

4. Did the GC/MS RIC's and TIC's exhibit interferences, off scale peaks or elevated baseline (YES/NO)? NO

5. Did the data contain elevated detection limits that could not be verified (YES/NO)?NO

6. Were any computational or transcription errors found (YES/NO)? NO

Specific Comments:

Reviewer Daniel J Heil AVP **Date:** 01/14/98

HEARTLAND
ENVIRONMENTAL SERVICES, INC.

MULTI-MEDIA SEMIVOLATILE ORGANIC FRACTION

CASE/SDG NUMBER:	32020
LABORATORY:	SWL-TULSA
CLIENT:	ENSAFE
PROJECT:	CHARLESTON ZONE G
REVIEWER:	Daniel J. Heil, A.V.P.
DATE:	January 14, 1998
QA/QC LEVEL:	LEVEL III
STATEMENT OF WORK:	SW846 8270
ANALYSIS MODIFICATIONS:	CLP DELIVIERABLES
NUMBER OF SAMPLES:	15
SAMPLE MATRIX:	WATER
NUMBER OF MS/MSDs:	1

MULTI-MEDIA SEMIVOLATILE ORGANIC FRACTION

HOLDING TIMES

	Water	soil	Analysis
CLP:	7 days from sampling	14 days from sampling	40 days from VTSR
SW846:	7 days from sampling	14 days from sampling	40 days from VTSR
Region I:	5 days from VTSR	7 days from VTSR	40 days from VTSR
Region III:	7 days from sampling	7 days from sampling	40 days from VTSR
NYSDEC:	5 days form VTSR	5 days from VTSR	40 days From VTSR

Action: DA - The number of days that the holding time was exceeded.

DA $\leq$ 5:	Qualify all positive results as estimated (J).
DA $>$ 5 $\leq$ 15:	Qualify all positive results as estimated (J) and all non detects estimated (UJ).
DA $>$ 15:	Qualify all positive results estimated (J) and reject all non detects.

All associated samples met holding time requirements for extraction and/or analysis. No qualifications are required.

MULTI-MEDIA SEMIVOLATILE ORGANIC FRACTION INTERNAL STANDARD AREA SUMMARY

Is the EICP area for each internal standard in all associated field samples, QC samples, and blanks within - 50% and + 100% of the respective internal standard EICP areas **(Yes/No)**? YES

If no, the non compliant internal standards have been circled in red.

If the EICP area of one (1) or more internal standard is less than -50%:

- Positive results for those compounds that are quantified using the particular internal standard are flagged as estimated (J).
- Non detected for that fraction are flagged with the sample quantitation limit classified as estimated (UJ).

If the EICP area of one (1) or more internal standards is greater than +100%:

- Positive results for those compounds that are quantified using the particular internal standard are flagged as estimated (J).

The internal standard area form 8's or equivalent have been included.

MULTI-MEDIA SEMIVOLATILE ORGANIC FRACTION BLANK SUMMARY

1. Blank qualification guidelines:

   a) If a compound is found in the blank but not in the sample, no action is taken.

   b) Any compound (other than listed below) detected in the sample, which was also detected in the associated blank, must be qualified by elevating the limit of detection or adjusting the limit of detection to the sample result, when the sample concentration is less than five (5) times the blank concentration. For the following compounds, the results are qualified by elevating the limit of detection or adjusting the limit of detection to the sample result, when the sample concentration is less than ten (10) times the blank concentration.

      Common laboratory contaminants: phthalates

   c) The reviewer should take note that the blank analysis may not involve the same weights, volumes or dilution factors as associated samples. These factors must be taken into consideration when applying the 5X and 10X criteria.

   d) In addition, the reviewer must review the trip blanks, rinseate blanks and field blanks (if they were submitted with the data package) and all associated samples. Apply the same data validation guidelines used in assessing the method blanks.

   e) Qualification/Action codes:

      U - The sample result is greater than the CRQL and less than ten times (10X) the blank value. Cross out the "B" flag and qualify the sample result with a "U".

      CRQL - The sample result is less than the CRQL and less than ten times (10X) the blank value. Reject the sample result, cross out the "B" flag, and report the CRQL.

      No Action - The sample result is greater than the CRQL and greater than ten times (10X) the blank value.

MULTI-MEDIA SEMIVOLATILE ORGANIC FRACTION
BLANK SUMMARY - TCL SUMMARY

Type of Blank: RINSEATE Matrix: WATER

Sample ID: 003EW00104 File ID:

# Compound	Concentration	CRQL	Action Level
1. bis(2-ethylhexyl)phthalate	14	10	140
2.			
3.			
4.			
5.			
6.			
7.			
8.			
9.			
10.			

Sample ID:	1	2	3	4	5	6	7	8	9	10
006GW00104	CRQL									
006GW00204	CRQL									
006GW00404	NA									
006GW00404DL	NA									
006HW00404	CRQL									
006GW00504	CRQL									
006GW00604	CRQL									
006GW00704	U									
120GW00104										
120GW00204	U									
120GW00304										
120HW00304	U									

MULTI-MEDIA SEMIVOLATILE ORGANIC FRACTION
BLANK SUMMARY - TCL SUMMARY

Type of Blank: FIELD Matrix: WATER

Sample ID: 003FW00104 File ID:

# Compound	Concentration	CRQL	Action Level
1. bis(2-ethylhexyl)phthalate	1J	10	10
2.			
3.			
4.			
5.			
6.			
7.			
8.			
9.			
10.			

Sample ID:	1	2	3	4	5	6	7	8	9	10
006GW00104	CRQL									
006GW00204	CRQL									
006GW00404	NA									
006GW00404DL	NA									
006HW00404	CRQL									
006GW00504	CRQL									
006GW00604	CRQL									
006GW00704	NA									
120GW00104										
120GW00204	NA									
120GW00304										
120HW00304	NA									

MULTI-MEDIA SEMIVOLATILE ORGANIC FRACTION
BLANK SUMMARY - TCL SUMMARY

Type of Blank: DI Matrix: WATER

Sample ID: 003DW00104 File ID:

#	Compound	Concentration	CRQL	Action Level
1.	NONE			
2.				
3.				
4.				
5.				
6.				
7.				
8.				
9.				
10.				

	1	2	3	4	5	6	7	8	9	10
Sample ID:										

ALL ASSOCIATED SAMPLES

MULTI-MEDIA SEMIVOLATILE ORGANIC FRACTION FIELD DUPLICATE SAMPLE SUMMARY

Sample ID: 006GW00404 **Dupliacte Sample ID:** 006HW00404

Water: **RPD > 30%** **Soil:** **RPD > 50%**

Compound	Sample Conc.	Dup. Sample Conc.	RPD
bis(2-ethylhexyl)phthalate	430	1J	199
			??
			??
			??
			??
			??
			??
			??
			??
			??
			??
			??
			??
			??
			??
			??
			??
			??

Comments: Common laboratory contaminant. No qualifications are required.

MULTI-MEDIA SEMIVOLATILE ORGANIC FRACTION
FIELD DUPLICATE SAMPLE SUMMARY

Sample ID: 120GW00304 **Dupliacte Sample ID:** 120HW00304

Water: **RPD > 30%** **Soil:** **RPD > 50%**

Compound	Sample Conc.	Dup. Sample Conc.	RPD
			??
			??
			??
			??
			??
			??
			??
			??
			??
			??
			??
			??
			??
			??
			??
			??
			??
			??

Comments: No qualifications are required.

HEARTLAND ESI SVOA **HESI96.1**

MULTI-MEDIA SEMIVOLATILE ORGANIC FRACTION SAMPLE RESULT VERIFICATION

1. Were the sample results reported within the calibration range (YES/NO)? YES
2. Was the percent moisture reported for all soil samples (YES/NO/NA)? NA
3. Was the data reported on a dry weight basis (YES/NO/NA)? NA
4. Did the GC/MS RIC's and TIC's exhibit interferences, off scale peaks or elevated baseline (YES/NO)? NO
5. Did the data contain elevated detection limits that could not be verified (YES/NO)?NO
6. Were any computational or transcription errors found (YES/NO)? NO

Specific Comments:

Reviewer Daniel J Hill AVP **Date:** 01/14/98

HEARTLAND
ENVIRONMENTAL SERVICES, INC.

MULTI-MEDIA PESTICIDE/AROCLOR FRACTION

CASE/SDG NUMBER:	32020B
LABORATORY:	SWL-Tulsa
CLIENT:	ENSAFE
PROJECT:	Charleston Zone G
REVIEWER:	Erica K. Ketcham
DATE:	January 14, 1998
QA/QC LEVEL:	DQO Level III
STATEMENT OF WORK:	SW-846 Method 8081
ANALYSIS MODIFICATIONS:	none
NUMBER OF SAMPLES:	19
SAMPLE MATRIX:	water
NUMBER OF MS/MSDs:	2

MULTI-MEDIA PESTICIDE/AROCLOR FRACTION

HOLDING TIMES

	Water	Soil	Analysis
CLP:	7 days from sampling	14 days from sampling	40 days from VTSR
SW846:	7 days from sampling	14 days from sampling	40 days from VTSR
Region I:	7 days from sampling	7 days from sampling	40 days from VTSR
Region II:	7 days from sampling	7 days from sampling	40 days from VTSR
Region III:	7 days from sampling	7 days from sampling	40 days from VTSR
NYSDEC:	5 days from VTSR	5 days from VTSR	40 days from VTSR

DA - The number of days that the holding time was exceeded.

DA ≤ 5:	Qualify all positive results as estimated (J).
DA > 5 ≤ 15:	Qualify all positive results as estimated (J) and all non detects as estimated (UJ).
DA > 15:	Qualify all positive results as estimated (J) and reject (R) all non detects.

All associated samples met holding time requirements for extraction and/or analysis. No qualifications are required.

MULTI-MEDIA PESTICIDE/AROCLOR FRACTION BLANK SUMMARY

1. Blank qualification guidelines:

   a) If a compound is found in the blank but not in the sample, no action is taken.

   b) Any compound detected in the sample, which was also detected in the associated blank, must be qualified by elevating the limit of detection or adjusting the limit of detection to the sample result, when the sample concentration is less than five (5) times the blank concentration.

   c) The reviewer should take note that the blank analysis may not involve the same weights, volumes or dilution factors as associated samples. These factors must be taken into consideration when applying the 5X and 10X criteria.

   d) In addition, the reviewer must review the trip blanks, rinseate blanks and field blanks (if they were submitted with the data package) and all associated samples. Apply the same data validation guidelines used in assessing the method blanks.

   e) Qualification/Action codes:

      U - The sample result is greater than the CRQL and less than five times (5X) the blank value. Cross out the "B" flag and qualify the sample result with a "U".

      CRQL - The sample result is less than the CRQL and less than five times (5X) the blank value. Reject the sample result, cross out the "B" flag, and report the CRQL.

      No Action - The sample result is greater than the CRQL and greater than five times (5X) the blank value.

HEARTLAND ESI GC **HESI96.1**

MULTI-MEDIA PESTICIDE/AROCLOR FRACTION BLANK SUMMARY - TCL SUMMARY

Type of Blank: DI Blank Matrix: water

Sample ID: 003DW00104 File ID:

#	Compound	Concentration	CRQL	Action Level
1.	No Contamination			
2.				
3.				
4.				
5.				
6.				
7.				
8.				
9.				
10.				

	1	2	3	4	5	6	7	8	9	10
Sample ID:										

all associated samples

HEARTLAND ESI GC **HESI96.1**

MULTI-MEDIA PESTICIDE/AROCLOR FRACTION BLANK SUMMARY - TCL SUMMARY

Type of Blank: Equipment Blank Matrix: water

Sample ID: 003EW00104 File ID:

# Compound	Concentration	CRQL	Action Level
1. No Contamination			
2.			
3.			
4.			
5.			
6.			
7.			
8.			
9.			
10.			

	1	2	3	4	5	6	7	8	9	10
Sample ID:										

all associated samples

HEARTLAND ESI GC **HESI96.1**

MULTI-MEDIA PESTICIDE/AROCLOR FRACTION BLANK SUMMARY - TCL SUMMARY

Type of Blank: Field Blank Matrix: water

Sample ID: 003FW00104 File ID:

#	Compound	Concentration	CRQL	Action Level
1.	No Contamination			
2.				
3.				
4.				
5.				
6.				
7.				
8.				
9.				
10.				

	1	2	3	4	5	6	7	8	9	10
Sample ID:										

all associated samples

HEARTLAND ESI GC HESI96.1

MULTI-MEDIA PESTICIDE/AROCLOR FRACTION
FIELD DUPLICATE SAMPLE SUMMARY

Sample ID: 003GW00204 **Duplicate Sample ID:** 003HW00204

Water: **RPD > 30%** **Soil:** **RPD > 50%**

Compound	Sample Conc.	Dup. Sample Conc.	RPD
			??
			??
			??
			??
			??
			??
			??
			??
			??
			??
			??
			??
			??
			??
			??
			??
			??
			??

Comments: No positive results. No qualifications were required.

HEARTLAND ESI GC HESI96.1

MULTI-MEDIA PESTICIDE/AROCLOR FRACTION FIELD DUPLICATE SAMPLE SUMMARY

Sample ID: 006GW00404 **Duplicate Sample ID:** 006HW00404

Water: **RPD > 30%** **Soil:** **RPD > 50%**

Compound	Sample Conc.	Dup. Sample Conc.	RPD
			??
			??
			??
			??
			??
			??
			??
			??
			??
			??
			??
			??
			??
			??
			??
			??
			??
			??

Comments: No positive results. No qualifications were required.

HEARTLAND ESI GC HESI96.1

MULTI-MEDIA PESTICIDE/AROCLOR FRACTION
FIELD DUPLICATE SAMPLE SUMMARY

Sample ID: 120GW00304 **Duplicate Sample ID:** 120HW00304

Water: **RPD > 30%** **Soil:** **RPD > 50%**

Compound	Sample Conc.	Dup. Sample Conc.	RPD
			??
			??
			??
			??
			??
			??
			??
			??
			??
			??
			??
			??
			??
			??
			??
			??
			??
			??

Comments: No positive results. No qualifications were required.

MULTI-MEDIA PESTICIDE/AROCLOR FRACTION

SAMPLE RESULT VERIFICATION

1. Were the sample results reported within the calibration range (YES/NO)? YES

2. Was the percent moisture reported for all soil samples (YES/NO/NA)? NA

3. Was the data reported on a dry weight basis (YES/NO/NA)? NA

4. Did the GC chromatograms exhibit interferences, off scale peaks or elevated baseline (YES/NO)? level III--chromatograms not included

5. Did the data contain elevated detection limits that could not be verified (YES/NO)?NO

6. Were any computational or transcription errors found (YES/NO)? NO

Specific Comments:

The method requires that all target compounds, with the exception of several PCBs, be analyzed with a five (5) point calibration curve. The laboratory analyzed a single point curve for Toxaphene. No positive results were reported for this compound, therefore the data did not require qualification.

Reviewer Erica K. Ketcham **Date:** 1/14/93

DATA DELIVERABLES(DQO III or C)
INORGANICS

Site Name: Charleston

Client: Ensafe

Location: 32020

Lab: SWOK

Analytical Fraction: Metals

Reviewer: P. Humby

Date(s): 1/14/92

A.	Control Chart - results of the method blank spikes run with each batch of samples processed	: Yes	No	NR
B.	CLP Form 1s with associated sample results and CLP flagging system. All percent moistures for soils and discussion of sample type	: Yes	No	NR
C.	CLP Form 2s with Initial and continuing calibration standards (part 1 only)	: Yes	No	NR
D.	CLP Form 3s with prep and method blanks	: Yes	No	NR
E.	CLP Form 4s with Interference check sample data	: Yes	No	NR
F.	CLP Form 5s with Matrix spike recovery and the postdigestion spike recovery for ICP Metals. Only done if predigest spike recovery exceeds limits	: Yes	No	NR
G.	CLP Form 6s with Duplicate data results	: Yes	No	NR
H.	CLP Form 8s with GFAA standard addition data	: Yes	No	NR
I.	CLP Form 13s with holding time data	: Yes	No	NR

HEARTLAND ESI Form A

DATA DELIVERABLE REQUIREMENTS

A.	Permanently Bound	Yes	No	NR
B.	Paginated	Yes	No	NR
C.	Table of Contents	Yes	No	NR
D.	Digestion Records(internal C-O-C)	Yes	No	NR
E.	Chain-Of-Custody (external)	Yes	No	NR
F.	Case Narrative			
	1. Sample list with Client and Lab IDs cross-referenced (copy attached)	Yes	No	NR
	2. All Protocol deviations and QC problems noted	Yes	No	NR
	3. Comments:_____			
G.	Uninitialed Strikeovers	Yes	No	NR
H.	Legible Photocopies	Yes	No	NR
I.	Consistent Dates	Yes	No	NR
J.	Preparation Logs	Yes	No	NR
K.	Instrument Run Logs	Yes	No	NR

L. Other Deviations or Comments:_____

HEARTLAND ESI Form B

HOLDING TIMES FOR METALS

1. Was the holding time exceeded on any of the Metal Fractions

   ICP/GFAA/FAA - Holding time of 6 months VTSR
   Mercury - Holding time of 28 days VTSR
   Cyanide - Holding time of 14 days VTSR

   Yes No

2. If yes, complete the following form for all samples that exceeding holding times.

   Fraction:_____

Sample ID	Matrix	VTSR	Date of Analysis	DA	QC Decision

PBA 1/14/98

Note: DA = The number of days holding time to analysis is exceeded.

S = Non-aqueous
A = Aqueous
X = Air

QA Decision: Results > IDL - J - estimated

Results < IDL - R - rejected

J.A. JONES
ENVIRONMENTAL SERVICES

Charleston Naval Complex
1849 Avenue F
N. Charleston, SC 29405

Phone: (843) 740-2780
Fax: (843) 740-2785

Fax

To: Bill Ellison From: Andrew O'Conor

Fax #: 352-333-7886 Total Pages: 7

Phone #: _____ Date: 2/7/03

Re: _____

☐ Urgent ☐ For Review ☐ Please Comment ☐ Please Reply

Comments:

CNC 39-41
SDG

DATA ASSESSMENT NARRATIVE

PESTICIDE/AROCLORS

General

The organic findings offered in this screening report assumes that all analytical results are correct as reported and is based upon the examination of the reported holding times, blank analysis results, surrogate and matrix spike recoveries, GC performance, and calibration results. This report was prepared in compliance relative to the analytical and deliverable requirements specified in the SW-846 Methods 8081 and 8082; the National Functional Guidelines for Organic Data Validation, February 1994; and DQO Level III requirements. All comments made within this report should be considered when examining the analytical results. Please refer the specific findings found in each category to the Summary of Data Qualification table.

SDG # 39741

A validation was performed on the Pesticide/Aroclor Data from SDG 39741. The data was evaluated based on the following parameters:

*	•	Data Completeness
*	•	Holding Times
*	•	GC Performance
*	•	Calibration
*	•	Blanks
	•	Surrogate Recoveries
*	•	Matrix Spike/Matrix Spike Duplicates
*	•	Field Duplicates
*	•	Compound Identification
	•	Compound Quantitation

* - All criteria were met for this parameter.

Surrogate Recoveries

The samples listed below exhibited high TCX and/or DCB recoveries during the Pesticide analysis. The positive results are qualified as estimated, J.

Sample ID	Surrogate	% Recovery
003SB01301	TCX-1	123%
003CB01301	TCX-1	138%
	DCB-2	146%

Compound Quantitation

Several samples exhibited column quantitation %Ds greater than 40%. The following guidelines were used to qualify the data:

1. No qualifications are required for positive sample results which exhibited column quantitation differences <40%. The "P" flag is removed from the result.

2. The positive sample result which exhibited a column quantitation difference >40%, but ≤100% is qualified as estimated, J.

3. The positive single component pesticide sample result which exhibited a column quantitation difference >100% and is <10X the respective compound CRQL, is qualified as non-detect, U. (All multi-component results are exempt from this rule.)

4. The positive single component pesticide sample result which exhibited a column quantitation difference >100% and >10X the respective compound CRQL, is qualified as presumptively present at an estimated concentration, NJ. (All multi-component results are exempt from this rule.)

5. The positive multi-component pesticide sample result which exhibited a column quantitation difference >100% and <10X the respective multi-component CRQL is qualified as presumptively present at an estimated concentration, NJ.

Compound Quantitation, Continued

The following samples and compounds have been qualified for high column quantitation %Ds.

Sample ID	Compound	%D	Lab Qual.	HESI Qual.	Ref. #
003SB01301	Endosulfan I	63.8%	P	J	2
	Gamma-Chlordane	73.2%	P	J	2
003SB01301DL	4,4'-DDD	96.1%	P	J	2
003CB01301	Gamma-Chlordane	73.5%	P	J	2
003CB01301DL	4,4'-DDD	93.4%	P	J	2
003SB01302	4,4'-DDD	76.7%	P	J	2

All samples were diluted to accurately quantitate target compounds. For the following samples, the results for the E-flagged compounds are replaced with the corresponding results from the dilution analysis. All other results from the dilution analysis are not used.

All Samples

Sample 003SB01301 exhibited a positive result above the calibration range of the instrument for 4,4'-DDE. Alpha-Chlordane was not detected in the dilution analysis. For the following sample and E-flagged compound, the positive result is qualified as estimated, J.

003SB01301 4,4'-DDE

System Performance and Overall Assessment

The data required qualifications.

SUMMARY OF DATA QUALIFICATIONS

SAMPLE ID	COMPOUND ID	DL	QL
003SB01301	All Pesticides	+	J
003CB01301	All Pesticides	+	J
ALL	All P < 40%	+	
ALL	All P > 40% But ≤ 100%	+	J
ALL	single component pests All P > 100% And < 10X CRQL	+	U
ALL	single component pests All P > 100% And > 10X CRQL	+	NJ
ALL	multi-component pests All P > 100% And < 10X CRQL	+	NJ
All Samples	All E-Flagged	+E	D
All DL Samples	All except corresponding D-Flagged results	+/-	not used
003SB01301	4,4'-DDE	+E	J

* DL denotes the Form I qualifier supplied by the laboratory
QL denotes the qualifier used by the data validation firm
\+ in the DL column denotes a positive result
\- in the DL column denotes a non-detect result

SOUTHWEST LABORATORY OF OKLAHOMA
1700 West Albany, Suite A/ Broken Arrow, OK 74012
918-251-2858

SDG NARRATIVE

CLIENT: ENSAFE

PROJECT: ZONE G, RELEASE 118

EPISODE: 39741

FRACTION: Pesticides

3 soil samples were extracted by SW846 method 3550 and analyzed for pesticides by SW846 method 8081.

It should be noted that SWLO is in the process of correcting a "software bug" in the program that generates the Form 8D. The program does not allow for the center of the retention time window to be updated with the daily calibration verification. As a result, there are surrogate retention times flagged as out of window incorrectly.

When analyzed undiluted the soil samples in this SDG caused breakdown of pesticides in the calibration verification standards following their injection (making the data non-compliant according to method 8000/8081A). The calibration verification standards analyzed before these samples met method 8000/8081A continuing calibration criteria. When diluted the samples met acceptance criteria. A non-compliant undiluted analysis and a compliant, dilution analysis was performed for these samples. Forms for the undiluted and the dilution data have been submitted. All of the samples except 003SB01302 required dilution in order to bring target analytes within calibration range.

Blanks: No corrective action required.

Surrogates: No corrective action required.

Laboratory Control Spike: No corrective action required.

Matrix Spikes: No corrective action required (SWLO episode 39681).

Drew Cowan
GC Supervisor
Dc

August 18, 1999

SOUTHWEST LABORATORY OF OKLAHOMA
1700 West Albany, Suite A/ Broken Arrow, OK 74012
918-251-2858

SDG NARRATIVE

CLIENT: ENSAFE

PROJECT: ZONE G, RELEASE 118

SDG NO: 39741

FRACTION: PCBs

3 soil samples were extracted by SW846 method 3550 and analyzed for PCBs by SW846 method 8082.

No major problems occurred during the analyses of these samples.

Blanks: No corrective action required.

Surrogates: No corrective action required.

Laboratory Control Spikes: No corrective action required.

Matrix Spikes: No corrective action required.

Drew Cowan
GC Supervisor
Dc

August 18, 1999

ENSAFE

800-588-7962
MEMPHIS, TENNESSEE
RLESTON,SC; CINCINNATI,OH; DALLAS,TX; JACKSON,TN; KNOXVILLE,TN;
ASTER,PA; NASHVILLE,TN; NORFOLK,VA; PADUCAH,KY; PENSACOLA,FL;
RALEIGH,NC; COLOGNE, GERMANY

CHAIN OF CUSTODY RECORD

PAGE 1 OF 1
PROJECT/JOB NO: 290X0010842 000
COC NO: 7
PO NO: 4
REL NO: 118
LAB NAME:

LIENT Ensafe Inc.
OCATION NAVBASE Chas.
AMPLERS: (SIGNATURE) PB Hardy

PROJECT MANAGER Craig Smith
TELE/FAX NO. (850) 439-2230
(850) 434-2288

ANALYSIS REQUIRED

FIELD SAMPLE NUMBER	DATE	TIME	SAMPLE TYPE	TYPE/SIZE OF CONTAINER	PRESERVATION TEMP.	PRESERVATION CHEMICAL	NO. OF CONTAINERS	Pests PCBs									REMARKS 4°C
BCG003SB01301	7/31/08	0805	Soil	9 oz Jar	4°C	—	1	X									
BCG003CB01301	↕	0805	↕	9 oz Jar	4°C	—	1	X									
BCG003SB01302	7/31/08	0815	Soil	9 oz Jar	4°C	—	1	X									

QUISHER: PB Hardy	DATE 7/31/08	RECEIVER:	DATE	RELINQUISHER:	DATE	RECEIVER:	DATE
ED: PB Hardy	TIME 1300	PRINTED:	TIME	PRINTED:	TIME	PRINTED:	TIME
NY: Ensafe		COMPANY:		COMPANY:		COMPANY:	

THOD OF SHIPMENT: FEDEX
PMENT NO: 434 914 5894
ND RESULTS TO: Ensafe

COMMENTS:

This file contains the Data Naratives and COCs for SDG# 41852, 41892.

Remainder of data validation package is in separate file.

Data Validation Report

Ensafe
Charleston Zone G
SDG# 41852, 41892

HEARTLAND
ENVIRONMENTAL SERVICES, INC.

Data Validation Report

SDG#:	41852
Date:	February 17, 2000
Client Name:	Ensafe
Project/Site Name:	Charleston Zone G
Date Sampled:	January 25, 2000
Number of Samples:	23 Non-Aqueous Sample(s) with 0 MS/MSD(s)
Laboratory:	Southwest Laboratory of Oklahoma
Validation Guidance:	National Functional Guidelines for Organic and Inorganic Data, February, 1994
QA/QC Level:	EPA DQO Level III
Method(s) Utilized:	SW846 Third Edition
Analytical Fractions:	Semivolatiles and Metals

Analytical data in this report were screened to determine usability of results and also to determine contractual compliance relative to these requirements and deliverables. This screening assumes analytical results are correct as reported and merely provides an interpretation of the reported quality control results. A minimum of 10% of all laboratory calculations have been verified as part of this validation. All instrument output, i.e. spectra, chromatograms, etc., for each sample have been carefully reviewed. The end-user is urged to review the Specific Findings and associated Data Qualifications presented in this report. Annotated Form 1s or spreadsheets for all samples reviewed are included after the Data Assessment Narratives. Form 1s for MS/MSD samples or spreadsheets are not annotated.

The release of this Data Validation Report is authorized by the following signature:

Craig G. Seazon

Paul B. Humburg, President

2-24-00.

Date

4127 Plaza 94 South • St. Charles, MO 63304
(636) 936-1332 • Fax (636) 936-1335

SDG# 41852

Samples and Fractions Reviewed

Sample Identifications Analytical Fractions

ENSAFE ID	MATRIX	SVOA		MET	
120SB01301	SOIL		X		
120SB01302	SOIL		X		
120SB01401	SOIL		X		
120SB01402	SOIL		X		
120SB01501	SOIL		X		
120SB01502	SOIL		X		
120SB01601	SOIL		X		
120SB01602	SOIL		X		
638SB00601	SOIL				X
638SB00602	SOIL				X
638SB01001	SOIL		X		
638SB01002	SOIL		X		
638SB01101	SOIL		X		
638SB01102	SOIL		X		
643SB01401	SOIL		X		
643SB02101	SOIL		X		X
643SB02102	SOIL		X		X
643SB02501	SOIL		X		X
643SB02502	SOIL		X		X
643SB02601	SOIL		X		X
643SB02602	SOIL		X		X
643SB02701	SOIL		X		X
643SB02702	SOIL		X		X
Total Billable Samples (Water/Soil)		0	21	0	10

SVOA= Semivolatiles
MET= Metals

DATA ASSESSMENT NARRATIVE

SEMIVOLATILE ORGANICS

General

The organic findings offered in this screening report assumes that all analytical results are correct as reported and is based upon the examination of the reported holding times, blank analysis results, surrogate and matrix spike recoveries, GC/MS performance, tuning results, calibration results and internal standard areas. This report was prepared in compliance relative to the analytical and deliverable requirements specified in the SW-846 Method 8270C for GC/MS Semivolatiles; the National Functional Guidelines for Organic Data Validation, 2/94, and DQO Level III requirements. All comments made within this report should be considered when examining the analytical results. Please refer the specific findings found in each category to the Summary of Data Qualification table.

SDG # 41852

A validation was performed on the Semivolatile Data from SDG 41852. The data was evaluated based on the following parameters:

*	•	Data Completeness
*	•	Holding Times
*	•	GC/MS Tuning
*	•	Calibration
	•	Blanks
	•	Internal Standard Performance
*	•	Surrogate Recoveries
*	•	Matrix Spike/Matrix Spike Duplicates
*	•	Field Duplicates
*	•	Compound Identification
	•	Compound Quantitation

* - All criteria were met for this parameter.

Internal Standards

The following samples exhibited non-compliant EICP area recoveries below the QC limits for the noted internal standards. All reported positive and non-detect results are qualified as estimated, J/UJ.

643SB02101	naphthalene-d8 acenaphthene-d10 phenanthrene-d10
120SB01401	perylene-d12

Blanks

The two (2) method blanks associated with the field samples in this SDG exhibited contamination for which qualifications were required. The end user should note that the action levels indicated for the blank analysis may not involve the same weights, volumes, dilution factors, or percent moisture as associated samples. These factors must be taken into considerations when applying the 5X and 10X criteria to field samples.

Associated blank	Compound	Concentration	Action Level
SBLK1	naphthalene	18J ug/Kg	90 ug/Kg
	bis(2-ethylhexyl)phthalate	43J ug/Kg	430 ug/Kg
SBLK2	bis(2-ethylhexyl)phthalate	20J ug/Kg	200 ug/Kg

Samples	Compound	Qualifications
120SB01301	naphthalene	CRQL
120SB01601		
120SB01501		
120SB01401		
643SB02702		
643SB01401		
638SB01001		
643SB02101		
120SB01402		
643SB02502		
643SB02701		
643SB01102		
643SB02602		
120SB01302		
638SB01101		
643SB02102		
120SB01301	bis(2-ethylhexyl)phthalate	CRQL
120SB01601		
120SB01602		
120SB01501		
120SB01502		
120SB01401		
643SB02702		

Blanks (continued)

Samples	Compound	Qualifications
643SB01401	bis(2-ethylhexyl)phthalate	CRQL
638SB01001		
643SB02101		
120SB01402		
643SB02502		
643SB02701		
643SB01102		
643SB02602		
120SB01302		
638SB01101		
643SB02102		
643SB02501		
643SB02601		
638SB01002		

Compound Quantitation

For the following sample, the E flagged result is not used in favor of the corresponding D flagged result reported in the dilution analysis of the sample. All other results reported in the dilution analysis are not used in favor of the results reported in the lessor dilution of the sample.

120SB01401
643SB02501

System Performance and Overall Assessment

The data, as reported, required qualifications.

GLOSSARY OF DATA QUALIFIERS

QUALIFICATION CODES

U = Not detected

J = Estimated value

UJ = Reported Quantitation limit is qualified as estimated

L = Result is estimated and biased low.

K = Result is estimated and biased high.

R = Result is rejected and unusable

D = Result value is based on dilution analysis

BLANK QUALIFICATION CODES

CRQL =	The sample result for the blank contaminant is less than the sample CRQL and is less than 5X (10X for common laboratory contaminants) the method blank value. The sample result for the blank contaminant is rejected and the CRQL for that compound is reported.
U =	The sample result for the blank contaminant is greater than the sample CRQL and is less than 5X (10X for common laboratory contaminants) the method blank value. The sample result for the blank contaminant is qualified as non detected at the compound value reported.
No Action =	The sample result for the blank contaminant is greater than the sample CRQL and is greater than 5X (10X for common laboratory contaminants) the method blank value. The sample result for the blank contaminant is not qualified with any blank qualifiers.

SUMMARY OF DATA QUALIFICATIONS

SAMPLE ID	COMPOUND ID	DL	QL
643SB02101	*All associated with* naphthalene-d8 acenaphthene-d10 phenanthrene-d10	+/-	J/UJ
120SB01401	*All associated with* perylene-d12	+/-	J/UJ
120SB01301 120SB01601 120SB01501 120SB01401 643SB02702 643SB01401 638SB01001 643SB02101 120SB01402 643SB02502 643SB02701 643SB01102 643SB02602 120SB01302 638SB01101 643SB02102	naphthalene	+B	CRQL
120SB01301 120SB01601 120SB01602 120SB01501 120SB01502 120SB01401 643SB02702 643SB01401 638SB01001 643SB02101 120SB01402 643SB02502 643SB02701	bis(2-ethylhexyl)phthalate	+B	CRQL

SUMMARY OF DATA QUALIFICATIONS

SAMPLE ID	COMPOUND ID	DL	QL
643SB01102 643SB02602 120SB01302 638SB01101 643SB02102 643SB02501 643SB02601 638SB01002	bis(2-ethylhexyl)phthalate	+B	CRQL
120SB01401 643SB02501	All E flagged compounds	+E	Do not use
120SB01401DL 643SB02501DL	All except corresponding D flagged results	+/-	Do Not use

* DL denotes the Form I qualifier supplied by the laboratory
QL denotes the qualifier used by the data validation firm
+ in the DL column denotes a positive result
- in the DL column denotes a non detect result

DATA ASSESSMENT NARRATIVE
METALS

General

The inorganic findings offered in this screening report assumes that all analytical results are correct as reported and is based upon the examination of the reported holding times, blank analysis results, matrix spike and LCS recoveries, matrix duplicates and calibration results. This report was prepared in compliance relative to the analytical and deliverable requirements specified in the SW 846 methods: the Functional Guidelines for Inorganic Data Validation, February 1994, and DQO Level III requirements. All comments made within this report should be considered when examining the analytical results. Please refer the specific findings found in each category to the Summary of Data Qualification table.

SDGs # 41852

A validation was performed on the Metals Data from SDG 41852. The data was evaluated based on the following parameters.

*	●	Data Completeness
*	●	Holding Times
*	●	Calibrations
	●	Blanks
*	●	Interferences
	●	Matrix Spike Recovery
*	●	Matrix Duplicates
*	●	Field Duplicates
*	●	Laboratory Control Samples
	●	Serial Dilutions

* - All criteria were met for this parameter.

Preparation and Field Blanks

The preparation and calibration blanks exhibited contamination for the following elements.

Elements	Conc.	Samples affected
Antimony	0.52 mg/kg	all soil samples below 2.6 mg/kg
Barium	0.18 mg/kg	no impact
Cadmium	0.20 mg/kg	all soil samples below 1.0 mg/kg
Iron	6.85 mg/kg	no impact
Lead	0.22 mg/kg	no impact
Manganese	0.09 mg/kg	no impact
Silver	0.55 mg/kg	all soil samples below 2.75 mg/kg

Zinc	0.99 mg/kg	no impact
Tin	3.49 mg/kg	all soil samples below 17.5 mg/kg

The USEPA requires that all sample values below five times the preparation or calibration blank contamination be qualified as non-detect, "U".

The preparation blanks exhibited negative bias for the following elements.

Elements	Conc.	Samples affected
Arsenic	-0.22 mg/kg	all soil samples below 2.2 mg/kg
Mercury	-0.03 mg/kg	all soil samples below 0.3 mg/kg

This reviewer qualifies all samples results below 10 times the absolute value of the negative blank value.

Matrix Spike Recovery results

The matrix spike recovery for soils for Antimony (72%) was below the lower control limits (>30% but <75%). All positive and non-detect results are qualified as estimated, "J" or "UJ"

Matrix Duplicate results

The matrix duplicate RPD for soils for Iron (24%) was below 35%. No qualification is necessary.

Serial Dilution results

The serial dilution result for soils for Zinc was greater than 10%. All positive results are qualified as estimated, "J".

All sample results left with a "B" qualifier after all other qualifications, will be qualified with a "J" qualifier in place of the "B". Value is below the CRDL but greater than the IDL.

SUMMARY OF DATA QUALIFICATIONS

Sample ID	Analyte	DL	QL
all soil samples below 2.6 mg/kg	Sb.	+	U
all soil samples below 1.0 mg/kg	Cd.		
all soil samples below 2.75 mg/kg	Ag.		
all soil samples below 17.5 mg/kg	Sn.		
all soil samples below 2.2 mg/kg	As.	+/U	J/UJ
all soil samples below 0.3 mg/kg	Hg.		
all soil samples	Sb.	+/U	J/UJ
all soil samples	Zn.	+	J
all samples	all analytes	B	J

EnSAFE

800-588-7842
MEMPHIS, TENNESSEE
...TON, SC; CINCINNATI, OH; DALLAS, TX; JACKSON, TN; KNOXVILLE, TN; ...R, PA; NASHVILLE, TN; NORFOLK, VA; PADUCAH, KY; PENSACOLA, FL; RALEIGH, NC; COLOGNE, GERMANY

CHAIN OF CUSTODY RECORD

PAGE 1 OF 2
PROJECT/JOB NO: 2907-051-08420
COC NO:
PO NO: 4
REL NO: 139
LAB NAME: SWL

...NT Naval Base Charleston
PROJECT MANAGER Charlie Vernoy
...TION Zone G
TELE/FAX NO. 843-884-6029
...PLERS: (SIGNATURE) [signature]

ANALYSIS REQUIRED

FIELD SAMPLE NUMBER	DATE	TIME	SAMPLE TYPE	TYPE/SIZE OF CONTAINER	PRESERVATION TEMP.	PRESERVATION CHEMICAL	NO. OF CONTAINERS	Metals	SVOC									REMARKS
G6435B021Ø1	Ø1-25-00	1Ø35	S	4 OZ. JARS	4°C	None	2	X	X									
G6435BØ21Ø2		1Ø41					2	X	X									
G6435BØ27Ø1		11Ø5					2	X	X									
G6435BØ27Ø2		111Ø					2	X	X									
G6435BØ26Ø1		1135					2	X	X									
G6435BØ26Ø2		1141					2	X	X									
G6435BØ25Ø1		12ØØ					2	X	X									
G6435BØ25Ø2		12Ø8					2	X	X									
G6435BØ14Ø1		1221					2		X									
G12ØSBØ16Ø1		15ØØ					2		X									
G12ØSBØ16Ø2		15Ø5					2		X									
G12ØSBØ15Ø1		1516					2		X									
G12ØSBØ15Ø2		1519					2		X									
G12ØSBØ14Ø1		153Ø					2		X									
G12ØSBØ14Ø2		1535					2		X									
G12ØSBØ13Ø1		155Ø					2		X									

...HEN:	DATE	RECEIVER:	DATE	RELINQUISHER:	DATE	RECEIVER:	DATE
Rachel M. White	1-25-00	PRINTED:	TIME	PRINTED:	TIME	PRINTED:	TIME
Rachel M. White	TIME 1755	COMPANY:		COMPANY:		COMPANY:	
EnSafe							

...D OF SHIPMENT: Fed Ex
...NO. 4849147870
...RESULTS TO: Charlie Vernoy

COMMENTS:

EN'SAFE

800-588-7967
MEMPHIS, TENNESSEE
CINCINNATI, OH; DALLAS, TX; JACKSON, TN; KNOXVILLE, TN; NASHVILLE, TN; NORFOLK, VA; PADUCAH, KY; PENSACOLA, FL; RALEIGH, NC; COLOGNE, GERMANY

CHAIN OF CUSTODY RECORD

PAGE 2 OF 2
PROJECT/JOB NO: 2907-001-L,420-0
COC NO:
PO NO: 4
REL NO: 139
LAB NAME: SWL

Naval Base Charleston
Zone G
PROJECT MANAGER Charlie Vernoy
TELE/FAX NO. 843-984-0029
S: (SIGNATURE) [signature]

ANALYSIS REQUIRED

FIELD PLE NUMBER	DATE	TIME	SAMPLE TYPE	TYPE/SIZE OF CONTAINER	PRESERVATION TEMP.	PRESERVATION CHEMICAL	NO. OF CONTAINERS	SVOC	Metals									REMARKS
2ØSBØ13Ø2	Ø1-25-ØØ	1557	S	4oz. JARS	4°C	None	2	X										
38SBØ11Ø1		1626					2	X										
38SBØ11Ø2		1633					2	X										
38SBØ1ØØ1		1645					2	X										
38SBØ1ØØ2		1653					2	X										
638SBØØ6Ø1		1713					2		X									
38SBØØ6Ø2		1721					2		X									

Rachel M. White
1-25-00

Rachel M. White	DATE 1-25-00	RECEIVER:	DATE	RELINQUISHER:	DATE	RECEIVER:	DATE
chel M. White	TIME 1755	PRINTED:	TIME	PRINTED:	TIME	PRINTED:	TIME
EnSafe		COMPANY:		COMPANY:		COMPANY:	

OF SHIPMENT: Fed EX
NO. 4849147870
SENT TO: Charlie Vernoy

COMMENTS:

EnSAFE

800-588-7942
MEMPHIS, TENNESSEE
...TON, SC; CINCINNATI, OH; DALLAS, TX; JACKSON, TN; KNOXVILLE, TN; ...ER, PA; NASHVILLE, TN; NORFOLK, VA; PADUCAH, KY; PENSACOLA, FL; RALEIGH, NC; COLOGNE, GERMANY

CHAIN OF CUSTODY RECORD

PAGE 1 OF 2
PROJECT/JOB NO: 2907-001-08420
COC NO:
PO NO: 4
REL NO: 139
LAB NAME: SWL

...NT Naval Base Charleston
PROJECT MANAGER Charlie Vernoy
...ATION Zone G
TELE/FAX NO. 843-884-6029
...PLERS: (SIGNATURE) [signature]

ANALYSIS REQUIRED

FIELD SAMPLE NUMBER	DATE	TIME	SAMPLE TYPE	TYPE/SIZE OF CONTAINER	PRESERVATION TEMP.	PRESERVATION CHEMICAL	NO. OF CONTAINERS	Metals	SVOC									REMARKS
G643SB021Ø1	Ø1-25-00	1Ø35	S	4 OZ. JARS	4°C	None	2	X	X									
G643SB021Ø2		1Ø41					2	X	X									
G643SB027Ø1		11Ø5					2	X	X									
G643SB027Ø2		111Ø					2	X	X									
G643SB026Ø1		1135					2	X	X									
G643SB026Ø2		1141					2	X	X									
G643SB025Ø1		12ØØ					2	X	X									
G643SB025Ø2		12Ø8					2	X	X									
G643SB014Ø1		1221					2		X									
G12ØSB016Ø1		15ØØ					2		X									
G12ØSB016Ø2		15Ø5					2		X									
G12ØSB015Ø1		1516					2		X									
G12ØSB015Ø2		1519					2		X									
G12ØSB014Ø1		153Ø					2		X									
G12ØSB014Ø2		1535					2		X									
G12ØSB013Ø1		155Ø					2		X									

...HER: Rachel M. White	DATE 1-25-00	RECEIVER:	DATE	RELINQUISHER:	DATE	RECEIVER:	DATE
Rachel M. White	TIME 1755	PRINTED:	TIME	PRINTED:	TIME	PRINTED:	TIME
EnSafe		COMPANY:		COMPANY:		COMPANY:	

...D OF SHIPMENT: Fed Ex
...ENT NO. 4849147870
...RESULTS TO: Charlie Vernoy

COMMENTS:

EN SAFE

800-588-7947
MEMPHIS, TENNESSEE
CINCINNATI, OH; DALLAS, TX; JACKSON, TN; KNOXVILLE, TN;
NASHVILLE, TN; NORFOLK, VA; PADUCAH, KY; PENSACOLA, FL;
RALEIGH, NC; COLOGNE, GERMANY

CHAIN OF CUSTODY RECORD

PAGE 2 OF 2
PROJECT/JOB NO: 2907-001-0,120-0
COC NO:
PO NO: 4
REL NO: 139
LAB NAME: SWL

Naval Base Charleston
Zone G
: (SIGNATURE) [signature]

PROJECT MANAGER Charlie Vernoy
TELE/FAX NO. 843-884-0029

ANALYSIS REQUIRED

FIELD LE NUMBER	DATE	TIME	SAMPLE TYPE	TYPE/SIZE OF CONTAINER	PRESERVATION TEMP.	PRESERVATION CHEMICAL	NO. OF CONTAINERS	SVOC	Metals									REMARKS
2ØSBØ13Ø2	Ø1-25-ØØ	1557	S	4oz. JARS	4°C	None	2	X										
38SBØ11Ø1		1626					2	X										
38SBØ11Ø2		1633					2	X										
38SBØ1ØØ1		1645					2	X										
38SBØ1ØØ2		1653					2	X										
38SBØØ6Ø1		1713					2		X									
38SBØØ6Ø2		1721					2		X									

Rachel M. White
1-25-00

	DATE		DATE		DATE		DATE
Rachel M. White	1-25-00	RECEIVER:		RELINQUISHER:		RECEIVER:	
chel M. White	TIME	PRINTED:	TIME	PRINTED:	TIME	PRINTED:	TIME
EnSafe	1755	COMPANY:		COMPANY:		COMPANY:	

E SHIPMENT: FedEx
NO. 48 8147870
UCTS TO: Charlie Vernoy

COMMENTS:

HEARTLAND
ENVIRONMENTAL SERVICES, INC.

Data Validation Report

SDG#:	39715
Date:	October 15, 1999
Client Name:	Ensafe
Project/Site Name:	Charleston Zone G
Date Sampled:	July 28 & 29, 1999
Number of Samples:	22 Non-Aqueous Sample(s) with 0 MS/MSD(s) 1 Aqueous Sample(s) with 0 MS/MSD(s)
Laboratory:	Southwest Laboratory of Oklahoma, Inc.
Validation Guidance:	National Functional Guidelines for Organic and Inorganic Data, February, 1994
QA/QC Level:	DQO Level III
Method(s) Utilized:	SW846 Third Edition
Analytical Fractions:	Volatiles, Semivolatiles, Pesticides, PCBs, SPLP Pesticides, SPLP PCBs, Metals, SPLP Metals and Total Organic Carbons

Analytical data in this report were screened to determine usability of results and also to determine contractual compliance relative to these requirements and deliverables. This screening assumes analytical results are correct as reported and merely provides an interpretation of the reported quality control results. A minimum of 10% of all laboratory calculations have been verified as part of this validation. All instrument output, i.e. spectra, chromatograms, etc., for each sample have been carefully reviewed. The end-user is urged to review the Specific Findings and associated Data Qualifications presented in this report. Annotated Form 1s or spreadsheets for all samples reviewed are included after the Data Assessment Narratives. Form 1s for MS/MSD samples or spreadsheets are not annotated.

The release of this Data Validation Report is authorized by the following signature:

Craig G. Searson
for Paul B. Humburg, President

10-18-99.
Date

4127 Plaza 94 South • St. Charles, MO 63304
(636) 936-1332 • Fax (636) 936-1335

SDG# 39715

Samples and Fractions Reviewed

Sample Identifications — Analytical Fractions

ENSAFE ID	MATRIX	VOA		SVOA		PEST		PCB		SP-PEST		SP-PCB		MET		SP-MET		TOC	
FDSTB03101	WATER	X																	
FDSSH02801	SOIL		X		X		X								X				
FDSSH02802	SOIL		X		X		X								X				
FDSSH02901	SOIL		X		X		X								X				
FDSSH02902	SOIL		X		X		X								X				
FDSSH03001	SOIL		X		X		X								X				
FDSCH03001	SOIL		X		X		X								X				
FDSSH03002	SOIL		X		X		X								X				
FDSSH03101	SOIL		X		X		X								X				
FDSCH03101	SOIL		X		X		X								X				
FDSSH03102	SOIL		X		X		X								X				
003SB01101	SOIL						X												
003SB01102	SOIL						X												
003SB01201	SOIL						X												
003CB01201	SOIL						X												
003SB01202	SOIL						X												
003SB01402	SOIL						X				X								X
633SB01101	SOIL						X												
633CB01101	SOIL						X												
633SB01102	SOIL						X												
633SB01202	SOIL								X				X						X
643SB01302	SOIL						X				X				X		X		X
642SB01102	SOIL														X		X		X
Total Billable Samples (Water/Soil)		1	10	0	10	0	20	0	1	0	2	0	1	0	12	0	2	0	4

VOA= Volatiles
SVOA= Semivolatiles
PEST= Pesticides
PCB= PCBs
SP-PEST= SPLP Pesticides
SP-PCB= SPLP PCBs
MET= Metals
SP-MET= SPLP Metals
TOC= Total Organic Carbons

CN 10/22/99

CHARLESTON - ZONE G
CHARLESTON ZONE G SOIL (ONLY)
SDG# 39715

LP-METAL

	SAMPLE ID ------->	642-S-B011-02		643-S-B013-02		BLK-0-9715-07		BLK-0-9715-08			
	ORIGINAL ID ----->	642SB01102		643SB01302		PBW		PBWT			
	LAB SAMPLE ID --->	39726.01		39726.02		PBW		PBWT			
	ID FROM REPORT -->	642SB01102		643SB01302		PBW		PBWT			
	SAMPLE DATE ----->	07/29/99		07/29/99		07/29/99		07/29/99			
	DATE EXTRACTED -->	08/03/99		08/03/99		08/03/99		08/03/99			
	DATE ANALYZED --->	08/04/99		08/04/99		08/04/99		08/04/99			
	MATRIX ---------->	Soil		Soil		Water		Water			
	UNITS ---------->	UG/L	A	UG/L	A	UG/L	D	UG/L	D		
CAS #	Parameter	39715		39715		39715		39715			
7439-97-6	Mercury (Hg)	1.4	~~B~~ J	1.2	~~B~~ J	1.	U	1.	U		
7429-90-5	Aluminum (Al)	307.		216.		32.1	U	42.5	B		
7440-36-0	Antimony (Sb)	5.	U	5.	U	5.	U	5.	U		
7440-38-2	Arsenic (As)	3.3	U	3.3	U	3.3	U	3.3	U		
7440-39-3	Barium (Ba)	288.		8.	~~B~~ J	0.4	U	1.	B		
7440-41-7	Beryllium (Be)	0.3	U	0.3	U	0.3	U	0.3	U		
7440-43-9	Cadmium (Cd)	1.4	~~B~~ J	0.3	U	0.3	U	17.5	B		
7440-70-2	Calcium (Ca)	1860.		2800.		394.	B	172.	U		
7440-47-3	Chromium (Cr)	0.5	U	0.68	~~B~~ J	0.5	U	0.95	B		
7440-48-4	Cobalt (Co)	1.7	U	1.7	U	1.7	U	1.7	U		
7440-50-8	Copper (Cu)	10.3	~~B~~ J	5.1	~~B~~ J	1.	B	1.4	B		
7439-89-6	Iron (Fe)	159.		462.		24.2	U	332.			
7439-92-1	Lead (Pb)	6.5	~~B~~ J	4.5	~~B~~ J	2.1	U	3.2			
7439-95-4	Magnesium (Mg)	216.	~~B~~ J	325.		37.	U	37.	U		
7439-96-5	Manganese (Mn)	1.6	~~B~~ J	4.3	~~B~~ J	1.2	U	1.3	B		
7440-02-0	Nickel (Ni)	1.3	~~B~~ J	1.	~~B~~ J	0.8	U	0.93	B		
7782-49-2	Selenium (Se)	2.9	U	2.9	U	2.9	U	2.9	U		
7440-22-4	Silver (Ag)	2.	U	2.	U	2.	U	2.	U		
7440-28-0	Thallium (Tl)	2.3	U	2.3	U	2.6	B	2.3	U		
7440-62-2	Vanadium (V)	1.1	~~B~~ J	2.2	~~B~~ J	0.9	U	0.9	U		
7440-66-6	Zinc (Zn)	74.6	U	19.5	~~B~~ U	34.3		11.2	B		
7440-31-5	Tin (Sn)	29.5	U	29.5	U	29.5	U	29.5	U		
7440-09-7	Potassium (K)	353.	U	353.	U	353.	U	353.	U		
7440-23-5	Sodium (Na)	3450.		8330.		67.	U	310.	B		

PBW 10/12/99

CW 10-22-99

CHARLESTON - ZONE G
CHARLESTON ZONE G SOIL (ONLY)
SDG# 39715

-P/PCB

	SAMPLE ID ------->	003-S-B014-02	633-S-B012-02	643-S-B013-02	BLK-0-9715-20	BLK-0-9715-21	BLK-0-9715-22
	ORIGINAL ID ----->	003SB01402	633SB01202	643SB01302	BL0910WG	BL0910WH	TB0990908B
	LAB SAMPLE ID --->	40227.03	40227.02	40227.01	BL0910WG	BL0910WH	TB0990908B
	ID FROM REPORT -->	003SB01402	633SB01202	643SB01302	BL0910WG	BL0910WH	TB0990908B
	SAMPLE DATE ----->	07/28/99	07/29/99	07/29/99	09/07/99	09/07/99	09/07/99
	DATE EXTRACTED -->	09/11/99	09/11/99	09/11/99	09/10/99	09/10/99	09/10/99
	DATE ANALYZED --->	09/14/99	09/14/99	09/14/99	09/16/99	09/13/99	09/13/99
	MATRIX ---------->	Soil	Soil	Soil	Water	Water	Water
	UNITS ---------->	UG/L A	UG/L A	UG/L A	UG/L D	UG/L D	UG/L D
CAS #	Parameter	39715	39715	39715	39715	39715	39715
574-11-2	Aroclor-1016	1.3 U ul	1. U ul	1.2 U ul	??????????	1. U	1.2 U
104-28-2	Aroclor-1221	1.3 U	1. U	1.2 U	??????????	1. U	1.2 U
141-16-5	Aroclor-1232	1.3 U	1. U	1.2 U	??????????	1. U	1.2 U
469-21-9	Aroclor-1242	1.3 U	1. U	1.2 U	??????????	1. U	1.2 U
672-29-6	Aroclor-1248	1.3 U	1. U	1.2 U	??????????	1. U	1.2 U
097-69-1	Aroclor-1254	1.3 U	1. U	1.2 U	??????????	1. U	1.2 U
096-82-5	Aroclor-1260	1.3 U	1. U	1.2 U	??????????	1. U	1.2 U
319-84-6	alpha-BHC	0.04 U	??????????	0.053 U	0.04 U	??????????	??????????
319-85-7	beta-BHC	0.04 U	??????????	0.053 U	0.04 U	??????????	??????????
319-86-8	delta-BHC	0.04 U	??????????	0.053 U	0.04 U	??????????	??????????
58-89-9	gamma-BHC (Lindane)	0.04 U	??????????	0.053 U	0.04 U	??????????	??????????
76-44-8	Heptachlor	0.04 U	??????????	0.053 U	0.04 U	??????????	??????????
309-00-2	Aldrin	0.04 U	??????????	0.053 U	0.04 U	??????????	??????????
024-57-3	Heptachlor epoxide	0.04 U	??????????	0.053 U	0.04 U	??????????	??????????
959-98-8	Endosulfan I	0.04 U	??????????	0.053 U	0.04 U	??????????	??????????
60-57-1	Dieldrin	0.08 U	??????????	0.11 U	0.08 U	??????????	??????????
72-55-9	4,4'-DDE	0.08 U	??????????	0.11 U	0.08 U	??????????	??????????
72-20-8	Endrin	0.08 U ul	??????????	0.11 U ul	0.08 U	??????????	??????????
5213-65-9	Endosulfan II	0.08 U ul	??????????	0.11 U ul	0.08 U	??????????	??????????
72-54-8	4,4'-DDD	0.08 U	??????????	0.11 U	0.08 U	??????????	??????????
1031-07-8	Endosulfan sulfate	0.08 U	??????????	0.11 U	0.08 U	??????????	??????????
50-29-3	4,4'-DDT	0.08 U	??????????	0.11 U	0.08 U	??????????	??????????
72-43-5	Methoxychlor	0.38 U	??????????	0.51 U	0.38 U	??????????	??????????
3494-70-5	Endrin ketone	0.08 U	??????????	0.11 U	0.08 U	??????????	??????????
7421-93-4	Endrin aldehyde	0.08 U	??????????	0.11 U	0.08 U	??????????	??????????
5103-71-9	alpha-Chlordane	0.04 U	??????????	0.053 U	0.04 U	??????????	??????????
5103-74-2	gamma-Chlordane	0.04 U	??????????	0.053 U	0.04 U	??????????	??????????
8001-35-2	Toxaphene	2.5 U	??????????	3.3 U	2.5 U	??????????	??????????

SPLP-PCB ONLY

JAC 10/14/99

CHARLESTON - ZONE G
CHARLESTON ZONE G SOIL (ONLY)
SDG# 39715

LP-P/PCB

SAMPLE ID ------->	BLK-0-9715-23
ORIGINAL ID ----->	TB990908B
LAB SAMPLE ID --->	TB990908B
ID FROM REPORT -->	TB990908B
SAMPLE DATE ----->	09/07/99
DATE EXTRACTED -->	09/10/99
DATE ANALYZED --->	09/16/99
MATRIX ---------->	Water
UNITS ---------->	UG/L D

CAS #	Parameter	39715
2674-11-2	Aroclor-1016	??????????
1104-28-2	Aroclor-1221	??????????
1141-16-5	Aroclor-1232	??????????
3469-21-9	Aroclor-1242	??????????
2672-29-6	Aroclor-1248	??????????
1097-69-1	Aroclor-1254	??????????
1096-82-5	Aroclor-1260	??????????
319-84-6	alpha-BHC	0.044 U
319-85-7	beta-BHC	0.044 U
319-86-8	delta-BHC	0.044 U
58-89-9	gamma-BHC (Lindane)	0.044 U
76-44-8	Heptachlor	0.044 U
309-00-2	Aldrin	0.044 U
024-57-3	Heptachlor epoxide	0.044 U
959-98-8	Endosulfan I	0.044 U
60-57-1	Dieldrin	0.089 U
72-55-9	4,4'-DDE	0.089 U
72-20-8	Endrin	0.089 U
213-65-9	Endosulfan II	0.089 U
72-54-8	4,4'-DDD	0.089 U
031-07-8	Endosulfan sulfate	0.089 U
50-29-3	4,4'-DDT	0.089 U
72-43-5	Methoxychlor	0.42 U
494-70-5	Endrin ketone	0.089 U
421-93-4	Endrin aldehyde	0.089 U
103-71-9	alpha-Chlordane	0.044 U
103-74-2	gamma-Chlordane	0.044 U
001-35-2	Toxaphene	2.8 U

JAC 101499

048

CHARLESTON - ZONE G
CHARLESTON ZONE G SOIL (ONLY)
SDG# 39715

5-META													
	SAMPLE ID ------->	642-S-B011-02		643-S-B013-02		BLK-0-9715-06		FDS-S-H028-01		FDS-S-H028-02		FDS-S-H029-01	
	ORIGINAL ID ----->	642SB01102		643SB01302		PBS		FDSSH02801		FDSSH02802		FDSSH02901	
	LAB SAMPLE ID --->	40420.01		40420.02		PBS		39715.10		39715.11		39726.11	
	ID FROM REPORT -->	642SB01102		643SB01302		PBS		FDSSH02801		FDSSH02802		FDSSH02901	
	SAMPLE DATE ----->	07/29/99		07/29/99		07/29/99		07/28/99		07/28/99		07/29/99	
	DATE EXTRACTED -->	09/23/99		09/23/99		08/10/99		08/17/99		08/17/99		08/17/99	
	DATE ANALYZED --->					08/12/99		08/18/99		08/18/99		08/18/99	
	MATRIX ---------->	Soil		Soil		Soil		Soil		Soil		Soil	
	UNITS ---------->	MG/KG	A	MG/KG	A	MG/KG	D	MG/KG	A	MG/KG	A	MG/KG	A
CAS #	Parameter	39715		39715		39715		39715		39715		39715	
29-90-5	Aluminum (Al)	4820.		5050.		2.8	U	4350.		15500.		11700.	
40-36-0	Antimony (Sb)	0.38	B J	0.62	B J	0.27	U	0.31	U UJ	0.31	U UJ	0.34	NU UJ
40-38-2	Arsenic (As)	1.7		7.9		0.19	U	1.4		9.3		10.9	
40-39-3	Barium (Ba)	14.		14.8		0.12	U	16.3		31.7		28.9	
40-41-7	Beryllium (Be)	0.15	B J	0.6	B J	0.08	U	0.25	B J	0.52	B J	0.33	B J
40-43-9	Cadmium (Cd)	0.26	B J	0.36	B J	0.03	U	0.04	B J	0.03	U	0.04	U
40-70-2	Calcium (Ca)	579.	B J	28900.		25.8	U	886.		647.		3680.	
40-47-3	Chromium (Cr)	8.5		16.4		0.14	U	4.9		25.6		19.9	
40-48-4	Cobalt (Co)	0.49	B J	2.2	B J	0.08	U	1.5	B J	3.1		2.	B J
40-50-8	Copper (Cu)	47.6		59.5		0.36	B	1.8	B U	1.2	B U	8.	
39-89-6	Iron (Fe)	4920.		10100.		3.3	U	2280.		19800.		15300.	
39-92-1	Lead (Pb)	32.8		76.6		0.22	U	63.4		9.6		41.	
39-95-4	Magnesium (Mg)	258.		1760.		9.2	U	194.		964.		944.	
39-96-5	Manganese (Mn)	16.1		113.		0.06	U	15.4		72.6		47.1	
39-97-6	Mercury (Hg)	0.36		0.03	B J	0.017	U	0.04		0.13		0.09	
40-02-0	Nickel (Ni)	2.3	B J	8.		0.36	U	2.2	B J	5.1		5.2	
40-09-7	Potassium (K)	119.	B J	520.		15.2	U	89.6	B J	409.		325.	
782-49-2	Selenium (Se)	0.39	U	0.53	U	0.33	U	0.37	U	0.47	B J	0.55	B J
40-22-4	Silver (Ag)	0.14	U	0.19	U	0.12	U	0.14	U	0.14	U	0.15	U
40-23-5	Sodium (Na)	362.		614.		50.2	U	232.	B J	335.	B J	209.	B J
40-28-0	Thallium (Tl)	0.4	U	0.6	B J	0.34	U	0.38	U	0.39	U	0.42	U
40-31-5	Tin (Sn)	6.2	B U	16.6	B J	2.7	B	3.	B U	3.2	B U	3.7	B U
40-62-2	Vanadium (V)	10.3		18.4		0.07	U	5.8		42.2		25.8	
40-66-6	Zinc (Zn)	59.3		195.		1.5	B	16.		18.5		67.5	

PBO 10/12/99

CHARLESTON - ZONE G
CHARLESTON ZONE G SOIL (ONLY)
SDG# 39715

346-META	SAMPLE ID ------->	FDS-S-H029-02	FDS-S-H030-01	FDS-C-H030-01	FDS-S-H030-02	FDS-S-H031-01	FDS-C-H031-01
	ORIGINAL ID ----->	FDSSH02902	FDSSH03001	FDSCH03001	FDSSH03002	FDSSH03101	FDSCH03101
	LAB SAMPLE ID --->	39726.12	39715.07	39715.08	39715.09	39726.07	39726.08
	ID FROM REPORT -->	FDSSH02902	FDSSH03001	FDSCH03001	FDSSH03002	FDSSH03101	FDSCH03101
	SAMPLE DATE ----->	07/29/99	07/28/99	07/28/99	07/28/99	07/29/99	07/29/99
	DATE EXTRACTED -->	08/17/99	08/17/99	08/17/99	08/17/99	08/17/99	08/17/99
	DATE ANALYZED --->	08/18/99	08/18/99	08/18/99	08/18/99	08/18/99	08/18/99
	MATRIX ---------->	Soil	Soil	Soil	Soil	Soil	Soil
	UNITS ---------->	MG/KG A	MG/KG A	MG/KG A	MG/KG A	MG/KG A	MG/KG A
CAS #	Parameter	39715	39715	39715	39715	39715	39715
7429-90-5	Aluminum (Al)	17700.	7820.	16200.	7860.	8820.	12100.
7440-36-0	Antimony (Sb)	0.32 ~~NU~~ UJ	0.34 ~~U~~ UJ	0.35 ~~U~~ UJ	0.31 ~~U~~ UJ	0.31 ~~NU~~ UJ	0.3 ~~NU~~ UJ
7440-38-2	Arsenic (As)	7.8	4.8	6.5	2.4	3.9	6.9
7440-39-3	Barium (Ba)	24.6	23.4	24.7	13.6	22.6	25.1
7440-41-7	Beryllium (Be)	0.34 ~~B~~ J	0.37 ~~B~~ J	0.37 ~~B~~ J	0.17 ~~B~~ J	0.36 ~~B~~ J	0.59
7440-43-9	Cadmium (Cd)	0.04 U	0.28 ~~B~~ J	0.04 U	0.03 U	0.03 U	0.03 U
7440-70-2	Calcium (Ca)	1420.	101000.	6300.	1170.	853.	1100.
7440-47-3	Chromium (Cr)	31.6	17.	38.7	14.8	17.6	22.3
7440-48-4	Cobalt (Co)	3. ~~B~~ J	5.3	2.4 ~~B~~ J	1. ~~B~~ J	2.2 ~~B~~ J	2.6 ~~B~~ J
7440-50-8	Copper (Cu)	2.4 ~~B~~ J	5.1 ~~B~~ J	1.9 ~~B~~ J	0.69 ~~B~~ U	2. ~~B~~ J	3.3 ~~B~~ J
7439-89-6	Iron (Fe)	24600.	12000.	30000.	11200.	12500.	18200.
7439-92-1	Lead (Pb)	12.9	179.	15.1	22.2	8.4	10.1
7439-95-4	Magnesium (Mg)	2320.	1630.	992.	627.	845.	1140.
7439-96-5	Manganese (Mn)	78.1	117.	28.4	22.	36.5	60.5
7439-97-6	Mercury (Hg)	0.06	0.39	0.63	0.04 ~~B~~ J	0.05	0.03 ~~B~~ J
7440-02-0	Nickel (Ni)	5.8	7.6	4.5 ~~B~~ J	1.8 ~~B~~ J	3.4 ~~B~~ J	4.9
7440-09-7	Potassium (K)	666.	422.	555.	302.	394.	511.
7782-49-2	Selenium (Se)	0.39 U	0.42 U	0.84	0.38 U	0.38 U	0.36 U
7440-22-4	Silver (Ag)	0.14 U	0.15 U	0.16 U	0.14 U	0.14 U	0.13 U
7440-23-5	Sodium (Na)	185. ~~B~~ J	421.	403.	320. ~~B~~ J	240. ~~B~~ J	262. ~~B~~ J
7440-28-0	Thallium (Tl)	0.41 U	0.43 U	0.77 ~~B~~ J	0.39 U	0.39 U	0.64 ~~B~~ J
7440-31-5	Tin (Sn)	4.5 ~~B~~ U	3.6 ~~B~~ U	3.9 ~~B~~ U	4.2 ~~B~~ U	4.2 ~~B~~ U	3.3 ~~B~~ U
7440-62-2	Vanadium (V)	37.9	21.8	58.8	23.1	22.2	35.1
7440-66-6	Zinc (Zn)	34.2	47.8	21.	18.3	18.3	21.8

PBZ 10/12/99

CHARLESTON - ZONE G
CHARLESTON ZONE G SOIL (ONLY)
SDG# 39715

6-META

SAMPLE ID ------->	FDS-S-H031-02
ORIGINAL ID ----->	FDSSH03102
LAB SAMPLE ID --->	39726.09
ID FROM REPORT -->	FDSSH03102
SAMPLE DATE ----->	07/29/99
DATE EXTRACTED -->	08/17/99
DATE ANALYZED --->	08/18/99
MATRIX ---------->	Soil
UNITS ---------->	MG/KG A

CAS #	Parameter	39715		
429-90-5	Aluminum (Al)	15300.		
440-36-0	Antimony (Sb)	0.32	~~NU~~ U	J
440-38-2	Arsenic (As)	8.3		
440-39-3	Barium (Ba)	23.7		
440-41-7	Beryllium (Be)	0.38	~~B~~ J	
440-43-9	Cadmium (Cd)	0.04	U	
440-70-2	Calcium (Ca)	693.		
440-47-3	Chromium (Cr)	38.3		
440-48-4	Cobalt (Co)	2.1	~~B~~ J	
440-50-8	Copper (Cu)	1.4	~~B~~ U	
439-89-6	Iron (Fe)	28900.		
439-92-1	Lead (Pb)	9.6		
439-95-4	Magnesium (Mg)	963.		
439-96-5	Manganese (Mn)	18.8		
439-97-6	Mercury (Hg)	0.26		
440-02-0	Nickel (Ni)	4.1	~~B~~ J	
440-09-7	Potassium (K)	486.		
782-49-2	Selenium (Se)	1.7		
440-22-4	Silver (Ag)	0.14	U	
440-23-5	Sodium (Na)	278.	~~B~~ J	
440-28-0	Thallium (Tl)	0.62	~~B~~ J	
440-31-5	Tin (Sn)	3.6	~~B~~ U	
440-62-2	Vanadium (V)	48.4		
440-66-6	Zinc (Zn)	16.8		

RBO 10/12/99

CAW 10/22/99

CHARLESTON - ZONE G
CHARLESTON ZONE G SOIL (ONLY)
SDG# 39715

8846-PEST

SAMPLE ID ------->	003-S-B011-01	003-S-B011-01 DL	003-S-B011-02	003-S-B011-02 DL	003-S-B012-01	003-S-B012-01 DL
ORIGINAL ID ----->	003SB01101	003SB01101	003SB01102	003SB01102	003SB01201	003SB01201
LAB SAMPLE ID --->	39715.04	39715.04	39715.05	39715.05	39715.01	39715.01
ID FROM REPORT -->	003SB01101	003SB01101	003SB01102	003SB01102	003SB01201	003SB01201
SAMPLE DATE ----->	07/28/99	07/28/99	07/28/99	07/28/99	07/28/99	07/28/99
DATE EXTRACTED -->	07/30/99	07/30/99	07/30/99	07/30/99	07/30/99	08/02/99
DATE ANALYZED --->	08/05/99	08/24/99	08/05/99	08/24/99	08/05/99	08/18/99
MATRIX ---------->	Soil	Soil	Soil	Soil	Soil	Soil
UNITS ---------->	UG/KG A	UG/KG C	UG/KG A	UG/KG C	UG/KG A	UG/KG C
CAS # Parameter	39715	39715	39715	39715	39715	39715
319-84-6 alpha-BHC	1.4 U	14. U UR	1.4 U	14. U UR	14. U	2700. U UR
319-85-7 beta-BHC	1.4 U	14. U	1.4 U	14. U	14. U	2700. U
319-86-8 delta-BHC	1.4 U	14. U	1.4 U	14. U	14. U	2700. U
58-89-9 gamma-BHC (Lindane)	1.4 U	14. U	1.4 U	14. U	14. U	2700. U
76-44-8 Heptachlor	1.4 U	14. U	1.4 U	14. U	14. U	2700. U
309-00-2 Aldrin	1.4 U	14. U	1.4 U	14. U	14. U	2700. U
1024-57-3 Heptachlor epoxide	1.4 U	14. U	1.4 U	14. U	14. U	2700. U
959-98-8 Endosulfan I	1.4 U	14. U	1.4 U	14. U	14. U	2700. U
60-57-1 Dieldrin	2.7 U	27. U	2.7 U	27. U	26. U	5300. U
72-55-9 4,4'-DDE	72 ~~92.~~ D ~~E~~	72. R	2.7 U	27. U	1100. J ~~E~~	5300. U
72-20-8 Endrin	2.7 U	27. U UR	2.7 U	27. U	26. U	5300. U
3213-65-9 Endosulfan II	2.7 U	27. U	2.7 U	27. U	26. U	5300. U
72-54-8 4,4'-DDD	2.7 U	27. U	2.7 U	27. U	5900 720. D ~~E~~	5900. R
1031-07-8 Endosulfan sulfate	2.7 U	27. U	2.7 U	27. U	26. U	5300. U R
50-29-3 4,4'-DDT	71 ~~110.~~ D J ~~E~~	71. R	20. J	27. U	7300 ~~8000.~~ D ~~E~~	78000. R
72-43-5 Methoxychlor	14. U	140. U UR	14. U	140. U	140. U	27000. U UR
3494-70-5 Endrin ketone	3. U	27. U	3. U	27. U	26. U	5300. U
7421-93-4 Endrin aldehyde	2.7 U	27. U	2.7 U	27. U	26. U	5300. U
5103-71-9 alpha-Chlordane	1.4 U	14. U	1.4 U	14. U	14. U	2700. U
5103-74-2 gamma-Chlordane	1.4 U	14. U	1.4 U	14. U	14. U	2700. U
8001-35-2 Toxaphene	88. U	880. U	91. U	910. U	880. U	180000. U
2674-11-2 Aroclor-1016	30. U	30. U	35. U	35. U	39. U	39. U
1104-28-2 Aroclor-1221	30. U	30. U	35. U	35. U	39. U	39. U
1141-16-5 Aroclor-1232	30. U	30. U	35. U	35. U	39. U	39. U
3469-21-9 Aroclor-1242	30. U	30. U	35. U	35. U	39. U	39. U
2672-29-6 Aroclor-1248	30. U	30. U	35. U	35. U	39. U	39. U
1097-69-1 Aroclor-1254	30. U	30. U	35. U	35. U	39. U	39. U
1096-82-5 Aroclor-1260	30. U	30. U	35. U	35. U	39. U	39. U

JAC 10/14/99

CHARLESTON - ZONE G
CHARLESTON ZONE G SOIL (ONLY)
SDG# 39715

-PEST	SAMPLE ID ------->	003-C-B012-01		003-C-B012-01 DL		003-S-B012-02		003-S-B012-02 DL		003-S-B014-02		633-S-B011-01	
	ORIGINAL ID ----->	003CB01201		003CB01201		003SB01202		003SB01202		003SB01402		633SB01101	
	LAB SAMPLE ID --->	39715.02		39715.02		39715.03		39715.03		39715.06		39726.04	
	ID FROM REPORT -->	003CB01201		003CB01201		003SB01202		003SB01202		003SB01402		633SB01101	
	SAMPLE DATE ----->	07/28/99		07/28/99		07/28/99		07/28/99		07/28/99		07/29/99	
	DATE EXTRACTED -->	07/30/99		08/02/99		07/30/99		08/02/99		07/30/99		08/02/99	
	DATE ANALYZED --->	08/05/99		08/18/99		08/05/99		08/18/99		08/05/99		08/17/99	
	MATRIX ---------->	Soil		Soil		Soil		Soil		Soil		Soil	
	UNITS ---------->	UG/KG	A	UG/KG	C	UG/KG	A	UG/KG	C	UG/KG	A	UG/KG	A
CAS #	Parameter	39715		39715		39715		39715		39715		39715	
19-84-6	alpha-BHC	15.	U	6000.	U UR	14.	U	2800.	U UR	1.4	U	1.5	U
19-85-7	beta-BHC	15.	U	6000.	U	14.	U	2800.	U	1.4	U	1.5	U
19-86-8	delta-BHC	15.	U	6000.	U	14.	U	2800.	U	1.4	U	1.5	U
58-89-9	gamma-BHC (Lindane)	15.	U	6000.	U	14.	U	2800.	U	1.4	U	1.5	U
76-44-8	Heptachlor	15.	U	6000.	U	14.	U	2800.	U	1.4	U	1.5	U
09-00-2	Aldrin	15.	U	6000.	U	14.	U	2800.	U	1.4	U	1.5	U
24-57-3	Heptachlor epoxide	15.	U	6000.	U	14.	U	2800.	U	1.4	U	1.5	U
59-98-8	Endosulfan I	15.	U	6000.	U	14.	U	2800.	U	1.4	U	1.5	U
60-57-1	Dieldrin	29.	U	12000.	U	27.	U	5500.	U	2.7	U	2.8	U
72-55-9	4,4'-DDE	3200. J	~~E~~	12000.	U	1500. J	~~E~~	5500.	U	2.7	U	2.8	U
72-20-8	Endrin	29.	U	12000.	U	27.	U	5500.	U	2.7	U	2.8	U
13-65-9	Endosulfan II	29.	U	12000.	U	27.	U	5500.	U	2.7	U	2.8	U
72-54-8	4,4'-DDD	1900. J	~~PE~~	12000.	U	6100 ~~1200.~~	~~PE~~	6100.	~~P~~ R	2.7	U	2.8	U
31-07-8	Endosulfan sulfate	29.	U	12000.	U	27.	U	5500.	U UR	2.7	U	2.8	U
50-29-3	4,4'-DDT	10000 ~~96000.~~ D	~~E~~	100000.	U R	93000 ~~66000.~~ D	~~E~~	73000.	~~P~~ R	2.7	U	2.8	U
72-43-5	Methoxychlor	150.	U	60000.	U UR	140.	U	28000.	U UR	14.	U	15.	U
94-70-5	Endrin ketone	29.	U	12000.	U	27.	U	5500.	U	3.	U	3.	U
21-93-4	Endrin aldehyde	29.	U	12000.	U	27.	U	5500.	U	2.7	U	2.8	U
03-71-9	alpha-Chlordane	15.	U	6000.	U	14.	U	2800.	U	1.4	U	1.5	U
03-74-2	gamma-Chlordane	28. U	~~P~~	6000.	U	14.	U	2800.	U	2.4	~~P~~ U	1.5	U
01-35-2	Toxaphene	960.	U	380000.	U	910.	U	180000.	U	90.	U	94.	U
74-11-2	Aroclor-1016	38.	U	38.	U	36.	U	36.	U	35.	U	36.	U
04-28-2	Aroclor-1221	38.	U	38.	U	36.	U	36.	U	35.	U	36.	U
41-16-5	Aroclor-1232	38.	U	38.	U	36.	U	36.	U	35.	U	36.	U
69-21-9	Aroclor-1242	38.	U	38.	U	36.	U	36.	U	35.	U	36.	U
72-29-6	Aroclor-1248	38.	U	38.	U	36.	U	36.	U	35.	U	36.	U
97-69-1	Aroclor-1254	38.	U	38.	U	36.	U	36.	U	35.	U	36.	U
96-82-5	Aroclor-1260	38.	U	38.	U	36.	U	36.	U	35.	U	36.	U

QAC 10/14/99

CHARLESTON - ZONE G
CHARLESTON ZONE G SOIL (ONLY)
SDG# 39715

B46-PEST

	SAMPLE ID ------->	633-S-B011-01 DL		633-C-B011-01		633-C-B011-01 DL		633-S-B011-02		633-S-B011-02 DL		633-S-B012-02	
	ORIGINAL ID ----->	633SB01101		633CB01101		633CB01101		633SB01102		633SB01102		633SB01202	
	LAB SAMPLE ID --->	39726.04		39726.05		39726.05		39726.06		39726.06		39726.03	
	ID FROM REPORT -->	633SB01101		633CB01101		633CB01101		633SB01102		633SB01102		633SB01202	
	SAMPLE DATE ----->	07/29/99		07/29/99		07/29/99		07/29/99		07/29/99		07/29/99	
	DATE EXTRACTED -->	08/02/99		08/02/99		08/02/99		08/02/99		08/02/99		08/02/99	
	DATE ANALYZED --->	08/18/99		08/17/99		08/18/99		08/17/99		08/18/99		08/17/99	
	MATRIX ---------->	Soil		Soil		Soil		Soil		Soil		Soil	
	UNITS ---------->	UG/KG	C	UG/KG	A	UG/KG	C	UG/KG	A	UG/KG	C	UG/KG	A
CAS #	Parameter	39715		39715		39715		39715		39715		39715	
319-84-6	alpha-BHC	15.	U UR	1.5	U	15.	U UR	1.7	U	17.	U UR	??????????	
319-85-7	beta-BHC	15.	U	1.5	U	15.	U	1.7	U	17.	U	??????????	
319-86-8	delta-BHC	15.	U	1.5	U	15.	U	1.7	U	17.	U	??????????	
58-89-9	gamma-BHC (Lindane)	15.	U	1.5	U	15.	U	1.7	U	17.	U	??????????	
76-44-8	Heptachlor	15.	U	1.5	U	15.	U	1.7	U	17.	U	??????????	
309-00-2	Aldrin	15.	U	1.5	U	15.	U	1.7	U	17.	U	??????????	
1024-57-3	Heptachlor epoxide	15.	U	1.5	U	15.	U	1.7	U	17.	U	??????????	
959-98-8	Endosulfan I	15.	U	1.5	U	15.	U	1.7	U	17.	U	??????????	
60-57-1	Dieldrin	28.	U	2.9	U	29.	U	3.3	U	33.	U	??????????	
72-55-9	4,4'-DDE	28.	U	2.9	U	29.	U	3.3	U	33.	U	??????????	
72-20-8	Endrin	29.	DP	2.9	U	29.	U	3.3	U	51.	D	??????????	
3213-65-9	Endosulfan II	28.	U	2.9	U	29.	U	3.3	U	33.	U	??????????	
72-54-8	4,4'-DDD	28.	U	2.9	U	29.	U	3.3	U	33.	U	??????????	
1031-07-8	Endosulfan sulfate	28.	U	2.9	U	29.	U	3.3	U	33.	U	??????????	
50-29-3	4,4'-DDT	28.	U	2.9	U	29.	U	3.3	U	33.	U	??????????	
72-43-5	Methoxychlor	150.	U	15.	U	150.	U	17.	U	170.	U	??????????	
494-70-5	Endrin ketone	28.	U	3.	U	29.	U	3.	U	33.	U	??????????	
421-93-4	Endrin aldehyde	28.	U	2.9	U	29.	U	3.3	U	33.	U	??????????	
103-71-9	alpha-Chlordane	15.	U	1.5	U	15.	U	1.7	U	17.	U	??????????	
103-74-2	gamma-Chlordane	15.	U	1.5	U	15.	U	1.7	U	17.	U	??????????	
8001-35-2	Toxaphene	940.	U	96.	U	960.	U	110.	U	1100.	U	??????????	
674-11-2	Aroclor-1016	36.	U	39.	U	39.	U	41.	U	41.	U	37.	U
104-28-2	Aroclor-1221	36.	U	39.	U	39.	U	41.	U	41.	U	37.	U
141-16-5	Aroclor-1232	36.	U	39.	U	39.	U	41.	U	41.	U	37.	U
469-21-9	Aroclor-1242	36.	U	39.	U	39.	U	41.	U	41.	U	37.	U
672-29-6	Aroclor-1248	36.	U	39.	U	39.	U	41.	U	41.	U	37.	U
097-69-1	Aroclor-1254	36.	U	39.	U	39.	U	41.	U	41.	U	37.	U
096-82-5	Aroclor-1260	36.	U	39.	U	39.	U	41.	U	41.	U	37.	U

JLC 10/14/99

PCBs ONLY

CHARLESTON - ZONE G
CHARLESTON ZONE G SOIL (ONLY)
SDG# 39715

6-PEST

SAMPLE ID ------->	643-S-B013-02	643-S-B013-02 DL	BLK-0-9715-01	BLK-0-9715-02	BLK-0-9715-03	BLK-0-9715-04
ORIGINAL ID ----->	643SB01302	643SB01302 DL	BL0730SN	BL0730SO	BL0802SH	BL0802SI
LAB SAMPLE ID --->	39726.02	39726.02	BL0730SN	BL0730SO	BL0802SH	BL0802SI
ID FROM REPORT -->	643SB01302	643SB01302DL	BL0730SN	BL0730SO	BL0802SH	BL0802SI
SAMPLE DATE ----->	07/29/99	07/29/99	07/29/99	07/29/99	07/29/99	07/29/99
DATE EXTRACTED -->	08/02/99	08/02/99	07/30/99	07/30/99	08/02/99	08/02/99
DATE ANALYZED --->	08/17/99	08/18/99	08/05/99	08/11/99	08/16/99	08/18/99
MATRIX ---------->	Soil	Soil	Soil	Soil	Soil	Soil
UNITS ---------->	UG/KG A	UG/KG C	UG/KG D	UG/KG D	UG/KG D	UG/KG D
CAS # Parameter	39715	39715	39715	39715	39715	39715
319-84-6 alpha-BHC	1.8 U	18. U UR	??????????	1.3 U	??????????	1.3 U
319-85-7 beta-BHC	1.8 U	18. U	??????????	1.3 U	??????????	1.3 U
319-86-8 delta-BHC	1.8 U	18. U	??????????	1.3 U	??????????	1.3 U
58-89-9 gamma-BHC (Lindane)	1.8 U	18. U	??????????	1.3 U	??????????	1.3 U
76-44-8 Heptachlor	1.8 U	18. U	??????????	1.3 U	??????????	1.3 U
309-00-2 Aldrin	1.8 U	18. U	??????????	1.3 U	??????????	1.3 U
024-57-3 Heptachlor epoxide	1.8 U	18. U	??????????	1.3 U	??????????	1.3 U
959-98-8 Endosulfan I	1.8 U	18. U	??????????	1.3 U	??????????	1.3 U
60-57-1 Dieldrin	3.4 U	34. U	??????????	2.5 U	??????????	2.4 U
72-55-9 4,4'-DDE	200 ~~150.~~ D E	200. U	??????????	2.5 U	??????????	2.4 U
72-20-8 Endrin	3.4 U	57. UR	??????????	2.5 U	??????????	2.4 U
213-65-9 Endosulfan II	3.4 U	34. U UR	??????????	2.5 U	??????????	2.4 U
72-54-8 4,4'-DDD	6.8	34. U	??????????	2.5 U	??????????	2.4 U
031-07-8 Endosulfan sulfate	3.4 U	34. U	??????????	2.5 U	??????????	2.4 U
50-29-3 4,4'-DDT	32.	88.	??????????	2.5 U	??????????	2.4 U
72-43-5 Methoxychlor	18. U	180. U UR	??????????	13. U	??????????	13. U
494-70-5 Endrin ketone	3. U	34. U	??????????	2.5 U	??????????	2. U
421-93-4 Endrin aldehyde	3.4 U	34. U	??????????	2.5 U	??????????	2.4 U
103-71-9 alpha-Chlordane	1.8 U	18. U	??????????	1.3 U	??????????	1.3 U
103-74-2 gamma-Chlordane	4.6	18. U	??????????	1.3 U	??????????	1.3 U
001-35-2 Toxaphene	110. U	1100. U	??????????	83. U	??????????	81. U
674-11-2 Aroclor-1016	45. U	45. U	33. U	??????????	33. U	??????????
104-28-2 Aroclor-1221	45. U	45. U	33. U	??????????	33. U	??????????
141-16-5 Aroclor-1232	45. U	45. U	33. U	??????????	33. U	??????????
469-21-9 Aroclor-1242	45. U	45. U	33. U	??????????	33. U	??????????
672-29-6 Aroclor-1248	45. U	45. U	33. U	??????????	33. U	??????????
097-69-1 Aroclor-1254	45. U	45. U	33. U	??????????	33. U	??????????
096-82-5 Aroclor-1260	45. U	45. U	33. U	??????????	33. U	??????????

DJC 10/14/99

CHARLESTON - ZONE G
CHARLESTON ZONE G SOIL (ONLY)
SDG# 39715

346-PEST

	SAMPLE ID ------->	FDS-S-H028-01		FDS-S-H028-01 DL		FDS-S-H028-02		FDS-S-H028-02 DL		FDS-S-H029-01		FDS-S-H029-01 DL	
	ORIGINAL ID ----->	FDSSH02801		FDSSH02801		FDSSH02802		FDSSH02802		FDSSH02901		FDSSH02901	
	LAB SAMPLE ID --->	39715.10		39715.10		39715.11		39715.11		39726.11		39726.11	
	ID FROM REPORT -->	FDSSH02801		FDSSH02801		FDSSH02802		FDSSH02802		FDSSH02901		FDSSH02901	
	SAMPLE DATE ----->	07/28/99		07/28/99		07/28/99		07/28/99		07/29/99		07/29/99	
	DATE EXTRACTED -->	07/30/99		07/30/99		07/30/99		07/30/99		08/02/99		08/02/99	
	DATE ANALYZED --->	08/05/99		08/24/99		08/05/99		08/12/99		08/17/99		08/18/99	
	MATRIX ---------->	Soil		Soil		Soil		Soil		Soil		Soil	
	UNITS ---------->	UG/KG	A	UG/KG	C	UG/KG	A	UG/KG	C	UG/KG	A	UG/KG	C
CAS #	Parameter	39715		39715		39715		39715		39715		39715	
319-84-6	alpha-BHC	1.5	U	15.	U UR	1.5	U	15.	U UR	1.6	U	16.	U UR
319-85-7	beta-BHC	1.5	U	15.	U	1.5	U	15.	U	1.6	U	16.	U
319-86-8	delta-BHC	1.5	U	15.	U	1.5	U	15.	U	1.6	U	16.	U
58-89-9	gamma-BHC (Lindane)	1.5	U	15.	U	1.5	U	15.	U	1.6	U	16.	U
76-44-8	Heptachlor	1.5	U	15.	U	1.5	U	15.	U	1.6	U	16.	U
309-00-2	Aldrin	1.5	U	15.	U	1.5	U	15.	U	1.6	U	16.	U
024-57-3	Heptachlor epoxide	1.5	U	15.	U	1.5	U	15.	U	1.6	U	16.	U
959-98-8	Endosulfan I	1.5	U	15.	U	1.5	U	15.	U	1.6	U	16.	U
60-57-1	Dieldrin	2.8	U	28.	U	2.9	U	29.	U	3.1	U	31.	U
72-55-9	4,4'-DDE	4.9 ~~29.~~	U P	28.	U	2.9	U	29.	U	30 ~~120~~ ~~3.1~~ ~~E~~	U U	31.	U
72-20-8	Endrin	2.8	U	28.	U	2.9	U	29.	U	3.1	U	30 ~~120.~~	U DP
5213-65-9	Endosulfan II	2.8	U	28.	U	2.9	U	29.	U	51 ~~24.~~	U	31.	U
72-54-8	4,4'-DDD	29. ~~K~~ J	P	28.	U	10.		29.	U	3.1	U	31.	U
031-07-8	Endosulfan sulfate	2.8	U	28.	U	2.9	U	29.	U	3.1	U	31.	U
50-29-3	4,4'-DDT	23 ~~46.~~ ~~45~~	P U	28.	U	2.9	U	29.	U	52 ~~22~~ ~~47.~~	P J	52 ~~31.~~	D U R
72-43-5	Methoxychlor	15.	U	150.	U	15.	U	150.	U	16 ~~110.~~	U P	140 ~~540.~~	U D UR
494-70-5	Endrin ketone	3.	U	28.	U	3.	U	29.	U	3.	U	31.	U
421-93-4	Endrin aldehyde	8.8	P	28.	U	2.9	U	29.	U	~~27~~ 56 ~~48.~~	P J	56 ~~31.~~	D U R
103-71-9	alpha-Chlordane	1.5	U	15.	U	1.5	U	15.	U	1.6	U	16.	U UR
103-74-2	gamma-Chlordane	2.5	P	15.	U	1.5	U	15.	U	1.6	U	16.	U
001-35-2	Toxaphene	94.	U	940.	U	96.	U	960.	U	100.	U	1000.	U
674-11-2	Aroclor-1016	37.	U	37.	U	38.	U	38.	U	38.	U	38.	U
104-28-2	Aroclor-1221	37.	U	37.	U	38.	U	38.	U	38.	U	38.	U
141-16-5	Aroclor-1232	37.	U	37.	U	38.	U	38.	U	38.	U	38.	U
469-21-9	Aroclor-1242	37.	U	37.	U	38.	U	38.	U	38.	U	38.	U
672-29-6	Aroclor-1248	37.	U	37.	U	38.	U	38.	U	38.	U	38.	U
097-69-1	Aroclor-1254	37.	U	37.	U	38.	U	38.	U	38.	U	38.	U
096-82-5	Aroclor-1260	37.	U	37.	U	38.	U	38.	U	38.	U	38.	U

Acon packnr

changes based on Form 10 results

JC 10/14/99 results corrected per Form

results corrected based on Form 1 results

CHARLESTON - ZONE G
CHARLESTON ZONE G SOIL (ONLY)
SDG# 39715

46-PEST

	SAMPLE ID ------->	FDS-S-H029-02		FDS-S-H029-02 DL		FDS-S-H030-01		FDS-S-H030-01 DL		FDS-C-H030-01		FDS-C-H030-01 DL	
	ORIGINAL ID ----->	FDSSH02902		FDSSH02902		FDSSH03001		FDSSH03001		FDSCH03001		FDSCH03001	
	LAB SAMPLE ID --->	39726.12		39726.12		39715.07		39715.07		39715.08		39715.08	
	ID FROM REPORT -->	FDSSH02902		FDSSH02902		FDSSH03001		FDSSH03001		FDSCH03001		FDSCH03001	
	SAMPLE DATE ----->	07/29/99		07/29/99		07/28/99		07/28/99		07/28/99		07/28/99	
	DATE EXTRACTED -->	08/02/99		08/02/99		07/30/99		07/30/99		07/30/99		07/30/99	
	DATE ANALYZED --->	08/17/99		08/18/99		08/05/99		08/24/99		08/05/99		08/24/99	
	MATRIX ---------->	Soil		Soil		Soil		Soil		Soil		Soil	
	UNITS ---------->	UG/KG	A	UG/KG	C	UG/KG	A	UG/KG	C	UG/KG	A	UG/KG	C
CAS #	Parameter	39715		39715		39715		39715		39715		39715	
319-84-6	alpha-BHC	1.6	U	16.	U UR	1.5	U	15.	U UR	1.7	U	17.	U UR
319-85-7	beta-BHC	1.6	U	16.	U	1.5	U	15.	U	1.7	U	17.	U
319-86-8	delta-BHC	1.6	U	16.	U	1.5	U	15.	U	1.7	U	17.	U
58-89-9	gamma-BHC (Lindane)	1.6	U	16.	U	1.5	U	15.	U	1.7	U	17.	U
76-44-8	Heptachlor	1.6	U	16.	U	1.5	U	15.	U	1.7	U	17.	U
309-00-2	Aldrin	1.6	U	16.	U	1.5	U	15.	U	1.7	U	17.	U
024-57-3	Heptachlor epoxide	1.6	U	16.	U	1.5	U	15.	U	1.7	U	17.	U
959-98-8	Endosulfan I	1.6	U	16.	U	1.5	U	15.	U	1.7	U	17.	U
60-57-1	Dieldrin	3.1	U	31.	U	2.8 UJ	U	28.	U	4.7	J	32.	U
72-55-9	4,4'-DDE	3.1	U	31.	U	2.8	U	28.	U	3.2	U	32.	U
72-20-8	Endrin	3.1	U	31.	U	2.8	U	28.	U	3.2	U	32.	U
3213-65-9	Endosulfan II	3.1	U	31.	U	2.8	U	28.	U	3.2	U	32.	U
72-54-8	4,4'-DDD	3.1	U	31.	U	2.8 UJ	U	28.	U	14.	J	32.	U
1031-07-8	Endosulfan sulfate	3.1	U	31.	U	2.8	U	28.	U	3.2	U	32.	U
50-29-3	4,4'-DDT	~~72.~~ 31	PE U	31.	U	23. U	P	28.	U	23. U	P	32.	U
72-43-5	Methoxychlor	16.	U	160.	U	15.	U	150.	U	17.	U	170.	U
6494-70-5	Endrin ketone	3.	U	31.	U	3.	U	28.	U	3.	U	32.	U
7421-93-4	Endrin aldehyde	3.1	U	31.	U	2.8	U	28.	U	8.8 J	P	32.	U
5103-71-9	alpha-Chlordane	1.6	U	16.	U	1.5	U	15.	U	1.7	U	17.	U
5103-74-2	gamma-Chlordane	1.6	U	16.	U	2.3 U	P	15.	U	5.8 J	P	17.	U
8001-35-2	Toxaphene	100.	U	1000.	U	94.	U	940.	U	110.	U	1100.	U
12674-11-2	Aroclor-1016	40.	U	40.	U	42.	U	42.	U	39.	U	39.	U
11104-28-2	Aroclor-1221	40.	U	40.	U	42.	U	42.	U	39.	U	39.	U
11141-16-5	Aroclor-1232	40.	U	40.	U	42.	U	42.	U	39.	U	39.	U
53469-21-9	Aroclor-1242	40.	U	40.	U	42.	U	42.	U	39.	U	39.	U
12672-29-6	Aroclor-1248	40.	U	40.	U	42.	U	42.	U	39.	U	39.	U
11097-69-1	Aroclor-1254	40.	U	40.	U	42.	U	42.	U	39.	U	39.	U
11096-82-5	Aroclor-1260	40.	U	40.	U	42.	U	42.	U	39.	U	39.	U

result corrected based on form I results

JBC 10/4/99

CHARLESTON - ZONE G
CHARLESTON ZONE G SOIL (ONLY)
SDG# 39715

46-PEST

	SAMPLE ID ------->	FDS-S-H030-02		FDS-S-H030-02 DL		FDS-S-H031-01		FDS-S-H031-01 DL		FDS-C-H031-01		FDS-C-H031-01 DL	
	ORIGINAL ID ----->	FDSSH03002		FDSSH03002		FDSSH03101		FDSSH03101		FDSCH03101		FDSCH03101	
	LAB SAMPLE ID --->	39715.09		39715.09		39726.07		39726.07		39726.08		39726.08	
	ID FROM REPORT -->	FDSSH03002		FDSSH03002		FDSSH03101		FDSSH03101		FDSCH03101		FDSCH03101	
	SAMPLE DATE ----->	07/28/99		07/28/99		07/29/99		07/29/99		07/29/99		07/29/99	
	DATE EXTRACTED -->	07/30/99		07/30/99		08/02/99		08/02/99		08/02/99		08/02/99	
	DATE ANALYZED --->	08/05/99		08/24/99		08/17/99		08/18/99		08/17/99		08/18/99	
	MATRIX ---------->	Soil		Soil		Soil		Soil		Soil		Soil	
	UNITS ---------->	UG/KG	A	UG/KG	C	UG/KG	A	UG/KG	C	UG/KG	A	UG/KG	C
CAS #	Parameter	39715		39715		39715		39715		39715		39715	
319-84-6	alpha-BHC	1.5	U	15.	U UR	1.4	U	270.	U UR	1.5	U	750.	U UR
319-85-7	beta-BHC	1.5	U	15.	U	1.4	U	270.	U	1.5	U	750.	U
319-86-8	delta-BHC	1.5	U	15.	U	1.4	U	270.	U	1.5	U	750.	U
58-89-9	gamma-BHC (Lindane)	1.5	U	15.	U	1.4	U	270.	U	1.5	U	750.	U
76-44-8	Heptachlor	1.5	U	15.	U	110.	J ~~E~~	270.	U	220.	J ~~E~~	750.	U
309-00-2	Aldrin	1.5	U	15.	U	1.4	U	270.	U	1.5	U	750.	U
024-57-3	Heptachlor epoxide	1.5	U	15.	U	270.	J ~~PE~~	270.	U	1.5	UJ ~~U~~	750.	U
959-98-8	Endosulfan I	1.5	U	15.	U	1.4	U	270.	U	1.5	U	750.	U
60-57-1	Dieldrin	2.9	U	29.	U	2.6	U	520.	U	2.9	U	1400.	U
72-55-9	4,4'-DDE	2.9	U	29.	U	2.6	U	520.	U	2.9	U	1400.	U
72-20-8	Endrin	2.9	U	29.	U	2.6	U	520.	U	2.9	U	1400.	U
213-65-9	Endosulfan II	2.9	U	29.	U	2.6	U	520.	U	2.9	U	1400.	U
72-54-8	4,4'-DDD	2.9	U	29.	U	2.6	U	520.	U	2.9	U	1400.	U
031-07-8	Endosulfan sulfate	2.9	U	29.	U	12.4 ~~56. HJ E~~ PU		520.	U	42 ~~170 HJ~~ J ~~E~~ P		1400.	U
50-29-3	4,4'-DDT	2.9	U	29.	U	54.	J ~~E~~	520.	U	120.	J ~~E~~	1400.	U
72-43-5	Methoxychlor	15.	U	150.	U	59.	J	2700.	U	180.	J	7500.	U
494-70-5	Endrin ketone	3.	U	29.	U	3.	U	520.	U	3.	U	1400.	U
421-93-4	Endrin aldehyde	2.9	U	29.	U	2.6	U	520.	U	2.9	U	1400.	U
103-71-9	alpha-Chlordane	1.5	U	15.	U	2400 ~~2000.~~ DJ	PE	2400.	D R	7000 ~~4300.~~ DJ	PE	7000.	R D
103-74-2	gamma-Chlordane	1.5	U	15.	U	2700 ~~2400.~~ DJ	~~E~~	2700.	D R	7900 ~~4800.~~ DJ	~~E~~	7900.	R D
001-35-2	Toxaphene	96.	U	960.	U	87.	U	17000.	U UR	96.	U	48000.	U
674-11-2	Aroclor-1016	35.	U	35.	U	35.	U	35.	U	36.	U	36.	U
104-28-2	Aroclor-1221	35.	U	35.	U	35.	U	35.	U	36.	U	36.	U
141-16-5	Aroclor-1232	35.	U	35.	U	35.	U	35.	U	36.	U	36.	U
469-21-9	Aroclor-1242	35.	U	35.	U	35.	U	35.	U	36.	U	36.	U
672-29-6	Aroclor-1248	35.	U	35.	U	35.	U	35.	U	36.	U	36.	U
097-69-1	Aroclor-1254	35.	U	35.	U	35.	U	35.	U	36.	U	36.	U
096-82-5	Aroclor-1260	35.	U	35.	U	35.	U	35.	U	36.	U	36.	U

correction based on Form 10 results

Correction based on Form 10 results

JC 10/4/99

CHARLESTON - ZONE G
CHARLESTON ZONE G SOIL (ONLY)
SDG# 39715

46-PEST

SAMPLE ID ------->	FDS-S-H031-02	FDS-S-H031-02 DL
ORIGINAL ID ----->	FDSSH03102	FDSSH03102
LAB SAMPLE ID --->	39726.09	39726.09
ID FROM REPORT -->	FDSSH03102	FDSSH03102
SAMPLE DATE ----->	07/29/99	07/29/99
DATE EXTRACTED -->	08/02/99	08/02/99
DATE ANALYZED --->	08/17/99	08/18/99
MATRIX ---------->	Soil	Soil
UNITS ---------->	UG/KG A	UG/KG C

CAS #	Parameter	39715		39715	
319-84-6	alpha-BHC	1.5	U	31.	U UR
319-85-7	beta-BHC	1.5	U	31.	U
319-86-8	delta-BHC	1.5	U	31.	U
58-89-9	gamma-BHC (Lindane)	1.5	U	31.	U
76-44-8	Heptachlor	18.		31.	U
309-00-2	Aldrin	1.5	U	31.	U
1024-57-3	Heptachlor epoxide	29. ~~BJ~~	~~PE~~	31.	U
959-98-8	Endosulfan I	1.5	U	31.	U
60-57-1	Dieldrin	3.	U	60.	U
72-55-9	4,4'-DDE	6.8	~~D~~	60.	U
72-20-8	Endrin	3.	U	60.	U
3213-65-9	Endosulfan II	3.	U	60.	U
72-54-8	4,4'-DDD	3.	U	60.	U
1031-07-8	Endosulfan sulfate	3.	U	60.	U
50-29-3	4,4'-DDT	3.	U	60.	U
72-43-5	Methoxychlor	15.	U	310.	U
3494-70-5	Endrin ketone	3.	U	60.	U
7421-93-4	Endrin aldehyde	3.	U	60.	U
5103-71-9	alpha-Chlordane	310 ~~210.~~	D ~~PE~~	310.	~~D~~ R
5103-74-2	gamma-Chlordane	330 ~~260.~~	D ~~PE~~	330.	~~D~~ R
8001-35-2	Toxaphene	99.	U	2000.	U UR
2674-11-2	Aroclor-1016	38.	U	38.	U
1104-28-2	Aroclor-1221	38.	U	38.	U
1141-16-5	Aroclor-1232	38.	U	38.	U
3469-21-9	Aroclor-1242	38.	U	38.	U
2672-29-6	Aroclor-1248	38.	U	38.	U
1097-69-1	Aroclor-1254	38.	U	38.	U
1096-82-5	Aroclor-1260	38.	U	38.	U

JRC 10/4/99

CW
10/22/99

CHARLESTON - ZONE G
CHARLESTON ZONE G SOIL (ONLY)
SDG# 39715

346-SVOA

	SAMPLE ID ------->	FDS-S-H028-01		FDS-S-H028-01 DL		FDS-S-H028-02		FDS-S-H028-02 DL		FDS-S-H029-01		FDS-S-H029-01 DL	
	ORIGINAL ID ----->	FDSSH02801		FDSSH02801		FDSSH02802		FDSSH02802		FDSSH02901		FDSSH02901	
	LAB SAMPLE ID --->	39715.10		39715.10		39715.11		39715.11		39726.11		39726.11	
	ID FROM REPORT -->	FDSSH02801		FDSSH02801		FDSSH02802		FDSSH02802		FDSSH02901		FDSSH02901	
	SAMPLE DATE ----->	07/28/99		07/28/99		07/28/99		07/28/99		07/29/99		07/29/99	
	DATE EXTRACTED -->	07/30/99		07/30/99		07/30/99		07/30/99		08/02/99		08/02/99	
	DATE ANALYZED --->	08/13/99		08/18/99		08/13/99		08/17/99		08/13/99		08/19/99	
	MATRIX ---------->	Soil		Soil		Soil		Soil		Soil		Soil	
	UNITS ---------->	UG/KG	A	UG/KG	C	UG/KG	A	UG/KG	C	UG/KG	A	UG/KG	C
CAS #	Parameter	39715		39715		39715		39715		39715		39715	
108-95-2	Phenol	360.	U	3600.	U UR	370.	U	3700.	U UR	410.	U	1600.	U UR
111-44-4	bis(2-Chloroethyl)ether	360.	U	3600.	U	370.	U	3700.	U	410.	U	1600.	U
95-57-8	2-Chlorophenol	360.	U	3600.	U	370.	U	3700.	U	410.	U	1600.	U
541-73-1	1,3-Dichlorobenzene	360.	U	3600.	U	370.	U	3700.	U	410.	U	1600.	U
106-46-7	1,4-Dichlorobenzene	360.	U	3600.	U	370.	U	3700.	U	410.	U	1600.	U
100-51-6	Benzyl alcohol	360.	U	3600.	U	370.	U	3700.	U	410.	U	1600.	U
95-50-1	1,2-Dichlorobenzene	360.	U	3600.	U	370.	U	3700.	U	410.	U	1600.	U
95-48-7	2-Methylphenol (o-Cresol)	360.	U	3600.	U	370.	U	3700.	U	410.	U	1600.	U
108-60-1	2,2'-oxybis(1-Chloropropane)	360.	U	3600.	U	370.	U	3700.	U	410.	U	1600.	U
106-44-5	4-Methylphenol (p-Cresol)	360.	U	3600.	U	370.	U	3700.	U	410.	U	1600.	U
621-64-7	N-Nitroso-di-n-propylamine	360.	U	3600.	U	370.	U	3700.	U	410.	U	1600.	U
67-72-1	Hexachloroethane	360.	U	3600.	U	370.	U	3700.	U	410.	U	1600.	U
98-95-3	Nitrobenzene	360.	U	3600.	U	370.	U	3700.	U	410.	U	1600.	U
78-59-1	Isophorone	360.	U	3600.	U	370.	U	3700.	U	410.	U	1600.	U
88-75-5	2-Nitrophenol	360.	U	3600.	U	370.	U	3700.	U	410.	U	1600.	U
105-67-9	2,4-Dimethylphenol	360.	U	3600.	U	370.	U	3700.	U	410.	U	1600.	U
65-85-0	Benzoic acid	360.	U	3600.	U	370.	U	3700.	U	410.	U	1600.	U
111-91-1	bis(2-Chloroethoxy)methane	360.	U	3600.	U	370.	U	3700.	U	410.	U	1600.	U
120-83-2	2,4-Dichlorophenol	360.	U	3600.	U	370.	U	3700.	U	410.	U	1600.	U
120-82-1	1,2,4-Trichlorobenzene	360.	U	3600.	U	370.	U	3700.	U	410.	U	1600.	U
91-20-3	Naphthalene	3600 ~~3100.~~	~~E~~ D	3600.	D	1300.		1500.	~~U J~~ R	410.	U	1600.	U
106-47-8	4-Chloroaniline	360.	U	3600.	U	370.	U	3700.	U UR	410.	U	1600.	U
87-68-3	Hexachlorobutadiene	360.	U	3600.	U	370.	U	3700.	U	410.	U	1600.	U
59-50-7	4-Chloro-3-methylphenol	360.	U	3600.	U	370.	U	3700.	U	410.	U	1600.	U
91-57-6	2-Methylnaphthalene	16000 ~~11000.~~	~~E~~ D	16000. R	~~D~~	2700 ~~8000.~~	~~E~~ D	27000.	~~D~~ R	410.	U	1600.	U
77-47-4	Hexachlorocyclopentadiene	360.	U	3600.	U UR	370.	U	3700.	U UR	410.	U	1600.	U
88-06-2	2,4,6-Trichlorophenol	360.	U	3600.	U	370.	U	3700.	U	410.	U	1600.	U
95-95-4	2,4,5-Trichlorophenol	890.	U	8900.	U	930.	U	9300.	U	1000.	U	4100.	U
91-58-7	2-Chloronaphthalene	360.	U	3600.	U	370.	U	3700.	U	410.	U	1600.	U
88-74-4	2-Nitroaniline	890.	U	8900.	U	930.	U	9300.	U	1000.	U	4100.	U
131-11-3	Dimethyl phthalate	360.	U	3600.	U	370.	U	3700.	U	410.	U	1600.	U
208-96-8	Acenaphthylene	360.	U	3600.	U	370.	U	3700.	U	410.	U	1600.	U
99-09-2	3-Nitroaniline	890.	U	8900.	U	930.	U	9300.	U	1000.	U	4100.	U
83-32-9	Acenaphthene	360.	U	640. R	~~UJ~~	980.		1300.	~~UJ~~ R	190.	J	150.	~~UJ~~ R
51-28-5	2,4-Dinitrophenol	890.	U	8900.	U UR	930.	U	9300.	U UR	1000.	U	4100.	U UR
100-02-7	4-Nitrophenol	890.	U	8900.	U	930.	U	9300.	U	1000.	U	4100.	U

CHARLESTON - ZONE G
CHARLESTON ZONE G SOIL (ONLY)
SDG# 39715

6-SVOA													
	SAMPLE ID ------->	FDS-S-H028-01		FDS-S-H028-01 DL		FDS-S-H028-02		FDS-S-H028-02 DL		FDS-S-H029-01		FDS-S-H029-01 DL	
	ORIGINAL ID ----->	FDSSH02801		FDSSH02801		FDSSH02802		FDSSH02802		FDSSH02901		FDSSH02901	
	LAB SAMPLE ID --->	39715.10		39715.10		39715.11		39715.11		39726.11		39726.11	
	ID FROM REPORT -->	FDSSH02801		FDSSH02801		FDSSH02802		FDSSH02802		FDSSH02901		FDSSH02901	
	SAMPLE DATE ----->	07/28/99		07/28/99		07/28/99		07/28/99		07/29/99		07/29/99	
	DATE EXTRACTED -->	07/30/99		07/30/99		07/30/99		07/30/99		08/02/99		08/02/99	
	DATE ANALYZED --->	08/13/99		08/18/99		08/13/99		08/17/99		08/13/99		08/19/99	
	MATRIX ---------->	Soil		Soil		Soil		Soil		Soil		Soil	
	UNITS ---------->	UG/KG	A	UG/KG	C	UG/KG	A	UG/KG	C	UG/KG	A	UG/KG	C
CAS #	Parameter	39715		39715		39715		39715		39715		39715	
32-64-9	Dibenzofuran	360.	U	620.	~~J~~ R	370.	U	770.	~~DJ~~ R	64.	J	1600.	~~U~~ UR
21-14-2	2,4-Dinitrotoluene	360.	U	3600.	~~U~~ UR	370.	U	3700.	~~U~~ UR	410.	U	1600.	~~U~~
06-20-2	2,6-Dinitrotoluene	360.	U	3600.	~~U~~	370.	U	3700.	~~U~~	410.	U	1600.	~~U~~
84-66-2	Diethylphthalate	360.	U	3600.	~~U~~	370.	U	3700.	~~U~~	410.	U	1600.	~~U~~
05-72-3	4-Chlorophenylphenylether	360.	U	3600.	~~U~~	370.	U	3700.	~~U~~	410.	U	1600.	~~U~~
86-73-7	Fluorene	950.		1200.	~~J~~ R	2000.		2400.	~~DJ~~ R	130.	J	84.	~~DJ~~ R
00-01-6	4-Nitroaniline	890.	U	8900.	~~U~~ UR	930.	U	9300.	~~U~~ UR	1000.	U	4100.	~~U~~ UR
534-52-1	2-Methyl-4,6-Dinitrophenol	890.	U	8900.	~~U~~	930.	U	9300.	~~U~~	1000.	U	4100.	~~U~~
86-30-6	N-Nitrosodiphenylamine	360.	U	3600.	~~U~~	370.	U	3700.	~~U~~	410.	U	1600.	~~U~~
01-55-3	4-Bromophenyl-phenylether	360.	U	3600.	~~U~~	370.	U	3700.	~~U~~	410.	U	1600.	~~U~~
118-74-1	Hexachlorobenzene	360.	U	3600.	~~U~~	370.	U	3700.	~~U~~	410.	U	1600.	~~U~~
87-86-5	Pentachlorophenol	890.	U	8900.	~~U~~	930.	U	9300.	~~U~~	1000.	U	4100.	~~U~~
85-01-8	Phenanthrene	1800.		2100.	~~J~~ R	4400 ~~3800.~~	~~E~~ D	4400.	~~D~~ R	3000.		2500.	~~D~~
120-12-7	Anthracene	360.	U	3600.	~~U~~ UR	370.	U	3700.	~~U~~ UR	920.		560.	~~DJ~~ R
84-74-2	Di-n-butylphthalate	360.	U	3600.	~~U~~	370.	U	3700.	~~U~~	410.	U	1600.	~~U~~ UR
206-44-0	Fluoranthene	120.	J	3600.	~~U~~	370.	U	3700.	~~U~~	5700 ~~5500.~~	~~E~~ D	5700.	~~D~~ R
129-00-0	Pyrene	130.	J	190.	~~J~~ R	210.	J	250.	~~DJ~~ R	5400 ~~5800.~~	~~E~~ D	5400.	~~D~~ R
85-68-7	Butylbenzylphthalate	360.	U	3600.	~~U~~ UR	370.	U	3700.	~~U~~ UR	410.	U	1600.	~~U~~
91-94-1	3,3'-Dichlorobenzidine	360.	U	3600.	~~U~~	370.	U	3700.	~~U~~	410.	U	1600.	~~U~~
56-55-3	Benzo(a)anthracene	35.	J	3600.	~~U~~	24.	J	3700.	~~U~~	2900 ~~3600.~~	~~E~~ D	2900.	~~D~~ R
117-81-7	bis(2-Ethylhexyl)phthalate (BEHP)	140.	J	3600.	~~U~~	24.	J	3700.	~~U~~	~~3400~~ ~~70.~~ 410	~~JB~~ U	170.	~~DJB~~ R
218-01-9	Chrysene	75.	J	3600.	~~U~~	47.	J	3700.	~~U~~	2700 ~~3400.~~	~~E~~ D	2700.	~~D~~ UR
117-84-0	Di-n-octyl phthalate	360.	U	3600.	~~U~~	370.	U	3700.	~~U~~	410.	U	1600.	~~U~~
205-99-2	Benzo(b)fluoranthene	26.	J	3600.	~~U~~	370.	U	3700.	~~U~~	2200 ~~3800.~~	~~E~~ D	2200.	~~D~~
207-08-9	Benzo(k)fluoranthene	360.	U	3600.	~~U~~	370.	U	3700.	~~U~~	2000.		2000.	~~D~~
50-32-8	Benzo(a)pyrene	23.	J	3600.	~~U~~	370.	U	3700.	~~U~~	2600.		1900.	~~D~~
193-39-5	Indeno(1,2,3-cd)pyrene	360.	U	3600.	~~U~~	370.	U	3700.	~~U~~	1300.		780.	~~DJ~~ R
53-70-3	Dibenz(a,h)anthracene	360.	U	3600.	~~U~~	370.	U	3700.	~~U~~	690.		340.	~~DJ~~ R
191-24-2	Benzo(g,h,i)perylene	18.	J	3600.	~~U~~	370.	U	3700.	~~U~~	1400.		830.	~~DJ~~ R

1101499

CHARLESTON - ZONE G
CHARLESTON ZONE G SOIL (ONLY)
SDG# 39715

46-SVOA

	SAMPLE ID ------->	FDS-S-H029-02				FDS-S-H030-01				FDS-S-H030-01 DL				FDS-C-H030-01				FDS-S-H030-02				FDS-S-H031-01			
	ORIGINAL ID ----->	FDSSH02902				FDSSH03001				FDSSH03001				FDSCH03001				FDSSH03002				FDSSH03101			
	LAB SAMPLE ID --->	39726.12				39715.07				39715.07				39715.08				39715.09				39726.07			
	ID FROM REPORT -->	FDSSH02902				FDSSH03001				FDSSH03001				FDSCH03001				FDSSH03002				FDSSH03101			
	SAMPLE DATE ----->	07/29/99				07/28/99				07/28/99				07/28/99				07/28/99				07/29/99			
	DATE EXTRACTED -->	08/02/99				07/30/99				07/30/99				07/30/99				07/30/99				08/02/99			
	DATE ANALYZED --->	08/13/99				08/13/99				08/17/99				08/13/99				08/13/99				08/13/99			
	MATRIX ---------->	Soil				Soil				Soil				Soil				Soil				Soil			
	UNITS ---------->	UG/KG			A	UG/KG			A	UG/KG			C	UG/KG			A	UG/KG			A	UG/KG			A
CAS #	Parameter	39715				39715				39715				39715				39715				39715			
108-95-2	Phenol	420.	U			390.	U			780.	U	UR		410.	U			370.	U			340.	U		
111-44-4	bis(2-Chloroethyl)ether	420.	U			390.	U			780.	U			410.	U			370.	U			340.	U		
95-57-8	2-Chlorophenol	420.	U			390.	U			780.	U			410.	U			370.	U			340.	U		
541-73-1	1,3-Dichlorobenzene	420.	U			390.	U			780.	U			410.	U			370.	U			340.	U		
106-46-7	1,4-Dichlorobenzene	420.	U			390.	U			780.	U			410.	U			370.	U			340.	U		
100-51-6	Benzyl alcohol	420.	U			390.	U			780.	U			410.	U			370.	U			340.	U		
95-50-1	1,2-Dichlorobenzene	420.	U			390.	U			780.	U			410.	U			370.	U			340.	U		
95-48-7	2-Methylphenol (o-Cresol)	420.	U			390.	U			780.	U			410.	U			370.	U			340.	U		
108-60-1	2,2'-oxybis(1-Chloropropane)	420.	U			390.	U			780.	U			410.	U			370.	U			340.	U		
106-44-5	4-Methylphenol (p-Cresol)	420.	U			390.	U			780.	U			410.	U			370.	U			340.	U		
621-64-7	N-Nitroso-di-n-propylamine	420.	U			390.	U			780.	U			410.	U			370.	U			340.	U		
67-72-1	Hexachloroethane	420.	U			390.	U			780.	U			410.	U			370.	U			340.	U		
98-95-3	Nitrobenzene	420.	U			390.	U			780.	U			410.	U			370.	U			340.	U		
78-59-1	Isophorone	420.	U			390.	U			780.	U			410.	U			370.	U			340.	U		
88-75-5	2-Nitrophenol	420.	U			390.	U			780.	U			410.	U			370.	U			340.	U		
105-67-9	2,4-Dimethylphenol	420.	U			390.	U			780.	U			410.	U			370.	U			340.	U		
65-85-0	Benzoic acid	420.	U			390.	U			780.	U			410.	U			370.	U			340.	U		
111-91-1	bis(2-Chloroethoxy)methane	420.	U			390.	U			780.	U			410.	U			370.	U			340.	U		
120-83-2	2,4-Dichlorophenol	420.	U			390.	U			780.	U			410.	U			370.	U			340.	U		
120-82-1	1,2,4-Trichlorobenzene	420.	U			390.	U			780.	U			410.	U			370.	U			340.	U		
91-20-3	Naphthalene	420.	U			390.	U			120.	J	R		34.	J			370.	U			340.	U		
106-47-8	4-Chloroaniline	420.	U			390.	U			780.	U	UR		410.	U			370.	U			340.	U		
87-68-3	Hexachlorobutadiene	420.	U			390.	U			780.	U			410.	U			370.	U			340.	U		
59-50-7	4-Chloro-3-methylphenol	420.	U			390.	U			780.	U			410.	U			370.	U			340.	U		
91-57-6	2-Methylnaphthalene	420.	U			390.	U			780.	U			410.	U			370.	U			340.	U		
77-47-4	Hexachlorocyclopentadiene	420.	U			390.	U			780.	U			410.	U			370.	U			340.	U		
88-06-2	2,4,6-Trichlorophenol	420.	U			390.	U			780.	U			410.	U			370.	U			340.	U		
95-95-4	2,4,5-Trichlorophenol	1000.	U			970.	U			1900.	U			1000.	U			930.	U			850.	U		
91-58-7	2-Chloronaphthalene	420.	U			390.	U			780.	U			410.	U			370.	U			340.	U		
88-74-4	2-Nitroaniline	1000.	U			970.	U			1900.	U			1000.	U			930.	U			850.	U		
131-11-3	Dimethyl phthalate	420.	U			390.	U			780.	U			410.	U			370.	U			340.	U		
208-96-8	Acenaphthylene	420.	U			390.	U			130.	J	R		93.	J			370.	U			340.	U		
99-09-2	3-Nitroaniline	1000.	U			970.	U			1900.	U	UR		1000.	U			930.	U			850.	U		
83-32-9	Acenaphthene	420.	U			390.	U			170.	J	R		150.	J			370.	U			340.	U		
51-28-5	2,4-Dinitrophenol	1000.	U			970.	U			1900.	U	UR		1000.	U			930.	U			850.	U		
100-02-7	4-Nitrophenol	1000.	U			970.	U			1900.	U			1000.	U			930.	U			850.	U		

CHARLESTON - ZONE G
CHARLESTON ZONE G SOIL (ONLY)
SDG# 39715

46-SVOA

	SAMPLE ID ------->	FDS-S-H029-02		FDS-S-H030-01		FDS-S-H030-01 DL		FDS-C-H030-01		FDS-S-H030-02		FDS-S-H031-01	
	ORIGINAL ID ----->	FDSSH02902		FDSSH03001		FDSSH03001		FDSCH03001		FDSSH03002		FDSSH03101	
	LAB SAMPLE ID --->	39726.12		39715.07		39715.07		39715.08		39715.09		39726.07	
	ID FROM REPORT -->	FDSSH02902		FDSSH03001		FDSSH03001		FDSCH03001		FDSSH03002		FDSSH03101	
	SAMPLE DATE ----->	07/29/99		07/28/99		07/28/99		07/28/99		07/28/99		07/29/99	
	DATE EXTRACTED -->	08/02/99		07/30/99		07/30/99		07/30/99		07/30/99		08/02/99	
	DATE ANALYZED --->	08/13/99		08/13/99		08/17/99		08/13/99		08/13/99		08/13/99	
	MATRIX ---------->	Soil		Soil		Soil		Soil		Soil		Soil	
	UNITS ---------->	UG/KG	A	UG/KG	A	UG/KG	C	UG/KG	A	UG/KG	A	UG/KG	A
CAS #	Parameter	39715		39715		39715		39715		39715		39715	
132-64-9	Dibenzofuran	420.	U	390.	U	780.	U UR	84.	J	370.	U	340.	U
121-14-2	2,4-Dinitrotoluene	420.	U	390.	U	780.	U	410.	U	370.	U	340.	U
606-20-2	2,6-Dinitrotoluene	420.	U	390.	U	780.	U	410.	U	370.	U	340.	U
84-66-2	Diethylphthalate	420.	U	390.	U	780.	U	410.	U	370.	U	340.	U
005-72-3	4-Chlorophenylphenylether	420.	U	390.	U	780.	U	410.	U	370.	U	340.	U
86-73-7	Fluorene	420.	U	190.	J	210.	~~J~~ R	180.	J	500.		340.	U
100-01-6	4-Nitroaniline	1000.	U	970.	U	1900.	U UR	1000.	U	930.	U	850.	U
534-52-1	2-Methyl-4,6-Dinitrophenol	1000.	U	970.	U	1900.	U	1000.	U	930.	U	850.	U
86-30-6	N-Nitrosodiphenylamine	420.	U	390.	U	780.	U	410.	U	370.	U	340.	U
101-55-3	4-Bromophenyl-phenylether	420.	U	390.	U	780.	U	410.	U	370.	U	340.	U
118-74-1	Hexachlorobenzene	420.	U	390.	U	780.	U	410.	U	370.	U	340.	U
87-86-5	Pentachlorophenol	1000.	U	970.	U	1900.	U	1000.	U	930.	U	850.	U
85-01-8	Phenanthrene	420.	U	1200.		1400.	U	1000.		290.	J	340.	U
120-12-7	Anthracene	420.	U	600.	~~J~~	630.	~~J~~ R	410.	~~J~~	370.	U	340.	U
84-74-2	Di-n-butylphthalate	420.	U	390.	U	780.	U UR	410.	U	370.	U	17.	J
206-44-0	Fluoranthene	37.	J	~~4200~~ ~~4000.~~	~~E~~ D	4200.		1700.	~~J~~	76.	J	99.	J
129-00-0	Pyrene	29.	J	3100.	~~J~~	3100.	U	1400.	~~J~~	79.	J	94.	J
85-68-7	Butylbenzylphthalate	420.	U	390.	U	780.	U	410.	U	370.	U	340.	U
91-94-1	3,3'-Dichlorobenzidine	420.	U	390.	U	780.	U	410.	U	370.	U	340.	U
56-55-3	Benzo(a)anthracene	22.	J	2200.	~~J~~	2200.	~~J~~ R	770.	~~J~~	23.	J	82.	J
117-81-7	bis(2-Ethylhexyl)phthalate (BEHP)	420 ~~65.~~	~~JB~~ U	44.	J	780.	U UR	80.	J	30.	J	340 ~~45.~~	~~JB~~ U
218-01-9	Chrysene	23.	J	2200.	~~J~~	2100.	~~J~~ R	790.	~~J~~	26.	J	110.	J
117-84-0	Di-n-octyl phthalate	420.	U	390.	U	780.	U UR	410.	U	370.	U	340.	U
205-99-2	Benzo(b)fluoranthene	35.	J	1900.	~~J~~	1900.	R	800.	~~J~~	370.	U	140.	J
207-08-9	Benzo(k)fluoranthene	420.	U	1600.	~~J~~	2100.	R	440.	~~J~~	370.	U	73.	J
50-32-8	Benzo(a)pyrene	420.	U	2000.	~~J~~	2300.	R	730.	~~J~~	370.	U	94.	J
193-39-5	Indeno(1,2,3-cd)pyrene	420.	U	1200.	~~J~~	1200.	R	420.	~~J~~	370.	U	39.	J
53-70-3	Dibenz(a,h)anthracene	420.	U	600.	~~J~~	700.	J R	230.	~~J~~	370.	U	340.	U
191-24-2	Benzo(g,h,i)perylene	420.	U	1200.	~~J~~	1300.	R	550.	~~J~~	370.	U	39.	J

L 101499

CHARLESTON - ZONE G
CHARLESTON ZONE G SOIL (ONLY)
SDG# 39715

46-SVOA

	SAMPLE ID ------->	FDS-C-H031-01		FDS-S-H031-02		SBL-0-9715-01		SBL-0-9715-02	
	ORIGINAL ID ----->	FDSCH03101		FDSSH03102		SBLK1		SBLK2	
	LAB SAMPLE ID --->	39726.08		39726.09		SBLK1		SBLK2	
	ID FROM REPORT -->	FDSCH03101		FDSSH03102		SBLK1		SBLK2	
	SAMPLE DATE ----->	07/29/99		07/29/99		07/29/99		07/29/99	
	DATE EXTRACTED -->	08/02/99		08/02/99		07/30/99		08/02/99	
	DATE ANALYZED --->	08/13/99		08/13/99		08/13/99		08/13/99	
	MATRIX ---------->	Soil		Soil		Soil		Soil	
	UNITS ---------->	UG/KG	A	UG/KG	A	UG/KG	D	UG/KG	D
CAS #	Parameter	39715		39715		39715		39715	
108-95-2	Phenol	340.	U	380.	U	330.	U	330.	U
111-44-4	bis(2-Chloroethyl)ether	340.	U	380.	U	330.	U	330.	U
95-57-8	2-Chlorophenol	340.	U	380.	U	330.	U	330.	U
541-73-1	1,3-Dichlorobenzene	340.	U	380.	U	330.	U	330.	U
106-46-7	1,4-Dichlorobenzene	340.	U	380.	U	330.	U	330.	U
100-51-6	Benzyl alcohol	340.	U	380.	U	330.	U	330.	U
95-50-1	1,2-Dichlorobenzene	340.	U	380.	U	330.	U	330.	U
95-48-7	2-Methylphenol (o-Cresol)	340.	U	380.	U	330.	U	330.	U
108-60-1	2,2'-oxybis(1-Chloropropane)	340.	U	380.	U	330.	U	330.	U
106-44-5	4-Methylphenol (p-Cresol)	340.	U	380.	U	330.	U	330.	U
621-64-7	N-Nitroso-di-n-propylamine	340.	U	380.	U	330.	U	330.	U
67-72-1	Hexachloroethane	340.	U	380.	U	330.	U	330.	U
98-95-3	Nitrobenzene	340.	U	380.	U	330.	U	330.	U
78-59-1	Isophorone	340.	U	380.	U	330.	U	330.	U
88-75-5	2-Nitrophenol	340.	U	380.	U	330.	U	330.	U
105-67-9	2,4-Dimethylphenol	340.	U	380.	U	330.	U	330.	U
65-85-0	Benzoic acid	340.	U	380.	U	330.	U	330.	U
111-91-1	bis(2-Chloroethoxy)methane	340.	U	380.	U	330.	U	330.	U
120-83-2	2,4-Dichlorophenol	340.	U	380.	U	330.	U	330.	U
120-82-1	1,2,4-Trichlorobenzene	340.	U	380.	U	330.	U	330.	U
91-20-3	Naphthalene	340.	U	380.	U	330.	U	330.	U
106-47-8	4-Chloroaniline	340.	U	380.	U	330.	U	330.	U
87-68-3	Hexachlorobutadiene	340.	U	380.	U	330.	U	330.	U
59-50-7	4-Chloro-3-methylphenol	340.	U	380.	U	330.	U	330.	U
91-57-6	2-Methylnaphthalene	340.	U	380.	U	330.	U	330.	U
77-47-4	Hexachlorocyclopentadiene	340.	U	380.	U	330.	U	330.	U
88-06-2	2,4,6-Trichlorophenol	340.	U	380.	U	330.	U	330.	U
95-95-4	2,4,5-Trichlorophenol	850.	U	960.	U	830.	U	830.	U
91-58-7	2-Chloronaphthalene	340.	U	380.	U	330.	U	330.	U
88-74-4	2-Nitroaniline	850.	U	960.	U	830.	U	830.	U
131-11-3	Dimethyl phthalate	340.	U	380.	U	330.	U	330.	U
208-96-8	Acenaphthylene	340.	U	380.	U	330.	U	330.	U
99-09-2	3-Nitroaniline	850.	U	960.	U	830.	U	830.	U
83-32-9	Acenaphthene	340.	U	380.	U	330.	U	330.	U
51-28-5	2,4-Dinitrophenol	850.	U	960.	U	830.	U	830.	U
100-02-7	4-Nitrophenol	850.	U	960.	U	830.	U	830.	U

UM101499

CHARLESTON - ZONE G
CHARLESTON ZONE G SOIL (ONLY)
SDG# 39715

6-SVOA	SAMPLE ID ------->	FDS-C-H031-01		FDS-S-H031-02		SBL-0-9715-01		SBL-0-9715-02			
	ORIGINAL ID ----->	FDSCH03101		FDSSH03102		SBLK1		SBLK2			
	LAB SAMPLE ID --->	39726.08		39726.09		SBLK1		SBLK2			
	ID FROM REPORT -->	FDSCH03101		FDSSH03102		SBLK1		SBLK2			
	SAMPLE DATE ----->	07/29/99		07/29/99		07/29/99		07/29/99			
	DATE EXTRACTED -->	08/02/99		08/02/99		07/30/99		08/02/99			
	DATE ANALYZED --->	08/13/99		08/13/99		08/13/99		08/13/99			
	MATRIX ---------->	Soil		Soil		Soil		Soil			
	UNITS ---------->	UG/KG	A	UG/KG	A	UG/KG	D	UG/KG	D		
CAS #	Parameter	39715		39715		39715		39715			
132-64-9	Dibenzofuran	340.	U	380.	U	330.	U	330.	U		
121-14-2	2,4-Dinitrotoluene	340.	U	380.	U	330.	U	330.	U		
606-20-2	2,6-Dinitrotoluene	340.	U	380.	U	330.	U	330.	U		
84-66-2	Diethylphthalate	340.	U	380.	U	330.	U	330.	U		
005-72-3	4-Chlorophenylphenylether	340.	U	380.	U	330.	U	330.	U		
86-73-7	Fluorene	340.	U	380.	U	330.	U	330.	U		
100-01-6	4-Nitroaniline	850.	U	960.	U	830.	U	830.	U		
534-52-1	2-Methyl-4,6-Dinitrophenol	850.	U	960.	U	830.	U	830.	U		
86-30-6	N-Nitrosodiphenylamine	340.	U	380.	U	330.	U	330.	U		
101-55-3	4-Bromophenyl-phenylether	340.	U	380.	U	330.	U	330.	U		
118-74-1	Hexachlorobenzene	340.	U	380.	U	330.	U	330.	U		
87-86-5	Pentachlorophenol	850.	U	960.	U	830.	U	830.	U		
85-01-8	Phenanthrene	340.	U	380.	U	330.	U	330.	U		
120-12-7	Anthracene	340.	U	380.	U	330.	U	330.	U		
84-74-2	Di-n-butylphthalate	17.	J	380.	U	330.	U	330.	U		
206-44-0	Fluoranthene	21.	J	380.	U	330.	U	330.	U		
129-00-0	Pyrene	340.	U	380.	U	330.	U	330.	U		
85-68-7	Butylbenzylphthalate	340.	U	380.	U	330.	U	330.	U		
91-94-1	3,3'-Dichlorobenzidine	340.	U	380.	U	330.	U	330.	U		
56-55-3	Benzo(a)anthracene	340.	U	380.	U	330.	U	330.	U		
117-81-7	bis(2-Ethylhexyl)phthalate (BEHP)	340 ~~89.~~	~~JB~~ U	380 ~~87.~~	~~JB~~ U	330.	U	28.	J		
218-01-9	Chrysene	340.	U	380.	U	330.	U	330.	U		
117-84-0	Di-n-octyl phthalate	340.	U	380.	U	330.	U	330.	U		
205-99-2	Benzo(b)fluoranthene	340.	U	380.	U	330.	U	330.	U		
207-08-9	Benzo(k)fluoranthene	340.	U	380.	U	330.	U	330.	U		
50-32-8	Benzo(a)pyrene	340.	U	380.	U	330.	U	330.	U		
193-39-5	Indeno(1,2,3-cd)pyrene	340.	U	380.	U	330.	U	330.	U		
53-70-3	Dibenz(a,h)anthracene	340.	U	380.	U	330.	U	330.	U		
191-24-2	Benzo(g,h,i)perylene	340.	U	380.	U	330.	U	330.	U		

L 101499

CAW
10/22/99

CHARLESTON - ZONE G
CHARLESTON ZONE G SOIL (ONLY)
SDG# 39715

46-VOA

	SAMPLE ID ------->	BLK-0-9715-05		BLK-0-9715-09		BLK-0-9715-10		BLK-0-9715-11		FDS-T-B031-01		FDS-S-H028-01	
	ORIGINAL ID ----->	N990803A		R990804A		R990805A		U990803A		FDSTB03101		FDSSH02801	
	LAB SAMPLE ID --->	N990803A		R990804A		R990805A		U990803A		39726.10		39715.10	
	ID FROM REPORT -->	N990803A		R990804A		R990805A		U990803A		FDSTB03101		FDSSH02801	
	SAMPLE DATE ----->	07/29/99		07/29/99		07/29/99		07/29/99		07/29/99		07/28/99	
	DATE ANALYZED --->	08/03/99		08/04/99		08/05/99		08/03/99		08/03/99		08/04/99	
	MATRIX ---------->	Soil		Soil		Soil		Water		Water		Soil	
	UNITS ---------->	UG/KG	D	UG/KG	D	UG/KG	D	UG/L	D	UG/L	B	UG/KG	A
CAS #	Parameter	39715		39715		39715		39715		39715		39715	
74-87-3	Chloromethane	5.	U	5.	U	5.	U	5.	U	5.	U	6.	~~U~~ UJ
74-83-9	Bromomethane	5.	U	5.	U	5.	U	5.	U	5.	U	6.	~~U~~ UJ
75-01-4	Vinyl chloride	5.	U	5.	U	5.	U	5.	U	5.	U	6.	U
75-00-3	Chloroethane	5.	U	5.	U	5.	U	5.	U	5.	U	6.	~~U~~ UJ
75-09-2	Methylene chloride	5.	U	5.	U	5.	U	5.	U	5.	U	6.	U
67-64-1	Acetone	5.	U	5.	U	5.	U	5.	U	5.	U	80.	
75-15-0	Carbon disulfide	5.	U	5.	U	5.	U	5.	U	5.	U	6.	U
75-35-4	1,1-Dichloroethene	5.	U	5.	U	5.	U	5.	U	5.	U	6.	U
75-34-3	1,1-Dichloroethane	5.	U	5.	U	5.	U	5.	U	5.	U	6.	U
540-59-0	1,2-Dichloroethene (total)	5.	U	5.	U	5.	U	5.	U	5.	U	6.	U
67-66-3	Chloroform	5.	U	5.	U	5.	U	5.	U	5.	U	6.	U
107-06-2	1,2-Dichloroethane	5.	U	5.	U	5.	U	5.	U	5.	U	6.	U
78-93-3	2-Butanone (MEK)	5.	U	5.	U	5.	U	5.	U	5.	U	6.	U
71-55-6	1,1,1-Trichloroethane	5.	U	5.	U	5.	U	5.	U	5.	U	6.	U
56-23-5	Carbon tetrachloride	5.	U	5.	U	5.	U	5.	U	5.	U	6.	U
108-05-4	Vinyl acetate	5.	U	5.	U	5.	U	5.	U	5.	U	6.	U
75-27-4	Bromodichloromethane	5.	U	5.	U	5.	U	5.	U	5.	U	6.	U
79-34-5	1,1,2,2-Tetrachloroethane	5.	U	5.	U	5.	U	5.	U	5.	U	6.	U
78-87-5	1,2-Dichloropropane	5.	U	5.	U	5.	U	5.	U	5.	U	6.	U
061-02-6	trans-1,3-Dichloropropene	5.	U	5.	U	5.	U	5.	U	5.	U	6.	U
79-01-6	Trichloroethene	5.	U	5.	U	5.	U	5.	U	5.	U	6.	U
124-48-1	Dibromochloromethane	5.	U	5.	U	5.	U	5.	U	5.	U	6.	U
79-00-5	1,1,2-Trichloroethane	5.	U	5.	U	5.	U	5.	U	5.	U	6.	U
71-43-2	Benzene	5.	U	5.	U	5.	U	5.	U	5.	U	6.	U
061-01-5	cis-1,3-Dichloropropene	5.	U	5.	U	5.	U	5.	U	5.	U	6.	U
110-75-8	2-Chloroethyl vinyl ether	5.	U	5.	U	5.	U	5.	U	5.	U	6.	U
75-25-2	Bromoform	5.	U	5.	U	5.	U	5.	U	5.	U	6.	U
591-78-6	2-Hexanone	5.	U	5.	U	5.	U	5.	U	5.	U	6.	U
108-10-1	4-Methyl-2-Pentanone (MIBK)	5.	U	5.	U	5.	U	5.	U	5.	U	6.	U
127-18-4	Tetrachloroethene	5.	U	5.	U	5.	U	5.	U	5.	U	6.	U
108-88-3	Toluene	5.	U	5.	U	5.	U	5.	U	5.	U	6.	U
108-90-7	Chlorobenzene	5.	U	5.	U	5.	U	5.	U	5.	U	6.	U
100-41-4	Ethylbenzene	5.	U	5.	U	5.	U	5.	U	5.	U	6.	J
100-42-5	Styrene	5.	U	5.	U	5.	U	5.	U	5.	U	6.	U
330-20-7	Xylene (Total)	5.	U	5.	U	5.	U	5.	U	5.	U	6.	U

WM 10/14/99

CHARLESTON - ZONE G
CHARLESTON ZONE G SOIL (ONLY)
SDG# 39715

6-VOA

	SAMPLE ID ------->	FDS-S-H028-02		FDS-S-H029-01		FDS-S-H029-02		FDS-S-H030-01		FDS-C-H030-01		FDS-S-H030-02	
	ORIGINAL ID ----->	FDSSH02802		FDSSH02901		FDSSH02902		FDSSH03001		FDSCH03001		FDSSH03002	
	LAB SAMPLE ID --->	39715.11		39726.11		39726.12		39715.07		39715.08		39715.09	
	ID FROM REPORT -->	FDSSH02802		FDSSH02901		FDSSH02902		FDSSH03001		FDSCH03001		FDSSH03002	
	SAMPLE DATE ----->	07/28/99		07/29/99		07/29/99		07/28/99		07/28/99		07/28/99	
	DATE ANALYZED --->	08/05/99		08/03/99		08/04/99		08/05/99		08/05/99		08/05/99	
	MATRIX ---------->	Soil		Soil		Soil		Soil		Soil		Soil	
	UNITS ---------->	UG/KG	A	UG/KG	A	UG/KG	A	UG/KG	A	UG/KG	A	UG/KG	A
CAS #	Parameter	39715		39715		39715		39715		39715		39715	
74-87-3	Chloromethane	7.	U	5.	U	5.	~~U~~ UJ	5.	U	7.	U	7.	U
74-83-9	Bromomethane	7.	U	5.	U	5.	~~U~~ UJ	5.	U	7.	U	7.	U
75-01-4	Vinyl chloride	7.	U	5.	U	5.	U	5.	U	7.	U	7.	U
75-00-3	Chloroethane	7.	U	5.	U	5.	~~U~~ UJ	5.	U	7.	U	7.	U
75-09-2	Methylene chloride	7.	U	5.	U	5.	U	5.	U	7.	U	7.	U
67-64-1	Acetone	7.	U	5.	U	5.	U	5.	U	7.	U	60.	
75-15-0	Carbon disulfide	7.	U	5.	U	5.	U	5.	U	7.	U	7.	U
75-35-4	1,1-Dichloroethene	7.	U	5.	U	5.	U	5.	U	7.	U	7.	U
75-34-3	1,1-Dichloroethane	7.	U	5.	U	5.	U	5.	U	7.	U	7.	U
540-59-0	1,2-Dichloroethene (total)	7.	U	5.	U	5.	U	5.	U	7.	U	7.	U
67-66-3	Chloroform	7.	U	5.	U	5.	U	5.	U	7.	U	7.	U
107-06-2	1,2-Dichloroethane	7.	U	5.	U	5.	U	5.	U	7.	U	7.	U
78-93-3	2-Butanone (MEK)	7.	U	5.	U	5.	U	5.	U	7.	U	7.	U
71-55-6	1,1,1-Trichloroethane	7.	U	5.	U	5.	U	5.	U	7.	U	7.	U
56-23-5	Carbon tetrachloride	7.	U	5.	U	5.	U	5.	U	7.	U	7.	U
108-05-4	Vinyl acetate	7.	U	5.	U	5.	U	5.	U	7.	U	7.	U
75-27-4	Bromodichloromethane	7.	U	5.	U	5.	U	5.	U	7.	U	7.	U
79-34-5	1,1,2,2-Tetrachloroethane	7.	U	5.	U	5.	U	5.	U	7.	U	7.	U
78-87-5	1,2-Dichloropropane	7.	U	5.	U	5.	U	5.	U	7.	U	7.	U
061-02-6	trans-1,3-Dichloropropene	7.	U	5.	U	5.	U	5.	U	7.	U	7.	U
79-01-6	Trichloroethene	7.	U	5.	U	5.	U	5.	U	7.	U	7.	U
124-48-1	Dibromochloromethane	7.	U	5.	U	5.	U	5.	U	7.	U	7.	U
79-00-5	1,1,2-Trichloroethane	7.	U	5.	U	5.	U	5.	U	7.	U	7.	U
71-43-2	Benzene	7.	U	5.	U	5.	U	5.	U	7.	U	7.	U
061-01-5	cis-1,3-Dichloropropene	7.	U	5.	U	5.	U	5.	U	7.	U	7.	U
110-75-8	2-Chloroethyl vinyl ether	7.	U	5.	U	5.	U	5.	U	7.	U	7.	U
75-25-2	Bromoform	7.	U	5.	U	5.	U	5.	U	7.	U	7.	U
591-78-6	2-Hexanone	7.	U	5.	U	5.	U	5.	U	7.	U	7.	U
108-10-1	4-Methyl-2-Pentanone (MIBK)	7.	U	5.	U	5.	U	5.	U	7.	U	7.	U
127-18-4	Tetrachloroethene	7.	U	5.	U	5.	U	5.	U	7.	U	7.	U
108-88-3	Toluene	7.	U	5.	U	5.	U	5.	U	7.	U	7.	U
108-90-7	Chlorobenzene	7.	U	5.	U	5.	U	5.	U	7.	U	7.	U
100-41-4	Ethylbenzene	7.	U	5.	U	5.	U	5.	U	7.	U	7.	U
100-42-5	Styrene	7.	U	5.	U	5.	U	5.	U	7.	U	7.	U
330-20-7	Xylene (Total)	7.	U	5.	U	5.	U	5.	U	7.	U	7.	U

U^1 101499

CHARLESTON - ZONE G
CHARLESTON ZONE G SOIL (ONLY)
SDG# 39715

346-VOA	SAMPLE ID ------->	FDS-S-H031-01		FDS-C-H031-01		FDS-S-H031-02				
	ORIGINAL ID ----->	FDSSH03101		FDSCH03101		FDSSH03102				
	LAB SAMPLE ID --->	39726.07		39726.08		39726.09				
	ID FROM REPORT -->	FDSSH03101		FDSCH03101		FDSSH03102				
	SAMPLE DATE ----->	07/29/99		07/29/99		07/29/99				
	DATE ANALYZED --->	08/03/99		08/04/99		08/03/99				
	MATRIX ---------->	Soil		Soil		Soil				
	UNITS ---------->	UG/KG	A	UG/KG	A	UG/KG	A			
CAS #	Parameter	39715		39715		39715				
74-87-3	Chloromethane	5.	~~U~~ UJ	6.	U	5.	U			
74-83-9	Bromomethane	5.	~~U~~ UJ	6.	U	5.	U			
75-01-4	Vinyl chloride	5.	U	6.	U	5.	U			
75-00-3	Chloroethane	5.	~~U~~ UJ	6.	U	5.	U			
75-09-2	Methylene chloride	5.	U	6.	U	5.	U			
67-64-1	Acetone	5.	U	6.	U	5.	U			
75-15-0	Carbon disulfide	5.	U	6.	U	1.	J			
75-35-4	1,1-Dichloroethene	5.	U	6.	U	5.	U			
75-34-3	1,1-Dichloroethane	5.	U	6.	U	5.	U			
540-59-0	1,2-Dichloroethene (total)	5.	U	6.	U	5.	U			
67-66-3	Chloroform	5.	U	6.	U	5.	U			
107-06-2	1,2-Dichloroethane	5.	U	6.	U	5.	U			
78-93-3	2-Butanone (MEK)	5.	U	6.	U	5.	U			
71-55-6	1,1,1-Trichloroethane	5.	U	6.	U	5.	U			
56-23-5	Carbon tetrachloride	5.	U	6.	U	5.	U			
108-05-4	Vinyl acetate	5.	U	6.	U	5.	U			
75-27-4	Bromodichloromethane	5.	U	6.	U	5.	U			
79-34-5	1,1,2,2-Tetrachloroethane	5.	U	6.	U	5.	U			
78-87-5	1,2-Dichloropropane	5.	U	6.	U	5.	U			
061-02-6	trans-1,3-Dichloropropene	5.	U	6.	U	5.	U			
79-01-6	Trichloroethene	5.	U	6.	U	5.	U			
124-48-1	Dibromochloromethane	5.	U	6.	U	5.	U			
79-00-5	1,1,2-Trichloroethane	5.	U	6.	U	5.	U			
71-43-2	Benzene	5.	U	6.	U	5.	U			
061-01-5	cis-1,3-Dichloropropene	5.	U	6.	U	5.	U			
110-75-8	2-Chloroethyl vinyl ether	5.	U	6.	U	5.	U			
75-25-2	Bromoform	5.	U	6.	U	5.	U			
591-78-6	2-Hexanone	5.	U	6.	U	5.	U			
108-10-1	4-Methyl-2-Pentanone (MIBK)	5.	U	6.	U	5.	U			
127-18-4	Tetrachloroethene	5.	U	6.	U	5.	U			
108-88-3	Toluene	5.	U	6.	U	5.	U			
108-90-7	Chlorobenzene	5.	U	6.	U	5.	U			
100-41-4	Ethylbenzene	5.	U	6.	U	5.	U			
100-42-5	Styrene	5.	U	6.	U	5.	U			
330-20-7	Xylene (Total)	5.	U	6.	U	5.	U			

UM101499

CHARLESTON - ZONE G
CHARLESTON ZONE G SOIL (ONLY)
SDG# 39715

	SAMPLE ID ------->	003-S-B014-02	633-S-B012-02	642-S-B011-02	643-S-B013-02		
	ORIGINAL ID ----->	003SB01402	633SB01202	642SB01102	643SB01302		
	LAB SAMPLE ID --->	40420.04	40420.03	40420.01	40420.02		
	ID FROM REPORT -->	003SB01402	633SB01202	642SB01102	643SB01302		
	SAMPLE DATE ----->	07/28/99	07/29/99	07/29/99	07/29/99		
	DATE EXTRACTED -->	09/23/99	09/23/99	09/23/99	09/23/99		
	DATE ANALYZED --->	09/27/99	09/27/99	09/27/99	09/27/99		
	MATRIX ---------->	Soil	Soil	Soil	Soil		
	UNITS ---------->	MG/KG A	MG/KG A	MG/KG A	MG/KG A		
CAS #	Parameter	39715 NV	39715 NV	39715 NV	39715 NV		
00-01-4	Total Organic Carbon (TOC)	??????????	??????????	??????????	??????????		
00-04-2	TOC (EPA 415.1)	2180.	2100.	4420.	17200.		

Julie
Change name to
Total Organic Carbon
Cas # 9999900-01-4

RB 10/12/99

Appendix D

CH2MHILL

PROJECT NUMBER	WELL NUMBER	
158814.ZG	G003GW004	page 1 of 1

SOIL SAMPLE LOG

PROJECT : Charleston Naval Complex (SWMU 3) **LOCATION :** Charleston, SC **NORTHING:** 373383.5646

ELEVATION : 11.49 **DRILLING CONTRACTOR :** Prosonic- Michael Coleman License # 889 **EASTING:** 2318864.9636

DRILLING METHOD AND EQUIPMENT USED : Direct-Push Sampling

START : 9/24/2002 **END:** 9/24/2002 **LOGGER :** D. Gates/NVR

DEPTH BELOW SURFACE (FT)	SAMPLE INTERVAL	SOIL DESCRIPTION SOIL NAME, USCS GROUP SYMBOL, COLOR, MOISTURE CONTENT, RELATIVE DENSITY, OR CONSISTENCY, SOIL STRUCTURE, MINERALOGY.	COMMENTS TESTS, INSTRUMENTATION ABANDONMENT METHOD
	0-1.0'	surface: grass **SAND**: dark brown, dry, silty, fine-grained	
	1.0-3.0'	**SAND:** orange brown, dry to moist, slightly silty, fine-grained	
	3.0-4.0'	**SAND**: orange-brown, moist, slightly clayey, fine grained,	
5	4.0-9.5'	**CLAY**: gray with rust mottling, moist, medium dense, slightly sandy	
10	9.5-11.0'	**SAND**: tan, slightly clayey, saturated at 10.0', water bearing	
	11.0-13.0'	**CLAY/SAND** stringers: clay is gray with rust mottling. Sand is tan as above, pea size gravel (about 1" length) at the 11.0' mark.	
	13.0-15.0'	Same as above to 14.5', then **CLAY,** gray, dry, medium dense	
15			Boring ended at 15.0'
20			
25			
30			

CH2MHILL

PROJECT NUMBER	WELL NUMBER	
158814.ZG	G003GW005	page 1 of 1

SOIL SAMPLE LOG

PROJECT : Charleston Naval Complex (SWMU 3) **LOCATION :** Charleston, SC **NORTHING:** 373337.6384

ELEVATION : 11.96 **DRILLING CONTRACTOR :** Prosonic- Michael Coleman License # 889 **EASTING:** 2318904.1056

DRILLING METHOD AND EQUIPMENT USED : Direct-Push Sampling

START : 9/24/2002 **END:** 9/24/2002 **LOGGER :** D. Gates/NVR

DEPTH BELOW SURFACE (FT)	SAMPLE INTERVAL	SOIL DESCRIPTION SOIL NAME, USCS GROUP SYMBOL, COLOR, MOISTURE CONTENT, RELATIVE DENSITY, OR CONSISTENCY, SOIL STRUCTURE, MINERALOGY.	COMMENTS TESTS, INSTRUMENTATION ABANDONMENT METHOD
		surface: shell, gravel	
	0-5.0'	**SAND:** brown to orange, fine grained, dry, slightly silty (SM)	
5			
	5.0-5.5'	Peat/coal particles	
	5.5-5.9'	**CLAYEY SAND:** fine grained orange with gray mottling, dry, medium dense, able to make ribbons (7 inches recovery)	
	7.0-8.0'	**CLAY** with fines: gray with orange nodules, ferrous, dry, medium dense	
	9.0-10.0'	Same as above, becoming sandy	
10			
	10.0-11.0'	**SAND:** slightly clayey, tan, saturated, soft (should make water)	
	11.0-12.0'	Same as above	
	12.0-13.5'	**CLAY** stringers intermittent with **SAND**, gray with rust nodules, mostly clay	Boring ended at 13.5'
15			
20			
25			
30			

CH2MHILL

PROJECT NUMBER	WELL NUMBER	
158814.ZG	G003GW006	page 1 of 1

SOIL SAMPLE LOG

PROJECT : Charleston Naval Complex (SWMU 3) **LOCATION :** Charleston, SC **NORTHING:** 373373.4955

ELEVATION : 12.34 **DRILLING CONTRACTOR :** Prosonic- Michael Coleman License # 889 **EASTING:** 2319020.4798

DRILLING METHOD AND EQUIPMENT USED : Direct-Push Sampling

START : 9/24/2002 **END:** 9/24/2002 **LOGGER :** D. Gates/NVR

DEPTH BELOW SURFACE (FT)	SAMPLE INTERVAL	SOIL DESCRIPTION SOIL NAME, USCS GROUP SYMBOL, COLOR, MOISTURE CONTENT, RELATIVE DENSITY, OR CONSISTENCY, SOIL STRUCTURE, MINERALOGY.	COMMENTS TESTS, INSTRUMENTATION ABANDONMENT METHOD
	0-2.0'	surface: shell, gravel **SAND**: slightly silty (SM), tan, fine grained, dry	
5	2.0-6.0'	**SAND**: slightly clayey (SC), orange-brown, fine grained, dry	
	6.0-7.0'	**SAND**: slightly clayey (SC), orange with rust nodules, fine grained, wet at 6.5' (24" recovery)	
	7.0-9.0'	Same as above (2.0" recovery)	
10	9.0-11.0'	Auger refusal at 10.0'. Appears to be concrete. Moved boring over 5 feet to continue drilling.	
	11.0-13.0'	**SANDY CLAY**: (SC), gray to tan, fine grained, saturated (6" recovery)	
	13.0-14.0'	Same as above	Boring ended at 14'
15			
20			
25			
30			

CH2MHILL

PROJECT NUMBER	WELL NUMBER	
158814.ZG	G003GW007	page 1 of 1

SOIL SAMPLE LOG

PROJECT : Charleston Naval Complex (SWMU 3) **LOCATION :** Charleston, SC **NORTHING:** 373306.4315

ELEVATION : 12.56 **DRILLING CONTRACTOR :** Prosonic- Michael Coleman License # 889 **EASTING:** 2319028.0065

DRILLING METHOD AND EQUIPMENT USED : Direct-Push Sampling

START : 9/25/2002 **END:** 9/25/2002 **LOGGER :** D. Gates/NVR

DEPTH BELOW SURFACE (FT)	SAMPLE INTERVAL	SOIL DESCRIPTION: SOIL NAME, USCS GROUP SYMBOL, COLOR, MOISTURE CONTENT, RELATIVE DENSITY, OR CONSISTENCY, SOIL STRUCTURE, MINERALOGY.	COMMENTS: TESTS, INSTRUMENTATION ABANDONMENT METHOD
	0-1.0'	surface: asphalt/limestone (2-3") **SAND:** brown, dry, soft, fine grained, slightly silty	
	1.0-3.0'	**SAND:** orange-brown, dry, soft, slightly silty	
	3.0-4.5'	**SAND:** orange-brown, moist, soft, slightly clayey	
	4.5-4.8'	**SAND:** light tan, moist, soft, slightly silty	
5	4.8-6.0'	**SAND:** orange-brown, moist, soft, slightly clayey	
	6.0-10.0'	**CLAY:** gray with rust nodules, moist and dry, medium dense, slightly sandy, fine-grained	
10	10.0-12.0'	**CLAY:** sandy, tan, wet, medium dense, fine grained	
	12.0-14.0'	**SAND:** slightly clay, tan, saturated, soft, fine grained, soft	Boring ended at 14.0'
15			
20			
25			
30			

CH2MHILL

PROJECT NUMBER	WELL NUMBER	
158814.ZG	G003GW008	page 1 of 1

SOIL SAMPLE LOG

PROJECT : Charleston Naval Complex (SWMU 3) **LOCATION :** Charleston, SC **NORTHING:** 373179.3522

ELEVATION : 10.93 **DRILLING CONTRACTOR :** Prosonic- Michael Coleman License # 889 **EASTING:** 2318942.6041

DRILLING METHOD AND EQUIPMENT USED : Direct-Push Sampling

START : 9/24/2002 **END:** 9/24/2002 **LOGGER :** D. Gates/NVR

DEPTH BELOW SURFACE (FT)	SAMPLE INTERVAL	SOIL DESCRIPTION: SOIL NAME, USCS GROUP SYMBOL, COLOR, MOISTURE CONTENT, RELATIVE DENSITY, OR CONSISTENCY, SOIL STRUCTURE, MINERALOGY.	COMMENTS: TESTS, INSTRUMENTATION ABANDONMENT METHOD
	0-1.0'	surface: grass **SAND:** fine grained, slightly silty, dry	
	1.0-4.0'	**SAND:** white, dry, slightly silty, fine grained	
5	4.0-5.0'	**CLAY:** gray,moist, soft, slightly sandy,	
	5.0-8.5'	**CLAY:** gray with rust nodules, slightly sandy, soft, moist to saturated at 6.5'	
10	8.5-13.0'	**SAND:** gray to tan, slightly clayey, saturated	Boring ended at 13.0'
15			
20			
25			
30			

CH2MHILL

PROJECT NUMBER	WELL NUMBER	
158814.ZG	G003GW009	page 1 of 1

SOIL SAMPLE LOG

PROJECT : Charleston Naval Complex (SWMU 3) **LOCATION :** Charleston, SC **NORTHING:** 373224.4825

ELEVATION : 10.77 **DRILLING CONTRACTOR :** Prosonic- Michael Coleman License # 889 **EASTING:** 2318878.9047

DRILLING METHOD AND EQUIPMENT USED : Direct-Push Sampling

START : 9/25/2002 **END:** 9/25/2002 **LOGGER :** D. Gates/NVR

DEPTH BELOW SURFACE (FT)	SAMPLE INTERVAL	SOIL DESCRIPTION SOIL NAME, USCS GROUP SYMBOL, COLOR, MOISTURE CONTENT, RELATIVE DENSITY, OR CONSISTENCY, SOIL STRUCTURE, MINERALOGY.	COMMENTS TESTS, INSTRUMENTATION ABANDONMENT METHOD
	0-1.0'	surface: grass **SAND:** tan, fine grained, dry	
5	1.0-9.0'	**CLAYEY SAND:** gray with rust nodules, moist, medium dense	
10	9.0-13.5'	**SAND:** slightly clayey, saturated, fine-grained, soft	
	13.5-14.0'	**CLAY/SAND** stringers, gray, tan, moist to wet	Boring ended at 14.0'
15			
20			
25			
30			

PROJECT NUMBER	WELL NUMBER	
158814.ZG	G003GW004	SHEET 1 OF 1

CH2MHILL

WELL COMPLETION DIAGRAM

PROJECT : SWMU 3, Zone G, Charleston Naval Complex — LOCATION : Charleston, South Carolina

DRILLING CONTRACTOR : Prosonic Corporation- Michael Coleman License # 889 — NORTHING 373383.5646

DRILLING METHOD AND EQUIPMENT USED : Hollow Stem Augering (4.25-inch diameter) — EASTING: 2318864.9636

WATER LEVELS : not measured — START : 9/24/2002 — END: 9/24/2002 — LOGGER : D. Gates/NVR

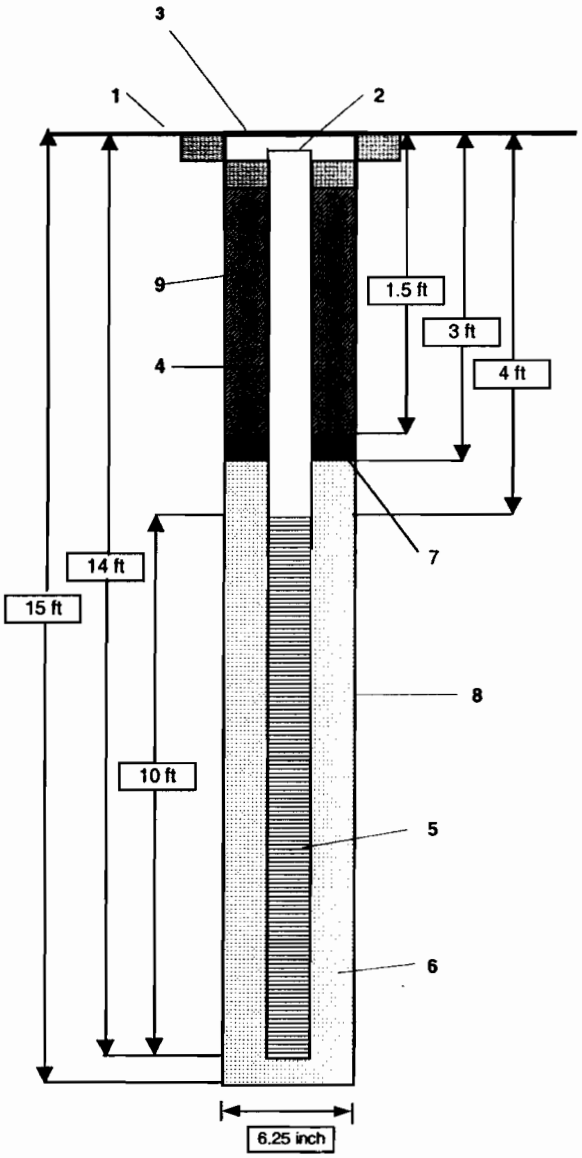

1- Ground elevation at well	not measured
2- Top of casing elevation	11.49'
3- Protective cover type	flush mount pad
a) concrete pad dimensions	2x2
4- Dia./type of well casing	2-inch inside diameter schedule 40 PVC
5- Type/slot size of screen	0.010-inch dia. machine slotted PVC
6- Type filter pack	20/30 Sieve Size Silica Sand (8 bags)
7- Type of seal	3/8-inch bentonite chips
8- Borehole diameter	6.25"
9- Grout	Type I Portland Cement

Note: Diagram not to scale.

PROJECT NUMBER	WELL NUMBER	
158814.ZG	G003GW005	SHEET 1 OF 1

CH2MHILL

WELL COMPLETION DIAGRAM

PROJECT : SWMU 3, Zone G, Charleston Naval Complex — LOCATION : Charleston, South Carolina

DRILLING CONTRACTOR : Prosonic Corporation- Michael Coleman License # 889 — NORTHING 373337.6384

DRILLING METHOD AND EQUIPMENT USED : Hollow Stem Augering (4.25-inch diameter) — EASTING: 2318904.1056

WATER LEVELS : not measured — START : 9/24/2002 — END: 9/24/2002 — LOGGER : D. Gates/NVR

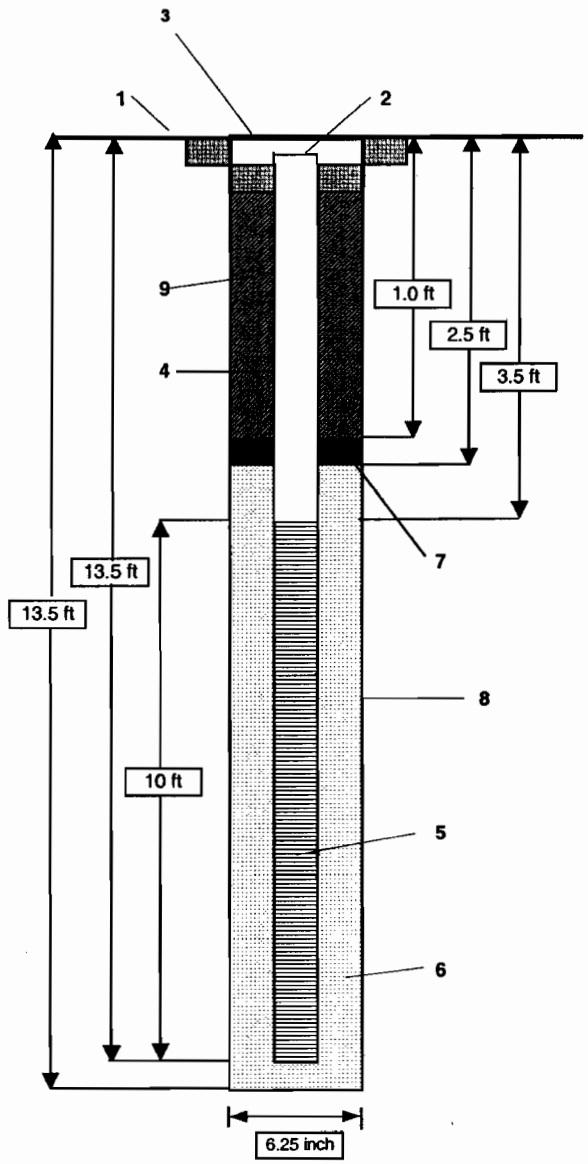

1- Ground elevation at well	not measured
2- Top of casing elevation	11.96'
3- Protective cover type	flush mount pad
a) concrete pad dimensions	2x2
4- Dia./type of well casing	2-inch inside diameter schedule 40 PVC
5- Type/slot size of screen	0.010-inch dia. machine slotted PVC
6- Type filter pack	20/30 Sieve Size Silica Sand (8 bags)
7- Type of seal	3/8-inch bentonite chips
8- Borehole diameter	6.25"
9- Grout	Type I Portland Cement

Note: Diagram not to scale.

PROJECT NUMBER	WELL NUMBER	
158814.ZG	G003GW006	SHEET 1 OF 1

CH2MHILL

WELL COMPLETION DIAGRAM

PROJECT : SWMU 3, Zone G, Charleston Naval Complex — LOCATION : Charleston, South Carolina

DRILLING CONTRACTOR : Prosonic Corporation- Michael Coleman License # 889 — NORTHING 373373.4955

DRILLING METHOD AND EQUIPMENT USED : Hollow Stem Augering (4.25-inch diameter) — EASTING: 2319020.4798

WATER LEVELS : not measured — START : 9/24/2002 — END: 9/24/2002 — LOGGER : D. Gates/NVR

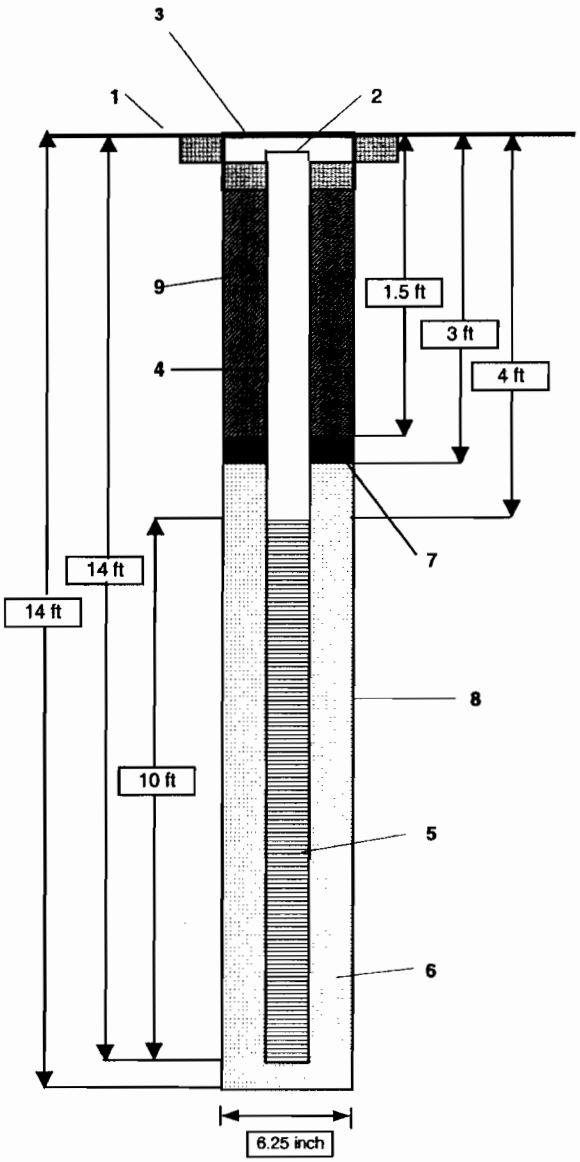

1- Ground elevation at well	not measured
2- Top of casing elevation	12.34'
3- Protective cover type	flush mount pad
a) concrete pad dimensions	2x2
4- Dia./type of well casing	2-inch inside diameter schedule 40 PVC
5- Type/slot size of screen	0.010-inch dia. machine slotted PVC
6- Type filter pack	20/30 Sieve Size Silica Sand (8 bags)
7- Type of seal	3/8-inch bentonite chips
8- Borehole diameter	6.25"
9- Grout	Type I Portland Cement

Note: Diagram not to scale.

PROJECT NUMBER	WELL NUMBER	
158814.ZG	G003GW007	SHEET 1 OF 1

CH2MHILL

WELL COMPLETION DIAGRAM

PROJECT : SWMU 3, Zone G, Charleston Naval Complex — LOCATION : Charleston, South Carolina

DRILLING CONTRACTOR : Prosonic Corporation- Michael Coleman License # 889 — NORTHING 373306.4315

DRILLING METHOD AND EQUIPMENT USED : Hollow Stem Augering (4.25-inch diameter) — EASTING: 2319028.0065

WATER LEVELS : not measured — START : 9/25/2002 — END: 9/25/2002 — LOGGER : D. Gates/NVR

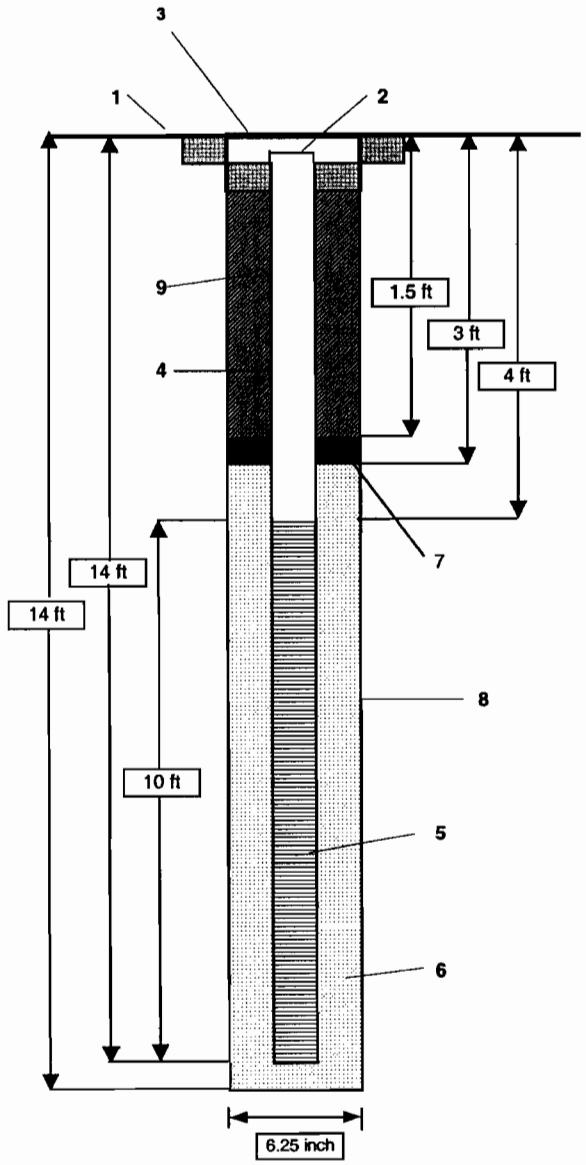

1- Ground elevation at well	not measured
2- Top of casing elevation	12.56'
3- Protective cover type	flush mount pad
a) concrete pad dimensions	2x2
4- Dia./type of well casing	2-inch inside diameter schedule 40 PVC
5- Type/slot size of screen	0.010-inch dia. machine slotted PVC
6- Type filter pack	20/30 Sieve Size Silica Sand (8 bags)
7- Type of seal	3/8-inch bentonite chips
8- Borehole diameter	6.25"
9- Grout	Type I Portland Cement

Note: Diagram not to scale.

PROJECT NUMBER	WELL NUMBER	
158814.ZG	G003GW008	SHEET 1 OF 1

CH2MHILL

WELL COMPLETION DIAGRAM

PROJECT : SWMU 3, Zone G, Charleston Naval Complex — LOCATION : Charleston, South Carolina

DRILLING CONTRACTOR : Prosonic Corporation- Michael Coleman License # 889 — NORTHING 373179.3522

DRILLING METHOD AND EQUIPMENT USED : Hollow Stem Augering (4.25-inch diameter) — EASTING: 2318942.6041

WATER LEVELS : not measured — START : 9/24/2002 — END: 9/24/2002 — LOGGER : D. Gates/NVR

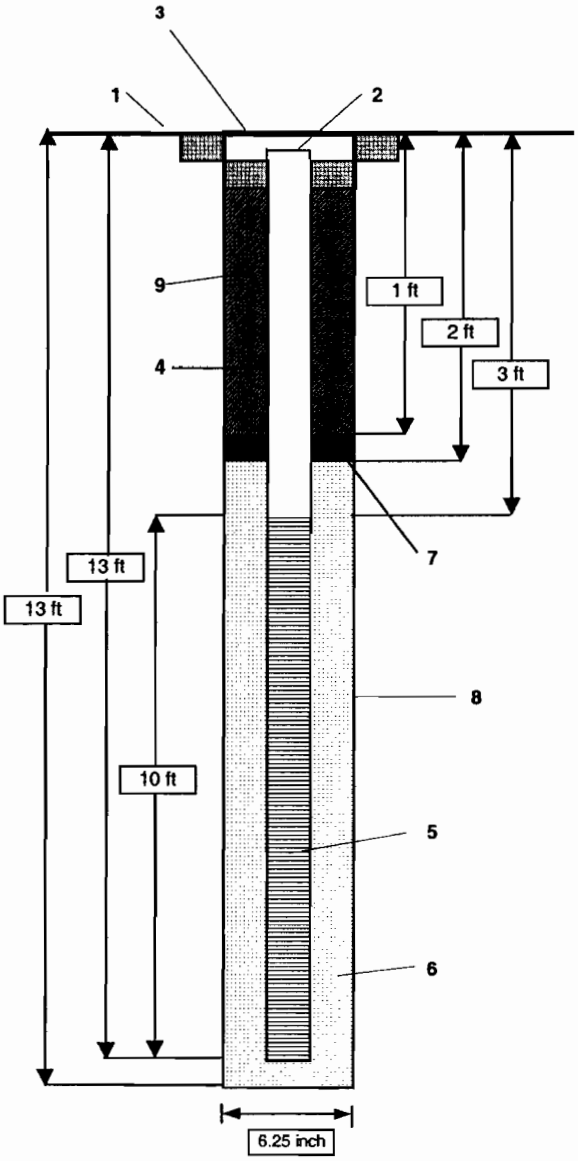

1- Ground elevation at well	not measured
2- Top of casing elevation	10.93'
3- Protective cover type	flush mount pad
a) concrete pad dimensions	2x2
4- Dia./type of well casing	2-inch inside diameter schedule 40 PVC
5- Type/slot size of screen	0.010-inch dia. machine slotted PVC
6- Type filter pack	20/30 Sieve Size Silica Sand (8 bags)
7- Type of seal	3/8-inch bentonite chips
8- Borehole diameter	6.25"
9- Grout	Type I Portland Cement

Note: Diagram not to scale.

PROJECT NUMBER	WELL NUMBER	
158814.ZG	G003GW009	SHEET 1 OF 1

CH2MHILL

WELL COMPLETION DIAGRAM

PROJECT : SWMU 3, Zone G, Charleston Naval Complex — LOCATION : Charleston, South Carolina

DRILLING CONTRACTOR : Prosonic Corporation- Michael Coleman License # 889 — NORTHING 373224.4825

DRILLING METHOD AND EQUIPMENT USED : Hollow Stem Augering (4.25-inch diameter) — EASTING: 2318878.9047

WATER LEVELS : not measured — START : 9/25/2002 — END: 9/25/2002 — LOGGER : D. Gates/NVR

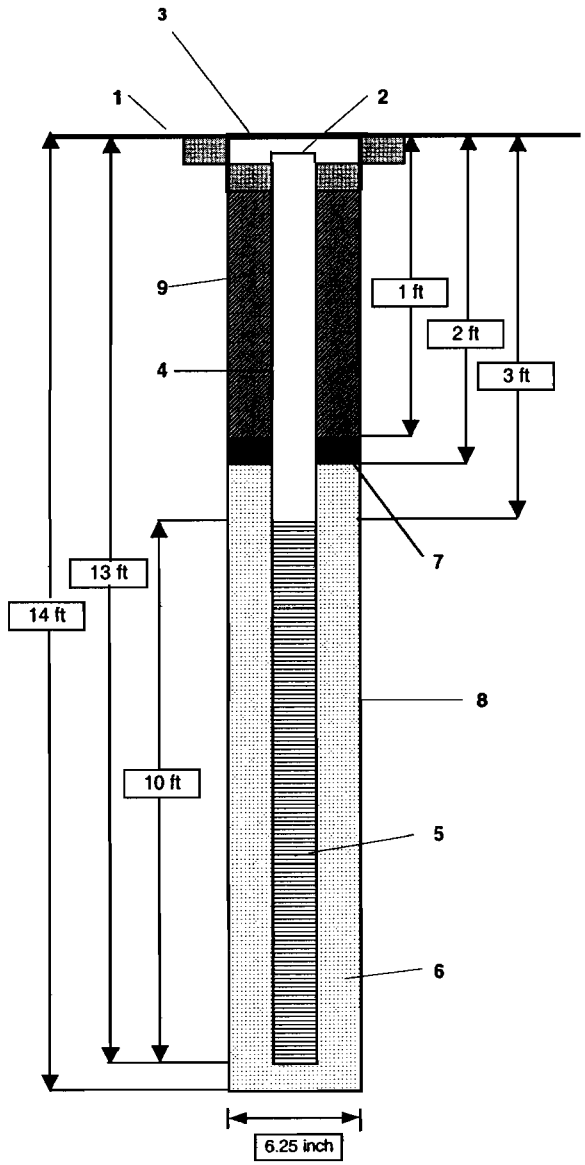

1- Ground elevation at well	not measured
2- Top of casing elevation	10.77'
3- Protective cover type	flush mount pad
a) concrete pad dimensions	2x2
4- Dia./type of well casing	2-inch inside diameter schedule 40 PVC
5- Type/slot size of screen	0.010-inch dia. machine slotted PVC
6- Type filter pack	20/30 Sieve Size Silica Sand (8 bags)
7- Type of seal	3/8-inch bentonite chips
8- Borehole diameter	6.25"
9- Grout	Type I Portland Cement

Note: Diagram not to scale.

Appendix E

Site: SWMU 3
Media: Statistical Summary
Units: ug/Kg

Chemical	Notes	Samples	Detects	Non-Detects	FOD	Min Detect	Max Detect	Avg Detect	Mean	Min nondetect	Max nondetect	W-Test	t-Statistic	UCL95 norm	H-statistic	UCL95 log	UCL95 nonparm	UCL95 bootstrap
Surface Soil																		
Chlordane	South EA	29	11	18	38%	110	2400	654	280	6.5	320	NONPARAMETRIC	1.70	453.4	3.66	1408	7.5	**453**
Dieldrin	North EA	58	13	45	22%	0.64	61	17.4	**5.54**	1.3	14.5	Unknown (n>50)	1.68	8.23	2.22	5.30	1.35	**8.13**
Dieldrin	South EA	31	21	10	68%	0.36	55	15.8	**11.1**	1.3	1.4	NONPARAMETRIC	1.70	15.14	2.74	25.8	1.35	**15.1**
Heptachlor Epoxide	South EA	28	17	11	61%	0.13	120	15.8	10.6	0.65	13.5	LOGNORMAL	1.70	17.94	3.24	**32.2**	0.70	18.0
DDT	North EA	58	34	24	59%	2.6	3100	318	187	1.3	1.4	Unknown (n>50)	1.68	290.71	3.96	1235	37.00	**279**
DDT	South EA	30	24	6	80%	1.7	6600	563	451	1.3	1.3	NONPARAMETRIC	1.70	864.9	4.11	5279	3.50	**863**
Subsurface Soil																		
Dieldrin	North EA	61	13	48	21%	0.48	48	6.54	**3.32**	1.3	14							
Dieldrin	South EA	23	10	13	43%	0.62	26	5.08	**3.02**	1.3	2							

Site:	SWMU 3
Media:	Surface Soil
Units:	ug/Kg
Chemical:	Chlordane
Exposure Area:	South

STATISTICS	
N	29
Detects	11
FOD	38%
Mean of Detect	654
Min of Detect	110
Max of Detect	2400
Best Estimate of Mean (arithmetic)	280.0
Best Estimate of Mean (geometric)	60.3
Nondetects at 1/2 DL	YES

95% UPPER CONFIDENCE LIMITS FOR MEAN	
UCL95 Normal	453.4
t-statistic	1.70
UCL95 Lognormal	1408
H-statistic	3.66
UCL95 Nonparametric	7.5
UCL95 Bootstrap	453.4

95% UPPER TOLERANCE INTERVAL	
UTL95 Normal	1230
coverage	95%
UTL95 Lognormal	1647
coverage	95%
UTL95 Nonparametric	2400
coverage	97%

DISTRIBUTION TESTING	
Population is best described as:	NONPARAMETRIC
W_{normal}	0.548
W_{log}	0.889
$W_{\alpha = 0.05}$	0.926

Notes:

1. If population does not fit normal or lognormal distribution, check Q-Q plots and W-test values. The population may be close enough to one of those distributions
2. For site data, if the selected UCL95 exceeds the Max Detect, the Max Detect should be chosen as the EPC.
3. Lognormal UCL or UTL values caculated for less than 30 samples may be widely inflated.
4. If there is >90% nondetection, it is generally impossible to cachulate a UTL or UCL with any level of confidence.

Site:	SWMU 3
Media:	Surface Soil
Chemical:	Chlordane
Notes:	South EA
Units:	ug/Kg

Station ID	Sample ID	Collection Date		Data	Qualifier
G003SB040	003SB04001	01/15/02		2400	J
G003SB091	003SB09101	06/13/02		1800	=
G003SB057	003SB05701	03/27/02		880	=
G003SB039	003SB03901	01/15/02		640	UJ
G003SB058	003SB05801	03/27/02		560	=
G003SB041	003SB04101	01/15/02		440	J
G003SB055	003SB05501	03/27/02		400	=
G003SB052	003SB05201	03/27/02		280	UJ
G003SB086	003SB08601	06/13/02		270	U
G003SB093	003SB09301RE	07/25/02		240	J
G003SB051	003SB05101	03/27/02		150	UJ
G003SB097	003SB09701	07/25/02		150	U
G003SB054	003SB05401	03/27/02		140	=
G003SB076	003SB07601	05/15/02		140	U
G003SB080	003SB08001	05/15/02		110	=
G003SB088	003SB08801	06/13/02		110	=
G003SB102	003SB10201	12/06/02		110	J
G003SB042	003SB04201	01/15/02		60	UJ
G003SB104	003SB10401	12/06/02		30	UJ
G003SB103	003SB10301	12/06/02		16	U
G003SB053	003SB05301	03/28/02		15	U
G003SB089	003SB08901	06/13/02		14	U
G003SB096	003SB09601	07/25/02		14	UJ
G003SB096	003SB09801	09/27/02		14	U
G003SB056	003SB05601	03/27/02	R	13	U
G003SB079	003SB07901	05/15/02	R	13	U
G003SB090	003SB09001	06/13/02	R	13	U
G003SB081	003SB08101	05/15/02	R	13	U
G003SB073	003SB07301	05/15/02	R	13	U
G003SB094	003SB09401	07/25/02		2800[a]	UJ

R Indicates removed (excavated) sample.

[a] data not included in statistics. Reported non-detected value greater than highest detected value.

Site:	SWMU 3
Media:	Surface Soil
Units:	ug/Kg
Chemical:	Dieldrin
Exposure Area:	North

STATISTICS	
N	58
Detects	13
FOD	22%
Mean of Detect	17.4
Min of Detect	0.64
Max of Detect	61.0
Best Estimate of Mean (arithmetic)	5.54
Best Estimate of Mean (geometric)	2.2
Nondetects at 1/2 DL	YES

95% UPPER CONFIDENCE LIMITS FOR MEAN	
UCL95 Normal	8.2
t-statistic	1.68
UCL95 Lognormal	5.3
H-statistic	2.22
UCL95 Nonparametric	1.35
UCL95 Bootstrap	8.13

95% UPPER TOLERANCE INTERVAL	
UTL95 Normal	26.2
coverage	95%
UTL95 Lognormal	13.5
coverage	95%
UTL95 Nonparametric	#N/A
coverage	96%

DISTRIBUTION TESTING	
Population is best described as:	Unknown
W_{normal}	--
W_{log}	--
$W_{\alpha = 0.05}$	--

Notes:

1. If population does not fit normal or lognormal distribution, check Q-Q plots and W-test values. The population may be close enough to one of those distributions
2. For site data, if the selected UCL95 exceeds the Max Detect, the Max Detect should be chosen as the EPC.
3. Lognormal UCL or UTL values caculated for less than 30 samples may be widely inflated.
4. If there is >90% nondetection, it is generally impossible to caclulate a UTL or UCL with any level of confidence.

Site: SWMU 3
Media: Surface Soil
Chemical: Dieldrin
Notes: North EA
Units: ug/Kg

Station ID	Sample ID	Collection Date		Data	Qualifier
G003SB077	003SB07701	05/15/02		61	=
G003SB049	003SB04901	03/27/02		59	=
G003SB078	003SB07801	05/15/02		35	=
G003SB020	003SB02001	01/27/00		29	U
G003SB047	003SB04701	03/27/02		29	J
G003SB095	003SB09501RE	07/25/02		28	UJ
G003SB075	003SB07501	05/15/02		16	J
G003SB031	003SB03101	11/29/01		13	U
G003SB009	003SB00901a	09/26/96		12	=
G003SB002	003SB00201a	11/12/96		5.9	U
G003SB038	003SB03801	03/27/02		5.6	U
G003SB037	003SB03701	03/27/02		5.5	U
G003SB071	003SB07101	05/15/02		4.2	J
G003SB007	003SB00701	10/08/96		4	=
G003SB015	003SB01501	12/17/99		3.7	U
G003SB019	003SB01901	01/27/00		2.9	U
G003SB059	003SB05901	03/28/02		2.9	U
G003SB070	003SB07001	05/15/02		2.9	U
G003SB001	003SB00101a	08/29/96		2.8	U
G003SB027	003SB02701	11/29/01		2.8	U
G003SB004	003SB00401a	09/26/96		2.7	U
G003SB005	003SB00501a	09/26/96		2.7	U
G003SB006	003SB00601b	09/26/96		2.7	U
G003SB010	003SB01001b	09/26/96		2.7	U
G003SB011	003SB01101	07/28/99		2.7	U
G003SB036	003SB03601	11/29/01		2.7	UJ
G003SB001	003SB00101b	11/12/96		2.6	U
G003SB013	003SB01301	07/30/99		2.6	U
G003SB022	003SB02201	11/29/01		2.6	U
G003SB024	003SB02401	11/29/01		2.6	U
G003SB046	003SB04601	03/27/02		2.6	U
G003SB068	003SB06801	05/13/02		2.3	J
G003SB085	003SB08501	06/13/02		0.95	J
G003SB069	003SB06901	05/13/02		0.91	J
G003SB074	003SB07401	05/13/02		0.71	J
G003SB021	003SB02101	11/29/01		0.64	J
G003SB003	003SB00301b	11/12/96	R	2.6	U
G003SB008	003SB00801a	09/26/96	R	2.6	U
G003SB012	003SB01201	07/28/99	R	2.6	U
G003SB016	003SB01601	01/27/00	R	2.6	U
G003SB017	003SB01701	01/27/00	R	2.6	U
G003SB018	003SB01801	01/27/00	R	2.6	U
G003SB023	003SB02301	11/29/01	R	2.6	U
G003SB025	003SB02501	11/29/01	R	2.6	U
G003SB026	003SB02601	11/29/01	R	2.6	U
G003SB028	003SB02801	11/29/01	R	2.6	U
G003SB029	003SB02901	11/29/01	R	2.6	U
G003SB030	003SB03001	11/29/01	R	2.6	U
G003SB032	003SB03201	11/28/01	R	2.6	U
G003SB033	003SB03301	11/29/01	R	2.6	U
G003SB034	003SB03401	11/29/01	R	2.6	U
G003SB035	003SB03501	11/29/01	R	2.6	U
G003SB043	003SB04301	03/27/02	R	2.6	U
G003SB044	003SB04401	03/27/02	R	2.6	U
G003SB045	003SB04501	03/27/02	R	2.6	U
G003SB048	003SB04801	03/27/02	R	2.6	U
G003SB067	003SB06701	03/27/02	R	2.6	U
G003SB072	003SB07201	05/13/02	R	2.6	U

R Indicates removed (excavated) sample.

Site:	SWMU 3
Media:	Surface Soil
Units:	ug/Kg
Chemical:	Dieldrin
Exposure Area:	South

STATISTICS	
N	31
Detects	21
FOD	68%
Mean of Detect	15.8
Min of Detect	0.36
Max of Detect	55.0
Best Estimate of Mean (arithmetic)	11.1
Best Estimate of Mean (geometric)	5.3
Nondetects at 1/2 DL	YES

95% UPPER CONFIDENCE LIMITS FOR MEAN	
UCL95 Normal	15.1
t-statistic	1.70
UCL95 Lognormal	25.6
H-statistic	2.74
UCL95 Nonparametric	1.35
UCL95 Bootstrap	15.1

95% UPPER TOLERANCE INTERVAL	
UTL95 Normal	33.8
coverage	95%
UTL95 Lognormal	53.8
coverage	95%
UTL95 Nonparametric	55.00
coverage	97%

DISTRIBUTION TESTING	
Population is best described as:	NONPARAMETRIC
W_{normal}	0.763
W_{log}	0.907
$W_{\alpha=0.05}$	0.929

Notes:

to subjectively select a normal or lognormal distribution.

2. For site data, if the selected UCL95 exceeds the Max Detect, the Max Detect should be chosen as the EPC.
3. Lognormal UCL or UTL values caculated for less than 30 samples may be widely inflated.
4. If there is >90% nondetection, it is generally impossible to caclulate a UTL or UCL with any level of confidence.

Site:	SWMU 3
Media:	Surface Soil
Chemical:	Dieldrin
Notes:	South EA
Units:	ug/Kg

Station ID	Sample ID	Collection Date		Data	Qualifier
G003SB099	003SB09901	12/06/02		55	J
G003SB052	003SB05201	03/27/02		40	J
G003SB091	003SB09101	06/13/02		39	=
G003SB051	003SB05101	03/27/02		22	J
G003SB041	003SB04101	01/15/02		21	=
G003SB055	003SB05501	03/27/02		20	=
G003SB039	003SB03901	01/15/02		16	J
G003SB057	003SB05701	03/27/02		15	J
G003SB080	003SB08001	05/15/02		14	=
G003SB100	003SB10001	12/06/02		14	J
G003SB058	003SB05801	03/27/02		12	J
G003SB097	003SB09701	07/25/02		12	J
G003SB101	003SB10101	12/06/02		11	J
G003SB040	003SB04001	01/15/02		9.8	J
G003SB093	003SB09301RE	07/25/02		7.1	J
G003SB042	003SB04201	01/15/02		6.6	J
G003SB088	003SB08801	06/13/02		5.7	=
G003SB102	003SB10201	12/06/02		5.1	J
G003SB054	003SB05401	03/27/02		4.7	J
G003SB053	003SB05301	03/28/02		2.8	U
G003SB096	003SB09601	07/25/02		2.7	U
G003SB098	003SB09801	09/27/02		2.7	U
G003SB089	003SB08901	06/13/02		2.6	U
G003SB073	003SB07301	05/15/02	R	2.6	U
G003SB076	003SB07601DL	05/15/02	R	2.6	U
G003SB079	003SB07901	05/15/02	R	2.6	U
G003SB081	003SB08101	05/15/02	R	2.6	U
G003SB090	003SB09001	06/13/02	R	2.6	U
G003SB056	003SB05601	03/27/02	R	2.6	U
G003SB104	003SB10401	12/06/02		1.4	J
G003SB103	003SB10301	12/06/02		0.36	J
G003SB094	003SB09401	07/25/02		540[a]	U
G003SB086	003SB08601	06/13/02		53[b]	U

R Indicates removed (excavated) sample.

[a] data not included in statistics. Reported non-detected value greater than highest detected value.

[b] data not included in statistics. Reported non-detected value greater than 10x typical non-detect value.

Site:	SWMU 3
Media:	Surface Soil
Units:	ug/Kg
Chemical:	Heptachlor Epoxide
Exposure Area:	South

STATISTICS	
N	28
Detects	17
FOD	61%
Mean of Detect	15.8
Min of Detect	0.13
Max of Detect	120.0
Best Estimate of Mean (arithmetic)	10.6
Best Estimate of Mean (geometric)	3.3
Nondetects at 1/2 DL	YES

95% UPPER CONFIDENCE LIMITS FOR MEAN	
UCL95 Normal	17.9
t-statistic	1.70
UCL95 Lognormal	32.2
H-statistic	3.24
UCL95 Nonparametric	0.7
UCL95 Bootstrap	18.0

95% UPPER TOLERANCE INTERVAL	
UTL95 Normal	50.0
coverage	95%
UTL95 Lognormal	52.8
coverage	95%
UTL95 Nonparametric	120.00
coverage	97%

DISTRIBUTION TESTING	
Population is best described as:	LOGNORMAL
W_{normal}	0.449
W_{log}	0.940
$W_{\alpha = 0.05}$	0.924

Notes:

1. If population does not fit normal or lognormal distribution, check Q-Q plots and W-test values. The population may be close enough to one of those distributions to subjectively select a normal or lognormal distribution.
2. For site data, if the selected UCL95 exceeds the Max Detect, the Max Detect should be chosen as the EPC.
3. Lognormal UCL or UTL values caculated for less than 30 samples may be widely inflated.
4. If there is >90% nondetection, it is generally impossible to caclulate a UTL or UCL with any level of confidence.

Site:	SWMU 3
Media:	Surface Soil
Chemical:	Heptachlor epoxide
Notes:	South EA
Units:	ug/Kg

Station ID	Sample ID	Collection Date		Data	Qualifier
G003SB091	003SB09101	06/13/02		120	=
G003SB080	003SB08001	05/15/02		31	=
G003SB086	003SB08601	06/13/02		27	U
G003SB104	003SB10401	12/06/02		21	=
G003SB039	003SB03901	01/15/02		19	J
G003SB052	003SB05201	03/27/02		14	J
G003SB076	003SB07601	05/15/02		14	U
G003SB093	003SB09301RE	07/25/02		13	J
G003SB097	003SB09701	07/25/02		8.8	J
G003SB040	003SB04001	01/15/02		8.7	J
G003SB102	003SB10201	12/06/02		8.2	=
G003SB057	003SB05701	03/27/02		7.4	J
G003SB058	003SB05801	03/27/02		5.8	U
G003SB054	003SB05401	03/27/02		4.8	J
G003SB055	003SB05501	03/27/02		4.7	J
G003SB051	003SB05101	03/27/02		3.8	J
G003SB041	003SB04101	01/15/02		2.6	J
G003SB053	003SB05301	03/28/02		1.5	U
G003SB089	003SB08901	06/13/02		1.4	U
G003SB096	003SB09601	07/25/02		1.4	U
G003SB042	003SB04201	01/15/02		0.98	J
G003SB088	003SB08801	06/13/02		0.66	J
G003SB098	003SB09801	09/27/02		0.13	J
G003SB079	003SB07901DL	05/15/02	R	1.3	U
G003SB090	003SB09001DL	06/13/02	R	1.3	U
G003SB056	003SB05601	03/27/02	R	1.3	U
G003SB073	003SB07301	05/15/02	R	1.3	U
G003SB081	003SB08101	05/15/02	R	1.3	U
G003SB103	003SB10301	12/06/02		0.94	J
G003SB094	003SB09401	07/25/02		280[a]	U

R Indicates removed (excavated) sample.

[a] data not included in statistics. Reported non-detected value greater than highest detected value.

Site:	SWMU 3
Media:	Surface Soil
Units:	ug/Kg
Chemical:	DDT
Exposure Area:	North

STATISTICS	
N	58
Detects	34
FOD	59%
Mean of Detect	318.4
Min of Detect	2.60
Max of Detect	3100
Best Estimate of Mean (arithmetic)	187.2
Best Estimate of Mean (geometric)	14.5
Nondetects at 1/2 DL	YES

95% UPPER CONFIDENCE LIMITS FOR MEAN	
UCL95 Normal	290.7
t-statistic	1.68
UCL95 Lognormal	1235
H-statistic	3.96
UCL95 Nonparametric	37
UCL95 Bootstrap	278.7

95% UPPER TOLERANCE INTERVAL	
UTL95 Normal	982.3
coverage	95%
UTL95 Lognormal	1013
coverage	95%
UTL95 Nonparametric	#N/A
coverage	96%

DISTRIBUTION TESTING	
Population is best described as:	Unknown
W_{normal}	--
W_{log}	--
$W_{\alpha=0.05}$	--

Notes:

1. If population does not fit normal or lognormal distribution, check Q-Q plots and W-test values. The population may be close enough to one of those distributions to subjectively select a normal or lognormal distribution.
2. For site data, if the selected UCL95 exceeds the Max Detect, the Max Detect should be chosen as the EPC.
3. Lognormal UCL or UTL values caculated for less than 30 samples may be widely inflated.
4. If there is >90% nondetection, it is generally impossible to caclulate a UTL or UCL with any level of confidence.

Site:	SWMU 3
Media:	Surface Soil
Chemical:	DDT
Notes:	North EA
Units:	ug/Kg

Station ID	Sample ID	Collection Date		Data	Qualifier
G003SB075	003SB07501DL	05/15/02		3100	J
G003SB071	003SB07101DL	05/15/02		1100	J
G003SB013	003SB01301	07/30/99		960	=
G003SB077	003SB07701DL	05/15/02		950	=
G003SB047	003SB04701	03/27/02		680	J
G003SB078	003SB07801DL	05/15/02		620	=
G003SB095	003SB09501RE	07/25/02		620	J
G003SB020	003SB02001	01/27/00		360	=
G003SB068	003SB06801DL	05/13/02		360	J
G003SB019	003SB01901	01/27/00		340	=
G003SB070	003SB07001DL	05/15/02		290	J
G003SB031	003SB03101	11/29/01		270	=
G003SB015	003SB01501	12/17/99		220	=
G003SB009	003SB00901a	09/26/96		180	=
G003SB049	003SB04901	03/27/02		160	=
G003SB085	003SB08501	06/13/02		100	=
G003SB007	003SB00701	10/08/96		94	=
G003SB011	003SB01101	07/28/99		71	J
G003SB069	003SB06901	05/13/02		67	J
G003SB002	003SB00201a	11/12/96		65	=
G003SB074	003SB07401	05/13/02		40	J
G003SB021	003SB02101	11/29/01		37	J
G003SB024	003SB02401	11/29/01		24	=
G003SB010	003SB01001b	09/26/96		20	J
G003SB005	003SB00501a	09/26/96		19	=
G003SB022	003SB02201	11/29/01		18	=
G003SB046	003SB04601	03/27/02		16	J
G003SB027	003SB02701	11/29/01		12	=
G003SB036	003SB03601	11/29/01		9.3	J
G003SB059	003SB05901	03/28/02		6.5	J
G003SB006	003SB00601b	09/26/96		5.7	=
G003SB037	003SB03701	03/27/02		5.6	=
G003SB004	003SB00401a	09/26/96		3.6	=
G003SB001	003SB00101a	08/29/96		2.8	U
G003SB001	003SB00101b	11/12/96		2.6	U
G003SB038	003SB03801	03/27/02		2.6	J
G003SB018	003SB01801	01/27/00	R	2.6	U
G003SB016	003SB01601	01/27/00	R	2.6	U
G003SB028	003SB02801DL	11/29/01	R	2.6	U
G003SB012	003SB01201	07/28/99	R	2.6	U
G003SB048	003SB04801	03/27/02	R	2.6	U
G003SB034	003SB03401DL	11/29/01	R	2.6	U
G003SB044	003SB04401	03/27/02	R	2.6	U
G003SB035	003SB03501DL	11/29/01	R	2.6	U
G003SB067	003SB06701	03/27/02	R	2.6	U
G003SB017	003SB01701	01/27/00	R	2.6	U
G003SB072	003SB07201DL	05/13/02	R	2.6	U
G003SB045	003SB04501	03/27/02	R	2.6	U
G003SB025	003SB02501	11/29/01	R	2.6	U
G003SB029	003SB02901	11/29/01	R	2.6	U
G003SB026	003SB02601	11/29/01	R	2.6	U
G003SB033	003SB03301	11/29/01	R	2.6	U
G003SB043	003SB04301	03/27/02	R	2.6	U
G003SB032	003SB03201	11/28/01	R	2.6	U
G003SB030	003SB03001	11/29/01	R	2.6	U
G003SB023	003SB02301	11/29/01	R	2.6	U
G003SB003	003SB00301b	11/12/96	R	2.6	U
G003SB008	003SB00801a	09/26/96	R	2.6	U

R Indicates removed (excavated) sample.

Site:	SWMU 3
Media:	Surface Soil
Units:	ug/Kg
Chemical:	DDT
Exposure Area:	South

STATISTICS	
N	30
Detects	24
FOD	80%
Mean of Detect	563.1
Min of Detect	1.70
Max of Detect	6600
Best Estimate of Mean (arithmetic)	450.8
Best Estimate of Mean (geometric)	38.8
Nondetects at 1/2 DL	YES

95% UPPER CONFIDENCE LIMITS FOR MEAN	
UCL95 Normal	864.9
t-statistic	1.70
UCL95 Lognormal	5279
H-statistic	4.11
UCL95 Nonparametric	3.5
UCL95 Bootstrap	862.8

95% UPPER TOLERANCE INTERVAL	
UTL95 Normal	2756
coverage	95%
UTL95 Lognormal	2730
coverage	95%
UTL95 Nonparametric	6600
coverage	97%

DISTRIBUTION TESTING	
Population is best described as:	NONPARAMETRIC
W_{normal}	0.371
W_{log}	0.918
$W_{\alpha = 0.05}$	0.927

Notes:

1. If population does not fit normal or lognormal distribution, check Q-Q plots and W-test values. The population may be close enough to one of those distributions to subjectively select a normal or lognormal distribution.
2. For site data, if the selected UCL95 exceeds the Max Detect, the Max Detect should be chosen as the EPC.
3. Lognormal UCL or UTL values caculated for less than 30 samples may be widely inflated.
4. If there is >90% nondetection, it is generally impossible to caclulate a UTL or UCL with any level of confidence.

Site:	SWMU 3
Media:	Surface Soil
Chemical:	DDT
Notes:	South EA
Units:	ug/Kg

Station ID	Sample ID	Collection Date		Data	Qualifier
G003SB094	003SB09401	07/25/02		6600	=
G003SB086	003SB08601DL	06/13/02		3600	=
G003SB052	003SB05201	03/27/02		710	=
G003SB057	003SB05701	03/27/02		510	J
G003SB091	003SB09101	06/13/02		500	=
G003SB042	003SB04201	01/15/02		280	=
G003SB039	003SB03901	01/15/02		260	=
G003SB097	003SB09701	07/25/02		180	=
G003SB054	003SB05401	03/27/02		110	=
G003SB058	003SB05801	03/27/02		110	=
G003SB051	003SB05101	03/27/02		100	=
G003SB104	003SB10401	12/06/02		84	=
G003SB102	003SB10201	12/06/02		79	=
G003SB088	003SB08801	06/13/02		75	=
G003SB040	003SB04001	01/15/02		67	=
G003SB055	003SB05501	03/27/02		64	J
G003SB041	003SB04101	01/15/02		61	=
G003SB103	003SB10301	12/06/02		42	=
G003SB080	003SB08001	05/15/02		34	=
G003SB093	003SB09301RE	07/25/02		24	J
G003SB096	003SB09601	07/25/02		17	=
G003SB089	003SB08901	06/13/02		3.5	=
G003SB098	003SB09801	09/27/02		3	=
G003SB053	003SB05301	03/28/02		1.7	J
G003SB073	003SB07301DL	05/15/02	R	2.6	U
G003SB056	003SB05601	03/27/02	R	2.6	U
G003SB079	003SB07901DL	05/15/02	R	2.6	U
G003SB090	003SB09001	06/13/02	R	2.6	U
G003SB081	003SB08101	05/15/02	R	2.6	U
G003SB076	003SB07601	05/15/02	R	2.6	U

R Indicates removed (excavated) sample.

Site:	SWMU 3
Media:	Subsurface Soil
Units:	ug/Kg
Chemical:	Dieldrin
Exposure Area:	North

STATISTICS	
N	61
Detects	13
FOD	21%
Mean of Detect	6.54
Min of Detect	0.48
Max of Detect	48.0
Best Estimate of Mean (arithmetic)	3.32
Best Estimate of Mean (geometric)	1.9
Nondetects at 1/2 DL	YES

95% UPPER CONFIDENCE LIMITS FOR MEAN	
UCL95 Normal	4.7
t-statistic	1.67
UCL95 Lognormal	3.3
H-statistic	2.05
UCL95 Nonparametric	1.5
UCL95 Bootstrap	4.70

95% UPPER TOLERANCE INTERVAL	
UTL95 Normal	14.4
coverage	95%
UTL95 Lognormal	7.63
coverage	95%
UTL95 Nonparametric	#N/A
coverage	96%

DISTRIBUTION TESTING	
Population is best described as:	Unknown
W_{normal}	--
W_{log}	--
$W_{\alpha = 0.05}$	--

Notes:

1. If population does not fit normal or lognormal distribution, check Q-Q plots and W-test values. The population may be close enough to one of those distributions to subjectively select a normal or lognormal distribution.
2. For site data, if the selected UCL95 exceeds the Max Detect, the Max Detect should be chosen as the EPC.
3. Lognormal UCL or UTL values caculated for less than 30 samples may be widely inflated.
4. If there is >90% nondetection, it is generally impossible to caclulate a UTL or UCL with any level of confidence.

Site:	SWMU 3
Media:	Subsurface Soil
Chemical:	Dieldrin
Notes:	North EA
Units:	ug/Kg

Station ID	Sample ID	Collection Date		Data	Qualifier
G003SB032	003SB03202	11/28/01		48	J
G003SB017	003SB01702	01/27/00		28	U
G003SB018	003SB01802	01/27/00		28	U
G003SB068	003SB06803	05/13/02		27	U
G003SB063	003SB06304	03/27/02		12	U
G003SB075	003SB07503	05/15/02		11	U
G003SB072	003SB07203	05/15/02		10	J
G003SB009	003SB00902b	09/26/96		7.2	U
G003SB033	003SB03302	11/29/01		7.2	=
G003SB030	003SB03002	11/29/01		5.8	U
G003SB066	003SB06603	03/27/02		5	J
G003SB015	003SB01502	12/17/99		3.8	U
G003SB005	003SB00502a	09/26/96		3.3	U
G003SB049	003SB04902	03/27/02		3.2	UJ
G003SB037	003SB03702	03/27/02		3	UJ
G003SB038	003SB03802	03/27/02		3	U
G003SB048	003SB04802	03/27/02		3	J
G003SB069	003SB06903	05/13/02		3	J
G003SB095	003SB09503RE	07/25/02		3	UJ
G003SB003	003SB00302b	11/12/96		2.9	U
G003SB004	003SB00402a	09/26/96		2.9	U
G003SB006	003SB00602a	09/26/96		2.9	U
G003SB008	003SB00802a	09/26/96		2.9	U
G003SB010	003SB01002a	09/26/96		2.9	U
G003SB019	003SB01902	01/27/00		2.9	U
G003SB020	003SB02002	01/27/00		2.9	U
G003SB028	003SB02802	11/29/01		2.9	U
G003SB067	003SB06702	03/27/02		2.9	U
G003SB070	003SB07003	05/15/02		2.9	U
G003SB070	003SB07002	05/15/02		2.9	U
G003SB001	003SB00102a	08/29/96		2.8	U
G003SB001	003SB00102b	11/12/96		2.8	U
G003SB016	003SB01602	01/27/00		2.8	U
G003SB021	003SB02102	11/29/01		2.8	U
G003SB025	003SB02502	11/29/01		2.8	U
G003SB027	003SB02702	11/29/01		2.8	U
G003SB074	003SB07403	05/13/02		2.8	U
G003SB084	003SB08403	05/13/02		2.8	U
G003SB095	003CB09503RE	07/25/02		2.8	UJ
G003SB002	003SB00202a	11/12/96		2.7	U
G003SB011	003SB01102	07/28/99		2.7	U
G003SB013	003SB01302	07/30/99		2.7	U
G003SB014	003SB01402	07/28/99		2.7	U
G003SB023	003SB02302	11/29/01		2.7	U
G003SB024	003SB02402	11/29/01		2.7	U
G003SB029	003SB02902	11/29/01		2.7	U
G003SB022	003SB02202	11/29/01		2.6	U
G003SB031	003SB03102	11/29/01		2.6	U
G003SB071	003SB07103	05/15/02		2.6	U
G003SB083	003SB08303	05/15/02		2	J
G003SB077	003SB07703	05/15/02		1.8	J
G003SB036	003SB03602	11/29/01		1.7	J
G003SB078	003SB07803	05/15/02		1.7	J
G003SB078	003SB07802	05/15/02		0.7	J
G003SB077	003SB07702	05/15/02		0.5	J
G003SB026	003SB02602	11/29/01		0.48	J
G003SB012	003SB01202	07/28/99	R	2.6	U
G003SB060	003SB06003	03/27/02	R	2.6	U
G003SB061	003SB06103	03/27/02	R	2.6	U
G003SB084	003SB06403	03/27/02	R	2.6	U
G003SB065	003SB06503	03/28/02	R	2.6	U
G003SB035	003SB03502	11/29/01		280[a]	U
G003SB034	003SB03402	11/29/01		120[a]	U
G003SB044	003SB04402	03/27/02		120[a]	U
G003SB062	003SB06203	03/27/02		69[a]	U
G003SB059	003SB05902	03/28/02		55[a]	U

R Indicates removed (excavated) sample.

[a] data not included in statistics. Reported non-detected value greater than highest detected value.

Site:	SWMU 3
Media:	Subsurface Soil
Units:	ug/Kg
Chemical:	Dieldrin
Exposure Area:	South

STATISTICS	
N	23
Detects	10
FOD	43%
Mean of Detect	5.08
Min of Detect	0.62
Max of Detect	26.0
Best Estimate of Mean (arithmetic)	3.02
Best Estimate of Mean (geometric)	1.9
Nondetects at 1/2 DL	YES

95% UPPER CONFIDENCE LIMITS FOR MEAN	
UCL95 Normal	4.9
t-statistic	1.72
UCL95 Lognormal	3.7
H-statistic	2.12
UCL95 Nonparametric	1.3
UCL95 Bootstrap	4.80

95% UPPER TOLERANCE INTERVAL	
UTL95 Normal	12.1
coverage	95%
UTL95 Lognormal	7.61
coverage	95%
UTL95 Nonparametric	26.00
coverage	96%

DISTRIBUTION TESTING	
Population is best described as:	NONPARAMETRIC
W_{normal}	0.402
W_{log}	0.835
$W_{\alpha = 0.05}$	0.914

Notes:

1. If population does not fit normal or lognormal distribution, check Q-Q plots and W-test values. The population may be close enough to one of those distributions to subjectively select a normal or lognormal distribution.
2. For site data, if the selected UCL95 exceeds the Max Detect, the Max Detect should be chosen as the EPC.
3. Lognormal UCL or UTL values caculated for less than 30 samples may be widely inflated.
4. If there is >90% nondetection, it is generally impossible to caclulate a UTL or UCL with any level of confidence.

Site:	SWMU 3
Media:	Subsurface Soil
Chemical:	Dieldrin
Notes:	South EA
Units:	ug/Kg

Station ID	Sample ID	Collection Date		Data	Qualifier
G003SB076	003SB07603	05/15/02		26	=
G003SB080	003SB08003	05/15/02		5.5	J
G003SB056	003SB05602	03/27/02		5	J
G003SB042	003SB04202	01/15/02		4	U
G003SB092	003SB09202	06/13/02		4	=
G003SB057	003SB05702	03/27/02		3.1	U
G003SB055	003SB05502	03/27/02		3	U
G003SB087	003SB08702	06/13/02		3	U
G003SB041	003SB04102	01/15/02		2.9	U
G003SB054	003SB05402	03/27/02		2.9	U
G003SB091	003SB09103	06/13/02		2.9	J
G003SB053	003SB05302	03/28/02		2.8	U
G003SB089	003SB08903	06/13/02		2.7	U
G003SB040	003SB04002	01/15/02		2.6	J
G003SB052	003SB05202	03/27/02		2.6	J
G003SB073	003SB07303	05/15/02	R	2.6	U
G003SB079	003SB07903	05/15/02	R	2.6	U
G003SB081	003SB08103	05/15/02	R	2.6	U
G003SB082	003SB08203	05/15/02	R	2.6	U
G003SB090	003SB09003	06/13/02	R	2.6	U
G003SB088	003SB08803	06/13/02		0.9	J
G003SB039	003SB03902	01/15/02		0.69	J
G003SB051	003SB05102	03/28/02		0.62	J
G003SB094	003SB09403	07/25/02		280[a]	U
G003SB058	003SB05802	03/27/02		30[a]	U

R Indicates removed (excavated) sample.

[a] data not included in statistics. Reported non-detected value greater than highest detected value.

Appendix F

Comments by Stacey French

Comment 31:

Section 10.11 SWMU 3 Pesticide Mixing Area, Page 10.11.1
This section should be revised to include a discussion of the activities outlined in the Interim/Stabilization Measure Report dated September 24, 1998, and their effects on the RFI. Other applicable sections of the RFI should also be revised pursuant to this comment.

CH2M-Jones Response:

A discussion of the EEG 1998 IM is included in Section 3.0 of the SWMU 3 RFI Report Addendum/IM Completion Report/CMS Work Plan (RFIRA/IMCR/CMSWP), Revision 0.

Comment 32:

Figure 10.11-1 Sampling Locations SWMU 3
This figure shows the former concrete slab and its relationship to Building 249 and the surrounding sampling locations. Samples were only taken north east of the concrete slab. The rationale for not sampling every side of the concrete slab is unclear. The south side of the pad was not sampled. The Department's position is that this area should have been investigated, and that there was not sufficient delineation at the site. Please revise section 10.11.12 to clearly indicate the rationale.

CH2M-Jones Response:

The RFI sample locations targeted an area identified in the Interim RCRA Facility Assessment, August 1987, as a denuded area (once devoid of vegetation). A confirmation study conducted in 1982 by Geraghty and Miller detected pesticides primarily in this area. Additional IM soil sampling and soil excavation was conducted in this area during the CH2M-Jones IM, as described in this CH2M-Jones RFIRA/IMCR/CMSWP. In addition, new monitoring wells were installed and sampled to assess impacts to site groundwater from this area.

Comment 42:

Table 11.1 Site Conclusions and Zone G Preliminary Recommendations
The Department does not agree with the recommendation presented for this site.
See Comment #32. Additional investigation is needed prior to selection of a remedy for this site. This should be discussed in Section 11.11.

CH2M-Jones Response:

Extensive additional soil and groundwater sampling was conducted at SWMU 3 by CH2M-Jones, as discussed in the response to Comment # 32 above. The CH2M-Jones soil IM and RFIRA/IMCR/CMSWP are believed to satisfy final remedy requirements for soils at this site; site groundwater will be addressed with a separate CMS.

Comment by Michael Danielson

Comment 10:

SWMU 3

A) The text states that the purpose of the field investigation is to confirm or deny the presence of contamination. The sampling in this area does not adequately address the presence or absence of contamination in the soils and groundwater for the areas in front of the present building (Building 249). Therefore this media needs to be further investigated with the addition of monitoring wells and sampling.

B) The additional wells, based on the groundwater flow maps, need to be located between 003SB004 and 003SB005, and northwest of 003SB004 locations to better complete the survey of groundwater.

C) This site should remain in RFI status until further investigation has been completed.

CH2M-Jones Response:

A) Please see response to Comment #32 (Stacey French).

B) Please see the response to Comment #42 (Stacey French).

C) Please see the response to Comment #42 (Stacey French).

Comments by Michael W. Danielsen

General:

"...Furthermore, the Navy has not completed groundwater characterizations for AOCs 628, 633, 638, 643, 646, 706, and SWMUs 3, 11, 12, and 24. The Department suggests that the Navy review these areas for further groundwater characterization locations to be added to this work plan addendum."

CH2M-Jones Response:

Investigative approaches for each site were developed and proposed in the Final Zones D, F, and G RFI Work Plan. We do not agree that groundwater characterization is needed at every site. We do agree that groundwater contamination needs to be adequately addressed at sites where groundwater characterization is an issue. Groundwater characterization at SWMU 3 was conducted by installing and sampling new monitoring wells, in addition to resampling existing wells, as discussed in the RFIRA/IMCR/CMSWP. The remaining groundwater issues at SWMU 3 will be addressed with a separate groundwater CMS.

Comment 3:

The text for the SWMUs and AOCs in this report states that additional sampling will help establish horizontal extent of chemical impact. The extent of vertical impact also needs to be defined. Of note: Most of the SWMUs and AOCs in Zone G were not completely defined in the previous RFI. Please explain the rational behind establishing horizontal extent and not vertical extent.

CH2M-Jones Response:

As discussed in the RFIRA/IMCR/CMSWP, the vertical extent of soil contamination at SWMU 3 was determined by installing and sampling additional IM delineation and confirmation borings.

Comment 4:

The Department suggests that all samples be analyzed for the full scan of contaminates (sic) at sites where a full characterization has not been completed to better enhance the data for each site. Where unusual constituents were historically located (i.e. explosives, fuel, pesticides, etc.) the analytical analysis (sic) should reflect these constituents in the test run on the samples. The Department is amenable to discussing this issue during comment resolution.

CH2M-Jones Response:

The additional soil delineation sampling performed by CH2M-Jones during the RFIRA/IM included analysis for pesticides and VOCs; groundwater was analyzed for PCBs, SVOCs, dioxins and metals in addition to pesticides and VOCs. Based upon site operational history and previous investigations, this analytical scope is believed to be representative of past pesticide mixing and rinsing activities at this site.

Engineering Comments Prepared by Jerry Stamps

1. **Section 3.2, Page 3-1**
Based upon past experiences with similar sites, collected soil samples must be analyzed for VOCs in addition the pesticides as currently proposed in the Interim Measure Work Plan. The basis for this requirement lies in the fact that chlorinated solvents are known to have been used to solubilize pesticides either for equipment cleaning or for application purposes. Though it is not known if this practice was employed at this site, the possibility does exist. It should be noted that the soil samples collected during the original RFI did not include VOC analysis.

CH2M-Jones Response:

The soil sampling approach in the IM delineation sampling effort was modified to include sampling and analyzing soils for VOCs in addition to pesticides. The results indicated that VOCs were not present in site soils at levels above site-specific SSLs, and so are not COCs in soils at SWMU 3.

2. **Section 4.0**
This section states that soil cuttings will be returned to their respective boreholes upon completion of the sampling activities. However, all IDW must be containerized and characterized to determine the proper method of disposal. This issue was discussed with Dean Williamson (CH2M Hill) via telephone on October 26, 2001. If there are any questions regarding the management of the IDW, please see the EPA guidance entitled *Management of Remediation Waste under RCRA* dated October 1998 (EPA530-F-98-026).

CH2M-Jones Response:

As documented in the CH2M-Jones Interim Measure Completion Report (IMCR), soil cuttings and excavated soils were properly containerized, subjected to waste characterization testing, and properly disposed of.

3. **Former Concrete Slab**
Based upon historical figures obtained from the GIS, it appears that the original location of the concrete slab may be in question. The Public Works figure from 1970 seems to indicate that the slab may have been located on the opposite end of the current Building 249 (the location of former Building 1316), which would have been adjacent to the roadway that once cut across the current parking lot. This roadway extended from the northwest to the southeast (parallel to Hobson Street) and connected Wood Street to the roadway southeast of Building 249. According to the Public Works figures, Building 1316 appears to have been the only building in existence within this area during the timeframe (prior to 1971) for which pesticide mixing is suspected to have occurred. Furthermore, according to the *Zone G RFI*

Work Plan Addendum the pesticide mixing is reported to have occurred at former Building 42-A (described as the greenhouse storage shed) which was located southeast of former building 1316 and the current building 249. It does not appear as though previous investigations have addressed these areas. Consequently, additional soil samples will be required to verify that contamination does not exist within these areas.

CH2M-Jones Response:

Both of the areas in question were investigated and excavated as described in the SWMU 3 RFIRA/IMCR/CMSWP.

Hydrogeology Comments Prepared by Paul M. Bergstrand

1. A review of Public Works Maps from 1962 through 1992 reveals the location of Building 42-A is not in the vicinity that was investigated in the RFI. Copies of relevant portions of the Public Works Maps have been attached. Also identified from the maps is Building 1316 which may have been the concrete slab used for mixing pesticides and/or cleaning the equipment for spraying and mixing pesticides. These two locations must be investigated to complete the RFI process.

CH2M-Jones Response:

See response to Jerry Stamps' Comment # 3 above.

2. A review of the RFI work plan addendum dated 17 January 2000 indicates the initial RFI investigation limited sampling parameters and did not include Volatile Organic Chemical (VOC) analysis. Past experience at a DOD Entomology Shop has taught that VOC solvents and fuels were commonly used and associated with pesticide shops. Therefore VOC analysis is required during this investigation. All subsequent sampling at this SWMU must include VOC analysis.

CH2M-Jones Response:

See response to Jerry Stamps' Comment #1 above.

3. A review of the referenced IM Work Plan indicates that several sample locations exceeded the Environmental Protection Agency (EPA) Generic Soil Screening Levels (SSL) with a Dilution Attenuation Factor (DAF) of 10. These exceedences indicate the need for groundwater samples as part of this workplan. Because VOCs may be a contaminant at this site, a DAF of 1 should be used to recalculate all SSL calculations.

CH2M-Jones Response:

Groundwater was investigated at SWMU 3 during the RFIRA/IM with installation and sampling of new monitoring wells, as well as resampling of existing monitoring wells. VOCs detected in site soils were rescreened using a DAF=1, with a site-specific SSL being calculated for detected VOCs (TCE and PCE) in subsurface soil. All detected VOC concentrations were below site-specific SSLs. The remaining groundwater issues will be addressed in a separate CMS, as described in the CMSWP.

4. The groundwater at this site, as represented in the attached GIS data image, flows away from Building 249. Downgradient monitoring wells are therefore necessary for this SWMU in addition to wells located at or near SSL exceedences.

CH2M-Jones Response:

See response to Comment #3 above.

SUMMARY OF CONDITIONS FOR APPROVAL

1. Include VOC analysis for soil and groundwater samples.
2. Containerize and characterize all IDW.
3. Based upon review of historical maps and aerial photographs, additional investigation is necessary for the former Building 1316 and Building 42-A areas.

CONDITIONS FOR APPROVAL

1. The former buildings 1316 and 42-A must be investigated as part of this SWMU.
2. All soil and groundwater sampling at this SWMU must include VOC analysis.
3. All SSL calculations at this SWMU should be recalculated used a DAF of 1.
4. Monitoring wells are necessary in the Building 249 parking area and at former building locations 1316 and 42-A. Additional wells and assessment may be required at this SWMU based on the report of findings or other subsequent information."

CH2M-Jones Response:

All of the above conditions for approval of the SWMU 3 IM have been met as discussed in previous comment responses, and as described in the RFIRA/IMCR/CMSWP.

Appendix G

load 1

WASTE MANAGEMENT

OAKRIDGE LANDFILL
2183 Highway 78, Dorchester, SC 29437
Tel 843-563-2607, Fax 843-563-3375

7-10-02
Truck 21
SWMU 3

SPECIAL WASTE MANIFEST
APPROVAL # OR 0206023
EXPIRATION 6/24/2003

Generator: CHARLESTON NAVAL COMPLEX

Account Number: 490-439

Location / Address: 1849 AVENUE E N CHARLESTON SC (10)

Telephone Number: 843740.2780 Contact: JED HEAMES
Generator Signature: [signature]

********** TO BE COMPLETED BY TRANSPORTER **********

Transporter of Waste: BUTLERWARE TRUCK# 21

Date: 7-10-02 Driver Signature: Vion Craven

********** TO BE COMPLETED BY OAKRIDGE LANDFILL **********

Disposal Site: Oakridge Landfill DWP 130

Description of Waste: RES/SMWU 3-PESTICIDE STORAGE AREA

Ticket Number: 42085 Tonnage: 24.71

Received by: N Carter Date: 7/10/02

load 2

WASTE MANAGEMENT

OAKRIDGE LANDFILL
2193 Highway 78, Dorchester, SC 29437
Tel 843-563-2507, Fax 843-563-3375

7-10-02
Truck 12
SW WU-3

SPECIAL WASTE MANIFEST
APPROVAL # OR 0206023
EXPIRATION 6/24/2003

Generator: CHARLESTON NAVAL COMPLEX

Account Number: 490-439

Location / Address: 1849 AVENUE E N CHARLESTON SC (10)

Telephone Number: 843740.2780 Contact: JED HEAMES
Generator Signature: [signature]

********** TO BE COMPLETED BY TRANSPORTER **********

Transporter of Waste: BUTLERWARE TRUCK# 12

Date: 7-10-02 Driver Signature: [signature]

********** TO BE COMPLETED BY OAKRIDGE LANDFILL **********

Disposal Site: Oakridge Landfill DWP 130

Description of Waste: RES/SMWU 3-PESTICIDE STORAGE AREA

Ticket Number: 912086 Tonnage: 23.77

Received by: M Carter Date: 7/10/02

WASTE MANAGEMENT

load 3

OAKRIDGE LANDFILL
2103 Highway 78, Dorchester, SC 29437
Tel 843-563-2687, Fax 843-563-3375

7-10-02
Truck 19
SWMU-3

SPECIAL WASTE MANIFEST
APPROVAL # OR 0206023
EXPIRATION 6/24/2003

Generator: CHARLESTON NAVAL COMPLEX

Account Number: 490-439

Location / Address: 1849 AVENUE E N CHARLESTON SC (10)

Telephone Number: 843740.2780 Contact: JED HEAMES
Generator Signature: [signature]

********** TO BE COMPLETED BY TRANSPORTER **********

Transporter of Waste: BUTLERWARE TRUCK# BW19

Date: 7.10.02 Driver Signature: [signature]

********** TO BE COMPLETED BY OAKRIDGE LANDFILL **********

Disposal Site: Oakridge Landfill DWP 130

Description of Waste: RES/SMWU 3-PESTICIDE STORAGE AREA

Ticket Number: 44202 Tonnage: 23.58

Received by: M Carter Date: 7/10/02

load 4

WASTE MANAGEMENT

OAKRIDGE LANDFILL
2183 Highway 78, Dorchester, SC 29437
Tel 843-563-2607, Fax 843-563-3375

7-10-02
Truck 15
SWMU-3

SPECIAL WASTE MANIFEST
APPROVAL # OR 0206023
EXPIRATION 6/24/2003

Generator: CHARLESTON NAVAL COMPLEX

Account Number: 490-439

Location / Address: 1849 AVENUE E N CHARLESTON SC (10)

Telephone Number: 843740.2780 Contact: JED HEAMES

Generator Signature: [signature]

********** TO BE COMPLETED BY TRANSPORTER **********

Transporter of Waste: BUTLERWARE TRUCK# BW 15

Date: 7-10-02 Driver Signature: [signature]

********** TO BE COMPLETED BY OAKRIDGE LANDFILL **********

Disposal Site: Oakridge Landfill DWP 130

Description of Waste: RES/SMWU 3-PESTICIDE STORAGE AREA

Ticket Number: 993091 Tonnage: 21.84

Received by: [signature] Date: 7/10/02

WASTE MANAGEMENT

OAKRIDGE LANDFILL
2193 Highway 78, Dorchester, SC 29437
Tel 843-563-2607, Fax 843-563-3375

Sump 3
TM: 1015
Date July 10, 2002
LOAD# 5

SPECIAL WASTE MANIFEST
APPROVAL # OR 0206023
EXPIRATION 6/24/2003

Generator: CHARLESTON NAVAL COMPLEX

Account Number: 490-439

Location / Address: 1849 AVENUE E N CHARLESTON SC (10)

Telephone Number: 843740.2780 Contact: JED HEAMES

Generator Signature: [signature]

********** TO BE COMPLETED BY TRANSPORTER **********

Transporter of Waste: BUTLERWARE TRUCK# 21 BW

Date: 7-10-02 Driver Signature: Vion Craven

********** TO BE COMPLETED BY OAKRIDGE LANDFILL **********

Disposal Site: SOL Oakridge Landfill DWP 130

Description of Waste: RES/SMWU 3-PESTICIDE STORAGE AREA

Ticket Number: 492133 Tonnage: 24.99

Received by: N Carter Date: 7/10/02

WASTE MANAGEMENT

OAKRIDGE LANDFILL
2183 Highway 78, Dorchester, SC 29437
Tel 843-563-2607, Fax 843-563-3358

Date: 7-10-02
TM: 1030
Load# 6
Truck # 12

SPECIAL WASTE MANIFEST
APPROVAL # OR 0206023
EXPIRATION 6/24/2003

Generator: CHARLESTON NAVAL COMPLEX

Account Number: 490-439

Location / Address: 1849 AVENUE E N CHARLESTON SC (10)

Telephone Number: 843740.2780 Contact: JED HEAMES
Generator Signature:

********** TO BE COMPLETED BY TRANSPORTER **********

Transporter of Waste: BUTLERWARE TRUCK# 12

Date: 7-10-02 Driver Signature:

********** TO BE COMPLETED BY OAKRIDGE LANDFILL **********

Disposal Site: Oakridge Landfill DWP 130

Description of Waste: RES/SMWU 3-PESTICIDE STORAGE AREA

Ticket Number: 96134 Tonnage: 25.51

Received by: MCarter Date: 7/10/02

WASTE MANAGEMENT

OAKRIDGE LANDFILL
2183 Highway 78, Dorchester, SC 29437
Tel 843-563-2687, Fax 843-563-3375

LOAD = 7
TRUCK 19
Date 7-10-02
TM = 1040

SPECIAL WASTE MANIFEST
APPROVAL # OR 0206023
EXPIRATION 6/24/2003

Generator: CHARLESTON NAVAL COMPLEX

Account Number: 490-439

Location / Address: 1849 AVENUE E N CHARLESTON SC (10)

Telephone Number: 843740.2780 Contact: JED HEAMES
Generator Signature: [signature]

********** TO BE COMPLETED BY TRANSPORTER **********

Transporter of Waste: BUTLERWARE TRUCK# 19

Date: 7-10-02 Driver Signature: [signature]

********** TO BE COMPLETED BY OAKRIDGE LANDFILL **********

Disposal Site: Oakridge Landfill DWP 130

Description of Waste: RES/SMWU 3-PESTICIDE STORAGE AREA

Ticket Number: 99150 Tonnage: 24.02

Received by: [signature] Date: 7/10/02

WASTE MANAGEMENT

OAKRIDGE LANDFILL
2193 Highway 78, Dorchester, SC 29437
Tel 843-563-2607, Fax 843-563-3258

TRUCK 15
TM = 1050
WAD = 8
7-10-02

SPECIAL WASTE MANIFEST
APPROVAL # OR 0206023
EXPIRATION 6/24/2003

Generator: CHARLESTON NAVAL COMPLEX

Account Number: 490-439

Location / Address: 1849 AVENUE E N CHARLESTON SC (10)

Telephone Number: 843740.2780 Contact: JED HEAMES
Generator Signature: [signature]

********** TO BE COMPLETED BY TRANSPORTER **********

Transporter of Waste: BUTLERWARE TRUCK# 15

Date: 7-10-02 Driver Signature: [signature]

********** TO BE COMPLETED BY OAKRIDGE LANDFILL **********

Disposal Site: Oakridge Landfill DWP 130

Description of Waste: RFS/SMWU 3-PESTICIDE STORAGE AREA

Ticket Number: 092151 Tonnage: 25.53

Received by: MC Date: 7/10/02

WASTE MANAGEMENT

OAKRIDGE LANDFILL
2183 Highway 78, Dorchester, SC 29437
Tel 843-563-2687, Fax 843-563-3375

Load # 9
TRUCK #21
7-10-02
TM: 1250

SPECIAL WASTE MANIFEST
APPROVAL # OR 0206023
EXPIRATION 6/24/2003

Generator: CHARLESTON NAVAL COMPLEX

Account Number: 490-439

Location / Address: 1849 AVENUE E N CHARLESTON SC (10)

Telephone Number: 843740.2780 Contact: JED HEAMES
Generator Signature: [signature]

********** TO BE COMPLETED BY TRANSPORTER **********

Transporter of Waste: BUTLERWARE TRUCK# 21

Date: 7-10-02 Driver Signature: Vion Craven

********** TO BE COMPLETED BY OAKRIDGE LANDFILL **********

Disposal Site: Oakridge Landfill DWP 130

Description of Waste: RES/SMWU 3-PESTICIDE STORAGE AREA

Ticket Number: 992191 Tonnage: 24.73

Received by: NCarter Date: 7/10/02

WASTE MANAGEMENT

OAKRIDGE LANDFILL
2183 Highway 78, Dorchester, SC 29437
Tel 843-563-2687, Fax 843-563-3375

LOAD # 10
TRUCK # 12
7-10-02
TM: 1305

SPECIAL WASTE MANIFEST
APPROVAL # OR 0206023
EXPIRATION 6/24/2003

Generator: CHARLESTON NAVAL COMPLEX

Account Number: 490-439

Location / Address: 1849 AVENUE E N CHARLESTON SC (10)

Telephone Number: 843740.2780 Contact: JED HEAMES
Generator Signature: [signature]

********** TO BE COMPLETED BY TRANSPORTER **********

Transporter of Waste: BUTLERWARE TRUCK# 12

Date: 7-10-02 Driver Signature: [signature]

********** TO BE COMPLETED BY OAKRIDGE LANDFILL **********

Disposal Site: Oakridge Landfill DWP 130

Description of Waste: ~~RES~~ SOL/SMWU 3-PESTICIDE STORAGE AREA

Ticket Number: 99295 Tonnage: 24.01

Received by: V Carter Date: 7/10/02

WASTE MANAGEMENT

OAKRIDGE LANDFILL
2183 Highway 78, Dorchester, SC 29437
Tel 843-563-2607 Fax 843-563-3375

TRUCK# 19
LOAD # 11
TM: 1325
DATE 7-10-02

SPECIAL WASTE MANIFEST
APPROVAL # OR 0206023
EXPIRATION 6/24/2003

Generator: CHARLESTON NAVAL COMPLEX

Account Number: 490-439

Location / Address: 1849 AVENUE E N CHARLESTON SC (10)

Telephone Number: 843740.2780 Contact: JED HEAMES

Generator Signature: [signature]

********** TO BE COMPLETED BY TRANSPORTER **********

Transporter of Waste: BUTLERWARE TRUCK# 19

Date: 7-10-02 Driver Signature: [signature]

********** TO BE COMPLETED BY OAKRIDGE LANDFILL **********

Disposal Site: Oakridge Landfill DWP 130

Description of Waste: RES/SMWU 3-PESTICIDE STORAGE AREA

Ticket Number: 993196 Tonnage: 2525

Received by: [signature] Date: 7/10/02

WASTE MANAGEMENT

OAKRIDGE LANDFILL
2183 Highway 78, Dorchester, SC 29437
Tel 843-563-2607, Fax 843-563-3353

Load = 12
Truck # 15
Time: 1345
Date: 7-10-02

Summ 3

SPECIAL WASTE MANIFEST
APPROVAL # OR 0206023
EXPIRATION 6/24/2003

Generator: CHARLESTON NAVAL COMPLEX

Account Number: 490-439

Location / Address: 1849 AVENUE E N CHARLESTON SC (10)

Telephone Number: 843740.2780 Contact: JED HEAMES
Generator Signature:

********** TO BE COMPLETED BY TRANSPORTER **********

Transporter of Waste: BUTLERWARE TRUCK# 15

Date: 7-10-02 Driver Signature:

********** TO BE COMPLETED BY OAKRIDGE LANDFILL **********

Disposal Site: Oakridge Landfill DWP 130

Description of Waste: RES/SMWU 3-PESTICIDE STORAGE AREA

Ticket Number: 992200 Tonnage: 2435

Received by: NC Date: 7/10/02

WASTE MANAGEMENT

OAKRIDGE LANDFILL
2183 Highway 78, Dorchester, SC 29437
Tel 843-563-2607, Fax 843-563-3375

Summ 3
Load # 13
Time: 1530
Date: 7-10-02

SPECIAL WASTE MANIFEST
APPROVAL # OR 0206023
EXPIRATION 6/24/2003

Generator: CHARLESTON NAVAL COMPLEX

Account Number: 490-439

Location / Address: 1849 AVENUE E N CHARLESTON SC (10)

Telephone Number: 843740.2780 **Contact:** JED HEAMES
Generator Signature: [signature]

********** TO BE COMPLETED BY TRANSPORTER **********

Transporter of Waste: BUTLERWARE **TRUCK#** 21

Date: 7-10-02 **Driver Signature:** Vion Craven

********** TO BE COMPLETED BY OAKRIDGE LANDFILL **********

Disposal Site: Oakridge Landfill DWP 130

Description of Waste: RFS/SMWU 3-PESTICIDE STORAGE AREA

Ticket Number: 002226 **Tonnage:** 24.73

Received by: N Carter **Date:** 7/10/02

WASTE MANAGEMENT

Load 14

OAKRIDGE LANDFILL
2103 Highway 78, Dorchester, SC 29437
Tel 843-553-2602, Fax 843-563-3375

7-11-02
0700
Truck 21
Samm-3

SPECIAL WASTE MANIFEST
APPROVAL # OR 0206023
EXPIRATION 6/24/2003

Generator: CHARLESTON NAVAL COMPLEX

Account Number: 490-439

Location / Address: 1849 AVENUE E N CHARLESTON SC (10)

Telephone Number: 843740.2780 Contact: JED HEAMES
Generator Signature: [signature]

********** TO BE COMPLETED BY TRANSPORTER **********

Transporter of Waste: BUTLERWARE TRUCK# 21

Date: 7-11-02 Driver Signature: Vion Craven

********** TO BE COMPLETED BY OAKRIDGE LANDFILL **********

Disposal Site: Oakridge Landfill DWP 130

Description of Waste: RES/SMWU 3-PESTICIDE STORAGE AREA

Ticket Number: 092256 Tonnage: 26.90

Received by: M Carter Date: 7/11/02

WASTE MANAGEMENT

Load #15

OAKRIDGE LANDFILL
2103 Highway 78, Dorchester, SC 29437
Tel 843-853-2687, Fax 843-563-3375

7-11-02
Truck 19
SWMU-3

SPECIAL WASTE MANIFEST
APPROVAL # OR 0206023
EXPIRATION 6/24/2003

Generator: CHARLESTON NAVAL COMPLEX

Account Number: 490-439

Location / Address: 1849 AVENUE E N CHARLESTON SC (10)

Telephone Number: 843740.2780 Contact: JED HEAMES
Generator Signature: [signature]

********** TO BE COMPLETED BY TRANSPORTER **********

Transporter of Waste: BUTLERWARE TRUCK# BW19

Date: 7-11-02 Driver Signature: Leroy

********** TO BE COMPLETED BY OAKRIDGE LANDFILL **********

Disposal Site: Oakridge Landfill DWP 130

Description of Waste: RES/SMWU 3-PESTICIDE STORAGE AREA

Ticket Number: 095260 Tonnage: 23.50

Received by: N Carter Date: 7/11/02

Load 16

WASTE MANAGEMENT

OAKRIDGE LANDFILL
2143 Highway 78, Dorchester, SC 29437
Tel 843-563-2667 Fax 843-563-3375

7-11-02
0745
Truck 12
SWMU-3

SPECIAL WASTE MANIFEST
APPROVAL # OR 0206023
EXPIRATION 6/24/2003

Generator: CHARLESTON NAVAL COMPLEX

Account Number: 490-439

Location / Address: 1849 AVENUE E N CHARLESTON SC (10)

Telephone Number: 843740.2780 Contact: JED HEAMES
Generator Signature: [signature]

********** TO BE COMPLETED BY TRANSPORTER **********

Transporter of Waste: BUTLERWARE TRUCK# 12

Date: 7-11-02 Driver Signature: [signature]

********** TO BE COMPLETED BY OAKRIDGE LANDFILL **********

Disposal Site: Oakridge Landfill DWP 130

Description of Waste: RES/SMWU 3-PESTICIDE STORAGE AREA

Ticket Number: 992268 Tonnage: 25.42

Received by: UNC Date: 7/11/02

load 17

WASTE MANAGEMENT

OAKRIDGE LANDFILL
2183 Highway 78, Dorchester, SC 29437
Tel 843-563-2607, Fax 843-563-3375

Truck 21
7-11-02
SWMW-3
0945

SPECIAL WASTE MANIFEST
APPROVAL # OR 0206023
EXPIRATION 6/24/2003

Generator: CHARLESTON NAVAL COMPLEX

Account Number: 490-439

Location / Address: 1849 AVENUE E N CHARLESTON SC (10)

Telephone Number: 843740.2780 Contact: JED HEAMES

Generator Signature: [signature]

********** TO BE COMPLETED BY TRANSPORTER **********

Transporter of Waste: BUTLERWARE TRUCK# 21

Date: 7-11-02 Driver Signature: Vion Craven

********** TO BE COMPLETED BY OAKRIDGE LANDFILL **********

Disposal Site: Oakridge Landfill DWP 130

Description of Waste: RES/SMWU 3-PESTICIDE STORAGE AREA

Ticket Number: 992307 Tonnage: 26.27

Received by: N Carter Date: 7/11/02

Load 18

WASTE MANAGEMENT

OAKRIDGE LANDFILL
2183 Highway 78, Dorchester, SC 29437
Tel 843-563-2607, Fax 843-563-3375

Truck 19
7-11-02
SWMU-3
1000

SPECIAL WASTE MANIFEST
APPROVAL # OR 0206023
EXPIRATION 6/24/2003

Generator: CHARLESTON NAVAL COMPLEX

Account Number: 490-439

Location / Address: 1849 AVENUE E N CHARLESTON SC (10)

Telephone Number: 843740.2780 Contact: JED HEAMES
Generator Signature:

********** TO BE COMPLETED BY TRANSPORTER **********

Transporter of Waste: BUTLERWARE TRUCK#

Date: 7-11-02 Driver Signature: Leroy

********** TO BE COMPLETED BY OAKRIDGE LANDFILL **********

Disposal Site: Oakridge Landfill DWP 130

Description of Waste: RES/SMWU 3-PESTICIDE STORAGE AREA

Ticket Number: 002313 Tonnage: 23.67

Received by: WCaster Date: 7/11/02

Load 19

WASTE MANAGEMENT

OAKRIDGE LANDFILL
2183 Highway 78, Dorchester, SC 29427
Tel 843-563-2687 Fax 843-563-3375

Truck 12
Gwar-3
7-11-02
1030

SPECIAL WASTE MANIFEST
APPROVAL # OR 0206023
EXPIRATION 6/24/2003

Generator: CHARLESTON NAVAL COMPLEX

Account Number: 490-439

Location / Address: 1849 AVENUE E N CHARLESTON SC (10)

Telephone Number: 843740.2780 Contact: JED HEAMES
Generator Signature: [signature]

********** TO BE COMPLETED BY TRANSPORTER **********

Transporter of Waste: BUTLERWARE TRUCK# 12

Date: 7-11-02 Driver Signature: [signature]

********** TO BE COMPLETED BY OAKRIDGE LANDFILL **********

Disposal Site: Oakridge Landfill DWP 130

Description of Waste: RES/SMWU 3-PESTICIDE STORAGE AREA

Ticket Number: 092320 Tonnage: 24.71

Received by: [signature] Date: 7/11/02

WASTE MANAGEMENT

Load 20

OAKRIDGE LANDFILL
2183 Highway 78, Dorchester SC 29437
Tel 843-563-2667 Fax 843-563-3375

Truck 21
7-11-02
SWMV-3
1236

SPECIAL WASTE MANIFEST
APPROVAL # OR 0206023
EXPIRATION 6/24/2003

Generator: CHARLESTON NAVAL COMPLEX

Account Number: 490-439

Location / Address: 1849 AVENUE E N CHARLESTON SC (10)

Telephone Number: 843740.2780 Contact: JED HEAMES
Generator Signature:

********** TO BE COMPLETED BY TRANSPORTER **********

Transporter of Waste: BUTLERWARE TRUCK# 21

Date: 7-11-02 Driver Signature: Vion Craven

********** TO BE COMPLETED BY OAKRIDGE LANDFILL **********

Disposal Site: Oakridge Landfill DWP 130

Description of Waste: RES/SMWU 3-PESTICIDE STORAGE AREA

Ticket Number: 992358 Tonnage: 25.54

Received by: LCarter Date: 7/11/02

load 21

WASTE MANAGEMENT

OAKRIDGE LANDFILL
2183 Highway 78, Dorchester, SC 29437
Tel 843-563-2607, Fax 843-563-3375

Truck 19
7-11-02
scale 3
1315

SPECIAL WASTE MANIFEST
APPROVAL # OR 0206023
EXPIRATION 6/24/2003

Generator: CHARLESTON NAVAL COMPLEX

Account Number: 490-439

Location / Address: 1849 AVENUE E N CHARLESTON SC (10)

Telephone Number: 843740.2780 Contact: JED HEAMES
Generator Signature: [signature]

********** TO BE COMPLETED BY TRANSPORTER **********

Transporter of Waste: BUTLERWARE TRUCK#

Date: 7/11/02 Driver Signature: [signature]

********** TO BE COMPLETED BY OAKRIDGE LANDFILL **********

Disposal Site: Oakridge Landfill DWP 130

Description of Waste: RES/SMWU 3-PESTICIDE STORAGE AREA

Ticket Number: 992363 Tonnage: 22.59

Received by: [signature] Date: 7/11/02

Load 22

WASTE MANAGEMENT

OAKRIDGE LANDFILL
2163 Highway 78, Dorchester, SC 29437
Tel 843-563-3607, Fax 843-563-3375

Truck 12
7-11-02
SWMU-3
1335

SPECIAL WASTE MANIFEST
APPROVAL # OR 0206023
EXPIRATION 6/24/2003

Generator: CHARLESTON NAVAL COMPLEX

Account Number: 490-439

Location / Address: 1849 AVENUE E N CHARLESTON SC (10)

Telephone Number: 843740.2780 Contact: JED HEAMES
Generator Signature: [signature]

********** TO BE COMPLETED BY TRANSPORTER **********

Transporter of Waste: BUTLERWARE TRUCK# 12

Date: 7-11-02 Driver Signature: [signature]

********** TO BE COMPLETED BY OAKRIDGE LANDFILL **********

Disposal Site: Oakridge Landfill DWP 130

Description of Waste: RES/SMWU 3-PESTICIDE STORAGE AREA

Ticket Number: 992373 Tonnage: 23.17

Received by: LCarter Date: 7/11/02

WASTE MANAGEMENT

OAKRIDGE LANDFILL
2183 Highway 78, Dorchester, SC 29437
Tel 843-563-2687, Fax 843-563-3375

Sumu 3
TM: 0810
Load # 23

SPECIAL WASTE MANIFEST
APPROVAL # OR 0206023
EXPIRATION 6/24/2003

Generator: CHARLESTON NAVAL COMPLEX

Account Number: 490-439

Location / Address: 1849 AVENUE E N CHARLESTON SC (10)

Telephone Number: 843740.2780 Contact: JED HEAMES

Generator Signature: [signature]

********** TO BE COMPLETED BY TRANSPORTER **********

Transporter of Waste: BUTLERWARE TRUCK# 21

Date: 7-12-02 Driver Signature: Vion Craven

********** TO BE COMPLETED BY OAKRIDGE LANDFILL **********

Disposal Site: Oakridge Landfill DWP 130

Description of Waste: RES/SMWU 3 PESTICIDE STORAGE AREA

Ticket Number: 092435 Tonnage: 26.58

Received by: [initials] Date: 7/12/02

WASTE MANAGEMENT

OAKRIDGE LANDFILL
2183 Highway 78, Dorchester, SC 29427
Tel 843-563-2607, Fax 843-563-3375

Simu 3
TM: 0825
LOAD # 24

SPECIAL WASTE MANIFEST
APPROVAL # OR 0206023
EXPIRATION 6/24/2003

Generator: CHARLESTON NAVAL COMPLEX

Account Number: 490-439

Location / Address: 1849 AVENUE E N CHARLESTON SC (10)

Telephone Number: 843740.2780 Contact: JED HEAMES

Generator Signature: [signature]

********** TO BE COMPLETED BY TRANSPORTER **********

Transporter of Waste: BUTLERWARE TRUCK# 19

Date: 7-12-02 Driver Signature: [signature]

********** TO BE COMPLETED BY OAKRIDGE LANDFILL **********

Disposal Site: Oakridge Landfill DWP 130

Description of Waste: RES/SMWU 3-PESTICIDE STORAGE AREA

Ticket Number: 992436 Tonnage: 24.98

Received by: [signature] Date: 7/12/02

WASTE MANAGEMENT

OAKRIDGE LANDFILL
2103 Highway 78, Dorchester, SC 29437
Tel 843-563-2687, Fax 843-563-3375

Sum 3
TM: 0835
Load # 25

SPECIAL WASTE MANIFEST
APPROVAL # OR 0206023
EXPIRATION 6/24/2003

Generator: CHARLESTON NAVAL COMPLEX

Account Number: 490-439

Location / Address: 1849 AVENUE E N CHARLESTON SC (10)

Telephone Number: 843740.2780 Contact: JED HEAMES
Generator Signature: [signature]

********** TO BE COMPLETED BY TRANSPORTER **********

Transporter of Waste: BUTLERWARE TRUCK# 12

Date: 7-12-02 Driver Signature: [signature]

********** TO BE COMPLETED BY OAKRIDGE LANDFILL **********

Disposal Site: Oakridge Landfill DWP 130

Description of Waste: RES/SMWU 3-PESTICIDE STORAGE AREA

Ticket Number: 092249 Tonnage: 26.15

Received by: YC Date: 7/12/02

WASTE MANAGEMENT

OAKRIDGE LANDFILL
2183 Highway 78, Dorchester, SC 29437
Tel 843-563-2682, Fax 843-563-3358

TRUCK = 12
LOAD # 26
7-12-02
Time: 1130

SPECIAL WASTE MANIFEST
APPROVAL # OR 0206023
EXPIRATION 6/24/2003

Generator: CHARLESTON NAVAL COMPLEX

Account Number: 490-439

Location / Address: 1849 AVENUE E N CHARLESTON SC (10)

Telephone Number: 843740.2780 Contact: JED HEAMES
Generator Signature:

********** TO BE COMPLETED BY TRANSPORTER **********

Transporter of Waste: BUTLERWARE . TRUCK# 21

Date: 7-12-02 Driver Signature:

********** TO BE COMPLETED BY OAKRIDGE LANDFILL **********

Disposal Site: Oakridge Landfill DWP 130

Description of Waste: RES/SMWU 3-PESTICIDE STORAGE AREA

Ticket Number: 092491 Tonnage: 26.38

Received by: NCarter Date: 7/12/02

WASTE MANAGEMENT

OAKRIDGE LANDFILL
2183 Highway 78, Dorchester, SC 29437
Tel 843-563-2667, Fax 843-563-3375

TRUCK NO: 21
TM: 1145
7-12-02
LOAD# 27

SPECIAL WASTE MANIFEST
APPROVAL # OR 0206023
EXPIRATION 6/24/2003

Generator: CHARLESTON NAVAL COMPLEX

Account Number: 490-439

Location / Address: 1849 AVENUE E N CHARLESTON SC (10)

Telephone Number: 843740.2780 Contact: JED HEAMES
Generator Signature: [signature]

********** TO BE COMPLETED BY TRANSPORTER **********

Transporter of Waste: BUTLERWARE TRUCK# 21

Date: 7-12 12 Driver Signature: Vion CRAVEN

********** TO BE COMPLETED BY OAKRIDGE LANDFILL **********

Disposal Site: Oakridge Landfill DWP 130

Description of Waste: RES/SMWU 1-PESTICIDE STORAGE AREA

Ticket Number: 992492 Tonnage: 27.65

Received by: VCarter Date: 7/12/02

WASTE MANAGEMENT

OAKRIDGE LANDFILL
2163 Highway 78, Dorchester, SC 29427
Tel 843-563-2607, Fax 843-563-3375

LOAD # 28
TM: 1200
Sum 3

SPECIAL WASTE MANIFEST
APPROVAL # OR 0206023
EXPIRATION 6/24/2003

Generator: CHARLESTON NAVAL COMPLEX

Account Number: 490-439

Location / Address: 1849 AVENUE E N CHARLESTON SC (10)

Telephone Number: 843740.2780 Contact: JED HEAMES

Generator Signature: [signature]

********** TO BE COMPLETED BY TRANSPORTER **********

Transporter of Waste: BUTLERWARE TRUCK# 19

Date: 7-12-02 Driver Signature: [signature]

********** TO BE COMPLETED BY OAKRIDGE LANDFILL **********

Disposal Site: Oakridge Landfill DWP 130

Description of Waste: RES/SMWU 3-PESTICIDE STORAGE AREA

Ticket Number: 992505 Tonnage: 24.50

Received by: NCarter Date: 7/12/02

WASTE MANAGEMENT

load 30

OAKRIDGE LANDFILL
2193 Highway 78, Dorchester, SC 29437
Tel 843-563-2687, Fax 843-563-3375

Truck 19
7-15-02
SWMU-3
0710

SPECIAL WASTE MANIFEST
APPROVAL # OR 0206023
EXPIRATION 6/24/2003

Generator: CHARLESTON NAVAL COMPLEX

Account Number: 490-439

Location / Address: 1849 AVENUE E N CHARLESTON SC (10)

Telephone Number: 843740.2780 Contact: JED HEAMES
Generator Signature: [signature]

********** TO BE COMPLETED BY TRANSPORTER **********

Transporter of Waste: BUTLERWARE TRUCK#

Date: 7.15.02 Driver Signature: Leroy

********** TO BE COMPLETED BY OAKRIDGE LANDFILL **********

Disposal Site: Oakridge Landfill DWP 130

Description of Waste: RES/SMWU 3-PESTICIDE STORAGE AREA

Ticket Number: 002648 Tonnage: 21.00

Received by: GC Date: 7/15/02

Load 31

WASTE MANAGEMENT

OAKRIDGE LANDFILL
2183 Highway 78, Dorchester, SC 29437
Tel 843-563-2607, Fax 843-563-3375

Truck 21
7-15-02
SWMU-3
0735

SPECIAL WASTE MANIFEST
APPROVAL # OR 0206023
EXPIRATION 6/24/2003

Generator: CHARLESTON NAVAL COMPLEX

Account Number: 490-439

Location / Address: 1849 AVENUE E N CHARLESTON SC (10)

Telephone Number: 843740.2780 Contact: JED HEAMES

Generator Signature: [signature]

********** TO BE COMPLETED BY TRANSPORTER **********

Transporter of Waste: BUTLERWARE TRUCK# 21

Date: 7-15-02 Driver Signature: Vion Craven

********** TO BE COMPLETED BY OAKRIDGE LANDFILL **********

Disposal Site: Oakridge Landfill DWP 130

Description of Waste: RES/SMWU 3-PESTICIDE STORAGE AREA

Ticket Number: 992655 Tonnage: 2392

Received by: [signature] Date: 7/15/02

06/22/2002 02:28 8435633375 OAKRIDGE PAGE 02

Load ~~te~~ 32
Truck 19
7-15-02
SWMU-3
1015

WASTE MANAGEMENT

OAKRIDGE LANDFILL
2183 Highway 78, Dorchester, SC 29437
Tel 843-563-2607, Fax 843-563-3375

SPECIAL WASTE MANIFEST
APPROVAL # OR 0206023
EXPIRATION 6/24/2003

Generator: CHARLESTON NAVAL COMPLEX

Account Number: 490-439

Location / Address: 1849 AVENUE E N CHARLESTON SC (10)

Telephone Number: 843740.2780 Contact: JED HEAMES

Generator Signature: [signature]

********** TO BE COMPLETED BY TRANSPORTER **********

Transporter of Waste: BUTLERWARE TRUCK#

Date: 7.15.02 Driver Signature: Leroy

********** TO BE COMPLETED BY OAKRIDGE LANDFILL **********

Disposal Site: Oakridge Landfill DWP 130

Description of Waste: RES/SMWU 3-PESTICIDE STORAGE AREA

Ticket Number: 992695 Tonnage: 23.04

Received by: Master Date: 7/15/02

Load 33

WASTE MANAGEMENT

OAKRIDGE LANDFILL
2183 Highway 78, Dorchester, SC 29437
Tel 843-563-2607, Fax 843-563-3375

Truck 21
7-15-02
SWMW-3
1020

SPECIAL WASTE MANIFEST
APPROVAL # OR 0206023
EXPIRATION 6/24/2003

Generator: CHARLESTON NAVAL COMPLEX

Account Number: 490-439

Location / Address: 1849 AVENUE E N CHARLESTON SC (10)

Telephone Number: 843740.2780 Contact: JED HEAMES

Generator Signature: [signature]

********** TO BE COMPLETED BY TRANSPORTER **********

Transporter of Waste: BUTLERWARE TRUCK# 21

Date: 7-15-02 Driver Signature: Vion Craven

********** TO BE COMPLETED BY OAKRIDGE LANDFILL **********

Disposal Site: Oakridge Landfill DWP 130

Description of Waste: RES/SMWU 3-PESTICIDE STORAGE AREA

Ticket Number: 992701 Tonnage: 24.72

Received by: Marter Date: 7/15/02

WASTE MANAGEMENT

OAKRIDGE LANDFILL

SNMR 3
LOAD # 27
TM: 1446
Date: 7-12-02

SPECIAL WASTE MANIFEST
APPROVAL # OR 0206023
EXPIRATION 6/24/2003

Generator: CHARLESTON NAVAL COMPLEX

Account Number: 490-439

Location / Address: 1849 AVENUE E N CHARLESTON SC (10)

Telephone Number: 843740.2780 Contact: JED HEAMES
Generator Signature:

********** TO BE COMPLETED BY TRANSPORTER **********

Transporter of Waste: BUTLERWARE TRUCK# 21
Date: 7-12-02 Driver Signature: Von Craven

********** TO BE COMPLETED BY OAKRIDGE LANDFILL **********

Disposal Site: Oakridge Landfill DWP 130

Description of Waste: RES/SMWU/PESTICIDE STORAGE AREA

Ticket Number: 992537 Tonnage: 25.29

Received by: MC Date: 7/12/02

Load 34

WASTE MANAGEMENT

OAKRIDGE LANDFILL
2184 Highway 78, Dorchester, SC 29437
Tel 843-563-2607 Fax 843-343-3375

SWMU 3
7-15-02
Truck 21

SPECIAL WASTE MANIFEST
APPROVAL # OR 0206023
EXPIRATION 6/24/2003

Generator: CHARLESTON NAVAL COMPLEX

Account Number: 490-439

Location / Address: 1849 AVENUE E N CHARLESTON SC (10)

Telephone Number: 843740.2780 **Contact:** JED HEAMES

Generator Signature: [signature]

********** TO BE COMPLETED BY TRANSPORTER **********

Transporter of Waste: BUTLERWARE **TRUCK#** 21

Date: 7-15-02 **Driver Signature:** Vion Craven

********** TO BE COMPLETED BY OAKRIDGE LANDFILL **********

Disposal Site: Oakridge Landfill DWP 130

Description of Waste: RES/SMWU 3-PESTICIDE STORAGE AREA

Ticket Number: 992765 **Tonnage:** 26.67

Received by: NC **Date:** 7/15

load 35

WASTE MANAGEMENT

OAKRIDGE LANDFILL
[illegible]
Tel [illegible] Fax [illegible]

SWMU-3
7-15-02
Truck 19
1330

SPECIAL WASTE MANIFEST
APPROVAL # OR 0206023
EXPIRATION 6/24/2003

Generator: CHARLESTON NAVAL COMPLEX

Account Number: 490-439

Location / Address: 1849 AVENUE E N CHARLESTON SC (10)

Telephone Number: 843740.2780 Contact: JED HEAMES
Generator Signature: [signature]

********** TO BE COMPLETED BY TRANSPORTER **********

Transporter of Waste: BUTLERWARE TRUCK#

Date: 7-15-02 Driver Signature: [signature]

********** TO BE COMPLETED BY OAKRIDGE LANDFILL **********

Disposal Site: Oakridge Landfill DWP 130

Description of Waste: RES/SMWU 3-PESTICIDE STORAGE AREA

Ticket Number: 4927664 Tonnage: 2.81

Received by: [illegible] Date: 7/15

NON-HAZARDOUS WASTE MANIFEST

1. Generator's US EPA ID No.

Manifest Doc. No.

2. Page 1 of 1

3. Generator's Name and Mailing Address

Southern Division Naval Facility
Caretaker Site Office, PO Box 190010
N Charleston, SC 29419

4. Generator's Phone ( )

5. Transporter 1 Company Name: Fenn-Vac

6. US EPA ID Number: SCD980837504

A. Transporter's Phone: 843-552-8306

7. Transporter 2 Company Name

8. US EPA ID Number

B. Transporter's Phone

9. Designated Facility Name and Site Address

Fennell Processing Facility
141 Fennell Rd
N Charleston, SC 29419

10. US EPA ID Number

C. Facility's Phone: 843-552-4751

11. Waste Shipping Name and Description	12. Containers No.	Type	13. Total Quantity	14. Unit Wt/Vol
a. non-regulated solid, n.o.s. (IDW soil)	021	DM	10500	P
b.				
c.				
d.				

D. Additional Descriptions for Materials Listed Above

PV01-70

SO335 A-E - SWMU-3 drill cuttings
SO337 A-J - SWMU-3 excavated soils

E. Handling Codes for Wastes Listed Above

15. Special Handling Instructions and Additional Information

16. GENERATOR'S CERTIFICATION: I certify the materials described above on this manifest are not subject to federal regulations for reporting proper disposal of Hazardous Waste.

Printed/Typed Name: Ted Heames

Signature: [signature]

Month 11 Day 27 Year 02

17. Transporter 1 Acknowledgement of Receipt of Materials

Printed/Typed Name: CHARLES G. SINGLETON

Signature: [signature]

Month 11 Day 27 Year 02

18. Transporter 2 Acknowledgement of Receipt of Materials

Printed/Typed Name

Signature

Month Day Year

19. Discrepancy Indication Space

20. Facility Owner or Operator: Certification of receipt of waste materials covered by this manifest except as noted in Item 19.

Printed/Typed Name: [signature]

Signature: [signature]

Month 12 Day 02 Year 02

GENERATOR

TRANSPORTER

FACILITY

Printed by: [illegible]
Neeher, [illegible]

TRANSPORTER #1

[illegible] Rev. [illegible]

01/08/03 10:51 FAX

NON-HAZARDOUS WASTE MANIFEST	1. Generator's US EPA ID No. SC01.7.0022560	Manifest Doc. No.	2. Page 1 of 1

3. Generator's Name and Mailing Address: Southern Division Naval facility Caretaker Site office, PO Box 190010

4. Generator's Phone (843) 740-2780 N. Charleston SC 29419

5. Transporter 1 Company Name	6. US EPA ID Number	A. Transporter's Phone
Fenn-Vac	SC09.8.0837.504	(843) 552-8306
7. Transporter 2 Company Name	8. US EPA ID Number	B. Transporter's Phone
9. Designated Facility Name and Site Address	10. US EPA ID Number	C. Facility's Phone
Fennell Processing facility 141 Fennell Rd N. Charleston, SC 29418		(843) 552-4751

11. Waste Shipping Name and Description	12. Containers No.	Type	13. Total Quantity	14. Unit Wt/Vol
a. non-regulated solid, n.o.s. (IDW soil)	18	DM	3.0.0.0	P
b. ~~non-regulated liquid, n.o.s. (IDW water)~~		DM		P
c.				
d.				

D. Additional Descriptions for Materials Listed Above: FV01-70

E. Handling Codes for Wastes Listed Above:

18. Special Handling Instructions and Additional Information

14 drums swamp - 3 Excavated soils
4 drums AOC-633

16. GENERATOR'S CERTIFICATION: I certify the materials described above on this manifest are not subject to federal regulations for reporting proper disposal of Hazardous Waste.

Printed/Typed Name	Signature	Month	Day	Year
Ted Heames	[signature]	12	22	02

17. Transporter 1 Acknowledgement of Receipt of Materials

Printed/Typed Name	Signature	Month	Day	Year
	[signature]	12	23	02

18. Transporter 2 Acknowledgement of Receipt of Materials

Printed/Typed Name	Signature	Month	Day	Year
[illegible]				

19. Discrepancy Indication Space

20. Facility Owner or Operator: Certification of receipt of waste materials covered by this manifest except as noted in item 19.

Printed/Typed Name	Signature	Month	Day	Year
[illegible]	[signature]	12	26	02

GENERATOR

TRANSPORTER

FACILITY

TRANSPORTER #1

Appendix H

10 7:41AM

10 11:24AM

11 6:18AM

12 10:06AM

12 10:07 AM

12 1:06 PM

15 1:07PM

24 9:30AM