N61165.AR.003417
CNC CHARLESTON
5090.3a

INTERIM MEASURES COMPLETION REPORT/CORRECTIVE MEASURES STUDY PILOT STUDY WORK PLAN SOLID WASTE MANAGEMENT UNIT 166 ZONE K CNC CHARLESTON SC

4/13/2005

CH2M HILL

IMCR/CMS WORK PLAN/PILOT STUDY WORK PLAN

SWMU 166. Zone K

Charleston Naval Complex
North Charleston, South Carolina

SUBMITTED TO
U.S. Navy Southern Division
Naval Facilities Engineering Command

CH2M Jones

November 2005

Contract N62467-99-C-0960

CH2M HILL
3011 SW Williston Road
Gainesville, FL
32608-3928
P.O. Box 147009
Gainesville, FL
32614-7009
Tel 352.335.7991
Fax 352.335.2959

CH2MHILL

April 13, 2005

Mr. David Scaturo
Corrective Action Engineering Section
South Carolina Department of Health and
Environmental Control
Bureau of Land and Waste Management
2600 Bull Street
Columbia, SC 29201

Re: Interim Measure Completion Report/CMS Work Plan/Pilot Study Work Plan (Revision 0) – SWMU 166, Zone K

Dear Mr. Scaturo:

Enclosed please find two copies of the Interim Measure Completion Report/CMS Work Plan/Pilot Study Work Plan (Revision 0) for SWMU 166 in Zone K of the Charleston Naval Complex (CNC). This report has been prepared pursuant to agreements by the CNC BRAC Cleanup Team for completing the RCRA Corrective Action process.

The principal author of this document is Sam Naik. Please contact him at 770/604-9182, extension 255, if you have any questions or comments.

Sincerely,

CH2M HILL

Dean Williamson, P.E.

cc: Rob Harrell/Navy, w/att
Dann Spariosu/EPA, w/att
Gary Foster/CH2M HILL, w/att

IMCR/CMS WORK PLAN/PILOT STUDY WORK PLAN

SWMU 166, Zone K

Charleston Naval Complex
North Charleston, South Carolina

SUBMITTED TO
U.S. Navy Southern Division
Naval Facilities Engineering Command

PREPARED BY
CH2M-Jones

November 2005

Revision 1
Contract N62467-99-C-0960
258814.ZK.PR.07

Certification Page for Interim Measure Completion Report/ Corrective Measures Study Work Plan/Pilot Test Work Plan (Revision 1) – SWMU 166, Zone K

I, Dean Williamson, certify that this report has been prepared under my direct supervision. The data and information are, to the best of my knowledge, accurate and correct, and the report has been prepared in accordance with current standards of practice for engineering.

South Carolina

Permit No. 21428

Dean Williamson

Dean Williamson, P.E.

11/2/2005

Date

Contents

Section **Page**

Acronyms and Abbreviations ..... **viii**

1.0 Introduction **1-1**

1.1 Background 1-1

1.1.1 Site History 1-1

1.1.2 General Source Area Description 1-2

1.2 Purpose of the Interim Measure Completion Report/Corrective Measures Study Work Plan 1-4

1.3 Organization of the Interim Measure Completion Report/Corrective Measures Study Work Plan 1-4

Figure 1-1 Location of SWMU 166, Zone K within the CNC 1-6

Figure 1-2 Shallow Groundwater Potentiometric Map 1-7

Figure 1-3 Deep Groundwater Potentiometric Map 1-8

Figure 1-4 Approximate Target Treatment Areas 1-9

Figure 1-5 Approximate Target Treatment Area 1 1-10

Figure 1-6 Approximate Target Treatment Area 2 1-11

Figure 1-7 Approximate Target Treatment Area 3 1-12

Figure 1-8 Approximate Target Treatment Areas 4 and 5 1-13

Figure 1-9 Approximate Target Treatment Area 6 1-14

Figure 1-10 Approximate Target Treatment Area 7 1-15

Figure 1-11 Approximate Target Treatment Area 8 1-16

2.0 Summary of Interim Measure Activities at SWMU 166 ..... **2-1**

2.1 Description of Interim Measure Activities 2-1

2.1.1 Treatment Technology Description 2-1

2.1.2 Interim Measure Implementation Summary 2-2

Table 2-1 Summary of CVOC Detections during Pre- and Post-Injection Sampling Events at TTA 1 2-6

Contents, Continued

Section **Page**

Table 2-2 Summary of CVOC Detections during Pre- and Post-Injection Sampling Events at TTA 2 2-7

Table 2-3 Summary of CVOC Detections during Pre- and Post-Injection Sampling Events at TTA 3 2-8

Table 2-4 Summary of CVOC Detections during Pre- and Post-Injection Sampling Events at TTA 4 2-10

Table 2-5 Summary of CVOC Detections during Pre- and Post-Injection Sampling Events at TTA 5 2-12

Table 2-6 Summary of CVOC Detections during Pre- and Post-Injection Sampling Events at TTA 6 2-14

Table 2-7 Summary of CVOC Detections during Pre- and Post-Injection Sampling Events at TTA 7 2-16

Table 2-8 Summary of CVOC Detections during Pre- and Post-Injection Sampling Events at TTA 8 2-17

Figure 2-1 Existing and Newly Installed Monitoring Wells for IM Treatment Monitoring - Eastern Extent of SWMU 166 2-18

Figure 2-2 Existing and Newly Installed Monitoring Wells for IM Treatment Monitoring - Central Portion of SWMU 166 2-19

Figure 2-3 Existing and Newly Installed Monitoring Wells for IM Treatment Monitoring - Western Extent of SWMU 166 2-20

Figure 2-4 Location of ZVI Injection Borings at TTA 1 2-22

Figure 2-5 Location of ZVI Injection Borings at TTA 2 2-22

Figure 2-6 Location of ZVI Injection Borings at TTA 3 2-23

Figure 2-7 Location of ZVI Injection Borings at TTA 4 2-24

Figure 2-8 Location of ZVI Injection Borings at TTA 5 2-25

Figure 2-9 Location of ZVI Injection Borings at TTA 6 2-26

Figure 2-10 Location of ZVI Injection Borings at TTA 7 2-27

Figure 2-11 Location of ZVI Injection Borings at TTA 8 2-28

3.0 Results of Interim Measure at SWMU 166 3-1

3.1 Groundwater Sampling and Analysis 3-1

Contents, Continued

Section **Page**

3.1.1 Baseline Monitoring for Full-Scale Interim Measure Implementation 3-1

3.1.2 Post-Treatment Monitoring for Full-Scale Interim Measure Implementation 3-1

3.2 Conclusions for Interim Measures at SWMU 166 3-4

Table 3-1 Analytical Parameters for Pre- and Post-Injection Monitoring 3-6

Table 3-2 Comparison of Pre- and Post-Injection Concentrations of Selected CVOCs at TTA 1 3-8

Table 3-3 Comparison of Pre- and Post-Injection Concentrations of Selected CVOCs at TTA 2 3-9

Table 3-4 Comparison of Pre- and Post-Injection Concentrations of Selected CVOCs at TTA 3 3-10

Table 3-5 Comparison of Pre- and Post-Injection Concentrations of Selected CVOCs at TTA 4 3-12

Table 3-6 Comparison of Pre- and Post-Injection Concentrations of Selected CVOCs at TTA 5 3-14

Table 3-7 Comparison of Pre- and Post-Injection Concentrations of Selected CVOCs at TTA 6 3-16

Table 3-8 Comparison of Pre- and Post-Injection Concentrations of Selected CVOCs at TTA 7 3-18

Table 3-9 Comparison of Pre- and Post-Injection Concentrations of Selected CVOCs at TTA 8 3-19

Figure 3-1 Trends of TCE and DCE Concentrations Before and After ZVI Injections at TTA-1 3-20

Figure 3-2 Trends of TCE and DCE Concentrations Before and After ZVI Injections at TTA-2 3-22

Figure 3-3 Trends of TCE and DCE Concentrations Before and After ZVI Injections at TTA-3 3-23

Figure 3-4 Trends of TCE and DCE Concentrations Before and After ZVI Injections at TTA-4 3-26

Figure 3-5 Trends of TCE and DCE Concentrations Before and After ZVI Injections at TTA-5 3-29

Contents, Continued

Section **Page**

Figure 3-6 Trends of TCE and DCE Concentrations Before and After ZVI Injections at TTA-6 3-31

Figure 3-7 Trends of TCE and DCE Concentrations Before and After ZVI Injections at TTA-7 3-33

Figure 3-8 Trends of TCE and DCE Concentrations Before and After ZVI Injections at TTA-8 3-35

4.0 CMS Work Plan for SWMU 166 4-1

4.1 Current Extent of Volatile Organic Compound Plume 4-1

4.2 Remedial Action Objectives 4-2

4.3 Remedial Goal Options and Proposed Media Cleanup Standards 4-2

4.4 Identification of Potential Corrective Measure Technologies 4-3

4.4.1 Enhanced In Situ Anaerobic Biodegradation 4-3

4.4.2 Monitored Natural Attenuation 4-4

4.4.3 Permeable Reactive Barriers 4-5

4.4.4 Air Sparging 4-6

4.5 Approach to Evaluating Corrective Measure Alternatives 4-7

4.5.1 Protect Human Health and the Environment 4-8

4.5.2 Attain Media Cleanup Standards 4-8

4.5.3 Control the Source of Releases 4-8

4.5.4 Comply with Applicable Standards for Management of Wastes 4-8

4.5.5 Other Factors 4-8

4.6 Corrective Measures Study Report 4-9

Table 4-1 Proposed MCSs for VOCs in Groundwater at SWMU 166 4-10

Table 4-2 Outline of Focused CMS Report for SWMU 166 4-11

Figure 4-1 TCE Concentrations in Shallow Wells at SWMU 166 4-12

Figure 4-2 VOC (Total) Concentrations in Shallow Wells at SWMU 166 4-13

Figure 4-3 TCE Concentrations in Deep Wells at SWMU 166 4-14

Contents, Continued

Section **Page**

Figure 4-4 VOC (Total) Concentrations in Deep Wells at SWMU 166 4-15

5.0 Pilot Study Work Plan for SWMU 166 5-1

5.1 Proposed Pilot Study Approach 5-1

5.2 Pilot Study Approach 5-2

5.2.1 Pilot Study Locations 5-2

5.2.2 Pilot Study Objectives and Approach Goals 5-3

5.2.3 Overall Approach to Pilot Study 5-3

Table 5-1 Baseline Characterization Sampling and Analysis for Pilot Study in TTAs at SWMU 166 5-9

Table 5-2 Post-Injection Monitoring for Pilot Study at TTAs at SWMU 166 5-10

Figure 5-1 New Injection Well Locations at TTAs 1 and 2 5-11

Figure 5-2 New Injection Well Location for Biobarrier Test 5-12

6.0 References 6-1

Appendixes

A Data Validation Report

B Boring Logs and Well Construction Diagrams

C Figures of ZVI Injection Location Layout for Phase I and Phase II Injections

D Analytical Data

E Responses to SCDHEC Comments on the Revision 0 Document

Acronyms and Abbreviations

ASR	automobile service rack
BRAC	Base Realignment and Closure Act
CA	corrective action
CFR	*Code of Federal Regulations*
CMS	corrective measures study
CNC	Charleston Naval Complex
COC	chemical of concern
CSAP	Comprehensive Sampling and Analysis Plan
CVOC	chlorinated volatile organic compound
DCE	dichloroethene
DHE	dehalococcoides ethanogenes
DNAPL	dense non-aqueous phase liquid
DO	dissolved oxygen
DPT	direct-push technology
EnSafe	EnSafe Inc.
EOS	emulsified oil product
EPA	U.S. Environmental Protection Agency
ft bls	feet below land surface
ft msl	feet mean sea level
IDW	investigation-derived waste
IM	interim measure
IMCR	Interim Measure Completion Report
LAI	liquid atomized injection
MCL	maximum contaminant level
MCS	media cleanup standard
µg/L	micrograms per liter
mg/L	milligrams per liter
MCS	media cleanup standards

Acronyms and Abbreviations, Continued

MIP	membrane interface probe
MNA	monitored natural attenuation
msl	mean sea level
MW	monitoring well
NAVBASE	Naval Base
ORP	oxidation-reduction potential
PCE	tetrachloroethene
PLFA	phospholipids fatty acid
PRB	permeable reactive barrier
PVC	polyvinyl chloride
RAO	remedial action objective
RGO	remedial goal option
RBC	risk-based concentration
RCRA	Resource Conservation and Recovery Act
RFI	RCRA Facility Investigation
ROI	radius of influence
SCDHEC	South Carolina Department of Health and Environmental Control
SWMU	solid waste management unit
TCE	trichloroethene
TCLP	toxicity characteristic leaching procedure
TOC	total organic carbon
TTA	target treatment area
VFA	volatile fatty acid
VOC	volatile organic compound
ZVI	zero-valent iron

1.0 Introduction

In 1993, Naval Base (NAVBASE) Charleston was added to the list of bases scheduled for closure as part of the Defense Base Realignment and Closure (BRAC) Act, which regulates the closure and transition of property to the community. The Charleston Naval Complex (CNC) was formed as a result of the dis-establishment of the Charleston Naval Shipyard and NAVBASE on April 1, 1996.

Corrective Action (CA) activities are being conducted under the Resource Conservation and Recovery Act (RCRA), with the South Carolina Department of Health and Environmental Control (SCDHEC) as the lead agency for CA activities at the CNC. All RCRA CA activities are performed in accordance with the Final Permit (Permit No. SC0 170 022 560).

In April 2000, CH2M-Jones was awarded a contract to provide environmental investigation and remediation services at the CNC. This submittal presents an Interim Measure Completion Report (IMCR) and a Corrective Measures Study Work Plan (CMSWP) for Solid Waste Management Unit (SWMU) 166 in Zone K at the CNC. This IMCR/CMSWP summarizes the activities conducted as part of the interim measure (IM) at SWMU 166, and describes the process to be used to evaluate corrective measure alternatives proposed for remediating the groundwater contamination at the site.

1.1 Background

1.1.1 Site History

SWMU 166, located in Zone K at the CNC Naval Annex, includes areas west of Avenue B and south of Fifth Street to just east of Interstate 26. The Naval Annex is a flat-lying area, approximately 40 feet above mean sea level (msl). The U.S. Marine Corps currently uses portions of the Naval Annex as a reserve training center, with administrative and classroom-type buildings and a heavy vehicle storage and maintenance/small repair facility.

SWMU 166 includes a former automotive service rack (ASR) area that is unpaved and located at the southwest corner of the intersection of Avenue B and Fifth Street immediately north of Building 22. Figure 1-1 shows the location of SWMU 166 and Zone K within the CNC. The former ASR area was identified in the *Zone K RCRA Facility Investigation (RFI) Report, Revision 0* (EnSafe Inc. [EnSafe], 1999a) as the suspected source area for chlorinated

volatile organic compounds (CVOCs) in groundwater at SWMU 166. An RFI was implemented over an approximate 5-year period by the Navy/EnSafe team and CH2M-Jones to assess the nature and extent of contamination at SWMU 166. A chlorinated solvent plume in groundwater, comprised primarily of trichloroethene (TCE), was identified as originating from the vicinity of SWMUs 163 and 166. The results of the RFI were previously presented in the *Zone K RFI Report, Revision 0* (EnSafe 1999a) and *RFI Report Addendum, SWMU 166, Zone K, Revision 0* (CH2M-Jones, 2002).

Based on the identification of several apparent source areas within the groundwater plume, a decision was made to implement an IM to treat the most concentrated portions of the groundwater plume. The objective of the IM was to reduce TCE source area concentrations significantly and decrease the size and longevity of the TCE plume. The results of the IM are described in this report.

1.1.2 General Source Area Description

The *Interim Measure Work Plan, SWMU 166, Zone K, Revision 0* (CH2M-Jones, 2002) identified target treatment areas (TTAs) within the groundwater-contaminated area near and downgradient of SWMU 166. In addition to TCE, low levels of 1,2-dichloroethene (1,2-DCE) were found in some of the areas targeted for treatment as part of the IM, and one area in SWMU 163 showed detections of low levels of tetrachloroethene (PCE). The areas contaminated with TCE include SWMU 163, the former ASR area at SWMU 166, and areas downgradient from SWMU 166 extending to the eastern boundary of the Naval Annex. For brevity, the term "SWMU 166" is used in this document to refer to all areas targeted for subsurface treatment by the IM Work Plan, although several of these areas fall outside the original footprint of the SWMU 166 boundary indicated in the *Zone K RFI Report, Revision 0* (EnSafe, 1999a).

Previous RFI groundwater investigations conducted at Zone K, along with the Phase I and Phase II Membrane Interface Probe (MIP) Pilot Studies, were incorporated into the IM Work Plan and used to delineate the approximate lateral and vertical extents of the TCE TTAs.

Groundwater elevations at SWMU 166 vary seasonally, ranging from 5 to 7 feet below land surface (ft bls). In general, shallow and deep groundwater at SWMU 166 flows eastward toward Interstate 26. Near SWMUs 163 and 166, groundwater flow direction tends to be somewhat more to the south-southeast. However, the overall direction of TCE migration in groundwater has been eastward towards Interstate 26. Figures 1-2 and 1-3 present potentiometric surface maps of the shallow and deep zones of the aquifer at Zone K, using groundwater elevation data collected in July 2000.

The TTAs represent the approximate lateral and vertical extent of portions of the TCE plume with TCE concentrations greater than approximately 1,000 micrograms per liter (µg/L), as determined during various investigations prior to the IM. During the groundwater investigations conducted at Zone K, concentrations of TCE up to 51,800 µg/L were detected in groundwater. The maximum solubility of TCE in water is approximately 1,100 milligrams per liter (mg/L). Concentrations of TCE greater than 1 percent of the maximum solubility (i.e., greater than 11 mg/L or 11,000 µg/L) may indicate the presence of a dense non-aqueous phase liquid (DNAPL) near the monitored location. TCE concentrations detected at a few locations during previous investigations at SWMU 166 exceed these potential DNAPL-indicator levels. As a conservative measure, a target TCE concentration of approximately 1,000 µg/L was used to delineate the boundaries of the TTAs. This approach resulted in the treatment of a larger area than the limited area with suspected DNAPL presence, but it significantly increased the likelihood that any potential DNAPL-containing areas would be treated. It was anticipated that any low-level PCE or 1,2-DCE present in the TTAs would also be treated during this IM implementation.

Based on the distribution of TCE concentrations measured during the RFI and membrane-interface probe (MIP) investigations, potential DNAPL source areas within the TTAs at SWMU 166 include the shallow zone of the aquifer at 11 to 17 ft bls at one location near the former ASR area; the interface between the clayey sand unit and overlying sandy unit (at approximately 23 to 28 ft bls) in several areas; and a deeper zone at the top of the Ashley Formation (approximately 31 to 37 ft bls) in most TTAs. An area near SWMU 163 also indicated elevated concentrations of PCE in one shallow monitoring well at a depth of approximately 11 ft bls and was included as part of TTA 7.

Eight TTAs, numbered TTA 1 through TTA 8, were identified at SWMU 166. TTA 4 and TTA 5 each include two small treatment areas, combined due to their close proximity. Figure 1-4 shows the general locations of the TTAs within Zone K. Figures 1-5 through Figure 1-11 show individual TTAs and sample locations with baseline groundwater TCE concentrations above 1,000 µg/L at different depths below land surface. In these figures, the lateral and vertical extents of the TTAs were derived by including all sample locations that showed a TCE concentration greater than 1,000 µg/L, including analytical results of groundwater samples collected from direct-push technology (DPT) borings, estimations from the MIP electrical conductivity data (ECD) response readings, vertical profiler borings, and monitoring wells.

This IM to treat the suspected source areas was not necessarily intended to be the final remedy for the SWMU 166 area. However, abatement of the source areas was expected to be compatible with the final remedy selected for SWMU 166.

1.2 Purpose of the Interim Measure Completion Report/Corrective Measures Study Work Plan

This document contains two RCRA submittals: (1) the IMCR, and (2) CMSWP. The IMCR, presented in Sections 2.0 and 3.0, documents the results of the IM using the Ferox℠ treatment process and summarizes the data collected during monitoring of the IM.

Section 4.0, the CMSWP, identifies the remedial action objectives (RAOs) and proposed media cleanup standards (MCSs) for VOCs in groundwater and presents corrective measure alternatives to be evaluated in the CMS for SWMU 166.

In addition to the IMCR and CMSWP, Section 5.0 contains a Pilot Study Work Plan (PSWP) for assessing the effectiveness of a biostimulation system for further treatment of the chlorinated solvent plume at SWMU 166.

1.3 Organization of the Interim Measure Completion Report/Corrective Measures Study Work Plan

This IMCR/CMSWP consists of the following sections:

1.0 Introduction—Presents the purpose of the IMCR/CMSWP, as well as relevant background information.

2.0 Summary of Interim Measure Activities at SWMU 166—Provides a description of major events that occurred during implementation of the IM.

3.0 Results of the Interim Measure at SWMU 166—Summarizes the results from the monitoring events conducted before and after the IM implementation at SWMU 166.

4.0 Corrective Measures Study Work Plan for SWMU 166—Presents the CMSWP for SWMU 166 and defines the RAOs and associated MCSs for the chemicals of concern (COCs) that are identified in Section 3.0. This section also presents the current extent and configuration of the TCE and total VOC plume at SWMU 166, along with the CMS procedures that will be used to evaluate and compare relevant remedial approaches for achieving RAOs and MCSs for the COCs.

5.0 Pilot Study Work Plan for Enhanced Reductive Dechlorination at SWMU 166—Presents a pilot study approach to evaluate the effectiveness of enhanced reductive dechlorination for treating further the chlorinated solvents in groundwater at SWMU 166. This PTWP will allow this alternative to be better evaluated during the CMS.

6.0 References—Lists the references used in this document.

Appendix A contains validated analytical reports and data validation summaries for the environmental media samples collected during the Phase I IM.

Appendix B contains copies of boring logs and well construction diagrams for monitoring wells installed as part of the IM.

Appendix C contains copies of figures showing the layout of zero-valent iron (ZVI) injection locations for Phase I and Phase II injections.

Appendix D contains the analytical data for environmental media samples collected during and after the Phase II IM at SWMU 166.

Appendix E contains CH2M-Jones's responses to SCDHEC comments on the *Interim Measure Completion Report/Corrective Measures Study Work Plan/Pilot Study Work Plan, SWMU 166, Zone K, Revision 0* (CH2M-Jones, 2005).

All tables and figures appear at the end of their respective sections.

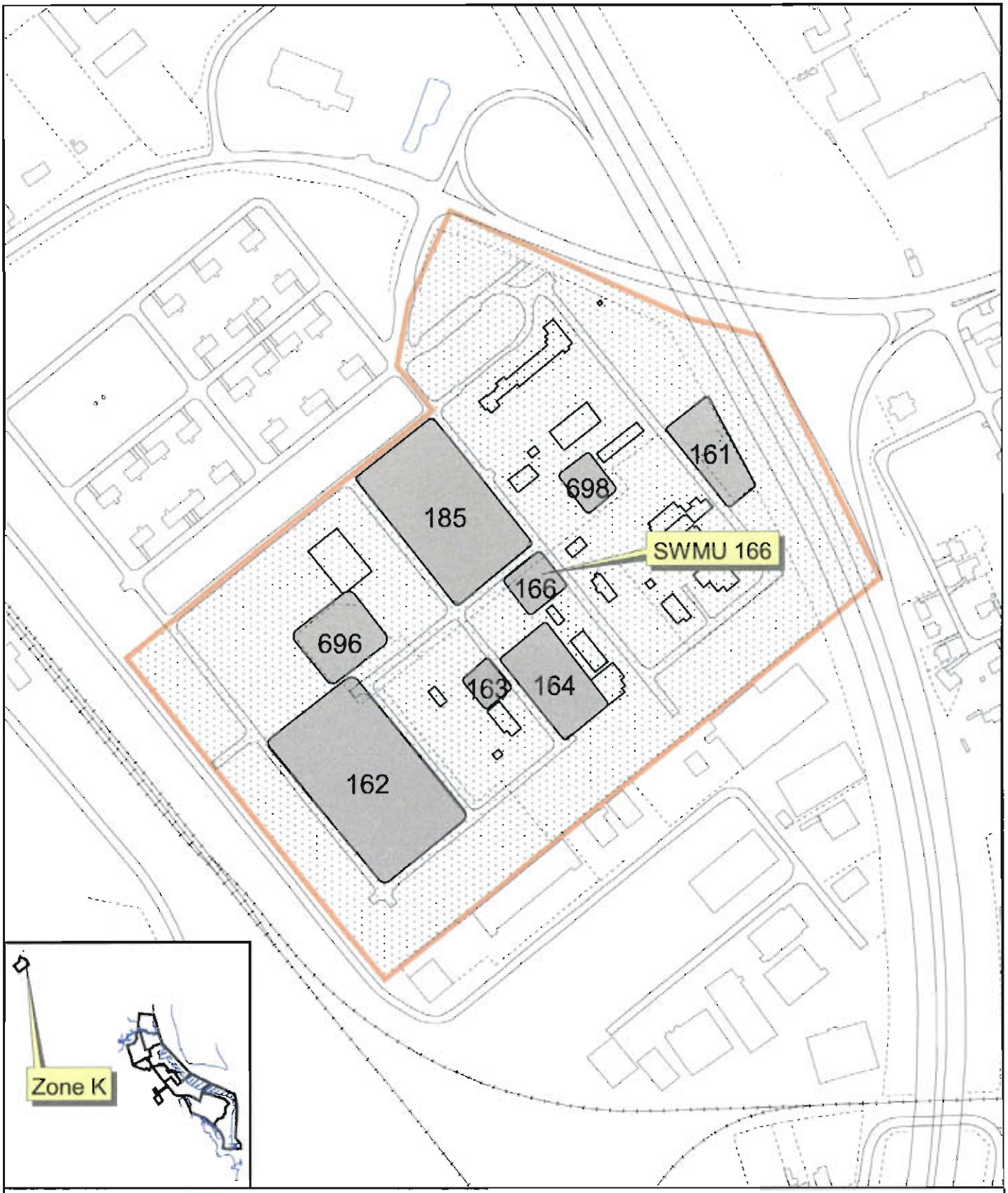

Fence
Railroads
Roads
AOC Boundary
SWMU Boundary
Buildings
Zone Boundary

N

0 300 600 Feet

1 inch = 333.333 feet

Figure 1-1
Location of SWMU 166 and Zone K within the CNC
SWMU 166, Zone K
Charleston Naval Complex

CH2MHILL

File Path: c:\18gis\projects\zone_k\swmu_166\aprs\swmu166.apr, Date: 06 Dec 2001 7:42, User: NMOUDRY, Figure 1-1 Location of SWMU 166 and Zone K within the CNC

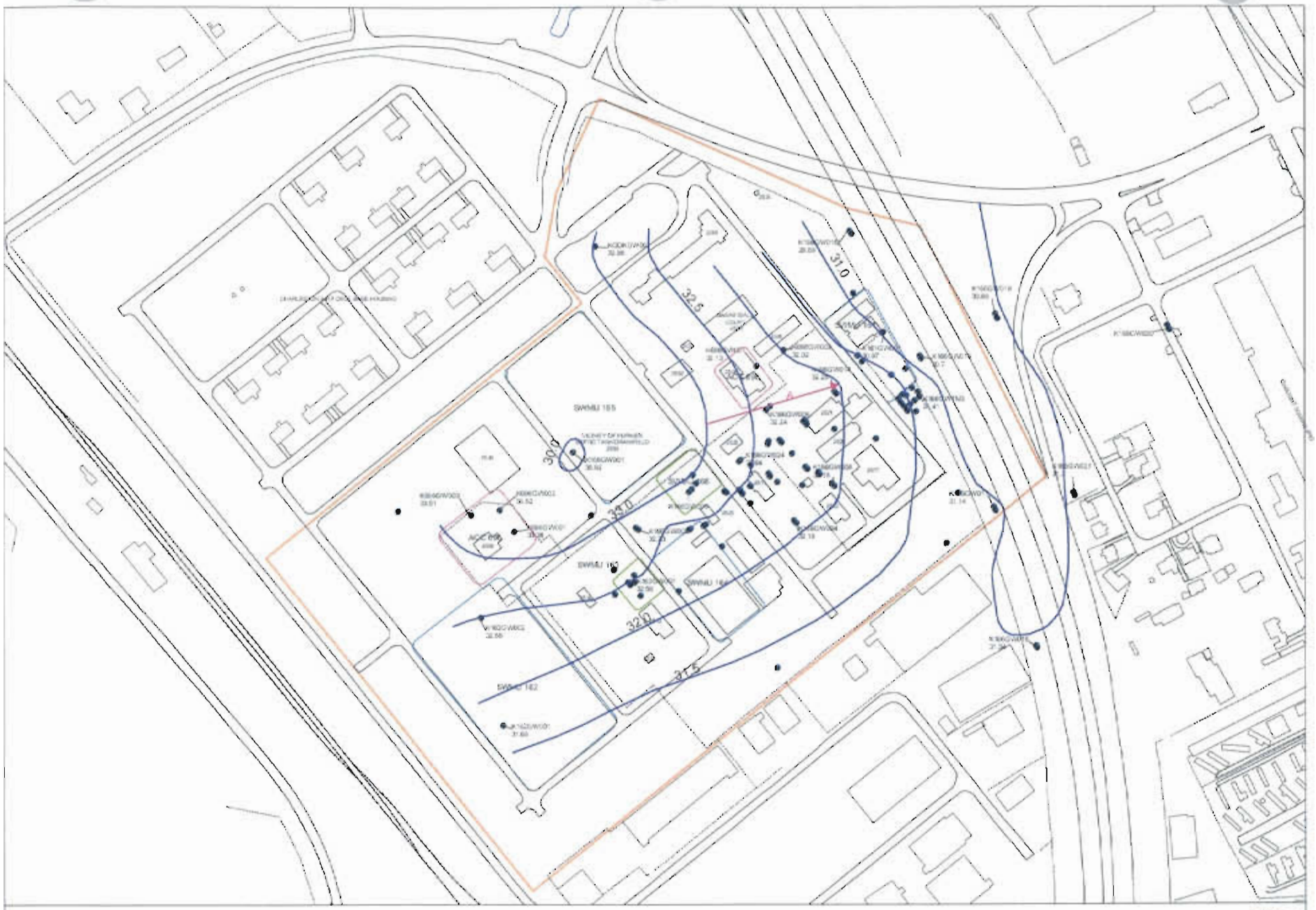

- Shallow Groundwater Monitoring Well
- Groundwater Contours February 2002 (msl)
- Interpreted Groundwater Flow Direction
- Railroads
- Fence
- Roads
- Active AOC Boundary
- Active SWMU Boundary
- NFA AOC Boundary
- NFA SWMU Boundary
- Buildings
- Zone Boundary

N

0 100 200 Feet

1 inch = 100 feet

Figure1-2
Shallow Groundwater Potentiometric Map
Zone K
Charleston Naval Complex

CH2MHILL

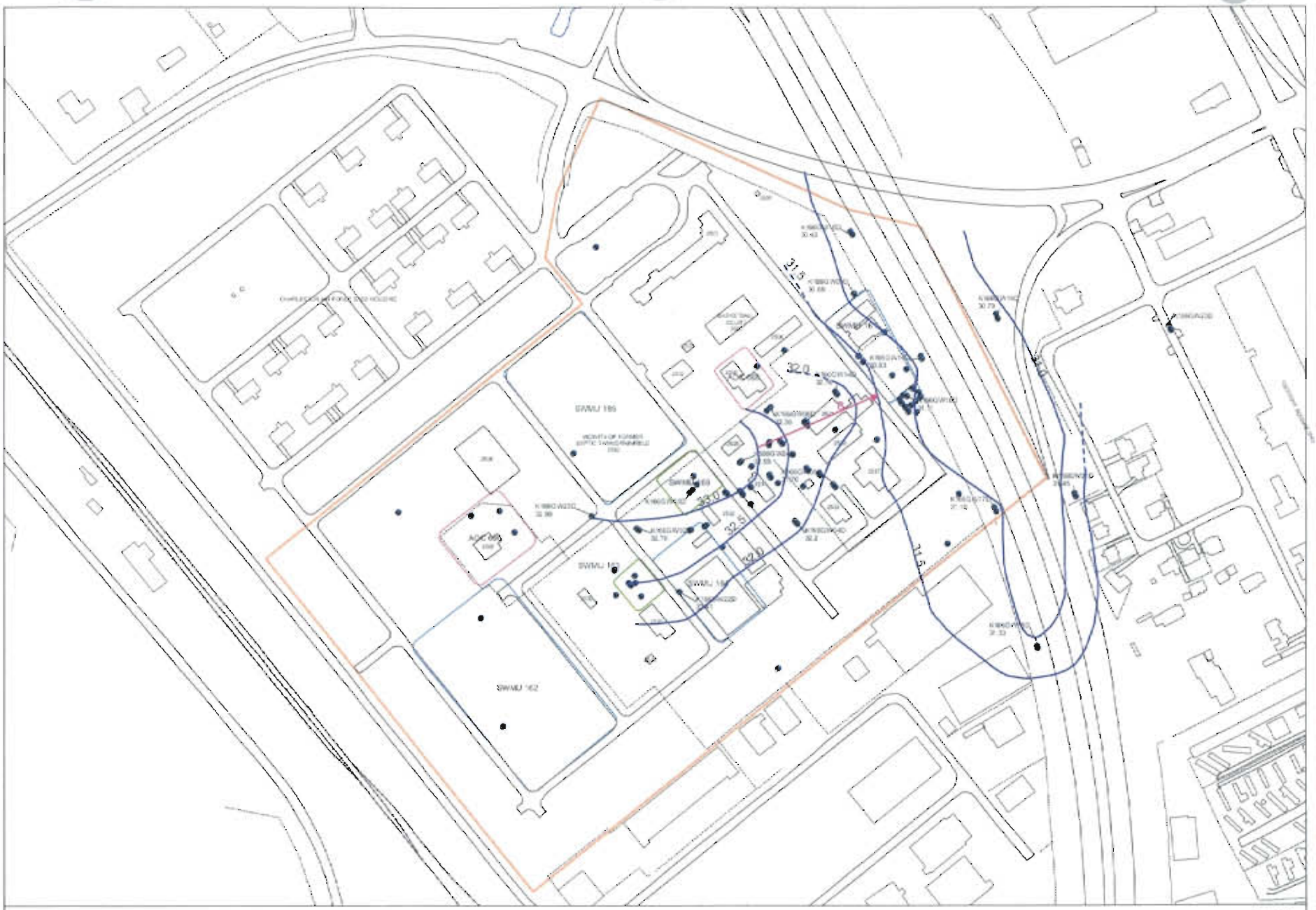

- Deep Groundwater Monitoring Well
- Groundwater Contours February 2002 (msl)
- Interpreted Groundwater Flow Direction
- Railroads
- Fence
- Roads
- Active AOC Boundary
- Active SWMU Boundary
- NFA AOC Boundary
- NFA SWMU Boundary
- Buildings
- Zone Boundary

N

0 100 200 Feet

1 inch = 110 feet

Figure1-3
Deep Groundwater Potentiometric Map
Zone K
Charleston Naval Complex

CH2MHILL

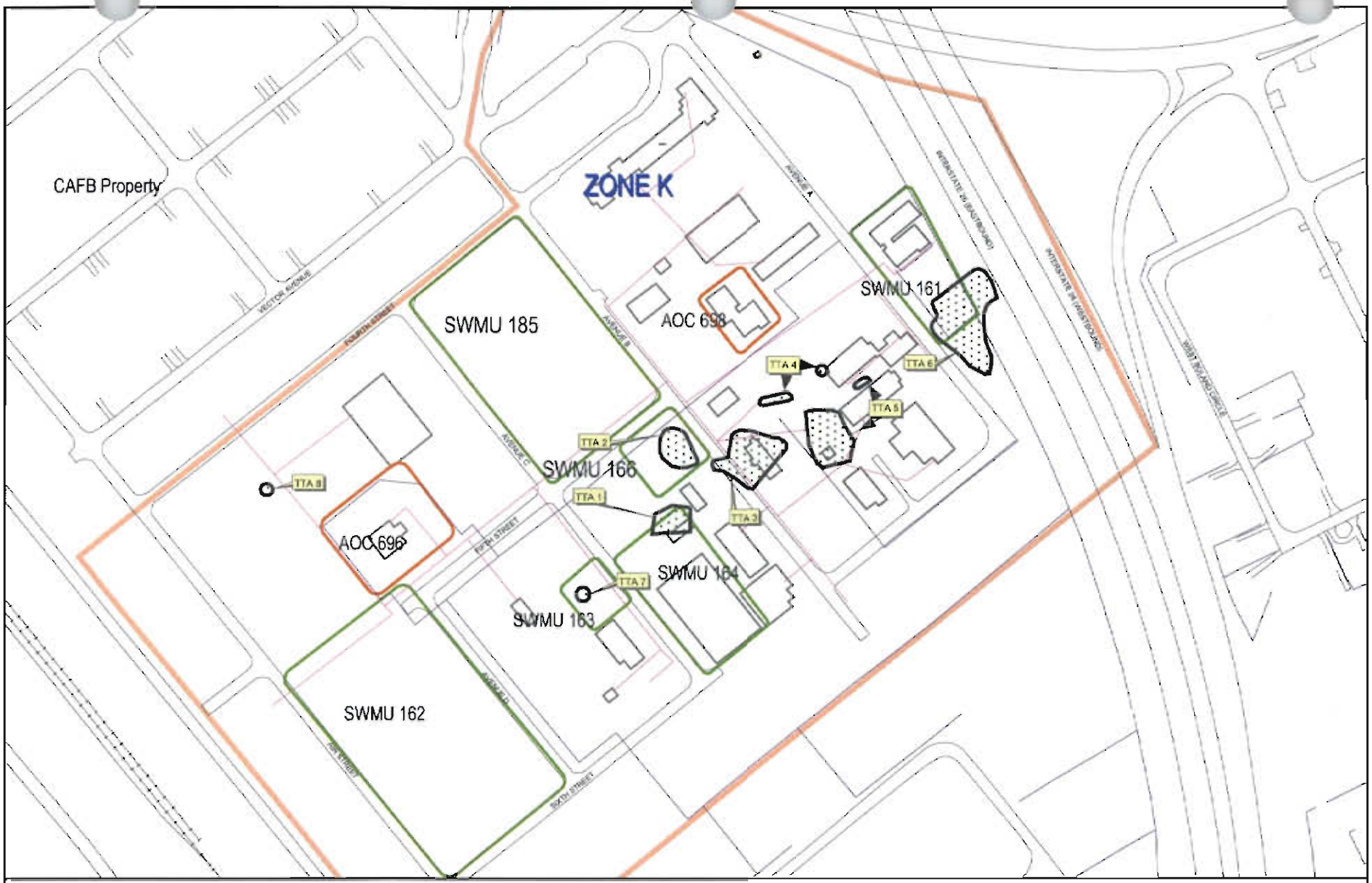

Approx. Target Treatment Area (TTA)
Fence
Roads
Sewer Lines
AOC Boundary
SWMU Boundary
Buildings
Zone Boundary

N

0 100 200 Feet

1 inch = 239 feet

Figure 1-4
Approximate Target Treatment Areas
Zone K
Charleston Naval Complex

CH2MHILL

File Path: c:\18gis\zone\zone-egis.apr, Date: 12 Sep 2001 8:08, User: SNAIKI

NOTE: Original figure in color

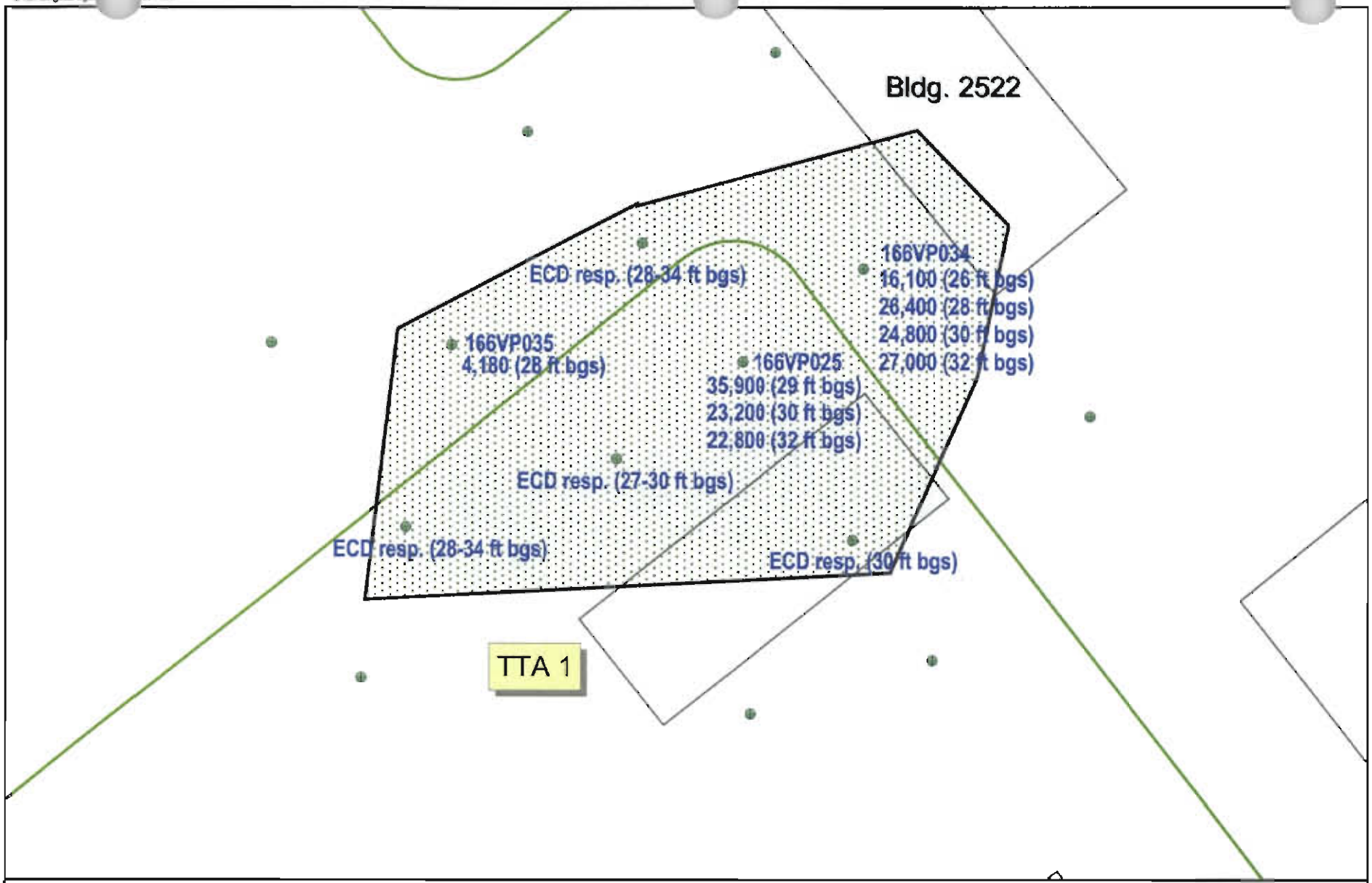

Approx. Target Treatment Area
Fence
Roads
Buildings

166VP034 Vertical Profiler Sample Location

16,000 (26 ft bgs) TCE Concentrations in ug/L at depth in ft bgs

ft bgs = feet below ground surface

N

0 10 20 Feet

1 inch = 13 feet

Figure 1-5
Approx. Target Treatment Area 1
SWMU 166 Area, Zone K
Charleston Naval Complex

CH2MHILL

File Path: c:\18gis\cnc\cnc-egis.apr, Date: 17 Sep 2001 16:05, User: SNAIK1

NOTE: Original figu in color

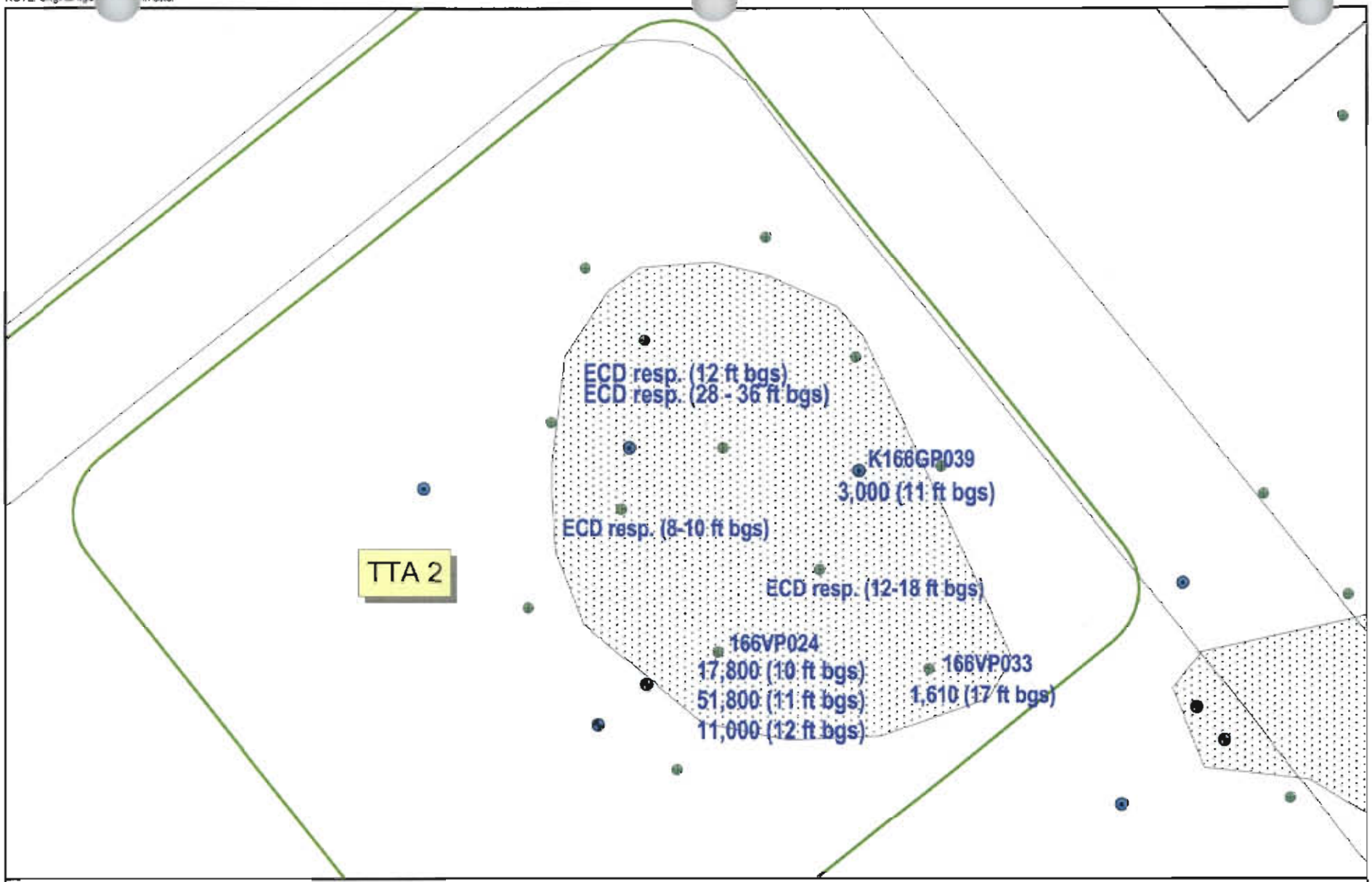

MIP/Vertical Profiler Location
Approx. Target Treatment Area
Fence
Roads
Buildings

166VP024 Vertical Profiler Sample Location

17,800 (10ft bgs) TCE Concentrations in ug/L at depth in ft bgs

ft bgs = feet below ground surface

N

0 10 20 Feet

1 inch = 20 feet

Figure 1-6
Approx. Target Treatment Area 2
Zone K
Charleston Naval Complex

CH2MHILL

File Path: c:\18gis\cnc\cnc-egis.apr, Date: 07 Sep 2001 15:02, User: SNAIK1

NOTE: Original fig... in color.

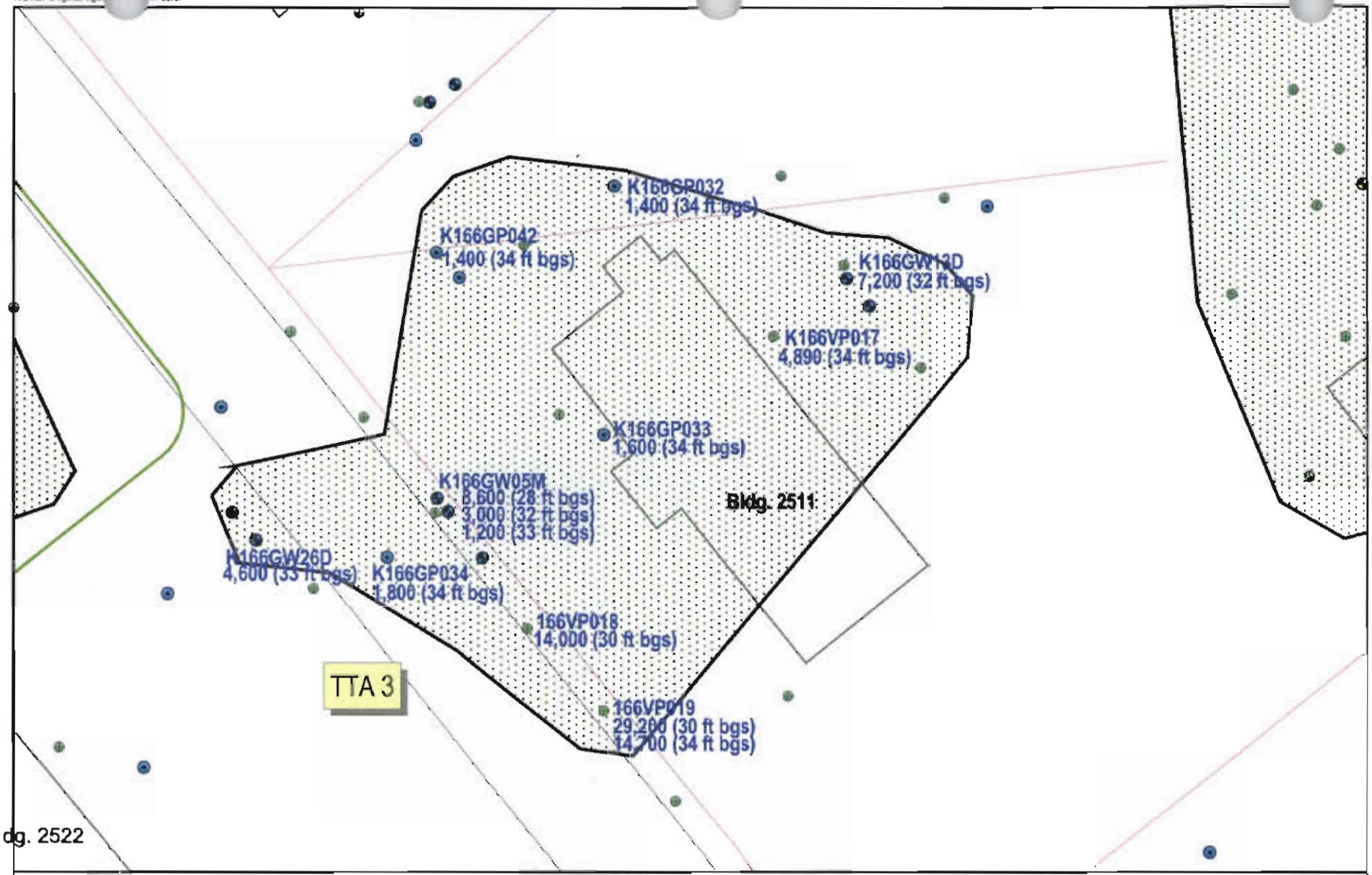

MIP/Vertical Profiler Location
Groundwater Well
Groundwater Probe
Fence
Railroads
Approx. Target Treatment Area
Roads
Sewer Line
AOC Boundary
SWMU Boundary
Buildings
Zone Boundary

166VP019 Vertical Profiler Sample Location

29,200 (30ft bgs) TCE Concentrations in ug/L at depth in ft bgs

ft bgs = feet below ground surface

N

0 10 20 Feet

1 inch = 23 feet

Figure 1-7
Approx. Target Treatment Area 3
Zone K
Charleston Naval Complex

CH2MHILL

File Path: c:\18gis\cnc\cnc-egis.apr, Date: 12 Sep 2001 9:54, User: SNAIK1

NOTE: Original figu in color

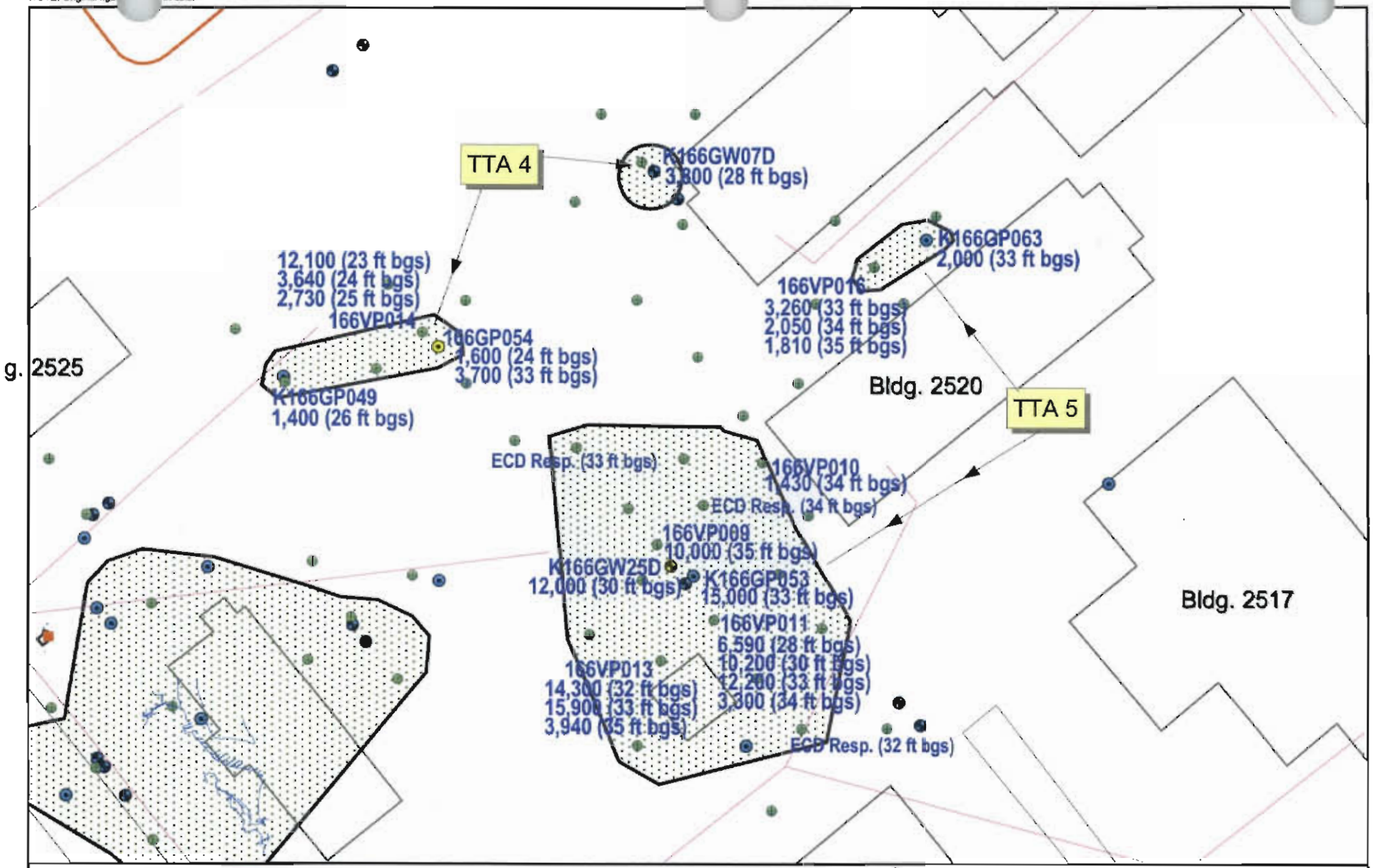

MIP
Groundwater Well
Groundwater Probe
Roads
Sewer Line
Approx. Target Treatment Area (TTA)

AOC Boundary
SWMU Boundary
Buildings
Zone Boundary

166VP013 Vertical Profiler Sample Location

14,300 (32 ft bgs) TCE Concentrations in ug/L at depth in ft bgs

ft bgs = feet below ground surface

N

0 20 40 Feet

1 inch = 37 feet

Figure 1-8
Approx. Target Treatment Areas 4 & 5
Zone K
Charleston Naval Complex

CH2MHILL

File Path: c:\18gis\cnc\cnc-egis.apr, Date: 12 Sep 2001 10:26, User: SNAIK1

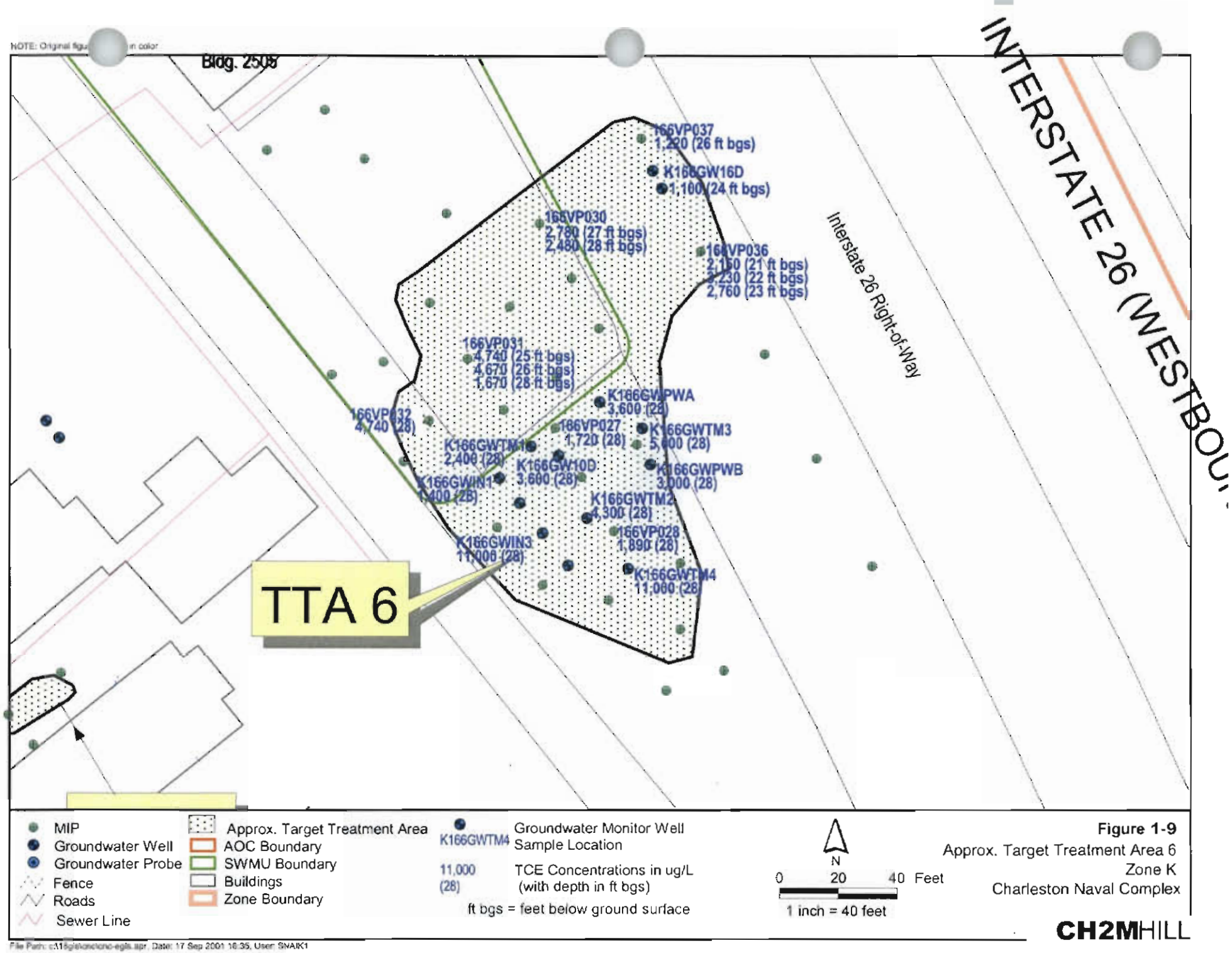

Figure 1-9
Approx. Target Treatment Area 6
Zone K
Charleston Naval Complex

File Path: c:\16gis\cnc\cnc-egis.apr, Date: 17 Sep 2001 16:35, User: SNAIK1

NOTE: Original figu in color

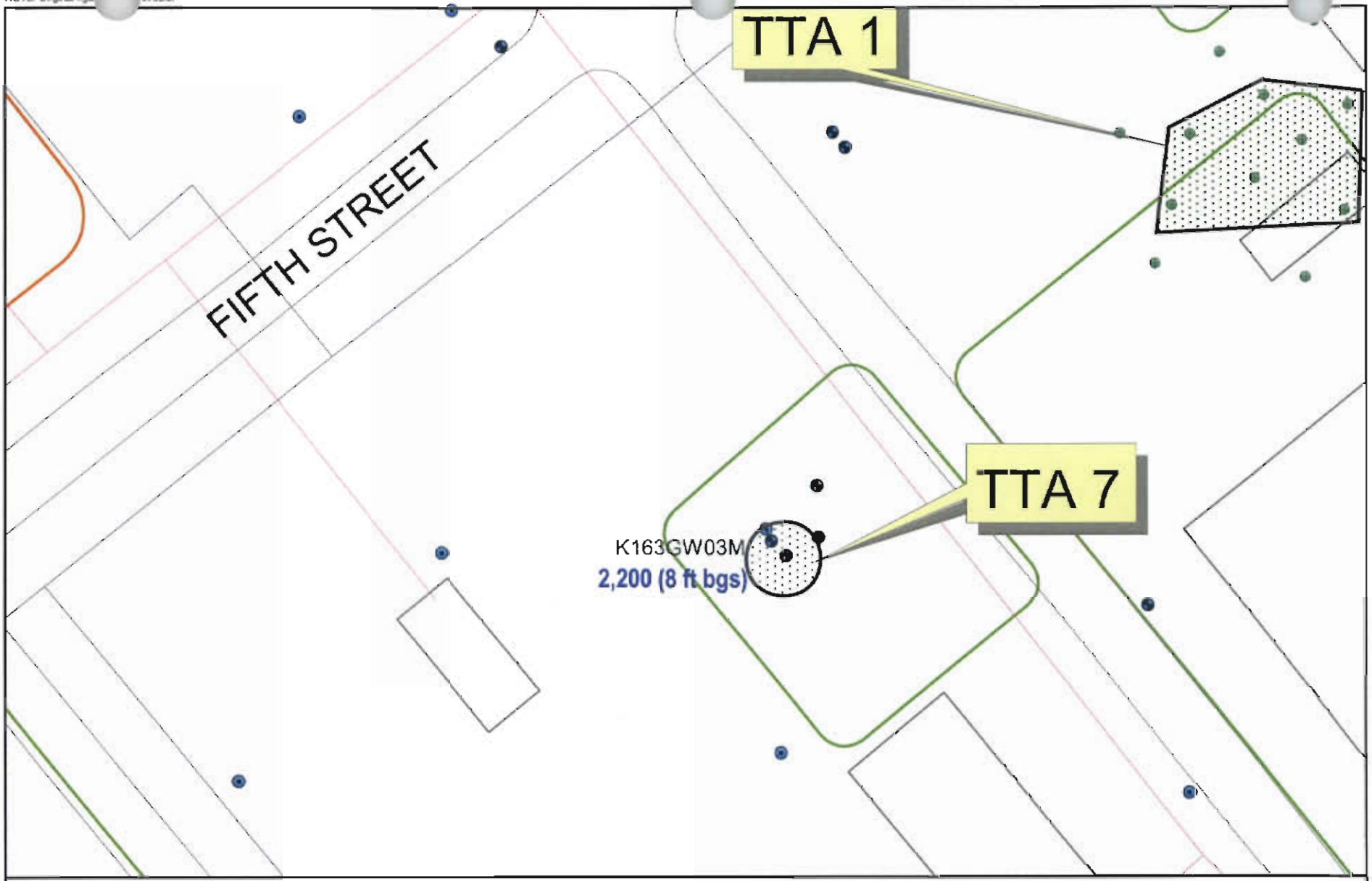

Groundwater Well
Groundwater Probe
Fence
Roads
Sewer Line
AOC Boundary
SWMU Boundary
Buildings
Zone Boundary
Approx. Target Treatment Area
K163GW03M Groundwater Monitor Well Sampling Location
2,200 (8 ft bgs) TCE Concentration in ug/L (with depth in ft bgs)
ft bgs = feet below ground surface
N
0 40 60
1 inch = 44 feet

Figure 1-10
Approx. Target Treatment Area 7
Zone K
Charleston Naval Complex

CH2MHILL

File Path: c:\18gis\znclonc-egis.apr, Date: 12 Sep 2001 11:14, User: SNAIK1

NOTE: Original figu[illegible] in color

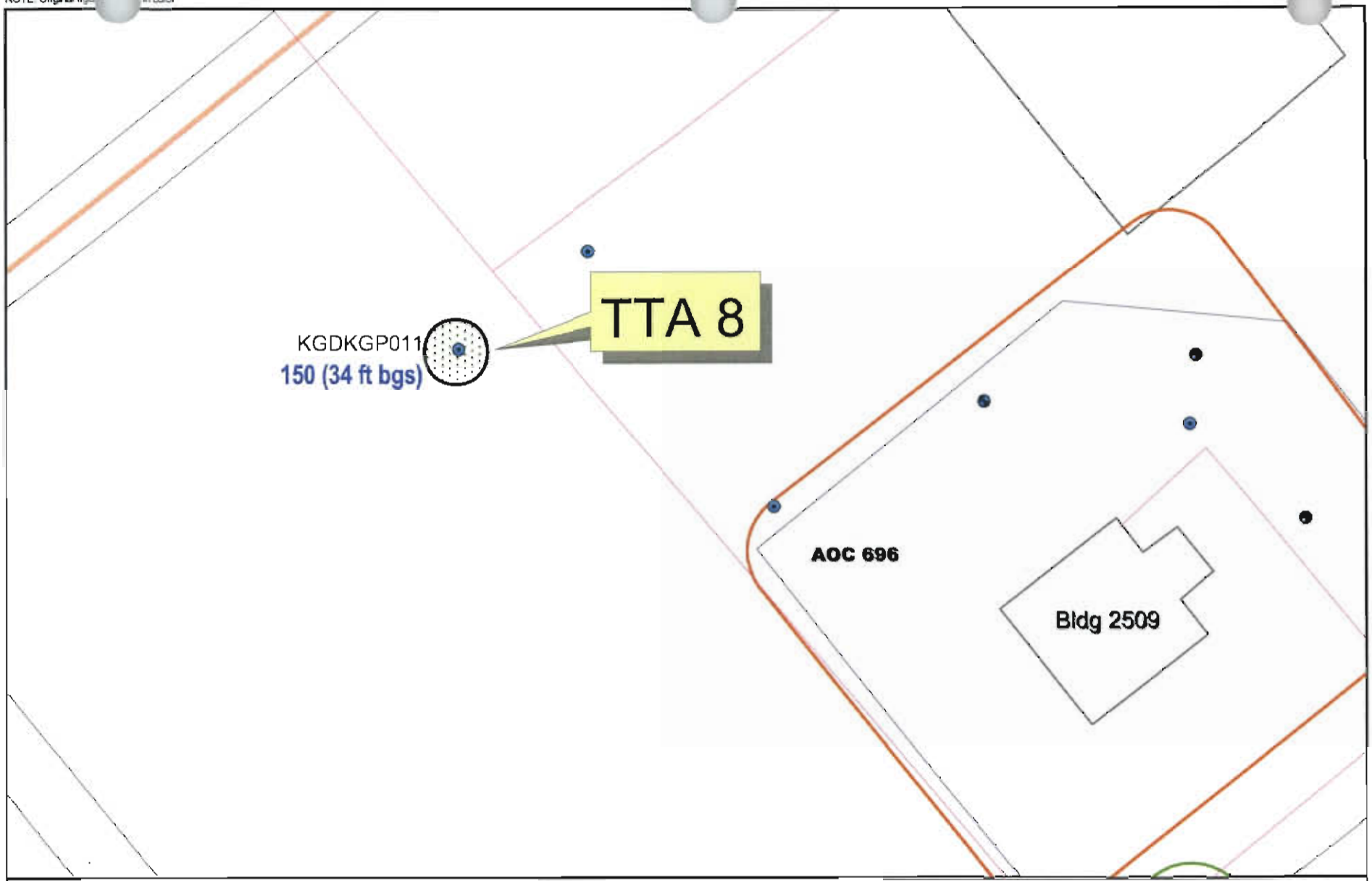

Groundwater Well
Groundwater Probe
Fence
Roads
Sewer Line
AOC Boundary
SWMU Boundary
Buildings
Zone Boundary
Approx. Target Treatment Area
KGDKGP011 Groundwater DPT Sampling Location
150 (34 ft bgs) TCE Concentration in ug/L (with depth in ft bgs)
ft bgs = feet below ground surface
N
0 30 60 Feet
1 inch = 44 feet

Figure 1-11
Approx. Target Treatment Area 8
Zone K
Charleston Naval Complex

CH2MHILL

File Path: c:\18gis\cnc\cnc-egis.apr, Date: 12 Sep 2001 11:20, User: SNAIK1

2.0 Summary of Interim Measure Activities at SWMU 166

This section provides a summary of the IM implementation activities conducted at SWMU 166, including an overview of the Ferox℠ technology employed during the IM and how this technology was implemented at each TTA.

2.1 Description of Interim Measure Activities

2.1.1 Treatment Technology Description

The treatment technology selected for remediation of CVOCs in groundwater at SWMU 166 was in situ chemical reduction through the injection of highly reactive ZVI powder using the proprietary Ferox℠ technology. The subcontractor selected to implement the IM using this treatment technology was ARS Technologies, Inc. (ARS) of New Brunswick, New Jersey. The *Interim Measure Work Plan, SWMU 166, Zone K, Revision 0* (CH2M-Jones, 2002) outlined the proposed construction and implementation approach.

ARS employs a patented subsurface in situ remediation process called the Ferox℠ process. The process treats chlorinated solvents and some dissolved metals. The Ferox℠ technology involves the subsurface injection and dispersion of specific quantities of highly reactive ZVI powder into saturated or unsaturated contamination zones. The ZVI incorporated in the Ferox℠ application is a 98+ percent pure, reduced-iron powder. The powder's particle size, shape, and carbon content result in a highly reactive material. The small particle size of this ZVI powder provides more surface area per unit weight, resulting in the powder being more reactive in the subsurface than other forms of iron powder.

The Ferox℠ field application involved the injection of targeted doses of highly reactive ZVI into the subsurface as a means to chemically reduce contaminants present in the groundwater and soils at SWMU 166. The ZVI was delivered into the subsurface through ARS's patented Liquid Atomized Injection (LAI) Technology. In conjunction with the LAI process, pneumatic fracturing of the subsurface formation was applied when required, prior to introducing the ZVI into the subsurface, to provide a pathway for ZVI dispersion in the subsurface.

The injection process consisted of a skid-mounted gas pressure module with an injection control manifold and a digital datalogger used to monitor various operational parameters. Due to the large quantity of compressed gas needed for the Ferox℠ injections, a bulk nitrogen "tube" trailer was mobilized to the site.

The compressed nitrogen was routed through the gas module's control manifold and connected by a high-pressure hose to the downhole packer/nozzle assembly. When the equipment was in place, the outer drive casing was raised, exposing the injector nozzle to the formation. The packers were inflated and the formation was pneumatically fractured. Fracturing consisted of applying pressurized nitrogen for approximately 15 seconds within a 20- to 36-inch interval isolated by the use of a double pneumatic straddle packer assembly.

Ferox℠ injections were performed immediately following pneumatic fracturing at each injection interval within the borehole. The ZVI powder was injected into the subsurface using a nitrogen gas stream as the carrier fluid. The gas manifold system provided accurate control over the injection pressures, which enabled ARS to achieve the optimal iron powder dispersion.

The iron slurry-nitrogen mixture was injected through the pneumatic packer assembly and performed in approximately 20- to 36-inch intervals. The duration and number of injections in each borehole were directly dependent upon the quantity of iron desired within the specific zone. Each borehole was addressed starting at the deepest interval and working upward, ensuring borehole stability. When the targeted dosage of iron was emplaced into the formation, the packers were deflated, and the nozzle assembly was raised to the next injection location. Where appropriate, the injection operations were initiated at the periphery of the TTA and moved inward within the TTA.

2.1.2 Interim Measure Implementation Summary

The objective of the IM was to implement the Ferox℠ technology for source control and reduction of the existing chlorinated solvent source areas at SWMU 166.

The IM at SWMU 166 was implemented through a two-phase approach. Phase I activities included the installation of 20 new groundwater monitoring wells within and immediately downgradient of the TTAs to monitor groundwater contamination and geochemical parameters before and after injection of the ZVI. These wells were sampled for VOCs and geochemical parameters to enable the baseline groundwater characterization. This sampling was followed by a pilot test injection of ZVI at TTA 4 to determine site-specific parameters

for ZVI delivery. The pilot test at TTA 4 was followed by full-scale implementation of the IM at the remaining TTAs.

Phase II activities consisted of a re-injection of ZVI in select areas two years after Phase I. These activities are briefly described in the following paragraphs.

Phase I Activities

Installation of Monitoring Wells

A total of 26 new monitoring wells were installed at the eight TTAs and the areas immediately adjacent to the TTAs during February 2002 and May 2002. The new wells and the existing wells installed during the RFI provide a network to monitor the effectiveness of the ZVI injections and the migration of contaminants as a result of the ZVI injection pressures. The new wells were screened to coincide with the depth of contamination near the wells and the corresponding treatment depth intervals. Figures 2-1, 2-2, and 2-3 show the locations of the new wells and the RFI wells used for baseline groundwater characterization. Figures 2-4 through 2-11 show the locations of the ZVI injection boring locations at each TTA.

Prior to ZVI injection, the wells were sampled and the groundwater samples were analyzed at an offsite laboratory for VOCs, dissolved hydrogen, dissolved methane, and nitrate (as nitrogen). Field measurements of pH, temperature, specific conductance, oxidation-reduction potential (ORP) and dissolved oxygen (DO) were also performed at each well. These analytical parameters were chosen to provide a baseline characterization of groundwater conditions prior to injection of the ZVI, so that changes in groundwater characteristics as a result of the Ferox^{SM} treatment could be measured after full-scale implementation of the IM. A summary of the analytical results from the pre-injection sampling event is included in Tables 2-1 through 2-8. Copies of the validated analytical reports and data validation summaries are included in Appendix A. Appendix B contains boring logs and well construction diagrams for wells installed as part of the IM.

ZVI Injections

Phase I served as the initial treatment phase and resulted in the emplacement of 169,021 pounds of ZVI within the eight designated TTAs. Phase I injections were conducted under three separate injection events. The first injection event was the pilot test performed at TTA 4 during the week of February 25, 2002. The second injection event was performed within TTA 1, TTA 2, TTA 5, TTA 6, TTA 7, and TTA 8 from May 2002 to July 2002. The third injection event was performed at TTA 3 during October 2002. Details of the number of

injection borings, depths of borings, number of injection intervals, and quantities of ZVI injected within each boring during Phase I are shown in Appendix C. The appendix also includes drawings showing the layout of the injection borings used during the Phase I injections at each of the eight TTAs.

As indicated in these figures, the injection points were spaced approximately 60 feet apart (center to center), with the objective of achieving an estimated radius of influence (ROI) of injection of 30 feet from each injection point.

Post-Injection Groundwater Monitoring

The treatment monitoring network of wells were sampled during three sampling events after Phase I injections were completed in July 2002, December 2002, and June 2003. A summary of the analytical results from the pre-injection sampling event is included in Tables 2-1 through 2-8. Copies of the validated analytical reports and data validation summaries are included in Appendix A.

Phase II Activities

Phase II operations were implemented within regions of SWMU 166 where significant TCE concentrations persisted after the Phase I implementation. Phase II injections entailed the emplacement of 39,500 lbs of ZVI within five TTAs (TTA 1, TTA 3, TTA 4, TTA 5, and TTA 6). The Phase II injection program involved a more conservatively spaced injection point network (resulting in an ROI of approximately 12 to 15 feet around each well) and the use of a newly developed, enhanced ZVI powder. Another modification was the use of a proprietary four-port sand nozzle with the capability of being driven and/or vibrated to target depths, which eliminated the need for the down-hole injection packers used during Phase I.

Details of the number of injection borings, depths of borings, number of injections in each boring, and quantities of ZVI injected are shown in Appendix C. The appendix also includes drawings showing the layout of the injection borings used during the Phase I injections at each of the eight TTAs.

Minor field problems encountered during injection activities were addressed satisfactorily. Due to the introduction of nitrogen under high pressure, slow release of nitrogen ("off-gassing") was observed at the surface in a few locations.

Wear and tear of packers due to repeated use resulted in some packers not providing a perfect seal within the well, or in some cases, slipping out of the wells due to pressure build-

up within the well. When this occurred, injection was stopped and the packers were replaced. Injection of ZVI was resumed in these wells at a lower pressure.

Compressed nitrogen, which is pumped into the subsurface before the ZVI slurry is introduced, sometimes finds a vertical path of high permeability (often around the annular space of a nearby historic well) and escapes to the ground surface. This occurrence is termed "day-lighting," and was observed near some wells. Since the nitrogen is introduced under significant pressure to create a pathway for the ZVI slurry, small amounts of ZVI slurry were also noticed at the ground surface in a few locations shortly after injection occurred. The amount of water and ZVI slurry surfacing to the ground as a result of day-lighting was minor and insufficient to allow collection. No monitoring wells were dislodged from their boreholes or damaged as a result of the pressure influence from the injection operations.

Groundwater Monitoring following Phase II Activities

Groundwater samples were collected during November 2004 from 50 monitoring wells encompassing the eight TTAs as part of the annual basewide groundwater monitoring program. Appendix D includes copies of the analytical results.

TABLE 2-2

Summary of CVOC Detections during Pre-injection and Post-injection Sampling Events

TTA-2, SWMU 166 IM, Zone K, Charleston Naval Complex

	StationID	K166GW39D								K166GW040									
		PRE-INJ		POST RD-1		POST RD-2		POST RD-4		PRE-INJ		POST RD-1		POST RD-2		POST RD-3		POST RD-4	
	SampleID	166GW39DM4		166GW39DM7		166GW39DM8		166GW39DP2		166GW040M4		166GW040M7		166HW040M8		166GW040N1		166GW040P2	
	DateCollected	05/21/2002		08/01/2002		12/09/2002		10/14/2004		05/21/2002		08/01/2002		12/09/2002				10/14/2004	
	DateExtracted	05/24/2002		08/07/2002		12/13/2002		10/27/2004		05/25/2002		08/05/2002		12/12/2002				10/28/2004	
	DateAnalyzed	05/24/2002		08/07/2002		12/13/2002		10/27/2004		05/25/2002		08/05/2002		12/12/2002		06/04/2003		10/28/2004	
	SDGNumber	60789		64676		71852		123724		60789		64676		71852		81287		123724	
Parameter	**Units**																		
Vinyl chloride	ug/L	10	U	10	U	10	U	10	U	250	U	4 4	J	500	U	2500	U	25000	U
1,1-Dichloroethene	ug/L	5	U	5	U	5	U	5	U	125	U	12 4	=	250	U	1250	U	12500	U
trans-1,2-Dichloroethene	ug/L	5	U	5	U	5	U	5	U	125	U	13.8	=	250	U	1250	U	12500	U
cis-1,2-Dichloroethylene	ug/L	13.4	=	5	U	2 2	J	0 87	J	309	=	5130	=	9210	J	9020	=	59200	=
1,2-Dichloroethene (total)	ug/L	13.4	=	5	U	2 2	J	0 87	J	309	=	5130	=	9210	J	9020	=	59200	=
Trichloroethylene (TCE)	ug/L	240	=	0 82	J	3 3	J	0 91	J	1950	=	90800	=	19300	J	14300	=	79500	=
Tetrachloroethylene (PCE)	ug/L	0 62	J	5	U	5	U	5	U	125	U	22 9	=	250	U	1250	U	12500	U
Hydrogen	nM	28	=	0 1	U	1.4	=	0 92	=	2 5	=	0.1	U	4	=	1 9	=		
Methane	ug/L	90	=	4 43	=	270	=			1 3	=	879	=	1 9	=				
Chloride	mg/L																		
Nitrogen, Nitrate (as N)	mg/L	0 1	U	0 1	U	0 1	U			0 1	U	0 1	U	0 1	U				
Sulfate (as SO4)	mg/L	8 16	=	4 43	=	29.6	J			540	=	879	=	219	=				
pH		8.41		7.46		7.11		7.16		7 66		5 57		7 00				6 44	
COND		0 30		0.51		0 72		0 32		1 29		2 02		0 92				0.99	
Turb		45 5		14 4		27 87		0 00		26 4		65 7		37.83				0 00	
DO		0 3		0 00		0 00		0 09		1 7		0 31		0 00				0 12	
Temp		22 3		22 2		21 9		22 0		21 8		24 8		22 3				25 1	
ORP		-81		-199		-161		-191		-77		-100		-193				-148	

ug/L	micrograms per liter
U	Indicates analyte not detected above laboratory detection limit
J	Indicates an estimated value A "J" qualifier may signify that the concentration is below the PQL, or that the "J" has been applied as a result of the data validation

TABLE 2-3

Summary of CVOC Detections during Pre-injection and Post-injection Sampling Events

TTA-3, SWMU 166 IM, Zone K, Charleston Naval Complex

	StationID	K166GW053			K166GW054			K166GW055			K166GW026			K166GW26D		
		BASELINE	POST-ROUND 2	POST-ROUND 4	BASELINE	POST-ROUND 2	POST-ROUND 4	BASELINE	POST-ROUND 2	POST-ROUND 4	BASELINE	POST-ROUND 2		BASELINE	POST-ROUND 2	POST-ROUND 4
	SampleID	166GW053M4		166GW053P2	166GW054M4		166GW054P2	166GW055M4		166GW055P2	166GW026M4	166GW026M8		166GW26DM4		166GW26DP2
	DateCollected	05/30/2002		10/11/2004	05/30/2002		10/11/2004	05/30/2002		10/11/2004	05/20/2002	12/02/2002		05/21/2002		10/14/2004
	DateExtracted	06/05/2002		10/25/2004	06/05/2002		10/24/2004	06/05/2002		10/24/2004	05/28/2002	12/09/2002		05/28/2002		10/27/2004
	DateAnalyzed	06/05/2002	06/05/2003	10/25/2004	06/05/2002	06/05/2003	10/24/2004	06/05/2002	06/05/2003	10/24/2004	05/28/2002	12/09/2002		05/28/2002	06/04/2003	10/27/2004
	SDGNumber	61258	81288	123470	61258	81288	123470	61258	81288	123470	60790	71658		60790		123724
Parameter	**Units**															
Vinyl chloride	ug/L	1000 U	1000 U	143 =	1000 U	1000 U	405 J	250 U	250 U	350 J	10 U	NS	10 U	10 U	100 U	220 =
1,1-Dichloroethene	ug/L	500 U	500 U	25 U	500 U	500 U	250 U	125 U	125 U	250 U	5 U	NS	5 U	1.2 J	50 U	50 U
trans-1,2-Dichloroethene	ug/L	500 U	500 U	25 U	500 U	500 U	250 U	125 U	125 U	250 U	5 U	NS	5 U	5 =	17.7 J	13.2 J
cis-1,2-Dichloroethylene	ug/L	216 J	286 J	377 =	199 J	212 J	3500 =	135 =	150 =	4380 =	5 U	NS	5 U	129 J	946 =	755 =
1,2-Dichloroethene (total)	ug/L	216 J	286 J	377 =	199 J	212 J	3500 =	135 =	150 =	4380 =	5 U	NS	5 U	156 =	963 =	768 =
Trichloroethylene (TCE)	ug/L	8290 =	6880 =	332 =	6350 =	5560 =	723 =	1890 =	1630 =	304 =	11.6 =	NS	11.6 J	1330 =	965 =	134 =
Tetrachloroethylene (PCE)	ug/L	500 U	500 U	25 U	500 U	500 U	250 U	125 U	125 U	250 U	5 U	NS	5 U	5 U	50 U	50 U
Concentrations Used to Calculate Total CVOC Concentrations.																
Vinyl chloride	ug/L	500	500	143	500	500	405	125	125	350	5		5	5	50	220
1,1-Dichloroethene	ug/L	250	250	12.5	250	250	125	62.5	62.5	125	2.5		2.5	1.2	25	25
1,2-Dichloroethene (total)	ug/L	216	286	377	199	212	3500	135	150	4880	2.5		2.5	156	963	768
Trichloroethylene (TCE)	ug/L	8290	6880	332	6350	5560	723	1890	1630	304	11.6		11.6	1330	965	134
Tetrachloroethylene (PCE)	ug/L	250	250	12.5	250	250	125	62.5	62.5	125	2.5		2.5	2.5	25	25
Total CVOC Conc	ug/L	**9506**	**8166**	**877**	**7549**	**6772**	**4878**	**2275**	**2030**	**5784**	**24.1**	**0**	**24.1**	**1494.7**	**2028**	**1172**

ug/L	micrograms per liter
U	Indicates analyte not detected above laboratory detection limit.
J	Indicates an estimated value. A "J" qualifier may signify that the concentration is below the PQL, or that the "J" has been applied as a result of the data validation.

TABLE 2-3 (CONTINUED)

Summary of CVOC Detections during Pre-injection and Post-injection Sampling Events

TTA-3, SWMU 166 IM, Zone K, Charleston Naval Complex

StationID		K166GW13D						K166GW41D						K166GW42D						K166GW43D					
		BASELINE		POST-ROUND 2		POST-ROUND 4		BASELINE		POST-ROUND 2		POST-ROUND 4		BASELINE		POST-ROUND 2		POST-ROUND 4		BASELINE		POST-ROUND 2		POST-ROUND 4	
SampleID		166GW13DM4				166GW13DP2		166GW41DM4				166GW41DP2		166GW42DM4				166GW42DP2		166GW43DM4				166GW43DP2	
DateCollected		05/22/2002				10/11/2004		05/22/2002				10/11/2004		05/22/2002				10/11/2004		05/22/2002				10/11/2004	
DateExtracted		05/31/2002				10/24/2004		05/31/2002				10/24/2004		05/31/2002				10/24/2004		05/31/2002				10/24/2004	
DateAnalyzed		05/31/2002		06/04/2003		10/24/2004		05/31/2002		06/05/2003		10/24/2004		05/31/2002		06/05/2003		10/24/2004		05/31/2002		06/05/2003		10/24/2004	
SDGNumber		60879				123470		60879		81288		123470		60879		81288		123470		60879		81288		123470	
Parameter	**Units**																								
Vinyl chloride	ug/L	1.9	J	1000	U	359	J	1.2	J	200	U	251	=	0.75	J	500	U	754	J	5.1	J	1000	U	200	U
1,1-Dichloroethene	ug/L	2.3	J	500	U	250	U	1.1	J	100	U	50	U	1.1	J	250	U	250	UJ	7.2	=	500	U	100	U
trans-1,2-Dichloroethene	ug/L	12	=	500	U	250	U	9.7	=	19.1	J	13.8	J	4.6	J	250	U	250	UJ	0.85	J	500	U	100	U
cis-1,2-Dichloroethylene	ug/L	211	J	244	J	4000	=	223	J	1330	=	552	=	81.3	=	2680	=	2740	J	319	J	7220	=	494	=
1,2-Dichloroethene (total)	ug/L	211	J	244	J	4000	=	223	J	1350	=	565	=	85.9	=	2680	=	2740	J	319	J	7220	=	494	=
Trichloroethylene (TCE)	ug/L	7190	=	6380	=	497	=	1110	=	204	=	126	=	2570	=	1850	=	28.3	J	12900	=	2710	=	1260	=
Tetrachloroethylene (PCE)	ug/L	5	U	500	U	250	U	5	U	100	U	50	U	5	U	250	U	250	UJ	5	U	500	U	100	U
Concentrations Used to Calculate Total CVOC Concentrations.																									
Vinyl chloride	ug/L	1.9		500		359		1.2		100		251		0.75		250		754		5.1		500		100	
1,1-Dichloroethene	ug/L	2.3		250		125		1.1		50		25		1.1		125		125		7.2		250		50	
1,2-Dichloroethene (total)	ug/L	211		244		4000		223		1350		565		85.9		2680		2740		319		7220		494	
Trichloroethylene (TCE)	ug/L	7190		6380		497		1110		204		126		2570		1850		28.3		12900		2710		1260	
Tetrachloroethylene (PCE)	ug/L	2.5		250		125		2.5		50		25		2.5		125		125		2.5		250		50	
Total CVOC Conc	ug/L	**7407.7**		**7624**		**5106**		**1337.8**		**1754**		**992**		**2660.25**		**5030**		**3772.3**		**13233.8**		**10930**		**1954**	

TABLE 2-4

Summary of CVOC Detections during Pre-injection and Post-injection Sampling Events

TTA-4, SWMU 166 IM, Zone K, Charleston Naval Complex

	StationID	K166GW27D						K166GW28D						K166GW29D						K166GW30D					
		BASELINE		POST-ROUND 3		POST-ROUND 4		BASELINE		POST-ROUND 3		POST-ROUND 4		BASELINE		POST-ROUND 3		POST-ROUND 4		BASELINE		POST-ROUND 3		POST-ROUND 4	
	SampleID	166GW27DM1				166GW27DP2		166GW28DM1				166GW28DP2		166GW29DM1				166GW29DP2		166GW30DM1				166GW30DP2	
	DateCollected	02/14/2002		06/05/2003		10/14/2004		02/19/2002		06/04/2003		10/14/2004		02/19/2002		06/04/2003		10/14/2004		02/19/2002		06/04/2003		10/14/2004	
	DateExtracted					10/27/2004						10/28/2004						10/27/2004						10/27/2004	
	DateAnalyzed					10/27/2004						10/28/2004						10/27/2004						10/27/2004	
	SDGNumber					123724						123724						123724				81287		123724	
Parameter	**Units**																								
Vinyl chloride	ug/L	10	U	10	U	10	U	0 4	J	50	U	10	U	10	U	10	U	20	U	1	J	100	U	50	U
1,1-Dichloroethene	ug/L	5	U	5	U	5	U	0.75	J	25	U	5	U	5	U	5	U	10	U	2	J	50	U	25	U
trans-1,2-Dichloroethene	ug/L	5	U	5	U	0 68	J	13 4	=	12 1	J	4.2	J	5	U	5	U	0.87	J	9	=	44 8	J	16 1	J
cis-1,2-Dichloroethylene	ug/L	0.47	J	0.38	J	15.8	=	61	=	97	=	51.1	=	2	J	3.9	J	23	=	97.9	=	485	=	488	=
1,2-Dichloroethene (total)	ug/L	0.47	J	0.38	J	16.5	=	74 5	=	109	=	55.3	=	2	J	3.9	J	23.9	=	107	=	530	=	504	=
Trichloroethylene (TCE)	ug/L	18 5	=	4.3	J	45.4	=	280	=	248	=	94.7	=	89 8	=	76.3	=	117	=	3010	=	512	=	257	=
Tetrachloroethylene (PCE)	ug/L	5	U	5	U	5	U	5	U	25	U	5	U	5	U	5	U	10	U	5	U	50	U	25	U
Vinyl chloride	ug/L	0		0		0		0.4		0		0		0		0		0		1		0		0	
1,1-Dichloroethene	ug/L	0		0		0		0.75		0		2.5		0		0		0		2		0		0	
1,2-Dichloroethene (total)	ug/L	0.47		0.38		16 5		74.5		109		55.3		2		3.9		23.9		107		530		504	
Trichloroethylene (TCE)	ug/L	18.5		4.3		45.4		280		248		94.7		89 8		76.3		117		3010		512		257	
Tetrachloroethylene (PCE)	ug/L	0		0		0		0		0		0		0		0		0		0		0		0	
Total CVOC Conc	**ug/L**	**18.97**		**4.68**		**61.9**		**355.65**		**357**		**152.5**		**91.8**		**80.2**		**140.9**		**3120**		**1042**		**761**	

ug/L icrograms per liter

U etected above laboratory detection limit

J ration is below the PQL, or that the "J" has been applied as a result of the data validation.

TABLE 2-4 (CONTINUED)
Summary of CVOC Detections during Pre-injection and Post-injection Sampling Events
TTA-4, SWMU 166 IM, Zone K, Charleston Naval Complex

	StationID	K166GW31D						K166GW32D						K166GW07D (inside TTA 4)					
		BASELINE		POST-ROUND 3		POST-ROUND 4		BASELINE		POST-ROUND 3		POST-ROUND 4		BASELINE		POST-ROUND 3		POST-ROUND 4	
	SampleID	166GW31DM1				166GW31DP2		166GW32DM1				166GW32DP2		166GW07DM4				166GW07DP2	
	DateCollected	02/14/2002		06/04/2003		10/12/2004		02/14/2002		06/06/2003		10/14/2004		05/20/2002		06/06/2003		10/12/2004	
	DateExtracted					10/24/2004				05/28/2003		10/27/2004						10/24/2004	
	DateAnalyzed					10/24/2004				06/06/2003		10/27/2004						10/24/2004	
	SDGNumber			81287		123470				81288		123724						123470	
Parameter	**Units**																		
Vinyl chloride	ug/L	100	U	100	U	50	UJ	250	U	250	U	17	J	5	U	200	U	100	UJ
1,1-Dichloroethene	ug/L	50	U	50	U	25	UJ	125	U	125	U	25	U	10	U	100	U	50	UJ
trans-1,2-Dichloroethene	ug/L	50	U	50	U	25	UJ	125	U	125	U	8.9	J	4.4	J	100	U	50	UJ
cis-1,2-Dichloroethylene	ug/L	23.5	J	27.2	J	265	J	57	J	105	J	409	=	0.64	J	31.4	J	171	J
1,2-Dichloroethene (total)	ug/L	23.5	J	27.2	J	265	J	57	J	105	J	418	=	29.6	=	31.4	J	171	J
Trichloroethylene (TCE)	ug/L	757	=	504	=	263	J	2700	=	1670	=	104	=	749	=	1030	=	594	J
Tetrachloroethylene (PCE)	ug/L	50	U	50	U	25	UJ	125	U	125	U	25	U	34	=	100	U	50	UJ
Vinyl chloride	ug/L	0		0		0		0		0		17		0		0		0	
1,1-Dichloroethene	ug/L	0		0		0		0		0		0		0		0		0	
1,2-Dichloroethene (total)	ug/L	23.5		27.2		265		57		105		418		29.6		31.4		171	
Trichloroethylene (TCE)	ug/L	757		504		263		2700		1670		104		749		1030		594	
Tetrachloroethylene (PCE)	ug/L	0		0		0		0		0		0		34		0		0	
Total CVOC Conc	**ug/L**	**780.5**		**531.2**		**528**		**2757**		**1775**		**539**		**812.6**		**1061.4**		**765**	

TABLE 2-5
Summary of CVOC Detections during Pre-injection and Post-injection Sampling Events
TTA-5, SWMU 166 IM, Zone K, Charleston Naval Complex

StationID		K166GW25D						K166GW45D						K166GW46D					
		BASELINE		POST-PHASE I		POST-PHASE II		BASELINE		POST-PHASE I		POST-PHASE II		BASELINE		POST-PHASE I		POST-PHASE II	
SampleID		166GW25DM4		166GW25DN1		166GW25DP2		166GW45DM4		166GW45DN1		166GW45DP2		166GW46DM4		166GW46DN1		166GW46DP2	
DateCollected		05/20/2002		05/28/2003		10/14/2004		05/23/2002		05/28/2003		10/14/2004		05/28/2002		05/28/2003		10/14/2004	
DateExtracted		05/29/2002		06/04/2003		10/27/2004		05/31/2002		06/05/2003		10/28/2004		06/04/2002		06/05/2003		10/28/2004	
DateAnalyzed		05/29/2002		06/04/2003		10/27/2004		05/31/2002		06/05/2003		10/28/2004		06/04/2002		06/05/2003		10/28/2004	
SDGNumber		60790		81287		123724		61044		8[illegible]288		123724		61134		81288		123724	
Parameter																			
Vinyl chloride	ug/L	1.4	J	500	U	500	U	10	U	500	U	250	U	500	U	500	U	500	U
1,1-Dichloroethene	ug/L	3.[illegible]	J	250	U	250	U	0.82	J	250	U	125	U	250	U	250	U	250	U
trans-1,2-Dichloroethene	ug/L	2	J	250	U	250	U	4	J	250	U	125	U	250	U	250	U	250	U
cis-1,2-Dichloroethylene	ug/L	121	J	4750	=	3590	=	44.6	=	498	=	610	=	57.2	J	716	=	2860	=
1,2-Dichloroethene (total)	ug/L	142	=	4750	=	3590	=	48.6	=	498	=	610	=	57.2	J	716	=	2860	=
Trichloroethylene (TCE)	ug/L	7320	=	1990	=	161	J	2200	=	3340	=	1740	=	3530	=	2790	=	414	=
Tetrachloroethylene (PCE)	ug/L	5	U	250	U	250	U	5	U	250	U	125	U	250	U	250	U	250	U
Concentrations Used to Calculate Total CVOC Concentrations.																			
Vinyl chloride	ug/L	1.4		0		0		0		0		0		0		0		0	
1,1-Dichloroethene	ug/L	3.1		0		0		0.82		0		0		0		0		0	
1,2-Dichloroethene (total)	ug/L	142		4750		3590		48.6		498		610		57.2		716		2860	
Trichloroethylene (TCE)	ug/L	7320		1990		161		2200		3340		1740		3530		2790		414	
Tetrachloroethylene (PCE)	ug/L	0		0		0		0		0		0		0		0		0	
Total CVOC Conc		**7466.5**		**6740**		**3751**		**2249.42**		**3838**		**2350**		**3587.2**		**3506**		**3274**	

ug/L icrograms per liter
U tected above laboratory detection limit.
J ation is below the PQL, or that the "J" has been applied as a result of the data validation.

TABLE 2-5 (CONTINUED)
Summary of CVOC Detections during Pre-injection and Post-injection Sampling Events
TTA-5, SWMU 166 IM, Zone K, Charleston Naval Complex

StationID		K166GW47D				K166GW48D						K166GW49D					
		BASELINE		POST-PHASE I		BASELINE		POST-PHASE I		POST-PHASE II		BASELINE		POST-PHASE I		POST-PHASE II	
SampleID		166GW47DM4		166GW47DM8		166GW48DM4		166GW48DN1		166GW48DP2		166GW49DM4		166GW49DN1		166GW49DP2	
DateCollected		05/23/2002		12/06/2002		05/23/2002		05/29/2003		10/12/2004		05/28/2002		05/29/2003		10/12/2004	
DateExtracted		06/03/2002		12/14/2002		05/31/2002		06/05/2003		10/24/2004		06/04/2002		06/05/2003		10/24/2004	
DateAnalyzed		06/03/2002		12/14/2002		05/31/2002		06/05/2003		10/24/2004		06/04/2002		06/05/2003		10/24/2004	
SDGNumber		61044		71766		61044		81288		123470		61134		81288		123470	
Parameter																	
Vinyl chloride	ug/L	10	U	10	U	0.89	J	1000	U	500	UJ	500	U	14.6	J	63.6	J
1,1-Dichloroethene	ug/L	5	U	5	U	1.2	J	500	U	250	UJ	250	U	100	U	100	UJ
trans-1,2-Dichloroethene	ug/L	5	U	5	U	2.5	J	500	U	250	UJ	250	U	100	U	100	UJ
cis-1,2-Dichloroethylene	ug/L	0.7	J	5	U	60.6	=	582	=	3520	J	44.8	J	508	=	1000	J
1,2-Dichloroethene (total)	ug/L	0.7	J	5	U	63.2	=	582	=	3520	J	44.8	J	508	=	1000	J
Trichloroethylene (TCE)	ug/L	22.7	=	8.4	J	3570	=	4950	=	270	J	2960	=	1170	=	186	J
Tetrachloroethylene (PCE)	ug/L	5	U	5	U	5	U	500	U	250	UJ	250	U	100	U	100	UJ
Concentrations Used to Calculate Total CVOC Concentrations.																	
Vinyl chloride	ug/L	0		0		0.89		0		0		0		14.6		63.6	
1,1-Dichloroethene	ug/L	0		0		1.2		0		0		0		0		0	
1,2-Dichloroethene (total)	ug/L	0.7		2.5		63.2		582		3520		44.8		508		1000	
Trichloroethylene (TCE)	ug/L	22.7		8.4		3570		4950		270		2960		1170		186	
Tetrachloroethylene (PCE)	ug/L	0		0		0		0		0		0		0		0	
Total CVOC Conc		**23.4**		**10.9**		**3635.29**		**5532**		**3790**		**3004.8**		**1692.6**		**1249.6**	

TABLE 2-6
Summary of CVOC Detections during Pre-injection and Post-injection Sampling Events
TTA-6, SWMU 166 IM, Zone K, Charleston Naval Complex

	StationID	K166GW16D						K166GW51D						K166GW52D					
		BASELINE		POST-ROUND 3		POST-ROUND 4		BASELINE		POST-ROUND 3		POST-ROUND 4		BASELINE		POST-ROUND 3		POST-ROUND 4	
	SampleID	166GW16DM4		166GW16DN1		166GW16DP2		166GW51DM4		166GW51DN1		166GW51DP2		166GW52DM4		166GW52DN1		166GW52DP2	
	DateCollected	05/30/2002		05/30/2003		10/12/2004		05/29/2002		05/29/2003		10/12/2004		05/29/2002		05/29/2003		10/12/2004	
	DateExtracted	06/05/2002		06/04/2003		10/24/2004		06/04/2002		06/05/2003		10/25/2004		06/04/2002		06/06/2003		10/25/2004	
	DateAnalyzed	06/05/2002		06/04/2003		10/24/2004		06/04/2002		06/05/2003		10/25/2004		06/04/2002		06/06/2003		10/25/2004	
	SDGNumber	61258		81287		123470		61170		81288		123470		61170		81288		123470	
Parameter	Units																		
Vinyl chloride	ug/L	30.6	J	500	U	38.4	J	200	U	500	U	250	U	500	U	250	U	500	UJ
1,1-Dichloroethene	ug/L	250	U	250	U	250	U	100	U	250	U	125	U	250	U	125	U	250	UJ
trans-1,2-Dichloroethene	ug/L	250	U	250	U	250	U	100	U	250	U	125	U	250	U	125	U	250	UJ
1,1-Dichloroethane	ug/L	250	U					100	U					250	U				
cis-1,2-Dichloroethylene	ug/L	3420	=	3260	=	3530	=	1120	=	1420	=	1660	=	3680	=	2150	=	1600	J
1,2-Dichloroethene (total)	ug/L	3420	=	3260	=	3530	=	1120	=	1420	=	1660	=	3680	=	2150	=	1600	J
Trichloroethylene (TCE)	ug/L	272	=	250	U	250	U	1330	=	2500	=	2010	=	345	=	2040	=	1930	J
Tetrachloroethylene (PCE)	ug/L	250	U	250	U	250	U	100	U	250	U	125	U	250	U	125	U	250	UJ
Concentrations Used to Calculate Total CVOC Concentrations.																			
Vinyl chloride	ug/L	30.6		0		38.4		0		0		0		0		0		0	
1,1-Dichloroethene	ug/L	0		0		0		0		0		0		0		0		0	
1,2-Dichloroethene (total)	ug/L	3420		3260		3530		1120		1420		1660		3680		2150		1600	
Trichloroethylene (TCE)	ug/L	272		125		125		1330		2500		2010		345		2040		1930	
Tetrachloroethylene (PCE)	ug/L	0		0		0		0		0		0		0		0		0	
Total CVOC Conc	**ug/L**	**3722.6**		**3385**		**3693.4**		**2450**		**3920**		**3670**		**4025**		**4190**		**3530**	

ug/L micrograms per liter
U Indicates analyte not detected above laboratory detection limit.
J Indicates an estimated value. A "J" qualifier may signify that the concentration is below the PQL, or that the "J" has been applied as a result of the data validation.

TABLE 2-6 (CONTINUED)

Summary of CVOC Detections during Pre-injection and Post-injection Sampling Events

TTA-6, SWMU 166 IM, Zone K, Charleston Naval Complex

K166GWIN3				K166GWTM3						K166GWTM4					
BASELINE		POST-ROUND 3		BASELINE		POST-ROUND 3		POST-ROUND 4		BASELINE		POST-ROUND 3		POST-ROUND 4	
166GWIN3M4		166GWIN3N1		166GWTM3M4		166GWTM3N1		166GWTM3P2		166GWTM4M4		166GWTM4N1		166GWTM4P2	
05/30/2002		05/29/2003		05/29/2002		05/29/2003		10/12/2004		05/23/2002		05/29/2003		10/12/2004	
06/05/2002		06/06/2003		06/04/2002		06/07/2003		10/24/2004		05/31/2002		06/06/2003		10/22/2004	
06/05/2002		06/06/2003		06/04/2002		06/07/2003		10/24/2004		05/31/2002		06/06/2003		10/22/2004	
61258		81288		61170		81288		123470		61044		81289		123473	
18.7	=	17.7	=	346	=	152	=	191	J	6	J	1000	U	34.2	J
5	U	5	U	100	U	50	U	125	UJ	3.5	J	500	U	250	U
5	U	0.42	J	100	U	50	U	125	UJ	7.6	=	500	U	250	U
5	U			100	U					5	U				
15.6	=	35.4	=	1150	=	982	=	1410	J	2610	=	4990	=	6130	=
15.6	=	35.8	=	1150	=	982	=	1410	J	2610	=	4990	=	6130	=
5	U	1.9	J	100	U	3.8	J	309	J	252	J	2930	=	616	=
5	U	5	U	100	U	50	U	125	UJ	5	U	500	U	250	U
18.7		17.7		346		152		191		6		0		34.2	
0		0		0		0		0		3.5		0		0	
15.6		35.8		1150		982		1410		2610		4990		6130	
0		1.9		0		3.8		309		252		2930		616	
0		0		0		0		0		0		0		0	
34.3		**55.4**		**1496**		**1137.8**		**1910**		**2871.5**		**7920**		**6780.2**	

TABLE 2-7
Summary of CVOC Detections during Pre-injection and Post-injection Sampling Events
TTA-7, SWMU 166 IM, Zone K, Charleston Naval Complex

	StationID	K163GW001					K163GW003								K163GW03M								K163GW005						
		BASELINE		POST-ROUND 1		POST-ROUND 3	BASELINE		POST-ROUND 1		POST-ROUND 2		POST-ROUND 3		BASELINE		POST-ROUND 1		POST-ROUND 2		POST-ROUND 3		BASELINE		POST-ROUND 1		POST-ROUND 2		POST-ROUND 3
	SampleID	163GW001M4		163GW001M7			163GW003M4		163GW003M7		163GW003M8		163GW003N1		163GW03MM4		163GW03MM7		163GW03MM8		163GW03MN1		163GW005M4		163GW005M7		163GW005M8		
	DateCollected	05/17/2002		07/29/2002			05/20/2002		08/01/2002		12/11/2002		05/30/2003		05/20/2002		08/01/2002		12/11/2002		05/30/2003		05/30/2002		07/29/2002		12/11/2002		
	DateExtracted	05/30/2002		08/07/2002			05/28/2002		08/05/2002		12/19/2002		06/05/2003		05/28/2002		08/05/2002		12/20/2002		06/04/2003		06/05/2002		08/07/2002		12/20/2002		
	DateAnalyzed	05/30/2002		08/07/2002			05/28/2002		08/05/2002		12/19/2002		06/05/2003		05/28/2002		08/05/2002		12/20/2002		06/04/2003		06/05/2002		08/07/2002		12/20/2002		
	SDGNumber	60790		64475			60790		64676		72055		81287		60790		64676		72055		81207		61258		64475		72055		
Parameter	Units																												
Vinyl chloride	ug/L	10	U	10	U	NS	10	U	10	U	10	UJ	10	U	10	U	10	U	10	UJ	10	U	10	U	10	U	10	UJ	NS
1,1-Dichloroethene	ug/L	5	U	5	U	NS	5	U	5	U	5	UJ	5	U	0.84	J	5	U	5	UJ	5	U	5	U	5	U	5	UJ	NS
trans-1,2-Dichloroethene	ug/L	5	U	5	U	NS	1.1	J	4.7	J	5	UJ	5	U	10.4	=	5	U	5	UJ	5	U	5	U	5	U	5	UJ	NS
1,1-Dichloroethane	ug/L	5	U	5	U	NS	5	U	5	U	5	UJ			5	U	5	U	5	UJ			5	U	5	U	5	UJ	NS
cis-1,2-Dichloroethylene	ug/L	5	U	5	U	NS	18	=	145	=	11.9	J	5	U	559	=	8.2	=	4.1	J	3.9	J	4.6	J	5	U	5	UJ	NS
1,2-Dichloroethene (total)	ug/L	5	U	5	U	NS	19.1	=	150	=	11.9	J	5	U	559	=	8.2	=	4.1	J	3.9	J	4.6	J	5	U	5	UJ	NS
Trichloroethylene (TCE)	ug/L	0.58	J	0.43	J	NS	8.7	=	205	=	188	J	3.3	J	178	J	4.9	J	2.3	J	1.6	J	28.6	=	5	U	5	UJ	NS
Tetrachloroethylene (PCE)	ug/L	0.99	J	0.6	J	NS	1.8	J	94	=	285	J	9.2	=	9.8	=	1.6	J	5	UJ	0.6	J	5	U	5	U	5	UJ	NS
Hydrogen	nM						0.79	=	1.9	=	6.7	=																	
Methane	ug/L						5	=	0.04	=	26	=																	
Chloride	mg/L																												
Nitrogen, Nitrate (as N)	mg/L						0.1	UJ	0.1	U	0.1	U																	
Sulfate (as SO4)	mg/L						9.89	=	10	=	9.09	=																	
pH				4.59					5.32		5.49						6.37		6.71						7.01		7.16		
COND				0.04					0.06		0.05						0.277		0.21						0.28		0.24		
Turb				31.3					7.2		3.80						80.0		39.20						50.3		32.00		
DO				0.00					0.77		0.00						3.83		0.00						0.00		0.00		
Temp				23.5					23.7		21						23.3		20						22.6		21		
ORP				-5					113		181						-84		-95						-123		-113		

NOTES

THE WELLS IN THIS TTA WERE NOT SAMPLED DURING 2004
NS-NOT SAMPLED
ug/L micrograms per liter
U Indicates analyte not detected above laboratory detection limit
J Indicates an estimated value. A "J" qualifier may signify that the concentration is below the PQL, or that the "J" has been applied as a result of the data validation

TABLE 2-8

Summary of CVOC Detections during Pre-injection and Post-injection Sampling Events

TTA-8, SWMU 166 IM, Zone K, Charleston Naval Complex

	StationID	K166GW33D					
		PRE-INJECTION		POST-PHASE I		POST-PHASE II	
	SampleID	166GW33DM4		166GW33DN1		166GW33DP2	
	DateCollected	05/20/2002		05/27/2003		10/15/2004	
	DateExtracted	05/24/2002		06/05/2003		10/27/2004	
	DateAnalyzed	05/24/2002		06/05/2003		10/27/2004	
	SDGNumber	60789		81287		123724	
Parameter	**Units**						
Vinyl chloride	ug/L	10	U	10	U	10	U
1,1-Dichloroethene	ug/L	0.43	J	5	U	5	U
trans-1,2-Dichloroethene	ug/L	6.9	=	2.3	J	5	U
cis-1,2-Dichloroethylene	ug/L	18.2	=	9.3	=	1.5	J
1,2-Dichloroethene (total)	ug/L	25.1	=	11.6	=	1 5	J
Trichloroethylene (TCE)	ug/L	110	=	70.3	=	10.1	=
Tetrachloroethylene (PCE)	ug/L	5	U	5	U	5	U
Concentrations Used to Calculate Total CVOC Concentrations.							
Vinyl chloride	ug/L	5		5		5	
1,1-Dichloroethene	ug/L	0.43		2.5		2.5	
1,2-Dichloroethene (total)	ug/L	25.1		11.6		1.5	
Trichloroethylene (TCE)	ug/L	110		70.3		10 1	
Tetrachloroethylene (PCE)	ug/L	2 5		2 5		2.5	
Total CVOC Conc	ug/L	**143.03**		**91.9**		**21.6**	

ug/L	micrograms per liter
U	Indicates analyte not detected above laboratory detection limit.
J	Indicates an estimated value. A "J" qualifier may signify that the concentration is below the PQL, or that the "J" has been applied as a result of the data validation.

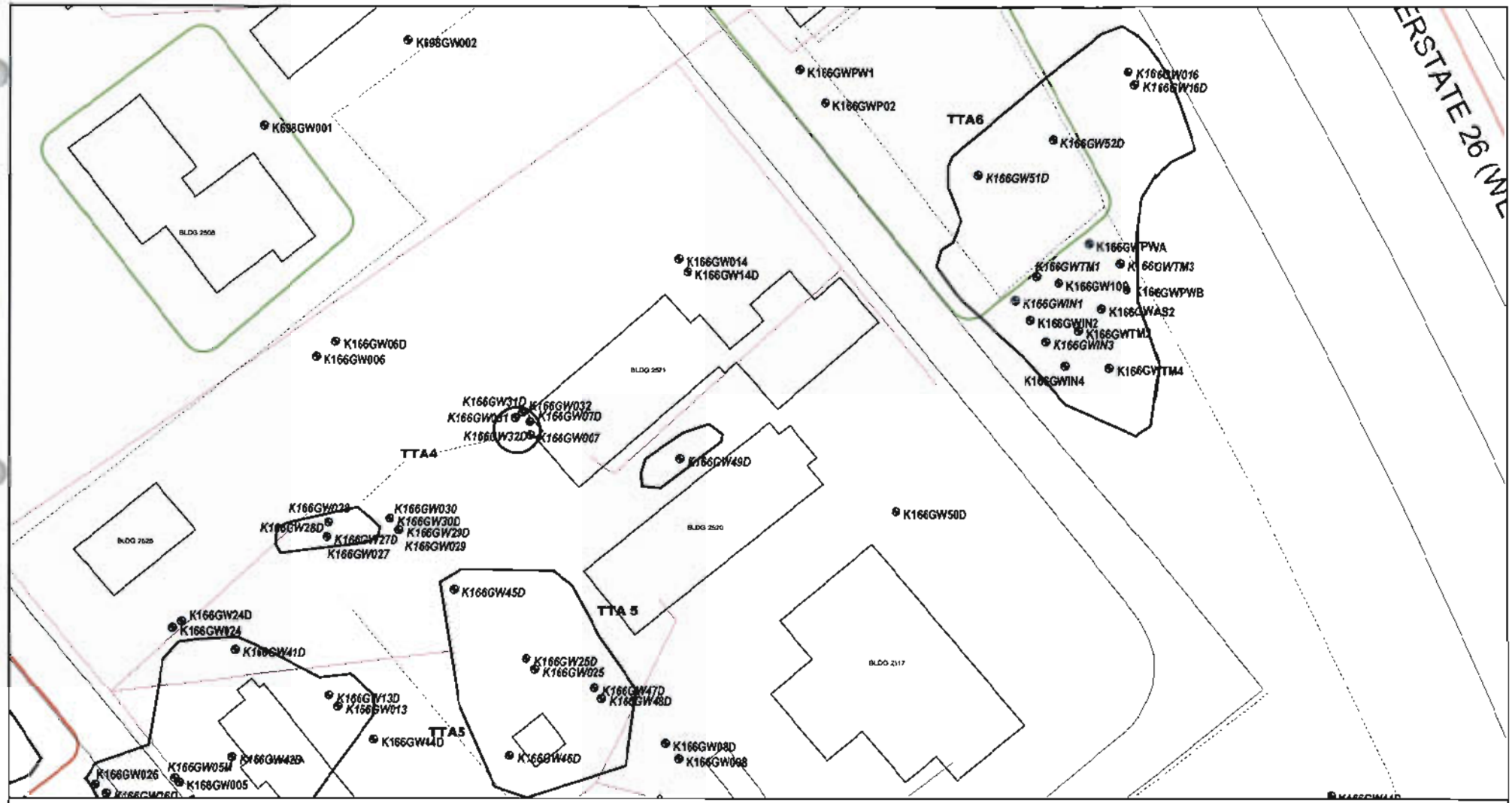

K166GW52D - Well Monitored During IM

K166GW04D - Well Not Monitored During IM

N

0 30 60 Feet

1 inch = 42 feet

Figure 2-1
Monitoring Wells Sampled for IM Treatment Monitoring
Eastern Extent of SWMU 166, Zone K
Charleston Naval Complex

CH2MHILL

File Path: c:\18gis\cno-egis.apr Date: 14 Apr 2005 21:13, User: SNAIK1, EGIS: Charleston Naval Complex - Figure 2-1 Monitoring Wells Sampled for IM Treatment Monitoring

NOTE: Original figure created in color

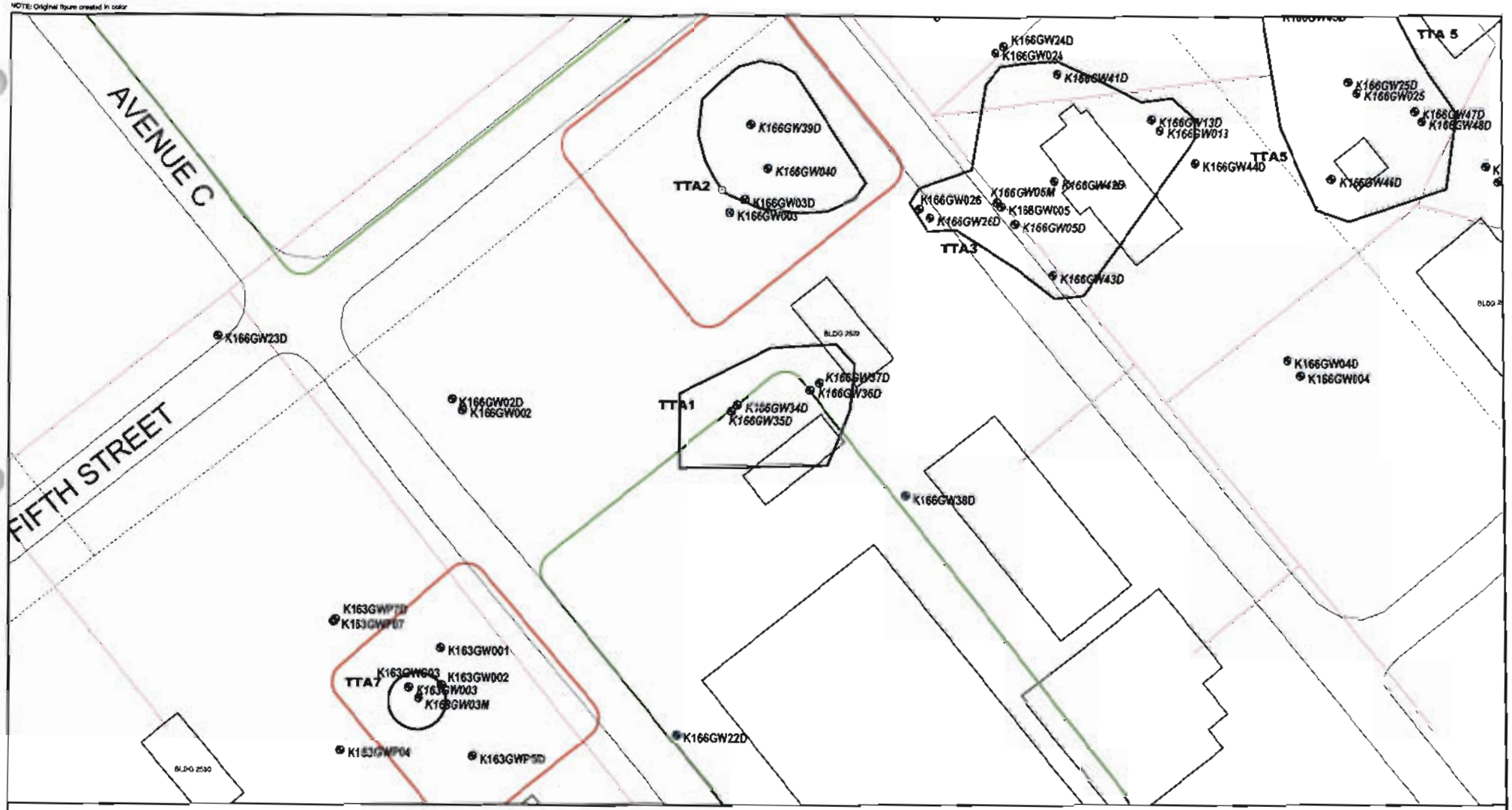

K166GW34D - Well Monitored During IM

K163GW002 - Well Not Monitored During IM

N

0 20 40 Feet

1 inch = 42 feet

Figure 2-2
Monitoring Wells Sampled for IM Treatment Monitoring
Central Extent of SWMU 166, Zone K
Charleston Naval Complex

CH2MHILL

File Path: c:\16gis\cno-egis.apr, Date: 14 Apr 2006 22:01 User: SNAIKY EGIS: Charleston Naval Complex - Figure 2-2 Map Title

K166GW33D - Well Monitored During IM

K696GW003 - Well Not Monitored During IM

N

0 20 40 Feet

1 inch = 42 feet

Figure 2-3
Monitoring Wells Sampled for IM Treatment Monitoring
Western Extent of SWMU 166, Zone K
Charleston Naval Complex

CH2MHILL

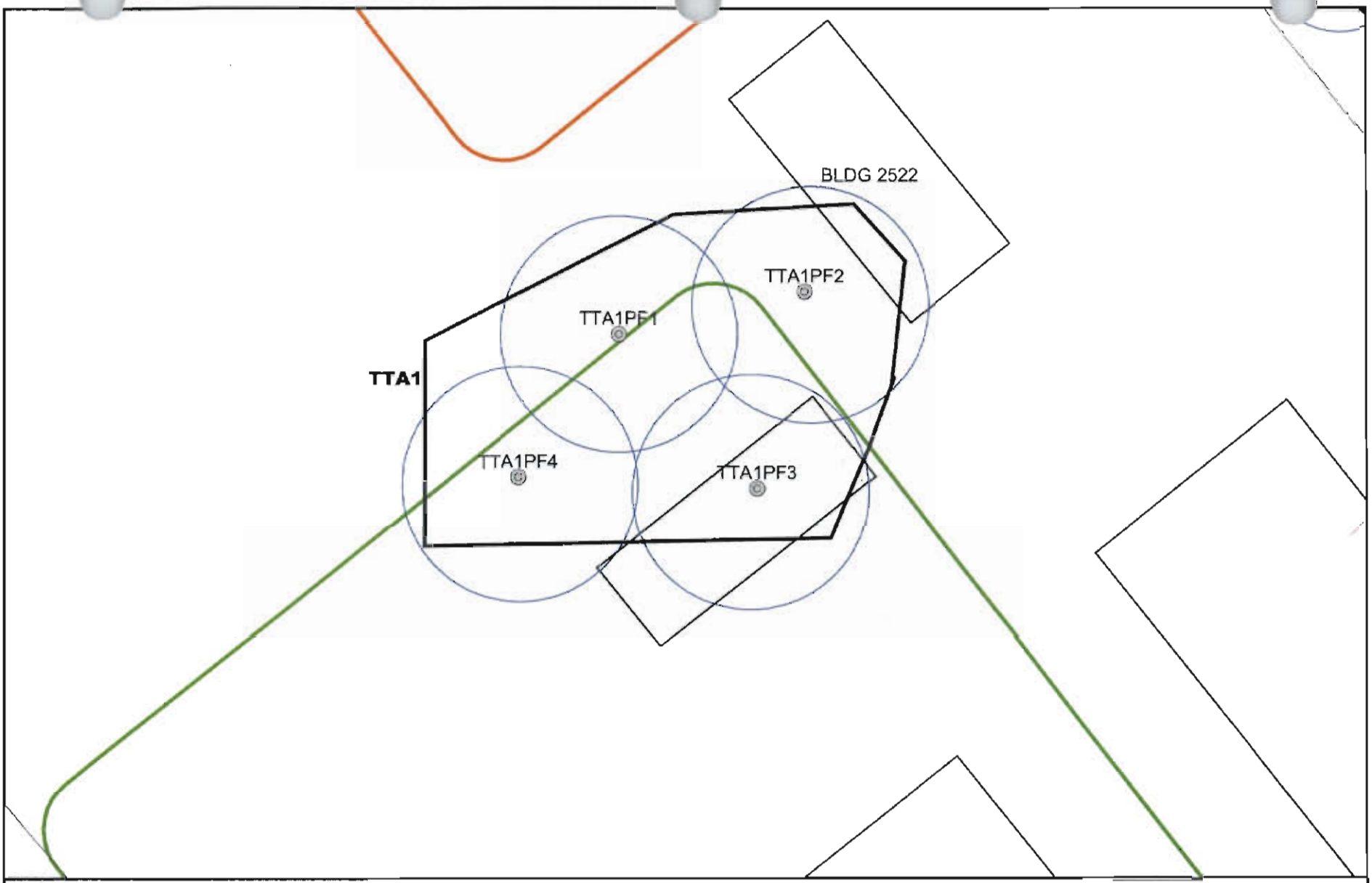

ZVI Injection Well Location
Approximate Radius of Influence of Injection
Approximate Target Treatment Area (TTA) Boundary

N

0 20 40 Feet

1 inch = 23 feet

Figure 2-4
Location of ZVI Injection Borings
TTA1, SWMU 166, Zone K
Charleston Naval Complex

CH2MHILL

File Path: c:\18gis\cnc-egis.apr, Date: 17 Mar 2005 14:34, User: SNAIK1, EGIS, Charleston Naval Complex - Figure 2-4 Location of ZVI Injection Borings

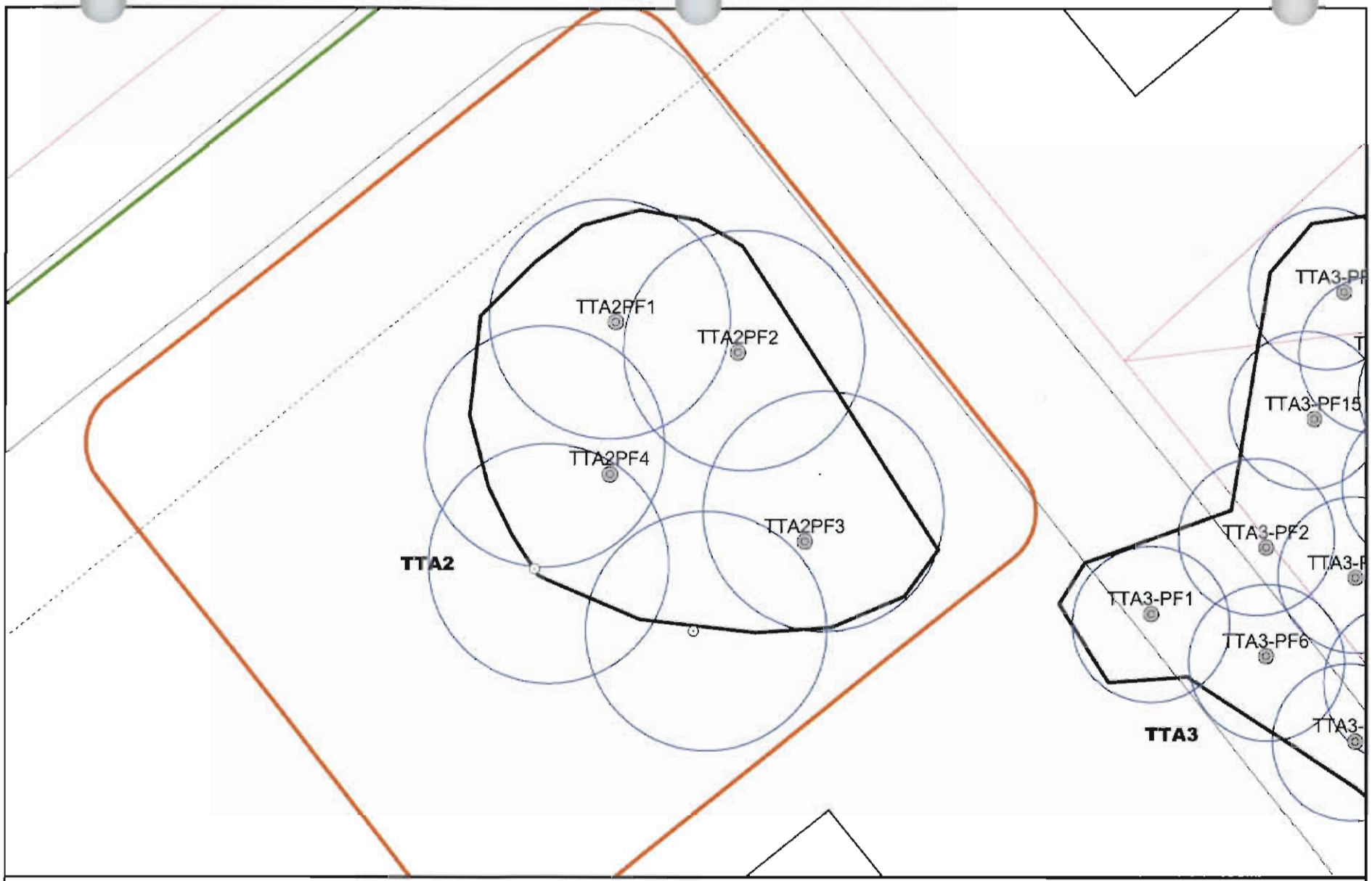

ZVI Injection Well Location
Approximate Radius of Influence of Injection
Approximate Target Treatment Area (TTA) Boundary

N

0 20 40 Feet

1 inch = 22 feet

Figure 2-5
Location of ZVI Injection Borings
TTA 2, SWMU 166, Zone K
Charleston Naval Complex

CH2MHILL

File Path: c:\18gis\cno-egis.apr, Date: 17 Mar 2006 14:45, User: SNAIK1, EGIS: Charleston Naval Complex - Figure 2-5 Map Title

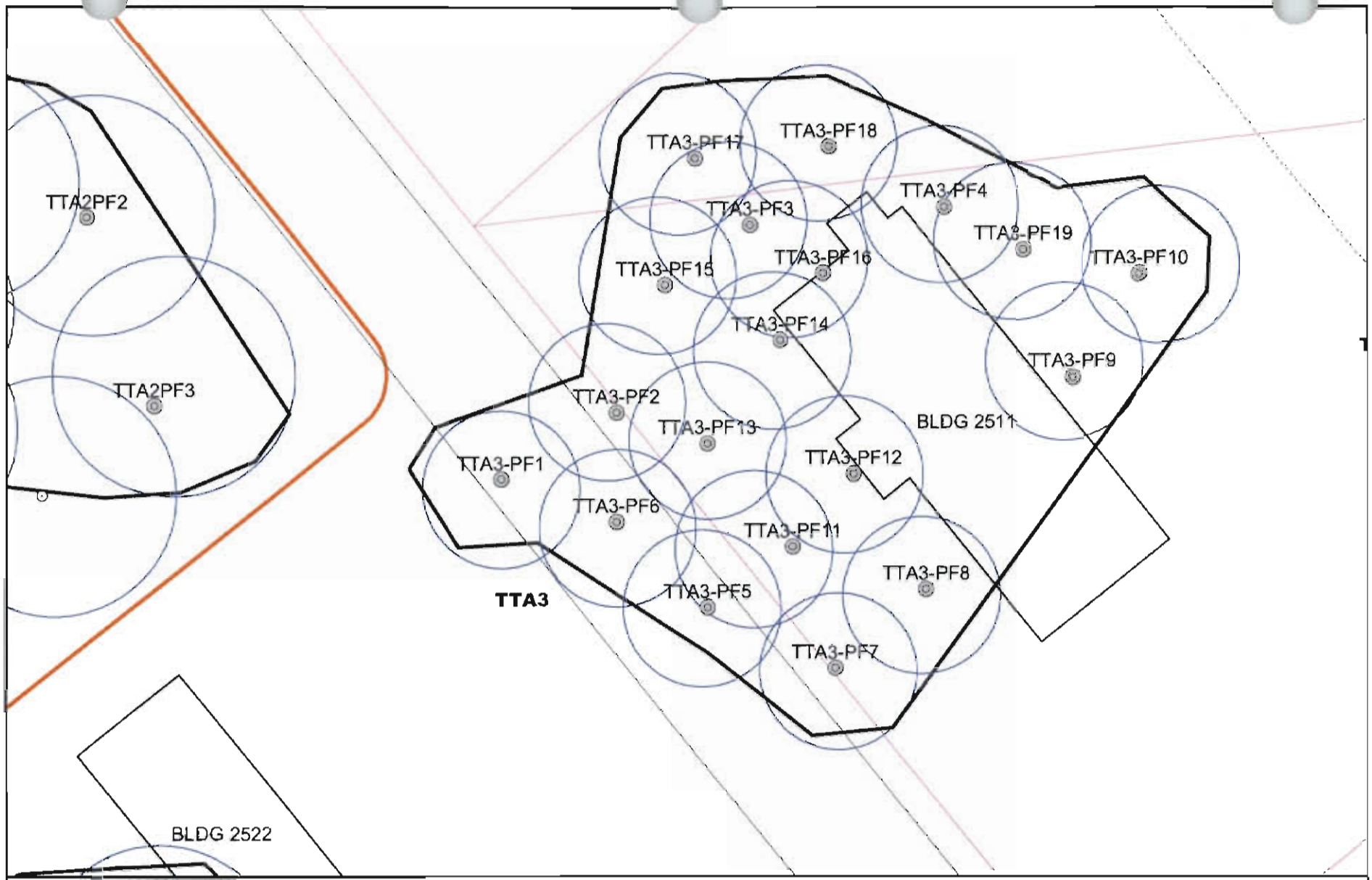

ZVI Injection Well Location
Approximate Radius of Influence of Injection
Approximate Target Treatment Area (TTA) Boundary

N

0 8 16 Feet

1 inch = 22 feet

Figure 2-6
Location of ZVI Injection Borings
TTA 3, SWMU 166, Zone K
Charleston Naval Complex

CH2MHILL

File Path: c:\18gis\cnc-egis.apr, Date: 17 Mar 2005 14:55, User: SNAIK1, EGIS: Charleston Naval Complex - Figure 2-6 TTA3

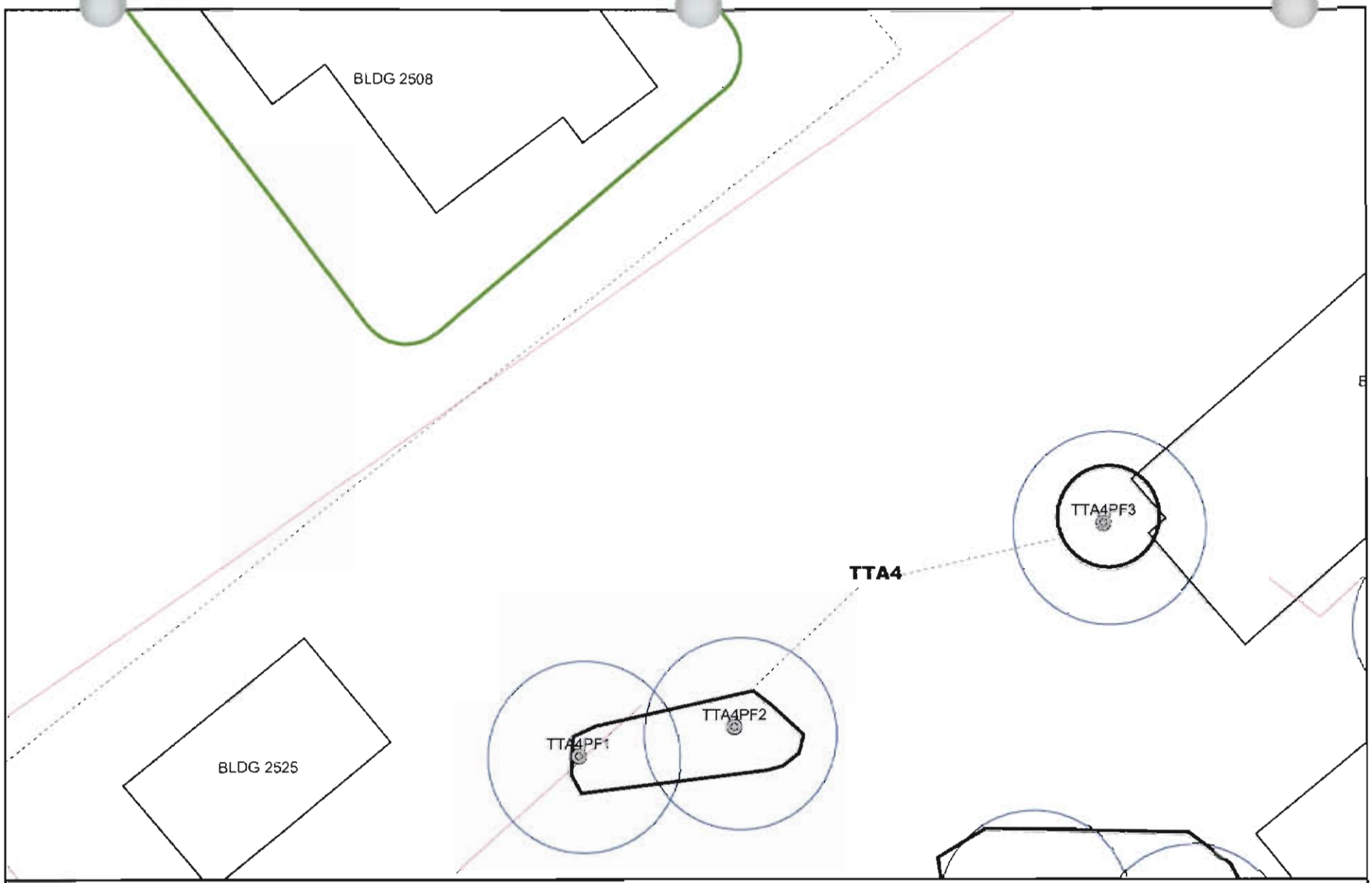

ZVI Injection Well Location
Approximate Radius of Influence of Injection
Approximate Target Treatment Area (TTA) Boundary

N

0 20 40 Feet

1 inch = 28 feet

Figure 2-7
Location of ZVI Injection Borings
TTA 4, SWMU 166, Zone K
Charleston Naval Complex

CH2MHILL

File Path: c:\Egis\cnc-egis.apr, Date: 17 Mar 2005 14:58, User: SNAIK1, EGIS: Charleston Naval Complex - Figure 2-7 TTA4

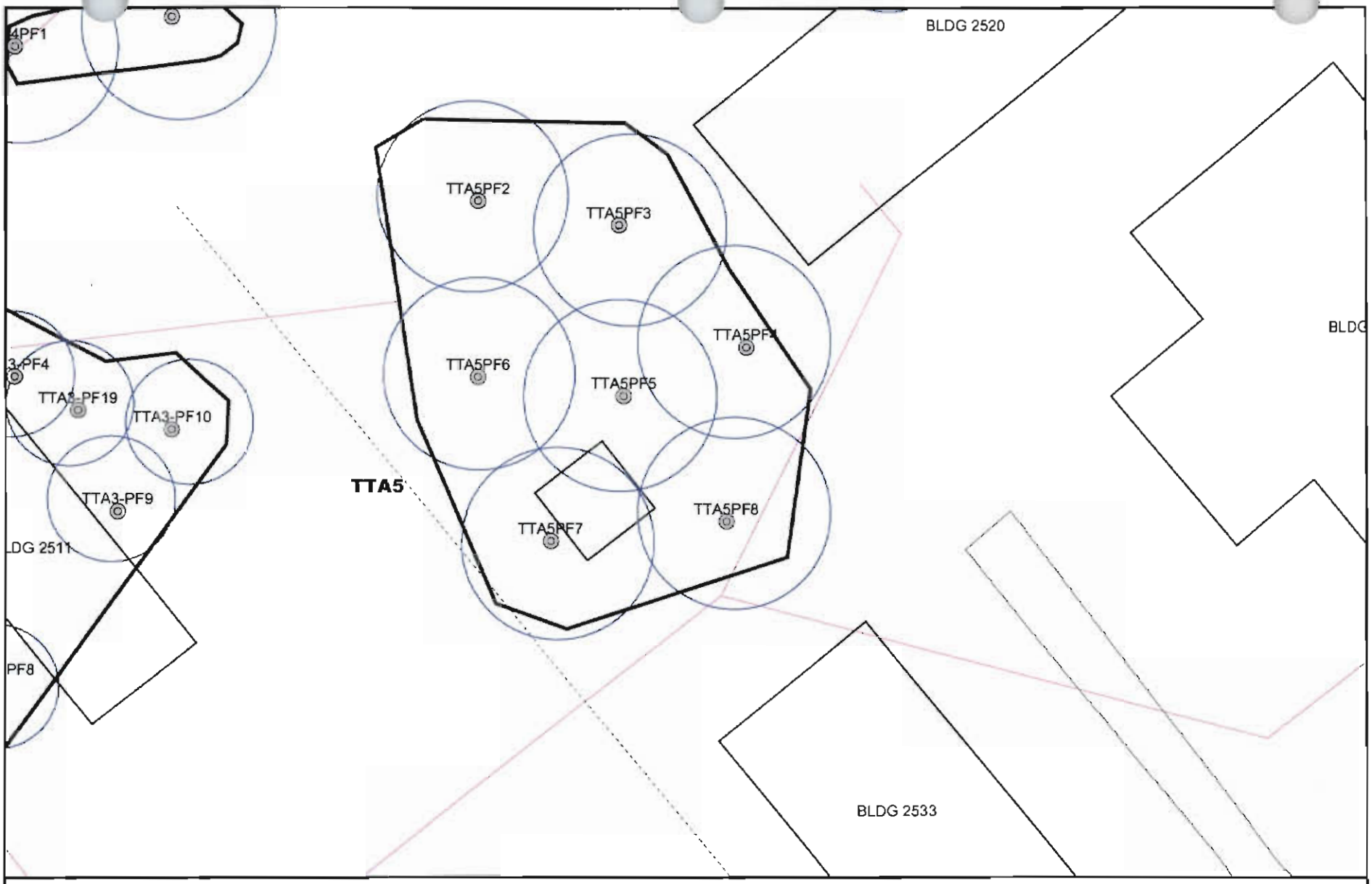

ZVI Injection Well Location
Approximate Radius of Influence of Injection
Approximate Target Treatment Area (TTA) Boundary

N

0 20 40 Feet

1 inch = 28 feet

Figure 2-8
Location of ZVI Injection Borings
TTA 5, SWMU 166, Zone K
Charleston Naval Complex

CH2MHILL

File Path: c:\16gis\cns-egis.apr, Date: 17 Mar 2005 15:52, User: SNAIK1, EGIS: Charleston Naval Complex - Figure 2-8

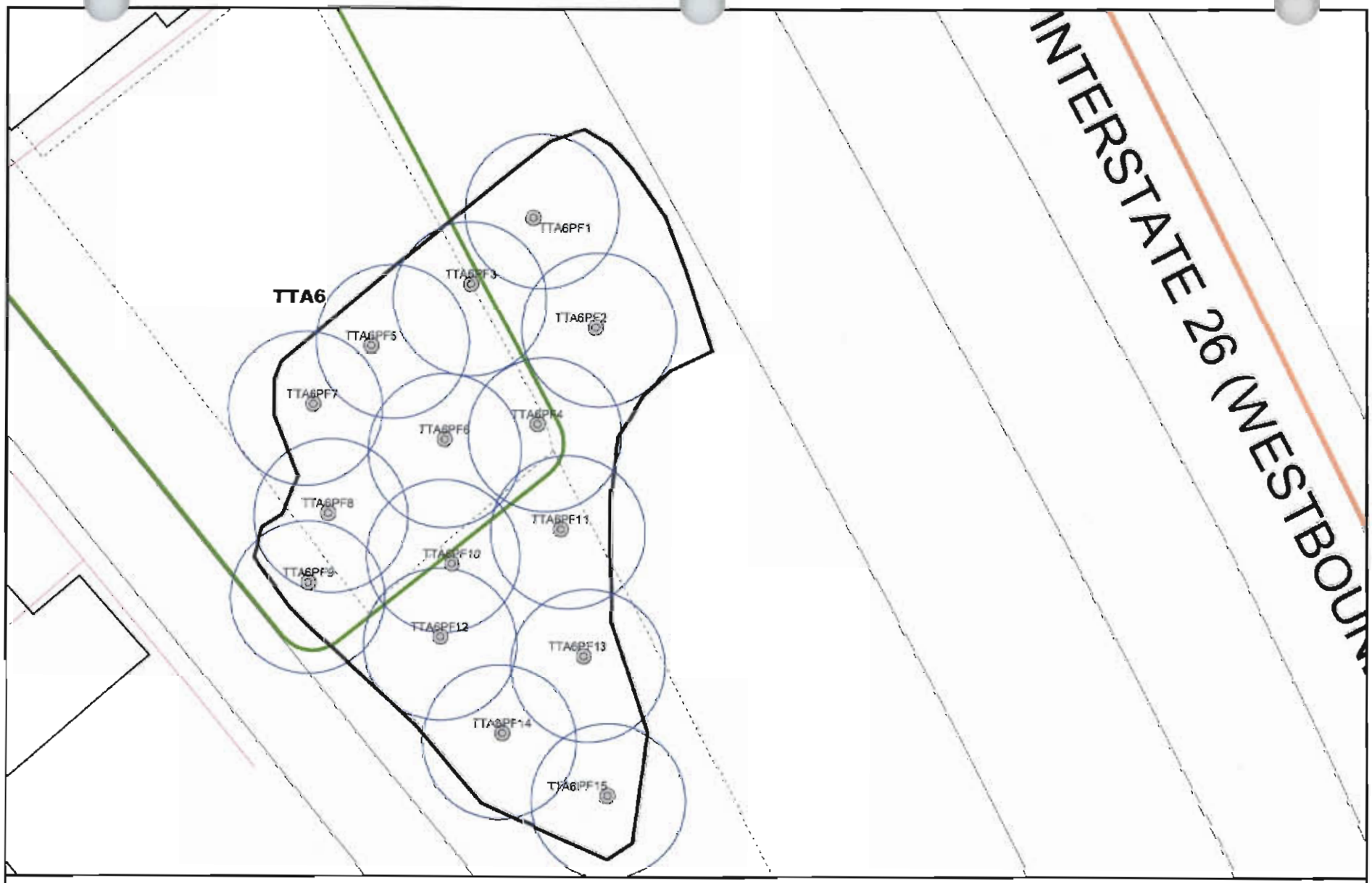

ZVI Injection Well Location
Approximate Radius of Influence of Injection
Approximate Target Treatment Area (TTA) Boundary

N

0 20 40 Feet

1 inch = 35 feet

Figure 2-9
Location of ZVI Injection Borings
TTA 6 SWMU 166, Zone K
Charleston Naval Complex

CH2MHILL

File Path: c:\t\8gis\cnc-egis.apr, Date: 17 Mar 2005 15:57, User: SNAK1, EGIS: Charleston Naval Complex - Figure 2-9

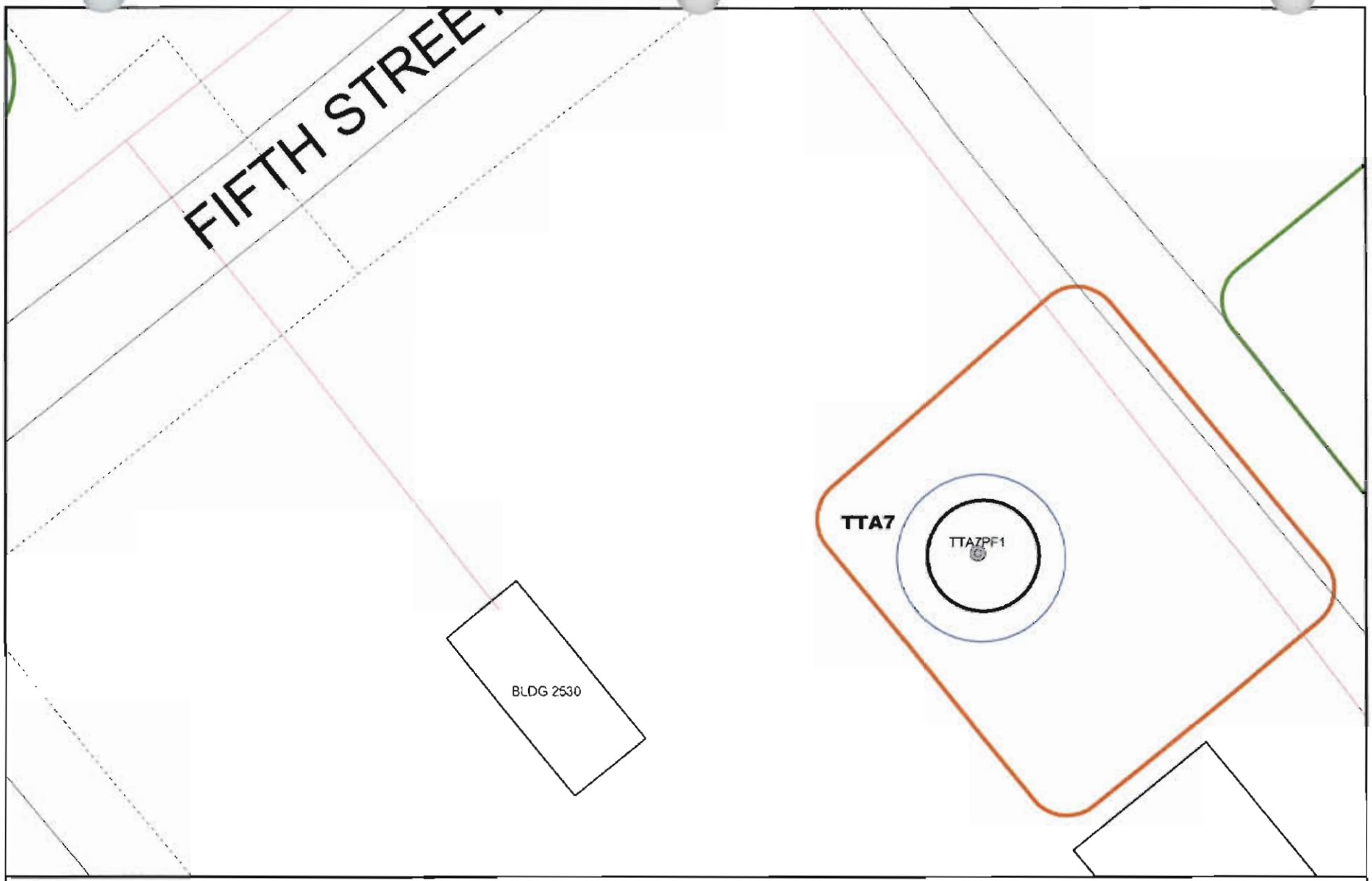

ZVI Injection Well Location
Approximate Radius of Influence of Injection
Approximate Target Treatment Area (TTA) Boundary

N

0 20 40 Feet

1 inch = 32 feet

Figure 2-10
Location of Phase I ZVI Injection Borings
TTA 7, SWMU 166, Zone K
Charleston Naval Complex

CH2MHILL

File Path: c:\18gis\cnc-egis.apr, Date: 17 Mar 2005 16:08, User: SNAIK1, EGIS: Charleston Naval Complex - Figure 2-10

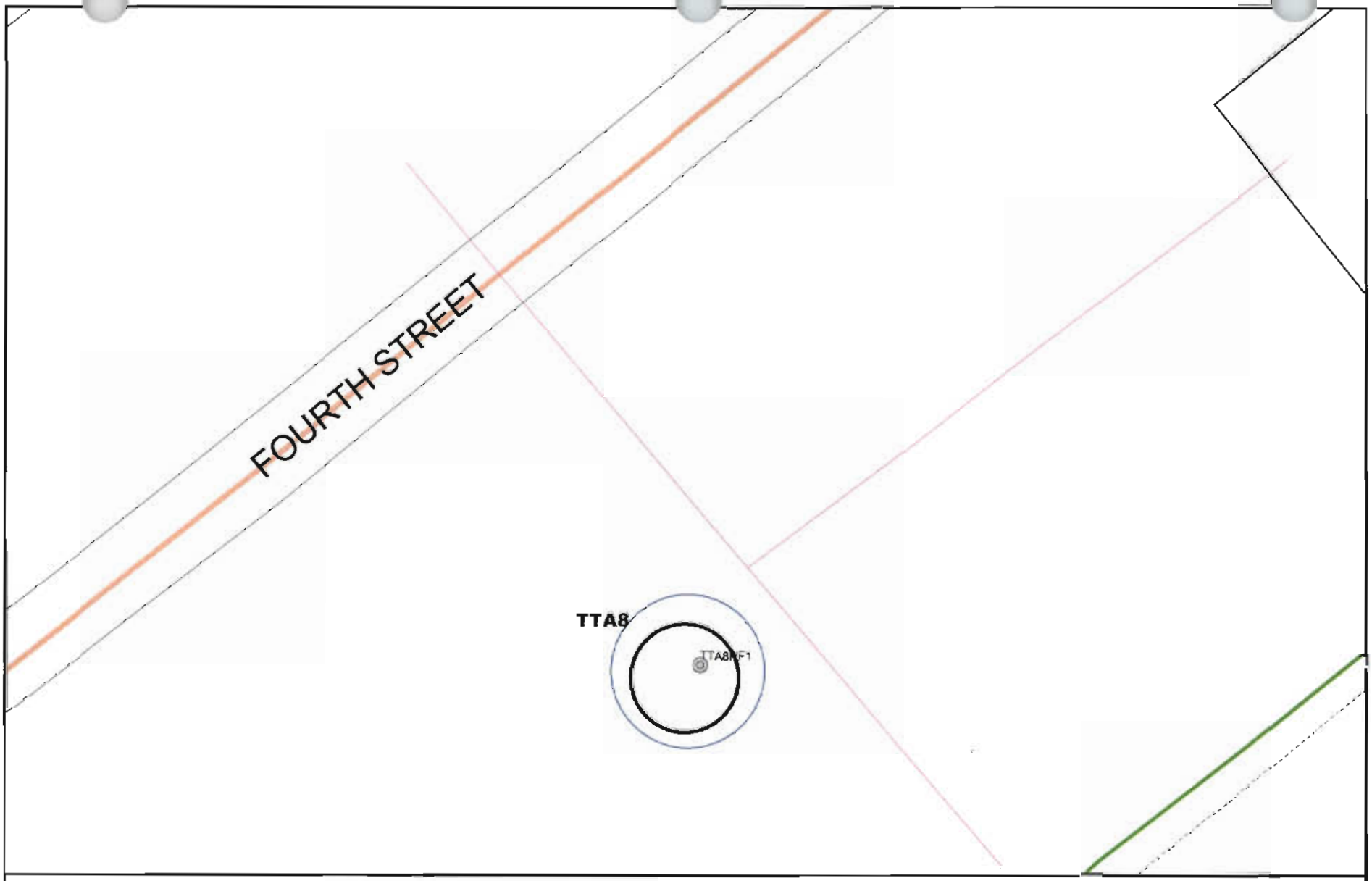

ZVI Injection Well Location
Approximate Radius of Influence of Injection
Approximate Target Treatment Area (TTA) Boundary

N

0 20 40 Feet

1 inch = 35 feet

Figure 2-11
Location of ZVI Injection Borings
TTA 8, SWMU 166, Zone K
Charleston Naval Complex

CH2MHILL

File Path: c:\1 8gisnone-egis.apr, Date: 17 Mar 2005 18:11, User: SNAIK1, EGIS: Charleston Naval Complex - Figure 2-11

3.0 Results of Interim Measure at SWMU 166

This section provides a performance summary and evaluation of the effectiveness of the IM treatment activities at SWMU 166 by comparing the groundwater data before and after injections performed as part of the IM.

3.1 Groundwater Sampling and Analysis

3.1.1 Baseline Monitoring for Full-Scale Interim Measure Implementation

In order to establish pre-treatment (baseline) conditions at TTAs 1 through 8, existing and newly installed monitoring wells were used to conduct groundwater sampling. Monitoring locations were selected both within the TTAs and immediately downgradient of the TTAs to measure pre- and post-treatment concentrations of CVOCs and monitored natural attenuation (MNA) parameters. Table 3-1 shows the parameters that were monitored during pre- and post-treatment monitoring.

3.1.2 Post-Treatment Monitoring for Full-Scale Interim Measure Implementation

The overall objective of the IM implementation was to achieve substantial reductions (target treatment efficiency of 95-percent reduction) in the TCE concentrations in the eight TTAs at SWMU 166. Tables 3-2 through 3-9 show a comparison of total and average TCE and CVOC concentrations detected during the baseline and post-injection sampling events, along with the percent reductions in concentrations of total CVOCs and TCE, the primary groundwater COC, at SWMU 166. Based strictly on concentration reductions as indicated in Table 2-10, varying degrees of success were achieved in the various TTAs. Figures 3-1 to 3-8 present TCE and total DCE concentrations before and after injection in a graphical format.

The total TCE concentrations for the baseline (May 2002) sampling event and the most recent sampling event (November 2004) for each TTA were calculated by summing up the TCE concentrations detected in the wells within the TTA. The total CVOC concentrations were calculated by summing up the concentrations of 1,1-DCE, 1,2-DCE (total), TCE, PCE and vinyl chloride. For those results showing a "U" qualifier (signifying that detections were below laboratory detection limits) during both the pre-injection and post-injection sampling events, a value of zero was used in calculating the percent removal. Vinyl chloride and PCE were the two chemicals that most commonly showed detections below laboratory detection limits in both the pre-injection and post-injection samples.

The following sections discuss the treatment effectiveness of the Ferox^{SM} injections at each of the TTAs at SWMU 166.

TTA 1

Table 3-2 shows the CVOC concentrations of the baseline (pre-injection) sampling event of May 2002, the third sampling event after Phase I injections in June 2003 and the fourth sampling event following Phase II injections in November 2004.

The percent reduction in total TCE concentrations as a result of the Phase I injections was 38 percent. TCE concentrations in two of the four wells monitored in this TTA decreased substantially and increased slightly in the remaining two wells.

The percent reductions in the total CVOC concentrations as a result of the Phase I injections was 8 percent. This number is lower than the percent reduction in TCE concentrations because the post-injection concentration of 1,2-DCE increased. 1,2-DCE is a breakdown product of TCE.

After the Phase II treatment in this area, the TCE reduction increased to approximately 84 percent. While this did not meet the 95 percent reduction that was the goal of the IM, this reduction is substantial. Total VOC reduction increased from only 8 percent after the Phase I treatment to 38 percent. The total VOC reduction was not as great as the reduction for TCE because DCE was produced as part of the TCE reduction.

The concentrations of CVOCs in this TTA after treatment indicate that the Ferox^{SM} treatment has been reasonably successful in reducing the source area TCE concentrations and initiating dechlorination of TCE. Some additional treatment of groundwater in this area may be required.

TTA 2

Table 3-3 shows the CVOC concentrations of the baseline (pre-injection) sampling event of May 2002 and the fourth sampling event following injections in November 2004. TCE and CVOC concentrations increased significantly between the pre-injection and November 2004 sampling events. TCE concentrations decreased in the second and third post-injection sampling events in well K166GW39D. However, the most recent sampling event shows a spike in TCE and 1,2-DCE concentrations in well K166GW040. The increase may be due to a previously undetected minor source of TCE toward well K166GW040. This TTA is the location where an IM was performed previously to remove TCE-impacted soil. This area will likely require additional corrective measures to address groundwater contamination.

TTA 3

Table 3-4 shows the CVOC concentrations of the baseline (pre-injection) sampling event of May 2002, the third sampling event after Phase I injections in June 2003, and the fourth sampling event following Phase II injections in November 2004.

The percent reduction in total TCE concentrations as a result of the Phase I injections was 37 percent. The percent reductions in total CVOC concentrations in TTA3 was 8 percent after Phase I. This number is much lower because some TCE converted to DCE.

After the Phase II injections, the reduction in TCE concentration increased to 92 percent and the reduction in total VOCs increased to 46 percent. These results indicate a significant decrease in TCE concentrations. Some additional groundwater treatment may be needed in this area.

TTA 4

Table 3-5 shows the CVOC concentrations of the baseline (pre-injection) sampling event of May 2002, the third sampling event after Phase I injections in June 2003, and the fourth sampling event following Phase II injections in November 2004.

The percent reduction in total TCE concentrations as a result of the Phase I injections was 47 percent. The percent reductions in the total CVOC concentrations in the TTA as a result of the Phase I injections was 43 percent.

After the Phase II injections, the reduction in TCE concentration increased to 81 percent, while the reduction in total VOCs increased to 63 percent. These reductions are considered significant. Some additional treatment may be needed in this area.

TTA 5

Table 3-6 shows the CVOC concentrations of the baseline (pre-injection) sampling event of May 2002, the third sampling event after Phase I injections in June 2003, and the fourth sampling event following Phase II injections in November 2004.

The percent reduction in total TCE concentrations as a result of the Phase I injections was 27 percent. The total CVOC concentrations in the TTA showed an increase of 7 percent after the Phase I injections. This increase is primarily due to a higher rate of 1,2-DCE formation and a localized increase of TCE in well K166GW45D.

After the Phase II treatment, the reduction in TCE concentration increased to 86 percent and the reduction in total VOCs increased to 28 percent. The reduction in TCE is considered significant. Some additional treatment may be required in this area.

TTA 6

Table 3-7 shows the CVOC concentrations of the baseline (pre-injection) sampling event of May 2002, the third sampling event after Phase I injections in June 2003, and the fourth sampling event following Phase II injections in November 2004.

Total CVOC and TCE concentrations increased after Phase I. This increase appears to be primarily due to a higher rate of 1,2-DCE formation and a localized increase of TCE in some wells. The concentrations of CVOCs in this TTA indicate that the Ferox^{SM} treatment was largely unsuccessful in reducing the TCE concentrations during Phase I.

After the Phase II treatment, overall reductions in both TCE and total VOC were still not observed in this area. The treatment appears to have been ineffective and the reason for the lack of success in this area is unknown. Additional treatment will be required to address VOCs in this area.

TTA 7

Table 3-8 shows the CVOC concentrations of the baseline (pre-injection) sampling event of May 2002 and the third sampling event after Phase I injections in June 2003 for the wells in this TTA. Based on the final concentrations of total CVOCs and TCE, this TTA has been successfully treated. The final TCE concentrations were below the maximum contaminant level (MCL) of 5 µg/L, and there were either no MCL exceedances or no detections above laboratory detection limits for the remaining CVOCs.

TTA 8

Table 3-9 shows the CVOC concentrations of the baseline (pre-injection) sampling event of May 2002, the third sampling event after Phase I injections in June 2003, and the fourth sampling event in November 2004 for the wells in this TTA. Based on the final concentrations of total CVOCs and TCE, this TTA has been successfully treated. The final TCE concentrations are close to the MCL of 5 µg/L, and there were either no MCL exceedances or no detections above laboratory detection limits for the remaining CVOCs.

3.2 Conclusions for Interim Measures at SWMU 166

Overall, significant reductions in TCE concentrations were achieved at most of the TTAs. At most locations, TCE concentrations have not "rebounded," indicating that at those locations, either any minor amounts of DNAPL that may have been present originally were effectively treated or that the TCE was present at those locations only in dissolved form.

The reduction in total VOCs was not as significant as the reduction in TCE due to the partial conversion of TCE to DCE at several TTAs. However, DCE can be treated using a variety of technologies and treatment of the remaining VOCs above the target cleanup levels will be the focus of the CMS and subsequent remediation efforts.

Potential methods to address the remaining VOC contamination are discussed in Section 4.0 of this report.

TABLE 3-1
Analytical Parameters for Pre-Injection and Post-Injection Monitoring
IM Completion Report/CMS Work Plan/Pilot Study Work Plan, SWMU 166, Zone K, Charleston Naval Complex

Analysis	Method	Comments	Data Use	Field or Fixed-Base Laboratory
VOCs	SW-846 8260B	Determine extent of chlorinated VOC contamination.	Data will be used to evaluate potential remedial approach(es) to be field tested as part of pilot study	Fixed-base
Dissolved Oxygen*	DO Meter calibrated in the field according to the supplier's specifications		Concentrations < 0.5 mg/L generally indicate an anoxic pathway	Field
Nitrate	Ion Chromatography Method E300		Substrate for microbial respiration if oxygen is depleted	Fixed-Base
Soluble Manganese [MN (II)]	Colorimetric Hach Company Method 8149		May indicate an anoxic degradation process due to depletion of oxygen, nitrate, and manganese	Field
Total Iron	SW-846 ICP 6010			
Ferrous Iron [FE(II)]	Colorimetric Hack Company Method 8146		May indicate an iron-reducing environment	Field
Sulfate	IC Method E300		Substrate for anoxic microbial respiration	Fixed-Base
Chloride	SW-846 Method 9056			
Hydrogen Sulfide	Color Disk methylene Blue Method	Hack Catalog Number 2238-01	The presence of H2S suggests a sulfate-reducing environment	Field
Methane	SW-846 method 3810 Modified		The presence of CH4 suggests biodegradation via methanogenesis	Fixed-Base

TABLE 3-1
Analytical Parameters for Pre-Injection and Post-Injection Monitoring
IM Completion Report/CMS Work Plan/Pilot Study Work Plan, SWMU 166, Zone K, Charleston Naval Complex

Analysis	Method	Comments	Data Use	Field or Fixed-Base Laboratory
Oxidation Reduction Potential (ORP)	American Society for Testing and Materials (ASTM) Method A2580B	Measurements made with electrodes and meter; protect sample from oxygen. Report results against the hydrogen electrode (Eh) by adding a correction factor specific to the electrode used	The ORP of groundwater reflects the relative oxidizing or reducing nature of the groundwater system. ORP is influenced by the nature of the biologically mediated degradation of contaminants, and may range from 800 mV (oxygenated) to less than –400 (strongly reducing)	Field
pH	Field probe with direct-reading meter calibrated in the field according to the supplier's specifications		Aerobic and anoxic processes are pH-sensitive; abiotic reduction of chromium is pH - sensitive	Field
Temperature	Field Probe with direct-reading mater			Field
Conductivity	E120.1/SW-846 Method 9050, direct meter reading		General water quality parameters used as a marker to verify that site samples are obtained from the groundwater system	Field
Hydrogen	Equilibration with gas; determined with reduction gas detector (Microseeps)		Determine terminal electron accepting process. Under biotic conditions, hydrogen may act as an electron donor	Fixed-Base

Some monitored natural attenuation (MNA) parameters were dropped after initial post-injection sampling events.

mg/L milligram per liter

TABLE 3-2

Comparison of Pre-Injection and Post-Injection Concentrations of Selected CVOCs at Target Treatment Area 1

IM Completion Report/CMS Work Plan/Pilot Study Work Plan, SWMU 166, Zone K, Charleston Naval Complex

	StationID	K166GW34D						K166GW35D						K166GW36D						K166GW37D			
		PRE-INJ		POST-PHASE I		POST PHASE II		PRE-INJ		POST PHASE I		POST PHASE II		PRE-INJ		POST PHASE I		POST PHASE II		PRE-INJ		POST PHASE I	
	SampleID	166GW34DM4		166GW34DN1		166GW34DP2		166GW35DM4		166GW35DN1		166GW35DP2		166GW36DM4		166GW36DN1		166GW36DP2		166GW37DM4		166GW37DN1	
	DateCollected	5/21/2002				10/14/2004		5/21/2002				10/15/2004		5/28/2002				10/14/2004		5/21/2002			
	DateExtracted	5/24/2002				10/27/2004		5/24/2002				10/27/2004		6/3/2002				10/27/2004		5/24/2002			
	DateAnalyzed	5/24/2002		6/5/2003		10/27/2004		5/24/2002		6/5/2003		10/27/2004		6/3/2002		6/6/2003		10/27/2004		5/24/2002		6/5/2003	
	SDGNumber	60789		81288		123724		60789		81288		123724		61134		81288		123724		60789		81288	
Parameter	**Units**																						
Vinyl chloride	µg/L	500	U	5000	U	5000	U	10	U	200	U	250	U	1000	U	100	U	50	U	500	U	2000	U
1,1-Dichloroethene	µg/L	250	U	2500	U	2500	U	5	U	100	U	125	U	500	U	50	U	25	U	250	U	1000	U
trans-1,2-Dichloroethene	µg/L	250	U	2500	U	2500	U	5	U	100	U	125	U	500	U	50	U	25	U	250	U	1000	U
cis-1,2-Dichloroethylene	µg/L	456	=	20400	=	40500	=	5.6	=	369	=	1180	=	521	=	431	=	128	=	817	=	10600	=
1,2 Dichloroethene (total)	µg/L	456	=	20400	=	40500	=	5.6	=	369	=	1180	=	521	=	431	=	128	=	817	=	10600	=
Trichloroethylene (TCE)	µg/L	42300	=	45700	=	1680	J	642	=	1120	=	125	U	31900	=	68.7	=	3	J	24200	=	14500	=
Tetrachloroethylene (PCE)	µg/L	250	U	2500	U	2500	U	5	U	100	U	125	U	500	U	50	U	25	U	250	U	1000	U
Concentrations Used to Calculate Total CVOC Concentrations.																							
Vinyl chloride	µg/L	0		0		0		0		0		0		0		0		0		0		0	
1,1-Dichloroethene	µg/L	0		0		0		0		0		0		0		0		0		0		0	
1,2-Dichloroethene (total)	µg/L	456		20400		40500		5.6		369		1180		521		431		128		817		10600	
Trichloroethylene (TCE)	***µg/L***	***42300***		***45700***		***1680***		***642***		***1120***		***62.5***		***31900***		***68.7***		***3***		***24200***		***14500***	
Tetrachloroethylene (PCE)	µg/L	0		0		0		0		0		0		0		0		0		0		0	
Total CVOC Conc	**µg/L**	**42756**		**66100**		**42180**		**647.6**		**1489**		**1242.5**		**32421**		**499.7**		**131**		**25017**		**25100**	

PERCENT REDUCTIONS OF GROUNDWATER CONTAMINANTS AFTER IM	Average	Total
TTA 1 Pre-Injection CVOC Conc:	25,210	100,842
TTA 1 June '03 CVOC Conc:	23,297	93,189
Percent reduction of CVOC At the End of Phase I	**8%**	**8%**
TTA 1 Nov '04 CVOC Conc:	17,163	68,654
Percent reduction of CVOC At the End of Phase II	**32%**	**32%**
TTA1 Pre-Injection TCE Conc	24,761	99,042
TTA 1 June '03 TCE Conc:	15,347	61,389
Percent reduction of TCE At the End of Phase I	**38%**	**38%**
TTA1 Nov '04 TCE Conc	3,249	16,246
Percent reduction of TCE At the End of Phase II	**87%**	**84%**

TABLE 3-3
Comparison of Pre-Injection and Post-Injection Concentrations of Selected CVCCs at Target Treatment Area 2
IM Completion Report/CMS Work Plan/Pilot Study Work Plan, SWMU 166, Zone K, Charleston Naval Complex

	StationID	K166GW39D			K166GW040		
		PRE-INJECTION	POST PHASE I	POST-PHASE II	PRE-INJECTION	POST PHASE I	POST-PHASE II
	SampleID	166GW39DM4	166GW39DM8	166GW39DP2	166GW040M4	166GW040N1	166GW040P2
	DateCollected	5/21/2002	12/9/2002	10/14/2004	5/21/2002		10/14/2004
	DateExtracted	5/24/2002	12/13/2002	10/27/2004	5/25/2002		10/28/2004
	DateAnalyzed	5/24/2002	12/13/2002	10/27/2004	5/25/2002	6/4/2003	10/28/2004
	SDGNumber	60789	71852	123724	60789	81287	123724
Parameter	**Units**						
Vinyl chloride	ug/L	10 U	10 U	10 U	250 U	2500 U	25000 U
1,1-Dichloroethene	ug/L	5 U	5 U	5 U	125 U	1250 U	12500 U
trans-1,2-Dichloroethene	ug/L	5 U	5 U	5 U	125 U	1250 U	12500 U
cis-1,2-Dichloroethylene	ug/L	13.4 =	2.2 J	0.87 J	309 =	9020 =	59200 =
1,2-Dichloroethene (total)	ug/L	13.4 =	2.2 J	0.87 J	309 =	9020 =	59200 =
Trichloroethylene (TCE)	ug/L	240 =	3.3 J	0.91 J	1950 =	14300 =	79500 =
Tetrachloroethylene (PCE)	ug/L	0.62 J	5 U	5 U	125 U	1250 U	12500 U
Concentrations Used to Calculate Total CVOC Concentrations.							
Vinyl chloride	ug/L	0	0	0	0	0	0
1,1-Dichloroethene	ug/L	0	0	0	0	0	0
cis-1,2-Dichloroethylene	ug/L						
1,2-Dichloroethene (total)	ug/L	13.4	2.2	0.87	309	9020	59200
Trichloroethylene (TCE)	ug/L	240	3.3	0.91	1950	14300	79500
Tetrachloroethylene (PCE)	ug/L	0.62	0	0	0	0	0
Total CVOC Conc	**ug/L**	**254.02**	**5.5**	**1.78**	**2259**	**23320**	**138700**

PERCENT REDUCTIONS OF GROUNDWATER CONTAMINANTS AFTER IM		
	Average	Total
TTA 2 Pre-Injection CVOC Conc:	1,257	2,513
TTA 2 Dec/'02/June '03 CVOC Conc:	11,663	23,326
Percent reduction of CVOC After Phase I	**-828%**	**-828%**
TTA 2 Oct '04 CVOC Conc:	69,351	138,702
Percent reduction of CVOC After Phase II	**-5419%**	**-5419%**
TTA2 Pre-Injection TCE Conc:	1,095	2,190
TTA 2 Dec/'02/June '03 TCE Conc:	7,152	14,303
Percent reduction of TCE After Phase I	**-553%**	**-553%**
TTA2 Oct '04 TCE Conc	39,750	79,501
Percent reduction of TCE After Phase II	**-3530%**	**-3530%**

TABLE
Comp

TABLE 3-4
Comparison of Pre-Injection and Post-Injection Concentrations of Selected CVOCs at Target Treatment Area 3
IM Completion Report/CMS Work Plan/Pilot Study Work Plan, SWMU 166, Zone K, Charleston Naval Complex

StationID		K166GW053			K166GW054			K166GW055			K166GW026			K166GW26D		
		PRE-INJECTION	POST-PHASE I	POST-PHASE II	PRE-INJECTION	POST-PHASE I	POST-PHASE II	PRE-INJECTION	POST-PHASE I	POST-PHASE II	PRE-INJECTION	POST-PHASE I		PRE-INJECTION	POST-PHASE I	POST-PHASE II
SampleID		166GW053M4		166GW053P2	166GW054M4		166GW054P2	166GW055M4		166GW055P2	166GW026M4	166GW026M8		166GW26DM4		166GW26DP2
DateCollected		5/30/2002		10/11/2004	5/30/2002		10/11/2004	5/30/2002		10/11/2004	5/20/2002	12/2/2002		5/21/2002		10/14/2004
DateExtracted		6/5/2002		10/25/2004	6/5/2002		10/24/2004	6/5/2002		10/24/2004	5/28/2002	12/9/2002		5/28/2002		10/27/2004
DateAnalyzed		6/5/2002	6/5/2003	10/25/2004	6/5/2002	6/5/2003	10/24/2004	6/5/2002	6/5/2003	10/24/2004	5/28/2002	12/9/2002		5/28/2002	6/4/2003	10/27/2004
SDGNumber		61258	81288	123470	61258	81288	123470	61258	81288	123470	60790	71658		60790		123724
Parameter	**Units**															
Vinyl chloride	ug/L	1000 U	1000 U	143 =	1000 U	1000 U	405 J	250 U	250 U	350 J	10 U	NS	10 U	10 U	100 U	220 =
1,1-Dichloroethene	ug/L	500 U	500 U	25 U	500 U	500 U	250 U	125 U	125 U	250 U	5 U	NS	5 U	1.2 J	50 U	50 U
trans-1,2-Dichloroethene	ug/L	500 U	500 U	25 U	500 U	500 U	250 U	125 U	125 U	250 U	5 U	NS	5 U	5 =	17.7 J	13.2 J
cis-1,2-Dichloroethylene	ug/L	216 J	286 J	377 =	199 J	212 J	3500 =	135 =	150 =	4880 =	5 U	NS	5 U	129 J	946 =	755 =
1,2-Dichloroethene (total)	ug/L	216 J	286 J	377 =	199 J	212 J	3500 =	135 =	150 =	4880 =	5 U	NS	5 U	156 =	963 =	768 =
Trichloroethylene (TCE)	ug/L	8290 =	6880 =	332 =	6350 =	5560 =	723 =	1890 =	1630 =	304 =	11.6 =	NS	11.6 J	1330 =	965 =	134 =
Tetrachloroethylene (PCE)	ug/L	500 U	500 U	25 U	500 U	500 U	250 U	125 U	125 U	250 U	5 U	NS	5 U	5 U	50 U	50 U
Concentrations Used to Calculate Total CVOC Concentrations.																
Vinyl chloride	ug/L	0	0	143	0	0	405	0	0	350	0		0	0	0	220
1,1-Dichloroethene	ug/L	0	0	0	0	0	0	0	0	0	0		0	1.2	0	0
1,2-Dichloroethene (total)	ug/L	216	286	377	199	212	3500	135	150	4880	2.5		2.5	156	963	768
Trichloroethylene (TCE)	ug/L	8290	6880	332	6350	5560	723	1890	1630	304	11.6		11.6	1330	965	134
Tetrachloroethylene (PCE)	ug/L	0	0	0	0	0	0	0	0	0	0		0	0	0	25
Total CVOC Conc	ug/L	**8506**	**7166**	**852**	**6549**	**5772**	**4628**	**2025**	**1780**	**5534**	**14.1**	**0**	**14.1**	**1487.2**	**1928**	**1147**

PERCENT REDUCTIONS OF GROUNDWATER CONTAMINANTS AFTER IM	Average	Total
TTA 3 Pre-Injection CVOC Conc:	4,801	43,213
TTA3 November '03 CVOC Conc:	4,957	39,659
Percent reduction of CVOC After Phase I	**-3%**	**8%**
TTA 3 Oct '04 CVOC Conc:	2,597	23,374
Percent reduction of CVOC After Phase II	**46%**	**46%**
TTA3 Pre-Injection TCE Conc	4,627	41,642
TTA3 June '03 TCE Conc.	3,272	26,179
Percent reduction of TCE After Phase I	**29%**	**37%**
TTA3 Oct '04 TCE Conc	380	3,416
Percent reduction of TCE After Phase II	**92%**	**92%**

TABLE 3-4 (CONTINUED)

Comparison of Pre-Injection and Post-Injection Concentrations of Selected CVOCs at Target Treatment Area 3

IM Completion Report/CMS Work Plan/Pilot Study Work Plan, SWMU 166, Zone K, Charleston Naval Complex

StationID		K166GW13D						K166GW41D						K166GW42D						K166GW43D					
		PRE-INJECTION		POST-PHASE I		POST-PHASE II		PRE-INJECTION		POST-PHASE I		POST-PHASE II		PRE-INJECTION		POST-PHASE I		POST-PHASE II		PRE-INJECTION		POST-PHASE I		POST-PHASE II	
SampleID		166GW13DM4				166GW13DP2		166GW41DM4				166GW41DP2		166GW42DM4				166GW42DP2		166GW43DM4				166GW43DP2	
DateCollected		5/22/2002				10/11/2004		5/22/2002				10/11/2004		5/22/2002				10/11/2004		5/22/2002				10/11/2004	
DateExtracted		5/31/2002				10/24/2004		5/31/2002				10/24/2004		5/31/2002				10/24/2004		5/31/2002				10/24/2004	
DateAnalyzed		5/31/2002		6/4/2003		10/24/2004		5/31/2002		6/5/2003		10/24/2004		5/31/2002		6/5/2003		10/24/2004		5/31/2002		6/5/2003		10/24/2004	
SDGNumber		60879				123470		60879		81288		123470		60879		81288		123470		60879		81288		123470	
Parameter	**Units**																								
Vinyl chloride	ug/L	1 9	J	1000	U	359	J	1.2	J	200	U	251	=	0 75	J	500	U	754	J	5 1	J	1000	U	200	U
1,1-Dichloroethere	ug/L	2 3	J	500	U	250	U	1.1	J	100	U	50	U	1.1	J	250	U	250	UJ	7 2	=	500	U	100	U
trans-1,2-Dichloroethene	ug/L	12	=	500	U	250	U	9.7	=	19 1	J	13 8	J	4 6	J	250	U	250	UJ	0 85	J	500	U	100	U
cis-1,2-Dichloroethylene	ug/L	211	J	244	J	4000	=	223	J	1330	=	552	=	81 3	=	2680	=	2740	J	319	J	7220	=	494	=
1,2-Dichloroethere (total)	ug/L	211	J	244	J	4000	=	223	J	1350	=	565	=	85 9	=	2680	=	2740	J	319	J	7220	=	494	=
Trichloroethylene (TCE)	ug/L	7190	=	6380	=	497	=	1110	=	204	=	126	=	2570	=	1850	=	28 3	J	12900	=	2710	=	1260	=
Tetrachloroethylene (PCE)	ug/L	5	U	500	U	250	U	5	U	100	U	50	U	5	U	250	U	250	UJ	5	U	500	U	100	U
Concentrations Used to Calculate Total CVOC Concentrations.																									
Vinyl chloride	ug/L	1.9		0		359		1 2		0		251		0 75		250		754		5 1		0		0	
1,1-Dichloroethere	ug/L	2 3		0		0		1 1		0		0		1.1		0		0		7 2		0		0	
1,2-Dichloroethere (total)	ug/L	211		244		4000		223		1350		565		85 9		2680		2740		319		7220		494	
Trichloroethylene (TCE)	ug/L	7190		6380		497		1110		204		126		2570		1850		28 3		12900		2710		1260	
Tetrachloroethylene (PCE)	ug/L	0		0		0		0		0		0		2 5		125		125		0		0		0	
Total CVOC Conc	ug/L	7405.2		6624		4856		1335.3		1554		942		2660.25		4905		3647.3		13231.3		9930		1754	

TABLE 3-9
Comparison of Pre-Injection and Post-Injection Concentrations of Selected CVOCs at Target Treatment Area 8
IM Completion Report/CMS Work Plan/Pilot Study Work Plan, SWMU 166, Zone K, Charleston Naval Complex

	StationID	**K166GW33D**					
		PRE-INJECTION		**POST-PHASE I**		**POST-PHASE II**	
	SampleID	166GW33DM4		166GW33DN1		166GW33DP2	
	DateCollected	5/20/2002		05/27/2003		10/15/2004	
	DateExtracted	5/24/2002		06/05/2003		10/27/2004	
	DateAnalyzed	5/24/2002		06/05/2003		10/27/2004	
	SDGNumber	60789		81287		123724	
Parameter	**Units**						
Vinyl chloride	µg/L	10	U	10	U	10	U
1,1-Dichloroethene	µg/L	0.43	J	5	U	5	U
trans-1,2-Dichloroethene	µg/L	6.9	=	2.3	J	5	U
cis-1,2-Dichloroethylene	µg/L	18.2	=	9.3	=	1.5	J
1,2-Dichloroethene (total)	µg/L	25.1	=	11.6	=	1.5	J
Trichloroethylene (TCE)	µg/L	110	=	70.3	=	10.1	=
Tetrachloroethylene (PCE)	µg/L	5	U	5	U	5	U
Concentrations Used to Calculate Total CVOC Concentrations.							
Vinyl chloride	µg/L	5		5		5	
1,1-Dichloroethene	µg/L	0.43		2.5		2.5	
1,2-Dichloroethene (total)	µg/L	25.1		11.6		1.5	
Trichloroethylene (TCE)	µg/L	110		70.3		10 1	
Tetrachloroethylene (PCE)	µg/L	2.5		2.5		2.5	
Total CVOC Conc	µg/L	**143.03**		**91.9**		**21.6**	

PERCENT REDUCTIONS OF GROUNDWATER CONTAMINANTS AFTER IM

	Average	**Total**
TTA 8 Pre-Injection COPC Conc:	**143**	**143**
TTA 8 Oct '04 COPC Conc:	**22**	**22**
Percent reduction of COPC	**85%**	**85%**
TTA8 Pre-Injection TCE Conc	**110**	**110**
TTA8 Oct '04 TCE Conc	**10**	**10**
Percent reduction in TCE	**91%**	**91%**

FIGURE 3-1
Trends of TCE and DCE Concentrations Before and After ZVI Injections at TTA-1
IM Completion Report/CMS Work Plan/Pilot Study Work Plan, SWMU 166, Zone K, Charleston Naval Complex

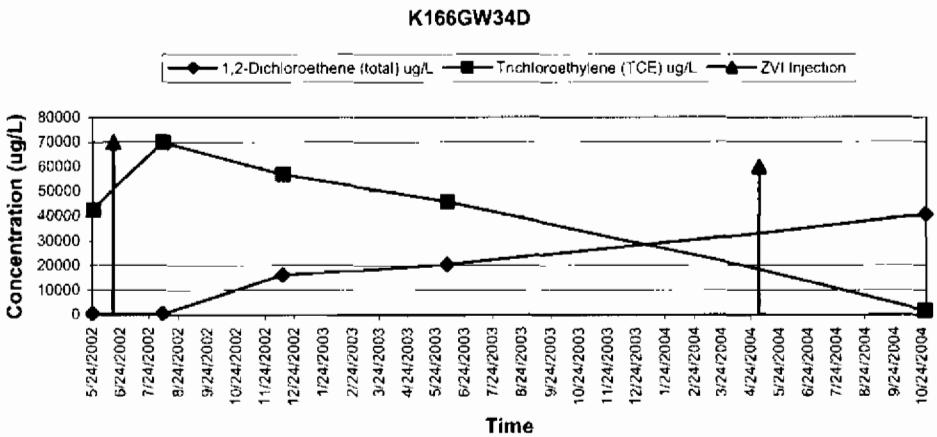

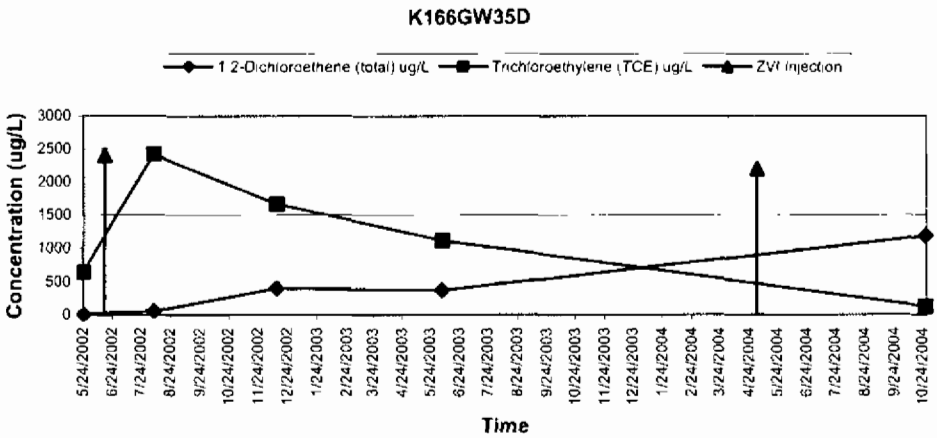

FIGURE 3-1 (CONTINUED)
Trends of TCE and DCE Concentrations Before and After ZVI Injections at TTA-1
IM Completion Report/CMS Work Plan/Pilot Study Work Plan, SWMU 166, Zone K, Charleston Naval Complex

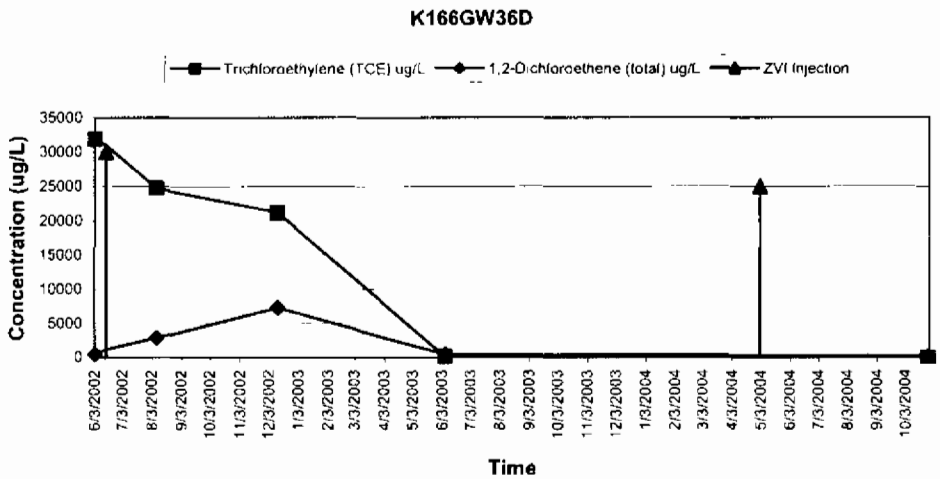

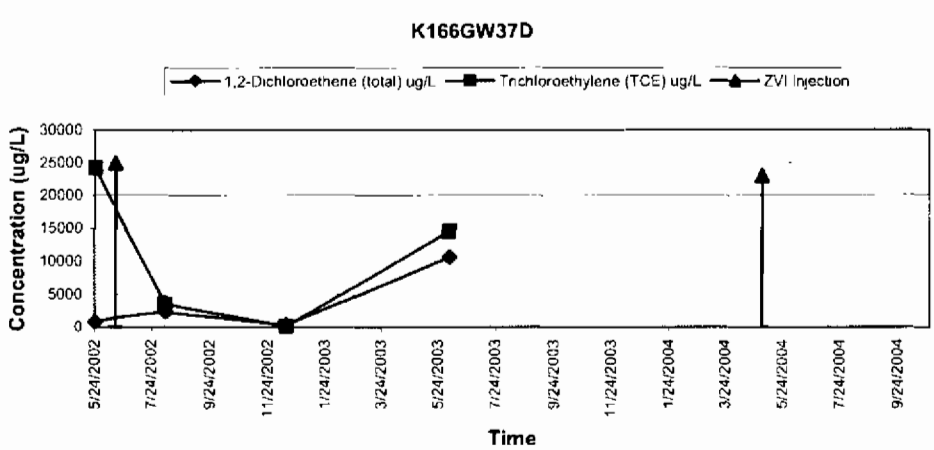

FIGURE 3-2
Trends of TCE and DCE Concentrations Before and After ZVI Injections at TTA-2
IM Completion Report/CMS Work Plan/Pilot Study Work Plan, SWMU 166, Zone K, Charleston Naval Complex

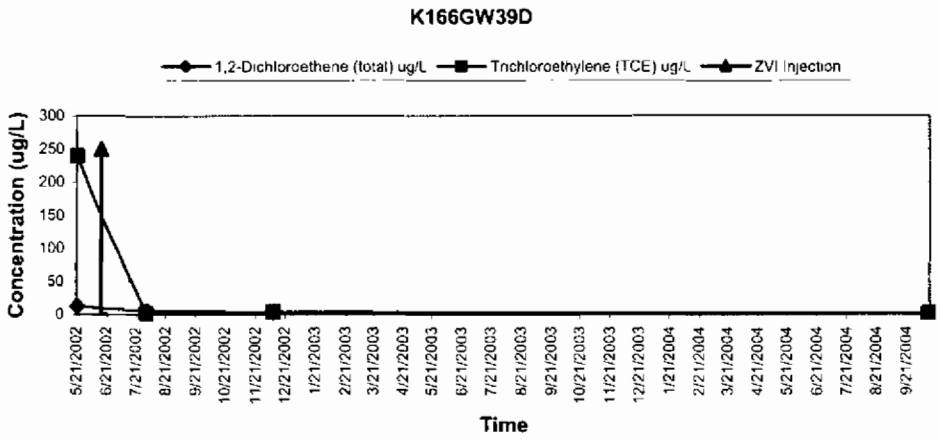

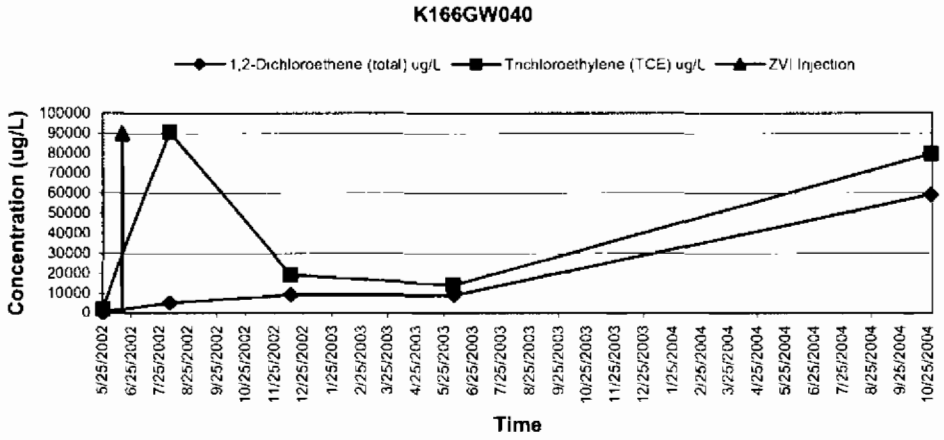

FIGURE 3-3
Trends of TCE and DCE Concentrations Before and After ZVI Injections at TTA-3
IM Completion Report/CMS Work Plan/Pilot Study Work Plan, SWMU 166, Zone K, Charleston Naval Complex

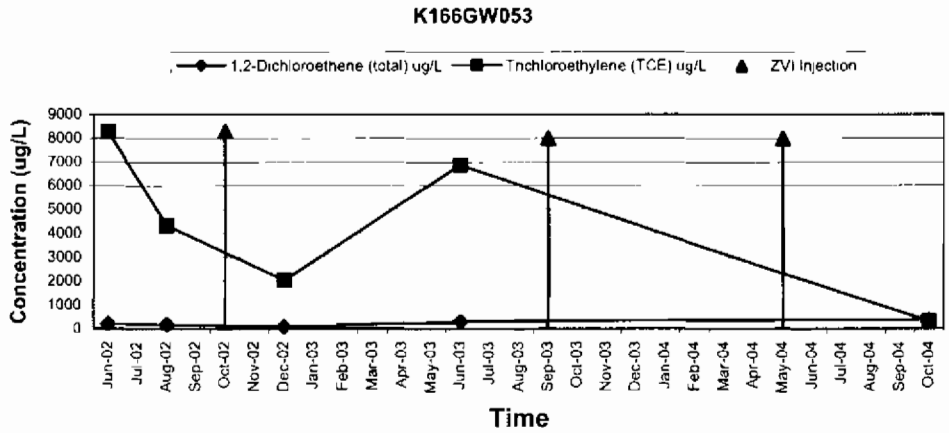

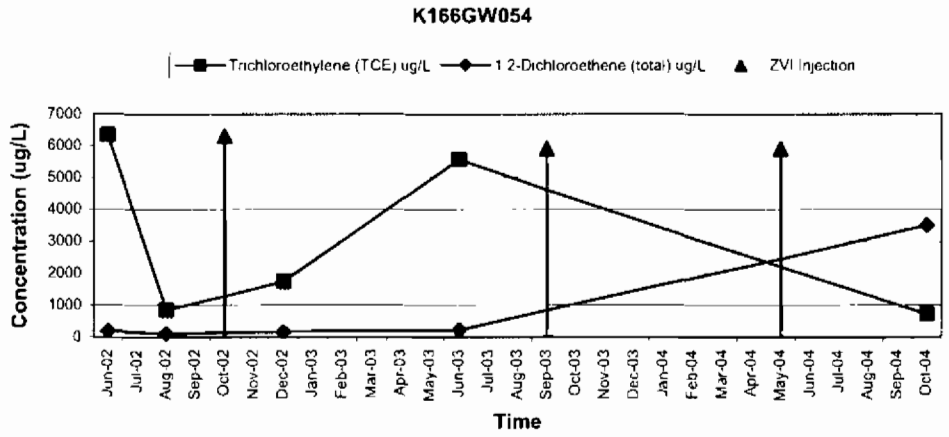

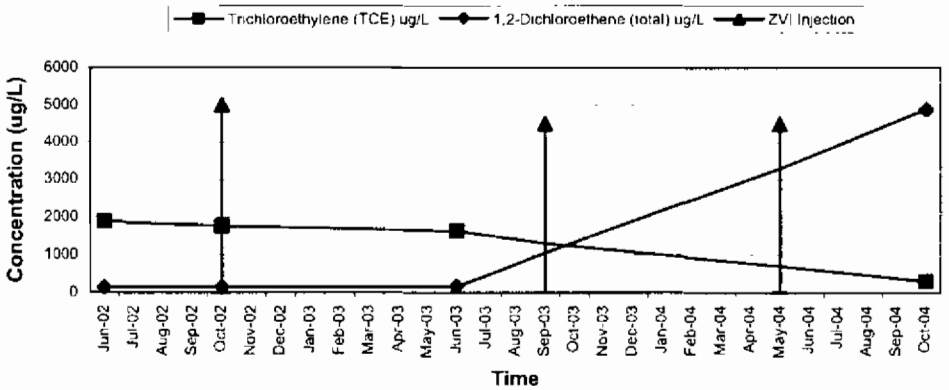

FIGURE 3-3 (CONTINUED)
Trends of TCE and DCE Concentrations Before and After ZVI Injections at TTA-3
IM Completion Report/CMS Work Plan/Pilot Study Work Plan, SWMU 166, Zone K, Charleston Naval Complex

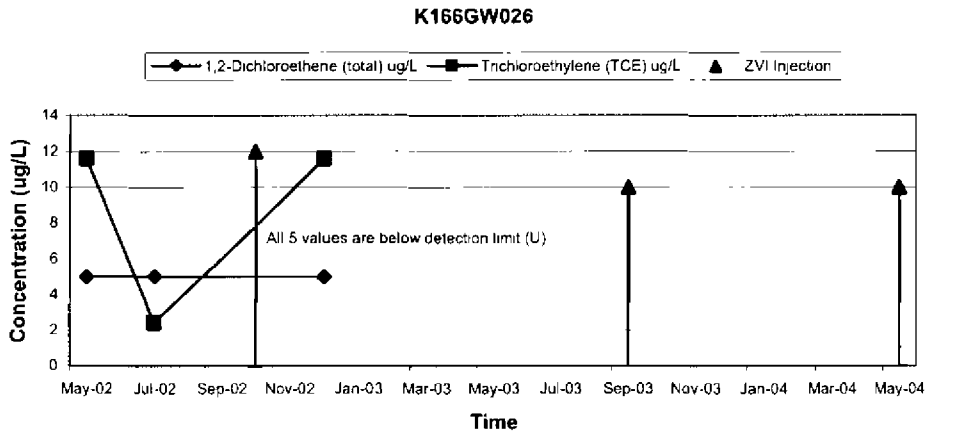

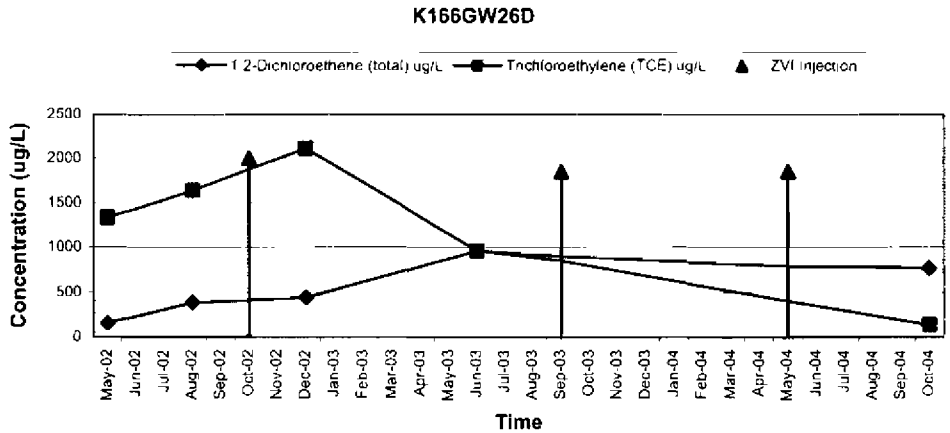

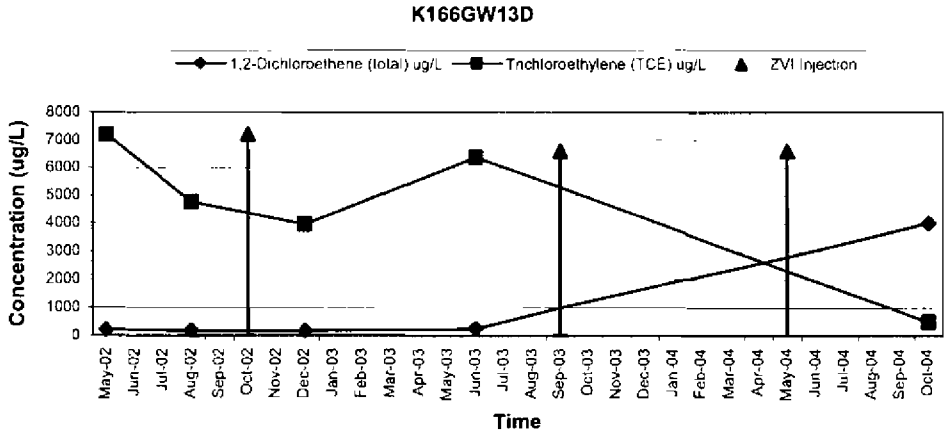

FIGURE 3-3 (CONTINUED)
Trends of TCE and DCE Concentrations Before and After ZVI Injections at TTA-3
IM Completion Report/CMS Work Plan/Pilot Study Work Plan, SWMU 166, Zone K, Charleston Naval Complex

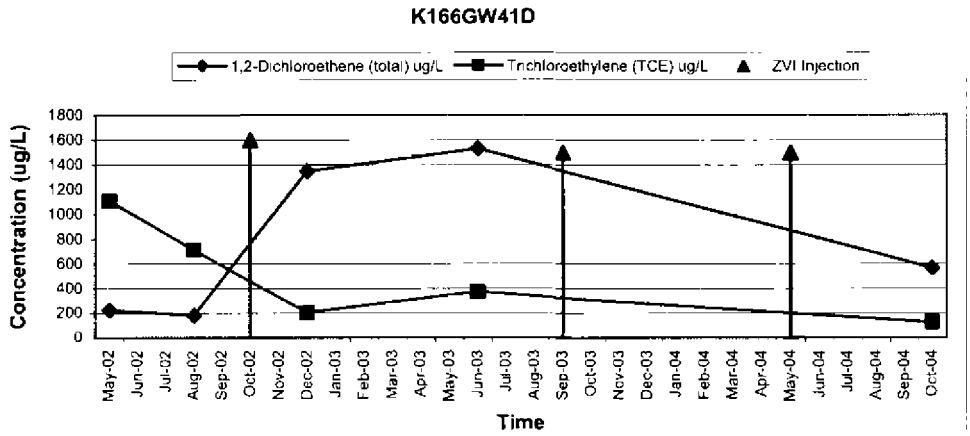

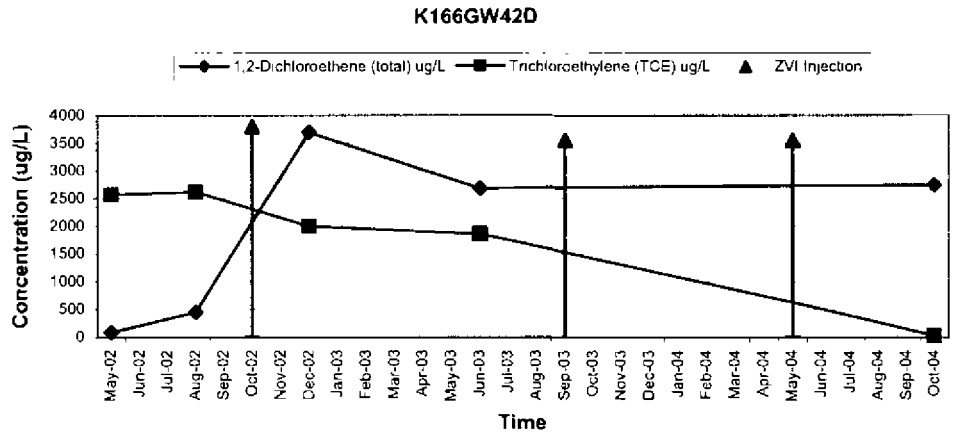

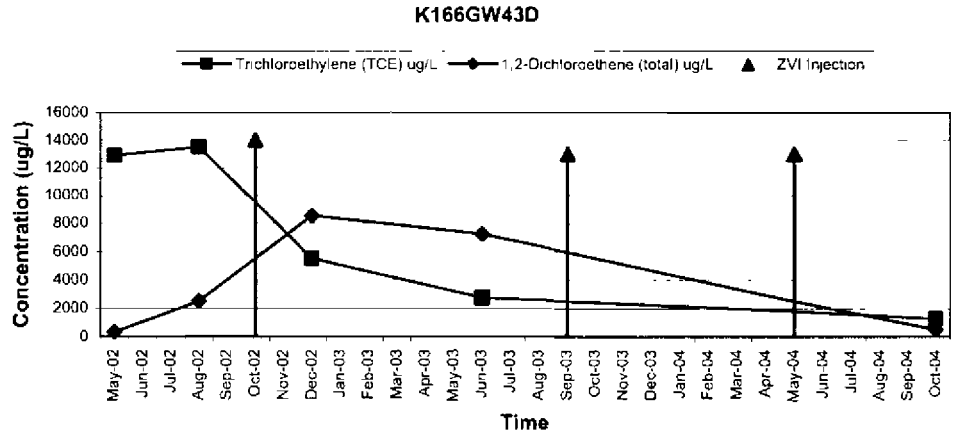

FIGURE 3-4
Trends of TCE and DCE Concentrations Before and After ZVI Injections at TTA-4
IM Completion Report/CMS Work Plan/Pilot Study Work Plan, SWMU 166, Zone K, Charleston Naval Complex

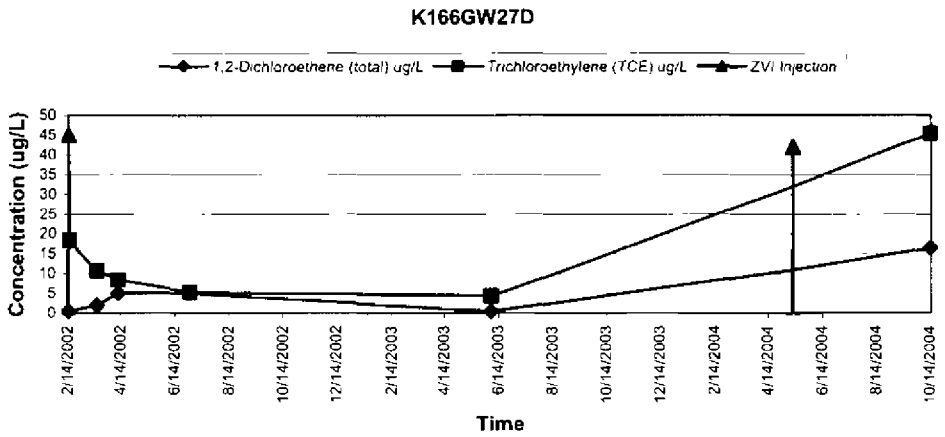

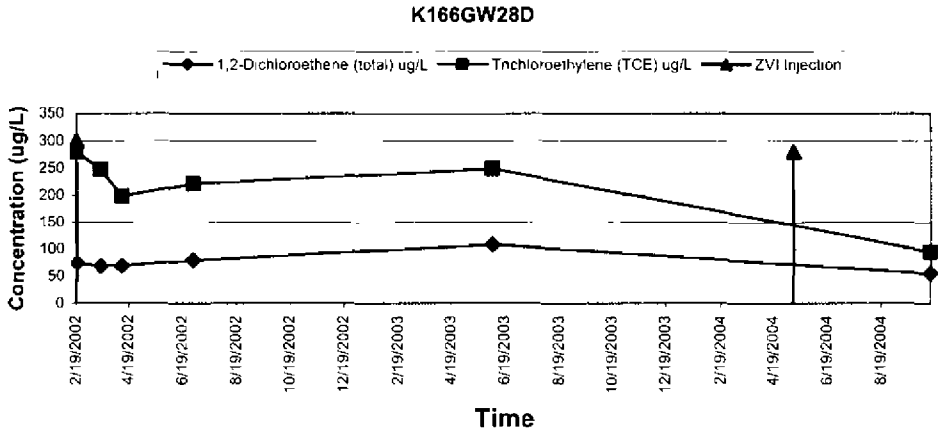

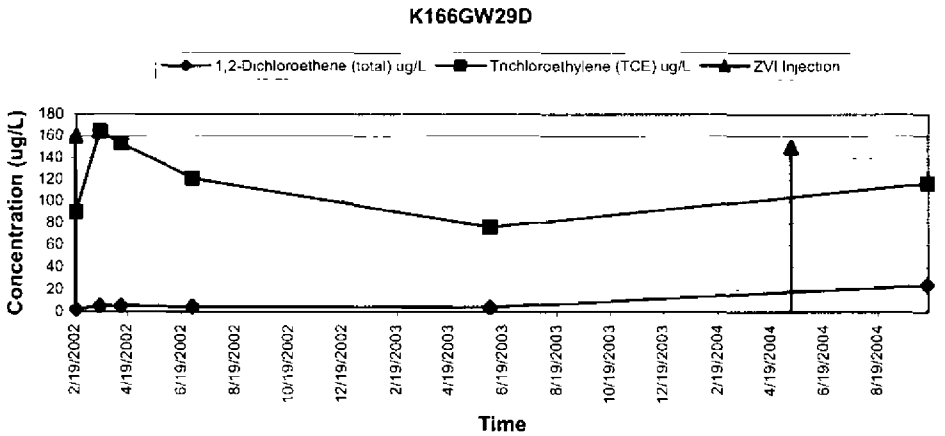

FIGURE 3-4 (CONTINUED)
Trends of TCE and DCE Concentrations Before and After ZVI Injections at TTA-4
IM Completion Report/CMS Work Plan/Pilot Study Work Plan, SWMU 166, Zone K, Charleston Naval Complex

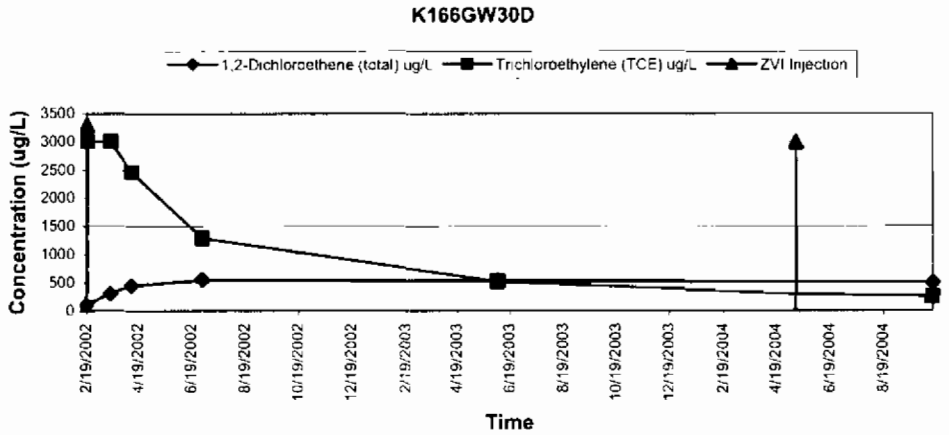

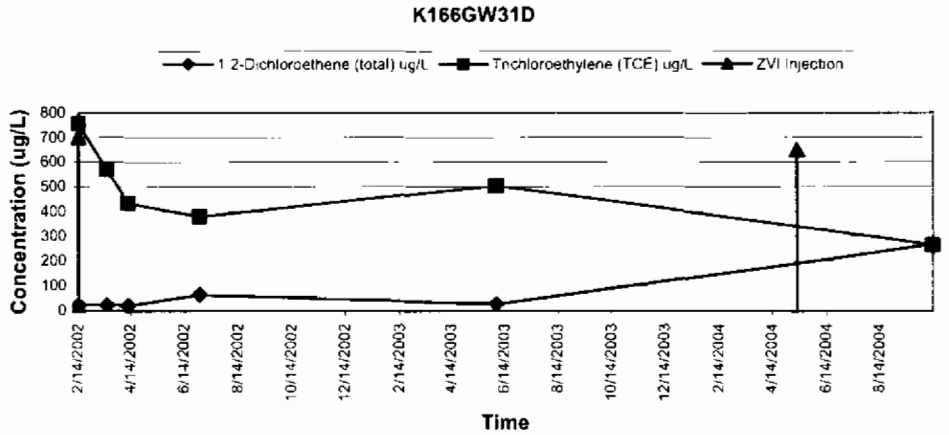

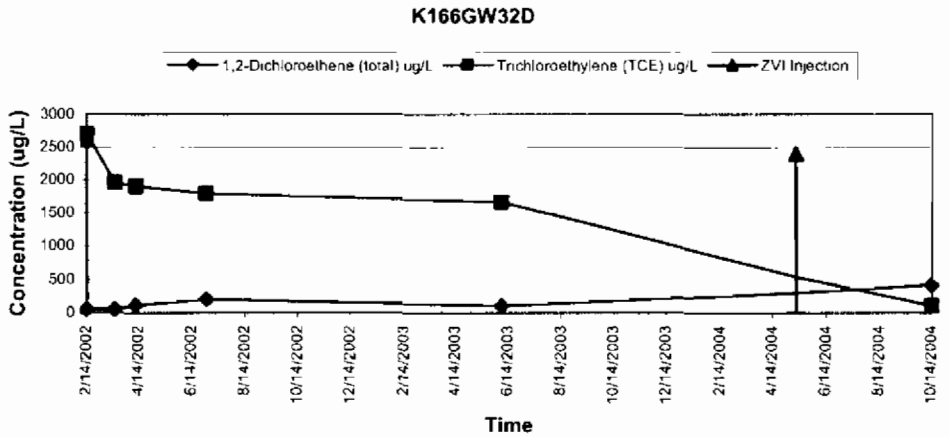

FIGURE 3-4 (CONTINUED)
Trends of TCE and DCE Concentrations Before and After ZVI Injections at TTA-4
IM Completion Report/CMS Work Plan/Pilot Study Work Plan, SWMU 166, Zone K, Charleston Naval Complex

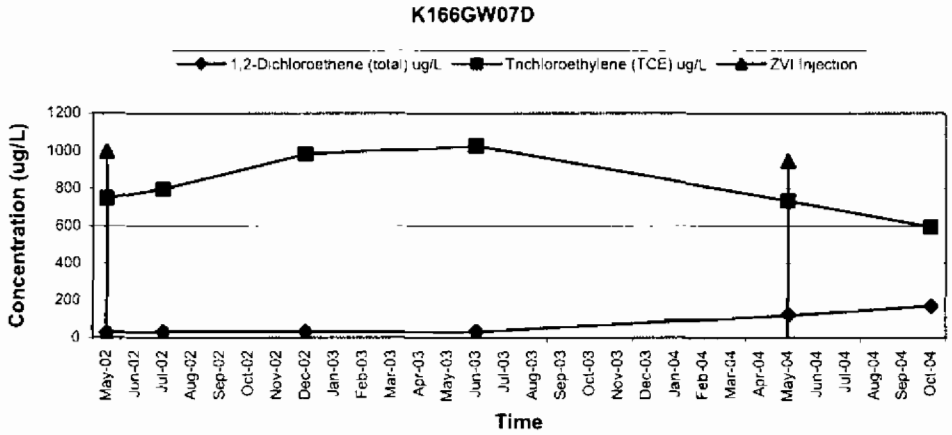

FIGURE 3-5
Trends of TCE and DCE Concentrations Before and After ZVI Injections at TTA-5
IM Completion Report/CMS Work Plan/Pilot Study Work Plan, SWMU 166, Zone K, Charleston Naval Complex

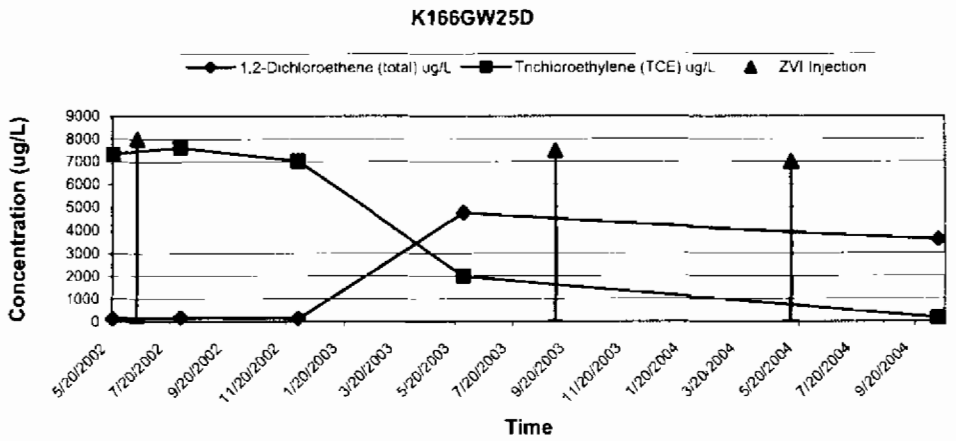

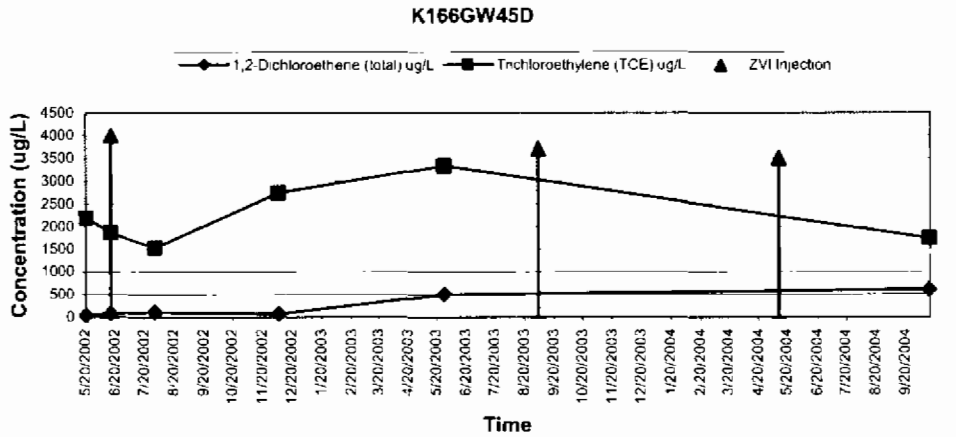

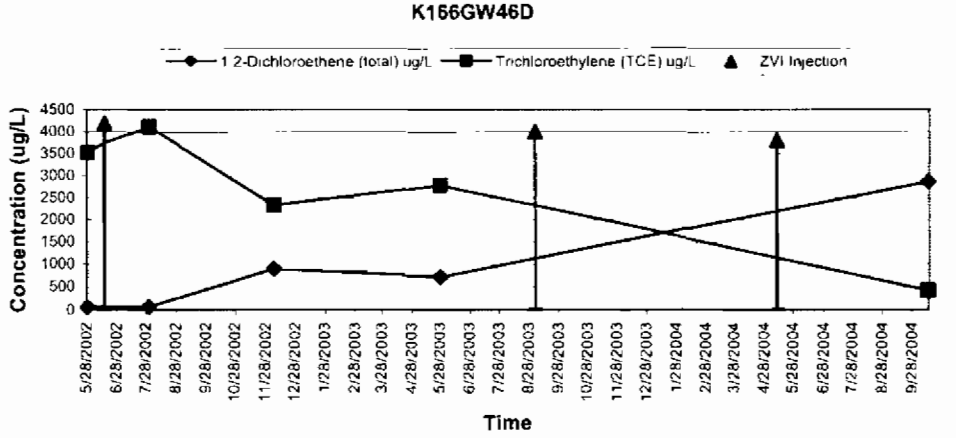

FIGURE 3-5 (CONTINUED)
Trends of TCE and DCE Concentrations Before and After ZVI Injections at TTA-5
IM Completion Report/CMS Work Plan/Pilot Study Work Plan, SWMU 166, Zone K, Charleston Naval Complex

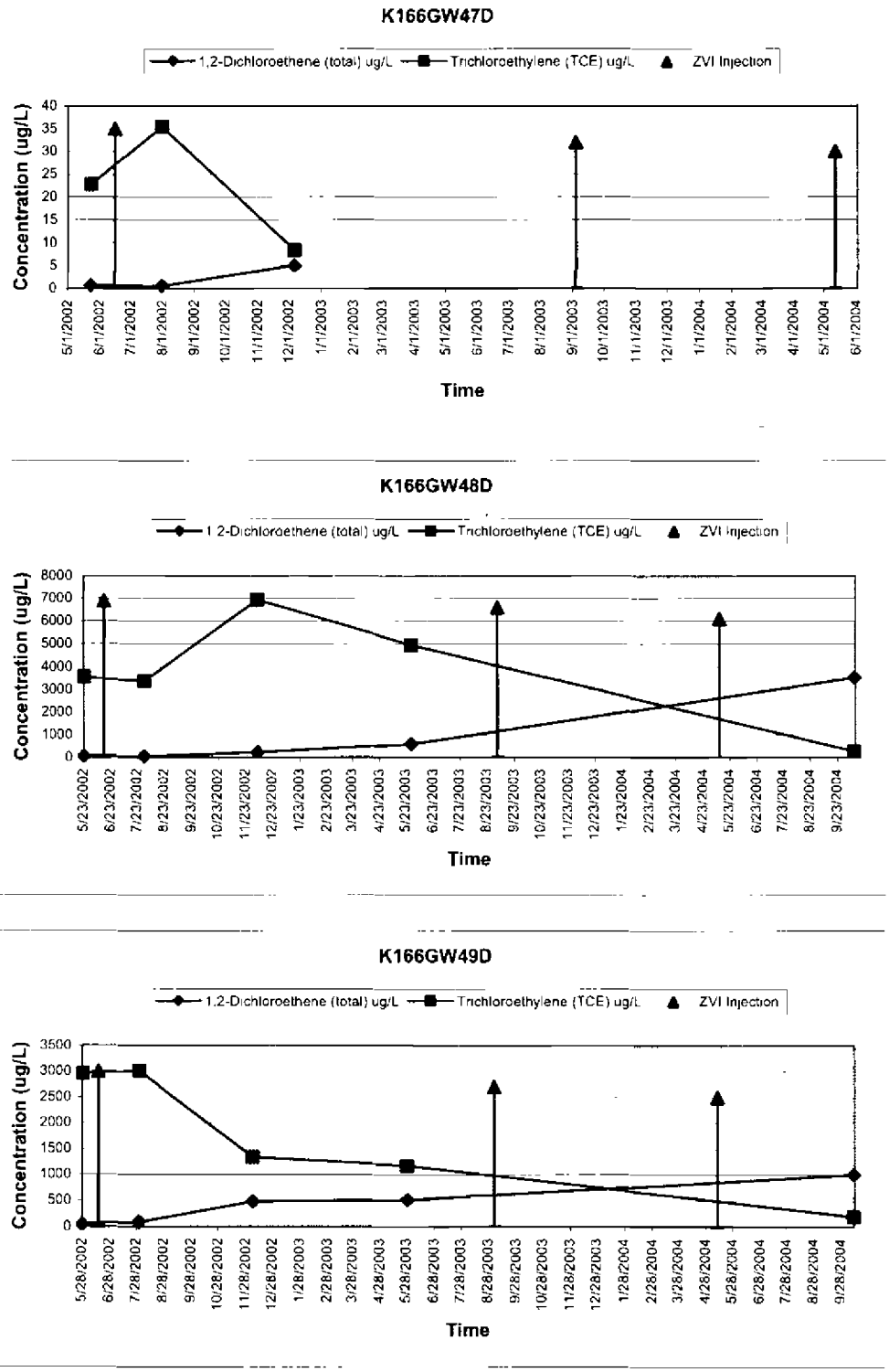

FIGURE 3-6
Trends of TCE and DCE Concentrations Before and After ZVI Injections at TTA-6
IM Completion Report/CMS Work Plan/Pilot Study Work Plan, SWMU 166, Zone K, Charleston Naval Complex

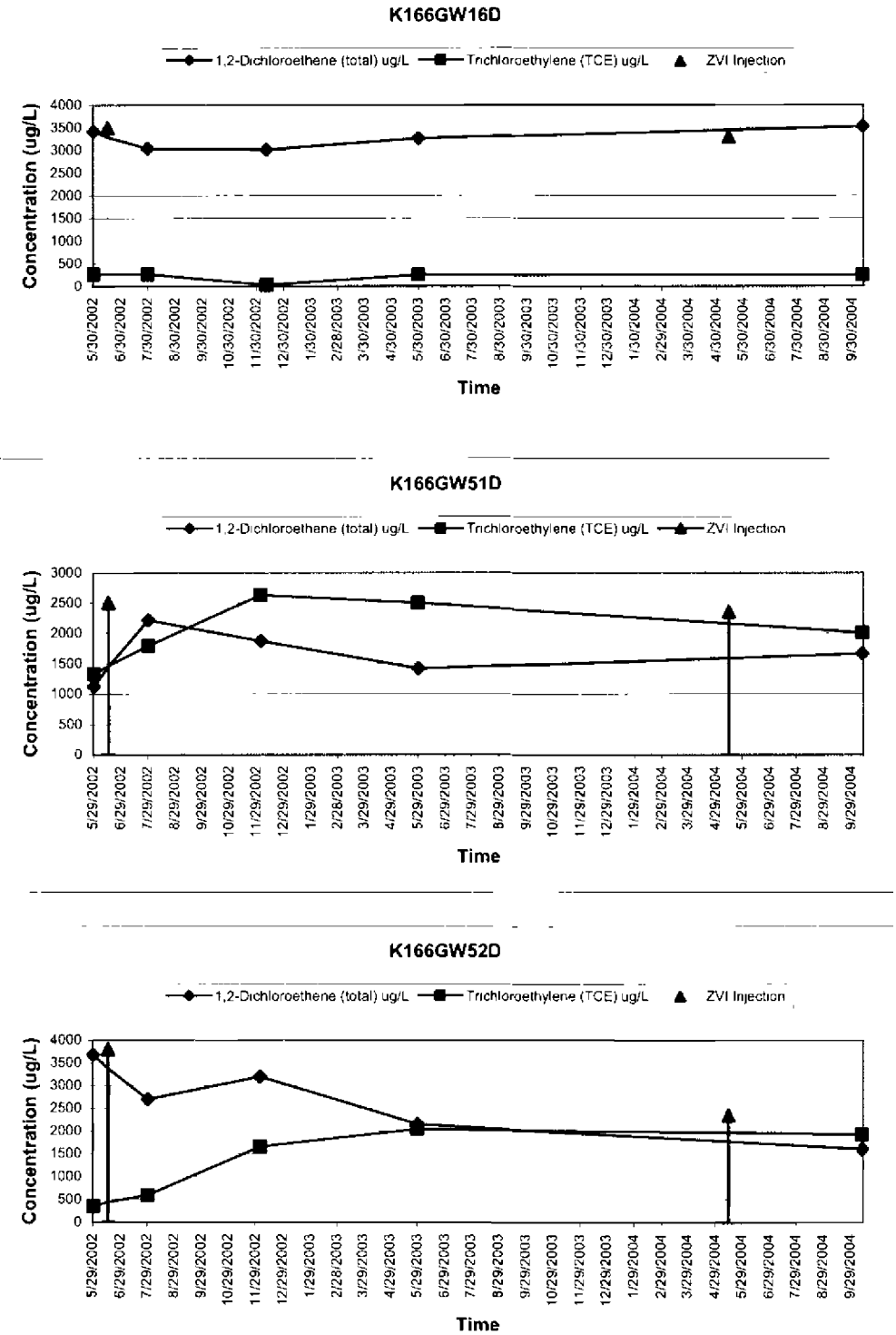

FIGURE 3-6 (CONTINUED)
Trends of TCE and DCE Concentrations Before and After ZVI Injections at TTA-6
IM Completion Report/CMS Work Plan/Pilot Study Work Plan, SWMU 166, Zone K, Charleston Naval Complex

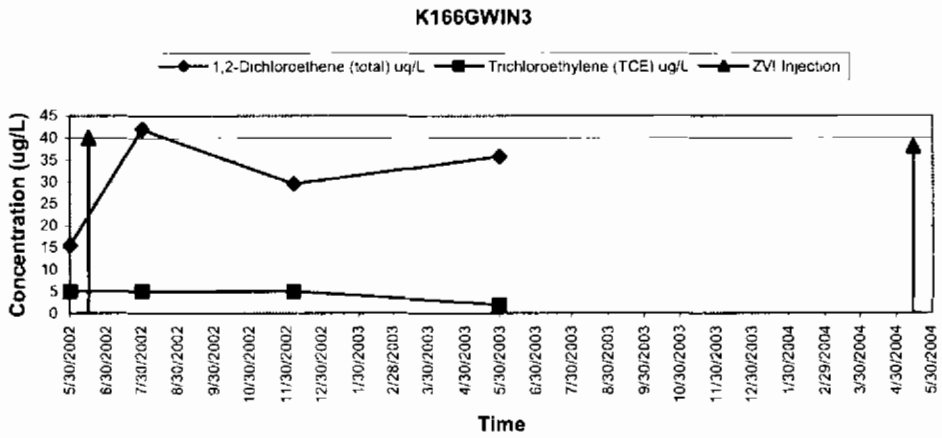

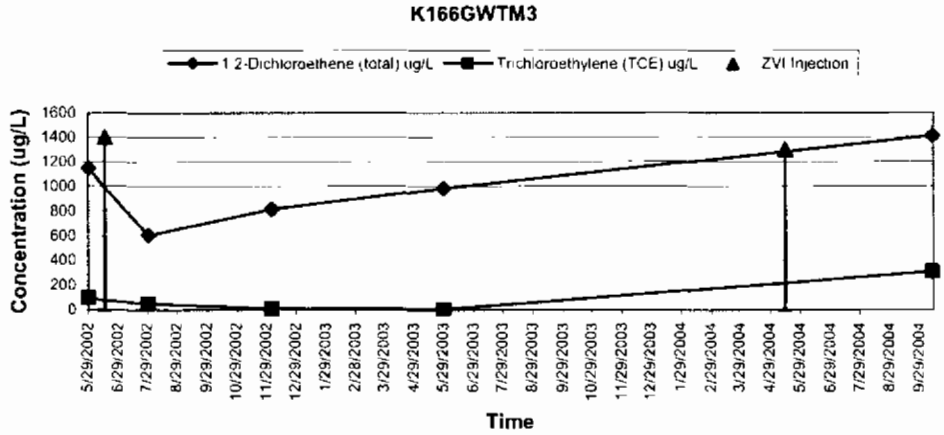

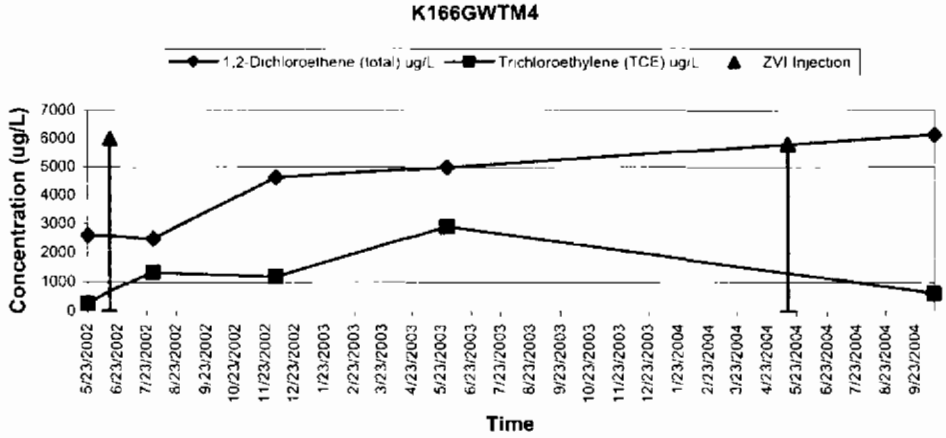

FIGURE 3-7
Trends of TCE and DCE Concentrations Before and After ZVI Injections at TTA-7
IM Completion Report/CMS Work Plan/Pilot Study Work Plan, SWMU 166, Zone K, Charleston Naval Complex

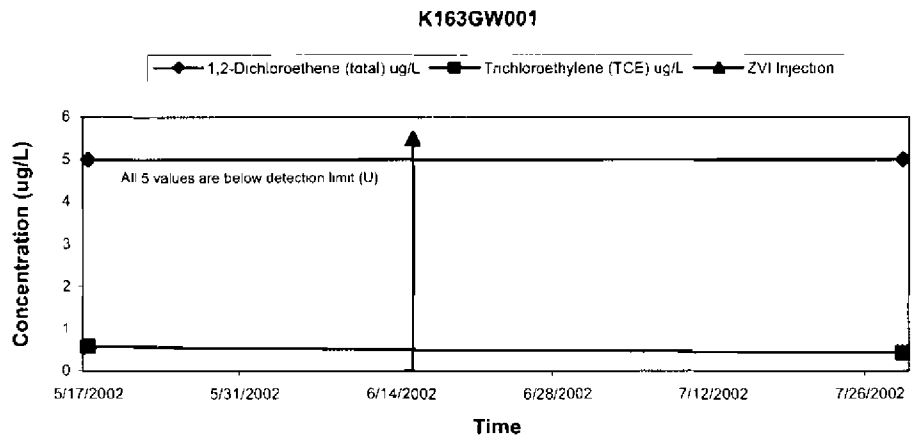

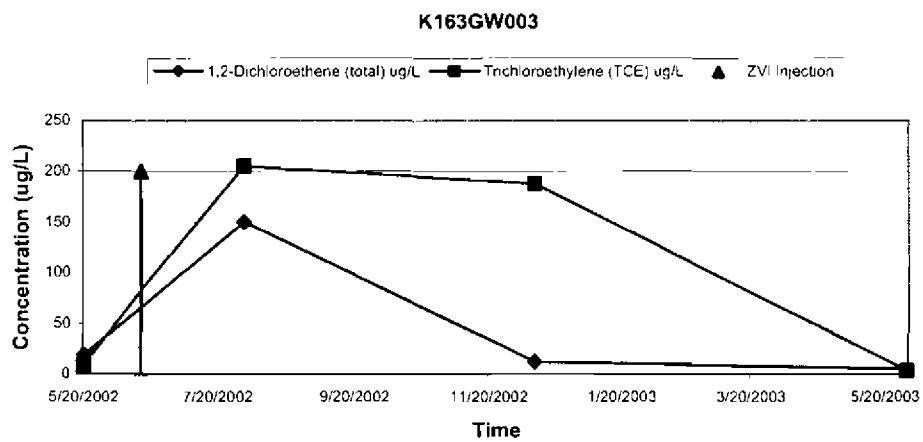

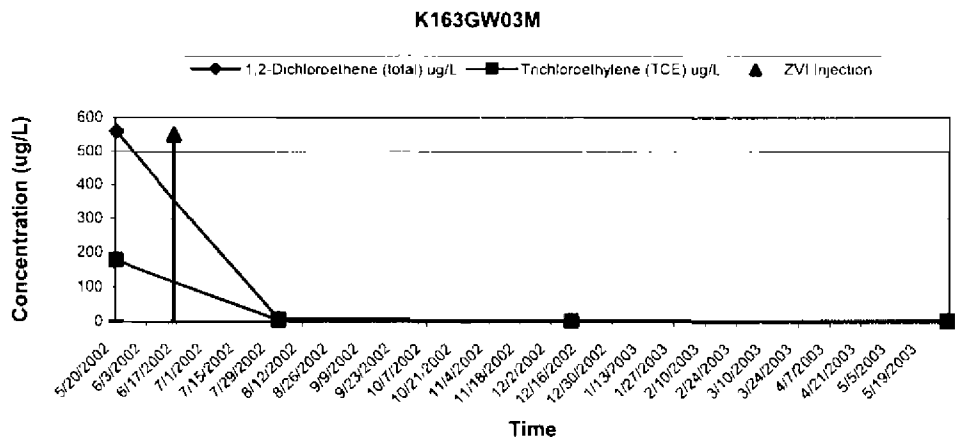

FIGURE 3-7 (CONTINUED)
Trends of TCE and DCE Concentrations Before and After ZVI Injections at TTA-7
IM Completion Report/CMS Work Plan/Pilot Study Work Plan, SWMU 166, Zone K, Charleston Naval Complex

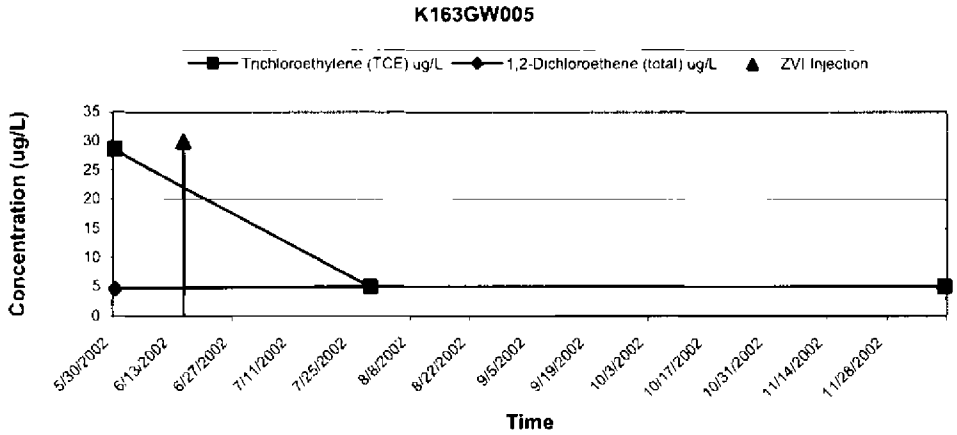

FIGURE 3-8
Trends of TCE and DCE Concentrations Before and After ZVI Injections at TTA-8
IM Completion Report/CMS Work Plan/Pilot Study Work Plan, SWMU 166, Zone K, Charleston Naval Complex

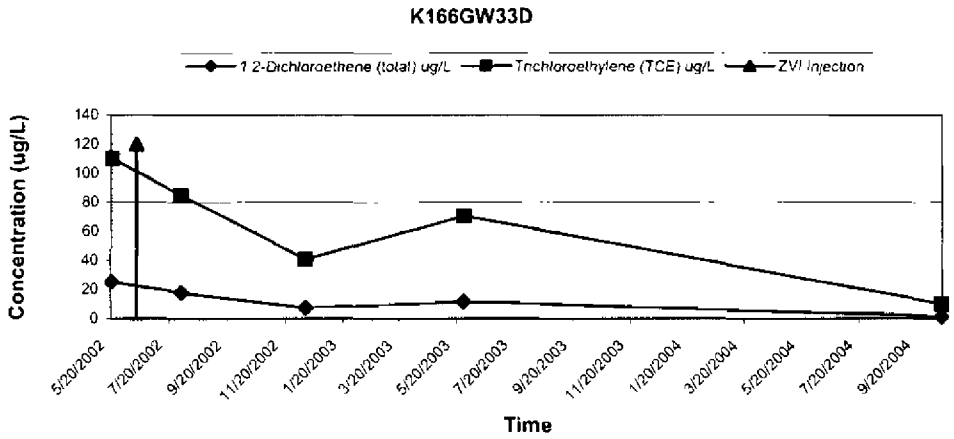

4.0 CMS Work Plan for SWMU 166

This section presents a CMSWP for SWMU 166. The current extent and configuration of the VOC plume is discussed herein. The RAOs for the CMS and RGOs for COCs in groundwater are proposed. The MCSs are identified for the COCs, potential remedies are presented for evaluation, and the overall approach to evaluating the potential remedies is discussed.

4.1 Current Extent of Volatile Organic Compound Plume

The IM conducted at the TTAs to address the portions of the VOC plume with the highest concentrations had a significant impact in reducing overall TCE concentrations and reducing total VOC concentrations to a lesser degree as well. Analytical data from the October 2004 basewide sampling event were plotted to assess the current TCE and total VOC plume extent and are representative of post-IM VOC concentrations in groundwater.

Figures 4-1 and 4-2 show the TCE and total VOC plume configuration for shallow groundwater (wells screened up to 20 ft bls), respectively, based on the November 2004 data. Figures 4-3 and 4-4 show the TCE and total VOC plume configuration for deeper groundwater (wells screened greater than 20 ft bls), respectively, based on the November 2004 data.

These latest data show a small, localized area of high VOC concentration in shallow groundwater in the vicinity of well K166GW040. A downgradient plume of VOCs consisting primarily of DCE is present in the groundwater closer to Interstate 26. Other than the vicinity of K166GW040, significant concentrations of TCE are generally not present in shallow groundwater. The data suggest that TCE may have been released to land surface in the vicinity of well K166GW040, migrated downward to the deeper portion of the shallow aquifer, and created a dissolved plume that has migrated laterally in a generally eastward direction toward Interstate 26.

The greatest concentrations of total VOCs in the deeper aquifer occur in the vicinity of TTA 1 near the location of SWMU 166, which suggests that some release of TCE may have occurred at SWMU 166, migrated downward into the deeper portion of the shallow aquifer, and created a dissolved plume that is migrating laterally eastward toward Interstate 26.

An area of elevated TCE concentration in deeper groundwater also occurs near well K166GW50D. This area may represent another location where a small quantity of TCE was released or it may simply be an area of higher dissolved-phase TCE that migrated downgradient from SWMU 166.

Overall the data indicate that the general VOC plume morphology and extent are reasonably well-defined. The data provide a suitable basis for developing and evaluating corrective measure alternatives.

4.2 Remedial Action Objectives

The RAOs for SWMU 166 are to:

- Prevent exposure of receptors to hazardous concentrations of COCs in groundwater,
- Mitigate the migration of COCs, and
- Restore the aquifer to its highest beneficial use by reducing concentrations of COCs in groundwater.

4.3 Remedial Goal Options and Proposed Media Cleanup Standards

Throughout the process of remediating a hazardous waste site, a risk manager uses a progression of increasingly acceptable site-specific media levels in considering remedial alternatives. RGOs and MCSs under RCRA are developed at the end of the risk assessment in the RFI/Remedial Investigation (RI) programs.

RGOs can be based on a variety of criteria, such as specific incremental lifetime cancer risks (ILCRs) (e.g., 1E-04, 1E-05, or 1E-06), Hazard Index (HI) levels (e.g., 0.1, 1.0, 3.0), or site background concentrations. For a particular RGO, specific MCSs can be determined as target concentration values. These target MCSs are estimated for industrial or residential (unrestricted) land use. It is also important to specify the assumed land use and exposure conditions in the RGOs. Achieving these MCSs is accepted as demonstrating that RGOs and RAOs have been achieved. Achieving these goals results in the protection of human health and the environment, while achieving compliance with applicable state and federal standards.

CVOC compounds (PCE, TCE, cis-1,2-DCE, 1,1-DCE, and vinyl chloride) were identified as COCs in groundwater at SWMU 166. Each of these chemicals has a drinking water MCL. As a result, MCLs are the primary MCSs for groundwater RGOs. The areas of groundwater

with contaminant concentrations greater than the MCS will be addressed in the CMS. In the absence of an MCL, the U.S. Environmental Protection Agency (EPA) Region III tap water risk-based concentrations (RBCs) and CNC background levels would be selected as MCSs, with a target cancer risk ranges between 10^{-6} to 10^{-4} and HI ranges between 0.1 to 3.0 for residential (potable) use. MCLs are applied to public water supply wells, which are typically completed in deeper aquifers. Table 4-1 provides a preliminary list of the groundwater MCSs.

4.4 Identification of Potential Corrective Measure Technologies

Corrective measure technologies that have the potential to achieve the MCSs at SWMU 166 will be identified and screened. Based on the current extent of contamination as described in this section, progress in remediating the site during the IM, and the hydrogeologic setting of the site, the following remedial technologies are considered potentially most suitable for SWMU 166:

- Enhanced In Situ Anaerobic Biodegradation
- Monitored Natural Attenuation (MNA)
- Permeable Reactive Barriers (PRBs)
- Air Sparging

In addition to these remedial technologies, other ancillary remedial approaches such as land use controls are expected to be required until the MCSs are achieved. Each of the remedial technologies is discussed briefly below.

4.4.1 Enhanced In Situ Anaerobic Biodegradation

Anaerobic biodegradation has been shown to be an effective remediation technology for chlorinated solvents at the main portion of the CNC. In addition, a brief pilot test of enhanced in situ biodegradation followed by air sparging was performed at the CNC Annex by the Navy/EnSafe team in 1999. The pilot test approach combined anaerobic reductive dechlorination to convert TCE to DCE and an aerobic process (air sparging) to physically strip the VOCs from groundwater or convert DCE to carbon dioxide and water via aerobic respiration. Initial results from this test were reported to be favorable. For these reasons, enhanced in situ anaerobic biodegradation is an approach that warrants consideration at SWMU 166.

The main CVOC biodegration mechanism in anaerobic-reducing environments is reductive dechlorination. Chlorinated ethenes serve as electron acceptors in the degradation reactions, and carbon compounds such as sugars, alcohols, and fatty acids serve as electron donors. To implement this technology at SWMU 166, the enhanced in situ biodegradation approach selected would be biostimulation, which involves injection of an organic substrate to stimulate anaerobic bacteria within the contaminant plume to accelerate the naturally occurring process of reductive dechlorination. A variety of substrates could be used for this process. Potassium lactate has been used at other CNC sites.

In order to better assess requirements for full-scale implementation of this technology, a pilot test similar to the one conducted as previously mentioned would be beneficial.

4.4.2 Monitored Natural Attenuation

Natural attenuation is the reduction of CVOC concentrations by natural processes that occur in aquifers, including volatilization, hydrolysis, dilution, dispersion, adsorption, and biotic and abiotic degradation. MNA is a careful evaluation of natural attenuation mechanisms using monitoring and could be a single component or part of a remediation strategy for the dissolved plume.

In general, the MNA alternative consists of three major features:

- A designed monitoring program,
- A tracking and data evaluation program, and
- A contingency response plan in the event that monitoring indicates an unacceptable degree of downgradient migration of dissolved CVOCs.

Under the MNA alternative, low-level CVOC plumes in the non-source portions of the surficial aquifer would be evaluated using a monitoring system designed to track the plume location and magnitude. Monitoring data would be compared to the predicted transport and fate of the CVOCs to check the accuracy of predictions.

The MNA alternative would be implemented in conjunction with a long-term monitoring plan, and possibly, with a more active remedial measure for the residual source areas. The purpose of the plan would be to monitor plume migration over time and to verify that adequate natural attenuation is occurring. The plan would specify monitoring wells located within, upgradient to, crossgradient to, within, and downgradient of the portions of the dissolved-phase plume for which MNA is intended.

The monitoring plan would include CVOCs and other parameters that can be used to assess the effectiveness of MNA, such as DO, nitrate, ferrous iron, sulfate/sulfide, common cations and anions, and dissolved hydrocarbon gases (ethene, ethane, and methane). The data would provide characterization of plume extent, native groundwater quality, ORP indicators, and indicators of biological degradation products of the CVOCs.

A complete evaluation of the potential for MNA to be effective has not yet been conducted at SWMU 166. Prior to or in conjunction with its use, collection of additional MNA data would be beneficial.

MNA at SWMU 166 may be best-suited as a remedy for portions of the plume that have relatively low VOC concentrations, such as the most downgradient portion of the plume, and as an ancillary approach used in conjunction with one of the other more active remedies, such as enhanced in situ bioremediation or PRBs.

4.4.3 Permeable Reactive Barriers

A PRB typically involves the placement of a reactive treatment medium into the saturated zone of the aquifer across the flow path of contaminated groundwater. PRBs are considered passive remediation systems in that they rely on the natural flow of groundwater to bring dissolved contaminants in contact with the material in the PRB. Contaminated groundwater is treated as it passes through the PRB; treated groundwater passes out of the PRB and continues to flow in a downgradient direction. PRBs have been used to effectively cut off migration of plumes and are often considered for use along site boundaries as a means to preclude offsite migration of contaminated groundwater.

A variety of reactive materials have been used in PRBs. Many of the initial PRBs installed in the 1990s at chlorinated solvent plume sites used granular ZVI. Over the past 10 years, a variety of materials have been found to be suitable for use in PRBs, depending on the particular contaminant being used. Activated carbon, limerock, and various mixtures such as mulch/gravel/compost and other materials have been found to be effective for particular applications.

An additional PRB approach that has been used increasingly during recent years is the "biobarrier." A biobarrier typically consists of a row of injection points or wells into which an organic substrate (such as hydrogen release compound [HRC™] or lactate) is injected to stimulate in situ biodegradation of contaminants. The substrate is periodically re-applied as needed to maintain reducing conditions and the appropriate biological environment.

A variety of construction and implementation approaches have been used to install effective PRBs. These methods include conventional trenching, one-pass trenching, cofferdam, hydrofracturing, and jetting methods. Like the reactive material selected for the PRB, the particular construction method is dependent on the site conditions and chemicals of concern. For biobarriers, construction methods can include direct push methods such as a Geoprobe for delivery of HRC™ in a series of injections or conventional injection wells for injection of soluble substrates.

The implementability and most appropriate type of PRB is determined based on the presence or absence of subsurface utilities and obstructions, overhead utilities, and the termination depth of the barrier. Conventional PRBs can be constructed to a depth of up to approximately 35 ft bls using conventional construction equipment, such as a one-pass trencher, provided that no interfering underground utilities are present. For deeper PRBs, alternate construction methods can be used. The barrier width can be reduced by constructing low-permeability wings or funnels on the sides of the PRB to direct groundwater flow through the reactive media. The thickness of a PRB is governed by the residence time needed for reaction (i.e., treatment of the CVOCs).

Conceptually, a PRB could be used at SWMU 166 as a site boundary treatment method to mitigate the offsite migration of VOC-impacted groundwater. Potential PRB alternatives that may be effective for this application include a conventional PRB containing ZVI or a biobarrier using an organic substrate.

A PRB at SWMU 166 could be combined with other treatment alternatives, such as source area treatment using enhanced in situ bioremediation and MNA for downgradient portions of the dissolved plume.

Because of the presence of various structures and facilities in the vicinity of the boundary of the Navy property and Interstate 26 in the general area where a PRB might be beneficially installed, the use of a biobarrier may the preferred approach for implementing a PRB as a method for providing treatment at the site boundary. A pilot test of the biobarrier may be advantageous prior to full-scale construction to better assess its viability for the site.

4.4.4 Air Sparging

Air sparging involves the introduction of air into the saturated zone of the aquifer via air injection wells for the purpose of physically stripping VOCs out of groundwater. The degree to which air sparging is effective in stripping volatile contaminants depends on a variety of factors, including the target chemical's Henry's Constant (air to water partition coefficient),

the hydrogeologic setting, and air sparging rate. Because the groundwater COCs at SWMU 166 consist of VOCs, air sparging would be expected to be a potentially effective remedy. The upper portion of the shallow aquifer is comprised of generally sandy material, which provides a setting generally conducive to implementing air stripping.

4.5 Approach to Evaluating Corrective Measure Alternatives

The CMS will consist of the following tasks that will be performed in the order presented below:

1. Review existing and new site data and technical literature to identify and screen the various corrective measure alternatives for applicability. In addition to those listed above, other corrective measure alternatives may also be evaluated in the CMS.
2. Evaluate the most feasible corrective measures.
3. Identify the preferred corrective measure alternative.

The CMS methods and the preferred corrective measure alternative will be documented in the CMS report.

According to the RCRA permit issued by SCDHEC (SCDHEC, 1998), the alternatives will be evaluated with the following five criteria:

1. Protect human health and the environment.
2. Attain MCSs, which will generally be the RGOs.
3. Control the source of releases to minimize future releases that may pose a threat to human health and the environment.
4. Comply with applicable standards for the management of wastes generated by remedial activities.
5. Other factors include (a) long-term reliability and effectiveness; (b) reduction in toxicity, mobility, or volume of wastes; (c) short-term effectiveness; (d) implementability; and (e) cost.

Each of the five criteria is defined in more detail below:

4.5.1 Protect Human Health and the Environment

The alternatives will be evaluated on the basis of their ability to protect human health and the environment. The ability of an alternative to achieve this criterion may or may not be independent of its ability to achieve the other standards. For example, an alternative may be protective of human health, but may not be able to attain the MCSs if the MCSs are not directly tied to protecting human health.

4.5.2 Attain Media Cleanup Standards

The alternatives will be evaluated on the basis of their ability to achieve the RGOs defined in this CMS Work Plan and the overall time frame to achieve the RGOs.

4.5.3 Control the Source of Releases

This criterion deals with the control of releases of contamination from the source (the area in which the contamination originated).

4.5.4 Comply with Applicable Standards for Management of Wastes

This criterion deals with the management of wastes derived from implementing the alternatives; for example, treatment or disposal of well cuttings, contaminated groundwater, or excavated material from a source area.

4.5.5 Other Factors

Five other factors are to be considered if an alternative is found to meet the four criteria described above. These other factors are as follows:

a. Long-term reliability and effectiveness

The various alternatives will be evaluated on the basis of their reliability, and the potential impact should the alternative fail. In other words, a qualitative assessment will be made as to the chance of the alternative's failing and the consequences of that failure.

b. Reduction in the toxicity, mobility, or volume of wastes

Alternatives with technologies that reduce the toxicity, mobility, or volume of the contamination will be generally favored over those that do not. Consequently, a qualitative assessment of this factor will be performed for each alternative.

c. Short-term effectiveness

Alternatives will be evaluated on the basis of the risk they create during the implementation of the remedy. Factors that may be considered include fire, explosion, and exposure of workers to hazardous substances.

d. Implementatiblity

The alternatives will be evaluated for their implementability by considering any difficulties associated with conducting the alternatives (such as the construction disturbances they may create), operation of the alternatives, and the availability of equipment and resources to implement the technologies comprising the alternatives.

e. Cost

A net present value of each alternative will be developed. These cost estimates will be used for the relative evaluation of the alternatives, not to bid or budget the work. The estimates will be based on information available at the time of the CMS and on a conceptual design of the alternative. They will be "order-of-magnitude" estimates with a generally expected accuracy of -30 percent to +50 percent for the scope of action described for each alternative. The estimates will be categorized into capital costs and operations and maintenance costs for each alternative.

4.6 Corrective Measures Study Report

The CMS report will present the identification, development, and evaluation of potential corrective measures for SWMU 166. A proposed outline of the report, as shown in Table 4-2, provides an example of the report format and content organization.

TABLE 4-1
Proposed MCSs for VOCs in Groundwater at SWMU 166
IM Completion Report/CMS Work Plan/Pilot Study Work Plan, SWMU 166, Zone K, Charleston Naval Complex

Chemical	Proposed MCS (µg/L)
Tetrachloroethene (PCE)	5
Trichloroethene (TCE)	5
Cis-1,2-Dichloroethene (cis-1,2-DCE)	70
1,1-Dichloroethene (1,1-DCE)	7
Vinyl Chloride (VC)	2

µg/L Micrograms per liter

TABLE 4-2
Outline of Focused CMS Report for SWMU 166
IM Completion Report/CMS Work Plan/Pilot Study Work Plan, SWMU 166, Zone K, Charleston Naval Complex

Section No.	Section Title
1.0	**Introduction**
1.1	Corrective Measures Study Purpose and Scope
1.2	Background Information
1.2.1	Facility Description
1.2.2	Site History
1.2.3	Site Hydrogeology
1.2.4	Nature and Extent of Contamination
1.2.5	Summary of Risk Assessment
1.3	Report Organization
2.0	**RAOs, Proposed MCSs, and Alternative Evaluation Criteria**
2.1	Remedial Action Objectives
2.2	Remedial Goal Options and Proposed Media Cleanup Standards
2.3	Evaluation Criteria
2.3.1	Protect Human Health and the Environment
2.3.2	Attain MCSs
2.3.3	Control the Source of Releases
2.3.4	Comply with Applicable Standards for Management of Wastes
2.3.5	Other Factors
3.0	**Description of Candidate Corrective Measure Alternatives**
3.1	Evaluation Approach
3.2	Description of Alternatives
4.0	**Detailed Analysis of Alternatives**
4.1	Analysis of Alternatives[a]
4.1.1	Alternative 1: Enhanced In Situ Anaerobic Biodegradation
4.1.2	Alternative 2: Monitored Natural Attenuation (MNA)
4.1.3	Alternative 3: Permeable Reactive Barriers (PRBs)
4.1.4	Alternative 4: Air Sparging
4.2	Comparative Analysis of Alternatives
5.0	**Recommended Corrective Measure Alternative**
6.0	**References**
Appendix A	**Corrective Measure Alternative Cost Estimates[b]**
List of Tables	
List of Figures	

[a] Additional alternatives will be analyzed as found necessary.

[b] Additional appendixes will be added, if necessary.

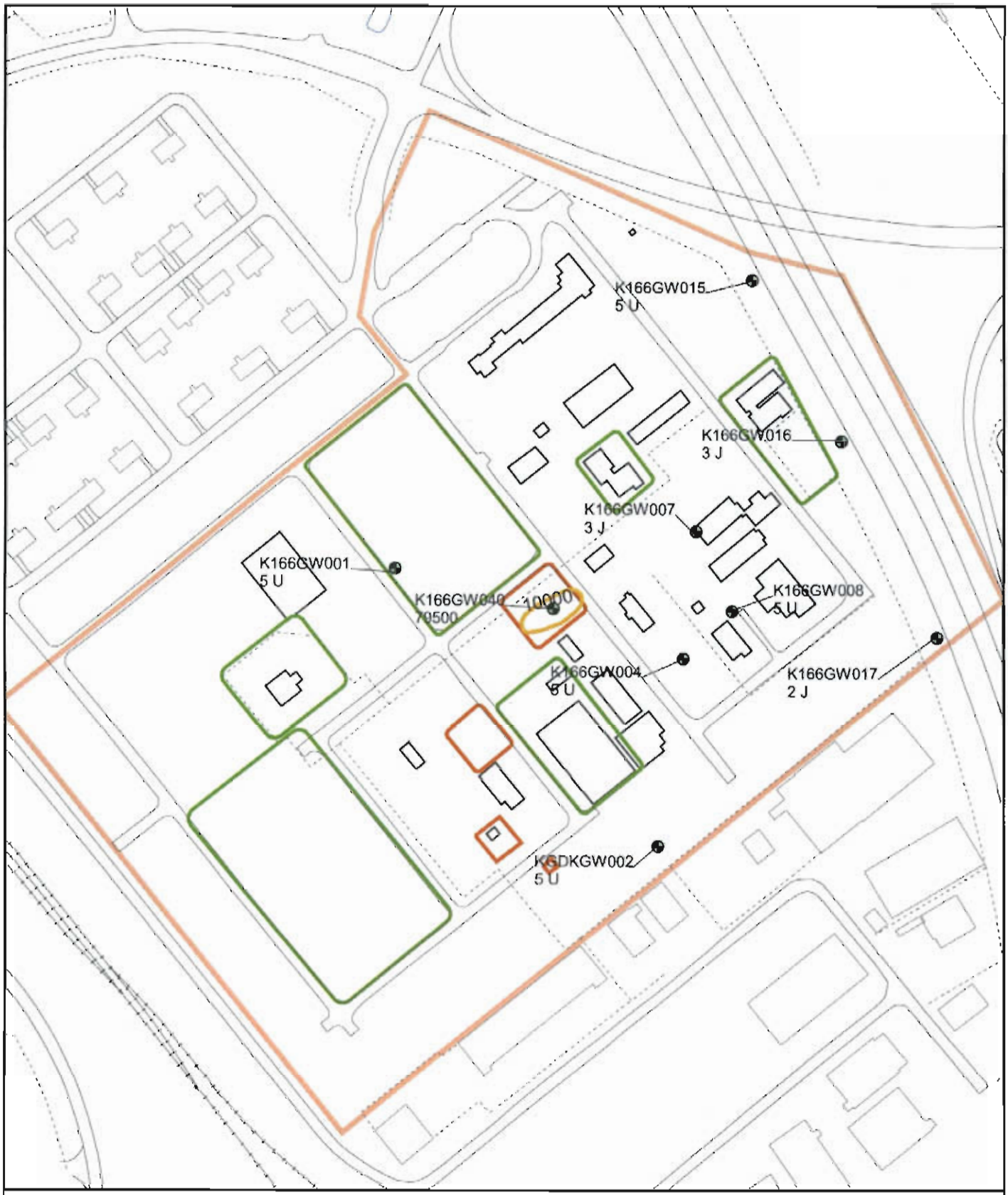

Groundwater Monitoring Well (bottom of screen is 0-20 ft bls)
Fence
Railroads
Roads
Active SWMU/AOC
Buildings
Zone Boundary

N

0 200 400 Feet

1 inch = 250 feet

Figure 4-1
TCE Concentrations in Shallow Wells
SWMU 166, Zone K
Charleston Naval Complex

CH2MHILL

File Path: C:\18gis\Projects\Zone_K\Swmu_166\Aprs\swmu-166-iso-cnc-egis.apr, Date: 18 Mar 2005 8:02, User: TWILEY

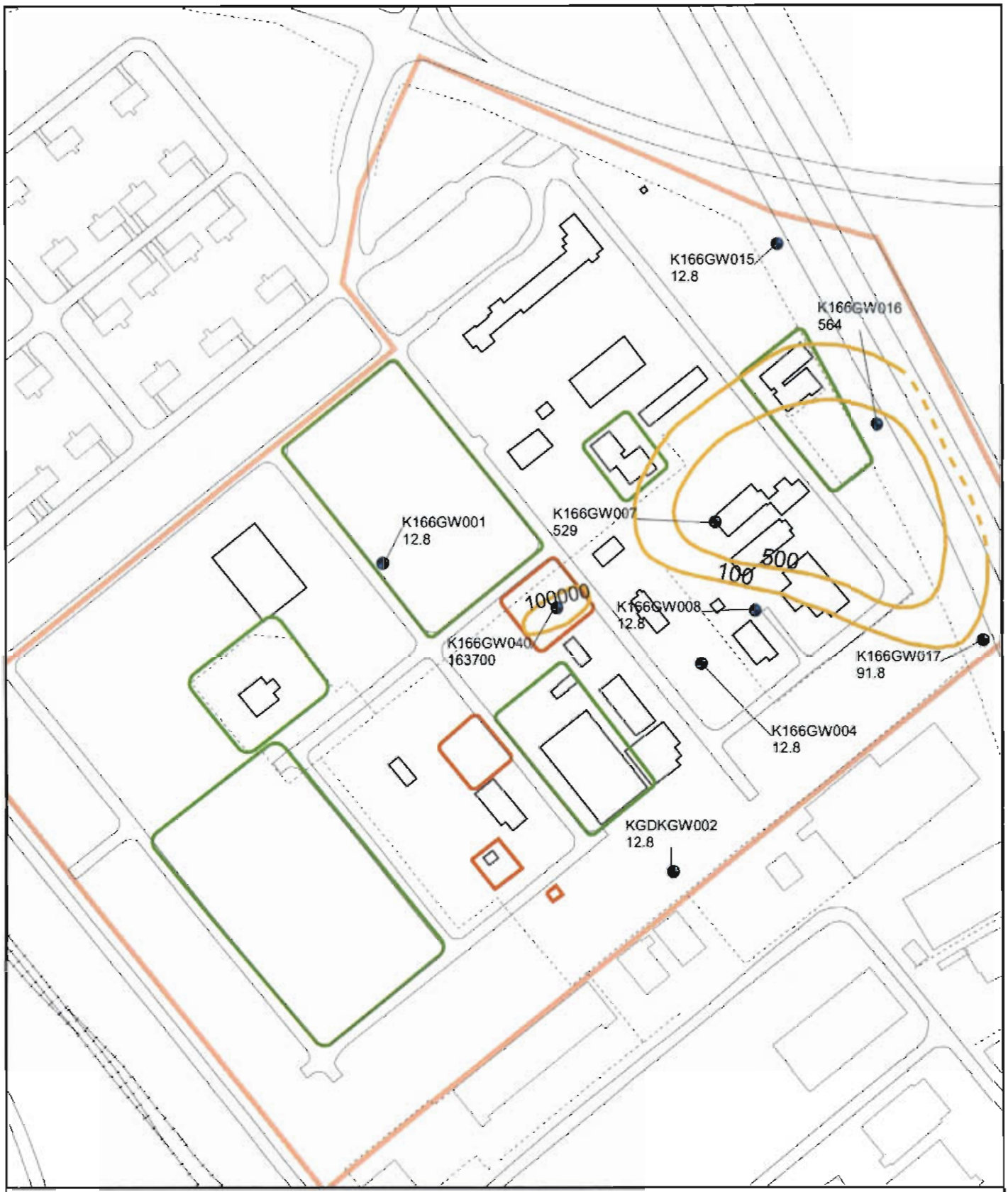

Groundwater Monitoring Well (bottom of screen is 0-20 ft bls)
VOC (Total) Concentraitlon Contour, inferred
VOC (Total) Concentration Contour
Fence
Railroads
Roads
Active SWMU/AOC
Buildings
Zone Boundary

N

0 200 400 Feet

1 inch = 225 feet

Figure 4-2
VOC (Total) Concentrations in Shallow Wells
SWMU 166, Zone K
Charleston Naval Complex

CH2MHILL

File Path: C:\18gis\Projects\Zone_K\Swmu_166\Apa\swmu-166-lku-cnc-egis.apr, Date: 18 Mar 2005 8:02, User: TWILEY

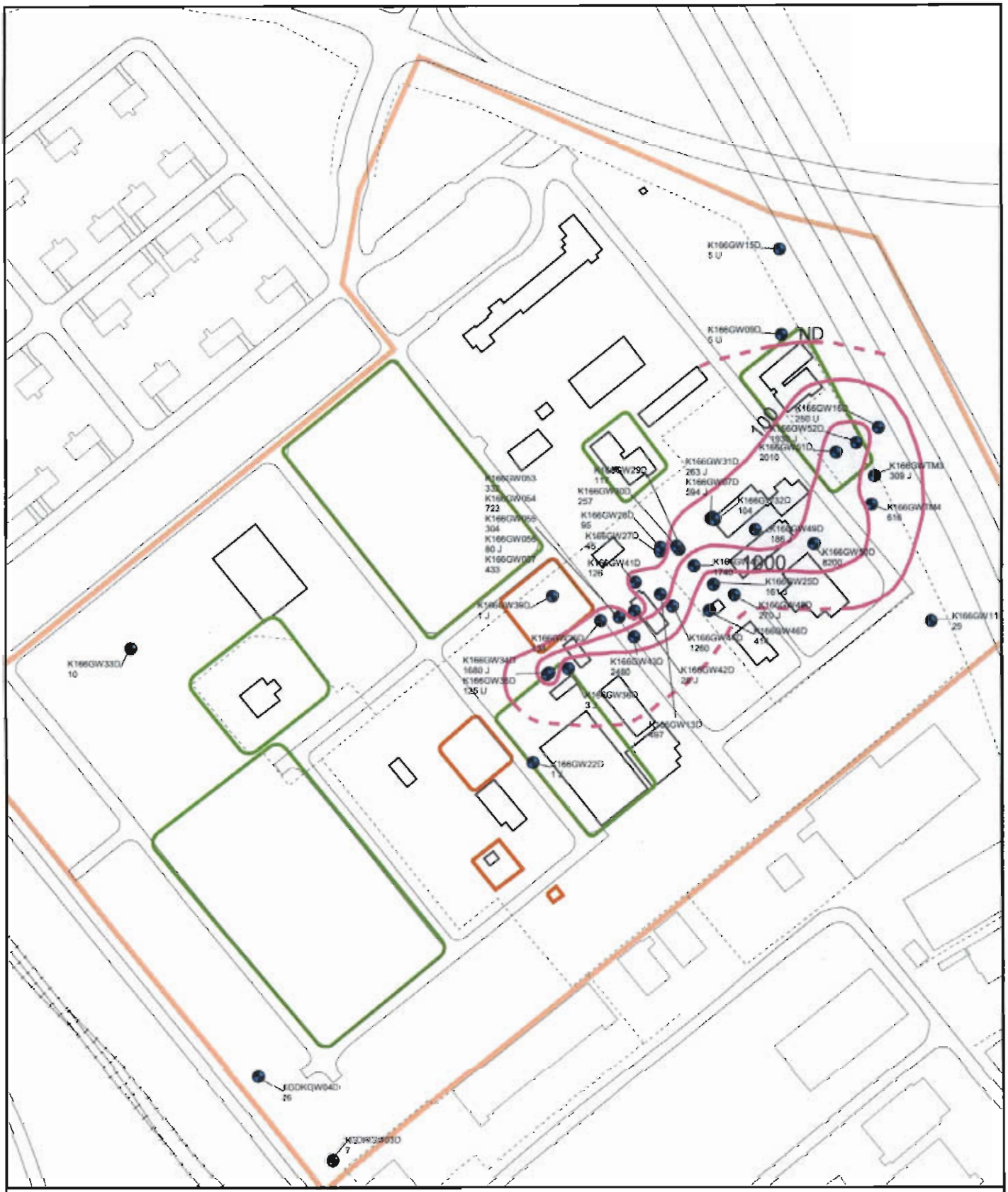

TCE Concentration Contour, inferred
TCE Concentration Contour
Groundwater Monitoring Well (bottom of screen is 20 + ft bls)
Fence
Railroads
Roads
Active SWMU/AOC
Buildings
Zone Boundary

N

0 200 400 Feet

1 inch = 225 feet

Figure 4-3
TCE Concentrations in Deep Wells
SWMU 166, Zone K
Charleston Naval Complex

CH2MHILL

File Path: C:\16gis\Projects\Zone_K\Swmu_166\gis\swmu-166-lsc-cnc-egis.apr; Date: 18 Mar 2005 8:02; User: TWILEY

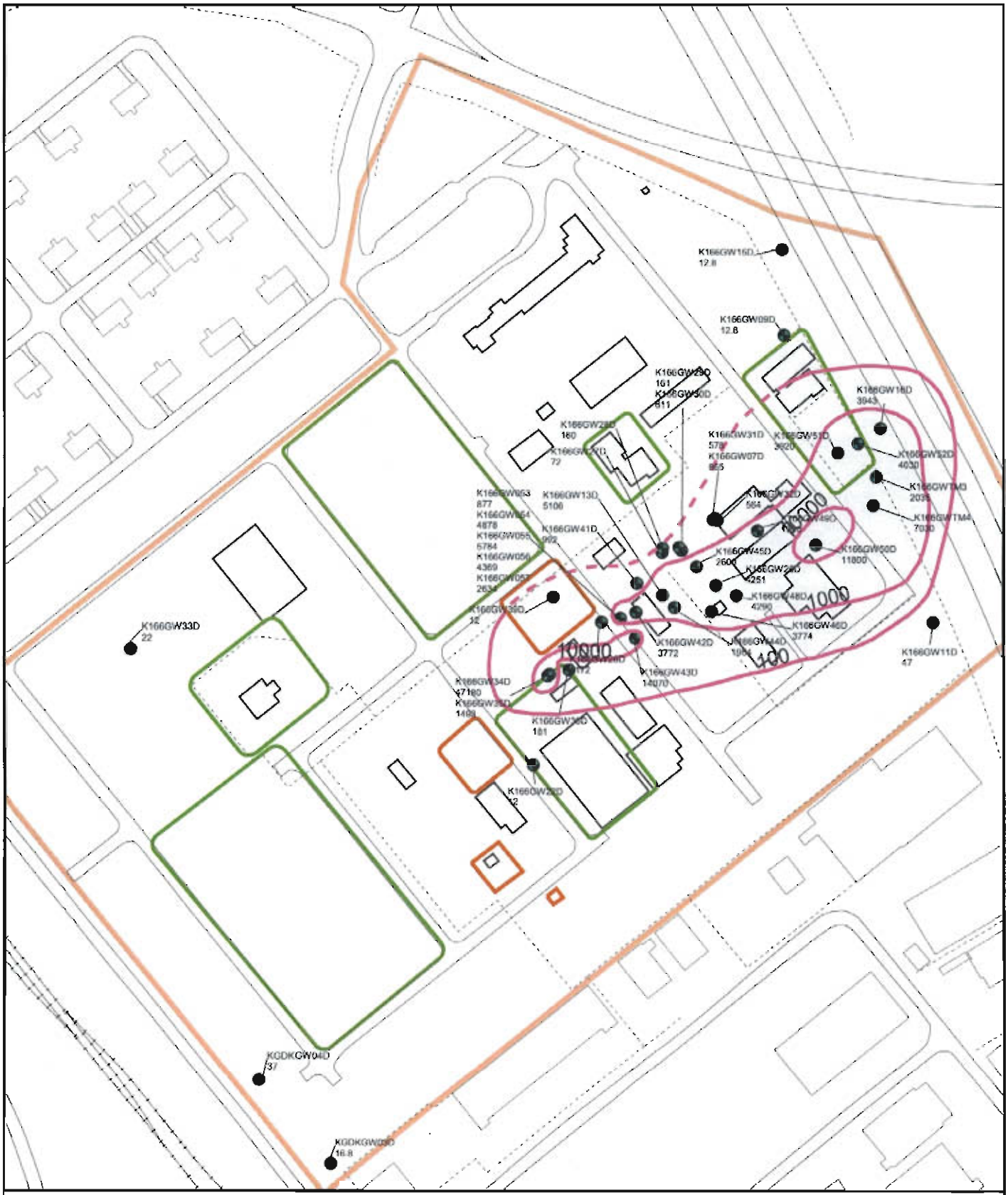

VOC (Total) Concentration Contour, inferred
VOC (Total) Concentration Contour
Groundwater Monitoring Well (bottom of screen is 20+ ft bls)
Fence
Railroads
Roads
Active SWMU/AOC
Buildings
Zone Boundary

N

0 200 400 Feet

1 inch = 225 feet

Figure 4-4
VOC (Total) Concentrations in Deep Wells
SWMU 166, Zone K
Charleston Naval Complex

CH2MHILL

File Path: C:\18gis\Projects\Zone_K\Swmu_166\Apr\swmu-166-lso-cnc-egis.apr, Date: 18 Mar 2005 8:03, User: TWILEY

5.0 Pilot Study Work Plan for SWMU 166

As noted in Section 4.0, enhanced in situ anaerobic biodegradation is a potentially effective technology for addressing the VOCs at SWMU 166 and has been shown to be a cost-effective method for addressing VOC contamination at the main CNC base. However, because the hydogeologic setting at the Naval Annex is somewhat different than that of the main CNC base, a pilot study for this method is recommended to determine better optimal conditions for its implementation at SWMU 166. Therefore, CH2M-Jones proposes to implement a pilot study of enhanced in situ anaerobic biodegradation at SWMU 166 prior to, or concurrent with, the development of the CMS for SWMU 166.

In addition, as noted in Section 4.0, the use of a biobarrier near the site boundary has the potential to be an effective means for mitigating the potential for offsite migration of VOCs in groundwater. A pilot study of a biobarrier is recommended to provide more detailed information regarding its applicability and potential effectiveness at SWMU 166. Therefore, CH2M-Jones also proposes to implement a pilot study of a biobarrier for the site.

5.1 Proposed Pilot Study Approach

The pilot study approach proposed for SWMU 166 is similar to that previously conducted at AOC 607 at the CNC. Several injection wells will be used to inject an organic substrate into the aquifer, and the effect of the substrate on VOC concentrations, hydrogeologic and geochemical conditions, and the native bacterial consortium will be evaluated over a 4 to 6-month period. The data collected during the pilot study will allow for better assessment of the likely performance of this remediation approach on a full-scale basis.

Two areas are proposed for the pilot study. One area will include two of the TTAs where IMs to address high VOC concentrations were previously conducted using the Ferox℠ method, as described in Section 2.0. Two TTAs will be selected for which the data indicate that further reduction in total VOC concentrations is desired. The pilot study in these areas will evaluate the degree to which enhanced in situ bioremediation can be used as a residual source area treatment method at SWMU 166. In addition, an area near the downgradient Navy property boundary near Interstate 26 (in the vicinity of TTA 6) will be selected for pilot testing the use of a biobarrier. A biobarrier in this area would be used to attenuate potential offsite migration of VOC-impacted groundwater.

The overall approach for implementing these pilot studies is presented in the following sections.

5.2 Pilot Study Approach

5.2.1 Pilot Study Locations

A pilot study of enhanced in situ bioremediation will be conducted at TTAs 1 and 2. At TTA 1, the most recent monitoring data indicate that TCE concentrations have been reduced by the IM by approximately 84 percent, while total VOC concentrations were reduced by approximately 26 percent. Much of the TCE in this TTA appears to have been converted to cis-1,2-DCE. In well K166GW34D, for example, TCE concentrations were reduced from 42,300 µg/L before the IM to 1,680 µg/L after the IM. While this reduction is significant, the DCE in this well increased from 456 µg/L to 40,500 µg/L. Therefore, additional remediation is recommended in this area.

At TTA 2, TCE and total VOC concentrations measured in the one of the monitoring wells are higher than prior to initiation of the IM. The TCE concentration in groundwater collected from well K166GW040 was 1,950 µg/L prior to the IM and 79,500 µg/L during October 2004, indicating the likely presence of a small residual DNAPL source area near this well. This well is a shallow well, screened from 8 to 13 ft bls, near the top of the saturated zone of the shallow water aquifer. This TTA is also the location at which an IM was previously conducted to remove soil impacted with TCE. It is likely that pneumatic injections of the FerOx process conducted as part of the groundwater IM disturbed a small amount of residual DNAPL in the shallow saturated zone of the aquifer in this area, thus causing the dissolved TCE concentrations in the immediate vicinity of the well to increase.

The pilot study at each of these TTAs will provide valuable information regarding optimal conditions for achieving enhanced in situ bioremediation.

At each of these TTAs, two new injection wells will be installed to allow delivery of an organic substrate to the target treatment zone. At TTA 1, two injection wells will be installed within approximately 10 feet upgradient of well K166GW34D. The injection wells will be screened in the same zone as well K166GW34D (22 to 27 ft bls).

At TTA 2, two injection wells will be installed within approximately 10 ft upgradient of well K166GW040. The wells will be screened in the same zone as well K166GW040 (8 to 13 ft bls). The proposed locations of the new injection wells are shown in Figure 5-1.

For the biobarrier pilot study, several existing injection wells that were used during the previous anaerobic-aerobic biodegradation pilot test are available for use for the pilot study of enhanced reductive dechlorination. These wells (K166GWIN1, K166GWIN2, K166GWIN3, and K166GWIN4) are located in a manner conducive to use as a biobarrier, aligned perpendicular to the direction of groundwater flow (see Figure 5-2). The well screens for these wells are located such that they intercept the sandy zone just above the top of the Ashley formation, in the zone where VOC migration in the deeper portion of the surficial aquifer has been found to be occurring. Existing monitor wells downgradient of these injection wells can be used to assess the performance of the biobarrier. Depending on specific groundwater flow rates in this area, it may take some period of time to assess the performance due to the location of these wells approximately 15 to 30 ft downgradient of the injection wells. For this reason, one additional new injection well is proposed to be installed approximately 10 ft upgradient of well K166GWTM4 to allow a rapid assessment of the effectiveness of the injected substrate for application as a biobarrier.

For the pilot study of a biobarrier, CH2M-Jones proposes to inject substrate into the four existing injection wells and one new injection well located as noted above.

5.2.2 Pilot Study Objectives and Approach Goals

The objectives of the pilot study are:

1. Assess the effectiveness of sodium lactate and EOS as electron donors (organic substrate) for stimulating the native bacterial consortium to reductively dechlorinate the COCs,
2. Assess the approximately longevity of sodium lactate and EOS as electron donors, and
3. Assess whether the native bacterial consortium is capable of completely degrading the COCs to ethene or whether bioaugmentation should be considered.

5.2.3 Overall Approach to Pilot Study

As part of the project scope, several individual tasks will be performed to meet the goals of the pilot study. The overall general approach will involve the following activities.

1. Injection well installation;
2. Baseline characterization (sampling and analysis) of microbiological and geochemical indicators and groundwater VOC concentrations;
3. Injection of electron donor; and
4. Post-injection performance monitoring.

Well Installation, Construction, and Development

Prior to installation of new injection wells, the approximate location will be staked or flagged, and underground utilities in the area will first be identified by a utilities location contractor. Final well installation will then be adjusted in the field to maintain proper distances from buried utilities.

Hollow-stem auger or rotosonic drilling techniques will be used to install the injection wells through a minimum borehole diameter of approximately 6 inches. Injection wells will be screened from 8 to 13 ft bls in TTA 1 and from 26 to 31 ft bls in TTA 2. These depths are in alignment with the downgradient wells K166GW40D (at TTA 1) and K166GW34D (at TTA 2) which will be monitored to assess the effectiveness of the treatment process. The new injection well installed upgradient of well K166GWTM4 will be screened from a depth of approximately 27 to 32 ft bls, just above the top of the Ashley Formation.

Well installation activities will be performed in accordance with the approved *EnSafe Final Comprehensive Sampling and Analysis Plan, Volume II, Revision 2* (CSAP) dated July 30, 1996 (EnSafe 1996), and the general requirements of the *EPA Environmental Services Division Environmental Investigations Standard Operating Procedures and Quality Assurance Manual* (EPA, 2001). Well installation procedures and materials will also conform to the requirements of the South Carolina Well Standards and Regulations (R.61-71), and appropriate well record forms will be provided after well installation and development, as required by SCDHEC.

The coordinate locations of the installed wells will be determined by a land surveyor registered in South Carolina. The mean sea level (msl) elevation of the top of the well casing will also be determined.

The monitoring and injection wells will be constructed using a 2-inch-diameter polyvinyl chloride (PVC) screen with threaded couplings and bottom plug/point, and a threaded 2-inch PVC riser pipe to reach the land surface. The well will be completed with a locking cover and cement pad, flush with grade. Appropriate sand filter pack and bentonite seal material will be installed, and the annular space will be grouted to the land surface with Portland cement grout.

The newly installed wells will be developed after the annular space grout has been allowed to cure for a minimum of 24 hours. The development procedures will comply with the approved CSAP, including monitoring of development water parameters. One or more of the approved CSAP development techniques (i.e., pumping, surging, bailing) may be used to develop the well.

The wells will be sampled no sooner than 48 hours after development to allow for groundwater to equilibrate after development, but no later than one week after the well has been completed.

In accordance with R.61-79.265 Subpart F of the South Carolina Hazardous Waste Management Regulations and R.61-71 of the South Carolina Well Standards and Regulations, a request for well installation must be submitted to SCDHEC two weeks prior to the scheduled activity. The written request will include the purpose of the well and the details of the well construction, and a map of the proposed location.

In addition to these activities, the four existing injection wells to be used for the biobarrier will be purged and an assessment of their condition and suitability for use as injection wells for a biobarrier will be conducted. If necessary, these wells may be redeveloped.

Baseline Characterization

Baseline characterization will include collection of groundwater samples from the new injection wells and analysis for field parameters (DO, ORP, pH, temperature, specific conductance), VOCs, dissolved iron, sulfate, sulfide, TOC, dissolved gases (methane, ethane, and ethene), and alkalinity. In addition, groundwater samples will be collected for several bacterialogical indicators, including phospholipids fatty acid (PLFA) analysis and dehalococcoides ethanogenes (DHE) using real-time PCR methods.

In addition to these groundwater samples, one soil sample collected from the target depth interval for the well screen will be analyzed for TOC, PFLAs, and the presence of DHE using real-time PCR methods. DHE is a bacterium that has been shown to be capable of completely reductively dechlorinating PCE and TCE to ethane. Its presence has been found to be a good indicator of the potential success of enhanced in situ bioremediation.

A summary of the baseline monitoring is presented in Table 5-1.

Substrate Injection

At TTA 1, sodium lactate will be used as the organic substrate to stimulate bioremediation. Lactate is a readily-fermentable soluble substrate that has been successfully used at a variety of sites to stimulate reductive dechlorination. At AOC 607, the potassium form (potassium lactate) was used due to the presence of clays at the site. Sodium may cause some clays to swell. However, at which SWMU 166, the aquifer has much less clay and impacts from sodium on clay at SWMU 166 is less likely to be an issue of concern.

the first 4 months, a determination will be made as to whether to switch to bi-monthly monitoring for some or all of the parameters and whether to eliminate some monitoring parameters.

CVOCs, TOC, and VFAs are the key parameters that will be used to evaluate the effectiveness of the lactate injections. Dissolved gases will also be evaluated to assess dechlorination to ethene and ethane and the presence of methane. The presence of methane demonstrates strong anaerobic conditions. The increase in biodegradation may stimulate bacteria growth, thereby increasing the dissolved iron, manganese, and sulfide in the groundwater. These parameters, along with DHE and PLFA, will be monitored during the periodic monitoring events, twice a year, starting 6 months after the initial injection.

Secondary performance monitoring events for parameters that can be measured with field instruments will be completed quarterly following monthly monitoring during the first quarter after the initial injection. In addition to the VFA results, trends in decreasing TOC and increasing ORP levels will be used to schedule additional lactate injections. DO and ORP results will also be used to evaluate the degree of reducing conditions achieved in the aquifer.

Groundwater Monitoring Procedures

Groundwater monitoring will be completed using a low-flow groundwater sampling technique to collect accurate field parameters (particularly DO and ORP) and less disturbed groundwater samples for the evaluation of dissolved gases. The intake of the low-flow pump will be placed in the middle of the screened interval and purging will continue until after at least three well volumes have been removed and the basic groundwater parameters (pH, temperature, and specific conductance) are deemed to have stabilized (when three consecutive measurements of these parameters are within ten percent of each other).

The groundwater analysis will follow the procedures found in the approved Comprehensive Sampling and Analysis Plan (CSAP) portion of the RFI Work Plan (EnSafe, Inc./Allen & Hoshall, 1994). The CSAP outlines all monitoring procedures to be performed during the IM to characterize the environmental setting, source, and releases of hazardous constituents. In addition, the CSAP includes the Quality Assurance Plan (QAP) and Data Management Plan (DMP) to verify that all information and data are valid and properly documented. Unless otherwise noted, the sampling strategy and procedures will be performed in accordance with the EPA Environmental Services Division *Standard Operating Procedures and Quality Assurance Manual* (ESDSOPQAM) (1996).

Field parameters to be measured and recorded during the sampling activities at the well include the following:

- Purge volume
- Turbidity
- DO
- pH
- Conductivity
- Water temperature
- ORP
- Depth to water prior to purging

Unless otherwise noted, the sampling strategy and procedures will be performed in accordance with the EPA Environmental Services Division *Standard Operating Procedures and Quality Assurance Manual* (ESDSOPQAM) (1996a). A copy of the ESDSOPQAM will be kept onsite to supplement the CSAP during all field operations. Sample analyses will be conducted in accordance with the guidance in EPA *Test Methods for Evaluating Solid Waste, SW-846, 3rd ed.*, Office of Solid Waste and Emergency Response (SW-846) and in the EPA Environmental Services Division *Laboratory Operations and Quality Control Manual* (ESDLOQCM) (1996). Sample analysis and data collection efforts will satisfy EPA DQO Level II protocol.

Investigation-Derived Waste

Investigation-derived waste (IDW) that is generated during the injection well installation activities will include groundwater from well development, sampling purge water, sample collection tubing, well cuttings, and personal protective equipment (PPE). Each waste type will be collected in labeled 55-gallon drums or a portable tank, as appropriate for proper handling. Contained IDW will remain at each site until work is completed, and will then be sampled for waste characterization by EPA TCLP methods, and transported to the short term (90 days or less) hazardous waste storage facility located at Building 1824/1846. Once analytical results have been obtained, the waste will be labeled and transported, as required, to a licensed and permitted facility for proper treatment and/or disposal.

TABLE 5-1
Baseline Characterization Sampling and Analysis for Pilot Study in TTAs at SWMU 166
Interim Measures Completion Report/Corrective Measures Study Work Plan/Pilot Study Work Plan, SWMU 166, Zone K, Charleston Naval Complex

Location	Media	Parameters
5 Injection Wells	Groundwater	VOCs, dissolved iron and manganese (field filtered), sulfate/sulfide, TOC, DHE (via Real Time PCR), PFLAs, alkalinity
3 Monitoring Wells	Groundwater	VOCs, dissolved iron and manganese (field filtered), sulfate/sulfide, TOC, DHE (via Real Time PCR), PFLAs, alkalinity
5 Injection Wells	Soil (one sample collected from screened interval during well installation)	TOC, DHE (via Real Time PCR), PFLAs

TABLE 5-2
Post-Injection Performance Monitoring for Pilot Study at TTAs at SWMU 166
Interim Measures Completion Report/Corrective Measures Study Work Plan/Pilot Study Work Plan, SWMU 166, Zone K, Charleston Naval Complex

Parameter	Method	Wells	Sample Volume, Container, and Preservative
Monthly Parameters during the First Quarter following Initial Injection			
DO, ORP, pH, temperature, and specific conductance	Field	K166GW040 K166GW34D K166GWTM4	Standard field instruments
Bi-Monthly Parameters			
DO, ORP, pH, temperature, and specific conductance	Field	Same as above	Standard field instruments
VOCs	SW846-8260B	Same as above	3-40 ml VOA vial (Teflon lined cap), pH <2 HCl, cool to 4°C
Methane, ethane, and ethene (MEE)	SW8015M	Same as above	2-40 ml VOA vial (Teflon lined cap), pH <2 HCl, cool to 4° C
Volatile fatty acids (VFA)	Lab method	Same as above	2-40 ml VOA vial (Teflon lined cap), cool to 4°C
Total Organic Carbon (TOC)	SW9060	Same as above	250mL HDPE, pH <2 H2SO4, cool to 4°C
Semiannual Parameters			
All Bi-Monthly Parameters (see above)			
Sulfate	EPA 300.0	Same as above	1L HDPE, cool to 4°C
Sulfide	EPA 376	Same as above	1L HDPE, pH >9 NaOH, Zn Acetate, cool to 4°C
Dissolved iron (field filtered)	SW-846 6010B	Same as above	250 or 500 mL in HDPE, preserved w/ HNO3 (pH < 2)
Dissolved manganese (field filtered)	SW-846 6010B	Same as above	250 or 500 mL in HDPE, preserved w/ HNO3 (pH < 2)
Alkalinity	EPA 310.1	Same as above	1L HDPE, cool to 4°C
DHE	Real-time PCR/Microbial Insights	Same as above	1L poly (alcohol rinsed), cool to 4°C
PFLAs	Microbial Insights	Same as above	2 1L poly (alcohol rinsed), cool to 4°C

NOTE: Original figure created in color

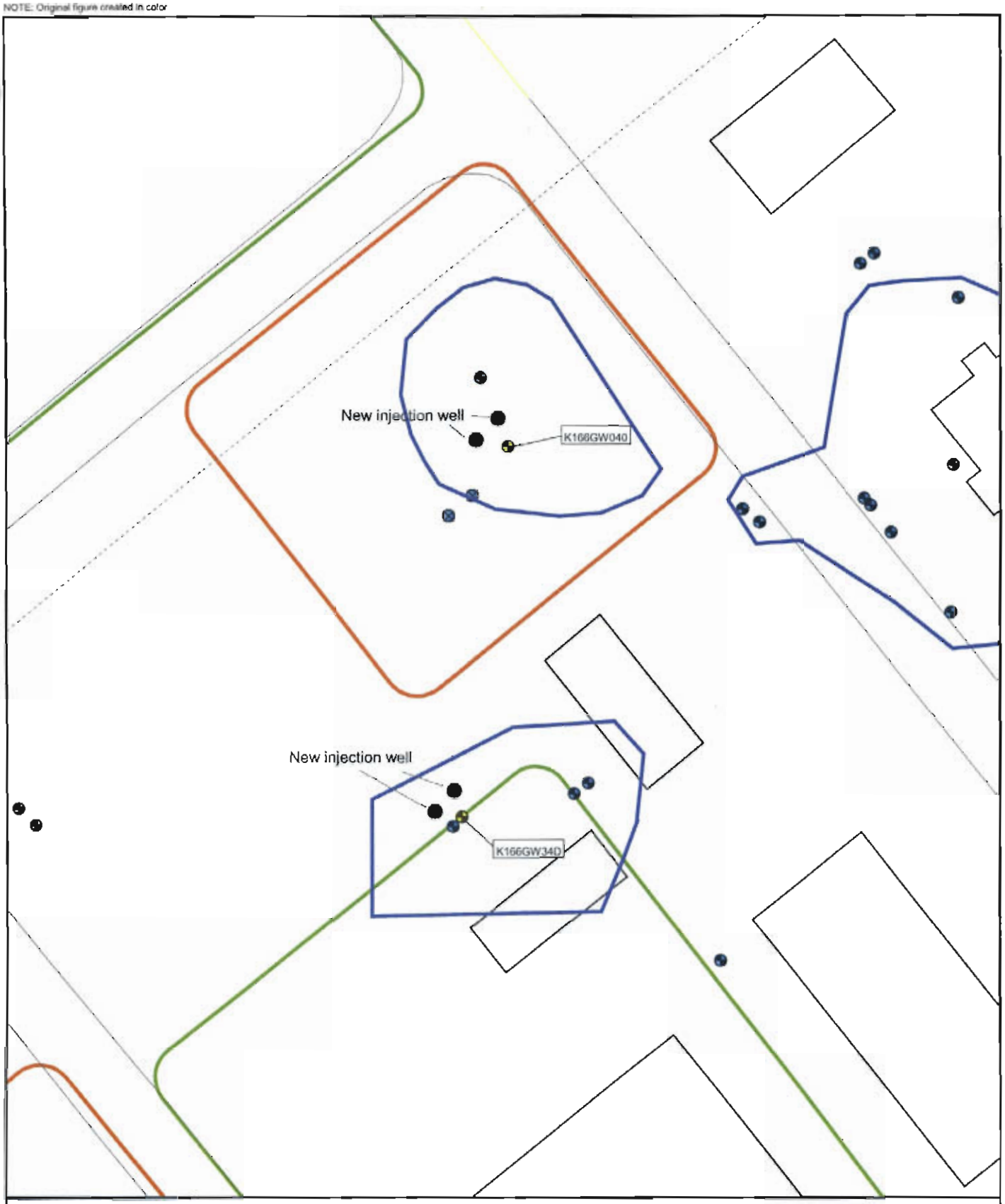

N

0 30 60 Feet

1 inch = 39.1225 feet

Figure 5-1
New Injection Well Locations for TTAs 1 and 2
SWMU 166, Zone K
Charleston Naval Complex

File Path: c:\18gis\crctono-egis.apr, Date: 17 Mar 2005 11:35, User: DWILLIAM, EGIS: Charleston Naval Complex - Figure 5-1 New Injection Well Locations for TTAs 1 and 2

NOTE: Original figure created in color

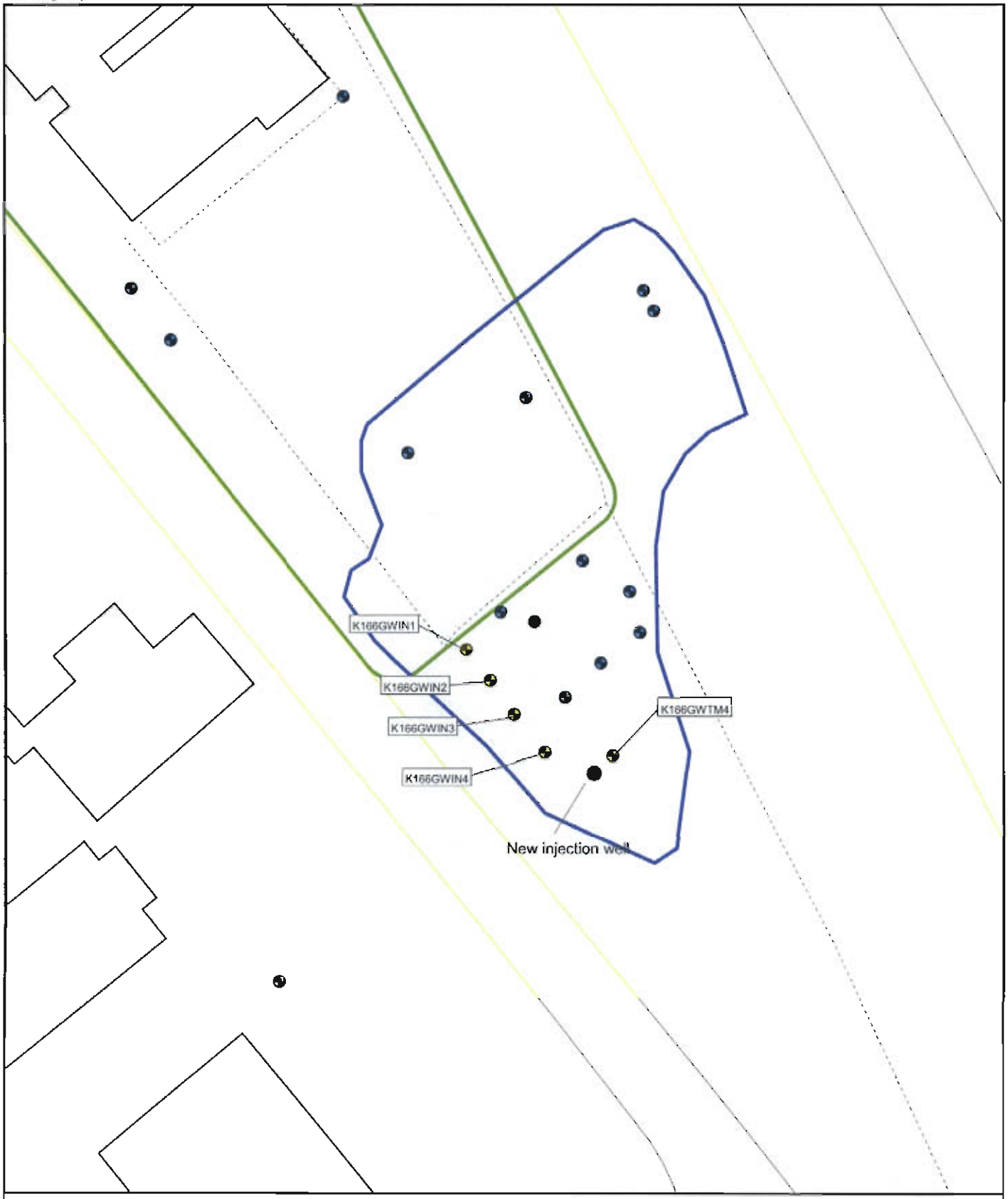

N

0 30 60 Feet

1 inch = 39.1225 feet

Figure 5-2
New Injection Well Location For Biobarrier Test
SWMU 166, Zone K
Charleston Naval Complex

File Path: c:\18gis\cncinc-egis.apr, Date: 17 Mar 2005 12:23, User: DWILLIAM, EGIS: Charleston Naval Complex - Figure 5-2 New Injection Well Location For Biobarrier Test

6.0 References

ARS Technologies, Inc. *Draft Ferox^{SM} Field Implementation Work Plan, SWMU 166*. CNC. December 2001.

CH2M-Jones. *Membrane Interface Probe-Phase II Pilot Study Report, CMS Work Plan, SWMU 166, Zone K, Revision 1*. February 2001.

CH2M-Jones. *RFI Report Addendum, SWMU 166, Zone K, Revision 0*. January 2002a.

CH2M-Jones. *Membrane Interface Probe-Phase II Pilot Study Report, SWMU 166, Zone K, Revision 0*. January 2002b.

CH2M-Jones. *Interim Measure Work Plan, SWMU 166, Zone K, Revision 0*. January 2002.

CH2M-Jones. *Interim Measure Completion Report/Corrective Measures Study Work Plan/Pilot Study Work Plan, SWMU 166, Zone K, Revision 0*. April 2005.

EnSafe Inc. *A-A Sequencing Treatability Study Report, Zone K (SWMU 166), Revision 0*. June 2, 2000.

EnSafe Inc. *Zone K RFI Offsite Groundwater Sampling Technical Memorandum, Revision 1*. February 21, 2001.

EnSafe Inc. *Zone K RCRA Facility Investigation Report, Revision 0*. CNC. June 11, 1999a.

EnSafe Inc. *Monitored Natural Attenuation Interim Report, Revision 0*. 1999b.

EnSafe Inc. *Final Comprehensive Sampling and Analysis Plan, Revision 2*. July 30, 1996.

U.S. Environmental Protection Agency. *Standard Operating Procedures and Quality Assurance Manual* (ESDSOPQAM). 2001.

U.S. Environmental Protection Agency. Office of Solid Waste and Emergency Response (SW846). *Test Methods for Evaluating Solid Waste, SW-846*. Revision 4. December 1996.

U.S. Environmental Protection Agency. *Laboratory Operations and Quality Control Manual* (ESDLOQCM). 1997.

U.S. Environmental Protection Agency. Office of Solid Waste and Emergency Response. *Groundwater Sampling Guidelines for Superfund and RCRA Project Managers*. EPA 542-S-02-001. May 2002.

APPENDIX A

Phase I IM Data Validation Reports

Data Validation Summary - Charleston Naval Complex - Zone K, SWMU 166

TO: Sam Naik/CH2M HILL/ATL

FROM: Amy Juchem/CH2M HILL/GNA
Herb Kelly/CH2M HILL/GNA

DATE: June 30, 2003

The purpose of this memorandum is to present the results of the data validation process for the samples collected at Zone K, SWMU 166. The samples were collected between the dates of May 27 and May 30, 2003.

The specific samples and analytical fractions reviewed are summarized below in Table 1.

The Quality Control areas that were reviewed and the resulting findings are documented within each subsection that follows. This data was validated for compliance with the analytical method requirements. This process also included a review of the data to assess the accuracy, precision, and completeness based upon procedures described in the guidance documents such as the Environmental Protection Agency (EPA) *National Functional Guidelines for Inorganic Data Review (EPA 2002) and National Functional Guidelines for Organic Data Review (EPA 1999)*. Quality assurance/quality control (QA/QC) summary forms and data reports were reviewed.

Samples were submitted to General Engineering Laboratories, Inc., in Charleston, South Carolina, for the following analyses: SW-846 8260 Volatile Organic Compounds (VOC).

Samples were submitted to Microseeps Laboratory, in Pittsburgh, Pennsylvania, for the following analyses: AM20GAX Hydrogen.

Sample results that were not within the acceptance limits were appended with a qualifying flag, which consisted of a single- or double-letter code that indicated a possible problem with the data. The qualifying flags originated during the data review and validation processes. These also include the secondary, or the two-digit "sub-qualifier" flags. The secondary qualifiers provide the reasoning behind the assignment of a qualifier flag to the data. The secondary qualifiers are presented and defined below.

No data were qualified based upon the validation process for this sampling event.

The following primary flags were used to qualify the data:

[=] Detected. The analyte was analyzed for and detected at the concentration shown.

[J] Estimated. The analyte was present but the reported value may not be accurate or precise.

[U] Undetected. The analyte was analyzed for but not detected above the method detection limit.

[UJ] Detection limit estimated. The analyte was analyzed for but qualified as not detected; the result is estimated.

[R] Rejected. The data is not useable.

Secondary Data Validation Qualifiers

Code	Definition
2S	Second Source
2C	Second Column Confirmation
BL	Blank
BD	Blank Spike/Blank Spike Duplicate or (LCS/LCSD) Precision
BS	Blank Spike/LCS
CC	Continuing Calibration Verification
DL	Dilution
FD	Field Duplicate
HT	Holding Time
IB	In-Between (metals - B's → J's)
IC	Initial Calibration
IS	Internal Standard
LD	Lab Duplicate
LR	Concentration exceeded Linear Range
MD	MS/MSD or LCS/LCSD Precision
MS	Matrix Spike/Matrix Spike Duplicate
OT	Other (see DV worksheet)
PD	Pesticide Degradation
PS	Post Spike
RE	Re-extraction/Re-analysis
SD	Serial Dilution
SS	Spiked Surrogate
TD	Total vs Dissolved
TN	Tune

Table 1 - Chemical Analytical Methods – Field and Quality Control Samples

81287	K166GW33D	166GW33DN1	81287001	WG	N	05/27/03	X	
81287	K163GW003	163GW003N1	81287002	WG	N	05/30/03	X	
81287	K163GW03M	163GW03MN1	81287003	WG	N	05/30/03	X	
81287	K166GW040	166GW040N1	81287004	WG	N	05/30/03	X	
81287	K166GW053	166GW053N1	81287005	WG	N	05/27/03	X	
81287	K166GW054	166GW054N1	81287006	WG	N	05/27/03	X	
81287	K166GW055	166GW055N1	81287008	WG	N	05/27/03	X	
81287	K166GW07D	166GW07DN1	81287009	WG	N	05/28/03	X	
81287	K166GW07D	166HW07DN1	81287010	WG	FD	05/28/03	X	
81287	K166GW13D	166GW13DN1	81287011	WG	N	05/27/03	X	
81287	K166GW16D	166GW16DN1	81287012	WG	N	05/30/03	X	
81287	K166GW25D	166GW25DN1	81287013	WG	N	05/28/03	X	
81287	K166GW26D	166GW26DN1	81287014	WG	N	05/27/03	X	
81287	K166GW26D	166HW26DN1	81287015	WG	FD	05/27/03	X	
81287	K166GW27D	166GW27DN1	81287016	WG	N	05/28/03	X	
81287	K166GW28D	166GW28DN1	81287017	WG	N	05/28/03	X	
81287	K166GW29D	166GW29DN1	81287018	WG	N	05/28/03	X	
81287	K166GW30D	166GW30DN1	81287019	WG	N	05/28/03	X	
81287	K166GW31D	166GW31DN1	81287020	WG	N	05/28/03	X	
81287	99999	1200434684	1200434684	WQ	LB		X	
81287	99999	1200434685	1200434685	WQ	BS		X	
81287	K166GW33D	166GW33DN1MSM	1200434686	WG	MS	05/27/03	X	
81287	K166GW33D	166GW33DN1MSS	1200434687	WG	SD	05/27/03	X	
81287	99999	1200435862	1200435862	WQ	LB		X	
81287	99999	1200435863	1200435863	WQ	BS		X	
81288	K166GW32D	166GW32DN1	81288001	WG	N	05/28/03	X	
81288	K166GW34D	166GW34DN1	81288002	WG	N	05/30/03	X	
81288	K166GW35D	166GW35DN1	81288003	WG	N	05/30/03	X	
81288	K166GW36D	166GW36DN1	81288004	WG	N	05/30/03	X	
81288	K166GW37D	166GW37DN1	81288005	WG	N	05/30/03	X	
81288	K166GW37D	166HW37DN1	81288006	WG	FD	05/30/03	X	
81288	K166GW39D	166GW39DN1	81288007	WG	N	05/30/03	X	

81288	K166GW41D	166GW41DN1	81288008	WG	N	05/29/03	X	
81288	K166GW42D	166GW42DN1	81288009	WG	N	05/29/03	X	
81288	K166GW43D	166GW43DN1	81288010	WG	N	05/29/03	X	
81288	K166GW44D	166GW44DN1	81288011	WG	N	05/29/03	X	
81288	K166GW45D	166GW45DN1	81288012	WG	N	05/28/03	X	
81288	K166GW46D	166GW46DN1	81288013	WG	N	05/28/03	X	
81288	K166GW48D	166GW48DN1	81288014	WG	N	05/29/03	X	
81288	K166GW49D	166GW49DN1	81288015	WG	N	05/29/03	X	
81288	K166GW50D	166GW50DN1	81288016	WG	N	05/29/03	X	
81288	K166GW51D	166GW51DN1	81288017	WG	N	05/29/03	X	
81288	K166GW52D	166GW52DN1	81288018	WG	N	05/29/03	X	
81288	K166GWIN3	166GWIN3N1	81288019	WG	N	05/29/03	X	
81288	K166GWTM3	166GWTM3N1	81288020	WG	N	05/29/03	X	
81288	99999	1200435696	1200435696	WQ	LB		X	
81288	99999	1200435697	1200435697	WQ	BS		X	
81288	99999	1200435701	1200435701	WQ	LB		X	
81288	99999	1200435702	1200435702	WQ	BS		X	
81288	K166GW32D	166GW32DN1MS	1200435703	WG	MS	05/28/03	X	
81288	K166GW32D	166GW32DN1SD	1200435704	WG	SD	05/28/03	X	
81288	99999	1200438722	1200438722	WQ	LB		X	
81288	99999	1200438723	1200438723	WQ	BS		X	
81289	K166GWTM4	166GWTM4N1	81289001	WG	N	05/29/03	X	
81289	FIELDQC	166EW33DN1	81289002	WQ	EB	05/28/03	X	
81289	99999	166TW33DN1	81289003	WQ	TB	05/30/03	X	
81289	FIELDQC	166EW34DN1	81289004	WQ	EB	05/29/03	X	
81289	FIELDQC	166EW003N1	81289005	WQ	EB	05/30/03	X	
81289	99999	1200436535	1200436535	WQ	LB		X	
81289	99999	1200436536	1200436536	WQ	BS		X	
81289	99999	166GWTM4N1MS	1200436537	WG	MS	05/29/03	X	
81289	99999	166GWTM4N1SD	1200436538	WG	SD	05/29/03	X	
P0306033	K166GW040	166GW040N1	P0306033-01	WG	N	05/30/03		X
P0306033	K166GW27D	166GW27DN1	P0306033-02	WG	N	05/28/03		X
P0306033	K166GW30D	166GW30DN1	P0306033-03	WG	N	05/28/03		X
P0306033	K166GW32D	166GW32DN1	P0306033-04	WG	N	05/28/03		X

P0306033	K166GW37D	166GW37DN1	P0306033-05	WG	N	05/30/03		X
P0306033	K166GW37D	166HW37DN1	P0306033-06	WG	FD	05/30/03		X
P0306033	K166GW39D	166GW39DN1	P0306033-07	WG	N	05/30/03		X
P0306033	K166GW41D	166GW41DN1	P0306033-08	WG	N	05/29/03		X
P0306033	K166GW43D	166GW43DN1	P0306033-09	WG	N	05/29/03		X
P0306033	K166GWTM3	166GWTM3N1	P0306033-10	WG	N	05/29/03		X

MATRIX CODE

WG – Ground Water
WQ - Water QC Samples

SAMPLE TYPE CODE

BS - Blank Spike
EB - Equipment Blank
FD - Field Duplicate
LB - Laboratory Blank
N - Native Sample
MS – Matrix Spike
SD – Matrix Spike Duplicate
TB – Trip Blank

ANALYSIS CODE

VOC - Volatile Organic Compounds

Organic Parameters

Quality Control Review

The following list represents the QA/QC measures that were reviewed during the data quality evaluation procedure for organic data.

- **Holding Times** – The holding times are evaluated to verify that samples were extracted and analyzed within holding times.
- **Blank samples** – Method blanks, trip blanks and equipment blanks were provided for this project. Blank samples enable the reviewer to determine if an analyte may be attributed to sampling or laboratory procedures, rather than environmental contamination from site activities.
- **Surrogate Recoveries** – Surrogate Compounds are added to each sample and the recoveries are used to monitor lab performance and possible matrix interference.
- **Lab Control Sample (LCS)** – This sample is a "controlled matrix", either laboratory reagent water or Ottawa sand, in which target compounds have been added prior to extraction/analysis. The recoveries serve as a monitor of the overall performance of each step during the analysis, including sample preparation.
- **Matrix Spike/Matrix Spike Duplicate (MS/MSD) Samples** – Spike recovery is used to evaluate potential matrix interferences, as well as accuracy. Precision information is also determined by calculating the reproducibility between the recoveries of each spiked parameter.
- **Field Duplicate Samples** – These samples are collected to determine precision between a native and its duplicate. This information can only be determined when target compounds are detected.

Volatile Organic Compounds (VOC) Analyses

The QA/QC parameters for VOC analyses for all of the samples were within acceptable control limits.

Hydrogen Analyses

The QA/QC parameters for Hydrogen analyses for all of the samples were within acceptable control limits, except as noted below:

Field Duplicate Samples

All Field Duplicate Samples were within acceptable quality control limits, except as noted below. No flags are applied due to Field Duplicate precision as per EPA National Functional Guidelines.

- Field duplicate sample set 166GW37DN1 / 166HW37DN1 did not meet %RPD criteria for Hydrogen, with results of 5700 nM and 4500 nM, respectively. The %RPD was 23.5% with a 20% limit.

Rejected Data

No data were rejected based upon the validation process for this sampling event.

Conclusion

A review of the analytical data submitted regarding the investigation of Zone K, SWMU 166, at the Charleston Naval Complex, Charleston, South Carolina by CH2M HILL has been completed. An overall evaluation of the data indicates that the sample handling, shipment, and analytical procedures have been adequately completed, and that the analytical results should be considered usable as qualified.

The analytical data had minor QC concerns as indicated above, however, it did not affect data usability for those specific results. The validation review demonstrated that the analytical systems were generally in control and the data results can be used in the decision making process.

Data Validation Summary - Charleston Naval Complex - Zone K, SWMU 166

TO: Sam Naik/CH2M HILL/ATL

FROM: Dan Lucas/CH2M HILL/GNV
Amy Klopper/CH2M HILL/GNV

DATE: March 31, 2005

The purpose of this memorandum is to present the results of the data validation process for the samples collected in Zone K, SWMU 166. The samples were collected between the dates of February 14 and December 11, 2002.

The specific samples and analytical fractions reviewed are summarized below in **Table 1**.

The Quality Control areas that were reviewed and the resulting findings are documented within each subsection that follows. This data was validated for compliance with the analytical method requirements. . This process also included a review of the data to assess the accuracy, precision, and completeness based upon procedures described in the guidance documents such as the Environmental Protection Agency (EPA) *National Functional Guidelines for Inorganic Data Review (EPA 2002) and National Functional Guidelines for Organic Data Review (EPA 1999)*. Quality assurance/quality control (QA/QC) summary forms and data reports were reviewed.

Samples were submitted to General Engineering Laboratories, Inc., in Charleston, South Carolina, for the following analyses: Volatile Organic Compounds (VOC) by method SW-846 8260B, Metals following SW-846 6010/7000 Series methodology, and Anions by EPA method 300.0. Samples were also submitted to Microseeps Laboratories, Inc., in Pittsburgh Pennsylvania, for the following analyses: Hydrogen and Methane by method AM20GAX

Sample results that were not within the acceptance limits were appended with a qualifying flag, which consisted of a single- or double-letter code that indicated a possible problem with the data. The qualifying flags originated during the data review and validation processes. These also include the secondary, or the two/three-digit "sub-qualifier" flags. The secondary qualifiers provide the reasoning behind the assignment of a qualifier flag to the data. The secondary qualifiers are presented and defined below.

Attachment 1 lists the changes in data qualifiers based upon the validation process, excluding those that were "rejected" due to dilutions or re-runs only, where there is a valid result for that parameter.

The following primary flags were used to qualify the data:

[=] Detected. The analyte was analyzed for and detected at the concentration shown.

[J] Estimated. The analyte was present but the reported value may not be accurate or precise.

[U] Undetected. The analyte was analyzed for but not detected above the method detection limit.

[UJ] Detection limit estimated. The analyte was analyzed for but qualified as not detected; the result is estimated.

[R] Rejected. The data is not useable.

Secondary Data Validation Qualifiers

Code	Definition
2C	Second Column (Confirmation)
2SH	Second Source Accuracy High
2SL	Second Source Accuracy Low
BD	Blank Spike/Blank Spike Duplicate (LCS/LCSD) Precision
BL	Blank
BSH	Blank Spike/LCS Recovery High
BSL	Blank Spike/LCS Recovery Low
CCH	Continuing Calibration Verification Accuracy High
CCL	Continuing Calibration Verification Accuracy Low
DL	Dilution
FD	Field Duplicate
HT	Holding Time
IB	In Between (Metals - B's □ J's)
ICH	Initial Calibration High
ICL	Initial Calibration Low
ISH	Internal Standard Area Response High
ISL	Internal Standard Area Response Low
LD	Lab Duplicate
LR	Linear Range (Exceeded calibration range)
MD	Matrix Spike/Matrix Spike Duplicate Precision
MSH	Matrix Spike and/or Matrix Spike Duplicate Recovery High
MSL	Matrix Spike and/or Matrix Spike Duplicate Recovery Low
OT	Other
PD	Pesticide Degradation
PSH	Post Spike Recovery High
PSL	Post Spike Recovery Low
RE	Re-extraction
SSH	Spiked Surrogate Recovery High
SSL	Spiked Surrogate Recovery Low
TN	Tune

Table 1 - Chemical Analytical Methods – Field and Quality Control Samples

SDG	Station ID	Sample ID	Lab Sample ID	Matrix	Sample Type	LR Type	Date Collected	VOC SW8260B	TCLP VOC SW8260B	Hydrogen/ Methane AM20GAX	Metals SW6010B	Anions E300
56223	K166GW27D	166GW27DM1	56223001	WG	N		02/14/02	X			X	X
56223	K166GW31D	166GW31DM1	56223002	WG	N		02/14/02	X			X	X
56223	K166GW32D	166GW32DM1	56223003	WG	N		02/14/02	X			X	X
56223	K166GW32D	166GW32DM1LR	56223003	WG	LR	DL	02/14/02	X				
56223	FIELDQC	166EW27DM1	56223004	WQ	EB		02/14/02	X			X	X
56223	FIELDQC	166TW27DM1	56223005	WQ	TB		02/15/02	X				
56223	LABQC	1200153526	1200153526	WQ	LB							X
56223	K166GW27D	166GW27DM1LR	1200153527	WG	LR	D	02/14/02					X
56223	K166GW27D	166GW27DM1MS	1200153528	WG	MS		02/14/02					X
56223	LABQC	1200153529	1200153529	WQ	BS							X
56223	LABQC	1200154200	1200154200	WQ	LB			X				
56223	LABQC	1200154201	1200154201	WQ	BS			X				
56223	LABQC	1200154206	1200154206	WQ	LB						X	
56223	LABQC	1200154207	1200154207	WQ	BS						X	
56223	K166GW27D	166GW27DM1MS	1200154208	WG	MS		02/14/02				X	
56223	K166GW27D	166GW27DM1SD	1200154209	WG	SD		02/14/02				X	
56223	K166GW27D	166GW27DM1SD	1200154875	WG	SD		02/14/02					X
56330	K166GW28D	166GW28DM1	56330001	WG	N		02/19/02	X			X	X

SDG	Station ID	Sample ID	Lab Sample ID	Matrix	Sample Type	LR Type	Date Collected	VOC SW8260B	LR VOC SW8260B	Hydrogen Methane AM20G	Metals SW6010B	Actions 1-300
56330	K166GW28D	166GW28DM1DL	56330001	WG	LR	DL	02/19/02	X				
56330	K166GW29D	166GW29DM1	56330002	WG	N		02/19/02	X			X	X
56330	K166GW30D	166GW30DM1	56330003	WG	N		02/19/02	X			X	X
56330	K166GW30D	166GW30DM1LR	56330003	WG	LR	DL	02/19/02	X				
56330	K166GW30D	166HW30DM1	56330004	WG	FD		02/19/02	X			X	X
56330	K166GW30D	166HW30DM1LR	56330004	WG	LR	DL	02/19/02	X				
56330	FIELDQC	166EW28DM1	56330005	WQ	EB		02/19/02	X			X	X
56330	FIELDQC	166TW28DM1	56330006	WQ	TB		01/07/02	X				
56330	LABQC	1200154998	1200154998	WQ	LB							X
56330	K166GW28D	166GW28DM1LR	1200155000	WG	LR	D	02/19/02					X
56330	K166GW28D	166GW28DM1MS	1200155002	WG	MS		02/19/02					X
56330	K166GW28D	166GW28DM1SD	1200155003	WG	SD		02/19/02					X
56330	LABQC	1200155004	1200155004	WQ	BS							X
56330	LABQC	1200155085	1200155085	WQ	LB						X	
56330	LABQC	1200155086	1200155086	WQ	BS						X	
56330	K166GW28D	166GW28DM1MS	1200155087	WG	MS		02/19/02				X	
56330	K166GW28D	166GW28DM1SD	1200155088	WG	SD		02/19/02				X	
56330	LABQC	1200164175	1200164175	WQ	LB			X				
56330	LABQC	1200164176	1200164176	WQ	BS			X				
56330	K166GW28D	166GW28DM1MS	1200164177	WG	MS		02/19/02	X				
56330	K166GW28D	166GW28DM1SD	1200164178	WG	SD		02/19/02	X				

SDG	Station ID	Sample ID	Lab Sample ID	Matrix	Sample Type	LR Type	Date Collected	VOC SW8260B	TCLP VOC SW8260B	Hydrogen Methane AM20GAX	Metals SW6010B	Anions E300
56330	LABQC	1200166215	1200166215	WQ	LB			X				
56330	LABQC	1200166216	1200166216	WQ	BS			X				
56330	LABQC	1200166835	1200166835	WQ	LB			X				
56330	LABQC	1200166836	1200166836	WQ	BS			X				
56341	K166VDRM001	166VDRM001M2	56341001	SO	N		02/19/02	X	X			
56341	K166VDRM002	166VDRM002M2	56341002	SO	N		02/19/02	X	X			
56341	K166VDRM002	166VDRM003M2	56341003	SO	N		02/19/02	X	X			
56341	LABQC	1200156215	1200156215	SQ	LB				X			
56341	LABQC	1200168115	1200168115	SQ	LB			X				
56341	LABQC	1200168122	1200168122	SQ	BS			X				
56341	LABQC	1200168161	1200168161	SQ	BD			X				
56341	LABQC	1200172355	1200172355	SQ	LB			X				
56341	LABQC	1200172356	1200172356	SQ	BS			X				
56341	LABQC	1200172595	1200172595	WQ	LB			X				
56341	K166VDRM001	166VDRM001M2M	1200172596	SO	MS		02/19/02		X			
56341	K166VDRM001	166VDRM001M2S	1200172597	SO	SD		02/19/02		X			
56341	LABQC	1200172598	1200172598	WQ	BS			X				
57725	K166GW27D	166GW27DM2	57725001	WG	N		03/18/02	X			X	X
57725	K166GW28D	166GW28DM2	57725002	WG	N		03/18/02	X			X	X
57725	K166GW28D	166GW28DM2DL	57725002	WG	LR	DL	03/18/02	X				
57725	K166GW29D	166GW29DM2	57725003	WG	N		03/18/02	X			X	X

SDG	Station ID	Sample ID	Lab Sample ID	Matrix	Sample Type	LR Type	Date Collected	[illegible]	TCLP VOC [illegible]	Hydrogen Methane [illegible]	Metals [illegible]	Anions [illegible]
57725	K166GW29D	166GW29DM2DL	57725003	WG	LR	DL	03/18/02	X				
57725	K166GW30D	166GW30DM2	57725004	WG	N		03/18/02	X			X	X
57725	K166GW30D	166GW30DM2DL	57725004	WG	LR	DL	03/18/02	X				
57725	K166GW30D	166HW30DM2	57725005	WG	FD		03/18/02	X			X	X
57725	K166GW30D	166HW30DM2DL	57725005	WG	LR	DL	03/18/02	X				
57725	K166GW31D	166GW31DM2	57725006	WG	N		03/18/02	X			X	X
57725	K166GW31D	166GW31DM2DL	57725006	WG	LR	DL	03/18/02	X				
57725	K166GW32D	166GW32DM2	57725007	WG	N		03/18/02	X			X	X
57725	K166GW32D	166GW32DM2DL	57725007	WG	LR	DL	03/18/02	X				
57725	FIELDQC	166EW27DM2	57725008	WQ	EB		03/18/02	X			X	X
57725	FIELDQC	166TW27DM2	57725009	WQ	TB		03/18/02	X				
57725	LABQC	1200186140	1200186140	WQ	LB							X
57725	K166GW27D	166GW27DM2LR	1200186141	WG	LR	D	03/18/02					X
57725	K166GW27D	166GW27DM2MS	1200186142	WG	MS		03/18/02					X
57725	K166GW27D	166GW27DM2SD	1200186143	WG	SD		03/18/02					X
57725	LABQC	1200186144	1200186144	WQ	BS							X
57725	LABQC	1200190185	1200190185	WQ	LB			X				
57725	LABQC	1200190186	1200190186	WQ	BS			X				
57725	K166GW27D	166GW27DM2MS	1200190187	WG	MS		03/18/02	X				
57725	K166GW27D	166GW27DM2SD	1200190188	WG	SD		03/18/02	X				
57725	LABQC	1200190267	1200190267	WQ	LB						X	

SDG	Station ID	Sample ID	Lab Sample ID	Matrix	Sample Type	QER Type	Date Collected	VOC SW8260B	TCLP VOC SW8260B	Hydrocarbon/ Methane/ AM20GX	Metals SW6010B	Anions E300
57725	K166GW27D	166GW27DM2MS	1200190269	WG	MS		03/18/02				X	
57725	K166GW27D	166GW27DM2SD	1200190270	WG	SD		03/18/02				X	
57725	LABQC	1200190271	1200190271	WQ	BS						X	
57725	LABQC	1200190588	1200190588	WQ	LB			X				
57725	LABQC	1200190589	1200190589	WQ	BS			X				
58856	K166GW27D	166GW27DM3	58856001	WG	N		04/11/02	X			X	X
58856	K166GW28D	166GW28DM3	58856002	WG	N		04/11/02	X			X	X
58856	K166GW28D	166GW28DM3DL	58856002	WG	LR	DL	04/11/02	X				
58856	K166GW29D	166GW29DM3	58856003	WG	N		04/11/02	X			X	X
58856	K166GW29D	166GW29DM3DL	58856003	WG	LR	DL	04/11/02	X				
58856	K166GW30D	166GW30DM3	58856004	WG	N		04/11/02	X			X	X
58856	K166GW30D	166GW30DM3DL	58856004	WG	LR	DL	04/11/02	X				
58856	K166GW31D	166GW31DM3	58856005	WG	N		04/11/02	X			X	X
58856	K166GW31D	166GW31DM3DL	58856005	WG	LR	DL	04/11/02	X				
58856	K166GW31D	166HW31DM3	58856006	WG	FD		04/11/02	X			X	X
58856	K166GW31D	166HW31DM3DL	58856006	WG	LR	DL	04/11/02	X				
58856	K166GW32D	166GW32DM3	58856007	WG	N		04/11/02	X			X	X
58856	K166GW32D	166GW32DM3DL	58856007	WG	LR	DL	04/11/02	X				
58856	FIELDQC	166EW27DM3	58856008	WQ	EB		04/11/02	X			X	X
58856	FIELDQC	166TW27DM3	58856009	WQ	TB		04/11/02	X				
58856	LABQC	1200200050	1200200050	WQ	LB							X

SDG	Station ID	Sample ID	Lab Sample ID	Matrix	Sample Type	LR Type	Date Collected	VOC SW8260B	TCLP VOC SW8260B	Hydrogen Methane AM20	Metals SW6010B	Anions E300
58856	K166GW32D	166GW32DM3LR	1200200051	WG	LR	D	04/11/02					X
58856	K166GW32D	166GW32DM3MS	1200200052	WG	MS		04/11/02					X
58856	K166GW32D	166GW32DM3SD	1200200053	WG	SD		04/11/02					X
58856	LABQC	1200200054	1200200054	WQ	BS							X
58856	LABQC	1200200113	1200200113	WQ	BS						X	
58856	K166GW27D	166GW27DM3 MS	1200200114	WG	MS		04/11/02				X	
58856	K166GW27D	166GW27DM3 SD	1200200115	WG	SD		04/11/02				X	
58856	LABQC	1200201356	1200201356	WQ	LB			X				
58856	LABQC	1200201357	1200201357	WQ	BS			X				
58856	K166GW27D	166GW27DM3 MS	1200201358	WG	MS		04/11/02	X				
58856	K166GW27D	166GW27DM3 SD	1200201359	WG	SD		04/11/02	X				
60789	K166GW33D	166GW33DM4	60789001	WG	N		05/20/02	X				X
60789	K166GW33D	166GW33DM4DL	60789001	WG	LR	DL	05/20/02	X				
60789	K166GW34D	166GW34DM4	60789002	WG	N		05/21/02	X				X
60789	K166GW34D	166GW34DM4DL	60789002	WG	LR	DL	05/21/02	X				
60789	K166GW35D	166GW35DM4	60789003	WG	N		05/21/02	X				X
60789	K166GW35D	166GW35DM4DL	60789003	WG	LR	DL	05/21/02	X				
60789	K166GW37D	166GW37DM4	60789004	WG	N		05/21/02	X				X
60789	K166GW37D	166GW37DM4DL	60789004	WG	LR	DL	05/21/02	X				
60789	K166GW39D	166GW39DM4	60789005	WG	N		05/21/02	X				X
60789	K166GW39D	166GW39DM4DL	60789005	WG	LR	DL	05/21/02	X				

SDG	Station ID	Sample ID	Lab Sample ID	Matrix	Sample Type	LR Type	Date Collected	VOC SW8260B	TCLP VOC SW1311	Hydrocarbon Methane AM20GX	Metals SW6010B	Anions PE300
60789	K166GW040	166GW040M4	60789006	WG	N		05/21/02	X				X
60789	K166GW040	166HW040M4	60789007	WG	FD		05/21/02	X				X
60789	FIELDQC	166EW34DM4	60789008	WQ	EB		05/20/02	X				
60789	FIELDQC	166EW33DM4	60789009	WQ	EB		05/20/02					X
60789	K163GW003	163GW003M4	60789010	WG	N		05/20/02					X
60789	LABQC	1200220480	1200220480	WQ	LB							X
60789	K166GW34D	166GW34DM4LR	1200220481	WG	LR	D	05/21/02					X
60789	K166GW34D	166GW34DM4MS	1200220482	WG	MS		05/21/02					X
60789	LABQC	1200220483	1200220483	WQ	BS							X
60789	K166GW34D	166GW34DM4SD	1200220583	WG	SD		05/21/02					X
60789	LABQC	1200222719	1200222719	WQ	LB			X				
60789	K166GW33D	166GW33DM4MS	1200222720	WG	MS		05/20/02	X				
60789	K166GW33D	166GW33DM4SD	1200222721	WG	SD		05/20/02	X				
60789	LABQC	1200222722	1200222722	WQ	BS			X				
60789	LABQC	1200223961	1200223961	WQ	LB			X				
60789	LABQC	1200223962	1200223962	WQ	BS			X				
60790	K163GW03M	163GW03MM4	60790001	WG	N		05/20/02	X				
60790	K163GW03M	163GW03MM4DL	60790001	WG	LR	DL	05/20/02	X				
60790	K166GW26D	166GW26DM4	60790002	WG	N		05/21/02	X				
60790	K166GW26D	166GW26DM4DL	60790002	WG	LR	DL	05/21/02	X				
60790	K166GW25D	166GW25DM4	60790003	WG	N		05/20/02	X				

SDG	Station ID	Sample ID	Lab Sample ID	Matrix	Sample Type	LR Type	Date Collected	VOC SW8260B	TCLP VOC SW8260B	Hydrogen Methane 6720C	Metals SW6010B	Anions E300
60790	K166GW25D	166GW25DM4DL	60790003	WG	LR	DL	05/20/02	X				
60790	K166GW25D	166HW25DM4	60790004	WG	FD		05/20/02	X				
60790	K166GW25D	166HW25DM4DL	60790004	WG	LR	DL	05/20/02	X				
60790	FIELDQC	166TW34DM4	60790005	WQ	TB		05/21/02	X				
60790	FIELDQC	166EW026M4	60790006	WQ	EB		05/21/02	X				
60790	FIELDQC	166TW026M4	60790007	WQ	TB		05/21/02	X				
60790	K166GW07D	166GW07DM4	60790008	WG	N		05/20/02	X				
60790	K166GW07D	166GW07DM4DL	60790008	WG	LR	DL	05/20/02	X				
60790	K163GW001	163GW001M4	60790009	WG	N		05/17/02	X				
60790	FIELDQC	166EW33DM4	60790010	WQ	EB		05/20/02	X				
60790	FIELDQC	166TW33DM4	60790011	WQ	TB		05/17/02	X				
60790	K163GW003	163GW003M4	60790012	WG	N		05/20/02	X				
60790	K166GW026	166GW026M4	60790013	WG	N		05/20/02	X				
60790	LABQC	1200221554	1200221554	WQ	LB			X				
60790	LABQC	1200221555	1200221555	WQ	LB			X				
60790	K166GW026	166GW026M4MS	1200221556	WG	MS		05/20/02	X				
60790	K166GW026	166GW026M4SD	1200221557	WG	SD		05/20/02	X				
60790	LABQC	1200221558	1200221558	WQ	BS			X				
60790	LABQC	1200221559	1200221559	WQ	BS			X				
60879	K166GW41D	166GW41DM4	60879001	WG	N		05/22/02	X				X
60879	K166GW41D	166GW41DM4DL	60879001	WG	LR	DL	05/22/02	X				

SDG	Station ID	Sample ID	Lab Sample ID	Matrix	Sample Type	QC Type	Sample Date	VOC SW8260B	SVOC SW8270C	Hydrocarbon Methane AM20GAX	Metals SW6010B	Anions E300
60879	K166GW42D	166GW42DM4	60879002	WG	N		05/22/02	X				X
60879	K166GW42D	166GW42DM4DL	60879002	WG	LR	DL	05/22/02	X				
60879	K166GW43D	166GW43DM4	60879003	WG	N		05/22/02	X				X
60879	K166GW43D	166GW43DM4DL	60879003	WG	LR	DL	05/22/02	X				
60879	K166GW44D	166GW44DM4	60879004	WG	N		05/22/02	X				X
60879	K166GW44D	166GW44DM4DL	60879004	WG	LR	DL	05/22/02	X				
60879	K166GW13D	166GW13DM4	60879005	WG	N		05/22/02	X				
60879	K166GW13D	166GW13DM4DL	60879005	WG	LR	DL	05/22/02	X				
60879	K166GW08D	166GW08DM4	60879006	WG	N		05/22/02	X				
60879	FIELDQC	166EW035DM4	60879007	WQ	EB		05/22/02	X				
60879	LABQC	1200221074	1200221074	WQ	LB							X
60879	K166GW41D	166GW41DM4LR	1200221075	WG	LR	D	05/22/02					X
60879	K166GW41D	166GW41DM4MS	1200221076	WG	MS		05/22/02					X
60879	K166GW41D	166GW41DM4SD	1200221077	WG	SD		05/22/02					X
60879	LABQC	1200221078	1200221078	WQ	BS							X
60879	LABQC	1200226364	1200226364	WQ	LB			X				
60879	LABQC	1200226365	1200226365	WQ	BS			X				
60879	LABQC	1200227550	1200227550	WQ	LB			X				
60879	LABQC	1200227551	1200227551	WQ	BS			X				
60879	LABQC	1200228227	1200228227	WQ	LB			X				
60879	LABQC	1200228228	1200228228	WQ	BS			X				

SDG	Station ID	Sample ID	Labsample ID	Matrix	Sample Type	LR Type	Date Collected	VOC SW8260B	TOC VOC SW8260B	Hydrogen Methane AM20GAX	Metals SW6010B	Anions E300
61044	K166GW38D	166GW38DM4	61044001	WG	N		05/24/02	X				X
61044	K166GW38D	166GW38DM4DL	61044001	WG	LR	DL	05/24/02	X				
61044	K166GW45D	166GW45DM4	61044002	WG	N		05/23/02	X				X
61044	K166GW45D	166GW45DM4DL	61044002	WG	LR	DL	05/23/02	X				
61044	K166GW47D	166GW47DM4	61044003	WG	N		05/23/02	X				X
61044	K166GW48D	166GW48DM4	61044004	WG	N		05/23/02	X				X
61044	K166GW48D	166GW48DM4DL	61044004	WG	LR	DL	05/23/02	X				
61044	K166GWTM4	166GWTM4M4	61044005	WG	N		05/23/02	X				X
61044	K166GWTM4	166GWTM4M4DL	61044005	WG	LR	DL	05/23/02	X				
61044	K166GW14D	166HW14DM4	61044006	WG	FD		05/23/02	X				
61044	K166GW14D	166GW14DM4	61044007	WG	N		05/23/02	X				
61044	K166GW14D	166GW14DM4DL	61044007	WG	LR	DL	05/23/02	X				
61044	K166GW06D	166GW06DM4	61044008	WG	N		05/22/02	X				
61044	FIELDQC	166EW36DM4	61044009	WQ	EB		05/23/02	X				
61044	K166ZDRM1	K166ZDRM1M5	61044010	WG	N		05/24/02	X				
61044	FIELDQC	166TW36DM4	61044011	WQ	TB		05/22/02	X				
61044	LABQC	1200223779	1200223779	WQ	LB							X
61044	K166GW38D	166GW38DM4LR	1200223780	WG	LR	D	05/24/02					X
61044	K166GW38D	166GW38DM4MS	1200223782	WG	MS		05/24/02					X
61044	K166GW38D	166GW38DM4SD	1200223784	WG	SD		05/24/02					X
61044	LABQC	1200223785	1200223785	WQ	BS							X

SDG	Station ID	Sample ID	Lab Sample ID	Matrix	Sample Type	LR Type	Date Collected	VOC SW8260B	TCLP VOC SW8260B	Hydrogen Methane M20G	Metals SW6010B	Anions E300
61044	LABQC	1200226364	1200226364	WQ	LB			X				
61044	LABQC	1200226365	1200226365	WQ	BS			X				
61044	K166GW38D	166GW38DM4MS	1200226366	WG	MS		05/24/02	X				
61044	K166GW38D	166GW38DM4SD	1200226367	WG	SD		05/24/02	X				
61044	LABQC	1200227438	1200227438	WQ	LB			X				
61044	LABQC	1200227439	1200227439	WQ	BS			X				
61044	LABQC	1200227550	1200227550	WQ	LB			X				
61044	LABQC	1200227551	1200227551	WQ	BS			X				
61134	FIELDQC	166EW46DM4	61134001	WQ	EB		05/28/02	X				
61134	K166GW36D	166GW36DM4	61134002	WG	N		05/28/02	X				X
61134	K166GW36D	166GW36DM4DL	61134002	WG	LR	DL	05/28/02	X				
61134	K166GW46D	166GW46DM4	61134003	WG	N		05/28/02	X				X
61134	K166GW49D	166GW49DM4	61134004	WG	N		05/28/02	X				X
61134	LABQC	1200224768	1200224768	WQ	LB							X
61134	LABQC	1200224775	1200224775	WQ	BS							X
61134	K166GW36D	166GW36DM4LR	1200225432	WG	LR	D	05/28/02					X
61134	K166GW36D	166GW36DM4MS	1200225433	WG	MS		05/28/02					X
61134	K166GW36D	166GW36DM4SD	1200225434	WG	SD		05/28/02					X
61134	FIELDQC	166EW46DM4MS	1200227623	WQ	MS		05/28/02	X				
61134	FIELDQC	166EW46DM4SD	1200227624	WQ	SD		05/28/02	X				
61134	LABQC	1200228223	1200228223	WQ	LB			X				

SDG	Station ID	Sample ID	Lab Sample ID	Matrix	Sample Type	[illegible]	[illegible] collected	[illegible]	[illegible]	[illegible]	[illegible]	[illegible]
61134	LABQC	1200228224	1200228224	WQ	BS			X				
61134	LABQC	1200228225	1200228225	WQ	LB			X				
61134	LABQC	1200228226	1200228226	WQ	BS			X				
61170	K166GW50D	166GW50DM4	61170001	WG	N		05/29/02	X				X
61170	K166GW50D	166GW50DM4DL	61170001	WG	LR	DL	05/29/02	X				
61170	K166GW51D	166GW51DM4	61170002	WG	N		05/29/02	X				X
61170	K166GW52D	166GW52DM4	61170003	WG	N		05/29/02	X				X
61170	K166GWTM3	166GWTM3M4	61170004	WG	N		05/29/02	X				X
61170	FIELDQC	166TWS1DM4	61170005	WQ	TB		05/14/02	X				
61170	FIELDQC	166EWS0DM4	61170006	WQ	EB		05/29/02	X				
61170	LABQC	1200224768	1200224768	WQ	LB							X
61170	LABQC	1200224775	1200224775	WQ	BS							X
61170	LABQC	1200227622	1200227622	WQ	LB			X				
61170	LABQC	1200227625	1200227625	WQ	BS			X				
61170	LABQC	1200228223	1200228223	WQ	LB			X				
61170	LABQC	1200228224	1200228224	WQ	BS			X				
61170	LABQC	1200228225	1200228225	WQ	LB			X				
61170	LABQC	1200228226	1200228226	WQ	BS			X				
61258	K166GW16D	166HW16DM4	61258001	WG	FD		05/30/02	X				X
61258	K166GW16D	166GW16DM4	61258002	WG	N		05/30/02	X				X
61258	K166GWIN3	166GWIN3M4	61258003	WG	N		05/30/02	X				X

SDG	Station ID	Sample ID	Lab Sample ID	Matrix	Sample Type	[illegible]	Date Collected	[illegible]	[illegible]	[illegible]	[illegible]	[illegible]
61258	K166GW053	166GW053M4	61258004	WG	N		05/30/02	X				
61258	K166GW054	166GW054M4	61258005	WG	N		05/30/02	X				
61258	K166GW055	166GW055M4	61258006	WG	N		05/30/02	X				
61258	K166GW055	166HW055M4	61258007	WG	FD		05/30/02	X				
61258	K698GW001	698GW001M4	61258008	WG	N		05/30/02	X				
61258	K698GW001	698HW001M4	61258009	WG	FD		05/30/02	X				
61258	FIELDQC	166EW16DM4	61258010	WQ	EB		05/30/02	X				
61258	K163GW005	163GW005M4	61258011	WG	N		05/30/02	X				
61258	LABQC	1200226686	1200226686	WQ	LB							X
61258	K166GW16D	166HW16DM4LR	1200226687	WG	LR	D	05/30/02					X
61258	K166GW16D	166HW16DM4MS	1200226688	WG	MS		05/30/02					X
61258	K166GW16D	166HW16DM4SD	1200226689	WG	SD		05/30/02					X
61258	LABQC	1200226716	1200226716	WQ	BS							X
61258	LABQC	1200228403	1200228403	WQ	LB			X				
61258	LABQC	1200228406	1200228406	WQ	BS			X				
61258	LABQC	1200229048	1200229048	WQ	LB			X				
61258	LABQC	1200229049	1200229049	WQ	BS			X				
61326	K166GW17D	166GW17DM4	61326001	WG	N		05/31/02	X				
61326	K166GW017	166GW017M4	61326002	WG	N		05/31/02	X				
61326	K166GW19D	166GW19DM4	61326003	WG	N		05/31/02	X				
61326	K166GW21D	166GW21DM4	61326004	WG	N		05/31/02	X				

SDG	Station ID	Sample ID	Lab Sample ID	Matrix	Sample Type	LR Type	Date Collected	VOC SW8260B	TCL VOC SW8260B	Hydrogen Methane AM20G	Metals SW6010B	Anions E-300
61326	FIELDQC	166EW17M4	61326005	WQ	EB		05/31/02	X				
61326	FIELDQC	166TW21DM4	61326006	WQ	TB		05/31/02	X				
61326	K166GW17D	166GW17DM4MS	1200228404	WG	MS		05/31/02	X				
61326	K166GW17D	166GW17DM4SD	1200228405	WG	SD		05/31/02	X				
61326	LABQC	1200229048	1200229048	WQ	LB			X				
61326	LABQC	1200229049	1200229049	WQ	BS			X				
61326	LABQC	1200231343	1200231343	WQ	LB			X				
61326	LABQC	1200231344	1200231344	WQ	BS			X				
62650	FIELDQC	166TW27DM6	62650001	WQ	TB		06/10/02	X				
62650	K166GW27D	166GW27DM6	62650002	WG	N		06/24/02	X			X	X
62650	K166GW28D	166GW28DM6	62650003	WG	N		06/24/02	X			X	X
62650	K166GW28D	166GW28DM6DL	62650003	WG	LR	DL	06/24/02	X				
62650	K166GW29D	166GW29DM6	62650004	WG	N		06/24/02	X			X	X
62650	K166GW30D	166GW30DM6	62650005	WG	N		06/24/02	X			X	X
62650	K166GW31D	166GW31DM6	62650006	WG	N		06/25/02	X			X	X
62650	K166GW31D	166HW31DM6	62650007	WG	FD		06/25/02	X			X	X
62650	K166GW32D	166GW32DM6	62650008	WG	N		06/25/02	X			X	X
62650	FIELDQC	166EW27DM6	62650009	WQ	EB		06/24/02	X			X	X
62650	LABQC	1200248782	1200248782	WQ	LB							X
62650	K166GW27D	166GW27DM6LR	1200248784	WG	LR	D	06/24/02					X
62650	K166GW27D	166GW27DM6MS	1200248786	WG	MS		06/24/02					X

SDG	Station ID	Sample ID	Lab Sample ID	Matrix	Sample Type	LR Type	Date Collected	VOC SW8260B	TCLP VOC SW8260B	Hydrogen / Methane AM20GX	Metals SW6010B	Anions E300
62650	K166GW27D	166GW27DM6SD	1200248787	WG	SD		06/24/02					X
62650	LABQC	1200248788	1200248788	WQ	BS							X
62650	LABQC	1200248956	1200248956	WQ	LB						X	
62650	K166GW27D	166GW27DM6MS	1200248961	WG	MS		06/24/02				X	
62650	K166GW27D	166GW27DM6SD	1200248962	WG	SD		06/24/02				X	
62650	LABQC	1200248963	1200248963	WQ	BS						X	
62650	LABQC	1200252736	1200252736	WQ	LB			X				
62650	K166GW27D	166GW27DM6MS	1200252737	WG	MS		06/24/02	X				
62650	K166GW27D	166GW27DM6SD	1200252738	WG	SD		06/24/02	X				
62650	LABQC	1200252739	1200252739	WQ	BS			X				
62650	LABQC	1200253945	1200253945	WQ	LB			X				
62650	LABQC	1200253946	1200253946	WQ	BS			X				
64473	FIELDQC	163TW003M7	64473001	WQ	TB		07/30/02	X				
64473	FIELDQC	163EW003M7	64473002	WQ	EB		07/30/02	X				X
64473	K166GW50D	166GW50DM7	64473003	WG	N		07/30/02	X				X
64473	K166GW50D	166GW50DM7DL	64473003	WG	LR	DL	07/30/02	X				
64473	K166GW50D	166HW50DM7	64473004	WG	FD		07/30/02	X				X
64473	K166GW50D	166HW50DM7DL	64473004	WG	LR	DL	07/30/02	X				
64473	K166GW51D	166GW51DM7	64473005	WG	N		07/30/02	X				X
64473	K166GW52D	166GW52DM7	64473006	WG	N		07/30/02	X				X
64473	K166GWIN3	166GWIN3M7	64473007	WG	N		07/30/02	X				X

SDG	Station ID	Sample ID	Sample ID	Matrix	Sample Type	LR Type	Date Collected	[illegible]	TCLP VOC SW8260B	[illegible]	Metals SW6010B	Anions E300
64473	K166GWTM3	166GWTM3M7	64473008	WG	N		07/30/02	X				X
64473	K166GWTM4	166GWTM4M7	64473009	WG	N		07/30/02	X				X
64473	K166GW16D	166GW16DM7	64473010	WG	N		07/30/02	X				X
64473	LABQC	1200274899	1200274899	WQ	LB							X
64473	K166GW50D	166GW50DM7LR	1200274900	WG	LR	D	07/30/02					X
64473	K166GW50D	166GW50DM7MS	1200274903	WG	MS		07/30/02					X
64473	LABQC	1200274906	1200274906	WQ	BS							X
64473	LABQC	1200278622	1200278622	WQ	LB			X				
64473	LABQC	1200278623	1200278623	WQ	LB			X				
64473	K166GW50D	166GW50DM7MS	1200278624	WG	MS		07/30/02	X				
64473	K166GW50D	166GW50DM7SD	1200278625	WG	SD	DL	07/30/02	X				
64473	LABQC	1200278626	1200278626	WQ	BS			X				
64473	LABQC	1200278627	1200278627	WQ	BS			X				
64473	LABQC	1200279157	1200279157	WQ	LB			X				
64473	LABQC	1200279158	1200279158	WQ	BS			X				
64475	K163GW001	163GW001M7	64475001	WG	N		07/29/02	X				
64475	K163GW005	163GW005M7	64475002	WG	N		07/29/02	X				
64475	K166GW017	166GW017M7	64475003	WG	N		07/30/02	X				
64475	K166GW026	166GW026M7	64475004	WG	N		07/29/02	X				
64475	K166GW053	166GW053M7	64475007	WG	N		07/29/02	X				
64475	K166GW053	166GW053M7DL	64475007	WG	LR	DL	07/29/02	X				

SDG	Station ID	Sample ID	Lab Sample ID	Matrix	Sample Type	LR Type	Date Collected	VOC SW8260B	TCLP VOC SW8260B	Hydrocarbon Methane, Ethane, Ethene	Metals SW6010B	Anions E300
64475	K166GW054	166GW054M7	64475008	WG	N		07/29/02	X				
64475	K166GW054	166GW054M7DL	64475008	WG	LR	DL	07/29/02	X				
64475	K166GW055	166GW055M7	64475009	WG	N		07/29/02	X				
64475	K166GW055	166GW055M7DL	64475009	WG	LR	DL	07/29/02	X				
64475	K166GW055	166HW055M7	64475010	WG	FD		07/29/02	X				
64475	K166GW055	166HW055M7DL	64475010	WG	LR	DL	07/29/02	X				
64475	K166GW07D	166GW07DM7	64475011	WG	N		07/29/02	X				
64475	K166GW07D	166GW07DM7DL	64475011	WG	LR	DL	07/29/02	X				
64475	K166GW08D	166GW08DM7	64475012	WG	N		07/30/02	X				
64475	K166GW13D	166GW13DM7	64475013	WG	N		07/29/02	X				
64475	K166GW13D	166GW13DM7DL	64475013	WG	LR	DL	07/29/02	X				
64475	K166GW13D	166HW13DM7	64475014	WG	FD		07/29/02	X				
64475	K166GW13D	166HW13DM7DL	64475014	WG	LR	DL	07/29/02	X				
64475	K166GW14D	166GW14DM7	64475015	WG	N		07/29/02	X				
64475	K166GW14D	166GW14DM7DL	64475015	WG	LR	DL	07/29/02	X				
64475	K166GW17D	166GW17DM7	64475016	WG	N		07/30/02	X				
64475	K166GW26D	166GW26DM7	64475019	WG	N		07/29/02	X				
64475	K166GW26D	166GW26DM7DL	64475019	WG	LR	DL	07/29/02	X				
64475	FIELDQC	166EW017M7	64475020	WQ	EB		07/29/02	X				
64475	LABQC	1200277522	1200277522	WQ	LB			X				
64475	K166GW026	166GW026M7MS	1200277523	WG	MS		07/29/02	X				

SDG	Station ID	Sample ID	Lab Sample ID	Matrix	Sample Type	QC Type	Date Collected	[illegible]	[illegible]	[illegible]	[illegible]	[illegible]	Action Taken
64475	K166GW026	166GW026M7SD	1200277524	WG	SD		07/29/02	X					
64475	LABQC	1200277525	1200277525	WQ	BS			X					
64475	K166GW17D	166GW17DM7MS	1200277530	WG	MS		07/30/02	X					
64475	K166GW17D	166GW17DM7SD	1200277531	WG	SD		07/30/02	X					
64475	LABQC	1200278542	1200278542	WQ	LB			X					
64475	LABQC	1200278543	1200278543	WQ	BS			X					
64475	LABQC	1200279731	1200279731	WQ	LB			X					
64475	LABQC	1200279732	1200279732	WQ	BS			X					
64550	FIELDQC	166TW040M7	64550001	WQ	TB		07/31/02	X					
64550	FIELDQC	166EW040M7	64550002	WQ	EB		07/31/02	X					X
64550	K166GW34D	166GW34DM7	64550003	WG	N		07/31/02	X					X
64550	K166GW34D	166GW34DM7DL	64550003	WG	LR	DL	07/31/02	X					
64550	K166GW36D	166GW36DM7	64550004	WG	N		07/31/02	X					X
64550	K166GW36D	166GW36DM7DL	64550004	WG	LR	DL	07/31/02	X					
64550	K166GW37D	166GW37DM7	64550005	WG	N		07/31/02	X					X
64550	K166GW45D	166GW45DM7	64550006	WG	N		07/31/02	X					X
64550	K166GW46D	166GW46DM7	64550007	WG	N		07/31/02	X					X
64550	K166GW47D	166GW47DM7	64550008	WG	N		07/31/02	X					X
64550	K166GW48D	166GW48DM7	64550009	WG	N		07/31/02	X					X
64550	K166GW49D	166GW49DM7	64550010	WG	N		07/31/02	X					X
64550	LABQC	1200276323	1200276323	WQ	LB								X

SDG	Station ID	Sample ID	Lab Sample ID	Matrix	Sample Type	LR Type	Date Collected	VOC SW8260B	Total Metals SW8260B	Hydrogen / Methane AM20G	Metals SW6010B	Anions E300
64550	K166GW34D	166GW34DM7LR	1200276324	WG	LR	D	07/31/02					X
64550	K166GW34D	166GW34DM7MS	1200276326	WG	MS		07/31/02					X
64550	LABQC	1200276328	1200276328	WQ	BS							X
64550	LABQC	1200278622	1200278622	WQ	LB			X				
64550	LABQC	1200278623	1200278623	WQ	LB			X				
64550	LABQC	1200278626	1200278626	WQ	BS			X				
64550	LABQC	1200278627	1200278627	WQ	BS			X				
64550	LABQC	1200279157	1200279157	WQ	LB			X				
64550	LABQC	1200279158	1200279158	WQ	BS			X				
64676	K163GW03M	163GW03MM7	64676001	WG	N		08/01/02	X				
64676	K163GW003	163GW003M7	64676002	WG	N		08/01/02	X				X
64676	K163GW003	163GW003M7DL	64676002	WG	LR	DL	08/01/02	X				
64676	K166GW040	166GW040M7	64676003	WG	N		08/01/02	X				X
64676	K166GW040	166GW040M7DL	64676003	WG	LR	DL	08/01/02	X				
64676	K166GW040	166HW040M7	64676004	WG	FD		08/01/02	X				X
64676	K166GW33D	166GW33DM7	64676005	WG	N		08/01/02	X				X
64676	K166GW38D	166GW38DM7	64676006	WG	N		08/01/02	X				X
64676	K166GW39D	166GW39DM7	64676007	WG	N		08/01/02	X				X
64676	K166GW41D	166GW41DM7	64676008	WG	N		08/01/02	X				X
64676	K166GW41D	166GW41DM7DL	64676008	WG	LR	DL	08/01/02	X				
64676	K166GW42D	166GW42DM7	64676009	WG	N		08/01/02	X				X

SDG	Station ID	Sample ID	Lab Sample ID	Matrix	Sample Type	Sample Level	Date Collected	SVOC 8260B	Pesticides 8081A	Herbicides 8151A	Metals SW6010B/7470A	Anions E300
64676	K166GW42D	166GW42DM7DL	64676009	WG	LR	DL	08/01/02	X				
64676	K166GW43D	166GW43DM7	64676010	WG	N		08/01/02					X
64676	K166GW43D	166GW43DM7DL	64676010	WG	LR	DL	08/01/02	X				
64676	K166GW44D	166GW44DM7	64676011	WG	N		08/01/02	X				X
64676	K166GW44D	166GW44DM7DL	64676011	WG	LR	DL	08/01/02	X				
64676	K166GW35D	166GW35DM7	64676012	WG	N		08/01/02	X				X
64676	K166GW35D	166GW35DM7DL	64676012	WG	LR	DL	08/01/02	X				
64676	FIELDQC	166TW005M7	64676013	WQ	TB		08/01/02	X				
64676	LABQC	1200277260	1200277260	WQ	LB							X
64676	K166GW040	166GW040M7LR	1200277261	WG	LR	D	08/01/02					X
64676	K166GW43D	166GW43DM7LR	1200277262	WG	LR	D	08/01/02					X
64676	K166GW040	166GW040M7MS	1200277263	WG	MS		08/01/02					X
64676	K166GW43D	166GW43DM7MS	1200277264	WG	MS		08/01/02					X
64676	LABQC	1200277265	1200277265	WQ	BS							X
64676	LABQC	1200277808	1200277808	WQ	LB			X				
64676	K163GW03M	163GW03MM7MS	1200277810	WG	MS		08/01/02	X				
64676	K163GW03M	163GW03MM7SD	1200277812	WG	SD		08/01/02	X				
64676	LABQC	1200277813	1200277813	WQ	BS			X				
64676	LABQC	1200278336	1200278336	WQ	LB			X				
64676	LABQC	1200278338	1200278338	WQ	BS			X				
64676	LABQC	1200279149	1200279149	WQ	LB			X				

SDG	Station ID	Sample ID	Lab Sample ID	Matrix	Sample Type	QC Type	Date Collected	VOC RWQCB(1998)	VOC SW8260B	Hydrazine Methanol Amines	Metals SW6010B	Anions EPA300
64676	LABQC	1200279150	1200279150	WQ	BS			X				
64677	FIELDQC	166EW026M7	64677001	WQ	EB		08/01/02	X				
64677	FIELDQC	166TW017M7	64677002	WQ	TB		08/01/02	X				
64677	K166GW21D	166GW21DM7	64677003	WG	N		08/01/02	X				
64677	K166GW25D	166GW25DM7	64677004	WG	N		07/31/02	X				
64677	K696GW001	696GW001M7	64677005	WG	N		08/01/02	X				
64677	K696GW001	696HW001M7	64677006	WG	FD		08/01/02	X				
64677	K166GW06D	166GW06DM7	64677007	WG	N		08/01/02	X				
64677	K166GW19D	166GW19DM7	64677008	WG	N		08/02/02	X				
64677	LABQC	1200279408	1200279408	WQ	LB			X				
64677	LABQC	1200279409	1200279409	WQ	BS			X				
64677	K696GW001	696GW001M7MS	1200279410	WG	MS		08/01/02	X				
64677	K696GW001	696GW001M7SD	1200279411	WG	SD		08/01/02	X				
64677	LABQC	1200280582	1200280582	WQ	LB			X				
64677	LABQC	1200280583	1200280583	WQ	BS			X				
71658	FIELDQC	166EW017M8	71658001	WQ	EB		12/02/02	X				
71658	FIELDQC	166EW026M8	71658002	WQ	EB		12/03/02	X				
71658	K166GW026	166GW026M8	71658003	WG	N		12/02/02	X				
71658	K166GW001	166GW001M8	71658004	WG	N		12/02/02	X				
71658	K166GW005	166GW005M8	71658005	WG	N		12/02/02	X				
71658	K166GW017	166GW017M8	71658006	WG	N		12/03/02	X				

SDG	Station ID	Sample ID	Lab Sample ID	Matrix	Sample Type	LR Type	Date Collected	VOC SW8260B	TCL VOC [illegible]	Hydrogen Methane [illegible]	Metals SW6010B	Anions E300
71658	K166GW053	166GW053M8	71658007	WG	N		12/02/02	X				
71658	K166GW053	166GW053M8DL	71658007	WG	LR	DL	12/02/02	X				
71658	K166GW054	166GW054M8	71658008	WG	N		12/02/02	X				
71658	K166GW054	166GW054M8DL	71658008	WG	LR	DL	12/02/02	X				
71658	K166GW055	166GW055M8	71658009	WG	N		12/02/02	X				
71658	K166GW055	166GW055M8DL	71658009	WG	LR	DL	12/02/02	X				
71658	K166GW056	166GW056M8	71658010	WG	N		12/02/02	X				
71658	K166GW056	166GW056M8DL	71658010	WG	LR	DL	12/02/02	X				
71658	K166GW06D	166GW06DM8	71658011	WG	N		12/03/02	X				
71658	K166GW07D	166GW07DM8	71658012	WG	N		12/03/02	X				
71658	K166GW07D	166GW07DM8DL	71658012	WG	LR	DL	12/03/02	X				
71658	K166GW08D	166GW08DM8	71658013	WG	N		12/03/02	X				
71658	K166GW13D	166GW13DM8	71658014	WG	N		12/02/02	X				
71658	K166GW13D	166GW13DM8DL	71658014	WG	LR	DL	12/02/02	X				
71658	K166GW13D	166HW13DM8	71658015	WG	FD		12/02/02	X				
71658	K166GW14D	166GW14DM8	71658016	WG	N		12/03/02	X				
71658	K166GW14D	166GW14DM8DL	71658016	WG	LR	DL	12/03/02	X				
71658	LABQC	1200347504	1200347504	WQ	LB			X				
71658	LABQC	1200347505	1200347505	WQ	BS			X				
71658	K166GW026	166GW026M8MS	1200347506	WG	MS		12/02/02	X				
71658	K166GW026	166GW026M8SD	1200347507	WG	SD		12/02/02	X				

SDG	Station ID	Sample ID	Lab Sample ID	Matrix	Sample Type	LR Type	Date Collected	VOC SW8260B	TCLP VOC SW1260B	Hydrogen Methane AM20GAX	Metals SW6010B	Anions E300
71658	K166GW005	166GW005M8MS	1200347848	WG	MS		12/02/02	X				
71658	K166GW005	166GW005M8SD	1200347849	WG	SD		12/02/02	X				
71658	LABQC	1200348408	1200348408	WQ	LB			X				
71658	LABQC	1200348409	1200348409	WQ	BS			X				
71659	K166GW17D	166GW17DM8	71659001	WG	N		12/03/02	X				
71659	K166GW19D	166GW19DM8	71659002	WG	N		12/04/02	X				
71659	K166GW19D	166GW19DM8DL	71659002	WG	LR	DL	12/04/02	X				
71659	K166GW21D	166GW21DM8	71659003	WG	N		12/03/02	X				
71659	K166GW25D	166GW25DM8	71659004	WG	N		12/03/02	X				
71659	K166GW25D	166GW25DM8DL	71659004	WG	LR	DL	12/03/02	X				
71659	K166GW26D	166GW26DM8	71659005	WG	N		12/02/02	X				
71659	K698GW001	698GW001M8	71659006	WG	N		12/03/02	X				
71659	K698GW001	698HW001M8	71659007	WG	FD		12/03/02	X				
71659	LABQC	1200348688	1200348688	WQ	LB			X				
71659	K166GW17D	166GW17DM8MS	1200348689	WG	MS		12/03/02	X				
71659	K166GW17D	166GW17DM8SD	1200348690	WG	SD		12/03/02	X				
71659	LABQC	1200348691	1200348691	WQ	BS			X				
71659	LABQC	1200349538	1200349538	WQ	LB			X				
71659	LABQC	1200349539	1200349539	WQ	BS			X				
71766	FIELDQC	163TW003M8	71766001	WQ	TB		12/06/02	X				
71766	FIELDQC	163EW003M8	71766002	WQ	EB		12/06/02	X				X

SDG	Station ID	Sample ID	Lab Sample ID	Matrix	Sample Type	LR Type	Date Collected	Vol. SW8260B	TCLP VOC SW8260B	Hydrogen Methane AM20	Metals SW6010B	Anions E300
71766	K166GW49D	166GW49DM8	71766003	WG	N		12/06/02	X				X
71766	K166GW49D	166GW49DM8DL	71766003	WG	LR	DL	12/06/02	X				
71766	K166GW50D	166GW50DM8	71766004	WG	N		12/06/02	X				X
71766	K166GW50D	166GW50DM8DL	71766004	WG	LR	DL	12/06/02	X				
71766	K166GW50D	166HW50DM8	71766005	WG	FD		12/06/02	X				X
71766	K166GW50D	166HW50DM8DL	71766005	WG	LR	DL	12/06/02	X				
71766	K166GW51D	166GW51DM8	71766006	WG	N		12/04/02	X				X
71766	K166GW51D	166GW51DM8DL	71766006	WG	LR	DL	12/04/02	X				
71766	K166GW52D	166GW52DM8	71766007	WG	N		12/04/02	X				X
71766	K166GW52D	166GW52DM8DL	71766007	WG	LR	DL	12/04/02	X				
71766	K166GWIN3	166GWIN3M8	71766008	WG	N		12/06/02	X				X
71766	K166GWTM3	166GWTM3M8	71766009	WG	N		12/04/02	X				X
71766	K166GWTM3	166GWTM3M8DL	71766009	WG	LR	DL	12/04/02	X				
71766	K166GWTM4	166GWTM4M8	71766010	WG	N		12/04/02	X				X
71766	K166GWTM4	166GWTM4M8DL	71766010	WG	LR	DL	12/04/02	X				
71766	K166GW45D	166GW45DM8	71766011	WG	N		12/06/02	X				X
71766	K166GW45D	166GW45DM8DL	71766011	WG	LR	DL	12/06/02	X				
71766	K166GW46D	166GW46DM8	71766012	WG	N		12/06/02	X				X
71766	K166GW46D	166GW46DM8DL	71766012	WG	LR	DL	12/06/02	X				
71766	K166GW47D	166GW47DM8	71766013	WG	N		12/06/02	X				X
71766	K166GW48D	166GW48DM8	71766014	WG	N		12/06/02	X				X

SDG	Station ID	Sample ID	Lab Sample ID	Matrix	Sample Type	QC Type	Date Collected	VOC SW-846 260B	Total VOC Aromatics	Hydrocarbon Methane AM/Gas	Metals SW6010B	Anions E300
71766	K166GW48D	166GW48DM8DL	71766014	WG	LR	DL	12/06/02	X				
71766	LABQC	1200346797	1200346797	WQ	LB							X
71766	FIELDQC	163EW003M8LR	1200346798	WQ	LR	D	12/06/02					X
71766	K166GW48D	166GW48DM8LR	1200346799	WG	LR	D	12/06/02					X
71766	FIELDQC	163EW003M8MS	1200346800	WQ	MS		12/06/02					X
71766	K166GW48D	166GW48DM8MS	1200346801	WG	MS		12/06/02					X
71766	LABQC	1200346802	1200346802	WQ	BS							X
71766	LABQC	1200349304	1200349304	WQ	LB			X				
71766	LABQC	1200349305	1200349305	WQ	BS			X				
71766	K166GW48D	166GW48DM8MS	1200349306	WG	MS		12/06/02	X				
71766	K166GW48D	166GW48DM8SD	1200349307	WG	SD		12/06/02	X				
71766	LABQC	1200349999	1200349999	WQ	LB			X				
71766	LABQC	1200350000	1200350000	WQ	BS			X				
71766	LABQC	1200353885	1200353885	WQ	LB			X				
71766	LABQC	1200353886	1200353886	WQ	LB			X				
71766	LABQC	1200353887	1200353887	WQ	BS			X				
71766	LABQC	1200353888	1200353888	WQ	BS			X				
71852	FIELDQC	166EW040M8	71852001	WQ	EB		12/09/02	X				X
71852	FIELDQC	166TW040M8	71852002	WQ	TB		12/09/02	X				
71852	K166GW040	166GW040M8	71852003	WG	N		12/09/02	X				X
71852	K166GW040	166GW040M8DL	71852003	WG	LR	DL	12/09/02	X				

SDG	Station ID	Sample ID	Laboratory ID	Matrix	Sample Type	QC Type	Date Collected	Data Validation Completed	Data Validation Performed	Data Validation Reviewed	Data Validation Verified	Action Form
71852	K166GW040	166HW040M8	71852004	WG	FD		12/09/02	X				X
71852	K166GW040	166HW040M8DL	71852004	WG	LR	DL	12/09/02	X				
71852	K166GW34D	166GW34DM8	71852005	WG	N		12/09/02	X				X
71852	K166GW34D	166GW34DM8DL	71852005	WG	LR	DL	12/09/02	X				
71852	K166GW35D	166GW35DM8	71852006	WG	N		12/09/02	X				X
71852	K166GW36D	166GW36DM8	71852007	WG	N		12/09/02	X				X
71852	K166GW36D	166GW36DM8DL	71852007	WG	LR	DL	12/09/02	X				
71852	K166GW37D	166GW37DM8	71852008	WG	N		12/09/02	X				X
71852	K166GW37D	166GW37DM8DL	71852008	WG	LR	DL	12/09/02	X				
71852	K166GW39D	166GW39DM8	71852009	WG	N		12/09/02	X				X
71852	K166GW41D	166GW41DM8	71852010	WG	N		12/09/02	X				X
71852	K166GW42D	166GW42DM8	71852011	WG	N		12/09/02	X				X
71852	K166GW43D	166GW43DM8	71852012	WG	N		12/09/02	X				X
71852	K166GW43D	166GW43DM8DL	71852012	WG	LR	DL	12/09/02	X				
71852	K166GW44D	166GW44DM8	71852013	WG	N		12/09/02	X				X
71852	LABQC	1200349290	1200349290	WQ	LB							X
71852	K166GW040	166GW040M8LR	1200349291	WG	LR	D	12/09/02					X
71852	K166GW44D	166GW44DM8LR	1200349292	WG	LR	D	12/09/02					X
71852	K166GW040	166GW040M8MS	1200349293	WG	MS		12/09/02					X
71852	K166GW44D	166GW44DM8MS	1200349294	WG	MS		12/09/02					X
71852	LABQC	1200349295	1200349295	WQ	BS							X

SDG	Station ID	Sample ID	Lab Sample ID	Matrix	Sample Type	LR Type	Date Collected	VOC SW8260B	TCLP VOC SW8260B	Hydrocarbon Methane AM20GAX	Metals SW6010B	Anions E300
71852	LABQC	1200350389	1200350389	WQ	LB			X				
71852	LABQC	1200350390	1200350390	WQ	BS			X				
71852	K166GW39D	166GW39DM8MS	1200350391	WG	MS		12/09/02	X				
71852	K166GW39D	166GW39DM8SD	1200350392	WG	SD		12/09/02	X				
71852	LABQC	1200350972	1200350972	WQ	LB			X				
71852	LABQC	1200350973	1200350973	WQ	BS			X				
71852	LABQC	1200353540	1200353540	WQ	LB			X				
71852	LABQC	1200353541	1200353541	WQ	BS			X				
72055	FIELDQC	166EB041M8	72055001	WQ	EB		12/11/02	X				X
72055	FIELDQC	166TW041M8	72055002	WQ	TB		12/11/02	X				
72055	K163GW003	163GW003M8	72055003	WG	N		12/11/02	X				X
72055	K163GW003	163GW003M8DL	72055003	WG	LR	DL	12/11/02	X				
72055	K163GW03M	163GW03MM8	72055004	WG	N		12/11/02	X				X
72055	K166GW16D	166GW16DM8	72055005	WG	N		12/11/02	X				X
72055	K166GW16D	166GW16DM8DL	72055005	WG	LR	DL	12/11/02	X				
72055	K166GW33D	166GW33DM8	72055006	WG	N		12/11/02	X				X
72055	K166GW38D	166GW38DM8	72055007	WG	N		12/11/02	X				X
72055	K166GW38D	166GW38DM8DL	72055007	WG	LR	DL	12/11/02	X				
72055	K163GW005	163GW005M8	72055008	WG	N		12/11/02	X				
72055	LABQC	1200350702	1200350702	WQ	LB							X
72055	K163GW003	163GW003M8LR	1200350703	WG	LR	D	12/11/02					X

SDG	Station ID	Sample ID	Lab Sample ID	Matrix	Sample Type	Time Period	Date Sampled	Volatile Organics	Semi-Volatile Organics	Metals	Cyanide	Anions
72055	K163GW003	163GW003M8MS	1200350705	WG	MS		12/11/02					X
72055	K163GW003	163GW003M8SD	1200350707	WG	SD		12/11/02					X
72055	LABQC	1200350708	1200350708	WQ	BS							X
72055	LABQC	1200354744	1200354744	WQ	LB			X				
72055	LABQC	1200354745	1200354745	WQ	BS			X				
72055	LABQC	1200355848	1200355848	WQ	LB			X				
72055	LABQC	1200355849	1200355849	WQ	BS			X				
P0202323	K166GW27D	166GW27DM1	P0202323-01	WG	N		02/14/02			X		
P0202323	K166GW28D	166GW28DM1	P0202323-02	WG	N		02/19/02			X		
P0202323	K166GW29D	166GW29DM1	P0202323-03	WG	N		02/19/02			X		
P0202323	K166GW30D	166GW30DM1	P0202323-04	WG	N		02/19/02			X		
P0202323	K166GW30D	166HW30DM1	P0202323-05	WG	FD		02/19/02			X		
P0202323	K166GW31D	166GW31DM1	P0202323-06	WG	N		02/14/02			X		
P0202323	K166GW32D	166GW32DM1	P0202323-07	WG	N		02/14/02			X		
P0203360	K166GW27D	166GW27DM2	P0203360-01	WG	N		03/18/02			X		
P0203360	K166GW28D	166GW28DM2	P0203360-02	WG	N		03/18/02			X		
P0203360	K166GW29D	166GW29DM2	P0203360-03	WG	N		03/18/02			X		
P0203360	K166GW30D	166GW30DM2	P0203360-04	WG	N		03/18/02			X		
P0203360	K166GW31D	166GW31DM2	P0203360-05	WG	N		03/18/02			X		
P0203360	K166GW32D	166GW32DM2	P0203360-06	WG	N		03/18/02			X		
P0205578	K166GW33D	166GW33DM4	P0205578-01	WG	N		05/20/02			X		

SDG	Station ID	Sample ID	Lab Sample ID	Matrix	Sample Type	QC Type	Date Collected	VOC SW8260B	TCLP VOC SW8260B	Hydrocarbons/ Methane AM20GAX	Metals SW6010B	Anions E300
P0205578	K166GW34D	166GW34DM4	P0205578-02	WG	N		05/21/02			X		
P0205578	K166GW35D	166GW35DM4	P0205578-03	WG	N		05/21/02			X		
P0205578	K166GW36D	166GW36DM4	P0205578-04	WG	N		05/28/02			X		
P0205578	K166GW37D	166GW37DM4	P0205578-05	WG	N		05/21/02			X		
P0205578	K166GW38D	166GW38DM4	P0205578-06	WG	N		05/24/02			X		
P0205578	K166GW39D	166GW39DM4	P0205578-07	WG	N		05/21/02			X		
P0205578	K166GW040	166GW040M4	P0205578-08	WG	N		05/21/02			X		
P0205578	K166GW040	166HW040M4	P0205578-09	WG	FD		05/21/02			X		
P0205578	K166GW41D	166GW41DM4	P0205578-10	WG	N		05/22/02			X		
P0205578	K166GW42D	166GW42DM4	P0205578-11	WG	N		05/22/02			X		
P0205578	K166GW43D	166GW43DM4	P0205578-12	WG	N		05/22/02			X		
P0205578	K166GW44D	166GW44DM4	P0205578-13	WG	N		05/22/02			X		
P0205578	K166GW45D	166GW45DM4	P0205578-14	WG	N		05/23/02			X		
P0205578	K166GW46D	166GW46DM4	P0205578-15	WG	N		05/28/02			X		
P0205578	K166GW47D	166GW47DM4	P0205578-16	WG	N		05/23/02			X		
P0205578	K166GW48D	166GW48DM4	P0205578-17	WG	N		05/23/02			X		
P0205578	K166GW49D	166GW49DM4	P0205578-18	WG	N		05/28/02			X		
P0205578	K166GW50D	166GW50DM4	P0205578-19	WG	N		05/29/02			X		
P0205578	K166GW51D	166GW51DM4	P0205578-20	WG	N		05/29/02			X		
P0205578	K166GW52D	166GW52DM4	P0205578-21	WG	N		05/29/02			X		
P0205578	K166GW16D	166GW16DM4	P0205578-22	WG	N		05/30/02			X		

SDG	Station ID	Sample ID	Lab Sample ID	Matrix	Sample Type	LR Type	[illegible]	[illegible]	[illegible]	Hydrogen Methane [illegible]	Metals SW6010B	Anions E300
P0205578	K166GWIN3	166GWIN3M4	P0205578-23	WG	N		05/30/02			X		
P0205578	K166GWTM3	166GWTM3M4	P0205578-24	WG	N		05/29/02			X		
P0205578	K166GWTM4	166GWTM4M4	P0205578-25	WG	N		05/23/02			X		
P0205578	K163GW003	163GW003	P0205578-26	WG	N		05/17/02			X		
P0206447	K166GW27D	166GW27DM6	P0206447-01	WG	N		06/24/02			X		
P0206447	K166GW28D	166GW28DM6	P0206447-02	WG	N		06/24/02			X		
P0206447	K166GW29D	166GW29DM6	P0206447-03	WG	N		06/24/02			X		
P0206447	K166GW30D	166GW30DM6	P0206447-04	WG	N		06/24/02			X		
P0206447	K166GW31D	166GW31DM6	P0206447-05	WG	N		06/25/02			X		
P0206447	K166GW31D	166HW31DM6	P0206447-06	WG	FD		06/25/02			X		
P0206447	K166GW32D	166GW32DM6	P0206447-07	WG	N		06/25/02			X		
P0208049	K163GW003	163GW003M7	P0208049-01	WG	N		08/01/02			X		
P0208049	K166GW040	166GW040M7	P0208049-02	WG	N		08/01/02			X		
P0208049	K166GW040	166HW040M7	P0208049-03	WG	FD		08/01/02			X		
P0208049	K166GW16D	166GW16DM7	P0208049-04	WG	N		07/30/02			X		
P0208049	K166GW33D	166GW33DM7	P0208049-05	WG	N		08/01/02			X		
P0208049	K166GW34D	166GW34DM7	P0208049-06	WG	N		07/31/02			X		
P0208049	K166GW35D	166GW35DM7	P0208049-07	WG	N		08/01/02			X		
P0208049	K166GW36D	166GW36DM7	P0208049-08	WG	N		07/31/02			X		
P0208049	K166GW37D	166GW37DM7	P0208049-09	WG	N		07/31/02			X		
P0208049	K166GW38D	166GW38DM7	P0208049-10	WG	N		08/01/02			X		

SDG	Station ID	Sample ID	Lab Sample ID	Matrix	Sample Type	LR Type	Date Collected	VOC SW8260B	TCLP VOC SW8260B	Hydrogen/ Methane AM20GAX	Metals SW6010B	Anions E300
P0208049	K166GW39D	166GW39DM7	P0208049-11	WG	N		08/01/02			X		
P0208049	K166GW41D	166GW41DM7	P0208049-12	WG	N		08/01/02			X		
P0208049	K166GW42D	166GW42DM7	P0208049-13	WG	N		08/01/02			X		
P0208049	K166GW43D	166GW43DM7	P0208049-14	WG	N		08/01/02			X		
P0208049	K166GW44D	166GW44DM7	P0208049-15	WG	N		08/01/02			X		
P0208049	K166GW45D	166GW45DM7	P0208049-16	WG	N		07/31/02			X		
P0208049	K166GW46D	166GW46DM7	P0208049-17	WG	N		07/31/02			X		
P0208049	K166GW47D	166GW47DM7	P0208049-18	WG	N		07/31/02			X		
P0208049	K166GW48D	166GW48DM7	P0208049-19	WG	N		07/31/02			X		
P0208049	K166GW49D	166GW49DM7	P0208049-20	WG	N		07/31/02			X		
P0208049	K166GW50D	166GW50DM7	P0208049-21	WG	N		07/30/02			X		
P0208049	K166GW50D	166HW50DM7	P0208049-22	WG	FD		07/30/02			X		
P0208049	K166GW51D	166GW51DM7	P0208049-23	WG	N		07/30/02			X		
P0208049	K166GW52D	166GW52DM7	P0208049-24	WG	N		07/30/02			X		
P0208049	K166GWIN3	166GWIN3M7	P0208049-25	WG	N		07/30/02			X		
P0208049	K166GWTM3	166GWTM3M7	P0208049-26	WG	N		07/30/02			X		
P0208049	K166GWTM4	166GWTM4M7	P0208049-27	WG	N		07/30/02			X		
P0212230	K163GW003	163GW003M8	P0212230-01	WG	N		12/11/02			X		
P0212230	K163GW03M	163GW03MM8	P0212230-02	WG	N		12/11/02			X		
P0212230	K166GW040	166GW040M8	P0212230-03	WG	N		12/09/02			X		
P0212230	K166GW16D	166GW16DM8	P0212230-04	WG	N		12/11/02			X		

SDG	Station ID	Sample ID	Lab Sample ID	Matrix	Sample Type	LFR Type	Date Collected	SVOC Analysis	VOC Analysis	Metals Analysis	Mercury Analysis	Anions Analysis
P0212230	K166GW33D	166GW33DM8	P0212230-05	WG	N		12/11/02			X		
P0212230	K166GW34D	166GW34DM8	P0212230-06	WG	N		12/09/02			X		
P0212230	K166GW35D	166GW35DM8	P0212230-07	WG	N		12/09/02			X		
P0212230	K166GW36D	166GW36DM8	P0212230-08	WG	N		12/09/02			X		
P0212230	K166GW37D	166GW37DM8	P0212230-09	WG	N		12/09/02			X		
P0212230	K166GW38D	166GW38DM8	P0212230-10	WG	N		12/11/02			X		
P0212230	K166GW39D	166GW39DM8	P0212230-11	WG	N		12/09/02			X		
P0212230	K166GW41D	166GW41DM8	P0212230-12	WG	N		12/09/02			X		
P0212230	K166GW41D	166HW41DM8	P0212230-13	WG	FD		12/09/02			X		
P0212230	K166GW42D	166GW42DM8	P0212230-14	WG	N		12/09/02			X		
P0212230	K166GW43D	166GW43DM8	P0212230-15	WG	N		12/09/02			X		
P0212230	K166GW44D	166GW44DM8	P0212230-16	WG	N		12/09/02			X		
P0212230	K166GW45D	166GW45DM8	P0212230-17	WG	N		12/06/02			X		
P0212230	K166GW46D	166GW46DM8	P0212230-18	WG	N		12/06/02			X		
P0212230	K166GW47D	166GW47DM8	P0212230-19	WG	N		12/06/02			X		
P0212230	K166GW48D	166GW48DM8	P0212230-20	WG	N		12/06/02			X		
P0212230	K166GW49D	166GW49DM8	P0212230-21	WG	N		12/06/02			X		
P0212230	K166GW50D	166GW50DM8	P0212230-22	WG	N		12/06/02			X		
P0212230	K166GW50D	166HW50DM8	P0212230-23	WG	FD		12/06/02			X		
P0212230	K166GW51D	166GW51DM8	P0212230-24	WG	N		12/04/02			X		
P0212230	K166GW52D	166GW52DM8	P0212230-25	WG	N		12/04/02			X		

SDG	Station ID	Sample ID	Lab Sample ID	Matrix	Sample Type	LR Type	Date Collected	VOC SW8260B	TCLP VOC SW8260B	Hydrogen/ Methane Analyzer	Metals W6010B	Anions E300
P0212230	K166GWIN3	166GWIN3M8	P0212230-26	WG	N		12/06/02			X		
P0212230	K166GWTM3	166GWTM3M8	P0212230-27	WG	N		12/04/02			X		
P0212230	K166GWTM4	166GWTM4M8	P0212230-28	WG	N		12/04/02			X		

MATRIX CODE

WG – Ground Water
WQ - Water QC Samples
SO - Soil Samples
SQ - Soil QC Samples

SAMPLE TYPE CODE

BS - Blank Spike
EB - Equipment Blank
FD - Field Duplicate
LB - Laboratory Blank
N - Native Sample
MS – Matrix Spike
SD – Matrix Spike Duplicate
LR – Laboratory Replicate
TB – Trip Blank

LR TYPE CODE

DL – Dilution
D – Laboratory Duplicate

ANALYSIS CODE

VOC - Volatile Organic Compounds
TCLP – Toxicity Characteristic Leaching Procedure

Organic Parameters

Quality Control Review

The following list represents the QA/QC measures that were reviewed during the data quality evaluation procedure for organic data.

- **Holding Times** – The holding times are evaluated to verify that samples were extracted and analyzed within holding times.
- **Blank samples** – Method blanks, equipment blanks, and trip blanks were provided for this project. Blank samples enable the reviewer to determine if an analyte may be attributed to sampling or laboratory procedures, rather than environmental contamination from site activities.
- **Surrogate Recoveries** – Surrogate Compounds are added to each sample and the recoveries are used to monitor lab performance and possible matrix interference.
- **Lab Control Sample (LCS)** – This sample is a "controlled matrix", either laboratory reagent water or Ottawa sand, in which target compounds have been added prior to extraction/analysis. The recoveries serve as a monitor of the overall performance of each step during the analysis, including sample preparation.
- **Matrix Spike/Matrix Spike Duplicate (MS/MSD) Samples** – Spike recovery is used to evaluate potential matrix interferences, as well as accuracy. Precision information is also determined by calculating the reproducibility between the recoveries of each spiked parameter.
- **Field Duplicate Samples** – These samples are collected to determine precision between a native and its duplicate. This information can only be determined when target compounds are detected.
- **GC/MS Tuning** – The mass spectrum of the tuning compound is evaluated for method compliance. The criteria are established to verify the proper mass assignment and mass resolution.
- **Initial Calibration** – The initial calibration ensures that the instrument is capable of producing acceptable qualitative and quantitative data for the compounds of interest.
- **Continuing Calibration** – The continuing calibration checks satisfactory performance of the instrument and its predicted response to the target compounds.
- **Internal Standards** – The internal standards (retention time and response) are evaluated for method compliance. The internal standards are used in quantitation of the target parameters and monitor the instrument sensitivity and response for stability during each analysis.

Volatile Organic Compounds (VOC) Analyses

The QA/QC parameters for VOC analyses for all of the samples were within acceptable control limits, except as noted below:

Blanks

The VOC target parameters detected in blank samples are listed in **Table 2**.

TABLE 2
Blank Contamination: VOC
Charleston Naval Complex, Zone K, SWMU 166, Charleston, SC

56223	1200154200	1200154200	LB	Methylene Chloride	0.96	µg/L	9.6 µg/L
56223	166EW27DM1	66223004	EB	Toluene	0.49	µg/L	2.5 µg/L
56223	166TW27DM1	56223005	TB	Methylene Chloride	2.3	µg/L	23.0 µg/L
56330	1200164175	1200164175	LB	Methylene Chloride	1.3	µg/L	13.0 µg/L
				Trichloroethylene	0.38	µg/L	1.9 µg/L
				Toluene	0.30	µg/L	1.5 µg/L
				Tetrachloroethylene	0.85	µg/L	4.3 µg/L
				1,2,4-Trichlorobenzene	0.50	µg/L	2.5 µg/L
56330	1200166215	1200166215	LB	Methylene Chloride	0.68	µg/L	6.8 µg/L
56330	1200166835	1200166835	LB	Methylene Chloride	1.3	µg/L	13.0 µg/L
56330	166EW28DM1	56330005	EB	Methylene Chloride	2.7	µg/L	27.0 µg/L
56330	166TW28DM1	56330006	TB	Methylene Chloride	2.2	µg/L	22.0 µg/L
				Trichloroethylene	0.43	µg/L	2.2 µg/L
				Toluene	0.21	µg/L	1.1 µg/L
56341	1200168115	1200168115	LB	Methylene Chloride	3.0	µg/L	30.0 µg/L
				1,2,4-Trichlorobenzene	0.59	µg/L	3.0 µg/L
56341	1200172355	1200172355	LB	Methylene Chloride	4.6	µg/L	46.0 µg/L
				1,2,4-Trichlorobenzene	0.46	µg/L	2.3 µg/L
57725	166EW27DM2	57725008	EB	Acetone	4.2	µg/L	42.0 µg/L
				Toluene	0.75	µg/L	3.8 µg/L
				1,4-Dichlorobenzene	0.21	µg/L	1.1 µg/L

TABLE 2
Blank Contamination: VOC
Charleston Naval Complex, Zone K, SWMU 166, Charleston, SC

57725	166TW27DM2	57725009	TB	1,4-Dichlorobenzene	0.19	µg/L	1.0 µg/L
58856	1200201356	1200201356	LB	Methylene Chloride	1.1	µg/L	11.0 µg/L
				Toluene	0.23	µg/L	1.2 µg/L
				1,4-Dichlorobenzene	0.27	µg/L	1.4 µg/L
58856	166EW27DM3	58856008	EB	Methylene Chloride	0.75	µg/L	7.5 µg/L
				Toluene	0.23	µg/L	1.2 µg/L
				1,4-Dichlorobenzene	0.25	µg/L	1.3 µg/L
58856	166TW27DM3	58856009	TB	Acetone	2.8	µg/L	28.0 µg/L
				1,4-Dichlorobenzene	0.27	µg/L	1.4 µg/L
60789	1200222719	1200222719	LB	Acetone	5.9	µg/L	59.0 µg/L
				Methylene Chloride	3.1	µg/L	31.0µg/L
60789	1200223961	1200223961	LB	Acetone	5.5	µg/L	55.0 µg/L
				Methylene Chloride	7.7	µg/L	77.0 µg/L
60789	166EW34DM4	60789008	EB	Acetone	4.8	µg/L	48.0 µg/L
				Methylene Chloride	3.4	µg/L	34.0 µg/L
60790	1200221558	1200221558	LB	Acetone	4.2	µg/L	42.0 µg/L
				Methylene Chloride	2.0	µg/L	20.0 µg/L
60790	1200221559	1200221559	LB	Acetone	2.5	µg/L	25.0 µg/L
				Methylene Chloride	1.9	µg/L	19.0 µg/L
60790	166EW026M4	60790006	EB	Acetone	2.5	µg/L	25.0 µg/L
				Methylene Chloride	3.3	µg/L	33.0 µg/L
60790	166EW033DM4	60790010	EB	Methylene Chloride	2.9	µg/L	29.0 µg/L
60790	166TW026M4	60790007	TB	Methylene Chloride	2.8	µg/L	28.0 µg/L
60790	166TW33DM4	607890011	TB	Methylene Chloride	1.9	µg/L	19.0 µg/L
60790	166TW34DM4	60790005	TB	Acetone	3.2	µg/L	32.0 µg/L
60879	1200226364	1200226363	LB	1,4-Dichlorobenzene	0.3	µg/L	1.5 µg/L
60879	166EW035DM4	60879007	EB	Acetone	8.3	µg/L	83.0 µg/L

TABLE 2
Blank Contamination: VOC
Charleston Naval Complex, Zone K, SWMU 166, Charleston, SC

[illegible]	[illegible]	[illegible]	[illegible]	[illegible]	[illegible]	[illegible]	[illegible]
60879	166EW035DM4	60879007	EB	Methylene Chloride	2.6	µg/L	26.0 µg/L
61044	1200226364	1200226364	LB	1,4-Dichlorobenzene	0.3	µg/L	1.5 µg/L
61044	1200227438	1200227438	LB	1,4-Dichlorobenzene	0.28	µg/L	1.4 µg/L
61044	166EW36DM4	166EW36DM4	EB	1,4-Dichlorobenzene	0.36	µg/L	1.8 µg/L
				Trichloroethylene	0.5	µg/L	2.5 µg/L
61326	166TW21DM4	61326006	TB	Styrene	0.38	µg/L	1.9 µg/L
64473	163EW003M7	64473002	EB	Toluene	0.46	µg/L	2.3 µg/L
64473	163TW003M7	64473001	TB	Trichloroethylene	0.36	µg/L	1.8 µg/L
64475	166EW017M7	64475020	EB	Acetone	2.8	µg/L	28.0 µg/L
				Toluene	0.48	µg/L	2.4 µg/L
64550	166EW040M7	64559002	EB	Acetone	3.1	µg/L	31.0 µg/L
				Toluene	0.53	µg/L	2.7 µg/L
64677	166EW026M7	64677001	EB	Acetone	7.4	µg/L	74.0 µg/L
				Toluene	0.56	µg/L	2.8 µg/L
				2-Hexanone	3.5	µg/L	35.0 µg/L
71658 71659	166EW026M8	71658002	EB	Toluene	0.43	µg/L	2.2 µg/L
				O-Xylene	0.30	µg/L	1.5 µg/L
				Xylenes(total)	0.30	µg/L	1.5 µg/L
71766	163TW003M8	71766001	TB	1,1-Dichloroethylene	1.5	µg/L	7.5 µg/L
72055	166EB041M8	72055001	EB	Acetone	6.4	µg/L	64.0 µg/L
				Toluene	0.58	µg/L	2.9 µg/L
				O-Xylene	0.26	µg/L	1.3 µg/L
				Xylenes(total)	0.26	µg/L	1.3 µg/L
72055	166TW041M8	72055002	TB	Acetone	6.2	µg/L	62.0 µg/L
				Toluene	0.46	µg/L	2.3 µg/L

If a target parameter determined to be a common contaminant was reported in a field sample, and the concentration was below the level determined to be due to blank contamination, the following actions were taken:

- If the concentration was above the reporting limit, the numeric result was unchanged, but it was flagged "U", as undetected.
- If the concentration was below the reporting limit, the numeric result was changed to the value of the reporting limit, and it was flagged "U", as undetected.

The results qualified due to blank contamination are listed in **Attachment 1**.

Recoveries – Surrogate, MS/MSD and LCS

All Surrogate, Matrix Spike (MS), Matrix Spike Duplicate (MSD), and Laboratory Control Sample (LCS) recoveries were within acceptable quality control limits, except as noted in **Table 3** below.

TABLE 3
Surrogate, MS/MSD, and LCS Recoveries Out of QC Limits: VOC
Charleston Naval Complex, Zone K, SWMU 166, Charleston, SC

56330	166GW28DM1 MS/MSD	Vinyl Acetate	56.8%(low)/56.8%(low)	70-130	56330001	Detects – J; non-detects – UJ
		2-Chloroethyl-vinylether	0%(low)/0%(low)			
56330	1200166836LCS	2-Chloroethyl-vinylether	166.4%(high)	70-130	56330001DL, 3DL, 4DL, and 5.	Detects – J.
56341	1200172356LCS	Vinyl Acetate	65.6% (low)	70-130	56341001 thru 003.	Detects – J; non-detects – UJ
57725	166GW27DM2 MS/MSD	Vinyl Acetate	157%(high)/155%(high)	70-130	57725001	Detects – J; non-detects – UJ
		2-Chloroethyl-vinylether	0%(low)/0%(low)			
57725	1200190186LCS	Vinyl Acetate	185%(high)	70-130	57725001 thru 007, and 009.	Detects – J.
57725	1200190589LCS	Vinyl Acetate	185%(high)	70-130	57725008, and 002DL thru 007DL.	Detects – J.
58856	166GW27DM3	2-Chloroethyl-vinylether	0%(low)/0%(low)	70-130	58856001	Detects – J; non-detects – R

TABLE 3
Surrogate, MS/MSD, and LCS Recoveries Out of QC Limits: VOC
Charleston Naval Complex, Zone K, SWMU 166, Charleston, SC

60789	166GW33DM4 MS/MSD	Vinyl Acetate	54.8%(low)/54.8%(low)	70-130	60789001	Detects – J; non-detects – UJ
		2-Chloroethyl-vinylether	0%(low)/0%(low)			Detects – J; non-detects – R
60790	166GW026M4 MS/MSD	2-Chloroethyl-vinylether	0%(low)/0%(low)	70-130	60790013	Detects – J; non-detects – R
61044	166GW38DM4 MS/MSD	2-Chloroethyl-vinylether	0%(low)/0%(low)	70-130	61044001	Detects – J; non-detects – R
61258	1200229049LCS	2-Chloroethyl-vinylether	65.2%(low)	70-130	61258001, 002, 003, and 006 thru 011.	Detects – J; non-detects – R
61326	166GW17DM4 MS/MSD	Chloroethane	139.8%high/132.6%high	70-130	61326001	Detects – J.
		2-Chloroethyl-vinylether	0%(low)/0%(low)			Detects – J; non-detects – R
61326	1200229049LCS	2-Chloroethyl-vinylether	65.2%(low)	70-130	61326001 thru 006.	Detects – J; non-detects – UJ
62650	166GW27DM6	4-BFB	124%(high)	86-115	62650002	Detects-J.
	166GW28DM6		119%(high)		62650003	
	166GW29DM6		118%(high)		62650004	
	166GW30DM6		118%(high)		62650005	
	166GW31DM6		115%(high)		62650006	
	166HW31DM6		119%(high)		62650007	
	166GW32DM6		116%(high)		62650008	
64473	166GW50DM7	4-BFB	116%(high)	86-115	64473003	Detects-J.
	166HW50DM7		118%(high)		64473004	
	166GWTM4M7		116%(high)		64473009	
	166GW16DM7		116%(high)		64473010	
	166GW50DM7DL		125%(high)		64473003DL	
	166HW50DM7DL		120%(high)		64473004DL	

TABLE 3
Surrogate, MS/MSD, and LCS Recoveries Out of QC Limits: VOC
Charleston Naval Complex, Zone K, SWMU 166, Charleston, SC

	166GW51DM7		117%(high)		64473005	
	166GWTM3M7		118%(high)		64473008	
64473	166GW50DM7	Vinyl Acetate	65.3%(low)/66.6%(low)	70-130	64473003	Detects – J; non-detects – UJ
64475	166GW026M7 MS/MSD	2-Chloroethyl-vinylether	0%(low)/0%(low)	70-130	64475004	Detects – J; non-detects – R
64475	166GW17DM7 MS/MSD	Vinyl Acetate	66%(low)/63.6%(low)	70-130		Detects – J; non-detects – UJ
		2-Chloroethyl-vinylether	0%(low)/0%(low)			Detects – J; non-detects – R
64475	1200277525LCS	2-Chloroethyl-vinylether	56.0%(low)	70-130	64475007, 009, 010, 011, 013, 014, 015, 019, and 020.	Detects – J; non-detects – UJ
64475	1200278543LCS	2-Chloroethyl-vinylether	40.8%(low)	70-130	64475001 thru 004, 008, 012, 016, 011DL, 015DL.	Detects – J; non-detects – UJ
		cis-1,3-Dichloropropane	62.0%(low)			
		trans-1,3-Dichloropropane	66.4%(low)			
64475	1200279732LCS	2-Chloroethyl-vinylether	49.6 %(low)	70-130	64475007DL, 008DL, 009DL, 010DL, 013DL, 014DL, and 019DL.	Detects – J; non-detects – UJ
		cis-1,3-Dichloropropane	66.6%(low)			
		trans-1,3-Dichloropropane	67.6%(low)			
64550	1200278626LCS	2-Chloroethyl-vinylether	135.6%(high)	70-130	64550001 and 002.	Detects – J.
64550	1200278627LCS	2-Chloroethyl-vinylether	138.8%(high)	70-130	64550003, 004, 007, 009, and 010.	Detects – J.
64676	163GW03MM7 MS/MSD	Vinyl Acetate	56.8%(low)/56.4%(low)	70-130	64676001	Detects – J; non-detects – UJ

TABLE 3
Surrogate, MS/MSD, and LCS Recoveries Out of QC Limits: VOC
Charleston Naval Complex, Zone K, SWMU 166, Charleston, SC

		2-Chloroethyl-vinylether	0%(low)/0%(low)			Detects – J; non-detects – R
64676	1200278338LCS	2-Chloroethyl-vinylether	135.6%(high)	70-130	64676002, 004, 004, 006, and 008 thru 013.	Detects – J.
64677	696GW001M7	Vinyl Chloride	132.2%(high)/137%(high)	70-130	64677005	Detects – J.
		Vinyl Acetate	62.4%(low)/64.4%(low)			Detects – J; non-detects – UJ
		2-Chloroethyl-vinylether	0%(low)/0%(low)			Detects – J; non-detects – R
64677	1200279409LCS	Vinyl Acetate	64.8%(low)	70-130	64677001 thru 008.	Detects – J; non-detects – UJ
71658	166GW005M8 MS/MSD	Vinyl Acetate	62%(low)/62.8%(low)	70-130	71658005	Detects – J; non-detects – UJ
		2-Chloroethyl-vinylether	0%(low)/0%(low)			Detects – J; non-detects – R
71658	166GW026M8 MS/MSD	Vinyl Acetate	58.8%(low)/60.8%(low)	70-130	71658003	Detects – J; non-detects – UJ
		2-Chloroethyl-vinylether	0%(low)/0%(low)			Detects – J; non-detects – R
71658	166EW017M8	DBFM	125%(high)	80-120	71658001	Detects – J.
		Toluene-d8	121%(high)	88-110		
		4-BFB	126%(high)	86-115		
	166EW026M8	DBFM	129%(high)	80-120	71658002	
		Toluene-d8	125%(high)	88-110		
		4-BFB	126%(high)	86-115		

TABLE 3
Surrogate, MS/MSD, and LCS Recoveries Out of QC Limits: VOC
Charleston Naval Complex, Zone K, SWMU 166, Charleston, SC

	166GW026M8	DBFM Toluene-d8 4-BFB	129%(high) 122%(high) 121%(high)	80-120 88-110 86-115	71658003	
	166GW001M8	DBFM Toluene-d8 4-BFB	130%(high) 123%(high) 125%(high)	80-120 88-110 86-115	71658004	
	166GW005M8	DBFM Toluene-d8 4-BFB	127%(high) 123%(high) 124%(high)	80-120 88-110 86-115	71658005	
	166GW017M8	DBFM Toluene-d8 4-BFB	128%(high) 121%(high) 124%(high)	80-120 88-110 86-115	71658006	
	166GW053M8	DBFM Toluene-d8 4-BFB	124%(high) 122%(high) 119%(high)	80-120 88-110 86-115	71658007	
	166GW053M8DL	DBFM Toluene-d8	125%(high) 117%(high)	80-120 88-110	71658007DL	
	166GW054M8	DBFM Toluene-d8 4-BFB	127%(high) 120%(high) 120%(high)	80-120 88-110 86-115	71658008	
	166GW054M8DL	DBFM Toluene-d8 4-BFB	123%(high) 122%(high) 115%(high)	80-120 88-110 86-115	71658008DL	
	166GW055M8	DBFM Toluene-d8 4-BFB	126%(high) 119%(high) 117%(high)	80-120 88-110 86-115	71658009	
	166GW055M8DL	DBFM Toluene-d8 4-BFB	126%(high) 120%(high) 116%(high)	80-120 88-110 86-115	71658009DL	

TABLE 3
Surrogate, MS/MSD, and LCS Recoveries Out of QC Limits: VOC
Charleston Naval Complex, Zone K, SWMU 166, Charleston, SC

	166GW056M8	DBFM Toluene-d8 4-BFB	129%(high) 121%(high) 118%(high)	80-120 88-110 86-115	716580010	
	166GW056M8DL	DBFM Toluene-d8	122%(high) 119%(high)	80-120 88-110	71658010DL	
	166GW06DM8	DBFM Toluene-d8 4-BFB	123%(high) 125%(high) 126%(high)	80-120 88-110 86-115	71658011	
	166GW07DM8	DBFM Toluene-d8 4-BFB	126%(high) 119%(high) 118%(high)	80-120 88-110 86-115	71658012	
	166GW07DM8DL	DBFM Toluene-d8 4-BFB	122%(high) 121%(high) 117%(high)	80-120 88-110 86-115	71658012DL	
	166GW08DM8	DBFM Toluene-d8 4-BFB	127%(high) 121%(high) 118%(high)	80-120 88-110 86-115	71658013	
	166GW13DM8	DBFM Toluene-d8	124%(high) 119%(high)	80-120 88-110	71658014	
	166GW13DM8DL	DBFM Toluene-d8 4-BFB	124%(high) 121%(high) 119%(high)	80-120 88-110 86-115	71658014DL	
	166HW13DM8	DBFM Toluene-d8 4-BFB	125%(high) 117%(high) 116%(high)	80-120 88-110 86-115	71658015	
	166GW14DM8	DBFM Toluene-d8 4-BFB	129%(high) 121%(high) 118%(high)	80-120 88-110 86-115	71658016	

TABLE 3
Surrogate, MS/MSD, and LCS Recoveries Out of QC Limits: VOC
Charleston Naval Complex, Zone K, SWMU 166, Charleston, SC

	166GW14DM8DL	DBFM Toluene-d8 4-BFB	125%(high) 123%(high) 126%(high)	80-120 88-110 86-115	71658016DL	
71659	166GW17DM8	DBFM Toluene-d8	126%(high) 121%(high)	80-120 88-110	71659001	Detects – J.
	166GW19DM8	DBFM Toluene-d8	123%(high) 121%(high)	80-120 88-110	71659002	
	166GW19DM8DL	DBFM Toluene-d8	123%(high) 120%(high)	80-120 88-110	71659002DL	
	166GW21DM8	DBFM Toluene-d8	123%(high) 119%(high)	80-120 88-110	71659003	
	166GW25DM8	DBFM Toluene-d8	122%(high) 119%(high)	80-120 88-110	71659004	
	166GW25DM8DL	DBFM Toluene-d8	122%(high) 119%(high)	80-120 88-110	71659004DL	
	166GW26DM8	DBFM Toluene-d8	125%(high) 123%(high)	80-120 88-110	71659005	
	698GW001M8	DBFM Toluene-d8	120%(high) 120%(high)	80-120 88-110	71659006	
	698HW001M8	DBFM Toluene-d8	123%(high) 119%(high)	80-120 88-110	71659007	

TABLE 3
Surrogate, MS/MSD, and LCS Recoveries Out of QC Limits: VOC
Charleston Naval Complex, Zone K, SWMU 166, Charleston, SC

71659	166GW17DM8 MS/MSD	Chloromethane	64.8(low)/72.8%	70-130	71659001	Detects – J; non-detects – UJ.
		2-Chloroethyl-vinylether	0%(low)/0%(low)	70-130		Detects – J; non-detects – R.
		1,2,3-Trichlorobenzene	136.4%high/132%high	70-130		Detects – J.
71659	1200348688LCS	1,2,3-Trichlorobenzene	133.8%(high)	70-130	71659004	Detects – J.
71766	1200349305LCS	1,2,3-Trichlorobenzene	139.8%(high)	70-130	71766008, 013, 003DI thru 007DL, 009DL, 010DL, 011DL, and 014DL.	Detects – J.
71766	1200350000LCS	1,2,4-Trichlorobenzene	136.0%(high)	70-130	71766012	Detects – J.
		1,2,3-Trichlorobenzene	151.6%(high)			
71766	1200353887LCS	Chloromethane	55.0%(low)	70-130	71766005, and 012DL.	Detects – J; non-detects – UJ.
		Vinyl Acetate	64.4%(low)			
71852	166GW39DM8 MS/MSD	2-Chloroethyl-vinylether	0%(low)/0%(low)	70-130	71852009	Detects – J; non-detects – R.
71852	166EW040M8	DBFM	128%(high)	80-120	71852001	Detects – J.
		Toluene-d8	124%(high)	88-110		
		4-BFB	120%(high)	86-115		
	166TW040M8	DBFM	128%(high)	80-120	71852002	
		Toluene-d8	121%(high)	88-110		
		4-BFB	121%(high)	86-115		
	166GW040M8	DBFM	127%(high)	80-120	71852003	
		Toluene-d8	121%(high)	88-110		

TABLE 3
Surrogate, MS/MSD, and LCS Recoveries Out of QC Limits: VOC
Charleston Naval Complex, Zone K, SWMU 166, Charleston, SC

	166GW040M8DL	DBFM Toluene-d8 4-BFB	126%(high) 119%(high) 115%(high)	80-120 88-110 86-115	71852003DL	
	166HW040M8	DBFM Toluene-d8	126%(high) 120%(high)	80-120 88-110	71852004	
	166HW040M8DL	DBFM Toluene-d8 4-BFB	124%(high) 120%(high) 115%(high)	80-120 88-110 86-115	71852004DL	
	166GW34DM8	DBFM Toluene-d8 4-BFB	126%(high) 121%(high) 118%(high)	80-120 88-110 86-115	71852005	
	166GW34DM8DL	DBFM Toluene-d8 4-BFB	123%(high) 118%(high) 119%(high)	80-120 88-110 86-115	71852005DL	
	166GW35DM8	DBFM Toluene-d8	129%(high) 120%(high)	80-120 88-110	71852006	
	166GW36DM8	DBFM Toluene-d8	122%(high) 121%(high)	80-120 88-110	71852007	
	166GW36DM8DL	DBFM Toluene-d8	124%(high) 121%(high)	80-120 88-110	71852007DL	
	166GW37DM8	DBFM Toluene-d8 4-BFB	126%(high) 120%(high) 115%(high)	80-120 88-110 86-115	71852008	
	166GW37DM8DL	DBFM Toluene-d8	126%(high) 122%(high)	80-120 88-110	71852008DL	

TABLE 3
Surrogate, MS/MSD, and LCS Recoveries Out of QC Limits: VOC
Charleston Naval Complex, Zone K, SWMU 166, Charleston, SC

	166GW39DM8	DBFM Toluene-d8 4-BFB	125%(high) 121%(high) 116%(high)	80-120 88-110 86-115	71852009	
	166GW41DM8	DBFM Toluene-d8 4-BFB	124%(high) 122%(high) 118%(high)	80-120 88-110 86-115	71852010	
	166GW42DM8	DBFM Toluene-d8 4-BFB	125%(high) 122%(high) 116%(high)	80-120 88-110 86-115	71852011	
	166GW43DM8	DBFM Toluene-d8	124%(high) 122%(high)	80-120 88-110	71852012	
	166GW43DM8DL	DBFM Toluene-d8	127%(high) 124%(high)	80-120 88-110	71852012DL	
	166GW44DM8	DBFM Toluene-d8 4-BFB	125%(high) 121%(high) 117%(high)	80-120 88-110 86-115	71852013	
72055	166EB041M8	Toluene-d8 4-BFB	82% (low) 77% (low)	88-110 86-115	72055001	Detects – J; non-detects – UJ.
	166TW041M8	Toluene-d8 4-BFB	80% (low) 75% (low)	88-110 86-115	72055002	
	166GW003M8	Toluene-d8 4-BFB	80% (low) 75% (low)	88-110 86-115	72055003	
	166GW003M8DL	Toluene-d8	82% (low)	88-110	72055003DL	
	166GW03MM8	Toluene-d8	82% (low)	88-110	72055004	
	166GW16DM8	Toluene-d8 4-BFB	81% (low) 75% (low)	88-110 86-115	72055005	

TABLE 3
Surrogate, MS/MSD, and LCS Recoveries Out of QC Limits: VOC
Charleston Naval Complex, Zone K, SWMU 166, Charleston, SC

	166GW16DM8DL	Toluene-d8	79% (low)	88-110	72055005DL	
	166GW33DM8	Toluene-d8	79% (low)	88-110	72055006	
	166GW38DM8	Toluene-d8 4-BFB	80% (low) 74% (low)	88-110 86-115	72055007	
	166GW38DM8DL	Toluene-d8	78% (low)	88-110	72055007DL	
	16GW005M8	Toluene-d8	82% (low)	88-110	72055008	
71766	166GW49DM9DL	DBFM Toluene-d8 4-BFB	126%(high) 122%(high) 120%(high)	80-120 88-110 86-115	71766003DL	Detects – J.
	166GW50DM8DL	DBFM Toluene-d8 4-BFB	127%(high) 123%(high) 117%(high)	80-120 88-110 86-115	71766004DL	
	166HW50DM8	DBFM Toluene-d8 4-BFB	128%(high) 127%(high) 119%(high)	80-120 88-110 86-115	71766005	
	166HW50DM8DL	DBFM Toluene-d8	127%(high) 124%(high)	80-120 88-110	71766005DL	
	166GW51DM8DL	DBFM Toluene-d8 4-BFB	127%(high) 120%(high) 118%(high)	80-120 88-110 86-115	71766006DL	
	166GW52DM8DL	DBFM Toluene-d8 4-BFB	127%(high) 123%(high) 119%(high)	80-120 88-110 86-115	71766007DL	

TABLE 3
Surrogate, MS/MSD, and LCS Recoveries Out of QC Limits: VOC
Charleston Naval Complex, Zone K, SWMU 166, Charleston, SC

	166GWIN3M8	DBFM	127%(high)	80-120	71766008	
		Toluene-d8	122%(high)	88-110		
		4-BFB	115%(high)	86-115		
	166GWTM3M8DL	DBFM	125%(high)	80-120	71766009DL	
		Toluene-d8	121%(high)	88-110		
		4-BFB	117%(high)	86-115		
	166GWTM4M8DL	DBFM	124%(high)	80-120	71766010DL	
		Toluene-d8	123%(high)	88-110		
		4-BFB	119%(high)	86-115		
	166GW45DM8DL	DBFM	126%(high)	80-120	71766011DL	
		Toluene-d8	119%(high)	88-110		
		4-BFB	118%(high)	86-115		
	166GW46DM8	DBFM	133%(high)	80-120	71766012	
		Toluene-d8	123%(high)	88-110		
		4-BFB	125%(high)	86-115		
	166GW46DM8DL	DBFM	129%(high)	80-120	71766012DL	
		Toluene-d8	126%(high)	88-110		
		4-BFB	119%(high)	86-115		
	166GW47DM8	DBFM	123%(high)	80-120	71766013	
		Toluene-d8	120%(high)	88-110		
		4-BFB	119%(high)	86-115		
	166GW48DM8DL	DBFM	126%(high)	80-120	71766014DL	
		Toluene-d8	118%(high)	88-110		
		4-BFB	116%(high)	86-115		

Initial and Continuing Calibration Criteria

All initial calibration criteria and continuing calibration criteria were met, except as listed in Table 4.

TABLE 4
Exceptions to Initial and Continuing Calibration Criteria: VOC
Charleston Naval Complex, Zone K, SWMU 166, Charleston, SC

VOA8-CCAL-02/18/02, 08:10	Chloromethane	24.4% low	56233001 thru 56233005.
	Vinyl Acetate	38.2% low	
	2-Chloroethyl-vinylether	35.2% high	
VOA8-CCAL-02/27/02, 07:46	2-Chloroethyl-vinylether	82.8% high	56330001 thru 56330004.
	4-Methyl-2-Pentanone	21.7% high	
VOA8-CCAL-02/27/02, 19:11	Vinyl Acetate	24.6% low	56330006.
	4-Methyl-2-Pentanone	26.7% high	
	2-Hexanone	22.7% high	
VOA8-CCAL-02/28/02, 09:53	Vinyl Acetate	24.2% low	56330006, 01DL, 03DL, and 04DL.
	2-Chloroethyl-vinylether	66.4% high	
VOA7-CCAL-03/04/02, 17:53	Chloromethane	26.6% low	56341001 thru 003.
	Acetone	29.4% low	
	2-Butanone	24.0% low	
	Vinyl Acetate	34.4% low	
	2-Hexanone	26.8% low	
VOA8-CCAL-03/26/02, 07:02	2-Chloroethyl-vinylether	24.2% high	57725008 and 002DL thru 007DL.
	Dibromochloromethane	22.8% high	
	1,2,4-Trichlorobenzene	21.5% high	
	1,2,3-Trichlorobenzene	21.8% high	
VOA2-CCAL-05/24/02, 19:25	Chloromethane	30.4% low	60789001 thru 005, and 008.
	Acetone	22.0 low	
VOA2-CCAL-05/24/02, 19:25	Chloromethane	25.8% high	60789006, 007, and 001DL thru 005DL.
	Dibromochloromethane	21.9% high	
	1,2,4-Trichlorobenzene	27.7% high	

TABLE 4
Exceptions to Initial and Continuing Calibration Criteria: VOC
Charleston Naval Complex, Zone K, SWMU 166, Charleston, SC

	1,2,3-Trichlobenzene	37.8% high	
VOA2-CCAL-05/28/02, 14:45	Chloroethane	22.3% high	60790001 thru 005, 008, 012, and 013.
	Acetone	20.5% high	
	1,2,3-Trichlorobenzene	27.5% high	
VOA2-CCAL-05/28/02, 14:45	2-Chloroethyl-vinylether	21.3% low	60790006, 007, 009, 010, 011, 001DI thru 004DI, and 008DL.
VOA1-CCAL-05/31/02, 08:20	Bromomethane	23.1% high	60879001 thru 005. 61044001 and 002.
	Chloroethane	22.0% high	
	2-Chloroethyl-vinylether	RF= 0.045	
VOA1-CCAL-06/03/02, 08:50	Bromomethane	28.8% high	60879006, 007, and 001DL thru 004DL. 61044003, 006, 001DL, 002DL, 004DL, 005DL, and 007DL. 61170005, 006.
	Chloroethane	27.7% high	
	2-Chloroethyl-vinylether	RF= 0.048	
VOA1-CCAL-06/04/02, 08:53	Bromomethane	28.8% high	60879005DL. 61134001, 003, 004, and 002DL. 61170002, 003, 004, and 001DL.
	Chloroethane	27.7% high	
	Methylene Chloride	20.1% low	
	2-Chloroethyl-vinylether	20.5% low RF= 0.048	
VOA1-CCAL-05/31/02, 20:52	Acetone	RF= 0.047	61044004, 005, 007 thru 011.
	Methylene Chloride	21.7% low	
	2-Chloroethyl-vinylether	RF= 0.046	
	1,2,4-Trichlorobenzene	22.4% low	
VOA1-CCAL-06/03/02, 20:15	Bromomethane	24.9% high	61134002. 61170001.
	Chloroethane	20.6% high	
	Acetone	RF= 0.045	
	Methylene Chloride	20.8% low	
	2-Chloroethyl-vinylether	RF= 0.045	

TABLE 4
Exceptions to Initial and Continuing Calibration Criteria: VOC
Charleston Naval Complex, Zone K, SWMU 166, Charleston, SC

	1,2,4-Trichlorobenzene	23.1% low	
VOA1-CCAL-06/04/02, 20:31	Acetone	24.0% low RF= 0.04	61258004 and 005.
	Methylene Chloride	28.4% low	
	2-Chloroethyl-vinylether	22.5% low RF= 0.042	
	Bromoform	22.0% low	
	1,1,2,2-Tetrachloroethane	21.6% low	
	1,3-Dichlorobenzene	21.2% low	
	1,4-Dichlorobenzene	24.8% low	
	1,2-Dichlorobenzene	22.2% low	
	1,2,4-Trichlorobenzene	24.7% low	
	1,2,3-Trichlorobenzene	20.5% low	
VOA1-CCAL-06/05/02, 08:21	Bromomethane	29.3% high	61258001 thru 003, and 006 thru 011. 61326001 thru 006.
	Methylene Chloride	22.6% low	
	2-Chloroethyl-vinylether	34.7% low RF= 0.035	
	Bromoform	21.8% low	
VOA1-CCAL-06/28/02, 20:19	Dichlorodifluoromethane	37.3% low	62650001.
	Chloromethane	26.1% low	
	Methylene Chloride	23.9% low	
	Vinyl Acetate	34.6% low	
	4-Methyl-2-Pentanone	31.2% high	
	Naphthalene	31.6% high	
VOA1-CCAL-07/01/02, 20:19	Chloromethane	25.4% low	62650002 thru 009.
	Methylene Chloride	25.3% low	
	Vinyl Acetate	37.0% low	

TABLE 4
Exceptions to Initial and Continuing Calibration Criteria: VOC
Charleston Naval Complex, Zone K, SWMU 166, Charleston, SC

VOA1-ICAL-07/24/02, 18:21	2-Chloroethyl-vinylether	RRF= 0.042	64473001 thru 010. 64550001 thru 010. 64550001 thru 013.
VOA1-CCAL-08/06/02, 08:11	Vinyl Acetate	27.0% low	64473001 and 002. 64550001 and 002. 64676004, 006, 008, 009, 011, 012, 002DL, 003DL, and 010DL.
	2-Chloroethyl-vinylether	35.4% high	
	Bromoform	24.5% high	
VOA1-CCAL-08/06/02, 19:18	Vinyl Acetate	29.4% low	64473003, 004, 006, 009, and 010. 64550003, 004, 007, 009, and 010.
	2-Chloroethyl-vinylether	38.8% high	
	2-Hexanone	21.7% high	
	Dibromochloromethane	22.0% high	
VOA1-CCAL-08/07/02, 08:21	Vinyl Acetate	27.3% low	64473005, 007, 008, 003DL, and 004DL. 64550005, 006, 008, 003DL, and 004DL. 64676005, 007, 008DL, 009DL, 011DL, and 012DL.
	2-Chloroethyl-vinylether	29.0% high	
	Bromoform	27.3% high	
VOA2-CCAL-08/05/02, 06:33	Chloromethane	41.9% high	64475007, 009, 010, 011, 013, 014, 015, and 019.
	Vinyl Acetate	24.7% high	
	Carbon Tetrachloride	20.3% low	
	2-Chloroethyl-vinylether	31.5% low	
VOA2-CCAL-08/07/02, 08:20	Chloromethane	29.5% high	64475001 thru 004, 008, 012, 016, 011DL, and 015DL.
	2-Chloroethyl-vinylether	53.5% low	
	cis-1,3-Dichloropropylene	31.4% low	
	trans-1,3-Dichloropropylene	22.7% low	
VOA2-CCAL-08/08/02, 17:39	Chloromethane	21.5% high	64475007DL, 008DL, 009DL, 010DL, 013DL, 014DL, 019DL.
	Carbon Tetrachloride	21.7% low	
	2-Chloroethyl-vinylether	48.3% low	
	cis-1,3-Dichloropropylene	32.4% low	

TABLE 4
Exceptions to Initial and Continuing Calibration Criteria: VOC
Charleston Naval Complex, Zone K, SWMU 166, Charleston, SC

	trans-1,3-Dichloropropylene	28.8% low	
VOA1-CCAL-08/05/02, 08:17	Vinyl Acetate	39.1% high	64676001, 002, 003, 010, and 012.
	2-Chloroethyl-vinylether	28.9% high	
	Bromoform	25.8% high	
VOA9-CCAL-08/08/02, 10:06	Chloromethane	22.8% high	64677001 thru 008.
VOA2-CCAL-12/10/02, 07:46	1,2,3-Trichlorobenzene	25.5% high	71659004
VOA2-CCAL-12/11/02, 08:31	Chloromethane	33.8% low	71659001 thru 003, 005 thru 007, 002DL, and 004DL.
	Acetone	28.2% low	
	Vinyl Acetate	22.1% low	
	2-Butanone	32.5% low	
	1,2-Dichloroethane	27.9% low	
	2-Chloroethyl-vinylether	32.2% low	
	4-Methyl-2-Pentanone	28.4% low	
	2-Hexanone	32.0% low	
VOA2-CCAL-12/12/02, 07:59	2-Chloroethyl-vinylether	23.3% low	71852001 thru 005, 007, 011, and 012.
VOA2-CCAL-12/13/02, 08:02	Chloromethane	32.9% low	71852006, 008, 009, 013, 003DL, 004DL, 005DL, 007DL, and 012DL.
	Acetone	23.5% low	
	2-Butanone	25.0% low	
	2-Chloroethyl-vinylether	36.3% low	
	4-Methyl-2-Pentanone	21.3% low	
	2-Hexanone	24.1% low	
VOA2-CCAL-12/13/02, 19:38	trans-1,2-Dichloroethylene	21.3% high	71766008, 013, 003DL thru 007DL, 009DL thru 011DL, and 014DL.
	1,2,4-Trichlorobenzene	35.5% high	
	1,2,3-Trichlorobenzene	51.0% high	
VOA2-CCAL-12/16/02, 11:38	2-Chloroethyl-vinylether	21.5% low	71852010.
	1,2,4-Trichlorobenzene	37.8% high	71766012.

TABLE 4
Exceptions to Initial and Continuing Calibration Criteria: VOC
Charleston Naval Complex, Zone K, SWMU 166, Charleston, SC

	1,2,3-Trichlorobenzene	51.6% high	
VOA2-CCAL-12/18/02, 01:00	Chloromethane	47.1% low	71766005, and 012DL.
	Acetone	26.1% low	
	Vinyl Acetate	29.1% low	
	2-Butanone	29.2% low	
	2-Hexanone	24.3% low	
	Dibromochloromethane	28.8% high	
	1,2,3-Trichlorobenzene	51.6% high	
VOA1-CCAL-12/19/02, 08:46	1,1,1-Trichloroethane	20.3% low	72055001, 002, 003, 005, and 007.
	1,2-Dichloroethane	23.1% low	
VOA1-CCAL-12/20/02, 11:36	2-Chloroethyl-vinylether	23.9% low	72055004, 006, 008, 003DL, 005DL, and 007DL.

Flags were applied to the compounds in the associated samples in the following manner:

- When the percent difference (%D) was low in the continuing calibration standards, detected compounds were flagged "J" and non-detected compounds were flagged "UJ", as estimated.
- When the percent difference (%D) was high in the continuing calibration standards, detected compounds were flagged "J", as estimated. Non-detected compounds were not flagged.
- When the Average Relative Response Factor (RRF) was low in the initial calibration, detected compounds were flagged "J", and non-detected compounds were flagged "UJ", as estimated.
- When the Relative Response Factor (RRF) was low in the continuing calibration, detected compounds were flagged "J", and non-detected compounds were flagged "UJ", as estimated.

Internal Standard Area

All internal standard areas were within QC limits except as noted in **Table 5** below.

TABLE 5
Internal Standard Area out of Criteria: VOC
Charleston Naval Complex, Zone K, SWMU 166, Charleston, SC

56431	#001	IS#1= -66.8%	Detects – J; non-detects – UJ.
		IS#2= -66.1%,	
		IS#3= -69.2%	

Field Duplicate Samples

All Field Duplicate Samples were within acceptable quality control limits, except as noted in Table 6 below. No flags are applied due to Field Duplicate precision.

TABLE 6
Field Duplicate RPDs Out of QC Limits: VOCs
Charleston Naval Complex, Zone K, SWMU 166, Charleston, SC

57725	57725004 / 57725005	trans-1,2-Dichloroethene	38.4 ug/L	51.9% ug/L	29.9%	20%
		cis-1,2-Dichloroethene	274 ug/L	504 ug/L	59.1%	20%
		1,2-Dichloroethene (total)	310 ug/L	583 ug/L	61.1%	20%
		Trichloroethylene	3010 ug/L	2380 ug/L	23.3%	20%
* - out of control limits						

TCLP Volatile Organic Compounds (VOC) Analyses

The QA/QC parameters for TCLP VOC analyses for all of the samples were within acceptable control limits.

Hydrogen and Methane Analyses

The QA/QC parameters for Hydrogen and Methane analyses for all of the samples were within acceptable control limits.

Inorganic Parameters

Quality Control Review

The following list represents the QA/QC measures that are typically reviewed during the data quality evaluation procedure for inorganic parameters.

- **Holding Times** – The holding times are evaluated to verify that samples were extracted and analyzed within holding times.
- **Blank samples** – Sample preparation, initial calibration blanks/continuing calibration blanks, and equipment blanks were provided for this project. Blank samples enable the reviewer to determine if an analyte may be attributed to sampling or laboratory procedures, rather than environmental contamination from site activities.
- **Lab Control Sample (LCS)** – This sample is a "controlled matrix", in which target parameters have been added prior to digestion/analysis. The recoveries serve as a monitor of the overall performance of each step during the analysis, including sample preparation.
- **Field Duplicate Samples** – These samples are collected to determine precision between a native and its duplicate. This information can only be determined when target compounds are detected.
- **Pre/Post Digestion Spike (MS/MSD)** – Spike recovery is used to evaluate potential matrix interferences, as well as accuracy. Precision information is also determined by calculating the reproducibility between the recoveries of each spiked parameter.
- **ICP Interference Check Sample** – This sample verifies the lab's interelement and background correction factors.
- **Initial Calibration Verification** – This parameter ensures that the instrument is capable of producing acceptable quantitative data for the target analyte list to be measured.
- **Continuing Calibration Verification** – This one-point, mid-range parameter establishes that the initial calibration is still valid by checking the performance of the instrument on a continual basis.
- **ICP Serial Dilution** – The serial dilution of samples quantitated by ICP determines whether or not significant physical or chemical interferences exist due to the sample matrix.

Metals Analyses

The QA/QC parameters for the Metals analyses for all of the samples were within acceptable control limits, except as noted below.

Blanks

The Metals target parameters detected in blank samples are listed in **Table 7**.

TABLE 7
Blank Contamination: Metals
Charleston Naval Complex, Zone K, SWMU 166, Charleston, SC

56330	CCB		CCB	Iron	16.5	µg/L	<82.5 µg/L

If a target parameter was reported in a field sample, and the concentration was below the level determined to be due to blank contamination (5 times the concentration in the associated QC blank samples), it was flagged as "U", not detected. Initial and continuing calibration blanks were also evaluated for possible contamination.

The results qualified due to blank contamination are listed in **Attachment 1.**

General Chemistry Analyses

The QA/QC parameters for the General Chemistry analyses for all of the samples were within acceptable control limits, except as noted below.

Blanks

The General Chemistry target parameters detected in blank samples are listed in **Table 8.**

TABLE 8
Blank Contamination: General Chemistry
Charleston Naval Complex, Zone K, SWMU 166, Charleston, SC

56330	56330005	166EW28DM1	EB	Chloride	5.09	mg/L	25.45 mg/L
58856	58856008	166EW27DM3	EB	Chloride	10.4	mg/L	52.0 mg/L**
				Sulfate	15.2	mg/L	76.0 mg/L**
71766	71766002	163EW003M8	EB	Nitrate	0.558	mg/L	2.79 mg/L**
				Sulfate	37.9	mg/L	189.5 mg/L**

If a target parameter was reported in a field sample, and the concentration was below the level determined to be due to blank contamination (5 times the concentration in the associated QC blank samples), it was flagged as "U", not detected. Initial and continuing calibration blanks were also evaluated for possible contamination.

**The concentrations of Chloride, Nitrate and Sulfate reported in the equipment blank samples, 166EW27DM3 and 163EW003M8, were significantly above typically contamination levels and were determined to be anomalies. Therefore, results less than 5 times the concentration in the associated equipment blank sample were not flagged as "U, not detected. However, the results for Chloride and Sulfate were qualified "J", as estimated.

The results qualified due to blank contamination are listed in **Attachment 1**.

Holding Times

All holding times were met except for samples 163GW003M4, 166GW51DM8, 166GW52DM8, 166GWTM3M8, and 166GWTM4M8. These samples were analyzed < 24 hours beyond 48 hour hold time for Nitrate. The Nitrate results were used, but qualified as estimated, due to holding time exceedance. Detected compounds were qualified "J", and non-detected compounds qualified "UJ".

The results qualified due to holding time are listed in **Attachment 1**.

Rejected Data

The majority of rejected data were associated with re-runs and dilutions (there can only be a single valid result per parameter per sample). However, there were selected results qualified as "R", rejected, due to associated QC parameters out of criteria, such that there is not a valid result for that parameter in each sample. The rejected data are summarized in **Table 9** below.

TABLE 9
Rejected Data
Charleston Naval Complex, Zone K, SWMU 166, Charleston, SC

SDG	[illegible]	[illegible]	[illegible]	[illegible]	[illegible]	[illegible]	[illegible]	[illegible]	[illegible]
58856	166GW27DM3	VOA	2-Chloroethyl vinyl ether	5	U	5	R	ug/L	MS
60789	166GW33DM4	VOA	2-Chloroethyl vinyl ether	5	U	5	R	ug/L	MS
60790	166GW026M4	VOA	2-Chloroethyl vinyl ether	5	U	5	R	ug/L	MS
61044	166GW38DM4	VOA	2-Chloroethyl vinyl ether	5	U	5	R	ug/L	MS

TABLE 9
Rejected Data
Charleston Naval Complex, Zone K, SWMU 166, Charleston, SC

61326	166GW17DM4	VOA	2-Chloroethyl vinyl ether	5	U	5	R	ug/L	MS
64475	166GW026M7	VOA	2-Chloroethyl vinyl ether	10	U	10	R	ug/L	MS
64475	166GW17DM7	VOA	2-Chloroethyl vinyl ether	10	U	10	R	ug/L	MS
64677	696GW001M7	VOA	2-Chloroethyl vinyl ether	10	U	10	R	ug/L	MS
71658	166GW005M8	VOA	2-Chloroethyl vinyl ether	10	U	10	R	ug/L	MS
71658	166GW026M8	VOA	2-Chloroethyl vinyl ether	10	U	10	R	ug/L	MS
71659	166GW17DM8	VOA	2-Chloroethyl vinyl ether	10	U	10	R	ug/L	MS
71852	166GW39DM8	VOA	2-Chloroethyl vinyl ether	10	U	10	R	ug/L	MS

Conclusion

A review of the analytical data submitted regarding the investigation of Zone K, SWMU 166 at the Charleston Naval Complex, Charleston, South Carolina by CH2M HILL has been completed. An overall evaluation of the data indicates that the sample handling, shipment, and analytical procedures have been adequately completed, and that the analytical results should be considered usable as qualified.

As discussed above, there were specific results that were rejected, in which the data cannot be used. With the exception of these results, the validation review demonstrated that the analytical systems were generally in control and the data can be used in the decision making process.

Attachment 1 - Changed Qualifiers and Results
Charleston Naval Complex - Zone K SMU 166 - 2002 Sampling Events

Parameter Class	Analytical Method	Parameter	SDG	Sample ID	Lab Sample ID	Matrix	Lab Result	Qualifier	Final Result	Final Qual	Units	Reasons
GENCHEM	E300	Chloride	56330	166GW28DM1	56330001	WG	7.77	=	7.77	U	mg/L	BL
GENCHEM	E300	Chloride	56330	166GW29DM1	56330002	WG	9.08	=	9.08	U	mg/L	BL
GENCHEM	E300	Chloride	56330	166GW30DM1	56330003	WG	11.1	=	11.1	U	mg/L	BL
GENCHEM	E300	Chloride	56330	166HW30DM1	56330004	WG	9.86	=	9.86	U	mg/L	BL
GENCHEM	E300	Chloride	58856	166GW27DM3	58856001	WG	9.56	=	9.56	J	mg/L	BL
GENCHEM	E300	Chloride	58856	166GW28DM3	58856002	WG	10	=	10	J	mg/L	BL
GENCHEM	E300	Chloride	58856	166GW29DM3	58856003	WG	9.28	=	9.28	J	mg/L	BL
GENCHEM	E300	Chloride	58856	166GW30DM3	58856004	WG	13.1	=	13.1	J	mg/L	BL
GENCHEM	E300	Chloride	58856	166GW31DM3	58856005	WG	10.9	=	10.9	J	mg/L	BL
GENCHEM	E300	Chloride	58856	166HW31DM3	58856006	WG	11.2	=	11.2	J	mg/L	BL
GENCHEM	E300	Chloride	58856	166GW32DM3	58856007	WG	8.38	=	8.38	J	mg/L	BL
GENCHEM	E300	NITROGEN, NITRATE (AS N)	60789	163GW003M4	60789010	WG	0.1	HU	0.1	UJ	mg/L	HT
GENCHEM	E300	NITROGEN, NITRATE (AS N)	71766	166GW51DM8	71766006	WG	0.1	HU	0.1	UJ	mg/L	HT
GENCHEM	E300	NITROGEN, NITRATE (AS N)	71766	166GW52DM8	71766007	WG	0.1	HU	0.1	UJ	mg/L	HT
GENCHEM	E300	NITROGEN, NITRATE (AS N)	71766	166GWTM3M8	71766009	WG	0.1	HU	0.1	UJ	mg/L	HT
GENCHEM	E300	NITROGEN, NITRATE (AS N)	71766	166GWTM4M8	71766010	WG	0.1	HU	0.1	UJ	mg/L	HT
GENCHEM	E300	SULFATE (AS SO4)	58856	166GW27DM3	58856001	WG	31.8	=	31.8	J	mg/L	BL
GENCHEM	E300	SULFATE (AS SO4)	58856	166GW28DM3	58856002	WG	12.4	=	12.4	J	mg/L	BL
GENCHEM	E300	SULFATE (AS SO4)	58856	166GW29DM3	58856003	WG	35.7	=	35.7	J	mg/L	BL
GENCHEM	E300	SULFATE (AS SO4)	58856	166GW30DM3	58856004	WG	1.76	=	1.76	J	mg/L	BL
GENCHEM	E300	SULFATE (AS SO4)	58856	166GW31DM3	58856005	WG	8.97	=	8.97	J	mg/L	BL

Attachment 1 - Changed Qualifiers and Results
Charleston Navel Complex - Zone K, SWMU 166 - 2002 Sampling Events

Parameter Class	Analytical Method	Parameter	SDG	Sample ID	Lab Sample ID	Matrix	Lab Result	Lab Qual	Final Result	Final Qual	Units	Reasons
GENCHEM	E300	SULFATE (AS SO4)	58856	166HW31DM3	58856006	WG	9.4	=	9.4	J	mg/L	BL
GENCHEM	E300	SULFATE (AS SO4)	58856	166GW32DM3	58856007	WG	10.1	=	10.1	J	mg/L	BL
GENCHEM	E300	SULFATE (AS SO4)	61258	166GWIN3M4	61258003	WG	0.342	J	0.342	J	mg/L	IB
GENCHEM	E300	SULFATE (AS SO4)	71766	166GW49DM8	71766003	WG	6.64	=	6.64	J	mg/L	BL
GENCHEM	E300	SULFATE (AS SO4)	71766	166GW50DM8	71766004	WG	7.29	=	7.29	J	mg/L	BL
GENCHEM	E300	SULFATE (AS SO4)	71766	166HW50DM8	71766005	WG	8.01	=	8.01	J	mg/L	BL
GENCHEM	E300	SULFATE (AS SO4)	71766	166GW51DM8	71766006	WG	7.46	=	7.46	J	mg/L	BL
GENCHEM	E300	SULFATE (AS SO4)	71766	166GW52DM8	71766007	WG	6.94	=	6.94	J	mg/L	BL
GENCHEM	E300	SULFATE (AS SO4)	71766	166GWIN3M8	71766008	WG	4.43	=	4.43	J	mg/L	BL
GENCHEM	E300	SULFATE (AS SO4)	71766	166GWTM3M8	71766009	WG	3.04	=	3.04	J	mg/L	BL
GENCHEM	E300	SULFATE (AS SO4)	71766	166GWTM4M8	71766010	WG	5.43	=	5.43	J	mg/L	BL
GENCHEM	E300	SULFATE (AS SO4)	71766	166GW45DM8	71766011	WG	65.7	=	65.7	J	mg/L	BL
GENCHEM	E300	SULFATE (AS SO4)	71766	166GW46DM8	71766012	WG	8.32	=	8.32	J	mg/L	BL
GENCHEM	E300	SULFATE (AS SO4)	71766	166GW47DM8	71766013	WG	28.3	=	28.3	J	mg/L	BL
GENCHEM	E300	SULFATE (AS SO4)	71766	166GW48DM8	71766014	WG	12.4	=	12.4	J	mg/L	BL
GENCHEM	E300	SULFATE (AS SO4)	71852	166GW34DM8	71852005	WG	0.516	=	0.516	J	mg/L	BL
GENCHEM	E300	SULFATE (AS SO4)	71852	166GW35DM8	71852006	WG	1.95	=	1.95	J	mg/L	BL
GENCHEM	E300	SULFATE (AS SO4)	71852	166GW37DM8	71852008	WG	4.02	=	4.02	J	mg/L	BL
GENCHEM	E300	SULFATE (AS SO4)	71852	166GW39DM8	71852009	WG	29.6	=	29.6	J	mg/L	BL
GENCHEM	E300	SULFATE (AS SO4)	71852	166GW41DM8	71852010	WG	14.7	=	14.7	J	mg/L	BL
GENCHEM	E300	SULFATE (AS SO4)	71852	166GW42DM8	71852011	WG	7.18	=	7.18	J	mg/L	BL

Parameter Class	Analytical Method	Parameter	SDG	Sample ID	Lab Sample ID	Matrix	Lab Result	Lab Qual	Final Result	Final Qual	Units	Reasons
GENCHEM	E300	SULFATE (AS SO4)	71852	166GW43DM8	71852012	WG	24.8	=	24.8	J	mg/L	BL
GENCHEM	E300	SULFATE (AS SO4)	71852	166GW44DM8	71852013	WG	37.6	=	37.6	J	mg/L	BL
METAL	SW6010B	IRON	56330	166GW28DM1	56330001	WG	65.3	B	65.3	U	ug/L	BL
VOA	SW8260B	1,1,1-TRICHLOROETHANE	56223	166GW32DM1LR	56223003	WG	250	U	250	R	ug/L	DL
VOA	SW8260B	1,1,1-TRICHLOROETHANE	56330	166GW28DM1DL	56330001	WG	25	U	25	R	ug/L	DL
VOA	SW8260B	1,1,1-TRICHLOROETHANE	56330	166GW30DM1LR	56330003	WG	250	U	250	R	ug/L	DL
VOA	SW8260B	1,1,1-TRICHLOROETHANE	56330	166HW30DM1LR	56330004	WG	250	U	250	R	ug/L	DL
VOA	SW8260B	1,1,1-TRICHLOROETHANE	56341	166VDRM001M2	56341001	SO	5.6	U	5.6	UJ	ug/kg	IS
VOA	SW8260B	1,1,1-TRICHLOROETHANE	57725	166GW28DM2DL	57725002	WG	10	U	10	R	ug/L	DL
VOA	SW8260B	1,1,1-TRICHLOROETHANE	57725	166GW29DM2DL	57725003	WG	10	U	10	R	ug/L	DL
VOA	SW8260B	1,1,1-TRICHLOROETHANE	57725	166GW30DM2DL	57725004	WG	50	U	50	R	ug/L	DL
VOA	SW8260B	1,1,1-TRICHLOROETHANE	57725	166HW30DM2DL	57725005	WG	50	U	50	R	ug/L	DL
VOA	SW8260B	1,1,1-TRICHLOROETHANE	57725	166GW31DM2DL	57725006	WG	10	U	10	R	ug/L	DL
VOA	SW8260B	1,1,1-TRICHLOROETHANE	57725	166GW32DM2DL	57725007	WG	50	U	50	R	ug/L	DL
VOA	SW8260B	1,1,1-TRICHLOROETHANE	58856	166GW28DM3DL	58856002	WG	50	U	50	R	ug/L	DL
VOA	SW8260B	1,1,1-TRICHLOROETHANE	58856	166GW29DM3DL	58856003	WG	10	U	10	R	ug/L	DL
VOA	SW8260B	1,1,1-TRICHLOROETHANE	58856	166GW30DM3DL	58856004	WG	250	U	250	R	ug/L	DL
VOA	SW8260B	1,1,1-TRICHLOROETHANE	58856	166GW31DM3DL	58856005	WG	25	U	25	R	ug/L	DL
VOA	SW8260B	1,1,1-TRICHLOROETHANE	58856	166HW31DM3DL	58856006	WG	50	U	50	R	ug/L	DL
VOA	SW8260B	1,1,1-TRICHLOROETHANE	58856	166GW32DM3DL	58856007	WG	250	U	250	R	ug/L	DL
VOA	SW8260B	1,1,1-TRICHLOROETHANE	60789	166GW33DM4DL	60789001	WG	10	U	10	R	ug/L	DL

Attachment 1 - Changed Qualifiers and Results
Charleston Navel Complex - Zone K, SWMU 166 - 2002 Sampling Events

Parameter Class	Analytical Method	Parameter	SDG	Sample ID	Lab Sample ID	Matrix	Lab Result	Lab Qual	Final Result	Final Qual	Units	Reasons
VOA	SW8260B	1,1,1-TRICHLOROETHANE	60789	166GW34DM4DL	60789002	WG	2500	U	2500	R	ug/L	DL
VOA	SW8260B	1,1,1-TRICHLOROETHANE	60789	166GW35DM4DL	60789003	WG	50	U	50	R	ug/L	DL
VOA	SW8260B	1,1,1-TRICHLOROETHANE	60789	166GW37DM4DL	60789004	WG	2500	U	2500	R	ug/L	DL
VOA	SW8260B	1,1,1-TRICHLOROETHANE	60789	166GW39DM4DL	60789005	WG	50	U	50	R	ug/L	DL
VOA	SW8260B	1,1,1-TRICHLOROETHANE	60790	163GW03MM4DL	60790001	WG	250	U	250	R	ug/L	DL
VOA	SW8260B	1,1,1-TRICHLOROETHANE	60790	166GW26DM4DL	60790002	WG	250	U	250	R	ug/L	DL
VOA	SW8260B	1,1,1-TRICHLOROETHANE	60790	166GW25DM4DL	60790003	WG	500	U	500	R	ug/L	DL
VOA	SW8260B	1,1,1-TRICHLOROETHANE	60790	166HW25DM4DL	60790004	WG	500	U	500	R	ug/L	DL
VOA	SW8260B	1,1,1-TRICHLOROETHANE	60790	166GW07DM4DL	60790008	WG	50	U	50	R	ug/L	DL
VOA	SW8260B	1,1,1-TRICHLOROETHANE	60879	166GW41DM4DL	60879001	WG	250	U	250	R	ug/L	DL
VOA	SW8260B	1,1,1-TRICHLOROETHANE	60879	166GW42DM4DL	60879002	WG	500	U	500	R	ug/L	DL
VOA	SW8260B	1,1,1-TRICHLOROETHANE	60879	166GW43DM4DL	60879003	WG	1250	U	1250	R	ug/L	DL
VOA	SW8260B	1,1,1-TRICHLOROETHANE	60879	166GW44DM4DL	60879004	WG	250	U	250	R	ug/L	DL
VOA	SW8260B	1,1,1-TRICHLOROETHANE	60879	166GW13DM4DL	60879005	WG	500	U	500	R	ug/L	DL
VOA	SW8260B	1,1,1-TRICHLOROETHANE	61044	166GW38DM4DL	61044001	WG	100	U	100	R	ug/L	DL
VOA	SW8260B	1,1,1-TRICHLOROETHANE	61044	166GW45DM4DL	61044002	WG	500	U	500	R	ug/L	DL
VOA	SW8260B	1,1,1-TRICHLOROETHANE	61044	166GW48DM4DL	61044004	WG	500	U	500	R	ug/L	DL
VOA	SW8260B	1,1,1-TRICHLOROETHANE	61044	166GWTM4M4DL	61044005	WG	500	U	500	R	ug/L	DL
VOA	SW8260B	1,1,1-TRICHLOROETHANE	61044	166GW14DM4DL	61044007	WG	10	U	10	R	ug/L	DL
VOA	SW8260B	1,1,1-TRICHLOROETHANE	61134	166GW36DM4DL	61134002	WG	2500	U	2500	R	ug/L	DL
VOA	SW8260B	1,1,1-TRICHLOROETHANE	61170	166GW50DM4DL	61170001	WG	1250	U	1250	R	ug/L	DL

Parameter Class	Analytical Method	Parameter	SDG	Sample ID	Lab Sample ID	Matrix	Lab Result	Lab Qualifier	Target Result	Final Qualifier	Units	Reason
VOA	SW8260B	1,1,1-TRICHLOROETHANE	62650	166GW28DM6DL	62650003	WG	25	U	25	R	ug/L	DL
VOA	SW8260B	1,1,1-TRICHLOROETHANE	64473	166GW50DM7DL	64473003	WG	1250	U	1250	R	ug/L	DL
VOA	SW8260B	1,1,1-TRICHLOROETHANE	64473	166HW50DM7DL	64473004	WG	1250	U	1250	R	ug/L	DL
VOA	SW8260B	1,1,1-TRICHLOROETHANE	64475	166GW053M7DL	64475007	WG	500	U	500	R	ug/L	DL
VOA	SW8260B	1,1,1-TRICHLOROETHANE	64475	166GW054M7DL	64475008	WG	125	U	125	R	ug/L	DL
VOA	SW8260B	1,1,1-TRICHLOROETHANE	64475	166GW055M7DL	64475009	WG	125	U	125	R	ug/L	DL
VOA	SW8260B	1,1,1-TRICHLOROETHANE	64475	166HW055M7DL	64475010	WG	125	U	125	R	ug/L	DL
VOA	SW8260B	1,1,1-TRICHLOROETHANE	64475	166GW07DM7DL	64475011	WG	125	U	125	R	ug/L	DL
VOA	SW8260B	1,1,1-TRICHLOROETHANE	64475	166GW13DM7DL	64475013	WG	500	U	500	R	ug/L	DL
VOA	SW8260B	1,1,1-TRICHLOROETHANE	64475	166HW13DM7DL	64475014	WG	500	U	500	R	ug/L	DL
VOA	SW8260B	1,1,1-TRICHLOROETHANE	64475	166GW14DM7DL	64475015	WG	10	U	10	R	ug/L	DL
VOA	SW8260B	1,1,1-TRICHLOROETHANE	64475	166GW26DM7DL	64475019	WG	250	U	250	R	ug/L	DL
VOA	SW8260B	1,1,1-TRICHLOROETHANE	64550	166GW34DM7DL	64550003	WG	5000	U	5000	R	ug/L	DL
VOA	SW8260B	1,1,1-TRICHLOROETHANE	64550	166GW36DM7DL	64550004	WG	2500	U	2500	R	ug/L	DL
VOA	SW8260B	1,1,1-TRICHLOROETHANE	64676	163GW003M7DL	64676002	WG	25	U	25	R	ug/L	DL
VOA	SW8260B	1,1,1-TRICHLOROETHANE	64676	166GW040M7DL	64676003	WG	5000	U	5000	R	ug/L	DL
VOA	SW8260B	1,1,1-TRICHLOROETHANE	64676	166GW41DM7DL	64676008	WG	50	U	50	R	ug/L	DL
VOA	SW8260B	1,1,1-TRICHLOROETHANE	64676	166GW42DM7DL	64676009	WG	500	U	500	R	ug/L	DL
VOA	SW8260B	1,1,1-TRICHLOROETHANE	64676	166GW44DM7DL	64676011	WG	500	U	500	R	ug/L	DL
VOA	SW8260B	1,1,1-TRICHLOROETHANE	64676	166GW35DM7DL	64676012	WG	500	U	500	R	ug/L	DL
VOA	SW8260B	1,1,1-TRICHLOROETHANE	71658	166GW053M8DL	71658007	WG	250	U	250	R	ug/L	DL

Attachment 1 - Changed Qualifiers and Results
Charleston Navel Complex - Zone K, SWMU 166 - 2002 Sampling Events

Parameter Class	Analytical Method	Parameter	SDG	Sample ID	Lab Sample ID	Matrix	Lab Result	Lab Qual	Final Result	Final Qual	Units	Reason
VOA	SW8260B	1,1,1-TRICHLOROETHANE	71658	166GW054M8DL	71658008	WG	125	U	125	R	ug/L	DL
VOA	SW8260B	1,1,1-TRICHLOROETHANE	71658	166GW055M8DL	71658009	WG	500	U	500	R	ug/L	DL
VOA	SW8260B	1,1,1-TRICHLOROETHANE	71658	166GW056M8DL	71658010	WG	500	U	500	R	ug/L	DL
VOA	SW8260B	1,1,1-TRICHLOROETHANE	71658	166GW07DM8DL	71658012	WG	125	U	125	R	ug/L	DL
VOA	SW8260B	1,1,1-TRICHLOROETHANE	71658	166GW13DM8DL	71658014	WG	500	U	500	R	ug/L	DL
VOA	SW8260B	1,1,1-TRICHLOROETHANE	71658	166GW14DM8DL	71658016	WG	10	U	10	R	ug/L	DL
VOA	SW8260B	1,1,1-TRICHLOROETHANE	71659	166GW19DM8DL	71659002	WG	10	U	10	R	ug/L	DL
VOA	SW8260B	1,1,1-TRICHLOROETHANE	71659	166GW25DM8DL	71659004	WG	500	U	500	R	ug/L	DL
VOA	SW8260B	1,1,1-TRICHLOROETHANE	71766	166GW49DM8DL	71766003	WG	250	U	250	R	ug/L	DL
VOA	SW8260B	1,1,1-TRICHLOROETHANE	71766	166GW50DM8DL	71766004	WG	1000	U	1000	R	ug/L	DL
VOA	SW8260B	1,1,1-TRICHLOROETHANE	71766	166HW50DM8DL	71766005	WG	2500	U	2500	R	ug/L	DL
VOA	SW8260B	1,1,1-TRICHLOROETHANE	71766	166GW51DM8DL	71766006	WG	500	U	500	R	ug/L	DL
VOA	SW8260B	1,1,1-TRICHLOROETHANE	71766	166GW52DM8DL	71766007	WG	500	U	500	R	ug/L	DL
VOA	SW8260B	1,1,1-TRICHLOROETHANE	71766	166GWTM3M8DL	71766009	WG	50	U	50	R	ug/L	DL
VOA	SW8260B	1,1,1-TRICHLOROETHANE	71766	166GWTM4M8DL	71766010	WG	1000	U	1000	R	ug/L	DL
VOA	SW8260B	1,1,1-TRICHLOROETHANE	71766	166GW45DM8DL	71766011	WG	250	U	250	R	ug/L	DL
VOA	SW8260B	1,1,1-TRICHLOROETHANE	71766	166GW46DM8DL	71766012	WG	250	U	250	R	ug/L	DL
VOA	SW8260B	1,1,1-TRICHLOROETHANE	71766	166GW48DM8DL	71766014	WG	500	U	500	R	ug/L	DL
VOA	SW8260B	1,1,1-TRICHLOROETHANE	71852	166GW040M8DL	71852003	WG	1250	U	1250	R	ug/L	DL
VOA	SW8260B	1,1,1-TRICHLOROETHANE	71852	166HW040M8DL	71852004	WG	1250	U	1250	R	ug/L	DL
VOA	SW8260B	1,1,1-TRICHLOROETHANE	71852	166GW34DM8DL	71852005	WG	5000	U	5000	R	ug/L	DL

Parameter Class	Analytical Method	Parameter	SDG	Sample ID	Lab Sample ID	Matrix	Lab Result	Lab Qual	Final Result	Final Qual	Units	Reasons
VOA	SW8260B	1,1,1-TRICHLOROETHANE	71852	166GW36DM8DL	71852007	WG	1250	U	1250	R	ug/L	DL
VOA	SW8260B	1,1,1-TRICHLOROETHANE	71852	166GW37DM8DL	71852008	WG	25	U	25	R	ug/L	DL
VOA	SW8260B	1,1,1-TRICHLOROETHANE	71852	166GW43DM8DL	71852012	WG	500	U	500	R	ug/L	DL
VOA	SW8260B	1,1,1-TRICHLOROETHANE	72055	163GW003M8	72055003	WG	5	U	5	UJ	ug/L	CC,SS
VOA	SW8260B	1,1,1-TRICHLOROETHANE	72055	163GW003M8DL	72055003	WG	50	U	50	R	ug/L	DL
VOA	SW8260B	1,1,1-TRICHLOROETHANE	72055	163GW03MM8	72055004	WG	5	U	5	UJ	ug/L	SS
VOA	SW8260B	1,1,1-TRICHLOROETHANE	72055	166GW16DM8	72055005	WG	5	U	5	UJ	ug/L	CC,SS
VOA	SW8260B	1,1,1-TRICHLOROETHANE	72055	166GW16DM8DL	72055005	WG	250	U	250	R	ug/L	DL
VOA	SW8260B	1,1,1-TRICHLOROETHANE	72055	166GW33DM8	72055006	WG	5	U	5	UJ	ug/L	SS
VOA	SW8260B	1,1,1-TRICHLOROETHANE	72055	166GW38DM8	72055007	WG	5	U	5	UJ	ug/L	CC,SS
VOA	SW8260B	1,1,1-TRICHLOROETHANE	72055	166GW38DM8DL	72055007	WG	50	U	50	R	ug/L	DL
VOA	SW8260B	1,1,1-TRICHLOROETHANE	72055	163GW005M8	72055008	WG	5	U	5	UJ	ug/L	SS
VOA	SW8260B	1,1,2,2-TETRACHLOROETHANE	56223	166GW32DM1LR	56223003	WG	250	U	250	R	ug/L	DL
VOA	SW8260B	1,1,2,2-TETRACHLOROETHANE	56330	166GW28DM1DL	56330001	WG	25	U	25	R	ug/L	DL
VOA	SW8260B	1,1,2,2-TETRACHLOROETHANE	56330	166GW30DM1LR	56330003	WG	250	U	250	R	ug/L	DL
VOA	SW8260B	1,1,2,2-TETRACHLOROETHANE	56330	166HW30DM1LR	56330004	WG	250	U	250	R	ug/L	DL
VOA	SW8260B	1,1,2,2-TETRACHLOROETHANE	56341	166VDRM001M2	56341001	SO	5.6	U	5.6	UJ	ug/kg	IS
VOA	SW8260B	1,1,2,2-TETRACHLOROETHANE	57725	166GW28DM2DL	57725002	WG	10	U	10	R	ug/L	DL
VOA	SW8260B	1,1,2,2-TETRACHLOROETHANE	57725	166GW29DM2DL	57725003	WG	10	U	10	R	ug/L	DL
VOA	SW8260B	1,1,2,2-TETRACHLOROETHANE	57725	166GW30DM2DL	57725004	WG	50	U	50	R	ug/L	DL
VOA	SW8260B	1,1,2,2-TETRACHLOROETHANE	57725	166HW30DM2DL	57725005	WG	50	U	50	R	ug/L	DL

Attachment 1 - Changed Qualifiers and Results
Charleston Navel Complex - Zone K, SWMU 166 - 2002 Sampling Events

Parameter Class	Analytical Method	Parameter	SDG	Sample ID	Lab Sample ID	Matrix	Lab Result	Lab Qual	Final Result	Final Qual	Units	Reason
VOA	SW8260B	1,1,2,2-TETRACHLOROETHANE	57725	166GW31DM2DL	57725006	WG	10	U	10	R	ug/L	DL
VOA	SW8260B	1,1,2,2-TETRACHLOROETHANE	57725	166GW32DM2DL	57725007	WG	50	U	50	R	ug/L	DL
VOA	SW8260B	1,1,2,2-TETRACHLOROETHANE	58856	166GW28DM3DL	58856002	WG	50	U	50	R	ug/L	DL
VOA	SW8260B	1,1,2,2-TETRACHLOROETHANE	58856	166GW29DM3DL	58856003	WG	10	U	10	R	ug/L	DL
VOA	SW8260B	1,1,2,2-TETRACHLOROETHANE	58856	166GW30DM3DL	58856004	WG	250	U	250	R	ug/L	DL
VOA	SW8260B	1,1,2,2-TETRACHLOROETHANE	58856	166GW31DM3DL	58856005	WG	25	U	25	R	ug/L	DL
VOA	SW8260B	1,1,2,2-TETRACHLOROETHANE	58856	166HW31DM3DL	58856006	WG	50	U	50	R	ug/L	DL
VOA	SW8260B	1,1,2,2-TETRACHLOROETHANE	58856	166GW32DM3DL	58856007	WG	250	U	250	R	ug/L	DL
VOA	SW8260B	1,1,2,2-TETRACHLOROETHANE	60789	166GW33DM4DL	60789001	WG	10	U	10	R	ug/L	DL
VOA	SW8260B	1,1,2,2-TETRACHLOROETHANE	60789	166GW34DM4DL	60789002	WG	2500	U	2500	R	ug/L	DL
VOA	SW8260B	1,1,2,2-TETRACHLOROETHANE	60789	166GW35DM4DL	60789003	WG	50	U	50	R	ug/L	DL
VOA	SW8260B	1,1,2,2-TETRACHLOROETHANE	60789	166GW37DM4DL	60789004	WG	2500	U	2500	R	ug/L	DL
VOA	SW8260B	1,1,2,2-TETRACHLOROETHANE	60789	166GW39DM4DL	60789005	WG	50	U	50	R	ug/L	DL
VOA	SW8260B	1,1,2,2-TETRACHLOROETHANE	60790	163GW03MM4DL	60790001	WG	250	U	250	R	ug/L	DL
VOA	SW8260B	1,1,2,2-TETRACHLOROETHANE	60790	166GW26DM4DL	60790002	WG	250	U	250	R	ug/L	DL
VOA	SW8260B	1,1,2,2-TETRACHLOROETHANE	60790	166GW25DM4DL	60790003	WG	500	U	500	R	ug/L	DL
VOA	SW8260B	1,1,2,2-TETRACHLOROETHANE	60790	166HW25DM4DL	60790004	WG	500	U	500	R	ug/L	DL
VOA	SW8260B	1,1,2,2-TETRACHLOROETHANE	60790	166GW07DM4DL	60790008	WG	50	U	50	R	ug/L	DL
VOA	SW8260B	1,1,2,2-TETRACHLOROETHANE	60879	166GW41DM4DL	60879001	WG	250	U	250	R	ug/L	DL
VOA	SW8260B	1,1,2,2-TETRACHLOROETHANE	60879	166GW42DM4DL	60879002	WG	500	U	500	R	ug/L	DL
VOA	SW8260B	1,1,2,2-TETRACHLOROETHANE	60879	166GW43DM4DL	60879003	WG	1250	U	1250	R	ug/L	DL

Parameter Class	Analytical Method	Parameter	SDG	Sample ID	Lab Sample ID	Matrix	Lab Result	Lab Qual	Final Result	Final Qual	Units	Reason
VOA	SW8260B	1,1,2,2-TETRACHLOROETHANE	60879	166GW44DM4DL	60879004	WG	250	U	250	R	ug/L	DL
VOA	SW8260B	1,1,2,2-TETRACHLOROETHANE	60879	166GW13DM4DL	60879005	WG	500	U	500	R	ug/L	DL
VOA	SW8260B	1,1,2,2-TETRACHLOROETHANE	61044	166GW38DM4DL	61044001	WG	100	U	100	R	ug/L	DL
VOA	SW8260B	1,1,2,2-TETRACHLOROETHANE	61044	166GW45DM4DL	61044002	WG	500	U	500	R	ug/L	DL
VOA	SW8260B	1,1,2,2-TETRACHLOROETHANE	61044	166GW48DM4DL	61044004	WG	500	U	500	R	ug/L	DL
VOA	SW8260B	1,1,2,2-TETRACHLOROETHANE	61044	166GWTM4M4DL	61044005	WG	500	U	500	R	ug/L	DL
VOA	SW8260B	1,1,2,2-TETRACHLOROETHANE	61044	166GW14DM4DL	61044007	WG	10	U	10	R	ug/L	DL
VOA	SW8260B	1,1,2,2-TETRACHLOROETHANE	61134	166GW36DM4DL	61134002	WG	2500	U	2500	R	ug/L	DL
VOA	SW8260B	1,1,2,2-TETRACHLOROETHANE	61170	166GW50DM4DL	61170001	WG	1250	U	1250	R	ug/L	DL
VOA	SW8260B	1,1,2,2-TETRACHLOROETHANE	61258	166GW053M4	61258004	WG	500	U	500	UJ	ug/L	CC
VOA	SW8260B	1,1,2,2-TETRACHLOROETHANE	61258	166GW054M4	61258005	WG	500	U	500	UJ	ug/L	CC
VOA	SW8260B	1,1,2,2-TETRACHLOROETHANE	62650	166GW28DM6DL	62650003	WG	25	U	25	R	ug/L	DL
VOA	SW8260B	1,1,2,2-TETRACHLOROETHANE	64473	166GW50DM7DL	64473003	WG	1250	U	1250	R	ug/L	DL
VOA	SW8260B	1,1,2,2-TETRACHLOROETHANE	64473	166HW50DM7DL	64473004	WG	1250	U	1250	R	ug/L	DL
VOA	SW8260B	1,1,2,2-TETRACHLOROETHANE	64475	166GW053M7DL	64475007	WG	500	U	500	R	ug/L	DL
VOA	SW8260B	1,1,2,2-TETRACHLOROETHANE	64475	166GW054M7DL	64475008	WG	125	U	125	R	ug/L	DL
VOA	SW8260B	1,1,2,2-TETRACHLOROETHANE	64475	166GW055M7DL	64475009	WG	125	U	125	R	ug/L	DL
VOA	SW8260B	1,1,2,2-TETRACHLOROETHANE	64475	166HW055M7DL	64475010	WG	125	U	125	R	ug/L	DL
VOA	SW8260B	1,1,2,2-TETRACHLOROETHANE	64475	166GW07DM7DL	64475011	WG	125	U	125	R	ug/L	DL
VOA	SW8260B	1,1,2,2-TETRACHLOROETHANE	64475	166GW13DM7DL	64475013	WG	500	U	500	R	ug/L	DL
VOA	SW8260B	1,1,2,2-TETRACHLOROETHANE	64475	166HW13DM7DL	64475014	WG	500	U	500	R	ug/L	DL

Attachment 1 - Changed Qualifiers and Results
Charleston Navel Complex - Zone K, SWMU 166 - 2002 Sampling Events

Parameter Class	Analytical Method	Parameter	SDG	Sample ID	Lab Sample ID	Matrix	Lab Result	Lab Qual	Final Result	Final Qual	Units	Reasons
VOA	SW8260B	1,1,2,2-TETRACHLOROETHANE	64475	166GW14DM7DL	64475015	WG	10	U	10	R	ug/L	DL
VOA	SW8260B	1,1,2,2-TETRACHLOROETHANE	64475	166GW26DM7DL	64475019	WG	250	U	250	R	ug/L	DL
VOA	SW8260B	1,1,2,2-TETRACHLOROETHANE	64550	166GW34DM7DL	64550003	WG	5000	U	5000	R	ug/L	DL
VOA	SW8260B	1,1,2,2-TETRACHLOROETHANE	64550	166GW36DM7DL	64550004	WG	2500	U	2500	R	ug/L	DL
VOA	SW8260B	1,1,2,2-TETRACHLOROETHANE	64676	163GW003M7DL	64676002	WG	25	U	25	R	ug/L	DL
VOA	SW8260B	1,1,2,2-TETRACHLOROETHANE	64676	166GW040M7DL	64676003	WG	5000	U	5000	R	ug/L	DL
VOA	SW8260B	1,1,2,2-TETRACHLOROETHANE	64676	166GW41DM7DL	64676008	WG	50	U	50	R	ug/L	DL
VOA	SW8260B	1,1,2,2-TETRACHLOROETHANE	64676	166GW42DM7DL	64676009	WG	500	U	500	R	ug/L	DL
VOA	SW8260B	1,1,2,2-TETRACHLOROETHANE	64676	166GW44DM7DL	64676011	WG	500	U	500	R	ug/L	DL
VOA	SW8260B	1,1,2,2-TETRACHLOROETHANE	64676	166GW35DM7DL	64676012	WG	500	U	500	R	ug/L	DL
VOA	SW8260B	1,1,2,2-TETRACHLOROETHANE	71658	166GW053M8DL	71658007	WG	250	U	250	R	ug/L	DL
VOA	SW8260B	1,1,2,2-TETRACHLOROETHANE	71658	166GW054M8DL	71658008	WG	125	U	125	R	ug/L	DL
VOA	SW8260B	1,1,2,2-TETRACHLOROETHANE	71658	166GW055M8DL	71658009	WG	500	U	500	R	ug/L	DL
VOA	SW8260B	1,1,2,2-TETRACHLOROETHANE	71658	166GW056M8DL	71658010	WG	500	U	500	R	ug/L	DL
VOA	SW8260B	1,1,2,2-TETRACHLOROETHANE	71658	166GW07DM8DL	71658012	WG	125	U	125	R	ug/L	DL
VOA	SW8260B	1,1,2,2-TETRACHLOROETHANE	71658	166GW13DM8DL	71658014	WG	500	U	500	R	ug/L	DL
VOA	SW8260B	1,1,2,2-TETRACHLOROETHANE	71658	166GW14DM8DL	71658016	WG	10	U	10	R	ug/L	DL
VOA	SW8260B	1,1,2,2-TETRACHLOROETHANE	71659	166GW19DM8DL	71659002	WG	10	U	10	R	ug/L	DL
VOA	SW8260B	1,1,2,2-TETRACHLOROETHANE	71659	166GW25DM8DL	71659004	WG	500	U	500	R	ug/L	DL
VOA	SW8260B	1,1,2,2-TETRACHLOROETHANE	71766	166GW49DM8DL	71766003	WG	250	U	250	R	ug/L	DL
VOA	SW8260B	1,1,2,2-TETRACHLOROETHANE	71766	166GW50DM8DL	71766004	WG	1000	U	1000	R	ug/L	DL

Parameter Class	Analytical Method	Parameter	SDG	Sample ID	Lab Sample ID	Matrix	Lab Result	Lab Qual	Final Result	Final Qual	Units	Reasons
VOA	SW8260B	1,1,2,2-TETRACHLOROETHANE	71766	166HW50DM8DL	71766005	WG	2500	U	2500	R	ug/L	DL
VOA	SW8260B	1,1,2,2-TETRACHLOROETHANE	71766	166GW51DM8DL	71766006	WG	500	U	500	R	ug/L	DL
VOA	SW8260B	1,1,2,2-TETRACHLOROETHANE	71766	166GW52DM8DL	71766007	WG	500	U	500	R	ug/L	DL
VOA	SW8260B	1,1,2,2-TETRACHLOROETHANE	71766	166GWTM3M8DL	71766009	WG	50	U	50	R	ug/L	DL
VOA	SW8260B	1,1,2,2-TETRACHLOROETHANE	71766	166GWTM4M8DL	71766010	WG	1000	U	1000	R	ug/L	DL
VOA	SW8260B	1,1,2,2-TETRACHLOROETHANE	71766	166GW45DM8DL	71766011	WG	250	U	250	R	ug/L	DL
VOA	SW8260B	1,1,2,2-TETRACHLOROETHANE	71766	166GW46DM8DL	71766012	WG	250	U	250	R	ug/L	DL
VOA	SW8260B	1,1,2,2-TETRACHLOROETHANE	71766	166GW48DM8DL	71766014	WG	500	U	500	R	ug/L	DL
VOA	SW8260B	1,1,2,2-TETRACHLOROETHANE	71852	166GW040M8DL	71852003	WG	1250	U	1250	R	ug/L	DL
VOA	SW8260B	1,1,2,2-TETRACHLOROETHANE	71852	166HW040M8DL	71852004	WG	1250	U	1250	R	ug/L	DL
VOA	SW8260B	1,1,2,2-TETRACHLOROETHANE	71852	166GW34DM8DL	71852005	WG	5000	U	5000	R	ug/L	DL
VOA	SW8260B	1,1,2,2-TETRACHLOROETHANE	71852	166GW36DM8DL	71852007	WG	1250	U	1250	R	ug/L	DL
VOA	SW8260B	1,1,2,2-TETRACHLOROETHANE	71852	166GW37DM8DL	71852008	WG	25	U	25	R	ug/L	DL
VOA	SW8260B	1,1,2,2-TETRACHLOROETHANE	71852	166GW43DM8DL	71852012	WG	500	U	500	R	ug/L	DL
VOA	SW8260B	1,1,2,2-TETRACHLOROETHANE	72055	163GW003M8	72055003	WG	5	U	5	UJ	ug/L	SS
VOA	SW8260B	1,1,2,2-TETRACHLOROETHANE	72055	163GW003M8DL	72055003	WG	50	U	50	R	ug/L	DL
VOA	SW8260B	1,1,2,2-TETRACHLOROETHANE	72055	163GW03MM8	72055004	WG	5	U	5	UJ	ug/L	SS
VOA	SW8260B	1,1,2,2-TETRACHLOROETHANE	72055	166GW16DM8	72055005	WG	5	U	5	UJ	ug/L	SS
VOA	SW8260B	1,1,2,2-TETRACHLOROETHANE	72055	166GW16DM8DL	72055005	WG	250	U	250	R	ug/L	DL
VOA	SW8260B	1,1,2,2-TETRACHLOROETHANE	72055	166GW33DM8	72055006	WG	5	U	5	UJ	ug/L	SS
VOA	SW8260B	1,1,2,2-TETRACHLOROETHANE	72055	166GW38DM8	72055007	WG	5	U	5	UJ	ug/L	SS

Attachment 1 - Changed Qualifiers and Results
Charleston Navel Complex - Zone K, SWMU 166 - 2002 Sampling Events

Parameter Class	Analytical Method	Parameter	SDG	Sample ID	Lab Sample ID	Matrix	Lab Result	Lab Qual	Final Result	Final Qual	Units	Reason
VOA	SW8260B	1,1,2,2-TETRACHLOROETHANE	72055	166GW38DM8DL	72055007	WG	50	U	50	R	ug/L	DL
VOA	SW8260B	1,1,2,2-TETRACHLOROETHANE	72055	163GW005M8	72055008	WG	5	U	5	UJ	ug/L	SS
VOA	SW8260B	1,1,2-TRICHLOROETHANE	56223	166GW32DM1LR	56223003	WG	250	U	250	R	ug/L	DL
VOA	SW8260B	1,1,2-TRICHLOROETHANE	56330	166GW28DM1DL	56330001	WG	25	U	25	R	ug/L	DL
VOA	SW8260B	1,1,2-TRICHLOROETHANE	56330	166GW30DM1LR	56330003	WG	250	U	250	R	ug/L	DL
VOA	SW8260B	1,1,2-TRICHLOROETHANE	56330	166HW30DM1LR	56330004	WG	250	U	250	R	ug/L	DL
VOA	SW8260B	1,1,2-TRICHLOROETHANE	56341	166VDRM001M2	56341001	SO	5.6	U	5.6	UJ	ug/kg	IS
VOA	SW8260B	1,1,2-TRICHLOROETHANE	57725	166GW28DM2DL	57725002	WG	10	U	10	R	ug/L	DL
VOA	SW8260B	1,1,2-TRICHLOROETHANE	57725	166GW29DM2DL	57725003	WG	10	U	10	R	ug/L	DL
VOA	SW8260B	1,1,2-TRICHLOROETHANE	57725	166GW30DM2DL	57725004	WG	50	U	50	R	ug/L	DL
VOA	SW8260B	1,1,2-TRICHLOROETHANE	57725	166HW30DM2DL	57725005	WG	50	U	50	R	ug/L	DL
VOA	SW8260B	1,1,2-TRICHLOROETHANE	57725	166GW31DM2DL	57725006	WG	10	U	10	R	ug/L	DL
VOA	SW8260B	1,1,2-TRICHLOROETHANE	57725	166GW32DM2DL	57725007	WG	50	U	50	R	ug/L	DL
VOA	SW8260B	1,1,2-TRICHLOROETHANE	58856	166GW28DM3DL	58856002	WG	50	U	50	R	ug/L	DL
VOA	SW8260B	1,1,2-TRICHLOROETHANE	58856	166GW29DM3DL	58856003	WG	10	U	10	R	ug/L	DL
VOA	SW8260B	1,1,2-TRICHLOROETHANE	58856	166GW30DM3DL	58856004	WG	250	U	250	R	ug/L	DL
VOA	SW8260B	1,1,2-TRICHLOROETHANE	58856	166GW31DM3DL	58856005	WG	25	U	25	R	ug/L	DL
VOA	SW8260B	1,1,2-TRICHLOROETHANE	58856	166HW31DM3DL	58856006	WG	50	U	50	R	ug/L	DL
VOA	SW8260B	1,1,2-TRICHLOROETHANE	58856	166GW32DM3DL	58856007	WG	250	U	250	R	ug/L	DL
VOA	SW8260B	1,1,2-TRICHLOROETHANE	60789	166GW33DM4DL	60789001	WG	10	U	10	R	ug/L	DL
VOA	SW8260B	1,1,2-TRICHLOROETHANE	60789	166GW34DM4DL	60789002	WG	2500	U	2500	R	ug/L	DL

Parameter Class	Analytical Method	Parameter	SDG	Sample ID	Lab Sample ID	Matrix	Lab Result	Lab Qual	Final Reporting	Final Qual	Units	Reasons
VOA	SW8260B	1,1,2-TRICHLOROETHANE	60789	166GW35DM4DL	60789003	WG	50	U	50	R	ug/L	DL
VOA	SW8260B	1,1,2-TRICHLOROETHANE	60789	166GW37DM4DL	60789004	WG	2500	U	2500	R	ug/L	DL
VOA	SW8260B	1,1,2-TRICHLOROETHANE	60789	166GW39DM4DL	60789005	WG	50	U	50	R	ug/L	DL
VOA	SW8260B	1,1,2-TRICHLOROETHANE	60790	163GW03MM4DL	60790001	WG	250	U	250	R	ug/L	DL
VOA	SW8260B	1,1,2-TRICHLOROETHANE	60790	166GW26DM4DL	60790002	WG	250	U	250	R	ug/L	DL
VOA	SW8260B	1,1,2-TRICHLOROETHANE	60790	166GW25DM4DL	60790003	WG	500	U	500	R	ug/L	DL
VOA	SW8260B	1,1,2-TRICHLOROETHANE	60790	166HW25DM4DL	60790004	WG	500	U	500	R	ug/L	DL
VOA	SW8260B	1,1,2-TRICHLOROETHANE	60790	166GW07DM4DL	60790008	WG	50	U	50	R	ug/L	DL
VOA	SW8260B	1,1,2-TRICHLOROETHANE	60879	166GW41DM4DL	60879001	WG	250	U	250	R	ug/L	DL
VOA	SW8260B	1,1,2-TRICHLOROETHANE	60879	166GW42DM4DL	60879002	WG	500	U	500	R	ug/L	DL
VOA	SW8260B	1,1,2-TRICHLOROETHANE	60879	166GW43DM4DL	60879003	WG	1250	U	1250	R	ug/L	DL
VOA	SW8260B	1,1,2-TRICHLOROETHANE	60879	166GW44DM4DL	60879004	WG	250	U	250	R	ug/L	DL
VOA	SW8260B	1,1,2-TRICHLOROETHANE	60879	166GW13DM4DL	60879005	WG	500	U	500	R	ug/L	DL
VOA	SW8260B	1,1,2-TRICHLOROETHANE	61044	166GW38DM4DL	61044001	WG	100	U	100	R	ug/L	DL
VOA	SW8260B	1,1,2-TRICHLOROETHANE	61044	166GW45DM4DL	61044002	WG	500	U	500	R	ug/L	DL
VOA	SW8260B	1,1,2-TRICHLOROETHANE	61044	166GW48DM4DL	61044004	WG	500	U	500	R	ug/L	DL
VOA	SW8260B	1,1,2-TRICHLOROETHANE	61044	166GWTM4M4DL	61044005	WG	500	U	500	R	ug/L	DL
VOA	SW8260B	1,1,2-TRICHLOROETHANE	61044	166GW14DM4DL	61044007	WG	10	U	10	R	ug/L	DL
VOA	SW8260B	1,1,2-TRICHLOROETHANE	61134	166GW36DM4DL	61134002	WG	2500	U	2500	R	ug/L	DL
VOA	SW8260B	1,1,2-TRICHLOROETHANE	61170	166GW50DM4DL	61170001	WG	1250	U	1250	R	ug/L	DL
VOA	SW8260B	1,1,2-TRICHLOROETHANE	62650	166GW28DM6DL	62650003	WG	25	U	25	R	ug/L	DL

Attachment 1 - Changed Qualifiers and Results
Charleston Navel Complex - Zone K, SWMU 166 - 2002 Sampling Events

Parameter Class	Analytical Method	Parameter	SDG	Sample ID	Lab Sample ID	Matrix	Lab Result	Lab Qual	Final Result	Final Qual	Units	Reasons
VOA	SW8260B	1,1,2-TRICHLOROETHANE	64473	166GW50DM7DL	64473003	WG	1250	U	1250	R	ug/L	DL
VOA	SW8260B	1,1,2-TRICHLOROETHANE	64473	166HW50DM7DL	64473004	WG	1250	U	1250	R	ug/L	DL
VOA	SW8260B	1,1,2-TRICHLOROETHANE	64475	166GW053M7DL	64475007	WG	500	U	500	R	ug/L	DL
VOA	SW8260B	1,1,2-TRICHLOROETHANE	64475	166GW054M7DL	64475008	WG	125	U	125	R	ug/L	DL
VOA	SW8260B	1,1,2-TRICHLOROETHANE	64475	166GW055M7DL	64475009	WG	125	U	125	R	ug/L	DL
VOA	SW8260B	1,1,2-TRICHLOROETHANE	64475	166HW055M7DL	64475010	WG	125	U	125	R	ug/L	DL
VOA	SW8260B	1,1,2-TRICHLOROETHANE	64475	166GW07DM7DL	64475011	WG	125	U	125	R	ug/L	DL
VOA	SW8260B	1,1,2-TRICHLOROETHANE	64475	166GW13DM7DL	64475013	WG	500	U	500	R	ug/L	DL
VOA	SW8260B	1,1,2-TRICHLOROETHANE	64475	166HW13DM7DL	64475014	WG	500	U	500	R	ug/L	DL
VOA	SW8260B	1,1,2-TRICHLOROETHANE	64475	166GW14DM7DL	64475015	WG	10	U	10	R	ug/L	DL
VOA	SW8260B	1,1,2-TRICHLOROETHANE	64475	166GW26DM7DL	64475019	WG	250	U	250	R	ug/L	DL
VOA	SW8260B	1,1,2-TRICHLOROETHANE	64550	166GW34DM7DL	64550003	WG	5000	U	5000	R	ug/L	DL
VOA	SW8260B	1,1,2-TRICHLOROETHANE	64550	166GW36DM7DL	64550004	WG	2500	U	2500	R	ug/L	DL
VOA	SW8260B	1,1,2-TRICHLOROETHANE	64676	163GW003M7DL	64676002	WG	25	U	25	R	ug/L	DL
VOA	SW8260B	1,1,2-TRICHLOROETHANE	64676	166GW040M7DL	64676003	WG	5000	U	5000	R	ug/L	DL
VOA	SW8260B	1,1,2-TRICHLOROETHANE	64676	166GW41DM7DL	64676008	WG	50	U	50	R	ug/L	DL
VOA	SW8260B	1,1,2-TRICHLOROETHANE	64676	166GW42DM7DL	64676009	WG	500	U	500	R	ug/L	DL
VOA	SW8260B	1,1,2-TRICHLOROETHANE	64676	166GW44DM7DL	64676011	WG	500	U	500	R	ug/L	DL
VOA	SW8260B	1,1,2-TRICHLOROETHANE	64676	166GW35DM7DL	64676012	WG	500	U	500	R	ug/L	DL
VOA	SW8260B	1,1,2-TRICHLOROETHANE	71658	166GW053M8DL	71658007	WG	250	U	250	R	ug/L	DL
VOA	SW8260B	1,1,2-TRICHLOROETHANE	71658	166GW054M8DL	71658008	WG	125	U	125	R	ug/L	DL

Parameter Class	Analytical Method	Parameter	SDG	Sample ID	Lab Sample ID	Matrix	Lab Result	Lab Qual	Final Result	Final Qual	Units	Reason
VOA	SW8260B	1,1,2-TRICHLOROETHANE	71658	166GW055M8DL	71658009	WG	500	U	500	R	ug/L	DL
VOA	SW8260B	1,1,2-TRICHLOROETHANE	71658	166GW056M8DL	71658010	WG	500	U	500	R	ug/L	DL
VOA	SW8260B	1,1,2-TRICHLOROETHANE	71658	166GW07DM8DL	71658012	WG	125	U	125	R	ug/L	DL
VOA	SW8260B	1,1,2-TRICHLOROETHANE	71658	166GW13DM8DL	71658014	WG	500	U	500	R	ug/L	DL
VOA	SW8260B	1,1,2-TRICHLOROETHANE	71658	166GW14DM8DL	71658016	WG	10	U	10	R	ug/L	DL
VOA	SW8260B	1,1,2-TRICHLOROETHANE	71659	166GW19DM8DL	71659002	WG	10	U	10	R	ug/L	DL
VOA	SW8260B	1,1,2-TRICHLOROETHANE	71659	166GW25DM8DL	71659004	WG	500	U	500	R	ug/L	DL
VOA	SW8260B	1,1,2-TRICHLOROETHANE	71766	166GW49DM8DL	71766003	WG	250	U	250	R	ug/L	DL
VOA	SW8260B	1,1,2-TRICHLOROETHANE	71766	166GW50DM8DL	71766004	WG	1000	U	1000	R	ug/L	DL
VOA	SW8260B	1,1,2-TRICHLOROETHANE	71766	166HW50DM8DL	71766005	WG	2500	U	2500	R	ug/L	DL
VOA	SW8260B	1,1,2-TRICHLOROETHANE	71766	166GW51DM8DL	71766006	WG	500	U	500	R	ug/L	DL
VOA	SW8260B	1,1,2-TRICHLOROETHANE	71766	166GW52DM8DL	71766007	WG	500	U	500	R	ug/L	DL
VOA	SW8260B	1,1,2-TRICHLOROETHANE	71766	166GWTM3M8DL	71766009	WG	50	U	50	R	ug/L	DL
VOA	SW8260B	1,1,2-TRICHLOROETHANE	71766	166GWTM4M8DL	71766010	WG	1000	U	1000	R	ug/L	DL
VOA	SW8260B	1,1,2-TRICHLOROETHANE	71766	166GW45DM8DL	71766011	WG	250	U	250	R	ug/L	DL
VOA	SW8260B	1,1,2-TRICHLOROETHANE	71766	166GW46DM8DL	71766012	WG	250	U	250	R	ug/L	DL
VOA	SW8260B	1,1,2-TRICHLOROETHANE	71766	166GW48DM8DL	71766014	WG	500	U	500	R	ug/L	DL
VOA	SW8260B	1,1,2-TRICHLOROETHANE	71852	166GW040M8DL	71852003	WG	1250	U	1250	R	ug/L	DL
VOA	SW8260B	1,1,2-TRICHLOROETHANE	71852	166HW040M8DL	71852004	WG	1250	U	1250	R	ug/L	DL
VOA	SW8260B	1,1,2-TRICHLOROETHANE	71852	166GW34DM8DL	71852005	WG	5000	U	5000	R	ug/L	DL
VOA	SW8260B	1,1,2-TRICHLOROETHANE	71852	166GW36DM8DL	71852007	WG	1250	U	1250	R	ug/L	DL

Attachment 1 - Changed Qualifiers and Results
Charleston Navel Complex - Zone K, SWMU 166 - 2002 Sampling Events

Parameter Class	Analytical Method	Parameter	SDG	Sample ID	Lab Sample ID	Matrix	Lab Result	Lab Qual	Final Result	Final Qual	Units	Reasons
VOA	SW8260B	1,1,2-TRICHLOROETHANE	71852	166GW37DM8DL	71852008	WG	25	U	25	R	ug/L	DL
VOA	SW8260B	1,1,2-TRICHLOROETHANE	71852	166GW43DM8DL	71852012	WG	500	U	500	R	ug/L	DL
VOA	SW8260B	1,1,2-TRICHLOROETHANE	72055	163GW003M8	72055003	WG	5	U	5	UJ	ug/L	SS
VOA	SW8260B	1,1,2-TRICHLOROETHANE	72055	163GW003M8DL	72055003	WG	50	U	50	R	ug/L	DL
VOA	SW8260B	1,1,2-TRICHLOROETHANE	72055	163GW03MM8	72055004	WG	5	U	5	UJ	ug/L	SS
VOA	SW8260B	1,1,2-TRICHLOROETHANE	72055	166GW16DM8	72055005	WG	5	U	5	UJ	ug/L	SS
VOA	SW8260B	1,1,2-TRICHLOROETHANE	72055	166GW16DM8DL	72055005	WG	250	U	250	R	ug/L	DL
VOA	SW8260B	1,1,2-TRICHLOROETHANE	72055	166GW33DM8	72055006	WG	5	U	5	UJ	ug/L	SS
VOA	SW8260B	1,1,2-TRICHLOROETHANE	72055	166GW38DM8	72055007	WG	5	U	5	UJ	ug/L	SS
VOA	SW8260B	1,1,2-TRICHLOROETHANE	72055	166GW38DM8DL	72055007	WG	50	U	50	R	ug/L	DL
VOA	SW8260B	1,1,2-TRICHLOROETHANE	72055	163GW005M8	72055008	WG	5	U	5	UJ	ug/L	SS
VOA	SW8260B	1,1-DICHLOROETHANE	56223	166GW32DM1LR	56223003	WG	250	U	250	R	ug/L	DL
VOA	SW8260B	1,1-DICHLOROETHANE	56330	166GW28DM1DL	56330001	WG	25	U	25	R	ug/L	DL
VOA	SW8260B	1,1-DICHLOROETHANE	56330	166GW30DM1LR	56330003	WG	250	U	250	R	ug/L	DL
VOA	SW8260B	1,1-DICHLOROETHANE	56330	166HW30DM1LR	56330004	WG	250	U	250	R	ug/L	DL
VOA	SW8260B	1,1-DICHLOROETHANE	56341	166VDRM001M2	56341001	SO	5.6	U	5.6	UJ	ug/kg	IS
VOA	SW8260B	1,1-DICHLOROETHANE	57725	166GW28DM2DL	57725002	WG	10	U	10	R	ug/L	DL
VOA	SW8260B	1,1-DICHLOROETHANE	57725	166GW29DM2DL	57725003	WG	10	U	10	R	ug/L	DL
VOA	SW8260B	1,1-DICHLOROETHANE	57725	166GW30DM2DL	57725004	WG	50	U	50	R	ug/L	DL
VOA	SW8260B	1,1-DICHLOROETHANE	57725	166HW30DM2DL	57725005	WG	50	U	50	R	ug/L	DL
VOA	SW8260B	1,1-DICHLOROETHANE	57725	166GW31DM2DL	57725006	WG	10	U	10	R	ug/L	DL

Parameter Class	Analytical Method	Parameter	SDG	Sample ID	Lab Sample ID	Matrix	Lab Result	Lab Qual	Final Result	Final Qual	Units	Reason
VOA	SW8260B	1,1-DICHLOROETHANE	57725	166GW32DM2DL	57725007	WG	50	U	50	R	ug/L	DL
VOA	SW8260B	1,1-DICHLOROETHANE	58856	166GW28DM3DL	58856002	WG	50	U	50	R	ug/L	DL
VOA	SW8260B	1,1-DICHLOROETHANE	58856	166GW29DM3DL	58856003	WG	10	U	10	R	ug/L	DL
VOA	SW8260B	1,1-DICHLOROETHANE	58856	166GW30DM3DL	58856004	WG	250	U	250	R	ug/L	DL
VOA	SW8260B	1,1-DICHLOROETHANE	58856	166GW31DM3DL	58856005	WG	25	U	25	R	ug/L	DL
VOA	SW8260B	1,1-DICHLOROETHANE	58856	166HW31DM3DL	58856006	WG	50	U	50	R	ug/L	DL
VOA	SW8260B	1,1-DICHLOROETHANE	58856	166GW32DM3DL	58856007	WG	250	U	250	R	ug/L	DL
VOA	SW8260B	1,1-DICHLOROETHANE	60789	166GW33DM4DL	60789001	WG	10	U	10	R	ug/L	DL
VOA	SW8260B	1,1-DICHLOROETHANE	60789	166GW34DM4DL	60789002	WG	2500	U	2500	R	ug/L	DL
VOA	SW8260B	1,1-DICHLOROETHANE	60789	166GW35DM4DL	60789003	WG	50	U	50	R	ug/L	DL
VOA	SW8260B	1,1-DICHLOROETHANE	60789	166GW37DM4DL	60789004	WG	2500	U	2500	R	ug/L	DL
VOA	SW8260B	1,1-DICHLOROETHANE	60789	166GW39DM4DL	60789005	WG	50	U	50	R	ug/L	DL
VOA	SW8260B	1,1-DICHLOROETHANE	60790	163GW03MM4DL	60790001	WG	250	U	250	R	ug/L	DL
VOA	SW8260B	1,1-DICHLOROETHANE	60790	166GW26DM4DL	60790002	WG	250	U	250	R	ug/L	DL
VOA	SW8260B	1,1-DICHLOROETHANE	60790	166GW25DM4DL	60790003	WG	500	U	500	R	ug/L	DL
VOA	SW8260B	1,1-DICHLOROETHANE	60790	166HW25DM4DL	60790004	WG	500	U	500	R	ug/L	DL
VOA	SW8260B	1,1-DICHLOROETHANE	60790	166GW07DM4DL	60790008	WG	50	U	50	R	ug/L	DL
VOA	SW8260B	1,1-DICHLOROETHANE	60879	166GW41DM4DL	60879001	WG	250	U	250	R	ug/L	DL
VOA	SW8260B	1,1-DICHLOROETHANE	60879	166GW42DM4DL	60879002	WG	500	U	500	R	ug/L	DL
VOA	SW8260B	1,1-DICHLOROETHANE	60879	166GW43DM4DL	60879003	WG	1250	U	1250	R	ug/L	DL
VOA	SW8260B	1,1-DICHLOROETHANE	60879	166GW44DM4DL	60879004	WG	250	U	250	R	ug/L	DL

Attachment 1 - Changed Qualifiers and Results
Charleston Navel Complex - Zone K, SWMU 166 - 2002 Sampling Events

Parameter Class	Analytical Method	Parameter	spG	Sample Id	Lab Sample Id	Matrix	Lab Result	Lab Qual	Final Result	Final Qual	Units	Reason
VOA	SW8260B	1,1-DICHLOROETHANE	60879	166GW13DM4DL	60879005	WG	500	U	500	R	ug/L	DL
VOA	SW8260B	1,1-DICHLOROETHANE	61044	166GW38DM4DL	61044001	WG	100	U	100	R	ug/L	DL
VOA	SW8260B	1,1-DICHLOROETHANE	61044	166GW45DM4DL	61044002	WG	500	U	500	R	ug/L	DL
VOA	SW8260B	1,1-DICHLOROETHANE	61044	166GW48DM4DL	61044004	WG	500	U	500	R	ug/L	DL
VOA	SW8260B	1,1-DICHLOROETHANE	61044	166GWTM4M4DL	61044005	WG	500	U	500	R	ug/L	DL
VOA	SW8260B	1,1-DICHLOROETHANE	61044	166GW14DM4DL	61044007	WG	10	U	10	R	ug/L	DL
VOA	SW8260B	1,1-DICHLOROETHANE	61134	166GW36DM4DL	61134002	WG	2500	U	2500	R	ug/L	DL
VOA	SW8260B	1,1-DICHLOROETHANE	61170	166GW50DM4DL	61170001	WG	1250	U	1250	R	ug/L	DL
VOA	SW8260B	1,1-DICHLOROETHANE	62650	166GW28DM6DL	62650003	WG	25	U	25	R	ug/L	DL
VOA	SW8260B	1,1-DICHLOROETHANE	64473	166GW50DM7DL	64473003	WG	1250	U	1250	R	ug/L	DL
VOA	SW8260B	1,1-DICHLOROETHANE	64473	166HW50DM7DL	64473004	WG	1250	U	1250	R	ug/L	DL
VOA	SW8260B	1,1-DICHLOROETHANE	64475	166GW053M7DL	64475007	WG	500	U	500	R	ug/L	DL
VOA	SW8260B	1,1-DICHLOROETHANE	64475	166GW054M7DL	64475008	WG	125	U	125	R	ug/L	DL
VOA	SW8260B	1,1-DICHLOROETHANE	64475	166GW055M7DL	64475009	WG	125	U	125	R	ug/L	DL
VOA	SW8260B	1,1-DICHLOROETHANE	64475	166HW055M7DL	64475010	WG	125	U	125	R	ug/L	DL
VOA	SW8260B	1,1-DICHLOROETHANE	64475	166GW07DM7DL	64475011	WG	125	U	125	R	ug/L	DL
VOA	SW8260B	1,1-DICHLOROETHANE	64475	166GW13DM7DL	64475013	WG	500	U	500	R	ug/L	DL
VOA	SW8260B	1,1-DICHLOROETHANE	64475	166HW13DM7DL	64475014	WG	500	U	500	R	ug/L	DL
VOA	SW8260B	1,1-DICHLOROETHANE	64475	166GW14DM7DL	64475015	WG	10	U	10	R	ug/L	DL
VOA	SW8260B	1,1-DICHLOROETHANE	64475	166GW26DM7DL	64475019	WG	250	U	250	R	ug/L	DL
VOA	SW8260B	1,1-DICHLOROETHANE	64550	166GW34DM7DL	645[illegible]03	WG	5000	U	5000	R	ug/L	DL

Parameter Class	Analytical Method	Parameter	SDG	Sample ID	Lab Sample ID	Matrix	Lab Result	Lab Qual	Final Result	Final Qual	Units	Reasons
VOA	SW8260B	1,1-DICHLOROETHANE	64550	166GW36DM7DL	64550004	WG	2500	U	2500	R	ug/L	DL
VOA	SW8260B	1,1-DICHLOROETHANE	64676	163GW003M7DL	64676002	WG	25	U	25	R	ug/L	DL
VOA	SW8260B	1,1-DICHLOROETHANE	64676	166GW040M7DL	64676003	WG	5000	U	5000	R	ug/L	DL
VOA	SW8260B	1,1-DICHLOROETHANE	64676	166GW41DM7DL	64676008	WG	50	U	50	R	ug/L	DL
VOA	SW8260B	1,1-DICHLOROETHANE	64676	166GW42DM7DL	64676009	WG	500	U	500	R	ug/L	DL
VOA	SW8260B	1,1-DICHLOROETHANE	64676	166GW44DM7DL	64676011	WG	500	U	500	R	ug/L	DL
VOA	SW8260B	1,1-DICHLOROETHANE	64676	166GW35DM7DL	64676012	WG	500	U	500	R	ug/L	DL
VOA	SW8260B	1,1-DICHLOROETHANE	71658	166GW053M8DL	71658007	WG	250	U	250	R	ug/L	DL
VOA	SW8260B	1,1-DICHLOROETHANE	71658	166GW054M8DL	71658008	WG	125	U	125	R	ug/L	DL
VOA	SW8260B	1,1-DICHLOROETHANE	71658	166GW055M8DL	71658009	WG	500	U	500	R	ug/L	DL
VOA	SW8260B	1,1-DICHLOROETHANE	71658	166GW056M8DL	71658010	WG	500	U	500	R	ug/L	DL
VOA	SW8260B	1,1-DICHLOROETHANE	71658	166GW07DM8DL	71658012	WG	125	U	125	R	ug/L	DL
VOA	SW8260B	1,1-DICHLOROETHANE	71658	166GW13DM8DL	71658014	WG	500	U	500	R	ug/L	DL
VOA	SW8260B	1,1-DICHLOROETHANE	71658	166GW14DM8DL	71658016	WG	10	U	10	R	ug/L	DL
VOA	SW8260B	1,1-DICHLOROETHANE	71659	166GW19DM8DL	71659002	WG	10	U	10	R	ug/L	DL
VOA	SW8260B	1,1-DICHLOROETHANE	71659	166GW25DM8DL	71659004	WG	500	U	500	R	ug/L	DL
VOA	SW8260B	1,1-DICHLOROETHANE	71766	166GW49DM8DL	71766003	WG	250	U	250	R	ug/L	DL
VOA	SW8260B	1,1-DICHLOROETHANE	71766	166GW50DM8DL	71766004	WG	1000	U	1000	R	ug/L	DL
VOA	SW8260B	1,1-DICHLOROETHANE	71766	166HW50DM8DL	71766005	WG	2500	U	2500	R	ug/L	DL
VOA	SW8260B	1,1-DICHLOROETHANE	71766	166GW51DM8DL	71766006	WG	500	U	500	R	ug/L	DL
VOA	SW8260B	1,1-DICHLOROETHANE	71766	166GW52DM8DL	71766007	WG	500	U	500	R	ug/L	DL

Parameter Class	Analytical Method	Parameter	SDG	Sample ID	Lab Sample ID	Matrix	Lab Result	Lab Qual	Final Result	Final Qual	Units	Reasons
VOA	SW8260B	1,1-DICHLOROETHANE	71766	166GWTM3M8DL	71766009	WG	50	U	50	R	ug/L	DL
VOA	SW8260B	1,1-DICHLOROETHANE	71766	166GWTM4M8DL	71766010	WG	1000	U	1000	R	ug/L	DL
VOA	SW8260B	1,1-DICHLOROETHANE	71766	166GW45DM8DL	71766011	WG	250	U	250	R	ug/L	DL
VOA	SW8260B	1,1-DICHLOROETHANE	71766	166GW46DM8DL	71766012	WG	250	U	250	R	ug/L	DL
VOA	SW8260B	1,1-DICHLOROETHANE	71766	166GW48DM8DL	71766014	WG	500	U	500	R	ug/L	DL
VOA	SW8260B	1,1-DICHLOROETHANE	71852	166GW040M8DL	71852003	WG	1250	U	1250	R	ug/L	DL
VOA	SW8260B	1,1-DICHLOROETHANE	71852	166HW040M8DL	71852004	WG	1250	U	1250	R	ug/L	DL
VOA	SW8260B	1,1-DICHLOROETHANE	71852	166GW34DM8DL	71852005	WG	5000	U	5000	R	ug/L	DL
VOA	SW8260B	1,1-DICHLOROETHANE	71852	166GW36DM8DL	71852007	WG	1250	U	1250	R	ug/L	DL
VOA	SW8260B	1,1-DICHLOROETHANE	71852	166GW37DM8DL	71852008	WG	25	U	25	R	ug/L	DL
VOA	SW8260B	1,1-DICHLOROETHANE	71852	166GW43DM8DL	71852012	WG	500	U	500	R	ug/L	DL
VOA	SW8260B	1,1-DICHLOROETHANE	72055	163GW003M8	72055003	WG	5	U	5	UJ	ug/L	SS
VOA	SW8260B	1,1-DICHLOROETHANE	72055	163GW003M8DL	72055003	WG	50	U	50	R	ug/L	DL
VOA	SW8260B	1,1-DICHLOROETHANE	72055	163GW03MM8	72055004	WG	5	U	5	UJ	ug/L	SS
VOA	SW8260B	1,1-DICHLOROETHANE	72055	166GW16DM8	72055005	WG	5	U	5	UJ	ug/L	SS
VOA	SW8260B	1,1-DICHLOROETHANE	72055	166GW16DM8DL	72055005	WG	250	U	250	R	ug/L	DL
VOA	SW8260B	1,1-DICHLOROETHANE	72055	166GW33DM8	72055006	WG	5	U	5	UJ	ug/L	SS
VOA	SW8260B	1,1-DICHLOROETHANE	72055	166GW38DM8	72055007	WG	5	U	5	UJ	ug/L	SS
VOA	SW8260B	1,1-DICHLOROETHANE	72055	166GW38DM8DL	72055007	WG	50	U	50	R	ug/L	DL
VOA	SW8260B	1,1-DICHLOROETHANE	72055	163GW005M8	72055008	WG	5	U	5	UJ	ug/L	SS
VOA	SW8260B	1,1-DICHLOROETHENE	56223	166GW32DM1LR	562[illegible]003	WG	250	U	250	R	ug/L	DL

Parameter Class	Analytical Method	Parameter	SDG	Sample ID	Lab Sample ID	Matrix	Lab Results	Lab Qual	Final Results	Final Qual	Units	Reason
VOA	SW8260B	1,1-DICHLOROETHENE	56330	166GW28DM1DL	56330001	WG	25	U	25	R	ug/L	DL
VOA	SW8260B	1,1-DICHLOROETHENE	56330	166GW30DM1LR	56330003	WG	250	U	250	R	ug/L	DL
VOA	SW8260B	1,1-DICHLOROETHENE	56330	166HW30DM1LR	56330004	WG	250	U	250	R	ug/L	DL
VOA	SW8260B	1,1-DICHLOROETHENE	56341	166VDRM001M2	56341001	SO	5.6	U	5.6	UJ	ug/kg	IS
VOA	SW8260B	1,1-DICHLOROETHENE	57725	166GW28DM2DL	57725002	WG	10	U	10	R	ug/L	DL
VOA	SW8260B	1,1-DICHLOROETHENE	57725	166GW29DM2DL	57725003	WG	10	U	10	R	ug/L	DL
VOA	SW8260B	1,1-DICHLOROETHENE	57725	166GW30DM2DL	57725004	WG	50	U	50	R	ug/L	DL
VOA	SW8260B	1,1-DICHLOROETHENE	57725	166HW30DM2DL	57725005	WG	50	U	50	R	ug/L	DL
VOA	SW8260B	1,1-DICHLOROETHENE	57725	166GW31DM2DL	57725006	WG	10	U	10	R	ug/L	DL
VOA	SW8260B	1,1-DICHLOROETHENE	57725	166GW32DM2DL	57725007	WG	50	U	50	R	ug/L	DL
VOA	SW8260B	1,1-DICHLOROETHENE	58856	166GW28DM3DL	58856002	WG	50	U	50	R	ug/L	DL
VOA	SW8260B	1,1-DICHLOROETHENE	58856	166GW29DM3DL	58856003	WG	10	U	10	R	ug/L	DL
VOA	SW8260B	1,1-DICHLOROETHENE	58856	166GW30DM3DL	58856004	WG	250	U	250	R	ug/L	DL
VOA	SW8260B	1,1-DICHLOROETHENE	58856	166GW31DM3DL	58856005	WG	25	U	25	R	ug/L	DL
VOA	SW8260B	1,1-DICHLOROETHENE	58856	166HW31DM3DL	58856006	WG	50	U	50	R	ug/L	DL
VOA	SW8260B	1,1-DICHLOROETHENE	58856	166GW32DM3DL	58856007	WG	250	U	250	R	ug/L	DL
VOA	SW8260B	1,1-DICHLOROETHENE	60789	166GW33DM4DL	60789001	WG	10	U	10	R	ug/L	DL
VOA	SW8260B	1,1-DICHLOROETHENE	60789	166GW34DM4DL	60789002	WG	2500	U	2500	R	ug/L	DL
VOA	SW8260B	1,1-DICHLOROETHENE	60789	166GW35DM4DL	60789003	WG	50	U	50	R	ug/L	DL
VOA	SW8260B	1,1-DICHLOROETHENE	60789	166GW37DM4DL	60789004	WG	2500	U	2500	R	ug/L	DL
VOA	SW8260B	1,1-DICHLOROETHENE	60789	166GW39DM4DL	60789005	WG	50	U	50	R	ug/L	DL

Attachment 1 - Changed Qualifiers and Results
Charleston Navel Complex - Zone K, SWMU 166 - 2002 Sampling Events

Parameter Class	Analytical Method	Parameter	SDG	Sample ID	Lab Sample ID	Matrix	Lab Result	Lab Qual	Final Result	Final Qual	Units	Reason
VOA	SW8260B	1,1-DICHLOROETHENE	60790	163GW03MM4DL	60790001	WG	250	U	250	R	ug/L	DL
VOA	SW8260B	1,1-DICHLOROETHENE	60790	166GW26DM4DL	60790002	WG	250	U	250	R	ug/L	DL
VOA	SW8260B	1,1-DICHLOROETHENE	60790	166GW25DM4DL	60790003	WG	500	U	500	R	ug/L	DL
VOA	SW8260B	1,1-DICHLOROETHENE	60790	166HW25DM4DL	60790004	WG	500	U	500	R	ug/L	DL
VOA	SW8260B	1,1-DICHLOROETHENE	60790	166GW07DM4DL	60790008	WG	50	U	50	R	ug/L	DL
VOA	SW8260B	1,1-DICHLOROETHENE	60879	166GW41DM4DL	60879001	WG	250	U	250	R	ug/L	DL
VOA	SW8260B	1,1-DICHLOROETHENE	60879	166GW42DM4DL	60879002	WG	500	U	500	R	ug/L	DL
VOA	SW8260B	1,1-DICHLOROETHENE	60879	166GW43DM4DL	60879003	WG	1250	U	1250	R	ug/L	DL
VOA	SW8260B	1,1-DICHLOROETHENE	60879	166GW44DM4DL	60879004	WG	250	U	250	R	ug/L	DL
VOA	SW8260B	1,1-DICHLOROETHENE	60879	166GW13DM4DL	60879005	WG	500	U	500	R	ug/L	DL
VOA	SW8260B	1,1-DICHLOROETHENE	61044	166GW38DM4DL	61044001	WG	100	U	100	R	ug/L	DL
VOA	SW8260B	1,1-DICHLOROETHENE	61044	166GW45DM4DL	61044002	WG	500	U	500	R	ug/L	DL
VOA	SW8260B	1,1-DICHLOROETHENE	61044	166GW48DM4DL	61044004	WG	500	U	500	R	ug/L	DL
VOA	SW8260B	1,1-DICHLOROETHENE	61044	166GWTM4M4DL	61044005	WG	500	U	500	R	ug/L	DL
VOA	SW8260B	1,1-DICHLOROETHENE	61044	166GW14DM4DL	61044007	WG	10	U	10	R	ug/L	DL
VOA	SW8260B	1,1-DICHLOROETHENE	61134	166GW36DM4DL	61134002	WG	2500	U	2500	R	ug/L	DL
VOA	SW8260B	1,1-DICHLOROETHENE	61170	166GW50DM4DL	61170001	WG	1250	U	1250	R	ug/L	DL
VOA	SW8260B	1,1-DICHLOROETHENE	62650	166GW28DM6DL	62650003	WG	25	U	25	R	ug/L	DL
VOA	SW8260B	1,1-DICHLOROETHENE	64473	166GW50DM7DL	64473003	WG	1250	U	1250	R	ug/L	DL
VOA	SW8260B	1,1-DICHLOROETHENE	64473	166HW50DM7DL	64473004	WG	1250	U	1250	R	ug/L	DL
VOA	SW8260B	1,1-DICHLOROETHENE	64475	166GW053M7DL	64475007	WG	500	U	500	R	ug/L	DL

Parameter Class	Analytical Method	Parameter	SDG	Sample ID	Lab Sample ID	Matrix	Lab Result	Original Qualifier	Final Result	Final Qualifier	Units	Reason
VOA	SW8260B	1,1-DICHLOROETHENE	64475	166GW054M7DL	64475008	WG	125	U	125	R	ug/L	DL
VOA	SW8260B	1,1-DICHLOROETHENE	64475	166GW055M7DL	64475009	WG	125	U	125	R	ug/L	DL
VOA	SW8260B	1,1-DICHLOROETHENE	64475	166HW055M7DL	64475010	WG	125	U	125	R	ug/L	DL
VOA	SW8260B	1,1-DICHLOROETHENE	64475	166GW07DM7DL	64475011	WG	125	U	125	R	ug/L	DL
VOA	SW8260B	1,1-DICHLOROETHENE	64475	166GW13DM7DL	64475013	WG	500	U	500	R	ug/L	DL
VOA	SW8260B	1,1-DICHLOROETHENE	64475	166HW13DM7DL	64475014	WG	500	U	500	R	ug/L	DL
VOA	SW8260B	1,1-DICHLOROETHENE	64475	166GW14DM7DL	64475015	WG	10	U	10	R	ug/L	DL
VOA	SW8260B	1,1-DICHLOROETHENE	64475	166GW26DM7DL	64475019	WG	250	U	250	R	ug/L	DL
VOA	SW8260B	1,1-DICHLOROETHENE	64550	166GW34DM7DL	64550003	WG	5000	U	5000	R	ug/L	DL
VOA	SW8260B	1,1-DICHLOROETHENE	64550	166GW36DM7DL	64550004	WG	2500	U	2500	R	ug/L	DL
VOA	SW8260B	1,1-DICHLOROETHENE	64676	163GW003M7DL	64676002	WG	25	U	25	R	ug/L	DL
VOA	SW8260B	1,1-DICHLOROETHENE	64676	166GW040M7DL	64676003	WG	5000	U	5000	R	ug/L	DL
VOA	SW8260B	1,1-DICHLOROETHENE	64676	166GW41DM7DL	64676008	WG	50	U	50	R	ug/L	DL
VOA	SW8260B	1,1-DICHLOROETHENE	64676	166GW42DM7DL	64676009	WG	500	U	500	R	ug/L	DL
VOA	SW8260B	1,1-DICHLOROETHENE	64676	166GW44DM7DL	64676011	WG	500	U	500	R	ug/L	DL
VOA	SW8260B	1,1-DICHLOROETHENE	64676	166GW35DM7DL	64676012	WG	500	U	500	R	ug/L	DL
VOA	SW8260B	1,1-DICHLOROETHENE	71658	166GW053M8DL	71658007	WG	250	U	250	R	ug/L	DL
VOA	SW8260B	1,1-DICHLOROETHENE	71658	166GW054M8DL	71658008	WG	125	U	125	R	ug/L	DL
VOA	SW8260B	1,1-DICHLOROETHENE	71658	166GW055M8DL	71658009	WG	500	U	500	R	ug/L	DL
VOA	SW8260B	1,1-DICHLOROETHENE	71658	166GW056M8	71658010	WG	3.5	J	3.5	J	ug/L	SS
VOA	SW8260B	1,1-DICHLOROETHENE	71658	166GW056M8DL	71658010	WG	500	U	500	R	ug/L	DL

Attachment 1 - Changed Qualifiers and Results
Charleston Navel Complex - Zone K, SWMU 166 - 2002 Sampling Events

Parameter Class	Analytical Method	Parameter	SDG	Sample ID	Lab Sample ID	Matrix	Lab Result	Lab Qual	Final Result	Final Qual	Units	Reason
VOA	SW8260B	1,1-DICHLOROETHENE	71658	166GW07DM8DL	71658012	WG	125	U	125	R	ug/L	DL
VOA	SW8260B	1,1-DICHLOROETHENE	71658	166GW13DM8DL	71658014	WG	500	U	500	R	ug/L	DL
VOA	SW8260B	1,1-DICHLOROETHENE	71658	166GW14DM8DL	71658016	WG	10	U	10	R	ug/L	DL
VOA	SW8260B	1,1-DICHLOROETHENE	71659	166GW19DM8DL	71659002	WG	10	U	10	R	ug/L	DL
VOA	SW8260B	1,1-DICHLOROETHENE	71659	166GW25DM8DL	71659004	WG	500	U	500	R	ug/L	DL
VOA	SW8260B	1,1-DICHLOROETHENE	71766	166GW49DM8	71766003	WG	1.3	J	5	U	ug/L	BL
VOA	SW8260B	1,1-DICHLOROETHENE	71766	166GW49DM8DL	71766003	WG	250	U	250	R	ug/L	DL
VOA	SW8260B	1,1-DICHLOROETHENE	71766	166GW50DM8	71766004	WG	4.9	J	5	U	ug/L	BL
VOA	SW8260B	1,1-DICHLOROETHENE	71766	166GW50DM8DL	71766004	WG	1000	U	1000	R	ug/L	DL
VOA	SW8260B	1,1-DICHLOROETHENE	71766	166HW50DM8DL	71766005	WG	2500	U	2500	R	ug/L	DL
VOA	SW8260B	1,1-DICHLOROETHENE	71766	166GW51DM8	71766006	WG	3.8	J	5	U	ug/L	BL
VOA	SW8260B	1,1-DICHLOROETHENE	71766	166GW51DM8DL	71766006	WG	500	U	500	R	ug/L	DL
VOA	SW8260B	1,1-DICHLOROETHENE	71766	166GW52DM8	71766007	WG	4.9	J	5	U	ug/L	BL
VOA	SW8260B	1,1-DICHLOROETHENE	71766	166GW52DM8DL	71766007	WG	500	U	500	R	ug/L	DL
VOA	SW8260B	1,1-DICHLOROETHENE	71766	166GWTM3M8	71766009	WG	1	J	5	U	ug/L	BL
VOA	SW8260B	1,1-DICHLOROETHENE	71766	166GWTM3M8DL	71766009	WG	50	U	50	R	ug/L	DL
VOA	SW8260B	1,1-DICHLOROETHENE	71766	166GWTM4M8	71766010	WG	7.5	=	7.5	U	ug/L	BL
VOA	SW8260B	1,1-DICHLOROETHENE	71766	166GWTM4M8DL	71766010	WG	1000	U	1000	R	ug/L	DL
VOA	SW8260B	1,1-DICHLOROETHENE	71766	166GW45DM8	71766011	WG	1.3	J	5	U	ug/L	BL
VOA	SW8260B	1,1-DICHLOROETHENE	71766	166GW45DM8DL	71766011	WG	250	U	250	R	ug/L	DL
VOA	SW8260B	1,1-DICHLOROETHENE	71766	166GW46DM8	71766012	WG	2.8	J	5	U	ug/L	BL

Parameter Class	Analytical Method	Parameter	SDG	Sample ID	Lab Sample ID	Matrix	Lab Result	Lab Qual	Final Result	Final Qual	Units	Reasons
VOA	SW8260B	1,1-DICHLOROETHENE	71766	166GW46DM8DL	71766012	WG	250	U	250	R	ug/L	DL
VOA	SW8260B	1,1-DICHLOROETHENE	71766	166GW48DM8	71766014	WG	1.9	J	5	U	ug/L	BL
VOA	SW8260B	1,1-DICHLOROETHENE	71766	166GW48DM8DL	71766014	WG	500	U	500	R	ug/L	DL
VOA	SW8260B	1,1-DICHLOROETHENE	71852	166GW040M8DL	71852003	WG	1250	U	1250	R	ug/L	DL
VOA	SW8260B	1,1-DICHLOROETHENE	71852	166HW040M8DL	71852004	WG	1250	U	1250	R	ug/L	DL
VOA	SW8260B	1,1-DICHLOROETHENE	71852	166GW34DM8DL	71852005	WG	5000	U	5000	R	ug/L	DL
VOA	SW8260B	1,1-DICHLOROETHENE	71852	166GW36DM8DL	71852007	WG	1250	U	1250	R	ug/L	DL
VOA	SW8260B	1,1-DICHLOROETHENE	71852	166GW37DM8DL	71852008	WG	25	U	25	R	ug/L	DL
VOA	SW8260B	1,1-DICHLOROETHENE	71852	166GW43DM8DL	71852012	WG	500	U	500	R	ug/L	DL
VOA	SW8260B	1,1-DICHLOROETHENE	72055	163GW003M8	72055003	WG	5	U	5	UJ	ug/L	SS
VOA	SW8260B	1,1-DICHLOROETHENE	72055	163GW003M8DL	72055003	WG	50	U	50	R	ug/L	DL
VOA	SW8260B	1,1-DICHLOROETHENE	72055	163GW03MM8	72055004	WG	5	U	5	UJ	ug/L	SS
VOA	SW8260B	1,1-DICHLOROETHENE	72055	166GW16DM8	72055005	WG	4.4	J	4.4	J	ug/L	SS
VOA	SW8260B	1,1-DICHLOROETHENE	72055	166GW16DM8DL	72055005	WG	250	U	250	R	ug/L	DL
VOA	SW8260B	1,1-DICHLOROETHENE	72055	166GW33DM8	72055006	WG	5	U	5	UJ	ug/L	SS
VOA	SW8260B	1,1-DICHLOROETHENE	72055	166GW38DM8	72055007	WG	0.59	J	0.59	J	ug/L	SS
VOA	SW8260B	1,1-DICHLOROETHENE	72055	166GW38DM8DL	72055007	WG	50	U	50	R	ug/L	DL
VOA	SW8260B	1,1-DICHLOROETHENE	72055	163GW005M8	72055008	WG	5	U	5	UJ	ug/L	SS
VOA	SW8260B	1,2,3-Trichlorobenzene	56223	166GW32DM1LR	56223003	WG	250	U	250	R	ug/L	DL
VOA	SW8260B	1,2,3-Trichlorobenzene	56330	166GW28DM1DL	56330001	WG	25	U	25	R	ug/L	DL
VOA	SW8260B	1,2,3-Trichlorobenzene	56330	166GW30DM1LR	56330003	WG	250	U	250	R	ug/L	DL

Attachment 1 - Changed Qualifiers and Results
Charleston Navel Complex - Zone K, SWMU 166 - 2002 Sampling Events

Parameter Class	Analytical Method	Parameter	SDG	Sample ID	Lab Sample ID	Matrix	Lab Result	Lab Qual	Final Result	Final Qual	Units	Reasons
VOA	SW8260B	1,2,3-Trichlorobenzene	56330	166HW30DM1LR	56330004	WG	250	U	250	R	ug/L	DL
VOA	SW8260B	1,2,3-Trichlorobenzene	56341	166VDRM001M2	56341001	SO	5.6	U	5.6	UJ	ug/kg	IS
VOA	SW8260B	1,2,3-Trichlorobenzene	57725	166GW28DM2DL	57725002	WG	10	U	10	R	ug/L	DL
VOA	SW8260B	1,2,3-Trichlorobenzene	57725	166GW29DM2DL	57725003	WG	10	U	10	R	ug/L	DL
VOA	SW8260B	1,2,3-Trichlorobenzene	57725	166GW30DM2DL	57725004	WG	50	U	50	R	ug/L	DL
VOA	SW8260B	1,2,3-Trichlorobenzene	57725	166HW30DM2DL	57725005	WG	50	U	50	R	ug/L	DL
VOA	SW8260B	1,2,3-Trichlorobenzene	57725	166GW31DM2DL	57725006	WG	10	U	10	R	ug/L	DL
VOA	SW8260B	1,2,3-Trichlorobenzene	57725	166GW32DM2DL	57725007	WG	50	U	50	R	ug/L	DL
VOA	SW8260B	1,2,3-Trichlorobenzene	58856	166GW28DM3DL	58856002	WG	50	U	50	R	ug/L	DL
VOA	SW8260B	1,2,3-Trichlorobenzene	58856	166GW29DM3DL	58856003	WG	10	U	10	R	ug/L	DL
VOA	SW8260B	1,2,3-Trichlorobenzene	58856	166GW30DM3DL	58856004	WG	250	U	250	R	ug/L	DL
VOA	SW8260B	1,2,3-Trichlorobenzene	58856	166GW31DM3DL	58856005	WG	25	U	25	R	ug/L	DL
VOA	SW8260B	1,2,3-Trichlorobenzene	58856	166HW31DM3DL	58856006	WG	50	U	50	R	ug/L	DL
VOA	SW8260B	1,2,3-Trichlorobenzene	58856	166GW32DM3DL	58856007	WG	250	U	250	R	ug/L	DL
VOA	SW8260B	1,2,3-Trichlorobenzene	60789	166GW33DM4DL	60789001	WG	10	U	10	R	ug/L	DL
VOA	SW8260B	1,2,3-Trichlorobenzene	60789	166GW34DM4DL	60789002	WG	2500	U	2500	R	ug/L	DL
VOA	SW8260B	1,2,3-Trichlorobenzene	60789	166GW35DM4DL	60789003	WG	50	U	50	R	ug/L	DL
VOA	SW8260B	1,2,3-Trichlorobenzene	60789	166GW37DM4DL	60789004	WG	2500	U	2500	R	ug/L	DL
VOA	SW8260B	1,2,3-Trichlorobenzene	60789	166GW39DM4DL	60789005	WG	50	U	50	R	ug/L	DL
VOA	SW8260B	1,2,3-Trichlorobenzene	60790	163GW03MM4DL	60790001	WG	250	U	250	R	ug/L	DL
VOA	SW8260B	1,2,3-Trichlorobenzene	60790	166GW26DM4DL	60790002	WG	250	U	250	R	ug/L	DL

Parameter Class	Analytical Methods	Parameter	SDG	Sample ID	Lab Sample ID	Matrix	Lab Result	Lab Qual	Final Result	Final Qual	Units	Reasons
VOA	SW8260B	1,2,3-Trichlorobenzene	60790	166GW25DM4DL	60790003	WG	500	U	500	R	ug/L	DL
VOA	SW8260B	1,2,3-Trichlorobenzene	60790	166HW25DM4DL	60790004	WG	500	U	500	R	ug/L	DL
VOA	SW8260B	1,2,3-Trichlorobenzene	60790	166GW07DM4DL	60790008	WG	50	U	50	R	ug/L	DL
VOA	SW8260B	1,2,3-Trichlorobenzene	60879	166GW41DM4DL	60879001	WG	250	U	250	R	ug/L	DL
VOA	SW8260B	1,2,3-Trichlorobenzene	60879	166GW42DM4DL	60879002	WG	500	U	500	R	ug/L	DL
VOA	SW8260B	1,2,3-Trichlorobenzene	60879	166GW43DM4DL	60879003	WG	1250	U	1250	R	ug/L	DL
VOA	SW8260B	1,2,3-Trichlorobenzene	60879	166GW44DM4DL	60879004	WG	250	U	250	R	ug/L	DL
VOA	SW8260B	1,2,3-Trichlorobenzene	60879	166GW13DM4DL	60879005	WG	500	U	500	R	ug/L	DL
VOA	SW8260B	1,2,3-Trichlorobenzene	61044	166GW38DM4DL	61044001	WG	100	U	100	R	ug/L	DL
VOA	SW8260B	1,2,3-Trichlorobenzene	61044	166GW45DM4DL	61044002	WG	500	U	500	R	ug/L	DL
VOA	SW8260B	1,2,3-Trichlorobenzene	61044	166GW48DM4DL	61044004	WG	500	U	500	R	ug/L	DL
VOA	SW8260B	1,2,3-Trichlorobenzene	61044	166GWTM4M4DL	61044005	WG	500	U	500	R	ug/L	DL
VOA	SW8260B	1,2,3-Trichlorobenzene	61044	166GW14DM4DL	61044007	WG	10	U	10	R	ug/L	DL
VOA	SW8260B	1,2,3-Trichlorobenzene	61134	166GW36DM4DL	61134002	WG	2500	U	2500	R	ug/L	DL
VOA	SW8260B	1,2,3-Trichlorobenzene	61170	166GW50DM4DL	61170001	WG	1250	U	1250	R	ug/L	DL
VOA	SW8260B	1,2,3-Trichlorobenzene	61258	166GW053M4	61258004	WG	500	U	500	UJ	ug/L	CC
VOA	SW8260B	1,2,3-Trichlorobenzene	61258	166GW054M4	61258005	WG	500	U	500	UJ	ug/L	CC
VOA	SW8260B	1,2,3-Trichlorobenzene	62650	166GW28DM6DL	62650003	WG	25	U	25	R	ug/L	DL
VOA	SW8260B	1,2,3-Trichlorobenzene	64473	166GW50DM7DL	64473003	WG	1250	U	1250	R	ug/L	DL
VOA	SW8260B	1,2,3-Trichlorobenzene	64473	166HW50DM7DL	64473004	WG	1250	U	1250	R	ug/L	DL
VOA	SW8260B	1,2,3-Trichlorobenzene	64475	166GW053M7DL	64475007	WG	500	U	500	R	ug/L	DL

Attachment 1 - Changed Qualifiers and Results
Charleston Navel Complex - Zone K, SWMU 166 - 2002 Sampling Events

Parameter Class	Analytical Method	Parameter	SDG	Sample ID	Lab Sample ID	Matrix	Result	Qualifier	Final Result	Final Qualifier	Units	Reason
VOA	SW8260B	1,2,3-Trichlorobenzene	64475	166GW054M7DL	64475008	WG	125	U	125	R	ug/L	DL
VOA	SW8260B	1,2,3-Trichlorobenzene	64475	166GW055M7DL	64475009	WG	125	U	125	R	ug/L	DL
VOA	SW8260B	1,2,3-Trichlorobenzene	64475	166HW055M7DL	64475010	WG	125	U	125	R	ug/L	DL
VOA	SW8260B	1,2,3-Trichlorobenzene	64475	166GW07DM7DL	64475011	WG	125	U	125	R	ug/L	DL
VOA	SW8260B	1,2,3-Trichlorobenzene	64475	166GW13DM7DL	64475013	WG	500	U	500	R	ug/L	DL
VOA	SW8260B	1,2,3-Trichlorobenzene	64475	166HW13DM7DL	64475014	WG	500	U	500	R	ug/L	DL
VOA	SW8260B	1,2,3-Trichlorobenzene	64475	166GW14DM7DL	64475015	WG	10	U	10	R	ug/L	DL
VOA	SW8260B	1,2,3-Trichlorobenzene	64475	166GW26DM7DL	64475019	WG	250	U	250	R	ug/L	DL
VOA	SW8260B	1,2,3-Trichlorobenzene	64550	166GW34DM7DL	64550003	WG	5000	U	5000	R	ug/L	DL
VOA	SW8260B	1,2,3-Trichlorobenzene	64550	166GW36DM7DL	64550004	WG	2500	U	2500	R	ug/L	DL
VOA	SW8260B	1,2,3-Trichlorobenzene	64676	163GW003M7DL	64676002	WG	25	U	25	R	ug/L	DL
VOA	SW8260B	1,2,3-Trichlorobenzene	64676	166GW040M7DL	64676003	WG	5000	U	5000	R	ug/L	DL
VOA	SW8260B	1,2,3-Trichlorobenzene	64676	166GW41DM7DL	64676008	WG	50	U	50	R	ug/L	DL
VOA	SW8260B	1,2,3-Trichlorobenzene	64676	166GW42DM7DL	64676009	WG	500	U	500	R	ug/L	DL
VOA	SW8260B	1,2,3-Trichlorobenzene	64676	166GW44DM7DL	64676011	WG	500	U	500	R	ug/L	DL
VOA	SW8260B	1,2,3-Trichlorobenzene	64676	166GW35DM7DL	64676012	WG	500	U	500	R	ug/L	DL
VOA	SW8260B	1,2,3-Trichlorobenzene	71658	166GW053M8DL	71658007	WG	250	U	250	R	ug/L	DL
VOA	SW8260B	1,2,3-Trichlorobenzene	71658	166GW054M8DL	71658008	WG	125	U	125	R	ug/L	DL
VOA	SW8260B	1,2,3-Trichlorobenzene	71658	166GW055M8DL	71658009	WG	500	U	500	R	ug/L	DL
VOA	SW8260B	1,2,3-Trichlorobenzene	71658	166GW056M8DL	71658010	WG	500	U	500	R	ug/L	DL
VOA	SW8260B	1,2,3-Trichlorobenzene	71658	166GW07DM8DL	71658012	WG	125	U	125	R	ug/L	DL

Parameter Class	Analytical Method	Parameter	SDG	Sample ID	Lab Sample ID	Matrix	Lab Result	Lab Qual	Final Result	Final Qual	Units	Reasons
VOA	SW8260B	1,2,3-Trichlorobenzene	71658	166GW13DM8DL	71658014	WG	500	U	500	R	ug/L	DL
VOA	SW8260B	1,2,3-Trichlorobenzene	71658	166GW14DM8DL	71658016	WG	10	U	10	R	ug/L	DL
VOA	SW8260B	1,2,3-Trichlorobenzene	71659	166GW19DM8DL	71659002	WG	10	U	10	R	ug/L	DL
VOA	SW8260B	1,2,3-Trichlorobenzene	71659	166GW25DM8DL	71659004	WG	500	U	500	R	ug/L	DL
VOA	SW8260B	1,2,3-Trichlorobenzene	71766	166GW49DM8DL	71766003	WG	250	U	250	R	ug/L	DL
VOA	SW8260B	1,2,3-Trichlorobenzene	71766	166GW50DM8DL	71766004	WG	1000	U	1000	R	ug/L	DL
VOA	SW8260B	1,2,3-Trichlorobenzene	71766	166HW50DM8DL	71766005	WG	2500	U	2500	R	ug/L	DL
VOA	SW8260B	1,2,3-Trichlorobenzene	71766	166GW51DM8DL	71766006	WG	500	U	500	R	ug/L	DL
VOA	SW8260B	1,2,3-Trichlorobenzene	71766	166GW52DM8DL	71766007	WG	500	U	500	R	ug/L	DL
VOA	SW8260B	1,2,3-Trichlorobenzene	71766	166GWTM3M8DL	71766009	WG	50	U	50	R	ug/L	DL
VOA	SW8260B	1,2,3-Trichlorobenzene	71766	166GWTM4M8DL	71766010	WG	1000	U	1000	R	ug/L	DL
VOA	SW8260B	1,2,3-Trichlorobenzene	71766	166GW45DM8DL	71766011	WG	250	U	250	R	ug/L	DL
VOA	SW8260B	1,2,3-Trichlorobenzene	71766	166GW46DM8DL	71766012	WG	250	U	250	R	ug/L	DL
VOA	SW8260B	1,2,3-Trichlorobenzene	71766	166GW48DM8DL	71766014	WG	500	U	500	R	ug/L	DL
VOA	SW8260B	1,2,4-TRICHLOROBENZENE	56223	166GW32DM1LR	56223003	WG	250	U	250	R	ug/L	DL
VOA	SW8260B	1,2,4-TRICHLOROBENZENE	56330	166GW28DM1DL	56330001	WG	25	U	25	R	ug/L	DL
VOA	SW8260B	1,2,4-TRICHLOROBENZENE	56330	166GW30DM1LR	56330003	WG	250	U	250	R	ug/L	DL
VOA	SW8260B	1,2,4-TRICHLOROBENZENE	56330	166HW30DM1LR	56330004	WG	250	U	250	R	ug/L	DL
VOA	SW8260B	1,2,4-TRICHLOROBENZENE	56341	166VDRM001M2	56341001	SO	5.6	U	5.6	UJ	ug/kg	IS
VOA	SW8260B	1,2,4-TRICHLOROBENZENE	57725	166GW28DM2DL	57725002	WG	5.5	JD	5.5	R	ug/L	DL
VOA	SW8260B	1,2,4-TRICHLOROBENZENE	57725	166GW29DM2DL	57725003	WG	10	U	10	R	ug/L	DL

Attachment 1 - Changed Qualifiers and Results
Charleston Navel Complex - Zone K, SWMU 166 - 2002 Sampling Events

Parameter Class	Analytical Method	Parameter	SDG	Sample ID	Lab Sample ID	Matrix	Lab Result	Lab Qual	Final Result	Final Qual	Units	Reason
VOA	SW8260B	1,2,4-TRICHLOROBENZENE	57725	166GW30DM2DL	57725004	WG	50	U	50	R	ug/L	DL
VOA	SW8260B	1,2,4-TRICHLOROBENZENE	57725	166HW30DM2DL	57725005	WG	50	U	50	R	ug/L	DL
VOA	SW8260B	1,2,4-TRICHLOROBENZENE	57725	166GW31DM2DL	57725006	WG	10	U	10	R	ug/L	DL
VOA	SW8260B	1,2,4-TRICHLOROBENZENE	57725	166GW32DM2DL	57725007	WG	50	U	50	R	ug/L	DL
VOA	SW8260B	1,2,4-TRICHLOROBENZENE	58856	166GW28DM3DL	58856002	WG	50	U	50	R	ug/L	DL
VOA	SW8260B	1,2,4-TRICHLOROBENZENE	58856	166GW29DM3DL	58856003	WG	10	U	10	R	ug/L	DL
VOA	SW8260B	1,2,4-TRICHLOROBENZENE	58856	166GW30DM3DL	58856004	WG	250	U	250	R	ug/L	DL
VOA	SW8260B	1,2,4-TRICHLOROBENZENE	58856	166GW31DM3DL	58856005	WG	25	U	25	R	ug/L	DL
VOA	SW8260B	1,2,4-TRICHLOROBENZENE	58856	166HW31DM3DL	58856006	WG	50	U	50	R	ug/L	DL
VOA	SW8260B	1,2,4-TRICHLOROBENZENE	58856	166GW32DM3DL	58856007	WG	250	U	250	R	ug/L	DL
VOA	SW8260B	1,2,4-TRICHLOROBENZENE	60789	166GW33DM4DL	60789001	WG	10	U	10	R	ug/L	DL
VOA	SW8260B	1,2,4-TRICHLOROBENZENE	60789	166GW34DM4DL	60789002	WG	2500	U	2500	R	ug/L	DL
VOA	SW8260B	1,2,4-TRICHLOROBENZENE	60789	166GW35DM4DL	60789003	WG	50	U	50	R	ug/L	DL
VOA	SW8260B	1,2,4-TRICHLOROBENZENE	60789	166GW37DM4DL	60789004	WG	2500	U	2500	R	ug/L	DL
VOA	SW8260B	1,2,4-TRICHLOROBENZENE	60789	166GW39DM4DL	60789005	WG	50	U	50	R	ug/L	DL
VOA	SW8260B	1,2,4-TRICHLOROBENZENE	60790	163GW03MM4DL	60790001	WG	250	U	250	R	ug/L	DL
VOA	SW8260B	1,2,4-TRICHLOROBENZENE	60790	166GW26DM4DL	60790002	WG	250	U	250	R	ug/L	DL
VOA	SW8260B	1,2,4-TRICHLOROBENZENE	60790	166GW25DM4DL	60790003	WG	500	U	500	R	ug/L	DL
VOA	SW8260B	1,2,4-TRICHLOROBENZENE	60790	166HW25DM4DL	60790004	WG	500	U	500	R	ug/L	DL
VOA	SW8260B	1,2,4-TRICHLOROBENZENE	60790	166GW07DM4DL	60790008	WG	50	U	50	R	ug/L	DL
VOA	SW8260B	1,2,4-TRICHLOROBENZENE	60879	166GW41DM4DL	60879001	WG	250	U	250	R	ug/L	DL

Parameter Class	Analytical Method	Parameter	SDG	Sample ID	Lab Sample ID	Matrix	Lab Result	Lab Qual	Final Result	Final Qual	Units	Reason
VOA	SW8260B	1,2,4-TRICHLOROBENZENE	60879	166GW42DM4DL	60879002	WG	500	U	500	R	ug/L	DL
VOA	SW8260B	1,2,4-TRICHLOROBENZENE	60879	166GW43DM4DL	60879003	WG	1250	U	1250	R	ug/L	DL
VOA	SW8260B	1,2,4-TRICHLOROBENZENE	60879	166GW44DM4DL	60879004	WG	250	U	250	R	ug/L	DL
VOA	SW8260B	1,2,4-TRICHLOROBENZENE	60879	166GW13DM4DL	60879005	WG	500	U	500	R	ug/L	DL
VOA	SW8260B	1,2,4-TRICHLOROBENZENE	61044	166GW38DM4DL	61044001	WG	100	U	100	R	ug/L	DL
VOA	SW8260B	1,2,4-TRICHLOROBENZENE	61044	166GW45DM4DL	61044002	WG	500	U	500	R	ug/L	DL
VOA	SW8260B	1,2,4-TRICHLOROBENZENE	61044	166GW48DM4	61044004	WG	5	U	5	UJ	ug/L	CC
VOA	SW8260B	1,2,4-TRICHLOROBENZENE	61044	166GW48DM4DL	61044004	WG	500	U	500	R	ug/L	DL
VOA	SW8260B	1,2,4-TRICHLOROBENZENE	61044	166GWTM4M4	61044005	WG	5	U	5	UJ	ug/L	CC
VOA	SW8260B	1,2,4-TRICHLOROBENZENE	61044	166GWTM4M4DL	61044005	WG	500	U	500	R	ug/L	DL
VOA	SW8260B	1,2,4-TRICHLOROBENZENE	61044	166GW14DM4	61044007	WG	5	U	5	UJ	ug/L	CC
VOA	SW8260B	1,2,4-TRICHLOROBENZENE	61044	166GW14DM4DL	61044007	WG	10	U	10	R	ug/L	DL
VOA	SW8260B	1,2,4-TRICHLOROBENZENE	61044	166GW06DM4	61044008	WG	5	U	5	UJ	ug/L	CC
VOA	SW8260B	1,2,4-TRICHLOROBENZENE	61044	K166ZDRM1M5	61044010	WG	5	U	5	UJ	ug/L	CC
VOA	SW8260B	1,2,4-TRICHLOROBENZENE	61134	166GW36DM4	61134002	WG	500	U	500	UJ	ug/L	CC
VOA	SW8260B	1,2,4-TRICHLOROBENZENE	61134	166GW36DM4DL	61134002	WG	2500	U	2500	R	ug/L	DL
VOA	SW8260B	1,2,4-TRICHLOROBENZENE	61170	166GW50DM4	61170001	WG	500	U	500	UJ	ug/L	CC
VOA	SW8260B	1,2,4-TRICHLOROBENZENE	61170	166GW50DM4DL	61170001	WG	1250	U	1250	R	ug/L	DL
VOA	SW8260B	1,2,4-TRICHLOROBENZENE	61258	166GW053M4	61258004	WG	500	U	500	UJ	ug/L	CC
VOA	SW8260B	1,2,4-TRICHLOROBENZENE	61258	166GW054M4	61258005	WG	500	U	500	UJ	ug/L	CC
VOA	SW8260B	1,2,4-TRICHLOROBENZENE	62650	166GW28DM6DL	62650003	WG	25	U	25	R	ug/L	DL

Attachment 1 - Changed Qualifiers and Results
Charleston Navel Complex - Zone K, SWMU 166 - 2002 Sampling Events

Parameter Class	Analytical Method	Parameter	SDG	Sample ID	Lab Sample ID	Matrix	Lab Result	Lab Qual	Final Result	Final Qual	Units	Reasons
VOA	SW8260B	1,2,4-TRICHLOROBENZENE	64473	166GW50DM7DL	64473003	WG	1250	U	1250	R	ug/L	DL
VOA	SW8260B	1,2,4-TRICHLOROBENZENE	64473	166HW50DM7DL	64473004	WG	1250	U	1250	R	ug/L	DL
VOA	SW8260B	1,2,4-TRICHLOROBENZENE	64475	166GW053M7DL	64475007	WG	500	U	500	R	ug/L	DL
VOA	SW8260B	1,2,4-TRICHLOROBENZENE	64475	166GW054M7DL	64475008	WG	125	U	125	R	ug/L	DL
VOA	SW8260B	1,2,4-TRICHLOROBENZENE	64475	166GW055M7DL	64475009	WG	125	U	125	R	ug/L	DL
VOA	SW8260B	1,2,4-TRICHLOROBENZENE	64475	166HW055M7DL	64475010	WG	125	U	125	R	ug/L	DL
VOA	SW8260B	1,2,4-TRICHLOROBENZENE	64475	166GW07DM7DL	64475011	WG	125	U	125	R	ug/L	DL
VOA	SW8260B	1,2,4-TRICHLOROBENZENE	64475	166GW13DM7DL	64475013	WG	500	U	500	R	ug/L	DL
VOA	SW8260B	1,2,4-TRICHLOROBENZENE	64475	166HW13DM7DL	64475014	WG	500	U	500	R	ug/L	DL
VOA	SW8260B	1,2,4-TRICHLOROBENZENE	64475	166GW14DM7DL	64475015	WG	10	U	10	R	ug/L	DL
VOA	SW8260B	1,2,4-TRICHLOROBENZENE	64475	166GW26DM7DL	64475019	WG	250	U	250	R	ug/L	DL
VOA	SW8260B	1,2,4-TRICHLOROBENZENE	64550	166GW34DM7DL	64550003	WG	5000	U	5000	R	ug/L	DL
VOA	SW8260B	1,2,4-TRICHLOROBENZENE	64550	166GW36DM7DL	64550004	WG	2500	U	2500	R	ug/L	DL
VOA	SW8260B	1,2,4-TRICHLOROBENZENE	64676	163GW003M7DL	64676002	WG	25	U	25	R	ug/L	DL
VOA	SW8260B	1,2,4-TRICHLOROBENZENE	64676	166GW040M7DL	64676003	WG	5000	U	5000	R	ug/L	DL
VOA	SW8260B	1,2,4-TRICHLOROBENZENE	64676	166GW41DM7DL	64676008	WG	50	U	50	R	ug/L	DL
VOA	SW8260B	1,2,4-TRICHLOROBENZENE	64676	166GW42DM7DL	64676009	WG	500	U	500	R	ug/L	DL
VOA	SW8260B	1,2,4-TRICHLOROBENZENE	64676	166GW44DM7DL	64676011	WG	500	U	500	R	ug/L	DL
VOA	SW8260B	1,2,4-TRICHLOROBENZENE	64676	166GW35DM7DL	64676012	WG	500	U	500	R	ug/L	DL
VOA	SW8260B	1,2,4-TRICHLOROBENZENE	71658	166GW053M8DL	71658007	WG	250	U	250	R	ug/L	DL
VOA	SW8260B	1,2,4-TRICHLOROBENZENE	71658	166GW054M8DL	71658008	WG	125	U	125	R	ug/L	DL

Parameter Class	Analytical Method	Parameter	SDG	Sample ID	Lab Sample ID	Matrix	Lab Result	Lab Qual	Final Result	Final Qual	Units	Reasons
VOA	SW8260B	1,2,4-TRICHLOROBENZENE	71658	166GW055M8DL	71658009	WG	500	U	500	R	ug/L	DL
VOA	SW8260B	1,2,4-TRICHLOROBENZENE	71658	166GW056M8DL	71658010	WG	500	U	500	R	ug/L	DL
VOA	SW8260B	1,2,4-TRICHLOROBENZENE	71658	166GW07DM8DL	71658012	WG	125	U	125	R	ug/L	DL
VOA	SW8260B	1,2,4-TRICHLOROBENZENE	71658	166GW13DM8DL	71658014	WG	500	U	500	R	ug/L	DL
VOA	SW8260B	1,2,4-TRICHLOROBENZENE	71658	166GW14DM8DL	71658016	WG	10	U	10	R	ug/L	DL
VOA	SW8260B	1,2,4-TRICHLOROBENZENE	71659	166GW19DM8DL	71659002	WG	10	U	10	R	ug/L	DL
VOA	SW8260B	1,2,4-TRICHLOROBENZENE	71659	166GW25DM8DL	71659004	WG	500	U	500	R	ug/L	DL
VOA	SW8260B	1,2,4-TRICHLOROBENZENE	71766	166GW49DM8DL	71766003	WG	250	U	250	R	ug/L	DL
VOA	SW8260B	1,2,4-TRICHLOROBENZENE	71766	166GW50DM8DL	71766004	WG	1000	U	1000	R	ug/L	DL
VOA	SW8260B	1,2,4-TRICHLOROBENZENE	71766	166HW50DM8DL	71766005	WG	2500	U	2500	R	ug/L	DL
VOA	SW8260B	1,2,4-TRICHLOROBENZENE	71766	166GW51DM8DL	71766006	WG	500	U	500	R	ug/L	DL
VOA	SW8260B	1,2,4-TRICHLOROBENZENE	71766	166GW52DM8DL	71766007	WG	500	U	500	R	ug/L	DL
VOA	SW8260B	1,2,4-TRICHLOROBENZENE	71766	166GWTM3M8DL	71766009	WG	50	U	50	R	ug/L	DL
VOA	SW8260B	1,2,4-TRICHLOROBENZENE	71766	166GWTM4M8DL	71766010	WG	1000	U	1000	R	ug/L	DL
VOA	SW8260B	1,2,4-TRICHLOROBENZENE	71766	166GW45DM8DL	71766011	WG	250	U	250	R	ug/L	DL
VOA	SW8260B	1,2,4-TRICHLOROBENZENE	71766	166GW46DM8DL	71766012	WG	250	U	250	R	ug/L	DL
VOA	SW8260B	1,2,4-TRICHLOROBENZENE	71766	166GW48DM8DL	71766014	WG	500	U	500	R	ug/L	DL
VOA	SW8260B	1,2-DICHLOROBENZENE	56223	166GW32DM1LR	56223003	WG	250	U	250	R	ug/L	DL
VOA	SW8260B	1,2-DICHLOROBENZENE	56330	166GW28DM1DL	56330001	WG	25	U	25	R	ug/L	DL
VOA	SW8260B	1,2-DICHLOROBENZENE	56330	166GW30DM1LR	56330003	WG	250	U	250	R	ug/L	DL
VOA	SW8260B	1,2-DICHLOROBENZENE	56330	166HW30DM1LR	56330004	WG	250	U	250	R	ug/L	DL

Attachment 1 - Changed Qualifiers and Results
Charleston Navel Complex - Zone K, SWMU 166 - 2002 Sampling Events

Parameter Class	Analytical Method	Parameter	SDG	Sample ID	Lab Sample ID	Matrix	Lab Result	Lab Qual	Final Result	Final Qual	Units	Reason
VOA	SW8260B	1,2-DICHLOROBENZENE	56341	166VDRM001M2	56341001	SO	5.6	U	5.6	UJ	ug/kg	IS
VOA	SW8260B	1,2-DICHLOROBENZENE	57725	166GW28DM2DL	57725002	WG	2.6	JD	2.6	R	ug/L	DL
VOA	SW8260B	1,2-DICHLOROBENZENE	57725	166GW29DM2DL	57725003	WG	10	U	10	R	ug/L	DL
VOA	SW8260B	1,2-DICHLOROBENZENE	57725	166GW30DM2DL	57725004	WG	50	U	50	R	ug/L	DL
VOA	SW8260B	1,2-DICHLOROBENZENE	57725	166HW30DM2DL	57725005	WG	50	U	50	R	ug/L	DL
VOA	SW8260B	1,2-DICHLOROBENZENE	57725	166GW31DM2	57725006	WG	0.23	J	1	U	ug/L	BL
VOA	SW8260B	1,2-DICHLOROBENZENE	57725	166GW31DM2DL	57725006	WG	10	U	10	R	ug/L	DL
VOA	SW8260B	1,2-DICHLOROBENZENE	57725	166GW32DM2DL	57725007	WG	50	U	50	R	ug/L	DL
VOA	SW8260B	1,2-DICHLOROBENZENE	58856	166GW28DM3DL	58856002	WG	50	U	50	R	ug/L	DL
VOA	SW8260B	1,2-DICHLOROBENZENE	58856	166GW29DM3DL	58856003	WG	10	U	10	R	ug/L	DL
VOA	SW8260B	1,2-DICHLOROBENZENE	58856	166GW30DM3DL	58856004	WG	250	U	250	R	ug/L	DL
VOA	SW8260B	1,2-DICHLOROBENZENE	58856	166GW31DM3DL	58856005	WG	25	U	25	R	ug/L	DL
VOA	SW8260B	1,2-DICHLOROBENZENE	58856	166HW31DM3DL	58856006	WG	50	U	50	R	ug/L	DL
VOA	SW8260B	1,2-DICHLOROBENZENE	58856	166GW32DM3DL	58856007	WG	250	U	250	R	ug/L	DL
VOA	SW8260B	1,2-DICHLOROBENZENE	60789	166GW33DM4DL	60789001	WG	10	U	10	R	ug/L	DL
VOA	SW8260B	1,2-DICHLOROBENZENE	60789	166GW34DM4DL	60789002	WG	2500	U	2500	R	ug/L	DL
VOA	SW8260B	1,2-DICHLOROBENZENE	60789	166GW35DM4DL	60789003	WG	50	U	50	R	ug/L	DL
VOA	SW8260B	1,2-DICHLOROBENZENE	60789	166GW37DM4DL	60789004	WG	2500	U	2500	R	ug/L	DL
VOA	SW8260B	1,2-DICHLOROBENZENE	60789	166GW39DM4DL	60789005	WG	50	U	50	R	ug/L	DL
VOA	SW8260B	1,2-DICHLOROBENZENE	60790	163GW03MM4DL	60790001	WG	250	U	250	R	ug/L	DL
VOA	SW8260B	1,2-DICHLOROBENZENE	60790	166GW26DM4DL	60790002	WG	250	U	250	R	ug/L	DL

Parameter Class	Analytical Method	Parameter	SDG	Sample Id	Lab Sample Id	Matrix	Lab Result	Lab Qual	Final Result	Final Qual	Units	Reasons
VOA	SW8260B	1,2-DICHLOROBENZENE	60790	166GW25DM4DL	60790003	WG	500	U	500	R	ug/L	DL
VOA	SW8260B	1,2-DICHLOROBENZENE	60790	166HW25DM4DL	60790004	WG	500	U	500	R	ug/L	DL
VOA	SW8260B	1,2-DICHLOROBENZENE	60790	166GW07DM4DL	60790008	WG	50	U	50	R	ug/L	DL
VOA	SW8260B	1,2-DICHLOROBENZENE	60879	166GW41DM4DL	60879001	WG	250	U	250	R	ug/L	DL
VOA	SW8260B	1,2-DICHLOROBENZENE	60879	166GW42DM4DL	60879002	WG	500	U	500	R	ug/L	DL
VOA	SW8260B	1,2-DICHLOROBENZENE	60879	166GW43DM4DL	60879003	WG	1250	U	1250	R	ug/L	DL
VOA	SW8260B	1,2-DICHLOROBENZENE	60879	166GW44DM4DL	60879004	WG	250	U	250	R	ug/L	DL
VOA	SW8260B	1,2-DICHLOROBENZENE	60879	166GW13DM4DL	60879005	WG	500	U	500	R	ug/L	DL
VOA	SW8260B	1,2-DICHLOROBENZENE	61044	166GW38DM4DL	61044001	WG	100	U	100	R	ug/L	DL
VOA	SW8260B	1,2-DICHLOROBENZENE	61044	166GW45DM4DL	61044002	WG	500	U	500	R	ug/L	DL
VOA	SW8260B	1,2-DICHLOROBENZENE	61044	166GW48DM4DL	61044004	WG	500	U	500	R	ug/L	DL
VOA	SW8260B	1,2-DICHLOROBENZENE	61044	166GWTM4M4DL	61044005	WG	500	U	500	R	ug/L	DL
VOA	SW8260B	1,2-DICHLOROBENZENE	61044	166GW14DM4DL	61044007	WG	10	U	10	R	ug/L	DL
VOA	SW8260B	1,2-DICHLOROBENZENE	61134	166GW36DM4DL	61134002	WG	2500	U	2500	R	ug/L	DL
VOA	SW8260B	1,2-DICHLOROBENZENE	61170	166GW50DM4DL	61170001	WG	1250	U	1250	R	ug/L	DL
VOA	SW8260B	1,2-DICHLOROBENZENE	61258	166GW053M4	61258004	WG	500	U	500	UJ	ug/L	CC
VOA	SW8260B	1,2-DICHLOROBENZENE	61258	166GW054M4	61258005	WG	500	U	500	UJ	ug/L	CC
VOA	SW8260B	1,2-DICHLOROBENZENE	62650	166GW28DM6DL	62650003	WG	25	U	25	R	ug/L	DL
VOA	SW8260B	1,2-DICHLOROBENZENE	64473	166GW50DM7DL	64473003	WG	1250	U	1250	R	ug/L	DL
VOA	SW8260B	1,2-DICHLOROBENZENE	64473	166HW50DM7DL	64473004	WG	1250	U	1250	R	ug/L	DL
VOA	SW8260B	1,2-DICHLOROBENZENE	64475	166GW053M7DL	64475007	WG	500	U	500	R	ug/L	DL

Attachment 1 - Changed Qualifiers and Results
Charleston Navel Complex - Zone K, SWMU 166 - 2002 Sampling Events

Parameter Class	Analytical Method	Parameter	SDG	Sample ID	Lab Sample ID	Matrix	Lab Result	Lab Qual	Final Result	Final Qual	Units	Response
VOA	SW8260B	1,2-DICHLOROBENZENE	64475	166GW054M7DL	64475008	WG	125	U	125	R	ug/L	DL
VOA	SW8260B	1,2-DICHLOROBENZENE	64475	166GW055M7DL	64475009	WG	125	U	125	R	ug/L	DL
VOA	SW8260B	1,2-DICHLOROBENZENE	64475	166HW055M7DL	64475010	WG	125	U	125	R	ug/L	DL
VOA	SW8260B	1,2-DICHLOROBENZENE	64475	166GW07DM7DL	64475011	WG	125	U	125	R	ug/L	DL
VOA	SW8260B	1,2-DICHLOROBENZENE	64475	166GW13DM7DL	64475013	WG	500	U	500	R	ug/L	DL
VOA	SW8260B	1,2-DICHLOROBENZENE	64475	166HW13DM7DL	64475014	WG	500	U	500	R	ug/L	DL
VOA	SW8260B	1,2-DICHLOROBENZENE	64475	166GW14DM7DL	64475015	WG	10	U	10	R	ug/L	DL
VOA	SW8260B	1,2-DICHLOROBENZENE	64475	166GW26DM7DL	64475019	WG	250	U	250	R	ug/L	DL
VOA	SW8260B	1,2-DICHLOROBENZENE	64550	166GW34DM7DL	64550003	WG	5000	U	5000	R	ug/L	DL
VOA	SW8260B	1,2-DICHLOROBENZENE	64550	166GW36DM7DL	64550004	WG	2500	U	2500	R	ug/L	DL
VOA	SW8260B	1,2-DICHLOROBENZENE	64676	163GW003M7DL	64676002	WG	25	U	25	R	ug/L	DL
VOA	SW8260B	1,2-DICHLOROBENZENE	64676	166GW040M7DL	64676003	WG	5000	U	5000	R	ug/L	DL
VOA	SW8260B	1,2-DICHLOROBENZENE	64676	166GW41DM7DL	64676008	WG	50	U	50	R	ug/L	DL
VOA	SW8260B	1,2-DICHLOROBENZENE	64676	166GW42DM7DL	64676009	WG	500	U	500	R	ug/L	DL
VOA	SW8260B	1,2-DICHLOROBENZENE	64676	166GW44DM7DL	64676011	WG	500	U	500	R	ug/L	DL
VOA	SW8260B	1,2-DICHLOROBENZENE	64676	166GW35DM7DL	64676012	WG	500	U	500	R	ug/L	DL
VOA	SW8260B	1,2-DICHLOROBENZENE	71658	166GW053M8DL	71658007	WG	250	U	250	R	ug/L	DL
VOA	SW8260B	1,2-DICHLOROBENZENE	71658	166GW054M8DL	71658008	WG	125	U	125	R	ug/L	DL
VOA	SW8260B	1,2-DICHLOROBENZENE	71658	166GW055M8DL	71658009	WG	500	U	500	R	ug/L	DL
VOA	SW8260B	1,2-DICHLOROBENZENE	71658	166GW056M8DL	71658010	WG	500	U	500	R	ug/L	DL
VOA	SW8260B	1,2-DICHLOROBENZENE	71658	166GW07DM8DL	71658012	WG	125	U	125	R	ug/L	DL

Parameter Class	Analytical Method	Parameter	Station	Sample ID	Lab Sample ID	Matrix	Lab Result	Lab Qual	Final Result	Final Qual	Units	Reason
VOA	SW8260B	1,2-DICHLOROBENZENE	71658	166GW13DM8DL	71658014	WG	500	U	500	R	ug/L	DL
VOA	SW8260B	1,2-DICHLOROBENZENE	71658	166GW14DM8DL	71658016	WG	10	U	10	R	ug/L	DL
VOA	SW8260B	1,2-DICHLOROBENZENE	71659	166GW19DM8DL	71659002	WG	10	U	10	R	ug/L	DL
VOA	SW8260B	1,2-DICHLOROBENZENE	71659	166GW25DM8DL	71659004	WG	500	U	500	R	ug/L	DL
VOA	SW8260B	1,2-DICHLOROBENZENE	71766	166GW49DM8DL	71766003	WG	250	U	250	R	ug/L	DL
VOA	SW8260B	1,2-DICHLOROBENZENE	71766	166GW50DM8DL	71766004	WG	1000	U	1000	R	ug/L	DL
VOA	SW8260B	1,2-DICHLOROBENZENE	71766	166HW50DM8DL	71766005	WG	2500	U	2500	R	ug/L	DL
VOA	SW8260B	1,2-DICHLOROBENZENE	71766	166GW51DM8DL	71766006	WG	500	U	500	R	ug/L	DL
VOA	SW8260B	1,2-DICHLOROBENZENE	71766	166GW52DM8DL	71766007	WG	500	U	500	R	ug/L	DL
VOA	SW8260B	1,2-DICHLOROBENZENE	71766	166GWTM3M8DL	71766009	WG	50	U	50	R	ug/L	DL
VOA	SW8260B	1,2-DICHLOROBENZENE	71766	166GWTM4M8DL	71766010	WG	1000	U	1000	R	ug/L	DL
VOA	SW8260B	1,2-DICHLOROBENZENE	71766	166GW45DM8DL	71766011	WG	250	U	250	R	ug/L	DL
VOA	SW8260B	1,2-DICHLOROBENZENE	71766	166GW46DM8DL	71766012	WG	250	U	250	R	ug/L	DL
VOA	SW8260B	1,2-DICHLOROBENZENE	71766	166GW48DM8DL	71766014	WG	500	U	500	R	ug/L	DL
VOA	SW8260B	1,2-DICHLOROETHANE	56223	166GW32DM1LR	56223003	WG	250	U	250	R	ug/L	DL
VOA	SW8260B	1,2-DICHLOROETHANE	56330	166GW28DM1DL	56330001	WG	25	U	25	R	ug/L	DL
VOA	SW8260B	1,2-DICHLOROETHANE	56330	166GW30DM1LR	56330003	WG	250	U	250	R	ug/L	DL
VOA	SW8260B	1,2-DICHLOROETHANE	56330	166HW30DM1LR	56330004	WG	250	U	250	R	ug/L	DL
VOA	SW8260B	1,2-DICHLOROETHANE	56341	166VDRM001M2	56341001	SO	5.6	U	5.6	UJ	ug/kg	IS
VOA	SW8260B	1,2-DICHLOROETHANE	57725	166GW28DM2DL	57725002	WG	10	U	10	R	ug/L	DL
VOA	SW8260B	1,2-DICHLOROETHANE	57725	166GW29DM2DL	57725003	WG	10	U	10	R	ug/L	DL

Attachment 1 - Changed Qualifiers and Results
Charleston Navel Complex - Zone K, SWMU 166 - 2002 Sampling Events

Parameter Class	Analytical Method	Parameter	SDG	Sample ID	Lab Sample ID	Matrix	Lab Result	Lab Qual	Final Result	Final Qual	Units	Reason
VOA	SW8260B	1,2-DICHLOROETHANE	57725	166GW30DM2DL	57725004	WG	50	U	50	R	ug/L	DL
VOA	SW8260B	1,2-DICHLOROETHANE	57725	166HW30DM2DL	57725005	WG	50	U	50	R	ug/L	DL
VOA	SW8260B	1,2-DICHLOROETHANE	57725	166GW31DM2DL	57725006	WG	10	U	10	R	ug/L	DL
VOA	SW8260B	1,2-DICHLOROETHANE	57725	166GW32DM2DL	57725007	WG	50	U	50	R	ug/L	DL
VOA	SW8260B	1,2-DICHLOROETHANE	58856	166GW28DM3DL	58856002	WG	50	U	50	R	ug/L	DL
VOA	SW8260B	1,2-DICHLOROETHANE	58856	166GW29DM3DL	58856003	WG	10	U	10	R	ug/L	DL
VOA	SW8260B	1,2-DICHLOROETHANE	58856	166GW30DM3DL	58856004	WG	250	U	250	R	ug/L	DL
VOA	SW8260B	1,2-DICHLOROETHANE	58856	166GW31DM3DL	58856005	WG	25	U	25	R	ug/L	DL
VOA	SW8260B	1,2-DICHLOROETHANE	58856	166HW31DM3DL	58856006	WG	50	U	50	R	ug/L	DL
VOA	SW8260B	1,2-DICHLOROETHANE	58856	166GW32DM3DL	58856007	WG	250	U	250	R	ug/L	DL
VOA	SW8260B	1,2-DICHLOROETHANE	60789	166GW33DM4DL	60789001	WG	10	U	10	R	ug/L	DL
VOA	SW8260B	1,2-DICHLOROETHANE	60789	166GW34DM4DL	60789002	WG	2500	U	2500	R	ug/L	DL
VOA	SW8260B	1,2-DICHLOROETHANE	60789	166GW35DM4DL	60789003	WG	50	U	50	R	ug/L	DL
VOA	SW8260B	1,2-DICHLOROETHANE	60789	166GW37DM4DL	60789004	WG	2500	U	2500	R	ug/L	DL
VOA	SW8260B	1,2-DICHLOROETHANE	60789	166GW39DM4DL	60789005	WG	50	U	50	R	ug/L	DL
VOA	SW8260B	1,2-DICHLOROETHANE	60790	163GW03MM4DL	60790001	WG	250	U	250	R	ug/L	DL
VOA	SW8260B	1,2-DICHLOROETHANE	60790	166GW26DM4DL	60790002	WG	250	U	250	R	ug/L	DL
VOA	SW8260B	1,2-DICHLOROETHANE	60790	166GW25DM4DL	60790003	WG	500	U	500	R	ug/L	DL
VOA	SW8260B	1,2-DICHLOROETHANE	60790	166HW25DM4DL	60790004	WG	500	U	500	R	ug/L	DL
VOA	SW8260B	1,2-DICHLOROETHANE	60790	166GW07DM4DL	60790008	WG	50	U	50	R	ug/L	DL
VOA	SW8260B	1,2-DICHLOROETHANE	60879	166GW41DM4DL	608[illegible]01	WG	250	U	250	R	ug/L	DL

Parameter Class	Analytical Method	Parameter	SDG	Sample ID	Lab Sample ID	Matrix	Lab Result	Lab Qual	Final Result	Final Qual	Units	Reasons
VOA	SW8260B	1,2-DICHLOROETHANE	60879	166GW42DM4DL	60879002	WG	500	U	500	R	ug/L	DL
VOA	SW8260B	1,2-DICHLOROETHANE	60879	166GW43DM4DL	60879003	WG	1250	U	1250	R	ug/L	DL
VOA	SW8260B	1,2-DICHLOROETHANE	60879	166GW44DM4DL	60879004	WG	250	U	250	R	ug/L	DL
VOA	SW8260B	1,2-DICHLOROETHANE	60879	166GW13DM4DL	60879005	WG	500	U	500	R	ug/L	DL
VOA	SW8260B	1,2-DICHLOROETHANE	61044	166GW38DM4DL	61044001	WG	100	U	100	R	ug/L	DL
VOA	SW8260B	1,2-DICHLOROETHANE	61044	166GW45DM4DL	61044002	WG	500	U	500	R	ug/L	DL
VOA	SW8260B	1,2-DICHLOROETHANE	61044	166GW48DM4DL	61044004	WG	500	U	500	R	ug/L	DL
VOA	SW8260B	1,2-DICHLOROETHANE	61044	166GWTM4M4DL	61044005	WG	500	U	500	R	ug/L	DL
VOA	SW8260B	1,2-DICHLOROETHANE	61044	166GW14DM4DL	61044007	WG	10	U	10	R	ug/L	DL
VOA	SW8260B	1,2-DICHLOROETHANE	61134	166GW36DM4DL	61134002	WG	2500	U	2500	R	ug/L	DL
VOA	SW8260B	1,2-DICHLOROETHANE	61170	166GW50DM4DL	61170001	WG	1250	U	1250	R	ug/L	DL
VOA	SW8260B	1,2-DICHLOROETHANE	62650	166GW28DM6DL	62650003	WG	25	U	25	R	ug/L	DL
VOA	SW8260B	1,2-DICHLOROETHANE	64473	166GW50DM7DL	64473003	WG	1250	U	1250	R	ug/L	DL
VOA	SW8260B	1,2-DICHLOROETHANE	64473	166HW50DM7DL	64473004	WG	1250	U	1250	R	ug/L	DL
VOA	SW8260B	1,2-DICHLOROETHANE	64475	166GW053M7DL	64475007	WG	500	U	500	R	ug/L	DL
VOA	SW8260B	1,2-DICHLOROETHANE	64475	166GW054M7DL	64475008	WG	125	U	125	R	ug/L	DL
VOA	SW8260B	1,2-DICHLOROETHANE	64475	166GW055M7DL	64475009	WG	125	U	125	R	ug/L	DL
VOA	SW8260B	1,2-DICHLOROETHANE	64475	166HW055M7DL	64475010	WG	125	U	125	R	ug/L	DL
VOA	SW8260B	1,2-DICHLOROETHANE	64475	166GW07DM7DL	64475011	WG	125	U	125	R	ug/L	DL
VOA	SW8260B	1,2-DICHLOROETHANE	64475	166GW13DM7DL	64475013	WG	500	U	500	R	ug/L	DL
VOA	SW8260B	1,2-DICHLOROETHANE	64475	166HW13DM7DL	64475014	WG	500	U	500	R	ug/L	DL

Attachment 1 - Changed Qualifiers and Results
Charleston Navel Complex - Zone K, SWMU 166 - 2002 Sampling Events

Parameter Class	Analytical Method	Parameter	SDG	Sample ID	Lab Sample ID	Matrix	Lab Result	Lab Qual	Final Result	Final Qual	Units	Reasons
VOA	SW8260B	1,2-DICHLOROETHANE	64475	166GW14DM7DL	64475015	WG	10	U	10	R	ug/L	DL
VOA	SW8260B	1,2-DICHLOROETHANE	64475	166GW26DM7DL	64475019	WG	250	U	250	R	ug/L	DL
VOA	SW8260B	1,2-DICHLOROETHANE	64550	166GW34DM7DL	64550003	WG	5000	U	5000	R	ug/L	DL
VOA	SW8260B	1,2-DICHLOROETHANE	64550	166GW36DM7DL	64550004	WG	2500	U	2500	R	ug/L	DL
VOA	SW8260B	1,2-DICHLOROETHANE	64676	163GW003M7DL	64676002	WG	25	U	25	R	ug/L	DL
VOA	SW8260B	1,2-DICHLOROETHANE	64676	166GW040M7DL	64676003	WG	5000	U	5000	R	ug/L	DL
VOA	SW8260B	1,2-DICHLOROETHANE	64676	166GW41DM7DL	64676008	WG	50	U	50	R	ug/L	DL
VOA	SW8260B	1,2-DICHLOROETHANE	64676	166GW42DM7DL	64676009	WG	500	U	500	R	ug/L	DL
VOA	SW8260B	1,2-DICHLOROETHANE	64676	166GW44DM7DL	64676011	WG	500	U	500	R	ug/L	DL
VOA	SW8260B	1,2-DICHLOROETHANE	64676	166GW35DM7DL	64676012	WG	500	U	500	R	ug/L	DL
VOA	SW8260B	1,2-DICHLOROETHANE	71658	166GW053M8DL	71658007	WG	250	U	250	R	ug/L	DL
VOA	SW8260B	1,2-DICHLOROETHANE	71658	166GW054M8DL	71658008	WG	125	U	125	R	ug/L	DL
VOA	SW8260B	1,2-DICHLOROETHANE	71658	166GW055M8DL	71658009	WG	500	U	500	R	ug/L	DL
VOA	SW8260B	1,2-DICHLOROETHANE	71658	166GW056M8DL	71658010	WG	500	U	500	R	ug/L	DL
VOA	SW8260B	1,2-DICHLOROETHANE	71658	166GW07DM8DL	71658012	WG	125	U	125	R	ug/L	DL
VOA	SW8260B	1,2-DICHLOROETHANE	71658	166GW13DM8DL	71658014	WG	500	U	500	R	ug/L	DL
VOA	SW8260B	1,2-DICHLOROETHANE	71658	166GW14DM8DL	71658016	WG	10	U	10	R	ug/L	DL
VOA	SW8260B	1,2-DICHLOROETHANE	71659	166GW17DM8	71659001	WG	5	U	5	UJ	ug/L	CC
VOA	SW8260B	1,2-DICHLOROETHANE	71659	166GW19DM8	71659002	WG	5	U	5	UJ	ug/L	CC
VOA	SW8260B	1,2-DICHLOROETHANE	71659	166GW19DM8DL	71659002	WG	10	U	10	R	ug/L	DL
VOA	SW8260B	1,2-DICHLOROETHANE	71659	166GW21DM8	71659003	WG	5	U	5	UJ	ug/L	CC

Parameter Class	Analytical Method	Parameter	SDG	Sample ID	Lab Sample ID	Matrix	Lab Result	Laboratory	Final Result	Final Qualifier	Units	Reasons
VOA	SW8260B	1,2-DICHLOROETHANE	71659	166GW25DM8DL	71659004	WG	500	U	500	R	ug/L	DL
VOA	SW8260B	1,2-DICHLOROETHANE	71659	166GW26DM8	71659005	WG	125	U	125	UJ	ug/L	CC
VOA	SW8260B	1,2-DICHLOROETHANE	71659	698GW001M8	71659006	WG	5	U	5	UJ	ug/L	CC
VOA	SW8260B	1,2-DICHLOROETHANE	71659	698HW001M8	71659007	WG	5	U	5	UJ	ug/L	CC
VOA	SW8260B	1,2-DICHLOROETHANE	71766	166GW49DM8DL	71766003	WG	250	U	250	R	ug/L	DL
VOA	SW8260B	1,2-DICHLOROETHANE	71766	166GW50DM8DL	71766004	WG	1000	U	1000	R	ug/L	DL
VOA	SW8260B	1,2-DICHLOROETHANE	71766	166HW50DM8DL	71766005	WG	2500	U	2500	R	ug/L	DL
VOA	SW8260B	1,2-DICHLOROETHANE	71766	166GW51DM8DL	71766006	WG	500	U	500	R	ug/L	DL
VOA	SW8260B	1,2-DICHLOROETHANE	71766	166GW52DM8DL	71766007	WG	500	U	500	R	ug/L	DL
VOA	SW8260B	1,2-DICHLOROETHANE	71766	166GWTM3M8DL	71766009	WG	50	U	50	R	ug/L	DL
VOA	SW8260B	1,2-DICHLOROETHANE	71766	166GWTM4M8DL	71766010	WG	1000	U	1000	R	ug/L	DL
VOA	SW8260B	1,2-DICHLOROETHANE	71766	166GW45DM8DL	71766011	WG	250	U	250	R	ug/L	DL
VOA	SW8260B	1,2-DICHLOROETHANE	71766	166GW46DM8DL	71766012	WG	250	U	250	R	ug/L	DL
VOA	SW8260B	1,2-DICHLOROETHANE	71766	166GW48DM8DL	71766014	WG	500	U	500	R	ug/L	DL
VOA	SW8260B	1,2-DICHLOROETHANE	71852	166GW040M8DL	71852003	WG	1250	U	1250	R	ug/L	DL
VOA	SW8260B	1,2-DICHLOROETHANE	71852	166HW040M8DL	71852004	WG	1250	U	1250	R	ug/L	DL
VOA	SW8260B	1,2-DICHLOROETHANE	71852	166GW34DM8DL	71852005	WG	5000	U	5000	R	ug/L	DL
VOA	SW8260B	1,2-DICHLOROETHANE	71852	166GW36DM8DL	71852007	WG	1250	U	1250	R	ug/L	DL
VOA	SW8260B	1,2-DICHLOROETHANE	71852	166GW37DM8DL	71852008	WG	25	U	25	R	ug/L	DL
VOA	SW8260B	1,2-DICHLOROETHANE	71852	166GW43DM8DL	71852012	WG	500	U	500	R	ug/L	DL
VOA	SW8260B	1,2-DICHLOROETHANE	72055	163GW003M8	72055003	WG	5	U	5	UJ	ug/L	CC,SS

Attachment 1 - Changed Qualifiers and Results
Charleston Navel Complex - Zone K, SWMU 166 - 2002 Sampling Events

Parameter Class	Analytical Method	Parameter	Spec	Sample ID	Lab Sample ID	Matrix	Lab Result	Lab Qual	Final Result	Final Qual	Units	Reason
VOA	SW8260B	1,2-DICHLOROETHANE	72055	163GW003M8DL	72055003	WG	50	U	50	R	ug/L	DL
VOA	SW8260B	1,2-DICHLOROETHANE	72055	163GW03MM8	72055004	WG	5	U	5	UJ	ug/L	SS
VOA	SW8260B	1,2-DICHLOROETHANE	72055	166GW16DM8	72055005	WG	5	U	5	UJ	ug/L	CC,SS
VOA	SW8260B	1,2-DICHLOROETHANE	72055	166GW16DM8DL	72055005	WG	250	U	250	R	ug/L	DL
VOA	SW8260B	1,2-DICHLOROETHANE	72055	166GW33DM8	72055006	WG	5	U	5	UJ	ug/L	SS
VOA	SW8260B	1,2-DICHLOROETHANE	72055	166GW38DM8	72055007	WG	5	U	5	UJ	ug/L	CC,SS
VOA	SW8260B	1,2-DICHLOROETHANE	72055	166GW38DM8DL	72055007	WG	50	U	50	R	ug/L	DL
VOA	SW8260B	1,2-DICHLOROETHANE	72055	163GW005M8	72055008	WG	5	U	5	UJ	ug/L	SS
VOA	SW8260B	1,2-Dichloroethene (total)	56223	166GW32DM1LR	56223003	WG	59.3	JD	59.3	R	ug/L	DL
VOA	SW8260B	1,2-Dichloroethene (total)	56330	166GW28DM1DL	56330001	WG	77.5	D	77.5	R	ug/L	DL
VOA	SW8260B	1,2-Dichloroethene (total)	56330	166GW30DM1LR	56330003	WG	104	JD	104	R	ug/L	DL
VOA	SW8260B	1,2-Dichloroethene (total)	56330	166HW30DM1LR	56330004	WG	118	JD	118	R	ug/L	DL
VOA	SW8260B	1,2-Dichloroethene (total)	56341	166VDRM001M2	56341001	SO	5.6	U	5.6	UJ	ug/kg	IS
VOA	SW8260B	1,2-Dichloroethene (total)	57725	166GW28DM2DL	57725002	WG	68.8	D	68.8	R	ug/L	DL
VOA	SW8260B	1,2-Dichloroethene (total)	57725	166GW29DM2DL	57725003	WG	4.9	JD	4.9	R	ug/L	DL
VOA	SW8260B	1,2-Dichloroethene (total)	57725	166GW30DM2	57725004	WG	306	E	306	R	ug/L	LR
VOA	SW8260B	1,2-Dichloroethene (total)	57725	166HW30DM2	57725005	WG	382	E	382	R	ug/L	LR
VOA	SW8260B	1,2-Dichloroethene (total)	57725	166GW31DM2DL	57725006	WG	23.2	D	23.2	R	ug/L	DL
VOA	SW8260B	1,2-Dichloroethene (total)	57725	166GW32DM2DL	57725007	WG	48.4	JD	48.4	R	ug/L	DL
VOA	SW8260B	1,2-Dichloroethene (total)	58856	166GW28DM3DL	58856002	WG	52.1	D	52.1	R	ug/L	DL
VOA	SW8260B	1,2-Dichloroethene (total)	58856	166GW29DM3DL	58856003	WG	5.2	JD	5.2	R	ug/L	DL

Parameter Class	Analytical Method	Parameter	SDG	Sample ID	Lab Sample ID	Matrix	Lab Result	Lab Qual	Final Result	Final Qual	Units	Reasons
VOA	SW8260B	1,2-Dichloroethene (total)	58856	166GW30DM3	58856004	WG	431	E	431	R	ug/L	LR
VOA	SW8260B	1,2-Dichloroethene (total)	58856	166GW31DM3DL	58856005	WG	23.2	JD	23.2	R	ug/L	DL
VOA	SW8260B	1,2-Dichloroethene (total)	58856	166HW31DM3DL	58856006	WG	20	JD	20	R	ug/L	DL
VOA	SW8260B	1,2-Dichloroethene (total)	58856	166GW32DM3DL	58856007	WG	160	JD	160	R	ug/L	DL
VOA	SW8260B	1,2-Dichloroethene (total)	60789	166GW33DM4DL	60789001	WG	25	D	25	R	ug/L	DL
VOA	SW8260B	1,2-Dichloroethene (total)	60789	166GW34DM4DL	60789002	WG	392	JD	392	R	ug/L	DL
VOA	SW8260B	1,2-Dichloroethene (total)	60789	166GW35DM4DL	60789003	WG	50	U	50	R	ug/L	DL
VOA	SW8260B	1,2-Dichloroethene (total)	60789	166GW37DM4DL	60789004	WG	788	JD	788	R	ug/L	DL
VOA	SW8260B	1,2-Dichloroethene (total)	60789	166GW39DM4DL	60789005	WG	50	U	50	R	ug/L	DL
VOA	SW8260B	1,2-Dichloroethene (total)	60790	163GW03MM4	60790001	WG	697	E	697	R	ug/L	LR
VOA	SW8260B	1,2-Dichloroethene (total)	60790	166GW26DM4DL	60790002	WG	129	JD	129	R	ug/L	DL
VOA	SW8260B	1,2-Dichloroethene (total)	60790	166GW25DM4DL	60790003	WG	121	JD	121	R	ug/L	DL
VOA	SW8260B	1,2-Dichloroethene (total)	60790	166HW25DM4DL	60790004	WG	127	JD	127	R	ug/L	DL
VOA	SW8260B	1,2-Dichloroethene (total)	60790	166GW07DM4DL	60790008	WG	29.4	JD	29.4	R	ug/L	DL
VOA	SW8260B	1,2-Dichloroethene (total)	60879	166GW41DM4	60879001	WG	246	E	246	R	ug/L	LR
VOA	SW8260B	1,2-Dichloroethene (total)	60879	166GW41DM4DL	60879001	WG	223	JD	223	J	ug/L	DL
VOA	SW8260B	1,2-Dichloroethene (total)	60879	166GW42DM4DL	60879002	WG	500	U	500	R	ug/L	DL
VOA	SW8260B	1,2-Dichloroethene (total)	60879	166GW43DM4	60879003	WG	325	E	325	R	ug/L	LR
VOA	SW8260B	1,2-Dichloroethene (total)	60879	166GW43DM4DL	60879003	WG	319	JD	319	J	ug/L	DL
VOA	SW8260B	1,2-Dichloroethene (total)	60879	166GW44DM4DL	60879004	WG	43.5	JD	43.5	R	ug/L	DL
VOA	SW8260B	1,2-Dichloroethene (total)	60879	166GW13DM4	60879005	WG	217	E	217	R	ug/L	LR

Attachment 1 - Changed Qualifiers and Results
Charleston Navel Complex - Zone K, SWMU 166 - 2002 Sampling Events

Parameter Class	Analytical Method	Parameter	SDG	Sample ID	Lab Sample ID	Matrix	Lab Result	Lab Qual	Final Result	Final Qual	Units	Reason
VOA	SW8260B	1,2-Dichloroethene (total)	60879	166GW13DM4DL	60879005	WG	211	JD	211	J	ug/L	DL
VOA	SW8260B	1,2-Dichloroethene (total)	61044	166GW38DM4DL	61044001	WG	148	D	148	R	ug/L	DL
VOA	SW8260B	1,2-Dichloroethene (total)	61044	166GW45DM4DL	61044002	WG	500	U	500	R	ug/L	DL
VOA	SW8260B	1,2-Dichloroethene (total)	61044	166GW48DM4DL	61044004	WG	500	U	500	R	ug/L	DL
VOA	SW8260B	1,2-Dichloroethene (total)	61044	166GWTM4M4	61044005	WG	2680	E	2680	R	ug/L	LR
VOA	SW8260B	1,2-Dichloroethene (total)	61044	166GW14DM4DL	61044007	WG	16.8	D	16.8	R	ug/L	DL
VOA	SW8260B	1,2-Dichloroethene (total)	61134	166GW36DM4DL	61134002	WG	432	JD	432	R	ug/L	DL
VOA	SW8260B	1,2-Dichloroethene (total)	61170	166GW50DM4DL	61170001	WG	230	JD	230	R	ug/L	DL
VOA	SW8260B	1,2-Dichloroethene (total)	62650	166GW28DM6	62650003	WG	79.6	=	79.6	J	ug/L	SS
VOA	SW8260B	1,2-Dichloroethene (total)	62650	166GW28DM6DL	62650003	WG	81.9	D	81.9	R	ug/L	DL
VOA	SW8260B	1,2-Dichloroethene (total)	62650	166GW29DM6	62650004	WG	4.2	J	4.2	J	ug/L	SS
VOA	SW8260B	1,2-Dichloroethene (total)	62650	166GW30DM6	62650005	WG	548	=	548	J	ug/L	SS
VOA	SW8260B	1,2-Dichloroethene (total)	62650	166GW31DM6	62650006	WG	64	=	64	J	ug/L	SS
VOA	SW8260B	1,2-Dichloroethene (total)	62650	166HW31DM6	62650007	WG	58.7	=	58.7	J	ug/L	SS
VOA	SW8260B	1,2-Dichloroethene (total)	62650	166GW32DM6	62650008	WG	202	=	202	J	ug/L	SS
VOA	SW8260B	1,2-Dichloroethene (total)	64473	166GW50DM7DL	64473003	WG	336	JD	336	R	ug/L	DL
VOA	SW8260B	1,2-Dichloroethene (total)	64473	166HW50DM7DL	64473004	WG	323	JD	323	R	ug/L	DL
VOA	SW8260B	1,2-Dichloroethene (total)	64475	166GW053M7	64475007	WG	198	E	198	R	ug/L	LR
VOA	SW8260B	1,2-Dichloroethene (total)	64475	166GW053M7DL	64475007	WG	167	JD	167	J	ug/L	DL
VOA	SW8260B	1,2-Dichloroethene (total)	64475	166GW054M7DL	64475008	WG	90.5	JD	90.5	R	ug/L	DL
VOA	SW8260B	1,2-Dichloroethene (total)	64475	166GW055M7	64475009	WG	122	E	122	R	ug/L	LR

Parameter Class	Analytical Method	Parameter	SDG	Sample ID	Lab Sample ID	Matrix	Lab Result	Lab Qual	Final Result	Final Qual	Units	Reasons
VOA	SW8260B	1,2-Dichloroethene (total)	64475	166GW055M7DL	64475009	WG	108	JD	108	J	ug/L	DL
VOA	SW8260B	1,2-Dichloroethene (total)	64475	166HW055M7	64475010	WG	130	E	130	R	ug/L	LR
VOA	SW8260B	1,2-Dichloroethene (total)	64475	166HW055M7DL	64475010	WG	105	JD	105	J	ug/L	DL
VOA	SW8260B	1,2-Dichloroethene (total)	64475	166GW07DM7DL	64475011	WG	25.4	JD	25.4	R	ug/L	DL
VOA	SW8260B	1,2-Dichloroethene (total)	64475	166GW13DM7	64475013	WG	208	E	208	R	ug/L	LR
VOA	SW8260B	1,2-Dichloroethene (total)	64475	166GW13DM7DL	64475013	WG	255	JD	255	J	ug/L	DL
VOA	SW8260B	1,2-Dichloroethene (total)	64475	166HW13DM7	64475014	WG	278	E	278	R	ug/L	LR
VOA	SW8260B	1,2-Dichloroethene (total)	64475	166HW13DM7DL	64475014	WG	184	JD	184	J	ug/L	DL
VOA	SW8260B	1,2-Dichloroethene (total)	64475	166GW14DM7DL	64475015	WG	19.6	D	19.6	R	ug/L	DL
VOA	SW8260B	1,2-Dichloroethene (total)	64475	166GW26DM7	64475019	WG	413	E	413	R	ug/L	LR
VOA	SW8260B	1,2-Dichloroethene (total)	64550	166GW34DM7DL	64550003	WG	561	JD	561	R	ug/L	DL
VOA	SW8260B	1,2-Dichloroethene (total)	64550	166GW36DM7DL	64550004	WG	2890	D	2890	R	ug/L	DL
VOA	SW8260B	1,2-Dichloroethene (total)	64676	163GW003M7	64676002	WG	142	E	142	R	ug/L	LR
VOA	SW8260B	1,2-Dichloroethene (total)	64676	166GW040M7	64676003	WG	2030	E	2030	R	ug/L	LR
VOA	SW8260B	1,2-Dichloroethene (total)	64676	166GW41DM7DL	64676008	WG	192	D	192	R	ug/L	DL
VOA	SW8260B	1,2-Dichloroethene (total)	64676	166GW42DM7DL	64676009	WG	530	D	530	R	ug/L	DL
VOA	SW8260B	1,2-Dichloroethene (total)	64676	166GW44DM7DL	64676011	WG	47.4	JD	47.4	R	ug/L	DL
VOA	SW8260B	1,2-Dichloroethene (total)	64676	166GW35DM7DL	64676012	WG	46.5	JD	46.5	R	ug/L	DL
VOA	SW8260B	1,2-Dichloroethene (total)	71658	166GW001M8	71658004	WG	0.39	J	0.39	J	ug/L	SS
VOA	SW8260B	1,2-Dichloroethene (total)	71658	166GW017M8	71658006	WG	3.8	J	3.8	J	ug/L	SS
VOA	SW8260B	1,2-Dichloroethene (total)	71658	166GW053M8	71658007	WG	83.5	=	83.5	J	ug/L	SS

Attachment 1 - Changed Qualifiers and Results
Charleston Navel Complex - Zone K, SWMU 166 - 2002 Sampling Events

Parameter Class	Analytical Method	Parameter	SDG	Sample ID	Lab Sample ID	Matrix	Lab Result	Qualifier	Final Result	Final Qualifier	Units	Reason
VOA	SW8260B	1,2-Dichloroethene (total)	71658	166GW053M8DL	71658007	WG	90.8	JD	90.8	R	ug/L	DL
VOA	SW8260B	1,2-Dichloroethene (total)	71658	166GW054M8	71658008	WG	165	=	165	J	ug/L	SS
VOA	SW8260B	1,2-Dichloroethene (total)	71658	166GW054M8DL	71658008	WG	162	D	162	R	ug/L	DL
VOA	SW8260B	1,2-Dichloroethene (total)	71658	166GW055M8	71658009	WG	238	=	238	J	ug/L	SS
VOA	SW8260B	1,2-Dichloroethene (total)	71658	166GW055M8DL	71658009	WG	226	JD	226	R	ug/L	DL
VOA	SW8260B	1,2-Dichloroethene (total)	71658	166GW056M8	71658010	WG	251	E	251	R	ug/L	LR
VOA	SW8260B	1,2-Dichloroethene (total)	71658	166GW056M8DL	71658010	WG	240	JD	240	J	ug/L	DL,SS
VOA	SW8260B	1,2-Dichloroethene (total)	71658	166GW07DM8	71658012	WG	35	=	35	J	ug/L	SS
VOA	SW8260B	1,2-Dichloroethene (total)	71658	166GW07DM8DL	71658012	WG	28.1	JD	28.1	R	ug/L	DL
VOA	SW8260B	1,2-Dichloroethene (total)	71658	166GW08DM8	71658013	WG	12	=	12	J	ug/L	SS
VOA	SW8260B	1,2-Dichloroethene (total)	71658	166GW13DM8	71658014	WG	223	J	223	J	ug/L	SS
VOA	SW8260B	1,2-Dichloroethene (total)	71658	166GW13DM8DL	71658014	WG	209	JD	209	R	ug/L	DL
VOA	SW8260B	1,2-Dichloroethene (total)	71658	166HW13DM8	71658015	WG	164	J	164	J	ug/L	SS
VOA	SW8260B	1,2-Dichloroethene (total)	71658	166GW14DM8	71658016	WG	25.1	=	25.1	J	ug/L	SS
VOA	SW8260B	1,2-Dichloroethene (total)	71658	166GW14DM8DL	71658016	WG	26.3	D	26.3	R	ug/L	DL
VOA	SW8260B	1,2-Dichloroethene (total)	71659	166GW19DM8	71659002	WG	44.3	=	44.3	J	ug/L	SS
VOA	SW8260B	1,2-Dichloroethene (total)	71659	166GW19DM8DL	71659002	WG	45.2	D	45.2	R	ug/L	DL
VOA	SW8260B	1,2-Dichloroethene (total)	71659	166GW25DM8	71659004	WG	147	J	147	J	ug/L	SS
VOA	SW8260B	1,2-Dichloroethene (total)	71659	166GW25DM8DL	71659004	WG	139	JD	139	R	ug/L	DL
VOA	SW8260B	1,2-Dichloroethene (total)	71659	166GW26DM8	71659005	WG	439	=	439	J	ug/L	SS
VOA	SW8260B	1,2-Dichloroethene (total)	71766	166GW49DM8	71766003	WG	459	E	459	R	ug/L	DL

Parameter Class	Analytical Method	Parameter	SDG	Sample ID	Lab Sample ID	Matrix	Lab Result	Lab Qual	Final Result	Final Qual	Units	Reason Code
VOA	SW8260B	1,2-Dichloroethene (total)	71766	166GW49DM8DL	71766003	WG	474	D	474	J	ug/L	SS
VOA	SW8260B	1,2-Dichloroethene (total)	71766	166GW50DM8	71766004	WG	434	E	434	R	ug/L	LR
VOA	SW8260B	1,2-Dichloroethene (total)	71766	166GW50DM8DL	71766004	WG	408	JD	408	J	ug/L	DL,SS
VOA	SW8260B	1,2-Dichloroethene (total)	71766	166HW50DM8	71766005	WG	620	=	620	J	ug/L	SS
VOA	SW8260B	1,2-Dichloroethene (total)	71766	166HW50DM8DL	71766005	WG	553	JD	553	R	ug/L	DL
VOA	SW8260B	1,2-Dichloroethene (total)	71766	166GW51DM8	71766006	WG	1880	E	1880	R	ug/L	LR
VOA	SW8260B	1,2-Dichloroethene (total)	71766	166GW51DM8DL	71766006	WG	1870	D	1870	J	ug/L	SS
VOA	SW8260B	1,2-Dichloroethene (total)	71766	166GW52DM8	71766007	WG	2710	E	2710	R	ug/L	LR
VOA	SW8260B	1,2-Dichloroethene (total)	71766	166GW52DM8DL	71766007	WG	3190	D	3190	J	ug/L	SS
VOA	SW8260B	1,2-Dichloroethene (total)	71766	166GWIN3M8	71766008	WG	29.6	=	29.6	J	ug/L	SS
VOA	SW8260B	1,2-Dichloroethene (total)	71766	166GWTM3M8	71766009	WG	756	E	756	R	ug/L	LR
VOA	SW8260B	1,2-Dichloroethene (total)	71766	166GWTM3M8DL	71766009	WG	813	D	813	J	ug/L	SS
VOA	SW8260B	1,2-Dichloroethene (total)	71766	166GWTM4M8	71766010	WG	4150	E	4150	R	ug/L	LR
VOA	SW8260B	1,2-Dichloroethene (total)	71766	166GWTM4M8DL	71766010	WG	4630	D	4630	J	ug/L	DL
VOA	SW8260B	1,2-Dichloroethene (total)	71766	166GW45DM8DL	71766011	WG	61.7	JD	61.7	R	ug/L	DL
VOA	SW8260B	1,2-Dichloroethene (total)	71766	166GW46DM8	71766012	WG	817	E	817	R	ug/L	LR
VOA	SW8260B	1,2-Dichloroethene (total)	71766	166GW46DM8DL	71766012	WG	904	D	904	J	ug/L	DL
VOA	SW8260B	1,2-Dichloroethene (total)	71766	166GW48DM8	71766014	WG	196	E	196	R	ug/L	LR
VOA	SW8260B	1,2-Dichloroethene (total)	71766	166GW48DM8DL	71766014	WG	213	JD	213	J	ug/L	DL,SS
VOA	SW8260B	1,2-Dichloroethene (total)	71852	166GW040M8	71852003	WG	8640	=	8640	R	ug/L	LR
VOA	SW8260B	1,2-Dichloroethene (total)	71852	166GW040M8DL	71852003	WG	8400	D	8400	J	ug/L	SS

Attachment 1 - Changed Qualifiers and Results
Charleston Navel Complex - Zone K, SWMU 166 - 2002 Sampling Events

Parameter Class	Analytical Method	Parameter	SDG	Sample ID	Lab Sample ID	Matrix	Lab Result	Lab Qual	Final Result	Final Qual	Units	Reasons
VOA	SW8260B	1,2-Dichloroethene (total)	71852	166HW040M8	71852004	WG	9000	=	9000	R	ug/L	LR
VOA	SW8260B	1,2-Dichloroethene (total)	71852	166HW040M8DL	71852004	WG	9210	D	9210	J	ug/L	SS
VOA	SW8260B	1,2-Dichloroethene (total)	71852	166GW34DM8	71852005	WG	14800	E	14800	R	ug/L	LR
VOA	SW8260B	1,2-Dichloroethene (total)	71852	166GW34DM8DL	71852005	WG	16100	D	16100	J	ug/L	SS
VOA	SW8260B	1,2-Dichloroethene (total)	71852	166GW36DM8	71852007	WG	6790	=	6790	R	ug/L	LR
VOA	SW8260B	1,2-Dichloroethene (total)	71852	166GW36DM8DL	71852007	WG	7240	D	7240	J	ug/L	SS
VOA	SW8260B	1,2-Dichloroethene (total)	71852	166GW37DM8	71852008	WG	322	E	322	R	ug/L	LR
VOA	SW8260B	1,2-Dichloroethene (total)	71852	166GW37DM8DL	71852008	WG	340	D	340	J	ug/L	SS
VOA	SW8260B	1,2-Dichloroethene (total)	71852	166GW43DM8	71852012	WG	8330	=	8330	R	ug/L	LR
VOA	SW8260B	1,2-Dichloroethene (total)	71852	166GW43DM8DL	71852012	WG	8530	D	8530	J	ug/L	SS
VOA	SW8260B	1,2-Dichloroethene (total)	72055	163GW003M8	72055003	WG	11.9	=	11.9	J	ug/L	SS
VOA	SW8260B	1,2-Dichloroethene (total)	72055	163GW003M8DL	72055003	WG	9.6	JD	9.6	R	ug/L	DL
VOA	SW8260B	1,2-Dichloroethene (total)	72055	163GW03MM8	72055004	WG	4.1	J	4.1	J	ug/L	SS
VOA	SW8260B	1,2-Dichloroethene (total)	72055	166GW16DM8	72055005	WG	1760	E	1760	R	ug/L	LR
VOA	SW8260B	1,2-Dichloroethene (total)	72055	166GW16DM8DL	72055005	WG	3020	D	3020	J	ug/L	SS
VOA	SW8260B	1,2-Dichloroethene (total)	72055	166GW33DM8	72055006	WG	7.4	=	7.4	J	ug/L	SS
VOA	SW8260B	1,2-Dichloroethene (total)	72055	166GW38DM8	72055007	WG	318	E	318	R	ug/L	LR
VOA	SW8260B	1,2-Dichloroethene (total)	72055	166GW38DM8DL	72055007	WG	327	D	327	J	ug/L	SS
VOA	SW8260B	1,2-Dichloroethene (total)	72055	163GW005M8	72055008	WG	5	U	5	UJ	ug/L	SS
VOA	SW8260B	1,2-DICHLOROPROPANE	56223	166GW32DM1LR	56223003	WG	250	U	250	R	ug/L	DL
VOA	SW8260B	1,2-DICHLOROPROPANE	56330	166GW28DM1DL	56330001	WG	25	U	25	R	ug/L	DL

Parameter Class	Analytical Method	Parameter	SDG	Sample Type	Lab Sample ID	Matrix	Lab Result	Lab Qual	Final Result	Final Qual	Units	Reason
VOA	SW8260B	1,2-DICHLOROPROPANE	56330	166GW30DM1LR	56330003	WG	250	U	250	R	ug/L	DL
VOA	SW8260B	1,2-DICHLOROPROPANE	56330	166HW30DM1LR	56330004	WG	250	U	250	R	ug/L	DL
VOA	SW8260B	1,2-DICHLOROPROPANE	56341	166VDRM001M2	56341001	SO	5.6	U	5.6	UJ	ug/kg	IS
VOA	SW8260B	1,2-DICHLOROPROPANE	57725	166GW28DM2DL	57725002	WG	10	U	10	R	ug/L	DL
VOA	SW8260B	1,2-DICHLOROPROPANE	57725	166GW29DM2DL	57725003	WG	10	U	10	R	ug/L	DL
VOA	SW8260B	1,2-DICHLOROPROPANE	57725	166GW30DM2DL	57725004	WG	50	U	50	R	ug/L	DL
VOA	SW8260B	1,2-DICHLOROPROPANE	57725	166HW30DM2DL	57725005	WG	50	U	50	R	ug/L	DL
VOA	SW8260B	1,2-DICHLOROPROPANE	57725	166GW31DM2DL	57725006	WG	10	U	10	R	ug/L	DL
VOA	SW8260B	1,2-DICHLOROPROPANE	57725	166GW32DM2DL	57725007	WG	50	U	50	R	ug/L	DL
VOA	SW8260B	1,2-DICHLOROPROPANE	58856	166GW28DM3DL	58856002	WG	50	U	50	R	ug/L	DL
VOA	SW8260B	1,2-DICHLOROPROPANE	58856	166GW29DM3DL	58856003	WG	10	U	10	R	ug/L	DL
VOA	SW8260B	1,2-DICHLOROPROPANE	58856	166GW30DM3DL	58856004	WG	250	U	250	R	ug/L	DL
VOA	SW8260B	1,2-DICHLOROPROPANE	58856	166GW31DM3DL	58856005	WG	25	U	25	R	ug/L	DL
VOA	SW8260B	1,2-DICHLOROPROPANE	58856	166HW31DM3DL	58856006	WG	50	U	50	R	ug/L	DL
VOA	SW8260B	1,2-DICHLOROPROPANE	58856	166GW32DM3DL	58856007	WG	250	U	250	R	ug/L	DL
VOA	SW8260B	1,2-DICHLOROPROPANE	60789	166GW33DM4DL	60789001	WG	10	U	10	R	ug/L	DL
VOA	SW8260B	1,2-DICHLOROPROPANE	60789	166GW34DM4DL	60789002	WG	2500	U	2500	R	ug/L	DL
VOA	SW8260B	1,2-DICHLOROPROPANE	60789	166GW35DM4DL	60789003	WG	50	U	50	R	ug/L	DL
VOA	SW8260B	1,2-DICHLOROPROPANE	60789	166GW37DM4DL	60789004	WG	2500	U	2500	R	ug/L	DL
VOA	SW8260B	1,2-DICHLOROPROPANE	60789	166GW39DM4DL	60789005	WG	50	U	50	R	ug/L	DL
VOA	SW8260B	1,2-DICHLOROPROPANE	60790	163GW03MM4DL	60790001	WG	250	U	250	R	ug/L	DL

Attachment 1 - Changed Qualifiers and Results
Charleston Navel Complex - Zone K, SWMU 166 - 2002 Sampling Events

Parameter Group	Analytical Method	Parameter	SDG	Sample ID	Lab Sample ID	Matrix	Lab Result	Lab Qual	Final Result	Final Qual	Units	Reason
VOA	SW8260B	1,2-DICHLOROPROPANE	60790	166GW26DM4DL	60790002	WG	250	U	250	R	ug/L	DL
VOA	SW8260B	1,2-DICHLOROPROPANE	60790	166GW25DM4DL	60790003	WG	500	U	500	R	ug/L	DL
VOA	SW8260B	1,2-DICHLOROPROPANE	60790	166HW25DM4DL	60790004	WG	500	U	500	R	ug/L	DL
VOA	SW8260B	1,2-DICHLOROPROPANE	60790	166GW07DM4DL	60790008	WG	50	U	50	R	ug/L	DL
VOA	SW8260B	1,2-DICHLOROPROPANE	60879	166GW41DM4DL	60879001	WG	250	U	250	R	ug/L	DL
VOA	SW8260B	1,2-DICHLOROPROPANE	60879	166GW42DM4DL	60879002	WG	500	U	500	R	ug/L	DL
VOA	SW8260B	1,2-DICHLOROPROPANE	60879	166GW43DM4DL	60879003	WG	1250	U	1250	R	ug/L	DL
VOA	SW8260B	1,2-DICHLOROPROPANE	60879	166GW44DM4DL	60879004	WG	250	U	250	R	ug/L	DL
VOA	SW8260B	1,2-DICHLOROPROPANE	60879	166GW13DM4DL	60879005	WG	500	U	500	R	ug/L	DL
VOA	SW8260B	1,2-DICHLOROPROPANE	61044	166GW38DM4DL	61044001	WG	100	U	100	R	ug/L	DL
VOA	SW8260B	1,2-DICHLOROPROPANE	61044	166GW45DM4DL	61044002	WG	500	U	500	R	ug/L	DL
VOA	SW8260B	1,2-DICHLOROPROPANE	61044	166GW48DM4DL	61044004	WG	500	U	500	R	ug/L	DL
VOA	SW8260B	1,2-DICHLOROPROPANE	61044	166GWTM4M4DL	61044005	WG	500	U	500	R	ug/L	DL
VOA	SW8260B	1,2-DICHLOROPROPANE	61044	166GW14DM4DL	61044007	WG	10	U	10	R	ug/L	DL
VOA	SW8260B	1,2-DICHLOROPROPANE	61134	166GW36DM4DL	61134002	WG	2500	U	2500	R	ug/L	DL
VOA	SW8260B	1,2-DICHLOROPROPANE	61170	166GW50DM4DL	61170001	WG	1250	U	1250	R	ug/L	DL
VOA	SW8260B	1,2-DICHLOROPROPANE	62650	166GW28DM6DL	62650003	WG	25	U	25	R	ug/L	DL
VOA	SW8260B	1,2-DICHLOROPROPANE	64473	166GW50DM7DL	64473003	WG	1250	U	1250	R	ug/L	DL
VOA	SW8260B	1,2-DICHLOROPROPANE	64473	166HW50DM7DL	64473004	WG	1250	U	1250	R	ug/L	DL
VOA	SW8260B	1,2-DICHLOROPROPANE	64475	166GW053M7DL	64475007	WG	500	U	500	R	ug/L	DL
VOA	SW[illegible]60B	1,2-DICHLOROPROPANE	64475	166GW054M7DL	64[illegible]008	WG	125	U	125	R	ug/l	DL

Parameter Class	Analytical Method	Parameter	SDG	Sample ID	Lab Sample ID	Matrix	Reporting Limit	Original Qual	Final Result	Final Qual	Units	Reasons
VOA	SW8260B	1,2-DICHLOROPROPANE	64475	166GW055M7DL	64475009	WG	125	U	125	R	ug/L	DL
VOA	SW8260B	1,2-DICHLOROPROPANE	64475	166HW055M7DL	64475010	WG	125	U	125	R	ug/L	DL
VOA	SW8260B	1,2-DICHLOROPROPANE	64475	166GW07DM7DL	64475011	WG	125	U	125	R	ug/L	DL
VOA	SW8260B	1,2-DICHLOROPROPANE	64475	166GW13DM7DL	64475013	WG	500	U	500	R	ug/L	DL
VOA	SW8260B	1,2-DICHLOROPROPANE	64475	166HW13DM7DL	64475014	WG	500	U	500	R	ug/L	DL
VOA	SW8260B	1,2-DICHLOROPROPANE	64475	166GW14DM7DL	64475015	WG	10	U	10	R	ug/L	DL
VOA	SW8260B	1,2-DICHLOROPROPANE	64475	166GW26DM7DL	64475019	WG	250	U	250	R	ug/L	DL
VOA	SW8260B	1,2-DICHLOROPROPANE	64550	166GW34DM7DL	64550003	WG	5000	U	5000	R	ug/L	DL
VOA	SW8260B	1,2-DICHLOROPROPANE	64550	166GW36DM7DL	64550004	WG	2500	U	2500	R	ug/L	DL
VOA	SW8260B	1,2-DICHLOROPROPANE	64676	163GW003M7DL	64676002	WG	25	U	25	R	ug/L	DL
VOA	SW8260B	1,2-DICHLOROPROPANE	64676	166GW040M7DL	64676003	WG	5000	U	5000	R	ug/L	DL
VOA	SW8260B	1,2-DICHLOROPROPANE	64676	166GW41DM7DL	64676008	WG	50	U	50	R	ug/L	DL
VOA	SW8260B	1,2-DICHLOROPROPANE	64676	166GW42DM7DL	64676009	WG	500	U	500	R	ug/L	DL
VOA	SW8260B	1,2-DICHLOROPROPANE	64676	166GW44DM7DL	64676011	WG	500	U	500	R	ug/L	DL
VOA	SW8260B	1,2-DICHLOROPROPANE	64676	166GW35DM7DL	64676012	WG	500	U	500	R	ug/L	DL
VOA	SW8260B	1,2-DICHLOROPROPANE	71658	166GW053M8DL	71658007	WG	250	U	250	R	ug/L	DL
VOA	SW8260B	1,2-DICHLOROPROPANE	71658	166GW054M8DL	71658008	WG	125	U	125	R	ug/L	DL
VOA	SW8260B	1,2-DICHLOROPROPANE	71658	166GW055M8DL	71658009	WG	500	U	500	R	ug/L	DL
VOA	SW8260B	1,2-DICHLOROPROPANE	71658	166GW056M8DL	71658010	WG	500	U	500	R	ug/L	DL
VOA	SW8260B	1,2-DICHLOROPROPANE	71658	166GW07DM8DL	71658012	WG	125	U	125	R	ug/L	DL
VOA	SW8260B	1,2-DICHLOROPROPANE	71658	166GW13DM8DL	71658014	WG	500	U	500	R	ug/L	DL

Attachment 1 - Changed Qualifiers and Results
Charleston Navel Complex - Zone K, SWMU 166 - 2002 Sampling Events

Parameter Class	Analytical Method	Parameter	Spec	Sample ID	Lab Sample ID	Matrix	Lab Result	Lab Qual	Final Result	Final Qual	Units	Reasons
VOA	SW8260B	1,2-DICHLOROPROPANE	71658	166GW14DM8DL	71658016	WG	10	U	10	R	ug/L	DL
VOA	SW8260B	1,2-DICHLOROPROPANE	71659	166GW19DM8DL	71659002	WG	10	U	10	R	ug/L	DL
VOA	SW8260B	1,2-DICHLOROPROPANE	71659	166GW25DM8DL	71659004	WG	500	U	500	R	ug/L	DL
VOA	SW8260B	1,2-DICHLOROPROPANE	71766	166GW49DM8DL	71766003	WG	250	U	250	R	ug/L	DL
VOA	SW8260B	1,2-DICHLOROPROPANE	71766	166GW50DM8DL	71766004	WG	1000	U	1000	R	ug/L	DL
VOA	SW8260B	1,2-DICHLOROPROPANE	71766	166HW50DM8DL	71766005	WG	2500	U	2500	R	ug/L	DL
VOA	SW8260B	1,2-DICHLOROPROPANE	71766	166GW51DM8DL	71766006	WG	500	U	500	R	ug/L	DL
VOA	SW8260B	1,2-DICHLOROPROPANE	71766	166GW52DM8DL	71766007	WG	500	U	500	R	ug/L	DL
VOA	SW8260B	1,2-DICHLOROPROPANE	71766	166GWTM3M8DL	71766009	WG	50	U	50	R	ug/L	DL
VOA	SW8260B	1,2-DICHLOROPROPANE	71766	166GWTM4M8DL	71766010	WG	1000	U	1000	R	ug/L	DL
VOA	SW8260B	1,2-DICHLOROPROPANE	71766	166GW45DM8DL	71766011	WG	250	U	250	R	ug/L	DL
VOA	SW8260B	1,2-DICHLOROPROPANE	71766	166GW46DM8DL	71766012	WG	250	U	250	R	ug/L	DL
VOA	SW8260B	1,2-DICHLOROPROPANE	71766	166GW48DM8DL	71766014	WG	500	U	500	R	ug/L	DL
VOA	SW8260B	1,2-DICHLOROPROPANE	71852	166GW040M8DL	71852003	WG	1250	U	1250	R	ug/L	DL
VOA	SW8260B	1,2-DICHLOROPROPANE	71852	166HW040M8DL	71852004	WG	1250	U	1250	R	ug/L	DL
VOA	SW8260B	1,2-DICHLOROPROPANE	71852	166GW34DM8DL	71852005	WG	5000	U	5000	R	ug/L	DL
VOA	SW8260B	1,2-DICHLOROPROPANE	71852	166GW36DM8DL	71852007	WG	1250	U	1250	R	ug/L	DL
VOA	SW8260B	1,2-DICHLOROPROPANE	71852	166GW37DM8DL	71852008	WG	25	U	25	R	ug/L	DL
VOA	SW8260B	1,2-DICHLOROPROPANE	71852	166GW43DM8DL	71852012	WG	500	U	500	R	ug/L	DL
VOA	SW8260B	1,2-DICHLOROPROPANE	72055	163GW003M8	72055003	WG	5	U	5	UJ	ug/L	SS
VOA	SW8260B	1,2-DICHLOROPROPANE	72055	163GW003M8DL	72055003	WG	50	U	50	R	ug/L	DL

Parameter Class	Analytical Method	Parameter	SDG	Sample ID	Lab Sample ID	Matrix	Lab Result	Lab Qual	Final Result	Final Qual	Units	Reason
VOA	SW8260B	1,2-DICHLOROPROPANE	72055	163GW03MM8	72055004	WG	5	U	5	UJ	ug/L	SS
VOA	SW8260B	1,2-DICHLOROPROPANE	72055	166GW16DM8	72055005	WG	5	U	5	UJ	ug/L	SS
VOA	SW8260B	1,2-DICHLOROPROPANE	72055	166GW16DM8DL	72055005	WG	250	U	250	R	ug/L	DL
VOA	SW8260B	1,2-DICHLOROPROPANE	72055	166GW33DM8	72055006	WG	5	U	5	UJ	ug/L	SS
VOA	SW8260B	1,2-DICHLOROPROPANE	72055	166GW38DM8	72055007	WG	5	U	5	UJ	ug/L	SS
VOA	SW8260B	1,2-DICHLOROPROPANE	72055	166GW38DM8DL	72055007	WG	50	U	50	R	ug/L	DL
VOA	SW8260B	1,2-DICHLOROPROPANE	72055	163GW005M8	72055008	WG	5	U	5	UJ	ug/L	SS
VOA	SW8260B	1,3-DICHLOROBENZENE	56223	166GW32DM1LR	56223003	WG	250	U	250	R	ug/L	DL
VOA	SW8260B	1,3-DICHLOROBENZENE	56330	166GW28DM1DL	56330001	WG	25	U	25	R	ug/L	DL
VOA	SW8260B	1,3-DICHLOROBENZENE	56330	166GW30DM1LR	56330003	WG	250	U	250	R	ug/L	DL
VOA	SW8260B	1,3-DICHLOROBENZENE	56330	166HW30DM1LR	56330004	WG	250	U	250	R	ug/L	DL
VOA	SW8260B	1,3-DICHLOROBENZENE	56341	166VDRM001M2	56341001	SO	0.37	J	0.37	J	ug/kg	IS
VOA	SW8260B	1,3-DICHLOROBENZENE	57725	166GW28DM2DL	57725002	WG	3.5	JD	3.5	R	ug/L	DL
VOA	SW8260B	1,3-DICHLOROBENZENE	57725	166GW29DM2DL	57725003	WG	10	U	10	R	ug/L	DL
VOA	SW8260B	1,3-DICHLOROBENZENE	57725	166GW30DM2DL	57725004	WG	50	U	50	R	ug/L	DL
VOA	SW8260B	1,3-DICHLOROBENZENE	57725	166HW30DM2DL	57725005	WG	50	U	50	R	ug/L	DL
VOA	SW8260B	1,3-DICHLOROBENZENE	57725	166GW31DM2DL	57725006	WG	10	U	10	R	ug/L	DL
VOA	SW8260B	1,3-DICHLOROBENZENE	57725	166GW32DM2DL	57725007	WG	50	U	50	R	ug/L	DL
VOA	SW8260B	1,3-DICHLOROBENZENE	58856	166GW28DM3DL	58856002	WG	50	U	50	R	ug/L	DL
VOA	SW8260B	1,3-DICHLOROBENZENE	58856	166GW29DM3DL	58856003	WG	10	U	10	R	ug/L	DL
VOA	SW8260B	1,3-DICHLOROBENZENE	58856	166GW30DM3DL	58856004	WG	250	U	250	R	ug/L	DL

Attachment 1 - Changed Qualifiers and Results
Charleston Navel Complex - Zone K, SWMU 166 - 2002 Sampling Events

Parameter Class	Analytical Method	Parameter	SDG	Sample ID	Lab Sample ID	Matrix	Lab Result	Lab Qual	Final Result	Final Qual	Units	Reason
VOA	SW8260B	1,3-DICHLOROBENZENE	58856	166GW31DM3DL	58856005	WG	25	U	25	R	ug/L	DL
VOA	SW8260B	1,3-DICHLOROBENZENE	58856	166HW31DM3DL	58856006	WG	50	U	50	R	ug/L	DL
VOA	SW8260B	1,3-DICHLOROBENZENE	58856	166GW32DM3DL	58856007	WG	250	U	250	R	ug/L	DL
VOA	SW8260B	1,3-DICHLOROBENZENE	60789	166GW33DM4DL	60789001	WG	10	U	10	R	ug/L	DL
VOA	SW8260B	1,3-DICHLOROBENZENE	60789	166GW34DM4DL	60789002	WG	2500	U	2500	R	ug/L	DL
VOA	SW8260B	1,3-DICHLOROBENZENE	60789	166GW35DM4DL	60789003	WG	50	U	50	R	ug/L	DL
VOA	SW8260B	1,3-DICHLOROBENZENE	60789	166GW37DM4DL	60789004	WG	2500	U	2500	R	ug/L	DL
VOA	SW8260B	1,3-DICHLOROBENZENE	60789	166GW39DM4DL	60789005	WG	50	U	50	R	ug/L	DL
VOA	SW8260B	1,3-DICHLOROBENZENE	60790	163GW03MM4DL	60790001	WG	250	U	250	R	ug/L	DL
VOA	SW8260B	1,3-DICHLOROBENZENE	60790	166GW26DM4DL	60790002	WG	250	U	250	R	ug/L	DL
VOA	SW8260B	1,3-DICHLOROBENZENE	60790	166GW25DM4DL	60790003	WG	500	U	500	R	ug/L	DL
VOA	SW8260B	1,3-DICHLOROBENZENE	60790	166HW25DM4DL	60790004	WG	500	U	500	R	ug/L	DL
VOA	SW8260B	1,3-DICHLOROBENZENE	60790	166GW07DM4DL	60790008	WG	50	U	50	R	ug/L	DL
VOA	SW8260B	1,3-DICHLOROBENZENE	60879	166GW41DM4DL	60879001	WG	250	U	250	R	ug/L	DL
VOA	SW8260B	1,3-DICHLOROBENZENE	60879	166GW42DM4DL	60879002	WG	500	U	500	R	ug/L	DL
VOA	SW8260B	1,3-DICHLOROBENZENE	60879	166GW43DM4DL	60879003	WG	1250	U	1250	R	ug/L	DL
VOA	SW8260B	1,3-DICHLOROBENZENE	60879	166GW44DM4DL	60879004	WG	250	U	250	R	ug/L	DL
VOA	SW8260B	1,3-DICHLOROBENZENE	60879	166GW13DM4DL	60879005	WG	500	U	500	R	ug/L	DL
VOA	SW8260B	1,3-DICHLOROBENZENE	61044	166GW38DM4DL	61044001	WG	100	U	100	R	ug/L	DL
VOA	SW8260B	1,3-DICHLOROBENZENE	61044	166GW45DM4DL	61044002	WG	500	U	500	R	ug/L	DL
VOA	SW8260B	1,3-DICHLOROBENZENE	61044	166GW48DM4DL	61044004	WG	500	U	500	R	ug/L	DL

Parameter Class	Analytical Method	Parameter	SDG	Sample ID	Lab Sample ID	Matrix	Lab Result	Lab Qualifier	Final Result	Final Qualifier	Units	Reason
VOA	SW8260B	1,3-DICHLOROBENZENE	61044	166GWTM4M4DL	61044005	WG	500	U	500	R	ug/L	DL
VOA	SW8260B	1,3-DICHLOROBENZENE	61044	166GW14DM4DL	61044007	WG	10	U	10	R	ug/L	DL
VOA	SW8260B	1,3-DICHLOROBENZENE	61134	166GW36DM4DL	61134002	WG	2500	U	2500	R	ug/L	DL
VOA	SW8260B	1,3-DICHLOROBENZENE	61170	166GW50DM4DL	61170001	WG	1250	U	1250	R	ug/L	DL
VOA	SW8260B	1,3-DICHLOROBENZENE	61258	166GW053M4	61258004	WG	500	U	500	UJ	ug/L	CC
VOA	SW8260B	1,3-DICHLOROBENZENE	61258	166GW054M4	61258005	WG	500	U	500	UJ	ug/L	CC
VOA	SW8260B	1,3-DICHLOROBENZENE	62650	166GW28DM6DL	62650003	WG	25	U	25	R	ug/L	DL
VOA	SW8260B	1,3-DICHLOROBENZENE	64473	166GW50DM7DL	64473003	WG	1250	U	1250	R	ug/L	DL
VOA	SW8260B	1,3-DICHLOROBENZENE	64473	166HW50DM7DL	64473004	WG	1250	U	1250	R	ug/L	DL
VOA	SW8260B	1,3-DICHLOROBENZENE	64475	166GW053M7DL	64475007	WG	500	U	500	R	ug/L	DL
VOA	SW8260B	1,3-DICHLOROBENZENE	64475	166GW054M7DL	64475008	WG	125	U	125	R	ug/L	DL
VOA	SW8260B	1,3-DICHLOROBENZENE	64475	166GW055M7DL	64475009	WG	125	U	125	R	ug/L	DL
VOA	SW8260B	1,3-DICHLOROBENZENE	64475	166HW055M7DL	64475010	WG	125	U	125	R	ug/L	DL
VOA	SW8260B	1,3-DICHLOROBENZENE	64475	166GW07DM7DL	64475011	WG	125	U	125	R	ug/L	DL
VOA	SW8260B	1,3-DICHLOROBENZENE	64475	166GW13DM7DL	64475013	WG	500	U	500	R	ug/L	DL
VOA	SW8260B	1,3-DICHLOROBENZENE	64475	166HW13DM7DL	64475014	WG	500	U	500	R	ug/L	DL
VOA	SW8260B	1,3-DICHLOROBENZENE	64475	166GW14DM7DL	64475015	WG	10	U	10	R	ug/L	DL
VOA	SW8260B	1,3-DICHLOROBENZENE	64475	166GW26DM7DL	64475019	WG	250	U	250	R	ug/L	DL
VOA	SW8260B	1,3-DICHLOROBENZENE	64550	166GW34DM7DL	64550003	WG	5000	U	5000	R	ug/L	DL
VOA	SW8260B	1,3-DICHLOROBENZENE	64550	166GW36DM7DL	64550004	WG	2500	U	2500	R	ug/L	DL
VOA	SW8260B	1,3-DICHLOROBENZENE	64676	163GW003M7DL	64676002	WG	25	U	25	R	ug/L	DL

Attachment 1 - Changed Qualifiers and Results
Charleston Navel Complex - Zone K, SWMU 166 - 2002 Sampling Events

Parameter Class	Analytical Method	Parameter	ISDC	Sample ID	Lab Sample ID	Matrix	Lab Result	Lab Qual	Final Result	Final Qual	Units	Reason
VOA	SW8260B	1,3-DICHLOROBENZENE	64676	166GW040M7DL	64676003	WG	5000	U	5000	R	ug/L	DL
VOA	SW8260B	1,3-DICHLOROBENZENE	64676	166GW41DM7DL	64676008	WG	50	U	50	R	ug/L	DL
VOA	SW8260B	1,3-DICHLOROBENZENE	64676	166GW42DM7DL	64676009	WG	500	U	500	R	ug/L	DL
VOA	SW8260B	1,3-DICHLOROBENZENE	64676	166GW44DM7DL	64676011	WG	500	U	500	R	ug/L	DL
VOA	SW8260B	1,3-DICHLOROBENZENE	64676	166GW35DM7DL	64676012	WG	500	U	500	R	ug/L	DL
VOA	SW8260B	1,3-DICHLOROBENZENE	71658	166GW053M8DL	71658007	WG	250	U	250	R	ug/L	DL
VOA	SW8260B	1,3-DICHLOROBENZENE	71658	166GW054M8DL	71658008	WG	125	U	125	R	ug/L	DL
VOA	SW8260B	1,3-DICHLOROBENZENE	71658	166GW055M8DL	71658009	WG	500	U	500	R	ug/L	DL
VOA	SW8260B	1,3-DICHLOROBENZENE	71658	166GW056M8DL	71658010	WG	500	U	500	R	ug/L	DL
VOA	SW8260B	1,3-DICHLOROBENZENE	71658	166GW07DM8DL	71658012	WG	125	U	125	R	ug/L	DL
VOA	SW8260B	1,3-DICHLOROBENZENE	71658	166GW13DM8DL	71658014	WG	500	U	500	R	ug/L	DL
VOA	SW8260B	1,3-DICHLOROBENZENE	71658	166GW14DM8DL	71658016	WG	10	U	10	R	ug/L	DL
VOA	SW8260B	1,3-DICHLOROBENZENE	71659	166GW19DM8DL	71659002	WG	10	U	10	R	ug/L	DL
VOA	SW8260B	1,3-DICHLOROBENZENE	71659	166GW25DM8DL	71659004	WG	500	U	500	R	ug/L	DL
VOA	SW8260B	1,3-DICHLOROBENZENE	71766	166GW49DM8DL	71766003	WG	250	U	250	R	ug/L	DL
VOA	SW8260B	1,3-DICHLOROBENZENE	71766	166GW50DM8DL	71766004	WG	1000	U	1000	R	ug/L	DL
VOA	SW8260B	1,3-DICHLOROBENZENE	71766	166HW50DM8DL	71766005	WG	2500	U	2500	R	ug/L	DL
VOA	SW8260B	1,3-DICHLOROBENZENE	71766	166GW51DM8DL	71766006	WG	500	U	500	R	ug/L	DL
VOA	SW8260B	1,3-DICHLOROBENZENE	71766	166GW52DM8DL	71766007	WG	500	U	500	R	ug/L	DL
VOA	SW8260B	1,3-DICHLOROBENZENE	71766	166GWTM3M8DL	71766009	WG	50	U	50	R	ug/L	DL
VOA	SW8260B	1,3-DICHLOROBENZENE	71766	166GWTM4M8DL	71766010	WG	1000	U	1000	R	ug/L	DL

Parameter Class	Analytical Method	Parameter	SDG	Sample ID	Lab Sample ID	Matrix	Lab Result	Lab Qualifier	Final (Reported)	Final Qualifier	Units	Reasons
VOA	SW8260B	1,3-DICHLOROBENZENE	71766	166GW45DM8DL	71766011	WG	250	U	250	R	ug/L	DL
VOA	SW8260B	1,3-DICHLOROBENZENE	71766	166GW46DM8DL	71766012	WG	250	U	250	R	ug/L	DL
VOA	SW8260B	1,3-DICHLOROBENZENE	71766	166GW48DM8DL	71766014	WG	500	U	500	R	ug/L	DL
VOA	SW8260B	1,4-DICHLOROBENZENE	56223	166GW32DM1LR	56223003	WG	8.9	JD	8.9	R	ug/L	DL
VOA	SW8260B	1,4-DICHLOROBENZENE	56330	166GW28DM1DL	56330001	WG	25	U	25	R	ug/L	DL
VOA	SW8260B	1,4-DICHLOROBENZENE	56330	166GW30DM1LR	56330003	WG	250	U	250	R	ug/L	DL
VOA	SW8260B	1,4-DICHLOROBENZENE	56330	166HW30DM1LR	56330004	WG	250	U	250	R	ug/L	DL
VOA	SW8260B	1,4-DICHLOROBENZENE	56341	166VDRM001M2	56341001	SO	0.83	J	0.83	J	ug/kg	IS
VOA	SW8260B	1,4-DICHLOROBENZENE	57725	166GW28DM2	57725002	WG	0.17	J	1	U	ug/L	BL
VOA	SW8260B	1,4-DICHLOROBENZENE	57725	166GW28DM2DL	57725002	WG	4.4	JD	4.4	R	ug/L	DL
VOA	SW8260B	1,4-DICHLOROBENZENE	57725	166GW29DM2DL	57725003	WG	10	U	10	R	ug/L	DL
VOA	SW8260B	1,4-DICHLOROBENZENE	57725	166GW30DM2DL	57725004	WG	50	U	50	R	ug/L	DL
VOA	SW8260B	1,4-DICHLOROBENZENE	57725	166HW30DM2DL	57725005	WG	50	U	50	R	ug/L	DL
VOA	SW8260B	1,4-DICHLOROBENZENE	57725	166GW31DM2DL	57725006	WG	10	U	10	R	ug/L	DL
VOA	SW8260B	1,4-DICHLOROBENZENE	57725	166GW32DM2DL	57725007	WG	8.5	JD	8.5	R	ug/L	DL
VOA	SW8260B	1,4-DICHLOROBENZENE	58856	166GW27DM3	58856001	WG	0.21	JB	5	U	ug/L	BL
VOA	SW8260B	1,4-DICHLOROBENZENE	58856	166GW28DM3	58856002	WG	0.26	JB	5	U	ug/L	BL
VOA	SW8260B	1,4-DICHLOROBENZENE	58856	166GW28DM3DL	58856002	WG	2	JBD	2	R	ug/L	DL
VOA	SW8260B	1,4-DICHLOROBENZENE	58856	166GW29DM3	58856003	WG	0.22	JB	5	U	ug/L	BL
VOA	SW8260B	1,4-DICHLOROBENZENE	58856	166GW29DM3DL	58856003	WG	0.35	JBD	0.35	R	ug/L	DL
VOA	SW8260B	1,4-DICHLOROBENZENE	58856	166GW30DM3	58856004	WG	0.21	JB	5	U	ug/L	BL

Attachment 1 - Changed Qualifiers and Results
Charleston Navel Complex - Zone K, SWMU 166 - 2002 Sampling Events

Parameter Class	Analytical Method	Parameter	Site	Sample ID	Lab Sample ID	Matrix	Lab Result	Lab Qual	Final Result	Final Qual	Units	Reason
VOA	SW8260B	1,4-DICHLOROBENZENE	58856	166GW30DM3DL	58856004	WG	250	U	250	R	ug/L	DL
VOA	SW8260B	1,4-DICHLOROBENZENE	58856	166GW31DM3	58856005	WG	0.24	JB	5	U	ug/L	BL
VOA	SW8260B	1,4-DICHLOROBENZENE	58856	166GW31DM3DL	58856005	WG	0.83	JBD	0.83	R	ug/L	DL
VOA	SW8260B	1,4-DICHLOROBENZENE	58856	166HW31DM3	58856006	WG	0.26	JB	5	U	ug/L	BL
VOA	SW8260B	1,4-DICHLOROBENZENE	58856	166HW31DM3DL	58856006	WG	2.1	JBD	2.1	R	ug/L	DL
VOA	SW8260B	1,4-DICHLOROBENZENE	58856	166GW32DM3	58856007	WG	0.26	JB	5	U	ug/L	BL
VOA	SW8260B	1,4-DICHLOROBENZENE	58856	166GW32DM3DL	58856007	WG	9.3	JBD	9.3	R	ug/L	DL
VOA	SW8260B	1,4-DICHLOROBENZENE	60789	166GW33DM4DL	60789001	WG	10	U	10	R	ug/L	DL
VOA	SW8260B	1,4-DICHLOROBENZENE	60789	166GW34DM4DL	60789002	WG	2500	U	2500	R	ug/L	DL
VOA	SW8260B	1,4-DICHLOROBENZENE	60789	166GW35DM4DL	60789003	WG	50	U	50	R	ug/L	DL
VOA	SW8260B	1,4-DICHLOROBENZENE	60789	166GW37DM4DL	60789004	WG	2500	U	2500	R	ug/L	DL
VOA	SW8260B	1,4-DICHLOROBENZENE	60789	166GW39DM4DL	60789005	WG	50	U	50	R	ug/L	DL
VOA	SW8260B	1,4-DICHLOROBENZENE	60790	163GW03MM4DL	60790001	WG	250	U	250	R	ug/L	DL
VOA	SW8260B	1,4-DICHLOROBENZENE	60790	166GW26DM4DL	60790002	WG	250	U	250	R	ug/L	DL
VOA	SW8260B	1,4-DICHLOROBENZENE	60790	166GW25DM4DL	60790003	WG	500	U	500	R	ug/L	DL
VOA	SW8260B	1,4-DICHLOROBENZENE	60790	166HW25DM4DL	60790004	WG	500	U	500	R	ug/L	DL
VOA	SW8260B	1,4-DICHLOROBENZENE	60790	166GW07DM4DL	60790008	WG	50	U	50	R	ug/L	DL
VOA	SW8260B	1,4-DICHLOROBENZENE	60879	166GW41DM4	60879001	WG	0.3	JB	5	U	ug/L	BL
VOA	SW8260B	1,4-DICHLOROBENZENE	60879	166GW41DM4DL	60879001	WG	250	U	250	R	ug/L	DL
VOA	SW8260B	1,4-DICHLOROBENZENE	60879	166GW42DM4	60879002	WG	0.27	JB	5	U	ug/L	BL
VOA	SW8260B	1,4-DICHLOROBENZENE	60879	166GW42DM4DL	60879002	WG	500	U	500	R	ug/L	DL

Parameter Class	Analytical Method	Parameter	SDG	Sample ID	Lab Sample ID	Matrix	Result	Lab Qual	Final Result	Final Qual	Units	Reasons
VOA	SW8260B	1,4-DICHLOROBENZENE	60879	166GW43DM4DL	60879003	WG	1250	U	1250	R	ug/L	DL
VOA	SW8260B	1,4-DICHLOROBENZENE	60879	166GW44DM4DL	60879004	WG	250	U	250	R	ug/L	DL
VOA	SW8260B	1,4-DICHLOROBENZENE	60879	166GW13DM4DL	60879005	WG	500	U	500	R	ug/L	DL
VOA	SW8260B	1,4-DICHLOROBENZENE	61044	166GW38DM4DL	61044001	WG	100	U	100	R	ug/L	DL
VOA	SW8260B	1,4-DICHLOROBENZENE	61044	166GW45DM4DL	61044002	WG	500	U	500	R	ug/L	DL
VOA	SW8260B	1,4-DICHLOROBENZENE	61044	166GW48DM4	61044004	WG	0.54	JB	5	U	ug/L	BL
VOA	SW8260B	1,4-DICHLOROBENZENE	61044	166GW48DM4DL	61044004	WG	500	U	500	R	ug/L	DL
VOA	SW8260B	1,4-DICHLOROBENZENE	61044	166GWTM4M4	61044005	WG	0.46	JB	5	U	ug/L	BL
VOA	SW8260B	1,4-DICHLOROBENZENE	61044	166GWTM4M4DL	61044005	WG	500	U	500	R	ug/L	DL
VOA	SW8260B	1,4-DICHLOROBENZENE	61044	166GW14DM4	61044007	WG	0.29	JB	5	U	ug/L	BL
VOA	SW8260B	1,4-DICHLOROBENZENE	61044	166GW14DM4DL	61044007	WG	10	U	10	R	ug/L	DL
VOA	SW8260B	1,4-DICHLOROBENZENE	61044	166GW06DM4	61044008	WG	0.46	JB	5	U	ug/L	BL
VOA	SW8260B	1,4-DICHLOROBENZENE	61134	166GW36DM4DL	61134002	WG	2500	U	2500	R	ug/L	DL
VOA	SW8260B	1,4-DICHLOROBENZENE	61170	166GW50DM4DL	61170001	WG	1250	U	1250	R	ug/L	DL
VOA	SW8260B	1,4-DICHLOROBENZENE	61258	166GW053M4	61258004	WG	500	U	500	UJ	ug/L	CC
VOA	SW8260B	1,4-DICHLOROBENZENE	61258	166GW054M4	61258005	WG	500	U	500	UJ	ug/L	CC
VOA	SW8260B	1,4-DICHLOROBENZENE	62650	166GW28DM6DL	62650003	WG	25	U	25	R	ug/L	DL
VOA	SW8260B	1,4-DICHLOROBENZENE	64473	166GW50DM7DL	64473003	WG	1250	U	1250	R	ug/L	DL
VOA	SW8260B	1,4-DICHLOROBENZENE	64473	166HW50DM7DL	64473004	WG	1250	U	1250	R	ug/L	DL
VOA	SW8260B	1,4-DICHLOROBENZENE	64475	166GW053M7DL	64475007	WG	500	U	500	R	ug/L	DL
VOA	SW8260B	1,4-DICHLOROBENZENE	64475	166GW054M7DL	64475008	WG	125	U	125	R	ug/L	DL

Attachment 1 - Changed Qualifiers and Results
Charleston Navel Complex - Zone K, SWMU 166 - 2002 Sampling Events

Parameter Class	Analytical Method	Parameter	SDG	Sample ID	Lab Sample ID	Matrix	Lab Result	Lab Qual	Final Result	Final Qual	Units	Reason
VOA	SW8260B	1,4-DICHLOROBENZENE	64475	166GW055M7DL	64475009	WG	125	U	125	R	ug/L	DL
VOA	SW8260B	1,4-DICHLOROBENZENE	64475	166HW055M7DL	64475010	WG	125	U	125	R	ug/L	DL
VOA	SW8260B	1,4-DICHLOROBENZENE	64475	166GW07DM7DL	64475011	WG	125	U	125	R	ug/L	DL
VOA	SW8260B	1,4-DICHLOROBENZENE	64475	166GW13DM7DL	64475013	WG	500	U	500	R	ug/L	DL
VOA	SW8260B	1,4-DICHLOROBENZENE	64475	166HW13DM7DL	64475014	WG	500	U	500	R	ug/L	DL
VOA	SW8260B	1,4-DICHLOROBENZENE	64475	166GW14DM7DL	64475015	WG	10	U	10	R	ug/L	DL
VOA	SW8260B	1,4-DICHLOROBENZENE	64475	166GW26DM7DL	64475019	WG	250	U	250	R	ug/L	DL
VOA	SW8260B	1,4-DICHLOROBENZENE	64550	166GW34DM7DL	64550003	WG	5000	U	5000	R	ug/L	DL
VOA	SW8260B	1,4-DICHLOROBENZENE	64550	166GW36DM7DL	64550004	WG	2500	U	2500	R	ug/L	DL
VOA	SW8260B	1,4-DICHLOROBENZENE	64676	163GW003M7DL	64676002	WG	25	U	25	R	ug/L	DL
VOA	SW8260B	1,4-DICHLOROBENZENE	64676	166GW040M7DL	64676003	WG	5000	U	5000	R	ug/L	DL
VOA	SW8260B	1,4-DICHLOROBENZENE	64676	166GW41DM7DL	64676008	WG	50	U	50	R	ug/L	DL
VOA	SW8260B	1,4-DICHLOROBENZENE	64676	166GW42DM7DL	64676009	WG	500	U	500	R	ug/L	DL
VOA	SW8260B	1,4-DICHLOROBENZENE	64676	166GW44DM7DL	64676011	WG	500	U	500	R	ug/L	DL
VOA	SW8260B	1,4-DICHLOROBENZENE	64676	166GW35DM7DL	64676012	WG	500	U	500	R	ug/L	DL
VOA	SW8260B	1,4-DICHLOROBENZENE	71658	166GW053M8DL	71658007	WG	250	U	250	R	ug/L	DL
VOA	SW8260B	1,4-DICHLOROBENZENE	71658	166GW054M8DL	71658008	WG	125	U	125	R	ug/L	DL
VOA	SW8260B	1,4-DICHLOROBENZENE	71658	166GW055M8DL	71658009	WG	500	U	500	R	ug/L	DL
VOA	SW8260B	1,4-DICHLOROBENZENE	71658	166GW056M8DL	71658010	WG	500	U	500	R	ug/L	DL
VOA	SW8260B	1,4-DICHLOROBENZENE	71658	166GW07DM8DL	71658012	WG	125	U	125	R	ug/L	DL
VOA	SW8260B	1,4-DICHLOROBENZENE	71658	166GW13DM8DL	71658014	WG	500	U	500	R	ug/L	DL

Parameter Class	Analytical Method	Parameter	SDG	Sample ID	Lab Sample ID	Matrix	Lab Result	Lab Qual	Final Result	Final Qual	Unit	Reason
VOA	SW8260B	1,4-DICHLOROBENZENE	71658	166GW14DM8DL	71658016	WG	10	U	10	R	ug/L	DL
VOA	SW8260B	1,4-DICHLOROBENZENE	71659	166GW19DM8DL	71659002	WG	10	U	10	R	ug/L	DL
VOA	SW8260B	1,4-DICHLOROBENZENE	71659	166GW25DM8DL	71659004	WG	500	U	500	R	ug/L	DL
VOA	SW8260B	1,4-DICHLOROBENZENE	71766	166GW49DM8DL	71766003	WG	250	U	250	R	ug/L	DL
VOA	SW8260B	1,4-DICHLOROBENZENE	71766	166GW50DM8DL	71766004	WG	1000	U	1000	R	ug/L	DL
VOA	SW8260B	1,4-DICHLOROBENZENE	71766	166HW50DM8DL	71766005	WG	2500	U	2500	R	ug/L	DL
VOA	SW8260B	1,4-DICHLOROBENZENE	71766	166GW51DM8DL	71766006	WG	500	U	500	R	ug/L	DL
VOA	SW8260B	1,4-DICHLOROBENZENE	71766	166GW52DM8DL	71766007	WG	500	U	500	R	ug/L	DL
VOA	SW8260B	1,4-DICHLOROBENZENE	71766	166GWTM3M8DL	71766009	WG	50	U	50	R	ug/L	DL
VOA	SW8260B	1,4-DICHLOROBENZENE	71766	166GWTM4M8DL	71766010	WG	1000	U	1000	R	ug/L	DL
VOA	SW8260B	1,4-DICHLOROBENZENE	71766	166GW45DM8DL	71766011	WG	250	U	250	R	ug/L	DL
VOA	SW8260B	1,4-DICHLOROBENZENE	71766	166GW46DM8DL	71766012	WG	250	U	250	R	ug/L	DL
VOA	SW8260B	1,4-DICHLOROBENZENE	71766	166GW48DM8DL	71766014	WG	500	U	500	R	ug/L	DL
VOA	SW8260B	2-Chloroethyl vinyl ether	56223	166GW32DM1LR	56223003	WG	250	U	250	R	ug/L	DL
VOA	SW8260B	2-Chloroethyl vinyl ether	56330	166GW28DM1	56330001	WG	5	U	5	UJ	ug/L	MS
VOA	SW8260B	2-Chloroethyl vinyl ether	56330	166GW28DM1DL	56330001	WG	25	U	25	R	ug/L	DL
VOA	SW8260B	2-Chloroethyl vinyl ether	56330	166GW30DM1LR	56330003	WG	250	U	250	R	ug/L	DL
VOA	SW8260B	2-Chloroethyl vinyl ether	56330	166HW30DM1LR	56330004	WG	250	U	250	R	ug/L	DL
VOA	SW8260B	2-Chloroethyl vinyl ether	56341	166VDRM001M2	56341001	SO	11.2	U	11.2	UJ	ug/kg	IS
VOA	SW8260B	2-Chloroethyl vinyl ether	57725	166GW27DM2	57725001	WG	5	U	5	UJ	ug/L	MS
VOA	SW8260B	2-Chloroethyl vinyl ether	57725	166GW28DM2DL	57725002	WG	50	U	50	R	ug/L	DL

Attachment 1 - Changed Qualifiers and Results
Charleston Navel Complex - Zone K, SWMU 166 - 2002 Sampling Events

Parameter Class	Analytical Method	Parameter	SDG	Sample ID	Lab Sample ID	Matrix	Lab Result	Lab Qual	Final Result	Final Qual	Units	Reason
VOA	SW8260B	2-Chloroethyl vinyl ether	57725	166GW29DM2DL	57725003	WG	50	U	50	R	ug/L	DL
VOA	SW8260B	2-Chloroethyl vinyl ether	57725	166GW30DM2DL	57725004	WG	250	U	250	R	ug/L	DL
VOA	SW8260B	2-Chloroethyl vinyl ether	57725	166HW30DM2DL	57725005	WG	250	U	250	R	ug/L	DL
VOA	SW8260B	2-Chloroethyl vinyl ether	57725	166GW31DM2DL	57725006	WG	50	U	50	R	ug/L	DL
VOA	SW8260B	2-Chloroethyl vinyl ether	57725	166GW32DM2DL	57725007	WG	250	U	250	R	ug/L	DL
VOA	SW8260B	2-Chloroethyl vinyl ether	58856	166GW27DM3	58856001	WG	5	U	5	R	ug/L	MS
VOA	SW8260B	2-Chloroethyl vinyl ether	58856	166GW28DM3DL	58856002	WG	50	U	50	R	ug/L	DL
VOA	SW8260B	2-Chloroethyl vinyl ether	58856	166GW29DM3DL	58856003	WG	10	U	10	R	ug/L	DL
VOA	SW8260B	2-Chloroethyl vinyl ether	58856	166GW30DM3DL	58856004	WG	250	U	250	R	ug/L	DL
VOA	SW8260B	2-Chloroethyl vinyl ether	58856	166GW31DM3DL	58856005	WG	25	U	25	R	ug/L	DL
VOA	SW8260B	2-Chloroethyl vinyl ether	58856	166HW31DM3DL	58856006	WG	50	U	50	R	ug/L	DL
VOA	SW8260B	2-Chloroethyl vinyl ether	58856	166GW32DM3DL	58856007	WG	250	U	250	R	ug/L	DL
VOA	SW8260B	2-Chloroethyl vinyl ether	60789	166GW33DM4	60789001	WG	5	U	5	R	ug/L	MS
VOA	SW8260B	2-Chloroethyl vinyl ether	60789	166GW33DM4DL	60789001	WG	10	U	10	R	ug/L	DL
VOA	SW8260B	2-Chloroethyl vinyl ether	60789	166GW34DM4DL	60789002	WG	2500	U	2500	R	ug/L	DL
VOA	SW8260B	2-Chloroethyl vinyl ether	60789	166GW35DM4DL	60789003	WG	50	U	50	R	ug/L	DL
VOA	SW8260B	2-Chloroethyl vinyl ether	60789	166GW37DM4DL	60789004	WG	2500	U	2500	R	ug/L	DL
VOA	SW8260B	2-Chloroethyl vinyl ether	60789	166GW39DM4DL	60789005	WG	50	U	50	R	ug/L	DL
VOA	SW8260B	2-Chloroethyl vinyl ether	60790	163GW03MM4DL	60790001	WG	250	U	250	R	ug/L	DL
VOA	SW8260B	2-Chloroethyl vinyl ether	60790	166GW26DM4DL	60790002	WG	250	U	250	R	ug/L	DL
VOA	SW8260B	2-Chloroethyl vinyl ether	60790	166GW25DM4DL	60790003	WG	500	U	500	R	ug/L	DL

Parameter Class	Analytical Method	Parameter	SDG	Sample ID	Lab Sample ID	Matrix	Lab Result	Lab Qual	Final Result	Final Qual	Units	Reasons
VOA	SW8260B	2-Chloroethyl vinyl ether	60790	166HW25DM4DL	60790004	WG	500	U	500	R	ug/L	DL
VOA	SW8260B	2-Chloroethyl vinyl ether	60790	166GW07DM4DL	60790008	WG	50	U	50	R	ug/L	DL
VOA	SW8260B	2-Chloroethyl vinyl ether	60790	163GW001M4	60790009	WG	5	U	5	UJ	ug/L	CC
VOA	SW8260B	2-Chloroethyl vinyl ether	60790	166GW026M4	60790013	WG	5	U	5	R	ug/L	MS
VOA	SW8260B	2-Chloroethyl vinyl ether	60879	166GW41DM4	60879001	WG	5	U	5	UJ	ug/L	CC
VOA	SW8260B	2-Chloroethyl vinyl ether	60879	166GW41DM4DL	60879001	WG	250	U	250	R	ug/L	DL
VOA	SW8260B	2-Chloroethyl vinyl ether	60879	166GW42DM4	60879002	WG	5	U	5	UJ	ug/L	CC
VOA	SW8260B	2-Chloroethyl vinyl ether	60879	166GW42DM4DL	60879002	WG	500	U	500	R	ug/L	DL
VOA	SW8260B	2-Chloroethyl vinyl ether	60879	166GW43DM4	60879003	WG	5	U	5	UJ	ug/L	CC
VOA	SW8260B	2-Chloroethyl vinyl ether	60879	166GW43DM4DL	60879003	WG	1250	U	1250	R	ug/L	DL
VOA	SW8260B	2-Chloroethyl vinyl ether	60879	166GW44DM4	60879004	WG	5	U	5	UJ	ug/L	CC
VOA	SW8260B	2-Chloroethyl vinyl ether	60879	166GW44DM4DL	60879004	WG	250	U	250	R	ug/L	DL
VOA	SW8260B	2-Chloroethyl vinyl ether	60879	166GW13DM4	60879005	WG	5	U	5	UJ	ug/L	CC
VOA	SW8260B	2-Chloroethyl vinyl ether	60879	166GW13DM4DL	60879005	WG	500	U	500	R	ug/L	DL
VOA	SW8260B	2-Chloroethyl vinyl ether	60879	166GW08DM4	60879006	WG	10	U	10	UJ	ug/L	CC
VOA	SW8260B	2-Chloroethyl vinyl ether	61044	166GW38DM4	61044001	WG	5	U	5	R	ug/L	MS
VOA	SW8260B	2-Chloroethyl vinyl ether	61044	166GW38DM4DL	61044001	WG	100	U	100	R	ug/L	DL
VOA	SW8260B	2-Chloroethyl vinyl ether	61044	166GW45DM4DL	61044002	WG	500	U	500	R	ug/L	DL
VOA	SW8260B	2-Chloroethyl vinyl ether	61044	166GW47DM4	61044003	WG	5	U	5	UJ	ug/L	CC
VOA	SW8260B	2-Chloroethyl vinyl ether	61044	166GW48DM4	61044004	WG	5	U	5	UJ	ug/L	CC
VOA	SW8260B	2-Chloroethyl vinyl ether	61044	166GW48DM4DL	61044004	WG	500	U	500	R	ug/L	DL

Attachment 1 - Changed Qualifiers and Results
Charleston Navel Complex - Zone K, SWMU 166 - 2002 Sampling Events

Parameter Class	Analytical Method	Parameter	SDG	Sample ID	Lab Sample No.	Matrix	Lab Result	Lab Qual	Final Result	Final Qual	Units	Reason
VOA	SW8260B	2-Chloroethyl vinyl ether	61044	166GWTM4M4	61044005	WG	5	U	5	UJ	ug/L	CC
VOA	SW8260B	2-Chloroethyl vinyl ether	61044	166GWTM4M4DL	61044005	WG	500	U	500	R	ug/L	DL
VOA	SW8260B	2-Chloroethyl vinyl ether	61044	166HW14DM4	61044006	WG	10	U	10	UJ	ug/L	CC
VOA	SW8260B	2-Chloroethyl vinyl ether	61044	166GW14DM4	61044007	WG	5	U	5	UJ	ug/L	CC
VOA	SW8260B	2-Chloroethyl vinyl ether	61044	166GW14DM4DL	61044007	WG	10	U	10	R	ug/L	DL
VOA	SW8260B	2-Chloroethyl vinyl ether	61044	166GW06DM4	61044008	WG	5	U	5	UJ	ug/L	CC
VOA	SW8260B	2-Chloroethyl vinyl ether	61044	K166ZDRM1M5	61044010	WG	5	U	5	UJ	ug/L	CC
VOA	SW8260B	2-Chloroethyl vinyl ether	61134	166GW36DM4	61134002	WG	500	U	500	UJ	ug/L	CC
VOA	SW8260B	2-Chloroethyl vinyl ether	61134	166GW36DM4DL	61134002	WG	2500	U	2500	R	ug/L	DL
VOA	SW8260B	2-Chloroethyl vinyl ether	61134	166GW46DM4	61134003	WG	250	U	250	UJ	ug/L	CC
VOA	SW8260B	2-Chloroethyl vinyl ether	61134	166GW49DM4	61134004	WG	250	U	250	UJ	ug/L	CC
VOA	SW8260B	2-Chloroethyl vinyl ether	61170	166GW50DM4	61170001	WG	500	U	500	UJ	ug/L	CC
VOA	SW8260B	2-Chloroethyl vinyl ether	61170	166GW50DM4DL	61170001	WG	1250	U	1250	R	ug/L	DL
VOA	SW8260B	2-Chloroethyl vinyl ether	61258	166HW16DM4	61258001	WG	250	U	250	UJ	ug/L	CC,BS
VOA	SW8260B	2-Chloroethyl vinyl ether	61258	166GW16DM4	61258002	WG	250	U	250	UJ	ug/L	CC, BS
VOA	SW8260B	2-Chloroethyl vinyl ether	61258	166GWIN3M4	61258003	WG	5	U	5	UJ	ug/L	CC,BS
VOA	SW8260B	2-Chloroethyl vinyl ether	61258	166GW053M4	61258004	WG	500	U	500	UJ	ug/L	CC
VOA	SW8260B	2-Chloroethyl vinyl ether	61258	166GW054M4	61258005	WG	500	U	500	UJ	ug/L	CC
VOA	SW8260B	2-Chloroethyl vinyl ether	61258	166GW055M4	61258006	WG	125	U	125	UJ	ug/L	CC,BS
VOA	SW8260B	2-Chloroethyl vinyl ether	61258	166HW055M4	61258007	WG	125	U	125	UJ	ug/L	CC,BS
VOA	SW8260B	2-Chloroethyl vinyl ether	61258	698GW001M4	61258008	WG	5	U	5	UJ	ug/L	CC,BS

Attachment 1 - Changed Qualifiers and Results
Charleston Navel Complex - Zone K MU 166 - 2002 Sampling Events

Parameter Class	Analytical Method	Parameter	SDG	Sample ID	Lab Sample ID	Matrix	Lab Result	Lab Qual	Final Result	Final Quals	Units	Reasons
VOA	SW8260B	2-Chloroethyl vinyl ether	61258	698HW001M4	61258009	WG	5	U	5	UJ	ug/L	CC,BS
VOA	SW8260B	2-Chloroethyl vinyl ether	61258	163GW005M4	61258011	WG	5	U	5	UJ	ug/L	CC,BS
VOA	SW8260B	2-Chloroethyl vinyl ether	61326	166GW17DM4	61326001	WG	5	U	5	R	ug/L	MS
VOA	SW8260B	2-Chloroethyl vinyl ether	61326	166GW017M4	61326002	WG	5	U	5	UJ	ug/L	CC,BS
VOA	SW8260B	2-Chloroethyl vinyl ether	61326	166GW19DM4	61326003	WG	5	U	5	UJ	ug/L	CC,BS
VOA	SW8260B	2-Chloroethyl vinyl ether	61326	166GW21DM4	61326004	WG	5	U	5	UJ	ug/L	CC,BS
VOA	SW8260B	2-Chloroethyl vinyl ether	62650	166GW28DM6DL	62650003	WG	25	U	25	R	ug/L	DL
VOA	SW8260B	2-Chloroethyl vinyl ether	64473	166GW50DM7	64473003	WG	500	U	500	UJ	ug/L	IC
VOA	SW8260B	2-Chloroethyl vinyl ether	64473	166GW50DM7DL	64473003	WG	2500	U	2500	R	ug/L	DL
VOA	SW8260B	2-Chloroethyl vinyl ether	64473	166HW50DM7	64473004	WG	500	U	500	UJ	ug/L	IC
VOA	SW8260B	2-Chloroethyl vinyl ether	64473	166HW50DM7DL	64473004	WG	2500	U	2500	R	ug/L	DL
VOA	SW8260B	2-Chloroethyl vinyl ether	64473	166GW51DM7	64473005	WG	250	U	250	UJ	ug/L	IC
VOA	SW8260B	2-Chloroethyl vinyl ether	64473	166GW52DM7	64473006	WG	500	U	500	UJ	ug/L	IC
VOA	SW8260B	2-Chloroethyl vinyl ether	64473	166GWIN3M7	64473007	WG	10	U	10	UJ	ug/L	IC
VOA	SW8260B	2-Chloroethyl vinyl ether	64473	166GWTM3M7	64473008	WG	100	U	100	UJ	ug/L	IC
VOA	SW8260B	2-Chloroethyl vinyl ether	64473	166GWTM4M7	64473009	WG	500	U	500	UJ	ug/L	IC
VOA	SW8260B	2-Chloroethyl vinyl ether	64473	166GW16DM7	64473010	WG	500	U	500	UJ	ug/L	IC
VOA	SW8260B	2-Chloroethyl vinyl ether	64475	163GW001M7	64475001	WG	10	U	10	UJ	ug/L	CC,BS
VOA	SW8260B	2-Chloroethyl vinyl ether	64475	163GW005M7	64475002	WG	10	U	10	UJ	ug/L	CC,BS
VOA	SW8260B	2-Chloroethyl vinyl ether	64475	166GW017M7	64475003	WG	10	U	10	UJ	ug/L	CC,BS
VOA	SW8260B	2-Chloroethyl vinyl ether	64475	166GW026M7	64475004	WG	10	U	10	R	ug/L	MS

Attachment 1 - Changed Qualifiers and Results
Charleston Navel Complex - Zone K, SWMU 166 - 2002 Sampling Events

Parameter Class	Analytical Methods	Parameter	SDG	Sample ID	Lab Sample ID	Matrix	Lab Result	Lab Qual	Final Result	Final Qual	Units	Reason
VOA	SW8260B	2-Chloroethyl vinyl ether	64475	166GW053M7	64475007	WG	10	U	10	UJ	ug/L	CC,BS
VOA	SW8260B	2-Chloroethyl vinyl ether	64475	166GW053M7DL	64475007	WG	1000	U	1000	R	ug/L	DL
VOA	SW8260B	2-Chloroethyl vinyl ether	64475	166GW054M7	64475008	WG	100	U	100	UJ	ug/L	CC,BS
VOA	SW8260B	2-Chloroethyl vinyl ether	64475	166GW054M7DL	64475008	WG	250	U	250	R	ug/L	DL
VOA	SW8260B	2-Chloroethyl vinyl ether	64475	166GW055M7	64475009	WG	10	U	10	UJ	ug/L	CC,BS
VOA	SW8260B	2-Chloroethyl vinyl ether	64475	166GW055M7DL	64475009	WG	250	U	250	R	ug/L	DL
VOA	SW8260B	2-Chloroethyl vinyl ether	64475	166HW055M7	64475010	WG	10	U	10	UJ	ug/L	CC,BS
VOA	SW8260B	2-Chloroethyl vinyl ether	64475	166HW055M7DL	64475010	WG	250	U	250	R	ug/L	DL
VOA	SW8260B	2-Chloroethyl vinyl ether	64475	166GW07DM7	64475011	WG	10	U	10	UJ	ug/L	CC,BS
VOA	SW8260B	2-Chloroethyl vinyl ether	64475	166GW07DM7DL	64475011	WG	250	U	250	R	ug/L	DL
VOA	SW8260B	2-Chloroethyl vinyl ether	64475	166GW08DM7	64475012	WG	10	U	10	UJ	ug/L	CC,BS
VOA	SW8260B	2-Chloroethyl vinyl ether	64475	166GW13DM7	64475013	WG	10	U	10	UJ	ug/L	CC,BS
VOA	SW8260B	2-Chloroethyl vinyl ether	64475	166GW13DM7DL	64475013	WG	1000	U	1000	R	ug/L	DL
VOA	SW8260B	2-Chloroethyl vinyl ether	64475	166HW13DM7	64475014	WG	10	U	10	UJ	ug/L	CC,BS
VOA	SW8260B	2-Chloroethyl vinyl ether	64475	166HW13DM7DL	64475014	WG	1000	U	1000	R	ug/L	DL
VOA	SW8260B	2-Chloroethyl vinyl ether	64475	166GW14DM7	64475015	WG	10	U	10	UJ	ug/L	CC,BS
VOA	SW8260B	2-Chloroethyl vinyl ether	64475	166GW14DM7DL	64475015	WG	20	U	20	R	ug/L	DL
VOA	SW8260B	2-Chloroethyl vinyl ether	64475	166GW17DM7	64475016	WG	10	U	10	R	ug/L	MS
VOA	SW8260B	2-Chloroethyl vinyl ether	64475	166GW26DM7	64475019	WG	10	U	10	UJ	ug/L	CC,BS
VOA	SW8260B	2-Chloroethyl vinyl ether	64475	166GW26DM7DL	64475019	WG	500	U	500	R	ug/L	DL
VOA	SW8260B	2-Chloroethyl vinyl ether	64550	166GW34DM7	64550003	WG	500	U	500	UJ	ug/L	IC

Parameter Class	Analytical Method	Parameter	SDG	Sample ID	Lab Sample ID	Matrix	Lab Result	Lab Qual	Final Result	Final Qual	Units	Reasons
VOA	SW8260B	2-Chloroethyl vinyl ether	64550	166GW34DM7DL	64550003	WG	10000	U	10000	R	ug/L	DL
VOA	SW8260B	2-Chloroethyl vinyl ether	64550	166GW36DM7	64550004	WG	500	U	500	UJ	ug/L	IC
VOA	SW8260B	2-Chloroethyl vinyl ether	64550	166GW36DM7DL	64550004	WG	5000	U	5000	R	ug/L	DL
VOA	SW8260B	2-Chloroethyl vinyl ether	64550	166GW37DM7	64550005	WG	500	U	500	UJ	ug/L	IC
VOA	SW8260B	2-Chloroethyl vinyl ether	64550	166GW45DM7	64550006	WG	250	U	250	UJ	ug/L	IC
VOA	SW8260B	2-Chloroethyl vinyl ether	64550	166GW46DM7	64550007	WG	500	U	500	UJ	ug/L	IC
VOA	SW8260B	2-Chloroethyl vinyl ether	64550	166GW47DM7	64550008	WG	10	U	10	UJ	ug/L	IC
VOA	SW8260B	2-Chloroethyl vinyl ether	64550	166GW48DM7	64550009	WG	500	U	500	UJ	ug/L	IC
VOA	SW8260B	2-Chloroethyl vinyl ether	64550	166GW49DM7	64550010	WG	500	U	500	UJ	ug/L	IC
VOA	SW8260B	2-Chloroethyl vinyl ether	64676	163GW03MM7	64676001	WG	10	U	10	UJ	ug/L	IC
VOA	SW8260B	2-Chloroethyl vinyl ether	64676	163GW003M7	64676002	WG	10	U	10	UJ	ug/L	IC
VOA	SW8260B	2-Chloroethyl vinyl ether	64676	163GW003M7DL	64676002	WG	50	U	50	R	ug/L	DL
VOA	SW8260B	2-Chloroethyl vinyl ether	64676	166GW040M7	64676003	WG	10	U	10	UJ	ug/L	IC
VOA	SW8260B	2-Chloroethyl vinyl ether	64676	166GW040M7DL	64676003	WG	10000	U	10000	R	ug/L	DL
VOA	SW8260B	2-Chloroethyl vinyl ether	64676	166HW040M7	64676004	WG	10000	U	10000	UJ	ug/L	IC
VOA	SW8260B	2-Chloroethyl vinyl ether	64676	166GW33DM7	64676005	WG	10	U	10	UJ	ug/L	IC
VOA	SW8260B	2-Chloroethyl vinyl ether	64676	166GW38DM7	64676006	WG	100	U	100	UJ	ug/L	IC
VOA	SW8260B	2-Chloroethyl vinyl ether	64676	166GW39DM7	64676007	WG	10	U	10	UJ	ug/L	IC
VOA	SW8260B	2-Chloroethyl vinyl ether	64676	166GW41DM7	64676008	WG	50	U	50	UJ	ug/L	IC
VOA	SW8260B	2-Chloroethyl vinyl ether	64676	166GW41DM7DL	64676008	WG	100	U	100	R	ug/L	DL
VOA	SW8260B	2-Chloroethyl vinyl ether	64676	166GW42DM7	64676009	WG	100	U	100	UJ	ug/L	IC

Attachment 1 - Changed Qualifiers and Results
Charleston Navel Complex - Zone K, SWMU 166 - 2002 Sampling Events

Parameter Class	Analytical Method	Parameter	SDG	Sample ID	Lab Sample ID	Matrix	Lab Result	Lab Qual	Final Result	Final Qual	Units	Reason
VOA	SW8260B	2-Chloroethyl vinyl ether	64676	166GW42DM7DL	64676009	WG	1000	U	1000	R	ug/L	DL
VOA	SW8260B	2-Chloroethyl vinyl ether	64676	166GW43DM7DL	64676010	WG	2000	U	2000	UJ	ug/L	IC
VOA	SW8260B	2-Chloroethyl vinyl ether	64676	166GW44DM7	64676011	WG	100	U	100	UJ	ug/L	IC
VOA	SW8260B	2-Chloroethyl vinyl ether	64676	166GW44DM7DL	64676011	WG	1000	U	1000	R	ug/L	DL
VOA	SW8260B	2-Chloroethyl vinyl ether	64676	166GW35DM7	64676012	WG	100	U	100	UJ	ug/L	IC
VOA	SW8260B	2-Chloroethyl vinyl ether	64676	166GW35DM7DL	64676012	WG	1000	U	1000	R	ug/L	DL
VOA	SW8260B	2-Chloroethyl vinyl ether	64677	696GW001M7	64677005	WG	10	U	10	R	ug/L	MS
VOA	SW8260B	2-Chloroethyl vinyl ether	71658	166GW026M8	71658003	WG	10	U	10	R	ug/L	MS
VOA	SW8260B	2-Chloroethyl vinyl ether	71658	166GW005M8	71658005	WG	10	U	10	R	ug/L	MS
VOA	SW8260B	2-Chloroethyl vinyl ether	71658	166GW053M8DL	71658007	WG	500	U	500	R	ug/L	DL
VOA	SW8260B	2-Chloroethyl vinyl ether	71658	166GW054M8DL	71658008	WG	250	U	250	R	ug/L	DL
VOA	SW8260B	2-Chloroethyl vinyl ether	71658	166GW055M8DL	71658009	WG	1000	U	1000	R	ug/L	DL
VOA	SW8260B	2-Chloroethyl vinyl ether	71658	166GW056M8DL	71658010	WG	1000	U	1000	R	ug/L	DL
VOA	SW8260B	2-Chloroethyl vinyl ether	71658	166GW07DM8DL	71658012	WG	250	U	250	R	ug/L	DL
VOA	SW8260B	2-Chloroethyl vinyl ether	71658	166GW13DM8DL	71658014	WG	1000	U	1000	R	ug/L	DL
VOA	SW8260B	2-Chloroethyl vinyl ether	71658	166GW14DM8DL	71658016	WG	20	U	20	R	ug/L	DL
VOA	SW8260B	2-Chloroethyl vinyl ether	71659	166GW17DM8	71659001	WG	10	U	10	R	ug/L	MS
VOA	SW8260B	2-Chloroethyl vinyl ether	71659	166GW19DM8	71659002	WG	10	U	10	UJ	ug/L	CC
VOA	SW8260B	2-Chloroethyl vinyl ether	71659	166GW19DM8DL	71659002	WG	20	U	20	R	ug/L	DL
VOA	SW8260B	2-Chloroethyl vinyl ether	71659	166GW21DM8	71659003	WG	10	U	10	UJ	ug/L	CC
VOA	SW8260B	2-Chloroethyl vinyl ether	71659	166GW25DM8DL	71659004	WG	1000	U	1000	R	ug/L	DL

Attachment 1 - Changed Qualifiers and Results
Charleston Navel Complex - Zone K SWMU 166 - 2002 Sampling Events

Parameter Class	Analytical Method	Parameter	SDG	Sample Id	Lab Sample Id	Matrix	Lab Result	Lab Qual	Final Result	Final Qual	Units	Reason
VOA	SW8260B	2-Chloroethyl vinyl ether	71659	166GW26DM8	71659005	WG	250	U	250	UJ	ug/L	CC
VOA	SW8260B	2-Chloroethyl vinyl ether	71659	698GW001M8	71659006	WG	10	U	10	UJ	ug/L	CC
VOA	SW8260B	2-Chloroethyl vinyl ether	71659	698HW001M8	71659007	WG	10	U	10	UJ	ug/L	CC
VOA	SW8260B	2-Chloroethyl vinyl ether	71766	166GW49DM8DL	71766003	WG	500	U	500	R	ug/L	DL
VOA	SW8260B	2-Chloroethyl vinyl ether	71766	166GW50DM8DL	71766004	WG	2000	U	2000	R	ug/L	DL
VOA	SW8260B	2-Chloroethyl vinyl ether	71766	166HW50DM8DL	71766005	WG	5000	U	5000	R	ug/L	DL
VOA	SW8260B	2-Chloroethyl vinyl ether	71766	166GW51DM8DL	71766006	WG	1000	U	1000	R	ug/L	DL
VOA	SW8260B	2-Chloroethyl vinyl ether	71766	166GW52DM8DL	71766007	WG	1000	U	1000	R	ug/L	DL
VOA	SW8260B	2-Chloroethyl vinyl ether	71766	166GWTM3M8DL	71766009	WG	100	U	100	R	ug/L	DL
VOA	SW8260B	2-Chloroethyl vinyl ether	71766	166GWTM4M8DL	71766010	WG	2000	U	2000	R	ug/L	DL
VOA	SW8260B	2-Chloroethyl vinyl ether	71766	166GW45DM8DL	71766011	WG	500	U	500	R	ug/L	DL
VOA	SW8260B	2-Chloroethyl vinyl ether	71766	166GW46DM8	71766012	WG	10	U	10	UJ	ug/L	CC
VOA	SW8260B	2-Chloroethyl vinyl ether	71766	166GW46DM8DL	71766012	WG	500	U	500	R	ug/L	DL
VOA	SW8260B	2-Chloroethyl vinyl ether	71766	166GW48DM8DL	71766014	WG	1000	U	1000	R	ug/L	DL
VOA	SW8260B	2-Chloroethyl vinyl ether	71852	166GW040M8	71852003	WG	500	U	500	UJ	ug/L	CC
VOA	SW8260B	2-Chloroethyl vinyl ether	71852	166GW040M8DL	71852003	WG	2500	U	2500	R	ug/L	DL
VOA	SW8260B	2-Chloroethyl vinyl ether	71852	166HW040M8	71852004	WG	500	U	500	UJ	ug/L	CC
VOA	SW8260B	2-Chloroethyl vinyl ether	71852	166HW040M8DL	71852004	WG	2500	U	2500	R	ug/L	DL
VOA	SW8260B	2-Chloroethyl vinyl ether	71852	166GW34DM8	71852005	WG	500	U	500	UJ	ug/L	CC
VOA	SW8260B	2-Chloroethyl vinyl ether	71852	166GW34DM8DL	71852005	WG	10000	U	10000	R	ug/L	DL
VOA	SW8260B	2-Chloroethyl vinyl ether	71852	166GW35DM8	71852006	WG	250	U	250	UJ	ug/L	CC

Attachment 1 - Changed Qualifiers and Results
Charleston Navel Complex - Zone K, SWMU 166 - 2002 Sampling Events

Parameter Class	Analytical Method	Parameter	SDG	Sample ID	Lab Sample ID	Matrix	Lab Result	Original Qualifier	Final Result	Final Qualifier	Units	Reason
VOA	SW8260B	2-Chloroethyl vinyl ether	71852	166GW36DM8	71852007	WG	500	U	500	UJ	ug/L	CC
VOA	SW8260B	2-Chloroethyl vinyl ether	71852	166GW36DM8DL	71852007	WG	2500	U	2500	R	ug/L	DL
VOA	SW8260B	2-Chloroethyl vinyl ether	71852	166GW37DM8	71852008	WG	10	U	10	UJ	ug/L	CC
VOA	SW8260B	2-Chloroethyl vinyl ether	71852	166GW37DM8DL	71852008	WG	50	U	50	R	ug/L	DL
VOA	SW8260B	2-Chloroethyl vinyl ether	71852	166GW39DM8	71852009	WG	10	U	10	R	ug/L	MS
VOA	SW8260B	2-Chloroethyl vinyl ether	71852	166GW41DM8	71852010	WG	200	U	200	UJ	ug/L	CC
VOA	SW8260B	2-Chloroethyl vinyl ether	71852	166GW42DM8	71852011	WG	500	U	500	UJ	ug/L	CC
VOA	SW8260B	2-Chloroethyl vinyl ether	71852	166GW43DM8	71852012	WG	500	U	500	UJ	ug/L	CC
VOA	SW8260B	2-Chloroethyl vinyl ether	71852	166GW43DM8DL	71852012	WG	1000	U	1000	R	ug/L	DL
VOA	SW8260B	2-Chloroethyl vinyl ether	71852	166GW44DM8	71852013	WG	250	U	250	UJ	ug/L	CC
VOA	SW8260B	2-Chloroethyl vinyl ether	72055	163GW003M8	72055003	WG	10	U	10	UJ	ug/L	SS
VOA	SW8260B	2-Chloroethyl vinyl ether	72055	163GW003M8DL	72055003	WG	100	U	100	R	ug/L	DL
VOA	SW8260B	2-Chloroethyl vinyl ether	72055	163GW03MM8	72055004	WG	10	U	10	UJ	ug/L	CC,SS
VOA	SW8260B	2-Chloroethyl vinyl ether	72055	166GW16DM8	72055005	WG	10	U	10	UJ	ug/L	SS
VOA	SW8260B	2-Chloroethyl vinyl ether	72055	166GW16DM8DL	72055005	WG	500	U	500	R	ug/L	DL
VOA	SW8260B	2-Chloroethyl vinyl ether	72055	166GW33DM8	72055006	WG	10	U	10	UJ	ug/L	CC,SS
VOA	SW8260B	2-Chloroethyl vinyl ether	72055	166GW38DM8	72055007	WG	10	U	10	UJ	ug/L	SS
VOA	SW8260B	2-Chloroethyl vinyl ether	72055	166GW38DM8DL	72055007	WG	100	U	100	R	ug/L	DL
VOA	SW8260B	2-Chloroethyl vinyl ether	72055	163GW005M8	72055008	WG	10	U	10	UJ	ug/L	CC, SS
VOA	SW8260B	2-HEXANONE	56223	166GW32DM1LR	56223003	WG	500	U	500	R	ug/L	DL
VOA	SW8260B	2-HEXANONE	56330	166GW28DM1	563[illegible]01	WG	10	U	10	U	ug/L	BL

Parameter Class	Analytical Method	Parameter	SDG	Sample ID	Lab Sample ID	Matrix	Lab Result	Lab Qual	Final Result	Final Qual	Units	Reason
VOA	SW8260B	2-HEXANONE	56330	166GW28DM1DL	56330001	WG	50	U	50	R	ug/L	DL
VOA	SW8260B	2-HEXANONE	56330	166GW30DM1LR	56330003	WG	500	U	500	R	ug/L	DL
VOA	SW8260B	2-HEXANONE	56330	166HW30DM1LR	56330004	WG	500	U	500	R	ug/L	DL
VOA	SW8260B	2-HEXANONE	56341	166VDRM001M2	56341001	SO	11.2	U	11.2	UJ	ug/kg	CC, IS
VOA	SW8260B	2-HEXANONE	56341	166VDRM002M2	56341002	SO	12.3	U	12.3	UJ	ug/kg	CC
VOA	SW8260B	2-HEXANONE	56341	166VDRM003M2	56341003	SO	11.8	U	11.8	UJ	ug/kg	CC
VOA	SW8260B	2-HEXANONE	57725	166GW28DM2DL	57725002	WG	50	U	50	R	ug/L	DL
VOA	SW8260B	2-HEXANONE	57725	166GW29DM2DL	57725003	WG	50	U	50	R	ug/L	DL
VOA	SW8260B	2-HEXANONE	57725	166GW30DM2DL	57725004	WG	250	U	250	R	ug/L	DL
VOA	SW8260B	2-HEXANONE	57725	166HW30DM2DL	57725005	WG	250	U	250	R	ug/L	DL
VOA	SW8260B	2-HEXANONE	57725	166GW31DM2DL	57725006	WG	50	U	50	R	ug/L	DL
VOA	SW8260B	2-HEXANONE	57725	166GW32DM2DL	57725007	WG	250	U	250	R	ug/L	DL
VOA	SW8260B	2-HEXANONE	58856	166GW28DM3DL	58856002	WG	100	U	100	R	ug/L	DL
VOA	SW8260B	2-HEXANONE	58856	166GW29DM3DL	58856003	WG	20	U	20	R	ug/L	DL
VOA	SW8260B	2-HEXANONE	58856	166GW30DM3DL	58856004	WG	500	U	500	R	ug/L	DL
VOA	SW8260B	2-HEXANONE	58856	166GW31DM3DL	58856005	WG	50	U	50	R	ug/L	DL
VOA	SW8260B	2-HEXANONE	58856	166HW31DM3DL	58856006	WG	100	U	100	R	ug/L	DL
VOA	SW8260B	2-HEXANONE	58856	166GW32DM3DL	58856007	WG	500	U	500	R	ug/L	DL
VOA	SW8260B	2-HEXANONE	60789	166GW33DM4DL	60789001	WG	20	U	20	R	ug/L	DL
VOA	SW8260B	2-HEXANONE	60789	166GW34DM4DL	60789002	WG	5000	U	5000	R	ug/L	DL
VOA	SW8260B	2-HEXANONE	60789	166GW35DM4DL	60789003	WG	100	U	100	R	ug/L	DL

Attachment 1 - Changed Qualifiers and Results
Charleston Navel Complex - Zone K, SWMU 166 - 2002 Sampling Events

Parameter Class	Analytical Method	Parameter	SDG	Sample ID	Lab Sample ID	Matrix	Lab Result	Lab Qual	Final Result	Final Qual	Units	Reason
VOA	SW8260B	2-HEXANONE	60789	166GW37DM4DL	60789004	WG	5000	U	5000	R	ug/L	DL
VOA	SW8260B	2-HEXANONE	60789	166GW39DM4DL	60789005	WG	100	U	100	R	ug/L	DL
VOA	SW8260B	2-HEXANONE	60790	163GW03MM4DL	60790001	WG	500	U	500	R	ug/L	DL
VOA	SW8260B	2-HEXANONE	60790	166GW26DM4DL	60790002	WG	500	U	500	R	ug/L	DL
VOA	SW8260B	2-HEXANONE	60790	166GW25DM4DL	60790003	WG	1000	U	1000	R	ug/L	DL
VOA	SW8260B	2-HEXANONE	60790	166HW25DM4DL	60790004	WG	1000	U	1000	R	ug/L	DL
VOA	SW8260B	2-HEXANONE	60790	166GW07DM4DL	60790008	WG	100	U	100	R	ug/L	DL
VOA	SW8260B	2-HEXANONE	60879	166GW41DM4DL	60879001	WG	500	U	500	R	ug/L	DL
VOA	SW8260B	2-HEXANONE	60879	166GW42DM4DL.	60879002	WG	1000	U	1000	R	ug/L	DL
VOA	SW8260B	2-HEXANONE	60879	166GW43DM4DL	60879003	WG	2500	U	2500	R	ug/L	DL
VOA	SW8260B	2-HEXANONE	60879	166GW44DM4DL	60879004	WG	500	U	500	R	ug/L	DL
VOA	SW8260B	2-HEXANONE	60879	166GW13DM4DL	60879005	WG	1000	U	1000	R	ug/L	DL
VOA	SW8260B	2-HEXANONE	61044	166GW38DM4DL	61044001	WG	200	U	200	R	ug/L	DL
VOA	SW8260B	2-HEXANONE	61044	166GW45DM4DL	61044002	WG	1000	U	1000	R	ug/L	DL
VOA	SW8260B	2-HEXANONE	61044	166GW48DM4DL	61044004	WG	1000	U	1000	R	ug/L	DL
VOA	SW8260B	2-HEXANONE	61044	166GWTM4M4DL	61044005	WG	1000	U	1000	R	ug/L	DL
VOA	SW8260B	2-HEXANONE	61044	166GW14DM4DL	61044007	WG	20	U	20	R	ug/L	DL
VOA	SW8260B	2-HEXANONE	61134	166GW36DM4DL	61134002	WG	5000	U	5000	R	ug/L	DL
VOA	SW8260B	2-HEXANONE	61170	166GW50DM4DL	61170001	WG	2500	U	2500	R	ug/L	DL
VOA	SW8260B	2-HEXANONE	62650	166GW28DM6DL	62650003	WG	50	U	50	R	ug/L	DL
VOA	SW8260B	2-HEXANONE	64473	166GW50DM7DL	64473003	WG	2500	U	2500	R	ug/L	DL

Parameter Class	Analytical Method	Parameter	SDG	Sample Id	Lab Sample Id	Matrix	Lab Result	Lab Qual	Final Result	Final Qual	Units	Reasons
VOA	SW8260B	2-HEXANONE	64473	166HW50DM7DL	64473004	WG	2500	U	2500	R	ug/L	DL
VOA	SW8260B	2-HEXANONE	64475	166GW053M7DL	64475007	WG	1000	U	1000	R	ug/L	DL
VOA	SW8260B	2-HEXANONE	64475	166GW054M7DL	64475008	WG	250	U	250	R	ug/L	DL
VOA	SW8260B	2-HEXANONE	64475	166GW055M7DL	64475009	WG	250	U	250	R	ug/L	DL
VOA	SW8260B	2-HEXANONE	64475	166HW055M7DL	64475010	WG	250	U	250	R	ug/L	DL
VOA	SW8260B	2-HEXANONE	64475	166GW07DM7DL	64475011	WG	250	U	250	R	ug/L	DL
VOA	SW8260B	2-HEXANONE	64475	166GW13DM7DL	64475013	WG	1000	U	1000	R	ug/L	DL
VOA	SW8260B	2-HEXANONE	64475	166HW13DM7DL	64475014	WG	1000	U	1000	R	ug/L	DL
VOA	SW8260B	2-HEXANONE	64475	166GW14DM7DL	64475015	WG	20	U	20	R	ug/L	DL
VOA	SW8260B	2-HEXANONE	64475	166GW26DM7DL	64475019	WG	500	U	500	R	ug/L	DL
VOA	SW8260B	2-HEXANONE	64550	166GW34DM7DL	64550003	WG	10000	U	10000	R	ug/L	DL
VOA	SW8260B	2-HEXANONE	64550	166GW36DM7DL	64550004	WG	5000	U	5000	R	ug/L	DL
VOA	SW8260B	2-HEXANONE	64676	163GW003M7DL	64676002	WG	50	U	50	R	ug/L	DL
VOA	SW8260B	2-HEXANONE	64676	166GW040M7DL	64676003	WG	10000	U	10000	R	ug/L	DL
VOA	SW8260B	2-HEXANONE	64676	166GW41DM7DL	64676008	WG	100	U	100	R	ug/L	DL
VOA	SW8260B	2-HEXANONE	64676	166GW42DM7DL	64676009	WG	1000	U	1000	R	ug/L	DL
VOA	SW8260B	2-HEXANONE	64676	166GW44DM7DL	64676011	WG	1000	U	1000	R	ug/L	DL
VOA	SW8260B	2-HEXANONE	64676	166GW35DM7DL	64676012	WG	1000	U	1000	R	ug/L	DL
VOA	SW8260B	2-HEXANONE	71658	166GW053M8DL	71658007	WG	500	U	500	R	ug/L	DL
VOA	SW8260B	2-HEXANONE	71658	166GW054M8DL	71658008	WG	250	U	250	R	ug/L	DL
VOA	SW8260B	2-HEXANONE	71658	166GW055M8DL	71658009	WG	1000	U	1000	R	ug/L	DL

Attachment 1 - Changed Qualifiers and Results
Charleston Navel Complex - Zone K, SWMU 166 - 2002 Sampling Events

Parameter Class	Analytical Method	Parameter	SDG	Sample ID	Lab Sample ID	Matrix	Lab Result	Lab Qual	Final Result	Final Qual	Units	Reasons
VOA	SW8260B	2-HEXANONE	71658	166GW056M8DL	71658010	WG	1000	U	1000	R	ug/L	DL
VOA	SW8260B	2-HEXANONE	71658	166GW07DM8DL	71658012	WG	250	U	250	R	ug/L	DL
VOA	SW8260B	2-HEXANONE	71658	166GW13DM8DL	71658014	WG	1000	U	1000	R	ug/L	DL
VOA	SW8260B	2-HEXANONE	71658	166GW14DM8DL	71658016	WG	20	U	20	R	ug/L	DL
VOA	SW8260B	2-HEXANONE	71659	166GW17DM8	71659001	WG	10	U	10	UJ	ug/L	CC
VOA	SW8260B	2-HEXANONE	71659	166GW19DM8	71659002	WG	10	U	10	UJ	ug/L	CC
VOA	SW8260B	2-HEXANONE	71659	166GW19DM8DL	71659002	WG	20	U	20	R	ug/L	DL
VOA	SW8260B	2-HEXANONE	71659	166GW21DM8	71659003	WG	10	U	10	UJ	ug/L	CC
VOA	SW8260B	2-HEXANONE	71659	166GW25DM8DL	71659004	WG	1000	U	1000	R	ug/L	DL
VOA	SW8260B	2-HEXANONE	71659	166GW26DM8	71659005	WG	250	U	250	UJ	ug/L	CC
VOA	SW8260B	2-HEXANONE	71659	698GW001M8	71659006	WG	10	U	10	UJ	ug/L	CC
VOA	SW8260B	2-HEXANONE	71659	698HW001M8	71659007	WG	10	U	10	UJ	ug/L	CC
VOA	SW8260B	2-HEXANONE	71766	166GW49DM8DL	71766003	WG	500	U	500	R	ug/L	DL
VOA	SW8260B	2-HEXANONE	71766	166GW50DM8DL	71766004	WG	2000	U	2000	R	ug/L	DL
VOA	SW8260B	2-HEXANONE	71766	166HW50DM8	71766005	WG	500	U	500	UJ	ug/L	CC
VOA	SW8260B	2-HEXANONE	71766	166HW50DM8DL	71766005	WG	5000	U	5000	R	ug/L	DL
VOA	SW8260B	2-HEXANONE	71766	166GW51DM8DL	71766006	WG	1000	U	1000	R	ug/L	DL
VOA	SW8260B	2-HEXANONE	71766	166GW52DM8DL	71766007	WG	1000	U	1000	R	ug/L	DL
VOA	SW8260B	2-HEXANONE	71766	166GWTM3M8DL	71766009	WG	100	U	100	R	ug/L	DL
VOA	SW8260B	2-HEXANONE	71766	166GWTM4M8DL	71766010	WG	2000	U	2000	R	ug/L	DL
VOA	SW8260B	2-HEXANONE	71766	166GW45DM8DL	71766011	WG	500	U	500	R	ug/L	DL

Parameter Class	Analytical Method	Parameter	SDG	Sample ID	Lab Sample ID	Matrix	Lab Result	Lab Qual	Final Result	Final Qual	Units	Reasons
VOA	SW8260B	2-HEXANONE	71766	166GW46DM8DL	71766012	WG	500	U	500	R	ug/L	DL
VOA	SW8260B	2-HEXANONE	71766	166GW48DM8DL	71766014	WG	1000	U	1000	R	ug/L	DL
VOA	SW8260B	2-HEXANONE	71852	166GW040M8DL	71852003	WG	2500	U	2500	R	ug/L	DL
VOA	SW8260B	2-HEXANONE	71852	166HW040M8DL	71852004	WG	2500	U	2500	R	ug/L	DL
VOA	SW8260B	2-HEXANONE	71852	166GW34DM8DL	71852005	WG	10000	U	10000	R	ug/L	DL
VOA	SW8260B	2-HEXANONE	71852	166GW35DM8	71852006	WG	250	U	250	UJ	ug/L	CC
VOA	SW8260B	2-HEXANONE	71852	166GW36DM8DL	71852007	WG	2500	U	2500	R	ug/L	DL
VOA	SW8260B	2-HEXANONE	71852	166GW37DM8	71852008	WG	10	U	10	UJ	ug/L	CC
VOA	SW8260B	2-HEXANONE	71852	166GW37DM8DL	71852008	WG	50	U	50	R	ug/L	DL
VOA	SW8260B	2-HEXANONE	71852	166GW39DM8	71852009	WG	10	U	10	UJ	ug/L	CC
VOA	SW8260B	2-HEXANONE	71852	166GW43DM8DL	71852012	WG	1000	U	1000	R	ug/L	DL
VOA	SW8260B	2-HEXANONE	71852	166GW44DM8	71852013	WG	250	U	250	UJ	ug/L	CC
VOA	SW8260B	2-HEXANONE	72055	163GW003M8	72055003	WG	10	U	10	UJ	ug/L	SS
VOA	SW8260B	2-HEXANONE	72055	163GW003M8DL	72055003	WG	100	U	100	R	ug/L	DL
VOA	SW8260B	2-HEXANONE	72055	163GW03MM8	72055004	WG	10	U	10	UJ	ug/L	SS
VOA	SW8260B	2-HEXANONE	72055	166GW16DM8	72055005	WG	10	U	10	UJ	ug/L	SS
VOA	SW8260B	2-HEXANONE	72055	166GW16DM8DL	72055005	WG	500	U	500	R	ug/L	DL
VOA	SW8260B	2-HEXANONE	72055	166GW33DM8	72055006	WG	10	U	10	UJ	ug/L	SS
VOA	SW8260B	2-HEXANONE	72055	166GW38DM8	72055007	WG	10	U	10	UJ	ug/L	SS
VOA	SW8260B	2-HEXANONE	72055	166GW38DM8DL	72055007	WG	100	U	100	R	ug/L	DL
VOA	SW8260B	2-HEXANONE	72055	163GW005M8	72055008	WG	10	U	10	UJ	ug/L	SS

Attachment 1 - Changed Qualifiers and Results
Charleston Navel Complex - Zone K, SWMU 166 - 2002 Sampling Events

Parameter Class	Analytical Method	Parameter	SDG	Sample ID	Lab Sample ID	Matrix	Lab Result	Lab Qual	Final Result	Final Qual	Units	Reasons
VOA	SW8260B	ACETONE	56223	166GW32DM1LR	56223003	WG	500	U	500	R	ug/L	DL
VOA	SW8260B	ACETONE	56330	166GW28DM1DL	56330001	WG	20.4	JD	20.4	R	ug/L	DL
VOA	SW8260B	ACETONE	56330	166GW30DM1LR	56330003	WG	500	U	500	R	ug/L	DL
VOA	SW8260B	ACETONE	56330	166HW30DM1LR	56330004	WG	500	U	500	R	ug/L	DL
VOA	SW8260B	ACETONE	56341	166VDRM001M2	56341001	SO	11.6	=	11.6	J	ug/kg	CC, IS
VOA	SW8260B	ACETONE	56341	166VDRM002M2	56341002	SO	5.4	J	5.4	J	ug/kg	CC
VOA	SW8260B	ACETONE	56341	166VDRM003M2	56341003	SO	6.1	J	6.1	J	ug/kg	CC
VOA	SW8260B	ACETONE	57725	166GW27DM2	57725001	WG	3.6	J	5	U	ug/L	BL
VOA	SW8260B	ACETONE	57725	166GW28DM2	57725002	WG	24.6	=	24.6	U	ug/L	BL
VOA	SW8260B	ACETONE	57725	166GW28DM2DL	57725002	WG	43.5	JD	43.5	R	ug/L	DL
VOA	SW8260B	ACETONE	57725	166GW29DM2	57725003	WG	5.4	=	5.4	U	ug/L	BL
VOA	SW8260B	ACETONE	57725	166GW29DM2DL	57725003	WG	25.1	JD	25.1	R	ug/L	DL
VOA	SW8260B	ACETONE	57725	166GW30DM2	57725004	WG	7.7	=	7.7	U	ug/L	BL
VOA	SW8260B	ACETONE	57725	166GW30DM2DL	57725004	WG	250	U	250	R	ug/L	DL
VOA	SW8260B	ACETONE	57725	166HW30DM2	57725005	WG	6.9	=	6.9	U	ug/L	BL
VOA	SW8260B	ACETONE	57725	166HW30DM2DL	57725005	WG	250	U	250	R	ug/L	DL
VOA	SW8260B	ACETONE	57725	166GW31DM2	57725006	WG	6.4	=	6.4	U	ug/L	BL
VOA	SW8260B	ACETONE	57725	166GW31DM2DL	57725006	WG	50	U	50	R	ug/L	DL
VOA	SW8260B	ACETONE	57725	166GW32DM2	57725007	WG	2.3	J	5	U	ug/L	BL
VOA	SW8260B	ACETONE	57725	166GW32DM2DL	57725007	WG	116	JD	116	R	ug/L	DL
VOA	SW8260B	ACETONE	58856	166GW27DM3	58856001	WG	3.6	J	10	U	ug/L	BL

Parameter Class	Analytical Method	Parameter	SDG	Sample ID	Lab Sample ID	Matrix	Result	Qualifier	Final Result	Final Qual	Units	Basis
VOA	SW8260B	ACETONE	58856	166GW28DM3	58856002	WG	19.6	=	19.6	U	ug/L	BL
VOA	SW8260B	ACETONE	58856	166GW28DM3DL	58856002	WG	39.3	JD	39.3	R	ug/L	DL
VOA	SW8260B	ACETONE	58856	166GW29DM3	58856003	WG	2.4	J	10	U	ug/L	BL
VOA	SW8260B	ACETONE	58856	166GW29DM3DL	58856003	WG	20	U	20	R	ug/L	DL
VOA	SW8260B	ACETONE	58856	166GW30DM3	58856004	WG	6.5	J	10	U	ug/L	BL
VOA	SW8260B	ACETONE	58856	166GW30DM3DL	58856004	WG	500	U	500	R	ug/L	DL
VOA	SW8260B	ACETONE	58856	166GW31DM3	58856005	WG	4	J	10	U	ug/L	BL
VOA	SW8260B	ACETONE	58856	166GW31DM3DL	58856005	WG	11.9	JD	11.9	R	ug/L	DL
VOA	SW8260B	ACETONE	58856	166HW31DM3	58856006	WG	3.8	J	10	U	ug/L	BL
VOA	SW8260B	ACETONE	58856	166HW31DM3DL	58856006	WG	100	U	100	R	ug/L	DL
VOA	SW8260B	ACETONE	58856	166GW32DM3	58856007	WG	10.2	=	10.2	U	ug/L	BL
VOA	SW8260B	ACETONE	58856	166GW32DM3DL	58856007	WG	500	U	500	R	ug/L	DL
VOA	SW8260B	ACETONE	60789	166GW33DM4	60789001	WG	3.7	JB	10	U	ug/L	BL
VOA	SW8260B	ACETONE	60789	166GW33DM4DL	60789001	WG	20	U	20	R	ug/L	DL
VOA	SW8260B	ACETONE	60789	166GW34DM4DL	60789002	WG	5000	U	5000	R	ug/L	DL
VOA	SW8260B	ACETONE	60789	166GW35DM4	60789003	WG	4.3	JB	10	U	ug/L	BL
VOA	SW8260B	ACETONE	60789	166GW35DM4DL	60789003	WG	41.6	JBD	41.6	R	ug/L	DL
VOA	SW8260B	ACETONE	60789	166GW37DM4DL	60789004	WG	5000	U	5000	R	ug/L	DL
VOA	SW8260B	ACETONE	60789	166GW39DM4	60789005	WG	4.5	JB	10	U	ug/L	BL
VOA	SW8260B	ACETONE	60789	166GW39DM4DL	60789005	WG	100	U	100	R	ug/L	DL
VOA	SW8260B	ACETONE	60790	163GW03MM4	60790001	WG	7.8	JB	10	U	ug/L	BL

Attachment 1 - Changed Qualifiers and Results
Charleston Navel Complex - Zone K, SWMU 166 - 2002 Sampling Events

Parameter Class	Analytical Method	Parameter	Site	Sample ID	Lab Sample ID	Matrix	Lab Result	Lab Qual	Final Result	Final Qual	Units	Reason
VOA	SW8260B	ACETONE	60790	163GW03MM4DL	60790001	WG	500	U	500	R	ug/L	DL
VOA	SW8260B	ACETONE	60790	166GW26DM4	60790002	WG	3.2	JB	10	U	ug/L	BL
VOA	SW8260B	ACETONE	60790	166GW26DM4DL	60790002	WG	500	U	500	R	ug/L	DL
VOA	SW8260B	ACETONE	60790	166GW25DM4	60790003	WG	3	JB	10	U	ug/L	BL
VOA	SW8260B	ACETONE	60790	166GW25DM4DL	60790003	WG	1000	U	1000	R	ug/L	DL
VOA	SW8260B	ACETONE	60790	166HW25DM4DL	60790004	WG	1000	U	1000	R	ug/L	DL
VOA	SW8260B	ACETONE	60790	166GW07DM4DL	60790008	WG	100	U	100	R	ug/L	DL
VOA	SW8260B	ACETONE	60879	166GW41DM4	60879001	WG	2.6	J	10	U	ug/L	BL
VOA	SW8260B	ACETONE	60879	166GW41DM4DL	60879001	WG	500	U	500	R	ug/L	DL
VOA	SW8260B	ACETONE	60879	166GW42DM4DL	60879002	WG	1000	U	1000	R	ug/L	DL
VOA	SW8260B	ACETONE	60879	166GW43DM4DL	60879003	WG	2500	U	2500	R	ug/L	DL
VOA	SW8260B	ACETONE	60879	166GW44DM4	60879004	WG	3.8	J	10	U	ug/L	BL
VOA	SW8260B	ACETONE	60879	166GW44DM4DL	60879004	WG	500	U	500	R	ug/L	DL
VOA	SW8260B	ACETONE	60879	166GW13DM4DL	60879005	WG	1000	U	1000	R	ug/L	DL
VOA	SW8260B	ACETONE	61044	166GW38DM4DL	61044001	WG	200	U	200	R	ug/L	DL
VOA	SW8260B	ACETONE	61044	166GW45DM4DL	61044002	WG	1000	U	1000	R	ug/L	DL
VOA	SW8260B	ACETONE	61044	166GW48DM4	61044004	WG	10	U	10	UJ	ug/L	CC
VOA	SW8260B	ACETONE	61044	166GW48DM4DL	61044004	WG	1000	U	1000	R	ug/L	DL
VOA	SW8260B	ACETONE	61044	166GWTM4M4	61044005	WG	10	U	10	UJ	ug/L	CC
VOA	SW8260B	ACETONE	61044	166GWTM4M4DL	61044005	WG	1000	U	1000	R	ug/L	DL
VOA	SW[illegible]60B	ACETONE	61044	166GW14DM4	610[illegible]07	WG	10	U	10	UJ	ug/L	CC

Parameter Class	Analytical Method	Parameter	SDG	Sample ID	Lab Sample ID	Matrix	Lab Result	Lab Qual	Final Result	Final Qual	Units	Reason
VOA	SW8260B	ACETONE	61044	166GW14DM4DL	61044007	WG	20	U	20	R	ug/L	DL
VOA	SW8260B	ACETONE	61044	166GW06DM4	61044008	WG	10	U	10	UJ	ug/L	CC
VOA	SW8260B	ACETONE	61044	K166ZDRM1M5	61044010	WG	3.6	J	3.6	J	ug/L	CC
VOA	SW8260B	ACETONE	61134	166GW36DM4	61134002	WG	1000	U	1000	UJ	ug/L	CC
VOA	SW8260B	ACETONE	61134	166GW36DM4DL	61134002	WG	5000	U	5000	R	ug/L	DL
VOA	SW8260B	ACETONE	61170	166GW50DM4	61170001	WG	1000	U	1000	UJ	ug/L	CC
VOA	SW8260B	ACETONE	61170	166GW50DM4DL	61170001	WG	2500	U	2500	R	ug/L	DL
VOA	SW8260B	ACETONE	61258	166GW053M4	61258004	WG	1000	U	1000	UJ	ug/L	CC
VOA	SW8260B	ACETONE	61258	166GW054M4	61258005	WG	1000	U	1000	UJ	ug/L	CC
VOA	SW8260B	ACETONE	62650	166GW28DM6	62650003	WG	6.6	J	6.6	J	ug/L	SS
VOA	SW8260B	ACETONE	62650	166GW28DM6DL	62650003	WG	12	JD	12	R	ug/L	DL
VOA	SW8260B	ACETONE	64473	166GW50DM7DL	64473003	WG	2500	U	2500	R	ug/L	DL
VOA	SW8260B	ACETONE	64473	166HW50DM7DL	64473004	WG	2500	U	2500	R	ug/L	DL
VOA	SW8260B	ACETONE	64475	166GW053M7	64475007	WG	2.3	J	10	U	ug/L	BL
VOA	SW8260B	ACETONE	64475	166GW053M7DL	64475007	WG	1000	U	1000	R	ug/L	DL
VOA	SW8260B	ACETONE	64475	166GW054M7DL	64475008	WG	250	U	250	R	ug/L	DL
VOA	SW8260B	ACETONE	64475	166GW055M7DL	64475009	WG	250	U	250	R	ug/L	DL
VOA	SW8260B	ACETONE	64475	166HW055M7	64475010	WG	2.5	J	10	U	ug/L	BL
VOA	SW8260B	ACETONE	64475	166HW055M7DL	64475010	WG	250	U	250	R	ug/L	DL
VOA	SW8260B	ACETONE	64475	166GW07DM7DL	64475011	WG	250	U	250	R	ug/L	DL
VOA	SW8260B	ACETONE	64475	166GW13DM7DL	64475013	WG	1000	U	1000	R	ug/L	DL

Attachment 1 - Changed Qualifiers and Results
Charleston Navel Complex - Zone K, SWMU 166 - 2002 Sampling Events

Parameter Class	Analytical Method	Parameter	SDG	Sample ID	Lab Sample ID	Matrix	Final Result	Initial Qual	Final Result	Final Qual	Units	Reason
VOA	SW8260B	ACETONE	64475	166HW13DM7DL	64475014	WG	1000	U	1000	R	ug/L	DL
VOA	SW8260B	ACETONE	64475	166GW14DM7DL	64475015	WG	20	U	20	R	ug/L	DL
VOA	SW8260B	ACETONE	64475	166GW26DM7DL	64475019	WG	500	U	500	R	ug/L	DL
VOA	SW8260B	ACETONE	64550	166GW34DM7DL	64550003	WG	10000	U	10000	R	ug/L	DL
VOA	SW8260B	ACETONE	64550	166GW36DM7DL	64550004	WG	5000	U	5000	R	ug/L	DL
VOA	SW8260B	ACETONE	64676	163GW003M7DL	64676002	WG	50	U	50	R	ug/L	DL
VOA	SW8260B	ACETONE	64676	166GW040M7DL	64676003	WG	10000	U	10000	R	ug/L	DL
VOA	SW8260B	ACETONE	64676	166GW41DM7DL	64676008	WG	100	U	100	R	ug/L	DL
VOA	SW8260B	ACETONE	64676	166GW42DM7DL	64676009	WG	1000	U	1000	R	ug/L	DL
VOA	SW8260B	ACETONE	64676	166GW44DM7DL	64676011	WG	1000	U	1000	R	ug/L	DL
VOA	SW8260B	ACETONE	64676	166GW35DM7DL	64676012	WG	1000	U	1000	R	ug/L	DL
VOA	SW8260B	ACETONE	71658	166GW053M8DL	71658007	WG	500	U	500	R	ug/L	DL
VOA	SW8260B	ACETONE	71658	166GW054M8DL	71658008	WG	250	U	250	R	ug/L	DL
VOA	SW8260B	ACETONE	71658	166GW055M8DL	71658009	WG	1000	U	1000	R	ug/L	DL
VOA	SW8260B	ACETONE	71658	166GW056M8DL	71658010	WG	1000	U	1000	R	ug/L	DL
VOA	SW8260B	ACETONE	71658	166GW07DM8DL	71658012	WG	250	U	250	R	ug/L	DL
VOA	SW8260B	ACETONE	71658	166GW13DM8DL	71658014	WG	1000	U	1000	R	ug/L	DL
VOA	SW8260B	ACETONE	71658	166GW14DM8DL	71658016	WG	20	U	20	R	ug/L	DL
VOA	SW8260B	ACETONE	71659	166GW17DM8	71659001	WG	10	U	10	UJ	ug/L	CC
VOA	SW8260B	ACETONE	71659	166GW19DM8	71659002	WG	10	U	10	UJ	ug/L	CC
VOA	SW8260B	ACETONE	71659	166GW19DM8DL	71659002	WG	20	U	20	R	ug/L	DL

Attachment 1 - Changed Qualifiers and Results
Charleston Navel Complex - Zone H SMU 166 - 2002 Sampling Events

Parameter Class	Analytical Method	Parameter	SDG	Sample ID	Lab Sample ID	Matrix	Result Value	Lab Qual	Final Result	Final Qual	Units	Reasons
VOA	SW8260B	ACETONE	71659	166GW21DM8	71659003	WG	10	U	10	UJ	ug/L	CC
VOA	SW8260B	ACETONE	71659	166GW25DM8DL	71659004	WG	1000	U	1000	R	ug/L	DL
VOA	SW8260B	ACETONE	71659	166GW26DM8	71659005	WG	250	U	250	UJ	ug/L	CC
VOA	SW8260B	ACETONE	71659	698GW001M8	71659006	WG	11.7	=	11.7	J	ug/L	CC,SS
VOA	SW8260B	ACETONE	71659	698HW001M8	71659007	WG	10.8	=	10.8	J	ug/L	CC,SS
VOA	SW8260B	ACETONE	71766	166GW49DM8DL	71766003	WG	500	U	500	R	ug/L	DL
VOA	SW8260B	ACETONE	71766	166GW50DM8DL	71766004	WG	2000	U	2000	R	ug/L	DL
VOA	SW8260B	ACETONE	71766	166HW50DM8	71766005	WG	500	U	500	UJ	ug/L	CC
VOA	SW8260B	ACETONE	71766	166HW50DM8DL	71766005	WG	5000	U	5000	R	ug/L	DL
VOA	SW8260B	ACETONE	71766	166GW51DM8DL	71766006	WG	1000	U	1000	R	ug/L	DL
VOA	SW8260B	ACETONE	71766	166GW52DM8DL	71766007	WG	1000	U	1000	R	ug/L	DL
VOA	SW8260B	ACETONE	71766	166GWTM3M8DL	71766009	WG	100	U	100	R	ug/L	DL
VOA	SW8260B	ACETONE	71766	166GWTM4M8DL	71766010	WG	2000	U	2000	R	ug/L	DL
VOA	SW8260B	ACETONE	71766	166GW45DM8DL	71766011	WG	500	U	500	R	ug/L	DL
VOA	SW8260B	ACETONE	71766	166GW46DM8DL	71766012	WG	500	U	500	R	ug/L	DL
VOA	SW8260B	ACETONE	71766	166GW48DM8DL	71766014	WG	1000	U	1000	R	ug/L	DL
VOA	SW8260B	ACETONE	71852	166GW040M8DL	71852003	WG	2500	U	2500	R	ug/L	DL
VOA	SW8260B	ACETONE	71852	166HW040M8DL	71852004	WG	2500	U	2500	R	ug/L	DL
VOA	SW8260B	ACETONE	71852	166GW34DM8DL	71852005	WG	10000	U	10000	R	ug/L	DL
VOA	SW8260B	ACETONE	71852	166GW35DM8	71852006	WG	250	U	250	UJ	ug/L	CC
VOA	SW8260B	ACETONE	71852	166GW36DM8DL	71852007	WG	2500	U	2500	R	ug/L	DL

Attachment 1 - Changed Qualifiers and Results
Charleston Navel Complex - Zone K, SWMU 166 - 2002 Sampling Events

Parameter Class	Analytical Method	Analyte	SDG	Sample ID	Lab Sample ID	Matrix	Lab Result	Lab Qual	Final Result	Final Qual	Unit	Reasons
VOA	SW8260B	ACETONE	71852	166GW37DM8	71852008	WG	10	U	10	UJ	ug/L	CC
VOA	SW8260B	ACETONE	71852	166GW37DM8DL	71852008	WG	50	U	50	R	ug/L	DL
VOA	SW8260B	ACETONE	71852	166GW39DM8	71852009	WG	10	U	10	UJ	ug/L	CC
VOA	SW8260B	ACETONE	71852	166GW43DM8DL	71852012	WG	1000	U	1000	R	ug/L	DL
VOA	SW8260B	ACETONE	71852	166GW44DM8	71852013	WG	250	U	250	UJ	ug/L	CC
VOA	SW8260B	ACETONE	72055	163GW003M8	72055003	WG	10	U	10	UJ	ug/L	SS
VOA	SW8260B	ACETONE	72055	163GW003M8DL	72055003	WG	100	U	100	R	ug/L	DL
VOA	SW8260B	ACETONE	72055	163GW03MM8	72055004	WG	10	U	10	UJ	ug/L	SS
VOA	SW8260B	ACETONE	72055	166GW16DM8	72055005	WG	10	U	10	UJ	ug/L	SS
VOA	SW8260B	ACETONE	72055	166GW16DM8DL	72055005	WG	500	U	500	R	ug/L	DL
VOA	SW8260B	ACETONE	72055	166GW33DM8	72055006	WG	10	U	10	UJ	ug/L	SS
VOA	SW8260B	ACETONE	72055	166GW38DM8	72055007	WG	10	U	10	UJ	ug/L	SS
VOA	SW8260B	ACETONE	72055	166GW38DM8DL	72055007	WG	100	U	100	R	ug/L	DL
VOA	SW8260B	ACETONE	72055	163GW005M8	72055008	WG	10	U	10	UJ	ug/L	SS
VOA	SW8260B	BENZENE	56223	166GW32DM1LR	56223003	WG	250	U	250	R	ug/L	DL
VOA	SW8260B	BENZENE	56330	166GW28DM1DL	56330001	WG	25	U	25	R	ug/L	DL
VOA	SW8260B	BENZENE	56330	166GW30DM1LR	56330003	WG	250	U	250	R	ug/L	DL
VOA	SW8260B	BENZENE	56330	166HW30DM1LR	56330004	WG	250	U	250	R	ug/L	DL
VOA	SW8260B	BENZENE	56341	166VDRM001M2	56341001	SO	5.6	U	5.6	UJ	ug/kg	IS
VOA	SW8260B	BENZENE	57725	166GW28DM2DL	57725002	WG	10	U	10	R	ug/L	DL
VOA	SW8260B	BENZENE	57725	166GW29DM2DL	57725003	WG	10	U	10	R	ug/L	DL

Parameter Class	Analytical Method	Parameter	SDG	Sample ID	Lab Sample ID	Matrix	Result	Lab Qual	Final Result	Final Qual	Units	Reasons
VOA	SW8260B	BENZENE	57725	166GW30DM2DL	57725004	WG	50	U	50	R	ug/L	DL
VOA	SW8260B	BENZENE	57725	166HW30DM2DL	57725005	WG	50	U	50	R	ug/L	DL
VOA	SW8260B	BENZENE	57725	166GW31DM2DL	57725006	WG	10	U	10	R	ug/L	DL
VOA	SW8260B	BENZENE	57725	166GW32DM2DL	57725007	WG	50	U	50	R	ug/L	DL
VOA	SW8260B	BENZENE	58856	166GW28DM3DL	58856002	WG	50	U	50	R	ug/L	DL
VOA	SW8260B	BENZENE	58856	166GW29DM3DL	58856003	WG	10	U	10	R	ug/L	DL
VOA	SW8260B	BENZENE	58856	166GW30DM3DL	58856004	WG	250	U	250	R	ug/L	DL
VOA	SW8260B	BENZENE	58856	166GW31DM3DL	58856005	WG	25	U	25	R	ug/L	DL
VOA	SW8260B	BENZENE	58856	166HW31DM3DL	58856006	WG	50	U	50	R	ug/L	DL
VOA	SW8260B	BENZENE	58856	166GW32DM3DL	58856007	WG	250	U	250	R	ug/L	DL
VOA	SW8260B	BENZENE	60789	166GW33DM4DL	60789001	WG	4.4	JD	4.4	R	ug/L	DL
VOA	SW8260B	BENZENE	60789	166GW34DM4DL	60789002	WG	2500	U	2500	R	ug/L	DL
VOA	SW8260B	BENZENE	60789	166GW35DM4DL	60789003	WG	50	U	50	R	ug/L	DL
VOA	SW8260B	BENZENE	60789	166GW37DM4DL	60789004	WG	2500	U	2500	R	ug/L	DL
VOA	SW8260B	BENZENE	60789	166GW39DM4DL	60789005	WG	50	U	50	R	ug/L	DL
VOA	SW8260B	BENZENE	60790	163GW03MM4DL	60790001	WG	250	U	250	R	ug/L	DL
VOA	SW8260B	BENZENE	60790	166GW26DM4DL	60790002	WG	250	U	250	R	ug/L	DL
VOA	SW8260B	BENZENE	60790	166GW25DM4DL	60790003	WG	500	U	500	R	ug/L	DL
VOA	SW8260B	BENZENE	60790	166HW25DM4DL	60790004	WG	500	U	500	R	ug/L	DL
VOA	SW8260B	BENZENE	60790	166GW07DM4DL	60790008	WG	50	U	50	R	ug/L	DL
VOA	SW8260B	BENZENE	60879	166GW41DM4DL	60879001	WG	250	U	250	R	ug/L	DL

Attachment 1 - Changed Qualifiers and Results
Charleston Navel Complex - Zone K, SWMU 166 - 2002 Sampling Events

Parameter Class	Analytical Method	Parameter	Site	Sample Id	Lab Sample Id	Matrix	Result	Validation	Final Result	Final Qual	Units	Reason Code
VOA	SW8260B	BENZENE	60879	166GW42DM4DL	60879002	WG	500	U	500	R	ug/L	DL
VOA	SW8260B	BENZENE	60879	166GW43DM4DL	60879003	WG	1250	U	1250	R	ug/L	DL
VOA	SW8260B	BENZENE	60879	166GW44DM4DL	60879004	WG	250	U	250	R	ug/L	DL
VOA	SW8260B	BENZENE	60879	166GW13DM4DL	60879005	WG	500	U	500	R	ug/L	DL
VOA	SW8260B	BENZENE	61044	166GW38DM4DL	61044001	WG	100	U	100	R	ug/L	DL
VOA	SW8260B	BENZENE	61044	166GW45DM4DL	61044002	WG	500	U	500	R	ug/L	DL
VOA	SW8260B	BENZENE	61044	166GW48DM4DL	61044004	WG	500	U	500	R	ug/L	DL
VOA	SW8260B	BENZENE	61044	166GWTM4M4DL	61044005	WG	500	U	500	R	ug/L	DL
VOA	SW8260B	BENZENE	61044	166GW14DM4DL	61044007	WG	10	U	10	R	ug/L	DL
VOA	SW8260B	BENZENE	61134	166GW36DM4DL	61134002	WG	2500	U	2500	R	ug/L	DL
VOA	SW8260B	BENZENE	61170	166GW50DM4DL	61170001	WG	1250	U	1250	R	ug/L	DL
VOA	SW8260B	BENZENE	62650	166GW28DM6DL	62650003	WG	25	U	25	R	ug/L	DL
VOA	SW8260B	BENZENE	64473	166GW50DM7DL	64473003	WG	1250	U	1250	R	ug/L	DL
VOA	SW8260B	BENZENE	64473	166HW50DM7DL	64473004	WG	1250	U	1250	R	ug/L	DL
VOA	SW8260B	BENZENE	64475	166GW053M7DL	64475007	WG	500	U	500	R	ug/L	DL
VOA	SW8260B	BENZENE	64475	166GW054M7DL	64475008	WG	125	U	125	R	ug/L	DL
VOA	SW8260B	BENZENE	64475	166GW055M7DL	64475009	WG	125	U	125	R	ug/L	DL
VOA	SW8260B	BENZENE	64475	166HW055M7DL	64475010	WG	125	U	125	R	ug/L	DL
VOA	SW8260B	BENZENE	64475	166GW07DM7DL	64475011	WG	125	U	125	R	ug/L	DL
VOA	SW8260B	BENZENE	64475	166GW13DM7DL	64475013	WG	500	U	500	R	ug/L	DL
VOA	SW8260B	BENZENE	64475	166HW13DM7DL	64475014	WG	500	U	500	R	ug/L	DL

Parameter Class	Analytical Method	Parameter	SDG	Sample ID	Lab Sample ID	Matrix	Lab Result	Lab Qual	Final Result	Final Qual	Units	Reason
VOA	SW8260B	BENZENE	64475	166GW14DM7DL	64475015	WG	10	U	10	R	ug/L	DL
VOA	SW8260B	BENZENE	64475	166GW26DM7DL	64475019	WG	250	U	250	R	ug/L	DL
VOA	SW8260B	BENZENE	64550	166GW34DM7DL	64550003	WG	5000	U	5000	R	ug/L	DL
VOA	SW8260B	BENZENE	64550	166GW36DM7DL	64550004	WG	2500	U	2500	R	ug/L	DL
VOA	SW8260B	BENZENE	64676	163GW003M7DL	64676002	WG	25	U	25	R	ug/L	DL
VOA	SW8260B	BENZENE	64676	166GW040M7DL	64676003	WG	5000	U	5000	R	ug/L	DL
VOA	SW8260B	BENZENE	64676	166GW41DM7DL	64676008	WG	50	U	50	R	ug/L	DL
VOA	SW8260B	BENZENE	64676	166GW42DM7DL	64676009	WG	500	U	500	R	ug/L	DL
VOA	SW8260B	BENZENE	64676	166GW44DM7DL	64676011	WG	500	U	500	R	ug/L	DL
VOA	SW8260B	BENZENE	64676	166GW35DM7DL	64676012	WG	500	U	500	R	ug/L	DL
VOA	SW8260B	BENZENE	71658	166GW053M8DL	71658007	WG	250	U	250	R	ug/L	DL
VOA	SW8260B	BENZENE	71658	166GW054M8DL	71658008	WG	125	U	125	R	ug/L	DL
VOA	SW8260B	BENZENE	71658	166GW055M8DL	71658009	WG	500	U	500	R	ug/L	DL
VOA	SW8260B	BENZENE	71658	166GW056M8DL	71658010	WG	500	U	500	R	ug/L	DL
VOA	SW8260B	BENZENE	71658	166GW07DM8DL	71658012	WG	125	U	125	R	ug/L	DL
VOA	SW8260B	BENZENE	71658	166GW13DM8DL	71658014	WG	500	U	500	R	ug/L	DL
VOA	SW8260B	BENZENE	71658	166GW14DM8DL	71658016	WG	10	U	10	R	ug/L	DL
VOA	SW8260B	BENZENE	71659	166GW19DM8DL	71659002	WG	10	U	10	R	ug/L	DL
VOA	SW8260B	BENZENE	71659	166GW25DM8DL	71659004	WG	500	U	500	R	ug/L	DL
VOA	SW8260B	BENZENE	71659	698GW001M8	71659006	WG	2	J	2	J	ug/L	SS
VOA	SW8260B	BENZENE	71659	698HW001M8	71659007	WG	1.6	J	1.6	J	ug/L	SS

Attachment 1 - Changed Qualifiers and Results
Charleston Navel Complex - Zone K, SWMU 166 - 2002 Sampling Events

Parameter Class	Analytical Method	Parameter	SDG	Sample ID	Lab Sample ID	Matrix	Lab Result	Lab Qual	Final Result	Final Qual	Units	Reason
VOA	SW8260B	BENZENE	71766	166GW49DM8DL	71766003	WG	250	U	250	R	ug/L	DL
VOA	SW8260B	BENZENE	71766	166GW50DM8DL	71766004	WG	1000	U	1000	R	ug/L	DL
VOA	SW8260B	BENZENE	71766	166HW50DM8DL	71766005	WG	2500	U	2500	R	ug/L	DL
VOA	SW8260B	BENZENE	71766	166GW51DM8DL	71766006	WG	500	U	500	R	ug/L	DL
VOA	SW8260B	BENZENE	71766	166GW52DM8DL	71766007	WG	500	U	500	R	ug/L	DL
VOA	SW8260B	BENZENE	71766	166GWTM3M8DL	71766009	WG	50	U	50	R	ug/L	DL
VOA	SW8260B	BENZENE	71766	166GWTM4M8DL	71766010	WG	1000	U	1000	R	ug/L	DL
VOA	SW8260B	BENZENE	71766	166GW45DM8DL	71766011	WG	250	U	250	R	ug/L	DL
VOA	SW8260B	BENZENE	71766	166GW46DM8DL	71766012	WG	250	U	250	R	ug/L	DL
VOA	SW8260B	BENZENE	71766	166GW48DM8DL	71766014	WG	500	U	500	R	ug/L	DL
VOA	SW8260B	BENZENE	71852	166GW040M8DL	71852003	WG	1250	U	1250	R	ug/L	DL
VOA	SW8260B	BENZENE	71852	166HW040M8DL	71852004	WG	1250	U	1250	R	ug/L	DL
VOA	SW8260B	BENZENE	71852	166GW34DM8DL	71852005	WG	5000	U	5000	R	ug/L	DL
VOA	SW8260B	BENZENE	71852	166GW36DM8DL	71852007	WG	1250	U	1250	R	ug/L	DL
VOA	SW8260B	BENZENE	71852	166GW37DM8DL	71852008	WG	25	U	25	R	ug/L	DL
VOA	SW8260B	BENZENE	71852	166GW43DM8DL	71852012	WG	500	U	500	R	ug/L	DL
VOA	SW8260B	BENZENE	72055	163GW003M8	72055003	WG	5	U	5	UJ	ug/L	SS
VOA	SW8260B	BENZENE	72055	163GW003M8DL	72055003	WG	50	U	50	R	ug/L	DL
VOA	SW8260B	BENZENE	72055	163GW03MM8	72055004	WG	5	U	5	UJ	ug/L	SS
VOA	SW8260B	BENZENE	72055	166GW16DM8	72055005	WG	0.69	J	0.69	J	ug/L	SS
VOA	SW8260B	BENZENE	72055	166GW16DM8DL	72055005	WG	250	U	250	R	ug/L	DL

Parameter Class	Analytical Method	Parameter	SDG	SampleID	Lab Sample ID	Matrix	Lab Result	Lab Qual	Final Result	Final Qual	Units	Reasons
VOA	SW8260B	BENZENE	72055	166GW33DM8	72055006	WG	1.7	J	1.7	J	ug/L	SS
VOA	SW8260B	BENZENE	72055	166GW38DM8	72055007	WG	5	U	5	UJ	ug/L	SS
VOA	SW8260B	BENZENE	72055	166GW38DM8DL	72055007	WG	50	U	50	R	ug/L	DL
VOA	SW8260B	BENZENE	72055	163GW005M8	72055008	WG	5	U	5	UJ	ug/L	SS
VOA	SW8260B	BROMODICHLOROMETHANE	56223	166GW32DM1LR	56223003	WG	250	U	250	R	ug/L	DL
VOA	SW8260B	BROMODICHLOROMETHANE	56330	166GW28DM1DL	56330001	WG	25	U	25	R	ug/L	DL
VOA	SW8260B	BROMODICHLOROMETHANE	56330	166GW30DM1LR	56330003	WG	250	U	250	R	ug/L	DL
VOA	SW8260B	BROMODICHLOROMETHANE	56330	166HW30DM1LR	56330004	WG	250	U	250	R	ug/L	DL
VOA	SW8260B	BROMODICHLOROMETHANE	56341	166VDRM001M2	56341001	SO	5.6	U	5.6	UJ	ug/kg	IS
VOA	SW8260B	BROMODICHLOROMETHANE	57725	166GW28DM2DL	57725002	WG	10	U	10	R	ug/L	DL
VOA	SW8260B	BROMODICHLOROMETHANE	57725	166GW29DM2DL	57725003	WG	10	U	10	R	ug/L	DL
VOA	SW8260B	BROMODICHLOROMETHANE	57725	166GW30DM2DL	57725004	WG	50	U	50	R	ug/L	DL
VOA	SW8260B	BROMODICHLOROMETHANE	57725	166HW30DM2DL	57725005	WG	50	U	50	R	ug/L	DL
VOA	SW8260B	BROMODICHLOROMETHANE	57725	166GW31DM2DL	57725006	WG	10	U	10	R	ug/L	DL
VOA	SW8260B	BROMODICHLOROMETHANE	57725	166GW32DM2DL	57725007	WG	50	U	50	R	ug/L	DL
VOA	SW8260B	BROMODICHLOROMETHANE	58856	166GW28DM3DL	58856002	WG	50	U	50	R	ug/L	DL
VOA	SW8260B	BROMODICHLOROMETHANE	58856	166GW29DM3DL	58856003	WG	10	U	10	R	ug/L	DL
VOA	SW8260B	BROMODICHLOROMETHANE	58856	166GW30DM3DL	58856004	WG	250	U	250	R	ug/L	DL
VOA	SW8260B	BROMODICHLOROMETHANE	58856	166GW31DM3DL	58856005	WG	25	U	25	R	ug/L	DL
VOA	SW8260B	BROMODICHLOROMETHANE	58856	166HW31DM3DL	58856006	WG	50	U	50	R	ug/L	DL
VOA	SW8260B	BROMODICHLOROMETHANE	58856	166GW32DM3DL	58856007	WG	250	U	250	R	ug/L	DL

Attachment 1 - Changed Qualifiers and Results
Charleston Navel Complex - Zone K, SWMU 166 - 2002 Sampling Events

Parameter Class	Analytical Method	Parameter	SDG	Sample ID	Lab Sample ID	Matrix	Result	Lab Qual	Final Result	Final Qual	Units	Reasons
VOA	SW8260B	BROMODICHLOROMETHANE	60789	166GW33DM4DL	60789001	WG	10	U	10	R	ug/L	DL
VOA	SW8260B	BROMODICHLOROMETHANE	60789	166GW34DM4DL	60789002	WG	2500	U	2500	R	ug/L	DL
VOA	SW8260B	BROMODICHLOROMETHANE	60789	166GW35DM4DL	60789003	WG	50	U	50	R	ug/L	DL
VOA	SW8260B	BROMODICHLOROMETHANE	60789	166GW37DM4DL	60789004	WG	2500	U	2500	R	ug/L	DL
VOA	SW8260B	BROMODICHLOROMETHANE	60789	166GW39DM4DL	60789005	WG	50	U	50	R	ug/L	DL
VOA	SW8260B	BROMODICHLOROMETHANE	60790	163GW03MM4DL	60790001	WG	250	U	250	R	ug/L	DL
VOA	SW8260B	BROMODICHLOROMETHANE	60790	166GW26DM4DL	60790002	WG	250	U	250	R	ug/L	DL
VOA	SW8260B	BROMODICHLOROMETHANE	60790	166GW25DM4DL	60790003	WG	500	U	500	R	ug/L	DL
VOA	SW8260B	BROMODICHLOROMETHANE	60790	166HW25DM4DL	60790004	WG	500	U	500	R	ug/L	DL
VOA	SW8260B	BROMODICHLOROMETHANE	60790	166GW07DM4DL	60790008	WG	50	U	50	R	ug/L	DL
VOA	SW8260B	BROMODICHLOROMETHANE	60879	166GW41DM4DL	60879001	WG	250	U	250	R	ug/L	DL
VOA	SW8260B	BROMODICHLOROMETHANE	60879	166GW42DM4DL	60879002	WG	500	U	500	R	ug/L	DL
VOA	SW8260B	BROMODICHLOROMETHANE	60879	166GW43DM4DL	60879003	WG	1250	U	1250	R	ug/L	DL
VOA	SW8260B	BROMODICHLOROMETHANE	60879	166GW44DM4DL	60879004	WG	250	U	250	R	ug/L	DL
VOA	SW8260B	BROMODICHLOROMETHANE	60879	166GW13DM4DL	60879005	WG	500	U	500	R	ug/L	DL
VOA	SW8260B	BROMODICHLOROMETHANE	61044	166GW38DM4DL	61044001	WG	100	U	100	R	ug/L	DL
VOA	SW8260B	BROMODICHLOROMETHANE	61044	166GW45DM4DL	61044002	WG	500	U	500	R	ug/L	DL
VOA	SW8260B	BROMODICHLOROMETHANE	61044	166GW48DM4DL	61044004	WG	500	U	500	R	ug/L	DL
VOA	SW8260B	BROMODICHLOROMETHANE	61044	166GWTM4M4DL	61044005	WG	500	U	500	R	ug/L	DL
VOA	SW8260B	BROMODICHLOROMETHANE	61044	166GW14DM4DL	61044007	WG	10	U	10	R	ug/L	DL
VOA	SW8260B	BROMODICHLOROMETHANE	61134	166GW36DM4DL	61[illegible]002	WG	2500	U	2500	R	ug/L	DL

Parameter Class	Analytical Method	Parameter	SDG	Sample ID	Lab Sample ID	Matrix	Lab Result	Lab Qual	Final Result	Final Qual	Units	Reasons
VOA	SW8260B	BROMODICHLOROMETHANE	61170	166GW50DM4DL	61170001	WG	1250	U	1250	R	ug/L	DL
VOA	SW8260B	BROMODICHLOROMETHANE	62650	166GW28DM6DL	62650003	WG	25	U	25	R	ug/L	DL
VOA	SW8260B	BROMODICHLOROMETHANE	64473	166GW50DM7DL	64473003	WG	1250	U	1250	R	ug/L	DL
VOA	SW8260B	BROMODICHLOROMETHANE	64473	166HW50DM7DL	64473004	WG	1250	U	1250	R	ug/L	DL
VOA	SW8260B	BROMODICHLOROMETHANE	64475	166GW053M7DL	64475007	WG	500	U	500	R	ug/L	DL
VOA	SW8260B	BROMODICHLOROMETHANE	64475	166GW054M7DL	64475008	WG	125	U	125	R	ug/L	DL
VOA	SW8260B	BROMODICHLOROMETHANE	64475	166GW055M7DL	64475009	WG	125	U	125	R	ug/L	DL
VOA	SW8260B	BROMODICHLOROMETHANE	64475	166HW055M7DL	64475010	WG	125	U	125	R	ug/L	DL
VOA	SW8260B	BROMODICHLOROMETHANE	64475	166GW07DM7DL	64475011	WG	125	U	125	R	ug/L	DL
VOA	SW8260B	BROMODICHLOROMETHANE	64475	166GW13DM7DL	64475013	WG	500	U	500	R	ug/L	DL
VOA	SW8260B	BROMODICHLOROMETHANE	64475	166HW13DM7DL	64475014	WG	500	U	500	R	ug/L	DL
VOA	SW8260B	BROMODICHLOROMETHANE	64475	166GW14DM7DL	64475015	WG	10	U	10	R	ug/L	DL
VOA	SW8260B	BROMODICHLOROMETHANE	64475	166GW26DM7DL	64475019	WG	250	U	250	R	ug/L	DL
VOA	SW8260B	BROMODICHLOROMETHANE	64550	166GW34DM7DL	64550003	WG	5000	U	5000	R	ug/L	DL
VOA	SW8260B	BROMODICHLOROMETHANE	64550	166GW36DM7DL	64550004	WG	2500	U	2500	R	ug/L	DL
VOA	SW8260B	BROMODICHLOROMETHANE	64676	163GW003M7DL	64676002	WG	25	U	25	R	ug/L	DL
VOA	SW8260B	BROMODICHLOROMETHANE	64676	166GW040M7DL	64676003	WG	5000	U	5000	R	ug/L	DL
VOA	SW8260B	BROMODICHLOROMETHANE	64676	166GW41DM7DL	64676008	WG	50	U	50	R	ug/L	DL
VOA	SW8260B	BROMODICHLOROMETHANE	64676	166GW42DM7DL	64676009	WG	500	U	500	R	ug/L	DL
VOA	SW8260B	BROMODICHLOROMETHANE	64676	166GW44DM7DL	64676011	WG	500	U	500	R	ug/L	DL
VOA	SW8260B	BROMODICHLOROMETHANE	64676	166GW35DM7DL	64676012	WG	500	U	500	R	ug/L	DL

Attachment 1 - Changed Qualifiers and Results
Charleston Navel Complex - Zone K, SWMU 166 - 2002 Sampling Events

Parameter Class	Analytical Method	Parameter	Site	Sample ID	Lab Sample ID	Matrix	Lab Result	Lab Qual	Final Result	Final Qual	Units	Reason
VOA	SW8260B	BROMODICHLOROMETHANE	71658	166GW053M8DL	71658007	WG	250	U	250	R	ug/L	DL
VOA	SW8260B	BROMODICHLOROMETHANE	71658	166GW054M8DL	71658008	WG	125	U	125	R	ug/L	DL
VOA	SW8260B	BROMODICHLOROMETHANE	71658	166GW055M8DL	71658009	WG	500	U	500	R	ug/L	DL
VOA	SW8260B	BROMODICHLOROMETHANE	71658	166GW056M8DL	71658010	WG	500	U	500	R	ug/L	DL
VOA	SW8260B	BROMODICHLOROMETHANE	71658	166GW07DM8DL	71658012	WG	125	U	125	R	ug/L	DL
VOA	SW8260B	BROMODICHLOROMETHANE	71658	166GW13DM8DL	71658014	WG	500	U	500	R	ug/L	DL
VOA	SW8260B	BROMODICHLOROMETHANE	71658	166GW14DM8DL	71658016	WG	10	U	10	R	ug/L	DL
VOA	SW8260B	BROMODICHLOROMETHANE	71659	166GW19DM8DL	71659002	WG	10	U	10	R	ug/L	DL
VOA	SW8260B	BROMODICHLOROMETHANE	71659	166GW25DM8DL	71659004	WG	500	U	500	R	ug/L	DL
VOA	SW8260B	BROMODICHLOROMETHANE	71766	166GW49DM8DL	71766003	WG	250	U	250	R	ug/L	DL
VOA	SW8260B	BROMODICHLOROMETHANE	71766	166GW50DM8DL	71766004	WG	1000	U	1000	R	ug/L	DL
VOA	SW8260B	BROMODICHLOROMETHANE	71766	166HW50DM8DL	71766005	WG	2500	U	2500	R	ug/L	DL
VOA	SW8260B	BROMODICHLOROMETHANE	71766	166GW51DM8DL	71766006	WG	500	U	500	R	ug/L	DL
VOA	SW8260B	BROMODICHLOROMETHANE	71766	166GW52DM8DL	71766007	WG	500	U	500	R	ug/L	DL
VOA	SW8260B	BROMODICHLOROMETHANE	71766	166GWTM3M8DL	71766009	WG	50	U	50	R	ug/L	DL
VOA	SW8260B	BROMODICHLOROMETHANE	71766	166GWTM4M8DL	71766010	WG	1000	U	1000	R	ug/L	DL
VOA	SW8260B	BROMODICHLOROMETHANE	71766	166GW45DM8DL	71766011	WG	250	U	250	R	ug/L	DL
VOA	SW8260B	BROMODICHLOROMETHANE	71766	166GW46DM8DL	71766012	WG	250	U	250	R	ug/L	DL
VOA	SW8260B	BROMODICHLOROMETHANE	71766	166GW48DM8DL	71766014	WG	500	U	500	R	ug/L	DL
VOA	SW8260B	BROMODICHLOROMETHANE	71852	166GW040M8DL	71852003	WG	1250	U	1250	R	ug/L	DL
VOA	SW8260B	BROMODICHLOROMETHANE	71852	166HW040M8DL	71852004	WG	1250	U	1250	R	ug/L	DL

Parameter Class	Analytical Method	Parameter	SDG	Sample ID	Lab Sample ID	Matrix	Result	Lab Qual	Final Result	Final Qual	Units	Reasons
VOA	SW8260B	BROMODICHLOROMETHANE	71852	166GW34DM8DL	71852005	WG	5000	U	5000	R	ug/L	DL
VOA	SW8260B	BROMODICHLOROMETHANE	71852	166GW36DM8DL	71852007	WG	1250	U	1250	R	ug/L	DL
VOA	SW8260B	BROMODICHLOROMETHANE	71852	166GW37DM8DL	71852008	WG	25	U	25	R	ug/L	DL
VOA	SW8260B	BROMODICHLOROMETHANE	71852	166GW43DM8DL	71852012	WG	500	U	500	R	ug/L	DL
VOA	SW8260B	BROMODICHLOROMETHANE	72055	163GW003M8	72055003	WG	5	U	5	UJ	ug/L	SS
VOA	SW8260B	BROMODICHLOROMETHANE	72055	163GW003M8DL	72055003	WG	50	U	50	R	ug/L	DL
VOA	SW8260B	BROMODICHLOROMETHANE	72055	163GW03MM8	72055004	WG	5	U	5	UJ	ug/L	SS
VOA	SW8260B	BROMODICHLOROMETHANE	72055	166GW16DM8	72055005	WG	5	U	5	UJ	ug/L	SS
VOA	SW8260B	BROMODICHLOROMETHANE	72055	166GW16DM8DL	72055005	WG	250	U	250	R	ug/L	DL
VOA	SW8260B	BROMODICHLOROMETHANE	72055	166GW33DM8	72055006	WG	5	U	5	UJ	ug/L	SS
VOA	SW8260B	BROMODICHLOROMETHANE	72055	166GW38DM8	72055007	WG	5	U	5	UJ	ug/L	SS
VOA	SW8260B	BROMODICHLOROMETHANE	72055	166GW38DM8DL	72055007	WG	50	U	50	R	ug/L	DL
VOA	SW8260B	BROMODICHLOROMETHANE	72055	163GW005M8	72055008	WG	5	U	5	UJ	ug/L	SS
VOA	SW8260B	BROMOFORM	56223	166GW32DM1LR	56223003	WG	250	U	250	R	ug/L	DL
VOA	SW8260B	BROMOFORM	56330	166GW28DM1DL	56330001	WG	25	U	25	R	ug/L	DL
VOA	SW8260B	BROMOFORM	56330	166GW30DM1LR	56330003	WG	250	U	250	R	ug/L	DL
VOA	SW8260B	BROMOFORM	56330	166HW30DM1LR	56330004	WG	250	U	250	R	ug/L	DL
VOA	SW8260B	BROMOFORM	56341	166VDRM001M2	56341001	SO	5.6	U	5.6	UJ	ug/kg	IS
VOA	SW8260B	BROMOFORM	57725	166GW28DM2DL	57725002	WG	10	U	10	R	ug/L	DL
VOA	SW8260B	BROMOFORM	57725	166GW29DM2DL	57725003	WG	10	U	10	R	ug/L	DL
VOA	SW8260B	BROMOFORM	57725	166GW30DM2DL	57725004	WG	50	U	50	R	ug/L	DL

Attachment 1 - Changed Qualifiers and Results
Charleston Navel Complex - Zone K, SWMU 166 - 2002 Sampling Events

Parameter Class	Analytical Method	Parameter	SDG	Sample ID	Lab Sample ID	Matrix	Lab Result	Lab Qual	Final Result	Final Qual	Units	Reasons
VOA	SW8260B	BROMOFORM	57725	166HW30DM2DL	57725005	WG	50	U	50	R	ug/L	DL
VOA	SW8260B	BROMOFORM	57725	166GW31DM2DL	57725006	WG	10	U	10	R	ug/L	DL
VOA	SW8260B	BROMOFORM	57725	166GW32DM2DL	57725007	WG	50	U	50	R	ug/L	DL
VOA	SW8260B	BROMOFORM	58856	166GW28DM3DL	58856002	WG	50	U	50	R	ug/L	DL
VOA	SW8260B	BROMOFORM	58856	166GW29DM3DL	58856003	WG	10	U	10	R	ug/L	DL
VOA	SW8260B	BROMOFORM	58856	166GW30DM3DL	58856004	WG	250	U	250	R	ug/L	DL
VOA	SW8260B	BROMOFORM	58856	166GW31DM3DL	58856005	WG	25	U	25	R	ug/L	DL
VOA	SW8260B	BROMOFORM	58856	166HW31DM3DL	58856006	WG	50	U	50	R	ug/L	DL
VOA	SW8260B	BROMOFORM	58856	166GW32DM3DL	58856007	WG	250	U	250	R	ug/L	DL
VOA	SW8260B	BROMOFORM	60789	166GW33DM4DL	60789001	WG	10	U	10	R	ug/L	DL
VOA	SW8260B	BROMOFORM	60789	166GW34DM4DL	60789002	WG	2500	U	2500	R	ug/L	DL
VOA	SW8260B	BROMOFORM	60789	166GW35DM4DL	60789003	WG	50	U	50	R	ug/L	DL
VOA	SW8260B	BROMOFORM	60789	166GW37DM4DL	60789004	WG	2500	U	2500	R	ug/L	DL
VOA	SW8260B	BROMOFORM	60789	166GW39DM4DL	60789005	WG	50	U	50	R	ug/L	DL
VOA	SW8260B	BROMOFORM	60790	163GW03MM4DL	60790001	WG	250	U	250	R	ug/L	DL
VOA	SW8260B	BROMOFORM	60790	166GW26DM4DL	60790002	WG	250	U	250	R	ug/L	DL
VOA	SW8260B	BROMOFORM	60790	166GW25DM4DL	60790003	WG	500	U	500	R	ug/L	DL
VOA	SW8260B	BROMOFORM	60790	166HW25DM4DL	60790004	WG	500	U	500	R	ug/L	DL
VOA	SW8260B	BROMOFORM	60790	166GW07DM4DL	60790008	WG	50	U	50	R	ug/L	DL
VOA	SW8260B	BROMOFORM	60879	166GW41DM4DL	60879001	WG	250	U	250	R	ug/L	DL
VOA	SW8260B	BROMOFORM	60879	166GW42DM4DL	60879002	WG	500	U	500	R	ug/L	DL

Parameter Class	Analytical Method	Parameter	SDG	Sample ID	Lab Sample ID	Matrix	Lab Result	Lab Qual	Final Result	Final Qual	Units	Reason
VOA	SW8260B	BROMOFORM	60879	166GW43DM4DL	60879003	WG	1250	U	1250	R	ug/L	DL
VOA	SW8260B	BROMOFORM	60879	166GW44DM4DL	60879004	WG	250	U	250	R	ug/L	DL
VOA	SW8260B	BROMOFORM	60879	166GW13DM4DL	60879005	WG	500	U	500	R	ug/L	DL
VOA	SW8260B	BROMOFORM	61044	166GW38DM4DL	61044001	WG	100	U	100	R	ug/L	DL
VOA	SW8260B	BROMOFORM	61044	166GW45DM4DL	61044002	WG	500	U	500	R	ug/L	DL
VOA	SW8260B	BROMOFORM	61044	166GW48DM4DL	61044004	WG	500	U	500	R	ug/L	DL
VOA	SW8260B	BROMOFORM	61044	166GWTM4M4DL	61044005	WG	500	U	500	R	ug/L	DL
VOA	SW8260B	BROMOFORM	61044	166GW14DM4DL	61044007	WG	10	U	10	R	ug/L	DL
VOA	SW8260B	BROMOFORM	61134	166GW36DM4DL	61134002	WG	2500	U	2500	R	ug/L	DL
VOA	SW8260B	BROMOFORM	61170	166GW50DM4DL	61170001	WG	1250	U	1250	R	ug/L	DL
VOA	SW8260B	BROMOFORM	61258	166HW16DM4	61258001	WG	250	U	250	UJ	ug/L	CC
VOA	SW8260B	BROMOFORM	61258	166GW16DM4	61258002	WG	250	U	250	UJ	ug/L	CC
VOA	SW8260B	BROMOFORM	61258	166GWIN3M4	61258003	WG	5	U	5	UJ	ug/L	CC
VOA	SW8260B	BROMOFORM	61258	166GW053M4	61258004	WG	500	U	500	UJ	ug/L	CC
VOA	SW8260B	BROMOFORM	61258	166GW054M4	61258005	WG	500	U	500	UJ	ug/L	CC
VOA	SW8260B	BROMOFORM	61258	166GW055M4	61258006	WG	125	U	125	UJ	ug/L	CC
VOA	SW8260B	BROMOFORM	61258	166HW055M4	61258007	WG	125	U	125	UJ	ug/L	CC
VOA	SW8260B	BROMOFORM	61258	698GW001M4	61258008	WG	5	U	5	UJ	ug/L	CC
VOA	SW8260B	BROMOFORM	61258	698HW001M4	61258009	WG	5	U	5	UJ	ug/L	CC
VOA	SW8260B	BROMOFORM	61258	163GW005M4	61258011	WG	5	U	5	UJ	ug/L	CC
VOA	SW8260B	BROMOFORM	61326	166GW17DM4	61326001	WG	5	U	5	UJ	ug/L	CC

Attachment 1 - Changed Qualifiers and Results
Charleston Navel Complex - Zone K, SWMU 166 - 2002 Sampling Events

Parameter Class	Analytical Method	Parameter	SDG	Sample ID	Lab Sample ID	Matrix	Lab Result	Lab Qual	Final Result	Final Qual	Units	Reason
VOA	SW8260B	BROMOFORM	61326	166GW017M4	61326002	WG	5	U	5	UJ	ug/L	CC
VOA	SW8260B	BROMOFORM	61326	166GW19DM4	61326003	WG	5	U	5	UJ	ug/L	CC
VOA	SW8260B	BROMOFORM	61326	166GW21DM4	61326004	WG	5	U	5	UJ	ug/L	CC
VOA	SW8260B	BROMOFORM	62650	166GW28DM6DL	62650003	WG	25	U	25	R	ug/L	DL
VOA	SW8260B	BROMOFORM	64473	166GW50DM7DL	64473003	WG	1250	U	1250	R	ug/L	DL
VOA	SW8260B	BROMOFORM	64473	166HW50DM7DL	64473004	WG	1250	U	1250	R	ug/L	DL
VOA	SW8260B	BROMOFORM	64475	166GW053M7DL	64475007	WG	500	U	500	R	ug/L	DL
VOA	SW8260B	BROMOFORM	64475	166GW054M7DL	64475008	WG	125	U	125	R	ug/L	DL
VOA	SW8260B	BROMOFORM	64475	166GW055M7DL	64475009	WG	125	U	125	R	ug/L	DL
VOA	SW8260B	BROMOFORM	64475	166HW055M7DL	64475010	WG	125	U	125	R	ug/L	DL
VOA	SW8260B	BROMOFORM	64475	166GW07DM7DL	64475011	WG	125	U	125	R	ug/L	DL
VOA	SW8260B	BROMOFORM	64475	166GW13DM7DL	64475013	WG	500	U	500	R	ug/L	DL
VOA	SW8260B	BROMOFORM	64475	166HW13DM7DL	64475014	WG	500	U	500	R	ug/L	DL
VOA	SW8260B	BROMOFORM	64475	166GW14DM7DL	64475015	WG	10	U	10	R	ug/L	DL
VOA	SW8260B	BROMOFORM	64475	166GW26DM7DL	64475019	WG	250	U	250	R	ug/L	DL
VOA	SW8260B	BROMOFORM	64550	166GW34DM7DL	64550003	WG	5000	U	5000	R	ug/L	DL
VOA	SW8260B	BROMOFORM	64550	166GW36DM7DL	64550004	WG	2500	U	2500	R	ug/L	DL
VOA	SW8260B	BROMOFORM	64676	163GW003M7DL	64676002	WG	25	U	25	R	ug/L	DL
VOA	SW8260B	BROMOFORM	64676	166GW040M7DL	64676003	WG	5000	U	5000	R	ug/L	DL
VOA	SW8260B	BROMOFORM	64676	166GW41DM7DL	64676008	WG	50	U	50	R	ug/L	DL
VOA	SW8260B	BROMOFORM	64676	166GW42DM7DL	646[illegible]09	WG	500	U	500	R	ug/L	DL

Parameter Class	Analytical Method	Parameter	SDG	Sample ID	Lab Sample ID	Matrix	Lab Result	Lab Qual	Final Result	Final Qual	Units	Reason
VOA	SW8260B	BROMOFORM	64676	166GW44DM7DL	64676011	WG	500	U	500	R	ug/L	DL
VOA	SW8260B	BROMOFORM	64676	166GW35DM7DL	64676012	WG	500	U	500	R	ug/L	DL
VOA	SW8260B	BROMOFORM	71658	166GW053M8DL	71658007	WG	250	U	250	R	ug/L	DL
VOA	SW8260B	BROMOFORM	71658	166GW054M8DL	71658008	WG	125	U	125	R	ug/L	DL
VOA	SW8260B	BROMOFORM	71658	166GW055M8DL	71658009	WG	500	U	500	R	ug/L	DL
VOA	SW8260B	BROMOFORM	71658	166GW056M8DL	71658010	WG	500	U	500	R	ug/L	DL
VOA	SW8260B	BROMOFORM	71658	166GW07DM8DL	71658012	WG	125	U	125	R	ug/L	DL
VOA	SW8260B	BROMOFORM	71658	166GW13DM8DL	71658014	WG	500	U	500	R	ug/L	DL
VOA	SW8260B	BROMOFORM	71658	166GW14DM8DL	71658016	WG	10	U	10	R	ug/L	DL
VOA	SW8260B	BROMOFORM	71659	166GW19DM8DL	71659002	WG	10	U	10	R	ug/L	DL
VOA	SW8260B	BROMOFORM	71659	166GW25DM8DL	71659004	WG	500	U	500	R	ug/L	DL
VOA	SW8260B	BROMOFORM	71766	166GW49DM8DL	71766003	WG	250	U	250	R	ug/L	DL
VOA	SW8260B	BROMOFORM	71766	166GW50DM8DL	71766004	WG	1000	U	1000	R	ug/L	DL
VOA	SW8260B	BROMOFORM	71766	166HW50DM8DL	71766005	WG	2500	U	2500	R	ug/L	DL
VOA	SW8260B	BROMOFORM	71766	166GW51DM8DL	71766006	WG	500	U	500	R	ug/L	DL
VOA	SW8260B	BROMOFORM	71766	166GW52DM8DL	71766007	WG	500	U	500	R	ug/L	DL
VOA	SW8260B	BROMOFORM	71766	166GWTM3M8DL	71766009	WG	50	U	50	R	ug/L	DL
VOA	SW8260B	BROMOFORM	71766	166GWTM4M8DL	71766010	WG	1000	U	1000	R	ug/L	DL
VOA	SW8260B	BROMOFORM	71766	166GW45DM8DL	71766011	WG	250	U	250	R	ug/L	DL
VOA	SW8260B	BROMOFORM	71766	166GW46DM8DL	71766012	WG	250	U	250	R	ug/L	DL
VOA	SW8260B	BROMOFORM	71766	166GW48DM8DL	71766014	WG	500	U	500	R	ug/L	DL

Attachment 1 - Changed Qualifiers and Results
Charleston Navel Complex - Zone K, SWMU 166 - 2002 Sampling Events

Parameter Class	Analytical Method	Parameter	SDG	Sample ID	Lab Sample ID	Matrix	Result	Lab Qual	Final Result	Final Qual	Units	Reason
VOA	SW8260B	BROMOFORM	71852	166GW040M8DL	71852003	WG	1250	U	1250	R	ug/L	DL
VOA	SW8260B	BROMOFORM	71852	166HW040M8DL	71852004	WG	1250	U	1250	R	ug/L	DL
VOA	SW8260B	BROMOFORM	71852	166GW34DM8DL	71852005	WG	5000	U	5000	R	ug/L	DL
VOA	SW8260B	BROMOFORM	71852	166GW36DM8DL	71852007	WG	1250	U	1250	R	ug/L	DL
VOA	SW8260B	BROMOFORM	71852	166GW37DM8DL	71852008	WG	25	U	25	R	ug/L	DL
VOA	SW8260B	BROMOFORM	71852	166GW43DM8DL	71852012	WG	500	U	500	R	ug/L	DL
VOA	SW8260B	BROMOFORM	72055	163GW003M8	72055003	WG	5	U	5	UJ	ug/L	SS
VOA	SW8260B	BROMOFORM	72055	163GW003M8DL	72055003	WG	50	U	50	R	ug/L	DL
VOA	SW8260B	BROMOFORM	72055	163GW03MM8	72055004	WG	5	U	5	UJ	ug/L	SS
VOA	SW8260B	BROMOFORM	72055	166GW16DM8	72055005	WG	5	U	5	UJ	ug/L	SS
VOA	SW8260B	BROMOFORM	72055	166GW16DM8DL	72055005	WG	250	U	250	R	ug/L	DL
VOA	SW8260B	BROMOFORM	72055	166GW33DM8	72055006	WG	5	U	5	UJ	ug/L	SS
VOA	SW8260B	BROMOFORM	72055	166GW38DM8	72055007	WG	5	U	5	UJ	ug/L	SS
VOA	SW8260B	BROMOFORM	72055	166GW38DM8DL	72055007	WG	50	U	50	R	ug/L	DL
VOA	SW8260B	BROMOFORM	72055	163GW005M8	72055008	WG	5	U	5	UJ	ug/L	SS
VOA	SW8260B	BROMOMETHANE	56223	166GW32DM1LR	56223003	WG	500	U	500	R	ug/L	DL
VOA	SW8260B	BROMOMETHANE	56330	166GW28DM1DL	56330001	WG	50	U	50	R	ug/L	DL
VOA	SW8260B	BROMOMETHANE	56330	166GW30DM1LR	56330003	WG	500	U	500	R	ug/L	DL
VOA	SW8260B	BROMOMETHANE	56330	166HW30DM1LR	56330004	WG	500	U	500	R	ug/L	DL
VOA	SW8260B	BROMOMETHANE	56341	166VDRM001M2	56341001	SO	11.2	U	11.2	UJ	ug/kg	IS
VOA	SW8260B	BROMOMETHANE	57725	166GW28DM2DL	57725002	WG	10	U	10	R	ug/L	DL

Parameter Class	Analytical Method	Parameter	SDG	Sample ID	Lab Sample ID	Matrix	Lab Result	Laboratory	Final Result	Final Qualifier	Units	Reason
VOA	SW8260B	BROMOMETHANE	57725	166GW29DM2DL	57725003	WG	10	U	10	R	ug/L	DL
VOA	SW8260B	BROMOMETHANE	57725	166GW30DM2DL	57725004	WG	50	U	50	R	ug/L	DL
VOA	SW8260B	BROMOMETHANE	57725	166HW30DM2DL	57725005	WG	50	U	50	R	ug/L	DL
VOA	SW8260B	BROMOMETHANE	57725	166GW31DM2DL	57725006	WG	10	U	10	R	ug/L	DL
VOA	SW8260B	BROMOMETHANE	57725	166GW32DM2DL	57725007	WG	50	U	50	R	ug/L	DL
VOA	SW8260B	BROMOMETHANE	58856	166GW28DM3DL	58856002	WG	100	U	100	R	ug/L	DL
VOA	SW8260B	BROMOMETHANE	58856	166GW29DM3DL	58856003	WG	20	U	20	R	ug/L	DL
VOA	SW8260B	BROMOMETHANE	58856	166GW30DM3DL	58856004	WG	500	U	500	R	ug/L	DL
VOA	SW8260B	BROMOMETHANE	58856	166GW31DM3DL	58856005	WG	50	U	50	R	ug/L	DL
VOA	SW8260B	BROMOMETHANE	58856	166HW31DM3DL	58856006	WG	100	U	100	R	ug/L	DL
VOA	SW8260B	BROMOMETHANE	58856	166GW32DM3DL	58856007	WG	500	U	500	R	ug/L	DL
VOA	SW8260B	BROMOMETHANE	60789	166GW33DM4DL	60789001	WG	20	U	20	R	ug/L	DL
VOA	SW8260B	BROMOMETHANE	60789	166GW34DM4DL	60789002	WG	5000	U	5000	R	ug/L	DL
VOA	SW8260B	BROMOMETHANE	60789	166GW35DM4DL	60789003	WG	100	U	100	R	ug/L	DL
VOA	SW8260B	BROMOMETHANE	60789	166GW37DM4DL	60789004	WG	5000	U	5000	R	ug/L	DL
VOA	SW8260B	BROMOMETHANE	60789	166GW39DM4DL	60789005	WG	100	U	100	R	ug/L	DL
VOA	SW8260B	BROMOMETHANE	60790	163GW03MM4DL	60790001	WG	500	U	500	R	ug/L	DL
VOA	SW8260B	BROMOMETHANE	60790	166GW26DM4DL	60790002	WG	500	U	500	R	ug/L	DL
VOA	SW8260B	BROMOMETHANE	60790	166GW25DM4DL	60790003	WG	1000	U	1000	R	ug/L	DL
VOA	SW8260B	BROMOMETHANE	60790	166HW25DM4DL	60790004	WG	1000	U	1000	R	ug/L	DL
VOA	SW8260B	BROMOMETHANE	60790	166GW07DM4DL	60790008	WG	100	U	100	R	ug/L	DL

Attachment 1 - Changed Qualifiers and Results
Charleston Navel Complex - Zone K, SWMU 166 - 2002 Sampling Events

Parameter Class	Analytical Method	Parameter	SDG	Sample ID	Lab Sample ID	Matrix	Lab Result	Lab Qual	Final Result	Final Qual	Units	Response
VOA	SW8260B	BROMOMETHANE	60879	166GW41DM4DL	60879001	WG	500	U	500	R	ug/L	DL
VOA	SW8260B	BROMOMETHANE	60879	166GW42DM4DL	60879002	WG	1000	U	1000	R	ug/L	DL
VOA	SW8260B	BROMOMETHANE	60879	166GW43DM4DL	60879003	WG	2500	U	2500	R	ug/L	DL
VOA	SW8260B	BROMOMETHANE	60879	166GW44DM4DL	60879004	WG	500	U	500	R	ug/L	DL
VOA	SW8260B	BROMOMETHANE	60879	166GW13DM4DL	60879005	WG	1000	U	1000	R	ug/L	DL
VOA	SW8260B	BROMOMETHANE	61044	166GW38DM4DL	61044001	WG	200	U	200	R	ug/L	DL
VOA	SW8260B	BROMOMETHANE	61044	166GW45DM4DL	61044002	WG	1000	U	1000	R	ug/L	DL
VOA	SW8260B	BROMOMETHANE	61044	166GW48DM4DL	61044004	WG	1000	U	1000	R	ug/L	DL
VOA	SW8260B	BROMOMETHANE	61044	166GWTM4M4DL	61044005	WG	1000	U	1000	R	ug/L	DL
VOA	SW8260B	BROMOMETHANE	61044	166GW14DM4DL	61044007	WG	20	U	20	R	ug/L	DL
VOA	SW8260B	BROMOMETHANE	61134	166GW36DM4DL	61134002	WG	5000	U	5000	R	ug/L	DL
VOA	SW8260B	BROMOMETHANE	61170	166GW50DM4DL	61170001	WG	2500	U	2500	R	ug/L	DL
VOA	SW8260B	BROMOMETHANE	62650	166GW28DM6DL	62650003	WG	50	U	50	R	ug/L	DL
VOA	SW8260B	BROMOMETHANE	64473	166GW50DM7DL	64473003	WG	2500	U	2500	R	ug/L	DL
VOA	SW8260B	BROMOMETHANE	64473	166HW50DM7DL	64473004	WG	2500	U	2500	R	ug/L	DL
VOA	SW8260B	BROMOMETHANE	64475	166GW053M7DL	64475007	WG	1000	U	1000	R	ug/L	DL
VOA	SW8260B	BROMOMETHANE	64475	166GW054M7DL	64475008	WG	250	U	250	R	ug/L	DL
VOA	SW8260B	BROMOMETHANE	64475	166GW055M7DL	64475009	WG	250	U	250	R	ug/L	DL
VOA	SW8260B	BROMOMETHANE	64475	166HW055M7DL	64475010	WG	250	U	250	R	ug/L	DL
VOA	SW8260B	BROMOMETHANE	64475	166GW07DM7DL	64475011	WG	250	U	250	R	ug/L	DL
VOA	SW8260B	BROMOMETHANE	64475	166GW13DM7DL	64475013	WG	1000	U	1000	R	ug/L	DL

Parameter Class	Analytical Method	Parameter	SDG	Sample ID	Lab Sample ID	Matrix	Lab Result	Lab Qual	Final Result	Final Qual	Units	Reason
VOA	SW8260B	BROMOMETHANE	64475	166HW13DM7DL	64475014	WG	1000	U	1000	R	ug/L	DL
VOA	SW8260B	BROMOMETHANE	64475	166GW14DM7DL	64475015	WG	20	U	20	R	ug/L	DL
VOA	SW8260B	BROMOMETHANE	64475	166GW26DM7DL	64475019	WG	500	U	500	R	ug/L	DL
VOA	SW8260B	BROMOMETHANE	64550	166GW34DM7DL	64550003	WG	10000	U	10000	R	ug/L	DL
VOA	SW8260B	BROMOMETHANE	64550	166GW36DM7DL	64550004	WG	5000	U	5000	R	ug/L	DL
VOA	SW8260B	BROMOMETHANE	64676	163GW003M7DL	64676002	WG	50	U	50	R	ug/L	DL
VOA	SW8260B	BROMOMETHANE	64676	166GW040M7DL	64676003	WG	10000	U	10000	R	ug/L	DL
VOA	SW8260B	BROMOMETHANE	64676	166GW41DM7DL	64676008	WG	100	U	100	R	ug/L	DL
VOA	SW8260B	BROMOMETHANE	64676	166GW42DM7DL	64676009	WG	1000	U	1000	R	ug/L	DL
VOA	SW8260B	BROMOMETHANE	64676	166GW44DM7DL	64676011	WG	1000	U	1000	R	ug/L	DL
VOA	SW8260B	BROMOMETHANE	64676	166GW35DM7DL	64676012	WG	1000	U	1000	R	ug/L	DL
VOA	SW8260B	BROMOMETHANE	71658	166GW053M8DL	71658007	WG	500	U	500	R	ug/L	DL
VOA	SW8260B	BROMOMETHANE	71658	166GW054M8DL	71658008	WG	250	U	250	R	ug/L	DL
VOA	SW8260B	BROMOMETHANE	71658	166GW055M8DL	71658009	WG	1000	U	1000	R	ug/L	DL
VOA	SW8260B	BROMOMETHANE	71658	166GW056M8DL	71658010	WG	1000	U	1000	R	ug/L	DL
VOA	SW8260B	BROMOMETHANE	71658	166GW07DM8DL	71658012	WG	250	U	250	R	ug/L	DL
VOA	SW8260B	BROMOMETHANE	71658	166GW13DM8DL	71658014	WG	1000	U	1000	R	ug/L	DL
VOA	SW8260B	BROMOMETHANE	71658	166GW14DM8DL	71658016	WG	20	U	20	R	ug/L	DL
VOA	SW8260B	BROMOMETHANE	71659	166GW19DM8DL	71659002	WG	20	U	20	R	ug/L	DL
VOA	SW8260B	BROMOMETHANE	71659	166GW25DM8DL	71659004	WG	1000	U	1000	R	ug/L	DL
VOA	SW8260B	BROMOMETHANE	71766	166GW49DM8DL	71766003	WG	500	U	500	R	ug/L	DL

Attachment 1 - Changed Qualifiers and Results
Charleston Navel Complex - Zone K, SWMU 166 - 2002 Sampling Events

Parameter Class	Analytical Method	Parameter	SDG	Sample Id	Lab Sample Id	Matrix	Lab Result	Lab Qual	Final Result	Final Qual	Units	Reasons
VOA	SW8260B	BROMOMETHANE	71766	166GW50DM8DL	71766004	WG	2000	U	2000	R	ug/L	DL
VOA	SW8260B	BROMOMETHANE	71766	166HW50DM8DL	71766005	WG	5000	U	5000	R	ug/L	DL
VOA	SW8260B	BROMOMETHANE	71766	166GW51DM8DL	71766006	WG	1000	U	1000	R	ug/L	DL
VOA	SW8260B	BROMOMETHANE	71766	166GW52DM8DL	71766007	WG	1000	U	1000	R	ug/L	DL
VOA	SW8260B	BROMOMETHANE	71766	166GWTM3M8DL	71766009	WG	100	U	100	R	ug/L	DL
VOA	SW8260B	BROMOMETHANE	71766	166GWTM4M8DL	71766010	WG	2000	U	2000	R	ug/L	DL
VOA	SW8260B	BROMOMETHANE	71766	166GW45DM8DL	71766011	WG	500	U	500	R	ug/L	DL
VOA	SW8260B	BROMOMETHANE	71766	166GW46DM8DL	71766012	WG	500	U	500	R	ug/L	DL
VOA	SW8260B	BROMOMETHANE	71766	166GW48DM8DL	71766014	WG	1000	U	1000	R	ug/L	DL
VOA	SW8260B	BROMOMETHANE	71852	166GW040M8DL	71852003	WG	2500	U	2500	R	ug/L	DL
VOA	SW8260B	BROMOMETHANE	71852	166HW040M8DL	71852004	WG	2500	U	2500	R	ug/L	DL
VOA	SW8260B	BROMOMETHANE	71852	166GW34DM8DL	71852005	WG	10000	U	10000	R	ug/L	DL
VOA	SW8260B	BROMOMETHANE	71852	166GW36DM8DL	71852007	WG	2500	U	2500	R	ug/L	DL
VOA	SW8260B	BROMOMETHANE	71852	166GW37DM8DL	71852008	WG	50	U	50	R	ug/L	DL
VOA	SW8260B	BROMOMETHANE	71852	166GW43DM8DL	71852012	WG	1000	U	1000	R	ug/L	DL
VOA	SW8260B	BROMOMETHANE	72055	163GW003M8	72055003	WG	10	U	10	UJ	ug/L	SS
VOA	SW8260B	BROMOMETHANE	72055	163GW003M8DL	72055003	WG	100	U	100	R	ug/L	DL
VOA	SW8260B	BROMOMETHANE	72055	163GW03MM8	72055004	WG	10	U	10	UJ	ug/L	SS
VOA	SW8260B	BROMOMETHANE	72055	166GW16DM8	72055005	WG	10	U	10	UJ	ug/L	SS
VOA	SW8260B	BROMOMETHANE	72055	166GW16DM8DL	72055005	WG	500	U	500	R	ug/L	DL
VOA	SW8260B	BROMOMETHANE	72055	166GW33DM8	72055006	WG	10	U	10	UJ	ug/L	SS

Parameter Class	Analytical Method	Parameter	SPID	Sample ID	Lab Sample ID	Matrix	Lab Result	Old Qual	Final Result	Final Qual	Units	Reason
VOA	SW8260B	BROMOMETHANE	72055	166GW38DM8	72055007	WG	10	U	10	UJ	ug/L	SS
VOA	SW8260B	BROMOMETHANE	72055	166GW38DM8DL	72055007	WG	100	U	100	R	ug/L	DL
VOA	SW8260B	BROMOMETHANE	72055	163GW005M8	72055008	WG	10	U	10	UJ	ug/L	SS
VOA	SW8260B	CARBON DISULFIDE	56223	166GW32DM1LR	56223003	WG	250	U	250	R	ug/L	DL
VOA	SW8260B	CARBON DISULFIDE	56330	166GW28DM1DL	56330001	WG	25	U	25	R	ug/L	DL
VOA	SW8260B	CARBON DISULFIDE	56330	166GW30DM1LR	56330003	WG	250	U	250	R	ug/L	DL
VOA	SW8260B	CARBON DISULFIDE	56330	166HW30DM1LR	56330004	WG	250	U	250	R	ug/L	DL
VOA	SW8260B	CARBON DISULFIDE	56341	166VDRM001M2	56341001	SO	5.6	U	5.6	UJ	ug/kg	IS
VOA	SW8260B	CARBON DISULFIDE	57725	166GW28DM2DL	57725002	WG	50	U	50	R	ug/L	DL
VOA	SW8260B	CARBON DISULFIDE	57725	166GW29DM2DL	57725003	WG	50	U	50	R	ug/L	DL
VOA	SW8260B	CARBON DISULFIDE	57725	166GW30DM2DL	57725004	WG	250	U	250	R	ug/L	DL
VOA	SW8260B	CARBON DISULFIDE	57725	166HW30DM2DL	57725005	WG	250	U	250	R	ug/L	DL
VOA	SW8260B	CARBON DISULFIDE	57725	166GW31DM2DL	57725006	WG	50	U	50	R	ug/L	DL
VOA	SW8260B	CARBON DISULFIDE	57725	166GW32DM2DL	57725007	WG	250	U	250	R	ug/L	DL
VOA	SW8260B	CARBON DISULFIDE	58856	166GW28DM3DL	58856002	WG	50	U	50	R	ug/L	DL
VOA	SW8260B	CARBON DISULFIDE	58856	166GW29DM3DL	58856003	WG	10	U	10	R	ug/L	DL
VOA	SW8260B	CARBON DISULFIDE	58856	166GW30DM3DL	58856004	WG	250	U	250	R	ug/L	DL
VOA	SW8260B	CARBON DISULFIDE	58856	166GW31DM3DL	58856005	WG	25	U	25	R	ug/L	DL
VOA	SW8260B	CARBON DISULFIDE	58856	166HW31DM3DL	58856006	WG	50	U	50	R	ug/L	DL
VOA	SW8260B	CARBON DISULFIDE	58856	166GW32DM3DL	58856007	WG	250	U	250	R	ug/L	DL
VOA	SW8260B	CARBON DISULFIDE	60789	166GW33DM4DL	60789001	WG	10	U	10	R	ug/L	DL

Attachment 1 - Changed Qualifiers and Results
Charleston Navel Complex - Zone K, SWMU 166 - 2002 Sampling Events

Parameter Class	Analytical Method	Parameter	SDG	Sample ID	Lab Sample ID	Matrix	Result	Qualifier	Final Result	Final Qualifier	Units	Remarks
VOA	SW8260B	CARBON DISULFIDE	60789	166GW34DM4DL	60789002	WG	2500	U	2500	R	ug/L	DL
VOA	SW8260B	CARBON DISULFIDE	60789	166GW35DM4DL	60789003	WG	50	U	50	R	ug/L	DL
VOA	SW8260B	CARBON DISULFIDE	60789	166GW37DM4DL	60789004	WG	2500	U	2500	R	ug/L	DL
VOA	SW8260B	CARBON DISULFIDE	60789	166GW39DM4DL	60789005	WG	50	U	50	R	ug/L	DL
VOA	SW8260B	CARBON DISULFIDE	60790	163GW03MM4DL	60790001	WG	250	U	250	R	ug/L	DL
VOA	SW8260B	CARBON DISULFIDE	60790	166GW26DM4DL	60790002	WG	250	U	250	R	ug/L	DL
VOA	SW8260B	CARBON DISULFIDE	60790	166GW25DM4DL	60790003	WG	500	U	500	R	ug/L	DL
VOA	SW8260B	CARBON DISULFIDE	60790	166HW25DM4DL	60790004	WG	500	U	500	R	ug/L	DL
VOA	SW8260B	CARBON DISULFIDE	60790	166GW07DM4DL	60790008	WG	50	U	50	R	ug/L	DL
VOA	SW8260B	CARBON DISULFIDE	60879	166GW41DM4DL	60879001	WG	250	U	250	R	ug/L	DL
VOA	SW8260B	CARBON DISULFIDE	60879	166GW42DM4DL	60879002	WG	500	U	500	R	ug/L	DL
VOA	SW8260B	CARBON DISULFIDE	60879	166GW43DM4DL	60879003	WG	1250	U	1250	R	ug/L	DL
VOA	SW8260B	CARBON DISULFIDE	60879	166GW44DM4DL	60879004	WG	250	U	250	R	ug/L	DL
VOA	SW8260B	CARBON DISULFIDE	60879	166GW13DM4DL	60879005	WG	500	U	500	R	ug/L	DL
VOA	SW8260B	CARBON DISULFIDE	61044	166GW38DM4DL	61044001	WG	100	U	100	R	ug/L	DL
VOA	SW8260B	CARBON DISULFIDE	61044	166GW45DM4DL	61044002	WG	500	U	500	R	ug/L	DL
VOA	SW8260B	CARBON DISULFIDE	61044	166GW48DM4DL	61044004	WG	500	U	500	R	ug/L	DL
VOA	SW8260B	CARBON DISULFIDE	61044	166GWTM4M4DL	61044005	WG	500	U	500	R	ug/L	DL
VOA	SW8260B	CARBON DISULFIDE	61044	166GW14DM4DL	61044007	WG	10	U	10	R	ug/L	DL
VOA	SW8260B	CARBON DISULFIDE	61134	166GW36DM4DL	61134002	WG	2500	U	2500	R	ug/L	DL
VOA	SW8260B	CARBON DISULFIDE	61170	166GW50DM4DL	61170[illegible]1	WG	1250	U	1250	R	ug/L	DL

Parameter Class	Analytical Method	Parameter	SDG	Sample ID	Lab Sample ID	Matrix	Lab Result	Lab Qual	Final Result	Final Qual	Unit	Reasons
VOA	SW8260B	CARBON DISULFIDE	62650	166GW28DM6DL	62650003	WG	25	U	25	R	ug/L	DL
VOA	SW8260B	CARBON DISULFIDE	64473	166GW50DM7DL	64473003	WG	1250	U	1250	R	ug/L	DL
VOA	SW8260B	CARBON DISULFIDE	64473	166HW50DM7DL	64473004	WG	1250	U	1250	R	ug/L	DL
VOA	SW8260B	CARBON DISULFIDE	64475	166GW053M7DL	64475007	WG	500	U	500	R	ug/L	DL
VOA	SW8260B	CARBON DISULFIDE	64475	166GW054M7DL	64475008	WG	125	U	125	R	ug/L	DL
VOA	SW8260B	CARBON DISULFIDE	64475	166GW055M7DL	64475009	WG	125	U	125	R	ug/L	DL
VOA	SW8260B	CARBON DISULFIDE	64475	166HW055M7DL	64475010	WG	125	U	125	R	ug/L	DL
VOA	SW8260B	CARBON DISULFIDE	64475	166GW07DM7DL	64475011	WG	125	U	125	R	ug/L	DL
VOA	SW8260B	CARBON DISULFIDE	64475	166GW13DM7DL	64475013	WG	500	U	500	R	ug/L	DL
VOA	SW8260B	CARBON DISULFIDE	64475	166HW13DM7DL	64475014	WG	500	U	500	R	ug/L	DL
VOA	SW8260B	CARBON DISULFIDE	64475	166GW14DM7DL	64475015	WG	10	U	10	R	ug/L	DL
VOA	SW8260B	CARBON DISULFIDE	64475	166GW26DM7DL	64475019	WG	250	U	250	R	ug/L	DL
VOA	SW8260B	CARBON DISULFIDE	64550	166GW34DM7DL	64550003	WG	5000	U	5000	R	ug/L	DL
VOA	SW8260B	CARBON DISULFIDE	64550	166GW36DM7DL	64550004	WG	2500	U	2500	R	ug/L	DL
VOA	SW8260B	CARBON DISULFIDE	64676	163GW003M7DL	64676002	WG	25	U	25	R	ug/L	DL
VOA	SW8260B	CARBON DISULFIDE	64676	166GW040M7DL	64676003	WG	5000	U	5000	R	ug/L	DL
VOA	SW8260B	CARBON DISULFIDE	64676	166GW41DM7DL	64676008	WG	50	U	50	R	ug/L	DL
VOA	SW8260B	CARBON DISULFIDE	64676	166GW42DM7DL	64676009	WG	500	U	500	R	ug/L	DL
VOA	SW8260B	CARBON DISULFIDE	64676	166GW44DM7DL	64676011	WG	500	U	500	R	ug/L	DL
VOA	SW8260B	CARBON DISULFIDE	64676	166GW35DM7DL	64676012	WG	500	U	500	R	ug/L	DL
VOA	SW8260B	CARBON DISULFIDE	71658	166GW053M8DL	71658007	WG	250	U	250	R	ug/L	DL

Attachment 1 - Changed Qualifiers and Results
Charleston Navel Complex - Zone K, SWMU 166 - 2002 Sampling Events

Parameter Class	Analytical Method	Parameter	SDG	Sample ID	Lab Sample ID	Matrix	Lab Result	Lab Qual	Final Result	Final Qual	Units	Reason
VOA	SW8260B	CARBON DISULFIDE	71658	166GW054M8DL	71658008	WG	125	U	125	R	ug/L	DL
VOA	SW8260B	CARBON DISULFIDE	71658	166GW055M8DL	71658009	WG	500	U	500	R	ug/L	DL
VOA	SW8260B	CARBON DISULFIDE	71658	166GW056M8DL	71658010	WG	500	U	500	R	ug/L	DL
VOA	SW8260B	CARBON DISULFIDE	71658	166GW07DM8DL	71658012	WG	125	U	125	R	ug/L	DL
VOA	SW8260B	CARBON DISULFIDE	71658	166GW13DM8DL	71658014	WG	500	U	500	R	ug/L	DL
VOA	SW8260B	CARBON DISULFIDE	71658	166GW14DM8DL	71658016	WG	10	U	10	R	ug/L	DL
VOA	SW8260B	CARBON DISULFIDE	71659	166GW19DM8DL	71659002	WG	10	U	10	R	ug/L	DL
VOA	SW8260B	CARBON DISULFIDE	71659	166GW25DM8DL	71659004	WG	500	U	500	R	ug/L	DL
VOA	SW8260B	CARBON DISULFIDE	71766	166GW49DM8DL	71766003	WG	250	U	250	R	ug/L	DL
VOA	SW8260B	CARBON DISULFIDE	71766	166GW50DM8DL	71766004	WG	1000	U	1000	R	ug/L	DL
VOA	SW8260B	CARBON DISULFIDE	71766	166HW50DM8DL	71766005	WG	2500	U	2500	R	ug/L	DL
VOA	SW8260B	CARBON DISULFIDE	71766	166GW51DM8DL	71766006	WG	500	U	500	R	ug/L	DL
VOA	SW8260B	CARBON DISULFIDE	71766	166GW52DM8DL	71766007	WG	500	U	500	R	ug/L	DL
VOA	SW8260B	CARBON DISULFIDE	71766	166GWTM3M8DL	71766009	WG	50	U	50	R	ug/L	DL
VOA	SW8260B	CARBON DISULFIDE	71766	166GWTM4M8DL	71766010	WG	1000	U	1000	R	ug/L	DL
VOA	SW8260B	CARBON DISULFIDE	71766	166GW45DM8DL	71766011	WG	250	U	250	R	ug/L	DL
VOA	SW8260B	CARBON DISULFIDE	71766	166GW46DM8DL	71766012	WG	250	U	250	R	ug/L	DL
VOA	SW8260B	CARBON DISULFIDE	71766	166GW48DM8DL	71766014	WG	500	U	500	R	ug/L	DL
VOA	SW8260B	CARBON DISULFIDE	71852	166GW040M8DL	71852003	WG	1250	U	1250	R	ug/L	DL
VOA	SW8260B	CARBON DISULFIDE	71852	166HW040M8DL	71852004	WG	1250	U	1250	R	ug/L	DL
VOA	SW8260B	CARBON DISULFIDE	71852	166GW34DM8DL	71852005	WG	5000	U	5000	R	ug/L	DL

Parameter Class	Analytical Method	Parameter	SDG	Sample ID	Lab Sample ID	Matrix	Lab Result	Lab Qual	Final Result	Final Qual	Units	Reason
VOA	SW8260B	CARBON DISULFIDE	71852	166GW36DM8DL	71852007	WG	1250	U	1250	R	ug/L	DL
VOA	SW8260B	CARBON DISULFIDE	71852	166GW37DM8DL	71852008	WG	25	U	25	R	ug/L	DL
VOA	SW8260B	CARBON DISULFIDE	71852	166GW43DM8DL	71852012	WG	500	U	500	R	ug/L	DL
VOA	SW8260B	CARBON DISULFIDE	72055	163GW003M8	72055003	WG	5	U	5	UJ	ug/L	SS
VOA	SW8260B	CARBON DISULFIDE	72055	163GW003M8DL	72055003	WG	50	U	50	R	ug/L	DL
VOA	SW8260B	CARBON DISULFIDE	72055	163GW03MM8	72055004	WG	5	U	5	UJ	ug/L	SS
VOA	SW8260B	CARBON DISULFIDE	72055	166GW16DM8	72055005	WG	5	U	5	UJ	ug/L	SS
VOA	SW8260B	CARBON DISULFIDE	72055	166GW16DM8DL	72055005	WG	250	U	250	R	ug/L	DL
VOA	SW8260B	CARBON DISULFIDE	72055	166GW33DM8	72055006	WG	5	U	5	UJ	ug/L	SS
VOA	SW8260B	CARBON DISULFIDE	72055	166GW38DM8	72055007	WG	5	U	5	UJ	ug/L	SS
VOA	SW8260B	CARBON DISULFIDE	72055	166GW38DM8DL	72055007	WG	50	U	50	R	ug/L	DL
VOA	SW8260B	CARBON DISULFIDE	72055	163GW005M8	72055008	WG	5	U	5	UJ	ug/L	SS
VOA	SW8260B	CARBON TETRACHLORIDE	56223	166GW32DM1LR	56223003	WG	250	U	250	R	ug/L	DL
VOA	SW8260B	CARBON TETRACHLORIDE	56330	166GW28DM1DL	56330001	WG	25	U	25	R	ug/L	DL
VOA	SW8260B	CARBON TETRACHLORIDE	56330	166GW30DM1LR	56330003	WG	250	U	250	R	ug/L	DL
VOA	SW8260B	CARBON TETRACHLORIDE	56330	166HW30DM1LR	56330004	WG	250	U	250	R	ug/L	DL
VOA	SW8260B	CARBON TETRACHLORIDE	56341	166VDRM001M2	56341001	SO	5.6	U	5.6	UJ	ug/kg	IS
VOA	SW8260B	CARBON TETRACHLORIDE	57725	166GW28DM2DL	57725002	WG	10	U	10	R	ug/L	DL
VOA	SW8260B	CARBON TETRACHLORIDE	57725	166GW29DM2DL	57725003	WG	10	U	10	R	ug/L	DL
VOA	SW8260B	CARBON TETRACHLORIDE	57725	166GW30DM2DL	57725004	WG	50	U	50	R	ug/L	DL
VOA	SW8260B	CARBON TETRACHLORIDE	57725	166HW30DM2DL	57725005	WG	50	U	50	R	ug/L	DL

Attachment 1 - Changed Qualifiers and Results
Charleston Navel Complex - Zone K, SWMU 166 - 2002 Sampling Events

Parameter Class	Analytical Method	Parameter	Date	Sample ID	Lab Sample ID	Matrix	Lab Result	Lab Qual	Final Result	Final Qual	Units	Reason
VOA	SW8260B	CARBON TETRACHLORIDE	57725	166GW31DM2DL	57725006	WG	10	U	10	R	ug/L	DL
VOA	SW8260B	CARBON TETRACHLORIDE	57725	166GW32DM2DL	57725007	WG	50	U	50	R	ug/L	DL
VOA	SW8260B	CARBON TETRACHLORIDE	58856	166GW28DM3DL	58856002	WG	50	U	50	R	ug/L	DL
VOA	SW8260B	CARBON TETRACHLORIDE	58856	166GW29DM3DL	58856003	WG	10	U	10	R	ug/L	DL
VOA	SW8260B	CARBON TETRACHLORIDE	58856	166GW30DM3DL	58856004	WG	250	U	250	R	ug/L	DL
VOA	SW8260B	CARBON TETRACHLORIDE	58856	166GW31DM3DL	58856005	WG	25	U	25	R	ug/L	DL
VOA	SW8260B	CARBON TETRACHLORIDE	58856	166HW31DM3DL	58856006	WG	50	U	50	R	ug/L	DL
VOA	SW8260B	CARBON TETRACHLORIDE	58856	166GW32DM3DL	58856007	WG	250	U	250	R	ug/L	DL
VOA	SW8260B	CARBON TETRACHLORIDE	60789	166GW33DM4DL	60789001	WG	10	U	10	R	ug/L	DL
VOA	SW8260B	CARBON TETRACHLORIDE	60789	166GW34DM4DL	60789002	WG	2500	U	2500	R	ug/L	DL
VOA	SW8260B	CARBON TETRACHLORIDE	60789	166GW35DM4DL	60789003	WG	50	U	50	R	ug/L	DL
VOA	SW8260B	CARBON TETRACHLORIDE	60789	166GW37DM4DL	60789004	WG	2500	U	2500	R	ug/L	DL
VOA	SW8260B	CARBON TETRACHLORIDE	60789	166GW39DM4DL	60789005	WG	50	U	50	R	ug/L	DL
VOA	SW8260B	CARBON TETRACHLORIDE	60790	163GW03MM4DL	60790001	WG	250	U	250	R	ug/L	DL
VOA	SW8260B	CARBON TETRACHLORIDE	60790	166GW26DM4DL	60790002	WG	250	U	250	R	ug/L	DL
VOA	SW8260B	CARBON TETRACHLORIDE	60790	166GW25DM4DL	60790003	WG	500	U	500	R	ug/L	DL
VOA	SW8260B	CARBON TETRACHLORIDE	60790	166HW25DM4DL	60790004	WG	500	U	500	R	ug/L	DL
VOA	SW8260B	CARBON TETRACHLORIDE	60790	166GW07DM4DL	60790008	WG	50	U	50	R	ug/L	DL
VOA	SW8260B	CARBON TETRACHLORIDE	60879	166GW41DM4DL	60879001	WG	250	U	250	R	ug/L	DL
VOA	SW8260B	CARBON TETRACHLORIDE	60879	166GW42DM4DL	60879002	WG	500	U	500	R	ug/L	DL
VOA	SW8260B	CARBON TETRACHLORIDE	60879	166GW43DM4DL	60879003	WG	1250	U	1250	R	ug/L	DL

Parameter Class	Analytical Method	Parameter	Spec	Sample ID	Lab Sample ID	Matrix	Lab Result	Lab Qual	Final Result	Final Qual	Units	Reasons
VOA	SW8260B	CARBON TETRACHLORIDE	60879	166GW44DM4DL	60879004	WG	250	U	250	R	ug/L	DL
VOA	SW8260B	CARBON TETRACHLORIDE	60879	166GW13DM4DL	60879005	WG	500	U	500	R	ug/L	DL
VOA	SW8260B	CARBON TETRACHLORIDE	61044	166GW38DM4DL	61044001	WG	100	U	100	R	ug/L	DL
VOA	SW8260B	CARBON TETRACHLORIDE	61044	166GW45DM4DL	61044002	WG	500	U	500	R	ug/L	DL
VOA	SW8260B	CARBON TETRACHLORIDE	61044	166GW48DM4DL	61044004	WG	500	U	500	R	ug/L	DL
VOA	SW8260B	CARBON TETRACHLORIDE	61044	166GWTM4M4DL	61044005	WG	500	U	500	R	ug/L	DL
VOA	SW8260B	CARBON TETRACHLORIDE	61044	166GW14DM4DL	61044007	WG	10	U	10	R	ug/L	DL
VOA	SW8260B	CARBON TETRACHLORIDE	61134	166GW36DM4DL	61134002	WG	2500	U	2500	R	ug/L	DL
VOA	SW8260B	CARBON TETRACHLORIDE	61170	166GW50DM4DL	61170001	WG	1250	U	1250	R	ug/L	DL
VOA	SW8260B	CARBON TETRACHLORIDE	62650	166GW28DM6DL	62650003	WG	25	U	25	R	ug/L	DL
VOA	SW8260B	CARBON TETRACHLORIDE	64473	166GW50DM7DL	64473003	WG	1250	U	1250	R	ug/L	DL
VOA	SW8260B	CARBON TETRACHLORIDE	64473	166HW50DM7DL	64473004	WG	1250	U	1250	R	ug/L	DL
VOA	SW8260B	CARBON TETRACHLORIDE	64475	166GW053M7	64475007	WG	5	U	5	UJ	ug/L	CC
VOA	SW8260B	CARBON TETRACHLORIDE	64475	166GW053M7DL	64475007	WG	500	U	500	R	ug/L	DL
VOA	SW8260B	CARBON TETRACHLORIDE	64475	166GW054M7DL	64475008	WG	125	U	125	R	ug/L	DL
VOA	SW8260B	CARBON TETRACHLORIDE	64475	166GW055M7	64475009	WG	5	U	5	UJ	ug/L	CC
VOA	SW8260B	CARBON TETRACHLORIDE	64475	166GW055M7DL	64475009	WG	125	U	125	R	ug/L	DL
VOA	SW8260B	CARBON TETRACHLORIDE	64475	166HW055M7	64475010	WG	5	U	5	UJ	ug/L	CC
VOA	SW8260B	CARBON TETRACHLORIDE	64475	166HW055M7DL	64475010	WG	125	U	125	R	ug/L	DL
VOA	SW8260B	CARBON TETRACHLORIDE	64475	166GW07DM7	64475011	WG	5	U	5	UJ	ug/L	CC
VOA	SW8260B	CARBON TETRACHLORIDE	64475	166GW07DM7DL	64475011	WG	125	U	125	R	ug/L	DL

Attachment 1 - Changed Qualifiers and Results
Charleston Navel Complex - Zone K, SWMU 166 - 2002 Sampling Events

Parameter Class	Analytical Method	Parameter	SDG	Sample ID	Lab Sample ID	Matrix	Lab Result	Lab Qual	Final Result	Final Qual	Units	Reason
VOA	SW8260B	CARBON TETRACHLORIDE	64475	166GW13DM7	64475013	WG	5	U	5	UJ	ug/L	CC
VOA	SW8260B	CARBON TETRACHLORIDE	64475	166GW13DM7DL	64475013	WG	500	U	500	R	ug/L	DL
VOA	SW8260B	CARBON TETRACHLORIDE	64475	166HW13DM7	64475014	WG	5	U	5	UJ	ug/L	CC
VOA	SW8260B	CARBON TETRACHLORIDE	64475	166HW13DM7DL	64475014	WG	500	U	500	R	ug/L	DL
VOA	SW8260B	CARBON TETRACHLORIDE	64475	166GW14DM7	64475015	WG	5	U	5	UJ	ug/L	CC
VOA	SW8260B	CARBON TETRACHLORIDE	64475	166GW14DM7DL	64475015	WG	10	U	10	R	ug/L	DL
VOA	SW8260B	CARBON TETRACHLORIDE	64475	166GW26DM7	64475019	WG	5	U	5	UJ	ug/L	CC
VOA	SW8260B	CARBON TETRACHLORIDE	64475	166GW26DM7DL	64475019	WG	250	U	250	R	ug/L	DL
VOA	SW8260B	CARBON TETRACHLORIDE	64550	166GW34DM7DL	64550003	WG	5000	U	5000	R	ug/L	DL
VOA	SW8260B	CARBON TETRACHLORIDE	64550	166GW36DM7DL	64550004	WG	2500	U	2500	R	ug/L	DL
VOA	SW8260B	CARBON TETRACHLORIDE	64676	163GW003M7DL	64676002	WG	25	U	25	R	ug/L	DL
VOA	SW8260B	CARBON TETRACHLORIDE	64676	166GW040M7DL	64676003	WG	5000	U	5000	R	ug/L	DL
VOA	SW8260B	CARBON TETRACHLORIDE	64676	166GW41DM7DL	64676008	WG	50	U	50	R	ug/L	DL
VOA	SW8260B	CARBON TETRACHLORIDE	64676	166GW42DM7DL	64676009	WG	500	U	500	R	ug/L	DL
VOA	SW8260B	CARBON TETRACHLORIDE	64676	166GW44DM7DL	64676011	WG	500	U	500	R	ug/L	DL
VOA	SW8260B	CARBON TETRACHLORIDE	64676	166GW35DM7DL	64676012	WG	500	U	500	R	ug/L	DL
VOA	SW8260B	CARBON TETRACHLORIDE	71658	166GW053M8DL	71658007	WG	250	U	250	R	ug/L	DL
VOA	SW8260B	CARBON TETRACHLORIDE	71658	166GW054M8DL	71658008	WG	125	U	125	R	ug/L	DL
VOA	SW8260B	CARBON TETRACHLORIDE	71658	166GW055M8DL	71658009	WG	500	U	500	R	ug/L	DL
VOA	SW8260B	CARBON TETRACHLORIDE	71658	166GW056M8DL	71658010	WG	500	U	500	R	ug/L	DL
VOA	SW[illegible]60B	CARBON TETRACHLORIDE	71658	166GW07DM8DL	71[illegible]12	WG	125	U	125	R	ug/L	DL

Parameter Class	Analytical Method	Parameter	SDG	Sample ID	Lab Sample ID	Matrix	Result Value	Laboratory Qualifier	Final Result	Final Qualifier	Units	Reasons
VOA	SW8260B	CARBON TETRACHLORIDE	71658	166GW13DM8DL	71658014	WG	500	U	500	R	ug/L	DL
VOA	SW8260B	CARBON TETRACHLORIDE	71658	166GW14DM8DL	71658016	WG	10	U	10	R	ug/L	DL
VOA	SW8260B	CARBON TETRACHLORIDE	71659	166GW19DM8DL	71659002	WG	10	U	10	R	ug/L	DL
VOA	SW8260B	CARBON TETRACHLORIDE	71659	166GW25DM8DL	71659004	WG	500	U	500	R	ug/L	DL
VOA	SW8260B	CARBON TETRACHLORIDE	71766	166GW49DM8DL	71766003	WG	250	U	250	R	ug/L	DL
VOA	SW8260B	CARBON TETRACHLORIDE	71766	166GW50DM8DL	71766004	WG	1000	U	1000	R	ug/L	DL
VOA	SW8260B	CARBON TETRACHLORIDE	71766	166HW50DM8DL	71766005	WG	2500	U	2500	R	ug/L	DL
VOA	SW8260B	CARBON TETRACHLORIDE	71766	166GW51DM8DL	71766006	WG	500	U	500	R	ug/L	DL
VOA	SW8260B	CARBON TETRACHLORIDE	71766	166GW52DM8DL	71766007	WG	500	U	500	R	ug/L	DL
VOA	SW8260B	CARBON TETRACHLORIDE	71766	166GWTM3M8DL	71766009	WG	50	U	50	R	ug/L	DL
VOA	SW8260B	CARBON TETRACHLORIDE	71766	166GWTM4M8DL	71766010	WG	1000	U	1000	R	ug/L	DL
VOA	SW8260B	CARBON TETRACHLORIDE	71766	166GW45DM8DL	71766011	WG	250	U	250	R	ug/L	DL
VOA	SW8260B	CARBON TETRACHLORIDE	71766	166GW46DM8DL	71766012	WG	250	U	250	R	ug/L	DL
VOA	SW8260B	CARBON TETRACHLORIDE	71766	166GW48DM8DL	71766014	WG	500	U	500	R	ug/L	DL
VOA	SW8260B	CARBON TETRACHLORIDE	71852	166GW040M8DL	71852003	WG	1250	U	1250	R	ug/L	DL
VOA	SW8260B	CARBON TETRACHLORIDE	71852	166HW040M8DL	71852004	WG	1250	U	1250	R	ug/L	DL
VOA	SW8260B	CARBON TETRACHLORIDE	71852	166GW34DM8DL	71852005	WG	5000	U	5000	R	ug/L	DL
VOA	SW8260B	CARBON TETRACHLORIDE	71852	166GW36DM8DL	71852007	WG	1250	U	1250	R	ug/L	DL
VOA	SW8260B	CARBON TETRACHLORIDE	71852	166GW37DM8DL	71852008	WG	25	U	25	R	ug/L	DL
VOA	SW8260B	CARBON TETRACHLORIDE	71852	166GW43DM8DL	71852012	WG	500	U	500	R	ug/L	DL
VOA	SW8260B	CARBON TETRACHLORIDE	72055	163GW003M8	72055003	WG	5	U	5	UJ	ug/L	SS

Parameter Class	Analytical Method	Parameter	Qty	Sample ID	Lab Sample ID	Matrix	Lab Result	Lab Qual	Final Result	Final Qual	Units	Reasons
VOA	SW8260B	CARBON TETRACHLORIDE	72055	163GW003M8DL	72055003	WG	50	U	50	R	ug/L	DL
VOA	SW8260B	CARBON TETRACHLORIDE	72055	163GW03MM8	72055004	WG	5	U	5	UJ	ug/L	SS
VOA	SW8260B	CARBON TETRACHLORIDE	72055	166GW16DM8	72055005	WG	5	U	5	UJ	ug/L	SS
VOA	SW8260B	CARBON TETRACHLORIDE	72055	166GW16DM8DL	72055005	WG	250	U	250	R	ug/L	DL
VOA	SW8260B	CARBON TETRACHLORIDE	72055	166GW33DM8	72055006	WG	0.39	J	0.39	J	ug/L	SS
VOA	SW8260B	CARBON TETRACHLORIDE	72055	166GW38DM8	72055007	WG	5	U	5	UJ	ug/L	SS
VOA	SW8260B	CARBON TETRACHLORIDE	72055	166GW38DM8DL	72055007	WG	50	U	50	R	ug/L	DL
VOA	SW8260B	CARBON TETRACHLORIDE	72055	163GW005M8	72055008	WG	5	U	5	UJ	ug/L	SS
VOA	SW8260B	CHLOROBENZENE	56223	166GW32DM1LR	56223003	WG	250	U	250	R	ug/L	DL
VOA	SW8260B	CHLOROBENZENE	56330	166GW28DM1DL	56330001	WG	25	U	25	R	ug/L	DL
VOA	SW8260B	CHLOROBENZENE	56330	166GW30DM1LR	56330003	WG	250	U	250	R	ug/L	DL
VOA	SW8260B	CHLOROBENZENE	56330	166HW30DM1LR	56330004	WG	250	U	250	R	ug/L	DL
VOA	SW8260B	CHLOROBENZENE	56341	166VDRM001M2	56341001	SO	5.6	U	5.6	UJ	ug/kg	IS
VOA	SW8260B	CHLOROBENZENE	57725	166GW28DM2DL	57725002	WG	10	U	10	R	ug/L	DL
VOA	SW8260B	CHLOROBENZENE	57725	166GW29DM2DL	57725003	WG	10	U	10	R	ug/L	DL
VOA	SW8260B	CHLOROBENZENE	57725	166GW30DM2DL	57725004	WG	50	U	50	R	ug/L	DL
VOA	SW8260B	CHLOROBENZENE	57725	166HW30DM2DL	57725005	WG	50	U	50	R	ug/L	DL
VOA	SW8260B	CHLOROBENZENE	57725	166GW31DM2DL	57725006	WG	10	U	10	R	ug/L	DL
VOA	SW8260B	CHLOROBENZENE	57725	166GW32DM2DL	57725007	WG	50	U	50	R	ug/L	DL
VOA	SW8260B	CHLOROBENZENE	58856	166GW28DM3DL	58856002	WG	50	U	50	R	ug/L	DL
VOA	SW8260B	CHLOROBENZENE	58856	166GW29DM3DL	588[illegible]03	WG	10	U	10	R	ug/L	DL

Parameter Class	Analytical Method	Parameter	SDG	Sample ID	Lab Sample ID	Matrix	Lab Result	Lab Qual	Final Result	Final Qual	Units	Reason
VOA	SW8260B	CHLOROBENZENE	58856	166GW30DM3DL	58856004	WG	250	U	250	R	ug/L	DL
VOA	SW8260B	CHLOROBENZENE	58856	166GW31DM3DL	58856005	WG	25	U	25	R	ug/L	DL
VOA	SW8260B	CHLOROBENZENE	58856	166HW31DM3DL	58856006	WG	50	U	50	R	ug/L	DL
VOA	SW8260B	CHLOROBENZENE	58856	166GW32DM3DL	58856007	WG	250	U	250	R	ug/L	DL
VOA	SW8260B	CHLOROBENZENE	60789	166GW33DM4DL	60789001	WG	10	U	10	R	ug/L	DL
VOA	SW8260B	CHLOROBENZENE	60789	166GW34DM4DL	60789002	WG	2500	U	2500	R	ug/L	DL
VOA	SW8260B	CHLOROBENZENE	60789	166GW35DM4DL	60789003	WG	50	U	50	R	ug/L	DL
VOA	SW8260B	CHLOROBENZENE	60789	166GW37DM4DL	60789004	WG	2500	U	2500	R	ug/L	DL
VOA	SW8260B	CHLOROBENZENE	60789	166GW39DM4DL	60789005	WG	50	U	50	R	ug/L	DL
VOA	SW8260B	CHLOROBENZENE	60790	163GW03MM4DL	60790001	WG	250	U	250	R	ug/L	DL
VOA	SW8260B	CHLOROBENZENE	60790	166GW26DM4DL	60790002	WG	250	U	250	R	ug/L	DL
VOA	SW8260B	CHLOROBENZENE	60790	166GW25DM4DL	60790003	WG	500	U	500	R	ug/L	DL
VOA	SW8260B	CHLOROBENZENE	60790	166HW25DM4DL	60790004	WG	500	U	500	R	ug/L	DL
VOA	SW8260B	CHLOROBENZENE	60790	166GW07DM4DL	60790008	WG	50	U	50	R	ug/L	DL
VOA	SW8260B	CHLOROBENZENE	60879	166GW41DM4DL	60879001	WG	250	U	250	R	ug/L	DL
VOA	SW8260B	CHLOROBENZENE	60879	166GW42DM4DL	60879002	WG	500	U	500	R	ug/L	DL
VOA	SW8260B	CHLOROBENZENE	60879	166GW43DM4DL	60879003	WG	1250	U	1250	R	ug/L	DL
VOA	SW8260B	CHLOROBENZENE	60879	166GW44DM4DL	60879004	WG	250	U	250	R	ug/L	DL
VOA	SW8260B	CHLOROBENZENE	60879	166GW13DM4DL	60879005	WG	500	U	500	R	ug/L	DL
VOA	SW8260B	CHLOROBENZENE	61044	166GW38DM4DL	61044001	WG	100	U	100	R	ug/L	DL
VOA	SW8260B	CHLOROBENZENE	61044	166GW45DM4DL	61044002	WG	500	U	500	R	ug/L	DL

Attachment 1 - Changed Qualifiers and Results
Charleston Navel Complex - Zone K, SWMU 166 - 2002 Sampling Events

Parameter Class	Analytical Method	Parameter	SDG	Sample ID	Lab Sample ID	Matrix	Lab Result	Lab Qual	Final Result	Final Qual	Units	Reasons
VOA	SW8260B	CHLOROBENZENE	61044	166GW48DM4DL	61044004	WG	500	U	500	R	ug/L	DL
VOA	SW8260B	CHLOROBENZENE	61044	166GWTM4M4DL	61044005	WG	500	U	500	R	ug/L	DL
VOA	SW8260B	CHLOROBENZENE	61044	166GW14DM4DL	61044007	WG	10	U	10	R	ug/L	DL
VOA	SW8260B	CHLOROBENZENE	61134	166GW36DM4DL	61134002	WG	2500	U	2500	R	ug/L	DL
VOA	SW8260B	CHLOROBENZENE	61170	166GW50DM4DL	61170001	WG	1250	U	1250	R	ug/L	DL
VOA	SW8260B	CHLOROBENZENE	62650	166GW28DM6DL	62650003	WG	25	U	25	R	ug/L	DL
VOA	SW8260B	CHLOROBENZENE	64473	166GW50DM7DL	64473003	WG	1250	U	1250	R	ug/L	DL
VOA	SW8260B	CHLOROBENZENE	64473	166HW50DM7DL	64473004	WG	1250	U	1250	R	ug/L	DL
VOA	SW8260B	CHLOROBENZENE	64475	166GW053M7DL	64475007	WG	500	U	500	R	ug/L	DL
VOA	SW8260B	CHLOROBENZENE	64475	166GW054M7DL	64475008	WG	125	U	125	R	ug/L	DL
VOA	SW8260B	CHLOROBENZENE	64475	166GW055M7DL	64475009	WG	125	U	125	R	ug/L	DL
VOA	SW8260B	CHLOROBENZENE	64475	166HW055M7DL	64475010	WG	125	U	125	R	ug/L	DL
VOA	SW8260B	CHLOROBENZENE	64475	166GW07DM7DL	64475011	WG	125	U	125	R	ug/L	DL
VOA	SW8260B	CHLOROBENZENE	64475	166GW13DM7DL	64475013	WG	500	U	500	R	ug/L	DL
VOA	SW8260B	CHLOROBENZENE	64475	166HW13DM7DL	64475014	WG	500	U	500	R	ug/L	DL
VOA	SW8260B	CHLOROBENZENE	64475	166GW14DM7DL	64475015	WG	10	U	10	R	ug/L	DL
VOA	SW8260B	CHLOROBENZENE	64475	166GW26DM7DL	64475019	WG	250	U	250	R	ug/L	DL
VOA	SW8260B	CHLOROBENZENE	64550	166GW34DM7DL	64550003	WG	5000	U	5000	R	ug/L	DL
VOA	SW8260B	CHLOROBENZENE	64550	166GW36DM7DL	64550004	WG	2500	U	2500	R	ug/L	DL
VOA	SW8260B	CHLOROBENZENE	64676	163GW003M7DL	64676002	WG	25	U	25	R	ug/L	DL
VOA	SW8260B	CHLOROBENZENE	64676	166GW040M7DL	64676003	WG	5000	U	5000	R	ug/L	DL

Parameter Class	Analytical Method	Parameter	SDG	Sample ID	Lab Sample ID	Matrix	Lab Result	Original Qual	Final Result	Final Qual	Units	Reason
VOA	SW8260B	CHLOROBENZENE	64676	166GW41DM7DL	64676008	WG	50	U	50	R	ug/L	DL
VOA	SW8260B	CHLOROBENZENE	64676	166GW42DM7DL	64676009	WG	500	U	500	R	ug/L	DL
VOA	SW8260B	CHLOROBENZENE	64676	166GW44DM7DL	64676011	WG	500	U	500	R	ug/L	DL
VOA	SW8260B	CHLOROBENZENE	64676	166GW35DM7DL	64676012	WG	500	U	500	R	ug/L	DL
VOA	SW8260B	CHLOROBENZENE	71658	166GW053M8DL	71658007	WG	250	U	250	R	ug/L	DL
VOA	SW8260B	CHLOROBENZENE	71658	166GW054M8DL	71658008	WG	125	U	125	R	ug/L	DL
VOA	SW8260B	CHLOROBENZENE	71658	166GW055M8DL	71658009	WG	500	U	500	R	ug/L	DL
VOA	SW8260B	CHLOROBENZENE	71658	166GW056M8DL	71658010	WG	500	U	500	R	ug/L	DL
VOA	SW8260B	CHLOROBENZENE	71658	166GW07DM8DL	71658012	WG	125	U	125	R	ug/L	DL
VOA	SW8260B	CHLOROBENZENE	71658	166GW13DM8DL	71658014	WG	500	U	500	R	ug/L	DL
VOA	SW8260B	CHLOROBENZENE	71658	166GW14DM8DL	71658016	WG	10	U	10	R	ug/L	DL
VOA	SW8260B	CHLOROBENZENE	71659	166GW19DM8DL	71659002	WG	10	U	10	R	ug/L	DL
VOA	SW8260B	CHLOROBENZENE	71659	166GW25DM8DL	71659004	WG	500	U	500	R	ug/L	DL
VOA	SW8260B	CHLOROBENZENE	71766	166GW49DM8DL	71766003	WG	250	U	250	R	ug/L	DL
VOA	SW8260B	CHLOROBENZENE	71766	166GW50DM8DL	71766004	WG	1000	U	1000	R	ug/L	DL
VOA	SW8260B	CHLOROBENZENE	71766	166HW50DM8DL	71766005	WG	2500	U	2500	R	ug/L	DL
VOA	SW8260B	CHLOROBENZENE	71766	166GW51DM8DL	71766006	WG	500	U	500	R	ug/L	DL
VOA	SW8260B	CHLOROBENZENE	71766	166GW52DM8DL	71766007	WG	500	U	500	R	ug/L	DL
VOA	SW8260B	CHLOROBENZENE	71766	166GWTM3M8DL	71766009	WG	50	U	50	R	ug/L	DL
VOA	SW8260B	CHLOROBENZENE	71766	166GWTM4M8DL	71766010	WG	1000	U	1000	R	ug/L	DL
VOA	SW8260B	CHLOROBENZENE	71766	166GW45DM8DL	71766011	WG	250	U	250	R	ug/L	DL

Attachment 1 - Changed Qualifiers and Results
Charleston Navel Complex - Zone K, SWMU 166 - 2002 Sampling Events

Parameter Class	Analytical Method	Parameter	Site	Sample ID	Lab Sample ID	Matrix	Lab Result	Lab Qual	Final Result	Final Qual	Units	Reason
VOA	SW8260B	CHLOROBENZENE	71766	166GW46DM8DL	71766012	WG	250	U	250	R	ug/L	DL
VOA	SW8260B	CHLOROBENZENE	71766	166GW48DM8DL	71766014	WG	500	U	500	R	ug/L	DL
VOA	SW8260B	CHLOROBENZENE	71852	166GW040M8DL	71852003	WG	1250	U	1250	R	ug/L	DL
VOA	SW8260B	CHLOROBENZENE	71852	166HW040M8DL	71852004	WG	1250	U	1250	R	ug/L	DL
VOA	SW8260B	CHLOROBENZENE	71852	166GW34DM8DL	71852005	WG	5000	U	5000	R	ug/L	DL
VOA	SW8260B	CHLOROBENZENE	71852	166GW36DM8DL	71852007	WG	1250	U	1250	R	ug/L	DL
VOA	SW8260B	CHLOROBENZENE	71852	166GW37DM8DL	71852008	WG	25	U	25	R	ug/L	DL
VOA	SW8260B	CHLOROBENZENE	71852	166GW43DM8DL	71852012	WG	500	U	500	R	ug/L	DL
VOA	SW8260B	CHLOROBENZENE	72055	163GW003M8	72055003	WG	5	U	5	UJ	ug/L	SS
VOA	SW8260B	CHLOROBENZENE	72055	163GW003M8DL	72055003	WG	50	U	50	R	ug/L	DL
VOA	SW8260B	CHLOROBENZENE	72055	163GW03MM8	72055004	WG	5	U	5	UJ	ug/L	SS
VOA	SW8260B	CHLOROBENZENE	72055	166GW16DM8	72055005	WG	5	U	5	UJ	ug/L	SS
VOA	SW8260B	CHLOROBENZENE	72055	166GW16DM8DL	72055005	WG	250	U	250	R	ug/L	DL
VOA	SW8260B	CHLOROBENZENE	72055	166GW33DM8	72055006	WG	5	U	5	UJ	ug/L	SS
VOA	SW8260B	CHLOROBENZENE	72055	166GW38DM8	72055007	WG	5	U	5	UJ	ug/L	SS
VOA	SW8260B	CHLOROBENZENE	72055	166GW38DM8DL	72055007	WG	50	U	50	R	ug/L	DL
VOA	SW8260B	CHLOROBENZENE	72055	163GW005M8	72055008	WG	5	U	5	UJ	ug/L	SS
VOA	SW8260B	CHLOROETHANE	56223	166GW32DM1LR	56223003	WG	500	U	500	R	ug/L	DL
VOA	SW8260B	CHLOROETHANE	56330	166GW28DM1DL	56330001	WG	50	U	50	R	ug/L	DL
VOA	SW8260B	CHLOROETHANE	56330	166GW30DM1LR	56330003	WG	500	U	500	R	ug/L	DL
VOA	SW8260B	CHLOROETHANE	56330	166HW30DM1LR	56330004	WG	500	U	500	R	ug/L	DL

Parameter Class	Analytical Method	Parameter	Site	Sample ID	Lab Sample ID	Matrix	Lab Result	Lab Qualifier	Result	Final Qualifier	Units	Reason
VOA	SW8260B	CHLOROETHANE	56341	166VDRM001M2	56341001	SO	11.2	U	11.2	UJ	ug/kg	IS
VOA	SW8260B	CHLOROETHANE	57725	166GW28DM2DL	57725002	WG	10	U	10	R	ug/L	DL
VOA	SW8260B	CHLOROETHANE	57725	166GW29DM2DL	57725003	WG	10	U	10	R	ug/L	DL
VOA	SW8260B	CHLOROETHANE	57725	166GW30DM2DL	57725004	WG	50	U	50	R	ug/L	DL
VOA	SW8260B	CHLOROETHANE	57725	166HW30DM2DL	57725005	WG	50	U	50	R	ug/L	DL
VOA	SW8260B	CHLOROETHANE	57725	166GW31DM2DL	57725006	WG	10	U	10	R	ug/L	DL
VOA	SW8260B	CHLOROETHANE	57725	166GW32DM2DL	57725007	WG	50	U	50	R	ug/L	DL
VOA	SW8260B	CHLOROETHANE	58856	166GW28DM3DL	58856002	WG	100	U	100	R	ug/L	DL
VOA	SW8260B	CHLOROETHANE	58856	166GW29DM3DL	58856003	WG	20	U	20	R	ug/L	DL
VOA	SW8260B	CHLOROETHANE	58856	166GW30DM3DL	58856004	WG	500	U	500	R	ug/L	DL
VOA	SW8260B	CHLOROETHANE	58856	166GW31DM3DL	58856005	WG	50	U	50	R	ug/L	DL
VOA	SW8260B	CHLOROETHANE	58856	166HW31DM3DL	58856006	WG	100	U	100	R	ug/L	DL
VOA	SW8260B	CHLOROETHANE	58856	166GW32DM3DL	58856007	WG	500	U	500	R	ug/L	DL
VOA	SW8260B	CHLOROETHANE	60789	166GW33DM4DL	60789001	WG	20	U	20	R	ug/L	DL
VOA	SW8260B	CHLOROETHANE	60789	166GW34DM4DL	60789002	WG	5000	U	5000	R	ug/L	DL
VOA	SW8260B	CHLOROETHANE	60789	166GW35DM4DL	60789003	WG	100	U	100	R	ug/L	DL
VOA	SW8260B	CHLOROETHANE	60789	166GW37DM4DL	60789004	WG	5000	U	5000	R	ug/L	DL
VOA	SW8260B	CHLOROETHANE	60789	166GW39DM4DL	60789005	WG	100	U	100	R	ug/L	DL
VOA	SW8260B	CHLOROETHANE	60790	163GW03MM4DL	60790001	WG	500	U	500	R	ug/L	DL
VOA	SW8260B	CHLOROETHANE	60790	166GW26DM4DL	60790002	WG	500	U	500	R	ug/L	DL
VOA	SW8260B	CHLOROETHANE	60790	166GW25DM4DL	60790003	WG	1000	U	1000	R	ug/L	DL

Attachment 1 - Changed Qualifiers and Results
Charleston Navel Complex - Zone K, SWMU 166 - 2002 Sampling Events

Parameter Class	Analytical Method	Parameter	SDG	Sample ID	Lab Sample ID	Matrix	Lab Result	Original	Final Result	Final Qual	Units	Reasons
VOA	SW8260B	CHLOROETHANE	60790	166HW25DM4DL	60790004	WG	1000	U	1000	R	ug/L	DL
VOA	SW8260B	CHLOROETHANE	60790	166GW07DM4DL	60790008	WG	100	U	100	R	ug/L	DL
VOA	SW8260B	CHLOROETHANE	60879	166GW41DM4DL	60879001	WG	500	U	500	R	ug/L	DL
VOA	SW8260B	CHLOROETHANE	60879	166GW42DM4DL	60879002	WG	1000	U	1000	R	ug/L	DL
VOA	SW8260B	CHLOROETHANE	60879	166GW43DM4DL	60879003	WG	2500	U	2500	R	ug/L	DL
VOA	SW8260B	CHLOROETHANE	60879	166GW44DM4DL	60879004	WG	500	U	500	R	ug/L	DL
VOA	SW8260B	CHLOROETHANE	60879	166GW13DM4DL	60879005	WG	1000	U	1000	R	ug/L	DL
VOA	SW8260B	CHLOROETHANE	61044	166GW38DM4DL	61044001	WG	200	U	200	R	ug/L	DL
VOA	SW8260B	CHLOROETHANE	61044	166GW45DM4DL	61044002	WG	1000	U	1000	R	ug/L	DL
VOA	SW8260B	CHLOROETHANE	61044	166GW48DM4DL	61044004	WG	1000	U	1000	R	ug/L	DL
VOA	SW8260B	CHLOROETHANE	61044	166GWTM4M4DL	61044005	WG	1000	U	1000	R	ug/L	DL
VOA	SW8260B	CHLOROETHANE	61044	166GW14DM4DL	61044007	WG	20	U	20	R	ug/L	DL
VOA	SW8260B	CHLOROETHANE	61134	166GW36DM4DL	61134002	WG	5000	U	5000	R	ug/L	DL
VOA	SW8260B	CHLOROETHANE	61170	166GW50DM4DL	61170001	WG	2500	U	2500	R	ug/L	DL
VOA	SW8260B	CHLOROETHANE	61326	166GW17DM4	61326001	WG	10	U	10	UJ	ug/L	MS
VOA	SW8260B	CHLOROETHANE	62650	166GW28DM6DL	62650003	WG	50	U	50	R	ug/L	DL
VOA	SW8260B	CHLOROETHANE	64473	166GW50DM7DL	64473003	WG	2500	U	2500	R	ug/L	DL
VOA	SW8260B	CHLOROETHANE	64473	166HW50DM7DL	64473004	WG	2500	U	2500	R	ug/L	DL
VOA	SW8260B	CHLOROETHANE	64475	166GW053M7DL	64475007	WG	1000	U	1000	R	ug/L	DL
VOA	SW8260B	CHLOROETHANE	64475	166GW054M7DL	64475008	WG	250	U	250	R	ug/L	DL
VOA	SW8260B	CHLOROETHANE	64475	166GW055M7DL	64475009	WG	250	U	250	R	ug/L	DL

Parameter Class	Analytical Method	Parameter	SDG	Sample ID	Lab Sample ID	Matrix	Lab Result	Lab Qual	Final Result	Final Qual	Units	Reason
VOA	SW8260B	CHLOROETHANE	64475	166HW055M7DL	64475010	WG	250	U	250	R	ug/L	DL
VOA	SW8260B	CHLOROETHANE	64475	166GW07DM7DL	64475011	WG	250	U	250	R	ug/L	DL
VOA	SW8260B	CHLOROETHANE	64475	166GW13DM7DL	64475013	WG	1000	U	1000	R	ug/L	DL
VOA	SW8260B	CHLOROETHANE	64475	166HW13DM7DL	64475014	WG	1000	U	1000	R	ug/L	DL
VOA	SW8260B	CHLOROETHANE	64475	166GW14DM7DL	64475015	WG	20	U	20	R	ug/L	DL
VOA	SW8260B	CHLOROETHANE	64475	166GW26DM7DL	64475019	WG	500	U	500	R	ug/L	DL
VOA	SW8260B	CHLOROETHANE	64550	166GW34DM7DL	64550003	WG	10000	U	10000	R	ug/L	DL
VOA	SW8260B	CHLOROETHANE	64550	166GW36DM7DL	64550004	WG	5000	U	5000	R	ug/L	DL
VOA	SW8260B	CHLOROETHANE	64676	163GW003M7DL	64676002	WG	50	U	50	R	ug/L	DL
VOA	SW8260B	CHLOROETHANE	64676	166GW040M7DL	64676003	WG	10000	U	10000	R	ug/L	DL
VOA	SW8260B	CHLOROETHANE	64676	166GW41DM7DL	64676008	WG	100	U	100	R	ug/L	DL
VOA	SW8260B	CHLOROETHANE	64676	166GW42DM7DL	64676009	WG	1000	U	1000	R	ug/L	DL
VOA	SW8260B	CHLOROETHANE	64676	166GW44DM7DL	64676011	WG	1000	U	1000	R	ug/L	DL
VOA	SW8260B	CHLOROETHANE	64676	166GW35DM7DL	64676012	WG	1000	U	1000	R	ug/L	DL
VOA	SW8260B	CHLOROETHANE	71658	166GW053M8DL	71658007	WG	500	U	500	R	ug/L	DL
VOA	SW8260B	CHLOROETHANE	71658	166GW054M8DL	71658008	WG	250	U	250	R	ug/L	DL
VOA	SW8260B	CHLOROETHANE	71658	166GW055M8DL	71658009	WG	1000	U	1000	R	ug/L	DL
VOA	SW8260B	CHLOROETHANE	71658	166GW056M8DL	71658010	WG	1000	U	1000	R	ug/L	DL
VOA	SW8260B	CHLOROETHANE	71658	166GW07DM8DL	71658012	WG	250	U	250	R	ug/L	DL
VOA	SW8260B	CHLOROETHANE	71658	166GW13DM8DL	71658014	WG	1000	U	1000	R	ug/L	DL
VOA	SW8260B	CHLOROETHANE	71658	166GW14DM8DL	71658016	WG	20	U	20	R	ug/L	DL

Attachment 1 - Changed Qualifiers and Results
Charleston Navel Complex - Zone K, SWMU 166 - 2002 Sampling Events

Parameter Class	Analytical Method	Parameter	SDG	Sample ID	Lab Sample ID	Matrix	Lab Result	Lab Qual	Final Result	Final Qual	Units	Reason
VOA	SW8260B	CHLOROETHANE	71659	166GW19DM8DL	71659002	WG	20	U	20	R	ug/L	DL
VOA	SW8260B	CHLOROETHANE	71659	166GW25DM8DL	71659004	WG	1000	U	1000	R	ug/L	DL
VOA	SW8260B	CHLOROETHANE	71766	166GW49DM8DL	71766003	WG	500	U	500	R	ug/L	DL
VOA	SW8260B	CHLOROETHANE	71766	166GW50DM8DL	71766004	WG	2000	U	2000	R	ug/L	DL
VOA	SW8260B	CHLOROETHANE	71766	166HW50DM8DL	71766005	WG	5000	U	5000	R	ug/L	DL
VOA	SW8260B	CHLOROETHANE	71766	166GW51DM8DL	71766006	WG	1000	U	1000	R	ug/L	DL
VOA	SW8260B	CHLOROETHANE	71766	166GW52DM8DL	71766007	WG	1000	U	1000	R	ug/L	DL
VOA	SW8260B	CHLOROETHANE	71766	166GWTM3M8DL	71766009	WG	100	U	100	R	ug/L	DL
VOA	SW8260B	CHLOROETHANE	71766	166GWTM4M8DL	71766010	WG	2000	U	2000	R	ug/L	DL
VOA	SW8260B	CHLOROETHANE	71766	166GW45DM8DL	71766011	WG	500	U	500	R	ug/L	DL
VOA	SW8260B	CHLOROETHANE	71766	166GW46DM8DL	71766012	WG	500	U	500	R	ug/L	DL
VOA	SW8260B	CHLOROETHANE	71766	166GW48DM8DL	71766014	WG	1000	U	1000	R	ug/L	DL
VOA	SW8260B	CHLOROETHANE	71852	166GW040M8DL	71852003	WG	2500	U	2500	R	ug/L	DL
VOA	SW8260B	CHLOROETHANE	71852	166HW040M8DL	71852004	WG	2500	U	2500	R	ug/L	DL
VOA	SW8260B	CHLOROETHANE	71852	166GW34DM8DL	71852005	WG	10000	U	10000	R	ug/L	DL
VOA	SW8260B	CHLOROETHANE	71852	166GW36DM8DL	71852007	WG	2500	U	2500	R	ug/L	DL
VOA	SW8260B	CHLOROETHANE	71852	166GW37DM8DL	71852008	WG	50	U	50	R	ug/L	DL
VOA	SW8260B	CHLOROETHANE	71852	166GW43DM8DL	71852012	WG	1000	U	1000	R	ug/L	DL
VOA	SW8260B	CHLOROETHANE	72055	163GW003M8	72055003	WG	10	U	10	UJ	ug/L	SS
VOA	SW8260B	CHLOROETHANE	72055	163GW003M8DL	72055003	WG	100	U	100	R	ug/L	DL
VOA	SW8260B	CHLOROETHANE	72055	163GW03MM8	72055004	WG	10	U	10	UJ	ug/L	SS

Parameter Class	Analytical Method	Parameter	SDG	Sample ID	Lab Sample ID	Matrix	Lab Result	Lab Qual	Final Result	Final Qual	Units	Reasons
VOA	SW8260B	CHLOROETHANE	72055	166GW16DM8	72055005	WG	10	U	10	UJ	ug/L	SS
VOA	SW8260B	CHLOROETHANE	72055	166GW16DM8DL	72055005	WG	500	U	500	R	ug/L	DL
VOA	SW8260B	CHLOROETHANE	72055	166GW33DM8	72055006	WG	10	U	10	UJ	ug/L	SS
VOA	SW8260B	CHLOROETHANE	72055	166GW38DM8	72055007	WG	10	U	10	UJ	ug/L	SS
VOA	SW8260B	CHLOROETHANE	72055	166GW38DM8DL	72055007	WG	100	U	100	R	ug/L	DL
VOA	SW8260B	CHLOROETHANE	72055	163GW005M8	72055008	WG	10	U	10	UJ	ug/L	SS
VOA	SW8260B	CHLOROFORM	56223	166GW32DM1LR	56223003	WG	250	U	250	R	ug/L	DL
VOA	SW8260B	CHLOROFORM	56330	166GW28DM1DL	56330001	WG	25	U	25	R	ug/L	DL
VOA	SW8260B	CHLOROFORM	56330	166GW30DM1LR	56330003	WG	250	U	250	R	ug/L	DL
VOA	SW8260B	CHLOROFORM	56330	166HW30DM1LR	56330004	WG	250	U	250	R	ug/L	DL
VOA	SW8260B	CHLOROFORM	56341	166VDRM001M2	56341001	SO	5.6	U	5.6	UJ	ug/kg	IS
VOA	SW8260B	CHLOROFORM	57725	166GW28DM2DL	57725002	WG	10	U	10	R	ug/L	DL
VOA	SW8260B	CHLOROFORM	57725	166GW29DM2DL	57725003	WG	10	U	10	R	ug/L	DL
VOA	SW8260B	CHLOROFORM	57725	166GW30DM2DL	57725004	WG	50	U	50	R	ug/L	DL
VOA	SW8260B	CHLOROFORM	57725	166HW30DM2DL	57725005	WG	50	U	50	R	ug/L	DL
VOA	SW8260B	CHLOROFORM	57725	166GW31DM2DL	57725006	WG	10	U	10	R	ug/L	DL
VOA	SW8260B	CHLOROFORM	57725	166GW32DM2DL	57725007	WG	50	U	50	R	ug/L	DL
VOA	SW8260B	CHLOROFORM	58856	166GW28DM3DL	58856002	WG	50	U	50	R	ug/L	DL
VOA	SW8260B	CHLOROFORM	58856	166GW29DM3DL	58856003	WG	10	U	10	R	ug/L	DL
VOA	SW8260B	CHLOROFORM	58856	166GW30DM3DL	58856004	WG	250	U	250	R	ug/L	DL
VOA	SW8260B	CHLOROFORM	58856	166GW31DM3DL	58856005	WG	25	U	25	R	ug/L	DL

Attachment 1 - Changed Qualifiers and Results
Charleston Navel Complex - Zone K, SWMU 166 - 2002 Sampling Events

Parameter Class	Analytical Method	Parameter	SDG	Sample ID	Lab Sample	Matrix	Lab Result	Lab Qual	Final Result	Final Qual	Units	Reason
VOA	SW8260B	CHLOROFORM	58856	166HW31DM3DL	58856006	WG	50	U	50	R	ug/L	DL
VOA	SW8260B	CHLOROFORM	58856	166GW32DM3DL	58856007	WG	250	U	250	R	ug/L	DL
VOA	SW8260B	CHLOROFORM	60789	166GW33DM4DL	60789001	WG	0.95	JD	0.95	R	ug/L	DL
VOA	SW8260B	CHLOROFORM	60789	166GW34DM4DL	60789002	WG	2500	U	2500	R	ug/L	DL
VOA	SW8260B	CHLOROFORM	60789	166GW35DM4DL	60789003	WG	50	U	50	R	ug/L	DL
VOA	SW8260B	CHLOROFORM	60789	166GW37DM4DL	60789004	WG	2500	U	2500	R	ug/L	DL
VOA	SW8260B	CHLOROFORM	60789	166GW39DM4DL	60789005	WG	50	U	50	R	ug/L	DL
VOA	SW8260B	CHLOROFORM	60790	163GW03MM4DL	60790001	WG	250	U	250	R	ug/L	DL
VOA	SW8260B	CHLOROFORM	60790	166GW26DM4DL	60790002	WG	250	U	250	R	ug/L	DL
VOA	SW8260B	CHLOROFORM	60790	166GW25DM4DL	60790003	WG	500	U	500	R	ug/L	DL
VOA	SW8260B	CHLOROFORM	60790	166HW25DM4DL	60790004	WG	500	U	500	R	ug/L	DL
VOA	SW8260B	CHLOROFORM	60790	166GW07DM4DL	60790008	WG	50	U	50	R	ug/L	DL
VOA	SW8260B	CHLOROFORM	60879	166GW41DM4DL	60879001	WG	250	U	250	R	ug/L	DL
VOA	SW8260B	CHLOROFORM	60879	166GW42DM4DL	60879002	WG	500	U	500	R	ug/L	DL
VOA	SW8260B	CHLOROFORM	60879	166GW43DM4DL	60879003	WG	1250	U	1250	R	ug/L	DL
VOA	SW8260B	CHLOROFORM	60879	166GW44DM4DL	60879004	WG	250	U	250	R	ug/L	DL
VOA	SW8260B	CHLOROFORM	60879	166GW13DM4DL	60879005	WG	500	U	500	R	ug/L	DL
VOA	SW8260B	CHLOROFORM	61044	166GW38DM4DL	61044001	WG	100	U	100	R	ug/L	DL
VOA	SW8260B	CHLOROFORM	61044	166GW45DM4DL	61044002	WG	500	U	500	R	ug/L	DL
VOA	SW8260B	CHLOROFORM	61044	166GW48DM4DL	61044004	WG	500	U	500	R	ug/L	DL
VOA	SW[illegible]60B	CHLOROFORM	61044	166GWTM4M4DL	61[illegible]05	WG	500	U	500	R	ug/L	DL

Parameter Group	Analytical Method	Parameter	SDG	Sample ID	Lab Sample ID	Matrix	Lab Result	Lab Qual	Final Result	Final Qual	Units	Reason
VOA	SW8260B	CHLOROFORM	61044	166GW14DM4DL	61044007	WG	10	U	10	R	ug/L	DL
VOA	SW8260B	CHLOROFORM	61134	166GW36DM4DL	61134002	WG	2500	U	2500	R	ug/L	DL
VOA	SW8260B	CHLOROFORM	61170	166GW50DM4DL	61170001	WG	1250	U	1250	R	ug/L	DL
VOA	SW8260B	CHLOROFORM	62650	166GW28DM6DL	62650003	WG	25	U	25	R	ug/L	DL
VOA	SW8260B	CHLOROFORM	64473	166GW50DM7DL	64473003	WG	1250	U	1250	R	ug/L	DL
VOA	SW8260B	CHLOROFORM	64473	166HW50DM7DL	64473004	WG	1250	U	1250	R	ug/L	DL
VOA	SW8260B	CHLOROFORM	64475	166GW053M7DL	64475007	WG	500	U	500	R	ug/L	DL
VOA	SW8260B	CHLOROFORM	64475	166GW054M7DL	64475008	WG	125	U	125	R	ug/L	DL
VOA	SW8260B	CHLOROFORM	64475	166GW055M7DL	64475009	WG	125	U	125	R	ug/L	DL
VOA	SW8260B	CHLOROFORM	64475	166HW055M7DL	64475010	WG	125	U	125	R	ug/L	DL
VOA	SW8260B	CHLOROFORM	64475	166GW07DM7DL	64475011	WG	125	U	125	R	ug/L	DL
VOA	SW8260B	CHLOROFORM	64475	166GW13DM7DL	64475013	WG	500	U	500	R	ug/L	DL
VOA	SW8260B	CHLOROFORM	64475	166HW13DM7DL	64475014	WG	500	U	500	R	ug/L	DL
VOA	SW8260B	CHLOROFORM	64475	166GW14DM7DL	64475015	WG	10	U	10	R	ug/L	DL
VOA	SW8260B	CHLOROFORM	64475	166GW26DM7DL	64475019	WG	250	U	250	R	ug/L	DL
VOA	SW8260B	CHLOROFORM	64550	166GW34DM7DL	64550003	WG	5000	U	5000	R	ug/L	DL
VOA	SW8260B	CHLOROFORM	64550	166GW36DM7DL	64550004	WG	2500	U	2500	R	ug/L	DL
VOA	SW8260B	CHLOROFORM	64676	163GW003M7DL	64676002	WG	25	U	25	R	ug/L	DL
VOA	SW8260B	CHLOROFORM	64676	166GW040M7DL	64676003	WG	5000	U	5000	R	ug/L	DL
VOA	SW8260B	CHLOROFORM	64676	166GW41DM7DL	64676008	WG	50	U	50	R	ug/L	DL
VOA	SW8260B	CHLOROFORM	64676	166GW42DM7DL	64676009	WG	500	U	500	R	ug/L	DL

Attachment 1 - Changed Qualifiers and Results
Charleston Navel Complex - Zone K, SWMU 166 - 2002 Sampling Events

Parameter Class	Analytical Method	Parameter	SDG	Sample ID	Lab sample ID	Matrix	Lab Result	Lab Qual	Final Result	Final Qual	Units	Reason
VOA	SW8260B	CHLOROFORM	64676	166GW44DM7DL	64676011	WG	500	U	500	R	ug/L	DL
VOA	SW8260B	CHLOROFORM	64676	166GW35DM7DL	64676012	WG	500	U	500	R	ug/L	DL
VOA	SW8260B	CHLOROFORM	71658	166GW005M8	71658005	WG	0.8	J	0.8	J	ug/L	SS
VOA	SW8260B	CHLOROFORM	71658	166GW053M8DL	71658007	WG	250	U	250	R	ug/L	DL
VOA	SW8260B	CHLOROFORM	71658	166GW054M8DL	71658008	WG	125	U	125	R	ug/L	DL
VOA	SW8260B	CHLOROFORM	71658	166GW055M8DL	71658009	WG	500	U	500	R	ug/L	DL
VOA	SW8260B	CHLOROFORM	71658	166GW056M8DL	71658010	WG	500	U	500	R	ug/L	DL
VOA	SW8260B	CHLOROFORM	71658	166GW07DM8DL	71658012	WG	125	U	125	R	ug/L	DL
VOA	SW8260B	CHLOROFORM	71658	166GW13DM8DL	71658014	WG	500	U	500	R	ug/L	DL
VOA	SW8260B	CHLOROFORM	71658	166GW14DM8DL	71658016	WG	10	U	10	R	ug/L	DL
VOA	SW8260B	CHLOROFORM	71659	166GW19DM8DL	71659002	WG	10	U	10	R	ug/L	DL
VOA	SW8260B	CHLOROFORM	71659	166GW25DM8DL	71659004	WG	500	U	500	R	ug/L	DL
VOA	SW8260B	CHLOROFORM	71766	166GW49DM8DL	71766003	WG	250	U	250	R	ug/L	DL
VOA	SW8260B	CHLOROFORM	71766	166GW50DM8DL	71766004	WG	1000	U	1000	R	ug/L	DL
VOA	SW8260B	CHLOROFORM	71766	166HW50DM8DL	71766005	WG	2500	U	2500	R	ug/L	DL
VOA	SW8260B	CHLOROFORM	71766	166GW51DM8DL	71766006	WG	500	U	500	R	ug/L	DL
VOA	SW8260B	CHLOROFORM	71766	166GW52DM8DL	71766007	WG	500	U	500	R	ug/L	DL
VOA	SW8260B	CHLOROFORM	71766	166GWTM3M8DL	71766009	WG	50	U	50	R	ug/L	DL
VOA	SW8260B	CHLOROFORM	71766	166GWTM4M8DL	71766010	WG	1000	U	1000	R	ug/L	DL
VOA	SW8260B	CHLOROFORM	71766	166GW45DM8DL	71766011	WG	250	U	250	R	ug/L	DL
VOA	SW8260B	CHLOROFORM	71766	166GW46DM8DL	71766012	WG	250	U	250	R	ug/L	DL

Parameter Class	Analytical Method	Parameter	SDG	Sample ID	Lab Sample ID	Matrix	Lab Result	Lab Qual	Final Result	Final Qual	Units	Reasons
VOA	SW8260B	CHLOROFORM	71766	166GW48DM8DL	71766014	WG	500	U	500	R	ug/L	DL
VOA	SW8260B	CHLOROFORM	71852	166GW040M8DL	71852003	WG	1250	U	1250	R	ug/L	DL
VOA	SW8260B	CHLOROFORM	71852	166HW040M8DL	71852004	WG	1250	U	1250	R	ug/L	DL
VOA	SW8260B	CHLOROFORM	71852	166GW34DM8DL	71852005	WG	5000	U	5000	R	ug/L	DL
VOA	SW8260B	CHLOROFORM	71852	166GW36DM8DL	71852007	WG	1250	U	1250	R	ug/L	DL
VOA	SW8260B	CHLOROFORM	71852	166GW37DM8DL	71852008	WG	25	U	25	R	ug/L	DL
VOA	SW8260B	CHLOROFORM	71852	166GW43DM8DL	71852012	WG	500	U	500	R	ug/L	DL
VOA	SW8260B	CHLOROFORM	72055	163GW003M8	72055003	WG	5	U	5	UJ	ug/L	SS
VOA	SW8260B	CHLOROFORM	72055	163GW003M8DL	72055003	WG	50	U	50	R	ug/L	DL
VOA	SW8260B	CHLOROFORM	72055	163GW03MM8	72055004	WG	5	U	5	UJ	ug/L	SS
VOA	SW8260B	CHLOROFORM	72055	166GW16DM8	72055005	WG	5	U	5	UJ	ug/L	SS
VOA	SW8260B	CHLOROFORM	72055	166GW16DM8DL	72055005	WG	250	U	250	R	ug/L	DL
VOA	SW8260B	CHLOROFORM	72055	166GW33DM8	72055006	WG	5	U	5	UJ	ug/L	SS
VOA	SW8260B	CHLOROFORM	72055	166GW38DM8	72055007	WG	5	U	5	UJ	ug/L	SS
VOA	SW8260B	CHLOROFORM	72055	166GW38DM8DL	72055007	WG	50	U	50	R	ug/L	DL
VOA	SW8260B	CHLOROFORM	72055	163GW005M8	72055008	WG	5	U	5	UJ	ug/L	SS
VOA	SW8260B	CHLOROMETHANE	56223	166GW27DM1	56223001	WG	10	U	10	UJ	ug/L	CC
VOA	SW8260B	CHLOROMETHANE	56223	166GW31DM1	56223002	WG	100	U	100	UJ	ug/L	CC
VOA	SW8260B	CHLOROMETHANE	56223	166GW32DM1	56223003	WG	250	U	250	UJ	ug/L	CC
VOA	SW8260B	CHLOROMETHANE	56223	166GW32DM1LR	56223003	WG	500	U	500	R	ug/L	DL
VOA	SW8260B	CHLOROMETHANE	56330	166GW28DM1DL	56330001	WG	50	U	50	R	ug/L	DL

Attachment 1 - Changed Qualifiers and Results
Charleston Navel Complex - Zone K, SWMU 166 - 2002 Sampling Events

Parameter Class	Analytical Method	Parameter	SDG	Sample ID	Lab Sample ID	Matrix	Lab Result	Lab Qual	Final Result	Final Qual	Units	Reasons
VOA	SW8260B	CHLOROMETHANE	56330	166GW30DM1LR	56330003	WG	500	U	500	R	ug/L	DL
VOA	SW8260B	CHLOROMETHANE	56330	166HW30DM1LR	56330004	WG	500	U	500	R	ug/L	DL
VOA	SW8260B	CHLOROMETHANE	56341	166VDRM001M2	56341001	SO	11.2	U	11.2	UJ	ug/kg	CC, IS
VOA	SW8260B	CHLOROMETHANE	56341	166VDRM002M2	56341002	SO	12.3	U	12.3	UJ	ug/kg	CC
VOA	SW8260B	CHLOROMETHANE	56341	166VDRM003M2	56341003	SO	11.8	U	11.8	UJ	ug/kg	CC
VOA	SW8260B	CHLOROMETHANE	57725	166GW28DM2DL	57725002	WG	10	U	10	R	ug/L	DL
VOA	SW8260B	CHLOROMETHANE	57725	166GW29DM2DL	57725003	WG	10	U	10	R	ug/L	DL
VOA	SW8260B	CHLOROMETHANE	57725	166GW30DM2DL	57725004	WG	50	U	50	R	ug/L	DL
VOA	SW8260B	CHLOROMETHANE	57725	166HW30DM2DL	57725005	WG	50	U	50	R	ug/L	DL
VOA	SW8260B	CHLOROMETHANE	57725	166GW31DM2DL	57725006	WG	10	U	10	R	ug/L	DL
VOA	SW8260B	CHLOROMETHANE	57725	166GW32DM2DL	57725007	WG	50	U	50	R	ug/L	DL
VOA	SW8260B	CHLOROMETHANE	58856	166GW28DM3DL	58856002	WG	100	U	100	R	ug/L	DL
VOA	SW8260B	CHLOROMETHANE	58856	166GW29DM3DL	58856003	WG	20	U	20	R	ug/L	DL
VOA	SW8260B	CHLOROMETHANE	58856	166GW30DM3DL	58856004	WG	500	U	500	R	ug/L	DL
VOA	SW8260B	CHLOROMETHANE	58856	166GW31DM3DL	58856005	WG	50	U	50	R	ug/L	DL
VOA	SW8260B	CHLOROMETHANE	58856	166HW31DM3DL	58856006	WG	100	U	100	R	ug/L	DL
VOA	SW8260B	CHLOROMETHANE	58856	166GW32DM3DL	58856007	WG	500	U	500	R	ug/L	DL
VOA	SW8260B	CHLOROMETHANE	60789	166GW33DM4DL	60789001	WG	20	U	20	R	ug/L	DL
VOA	SW8260B	CHLOROMETHANE	60789	166GW34DM4DL	60789002	WG	5000	U	5000	R	ug/L	DL
VOA	SW8260B	CHLOROMETHANE	60789	166GW35DM4DL	60789003	WG	100	U	100	R	ug/L	DL
VOA	SW8260B	CHLOROMETHANE	60789	166GW37DM4DL	60789004	WG	5000	U	5000	R	ug/L	DL

Parameter Class	Analytical Method	Parameter	SDG	Sample ID	Lab Sample ID	Matrix	Lab Result	Lab Qual	Final Result	Final Qual	Units	Reason
VOA	SW8260B	CHLOROMETHANE	60789	166GW39DM4DL	60789005	WG	100	U	100	R	ug/L	DL
VOA	SW8260B	CHLOROMETHANE	60790	163GW03MM4DL	60790001	WG	500	U	500	R	ug/L	DL
VOA	SW8260B	CHLOROMETHANE	60790	166GW26DM4DL	60790002	WG	500	U	500	R	ug/L	DL
VOA	SW8260B	CHLOROMETHANE	60790	166GW25DM4DL	60790003	WG	1000	U	1000	R	ug/L	DL
VOA	SW8260B	CHLOROMETHANE	60790	166HW25DM4DL	60790004	WG	1000	U	1000	R	ug/L	DL
VOA	SW8260B	CHLOROMETHANE	60790	166GW07DM4DL	60790008	WG	100	U	100	R	ug/L	DL
VOA	SW8260B	CHLOROMETHANE	60879	166GW41DM4DL	60879001	WG	500	U	500	R	ug/L	DL
VOA	SW8260B	CHLOROMETHANE	60879	166GW42DM4DL	60879002	WG	1000	U	1000	R	ug/L	DL
VOA	SW8260B	CHLOROMETHANE	60879	166GW43DM4DL	60879003	WG	2500	U	2500	R	ug/L	DL
VOA	SW8260B	CHLOROMETHANE	60879	166GW44DM4DL	60879004	WG	500	U	500	R	ug/L	DL
VOA	SW8260B	CHLOROMETHANE	60879	166GW13DM4DL	60879005	WG	1000	U	1000	R	ug/L	DL
VOA	SW8260B	CHLOROMETHANE	61044	166GW38DM4DL	61044001	WG	200	U	200	R	ug/L	DL
VOA	SW8260B	CHLOROMETHANE	61044	166GW45DM4DL	61044002	WG	1000	U	1000	R	ug/L	DL
VOA	SW8260B	CHLOROMETHANE	61044	166GW48DM4DL	61044004	WG	1000	U	1000	R	ug/L	DL
VOA	SW8260B	CHLOROMETHANE	61044	166GWTM4M4DL	61044005	WG	1000	U	1000	R	ug/L	DL
VOA	SW8260B	CHLOROMETHANE	61044	166GW14DM4DL	61044007	WG	20	U	20	R	ug/L	DL
VOA	SW8260B	CHLOROMETHANE	61134	166GW36DM4DL	61134002	WG	5000	U	5000	R	ug/L	DL
VOA	SW8260B	CHLOROMETHANE	61170	166GW50DM4DL	61170001	WG	2500	U	2500	R	ug/L	DL
VOA	SW8260B	CHLOROMETHANE	62650	166GW27DM6	62650002	WG	10	U	10	UJ	ug/L	CC
VOA	SW8260B	CHLOROMETHANE	62650	166GW28DM6	62650003	WG	20	U	20	UJ	ug/L	CC
VOA	SW8260B	CHLOROMETHANE	62650	166GW28DM6DL	62650003	WG	50	U	50	R	ug/L	DL

Attachment 1 - Changed Qualifiers and Results
Charleston Navel Complex - Zone K, SWMU 166 - 2002 Sampling Events

Parameter Class	Analytical Method	Parameter	SDG	Sample ID	Lab Sample ID	Matrix	Sample Result	Original	Final Result	Final Qual	Units	Reasons
VOA	SW8260B	CHLOROMETHANE	62650	166GW29DM6	62650004	WG	20	U	20	UJ	ug/L	CC
VOA	SW8260B	CHLOROMETHANE	62650	166GW30DM6	62650005	WG	200	U	200	UJ	ug/L	CC
VOA	SW8260B	CHLOROMETHANE	62650	166GW31DM6	62650006	WG	40	U	40	UJ	ug/L	CC
VOA	SW8260B	CHLOROMETHANE	62650	166HW31DM6	62650007	WG	40	U	40	UJ	ug/L	CC
VOA	SW8260B	CHLOROMETHANE	62650	166GW32DM6	62650008	WG	250	U	250	UJ	ug/L	CC
VOA	SW8260B	CHLOROMETHANE	64473	166GW50DM7DL	64473003	WG	2500	U	2500	R	ug/L	DL
VOA	SW8260B	CHLOROMETHANE	64473	166HW50DM7DL	64473004	WG	2500	U	2500	R	ug/L	DL
VOA	SW8260B	CHLOROMETHANE	64475	166GW053M7DL	64475007	WG	1000	U	1000	R	ug/L	DL
VOA	SW8260B	CHLOROMETHANE	64475	166GW054M7DL	64475008	WG	250	U	250	R	ug/L	DL
VOA	SW8260B	CHLOROMETHANE	64475	166GW055M7DL	64475009	WG	250	U	250	R	ug/L	DL
VOA	SW8260B	CHLOROMETHANE	64475	166HW055M7DL	64475010	WG	250	U	250	R	ug/L	DL
VOA	SW8260B	CHLOROMETHANE	64475	166GW07DM7DL	64475011	WG	250	U	250	R	ug/L	DL
VOA	SW8260B	CHLOROMETHANE	64475	166GW13DM7DL	64475013	WG	1000	U	1000	R	ug/L	DL
VOA	SW8260B	CHLOROMETHANE	64475	166HW13DM7DL	64475014	WG	1000	U	1000	R	ug/L	DL
VOA	SW8260B	CHLOROMETHANE	64475	166GW14DM7DL	64475015	WG	20	U	20	R	ug/L	DL
VOA	SW8260B	CHLOROMETHANE	64475	166GW26DM7DL	64475019	WG	500	U	500	R	ug/L	DL
VOA	SW8260B	CHLOROMETHANE	64550	166GW34DM7DL	64550003	WG	10000	U	10000	R	ug/L	DL
VOA	SW8260B	CHLOROMETHANE	64550	166GW36DM7DL	64550004	WG	5000	U	5000	R	ug/L	DL
VOA	SW8260B	CHLOROMETHANE	64676	163GW003M7DL	64676002	WG	50	U	50	R	ug/L	DL
VOA	SW8260B	CHLOROMETHANE	64676	166GW040M7DL	64676003	WG	10000	U	10000	R	ug/L	DL
VOA	SW8260B	CHLOROMETHANE	64676	166GW41DM7DL	646[illegible]08	WG	100	U	100	R	ug/L	DL

Attachment 1 - Changed Qualifiers and Results
Charleston Navel Complex - Zone K SMU 166 - 2002 Sampling Events

Parameter Class	Analytical Method	Parameter	SDG	Sample ID	Lab Sample ID	Matrix	Lab Result	Validation Qualifier	Final Result	Final Qual	Units	Reason
VOA	SW8260B	CHLOROMETHANE	64676	166GW42DM7DL	64676009	WG	1000	U	1000	R	ug/L	DL
VOA	SW8260B	CHLOROMETHANE	64676	166GW44DM7DL	64676011	WG	1000	U	1000	R	ug/L	DL
VOA	SW8260B	CHLOROMETHANE	64676	166GW35DM7DL	64676012	WG	1000	U	1000	R	ug/L	DL
VOA	SW8260B	CHLOROMETHANE	71658	166GW053M8DL	71658007	WG	500	U	500	R	ug/L	DL
VOA	SW8260B	CHLOROMETHANE	71658	166GW054M8DL	71658008	WG	250	U	250	R	ug/L	DL
VOA	SW8260B	CHLOROMETHANE	71658	166GW055M8DL	71658009	WG	1000	U	1000	R	ug/L	DL
VOA	SW8260B	CHLOROMETHANE	71658	166GW056M8DL	71658010	WG	1000	U	1000	R	ug/L	DL
VOA	SW8260B	CHLOROMETHANE	71658	166GW07DM8DL	71658012	WG	250	U	250	R	ug/L	DL
VOA	SW8260B	CHLOROMETHANE	71658	166GW13DM8DL	71658014	WG	1000	U	1000	R	ug/L	DL
VOA	SW8260B	CHLOROMETHANE	71658	166GW14DM8DL	71658016	WG	20	U	20	R	ug/L	DL
VOA	SW8260B	CHLOROMETHANE	71659	166GW17DM8	71659001	WG	10	U	10	UJ	ug/L	CC, MS
VOA	SW8260B	CHLOROMETHANE	71659	166GW19DM8	71659002	WG	10	U	10	UJ	ug/L	CC
VOA	SW8260B	CHLOROMETHANE	71659	166GW19DM8DL	71659002	WG	20	U	20	R	ug/L	DL
VOA	SW8260B	CHLOROMETHANE	71659	166GW21DM8	71659003	WG	10	U	10	UJ	ug/L	CC
VOA	SW8260B	CHLOROMETHANE	71659	166GW25DM8DL	71659004	WG	1000	U	1000	R	ug/L	DL
VOA	SW8260B	CHLOROMETHANE	71659	166GW26DM8	71659005	WG	250	U	250	UJ	ug/L	CC
VOA	SW8260B	CHLOROMETHANE	71659	698GW001M8	71659006	WG	10	U	10	UJ	ug/L	CC
VOA	SW8260B	CHLOROMETHANE	71659	698HW001M8	71659007	WG	10	U	10	UJ	ug/L	CC
VOA	SW8260B	CHLOROMETHANE	71766	166GW49DM8DL	71766003	WG	500	U	500	R	ug/L	DL
VOA	SW8260B	CHLOROMETHANE	71766	166GW50DM8DL	71766004	WG	2000	U	2000	R	ug/L	DL
VOA	SW8260B	CHLOROMETHANE	71766	166HW50DM8	71766005	WG	500	U	500	UJ	ug/L	CC,BS

Attachment 1 - Changed Qualifiers and Results
Charleston Navel Complex - Zone K, SWMU 166 - 2002 Sampling Events

Parameter Class	Analytical Method	Parameter	SDG	Sample ID	Lab Sample ID	Matrix	Lab Result	Lab Qual	Final Result	Final Qual	Units	Reason
VOA	SW8260B	CHLOROMETHANE	71766	166HW50DM8DL	71766005	WG	5000	U	5000	R	ug/L	DL
VOA	SW8260B	CHLOROMETHANE	71766	166GW51DM8DL	71766006	WG	1000	U	1000	R	ug/L	DL
VOA	SW8260B	CHLOROMETHANE	71766	166GW52DM8DL	71766007	WG	1000	U	1000	R	ug/L	DL
VOA	SW8260B	CHLOROMETHANE	71766	166GWTM3M8DL	71766009	WG	100	U	100	R	ug/L	DL
VOA	SW8260B	CHLOROMETHANE	71766	166GWTM4M8DL	71766010	WG	2000	U	2000	R	ug/L	DL
VOA	SW8260B	CHLOROMETHANE	71766	166GW45DM8DL	71766011	WG	500	U	500	R	ug/L	DL
VOA	SW8260B	CHLOROMETHANE	71766	166GW46DM8DL	71766012	WG	500	U	500	R	ug/L	DL
VOA	SW8260B	CHLOROMETHANE	71766	166GW48DM8DL	71766014	WG	1000	U	1000	R	ug/L	DL
VOA	SW8260B	CHLOROMETHANE	71852	166GW040M8DL	71852003	WG	2500	U	2500	R	ug/L	DL
VOA	SW8260B	CHLOROMETHANE	71852	166HW040M8DL	71852004	WG	2500	U	2500	R	ug/L	DL
VOA	SW8260B	CHLOROMETHANE	71852	166GW34DM8DL	71852005	WG	10000	U	10000	R	ug/L	DL
VOA	SW8260B	CHLOROMETHANE	71852	166GW35DM8	71852006	WG	250	U	250	UJ	ug/L	CC
VOA	SW8260B	CHLOROMETHANE	71852	166GW36DM8DL	71852007	WG	2500	U	2500	R	ug/L	DL
VOA	SW8260B	CHLOROMETHANE	71852	166GW37DM8	71852008	WG	10	U	10	UJ	ug/L	CC
VOA	SW8260B	CHLOROMETHANE	71852	166GW37DM8DL	71852008	WG	50	U	50	R	ug/L	DL
VOA	SW8260B	CHLOROMETHANE	71852	166GW39DM8	71852009	WG	10	U	10	UJ	ug/L	CC
VOA	SW8260B	CHLOROMETHANE	71852	166GW43DM8DL	71852012	WG	1000	U	1000	R	ug/L	DL
VOA	SW8260B	CHLOROMETHANE	71852	166GW44DM8	71852013	WG	250	U	250	UJ	ug/L	CC
VOA	SW8260B	CHLOROMETHANE	72055	163GW003M8	72055003	WG	10	U	10	UJ	ug/L	SS
VOA	SW8260B	CHLOROMETHANE	72055	163GW003M8DL	72055003	WG	100	U	100	R	ug/L	DL
VOA	SW8260B	CHLOROMETHANE	72055	163GW03MM8	72055004	WG	10	U	10	UJ	ug/L	SS

Parameter Class	Analytical Method	Parameter	SDG	Sample ID	Lab Sample ID	Matrix	Lab Result	Lab Qual	Final Result	Final Qual	Units	Reason
VOA	SW8260B	CHLOROMETHANE	72055	166GW16DM8	72055005	WG	10	U	10	UJ	ug/L	SS
VOA	SW8260B	CHLOROMETHANE	72055	166GW16DM8DL	72055005	WG	500	U	500	R	ug/L	DL
VOA	SW8260B	CHLOROMETHANE	72055	166GW33DM8	72055006	WG	10	U	10	UJ	ug/L	SS
VOA	SW8260B	CHLOROMETHANE	72055	166GW38DM8	72055007	WG	10	U	10	UJ	ug/L	SS
VOA	SW8260B	CHLOROMETHANE	72055	166GW38DM8DL	72055007	WG	100	U	100	R	ug/L	DL
VOA	SW8260B	CHLOROMETHANE	72055	163GW005M8	72055008	WG	10	U	10	UJ	ug/L	SS
VOA	SW8260B	cis-1,2-DICHLOROETHYLENE	56223	166GW32DM1LR	56223003	WG	59.3	JD	59.3	R	ug/L	DL
VOA	SW8260B	cis-1,2-DICHLOROETHYLENE	56330	166GW28DM1DL	56330001	WG	62.7	D	62.7	R	ug/L	DL
VOA	SW8260B	cis-1,2-DICHLOROETHYLENE	56330	166GW30DM1LR	56330003	WG	104	JD	104	R	ug/L	DL
VOA	SW8260B	cis-1,2-DICHLOROETHYLENE	56330	166HW30DM1	56330004	WG	102	E	102	R	ug/L	LR
VOA	SW8260B	cis-1,2-DICHLOROETHYLENE	56341	166VDRM001M2	56341001	SO	5.6	U	5.6	UJ	ug/kg	IS
VOA	SW8260B	cis-1,2-DICHLOROETHYLENE	57725	166GW28DM2DL	57725002	WG	56.7	D	56.7	R	ug/L	DL
VOA	SW8260B	cis-1,2-DICHLOROETHYLENE	57725	166GW29DM2DL	57725003	WG	4.9	JD	4.9	R	ug/L	DL
VOA	SW8260B	cis-1,2-DICHLOROETHYLENE	57725	166GW30DM2	57725004	WG	267	E	267	R	ug/L	LR
VOA	SW8260B	cis-1,2-DICHLOROETHYLENE	57725	166HW30DM2	57725005	WG	330	E	330	R	ug/L	LR
VOA	SW8260B	cis-1,2-DICHLOROETHYLENE	57725	166GW31DM2DL	57725006	WG	23.2	D	23.2	R	ug/L	DL
VOA	SW8260B	cis-1,2-DICHLOROETHYLENE	57725	166GW32DM2DL	57725007	WG	48.4	JD	48.4	R	ug/L	DL
VOA	SW8260B	cis-1,2-DICHLOROETHYLENE	58856	166GW28DM3DL	58856002	WG	43	JD	43	R	ug/L	DL
VOA	SW8260B	cis-1,2-DICHLOROETHYLENE	58856	166GW29DM3DL	58856003	WG	5.2	JD	5.2	R	ug/L	DL
VOA	SW8260B	cis-1,2-DICHLOROETHYLENE	58856	166GW30DM3	58856004	WG	373	E	373	R	ug/L	LR
VOA	SW8260B	cis-1,2-DICHLOROETHYLENE	58856	166GW31DM3DL	58856005	WG	21.2	JD	21.2	R	ug/L	DL

Attachment 1 - Changed Qualifiers and Results
Charleston Navel Complex - Zone K, SWMU 166 - 2002 Sampling Events

Parameter Class	Analytical Method	Parameter	SDG	Sample ID	Lab Sample ID	Matrix	Lab Flag	Initial Qual	Final Result	Final Qual	Units	Reasons
VOA	SW8260B	cis-1,2-DICHLOROETHYLENE	58856	166HW31DM3DL	58856006	WG	20	JD	20	R	ug/L	DL
VOA	SW8260B	cis-1,2-DICHLOROETHYLENE	58856	166GW32DM3DL	58856007	WG	143	JD	143	R	ug/L	DL
VOA	SW8260B	cis-1,2-DICHLOROETHYLENE	60789	166GW33DM4DL	60789001	WG	18.3	D	18.3	R	ug/L	DL
VOA	SW8260B	cis-1,2-DICHLOROETHYLENE	60789	166GW34DM4DL	60789002	WG	392	JD	392	R	ug/L	DL
VOA	SW8260B	cis-1,2-DICHLOROETHYLENE	60789	166GW35DM4DL	60789003	WG	5.6	JD	5.6	R	ug/L	DL
VOA	SW8260B	cis-1,2-DICHLOROETHYLENE	60789	166GW37DM4DL	60789004	WG	788	JD	788	R	ug/L	DL
VOA	SW8260B	cis-1,2-DICHLOROETHYLENE	60789	166GW39DM4DL	60789005	WG	5.6	JD	5.6	R	ug/L	DL
VOA	SW8260B	cis-1,2-DICHLOROETHYLENE	60790	163GW03MM4	60790001	WG	687	E	687	R	ug/L	LR
VOA	SW8260B	cis-1,2-DICHLOROETHYLENE	60790	166GW26DM4	60790002	WG	151	E	151	R	ug/L	LR
VOA	SW8260B	cis-1,2-DICHLOROETHYLENE	60790	166GW26DM4DL	60790002	WG	129	JD	129	J	ug/L	DL
VOA	SW8260B	cis-1,2-DICHLOROETHYLENE	60790	166GW25DM4	60790003	WG	140	E	140	R	ug/L	LR
VOA	SW8260B	cis-1,2-DICHLOROETHYLENE	60790	166GW25DM4DL	60790003	WG	121	JD	121	J	ug/L	DL
VOA	SW8260B	cis-1,2-DICHLOROETHYLENE	60790	166HW25DM4	60790004	WG	129	E	129	R	ug/L	LR
VOA	SW8260B	cis-1,2-DICHLOROETHYLENE	60790	166HW25DM4DL	60790004	WG	127	JD	127	J	ug/L	DL
VOA	SW8260B	cis-1,2-DICHLOROETHYLENE	60790	166GW07DM4DL	60790008	WG	25.6	JD	25.6	R	ug/L	DL
VOA	SW8260B	cis-1,2-DICHLOROETHYLENE	60879	166GW41DM4	60879001	WG	236	E	236	R	ug/L	LR
VOA	SW8260B	cis-1,2-DICHLOROETHYLENE	60879	166GW41DM4DL	60879001	WG	223	JD	223	J	ug/L	DL
VOA	SW8260B	cis-1,2-DICHLOROETHYLENE	60879	166GW42DM4DL	60879002	WG	62.8	JD	62.8	R	ug/L	DL
VOA	SW8260B	cis-1,2-DICHLOROETHYLENE	60879	166GW43DM4	60879003	WG	324	E	324	R	ug/L	LR
VOA	SW8260B	cis-1,2-DICHLOROETHYLENE	60879	166GW43DM4DL	60879003	WG	319	JD	319	J	ug/L	DL
VOA	SW8260B	cis-1,2-DICHLOROETHYLENE	60879	166GW44DM4DL	608[illegible]04	WG	43.5	JD	43.5	R	ug/L	DL

Parameter Class	Analytical Method	Parameter	SDG	Sample ID	Lab Sample ID	Matrix	Lab Result	Lab Qual	Final Result	Final Qual	Units	Reasons
VOA	SW8260B	cis-1,2-DICHLOROETHYLENE	60879	166GW13DM4	60879005	WG	205	E	205	R	ug/L	LR
VOA	SW8260B	cis-1,2-DICHLOROETHYLENE	60879	166GW13DM4DL	60879005	WG	211	JD	211	J	ug/L	DL
VOA	SW8260B	cis-1,2-DICHLOROETHYLENE	61044	166GW38DM4	61044001	WG	147	E	147	R	ug/L	LR
VOA	SW8260B	cis-1,2-DICHLOROETHYLENE	61044	166GW45DM4DL	61044002	WG	500	U	500	R	ug/L	DL
VOA	SW8260B	cis-1,2-DICHLOROETHYLENE	61044	166GW48DM4DL	61044004	WG	500	U	500	R	ug/L	DL
VOA	SW8260B	cis-1,2-DICHLOROETHYLENE	61044	166GWTM4M4	61044005	WG	2680	E	2680	R	ug/L	LR
VOA	SW8260B	cis-1,2-DICHLOROETHYLENE	61044	166GW14DM4DL	61044007	WG	16.8	D	16.8	R	ug/L	DL
VOA	SW8260B	cis-1,2-DICHLOROETHYLENE	61134	166GW36DM4DL	61134002	WG	432	JD	432	R	ug/L	DL
VOA	SW8260B	cis-1,2-DICHLOROETHYLENE	61170	166GW50DM4DL	61170001	WG	230	JD	230	R	ug/L	DL
VOA	SW8260B	cis-1,2-DICHLOROETHYLENE	62650	166GW28DM6	62650003	WG	67.6	=	67.6	J	ug/L	SS
VOA	SW8260B	cis-1,2-DICHLOROETHYLENE	62650	166GW28DM6DL	62650003	WG	69.6	D	69.6	R	ug/L	DL
VOA	SW8260B	cis-1,2-DICHLOROETHYLENE	62650	166GW29DM6	62650004	WG	4.2	J	4.2	J	ug/L	SS
VOA	SW8260B	cis-1,2-DICHLOROETHYLENE	62650	166GW30DM6	62650005	WG	484	=	484	J	ug/L	SS
VOA	SW8260B	cis-1,2-DICHLOROETHYLENE	62650	166GW31DM6	62650006	WG	61.8	=	61.8	J	ug/L	SS
VOA	SW8260B	cis-1,2-DICHLOROETHYLENE	62650	166HW31DM6	62650007	WG	56.8	=	56.8	J	ug/L	SS
VOA	SW8260B	cis-1,2-DICHLOROETHYLENE	62650	166GW32DM6	62650008	WG	185	=	185	J	ug/L	SS
VOA	SW8260B	cis-1,2-DICHLOROETHYLENE	64473	166GW50DM7DL	64473003	WG	336	JD	336	R	ug/L	DL
VOA	SW8260B	cis-1,2-DICHLOROETHYLENE	64473	166HW50DM7DL	64473004	WG	323	JD	323	R	ug/L	DL
VOA	SW8260B	cis-1,2-DICHLOROETHYLENE	64475	166GW053M7	64475007	WG	189	E	189	R	ug/L	LR
VOA	SW8260B	cis-1,2-DICHLOROETHYLENE	64475	166GW053M7DL	64475007	WG	167	JD	167	J	ug/L	DL
VOA	SW8260B	cis-1,2-DICHLOROETHYLENE	64475	166GW054M7DL	64475008	WG	90.5	JD	90.5	R	ug/L	DL

Attachment 1 - Changed Qualifiers and Results
Charleston Navel Complex - Zone K, SWMU 166 - 2002 Sampling Events

Parameter Class	Analytical Method	Parameter	SDG	Sample ID	Lab Sample ID	Matrix	Lab Result	Lab Qual	Final Result	Final Qual	Units	Reason
VOA	SW8260B	cis-1,2-DICHLOROETHYLENE	64475	166GW055M7	64475009	WG	118	E	118	R	ug/L	LR
VOA	SW8260B	cis-1,2-DICHLOROETHYLENE	64475	166GW055M7DL	64475009	WG	108	JD	108	J	ug/L	DL
VOA	SW8260B	cis-1,2-DICHLOROETHYLENE	64475	166HW055M7	64475010	WG	126	E	126	R	ug/L	LR
VOA	SW8260B	cis-1,2-DICHLOROETHYLENE	64475	166HW055M7DL	64475010	WG	105	JD	105	J	ug/L	DL
VOA	SW8260B	cis-1,2-DICHLOROETHYLENE	64475	166GW07DM7DL	64475011	WG	25.4	JD	25.4	R	ug/L	DL
VOA	SW8260B	cis-1,2-DICHLOROETHYLENE	64475	166GW13DM7	64475013	WG	197	E	197	R	ug/L	LR
VOA	SW8260B	cis-1,2-DICHLOROETHYLENE	64475	166GW13DM7DL	64475013	WG	255	JD	255	J	ug/L	DL
VOA	SW8260B	cis-1,2-DICHLOROETHYLENE	64475	166HW13DM7	64475014	WG	270	E	270	R	ug/L	LR
VOA	SW8260B	cis-1,2-DICHLOROETHYLENE	64475	166HW13DM7DL	64475014	WG	184	JD	184	J	ug/L	DL
VOA	SW8260B	cis-1,2-DICHLOROETHYLENE	64475	166GW14DM7DL	64475015	WG	18.4	D	18.4	R	ug/L	DL
VOA	SW8260B	cis-1,2-DICHLOROETHYLENE	64475	166GW26DM7	64475019	WG	377	E	377	R	ug/L	LR
VOA	SW8260B	cis-1,2-DICHLOROETHYLENE	64550	166GW34DM7DL	64550003	WG	561	JD	561	R	ug/L	DL
VOA	SW8260B	cis-1,2-DICHLOROETHYLENE	64550	166GW36DM7DL	64550004	WG	2890	D	2890	R	ug/L	DL
VOA	SW8260B	cis-1,2-DICHLOROETHYLENE	64676	163GW003M7	64676002	WG	137	E	137	R	ug/L	LR
VOA	SW8260B	cis-1,2-DICHLOROETHYLENE	64676	166GW040M7	64676003	WG	2020	E	2020	R	ug/L	LR
VOA	SW8260B	cis-1,2-DICHLOROETHYLENE	64676	166GW41DM7DL	64676008	WG	178	D	178	R	ug/L	DL
VOA	SW8260B	cis-1,2-DICHLOROETHYLENE	64676	166GW42DM7DL	64676009	WG	530	D	530	R	ug/L	DL
VOA	SW8260B	cis-1,2-DICHLOROETHYLENE	64676	166GW44DM7DL	64676011	WG	47.4	JD	47.4	R	ug/L	DL
VOA	SW8260B	cis-1,2-DICHLOROETHYLENE	64676	166GW35DM7DL	64676012	WG	46.5	JD	46.5	R	ug/L	DL
VOA	SW8260B	cis-1,2-DICHLOROETHYLENE	71658	166GW001M8	71658004	WG	0.39	J	0.39	J	ug/L	SS
VOA	SW8260B	cis-1,2-DICHLOROETHYLENE	71658	166GW017M8	71658006	WG	3.8	J	3.8	J	ug/L	SS

Parameter Class	Analytical Method	Parameter	SDG	Sample ID	Lab Sample ID	Matrix	Result	Lab Qual	Final Result	Final Qual	Units	Reasons
VOA	SW8260B	cis-1,2-DICHLOROETHYLENE	71658	166GW053M8	71658007	WG	83.5	=	83.5	J	ug/L	SS
VOA	SW8260B	cis-1,2-DICHLOROETHYLENE	71658	166GW053M8DL	71658007	WG	90.8	JD	90.8	R	ug/L	DL
VOA	SW8260B	cis-1,2-DICHLOROETHYLENE	71658	166GW054M8	71658008	WG	165	=	165	J	ug/L	SS
VOA	SW8260B	cis-1,2-DICHLOROETHYLENE	71658	166GW054M8DL	71658008	WG	162	D	162	R	ug/L	DL
VOA	SW8260B	cis-1,2-DICHLOROETHYLENE	71658	166GW055M8	71658009	WG	234	=	234	J	ug/L	SS
VOA	SW8260B	cis-1,2-DICHLOROETHYLENE	71658	166GW055M8DL	71658009	WG	226	JD	226	R	ug/L	DL
VOA	SW8260B	cis-1,2-DICHLOROETHYLENE	71658	166GW056M8	71658010	WG	240	E	240	R	ug/L	LR
VOA	SW8260B	cis-1,2-DICHLOROETHYLENE	71658	166GW056M8DL	71658010	WG	240	JD	240	J	ug/L	DL,SS
VOA	SW8260B	cis-1,2-DICHLOROETHYLENE	71658	166GW07DM8	71658012	WG	31.5	=	31.5	J	ug/L	SS
VOA	SW8260B	cis-1,2-DICHLOROETHYLENE	71658	166GW07DM8DL	71658012	WG	28.1	JD	28.1	R	ug/L	DL
VOA	SW8260B	cis-1,2-DICHLOROETHYLENE	71658	166GW08DM8	71658013	WG	10.4	=	10.4	J	ug/L	SS
VOA	SW8260B	cis-1,2-DICHLOROETHYLENE	71658	166GW13DM8	71658014	WG	223	J	223	J	ug/L	SS
VOA	SW8260B	cis-1,2-DICHLOROETHYLENE	71658	166GW13DM8DL	71658014	WG	209	JD	209	R	ug/L	DL
VOA	SW8260B	cis-1,2-DICHLOROETHYLENE	71658	166HW13DM8	71658015	WG	164	J	164	J	ug/L	SS
VOA	SW8260B	cis-1,2-DICHLOROETHYLENE	71658	166GW14DM8	71658016	WG	23.7	=	23.7	J	ug/L	SS
VOA	SW8260B	cis-1,2-DICHLOROETHYLENE	71658	166GW14DM8DL	71658016	WG	24.8	D	24.8	R	ug/L	DL
VOA	SW8260B	cis-1,2-DICHLOROETHYLENE	71659	166GW19DM8	71659002	WG	43.5	=	43.5	J	ug/L	SS
VOA	SW8260B	cis-1,2-DICHLOROETHYLENE	71659	166GW19DM8DL	71659002	WG	45.2	D	45.2	R	ug/L	DL
VOA	SW8260B	cis-1,2-DICHLOROETHYLENE	71659	166GW25DM8	71659004	WG	147	J	147	J	ug/L	SS
VOA	SW8260B	cis-1,2-DICHLOROETHYLENE	71659	166GW25DM8DL	71659004	WG	139	JD	139	R	ug/L	DL
VOA	SW8260B	cis-1,2-DICHLOROETHYLENE	71659	166GW26DM8	71659005	WG	416	=	416	J	ug/L	SS

Attachment 1 - Changed Qualifiers and Results
Charleston Navel Complex - Zone K, SWMU 166 - 2002 Sampling Events

Parameter Class	Analytical Method	Parameter	SDG	Sample ID	Lab Sample ID	Matrix	Lab Result	Lab Qual	Final Result	Final Qual	Unit	Reasons
VOA	SW8260B	cis-1,2-DICHLOROETHYLENE	71766	166GW49DM8	71766003	WG	458	E	458	R	ug/L	DL
VOA	SW8260B	cis-1,2-DICHLOROETHYLENE	71766	166GW49DM8DL	71766003	WG	474	D	474	J	ug/L	SS
VOA	SW8260B	cis-1,2-DICHLOROETHYLENE	71766	166GW50DM8	71766004	WG	424	E	424	R	ug/L	LR
VOA	SW8260B	cis-1,2-DICHLOROETHYLENE	71766	166GW50DM8DL	71766004	WG	408	JD	408	J	ug/L	DL,SS
VOA	SW8260B	cis-1,2-DICHLOROETHYLENE	71766	166HW50DM8	71766005	WG	620	=	620	J	ug/L	SS
VOA	SW8260B	cis-1,2-DICHLOROETHYLENE	71766	166HW50DM8DL	71766005	WG	553	JD	553	R	ug/L	DL
VOA	SW8260B	cis-1,2-DICHLOROETHYLENE	71766	166GW51DM8	71766006	WG	1880	E	1880	R	ug/L	LR
VOA	SW8260B	cis-1,2-DICHLOROETHYLENE	71766	166GW51DM8DL	71766006	WG	1870	D	1870	J	ug/L	SS
VOA	SW8260B	cis-1,2-DICHLOROETHYLENE	71766	166GW52DM8	71766007	WG	2710	E	2710	R	ug/L	LR
VOA	SW8260B	cis-1,2-DICHLOROETHYLENE	71766	166GW52DM8DL	71766007	WG	3190	D	3190	J	ug/L	SS
VOA	SW8260B	cis-1,2-DICHLOROETHYLENE	71766	166GWIN3M8	71766008	WG	29.6	=	29.6	J	ug/L	SS
VOA	SW8260B	cis-1,2-DICHLOROETHYLENE	71766	166GWTM3M8	71766009	WG	755	E	755	R	ug/L	LR
VOA	SW8260B	cis-1,2-DICHLOROETHYLENE	71766	166GWTM3M8DL	71766009	WG	813	D	813	J	ug/L	SS
VOA	SW8260B	cis-1,2-DICHLOROETHYLENE	71766	166GWTM4M8	71766010	WG	4140	E	4140	R	ug/L	LR
VOA	SW8260B	cis-1,2-DICHLOROETHYLENE	71766	166GWTM4M8DL	71766010	WG	4630	D	4630	J	ug/L	DL
VOA	SW8260B	cis-1,2-DICHLOROETHYLENE	71766	166GW45DM8DL	71766011	WG	61.7	JD	61.7	R	ug/L	DL
VOA	SW8260B	cis-1,2-DICHLOROETHYLENE	71766	166GW46DM8	71766012	WG	814	E	814	R	ug/L	LR
VOA	SW8260B	cis-1,2-DICHLOROETHYLENE	71766	166GW46DM8DL	71766012	WG	904	D	904	J	ug/L	DL
VOA	SW8260B	cis-1,2-DICHLOROETHYLENE	71766	166GW48DM8	71766014	WG	191	E	191	R	ug/L	LR
VOA	SW8260B	cis-1,2-DICHLOROETHYLENE	71766	166GW48DM8DL	71766014	WG	213	JD	213	J	ug/L	DL,SS
VOA	SW8260B	cis-1,2-DICHLOROETHYLENE	71852	166GW040M8	71852003	WG	8640	E	8640	R	ug/L	LR

Parameter Class	Analytical Method	Parameter	SDG	Sample ID	Lab Sample ID	Matrix	Lab Result	Lab Qual	Final Result	Final Qual	Units	Reason
VOA	SW8260B	cis-1,2-DICHLOROETHYLENE	71852	166GW040M8DL	71852003	WG	8400	D	8400	J	ug/L	SS
VOA	SW8260B	cis-1,2-DICHLOROETHYLENE	71852	166HW040M8	71852004	WG	9000	E	9000	R	ug/L	LR
VOA	SW8260B	cis-1,2-DICHLOROETHYLENE	71852	166HW040M8DL	71852004	WG	9210	D	9210	J	ug/L	SS
VOA	SW8260B	cis-1,2-DICHLOROETHYLENE	71852	166GW34DM8	71852005	WG	14800	E	14800	R	ug/L	LR
VOA	SW8260B	cis-1,2-DICHLOROETHYLENE	71852	166GW34DM8DL	71852005	WG	16100	D	16100	J	ug/L	SS
VOA	SW8260B	cis-1,2-DICHLOROETHYLENE	71852	166GW36DM8	71852007	WG	6790	E	6790	R	ug/L	LR
VOA	SW8260B	cis-1,2-DICHLOROETHYLENE	71852	166GW36DM8DL	71852007	WG	7240	D	7240	J	ug/L	SS
VOA	SW8260B	cis-1,2-DICHLOROETHYLENE	71852	166GW37DM8	71852008	WG	322	E	322	R	ug/L	LR
VOA	SW8260B	cis-1,2-DICHLOROETHYLENE	71852	166GW37DM8DL	71852008	WG	340	D	340	J	ug/L	SS
VOA	SW8260B	cis-1,2-DICHLOROETHYLENE	71852	166GW43DM8	71852012	WG	8330	E	8330	R	ug/L	LR
VOA	SW8260B	cis-1,2-DICHLOROETHYLENE	71852	166GW43DM8DL	71852012	WG	8530	D	8530	J	ug/L	SS
VOA	SW8260B	cis-1,2-DICHLOROETHYLENE	72055	163GW003M8	72055003	WG	11.9	=	11.9	J	ug/L	SS
VOA	SW8260B	cis-1,2-DICHLOROETHYLENE	72055	163GW003M8DL	72055003	WG	9.6	JD	9.6	R	ug/L	DL
VOA	SW8260B	cis-1,2-DICHLOROETHYLENE	72055	163GW03MM8	72055004	WG	4.1	J	4.1	J	ug/L	SS
VOA	SW8260B	cis-1,2-DICHLOROETHYLENE	72055	166GW16DM8	72055005	WG	1750	E	1750	R	ug/L	LR
VOA	SW8260B	cis-1,2-DICHLOROETHYLENE	72055	166GW16DM8DL	72055005	WG	3020	D	3020	J	ug/L	SS
VOA	SW8260B	cis-1,2-DICHLOROETHYLENE	72055	166GW33DM8	72055006	WG	6.2	=	6.2	J	ug/L	SS
VOA	SW8260B	cis-1,2-DICHLOROETHYLENE	72055	166GW38DM8	72055007	WG	316	E	316	R	ug/L	LR
VOA	SW8260B	cis-1,2-DICHLOROETHYLENE	72055	166GW38DM8DL	72055007	WG	327	D	327	J	ug/L	SS
VOA	SW8260B	cis-1,2-DICHLOROETHYLENE	72055	163GW005M8	72055008	WG	5	U	5	UJ	ug/L	SS
VOA	SW8260B	cis-1,3-DICHLOROPROPENE	56223	166GW32DM1LR	56223003	WG	250	U	250	R	ug/L	DL

Attachment 1 - Changed Qualifiers and Results
Charleston Navel Complex - Zone K, SWMU 166 - 2002 Sampling Events

Parameter Class	Analytical Method	Parameter	SDG	Sample ID	Lab Sample ID	Matrix	Lab Result	Lab Qual	Final Result	Final Qual	Units	Reasons
VOA	SW8260B	cis-1,3-DICHLOROPROPENE	56330	166GW28DM1DL	56330001	WG	25	U	25	R	ug/L	DL
VOA	SW8260B	cis-1,3-DICHLOROPROPENE	56330	166GW30DM1LR	56330003	WG	250	U	250	R	ug/L	DL
VOA	SW8260B	cis-1,3-DICHLOROPROPENE	56330	166HW30DM1LR	56330004	WG	250	U	250	R	ug/L	DL
VOA	SW8260B	cis-1,3-DICHLOROPROPENE	56341	166VDRM001M2	56341001	SO	5.6	U	5.6	UJ	ug/kg	IS
VOA	SW8260B	cis-1,3-DICHLOROPROPENE	57725	166GW28DM2DL	57725002	WG	10	U	10	R	ug/L	DL
VOA	SW8260B	cis-1,3-DICHLOROPROPENE	57725	166GW29DM2DL	57725003	WG	10	U	10	R	ug/L	DL
VOA	SW8260B	cis-1,3-DICHLOROPROPENE	57725	166GW30DM2DL	57725004	WG	50	U	50	R	ug/L	DL
VOA	SW8260B	cis-1,3-DICHLOROPROPENE	57725	166HW30DM2DL	57725005	WG	50	U	50	R	ug/L	DL
VOA	SW8260B	cis-1,3-DICHLOROPROPENE	57725	166GW31DM2DL	57725006	WG	10	U	10	R	ug/L	DL
VOA	SW8260B	cis-1,3-DICHLOROPROPENE	57725	166GW32DM2DL	57725007	WG	50	U	50	R	ug/L	DL
VOA	SW8260B	cis-1,3-DICHLOROPROPENE	58856	166GW28DM3DL	58856002	WG	50	U	50	R	ug/L	DL
VOA	SW8260B	cis-1,3-DICHLOROPROPENE	58856	166GW29DM3DL	58856003	WG	10	U	10	R	ug/L	DL
VOA	SW8260B	cis-1,3-DICHLOROPROPENE	58856	166GW30DM3DL	58856004	WG	250	U	250	R	ug/L	DL
VOA	SW8260B	cis-1,3-DICHLOROPROPENE	58856	166GW31DM3DL	58856005	WG	25	U	25	R	ug/L	DL
VOA	SW8260B	cis-1,3-DICHLOROPROPENE	58856	166HW31DM3DL	58856006	WG	50	U	50	R	ug/L	DL
VOA	SW8260B	cis-1,3-DICHLOROPROPENE	58856	166GW32DM3DL	58856007	WG	250	U	250	R	ug/L	DL
VOA	SW8260B	cis-1,3-DICHLOROPROPENE	60789	166GW33DM4DL	60789001	WG	10	U	10	R	ug/L	DL
VOA	SW8260B	cis-1,3-DICHLOROPROPENE	60789	166GW34DM4DL	60789002	WG	2500	U	2500	R	ug/L	DL
VOA	SW8260B	cis-1,3-DICHLOROPROPENE	60789	166GW35DM4DL	60789003	WG	50	U	50	R	ug/L	DL
VOA	SW8260B	cis-1,3-DICHLOROPROPENE	60789	166GW37DM4DL	60789004	WG	2500	U	2500	R	ug/L	DL
VOA	SW8260B	cis-1,3-DICHLOROPROPENE	60789	166GW39DM4DL	60789005	WG	50	U	50	R	ug/L	DL

Parameter Class	Analytical Method	Parameter	SDG	Sample ID	Lab Sample	Matrix	Lab Result	Lab Qualifier	Final Result	Final Qualifier	Unit	Reason
VOA	SW8260B	cis-1,3-DICHLOROPROPENE	60790	163GW03MM4DL	60790001	WG	250	U	250	R	ug/L	DL
VOA	SW8260B	cis-1,3-DICHLOROPROPENE	60790	166GW26DM4DL	60790002	WG	250	U	250	R	ug/L	DL
VOA	SW8260B	cis-1,3-DICHLOROPROPENE	60790	166GW25DM4DL	60790003	WG	500	U	500	R	ug/L	DL
VOA	SW8260B	cis-1,3-DICHLOROPROPENE	60790	166HW25DM4DL	60790004	WG	500	U	500	R	ug/L	DL
VOA	SW8260B	cis-1,3-DICHLOROPROPENE	60790	166GW07DM4DL	60790008	WG	50	U	50	R	ug/L	DL
VOA	SW8260B	cis-1,3-DICHLOROPROPENE	60879	166GW41DM4DL	60879001	WG	250	U	250	R	ug/L	DL
VOA	SW8260B	cis-1,3-DICHLOROPROPENE	60879	166GW42DM4DL	60879002	WG	500	U	500	R	ug/L	DL
VOA	SW8260B	cis-1,3-DICHLOROPROPENE	60879	166GW43DM4DL	60879003	WG	1250	U	1250	R	ug/L	DL
VOA	SW8260B	cis-1,3-DICHLOROPROPENE	60879	166GW44DM4DL	60879004	WG	250	U	250	R	ug/L	DL
VOA	SW8260B	cis-1,3-DICHLOROPROPENE	60879	166GW13DM4DL	60879005	WG	500	U	500	R	ug/L	DL
VOA	SW8260B	cis-1,3-DICHLOROPROPENE	61044	166GW38DM4DL	61044001	WG	100	U	100	R	ug/L	DL
VOA	SW8260B	cis-1,3-DICHLOROPROPENE	61044	166GW45DM4DL	61044002	WG	500	U	500	R	ug/L	DL
VOA	SW8260B	cis-1,3-DICHLOROPROPENE	61044	166GW48DM4DL	61044004	WG	500	U	500	R	ug/L	DL
VOA	SW8260B	cis-1,3-DICHLOROPROPENE	61044	166GWTM4M4DL	61044005	WG	500	U	500	R	ug/L	DL
VOA	SW8260B	cis-1,3-DICHLOROPROPENE	61044	166GW14DM4DL	61044007	WG	10	U	10	R	ug/L	DL
VOA	SW8260B	cis-1,3-DICHLOROPROPENE	61134	166GW36DM4DL	61134002	WG	2500	U	2500	R	ug/L	DL
VOA	SW8260B	cis-1,3-DICHLOROPROPENE	61170	166GW50DM4DL	61170001	WG	1250	U	1250	R	ug/L	DL
VOA	SW8260B	cis-1,3-DICHLOROPROPENE	62650	166GW28DM6DL	62650003	WG	25	U	25	R	ug/L	DL
VOA	SW8260B	cis-1,3-DICHLOROPROPENE	64473	166GW50DM7DL	64473003	WG	1250	U	1250	R	ug/L	DL
VOA	SW8260B	cis-1,3-DICHLOROPROPENE	64473	166HW50DM7DL	64473004	WG	1250	U	1250	R	ug/L	DL
VOA	SW8260B	cis-1,3-DICHLOROPROPENE	64475	163GW001M7	64475001	WG	5	U	5	UJ	ug/L	CC,BS

Attachment 1 - Changed Qualifiers and Results
Charleston Navel Complex - Zone K, SWMU 166 - 2002 Sampling Events

Parameter Class	Analytical Method	Parameter	SDG	Sample ID	Lab Sample ID	Matrix	Lab Result	Lab Qual	Final Result	Final Qual	Units	Reasons
VOA	SW8260B	cis-1,3-DICHLOROPROPENE	64475	163GW005M7	64475002	WG	5	U	5	UJ	ug/L	CC,BS
VOA	SW8260B	cis-1,3-DICHLOROPROPENE	64475	166GW017M7	64475003	WG	5	U	5	UJ	ug/L	CC,BS
VOA	SW8260B	cis-1,3-DICHLOROPROPENE	64475	166GW026M7	64475004	WG	5	U	5	UJ	ug/L	CC,BS
VOA	SW8260B	cis-1,3-DICHLOROPROPENE	64475	166GW053M7DL	64475007	WG	500	U	500	R	ug/L	DL
VOA	SW8260B	cis-1,3-DICHLOROPROPENE	64475	166GW054M7	64475008	WG	50	U	50	UJ	ug/L	CC,BS
VOA	SW8260B	cis-1,3-DICHLOROPROPENE	64475	166GW054M7DL	64475008	WG	125	U	125	R	ug/L	DL
VOA	SW8260B	cis-1,3-DICHLOROPROPENE	64475	166GW055M7DL	64475009	WG	125	U	125	R	ug/L	DL
VOA	SW8260B	cis-1,3-DICHLOROPROPENE	64475	166HW055M7DL	64475010	WG	125	U	125	R	ug/L	DL
VOA	SW8260B	cis-1,3-DICHLOROPROPENE	64475	166GW07DM7DL	64475011	WG	125	U	125	R	ug/L	DL
VOA	SW8260B	cis-1,3-DICHLOROPROPENE	64475	166GW08DM7	64475012	WG	5	U	5	UJ	ug/L	CC,BS
VOA	SW8260B	cis-1,3-DICHLOROPROPENE	64475	166GW13DM7DL	64475013	WG	500	U	500	R	ug/L	DL
VOA	SW8260B	cis-1,3-DICHLOROPROPENE	64475	166HW13DM7DL	64475014	WG	500	U	500	R	ug/L	DL
VOA	SW8260B	cis-1,3-DICHLOROPROPENE	64475	166GW14DM7DL	64475015	WG	10	U	10	R	ug/L	DL
VOA	SW8260B	cis-1,3-DICHLOROPROPENE	64475	166GW17DM7	64475016	WG	5	U	5	UJ	ug/L	CC,BS
VOA	SW8260B	cis-1,3-DICHLOROPROPENE	64475	166GW26DM7DL	64475019	WG	250	U	250	R	ug/L	DL
VOA	SW8260B	cis-1,3-DICHLOROPROPENE	64550	166GW34DM7DL	64550003	WG	5000	U	5000	R	ug/L	DL
VOA	SW8260B	cis-1,3-DICHLOROPROPENE	64550	166GW36DM7DL	64550004	WG	2500	U	2500	R	ug/L	DL
VOA	SW8260B	cis-1,3-DICHLOROPROPENE	64676	163GW003M7DL	64676002	WG	25	U	25	R	ug/L	DL
VOA	SW8260B	cis-1,3-DICHLOROPROPENE	64676	166GW040M7DL	64676003	WG	5000	U	5000	R	ug/L	DL
VOA	SW8260B	cis-1,3-DICHLOROPROPENE	64676	166GW41DM7DL	64676008	WG	50	U	50	R	ug/L	DL
VOA	SW8260B	cis-1,3-DICHLOROPROPENE	64676	166GW42DM7DL	64676009	WG	500	U	500	R	ug/L	DL

Parameter Class	Analytical Method	Parameter	SDG	Sample ID	Lab Sample ID	Matrix	Lab Result	Lab Qual	Final Result	Final Qual	Units	Response
VOA	SW8260B	cis-1,3-DICHLOROPROPENE	64676	166GW44DM7DL	64676011	WG	500	U	500	R	ug/L	DL
VOA	SW8260B	cis-1,3-DICHLOROPROPENE	64676	166GW35DM7DL	64676012	WG	500	U	500	R	ug/L	DL
VOA	SW8260B	cis-1,3-DICHLOROPROPENE	71658	166GW053M8DL	71658007	WG	250	U	250	R	ug/L	DL
VOA	SW8260B	cis-1,3-DICHLOROPROPENE	71658	166GW054M8DL	71658008	WG	125	U	125	R	ug/L	DL
VOA	SW8260B	cis-1,3-DICHLOROPROPENE	71658	166GW055M8DL	71658009	WG	500	U	500	R	ug/L	DL
VOA	SW8260B	cis-1,3-DICHLOROPROPENE	71658	166GW056M8DL	71658010	WG	500	U	500	R	ug/L	DL
VOA	SW8260B	cis-1,3-DICHLOROPROPENE	71658	166GW07DM8DL	71658012	WG	125	U	125	R	ug/L	DL
VOA	SW8260B	cis-1,3-DICHLOROPROPENE	71658	166GW13DM8DL	71658014	WG	500	U	500	R	ug/L	DL
VOA	SW8260B	cis-1,3-DICHLOROPROPENE	71658	166GW14DM8DL	71658016	WG	10	U	10	R	ug/L	DL
VOA	SW8260B	cis-1,3-DICHLOROPROPENE	71659	166GW19DM8DL	71659002	WG	10	U	10	R	ug/L	DL
VOA	SW8260B	cis-1,3-DICHLOROPROPENE	71659	166GW25DM8DL	71659004	WG	500	U	500	R	ug/L	DL
VOA	SW8260B	cis-1,3-DICHLOROPROPENE	71766	166GW49DM8DL	71766003	WG	250	U	250	R	ug/L	DL
VOA	SW8260B	cis-1,3-DICHLOROPROPENE	71766	166GW50DM8DL	71766004	WG	1000	U	1000	R	ug/L	DL
VOA	SW8260B	cis-1,3-DICHLOROPROPENE	71766	166HW50DM8DL	71766005	WG	2500	U	2500	R	ug/L	DL
VOA	SW8260B	cis-1,3-DICHLOROPROPENE	71766	166GW51DM8DL	71766006	WG	500	U	500	R	ug/L	DL
VOA	SW8260B	cis-1,3-DICHLOROPROPENE	71766	166GW52DM8DL	71766007	WG	500	U	500	R	ug/L	DL
VOA	SW8260B	cis-1,3-DICHLOROPROPENE	71766	166GWTM3M8DL	71766009	WG	50	U	50	R	ug/L	DL
VOA	SW8260B	cis-1,3-DICHLOROPROPENE	71766	166GWTM4M8DL	71766010	WG	1000	U	1000	R	ug/L	DL
VOA	SW8260B	cis-1,3-DICHLOROPROPENE	71766	166GW45DM8DL	71766011	WG	250	U	250	R	ug/L	DL
VOA	SW8260B	cis-1,3-DICHLOROPROPENE	71766	166GW46DM8DL	71766012	WG	250	U	250	R	ug/L	DL
VOA	SW8260B	cis-1,3-DICHLOROPROPENE	71766	166GW48DM8DL	71766014	WG	500	U	500	R	ug/L	DL

Attachment 1 - Changed Qualifiers and Results
Charleston Navel Complex - Zone K, SWMU 166 - 2002 Sampling Events

Parameter Class	Analytical Method	Parameter	SDG	Sample ID	Lab Sample ID	Matrix	Result	Lab Qual	Final Result	Final Qual	Units	Reasons
VOA	SW8260B	cis-1,3-DICHLOROPROPENE	71852	166GW040M8DL	71852003	WG	1250	U	1250	R	ug/L	DL
VOA	SW8260B	cis-1,3-DICHLOROPROPENE	71852	166HW040M8DL	71852004	WG	1250	U	1250	R	ug/L	DL
VOA	SW8260B	cis-1,3-DICHLOROPROPENE	71852	166GW34DM8DL	71852005	WG	5000	U	5000	R	ug/L	DL
VOA	SW8260B	cis-1,3-DICHLOROPROPENE	71852	166GW36DM8DL	71852007	WG	1250	U	1250	R	ug/L	DL
VOA	SW8260B	cis-1,3-DICHLOROPROPENE	71852	166GW37DM8DL	71852008	WG	25	U	25	R	ug/L	DL
VOA	SW8260B	cis-1,3-DICHLOROPROPENE	71852	166GW43DM8DL	71852012	WG	500	U	500	R	ug/L	DL
VOA	SW8260B	cis-1,3-DICHLOROPROPENE	72055	163GW003M8	72055003	WG	5	U	5	UJ	ug/L	SS
VOA	SW8260B	cis-1,3-DICHLOROPROPENE	72055	163GW003M8DL	72055003	WG	50	U	50	R	ug/L	DL
VOA	SW8260B	cis-1,3-DICHLOROPROPENE	72055	163GW03MM8	72055004	WG	5	U	5	UJ	ug/L	SS
VOA	SW8260B	cis-1,3-DICHLOROPROPENE	72055	166GW16DM8	72055005	WG	5	U	5	UJ	ug/L	SS
VOA	SW8260B	cis-1,3-DICHLOROPROPENE	72055	166GW16DM8DL	72055005	WG	250	U	250	R	ug/L	DL
VOA	SW8260B	cis-1,3-DICHLOROPROPENE	72055	166GW33DM8	72055006	WG	5	U	5	UJ	ug/L	SS
VOA	SW8260B	cis-1,3-DICHLOROPROPENE	72055	166GW38DM8	72055007	WG	5	U	5	UJ	ug/L	SS
VOA	SW8260B	cis-1,3-DICHLOROPROPENE	72055	166GW38DM8DL	72055007	WG	50	U	50	R	ug/L	DL
VOA	SW8260B	cis-1,3-DICHLOROPROPENE	72055	163GW005M8	72055008	WG	5	U	5	UJ	ug/L	CC, SS
VOA	SW8260B	DIBROMOCHLOROMETHANE	56223	166GW32DM1LR	56223003	WG	250	U	250	R	ug/L	DL
VOA	SW8260B	DIBROMOCHLOROMETHANE	56330	166GW28DM1DL	56330001	WG	25	U	25	R	ug/L	DL
VOA	SW8260B	DIBROMOCHLOROMETHANE	56330	166GW30DM1LR	56330003	WG	250	U	250	R	ug/L	DL
VOA	SW8260B	DIBROMOCHLOROMETHANE	56330	166HW30DM1LR	56330004	WG	250	U	250	R	ug/L	DL
VOA	SW8260B	DIBROMOCHLOROMETHANE	56341	166VDRM001M2	56341001	SO	5.6	U	5.6	UJ	ug/kg	IS
VOA	SW8260B	DIBROMOCHLOROMETHANE	57725	166GW28DM2DL	57[illegible]02	WG	10	U	10	R	ug/L	DL

Parameter Class	Analytical Method	Parameter	SDG	Sample ID	Lab Sample ID	Matrix	Lab Result	Lab Qual	Final Result	Final Qual	Units	Reason
VOA	SW8260B	DIBROMOCHLOROMETHANE	57725	166GW29DM2DL	57725003	WG	10	U	10	R	ug/L	DL
VOA	SW8260B	DIBROMOCHLOROMETHANE	57725	166GW30DM2DL	57725004	WG	50	U	50	R	ug/L	DL
VOA	SW8260B	DIBROMOCHLOROMETHANE	57725	166HW30DM2DL	57725005	WG	50	U	50	R	ug/L	DL
VOA	SW8260B	DIBROMOCHLOROMETHANE	57725	166GW31DM2DL	57725006	WG	10	U	10	R	ug/L	DL
VOA	SW8260B	DIBROMOCHLOROMETHANE	57725	166GW32DM2DL	57725007	WG	50	U	50	R	ug/L	DL
VOA	SW8260B	DIBROMOCHLOROMETHANE	58856	166GW28DM3DL	58856002	WG	50	U	50	R	ug/L	DL
VOA	SW8260B	DIBROMOCHLOROMETHANE	58856	166GW29DM3DL	58856003	WG	10	U	10	R	ug/L	DL
VOA	SW8260B	DIBROMOCHLOROMETHANE	58856	166GW30DM3DL	58856004	WG	250	U	250	R	ug/L	DL
VOA	SW8260B	DIBROMOCHLOROMETHANE	58856	166GW31DM3DL	58856005	WG	25	U	25	R	ug/L	DL
VOA	SW8260B	DIBROMOCHLOROMETHANE	58856	166HW31DM3DL	58856006	WG	50	U	50	R	ug/L	DL
VOA	SW8260B	DIBROMOCHLOROMETHANE	58856	166GW32DM3DL	58856007	WG	250	U	250	R	ug/L	DL
VOA	SW8260B	DIBROMOCHLOROMETHANE	60789	166GW33DM4DL	60789001	WG	10	U	10	R	ug/L	DL
VOA	SW8260B	DIBROMOCHLOROMETHANE	60789	166GW34DM4DL	60789002	WG	2500	U	2500	R	ug/L	DL
VOA	SW8260B	DIBROMOCHLOROMETHANE	60789	166GW35DM4DL	60789003	WG	50	U	50	R	ug/L	DL
VOA	SW8260B	DIBROMOCHLOROMETHANE	60789	166GW37DM4DL	60789004	WG	2500	U	2500	R	ug/L	DL
VOA	SW8260B	DIBROMOCHLOROMETHANE	60789	166GW39DM4DL	60789005	WG	50	U	50	R	ug/L	DL
VOA	SW8260B	DIBROMOCHLOROMETHANE	60790	163GW03MM4DL	60790001	WG	250	U	250	R	ug/L	DL
VOA	SW8260B	DIBROMOCHLOROMETHANE	60790	166GW26DM4DL	60790002	WG	250	U	250	R	ug/L	DL
VOA	SW8260B	DIBROMOCHLOROMETHANE	60790	166GW25DM4DL	60790003	WG	500	U	500	R	ug/L	DL
VOA	SW8260B	DIBROMOCHLOROMETHANE	60790	166HW25DM4DL	60790004	WG	500	U	500	R	ug/L	DL
VOA	SW8260B	DIBROMOCHLOROMETHANE	60790	166GW07DM4DL	60790008	WG	50	U	50	R	ug/L	DL

Attachment 1 - Changed Qualifiers and Results
Charleston Navel Complex - Zone K, SWMU 166 - 2002 Sampling Events

Parameter Class	Analytical Method	Parameter	SDG	Sample ID	Lab Sample ID	Matrix	Lab Result	Lab Qual	Final Result	Final Qual	Units	Reason
VOA	SW8260B	DIBROMOCHLOROMETHANE	60879	166GW41DM4DL	60879001	WG	250	U	250	R	ug/L	DL
VOA	SW8260B	DIBROMOCHLOROMETHANE	60879	166GW42DM4DL	60879002	WG	500	U	500	R	ug/L	DL
VOA	SW8260B	DIBROMOCHLOROMETHANE	60879	166GW43DM4DL	60879003	WG	1250	U	1250	R	ug/L	DL
VOA	SW8260B	DIBROMOCHLOROMETHANE	60879	166GW44DM4DL	60879004	WG	250	U	250	R	ug/L	DL
VOA	SW8260B	DIBROMOCHLOROMETHANE	60879	166GW13DM4DL	60879005	WG	500	U	500	R	ug/L	DL
VOA	SW8260B	DIBROMOCHLOROMETHANE	61044	166GW38DM4DL	61044001	WG	100	U	100	R	ug/L	DL
VOA	SW8260B	DIBROMOCHLOROMETHANE	61044	166GW45DM4DL	61044002	WG	500	U	500	R	ug/L	DL
VOA	SW8260B	DIBROMOCHLOROMETHANE	61044	166GW48DM4DL	61044004	WG	500	U	500	R	ug/L	DL
VOA	SW8260B	DIBROMOCHLOROMETHANE	61044	166GWTM4M4DL	61044005	WG	500	U	500	R	ug/L	DL
VOA	SW8260B	DIBROMOCHLOROMETHANE	61044	166GW14DM4DL	61044007	WG	10	U	10	R	ug/L	DL
VOA	SW8260B	DIBROMOCHLOROMETHANE	61134	166GW36DM4DL	61134002	WG	2500	U	2500	R	ug/L	DL
VOA	SW8260B	DIBROMOCHLOROMETHANE	61170	166GW50DM4DL	61170001	WG	1250	U	1250	R	ug/L	DL
VOA	SW8260B	DIBROMOCHLOROMETHANE	62650	166GW28DM6DL	62650003	WG	25	U	25	R	ug/L	DL
VOA	SW8260B	DIBROMOCHLOROMETHANE	64473	166GW50DM7DL	64473003	WG	1250	U	1250	R	ug/L	DL
VOA	SW8260B	DIBROMOCHLOROMETHANE	64473	166HW50DM7DL	64473004	WG	1250	U	1250	R	ug/L	DL
VOA	SW8260B	DIBROMOCHLOROMETHANE	64475	166GW053M7DL	64475007	WG	500	U	500	R	ug/L	DL
VOA	SW8260B	DIBROMOCHLOROMETHANE	64475	166GW054M7DL	64475008	WG	125	U	125	R	ug/L	DL
VOA	SW8260B	DIBROMOCHLOROMETHANE	64475	166GW055M7DL	64475009	WG	125	U	125	R	ug/L	DL
VOA	SW8260B	DIBROMOCHLOROMETHANE	64475	166HW055M7DL	64475010	WG	125	U	125	R	ug/L	DL
VOA	SW8260B	DIBROMOCHLOROMETHANE	64475	166GW07DM7DL	64475011	WG	125	U	125	R	ug/L	DL
VOA	SW8260B	DIBROMOCHLOROMETHANE	64475	166GW13DM7DL	64475013	WG	500	U	500	R	ug/L	DL

Parameter Class	Analytical Method	Parameter	SDG	Sample ID	Lab Sample ID	Matrix	Lab Result	Lab Qual	Final Result	Final Qual	Units	Reasons
VOA	SW8260B	DIBROMOCHLOROMETHANE	64475	166HW13DM7DL	64475014	WG	500	U	500	R	ug/L	DL
VOA	SW8260B	DIBROMOCHLOROMETHANE	64475	166GW14DM7DL	64475015	WG	10	U	10	R	ug/L	DL
VOA	SW8260B	DIBROMOCHLOROMETHANE	64475	166GW26DM7DL	64475019	WG	250	U	250	R	ug/L	DL
VOA	SW8260B	DIBROMOCHLOROMETHANE	64550	166GW34DM7DL	64550003	WG	5000	U	5000	R	ug/L	DL
VOA	SW8260B	DIBROMOCHLOROMETHANE	64550	166GW36DM7DL	64550004	WG	2500	U	2500	R	ug/L	DL
VOA	SW8260B	DIBROMOCHLOROMETHANE	64676	163GW003M7DL	64676002	WG	25	U	25	R	ug/L	DL
VOA	SW8260B	DIBROMOCHLOROMETHANE	64676	166GW040M7DL	64676003	WG	5000	U	5000	R	ug/L	DL
VOA	SW8260B	DIBROMOCHLOROMETHANE	64676	166GW41DM7DL	64676008	WG	50	U	50	R	ug/L	DL
VOA	SW8260B	DIBROMOCHLOROMETHANE	64676	166GW42DM7DL	64676009	WG	500	U	500	R	ug/L	DL
VOA	SW8260B	DIBROMOCHLOROMETHANE	64676	166GW44DM7DL	64676011	WG	500	U	500	R	ug/L	DL
VOA	SW8260B	DIBROMOCHLOROMETHANE	64676	166GW35DM7DL	64676012	WG	500	U	500	R	ug/L	DL
VOA	SW8260B	DIBROMOCHLOROMETHANE	71658	166GW053M8DL	71658007	WG	250	U	250	R	ug/L	DL
VOA	SW8260B	DIBROMOCHLOROMETHANE	71658	166GW054M8DL	71658008	WG	125	U	125	R	ug/L	DL
VOA	SW8260B	DIBROMOCHLOROMETHANE	71658	166GW055M8DL	71658009	WG	500	U	500	R	ug/L	DL
VOA	SW8260B	DIBROMOCHLOROMETHANE	71658	166GW056M8DL	71658010	WG	500	U	500	R	ug/L	DL
VOA	SW8260B	DIBROMOCHLOROMETHANE	71658	166GW07DM8DL	71658012	WG	125	U	125	R	ug/L	DL
VOA	SW8260B	DIBROMOCHLOROMETHANE	71658	166GW13DM8DL	71658014	WG	500	U	500	R	ug/L	DL
VOA	SW8260B	DIBROMOCHLOROMETHANE	71658	166GW14DM8DL	71658016	WG	10	U	10	R	ug/L	DL
VOA	SW8260B	DIBROMOCHLOROMETHANE	71659	166GW19DM8DL	71659002	WG	10	U	10	R	ug/L	DL
VOA	SW8260B	DIBROMOCHLOROMETHANE	71659	166GW25DM8DL	71659004	WG	500	U	500	R	ug/L	DL
VOA	SW8260B	DIBROMOCHLOROMETHANE	71766	166GW49DM8DL	71766003	WG	250	U	250	R	ug/L	DL

Attachment 1 - Changed Qualifiers and Results
Charleston Navel Complex - Zone K, SWMU 166 - 2002 Sampling Events

Parameter Class	Analytical Method	Parameter	SDG	Sample ID	Lab Sample	Matrix	Lab Result	Lab Qual	Final Result	Final Qual	Units	Reason
VOA	SW8260B	DIBROMOCHLOROMETHANE	71766	166GW50DM8DL	71766004	WG	1000	U	1000	R	ug/L	DL
VOA	SW8260B	DIBROMOCHLOROMETHANE	71766	166HW50DM8DL	71766005	WG	2500	U	2500	R	ug/L	DL
VOA	SW8260B	DIBROMOCHLOROMETHANE	71766	166GW51DM8DL	71766006	WG	500	U	500	R	ug/L	DL
VOA	SW8260B	DIBROMOCHLOROMETHANE	71766	166GW52DM8DL	71766007	WG	500	U	500	R	ug/L	DL
VOA	SW8260B	DIBROMOCHLOROMETHANE	71766	166GWTM3M8DL	71766009	WG	50	U	50	R	ug/L	DL
VOA	SW8260B	DIBROMOCHLOROMETHANE	71766	166GWTM4M8DL	71766010	WG	1000	U	1000	R	ug/L	DL
VOA	SW8260B	DIBROMOCHLOROMETHANE	71766	166GW45DM8DL	71766011	WG	250	U	250	R	ug/L	DL
VOA	SW8260B	DIBROMOCHLOROMETHANE	71766	166GW46DM8DL	71766012	WG	250	U	250	R	ug/L	DL
VOA	SW8260B	DIBROMOCHLOROMETHANE	71766	166GW48DM8DL	71766014	WG	500	U	500	R	ug/L	DL
VOA	SW8260B	DIBROMOCHLOROMETHANE	71852	166GW040M8DL	71852003	WG	1250	U	1250	R	ug/L	DL
VOA	SW8260B	DIBROMOCHLOROMETHANE	71852	166HW040M8DL	71852004	WG	1250	U	1250	R	ug/L	DL
VOA	SW8260B	DIBROMOCHLOROMETHANE	71852	166GW34DM8DL	71852005	WG	5000	U	5000	R	ug/L	DL
VOA	SW8260B	DIBROMOCHLOROMETHANE	71852	166GW36DM8DL	71852007	WG	1250	U	1250	R	ug/L	DL
VOA	SW8260B	DIBROMOCHLOROMETHANE	71852	166GW37DM8DL	71852008	WG	25	U	25	R	ug/L	DL
VOA	SW8260B	DIBROMOCHLOROMETHANE	71852	166GW43DM8DL	71852012	WG	500	U	500	R	ug/L	DL
VOA	SW8260B	DIBROMOCHLOROMETHANE	72055	163GW003M8	72055003	WG	5	U	5	UJ	ug/L	SS
VOA	SW8260B	DIBROMOCHLOROMETHANE	72055	163GW003M8DL	72055003	WG	50	U	50	R	ug/L	DL
VOA	SW8260B	DIBROMOCHLOROMETHANE	72055	163GW03MM8	72055004	WG	5	U	5	UJ	ug/L	SS
VOA	SW8260B	DIBROMOCHLOROMETHANE	72055	166GW16DM8	72055005	WG	5	U	5	UJ	ug/L	SS
VOA	SW8260B	DIBROMOCHLOROMETHANE	72055	166GW16DM8DL	72055005	WG	250	U	250	R	ug/L	DL
VOA	SW8260B	DIBROMOCHLOROMETHANE	72055	166GW33DM8	72055006	WG	5	U	5	UJ	ug/L	SS

Parameter Class	Analytical Method	Parameter	SDG	Sample ID	Lab Sample ID	Matrix	Lab Result	Lab Qual	Final Result	Final Qual	Units	Reasons
VOA	SW8260B	DIBROMOCHLOROMETHANE	72055	166GW38DM8	72055007	WG	5	U	5	UJ	ug/L	SS
VOA	SW8260B	DIBROMOCHLOROMETHANE	72055	166GW38DM8DL	72055007	WG	50	U	50	R	ug/L	DL
VOA	SW8260B	DIBROMOCHLOROMETHANE	72055	163GW005M8	72055008	WG	5	U	5	UJ	ug/L	SS
VOA	SW8260B	ETHYLBENZENE	56223	166GW32DM1LR	56223003	WG	250	U	250	R	ug/L	DL
VOA	SW8260B	ETHYLBENZENE	56330	166GW28DM1DL	56330001	WG	25	U	25	R	ug/L	DL
VOA	SW8260B	ETHYLBENZENE	56330	166GW30DM1LR	56330003	WG	250	U	250	R	ug/L	DL
VOA	SW8260B	ETHYLBENZENE	56330	166HW30DM1LR	56330004	WG	250	U	250	R	ug/L	DL
VOA	SW8260B	ETHYLBENZENE	56341	166VDRM001M2	56341001	SO	0.6	J	0.6	J	ug/kg	IS
VOA	SW8260B	ETHYLBENZENE	57725	166GW28DM2DL	57725002	WG	1.7	JD	1.7	R	ug/L	DL
VOA	SW8260B	ETHYLBENZENE	57725	166GW29DM2DL	57725003	WG	10	U	10	R	ug/L	DL
VOA	SW8260B	ETHYLBENZENE	57725	166GW30DM2DL	57725004	WG	50	U	50	R	ug/L	DL
VOA	SW8260B	ETHYLBENZENE	57725	166HW30DM2DL	57725005	WG	50	U	50	R	ug/L	DL
VOA	SW8260B	ETHYLBENZENE	57725	166GW31DM2DL	57725006	WG	10	U	10	R	ug/L	DL
VOA	SW8260B	ETHYLBENZENE	57725	166GW32DM2DL	57725007	WG	50	U	50	R	ug/L	DL
VOA	SW8260B	ETHYLBENZENE	58856	166GW28DM3DL	58856002	WG	50	U	50	R	ug/L	DL
VOA	SW8260B	ETHYLBENZENE	58856	166GW29DM3DL	58856003	WG	10	U	10	R	ug/L	DL
VOA	SW8260B	ETHYLBENZENE	58856	166GW30DM3DL	58856004	WG	250	U	250	R	ug/L	DL
VOA	SW8260B	ETHYLBENZENE	58856	166GW31DM3DL	58856005	WG	25	U	25	R	ug/L	DL
VOA	SW8260B	ETHYLBENZENE	58856	166HW31DM3DL	58856006	WG	50	U	50	R	ug/L	DL
VOA	SW8260B	ETHYLBENZENE	58856	166GW32DM3DL	58856007	WG	250	U	250	R	ug/L	DL
VOA	SW8260B	ETHYLBENZENE	60789	166GW33DM4DL	60789001	WG	10	U	10	R	ug/L	DL

Attachment 1 - Changed Qualifiers and Results
Charleston Navel Complex - Zone K, SWMU 166 - 2002 Sampling Events

Parameter Class	Analytical Method	Parameter	Date	Sample ID	Laboratory ID	Matrix	Result	Qualifier	Final Result	Final Qualifier	Units	Reason
VOA	SW8260B	ETHYLBENZENE	60789	166GW34DM4DL	60789002	WG	2500	U	2500	R	ug/L	DL
VOA	SW8260B	ETHYLBENZENE	60789	166GW35DM4DL	60789003	WG	50	U	50	R	ug/L	DL
VOA	SW8260B	ETHYLBENZENE	60789	166GW37DM4DL	60789004	WG	2500	U	2500	R	ug/L	DL
VOA	SW8260B	ETHYLBENZENE	60789	166GW39DM4DL	60789005	WG	50	U	50	R	ug/L	DL
VOA	SW8260B	ETHYLBENZENE	60790	163GW03MM4DL	60790001	WG	250	U	250	R	ug/L	DL
VOA	SW8260B	ETHYLBENZENE	60790	166GW26DM4DL	60790002	WG	250	U	250	R	ug/L	DL
VOA	SW8260B	ETHYLBENZENE	60790	166GW25DM4DL	60790003	WG	500	U	500	R	ug/L	DL
VOA	SW8260B	ETHYLBENZENE	60790	166HW25DM4DL	60790004	WG	500	U	500	R	ug/L	DL
VOA	SW8260B	ETHYLBENZENE	60790	166GW07DM4DL	60790008	WG	50	U	50	R	ug/L	DL
VOA	SW8260B	ETHYLBENZENE	60879	166GW41DM4DL	60879001	WG	250	U	250	R	ug/L	DL
VOA	SW8260B	ETHYLBENZENE	60879	166GW42DM4DL	60879002	WG	500	U	500	R	ug/L	DL
VOA	SW8260B	ETHYLBENZENE	60879	166GW43DM4DL	60879003	WG	1250	U	1250	R	ug/L	DL
VOA	SW8260B	ETHYLBENZENE	60879	166GW44DM4DL	60879004	WG	250	U	250	R	ug/L	DL
VOA	SW8260B	ETHYLBENZENE	60879	166GW13DM4DL	60879005	WG	500	U	500	R	ug/L	DL
VOA	SW8260B	ETHYLBENZENE	61044	166GW38DM4DL	61044001	WG	100	U	100	R	ug/L	DL
VOA	SW8260B	ETHYLBENZENE	61044	166GW45DM4DL	61044002	WG	500	U	500	R	ug/L	DL
VOA	SW8260B	ETHYLBENZENE	61044	166GW48DM4DL	61044004	WG	500	U	500	R	ug/L	DL
VOA	SW8260B	ETHYLBENZENE	61044	166GWTM4M4DL	61044005	WG	500	U	500	R	ug/L	DL
VOA	SW8260B	ETHYLBENZENE	61044	166GW14DM4DL	61044007	WG	10	U	10	R	ug/L	DL
VOA	SW8260B	ETHYLBENZENE	61134	166GW36DM4DL	61134002	WG	2500	U	2500	R	ug/L	DL
VOA	SW8260B	ETHYLBENZENE	61170	166GW50DM4DL	61170001	WG	1250	U	1250	R	ug/L	DL

Parameter Class	Analytical Method	Parameter	SDG	Sample ID	Lab Sample ID	Matrix	Lab Result	Lab Qual	Final Result	Final Qual	Units	Reasons
VOA	SW8260B	ETHYLBENZENE	62650	166GW28DM6DL	62650003	WG	25	U	25	R	ug/L	DL
VOA	SW8260B	ETHYLBENZENE	64473	166GW50DM7DL	64473003	WG	1250	U	1250	R	ug/L	DL
VOA	SW8260B	ETHYLBENZENE	64473	166HW50DM7DL	64473004	WG	1250	U	1250	R	ug/L	DL
VOA	SW8260B	ETHYLBENZENE	64475	166GW053M7DL	64475007	WG	500	U	500	R	ug/L	DL
VOA	SW8260B	ETHYLBENZENE	64475	166GW054M7DL	64475008	WG	125	U	125	R	ug/L	DL
VOA	SW8260B	ETHYLBENZENE	64475	166GW055M7DL	64475009	WG	125	U	125	R	ug/L	DL
VOA	SW8260B	ETHYLBENZENE	64475	166HW055M7DL	64475010	WG	125	U	125	R	ug/L	DL
VOA	SW8260B	ETHYLBENZENE	64475	166GW07DM7DL	64475011	WG	125	U	125	R	ug/L	DL
VOA	SW8260B	ETHYLBENZENE	64475	166GW13DM7DL	64475013	WG	500	U	500	R	ug/L	DL
VOA	SW8260B	ETHYLBENZENE	64475	166HW13DM7DL	64475014	WG	500	U	500	R	ug/L	DL
VOA	SW8260B	ETHYLBENZENE	64475	166GW14DM7DL	64475015	WG	10	U	10	R	ug/L	DL
VOA	SW8260B	ETHYLBENZENE	64475	166GW26DM7DL	64475019	WG	250	U	250	R	ug/L	DL
VOA	SW8260B	ETHYLBENZENE	64550	166GW34DM7DL	64550003	WG	5000	U	5000	R	ug/L	DL
VOA	SW8260B	ETHYLBENZENE	64550	166GW36DM7DL	64550004	WG	2500	U	2500	R	ug/L	DL
VOA	SW8260B	ETHYLBENZENE	64676	163GW003M7DL	64676002	WG	25	U	25	R	ug/L	DL
VOA	SW8260B	ETHYLBENZENE	64676	166GW040M7	64676003	WG	392	E	392	R	ug/L	LR
VOA	SW8260B	ETHYLBENZENE	64676	166GW040M7DL	64676003	WG	540	JD	540	J	ug/L	DL
VOA	SW8260B	ETHYLBENZENE	64676	166GW41DM7DL	64676008	WG	50	U	50	R	ug/L	DL
VOA	SW8260B	ETHYLBENZENE	64676	166GW42DM7DL	64676009	WG	500	U	500	R	ug/L	DL
VOA	SW8260B	ETHYLBENZENE	64676	166GW44DM7DL	64676011	WG	500	U	500	R	ug/L	DL
VOA	SW8260B	ETHYLBENZENE	64676	166GW35DM7DL	64676012	WG	500	U	500	R	ug/L	DL

Attachment 1 - Changed Qualifiers and Results
Charleston Navel Complex - Zone K, SWMU 166 - 2002 Sampling Events

Parameter Class	Analytical Method	Parameter	SDG	Sample ID	Lab Sample ID	Matrix	Lab Result	Lab Qual	Final Result	Final Qual	Units	Reason
VOA	SW8260B	ETHYLBENZENE	71658	166GW053M8DL	71658007	WG	250	U	250	R	ug/L	DL
VOA	SW8260B	ETHYLBENZENE	71658	166GW054M8DL	71658008	WG	125	U	125	R	ug/L	DL
VOA	SW8260B	ETHYLBENZENE	71658	166GW055M8DL	71658009	WG	500	U	500	R	ug/L	DL
VOA	SW8260B	ETHYLBENZENE	71658	166GW056M8DL	71658010	WG	500	U	500	R	ug/L	DL
VOA	SW8260B	ETHYLBENZENE	71658	166GW07DM8DL	71658012	WG	125	U	125	R	ug/L	DL
VOA	SW8260B	ETHYLBENZENE	71658	166GW13DM8DL	71658014	WG	500	U	500	R	ug/L	DL
VOA	SW8260B	ETHYLBENZENE	71658	166GW14DM8DL	71658016	WG	10	U	10	R	ug/L	DL
VOA	SW8260B	ETHYLBENZENE	71659	166GW19DM8DL	71659002	WG	10	U	10	R	ug/L	DL
VOA	SW8260B	ETHYLBENZENE	71659	166GW25DM8DL	71659004	WG	500	U	500	R	ug/L	DL
VOA	SW8260B	ETHYLBENZENE	71659	698GW001M8	71659006	WG	1.9	J	1.9	J	ug/L	SS
VOA	SW8260B	ETHYLBENZENE	71659	698HW001M8	71659007	WG	1.5	J	1.5	J	ug/L	SS
VOA	SW8260B	ETHYLBENZENE	71766	166GW49DM8DL	71766003	WG	250	U	250	R	ug/L	DL
VOA	SW8260B	ETHYLBENZENE	71766	166GW50DM8DL	71766004	WG	1000	U	1000	R	ug/L	DL
VOA	SW8260B	ETHYLBENZENE	71766	166HW50DM8DL	71766005	WG	2500	U	2500	R	ug/L	DL
VOA	SW8260B	ETHYLBENZENE	71766	166GW51DM8DL	71766006	WG	500	U	500	R	ug/L	DL
VOA	SW8260B	ETHYLBENZENE	71766	166GW52DM8DL	71766007	WG	500	U	500	R	ug/L	DL
VOA	SW8260B	ETHYLBENZENE	71766	166GWIN3M8	71766008	WG	0.23	J	0.23	J	ug/L	SS
VOA	SW8260B	ETHYLBENZENE	71766	166GWTM3M8DL	71766009	WG	50	U	50	R	ug/L	DL
VOA	SW8260B	ETHYLBENZENE	71766	166GWTM4M8DL	71766010	WG	1000	U	1000	R	ug/L	DL
VOA	SW8260B	ETHYLBENZENE	71766	166GW45DM8DL	71766011	WG	250	U	250	R	ug/L	DL
VOA	SW8260B	ETHYLBENZENE	71766	166GW46DM8DL	71766012	WG	250	U	250	R	ug/L	DL

Parameter Class	Analytical Method	Parameter	SDG	Sample ID	Lab Sample ID	Matrix	Lab Result	Lab Qual	Final Result	Final Qual	Units	Reasons
VOA	SW8260B	ETHYLBENZENE	71766	166GW48DM8DL	71766014	WG	500	U	500	R	ug/L	DL
VOA	SW8260B	ETHYLBENZENE	71852	166GW040M8	71852003	WG	195	J	195	J	ug/L	SS
VOA	SW8260B	ETHYLBENZENE	71852	166GW040M8DL	71852003	WG	176	JD	176	R	ug/L	DL
VOA	SW8260B	ETHYLBENZENE	71852	166HW040M8DL	71852004	WG	182	JD	182	R	ug/L	DL
VOA	SW8260B	ETHYLBENZENE	71852	166GW34DM8DL	71852005	WG	5000	U	5000	R	ug/L	DL
VOA	SW8260B	ETHYLBENZENE	71852	166GW36DM8DL	71852007	WG	1250	U	1250	R	ug/L	DL
VOA	SW8260B	ETHYLBENZENE	71852	166GW37DM8DL	71852008	WG	25	U	25	R	ug/L	DL
VOA	SW8260B	ETHYLBENZENE	71852	166GW43DM8DL	71852012	WG	500	U	500	R	ug/L	DL
VOA	SW8260B	ETHYLBENZENE	72055	163GW003M8	72055003	WG	5	U	5	UJ	ug/L	SS
VOA	SW8260B	ETHYLBENZENE	72055	163GW003M8DL	72055003	WG	50	U	50	R	ug/L	DL
VOA	SW8260B	ETHYLBENZENE	72055	163GW03MM8	72055004	WG	5	U	5	UJ	ug/L	SS
VOA	SW8260B	ETHYLBENZENE	72055	166GW16DM8	72055005	WG	5	U	5	UJ	ug/L	SS
VOA	SW8260B	ETHYLBENZENE	72055	166GW16DM8DL	72055005	WG	250	U	250	R	ug/L	DL
VOA	SW8260B	ETHYLBENZENE	72055	166GW33DM8	72055006	WG	5	U	5	UJ	ug/L	SS
VOA	SW8260B	ETHYLBENZENE	72055	166GW38DM8	72055007	WG	5	U	5	UJ	ug/L	SS
VOA	SW8260B	ETHYLBENZENE	72055	166GW38DM8DL	72055007	WG	50	U	50	R	ug/L	DL
VOA	SW8260B	ETHYLBENZENE	72055	163GW005M8	72055008	WG	5	U	5	UJ	ug/L	SS
VOA	SW8260B	m+p Xylene	56223	166GW32DM1LR	56223003	WG	250	U	250	R	ug/L	DL
VOA	SW8260B	m+p Xylene	56330	166GW28DM1DL	56330001	WG	25	U	25	R	ug/L	DL
VOA	SW8260B	m+p Xylene	56330	166GW30DM1LR	56330003	WG	250	U	250	R	ug/L	DL
VOA	SW8260B	m+p Xylene	56330	166HW30DM1LR	56330004	WG	250	U	250	R	ug/L	DL

Parameter Class	Analytical Method	Parameter	SDG	Sample ID	Lab Sample ID	Matrix	Lab Result	Lab Qual	Final Result	Final Qual	Units	Reasons
VOA	SW8260B	m+p Xylene	56341	166VDRM001M2	56341001	SO	1.6	J	1.6	J	ug/kg	IS
VOA	SW8260B	m+p Xylene	57725	166GW28DM2DL	57725002	WG	20	U	20	R	ug/L	DL
VOA	SW8260B	m+p Xylene	57725	166GW29DM2DL	57725003	WG	20	U	20	R	ug/L	DL
VOA	SW8260B	m+p Xylene	57725	166GW30DM2DL	57725004	WG	100	U	100	R	ug/L	DL
VOA	SW8260B	m+p Xylene	57725	166HW30DM2DL	57725005	WG	100	U	100	R	ug/L	DL
VOA	SW8260B	m+p Xylene	57725	166GW31DM2DL	57725006	WG	20	U	20	R	ug/L	DL
VOA	SW8260B	m+p Xylene	57725	166GW32DM2DL	57725007	WG	100	U	100	R	ug/L	DL
VOA	SW8260B	m+p Xylene	58856	166GW28DM3DL	58856002	WG	50	U	50	R	ug/L	DL
VOA	SW8260B	m+p Xylene	58856	166GW29DM3DL	58856003	WG	10	U	10	R	ug/L	DL
VOA	SW8260B	m+p Xylene	58856	166GW30DM3DL	58856004	WG	250	U	250	R	ug/L	DL
VOA	SW8260B	m+p Xylene	58856	166GW31DM3DL	58856005	WG	25	U	25	R	ug/L	DL
VOA	SW8260B	m+p Xylene	58856	166HW31DM3DL	58856006	WG	50	U	50	R	ug/L	DL
VOA	SW8260B	m+p Xylene	58856	166GW32DM3DL	58856007	WG	250	U	250	R	ug/L	DL
VOA	SW8260B	m+p Xylene	60789	166GW33DM4DL	60789001	WG	10	U	10	R	ug/L	DL
VOA	SW8260B	m+p Xylene	60789	166GW34DM4DL	60789002	WG	2500	U	2500	R	ug/L	DL
VOA	SW8260B	m+p Xylene	60789	166GW35DM4DL	60789003	WG	50	U	50	R	ug/L	DL
VOA	SW8260B	m+p Xylene	60789	166GW37DM4DL	60789004	WG	2500	U	2500	R	ug/L	DL
VOA	SW8260B	m+p Xylene	60789	166GW39DM4DL	60789005	WG	50	U	50	R	ug/L	DL
VOA	SW8260B	m+p Xylene	60790	163GW03MM4DL	60790001	WG	250	U	250	R	ug/L	DL
VOA	SW8260B	m+p Xylene	60790	166GW26DM4DL	60790002	WG	250	U	250	R	ug/L	DL
VOA	SW8260B	m+p Xylene	60790	166GW25DM4DL	60790003	WG	500	U	500	R	ug/L	DL

Attachment 1 - Changed Qualifiers and Results
Charleston Navel Complex - Zone K ( )MU 166 - 2002 Sampling Events

Parameter Class	Analytical Method	Parameter	SDG	Sample ID	Lab Sample ID	Matrix	Lab Result	Qualifier	Final Result	Final Qualifier	Units	Reason
VOA	SW8260B	m+p Xylene	60790	166HW25DM4DL	60790004	WG	500	U	500	R	ug/L	DL
VOA	SW8260B	m+p Xylene	60790	166GW07DM4DL	60790008	WG	50	U	50	R	ug/L	DL
VOA	SW8260B	m+p Xylene	60879	166GW41DM4DL	60879001	WG	250	U	250	R	ug/L	DL
VOA	SW8260B	m+p Xylene	60879	166GW42DM4DL	60879002	WG	500	U	500	R	ug/L	DL
VOA	SW8260B	m+p Xylene	60879	166GW43DM4DL	60879003	WG	1250	U	1250	R	ug/L	DL
VOA	SW8260B	m+p Xylene	60879	166GW44DM4DL	60879004	WG	250	U	250	R	ug/L	DL
VOA	SW8260B	m+p Xylene	60879	166GW13DM4DL	60879005	WG	500	U	500	R	ug/L	DL
VOA	SW8260B	m+p Xylene	61044	166GW38DM4DL	61044001	WG	100	U	100	R	ug/L	DL
VOA	SW8260B	m+p Xylene	61044	166GW45DM4DL	61044002	WG	500	U	500	R	ug/L	DL
VOA	SW8260B	m+p Xylene	61044	166GW48DM4DL	61044004	WG	500	U	500	R	ug/L	DL
VOA	SW8260B	m+p Xylene	61044	166GWTM4M4DL	61044005	WG	500	U	500	R	ug/L	DL
VOA	SW8260B	m+p Xylene	61044	166GW14DM4DL	61044007	WG	10	U	10	R	ug/L	DL
VOA	SW8260B	m+p Xylene	61134	166GW36DM4DL	61134002	WG	2500	U	2500	R	ug/L	DL
VOA	SW8260B	m+p Xylene	61170	166GW50DM4DL	61170001	WG	1250	U	1250	R	ug/L	DL
VOA	SW8260B	m+p Xylene	62650	166GW28DM6DL	62650003	WG	25	U	25	R	ug/L	DL
VOA	SW8260B	m+p Xylene	64473	166GW50DM7DL	64473003	WG	1250	U	1250	R	ug/L	DL
VOA	SW8260B	m+p Xylene	64473	166HW50DM7DL	64473004	WG	1250	U	1250	R	ug/L	DL
VOA	SW8260B	m+p Xylene	64475	166GW053M7DL	64475007	WG	500	U	500	R	ug/L	DL
VOA	SW8260B	m+p Xylene	64475	166GW054M7DL	64475008	WG	125	U	125	R	ug/L	DL
VOA	SW8260B	m+p Xylene	64475	166GW055M7DL	64475009	WG	125	U	125	R	ug/L	DL
VOA	SW8260B	m+p Xylene	64475	166HW055M7DL	64475010	WG	125	U	125	R	ug/L	DL

Attachment 1 - Changed Qualifiers and Results
Charleston Navel Complex - Zone K, SWMU 166 - 2002 Sampling Events

Parameter Class	Analytical Method	Parameter	SDG	Sample ID	Lab Sample ID	Matrix	Lab Result	Lab Qual	Final Result	Final Qual	Units	Reasons
VOA	SW8260B	m+p Xylene	64475	166GW07DM7DL	64475011	WG	125	U	125	R	ug/L	DL
VOA	SW8260B	m+p Xylene	64475	166GW13DM7DL	64475013	WG	500	U	500	R	ug/L	DL
VOA	SW8260B	m+p Xylene	64475	166HW13DM7DL	64475014	WG	500	U	500	R	ug/L	DL
VOA	SW8260B	m+p Xylene	64475	166GW14DM7DL	64475015	WG	10	U	10	R	ug/L	DL
VOA	SW8260B	m+p Xylene	64475	166GW26DM7DL	64475019	WG	250	U	250	R	ug/L	DL
VOA	SW8260B	m+p Xylene	64550	166GW34DM7DL	64550003	WG	5000	U	5000	R	ug/L	DL
VOA	SW8260B	m+p Xylene	64550	166GW36DM7DL	64550004	WG	2500	U	2500	R	ug/L	DL
VOA	SW8260B	m+p Xylene	64676	163GW003M7DL	64676002	WG	25	U	25	R	ug/L	DL
VOA	SW8260B	m+p Xylene	64676	166GW040M7	64676003	WG	1060	E	1060	R	ug/L	LR
VOA	SW8260B	m+p Xylene	64676	166GW040M7DL	64676003	WG	1690	JD	1690	J	ug/L	DL
VOA	SW8260B	m+p Xylene	64676	166GW41DM7DL	64676008	WG	50	U	50	R	ug/L	DL
VOA	SW8260B	m+p Xylene	64676	166GW42DM7DL	64676009	WG	500	U	500	R	ug/L	DL
VOA	SW8260B	m+p Xylene	64676	166GW44DM7DL	64676011	WG	500	U	500	R	ug/L	DL
VOA	SW8260B	m+p Xylene	64676	166GW35DM7DL	64676012	WG	500	U	500	R	ug/L	DL
VOA	SW8260B	m+p Xylene	71658	166GW053M8DL	71658007	WG	250	U	250	R	ug/L	DL
VOA	SW8260B	m+p Xylene	71658	166GW054M8DL	71658008	WG	125	U	125	R	ug/L	DL
VOA	SW8260B	m+p Xylene	71658	166GW055M8DL	71658009	WG	500	U	500	R	ug/L	DL
VOA	SW8260B	m+p Xylene	71658	166GW056M8DL	71658010	WG	500	U	500	R	ug/L	DL
VOA	SW8260B	m+p Xylene	71658	166GW07DM8DL	71658012	WG	125	U	125	R	ug/L	DL
VOA	SW8260B	m+p Xylene	71658	166GW13DM8DL	71658014	WG	500	U	500	R	ug/L	DL
VOA	SW8260B	m+p Xylene	71658	166GW14DM8DL	71658016	WG	10	U	10	R	ug/L	DL

Parameter Class	Analytical Method	Parameter	SDG	Sample ID	Lab Sample ID	Matrix	Lab Result	Lab Qual	Final Result	Final Qual	Units	Reasons
VOA	SW8260B	m+p Xylene	71659	166GW19DM8DL	71659002	WG	10	U	10	R	ug/L	DL
VOA	SW8260B	m+p Xylene	71659	166GW25DM8DL	71659004	WG	500	U	500	R	ug/L	DL
VOA	SW8260B	m+p Xylene	71659	698GW001M8	71659006	WG	1.6	J	1.6	J	ug/L	SS
VOA	SW8260B	m+p Xylene	71659	698HW001M8	71659007	WG	1.1	J	1.1	J	ug/L	SS
VOA	SW8260B	m+p Xylene	71766	166GW49DM8DL	71766003	WG	250	U	250	R	ug/L	DL
VOA	SW8260B	m+p Xylene	71766	166GW50DM8DL	71766004	WG	1000	U	1000	R	ug/L	DL
VOA	SW8260B	m+p Xylene	71766	166HW50DM8DL	71766005	WG	2500	U	2500	R	ug/L	DL
VOA	SW8260B	m+p Xylene	71766	166GW51DM8DL	71766006	WG	500	U	500	R	ug/L	DL
VOA	SW8260B	m+p Xylene	71766	166GW52DM8DL	71766007	WG	500	U	500	R	ug/L	DL
VOA	SW8260B	m+p Xylene	71766	166GWTM3M8DL	71766009	WG	50	U	50	R	ug/L	DL
VOA	SW8260B	m+p Xylene	71766	166GWTM4M8DL	71766010	WG	1000	U	1000	R	ug/L	DL
VOA	SW8260B	m+p Xylene	71766	166GW45DM8DL	71766011	WG	250	U	250	R	ug/L	DL
VOA	SW8260B	m+p Xylene	71766	166GW46DM8DL	71766012	WG	250	U	250	R	ug/L	DL
VOA	SW8260B	m+p Xylene	71766	166GW48DM8DL	71766014	WG	500	U	500	R	ug/L	DL
VOA	SW8260B	m+p Xylene	71852	166GW040M8	71852003	WG	502	=	502	J	ug/L	SS
VOA	SW8260B	m+p Xylene	71852	166GW040M8DL	71852003	WG	443	JD	443	R	ug/L	DL
VOA	SW8260B	m+p Xylene	71852	166HW040M8DL	71852004	WG	496	JD	496	R	ug/L	DL
VOA	SW8260B	m+p Xylene	71852	166GW34DM8DL	71852005	WG	5000	U	5000	R	ug/L	DL
VOA	SW8260B	m+p Xylene	71852	166GW36DM8DL	71852007	WG	1250	U	1250	R	ug/L	DL
VOA	SW8260B	m+p Xylene	71852	166GW37DM8DL	71852008	WG	25	U	25	R	ug/L	DL
VOA	SW8260B	m+p Xylene	71852	166GW43DM8DL	71852012	WG	500	U	500	R	ug/L	DL

Parameter Class	Analytical Method	Parameter	Spec	Sample ID	Lab Sample ID	Matrix	[illegible]	[illegible]	[illegible]	[illegible]	[illegible]	[illegible]
VOA	SW8260B	m+p Xylene	72055	163GW003M8	72055003	WG	5	U	5	UJ	ug/L	SS
VOA	SW8260B	m+p Xylene	72055	163GW003M8DL	72055003	WG	50	U	50	R	ug/L	DL
VOA	SW8260B	m+p Xylene	72055	163GW03MM8	72055004	WG	5	U	5	UJ	ug/L	SS
VOA	SW8260B	m+p Xylene	72055	166GW16DM8	72055005	WG	5	U	5	UJ	ug/L	SS
VOA	SW8260B	m+p Xylene	72055	166GW16DM8DL	72055005	WG	250	U	250	R	ug/L	DL
VOA	SW8260B	m+p Xylene	72055	166GW33DM8	72055006	WG	5	U	5	UJ	ug/L	SS
VOA	SW8260B	m+p Xylene	72055	166GW38DM8	72055007	WG	5	U	5	UJ	ug/L	SS
VOA	SW8260B	m+p Xylene	72055	166GW38DM8DL	72055007	WG	50	U	50	R	ug/L	DL
VOA	SW8260B	m+p Xylene	72055	163GW005M8	72055008	WG	5	U	5	UJ	ug/L	SS
VOA	SW8260B	METHYL ETHYL KETONE (2-BUTANONE)	56223	166GW32DM1LR	56223003	WG	500	U	500	R	ug/L	DL
VOA	SW8260B	METHYL ETHYL KETONE (2-BUTANONE)	56330	166GW28DM1DL	56330001	WG	50	U	50	R	ug/L	DL
VOA	SW8260B	METHYL ETHYL KETONE (2-BUTANONE)	56330	166GW30DM1LR	56330003	WG	500	U	500	R	ug/L	DL
VOA	SW8260B	METHYL ETHYL KETONE (2-BUTANONE)	56330	166HW30DM1LR	56330004	WG	500	U	500	R	ug/L	DL
VOA	SW8260B	METHYL ETHYL KETONE (2-BUTANONE)	56341	166VDRM001M2	56341001	SO	11.2	U	11.2	UJ	ug/kg	CC, IS
VOA	SW8260B	METHYL ETHYL KETONE (2-BUTANONE)	56341	166VDRM002M2	56341002	SO	12.3	U	12.3	UJ	ug/kg	CC
VOA	SW8260B	METHYL ETHYL KETONE (2-BUTANONE)	56341	166VDRM003M2	56341003	SO	11.8	U	11.8	UJ	ug/kg	CC
VOA	SW8260B	METHYL ETHYL KETONE (2-BUTANONE)	57725	166GW28DM2DL	57725002	WG	50	U	50	R	ug/L	DL
VOA	SW8260B	METHYL ETHYL KETONE (2-BUTANONE)	57725	166GW29DM2DL	57725003	WG	50	U	50	R	ug/L	DL
VOA	SW8260B	METHYL ETHYL KETONE (2-BUTANONE)	57725	166GW30DM2DL	57725004	WG	250	U	250	R	ug/L	DL
VOA	SW8260B	METHYL ETHYL KETONE (2-BUTANONE)	57725	166HW30DM2DL	57725005	WG	250	U	250	R	ug/L	DL
VOA	SW8260B	METHYL ETHYL KETONE (2-BUTANONE)	57725	166GW31DM2DL	57725006	WG	50	U	50	R	ug/L	DL

Parameter Class	Analytical Method	Parameter	SDG	Sample ID	Lab Sample	Matrix	Lab Result	Lab Qual	Final Result	Final Qual	Unit	Reasons
VOA	SW8260B	METHYL ETHYL KETONE (2-BUTANONE)	57725	166GW32DM2DL	57725007	WG	250	U	250	R	ug/L	DL
VOA	SW8260B	METHYL ETHYL KETONE (2-BUTANONE)	58856	166GW28DM3DL	58856002	WG	100	U	100	R	ug/L	DL
VOA	SW8260B	METHYL ETHYL KETONE (2-BUTANONE)	58856	166GW29DM3DL	58856003	WG	20	U	20	R	ug/L	DL
VOA	SW8260B	METHYL ETHYL KETONE (2-BUTANONE)	58856	166GW30DM3DL	58856004	WG	500	U	500	R	ug/L	DL
VOA	SW8260B	METHYL ETHYL KETONE (2-BUTANONE)	58856	166GW31DM3DL	58856005	WG	50	U	50	R	ug/L	DL
VOA	SW8260B	METHYL ETHYL KETONE (2-BUTANONE)	58856	166HW31DM3DL	58856006	WG	100	U	100	R	ug/L	DL
VOA	SW8260B	METHYL ETHYL KETONE (2-BUTANONE)	58856	166GW32DM3DL	58856007	WG	500	U	500	R	ug/L	DL
VOA	SW8260B	METHYL ETHYL KETONE (2-BUTANONE)	60789	166GW33DM4DL	60789001	WG	20	U	20	R	ug/L	DL
VOA	SW8260B	METHYL ETHYL KETONE (2-BUTANONE)	60789	166GW34DM4DL	60789002	WG	5000	U	5000	R	ug/L	DL
VOA	SW8260B	METHYL ETHYL KETONE (2-BUTANONE)	60789	166GW35DM4DL	60789003	WG	24.1	JD	24.1	R	ug/L	DL
VOA	SW8260B	METHYL ETHYL KETONE (2-BUTANONE)	60789	166GW37DM4DL	60789004	WG	5000	U	5000	R	ug/L	DL
VOA	SW8260B	METHYL ETHYL KETONE (2-BUTANONE)	60789	166GW39DM4DL	60789005	WG	100	U	100	R	ug/L	DL
VOA	SW8260B	METHYL ETHYL KETONE (2-BUTANONE)	60790	163GW03MM4DL	60790001	WG	500	U	500	R	ug/L	DL
VOA	SW8260B	METHYL ETHYL KETONE (2-BUTANONE)	60790	166GW26DM4DL	60790002	WG	500	U	500	R	ug/L	DL
VOA	SW8260B	METHYL ETHYL KETONE (2-BUTANONE)	60790	166GW25DM4DL	60790003	WG	1000	U	1000	R	ug/L	DL
VOA	SW8260B	METHYL ETHYL KETONE (2-BUTANONE)	60790	166HW25DM4DL	60790004	WG	1000	U	1000	R	ug/L	DL
VOA	SW8260B	METHYL ETHYL KETONE (2-BUTANONE)	60790	166GW07DM4DL	60790008	WG	100	U	100	R	ug/L	DL
VOA	SW8260B	METHYL ETHYL KETONE (2-BUTANONE)	60879	166GW41DM4DL	60879001	WG	500	U	500	R	ug/L	DL
VOA	SW8260B	METHYL ETHYL KETONE (2-BUTANONE)	60879	166GW42DM4DL	60879002	WG	1000	U	1000	R	ug/L	DL
VOA	SW8260B	METHYL ETHYL KETONE (2-BUTANONE)	60879	166GW43DM4DL	60879003	WG	2500	U	2500	R	ug/L	DL
VOA	SW8260B	METHYL ETHYL KETONE (2-BUTANONE)	60879	166GW44DM4DL	60879004	WG	500	U	500	R	ug/L	DL

Attachment 1 - Changed Qualifiers and Results

Attachment 1 - Changed Qualifiers and Results
Charleston Navel Complex - Zone K, SWMU 166 - 2002 Sampling Events

Parameter Class	Analytical Method	Parameter	Site	Sample ID	Lab Sample ID	Matrix	Lab Result	Lab Qual	Final Result	Final Qual	Units	Reason
VOA	SW8260B	METHYL ETHYL KETONE (2-BUTANONE)	60879	166GW13DM4DL	60879005	WG	1000	U	1000	R	ug/L	DL
VOA	SW8260B	METHYL ETHYL KETONE (2-BUTANONE)	61044	166GW38DM4DL	61044001	WG	200	U	200	R	ug/L	DL
VOA	SW8260B	METHYL ETHYL KETONE (2-BUTANONE)	61044	166GW45DM4DL	61044002	WG	1000	U	1000	R	ug/L	DL
VOA	SW8260B	METHYL ETHYL KETONE (2-BUTANONE)	61044	166GW48DM4DL	61044004	WG	1000	U	1000	R	ug/L	DL
VOA	SW8260B	METHYL ETHYL KETONE (2-BUTANONE)	61044	166GWTM4M4DL	61044005	WG	1000	U	1000	R	ug/L	DL
VOA	SW8260B	METHYL ETHYL KETONE (2-BUTANONE)	61044	166GW14DM4DL	61044007	WG	20	U	20	R	ug/L	DL
VOA	SW8260B	METHYL ETHYL KETONE (2-BUTANONE)	61134	166GW36DM4DL	61134002	WG	5000	U	5000	R	ug/L	DL
VOA	SW8260B	METHYL ETHYL KETONE (2-BUTANONE)	61170	166GW50DM4DL	61170001	WG	2500	U	2500	R	ug/L	DL
VOA	SW8260B	METHYL ETHYL KETONE (2-BUTANONE)	62650	166GW28DM6DL	62650003	WG	50	U	50	R	ug/L	DL
VOA	SW8260B	METHYL ETHYL KETONE (2-BUTANONE)	64473	166GW50DM7DL	64473003	WG	2500	U	2500	R	ug/L	DL
VOA	SW8260B	METHYL ETHYL KETONE (2-BUTANONE)	64473	166HW50DM7DL	64473004	WG	2500	U	2500	R	ug/L	DL
VOA	SW8260B	METHYL ETHYL KETONE (2-BUTANONE)	64475	166GW053M7DL	64475007	WG	1000	U	1000	R	ug/L	DL
VOA	SW8260B	METHYL ETHYL KETONE (2-BUTANONE)	64475	166GW054M7DL	64475008	WG	250	U	250	R	ug/L	DL
VOA	SW8260B	METHYL ETHYL KETONE (2-BUTANONE)	64475	166GW055M7DL	64475009	WG	250	U	250	R	ug/L	DL
VOA	SW8260B	METHYL ETHYL KETONE (2-BUTANONE)	64475	166HW055M7DL	64475010	WG	250	U	250	R	ug/L	DL
VOA	SW8260B	METHYL ETHYL KETONE (2-BUTANONE)	64475	166GW07DM7DL	64475011	WG	250	U	250	R	ug/L	DL
VOA	SW8260B	METHYL ETHYL KETONE (2-BUTANONE)	64475	166GW13DM7DL	64475013	WG	1000	U	1000	R	ug/L	DL
VOA	SW8260B	METHYL ETHYL KETONE (2-BUTANONE)	64475	166HW13DM7DL	64475014	WG	1000	U	1000	R	ug/L	DL
VOA	SW8260B	METHYL ETHYL KETONE (2-BUTANONE)	64475	166GW14DM7DL	64475015	WG	20	U	20	R	ug/L	DL
VOA	SW8260B	METHYL ETHYL KETONE (2-BUTANONE)	64475	166GW26DM7DL	64475019	WG	500	U	500	R	ug/L	DL
VOA	SW8260B	METHYL ETHYL KETONE (2-BUTANONE)	64550	166GW34DM7DL	64550003	WG	10000	U	10000	R	ug/L	DL

Parameter Class	Analytical Method	Parameter	SDG	Sample ID	Lab Sample ID	Matrix	Result	Lab Qual	Final Result	Final Qual	Units	Reasons
VOA	SW8260B	METHYL ETHYL KETONE (2-BUTANONE)	64550	166GW36DM7DL	64550004	WG	5000	U	5000	R	ug/L	DL
VOA	SW8260B	METHYL ETHYL KETONE (2-BUTANONE)	64676	163GW003M7DL	64676002	WG	50	U	50	R	ug/L	DL
VOA	SW8260B	METHYL ETHYL KETONE (2-BUTANONE)	64676	166GW040M7DL	64676003	WG	10000	U	10000	R	ug/L	DL
VOA	SW8260B	METHYL ETHYL KETONE (2-BUTANONE)	64676	166GW41DM7DL	64676008	WG	100	U	100	R	ug/L	DL
VOA	SW8260B	METHYL ETHYL KETONE (2-BUTANONE)	64676	166GW42DM7DL	64676009	WG	1000	U	1000	R	ug/L	DL
VOA	SW8260B	METHYL ETHYL KETONE (2-BUTANONE)	64676	166GW44DM7DL	64676011	WG	1000	U	1000	R	ug/L	DL
VOA	SW8260B	METHYL ETHYL KETONE (2-BUTANONE)	64676	166GW35DM7DL	64676012	WG	1000	U	1000	R	ug/L	DL
VOA	SW8260B	METHYL ETHYL KETONE (2-BUTANONE)	71658	166GW053M8DL	71658007	WG	500	U	500	R	ug/L	DL
VOA	SW8260B	METHYL ETHYL KETONE (2-BUTANONE)	71658	166GW054M8DL	71658008	WG	250	U	250	R	ug/L	DL
VOA	SW8260B	METHYL ETHYL KETONE (2-BUTANONE)	71658	166GW055M8DL	71658009	WG	1000	U	1000	R	ug/L	DL
VOA	SW8260B	METHYL ETHYL KETONE (2-BUTANONE)	71658	166GW056M8DL	71658010	WG	1000	U	1000	R	ug/L	DL
VOA	SW8260B	METHYL ETHYL KETONE (2-BUTANONE)	71658	166GW07DM8DL	71658012	WG	250	U	250	R	ug/L	DL
VOA	SW8260B	METHYL ETHYL KETONE (2-BUTANONE)	71658	166GW13DM8DL	71658014	WG	1000	U	1000	R	ug/L	DL
VOA	SW8260B	METHYL ETHYL KETONE (2-BUTANONE)	71658	166GW14DM8DL	71658016	WG	20	U	20	R	ug/L	DL
VOA	SW8260B	METHYL ETHYL KETONE (2-BUTANONE)	71659	166GW17DM8	71659001	WG	10	U	10	UJ	ug/L	CC
VOA	SW8260B	METHYL ETHYL KETONE (2-BUTANONE)	71659	166GW19DM8	71659002	WG	10	U	10	UJ	ug/L	CC
VOA	SW8260B	METHYL ETHYL KETONE (2-BUTANONE)	71659	166GW19DM8DL	71659002	WG	20	U	20	R	ug/L	DL
VOA	SW8260B	METHYL ETHYL KETONE (2-BUTANONE)	71659	166GW21DM8	71659003	WG	10	U	10	UJ	ug/L	CC
VOA	SW8260B	METHYL ETHYL KETONE (2-BUTANONE)	71659	166GW25DM8DL	71659004	WG	1000	U	1000	R	ug/L	DL
VOA	SW8260B	METHYL ETHYL KETONE (2-BUTANONE)	71659	166GW26DM8	71659005	WG	250	U	250	UJ	ug/L	CC
VOA	SW8260B	METHYL ETHYL KETONE (2-BUTANONE)	71659	698GW001M8	71659006	WG	10	U	10	UJ	ug/L	CC

Attachment 1 - Changed Qualifiers and Results
Charleston Navel Complex - Zone K, SWMU 166 - 2002 Sampling Events

Parameter Class	Analytical Method	Analyte	SDG	Sample ID	Lab Sample ID	Matrix	Lab Result	Lab Qual	Final Result	Final Qual	Units	Reason
VOA	SW8260B	METHYL ETHYL KETONE (2-BUTANONE)	71659	698HW001M8	71659007	WG	2.31	J	2.31	J	ug/L	CC,SS
VOA	SW8260B	METHYL ETHYL KETONE (2-BUTANONE)	71766	166GW49DM8DL	71766003	WG	500	U	500	R	ug/L	DL
VOA	SW8260B	METHYL ETHYL KETONE (2-BUTANONE)	71766	166GW50DM8DL	71766004	WG	2000	U	2000	R	ug/L	DL
VOA	SW8260B	METHYL ETHYL KETONE (2-BUTANONE)	71766	166HW50DM8	71766005	WG	500	U	500	UJ	ug/L	CC
VOA	SW8260B	METHYL ETHYL KETONE (2-BUTANONE)	71766	166HW50DM8DL	71766005	WG	5000	U	5000	R	ug/L	DL
VOA	SW8260B	METHYL ETHYL KETONE (2-BUTANONE)	71766	166GW51DM8DL	71766006	WG	1000	U	1000	R	ug/L	DL
VOA	SW8260B	METHYL ETHYL KETONE (2-BUTANONE)	71766	166GW52DM8DL	71766007	WG	1000	U	1000	R	ug/L	DL
VOA	SW8260B	METHYL ETHYL KETONE (2-BUTANONE)	71766	166GWTM3M8DL	71766009	WG	100	U	100	R	ug/L	DL
VOA	SW8260B	METHYL ETHYL KETONE (2-BUTANONE)	71766	166GWTM4M8DL	71766010	WG	2000	U	2000	R	ug/L	DL
VOA	SW8260B	METHYL ETHYL KETONE (2-BUTANONE)	71766	166GW45DM8DL	71766011	WG	500	U	500	R	ug/L	DL
VOA	SW8260B	METHYL ETHYL KETONE (2-BUTANONE)	71766	166GW46DM8DL	71766012	WG	500	U	500	R	ug/L	DL
VOA	SW8260B	METHYL ETHYL KETONE (2-BUTANONE)	71766	166GW48DM8DL	71766014	WG	1000	U	1000	R	ug/L	DL
VOA	SW8260B	METHYL ETHYL KETONE (2-BUTANONE)	71852	166GW040M8DL	71852003	WG	2500	U	2500	R	ug/L	DL
VOA	SW8260B	METHYL ETHYL KETONE (2-BUTANONE)	71852	166HW040M8DL	71852004	WG	2500	U	2500	R	ug/L	DL
VOA	SW8260B	METHYL ETHYL KETONE (2-BUTANONE)	71852	166GW34DM8DL	71852005	WG	10000	U	10000	R	ug/L	DL
VOA	SW8260B	METHYL ETHYL KETONE (2-BUTANONE)	71852	166GW35DM8	71852006	WG	250	U	250	UJ	ug/L	CC
VOA	SW8260B	METHYL ETHYL KETONE (2-BUTANONE)	71852	166GW36DM8DL	71852007	WG	2500	U	2500	R	ug/L	DL
VOA	SW8260B	METHYL ETHYL KETONE (2-BUTANONE)	71852	166GW37DM8	71852008	WG	10	U	10	UJ	ug/L	CC
VOA	SW8260B	METHYL ETHYL KETONE (2-BUTANONE)	71852	166GW37DM8DL	71852008	WG	50	U	50	R	ug/L	DL
VOA	SW8260B	METHYL ETHYL KETONE (2-BUTANONE)	71852	166GW39DM8	71852009	WG	10	U	10	UJ	ug/L	CC
VOA	SW8260B	METHYL ETHYL KETONE (2-BUTANONE)	71852	166GW43DM8DL	71852012	WG	1000	U	1000	R	ug/L	DL

Parameter Class	Analytical Method	Parameter	SDG	Sample ID	Lab Sample ID	Matrix	Lab Result	Lab Qual	Final Result	Final Qual	Units	Reasons
VOA	SW8260B	METHYL ETHYL KETONE (2-BUTANONE)	71852	166GW44DM8	71852013	WG	250	U	250	UJ	ug/L	CC
VOA	SW8260B	METHYL ETHYL KETONE (2-BUTANONE)	72055	163GW003M8	72055003	WG	10	U	10	UJ	ug/L	SS
VOA	SW8260B	METHYL ETHYL KETONE (2-BUTANONE)	72055	163GW003M8DL	72055003	WG	100	U	100	R	ug/L	DL
VOA	SW8260B	METHYL ETHYL KETONE (2-BUTANONE)	72055	163GW03MM8	72055004	WG	10	U	10	UJ	ug/L	SS
VOA	SW8260B	METHYL ETHYL KETONE (2-BUTANONE)	72055	166GW16DM8	72055005	WG	10	U	10	UJ	ug/L	SS
VOA	SW8260B	METHYL ETHYL KETONE (2-BUTANONE)	72055	166GW16DM8DL	72055005	WG	500	U	500	R	ug/L	DL
VOA	SW8260B	METHYL ETHYL KETONE (2-BUTANONE)	72055	166GW33DM8	72055006	WG	10	U	10	UJ	ug/L	SS
VOA	SW8260B	METHYL ETHYL KETONE (2-BUTANONE)	72055	166GW38DM8	72055007	WG	10	U	10	UJ	ug/L	SS
VOA	SW8260B	METHYL ETHYL KETONE (2-BUTANONE)	72055	166GW38DM8DL	72055007	WG	100	U	100	R	ug/L	DL
VOA	SW8260B	METHYL ETHYL KETONE (2-BUTANONE)	72055	163GW005M8	72055008	WG	10	U	10	UJ	ug/L	SS
VOA	SW8260B	METHYL ISOBUTYL KETONE (4-METHYL-2-PENTANONE)	56223	166GW32DM1LR	56223003	WG	500	U	500	R	ug/L	DL
VOA	SW8260B	METHYL ISOBUTYL KETONE (4-METHYL-2-PENTANONE)	56330	166GW28DM1	56330001	WG	9.6	J	9.6	J	ug/L	CC
VOA	SW8260B	METHYL ISOBUTYL KETONE (4-METHYL-2-PENTANONE)	56330	166GW28DM1DL	56330001	WG	8.7	JD	8.7	R	ug/L	DL
VOA	SW8260B	METHYL ISOBUTYL KETONE (4-METHYL-2-PENTANONE)	56330	166GW30DM1LR	56330003	WG	500	U	500	R	ug/L	DL
VOA	SW8260B	METHYL ISOBUTYL KETONE (4-METHYL-2-PENTANONE)	56330	166HW30DM1LR	56330004	WG	500	U	500	R	ug/L	DL
VOA	SW8260B	METHYL ISOBUTYL KETONE (4-METHYL-2-PENTANONE)	56341	166VDRM001M2	56341001	SO	5.6	U	5.6	UJ	ug/kg	IS
VOA	SW8260B	METHYL ISOBUTYL KETONE (4-METHYL-2-PENTANONE)	57725	166GW28DM2DL	57725002	WG	50	U	50	R	ug/L	DL
VOA	SW8260B	METHYL ISOBUTYL KETONE (4-METHYL-2-PENTANONE)	57725	166GW29DM2DL	57725003	WG	50	U	50	R	ug/L	DL
VOA	SW8260B	METHYL ISOBUTYL KETONE (4-METHYL-2-PENTANONE)	57725	166GW30DM2DL	57725004	WG	250	U	250	R	ug/L	DL
VOA	SW8260B	METHYL ISOBUTYL KETONE (4-METHYL-2-PENTANONE)	57725	166HW30DM2DL	57725005	WG	250	U	250	R	ug/L	DL
VOA	SW8260B	METHYL ISOBUTYL KETONE (4-METHYL-2-PENTANONE)	57725	166GW31DM2DL	57725006	WG	50	U	50	R	ug/L	DL

Attachment 1 - Changed Qualifiers and Results
Charleston Navel Complex - Zone K, SWMU 166 - 2002 Sampling Events

Parameter Class	Analytical Method	Parameter	SDG	Sample ID	Lab Sample ID	Matrix	Lab Result	Lab Qual	Final Result	Final Qual	Units	Reasons
VOA	SW8260B	METHYL ISOBUTYL KETONE (4-METHYL-2-PENTANONE)	57725	166GW32DM2DL	57725007	WG	250	U	250	R	ug/L	DL
VOA	SW8260B	METHYL ISOBUTYL KETONE (4-METHYL-2-PENTANONE)	58856	166GW28DM3DL	58856002	WG	100	U	100	R	ug/L	DL
VOA	SW8260B	METHYL ISOBUTYL KETONE (4-METHYL-2-PENTANONE)	58856	166GW29DM3DL	58856003	WG	20	U	20	R	ug/L	DL
VOA	SW8260B	METHYL ISOBUTYL KETONE (4-METHYL-2-PENTANONE)	58856	166GW30DM3DL	58856004	WG	500	U	500	R	ug/L	DL
VOA	SW8260B	METHYL ISOBUTYL KETONE (4-METHYL-2-PENTANONE)	58856	166GW31DM3DL	58856005	WG	50	U	50	R	ug/L	DL
VOA	SW8260B	METHYL ISOBUTYL KETONE (4-METHYL-2-PENTANONE)	58856	166HW31DM3DL	58856006	WG	100	U	100	R	ug/L	DL
VOA	SW8260B	METHYL ISOBUTYL KETONE (4-METHYL-2-PENTANONE)	58856	166GW32DM3DL	58856007	WG	500	U	500	R	ug/L	DL
VOA	SW8260B	METHYL ISOBUTYL KETONE (4-METHYL-2-PENTANONE)	60789	166GW33DM4DL	60789001	WG	20	U	20	R	ug/L	DL
VOA	SW8260B	METHYL ISOBUTYL KETONE (4-METHYL-2-PENTANONE)	60789	166GW34DM4DL	60789002	WG	5000	U	5000	R	ug/L	DL
VOA	SW8260B	METHYL ISOBUTYL KETONE (4-METHYL-2-PENTANONE)	60789	166GW35DM4DL	60789003	WG	100	U	100	R	ug/L	DL
VOA	SW8260B	METHYL ISOBUTYL KETONE (4-METHYL-2-PENTANONE)	60789	166GW37DM4DL	60789004	WG	5000	U	5000	R	ug/L	DL
VOA	SW8260B	METHYL ISOBUTYL KETONE (4-METHYL-2-PENTANONE)	60789	166GW39DM4DL	60789005	WG	100	U	100	R	ug/L	DL
VOA	SW8260B	METHYL ISOBUTYL KETONE (4-METHYL-2-PENTANONE)	60790	163GW03MM4DL	60790001	WG	500	U	500	R	ug/L	DL
VOA	SW8260B	METHYL ISOBUTYL KETONE (4-METHYL-2-PENTANONE)	60790	166GW26DM4DL	60790002	WG	500	U	500	R	ug/L	DL
VOA	SW8260B	METHYL ISOBUTYL KETONE (4-METHYL-2-PENTANONE)	60790	166GW25DM4DL	60790003	WG	1000	U	1000	R	ug/L	DL
VOA	SW8260B	METHYL ISOBUTYL KETONE (4-METHYL-2-PENTANONE)	60790	166HW25DM4DL	60790004	WG	1000	U	1000	R	ug/L	DL
VOA	SW8260B	METHYL ISOBUTYL KETONE (4-METHYL-2-PENTANONE)	60790	166GW07DM4DL	60790008	WG	100	U	100	R	ug/L	DL
VOA	SW8260B	METHYL ISOBUTYL KETONE (4-METHYL-2-PENTANONE)	60879	166GW41DM4DL	60879001	WG	500	U	500	R	ug/L	DL
VOA	SW8260B	METHYL ISOBUTYL KETONE (4-METHYL-2-PENTANONE)	60879	166GW42DM4DL	60879002	WG	1000	U	1000	R	ug/L	DL
VOA	SW8260B	METHYL ISOBUTYL KETONE (4-METHYL-2-PENTANONE)	60879	166GW43DM4DL	60879003	WG	2500	U	2500	R	ug/L	DL
VOA	SW8260B	METHYL ISOBUTYL KETONE (4-METHYL-2-PENTANONE)	60879	166GW44DM4DL	60879004	WG	500	U	500	R	ug/L	DL

Parameter Class	Analytical Method	Parameter	SDG	Sample ID	Lab Sample ID	Matrix	Lab Result	Lab Qual	Final Result	Final Qual	Unit	Reasons
VOA	SW8260B	METHYL ISOBUTYL KETONE (4-METHYL-2-PENTANONE)	60879	166GW13DM4DL	60879005	WG	1000	U	1000	R	ug/L	DL
VOA	SW8260B	METHYL ISOBUTYL KETONE (4-METHYL-2-PENTANONE)	61044	166GW38DM4DL	61044001	WG	200	U	200	R	ug/L	DL
VOA	SW8260B	METHYL ISOBUTYL KETONE (4-METHYL-2-PENTANONE)	61044	166GW45DM4DL	61044002	WG	1000	U	1000	R	ug/L	DL
VOA	SW8260B	METHYL ISOBUTYL KETONE (4-METHYL-2-PENTANONE)	61044	166GW48DM4DL	61044004	WG	1000	U	1000	R	ug/L	DL
VOA	SW8260B	METHYL ISOBUTYL KETONE (4-METHYL-2-PENTANONE)	61044	166GWTM4M4DL	61044005	WG	1000	U	1000	R	ug/L	DL
VOA	SW8260B	METHYL ISOBUTYL KETONE (4-METHYL-2-PENTANONE)	61044	166GW14DM4DL	61044007	WG	20	U	20	R	ug/L	DL
VOA	SW8260B	METHYL ISOBUTYL KETONE (4-METHYL-2-PENTANONE)	61134	166GW36DM4DL	61134002	WG	5000	U	5000	R	ug/L	DL
VOA	SW8260B	METHYL ISOBUTYL KETONE (4-METHYL-2-PENTANONE)	61170	166GW50DM4DL	61170001	WG	2500	U	2500	R	ug/L	DL
VOA	SW8260B	METHYL ISOBUTYL KETONE (4-METHYL-2-PENTANONE)	62650	166GW28DM6DL	62650003	WG	50	U	50	R	ug/L	DL
VOA	SW8260B	METHYL ISOBUTYL KETONE (4-METHYL-2-PENTANONE)	64473	166GW50DM7DL	64473003	WG	2500	U	2500	R	ug/L	DL
VOA	SW8260B	METHYL ISOBUTYL KETONE (4-METHYL-2-PENTANONE)	64473	166HW50DM7DL	64473004	WG	2500	U	2500	R	ug/L	DL
VOA	SW8260B	METHYL ISOBUTYL KETONE (4-METHYL-2-PENTANONE)	64475	166GW053M7DL	64475007	WG	1000	U	1000	R	ug/L	DL
VOA	SW8260B	METHYL ISOBUTYL KETONE (4-METHYL-2-PENTANONE)	64475	166GW054M7DL	64475008	WG	250	U	250	R	ug/L	DL
VOA	SW8260B	METHYL ISOBUTYL KETONE (4-METHYL-2-PENTANONE)	64475	166GW055M7DL	64475009	WG	250	U	250	R	ug/L	DL
VOA	SW8260B	METHYL ISOBUTYL KETONE (4-METHYL-2-PENTANONE)	64475	166HW055M7DL	64475010	WG	250	U	250	R	ug/L	DL
VOA	SW8260B	METHYL ISOBUTYL KETONE (4-METHYL-2-PENTANONE)	64475	166GW07DM7DL	64475011	WG	250	U	250	R	ug/L	DL
VOA	SW8260B	METHYL ISOBUTYL KETONE (4-METHYL-2-PENTANONE)	64475	166GW13DM7DL	64475013	WG	1000	U	1000	R	ug/L	DL
VOA	SW8260B	METHYL ISOBUTYL KETONE (4-METHYL-2-PENTANONE)	64475	166HW13DM7DL	64475014	WG	1000	U	1000	R	ug/L	DL
VOA	SW8260B	METHYL ISOBUTYL KETONE (4-METHYL-2-PENTANONE)	64475	166GW14DM7DL	64475015	WG	20	U	20	R	ug/L	DL
VOA	SW8260B	METHYL ISOBUTYL KETONE (4-METHYL-2-PENTANONE)	64475	166GW26DM7DL	64475019	WG	500	U	500	R	ug/L	DL
VOA	SW8260B	METHYL ISOBUTYL KETONE (4-METHYL-2-PENTANONE)	64550	166GW34DM7DL	64550003	WG	10000	U	10000	R	ug/L	DL

Parameter Class	Analytical Method	Parameter	SDG	Sample ID	Lab Sample ID	Matrix	Lab Result	Lab Qual	Final Result	Final Qual	Units	Reasons
VOA	SW8260B	METHYL ISOBUTYL KETONE (4-METHYL-2-PENTANONE)	64550	166GW36DM7DL	64550004	WG	5000	U	5000	R	ug/L	DL
VOA	SW8260B	METHYL ISOBUTYL KETONE (4-METHYL-2-PENTANONE)	64676	163GW003M7DL	64676002	WG	50	U	50	R	ug/L	DL
VOA	SW8260B	METHYL ISOBUTYL KETONE (4-METHYL-2-PENTANONE)	64676	166GW040M7DL	64676003	WG	10000	U	10000	R	ug/L	DL
VOA	SW8260B	METHYL ISOBUTYL KETONE (4-METHYL-2-PENTANONE)	64676	166GW41DM7DL	64676008	WG	100	U	100	R	ug/L	DL
VOA	SW8260B	METHYL ISOBUTYL KETONE (4-METHYL-2-PENTANONE)	64676	166GW42DM7DL	64676009	WG	1000	U	1000	R	ug/L	DL
VOA	SW8260B	METHYL ISOBUTYL KETONE (4-METHYL-2-PENTANONE)	64676	166GW44DM7DL	64676011	WG	1000	U	1000	R	ug/L	DL
VOA	SW8260B	METHYL ISOBUTYL KETONE (4-METHYL-2-PENTANONE)	64676	166GW35DM7DL	64676012	WG	1000	U	1000	R	ug/L	DL
VOA	SW8260B	METHYL ISOBUTYL KETONE (4-METHYL-2-PENTANONE)	71658	166GW053M8DL	71658007	WG	500	U	500	R	ug/L	DL
VOA	SW8260B	METHYL ISOBUTYL KETONE (4-METHYL-2-PENTANONE)	71658	166GW054M8DL	71658008	WG	250	U	250	R	ug/L	DL
VOA	SW8260B	METHYL ISOBUTYL KETONE (4-METHYL-2-PENTANONE)	71658	166GW055M8DL	71658009	WG	1000	U	1000	R	ug/L	DL
VOA	SW8260B	METHYL ISOBUTYL KETONE (4-METHYL-2-PENTANONE)	71658	166GW056M8DL	71658010	WG	1000	U	1000	R	ug/L	DL
VOA	SW8260B	METHYL ISOBUTYL KETONE (4-METHYL-2-PENTANONE)	71658	166GW07DM8DL	71658012	WG	250	U	250	R	ug/L	DL
VOA	SW8260B	METHYL ISOBUTYL KETONE (4-METHYL-2-PENTANONE)	71658	166GW13DM8DL	71658014	WG	1000	U	1000	R	ug/L	DL
VOA	SW8260B	METHYL ISOBUTYL KETONE (4-METHYL-2-PENTANONE)	71658	166GW14DM8DL	71658016	WG	20	U	20	R	ug/L	DL
VOA	SW8260B	METHYL ISOBUTYL KETONE (4-METHYL-2-PENTANONE)	71659	166GW17DM8	71659001	WG	10	U	10	UJ	ug/L	CC
VOA	SW8260B	METHYL ISOBUTYL KETONE (4-METHYL-2-PENTANONE)	71659	166GW19DM8	71659002	WG	10	U	10	UJ	ug/L	CC
VOA	SW8260B	METHYL ISOBUTYL KETONE (4-METHYL-2-PENTANONE)	71659	166GW19DM8DL	71659002	WG	20	U	20	R	ug/L	DL
VOA	SW8260B	METHYL ISOBUTYL KETONE (4-METHYL-2-PENTANONE)	71659	166GW21DM8	71659003	WG	10	U	10	UJ	ug/L	CC
VOA	SW8260B	METHYL ISOBUTYL KETONE (4-METHYL-2-PENTANONE)	71659	166GW25DM8DL	71659004	WG	1000	U	1000	R	ug/L	DL
VOA	SW8260B	METHYL ISOBUTYL KETONE (4-METHYL-2-PENTANONE)	71659	166GW26DM8	71659005	WG	250	U	250	UJ	ug/L	CC
VOA	SW8260B	METHYL ISOBUTYL KETONE (4-METHYL-2-PENTANONE)	71659	698GW001M8	71659006	WG	10	U	10	UJ	ug/L	CC

Parameter Class	Analytical Method	Parameter	SDG	Sample ID	Lab Sample ID	Matrix	Lab Result	Lab Qual	Final Result	Final Qual	Units	Reason
VOA	SW8260B	METHYL ISOBUTYL KETONE (4-METHYL-2-PENTANONE)	71659	698HW001M8	71659007	WG	10	U	10	UJ	ug/L	CC
VOA	SW8260B	METHYL ISOBUTYL KETONE (4-METHYL-2-PENTANONE)	71766	166GW49DM8DL	71766003	WG	500	U	500	R	ug/L	DL
VOA	SW8260B	METHYL ISOBUTYL KETONE (4-METHYL-2-PENTANONE)	71766	166GW50DM8DL	71766004	WG	2000	U	2000	R	ug/L	DL
VOA	SW8260B	METHYL ISOBUTYL KETONE (4-METHYL-2-PENTANONE)	71766	166HW50DM8DL	71766005	WG	5000	U	5000	R	ug/L	DL
VOA	SW8260B	METHYL ISOBUTYL KETONE (4-METHYL-2-PENTANONE)	71766	166GW51DM8DL	71766006	WG	1000	U	1000	R	ug/L	DL
VOA	SW8260B	METHYL ISOBUTYL KETONE (4-METHYL-2-PENTANONE)	71766	166GW52DM8DL	71766007	WG	1000	U	1000	R	ug/L	DL
VOA	SW8260B	METHYL ISOBUTYL KETONE (4-METHYL-2-PENTANONE)	71766	166GWTM3M8DL	71766009	WG	100	U	100	R	ug/L	DL
VOA	SW8260B	METHYL ISOBUTYL KETONE (4-METHYL-2-PENTANONE)	71766	166GWTM4M8DL	71766010	WG	2000	U	2000	R	ug/L	DL
VOA	SW8260B	METHYL ISOBUTYL KETONE (4-METHYL-2-PENTANONE)	71766	166GW45DM8DL	71766011	WG	500	U	500	R	ug/L	DL
VOA	SW8260B	METHYL ISOBUTYL KETONE (4-METHYL-2-PENTANONE)	71766	166GW46DM8DL	71766012	WG	500	U	500	R	ug/L	DL
VOA	SW8260B	METHYL ISOBUTYL KETONE (4-METHYL-2-PENTANONE)	71766	166GW48DM8DL	71766014	WG	1000	U	1000	R	ug/L	DL
VOA	SW8260B	METHYL ISOBUTYL KETONE (4-METHYL-2-PENTANONE)	71852	166GW040M8DL	71852003	WG	2500	U	2500	R	ug/L	DL
VOA	SW8260B	METHYL ISOBUTYL KETONE (4-METHYL-2-PENTANONE)	71852	166HW040M8DL	71852004	WG	2500	U	2500	R	ug/L	DL
VOA	SW8260B	METHYL ISOBUTYL KETONE (4-METHYL-2-PENTANONE)	71852	166GW34DM8DL	71852005	WG	10000	U	10000	R	ug/L	DL
VOA	SW8260B	METHYL ISOBUTYL KETONE (4-METHYL-2-PENTANONE)	71852	166GW35DM8	71852006	WG	250	U	250	UJ	ug/L	CC
VOA	SW8260B	METHYL ISOBUTYL KETONE (4-METHYL-2-PENTANONE)	71852	166GW36DM8DL	71852007	WG	2500	U	2500	R	ug/L	DL
VOA	SW8260B	METHYL ISOBUTYL KETONE (4-METHYL-2-PENTANONE)	71852	166GW37DM8	71852008	WG	10	U	10	UJ	ug/L	CC
VOA	SW8260B	METHYL ISOBUTYL KETONE (4-METHYL-2-PENTANONE)	71852	166GW37DM8DL	71852008	WG	50	U	50	R	ug/L	DL
VOA	SW8260B	METHYL ISOBUTYL KETONE (4-METHYL-2-PENTANONE)	71852	166GW39DM8	71852009	WG	10	U	10	UJ	ug/L	CC
VOA	SW8260B	METHYL ISOBUTYL KETONE (4-METHYL-2-PENTANONE)	71852	166GW43DM8DL	71852012	WG	1000	U	1000	R	ug/L	DL
VOA	SW8260B	METHYL ISOBUTYL KETONE (4-METHYL-2-PENTANONE)	71852	166GW44DM8	71852013	WG	250	U	250	UJ	ug/L	CC

Parameter Class	Analytical Method	Parameter	Sub	Sample ID	Lab Sample ID	Matrix	Lab Result	Lab Qual	Final Result	Final Qual	Units	Reasons
VOA	SW8260B	METHYL ISOBUTYL KETONE (4-METHYL-2-PENTANONE)	72055	163GW003M8	72055003	WG	10	U	10	UJ	ug/L	SS
VOA	SW8260B	METHYL ISOBUTYL KETONE (4-METHYL-2-PENTANONE)	72055	163GW003M8DL	72055003	WG	100	U	100	R	ug/L	DL
VOA	SW8260B	METHYL ISOBUTYL KETONE (4-METHYL-2-PENTANONE)	72055	163GW03MM8	72055004	WG	10	U	10	UJ	ug/L	SS
VOA	SW8260B	METHYL ISOBUTYL KETONE (4-METHYL-2-PENTANONE)	72055	166GW16DM8	72055005	WG	10	U	10	UJ	ug/L	SS
VOA	SW8260B	METHYL ISOBUTYL KETONE (4-METHYL-2-PENTANONE)	72055	166GW16DM8DL	72055005	WG	500	U	500	R	ug/L	DL
VOA	SW8260B	METHYL ISOBUTYL KETONE (4-METHYL-2-PENTANONE)	72055	166GW33DM8	72055006	WG	10	U	10	UJ	ug/L	SS
VOA	SW8260B	METHYL ISOBUTYL KETONE (4-METHYL-2-PENTANONE)	72055	166GW38DM8	72055007	WG	10	U	10	UJ	ug/L	SS
VOA	SW8260B	METHYL ISOBUTYL KETONE (4-METHYL-2-PENTANONE)	72055	166GW38DM8DL	72055007	WG	100	U	100	R	ug/L	DL
VOA	SW8260B	METHYL ISOBUTYL KETONE (4-METHYL-2-PENTANONE)	72055	163GW005M8	72055008	WG	10	U	10	UJ	ug/L	SS
VOA	SW8260B	METHYLENE CHLORIDE	56223	166GW32DM1LR	56223003	WG	250	U	250	R	ug/L	DL
VOA	SW8260B	METHYLENE CHLORIDE	56330	166GW28DM1	56330001	WG	2.4	JB	5	U	ug/L	BL
VOA	SW8260B	METHYLENE CHLORIDE	56330	166GW28DM1DL	56330001	WG	13.8	JBD	13.8	R	ug/L	DL
VOA	SW8260B	METHYLENE CHLORIDE	56330	166GW29DM1	56330002	WG	3.5	JB	5	U	ug/L	BL
VOA	SW8260B	METHYLENE CHLORIDE	56330	166GW30DM1	56330003	WG	3.8	JB	5	U	ug/L	BL
VOA	SW8260B	METHYLENE CHLORIDE	56330	166GW30DM1LR	56330003	WG	122	JBD	122	R	ug/L	DL
VOA	SW8260B	METHYLENE CHLORIDE	56330	166HW30DM1	56330004	WG	3.4	JB	5	U	ug/L	BL
VOA	SW8260B	METHYLENE CHLORIDE	56330	166HW30DM1LR	56330004	WG	168	JBD	168	R	ug/L	DL
VOA	SW8260B	METHYLENE CHLORIDE	56341	166VDRM001M2	56341001	SO	9.3	B	9.3	UJ	ug/kg	BL, IS
VOA	SW8260B	METHYLENE CHLORIDE	56341	166VDRM002M2	56341002	SO	10.5	B	10.5	U	ug/kg	BL
VOA	SW8260B	METHYLENE CHLORIDE	56341	166VDRM003M2	56341003	SO	6.6	B	6.6	U	ug/kg	BL
VOA	SW8260B	METHYLENE CHLORIDE	57725	166GW28DM2DL	57725002	WG	50	U	50	R	ug/L	DL

Parameter Class	Analytical Method	Parameter	SDG	Sample ID	Lab Sample	Matrix	Lab Result	Lab Qual	Final Result	Final Qual	Units	Reason
VOA	SW8260B	METHYLENE CHLORIDE	57725	166GW29DM2DL	57725003	WG	50	U	50	R	ug/L	DL
VOA	SW8260B	METHYLENE CHLORIDE	57725	166GW30DM2DL	57725004	WG	250	U	250	R	ug/L	DL
VOA	SW8260B	METHYLENE CHLORIDE	57725	166HW30DM2DL	57725005	WG	250	U	250	R	ug/L	DL
VOA	SW8260B	METHYLENE CHLORIDE	57725	166GW31DM2DL	57725006	WG	50	U	50	R	ug/L	DL
VOA	SW8260B	METHYLENE CHLORIDE	57725	166GW32DM2DL	57725007	WG	250	U	250	R	ug/L	DL
VOA	SW8260B	METHYLENE CHLORIDE	58856	166GW27DM3	58856001	WG	0.56	JB	5	U	ug/L	BL
VOA	SW8260B	METHYLENE CHLORIDE	58856	166GW28DM3DL	58856002	WG	7.1	JBD	7.1	R	ug/L	DL
VOA	SW8260B	METHYLENE CHLORIDE	58856	166GW29DM3DL	58856003	WG	10	U	10	R	ug/L	DL
VOA	SW8260B	METHYLENE CHLORIDE	58856	166GW30DM3	58856004	WG	0.52	JB	5	U	ug/L	BL
VOA	SW8260B	METHYLENE CHLORIDE	58856	166GW30DM3DL	58856004	WG	250	U	250	R	ug/L	DL
VOA	SW8260B	METHYLENE CHLORIDE	58856	166GW31DM3	58856005	WG	0.98	JB	5	U	ug/L	BL
VOA	SW8260B	METHYLENE CHLORIDE	58856	166GW31DM3DL	58856005	WG	1.9	JBD	1.9	R	ug/L	DL
VOA	SW8260B	METHYLENE CHLORIDE	58856	166HW31DM3DL	58856006	WG	50	U	50	R	ug/L	DL
VOA	SW8260B	METHYLENE CHLORIDE	58856	166GW32DM3DL	58856007	WG	250	U	250	R	ug/L	DL
VOA	SW8260B	METHYLENE CHLORIDE	60789	166GW33DM4	60789001	WG	2.4	JB	5	U	ug/L	BL
VOA	SW8260B	METHYLENE CHLORIDE	60789	166GW33DM4DL	60789001	WG	18.7	BD	18.7	R	ug/L	DL
VOA	SW8260B	METHYLENE CHLORIDE	60789	166GW34DM4	60789002	WG	130	JB	250	U	ug/L	BL
VOA	SW8260B	METHYLENE CHLORIDE	60789	166GW34DM4DL	60789002	WG	4860	BD	4860	R	ug/L	DL
VOA	SW8260B	METHYLENE CHLORIDE	60789	166GW35DM4	60789003	WG	2.4	JB	5	U	ug/L	BL
VOA	SW8260B	METHYLENE CHLORIDE	60789	166GW35DM4DL	60789003	WG	102	BD	102	R	ug/L	DL
VOA	SW8260B	METHYLENE CHLORIDE	60789	166GW37DM4	60789004	WG	128	JB	250	U	ug/L	BL

Attachment 1 - Changed Qualifiers and Results
Charleston Navel Complex - Zone K, SWMU 166 - 2002 Sampling Events

Parameter Group	Analytical Method	Parameter	DQ	Sample ID	Lab Sample ID	Matrix	Lab Result	Original	Final Result	Final Qual	Units	Reasons
VOA	SW8260B	METHYLENE CHLORIDE	60789	166GW37DM4DL	60789004	WG	5010	BD	5010	R	ug/L	DL
VOA	SW8260B	METHYLENE CHLORIDE	60789	166GW39DM4	60789005	WG	2.4	JB	5	U	ug/L	BL
VOA	SW8260B	METHYLENE CHLORIDE	60789	166GW39DM4DL	60789005	WG	125	BD	125	R	ug/L	DL
VOA	SW8260B	METHYLENE CHLORIDE	60789	166GW040M4	60789006	WG	257	B	257	U	ug/L	BL
VOA	SW8260B	METHYLENE CHLORIDE	60789	166HW040M4	60789007	WG	249	B	249	U	ug/L	BL
VOA	SW8260B	METHYLENE CHLORIDE	60790	163GW03MM4	60790001	WG	2.4	JB	5	U	ug/L	BL
VOA	SW8260B	METHYLENE CHLORIDE	60790	163GW03MM4DL	60790001	WG	97.1	JBD	97.1	R	ug/L	DL
VOA	SW8260B	METHYLENE CHLORIDE	60790	166GW26DM4DL	60790002	WG	124	JBD	124	R	ug/L	DL
VOA	SW8260B	METHYLENE CHLORIDE	60790	166GW25DM4	60790003	WG	1.9	JB	5	U	ug/L	BL
VOA	SW8260B	METHYLENE CHLORIDE	60790	166GW25DM4DL	60790003	WG	500	U	500	R	ug/L	DL
VOA	SW8260B	METHYLENE CHLORIDE	60790	166HW25DM4DL	60790004	WG	203	JBD	203	R	ug/L	DL
VOA	SW8260B	METHYLENE CHLORIDE	60790	166GW07DM4DL	60790008	WG	21.3	JBD	21.3	R	ug/L	DL
VOA	SW8260B	METHYLENE CHLORIDE	60879	166GW41DM4DL	60879001	WG	250	U	250	R	ug/L	DL
VOA	SW8260B	METHYLENE CHLORIDE	60879	166GW42DM4DL	60879002	WG	500	U	500	R	ug/L	DL
VOA	SW8260B	METHYLENE CHLORIDE	60879	166GW43DM4	60879003	WG	2	J	5	U	ug/L	BL
VOA	SW8260B	METHYLENE CHLORIDE	60879	166GW43DM4DL	60879003	WG	1250	U	1250	R	ug/L	DL
VOA	SW8260B	METHYLENE CHLORIDE	60879	166GW44DM4DL	60879004	WG	250	U	250	R	ug/L	DL
VOA	SW8260B	METHYLENE CHLORIDE	60879	166GW13DM4DL	60879005	WG	500	U	500	R	ug/L	DL
VOA	SW8260B	METHYLENE CHLORIDE	61044	166GW38DM4DL	61044001	WG	100	U	100	R	ug/L	DL
VOA	SW8260B	METHYLENE CHLORIDE	61044	166GW45DM4DL	61044002	WG	500	U	500	R	ug/L	DL
VOA	SW8260B	METHYLENE CHLORIDE	61044	166GW48DM4	61044004	WG	5	U	5	UJ	ug/L	CC

Parameter Group	Analytical Method	Parameter	SDG	Sample ID	Lab Sample ID	Matrix	Lab Result	Lab Qual	Final Result	Final Qual	Units	Reasons
VOA	SW8260B	METHYLENE CHLORIDE	61044	166GW48DM4DL	61044004	WG	500	U	500	R	ug/L	DL
VOA	SW8260B	METHYLENE CHLORIDE	61044	166GWTM4M4	61044005	WG	5	U	5	UJ	ug/L	CC
VOA	SW8260B	METHYLENE CHLORIDE	61044	166GWTM4M4DL	61044005	WG	500	U	500	R	ug/L	DL
VOA	SW8260B	METHYLENE CHLORIDE	61044	166GW14DM4	61044007	WG	5	U	5	UJ	ug/L	CC
VOA	SW8260B	METHYLENE CHLORIDE	61044	166GW14DM4DL	61044007	WG	10	U	10	R	ug/L	DL
VOA	SW8260B	METHYLENE CHLORIDE	61044	166GW06DM4	61044008	WG	5	U	5	UJ	ug/L	CC
VOA	SW8260B	METHYLENE CHLORIDE	61044	K166ZDRM1M5	61044010	WG	5	U	5	UJ	ug/L	CC
VOA	SW8260B	METHYLENE CHLORIDE	61134	166GW36DM4	61134002	WG	500	U	500	UJ	ug/L	CC
VOA	SW8260B	METHYLENE CHLORIDE	61134	166GW36DM4DL	61134002	WG	2500	U	2500	R	ug/L	DL
VOA	SW8260B	METHYLENE CHLORIDE	61134	166GW46DM4	61134003	WG	250	U	250	UJ	ug/L	CC
VOA	SW8260B	METHYLENE CHLORIDE	61134	166GW49DM4	61134004	WG	250	U	250	UJ	ug/L	CC
VOA	SW8260B	METHYLENE CHLORIDE	61170	166GW50DM4	61170001	WG	500	U	500	UJ	ug/L	CC
VOA	SW8260B	METHYLENE CHLORIDE	61170	166GW50DM4DL	61170001	WG	1250	U	1250	R	ug/L	DL
VOA	SW8260B	METHYLENE CHLORIDE	61170	166GW51DM4	61170002	WG	100	U	100	UJ	ug/L	CC
VOA	SW8260B	METHYLENE CHLORIDE	61170	166GW52DM4	61170003	WG	250	U	250	UJ	ug/L	CC
VOA	SW8260B	METHYLENE CHLORIDE	61170	166GWTM3M4	61170004	WG	100	U	100	UJ	ug/L	CC
VOA	SW8260B	METHYLENE CHLORIDE	61258	166HW16DM4	61258001	WG	250	U	250	UJ	ug/L	CC
VOA	SW8260B	METHYLENE CHLORIDE	61258	166GW16DM4	61258002	WG	250	U	250	UJ	ug/L	CC
VOA	SW8260B	METHYLENE CHLORIDE	61258	166GWIN3M4	61258003	WG	5	U	5	UJ	ug/L	CC
VOA	SW8260B	METHYLENE CHLORIDE	61258	166GW053M4	61258004	WG	500	U	500	UJ	ug/L	CC
VOA	SW8260B	METHYLENE CHLORIDE	61258	166GW054M4	61258005	WG	500	U	500	UJ	ug/L	CC

Attachment 1 - Changed Qualifiers and Results
Charleston Navel Complex - Zone K, SWMU 166 - 2002 Sampling Events

Parameter Class	Analytical Method	Parameter	SDG	Sample ID	Lab Sample ID	Matrix	Lab Result	Lab Qual	Final Result	Final Qual	Units	Reason Code
VOA	SW8260B	METHYLENE CHLORIDE	61258	166GW055M4	61258006	WG	125	U	125	UJ	ug/L	CC
VOA	SW8260B	METHYLENE CHLORIDE	61258	166HW055M4	61258007	WG	125	U	125	UJ	ug/L	CC
VOA	SW8260B	METHYLENE CHLORIDE	61258	698GW001M4	61258008	WG	5	U	5	UJ	ug/L	CC
VOA	SW8260B	METHYLENE CHLORIDE	61258	698HW001M4	61258009	WG	5	U	5	UJ	ug/L	CC
VOA	SW8260B	METHYLENE CHLORIDE	61258	163GW005M4	61258011	WG	5	U	5	UJ	ug/L	CC
VOA	SW8260B	METHYLENE CHLORIDE	61326	166GW17DM4	61326001	WG	5	U	5	UJ	ug/L	CC
VOA	SW8260B	METHYLENE CHLORIDE	61326	166GW017M4	61326002	WG	5	U	5	UJ	ug/L	CC
VOA	SW8260B	METHYLENE CHLORIDE	61326	166GW19DM4	61326003	WG	5	U	5	UJ	ug/L	CC
VOA	SW8260B	METHYLENE CHLORIDE	61326	166GW21DM4	61326004	WG	5	U	5	UJ	ug/L	CC
VOA	SW8260B	METHYLENE CHLORIDE	62650	166GW27DM6	62650002	WG	5	U	5	UJ	ug/L	CC
VOA	SW8260B	METHYLENE CHLORIDE	62650	166GW28DM6	62650003	WG	10	U	10	UJ	ug/L	CC
VOA	SW8260B	METHYLENE CHLORIDE	62650	166GW28DM6DL	62650003	WG	25	U	25	R	ug/L	DL
VOA	SW8260B	METHYLENE CHLORIDE	62650	166GW29DM6	62650004	WG	10	U	10	UJ	ug/L	CC
VOA	SW8260B	METHYLENE CHLORIDE	62650	166GW30DM6	62650005	WG	100	U	100	UJ	ug/L	CC
VOA	SW8260B	METHYLENE CHLORIDE	62650	166GW31DM6	62650006	WG	20	U	20	UJ	ug/L	CC
VOA	SW8260B	METHYLENE CHLORIDE	62650	166HW31DM6	62650007	WG	20	U	20	UJ	ug/L	CC
VOA	SW8260B	METHYLENE CHLORIDE	62650	166GW32DM6	62650008	WG	125	U	125	UJ	ug/L	CC
VOA	SW8260B	METHYLENE CHLORIDE	64473	166GW50DM7DL	64473003	WG	1250	U	1250	R	ug/L	DL
VOA	SW8260B	METHYLENE CHLORIDE	64473	166HW50DM7DL	64473004	WG	1250	U	1250	R	ug/L	DL
VOA	SW8260B	METHYLENE CHLORIDE	64475	166GW053M7DL	64475007	WG	500	U	500	R	ug/L	DL
VOA	SW8260B	METHYLENE CHLORIDE	64475	166GW054M7DL	64475008	WG	125	U	125	R	ug/L	DL

Parameter Class	Analytical Method	Parameter	SDG	Sample ID	Lab Sample ID	Matrix	Lab Result	Lab Qual	Final Result	Final Qual	Units	Reason
VOA	SW8260B	METHYLENE CHLORIDE	64475	166GW055M7DL	64475009	WG	125	U	125	R	ug/L	DL
VOA	SW8260B	METHYLENE CHLORIDE	64475	166HW055M7DL	64475010	WG	125	U	125	R	ug/L	DL
VOA	SW8260B	METHYLENE CHLORIDE	64475	166GW07DM7DL	64475011	WG	125	U	125	R	ug/L	DL
VOA	SW8260B	METHYLENE CHLORIDE	64475	166GW13DM7DL	64475013	WG	500	U	500	R	ug/L	DL
VOA	SW8260B	METHYLENE CHLORIDE	64475	166HW13DM7DL	64475014	WG	500	U	500	R	ug/L	DL
VOA	SW8260B	METHYLENE CHLORIDE	64475	166GW14DM7DL	64475015	WG	10	U	10	R	ug/L	DL
VOA	SW8260B	METHYLENE CHLORIDE	64475	166GW26DM7DL	64475019	WG	250	U	250	R	ug/L	DL
VOA	SW8260B	METHYLENE CHLORIDE	64550	166GW34DM7DL	64550003	WG	5000	U	5000	R	ug/L	DL
VOA	SW8260B	METHYLENE CHLORIDE	64550	166GW36DM7DL	64550004	WG	2500	U	2500	R	ug/L	DL
VOA	SW8260B	METHYLENE CHLORIDE	64676	163GW003M7DL	64676002	WG	25	U	25	R	ug/L	DL
VOA	SW8260B	METHYLENE CHLORIDE	64676	166GW040M7DL	64676003	WG	5000	U	5000	R	ug/L	DL
VOA	SW8260B	METHYLENE CHLORIDE	64676	166GW41DM7DL	64676008	WG	50	U	50	R	ug/L	DL
VOA	SW8260B	METHYLENE CHLORIDE	64676	166GW42DM7DL	64676009	WG	500	U	500	R	ug/L	DL
VOA	SW8260B	METHYLENE CHLORIDE	64676	166GW44DM7DL	64676011	WG	500	U	500	R	ug/L	DL
VOA	SW8260B	METHYLENE CHLORIDE	64676	166GW35DM7DL	64676012	WG	500	U	500	R	ug/L	DL
VOA	SW8260B	METHYLENE CHLORIDE	71658	166GW053M8DL	71658007	WG	250	U	250	R	ug/L	DL
VOA	SW8260B	METHYLENE CHLORIDE	71658	166GW054M8DL	71658008	WG	125	U	125	R	ug/L	DL
VOA	SW8260B	METHYLENE CHLORIDE	71658	166GW055M8DL	71658009	WG	500	U	500	R	ug/L	DL
VOA	SW8260B	METHYLENE CHLORIDE	71658	166GW056M8DL	71658010	WG	500	U	500	R	ug/L	DL
VOA	SW8260B	METHYLENE CHLORIDE	71658	166GW07DM8DL	71658012	WG	125	U	125	R	ug/L	DL
VOA	SW8260B	METHYLENE CHLORIDE	71658	166GW13DM8DL	71658014	WG	500	U	500	R	ug/L	DL

Attachment 1 - Changed Qualifiers and Results
Charleston Navel Complex - Zone K, SWMU 166 - 2002 Sampling Events

Parameter Class	Analytical Method	Parameter	SDG	Sample ID	Lab Sample ID	Matrix	Lab Result	Lab Qual	Final Result	Final Qual	Units	Reason
VOA	SW8260B	METHYLENE CHLORIDE	71658	166GW14DM8DL	71658016	WG	10	U	10	R	ug/L	DL
VOA	SW8260B	METHYLENE CHLORIDE	71659	166GW19DM8DL	71659002	WG	10	U	10	R	ug/L	DL
VOA	SW8260B	METHYLENE CHLORIDE	71659	166GW25DM8DL	71659004	WG	500	U	500	R	ug/L	DL
VOA	SW8260B	METHYLENE CHLORIDE	71766	166GW49DM8DL	71766003	WG	250	U	250	R	ug/L	DL
VOA	SW8260B	METHYLENE CHLORIDE	71766	166GW50DM8DL	71766004	WG	1000	U	1000	R	ug/L	DL
VOA	SW8260B	METHYLENE CHLORIDE	71766	166HW50DM8DL	71766005	WG	2500	U	2500	R	ug/L	DL
VOA	SW8260B	METHYLENE CHLORIDE	71766	166GW51DM8DL	71766006	WG	500	U	500	R	ug/L	DL
VOA	SW8260B	METHYLENE CHLORIDE	71766	166GW52DM8DL	71766007	WG	500	U	500	R	ug/L	DL
VOA	SW8260B	METHYLENE CHLORIDE	71766	166GWTM3M8DL	71766009	WG	50	U	50	R	ug/L	DL
VOA	SW8260B	METHYLENE CHLORIDE	71766	166GWTM4M8DL	71766010	WG	1000	U	1000	R	ug/L	DL
VOA	SW8260B	METHYLENE CHLORIDE	71766	166GW45DM8DL	71766011	WG	250	U	250	R	ug/L	DL
VOA	SW8260B	METHYLENE CHLORIDE	71766	166GW46DM8DL	71766012	WG	250	U	250	R	ug/L	DL
VOA	SW8260B	METHYLENE CHLORIDE	71766	166GW48DM8DL	71766014	WG	500	U	500	R	ug/L	DL
VOA	SW8260B	METHYLENE CHLORIDE	71852	166GW040M8DL	71852003	WG	1250	U	1250	R	ug/L	DL
VOA	SW8260B	METHYLENE CHLORIDE	71852	166HW040M8DL	71852004	WG	1250	U	1250	R	ug/L	DL
VOA	SW8260B	METHYLENE CHLORIDE	71852	166GW34DM8DL	71852005	WG	5000	U	5000	R	ug/L	DL
VOA	SW8260B	METHYLENE CHLORIDE	71852	166GW36DM8DL	71852007	WG	1250	U	1250	R	ug/L	DL
VOA	SW8260B	METHYLENE CHLORIDE	71852	166GW37DM8DL	71852008	WG	25	U	25	R	ug/L	DL
VOA	SW8260B	METHYLENE CHLORIDE	71852	166GW43DM8DL	71852012	WG	500	U	500	R	ug/L	DL
VOA	SW8260B	METHYLENE CHLORIDE	72055	163GW003M8	72055003	WG	5	U	5	UJ	ug/L	SS
VOA	SW8260B	METHYLENE CHLORIDE	72055	163GW003M8DL	72055003	WG	50	U	50	R	ug/L	DL

Parameter Class	Analytical Method	Parameter	SDG	Sample ID	Lab Sample ID	Matrix	Lab Result	Lab Qual	Final Result	Final Qual	Units	Reasons
VOA	SW8260B	METHYLENE CHLORIDE	72055	163GW03MM8	72055004	WG	5	U	5	UJ	ug/L	SS
VOA	SW8260B	METHYLENE CHLORIDE	72055	166GW16DM8	72055005	WG	5	U	5	UJ	ug/L	SS
VOA	SW8260B	METHYLENE CHLORIDE	72055	166GW16DM8DL	72055005	WG	250	U	250	R	ug/L	DL
VOA	SW8260B	METHYLENE CHLORIDE	72055	166GW33DM8	72055006	WG	5	U	5	UJ	ug/L	SS
VOA	SW8260B	METHYLENE CHLORIDE	72055	166GW38DM8	72055007	WG	5	U	5	UJ	ug/L	SS
VOA	SW8260B	METHYLENE CHLORIDE	72055	166GW38DM8DL	72055007	WG	50	U	50	R	ug/L	DL
VOA	SW8260B	METHYLENE CHLORIDE	72055	163GW005M8	72055008	WG	5	U	5	UJ	ug/L	SS
VOA	SW8260B	o-Xylene	56223	166GW32DM1LR	56223003	WG	250	U	250	R	ug/L	DL
VOA	SW8260B	o-Xylene	56330	166GW28DM1DL	56330001	WG	25	U	25	R	ug/L	DL
VOA	SW8260B	o-Xylene	56330	166GW30DM1LR	56330003	WG	250	U	250	R	ug/L	DL
VOA	SW8260B	o-Xylene	56330	166HW30DM1LR	56330004	WG	250	U	250	R	ug/L	DL
VOA	SW8260B	o-Xylene	56341	166VDRM001M2	56341001	SO	5.6	U	5.6	UJ	ug/kg	IS
VOA	SW8260B	o-Xylene	57725	166GW28DM2DL	57725002	WG	10	U	10	R	ug/L	DL
VOA	SW8260B	o-Xylene	57725	166GW29DM2DL	57725003	WG	10	U	10	R	ug/L	DL
VOA	SW8260B	o-Xylene	57725	166GW30DM2DL	57725004	WG	50	U	50	R	ug/L	DL
VOA	SW8260B	o-Xylene	57725	166HW30DM2DL	57725005	WG	50	U	50	R	ug/L	DL
VOA	SW8260B	o-Xylene	57725	166GW31DM2DL	57725006	WG	10	U	10	R	ug/L	DL
VOA	SW8260B	o-Xylene	57725	166GW32DM2DL	57725007	WG	50	U	50	R	ug/L	DL
VOA	SW8260B	o-Xylene	58856	166GW28DM3DL	58856002	WG	50	U	50	R	ug/L	DL
VOA	SW8260B	o-Xylene	58856	166GW29DM3DL	58856003	WG	10	U	10	R	ug/L	DL
VOA	SW8260B	o-Xylene	58856	166GW30DM3DL	58856004	WG	250	U	250	R	ug/L	DL

Attachment 1 - Changed Qualifiers and Results
Charleston Navel Complex - Zone K, SWMU 166 - 2002 Sampling Events

Parameter Class	Analytical Method	Parameter	SDG	Sample ID	Lab Sample ID	Matrix	Lab Result	Lab Qual	Final Result	Final Qual	Units	Reasons
VOA	SW8260B	o-Xylene	58856	166GW31DM3DL	58856005	WG	25	U	25	R	ug/L	DL
VOA	SW8260B	o-Xylene	58856	166HW31DM3DL	58856006	WG	50	U	50	R	ug/L	DL
VOA	SW8260B	o-Xylene	58856	166GW32DM3DL	58856007	WG	250	U	250	R	ug/L	DL
VOA	SW8260B	o-Xylene	60789	166GW33DM4DL	60789001	WG	10	U	10	R	ug/L	DL
VOA	SW8260B	o-Xylene	60789	166GW34DM4DL	60789002	WG	2500	U	2500	R	ug/L	DL
VOA	SW8260B	o-Xylene	60789	166GW35DM4DL	60789003	WG	50	U	50	R	ug/L	DL
VOA	SW8260B	o-Xylene	60789	166GW37DM4DL	60789004	WG	2500	U	2500	R	ug/L	DL
VOA	SW8260B	o-Xylene	60789	166GW39DM4DL	60789005	WG	50	U	50	R	ug/L	DL
VOA	SW8260B	o-Xylene	60790	163GW03MM4DL	60790001	WG	250	U	250	R	ug/L	DL
VOA	SW8260B	o-Xylene	60790	166GW26DM4DL	60790002	WG	250	U	250	R	ug/L	DL
VOA	SW8260B	o-Xylene	60790	166GW25DM4DL	60790003	WG	500	U	500	R	ug/L	DL
VOA	SW8260B	o-Xylene	60790	166HW25DM4DL	60790004	WG	500	U	500	R	ug/L	DL
VOA	SW8260B	o-Xylene	60790	166GW07DM4DL	60790008	WG	50	U	50	R	ug/L	DL
VOA	SW8260B	o-Xylene	60879	166GW41DM4DL	60879001	WG	250	U	250	R	ug/L	DL
VOA	SW8260B	o-Xylene	60879	166GW42DM4DL	60879002	WG	500	U	500	R	ug/L	DL
VOA	SW8260B	o-Xylene	60879	166GW43DM4DL	60879003	WG	1250	U	1250	R	ug/L	DL
VOA	SW8260B	o-Xylene	60879	166GW44DM4DL	60879004	WG	250	U	250	R	ug/L	DL
VOA	SW8260B	o-Xylene	60879	166GW13DM4DL	60879005	WG	500	U	500	R	ug/L	DL
VOA	SW8260B	o-Xylene	61044	166GW38DM4DL	61044001	WG	100	U	100	R	ug/L	DL
VOA	SW8260B	o-Xylene	61044	166GW45DM4DL	61044002	WG	500	U	500	R	ug/L	DL
VOA	SW8260B	o-Xylene	61044	166GW48DM4DL	61044004	WG	500	U	500	R	ug/L	DL

Parameter Class	Analytical Method	Parameter	SDG	Sample ID	Lab Sample ID	Matrix	Lab Result	Lab Qual	Final Result	Final Qual	Units	Reasons
VOA	SW8260B	o-Xylene	61044	166GWTM4M4DL	61044005	WG	500	U	500	R	ug/L	DL
VOA	SW8260B	o-Xylene	61044	166GW14DM4DL	61044007	WG	10	U	10	R	ug/L	DL
VOA	SW8260B	o-Xylene	61134	166GW36DM4DL	61134002	WG	2500	U	2500	R	ug/L	DL
VOA	SW8260B	o-Xylene	61170	166GW50DM4DL	61170001	WG	1250	U	1250	R	ug/L	DL
VOA	SW8260B	o-Xylene	62650	166GW28DM6DL	62650003	WG	25	U	25	R	ug/L	DL
VOA	SW8260B	o-Xylene	64473	166GW50DM7DL	64473003	WG	1250	U	1250	R	ug/L	DL
VOA	SW8260B	o-Xylene	64473	166HW50DM7DL	64473004	WG	1250	U	1250	R	ug/L	DL
VOA	SW8260B	o-Xylene	64475	166GW053M7DL	64475007	WG	500	U	500	R	ug/L	DL
VOA	SW8260B	o-Xylene	64475	166GW054M7DL	64475008	WG	125	U	125	R	ug/L	DL
VOA	SW8260B	o-Xylene	64475	166GW055M7DL	64475009	WG	125	U	125	R	ug/L	DL
VOA	SW8260B	o-Xylene	64475	166HW055M7DL	64475010	WG	125	U	125	R	ug/L	DL
VOA	SW8260B	o-Xylene	64475	166GW07DM7DL	64475011	WG	125	U	125	R	ug/L	DL
VOA	SW8260B	o-Xylene	64475	166GW13DM7DL	64475013	WG	500	U	500	R	ug/L	DL
VOA	SW8260B	o-Xylene	64475	166HW13DM7DL	64475014	WG	500	U	500	R	ug/L	DL
VOA	SW8260B	o-Xylene	64475	166GW14DM7DL	64475015	WG	10	U	10	R	ug/L	DL
VOA	SW8260B	o-Xylene	64475	166GW26DM7DL	64475019	WG	250	U	250	R	ug/L	DL
VOA	SW8260B	o-Xylene	64550	166GW34DM7DL	64550003	WG	5000	U	5000	R	ug/L	DL
VOA	SW8260B	o-Xylene	64550	166GW36DM7DL	64550004	WG	2500	U	2500	R	ug/L	DL
VOA	SW8260B	o-Xylene	64676	163GW003M7DL	64676002	WG	25	U	25	R	ug/L	DL
VOA	SW8260B	o-Xylene	64676	166GW040M7	64676003	WG	907	E	907	R	ug/L	LR
VOA	SW8260B	o-Xylene	64676	166GW040M7DL	64676003	WG	1020	JD	1020	J	ug/L	DL

Attachment 1 - Changed Qualifiers and Results
Charleston Navel Complex - Zone K, SWMU 166 - 2002 Sampling Events

Parameter Class	Analytical Method	Parameter	SDG	Sample ID	Lab Sample ID	Matrix	Lab Result	Lab Qualifier	Final Result	Final Qual	Units	Reason
VOA	SW8260B	o-Xylene	64676	166GW41DM7DL	64676008	WG	50	U	50	R	ug/L	DL
VOA	SW8260B	o-Xylene	64676	166GW42DM7DL	64676009	WG	500	U	500	R	ug/L	DL
VOA	SW8260B	o-Xylene	64676	166GW44DM7DL	64676011	WG	500	U	500	R	ug/L	DL
VOA	SW8260B	o-Xylene	64676	166GW35DM7DL	64676012	WG	500	U	500	R	ug/L	DL
VOA	SW8260B	o-Xylene	71658	166GW053M8DL	71658007	WG	250	U	250	R	ug/L	DL
VOA	SW8260B	o-Xylene	71658	166GW054M8DL	71658008	WG	125	U	125	R	ug/L	DL
VOA	SW8260B	o-Xylene	71658	166GW055M8DL	71658009	WG	500	U	500	R	ug/L	DL
VOA	SW8260B	o-Xylene	71658	166GW056M8DL	71658010	WG	500	U	500	R	ug/L	DL
VOA	SW8260B	o-Xylene	71658	166GW07DM8DL	71658012	WG	125	U	125	R	ug/L	DL
VOA	SW8260B	o-Xylene	71658	166GW13DM8DL	71658014	WG	500	U	500	R	ug/L	DL
VOA	SW8260B	o-Xylene	71658	166GW14DM8DL	71658016	WG	10	U	10	R	ug/L	DL
VOA	SW8260B	o-Xylene	71659	166GW19DM8DL	71659002	WG	10	U	10	R	ug/L	DL
VOA	SW8260B	o-Xylene	71659	166GW25DM8DL	71659004	WG	500	U	500	R	ug/L	DL
VOA	SW8260B	o-Xylene	71659	698GW001M8	71659006	WG	0.96	J	5	U	ug/L	BL
VOA	SW8260B	o-Xylene	71659	698HW001M8	71659007	WG	0.58	J	5	U	ug/L	BL
VOA	SW8260B	o-Xylene	71766	166GW49DM8DL	71766003	WG	250	U	250	R	ug/L	DL
VOA	SW8260B	o-Xylene	71766	166GW50DM8DL	71766004	WG	1000	U	1000	R	ug/L	DL
VOA	SW8260B	o-Xylene	71766	166HW50DM8DL	71766005	WG	2500	U	2500	R	ug/L	DL
VOA	SW8260B	o-Xylene	71766	166GW51DM8DL	71766006	WG	500	U	500	R	ug/L	DL
VOA	SW8260B	o-Xylene	71766	166GW52DM8DL	71766007	WG	500	U	500	R	ug/L	DL
VOA	SW8260B	o-Xylene	71766	166GWIN3M8	71766008	WG	0.27	J	0.27	J	ug/L	SS

Parameter Class	Analytical Method	Parameter	SDG	Sample ID	Lab Sample	Matrix	Lab Result	Lab Qual	Final Result	Final Qual	Units	Reasons
VOA	SW8260B	o-Xylene	71766	166GWTM3M8DL	71766009	WG	50	U	50	R	ug/L	DL
VOA	SW8260B	o-Xylene	71766	166GWTM4M8DL	71766010	WG	1000	U	1000	R	ug/L	DL
VOA	SW8260B	o-Xylene	71766	166GW45DM8DL	71766011	WG	250	U	250	R	ug/L	DL
VOA	SW8260B	o-Xylene	71766	166GW46DM8DL	71766012	WG	250	U	250	R	ug/L	DL
VOA	SW8260B	o-Xylene	71766	166GW48DM8DL	71766014	WG	500	U	500	R	ug/L	DL
VOA	SW8260B	o-Xylene	71852	166GW040M8	71852003	WG	231	J	231	J	ug/L	SS
VOA	SW8260B	o-Xylene	71852	166GW040M8DL	71852003	WG	193	JD	193	R	ug/L	DL
VOA	SW8260B	o-Xylene	71852	166HW040M8DL	71852004	WG	233	JD	233	R	ug/L	DL
VOA	SW8260B	o-Xylene	71852	166GW34DM8DL	71852005	WG	5000	U	5000	R	ug/L	DL
VOA	SW8260B	o-Xylene	71852	166GW36DM8DL	71852007	WG	1250	U	1250	R	ug/L	DL
VOA	SW8260B	o-Xylene	71852	166GW37DM8DL	71852008	WG	25	U	25	R	ug/L	DL
VOA	SW8260B	o-Xylene	71852	166GW43DM8DL	71852012	WG	500	U	500	R	ug/L	DL
VOA	SW8260B	o-Xylene	72055	163GW003M8	72055003	WG	5	U	5	UJ	ug/L	SS
VOA	SW8260B	o-Xylene	72055	163GW003M8DL	72055003	WG	50	U	50	R	ug/L	DL
VOA	SW8260B	o-Xylene	72055	163GW03MM8	72055004	WG	5	U	5	UJ	ug/L	SS
VOA	SW8260B	o-Xylene	72055	166GW16DM8	72055005	WG	5	U	5	UJ	ug/L	SS
VOA	SW8260B	o-Xylene	72055	166GW16DM8DL	72055005	WG	250	U	250	R	ug/L	DL
VOA	SW8260B	o-Xylene	72055	166GW33DM8	72055006	WG	5	U	5	UJ	ug/L	SS
VOA	SW8260B	o-Xylene	72055	166GW38DM8	72055007	WG	5	U	5	UJ	ug/L	SS
VOA	SW8260B	o-Xylene	72055	166GW38DM8DL	72055007	WG	50	U	50	R	ug/L	DL
VOA	SW8260B	o-Xylene	72055	163GW005M8	72055008	WG	5	U	5	UJ	ug/L	SS

Parameter Class	Analytical Method	Parameter	Spec	Sample ID	Lab Sample ID	Matrix	Field Result	Lab Qual	Final Result	Final Qual	Units	Reason
VOA	SW8260B	STYRENE	56223	166GW32DM1LR	56223003	WG	250	U	250	R	ug/L	DL
VOA	SW8260B	STYRENE	56330	166GW28DM1DL	56330001	WG	25	U	25	R	ug/L	DL
VOA	SW8260B	STYRENE	56330	166GW30DM1LR	56330003	WG	250	U	250	R	ug/L	DL
VOA	SW8260B	STYRENE	56330	166HW30DM1LR	56330004	WG	250	U	250	R	ug/L	DL
VOA	SW8260B	STYRENE	56341	166VDRM001M2	56341001	SO	5.6	U	5.6	UJ	ug/kg	IS
VOA	SW8260B	STYRENE	57725	166GW28DM2DL	57725002	WG	10	U	10	R	ug/L	DL
VOA	SW8260B	STYRENE	57725	166GW29DM2DL	57725003	WG	10	U	10	R	ug/L	DL
VOA	SW8260B	STYRENE	57725	166GW30DM2DL	57725004	WG	50	U	50	R	ug/L	DL
VOA	SW8260B	STYRENE	57725	166HW30DM2DL	57725005	WG	50	U	50	R	ug/L	DL
VOA	SW8260B	STYRENE	57725	166GW31DM2DL	57725006	WG	10	U	10	R	ug/L	DL
VOA	SW8260B	STYRENE	57725	166GW32DM2DL	57725007	WG	50	U	50	R	ug/L	DL
VOA	SW8260B	STYRENE	58856	166GW28DM3DL	58856002	WG	50	U	50	R	ug/L	DL
VOA	SW8260B	STYRENE	58856	166GW29DM3DL	58856003	WG	10	U	10	R	ug/L	DL
VOA	SW8260B	STYRENE	58856	166GW30DM3DL	58856004	WG	250	U	250	R	ug/L	DL
VOA	SW8260B	STYRENE	58856	166GW31DM3DL	58856005	WG	25	U	25	R	ug/L	DL
VOA	SW8260B	STYRENE	58856	166HW31DM3DL	58856006	WG	50	U	50	R	ug/L	DL
VOA	SW8260B	STYRENE	58856	166GW32DM3DL	58856007	WG	250	U	250	R	ug/L	DL
VOA	SW8260B	STYRENE	60789	166GW33DM4DL	60789001	WG	10	U	10	R	ug/L	DL
VOA	SW8260B	STYRENE	60789	166GW34DM4DL	60789002	WG	2500	U	2500	R	ug/L	DL
VOA	SW8260B	STYRENE	60789	166GW35DM4DL	60789003	WG	50	U	50	R	ug/L	DL
VOA	SW[illegible]60B	STYRENE	60789	166GW37DM4DL	607[illegible]4	WG	2500	U	2500	R	ug/L	DL

Parameter Class	Analytical Method	Parameter	SDG	Sample ID	Lab Sample ID	Matrix	Lab Result	Lab Qualifier	Final Result	Final Qualifier	Unit	Reason
VOA	SW8260B	STYRENE	60789	166GW39DM4DL	60789005	WG	50	U	50	R	ug/L	DL
VOA	SW8260B	STYRENE	60790	163GW03MM4DL	60790001	WG	250	U	250	R	ug/L	DL
VOA	SW8260B	STYRENE	60790	166GW26DM4DL	60790002	WG	250	U	250	R	ug/L	DL
VOA	SW8260B	STYRENE	60790	166GW25DM4DL	60790003	WG	500	U	500	R	ug/L	DL
VOA	SW8260B	STYRENE	60790	166HW25DM4DL	60790004	WG	500	U	500	R	ug/L	DL
VOA	SW8260B	STYRENE	60790	166GW07DM4DL	60790008	WG	50	U	50	R	ug/L	DL
VOA	SW8260B	STYRENE	60879	166GW41DM4DL	60879001	WG	250	U	250	R	ug/L	DL
VOA	SW8260B	STYRENE	60879	166GW42DM4DL	60879002	WG	500	U	500	R	ug/L	DL
VOA	SW8260B	STYRENE	60879	166GW43DM4DL	60879003	WG	1250	U	1250	R	ug/L	DL
VOA	SW8260B	STYRENE	60879	166GW44DM4DL	60879004	WG	250	U	250	R	ug/L	DL
VOA	SW8260B	STYRENE	60879	166GW13DM4DL	60879005	WG	500	U	500	R	ug/L	DL
VOA	SW8260B	STYRENE	61044	166GW38DM4DL	61044001	WG	100	U	100	R	ug/L	DL
VOA	SW8260B	STYRENE	61044	166GW45DM4DL	61044002	WG	500	U	500	R	ug/L	DL
VOA	SW8260B	STYRENE	61044	166GW48DM4DL	61044004	WG	500	U	500	R	ug/L	DL
VOA	SW8260B	STYRENE	61044	166GWTM4M4DL	61044005	WG	500	U	500	R	ug/L	DL
VOA	SW8260B	STYRENE	61044	166GW14DM4DL	61044007	WG	10	U	10	R	ug/L	DL
VOA	SW8260B	STYRENE	61134	166GW36DM4DL	61134002	WG	2500	U	2500	R	ug/L	DL
VOA	SW8260B	STYRENE	61170	166GW50DM4DL	61170001	WG	1250	U	1250	R	ug/L	DL
VOA	SW8260B	STYRENE	62650	166GW28DM6DL	62650003	WG	25	U	25	R	ug/L	DL
VOA	SW8260B	STYRENE	64473	166GW50DM7DL	64473003	WG	1250	U	1250	R	ug/L	DL
VOA	SW8260B	STYRENE	64473	166HW50DM7DL	64473004	WG	1250	U	1250	R	ug/L	DL

Attachment 1 - Changed Qualifiers and Results
Charleston Navel Complex - Zone K, SWMU 166 - 2002 Sampling Events

Parameter Class	Analytical Method	Parameter	SDG	Sample ID	Lab Sample ID	Matrix	Lab Result	Lab Qual	Int Result	Final Qual	Units	Reason
VOA	SW8260B	STYRENE	64475	166GW053M7DL	64475007	WG	500	U	500	R	ug/L	DL
VOA	SW8260B	STYRENE	64475	166GW054M7DL	64475008	WG	125	U	125	R	ug/L	DL
VOA	SW8260B	STYRENE	64475	166GW055M7DL	64475009	WG	125	U	125	R	ug/L	DL
VOA	SW8260B	STYRENE	64475	166HW055M7DL	64475010	WG	125	U	125	R	ug/L	DL
VOA	SW8260B	STYRENE	64475	166GW07DM7DL	64475011	WG	125	U	125	R	ug/L	DL
VOA	SW8260B	STYRENE	64475	166GW13DM7DL	64475013	WG	500	U	500	R	ug/L	DL
VOA	SW8260B	STYRENE	64475	166HW13DM7DL	64475014	WG	500	U	500	R	ug/L	DL
VOA	SW8260B	STYRENE	64475	166GW14DM7DL	64475015	WG	10	U	10	R	ug/L	DL
VOA	SW8260B	STYRENE	64475	166GW26DM7DL	64475019	WG	250	U	250	R	ug/L	DL
VOA	SW8260B	STYRENE	64550	166GW34DM7DL	64550003	WG	5000	U	5000	R	ug/L	DL
VOA	SW8260B	STYRENE	64550	166GW36DM7DL	64550004	WG	2500	U	2500	R	ug/L	DL
VOA	SW8260B	STYRENE	64676	163GW003M7DL	64676002	WG	25	U	25	R	ug/L	DL
VOA	SW8260B	STYRENE	64676	166GW040M7DL	64676003	WG	5000	U	5000	R	ug/L	DL
VOA	SW8260B	STYRENE	64676	166GW41DM7DL	64676008	WG	50	U	50	R	ug/L	DL
VOA	SW8260B	STYRENE	64676	166GW42DM7DL	64676009	WG	500	U	500	R	ug/L	DL
VOA	SW8260B	STYRENE	64676	166GW44DM7DL	64676011	WG	500	U	500	R	ug/L	DL
VOA	SW8260B	STYRENE	64676	166GW35DM7DL	64676012	WG	500	U	500	R	ug/L	DL
VOA	SW8260B	STYRENE	71658	166GW053M8DL	71658007	WG	250	U	250	R	ug/L	DL
VOA	SW8260B	STYRENE	71658	166GW054M8DL	71658008	WG	125	U	125	R	ug/L	DL
VOA	SW8260B	STYRENE	71658	166GW055M8DL	71658009	WG	500	U	500	R	ug/L	DL
VOA	SW8260B	STYRENE	71658	166GW056M8DL	716[illegible]10	WG	500	U	500	R	ug/L	DL

Parameter Class	Analytical Method	Parameter	SDG	Sample ID	Lab Sample ID	Matrix	Result	Qualifier	Final Result	Final Qual	Units	Reason
VOA	SW8260B	STYRENE	71658	166GW07DM8DL	71658012	WG	125	U	125	R	ug/L	DL
VOA	SW8260B	STYRENE	71658	166GW13DM8DL	71658014	WG	500	U	500	R	ug/L	DL
VOA	SW8260B	STYRENE	71658	166GW14DM8DL	71658016	WG	10	U	10	R	ug/L	DL
VOA	SW8260B	STYRENE	71659	166GW19DM8DL	71659002	WG	10	U	10	R	ug/L	DL
VOA	SW8260B	STYRENE	71659	166GW25DM8DL	71659004	WG	500	U	500	R	ug/L	DL
VOA	SW8260B	STYRENE	71766	166GW49DM8DL	71766003	WG	250	U	250	R	ug/L	DL
VOA	SW8260B	STYRENE	71766	166GW50DM8DL	71766004	WG	1000	U	1000	R	ug/L	DL
VOA	SW8260B	STYRENE	71766	166HW50DM8DL	71766005	WG	2500	U	2500	R	ug/L	DL
VOA	SW8260B	STYRENE	71766	166GW51DM8DL	71766006	WG	500	U	500	R	ug/L	DL
VOA	SW8260B	STYRENE	71766	166GW52DM8DL	71766007	WG	500	U	500	R	ug/L	DL
VOA	SW8260B	STYRENE	71766	166GWTM3M8DL	71766009	WG	50	U	50	R	ug/L	DL
VOA	SW8260B	STYRENE	71766	166GWTM4M8DL	71766010	WG	1000	U	1000	R	ug/L	DL
VOA	SW8260B	STYRENE	71766	166GW45DM8DL	71766011	WG	250	U	250	R	ug/L	DL
VOA	SW8260B	STYRENE	71766	166GW46DM8DL	71766012	WG	250	U	250	R	ug/L	DL
VOA	SW8260B	STYRENE	71766	166GW48DM8DL	71766014	WG	500	U	500	R	ug/L	DL
VOA	SW8260B	STYRENE	71852	166GW040M8DL	71852003	WG	1250	U	1250	R	ug/L	DL
VOA	SW8260B	STYRENE	71852	166HW040M8DL	71852004	WG	1250	U	1250	R	ug/L	DL
VOA	SW8260B	STYRENE	71852	166GW34DM8DL	71852005	WG	5000	U	5000	R	ug/L	DL
VOA	SW8260B	STYRENE	71852	166GW36DM8DL	71852007	WG	1250	U	1250	R	ug/L	DL
VOA	SW8260B	STYRENE	71852	166GW37DM8DL	71852008	WG	25	U	25	R	ug/L	DL
VOA	SW8260B	STYRENE	71852	166GW43DM8DL	71852012	WG	500	U	500	R	ug/L	DL

Attachment 1 - Changed Qualifiers and Results
Charleston Navel Complex - Zone K, SWMU 166 - 2002 Sampling Events

Parameter Class	Analytical Method	Parameter	SPC	Sample ID	Lab Sample ID	Matrix	Lab Result	Original Qual	Final Result	Final Qual	Units	Reason
VOA	SW8260B	STYRENE	72055	163GW003M8	72055003	WG	5	U	5	UJ	ug/L	SS
VOA	SW8260B	STYRENE	72055	163GW003M8DL	72055003	WG	50	U	50	R	ug/L	DL
VOA	SW8260B	STYRENE	72055	163GW03MM8	72055004	WG	5	U	5	UJ	ug/L	SS
VOA	SW8260B	STYRENE	72055	166GW16DM8	72055005	WG	5	U	5	UJ	ug/L	SS
VOA	SW8260B	STYRENE	72055	166GW16DM8DL	72055005	WG	250	U	250	R	ug/L	DL
VOA	SW8260B	STYRENE	72055	166GW33DM8	72055006	WG	5	U	5	UJ	ug/L	SS
VOA	SW8260B	STYRENE	72055	166GW38DM8	72055007	WG	5	U	5	UJ	ug/L	SS
VOA	SW8260B	STYRENE	72055	166GW38DM8DL	72055007	WG	50	U	50	R	ug/L	DL
VOA	SW8260B	STYRENE	72055	163GW005M8	72055008	WG	5	U	5	UJ	ug/L	SS
VOA	SW8260B	TETRACHLOROETHYLENE(PCE)	56223	166GW32DM1LR	56223003	WG	250	U	250	R	ug/L	DL
VOA	SW8260B	TETRACHLOROETHYLENE(PCE)	56330	166GW28DM1	56330001	WG	0.43	JB	5	U	ug/L	BL
VOA	SW8260B	TETRACHLOROETHYLENE(PCE)	56330	166GW28DM1DL	56330001	WG	25	U	25	R	ug/L	DL
VOA	SW8260B	TETRACHLOROETHYLENE(PCE)	56330	166GW29DM1	56330002	WG	0.52	JB	5	U	ug/L	BL
VOA	SW8260B	TETRACHLOROETHYLENE(PCE)	56330	166GW30DM1	56330003	WG	0.45	JB	5	U	ug/L	BL
VOA	SW8260B	TETRACHLOROETHYLENE(PCE)	56330	166GW30DM1LR	56330003	WG	250	U	250	R	ug/L	DL
VOA	SW8260B	TETRACHLOROETHYLENE(PCE)	56330	166HW30DM1	56330004	WG	0.49	JB	5	U	ug/L	BL
VOA	SW8260B	TETRACHLOROETHYLENE(PCE)	56330	166HW30DM1LR	56330004	WG	250	U	250	R	ug/L	DL
VOA	SW8260B	TETRACHLOROETHYLENE(PCE)	56341	166VDRM001M2	56341001	SO	5.6	U	5.6	UJ	ug/kg	IS
VOA	SW8260B	TETRACHLOROETHYLENE(PCE)	57725	166GW28DM2DL	57725002	WG	10	U	10	R	ug/L	DL
VOA	SW8260B	TETRACHLOROETHYLENE(PCE)	57725	166GW29DM2DL	57725003	WG	10	U	10	R	ug/L	DL
VOA	SW8260B	TETRACHLOROETHYLENE(PCE)	57725	166GW30DM2DL	57725004	WG	50	U	50	R	ug/L	DL

Parameter Class	Analytical Method	Parameter	SDG	Sample ID	Lab Sample ID	Matrix	Lab Result	Lab Qual	Final Result	Final Qual	Units	Reason
VOA	SW8260B	TETRACHLOROETHYLENE(PCE)	57725	166HW30DM2DL	57725005	WG	50	U	50	R	ug/L	DL
VOA	SW8260B	TETRACHLOROETHYLENE(PCE)	57725	166GW31DM2DL	57725006	WG	10	U	10	R	ug/L	DL
VOA	SW8260B	TETRACHLOROETHYLENE(PCE)	57725	166GW32DM2DL	57725007	WG	50	U	50	R	ug/L	DL
VOA	SW8260B	TETRACHLOROETHYLENE(PCE)	58856	166GW28DM3DL	58856002	WG	50	U	50	R	ug/L	DL
VOA	SW8260B	TETRACHLOROETHYLENE(PCE)	58856	166GW29DM3DL	58856003	WG	10	U	10	R	ug/L	DL
VOA	SW8260B	TETRACHLOROETHYLENE(PCE)	58856	166GW30DM3DL	58856004	WG	250	U	250	R	ug/L	DL
VOA	SW8260B	TETRACHLOROETHYLENE(PCE)	58856	166GW31DM3DL	58856005	WG	25	U	25	R	ug/L	DL
VOA	SW8260B	TETRACHLOROETHYLENE(PCE)	58856	166HW31DM3DL	58856006	WG	50	U	50	R	ug/L	DL
VOA	SW8260B	TETRACHLOROETHYLENE(PCE)	58856	166GW32DM3DL	58856007	WG	250	U	250	R	ug/L	DL
VOA	SW8260B	TETRACHLOROETHYLENE(PCE)	60789	166GW33DM4DL	60789001	WG	10	U	10	R	ug/L	DL
VOA	SW8260B	TETRACHLOROETHYLENE(PCE)	60789	166GW34DM4DL	60789002	WG	2500	U	2500	R	ug/L	DL
VOA	SW8260B	TETRACHLOROETHYLENE(PCE)	60789	166GW35DM4DL	60789003	WG	50	U	50	R	ug/L	DL
VOA	SW8260B	TETRACHLOROETHYLENE(PCE)	60789	166GW37DM4DL	60789004	WG	2500	U	2500	R	ug/L	DL
VOA	SW8260B	TETRACHLOROETHYLENE(PCE)	60789	166GW39DM4DL	60789005	WG	50	U	50	R	ug/L	DL
VOA	SW8260B	TETRACHLOROETHYLENE(PCE)	60790	163GW03MM4DL	60790001	WG	24.9	JD	24.9	R	ug/L	DL
VOA	SW8260B	TETRACHLOROETHYLENE(PCE)	60790	166GW26DM4DL	60790002	WG	250	U	250	R	ug/L	DL
VOA	SW8260B	TETRACHLOROETHYLENE(PCE)	60790	166GW25DM4DL	60790003	WG	500	U	500	R	ug/L	DL
VOA	SW8260B	TETRACHLOROETHYLENE(PCE)	60790	166HW25DM4DL	60790004	WG	500	U	500	R	ug/L	DL
VOA	SW8260B	TETRACHLOROETHYLENE(PCE)	60790	166GW07DM4DL	60790008	WG	50	U	50	R	ug/L	DL
VOA	SW8260B	TETRACHLOROETHYLENE(PCE)	60879	166GW41DM4DL	60879001	WG	250	U	250	R	ug/L	DL
VOA	SW8260B	TETRACHLOROETHYLENE(PCE)	60879	166GW42DM4DL	60879002	WG	500	U	500	R	ug/L	DL

Attachment 1 - Changed Qualifiers and Results
Charleston Navel Complex - Zone K, SWMU 166 - 2002 Sampling Events

Parameter Class	Analytical Method	Parameter	SDG	Sample ID	Lab Sample ID	Matrix	Result	Qualifier	Final Result	Final Qualifier	Unit	Reason
VOA	SW8260B	TETRACHLOROETHYLENE(PCE)	60879	166GW43DM4DL	60879003	WG	1250	U	1250	R	ug/L	DL
VOA	SW8260B	TETRACHLOROETHYLENE(PCE)	60879	166GW44DM4DL	60879004	WG	250	U	250	R	ug/L	DL
VOA	SW8260B	TETRACHLOROETHYLENE(PCE)	60879	166GW13DM4DL	60879005	WG	500	U	500	R	ug/L	DL
VOA	SW8260B	TETRACHLOROETHYLENE(PCE)	61044	166GW38DM4DL	61044001	WG	100	U	100	R	ug/L	DL
VOA	SW8260B	TETRACHLOROETHYLENE(PCE)	61044	166GW45DM4DL	61044002	WG	500	U	500	R	ug/L	DL
VOA	SW8260B	TETRACHLOROETHYLENE(PCE)	61044	166GW48DM4DL	61044004	WG	500	U	500	R	ug/L	DL
VOA	SW8260B	TETRACHLOROETHYLENE(PCE)	61044	166GWTM4M4DL	61044005	WG	500	U	500	R	ug/L	DL
VOA	SW8260B	TETRACHLOROETHYLENE(PCE)	61044	166GW14DM4DL	61044007	WG	10	U	10	R	ug/L	DL
VOA	SW8260B	TETRACHLOROETHYLENE(PCE)	61134	166GW36DM4DL	61134002	WG	2500	U	2500	R	ug/L	DL
VOA	SW8260B	TETRACHLOROETHYLENE(PCE)	61170	166GW50DM4DL	61170001	WG	1250	U	1250	R	ug/L	DL
VOA	SW8260B	TETRACHLOROETHYLENE(PCE)	62650	166GW28DM6DL	62650003	WG	25	U	25	R	ug/L	DL
VOA	SW8260B	TETRACHLOROETHYLENE(PCE)	64473	166GW50DM7DL	64473003	WG	1250	U	1250	R	ug/L	DL
VOA	SW8260B	TETRACHLOROETHYLENE(PCE)	64473	166HW50DM7DL	64473004	WG	1250	U	1250	R	ug/L	DL
VOA	SW8260B	TETRACHLOROETHYLENE(PCE)	64475	166GW053M7DL	64475007	WG	500	U	500	R	ug/L	DL
VOA	SW8260B	TETRACHLOROETHYLENE(PCE)	64475	166GW054M7DL	64475008	WG	125	U	125	R	ug/L	DL
VOA	SW8260B	TETRACHLOROETHYLENE(PCE)	64475	166GW055M7DL	64475009	WG	125	U	125	R	ug/L	DL
VOA	SW8260B	TETRACHLOROETHYLENE(PCE)	64475	166HW055M7DL	64475010	WG	125	U	125	R	ug/L	DL
VOA	SW8260B	TETRACHLOROETHYLENE(PCE)	64475	166GW07DM7DL	64475011	WG	125	U	125	R	ug/L	DL
VOA	SW8260B	TETRACHLOROETHYLENE(PCE)	64475	166GW13DM7DL	64475013	WG	500	U	500	R	ug/L	DL
VOA	SW8260B	TETRACHLOROETHYLENE(PCE)	64475	166HW13DM7DL	64475014	WG	500	U	500	R	ug/L	DL
VOA	SW8260B	TETRACHLOROETHYLENE(PCE)	64475	166GW14DM7DL	64475015	WG	10	U	10	R	ug/L	DL

Parameter Class	Analytical Method	Parameter	SDG	Sample ID	Lab Sample ID	Matrix	Lab Result	Lab Qual	Final Result	Final Qual	Units	Reasons
VOA	SW8260B	TETRACHLOROETHYLENE(PCE)	64475	166GW26DM7DL	64475019	WG	250	U	250	R	ug/L	DL
VOA	SW8260B	TETRACHLOROETHYLENE(PCE)	64550	166GW34DM7DL	64550003	WG	5000	U	5000	R	ug/L	DL
VOA	SW8260B	TETRACHLOROETHYLENE(PCE)	64550	166GW36DM7DL	64550004	WG	2500	U	2500	R	ug/L	DL
VOA	SW8260B	TETRACHLOROETHYLENE(PCE)	64676	163GW003M7DL	64676002	WG	98.2	D	98.2	R	ug/L	DL
VOA	SW8260B	TETRACHLOROETHYLENE(PCE)	64676	166GW040M7DL	64676003	WG	5000	U	5000	R	ug/L	DL
VOA	SW8260B	TETRACHLOROETHYLENE(PCE)	64676	166GW41DM7DL	64676008	WG	50	U	50	R	ug/L	DL
VOA	SW8260B	TETRACHLOROETHYLENE(PCE)	64676	166GW42DM7DL	64676009	WG	500	U	500	R	ug/L	DL
VOA	SW8260B	TETRACHLOROETHYLENE(PCE)	64676	166GW44DM7DL	64676011	WG	500	U	500	R	ug/L	DL
VOA	SW8260B	TETRACHLOROETHYLENE(PCE)	64676	166GW35DM7DL	64676012	WG	500	U	500	R	ug/L	DL
VOA	SW8260B	TETRACHLOROETHYLENE(PCE)	71658	166GW001M8	71658004	WG	1.2	J	1.2	J	ug/L	SS
VOA	SW8260B	TETRACHLOROETHYLENE(PCE)	71658	166GW017M8	71658006	WG	10.3	=	10.3	J	ug/L	SS
VOA	SW8260B	TETRACHLOROETHYLENE(PCE)	71658	166GW053M8DL	71658007	WG	250	U	250	R	ug/L	DL
VOA	SW8260B	TETRACHLOROETHYLENE(PCE)	71658	166GW054M8DL	71658008	WG	125	U	125	R	ug/L	DL
VOA	SW8260B	TETRACHLOROETHYLENE(PCE)	71658	166GW055M8DL	71658009	WG	500	U	500	R	ug/L	DL
VOA	SW8260B	TETRACHLOROETHYLENE(PCE)	71658	166GW056M8DL	71658010	WG	500	U	500	R	ug/L	DL
VOA	SW8260B	TETRACHLOROETHYLENE(PCE)	71658	166GW07DM8DL	71658012	WG	125	U	125	R	ug/L	DL
VOA	SW8260B	TETRACHLOROETHYLENE(PCE)	71658	166GW13DM8DL	71658014	WG	500	U	500	R	ug/L	DL
VOA	SW8260B	TETRACHLOROETHYLENE(PCE)	71658	166GW14DM8DL	71658016	WG	10	U	10	R	ug/L	DL
VOA	SW8260B	TETRACHLOROETHYLENE(PCE)	71659	166GW19DM8	71659002	WG	103	E	103	R	ug/L	LR
VOA	SW8260B	TETRACHLOROETHYLENE(PCE)	71659	166GW19DM8DL	71659002	WG	114	D	114	J	ug/L	SS
VOA	SW8260B	TETRACHLOROETHYLENE(PCE)	71659	166GW25DM8DL	71659004	WG	500	U	500	R	ug/L	DL

Attachment 1 - Changed Qualifiers and Results
Charleston Navel Complex - Zone K, SWMU 166 - 2002 Sampling Events

Parameter Class	Analytical Method	Parameter	SDG	Sample ID	Lab Sample ID	Matrix	Result	Lab Qual	Final Result	Final Qual	Units	Reason
VOA	SW8260B	TETRACHLOROETHYLENE(PCE)	71766	166GW49DM8DL	71766003	WG	250	U	250	R	ug/L	DL
VOA	SW8260B	TETRACHLOROETHYLENE(PCE)	71766	166GW50DM8DL	71766004	WG	1000	U	1000	R	ug/L	DL
VOA	SW8260B	TETRACHLOROETHYLENE(PCE)	71766	166HW50DM8DL	71766005	WG	2500	U	2500	R	ug/L	DL
VOA	SW8260B	TETRACHLOROETHYLENE(PCE)	71766	166GW51DM8DL	71766006	WG	500	U	500	R	ug/L	DL
VOA	SW8260B	TETRACHLOROETHYLENE(PCE)	71766	166GW52DM8DL	71766007	WG	500	U	500	R	ug/L	DL
VOA	SW8260B	TETRACHLOROETHYLENE(PCE)	71766	166GWTM3M8DL	71766009	WG	50	U	50	R	ug/L	DL
VOA	SW8260B	TETRACHLOROETHYLENE(PCE)	71766	166GWTM4M8DL	71766010	WG	1000	U	1000	R	ug/L	DL
VOA	SW8260B	TETRACHLOROETHYLENE(PCE)	71766	166GW45DM8DL	71766011	WG	250	U	250	R	ug/L	DL
VOA	SW8260B	TETRACHLOROETHYLENE(PCE)	71766	166GW46DM8DL	71766012	WG	250	U	250	R	ug/L	DL
VOA	SW8260B	TETRACHLOROETHYLENE(PCE)	71766	166GW48DM8DL	71766014	WG	500	U	500	R	ug/L	DL
VOA	SW8260B	TETRACHLOROETHYLENE(PCE)	71852	166GW040M8DL	71852003	WG	1250	U	1250	R	ug/L	DL
VOA	SW8260B	TETRACHLOROETHYLENE(PCE)	71852	166HW040M8DL	71852004	WG	1250	U	1250	R	ug/L	DL
VOA	SW8260B	TETRACHLOROETHYLENE(PCE)	71852	166GW34DM8DL	71852005	WG	5000	U	5000	R	ug/L	DL
VOA	SW8260B	TETRACHLOROETHYLENE(PCE)	71852	166GW36DM8DL	71852007	WG	1250	U	1250	R	ug/L	DL
VOA	SW8260B	TETRACHLOROETHYLENE(PCE)	71852	166GW37DM8DL	71852008	WG	25	U	25	R	ug/L	DL
VOA	SW8260B	TETRACHLOROETHYLENE(PCE)	71852	166GW43DM8DL	71852012	WG	500	U	500	R	ug/L	DL
VOA	SW8260B	TETRACHLOROETHYLENE(PCE)	72055	163GW003M8	72055003	WG	356	E	356	R	ug/L	LR
VOA	SW8260B	TETRACHLOROETHYLENE(PCE)	72055	163GW003M8DL	72055003	WG	285	D	285	J	ug/L	SS
VOA	SW8260B	TETRACHLOROETHYLENE(PCE)	72055	163GW03MM8	72055004	WG	5	U	5	UJ	ug/L	SS
VOA	SW8260B	TETRACHLOROETHYLENE(PCE)	72055	166GW16DM8	72055005	WG	5	U	5	UJ	ug/L	SS
VOA	SW8260B	TETRACHLOROETHYLENE(PCE)	72055	166GW16DM8DL	72055005	WG	250	U	250	R	ug/L	DL

Parameter Class	Analytical Method	Parameter	SDG	Sample ID	Lab Sample ID	Matrix	Result	Final Qual	Final Result	Final Qual	Units	Reason
VOA	SW8260B	TETRACHLOROETHYLENE(PCE)	72055	166GW33DM8	72055006	WG	5	U	5	UJ	ug/L	SS
VOA	SW8260B	TETRACHLOROETHYLENE(PCE)	72055	166GW38DM8	72055007	WG	5	U	5	UJ	ug/L	SS
VOA	SW8260B	TETRACHLOROETHYLENE(PCE)	72055	166GW38DM8DL	72055007	WG	50	U	50	R	ug/L	DL
VOA	SW8260B	TETRACHLOROETHYLENE(PCE)	72055	163GW005M8	72055008	WG	5	U	5	UJ	ug/L	SS
VOA	SW8260B	TOLUENE	56223	166GW27DM1	56223001	WG	0.4	J	5	U	ug/L	BL
VOA	SW8260B	TOLUENE	56223	166GW32DM1LR	56223003	WG	10.3	JD	10.3	R	ug/L	DL
VOA	SW8260B	TOLUENE	56330	166GW28DM1	56330001	WG	0.28	JB	5	U	ug/L	BL
VOA	SW8260B	TOLUENE	56330	166GW28DM1DL	56330001	WG	25	U	25	R	ug/L	DL
VOA	SW8260B	TOLUENE	56330	166GW29DM1	56330002	WG	0.27	JB	5	U	ug/L	BL
VOA	SW8260B	TOLUENE	56330	166GW30DM1	56330003	WG	0.41	JB	5	U	ug/L	BL
VOA	SW8260B	TOLUENE	56330	166GW30DM1LR	56330003	WG	250	U	250	R	ug/L	DL
VOA	SW8260B	TOLUENE	56330	166HW30DM1	56330004	WG	0.39	JB	5	U	ug/L	BL
VOA	SW8260B	TOLUENE	56330	166HW30DM1LR	56330004	WG	250	U	250	R	ug/L	DL
VOA	SW8260B	TOLUENE	56341	166VDRM001M2	56341001	SO	1	J	1	J	ug/kg	IS
VOA	SW8260B	TOLUENE	57725	166GW28DM2DL	57725002	WG	10	U	10	R	ug/L	DL
VOA	SW8260B	TOLUENE	57725	166GW29DM2DL	57725003	WG	10	U	10	R	ug/L	DL
VOA	SW8260B	TOLUENE	57725	166GW30DM2	57725004	WG	0.21	J	1	U	ug/L	BL
VOA	SW8260B	TOLUENE	57725	166GW30DM2DL	57725004	WG	50	U	50	R	ug/L	DL
VOA	SW8260B	TOLUENE	57725	166HW30DM2	57725005	WG	0.22	J	1	U	ug/L	BL
VOA	SW8260B	TOLUENE	57725	166HW30DM2DL	57725005	WG	50	U	50	R	ug/L	DL
VOA	SW8260B	TOLUENE	57725	166GW31DM2DL	57725006	WG	10	U	10	R	ug/L	DL

Attachment 1 - Changed Qualifiers and Results
Charleston Navel Complex - Zone K, SWMU 166 - 2002 Sampling Events

Parameter Group	Analytical Method	Analyte	Sample	Sample ID	Lab Sample ID	Matrix	Result	Qualifier	Final Result	Final Qualifier	Units	Reasons
VOA	SW8260B	TOLUENE	57725	166GW32DM2DL	57725007	WG	50	U	50	R	ug/L	DL
VOA	SW8260B	TOLUENE	58856	166GW27DM3	58856001	WG	0.22	JB	5	U	ug/L	BL
VOA	SW8260B	TOLUENE	58856	166GW28DM3	58856002	WG	0.19	JB	5	U	ug/L	BL
VOA	SW8260B	TOLUENE	58856	166GW28DM3DL	58856002	WG	2.5	JBD	2.5	R	ug/L	DL
VOA	SW8260B	TOLUENE	58856	166GW29DM3	58856003	WG	0.32	JB	5	U	ug/L	BL
VOA	SW8260B	TOLUENE	58856	166GW29DM3DL	58856003	WG	0.56	JBD	0.56	R	ug/L	DL
VOA	SW8260B	TOLUENE	58856	166GW30DM3	58856004	WG	0.34	JB	5	U	ug/L	BL
VOA	SW8260B	TOLUENE	58856	166GW30DM3DL	58856004	WG	10.4	JBD	10.4	R	ug/L	DL
VOA	SW8260B	TOLUENE	58856	166GW31DM3	58856005	WG	0.26	JB	5	U	ug/L	BL
VOA	SW8260B	TOLUENE	58856	166GW31DM3DL	58856005	WG	25	U	25	R	ug/L	DL
VOA	SW8260B	TOLUENE	58856	166HW31DM3	58856006	WG	0.2	JB	5	U	ug/L	BL
VOA	SW8260B	TOLUENE	58856	166HW31DM3DL	58856006	WG	1.8	JBD	1.8	R	ug/L	DL
VOA	SW8260B	TOLUENE	58856	166GW32DM3	58856007	WG	0.24	JB	5	U	ug/L	BL
VOA	SW8260B	TOLUENE	58856	166GW32DM3DL	58856007	WG	250	U	250	R	ug/L	DL
VOA	SW8260B	TOLUENE	60789	166GW33DM4DL	60789001	WG	10	U	10	R	ug/L	DL
VOA	SW8260B	TOLUENE	60789	166GW34DM4DL	60789002	WG	2500	U	2500	R	ug/L	DL
VOA	SW8260B	TOLUENE	60789	166GW35DM4DL	60789003	WG	50	U	50	R	ug/L	DL
VOA	SW8260B	TOLUENE	60789	166GW37DM4DL	60789004	WG	2500	U	2500	R	ug/L	DL
VOA	SW8260B	TOLUENE	60789	166GW39DM4DL	60789005	WG	50	U	50	R	ug/L	DL
VOA	SW8260B	TOLUENE	60790	163GW03MM4DL	60790001	WG	250	U	250	R	ug/L	DL
VOA	SW8260B	TOLUENE	60790	166GW26DM4DL	607[illegible]02	WG	250	U	250	R	ug/L	DL

Attachment 1 - Changed Qualifiers and Results
Charleston Navel Complex - Zone K ( )MU 166 - 2002 Sampling Events

Parameter Class	Analytical Method	Parameter	SDG	Sample ID	Lab Sample ID	Matrix	Lab Result	Lab Qual	Final Result	Final Qual	Units	Reason
VOA	SW8260B	TOLUENE	60790	166GW25DM4DL	60790003	WG	500	U	500	R	ug/L	DL
VOA	SW8260B	TOLUENE	60790	166HW25DM4DL	60790004	WG	500	U	500	R	ug/L	DL
VOA	SW8260B	TOLUENE	60790	166GW07DM4DL	60790008	WG	50	U	50	R	ug/L	DL
VOA	SW8260B	TOLUENE	60879	166GW41DM4DL	60879001	WG	250	U	250	R	ug/L	DL
VOA	SW8260B	TOLUENE	60879	166GW42DM4DL	60879002	WG	500	U	500	R	ug/L	DL
VOA	SW8260B	TOLUENE	60879	166GW43DM4DL	60879003	WG	1250	U	1250	R	ug/L	DL
VOA	SW8260B	TOLUENE	60879	166GW44DM4DL	60879004	WG	250	U	250	R	ug/L	DL
VOA	SW8260B	TOLUENE	60879	166GW13DM4DL	60879005	WG	500	U	500	R	ug/L	DL
VOA	SW8260B	TOLUENE	61044	166GW38DM4DL	61044001	WG	100	U	100	R	ug/L	DL
VOA	SW8260B	TOLUENE	61044	166GW45DM4DL	61044002	WG	500	U	500	R	ug/L	DL
VOA	SW8260B	TOLUENE	61044	166GW48DM4DL	61044004	WG	500	U	500	R	ug/L	DL
VOA	SW8260B	TOLUENE	61044	166GWTM4M4DL	61044005	WG	500	U	500	R	ug/L	DL
VOA	SW8260B	TOLUENE	61044	166GW14DM4DL	61044007	WG	10	U	10	R	ug/L	DL
VOA	SW8260B	TOLUENE	61134	166GW36DM4DL	61134002	WG	2500	U	2500	R	ug/L	DL
VOA	SW8260B	TOLUENE	61170	166GW50DM4DL	61170001	WG	1250	U	1250	R	ug/L	DL
VOA	SW8260B	TOLUENE	62650	166GW28DM6DL	62650003	WG	25	U	25	R	ug/L	DL
VOA	SW8260B	TOLUENE	64473	166GW50DM7DL	64473003	WG	1250	U	1250	R	ug/L	DL
VOA	SW8260B	TOLUENE	64473	166HW50DM7DL	64473004	WG	1250	U	1250	R	ug/L	DL
VOA	SW8260B	TOLUENE	64475	166GW053M7	64475007	WG	1.2	J	5	U	ug/L	BL
VOA	SW8260B	TOLUENE	64475	166GW053M7DL	64475007	WG	500	U	500	R	ug/L	DL
VOA	SW8260B	TOLUENE	64475	166GW054M7DL	64475008	WG	125	U	125	R	ug/L	DL

Parameter Class	Analytical Method	Parameter	SDG	Sample ID	Lab Sample	Matrix	Lab Result	Lab Qual	Final Result	Final Qual	Units	Reasons
VOA	SW8260B	TOLUENE	64475	166GW055M7DL	64475009	WG	125	U	125	R	ug/L	DL
VOA	SW8260B	TOLUENE	64475	166HW055M7	64475010	WG	1.6	J	5	U	ug/L	BL
VOA	SW8260B	TOLUENE	64475	166HW055M7DL	64475010	WG	125	U	125	R	ug/L	DL
VOA	SW8260B	TOLUENE	64475	166GW07DM7DL	64475011	WG	125	U	125	R	ug/L	DL
VOA	SW8260B	TOLUENE	64475	166GW13DM7DL	64475013	WG	500	U	500	R	ug/L	DL
VOA	SW8260B	TOLUENE	64475	166HW13DM7DL	64475014	WG	500	U	500	R	ug/L	DL
VOA	SW8260B	TOLUENE	64475	166GW14DM7DL	64475015	WG	10	U	10	R	ug/L	DL
VOA	SW8260B	TOLUENE	64475	166GW26DM7DL	64475019	WG	250	U	250	R	ug/L	DL
VOA	SW8260B	TOLUENE	64550	166GW34DM7DL	64550003	WG	5000	U	5000	R	ug/L	DL
VOA	SW8260B	TOLUENE	64550	166GW36DM7DL	64550004	WG	2500	U	2500	R	ug/L	DL
VOA	SW8260B	TOLUENE	64676	163GW003M7DL	64676002	WG	25	U	25	R	ug/L	DL
VOA	SW8260B	TOLUENE	64676	166GW040M7	64676003	WG	878	E	878	R	ug/L	LR
VOA	SW8260B	TOLUENE	64676	166GW040M7DL	64676003	WG	2180	JD	2180	J	ug/L	DL
VOA	SW8260B	TOLUENE	64676	166GW41DM7DL	64676008	WG	50	U	50	R	ug/L	DL
VOA	SW8260B	TOLUENE	64676	166GW42DM7DL	64676009	WG	500	U	500	R	ug/L	DL
VOA	SW8260B	TOLUENE	64676	166GW44DM7DL	64676011	WG	500	U	500	R	ug/L	DL
VOA	SW8260B	TOLUENE	64676	166GW35DM7DL	64676012	WG	500	U	500	R	ug/L	DL
VOA	SW8260B	TOLUENE	71658	166GW053M8DL	71658007	WG	250	U	250	R	ug/L	DL
VOA	SW8260B	TOLUENE	71658	166GW054M8DL	71658008	WG	125	U	125	R	ug/L	DL
VOA	SW8260B	TOLUENE	71658	166GW055M8DL	71658009	WG	500	U	500	R	ug/L	DL
VOA	SW8260B	TOLUENE	71658	166GW056M8	71658010	WG	0.59	J	5	U	ug/L	BL

Parameter Class	Analytical Method	Parameter	SDG	Sample ID	Lab Sample ID	Matrix	Lab Result	Lab Qual	Final Result	Final Qual	Units	Reasons
VOA	SW8260B	TOLUENE	71658	166GW056M8DL	71658010	WG	500	U	500	R	ug/L	DL
VOA	SW8260B	TOLUENE	71658	166GW07DM8DL	71658012	WG	125	U	125	R	ug/L	DL
VOA	SW8260B	TOLUENE	71658	166GW13DM8DL	71658014	WG	500	U	500	R	ug/L	DL
VOA	SW8260B	TOLUENE	71658	166GW14DM8DL	71658016	WG	10	U	10	R	ug/L	DL
VOA	SW8260B	TOLUENE	71659	166GW19DM8DL	71659002	WG	10	U	10	R	ug/L	DL
VOA	SW8260B	TOLUENE	71659	166GW25DM8DL	71659004	WG	500	U	500	R	ug/L	DL
VOA	SW8260B	TOLUENE	71659	698GW001M8	71659006	WG	1.1	J	5	U	ug/L	BL
VOA	SW8260B	TOLUENE	71659	698HW001M8	71659007	WG	0.76	J	5	U	ug/L	BL
VOA	SW8260B	TOLUENE	71766	166GW49DM8DL	71766003	WG	250	U	250	R	ug/L	DL
VOA	SW8260B	TOLUENE	71766	166GW50DM8DL	71766004	WG	1000	U	1000	R	ug/L	DL
VOA	SW8260B	TOLUENE	71766	166HW50DM8DL	71766005	WG	2500	U	2500	R	ug/L	DL
VOA	SW8260B	TOLUENE	71766	166GW51DM8DL	71766006	WG	500	U	500	R	ug/L	DL
VOA	SW8260B	TOLUENE	71766	166GW52DM8DL	71766007	WG	500	U	500	R	ug/L	DL
VOA	SW8260B	TOLUENE	71766	166GWTM3M8DL	71766009	WG	50	U	50	R	ug/L	DL
VOA	SW8260B	TOLUENE	71766	166GWTM4M8DL	71766010	WG	1000	U	1000	R	ug/L	DL
VOA	SW8260B	TOLUENE	71766	166GW45DM8DL	71766011	WG	250	U	250	R	ug/L	DL
VOA	SW8260B	TOLUENE	71766	166GW46DM8DL	71766012	WG	250	U	250	R	ug/L	DL
VOA	SW8260B	TOLUENE	71766	166GW48DM8DL	71766014	WG	500	U	500	R	ug/L	DL
VOA	SW8260B	TOLUENE	71852	166GW040M8	71852003	WG	245	J	245	J	ug/L	SS
VOA	SW8260B	TOLUENE	71852	166GW040M8DL	71852003	WG	213	JD	213	R	ug/L	DL
VOA	SW8260B	TOLUENE	71852	166HW040M8DL	71852004	WG	282	JD	282	R	ug/L	DL

Attachment 1 - Changed Qualifiers and Results
Charleston Navel Complex - Zone K, SWMU 166 - 2002 Sampling Events

Parameter Class	Analytical Method	Parameter	SDG	Sample ID	Lab Sample ID	Matrix	Result	Qual	Final Result	Final Qual	Units	Reasons
VOA	SW8260B	TOLUENE	71852	166GW34DM8DL	71852005	WG	5000	U	5000	R	ug/L	DL
VOA	SW8260B	TOLUENE	71852	166GW36DM8DL	71852007	WG	1250	U	1250	R	ug/L	DL
VOA	SW8260B	TOLUENE	71852	166GW37DM8DL	71852008	WG	25	U	25	R	ug/L	DL
VOA	SW8260B	TOLUENE	71852	166GW43DM8DL	71852012	WG	500	U	500	R	ug/L	DL
VOA	SW8260B	TOLUENE	72055	163GW003M8	72055003	WG	5	U	5	UJ	ug/L	SS
VOA	SW8260B	TOLUENE	72055	163GW003M8DL	72055003	WG	50	U	50	R	ug/L	DL
VOA	SW8260B	TOLUENE	72055	163GW03MM8	72055004	WG	5	U	5	UJ	ug/L	SS
VOA	SW8260B	TOLUENE	72055	166GW16DM8	72055005	WG	5	U	5	UJ	ug/L	SS
VOA	SW8260B	TOLUENE	72055	166GW16DM8DL	72055005	WG	250	U	250	R	ug/L	DL
VOA	SW8260B	TOLUENE	72055	166GW33DM8	72055006	WG	5	U	5	UJ	ug/L	SS
VOA	SW8260B	TOLUENE	72055	166GW38DM8	72055007	WG	5	U	5	UJ	ug/L	SS
VOA	SW8260B	TOLUENE	72055	166GW38DM8DL	72055007	WG	50	U	50	R	ug/L	DL
VOA	SW8260B	TOLUENE	72055	163GW005M8	72055008	WG	5	U	5	UJ	ug/L	SS
VOA	SW8260B	trans-1,2-DICHLOROETHENE	56223	166GW32DM1LR	56223003	WG	250	U	250	R	ug/L	DL
VOA	SW8260B	trans-1,2-DICHLOROETHENE	56330	166GW28DM1DL	56330001	WG	14.8	JD	14.8	R	ug/L	DL
VOA	SW8260B	trans-1,2-DICHLOROETHENE	56330	166GW30DM1LR	56330003	WG	250	U	250	R	ug/L	DL
VOA	SW8260B	trans-1,2-DICHLOROETHENE	56330	166HW30DM1LR	56330004	WG	250	U	250	R	ug/L	DL
VOA	SW8260B	trans-1,2-DICHLOROETHENE	56341	166VDRM001M2	56341001	SO	5.6	U	5.6	UJ	ug/kg	IS
VOA	SW8260B	trans-1,2-DICHLOROETHENE	57725	166GW28DM2DL	57725002	WG	12.1	D	12.1	R	ug/L	DL
VOA	SW8260B	trans-1,2-DICHLOROETHENE	57725	166GW29DM2DL	57725003	WG	10	U	10	R	ug/L	DL
VOA	SW8260B	trans-1,2-DICHLOROETHENE	57725	166GW30DM2DL	57725004	WG	35.6	JD	35.6	R	ug/L	DL

Parameter Class	Analytical Method	Parameter	SDG	Sample ID	Lab Sample	Matrix	Lab Result	Lab Qual	Final Result	Final Qual	Unit	Reasons
VOA	SW8260B	trans-1,2-DICHLOROETHENE	57725	166HW30DM2DL	57725005	WG	79.7	D	79.7	R	ug/L	DL
VOA	SW8260B	trans-1,2-DICHLOROETHENE	57725	166GW31DM2DL	57725006	WG	10	U	10	R	ug/L	DL
VOA	SW8260B	trans-1,2-DICHLOROETHENE	57725	166GW32DM2DL	57725007	WG	50	U	50	R	ug/L	DL
VOA	SW8260B	trans-1,2-DICHLOROETHENE	58856	166GW28DM3DL	58856002	WG	9.1	JD	9.1	R	ug/L	DL
VOA	SW8260B	trans-1,2-DICHLOROETHENE	58856	166GW29DM3DL	58856003	WG	10	U	10	R	ug/L	DL
VOA	SW8260B	trans-1,2-DICHLOROETHENE	58856	166GW30DM3DL	58856004	WG	56.3	JD	56.3	R	ug/L	DL
VOA	SW8260B	trans-1,2-DICHLOROETHENE	58856	166GW31DM3DL	58856005	WG	2	JD	2	R	ug/L	DL
VOA	SW8260B	trans-1,2-DICHLOROETHENE	58856	166HW31DM3DL	58856006	WG	50	U	50	R	ug/L	DL
VOA	SW8260B	trans-1,2-DICHLOROETHENE	58856	166GW32DM3DL	58856007	WG	16.2	JD	16.2	R	ug/L	DL
VOA	SW8260B	trans-1,2-DICHLOROETHENE	60789	166GW33DM4DL	60789001	WG	6.8	JD	6.8	R	ug/L	DL
VOA	SW8260B	trans-1,2-DICHLOROETHENE	60789	166GW34DM4DL	60789002	WG	2500	U	2500	R	ug/L	DL
VOA	SW8260B	trans-1,2-DICHLOROETHENE	60789	166GW35DM4DL	60789003	WG	50	U	50	R	ug/L	DL
VOA	SW8260B	trans-1,2-DICHLOROETHENE	60789	166GW37DM4DL	60789004	WG	2500	U	2500	R	ug/L	DL
VOA	SW8260B	trans-1,2-DICHLOROETHENE	60789	166GW39DM4DL	60789005	WG	50	U	50	R	ug/L	DL
VOA	SW8260B	trans-1,2-DICHLOROETHENE	60790	163GW03MM4DL	60790001	WG	250	U	250	R	ug/L	DL
VOA	SW8260B	trans-1,2-DICHLOROETHENE	60790	166GW26DM4DL	60790002	WG	250	U	250	R	ug/L	DL
VOA	SW8260B	trans-1,2-DICHLOROETHENE	60790	166GW25DM4DL	60790003	WG	500	U	500	R	ug/L	DL
VOA	SW8260B	trans-1,2-DICHLOROETHENE	60790	166HW25DM4DL	60790004	WG	500	U	500	R	ug/L	DL
VOA	SW8260B	trans-1,2-DICHLOROETHENE	60790	166GW07DM4DL	60790008	WG	3.7	JD	3.7	R	ug/L	DL
VOA	SW8260B	trans-1,2-DICHLOROETHENE	60879	166GW41DM4DL	60879001	WG	250	U	250	R	ug/L	DL
VOA	SW8260B	trans-1,2-DICHLOROETHENE	60879	166GW42DM4DL	60879002	WG	500	U	500	R	ug/L	DL

Parameter Class	Analytical Method	Parameter	SDG	Sample ID	Lab Sample ID	Matrix	[illegible]	Qual	Final Result	Final Qual	Units	Reason
VOA	SW8260B	trans-1,2-DICHLOROETHENE	60879	166GW43DM4DL	60879003	WG	1250	U	1250	R	ug/L	DL
VOA	SW8260B	trans-1,2-DICHLOROETHENE	60879	166GW44DM4DL	60879004	WG	250	U	250	R	ug/L	DL
VOA	SW8260B	trans-1,2-DICHLOROETHENE	60879	166GW13DM4DL	60879005	WG	500	U	500	R	ug/L	DL
VOA	SW8260B	trans-1,2-DICHLOROETHENE	61044	166GW38DM4DL	61044001	WG	100	U	100	R	ug/L	DL
VOA	SW8260B	trans-1,2-DICHLOROETHENE	61044	166GW45DM4DL	61044002	WG	500	U	500	R	ug/L	DL
VOA	SW8260B	trans-1,2-DICHLOROETHENE	61044	166GW48DM4DL	61044004	WG	500	U	500	R	ug/L	DL
VOA	SW8260B	trans-1,2-DICHLOROETHENE	61044	166GWTM4M4DL	61044005	WG	500	U	500	R	ug/L	DL
VOA	SW8260B	trans-1,2-DICHLOROETHENE	61044	166GW14DM4DL	61044007	WG	10	U	10	R	ug/L	DL
VOA	SW8260B	trans-1,2-DICHLOROETHENE	61134	166GW36DM4DL	61134002	WG	2500	U	2500	R	ug/L	DL
VOA	SW8260B	trans-1,2-DICHLOROETHENE	61170	166GW50DM4DL	61170001	WG	1250	U	1250	R	ug/L	DL
VOA	SW8260B	trans-1,2-DICHLOROETHENE	62650	166GW28DM6	62650003	WG	12	=	12	J	ug/L	SS
VOA	SW8260B	trans-1,2-DICHLOROETHENE	62650	166GW28DM6DL	62650003	WG	12.3	JD	12.3	R	ug/L	DL
VOA	SW8260B	trans-1,2-DICHLOROETHENE	62650	166GW30DM6	62650005	WG	64	J	64	J	ug/L	SS
VOA	SW8260B	trans-1,2-DICHLOROETHENE	62650	166GW31DM6	62650006	WG	2.2	J	2.2	J	ug/L	SS
VOA	SW8260B	trans-1,2-DICHLOROETHENE	62650	166HW31DM6	62650007	WG	2	J	2	J	ug/L	SS
VOA	SW8260B	trans-1,2-DICHLOROETHENE	62650	166GW32DM6	62650008	WG	17.8	J	17.8	J	ug/L	SS
VOA	SW8260B	trans-1,2-DICHLOROETHENE	64473	166GW50DM7DL	64473003	WG	1250	U	1250	R	ug/L	DL
VOA	SW8260B	trans-1,2-DICHLOROETHENE	64473	166HW50DM7DL	64473004	WG	1250	U	1250	R	ug/L	DL
VOA	SW8260B	trans-1,2-DICHLOROETHENE	64475	166GW053M7DL	64475007	WG	500	U	500	R	ug/L	DL
VOA	SW8260B	trans-1,2-DICHLOROETHENE	64475	166GW054M7DL	64475008	WG	125	U	125	R	ug/L	DL
VOA	SW8260B	trans-1,2-DICHLOROETHENE	64475	166GW055M7DL	64475009	WG	125	U	125	R	ug/L	DL

Parameter Class	Analytical Method	Parameter	SDG	Sample ID	Lab Sample	Matrix	Result	Qualifier	Final Result	Final Qualifier	Units	Reason
VOA	SW8260B	trans-1,2-DICHLOROETHENE	64475	166HW055M7DL	64475010	WG	125	U	125	R	ug/L	DL
VOA	SW8260B	trans-1,2-DICHLOROETHENE	64475	166GW07DM7DL	64475011	WG	125	U	125	R	ug/L	DL
VOA	SW8260B	trans-1,2-DICHLOROETHENE	64475	166GW13DM7DL	64475013	WG	500	U	500	R	ug/L	DL
VOA	SW8260B	trans-1,2-DICHLOROETHENE	64475	166HW13DM7DL	64475014	WG	500	U	500	R	ug/L	DL
VOA	SW8260B	trans-1,2-DICHLOROETHENE	64475	166GW14DM7DL	64475015	WG	1.2	JD	1.2	R	ug/L	DL
VOA	SW8260B	trans-1,2-DICHLOROETHENE	64475	166GW26DM7DL	64475019	WG	26.5	JD	26.5	R	ug/L	DL
VOA	SW8260B	trans-1,2-DICHLOROETHENE	64550	166GW34DM7DL	64550003	WG	5000	U	5000	R	ug/L	DL
VOA	SW8260B	trans-1,2-DICHLOROETHENE	64550	166GW36DM7DL	64550004	WG	2500	U	2500	R	ug/L	DL
VOA	SW8260B	trans-1,2-DICHLOROETHENE	64676	163GW003M7DL	64676002	WG	4.6	JD	4.6	R	ug/L	DL
VOA	SW8260B	trans-1,2-DICHLOROETHENE	64676	166GW040M7DL	64676003	WG	5000	U	5000	R	ug/L	DL
VOA	SW8260B	trans-1,2-DICHLOROETHENE	64676	166GW41DM7DL	64676008	WG	14.1	JD	14.1	R	ug/L	DL
VOA	SW8260B	trans-1,2-DICHLOROETHENE	64676	166GW42DM7DL	64676009	WG	500	U	500	R	ug/L	DL
VOA	SW8260B	trans-1,2-DICHLOROETHENE	64676	166GW44DM7DL	64676011	WG	500	U	500	R	ug/L	DL
VOA	SW8260B	trans-1,2-DICHLOROETHENE	64676	166GW35DM7DL	64676012	WG	500	U	500	R	ug/L	DL
VOA	SW8260B	trans-1,2-DICHLOROETHENE	71658	166GW053M8DL	71658007	WG	250	U	250	R	ug/L	DL
VOA	SW8260B	trans-1,2-DICHLOROETHENE	71658	166GW054M8DL	71658008	WG	125	U	125	R	ug/L	DL
VOA	SW8260B	trans-1,2-DICHLOROETHENE	71658	166GW055M8	71658009	WG	4.1	J	4.1	J	ug/L	SS
VOA	SW8260B	trans-1,2-DICHLOROETHENE	71658	166GW055M8DL	71658009	WG	500	U	500	R	ug/L	DL
VOA	SW8260B	trans-1,2-DICHLOROETHENE	71658	166GW056M8	71658010	WG	11.4	=	11.4	J	ug/L	SS
VOA	SW8260B	trans-1,2-DICHLOROETHENE	71658	166GW056M8DL	71658010	WG	500	U	500	R	ug/L	DL
VOA	SW8260B	trans-1,2-DICHLOROETHENE	71658	166GW07DM8	71658012	WG	3.4	J	3.4	J	ug/L	SS

Attachment 1 - Changed Qualifiers and Results
Charleston Navel Complex - Zone K, SWMU 166 - 2002 Sampling Events

Parameter Class	Analytical Method	Parameter	Site	Sample ID	Lab Sample ID	Matrix	Result	Qualifier	Final Result	Final Qualifier	Units	Reason
VOA	SW8260B	trans-1,2-DICHLOROETHENE	71658	166GW07DM8DL	71658012	WG	125	U	125	R	ug/L	DL
VOA	SW8260B	trans-1,2-DICHLOROETHENE	71658	166GW08DM8	71658013	WG	1.5	J	1.5	J	ug/L	SS
VOA	SW8260B	trans-1,2-DICHLOROETHENE	71658	166GW13DM8DL	71658014	WG	500	U	500	R	ug/L	DL
VOA	SW8260B	trans-1,2-DICHLOROETHENE	71658	166GW14DM8	71658016	WG	1.4	J	1.4	J	ug/L	SS
VOA	SW8260B	trans-1,2-DICHLOROETHENE	71658	166GW14DM8DL	71658016	WG	1.5	JD	1.5	R	ug/L	DL
VOA	SW8260B	trans-1,2-DICHLOROETHENE	71659	166GW19DM8	71659002	WG	0.77	J	0.77	J	ug/L	SS
VOA	SW8260B	trans-1,2-DICHLOROETHENE	71659	166GW19DM8DL	71659002	WG	10	U	10	R	ug/L	DL
VOA	SW8260B	trans-1,2-DICHLOROETHENE	71659	166GW25DM8DL	71659004	WG	500	U	500	R	ug/L	DL
VOA	SW8260B	trans-1,2-DICHLOROETHENE	71659	166GW26DM8	71659005	WG	22.3	J	22.3	J	ug/L	SS
VOA	SW8260B	trans-1,2-DICHLOROETHENE	71766	166GW49DM8DL	71766003	WG	250	U	250	R	ug/L	DL
VOA	SW8260B	trans-1,2-DICHLOROETHENE	71766	166GW50DM8DL	71766004	WG	1000	U	1000	R	ug/L	DL
VOA	SW8260B	trans-1,2-DICHLOROETHENE	71766	166HW50DM8DL	71766005	WG	2500	U	2500	R	ug/L	DL
VOA	SW8260B	trans-1,2-DICHLOROETHENE	71766	166GW51DM8DL	71766006	WG	500	U	500	R	ug/L	DL
VOA	SW8260B	trans-1,2-DICHLOROETHENE	71766	166GW52DM8DL	71766007	WG	500	U	500	R	ug/L	DL
VOA	SW8260B	trans-1,2-DICHLOROETHENE	71766	166GWTM3M8DL	71766009	WG	50	U	50	R	ug/L	DL
VOA	SW8260B	trans-1,2-DICHLOROETHENE	71766	166GWTM4M8DL	71766010	WG	1000	U	1000	R	ug/L	DL
VOA	SW8260B	trans-1,2-DICHLOROETHENE	71766	166GW45DM8DL	71766011	WG	250	U	250	R	ug/L	DL
VOA	SW8260B	trans-1,2-DICHLOROETHENE	71766	166GW46DM8	71766012	WG	2.5	J	2.5	J	ug/L	SS
VOA	SW8260B	trans-1,2-DICHLOROETHENE	71766	166GW46DM8DL	71766012	WG	250	U	250	R	ug/L	DL
VOA	SW8260B	trans-1,2-DICHLOROETHENE	71766	166GW48DM8DL	71766014	WG	500	U	500	R	ug/L	DL
VOA	SW8260B	trans-1,2-DICHLOROETHENE	71852	166GW040M8DL	71852003	WG	1250	U	1250	R	ug/L	DL

Attachment 1 - Changed Qualifiers and Results
Charleston Navel Complex - Zone F MU 166 - 2002 Sampling Events

Parameter Class	Analytical Method	Parameter	SDG	Sample ID	Lab Sample ID	Matrix	Lab Result	Lab Qual	Final Result	Final Qual	Units	Reasons
VOA	SW8260B	trans-1,2-DICHLOROETHENE	71852	166HW040M8DL	71852004	WG	1250	U	1250	R	ug/L	DL
VOA	SW8260B	trans-1,2-DICHLOROETHENE	71852	166GW34DM8DL	71852005	WG	5000	U	5000	R	ug/L	DL
VOA	SW8260B	trans-1,2-DICHLOROETHENE	71852	166GW36DM8DL	71852007	WG	1250	U	1250	R	ug/L	DL
VOA	SW8260B	trans-1,2-DICHLOROETHENE	71852	166GW37DM8DL	71852008	WG	25	U	25	R	ug/L	DL
VOA	SW8260B	trans-1,2-DICHLOROETHENE	71852	166GW43DM8DL	71852012	WG	500	U	500	R	ug/L	DL
VOA	SW8260B	trans-1,2-DICHLOROETHENE	72055	163GW003M8	72055003	WG	5	U	5	UJ	ug/L	SS
VOA	SW8260B	trans-1,2-DICHLOROETHENE	72055	163GW003M8DL	72055003	WG	50	U	50	R	ug/L	DL
VOA	SW8260B	trans-1,2-DICHLOROETHENE	72055	163GW03MM8	72055004	WG	5	U	5	UJ	ug/L	SS
VOA	SW8260B	trans-1,2-DICHLOROETHENE	72055	166GW16DM8	72055005	WG	5.6	=	5.6	J	ug/L	SS
VOA	SW8260B	trans-1,2-DICHLOROETHENE	72055	166GW16DM8DL	72055005	WG	250	U	250	R	ug/L	DL
VOA	SW8260B	trans-1,2-DICHLOROETHENE	72055	166GW33DM8	72055006	WG	1.2	J	1.2	J	ug/L	SS
VOA	SW8260B	trans-1,2-DICHLOROETHENE	72055	166GW38DM8	72055007	WG	2.5	J	2.5	J	ug/L	SS
VOA	SW8260B	trans-1,2-DICHLOROETHENE	72055	166GW38DM8DL	72055007	WG	50	U	50	R	ug/L	DL
VOA	SW8260B	trans-1,2-DICHLOROETHENE	72055	163GW005M8	72055008	WG	5	U	5	UJ	ug/L	SS
VOA	SW8260B	trans-1,3-DICHLOROPROPENE	56223	166GW32DM1LR	56223003	WG	250	U	250	R	ug/L	DL
VOA	SW8260B	trans-1,3-DICHLOROPROPENE	56330	166GW28DM1DL	56330001	WG	25	U	25	R	ug/L	DL
VOA	SW8260B	trans-1,3-DICHLOROPROPENE	56330	166GW30DM1LR	56330003	WG	250	U	250	R	ug/L	DL
VOA	SW8260B	trans-1,3-DICHLOROPROPENE	56330	166HW30DM1LR	56330004	WG	250	U	250	R	ug/L	DL
VOA	SW8260B	trans-1,3-DICHLOROPROPENE	56341	166VDRM001M2	56341001	SO	5.6	U	5.6	UJ	ug/kg	IS
VOA	SW8260B	trans-1,3-DICHLOROPROPENE	57725	166GW28DM2DL	57725002	WG	10	U	10	R	ug/L	DL
VOA	SW8260B	trans-1,3-DICHLOROPROPENE	57725	166GW29DM2DL	57725003	WG	10	U	10	R	ug/L	DL

Attachment 1 - Changed Qualifiers and Results
Charleston Navel Complex - Zone K, SWMU 166 - 2002 Sampling Events

Parameter Class	Analytical Method	Parameter	SDG	Sample ID	Lab Sample ID	Matrix	Lab Result	Lab Qual	Final Result	Final Qual	Units	Reason
VOA	SW8260B	trans-1,3-DICHLOROPROPENE	57725	166GW30DM2DL	57725004	WG	50	U	50	R	ug/L	DL
VOA	SW8260B	trans-1,3-DICHLOROPROPENE	57725	166HW30DM2DL	57725005	WG	50	U	50	R	ug/L	DL
VOA	SW8260B	trans-1,3-DICHLOROPROPENE	57725	166GW31DM2DL	57725006	WG	10	U	10	R	ug/L	DL
VOA	SW8260B	trans-1,3-DICHLOROPROPENE	57725	166GW32DM2DL	57725007	WG	50	U	50	R	ug/L	DL
VOA	SW8260B	trans-1,3-DICHLOROPROPENE	58856	166GW28DM3DL	58856002	WG	50	U	50	R	ug/L	DL
VOA	SW8260B	trans-1,3-DICHLOROPROPENE	58856	166GW29DM3DL	58856003	WG	10	U	10	R	ug/L	DL
VOA	SW8260B	trans-1,3-DICHLOROPROPENE	58856	166GW30DM3DL	58856004	WG	250	U	250	R	ug/L	DL
VOA	SW8260B	trans-1,3-DICHLOROPROPENE	58856	166GW31DM3DL	58856005	WG	25	U	25	R	ug/L	DL
VOA	SW8260B	trans-1,3-DICHLOROPROPENE	58856	166HW31DM3DL	58856006	WG	50	U	50	R	ug/L	DL
VOA	SW8260B	trans-1,3-DICHLOROPROPENE	58856	166GW32DM3DL	58856007	WG	250	U	250	R	ug/L	DL
VOA	SW8260B	trans-1,3-DICHLOROPROPENE	60789	166GW33DM4DL	60789001	WG	10	U	10	R	ug/L	DL
VOA	SW8260B	trans-1,3-DICHLOROPROPENE	60789	166GW34DM4DL	60789002	WG	2500	U	2500	R	ug/L	DL
VOA	SW8260B	trans-1,3-DICHLOROPROPENE	60789	166GW35DM4DL	60789003	WG	50	U	50	R	ug/L	DL
VOA	SW8260B	trans-1,3-DICHLOROPROPENE	60789	166GW37DM4DL	60789004	WG	2500	U	2500	R	ug/L	DL
VOA	SW8260B	trans-1,3-DICHLOROPROPENE	60789	166GW39DM4DL	60789005	WG	50	U	50	R	ug/L	DL
VOA	SW8260B	trans-1,3-DICHLOROPROPENE	60790	163GW03MM4DL	60790001	WG	250	U	250	R	ug/L	DL
VOA	SW8260B	trans-1,3-DICHLOROPROPENE	60790	166GW26DM4DL	60790002	WG	250	U	250	R	ug/L	DL
VOA	SW8260B	trans-1,3-DICHLOROPROPENE	60790	166GW25DM4DL	60790003	WG	500	U	500	R	ug/L	DL
VOA	SW8260B	trans-1,3-DICHLOROPROPENE	60790	166HW25DM4DL	60790004	WG	500	U	500	R	ug/L	DL
VOA	SW8260B	trans-1,3-DICHLOROPROPENE	60790	166GW07DM4DL	60790008	WG	50	U	50	R	ug/L	DL
VOA	SW8260B	trans-1,3-DICHLOROPROPENE	60879	166GW41DM4DL	608[illegible]01	WG	250	U	250	R	ug/L	DL

Parameter Class	Analytical Method	Parameter	SDG	Sample ID	Lab Sample ID	Matrix	Lab Result	Lab Qual	Final Result	Final Qual	Units	Reason
VOA	SW8260B	trans-1,3-DICHLOROPROPENE	60879	166GW42DM4DL	60879002	WG	500	U	500	R	ug/L	DL
VOA	SW8260B	trans-1,3-DICHLOROPROPENE	60879	166GW43DM4DL	60879003	WG	1250	U	1250	R	ug/L	DL
VOA	SW8260B	trans-1,3-DICHLOROPROPENE	60879	166GW44DM4DL	60879004	WG	250	U	250	R	ug/L	DL
VOA	SW8260B	trans-1,3-DICHLOROPROPENE	60879	166GW13DM4DL	60879005	WG	500	U	500	R	ug/L	DL
VOA	SW8260B	trans-1,3-DICHLOROPROPENE	61044	166GW38DM4DL	61044001	WG	100	U	100	R	ug/L	DL
VOA	SW8260B	trans-1,3-DICHLOROPROPENE	61044	166GW45DM4DL	61044002	WG	500	U	500	R	ug/L	DL
VOA	SW8260B	trans-1,3-DICHLOROPROPENE	61044	166GW48DM4DL	61044004	WG	500	U	500	R	ug/L	DL
VOA	SW8260B	trans-1,3-DICHLOROPROPENE	61044	166GWTM4M4DL	61044005	WG	500	U	500	R	ug/L	DL
VOA	SW8260B	trans-1,3-DICHLOROPROPENE	61044	166GW14DM4DL	61044007	WG	10	U	10	R	ug/L	DL
VOA	SW8260B	trans-1,3-DICHLOROPROPENE	61134	166GW36DM4DL	61134002	WG	2500	U	2500	R	ug/L	DL
VOA	SW8260B	trans-1,3-DICHLOROPROPENE	61170	166GW50DM4DL	61170001	WG	1250	U	1250	R	ug/L	DL
VOA	SW8260B	trans-1,3-DICHLOROPROPENE	62650	166GW28DM6DL	62650003	WG	25	U	25	R	ug/L	DL
VOA	SW8260B	trans-1,3-DICHLOROPROPENE	64473	166GW50DM7DL	64473003	WG	1250	U	1250	R	ug/L	DL
VOA	SW8260B	trans-1,3-DICHLOROPROPENE	64473	166HW50DM7DL	64473004	WG	1250	U	1250	R	ug/L	DL
VOA	SW8260B	trans-1,3-DICHLOROPROPENE	64475	163GW001M7	64475001	WG	5	U	5	UJ	ug/L	CC,BS
VOA	SW8260B	trans-1,3-DICHLOROPROPENE	64475	163GW005M7	64475002	WG	5	U	5	UJ	ug/L	CC,BS
VOA	SW8260B	trans-1,3-DICHLOROPROPENE	64475	166GW017M7	64475003	WG	5	U	5	UJ	ug/L	CC,BS
VOA	SW8260B	trans-1,3-DICHLOROPROPENE	64475	166GW026M7	64475004	WG	5	U	5	UJ	ug/L	CC,BS
VOA	SW8260B	trans-1,3-DICHLOROPROPENE	64475	166GW053M7DL	64475007	WG	500	U	500	R	ug/L	DL
VOA	SW8260B	trans-1,3-DICHLOROPROPENE	64475	166GW054M7	64475008	WG	50	U	50	UJ	ug/L	CC,BS
VOA	SW8260B	trans-1,3-DICHLOROPROPENE	64475	166GW054M7DL	64475008	WG	125	U	125	R	ug/L	DL

Parameter Class	Analytical Method	Parameter	Grid	Sample ID	Lab Sample ID	Matrix	Lab Result	Lab Qual	Final Result	Final Qual	Units	Reasons
VOA	SW8260B	trans-1,3-DICHLOROPROPENE	64475	166GW055M7DL	64475009	WG	125	U	125	R	ug/L	DL
VOA	SW8260B	trans-1,3-DICHLOROPROPENE	64475	166HW055M7DL	64475010	WG	125	U	125	R	ug/L	DL
VOA	SW8260B	trans-1,3-DICHLOROPROPENE	64475	166GW07DM7DL	64475011	WG	125	U	125	R	ug/L	DL
VOA	SW8260B	trans-1,3-DICHLOROPROPENE	64475	166GW08DM7	64475012	WG	5	U	5	UJ	ug/L	CC,BS
VOA	SW8260B	trans-1,3-DICHLOROPROPENE	64475	166GW13DM7DL	64475013	WG	500	U	500	R	ug/L	DL
VOA	SW8260B	trans-1,3-DICHLOROPROPENE	64475	166HW13DM7DL	64475014	WG	500	U	500	R	ug/L	DL
VOA	SW8260B	trans-1,3-DICHLOROPROPENE	64475	166GW14DM7DL	64475015	WG	10	U	10	R	ug/L	DL
VOA	SW8260B	trans-1,3-DICHLOROPROPENE	64475	166GW17DM7	64475016	WG	5	U	5	UJ	ug/L	CC,BS
VOA	SW8260B	trans-1,3-DICHLOROPROPENE	64475	166GW26DM7DL	64475019	WG	250	U	250	R	ug/L	DL
VOA	SW8260B	trans-1,3-DICHLOROPROPENE	64550	166GW34DM7DL	64550003	WG	5000	U	5000	R	ug/L	DL
VOA	SW8260B	trans-1,3-DICHLOROPROPENE	64550	166GW36DM7DL	64550004	WG	2500	U	2500	R	ug/L	DL
VOA	SW8260B	trans-1,3-DICHLOROPROPENE	64676	163GW003M7DL	64676002	WG	25	U	25	R	ug/L	DL
VOA	SW8260B	trans-1,3-DICHLOROPROPENE	64676	166GW040M7DL	64676003	WG	5000	U	5000	R	ug/L	DL
VOA	SW8260B	trans-1,3-DICHLOROPROPENE	64676	166GW41DM7DL	64676008	WG	50	U	50	R	ug/L	DL
VOA	SW8260B	trans-1,3-DICHLOROPROPENE	64676	166GW42DM7DL	64676009	WG	500	U	500	R	ug/L	DL
VOA	SW8260B	trans-1,3-DICHLOROPROPENE	64676	166GW44DM7DL	64676011	WG	500	U	500	R	ug/L	DL
VOA	SW8260B	trans-1,3-DICHLOROPROPENE	64676	166GW35DM7DL	64676012	WG	500	U	500	R	ug/L	DL
VOA	SW8260B	trans-1,3-DICHLOROPROPENE	71658	166GW053M8DL	71658007	WG	250	U	250	R	ug/L	DL
VOA	SW8260B	trans-1,3-DICHLOROPROPENE	71658	166GW054M8DL	71658008	WG	125	U	125	R	ug/L	DL
VOA	SW8260B	trans-1,3-DICHLOROPROPENE	71658	166GW055M8DL	71658009	WG	500	U	500	R	ug/L	DL
VOA	SW8260B	trans-1,3-DICHLOROPROPENE	71658	166GW056M8DL	71658010	WG	500	U	500	R	ug/L	DL

Attachment 1 - Changed Qualifiers and Results
Charleston Navel Complex - Zone [illegible] VMU 166 - 2002 Sampling Events

Parameter Class	Analytical Method	Parameter	SDG	Sample ID	Lab Sample ID	Matrix	Lab Result	Lab Qual	Final Result	Final Qual	Units	Reasons
VOA	SW8260B	trans-1,3-DICHLOROPROPENE	71658	166GW07DM8DL	71658012	WG	125	U	125	R	ug/L	DL
VOA	SW8260B	trans-1,3-DICHLOROPROPENE	71658	166GW13DM8DL	71658014	WG	500	U	500	R	ug/L	DL
VOA	SW8260B	trans-1,3-DICHLOROPROPENE	71658	166GW14DM8DL	71658016	WG	10	U	10	R	ug/L	DL
VOA	SW8260B	trans-1,3-DICHLOROPROPENE	71659	166GW19DM8DL	71659002	WG	10	U	10	R	ug/L	DL
VOA	SW8260B	trans-1,3-DICHLOROPROPENE	71659	166GW25DM8DL	71659004	WG	500	U	500	R	ug/L	DL
VOA	SW8260B	trans-1,3-DICHLOROPROPENE	71766	166GW49DM8DL	71766003	WG	250	U	250	R	ug/L	DL
VOA	SW8260B	trans-1,3-DICHLOROPROPENE	71766	166GW50DM8DL	71766004	WG	1000	U	1000	R	ug/L	DL
VOA	SW8260B	trans-1,3-DICHLOROPROPENE	71766	166HW50DM8DL	71766005	WG	2500	U	2500	R	ug/L	DL
VOA	SW8260B	trans-1,3-DICHLOROPROPENE	71766	166GW51DM8DL	71766006	WG	500	U	500	R	ug/L	DL
VOA	SW8260B	trans-1,3-DICHLOROPROPENE	71766	166GW52DM8DL	71766007	WG	500	U	500	R	ug/L	DL
VOA	SW8260B	trans-1,3-DICHLOROPROPENE	71766	166GWTM3M8DL	71766009	WG	50	U	50	R	ug/L	DL
VOA	SW8260B	trans-1,3-DICHLOROPROPENE	71766	166GWTM4M8DL	71766010	WG	1000	U	1000	R	ug/L	DL
VOA	SW8260B	trans-1,3-DICHLOROPROPENE	71766	166GW45DM8DL	71766011	WG	250	U	250	R	ug/L	DL
VOA	SW8260B	trans-1,3-DICHLOROPROPENE	71766	166GW46DM8DL	71766012	WG	250	U	250	R	ug/L	DL
VOA	SW8260B	trans-1,3-DICHLOROPROPENE	71766	166GW48DM8DL	71766014	WG	500	U	500	R	ug/L	DL
VOA	SW8260B	trans-1,3-DICHLOROPROPENE	71852	166GW040M8DL	71852003	WG	1250	U	1250	R	ug/L	DL
VOA	SW8260B	trans-1,3-DICHLOROPROPENE	71852	166HW040M8DL	71852004	WG	1250	U	1250	R	ug/L	DL
VOA	SW8260B	trans-1,3-DICHLOROPROPENE	71852	166GW34DM8DL	71852005	WG	5000	U	5000	R	ug/L	DL
VOA	SW8260B	trans-1,3-DICHLOROPROPENE	71852	166GW36DM8DL	71852007	WG	1250	U	1250	R	ug/L	DL
VOA	SW8260B	trans-1,3-DICHLOROPROPENE	71852	166GW37DM8DL	71852008	WG	25	U	25	R	ug/L	DL
VOA	SW8260B	trans-1,3-DICHLOROPROPENE	71852	166GW43DM8DL	71852012	WG	500	U	500	R	ug/L	DL

Parameter Class	Analytical Method	Parameter	SDG	Sample ID	Lab Sample ID	Matrix	Lab Result	Lab Qual	Final Result	Final Qual	Units	Reasons
VOA	SW8260B	trans-1,3-DICHLOROPROPENE	72055	163GW003M8	72055003	WG	5	U	5	UJ	ug/L	SS
VOA	SW8260B	trans-1,3-DICHLOROPROPENE	72055	163GW003M8DL	72055003	WG	50	U	50	R	ug/L	DL
VOA	SW8260B	trans-1,3-DICHLOROPROPENE	72055	163GW03MM8	72055004	WG	5	U	5	UJ	ug/L	SS
VOA	SW8260B	trans-1,3-DICHLOROPROPENE	72055	166GW16DM8	72055005	WG	5	U	5	UJ	ug/L	SS
VOA	SW8260B	trans-1,3-DICHLOROPROPENE	72055	166GW16DM8DL	72055005	WG	250	U	250	R	ug/L	DL
VOA	SW8260B	trans-1,3-DICHLOROPROPENE	72055	166GW33DM8	72055006	WG	5	U	5	UJ	ug/L	SS
VOA	SW8260B	trans-1,3-DICHLOROPROPENE	72055	166GW38DM8	72055007	WG	5	U	5	UJ	ug/L	SS
VOA	SW8260B	trans-1,3-DICHLOROPROPENE	72055	166GW38DM8DL	72055007	WG	50	U	50	R	ug/L	DL
VOA	SW8260B	trans-1,3-DICHLOROPROPENE	72055	163GW005M8	72055008	WG	5	U	5	UJ	ug/L	SS
VOA	SW8260B	TRICHLOROETHYLENE (TCE)	56223	166GW32DM1	56223003	WG	2610	E	2610	R	ug/L	LR
VOA	SW8260B	TRICHLOROETHYLENE (TCE)	56330	166GW28DM1	56330001	WG	258	EB	258	R	ug/L	LR
VOA	SW8260B	TRICHLOROETHYLENE (TCE)	56330	166GW30DM1	56330003	WG	1770	EB	1770	R	ug/L	LR
VOA	SW8260B	TRICHLOROETHYLENE (TCE)	56330	166HW30DM1	56330004	WG	1700	EB	1700	R	ug/L	LR
VOA	SW8260B	TRICHLOROETHYLENE (TCE)	56341	166VDRM001M2	56341001	SO	5.6	U	5.6	UJ	ug/kg	IS
VOA	SW8260B	TRICHLOROETHYLENE (TCE)	57725	166GW28DM2	57725002	WG	236	E	236	R	ug/L	LR
VOA	SW8260B	TRICHLOROETHYLENE (TCE)	57725	166GW29DM2	57725003	WG	155	E	155	R	ug/L	LR
VOA	SW8260B	TRICHLOROETHYLENE (TCE)	57725	166GW30DM2	57725004	WG	1800	E	1800	R	ug/L	LR
VOA	SW8260B	TRICHLOROETHYLENE (TCE)	57725	166HW30DM2	57725005	WG	1750	E	1750	R	ug/L	LR
VOA	SW8260B	TRICHLOROETHYLENE (TCE)	57725	166GW31DM2	57725006	WG	490	E	490	R	ug/L	LR
VOA	SW8260B	TRICHLOROETHYLENE (TCE)	57725	166GW32DM2	57725007	WG	1220	E	1220	R	ug/L	LR
VOA	SW8260B	TRICHLOROETHYLENE (TCE)	58856	166GW28DM3	588[illegible]2	WG	220	E	220	R	ug/L	LR

Parameter Class	Analytical Method	Parameter	SDG	Sample ID	Lab Sample ID	Matrix	Lab Result	Lab Qual	Final Result	Final Qual	Units	Reasons
VOA	SW8260B	TRICHLOROETHYLENE (TCE)	58856	166GW29DM3	58856003	WG	142	E	142	R	ug/L	LR
VOA	SW8260B	TRICHLOROETHYLENE (TCE)	58856	166GW30DM3	58856004	WG	1720	E	1720	R	ug/L	LR
VOA	SW8260B	TRICHLOROETHYLENE (TCE)	58856	166GW31DM3	58856005	WG	402	E	402	R	ug/L	LR
VOA	SW8260B	TRICHLOROETHYLENE (TCE)	58856	166HW31DM3	58856006	WG	381	E	381	R	ug/L	LR
VOA	SW8260B	TRICHLOROETHYLENE (TCE)	58856	166GW32DM3	58856007	WG	1420	E	1420	R	ug/L	LR
VOA	SW8260B	TRICHLOROETHYLENE (TCE)	60789	166GW33DM4	60789001	WG	101	E	101	R	ug/L	LR
VOA	SW8260B	TRICHLOROETHYLENE (TCE)	60789	166GW34DM4	60789002	WG	26100	E	26100	R	ug/L	LR
VOA	SW8260B	TRICHLOROETHYLENE (TCE)	60789	166GW35DM4	60789003	WG	408	E	408	R	ug/L	LR
VOA	SW8260B	TRICHLOROETHYLENE (TCE)	60789	166GW37DM4	60789004	WG	16400	E	16400	R	ug/L	LR
VOA	SW8260B	TRICHLOROETHYLENE (TCE)	60789	166GW39DM4	60789005	WG	313	E	313	R	ug/L	LR
VOA	SW8260B	TRICHLOROETHYLENE (TCE)	60790	163GW03MM4	60790001	WG	159	E	159	R	ug/L	LR
VOA	SW8260B	TRICHLOROETHYLENE (TCE)	60790	163GW03MM4DL	60790001	WG	178	JD	178	J	ug/L	DL
VOA	SW8260B	TRICHLOROETHYLENE (TCE)	60790	166GW26DM4	60790002	WG	775	E	775	R	ug/L	LR
VOA	SW8260B	TRICHLOROETHYLENE (TCE)	60790	166GW25DM4	60790003	WG	1710	E	1710	R	ug/L	LR
VOA	SW8260B	TRICHLOROETHYLENE (TCE)	60790	166HW25DM4	60790004	WG	1590	E	1590	R	ug/L	LR
VOA	SW8260B	TRICHLOROETHYLENE (TCE)	60790	166GW07DM4	60790008	WG	447	E	447	R	ug/L	LR
VOA	SW8260B	TRICHLOROETHYLENE (TCE)	60879	166GW41DM4	60879001	WG	1210	E	1210	R	ug/L	LR
VOA	SW8260B	TRICHLOROETHYLENE (TCE)	60879	166GW42DM4	60879002	WG	2570	E	2570	R	ug/L	LR
VOA	SW8260B	TRICHLOROETHYLENE (TCE)	60879	166GW43DM4	60879003	WG	4370	E	4370	R	ug/L	LR
VOA	SW8260B	TRICHLOROETHYLENE (TCE)	60879	166GW44DM4	60879004	WG	2140	E	2140	R	ug/L	LR
VOA	[illegible]8260B	TRICHLOROETHYLENE (TCE)	60879	166GW13DM4	[illegible]79005	WG	3780	E	3780	R	[illegible]	LR

Parameter Class	Analytical Method	Parameter	Spec	Sample ID	Lab Sample ID	Matrix	Lab Result	Lab Qual	Final Result	Final Qual	Units	Reasons
VOA	SW8260B	TRICHLOROETHYLENE (TCE)	61044	166GW38DM4	61044001	WG	727	E	727	R	ug/L	LR
VOA	SW8260B	TRICHLOROETHYLENE (TCE)	61044	166GW45DM4	61044002	WG	2230	E	2230	R	ug/L	LR
VOA	SW8260B	TRICHLOROETHYLENE (TCE)	61044	166GW48DM4	61044004	WG	2930	E	2930	R	ug/L	LR
VOA	SW8260B	TRICHLOROETHYLENE (TCE)	61044	166GWTM4M4	61044005	WG	256	E	256	R	ug/L	LR
VOA	SW8260B	TRICHLOROETHYLENE (TCE)	61044	166GWTM4M4DL	61044005	WG	252	JD	252	J	ug/L	DL
VOA	SW8260B	TRICHLOROETHYLENE (TCE)	61044	166GW14DM4	61044007	WG	103	E	103	R	ug/L	LR
VOA	SW8260B	TRICHLOROETHYLENE (TCE)	61134	166GW36DM4	61134002	WG	38500	E	38500	R	ug/L	LR
VOA	SW8260B	TRICHLOROETHYLENE (TCE)	61170	166GW50DM4	61170001	WG	13100	E	13100	R	ug/L	LR
VOA	SW8260B	TRICHLOROETHYLENE (TCE)	62650	166GW27DM6	62650002	WG	5.2	=	5.2	J	ug/L	SS
VOA	SW8260B	TRICHLOROETHYLENE (TCE)	62650	166GW28DM6	62650003	WG	213	E	213	R	ug/L	LR
VOA	SW8260B	TRICHLOROETHYLENE (TCE)	62650	166GW29DM6	62650004	WG	121	=	121	J	ug/L	SS
VOA	SW8260B	TRICHLOROETHYLENE (TCE)	62650	166GW30DM6	62650005	WG	1290	=	1290	J	ug/L	SS
VOA	SW8260B	TRICHLOROETHYLENE (TCE)	62650	166GW31DM6	62650006	WG	381	=	381	J	ug/L	SS
VOA	SW8260B	TRICHLOROETHYLENE (TCE)	62650	166HW31DM6	62650007	WG	348	=	348	J	ug/L	SS
VOA	SW8260B	TRICHLOROETHYLENE (TCE)	62650	166GW32DM6	62650008	WG	1800	=	1800	J	ug/L	SS
VOA	SW8260B	TRICHLOROETHYLENE (TCE)	64473	166GW50DM7	64473003	WG	10400	E	10400	R	ug/L	LR
VOA	SW8260B	TRICHLOROETHYLENE (TCE)	64473	166HW50DM7	64473004	WG	10400	E	10400	R	ug/L	LR
VOA	SW8260B	TRICHLOROETHYLENE (TCE)	64473	166GWIN3M7	64473007	WG	1.2	J	5	U	ug/L	BL
VOA	SW8260B	TRICHLOROETHYLENE (TCE)	64473	166GWTM3M7	64473008	WG	3.8	J	50	U	ug/L	BL
VOA	SW8260B	TRICHLOROETHYLENE (TCE)	64475	166GW053M7	64475007	WG	2420	E	2420	R	ug/L	LR
VOA	SW8260B	TRICHLOROETHYLENE (TCE)	64475	166GW054M7	64475008	WG	1280	E	1280	R	ug/L	LR

Parameter Class	Analytical Method	Parameter	Site	Sample ID	Lab Sample ID	Matrix	Result	Qualifier	Final Result	Final Qual	Units	Reason
VOA	SW8260B	TRICHLOROETHYLENE (TCE)	64475	166GW055M7	64475009	WG	1230	E	1230	R	ug/L	LR
VOA	SW8260B	TRICHLOROETHYLENE (TCE)	64475	166HW055M7	64475010	WG	1290	E	1290	R	ug/L	LR
VOA	SW8260B	TRICHLOROETHYLENE (TCE)	64475	166GW07DM7	64475011	WG	743	E	743	R	ug/L	LR
VOA	SW8260B	TRICHLOROETHYLENE (TCE)	64475	166GW13DM7	64475013	WG	2350	E	2350	R	ug/L	LR
VOA	SW8260B	TRICHLOROETHYLENE (TCE)	64475	166HW13DM7	64475014	WG	2170	E	2170	R	ug/L	LR
VOA	SW8260B	TRICHLOROETHYLENE (TCE)	64475	166GW14DM7	64475015	WG	130	E	130	R	ug/L	LR
VOA	SW8260B	TRICHLOROETHYLENE (TCE)	64475	166GW26DM7	64475019	WG	1140	E	1140	R	ug/L	LR
VOA	SW8260B	TRICHLOROETHYLENE (TCE)	64550	166GW34DM7	64550003	WG	60300	E	60300	R	ug/L	LR
VOA	SW8260B	TRICHLOROETHYLENE (TCE)	64550	166GW36DM7	64550004	WG	23000	E	23000	R	ug/L	LR
VOA	SW8260B	TRICHLOROETHYLENE (TCE)	64676	163GW003M7	64676002	WG	194	E	194	R	ug/L	LR
VOA	SW8260B	TRICHLOROETHYLENE (TCE)	64676	166GW040M7	64676003	WG	4550	E	4550	R	ug/L	LR
VOA	SW8260B	TRICHLOROETHYLENE (TCE)	64676	166GW41DM7	64676008	WG	664	E	664	R	ug/L	LR
VOA	SW8260B	TRICHLOROETHYLENE (TCE)	64676	166GW42DM7	64676009	WG	2400	E	2400	R	ug/L	LR
VOA	SW8260B	TRICHLOROETHYLENE (TCE)	64676	166GW44DM7	64676011	WG	2260	E	2260	R	ug/L	LR
VOA	SW8260B	TRICHLOROETHYLENE (TCE)	64676	166GW35DM7	64676012	WG	2280	E	2280	R	ug/L	LR
VOA	SW8260B	TRICHLOROETHYLENE (TCE)	71658	166GW026M8	71658003	WG	11.6	=	11.6	J	ug/L	SS
VOA	SW8260B	TRICHLOROETHYLENE (TCE)	71658	166GW001M8	71658004	WG	0.74	J	0.74	J	ug/L	SS
VOA	SW8260B	TRICHLOROETHYLENE (TCE)	71658	166GW005M8	71658005	WG	3.5	J	3.5	J	ug/L	SS
VOA	SW8260B	TRICHLOROETHYLENE (TCE)	71658	166GW017M8	71658006	WG	5	=	5	J	ug/L	SS
VOA	SW8260B	TRICHLOROETHYLENE (TCE)	71658	166GW053M8	71658007	WG	1840	E	1840	R	ug/L	LR
VOA	SW8260B	TRICHLOROETHYLENE (TCE)	71658	166GW053M8DL	71658007	WG	2030	D	2030	J	ug/L	SS

Category Class	Analytical Method	Parameter	SDG	Sample ID	Lab Sample ID	Matrix	Result	Qualifier	Final Result	Final Qualifier	Units	Reason
VOA	SW8260B	TRICHLOROETHYLENE (TCE)	71658	166GW054M8	71658008	WG	1580	E	1580	R	ug/L	LR
VOA	SW8260B	TRICHLOROETHYLENE (TCE)	71658	166GW054M8DL	71658008	WG	1740	D	1740	J	ug/L	SS
VOA	SW8260B	TRICHLOROETHYLENE (TCE)	71658	166GW055M8	71658009	WG	5050	E	5050	R	ug/L	LR
VOA	SW8260B	TRICHLOROETHYLENE (TCE)	71658	166GW055M8DL	71658009	WG	6000	D	6000	J	ug/L	SS
VOA	SW8260B	TRICHLOROETHYLENE (TCE)	71658	166GW056M8	71658010	WG	4800	E	4800	R	ug/L	LR
VOA	SW8260B	TRICHLOROETHYLENE (TCE)	71658	166GW056M8DL	71658010	WG	7840	D	7840	J	ug/L	SS
VOA	SW8260B	TRICHLOROETHYLENE (TCE)	71658	166GW06DM8	71658011	WG	0.52	J	0.52	J	ug/L	SS
VOA	SW8260B	TRICHLOROETHYLENE (TCE)	71658	166GW07DM8	71658012	WG	898	E	898	R	ug/L	LR
VOA	SW8260B	TRICHLOROETHYLENE (TCE)	71658	166GW07DM8DL	71658012	WG	985	D	985	J	ug/L	SS
VOA	SW8260B	TRICHLOROETHYLENE (TCE)	71658	166GW08DM8	71658013	WG	88.4	=	88.4	J	ug/L	SS
VOA	SW8260B	TRICHLOROETHYLENE (TCE)	71658	166GW13DM8	71658014	WG	5840	E	5840	R	ug/L	LR
VOA	SW8260B	TRICHLOROETHYLENE (TCE)	71658	166GW13DM8DL	71658014	WG	6560	D	6560	J	ug/L	SS
VOA	SW8260B	TRICHLOROETHYLENE (TCE)	71658	166HW13DM8	71658015	WG	3960	=	3960	J	ug/L	SS
VOA	SW8260B	TRICHLOROETHYLENE (TCE)	71658	166GW14DM8	71658016	WG	130	E	130	R	ug/L	LR
VOA	SW8260B	TRICHLOROETHYLENE (TCE)	71658	166GW14DM8DL	71658016	WG	139	D	139	J	ug/L	SS
VOA	SW8260B	TRICHLOROETHYLENE (TCE)	71659	166GW17DM8	71659001	WG	7.3	=	7.3	J	ug/L	SS
VOA	SW8260B	TRICHLOROETHYLENE (TCE)	71659	166GW19DM8	71659002	WG	106	E	106	R	ug/L	LR
VOA	SW8260B	TRICHLOROETHYLENE (TCE)	71659	166GW19DM8DL	71659002	WG	114	D	114	J	ug/L	SS
VOA	SW8260B	TRICHLOROETHYLENE (TCE)	71659	166GW21DM8	71659003	WG	1.3	J	1.3	J	ug/L	SS
VOA	SW8260B	TRICHLOROETHYLENE (TCE)	71659	166GW25DM8	71659004	WG	7310	E	7310	R	ug/L	LR
VOA	SW8260B	TRICHLOROETHYLENE (TCE)	71659	166GW25DM8DL	71659004	WG	7030	D	7030	J	ug/L	SS

Parameter Class	Analytical Method	Parameter	EDC	Sample ID	Lab Sample ID	Matrix	Lab Result	Lab Qual	Final Result	Final Qual	Units	Reasons
VOA	SW8260B	TRICHLOROETHYLENE (TCE)	71659	166GW26DM8	71659005	WG	2110	=	2110	J	ug/L	SS
VOA	SW8260B	TRICHLOROETHYLENE (TCE)	71659	698GW001M8	71659006	WG	1.7	J	1.7	J	ug/L	SS
VOA	SW8260B	TRICHLOROETHYLENE (TCE)	71766	166GW49DM8	71766003	WG	1360	E	1360	R	ug/L	DL
VOA	SW8260B	TRICHLOROETHYLENE (TCE)	71766	166GW49DM8DL	71766003	WG	1330	D	1330	J	ug/L	SS
VOA	SW8260B	TRICHLOROETHYLENE (TCE)	71766	166GW50DM8	71766004	WG	4350	E	4350	R	ug/L	LR
VOA	SW8260B	TRICHLOROETHYLENE (TCE)	71766	166GW50DM8DL	71766004	WG	9310	D	9310	J	ug/L	SS
VOA	SW8260B	TRICHLOROETHYLENE (TCE)	71766	166HW50DM8	71766005	WG	14800	E	14800	R	ug/L	LR
VOA	SW8260B	TRICHLOROETHYLENE (TCE)	71766	166HW50DM8DL	71766005	WG	16100	D	16100	J	ug/L	SS
VOA	SW8260B	TRICHLOROETHYLENE (TCE)	71766	166GW51DM8	71766006	WG	2660	E	2660	R	ug/L	LR
VOA	SW8260B	TRICHLOROETHYLENE (TCE)	71766	166GW51DM8DL	71766006	WG	2630	D	2630	J	ug/L	SS
VOA	SW8260B	TRICHLOROETHYLENE (TCE)	71766	166GW52DM8	71766007	WG	1600	E	1600	R	ug/L	LR
VOA	SW8260B	TRICHLOROETHYLENE (TCE)	71766	166GW52DM8DL	71766007	WG	1650	D	1650	J	ug/L	SS
VOA	SW8260B	TRICHLOROETHYLENE (TCE)	71766	166GWTM3M8DL	71766009	WG	6.1	JD	6.1	R	ug/L	DL
VOA	SW8260B	TRICHLOROETHYLENE (TCE)	71766	166GWTM4M8	71766010	WG	1250	E	1250	R	ug/L	LR
VOA	SW8260B	TRICHLOROETHYLENE (TCE)	71766	166GWTM4M8DL	71766010	WG	1180	D	1180	J	ug/L	DL
VOA	SW8260B	TRICHLOROETHYLENE (TCE)	71766	166GW45DM8	71766011	WG	2780	E	2780	R	ug/L	LR
VOA	SW8260B	TRICHLOROETHYLENE (TCE)	71766	166GW45DM8DL	71766011	WG	2750	D	2750	J	ug/L	SS
VOA	SW8260B	TRICHLOROETHYLENE (TCE)	71766	166GW46DM8	71766012	WG	3200	E	3200	R	ug/L	LR
VOA	SW8260B	TRICHLOROETHYLENE (TCE)	71766	166GW46DM8DL	71766012	WG	2340	D	2340	J	ug/L	DL
VOA	SW8260B	TRICHLOROETHYLENE (TCE)	71766	166GW47DM8	71766013	WG	8.4	=	8.4	J	ug/L	SS
VOA	[illegible]8260B	TRICHLOROETHYLENE (TCE)	71766	166GW48DM8	[illegible]6014	WG	4540	E	4540	R	u[illegible]	LR

Parameter Type	Analytical Method	Parameter	SPC	Sample ID	Lab Sample ID	Matrix	Lab Result	Lab Qual	Final Result	Final Qual	Units	Reasons
VOA	SW8260B	TRICHLOROETHYLENE (TCE)	71766	166GW48DM8DL	71766014	WG	6920	D	6920	J	ug/L	SS
VOA	SW8260B	TRICHLOROETHYLENE (TCE)	71852	166GW040M8	71852003	WG	19200	E	19200	R	ug/L	LR
VOA	SW8260B	TRICHLOROETHYLENE (TCE)	71852	166GW040M8DL	71852003	WG	18600	D	18600	J	ug/L	SS
VOA	SW8260B	TRICHLOROETHYLENE (TCE)	71852	166HW040M8	71852004	WG	18800	E	18800	R	ug/L	LR
VOA	SW8260B	TRICHLOROETHYLENE (TCE)	71852	166HW040M8DL	71852004	WG	19300	D	19300	J	ug/L	SS
VOA	SW8260B	TRICHLOROETHYLENE (TCE)	71852	166GW34DM8	71852005	WG	49300	E	49300	R	ug/L	LR
VOA	SW8260B	TRICHLOROETHYLENE (TCE)	71852	166GW34DM8DL	71852005	WG	56800	D	56800	J	ug/L	SS
VOA	SW8260B	TRICHLOROETHYLENE (TCE)	71852	166GW36DM8	71852007	WG	18800	E	18800	R	ug/L	LR
VOA	SW8260B	TRICHLOROETHYLENE (TCE)	71852	166GW36DM8DL	71852007	WG	21200	D	21200	J	ug/L	SS
VOA	SW8260B	TRICHLOROETHYLENE (TCE)	71852	166GW37DM8DL	71852008	WG	75.2	D	75.2	R	ug/L	DL
VOA	SW8260B	TRICHLOROETHYLENE (TCE)	71852	166GW43DM8	71852012	WG	5380	E	5380	R	ug/L	LR
VOA	SW8260B	TRICHLOROETHYLENE (TCE)	71852	166GW43DM8DL	71852012	WG	5510	D	5510	J	ug/L	SS
VOA	SW8260B	TRICHLOROETHYLENE (TCE)	72055	163GW003M8	72055003	WG	235	E	235	R	ug/L	LR
VOA	SW8260B	TRICHLOROETHYLENE (TCE)	72055	163GW003M8DL	72055003	WG	188	D	188	J	ug/L	SS
VOA	SW8260B	TRICHLOROETHYLENE (TCE)	72055	163GW03MM8	72055004	WG	2.3	J	2.3	J	ug/L	SS
VOA	SW8260B	TRICHLOROETHYLENE (TCE)	72055	166GW16DM8	72055005	WG	29.8	=	29.8	J	ug/L	SS
VOA	SW8260B	TRICHLOROETHYLENE (TCE)	72055	166GW16DM8DL	72055005	WG	32.6	JD	32.6	R	ug/L	DL
VOA	SW8260B	TRICHLOROETHYLENE (TCE)	72055	166GW33DM8	72055006	WG	40.9	=	40.9	J	ug/L	SS
VOA	SW8260B	TRICHLOROETHYLENE (TCE)	72055	166GW38DM8	72055007	WG	21.4	=	21.4	J	ug/L	SS
VOA	SW8260B	TRICHLOROETHYLENE (TCE)	72055	166GW38DM8DL	72055007	WG	24.5	JD	24.5	R	ug/L	DL
VOA	SW8260B	TRICHLOROETHYLENE (TCE)	72055	163GW005M8	72055008	WG	5	U	5	UJ	ug/L	SS

Analytical Group	Analytical Method	Parameter	Sample	Sample ID	Laboratory ID	Matrix	Result	Lab Qual	Final Result	Final Qual	Units	Reasons
VOA	SW8260B	Vinyl acetate	56223	166GW27DM1	56223001	WG	10	U	10	UJ	ug/L	CC
VOA	SW8260B	Vinyl acetate	56223	166GW31DM1	56223002	WG	100	U	100	UJ	ug/L	CC
VOA	SW8260B	Vinyl acetate	56223	166GW32DM1	56223003	WG	250	U	250	UJ	ug/L	CC
VOA	SW8260B	Vinyl acetate	56223	166GW32DM1LR	56223003	WG	500	U	500	R	ug/L	DL
VOA	SW8260B	Vinyl acetate	56330	166GW28DM1	56330001	WG	10	U	10	UJ	ug/L	MS
VOA	SW8260B	Vinyl acetate	56330	166GW28DM1DL	56330001	WG	50	U	50	R	ug/L	DL
VOA	SW8260B	Vinyl acetate	56330	166GW30DM1LR	56330003	WG	500	U	500	R	ug/L	DL
VOA	SW8260B	Vinyl acetate	56330	166HW30DM1LR	56330004	WG	500	U	500	R	ug/L	DL
VOA	SW8260B	Vinyl acetate	56341	166VDRM001M2	56341001	SO	11.2	U	11.2	UJ	ug/kg	CC, IS, BS
VOA	SW8260B	Vinyl acetate	56341	166VDRM002M2	56341002	SO	12.3	U	12.3	UJ	ug/kg	CC, BS
VOA	SW8260B	Vinyl acetate	56341	166VDRM003M2	56341003	SO	11.8	U	11.8	UJ	ug/kg	CC, BS
VOA	SW8260B	Vinyl acetate	57725	166GW28DM2DL	57725002	WG	50	U	50	R	ug/L	DL
VOA	SW8260B	Vinyl acetate	57725	166GW29DM2DL	57725003	WG	50	U	50	R	ug/L	DL
VOA	SW8260B	Vinyl acetate	57725	166GW30DM2DL	57725004	WG	250	U	250	R	ug/L	DL
VOA	SW8260B	Vinyl acetate	57725	166HW30DM2DL	57725005	WG	250	U	250	R	ug/L	DL
VOA	SW8260B	Vinyl acetate	57725	166GW31DM2DL	57725006	WG	50	U	50	R	ug/L	DL
VOA	SW8260B	Vinyl acetate	57725	166GW32DM2DL	57725007	WG	250	U	250	R	ug/L	DL
VOA	SW8260B	Vinyl acetate	58856	166GW28DM3DL	58856002	WG	100	U	100	R	ug/L	DL
VOA	SW8260B	Vinyl acetate	58856	166GW29DM3DL	58856003	WG	20	U	20	R	ug/L	DL
VOA	SW8260B	Vinyl acetate	58856	166GW30DM3DL	58856004	WG	500	U	500	R	ug/L	DL
VOA	SW8260B	Vinyl acetate	58856	166GW31DM3DL	[illegible]6005	WG	50	U	50	R	u	DL

Parameter Class	Analytical Method	Parameter	DC	Sample ID	Lab Sample ID	Matrix	Lab Result	Lab Qual	Final Result	Final Qual	Units	Reasons
VOA	SW8260B	Vinyl acetate	58856	166HW31DM3DL	58856006	WG	100	U	100	R	ug/L	DL
VOA	SW8260B	Vinyl acetate	58856	166GW32DM3DL	58856007	WG	500	U	500	R	ug/L	DL
VOA	SW8260B	Vinyl acetate	60789	166GW33DM4	60789001	WG	10	U	10	UJ	ug/L	BS
VOA	SW8260B	Vinyl acetate	60789	166GW33DM4DL	60789001	WG	20	U	20	R	ug/L	DL
VOA	SW8260B	Vinyl acetate	60789	166GW34DM4DL	60789002	WG	5000	U	5000	R	ug/L	DL
VOA	SW8260B	Vinyl acetate	60789	166GW35DM4DL	60789003	WG	100	U	100	R	ug/L	DL
VOA	SW8260B	Vinyl acetate	60789	166GW37DM4DL	60789004	WG	5000	U	5000	R	ug/L	DL
VOA	SW8260B	Vinyl acetate	60789	166GW39DM4DL	60789005	WG	100	U	100	R	ug/L	DL
VOA	SW8260B	Vinyl acetate	60790	163GW03MM4DL	60790001	WG	500	U	500	R	ug/L	DL
VOA	SW8260B	Vinyl acetate	60790	166GW26DM4DL	60790002	WG	500	U	500	R	ug/L	DL
VOA	SW8260B	Vinyl acetate	60790	166GW25DM4DL	60790003	WG	1000	U	1000	R	ug/L	DL
VOA	SW8260B	Vinyl acetate	60790	166HW25DM4DL	60790004	WG	1000	U	1000	R	ug/L	DL
VOA	SW8260B	Vinyl acetate	60790	166GW07DM4DL	60790008	WG	100	U	100	R	ug/L	DL
VOA	SW8260B	Vinyl acetate	60879	166GW41DM4DL	60879001	WG	500	U	500	R	ug/L	DL
VOA	SW8260B	Vinyl acetate	60879	166GW42DM4DL	60879002	WG	1000	U	1000	R	ug/L	DL
VOA	SW8260B	Vinyl acetate	60879	166GW43DM4DL	60879003	WG	2500	U	2500	R	ug/L	DL
VOA	SW8260B	Vinyl acetate	60879	166GW44DM4DL	60879004	WG	500	U	500	R	ug/L	DL
VOA	SW8260B	Vinyl acetate	60879	166GW13DM4DL	60879005	WG	1000	U	1000	R	ug/L	DL
VOA	SW8260B	Vinyl acetate	61044	166GW38DM4DL	61044001	WG	200	U	200	R	ug/L	DL
VOA	SW8260B	Vinyl acetate	61044	166GW45DM4DL	61044002	WG	1000	U	1000	R	ug/L	DL
VOA	SW8260B	Vinyl acetate	61044	166GW48DM4DL	61044004	WG	1000	U	1000	R	ug/L	DL

Parameter Class	Analytical Method	Parameter	SDG	Sample ID	Lab Sample ID	Matrix	Lab Result	Lab Qual	Final Result	Final Qual	Units	Reason
VOA	SW8260B	Vinyl acetate	61044	166GWTM4M4DL	61044005	WG	1000	U	1000	R	ug/L	DL
VOA	SW8260B	Vinyl acetate	61044	166GW14DM4DL	61044007	WG	20	U	20	R	ug/L	DL
VOA	SW8260B	Vinyl acetate	61134	166GW36DM4DL	61134002	WG	5000	U	5000	R	ug/L	DL
VOA	SW8260B	Vinyl acetate	61170	166GW50DM4DL	61170001	WG	2500	U	2500	R	ug/L	DL
VOA	SW8260B	Vinyl acetate	62650	166GW27DM6	62650002	WG	10	U	10	UJ	ug/L	CC
VOA	SW8260B	Vinyl acetate	62650	166GW28DM6	62650003	WG	20	U	20	UJ	ug/L	CC
VOA	SW8260B	Vinyl acetate	62650	166GW28DM6DL	62650003	WG	50	U	50	R	ug/L	DL
VOA	SW8260B	Vinyl acetate	62650	166GW29DM6	62650004	WG	20	U	20	UJ	ug/L	CC
VOA	SW8260B	Vinyl acetate	62650	166GW30DM6	62650005	WG	200	U	200	UJ	ug/L	CC
VOA	SW8260B	Vinyl acetate	62650	166GW31DM6	62650006	WG	40	U	40	UJ	ug/L	CC
VOA	SW8260B	Vinyl acetate	62650	166HW31DM6	62650007	WG	40	U	40	UJ	ug/L	CC
VOA	SW8260B	Vinyl acetate	62650	166GW32DM6	62650008	WG	250	U	250	UJ	ug/L	CC
VOA	SW8260B	Vinyl acetate	64473	166GW50DM7	64473003	WG	500	U	500	UJ	ug/L	CC,MS
VOA	SW8260B	Vinyl acetate	64473	166GW50DM7DL	64473003	WG	2500	U	2500	R	ug/L	DL
VOA	SW8260B	Vinyl acetate	64473	166HW50DM7	64473004	WG	500	U	500	UJ	ug/L	CC
VOA	SW8260B	Vinyl acetate	64473	166HW50DM7DL	64473004	WG	2500	U	2500	R	ug/L	DL
VOA	SW8260B	Vinyl acetate	64473	166GW51DM7	64473005	WG	250	U	250	UJ	ug/L	CC
VOA	SW8260B	Vinyl acetate	64473	166GW52DM7	64473006	WG	500	U	500	UJ	ug/L	CC
VOA	SW8260B	Vinyl acetate	64473	166GWIN3M7	64473007	WG	10	U	10	UJ	ug/L	CC
VOA	SW8260B	Vinyl acetate	64473	166GWTM3M7	64473008	WG	100	U	100	UJ	ug/L	CC
VOA	[illegible]8260B	Vinyl acetate	64473	166GWTM4M7	[illegible]3009	WG	500	U	500	UJ	[illegible]	CC

Chemical Group	Analytical Method	Parameter	Code	Sample ID	Lab Sample ID	Matrix	Result	Lab Qual	Final Result	Final Qual	Units	Reasons
VOA	SW8260B	Vinyl acetate	64473	166GW16DM7	64473010	WG	500	U	500	UJ	ug/L	CC
VOA	SW8260B	Vinyl acetate	64475	166GW053M7DL	64475007	WG	1000	U	1000	R	ug/L	DL
VOA	SW8260B	Vinyl acetate	64475	166GW054M7DL	64475008	WG	250	U	250	R	ug/L	DL
VOA	SW8260B	Vinyl acetate	64475	166GW055M7DL	64475009	WG	250	U	250	R	ug/L	DL
VOA	SW8260B	Vinyl acetate	64475	166HW055M7DL	64475010	WG	250	U	250	R	ug/L	DL
VOA	SW8260B	Vinyl acetate	64475	166GW07DM7DL	64475011	WG	250	U	250	R	ug/L	DL
VOA	SW8260B	Vinyl acetate	64475	166GW13DM7DL	64475013	WG	1000	U	1000	R	ug/L	DL
VOA	SW8260B	Vinyl acetate	64475	166HW13DM7DL	64475014	WG	1000	U	1000	R	ug/L	DL
VOA	SW8260B	Vinyl acetate	64475	166GW14DM7DL	64475015	WG	20	U	20	R	ug/L	DL
VOA	SW8260B	Vinyl acetate	64475	166GW17DM7	64475016	WG	10	U	10	UJ	ug/L	MS
VOA	SW8260B	Vinyl acetate	64475	166GW26DM7DL	64475019	WG	500	U	500	R	ug/L	DL
VOA	SW8260B	Vinyl acetate	64550	166GW34DM7	64550003	WG	500	U	500	UJ	ug/L	CC
VOA	SW8260B	Vinyl acetate	64550	166GW34DM7DL	64550003	WG	10000	U	10000	R	ug/L	DL
VOA	SW8260B	Vinyl acetate	64550	166GW36DM7	64550004	WG	500	U	500	UJ	ug/L	CC
VOA	SW8260B	Vinyl acetate	64550	166GW36DM7DL	64550004	WG	5000	U	5000	R	ug/L	DL
VOA	SW8260B	Vinyl acetate	64550	166GW37DM7	64550005	WG	500	U	500	UJ	ug/L	CC
VOA	SW8260B	Vinyl acetate	64550	166GW45DM7	64550006	WG	250	U	250	UJ	ug/L	CC
VOA	SW8260B	Vinyl acetate	64550	166GW46DM7	64550007	WG	500	U	500	UJ	ug/L	CC
VOA	SW8260B	Vinyl acetate	64550	166GW47DM7	64550008	WG	10	U	10	UJ	ug/L	CC
VOA	SW8260B	Vinyl acetate	64550	166GW48DM7	64550009	WG	500	U	500	UJ	ug/L	CC
VOA	SW8260B	Vinyl acetate	64550	166GW49DM7	64550010	WG	500	U	500	UJ	ug/L	CC

Analytical Class	Analytical Method	Parameter	Step	Sample ID	Laboratory ID	Matrix	Result	Lab Qual	Final Result	Final Qual	Units	Reason
VOA	SW8260B	Vinyl acetate	64676	163GW03MM7	64676001	WG	10	U	10	UJ	ug/L	MS
VOA	SW8260B	Vinyl acetate	64676	163GW003M7DL	64676002	WG	50	U	50	R	ug/L	DL
VOA	SW8260B	Vinyl acetate	64676	166GW040M7DL	64676003	WG	10000	U	10000	R	ug/L	DL
VOA	SW8260B	Vinyl acetate	64676	166HW040M7	64676004	WG	10000	U	10000	UJ	ug/L	CC
VOA	SW8260B	Vinyl acetate	64676	166GW33DM7	64676005	WG	10	U	10	UJ	ug/L	CC
VOA	SW8260B	Vinyl acetate	64676	166GW38DM7	64676006	WG	100	U	100	UJ	ug/L	CC
VOA	SW8260B	Vinyl acetate	64676	166GW39DM7	64676007	WG	10	U	10	UJ	ug/L	CC
VOA	SW8260B	Vinyl acetate	64676	166GW41DM7	64676008	WG	50	U	50	UJ	ug/L	CC
VOA	SW8260B	Vinyl acetate	64676	166GW41DM7DL	64676008	WG	100	U	100	R	ug/L	DL
VOA	SW8260B	Vinyl acetate	64676	166GW42DM7	64676009	WG	100	U	100	UJ	ug/L	CC
VOA	SW8260B	Vinyl acetate	64676	166GW42DM7DL	64676009	WG	1000	U	1000	R	ug/L	DL
VOA	SW8260B	Vinyl acetate	64676	166GW43DM7DL	64676010	WG	2000	U	2000	UJ	ug/L	CC
VOA	SW8260B	Vinyl acetate	64676	166GW44DM7	64676011	WG	100	U	100	UJ	ug/L	CC
VOA	SW8260B	Vinyl acetate	64676	166GW44DM7DL	64676011	WG	1000	U	1000	R	ug/L	DL
VOA	SW8260B	Vinyl acetate	64676	166GW35DM7	64676012	WG	100	U	100	UJ	ug/L	CC
VOA	SW8260B	Vinyl acetate	64676	166GW35DM7DL	64676012	WG	1000	U	1000	R	ug/L	DL
VOA	SW8260B	Vinyl acetate	64677	166GW21DM7	64677003	WG	10	U	10	UJ	ug/L	BS
VOA	SW8260B	Vinyl acetate	64677	166GW25DM7	64677004	WG	1000	U	1000	UJ	ug/L	BS
VOA	SW8260B	Vinyl acetate	64677	696GW001M7	64677005	WG	10	U	10	UJ	ug/L	BS,MS
VOA	SW8260B	Vinyl acetate	64677	696HW001M7	64677006	WG	10	U	10	UJ	ug/L	BS
VOA	SW8260B	Vinyl acetate	64677	166GW06DM7	64677007	WG	10	U	10	UJ	ug/L	BS

Parameter Class	Analytical Method	Parameter	CAS	Sample ID	Lab Sample ID	Matrix	Lab Result	Lab Qual	Final Result	Final Qual	Units	Reasons
VOA	SW8260B	Vinyl acetate	64677	166GW19DM7	64677008	WG	20	U	20	UJ	ug/L	BS
VOA	SW8260B	Vinyl acetate	71658	166GW026M8	71658003	WG	10	U	10	UJ	ug/L	MS
VOA	SW8260B	Vinyl acetate	71658	166GW005M8	71658005	WG	10	U	10	UJ	ug/L	MS
VOA	SW8260B	Vinyl acetate	71658	166GW053M8DL	71658007	WG	500	U	500	R	ug/L	DL
VOA	SW8260B	Vinyl acetate	71658	166GW054M8DL	71658008	WG	250	U	250	R	ug/L	DL
VOA	SW8260B	Vinyl acetate	71658	166GW055M8DL	71658009	WG	1000	U	1000	R	ug/L	DL
VOA	SW8260B	Vinyl acetate	71658	166GW056M8DL	71658010	WG	1000	U	1000	R	ug/L	DL
VOA	SW8260B	Vinyl acetate	71658	166GW07DM8DL	71658012	WG	250	U	250	R	ug/L	DL
VOA	SW8260B	Vinyl acetate	71658	166GW13DM8DL	71658014	WG	1000	U	1000	R	ug/L	DL
VOA	SW8260B	Vinyl acetate	71658	166GW14DM8DL	71658016	WG	20	U	20	R	ug/L	DL
VOA	SW8260B	Vinyl acetate	71659	166GW17DM8	71659001	WG	10	U	10	UJ	ug/L	CC
VOA	SW8260B	Vinyl acetate	71659	166GW19DM8	71659002	WG	10	U	10	UJ	ug/L	CC
VOA	SW8260B	Vinyl acetate	71659	166GW19DM8DL	71659002	WG	20	U	20	R	ug/L	DL
VOA	SW8260B	Vinyl acetate	71659	166GW21DM8	71659003	WG	10	U	10	UJ	ug/L	CC
VOA	SW8260B	Vinyl acetate	71659	166GW25DM8DL	71659004	WG	1000	U	1000	R	ug/L	DL
VOA	SW8260B	Vinyl acetate	71659	166GW26DM8	71659005	WG	250	U	250	UJ	ug/L	CC
VOA	SW8260B	Vinyl acetate	71659	698GW001M8	71659006	WG	10	U	10	UJ	ug/L	CC
VOA	SW8260B	Vinyl acetate	71659	698HW001M8	71659007	WG	10	U	10	UJ	ug/L	CC
VOA	SW8260B	Vinyl acetate	71766	166GW49DM8DL	71766003	WG	500	U	500	R	ug/L	DL
VOA	SW8260B	Vinyl acetate	71766	166GW50DM8DL	71766004	WG	2000	U	2000	R	ug/L	DL
VOA	SW8260B	Vinyl acetate	71766	166HW50DM8	71766005	WG	500	U	500	UJ	ug/L	CC,BS

Parameter Class	Analytical Method	Parameter	SDG	Sample ID	Lab Sample ID	Matrix	Lab Result	Lab Qual	Final Result	Final Qual	Units	Reasons
VOA	SW8260B	Vinyl acetate	71766	166HW50DM8DL	71766005	WG	5000	U	5000	R	ug/L	DL
VOA	SW8260B	Vinyl acetate	71766	166GW51DM8DL	71766006	WG	1000	U	1000	R	ug/L	DL
VOA	SW8260B	Vinyl acetate	71766	166GW52DM8DL	71766007	WG	1000	U	1000	R	ug/L	DL
VOA	SW8260B	Vinyl acetate	71766	166GWTM3M8DL	71766009	WG	100	U	100	R	ug/L	DL
VOA	SW8260B	Vinyl acetate	71766	166GWTM4M8DL	71766010	WG	2000	U	2000	R	ug/L	DL
VOA	SW8260B	Vinyl acetate	71766	166GW45DM8DL	71766011	WG	500	U	500	R	ug/L	DL
VOA	SW8260B	Vinyl acetate	71766	166GW46DM8DL	71766012	WG	500	U	500	R	ug/L	DL
VOA	SW8260B	Vinyl acetate	71766	166GW48DM8DL	71766014	WG	1000	U	1000	R	ug/L	DL
VOA	SW8260B	Vinyl acetate	71852	166GW040M8DL	71852003	WG	2500	U	2500	R	ug/L	DL
VOA	SW8260B	Vinyl acetate	71852	166HW040M8DL	71852004	WG	2500	U	2500	R	ug/L	DL
VOA	SW8260B	Vinyl acetate	71852	166GW34DM8DL	71852005	WG	10000	U	10000	R	ug/L	DL
VOA	SW8260B	Vinyl acetate	71852	166GW36DM8DL	71852007	WG	2500	U	2500	R	ug/L	DL
VOA	SW8260B	Vinyl acetate	71852	166GW37DM8DL	71852008	WG	50	U	50	R	ug/L	DL
VOA	SW8260B	Vinyl acetate	71852	166GW43DM8DL	71852012	WG	1000	U	1000	R	ug/L	DL
VOA	SW8260B	Vinyl acetate	72055	163GW003M8	72055003	WG	10	U	10	UJ	ug/L	SS
VOA	SW8260B	Vinyl acetate	72055	163GW003M8DL	72055003	WG	100	U	100	R	ug/L	DL
VOA	SW8260B	Vinyl acetate	72055	163GW03MM8	72055004	WG	10	U	10	UJ	ug/L	SS
VOA	SW8260B	Vinyl acetate	72055	166GW16DM8	72055005	WG	10	U	10	UJ	ug/L	SS
VOA	SW8260B	Vinyl acetate	72055	166GW16DM8DL	72055005	WG	500	U	500	R	ug/L	DL
VOA	SW8260B	Vinyl acetate	72055	166GW33DM8	72055006	WG	10	U	10	UJ	ug/L	SS
VOA	[illegible]8260B	Vinyl acetate	72055	166GW38DM8	[illegible]5007	WG	10	U	10	UJ	[illegible]	SS

Parent Class	Analytical Method	Parameter	CAS	Sample ID	Lab Sample ID	Matrix	Lab Result	Lab Qual	Final Result	Final Qual	Units	Reasons
VOA	SW8260B	Vinyl acetate	72055	166GW38DM8DL	72055007	WG	100	U	100	R	ug/L	DL
VOA	SW8260B	Vinyl acetate	72055	163GW005M8	72055008	WG	10	U	10	UJ	ug/L	SS
VOA	SW8260B	VINYL CHLORIDE	56223	166GW32DM1LR	56223003	WG	500	U	500	R	ug/L	DL
VOA	SW8260B	VINYL CHLORIDE	56330	166GW28DM1DL	56330001	WG	50	U	50	R	ug/L	DL
VOA	SW8260B	VINYL CHLORIDE	56330	166GW30DM1LR	56330003	WG	500	U	500	R	ug/L	DL
VOA	SW8260B	VINYL CHLORIDE	56330	166HW30DM1LR	56330004	WG	500	U	500	R	ug/L	DL
VOA	SW8260B	VINYL CHLORIDE	56341	166VDRM001M2	56341001	SO	11.2	U	11.2	UJ	ug/kg	IS
VOA	SW8260B	VINYL CHLORIDE	57725	166GW28DM2DL	57725002	WG	10	U	10	R	ug/L	DL
VOA	SW8260B	VINYL CHLORIDE	57725	166GW29DM2DL	57725003	WG	10	U	10	R	ug/L	DL
VOA	SW8260B	VINYL CHLORIDE	57725	166GW30DM2DL	57725004	WG	50	U	50	R	ug/L	DL
VOA	SW8260B	VINYL CHLORIDE	57725	166HW30DM2DL	57725005	WG	50	U	50	R	ug/L	DL
VOA	SW8260B	VINYL CHLORIDE	57725	166GW31DM2DL	57725006	WG	10	U	10	R	ug/L	DL
VOA	SW8260B	VINYL CHLORIDE	57725	166GW32DM2DL	57725007	WG	50	U	50	R	ug/L	DL
VOA	SW8260B	VINYL CHLORIDE	58856	166GW28DM3DL	58856002	WG	100	U	100	R	ug/L	DL
VOA	SW8260B	VINYL CHLORIDE	58856	166GW29DM3DL	58856003	WG	20	U	20	R	ug/L	DL
VOA	SW8260B	VINYL CHLORIDE	58856	166GW30DM3DL	58856004	WG	500	U	500	R	ug/L	DL
VOA	SW8260B	VINYL CHLORIDE	58856	166GW31DM3DL	58856005	WG	50	U	50	R	ug/L	DL
VOA	SW8260B	VINYL CHLORIDE	58856	166HW31DM3DL	58856006	WG	100	U	100	R	ug/L	DL
VOA	SW8260B	VINYL CHLORIDE	58856	166GW32DM3DL	58856007	WG	500	U	500	R	ug/L	DL
VOA	SW8260B	VINYL CHLORIDE	60789	166GW33DM4DL	60789001	WG	20	U	20	R	ug/L	DL
VOA	SW8260B	VINYL CHLORIDE	60789	166GW34DM4DL	60789002	WG	5000	U	5000	R	ug/L	DL

Fraction Class	Analytical Method	Analyte	Group	Sample ID	Lab Sample ID	Matrix	Raw Result	Lab Qual	Final Result	Final Qual	Units	Reason
VOA	SW8260B	VINYL CHLORIDE	60789	166GW35DM4DL	60789003	WG	100	U	100	R	ug/L	DL
VOA	SW8260B	VINYL CHLORIDE	60789	166GW37DM4DL	60789004	WG	5000	U	5000	R	ug/L	DL
VOA	SW8260B	VINYL CHLORIDE	60789	166GW39DM4DL	60789005	WG	100	U	100	R	ug/L	DL
VOA	SW8260B	VINYL CHLORIDE	60790	163GW03MM4DL	60790001	WG	500	U	500	R	ug/L	DL
VOA	SW8260B	VINYL CHLORIDE	60790	166GW26DM4DL	60790002	WG	500	U	500	R	ug/L	DL
VOA	SW8260B	VINYL CHLORIDE	60790	166GW25DM4DL	60790003	WG	1000	U	1000	R	ug/L	DL
VOA	SW8260B	VINYL CHLORIDE	60790	166HW25DM4DL	60790004	WG	1000	U	1000	R	ug/L	DL
VOA	SW8260B	VINYL CHLORIDE	60790	166GW07DM4DL	60790008	WG	100	U	100	R	ug/L	DL
VOA	SW8260B	VINYL CHLORIDE	60879	166GW41DM4DL	60879001	WG	500	U	500	R	ug/L	DL
VOA	SW8260B	VINYL CHLORIDE	60879	166GW42DM4DL	60879002	WG	1000	U	1000	R	ug/L	DL
VOA	SW8260B	VINYL CHLORIDE	60879	166GW43DM4DL	60879003	WG	2500	U	2500	R	ug/L	DL
VOA	SW8260B	VINYL CHLORIDE	60879	166GW44DM4DL	60879004	WG	500	U	500	R	ug/L	DL
VOA	SW8260B	VINYL CHLORIDE	60879	166GW13DM4DL	60879005	WG	1000	U	1000	R	ug/L	DL
VOA	SW8260B	VINYL CHLORIDE	61044	166GW38DM4DL	61044001	WG	200	U	200	R	ug/L	DL
VOA	SW8260B	VINYL CHLORIDE	61044	166GW45DM4DL	61044002	WG	1000	U	1000	R	ug/L	DL
VOA	SW8260B	VINYL CHLORIDE	61044	166GW48DM4DL	61044004	WG	1000	U	1000	R	ug/L	DL
VOA	SW8260B	VINYL CHLORIDE	61044	166GWTM4M4DL	61044005	WG	1000	U	1000	R	ug/L	DL
VOA	SW8260B	VINYL CHLORIDE	61044	166GW14DM4DL	61044007	WG	20	U	20	R	ug/L	DL
VOA	SW8260B	VINYL CHLORIDE	61134	166GW36DM4DL	61134002	WG	5000	U	5000	R	ug/L	DL
VOA	SW8260B	VINYL CHLORIDE	61170	166GW50DM4DL	61170001	WG	2500	U	2500	R	ug/L	DL
VOA	[illegible]8260B	VINYL CHLORIDE	62650	166GW28DM6DL	[illegible]0003	WG	50	U	50	R	[illegible]	DL

Parameter Class	Analytical Method	Parameter	SDG	Sample ID	Lab Sample ID	Matrix	Lab Result	Lab Qual	Final Result	Final Qual	Units	Reasons
VOA	SW8260B	VINYL CHLORIDE	64473	166GW50DM7DL	64473003	WG	2500	U	2500	R	ug/L	DL
VOA	SW8260B	VINYL CHLORIDE	64473	166HW50DM7DL	64473004	WG	2500	U	2500	R	ug/L	DL
VOA	SW8260B	VINYL CHLORIDE	64475	166GW053M7DL	64475007	WG	1000	U	1000	R	ug/L	DL
VOA	SW8260B	VINYL CHLORIDE	64475	166GW054M7DL	64475008	WG	250	U	250	R	ug/L	DL
VOA	SW8260B	VINYL CHLORIDE	64475	166GW055M7DL	64475009	WG	250	U	250	R	ug/L	DL
VOA	SW8260B	VINYL CHLORIDE	64475	166HW055M7DL	64475010	WG	250	U	250	R	ug/L	DL
VOA	SW8260B	VINYL CHLORIDE	64475	166GW07DM7DL	64475011	WG	250	U	250	R	ug/L	DL
VOA	SW8260B	VINYL CHLORIDE	64475	166GW13DM7DL	64475013	WG	1000	U	1000	R	ug/L	DL
VOA	SW8260B	VINYL CHLORIDE	64475	166HW13DM7DL	64475014	WG	1000	U	1000	R	ug/L	DL
VOA	SW8260B	VINYL CHLORIDE	64475	166GW14DM7DL	64475015	WG	20	U	20	R	ug/L	DL
VOA	SW8260B	VINYL CHLORIDE	64475	166GW26DM7DL	64475019	WG	500	U	500	R	ug/L	DL
VOA	SW8260B	VINYL CHLORIDE	64550	166GW34DM7DL	64550003	WG	10000	U	10000	R	ug/L	DL
VOA	SW8260B	VINYL CHLORIDE	64550	166GW36DM7DL	64550004	WG	5000	U	5000	R	ug/L	DL
VOA	SW8260B	VINYL CHLORIDE	64676	163GW003M7DL	64676002	WG	50	U	50	R	ug/L	DL
VOA	SW8260B	VINYL CHLORIDE	64676	166GW040M7DL	64676003	WG	10000	U	10000	R	ug/L	DL
VOA	SW8260B	VINYL CHLORIDE	64676	166GW41DM7DL	64676008	WG	100	U	100	R	ug/L	DL
VOA	SW8260B	VINYL CHLORIDE	64676	166GW42DM7DL	64676009	WG	1000	U	1000	R	ug/L	DL
VOA	SW8260B	VINYL CHLORIDE	64676	166GW44DM7DL	64676011	WG	1000	U	1000	R	ug/L	DL
VOA	SW8260B	VINYL CHLORIDE	64676	166GW35DM7DL	64676012	WG	1000	U	1000	R	ug/L	DL
VOA	SW8260B	VINYL CHLORIDE	71658	166GW053M8DL	71658007	WG	500	U	500	R	ug/L	DL
VOA	SW8260B	VINYL CHLORIDE	71658	166GW054M8DL	71658008	WG	250	U	250	R	ug/L	DL

Parameter Class	Analytical Method	Parameter	Station	Sample ID	Lab Sample ID	Matrix	Lab Result	Lab Qual	Final Result	Final Qual	Units	Reason
VOA	SW8260B	VINYL CHLORIDE	71658	166GW055M8DL	71658009	WG	1000	U	1000	R	ug/L	DL
VOA	SW8260B	VINYL CHLORIDE	71658	166GW056M8	71658010	WG	1.9	J	1.9	J	ug/L	SS
VOA	SW8260B	VINYL CHLORIDE	71658	166GW056M8DL	71658010	WG	1000	U	1000	R	ug/L	DL
VOA	SW8260B	VINYL CHLORIDE	71658	166GW07DM8DL	71658012	WG	250	U	250	R	ug/L	DL
VOA	SW8260B	VINYL CHLORIDE	71658	166GW13DM8DL	71658014	WG	1000	U	1000	R	ug/L	DL
VOA	SW8260B	VINYL CHLORIDE	71658	166GW14DM8DL	71658016	WG	20	U	20	R	ug/L	DL
VOA	SW8260B	VINYL CHLORIDE	71659	166GW19DM8	71659002	WG	0.92	J	0.92	J	ug/L	SS
VOA	SW8260B	VINYL CHLORIDE	71659	166GW19DM8DL	71659002	WG	20	U	20	R	ug/L	DL
VOA	SW8260B	VINYL CHLORIDE	71659	166GW25DM8DL	71659004	WG	1000	U	1000	R	ug/L	DL
VOA	SW8260B	VINYL CHLORIDE	71766	166GW49DM8DL	71766003	WG	500	U	500	R	ug/L	DL
VOA	SW8260B	VINYL CHLORIDE	71766	166GW50DM8DL	71766004	WG	2000	U	2000	R	ug/L	DL
VOA	SW8260B	VINYL CHLORIDE	71766	166HW50DM8DL	71766005	WG	5000	U	5000	R	ug/L	DL
VOA	SW8260B	VINYL CHLORIDE	71766	166GW51DM8DL	71766006	WG	1000	U	1000	R	ug/L	DL
VOA	SW8260B	VINYL CHLORIDE	71766	166GW52DM8DL	71766007	WG	1000	U	1000	R	ug/L	DL
VOA	SW8260B	VINYL CHLORIDE	71766	166GWIN3M8	71766008	WG	8.6	J	8.6	J	ug/L	SS
VOA	SW8260B	VINYL CHLORIDE	71766	166GWTM3M8	71766009	WG	146	E	146	R	ug/L	LR
VOA	SW8260B	VINYL CHLORIDE	71766	166GWTM3M8DL	71766009	WG	144	D	144	J	ug/L	SS
VOA	SW8260B	VINYL CHLORIDE	71766	166GWTM4M8DL	71766010	WG	2000	U	2000	R	ug/L	DL
VOA	SW8260B	VINYL CHLORIDE	71766	166GW45DM8DL	71766011	WG	500	U	500	R	ug/L	DL
VOA	SW8260B	VINYL CHLORIDE	71766	166GW46DM8	71766012	WG	1	J	1	J	ug/L	SS
VOA	SW8260B	VINYL CHLORIDE	71766	166GW46DM8DL	71766012	WG	500	U	500	R	ug/L	DL

[illegible]	[illegible]	[illegible]	[illegible]	[illegible]	[illegible]	[illegible]	[illegible]	[illegible]	[illegible]	[illegible]	[illegible]	[illegible]
VOA	SW8260B	VINYL CHLORIDE	71766	166GW48DM8DL	71766014	WG	1000	U	1000	R	ug/L	DL
VOA	SW8260B	VINYL CHLORIDE	71852	166GW040M8DL	71852003	WG	2500	U	2500	R	ug/L	DL
VOA	SW8260B	VINYL CHLORIDE	71852	166HW040M8DL	71852004	WG	2500	U	2500	R	ug/L	DL
VOA	SW8260B	VINYL CHLORIDE	71852	166GW34DM8DL	71852005	WG	10000	U	10000	R	ug/L	DL
VOA	SW8260B	VINYL CHLORIDE	71852	166GW36DM8DL	71852007	WG	2500	U	2500	R	ug/L	DL
VOA	SW8260B	VINYL CHLORIDE	71852	166GW37DM8DL	71852008	WG	50	U	50	R	ug/L	DL
VOA	SW8260B	VINYL CHLORIDE	71852	166GW43DM8DL	71852012	WG	1000	U	1000	R	ug/L	DL
VOA	SW8260B	VINYL CHLORIDE	72055	163GW003M8	72055003	WG	10	U	10	UJ	ug/L	SS
VOA	SW8260B	VINYL CHLORIDE	72055	163GW003M8DL	72055003	WG	100	U	100	R	ug/L	DL
VOA	SW8260B	VINYL CHLORIDE	72055	163GW03MM8	72055004	WG	10	U	10	UJ	ug/L	SS
VOA	SW8260B	VINYL CHLORIDE	72055	166GW16DM8	72055005	WG	28	=	28	J	ug/L	SS
VOA	SW8260B	VINYL CHLORIDE	72055	166GW16DM8DL	72055005	WG	500	U	500	R	ug/L	DL
VOA	SW8260B	VINYL CHLORIDE	72055	166GW33DM8	72055006	WG	10	U	10	UJ	ug/L	SS
VOA	SW8260B	VINYL CHLORIDE	72055	166GW38DM8	72055007	WG	10	U	10	UJ	ug/L	SS
VOA	SW8260B	VINYL CHLORIDE	72055	166GW38DM8DL	72055007	WG	100	U	100	R	ug/L	DL
VOA	SW8260B	VINYL CHLORIDE	72055	163GW005M8	72055008	WG	10	U	10	UJ	ug/L	SS
VOA	SW8260B	XYLENES, TOTAL	56223	166GW32DM1LR	56223003	WG	250	U	250	R	ug/L	DL
VOA	SW8260B	XYLENES, TOTAL	56330	166GW28DM1DL	56330001	WG	25	U	25	R	ug/L	DL
VOA	SW8260B	XYLENES, TOTAL	56330	166GW30DM1LR	56330003	WG	250	U	250	R	ug/L	DL
VOA	SW8260B	XYLENES, TOTAL	56330	166HW30DM1LR	56330004	WG	250	U	250	R	ug/L	DL
VOA	SW8260B	XYLENES, TOTAL	56341	166VDRM001M2	56341001	SO	1.6	J	1.6	J	ug/kg	IS

Parameter Class	Analytical Method	Parameter	SDG	Sample ID	Lab Sample ID	Matrix	Result	Lab Qual	Final Result	Final Qual	Units	Reasons
VOA	SW8260B	XYLENES, TOTAL	57725	166GW28DM2DL	57725002	WG	30	U	30	R	ug/L	DL
VOA	SW8260B	XYLENES, TOTAL	57725	166GW29DM2DL	57725003	WG	30	U	30	R	ug/L	DL
VOA	SW8260B	XYLENES, TOTAL	57725	166GW30DM2DL	57725004	WG	150	U	150	R	ug/L	DL
VOA	SW8260B	XYLENES, TOTAL	57725	166HW30DM2DL	57725005	WG	150	U	150	R	ug/L	DL
VOA	SW8260B	XYLENES, TOTAL	57725	166GW31DM2DL	57725006	WG	30	U	30	R	ug/L	DL
VOA	SW8260B	XYLENES, TOTAL	57725	166GW32DM2DL	57725007	WG	150	U	150	R	ug/L	DL
VOA	SW8260B	XYLENES, TOTAL	58856	166GW28DM3DL	58856002	WG	50	U	50	R	ug/L	DL
VOA	SW8260B	XYLENES, TOTAL	58856	166GW29DM3DL	58856003	WG	10	U	10	R	ug/L	DL
VOA	SW8260B	XYLENES, TOTAL	58856	166GW30DM3DL	58856004	WG	250	U	250	R	ug/L	DL
VOA	SW8260B	XYLENES, TOTAL	58856	166GW31DM3DL	58856005	WG	25	U	25	R	ug/L	DL
VOA	SW8260B	XYLENES, TOTAL	58856	166HW31DM3DL	58856006	WG	50	U	50	R	ug/L	DL
VOA	SW8260B	XYLENES, TOTAL	58856	166GW32DM3DL	58856007	WG	250	U	250	R	ug/L	DL
VOA	SW8260B	XYLENES, TOTAL	60789	166GW33DM4DL	60789001	WG	10	U	10	R	ug/L	DL
VOA	SW8260B	XYLENES, TOTAL	60789	166GW34DM4DL	60789002	WG	2500	U	2500	R	ug/L	DL
VOA	SW8260B	XYLENES, TOTAL	60789	166GW35DM4DL	60789003	WG	50	U	50	R	ug/L	DL
VOA	SW8260B	XYLENES, TOTAL	60789	166GW37DM4DL	60789004	WG	2500	U	2500	R	ug/L	DL
VOA	SW8260B	XYLENES, TOTAL	60789	166GW39DM4DL	60789005	WG	50	U	50	R	ug/L	DL
VOA	SW8260B	XYLENES, TOTAL	60790	163GW03MM4DL	60790001	WG	250	U	250	R	ug/L	DL
VOA	SW8260B	XYLENES, TOTAL	60790	166GW26DM4DL	60790002	WG	250	U	250	R	ug/L	DL
VOA	SW8260B	XYLENES, TOTAL	60790	166GW25DM4DL	60790003	WG	500	U	500	R	ug/L	DL
VOA	SW8260B	XYLENES, TOTAL	60790	166HW25DM4DL	60790004	WG	500	U	500	R	ug/L	DL

Fraction Group	Analytical Method	Parameter	Site	Sample ID	Laboratory ID	Matrix	Result	Lab Qual	Final Result	Final Qual	Units	Reason
VOA	SW8260B	XYLENES, TOTAL	60790	166GW07DM4DL	60790008	WG	50	U	50	R	ug/L	DL
VOA	SW8260B	XYLENES, TOTAL	60879	166GW41DM4DL	60879001	WG	250	U	250	R	ug/L	DL
VOA	SW8260B	XYLENES, TOTAL	60879	166GW42DM4DL	60879002	WG	500	U	500	R	ug/L	DL
VOA	SW8260B	XYLENES, TOTAL	60879	166GW43DM4DL	60879003	WG	1250	U	1250	R	ug/L	DL
VOA	SW8260B	XYLENES, TOTAL	60879	166GW44DM4DL	60879004	WG	250	U	250	R	ug/L	DL
VOA	SW8260B	XYLENES, TOTAL	60879	166GW13DM4DL	60879005	WG	500	U	500	R	ug/L	DL
VOA	SW8260B	XYLENES, TOTAL	61044	166GW38DM4DL	61044001	WG	100	U	100	R	ug/L	DL
VOA	SW8260B	XYLENES, TOTAL	61044	166GW45DM4DL	61044002	WG	500	U	500	R	ug/L	DL
VOA	SW8260B	XYLENES, TOTAL	61044	166GW48DM4DL	61044004	WG	500	U	500	R	ug/L	DL
VOA	SW8260B	XYLENES, TOTAL	61044	166GWTM4M4DL	61044005	WG	500	U	500	R	ug/L	DL
VOA	SW8260B	XYLENES, TOTAL	61044	166GW14DM4DL	61044007	WG	10	U	10	R	ug/L	DL
VOA	SW8260B	XYLENES, TOTAL	61134	166GW36DM4DL	61134002	WG	2500	U	2500	R	ug/L	DL
VOA	SW8260B	XYLENES, TOTAL	61170	166GW50DM4DL	61170001	WG	1250	U	1250	R	ug/L	DL
VOA	SW8260B	XYLENES, TOTAL	62650	166GW28DM6DL	62650003	WG	25	U	25	R	ug/L	DL
VOA	SW8260B	XYLENES, TOTAL	64473	166GW50DM7DL	64473003	WG	1250	U	1250	R	ug/L	DL
VOA	SW8260B	XYLENES, TOTAL	64473	166HW50DM7DL	64473004	WG	1250	U	1250	R	ug/L	DL
VOA	SW8260B	XYLENES, TOTAL	64475	166GW053M7DL	64475007	WG	500	U	500	R	ug/L	DL
VOA	SW8260B	XYLENES, TOTAL	64475	166GW054M7DL	64475008	WG	125	U	125	R	ug/L	DL
VOA	SW8260B	XYLENES, TOTAL	64475	166GW055M7DL	64475009	WG	125	U	125	R	ug/L	DL
VOA	SW8260B	XYLENES, TOTAL	64475	166HW055M7DL	64475010	WG	125	U	125	R	ug/L	DL
VOA	SW8260B	XYLENES, TOTAL	64475	166GW07DM7DL	64475011	WG	125	U	125	R	ug/L	DL

Attachment 1 - Changed Qualifiers and Results
Charleston Navel Complex - Zone K, SWMU 166 - 2002 Sampling Events

Parameter Class	Analytical Method	Parameter	Sample	Station ID	Sample ID	Matrix	Lab Result	Lab Qual	Final Result	Final Qual	Units	Reason
VOA	SW8260B	XYLENES, TOTAL	64475	166GW13DM7DL	64475013	WG	500	U	500	R	ug/L	DL
VOA	SW8260B	XYLENES, TOTAL	64475	166HW13DM7DL	64475014	WG	500	U	500	R	ug/L	DL
VOA	SW8260B	XYLENES, TOTAL	64475	166GW14DM7DL	64475015	WG	10	U	10	R	ug/L	DL
VOA	SW8260B	XYLENES, TOTAL	64475	166GW26DM7DL	64475019	WG	250	U	250	R	ug/L	DL
VOA	SW8260B	XYLENES, TOTAL	64550	166GW34DM7DL	64550003	WG	5000	U	5000	R	ug/L	DL
VOA	SW8260B	XYLENES, TOTAL	64550	166GW36DM7DL	64550004	WG	2500	U	2500	R	ug/L	DL
VOA	SW8260B	XYLENES, TOTAL	64676	163GW003M7DL	64676002	WG	25	U	25	R	ug/L	DL
VOA	SW8260B	XYLENES, TOTAL	64676	166GW040M7	64676003	WG	1970	E	1970	R	ug/L	LR
VOA	SW8260B	XYLENES, TOTAL	64676	166GW040M7DL	64676003	WG	2710	JD	2710	J	ug/L	DL
VOA	SW8260B	XYLENES, TOTAL	64676	166GW41DM7DL	64676008	WG	50	U	50	R	ug/L	DL
VOA	SW8260B	XYLENES, TOTAL	64676	166GW42DM7DL	64676009	WG	500	U	500	R	ug/L	DL
VOA	SW8260B	XYLENES, TOTAL	64676	166GW44DM7DL	64676011	WG	500	U	500	R	ug/L	DL
VOA	SW8260B	XYLENES, TOTAL	64676	166GW35DM7DL	64676012	WG	500	U	500	R	ug/L	DL
VOA	SW8260B	XYLENES, TOTAL	71658	166GW053M8DL	71658007	WG	250	U	250	R	ug/L	DL
VOA	SW8260B	XYLENES, TOTAL	71658	166GW054M8DL	71658008	WG	125	U	125	R	ug/L	DL
VOA	SW8260B	XYLENES, TOTAL	71658	166GW055M8DL	71658009	WG	500	U	500	R	ug/L	DL
VOA	SW8260B	XYLENES, TOTAL	71658	166GW056M8DL	71658010	WG	500	U	500	R	ug/L	DL
VOA	SW8260B	XYLENES, TOTAL	71658	166GW07DM8DL	71658012	WG	125	U	125	R	ug/L	DL
VOA	SW8260B	XYLENES, TOTAL	71658	166GW13DM8DL	71658014	WG	500	U	500	R	ug/L	DL
VOA	SW8260B	XYLENES, TOTAL	71658	166GW14DM8DL	71658016	WG	10	U	10	R	ug/L	DL
VOA	SW8260B	XYLENES, TOTAL	71659	166GW19DM8DL	[illegible]9002	WG	10	U	10	R	ug/L	DL

Parameter Class	Analytical Method	Parameter	CAS	Sample ID	Lab Sample ID	Matrix	Lab Result	Lab Qual	Final Result	Final Qual	Units	Reasons
VOA	SW8260B	XYLENES, TOTAL	71659	166GW25DM8DL	71659004	WG	500	U	500	R	ug/L	DL
VOA	SW8260B	XYLENES, TOTAL	71659	698GW001M8	71659006	WG	2.5	J	2.5	J	ug/L	SS
VOA	SW8260B	XYLENES, TOTAL	71659	698HW001M8	71659007	WG	1.6	J	1.6	J	ug/L	SS
VOA	SW8260B	XYLENES, TOTAL	71766	166GW49DM8DL	71766003	WG	250	U	250	R	ug/L	DL
VOA	SW8260B	XYLENES, TOTAL	71766	166GW50DM8DL	71766004	WG	1000	U	1000	R	ug/L	DL
VOA	SW8260B	XYLENES, TOTAL	71766	166HW50DM8DL	71766005	WG	2500	U	2500	R	ug/L	DL
VOA	SW8260B	XYLENES, TOTAL	71766	166GW51DM8DL	71766006	WG	500	U	500	R	ug/L	DL
VOA	SW8260B	XYLENES, TOTAL	71766	166GW52DM8DL	71766007	WG	500	U	500	R	ug/L	DL
VOA	SW8260B	XYLENES, TOTAL	71766	166GWIN3M8	71766008	WG	0.27	J	0.27	J	ug/L	SS
VOA	SW8260B	XYLENES, TOTAL	71766	166GWTM3M8DL	71766009	WG	50	U	50	R	ug/L	DL
VOA	SW8260B	XYLENES, TOTAL	71766	166GWTM4M8DL	71766010	WG	1000	U	1000	R	ug/L	DL
VOA	SW8260B	XYLENES, TOTAL	71766	166GW45DM8DL	71766011	WG	250	U	250	R	ug/L	DL
VOA	SW8260B	XYLENES, TOTAL	71766	166GW46DM8DL	71766012	WG	250	U	250	R	ug/L	DL
VOA	SW8260B	XYLENES, TOTAL	71766	166GW48DM8DL	71766014	WG	500	U	500	R	ug/L	DL
VOA	SW8260B	XYLENES, TOTAL	71852	166GW040M8	71852003	WG	733	=	733	J	ug/L	SS
VOA	SW8260B	XYLENES, TOTAL	71852	166GW040M8DL	71852003	WG	636	JD	636	R	ug/L	DL
VOA	SW8260B	XYLENES, TOTAL	71852	166HW040M8DL	71852004	WG	730	JD	730	R	ug/L	DL
VOA	SW8260B	XYLENES, TOTAL	71852	166GW34DM8DL	71852005	WG	5000	U	5000	R	ug/L	DL
VOA	SW8260B	XYLENES, TOTAL	71852	166GW36DM8DL	71852007	WG	1250	U	1250	R	ug/L	DL
VOA	SW8260B	XYLENES, TOTAL	71852	166GW37DM8DL	71852008	WG	25	U	25	R	ug/L	DL
VOA	SW8260B	XYLENES, TOTAL	71852	166GW43DM8DL	71852012	WG	500	U	500	R	ug/L	DL

Parameter Cl	Analytical Method	Parameter	SDG	Sample ID	Lab Sample ID	Matrix	Lab Result	Lab Qual	Final Result	Final Qual	Units	Reasons
VOA	SW8260B	XYLENES, TOTAL	72055	163GW003M8	72055003	WG	5	U	5	UJ	ug/L	SS
VOA	SW8260B	XYLENES, TOTAL	72055	163GW003M8DL	72055003	WG	50	U	50	R	ug/L	DL
VOA	SW8260B	XYLENES, TOTAL	72055	163GW03MM8	72055004	WG	5	U	5	UJ	ug/L	SS
VOA	SW8260B	XYLENES, TOTAL	72055	166GW16DM8	72055005	WG	5	U	5	UJ	ug/L	SS
VOA	SW8260B	XYLENES, TOTAL	72055	166GW16DM8DL	72055005	WG	250	U	250	R	ug/L	DL
VOA	SW8260B	XYLENES, TOTAL	72055	166GW33DM8	72055006	WG	5	U	5	UJ	ug/L	SS
VOA	SW8260B	XYLENES, TOTAL	72055	166GW38DM8	72055007	WG	5	U	5	UJ	ug/L	SS
VOA	SW8260B	XYLENES, TOTAL	72055	166GW38DM8DL	72055007	WG	50	U	50	R	ug/L	DL
VOA	SW8260B	XYLENES, TOTAL	72055	163GW005M8	72055008	WG	5	U	5	UJ	ug/L	SS

CH2M HILL Chain of Custody/ Laboratory Analysis Form

COC Tracking #: **ZK166-020802-01** page 1 of 2

Laboratory: GEL

Project Name: Charleston Navy Complex

Site Name: Zone K, SWMU 166

Project Number: 158814.PM.04

TAT: standard

Project Manager:

QA Level: 3

Address: GNV: 3011 SW Williston Rd., Gainesville, FL 32605

ATL 115 Perimeter Center Place NE, Suite 700, Atlanta, GA 30346-1278

Send Report To: see last page of COC

EDD: CNC format

Lab Batch/SDG: 56223

Sample ID	Station ID	Sample Description	Depth Begin	Depth End	Date & Time Collected	Matrix	# of containers	VOCs (SW8260B) 3 - 40mL vial, HCl	Sulfate (E300), nitrate (E300), chloride (SW9056) 1 - 500 mL HDPE	Iron (SW6010B) 250 mL HDPE, HNO3						Comments
166GW27DM1	K166GW27D				2-14-02/ 1505	WG	5	X	X	X						
166GW28DM1	K166GW28D					WG		X	X	X						
166GW29DM1	K166GW29D					WG		X	X	X						
166GW30DM1	K166GW30D					WG		X	X	X						
166HW30DM1	K166GW30D					WG		X	X	X						
166GW31DM1	K166GW31D				2-14-02/ 1310	WG	5	X	X	X						
166GW32DM1	K166GW32D				2-14-02/ 1410	WG	5	X	X	X						
166EW27DM1	K166EW27D				2-14-02/ 1420	WQ	5	X	X	X						EB
166TW27DM1	K166TW29D				Lab Supplied	WQ	3	X								TB
166EW28DM1	K166EW28D					WQ		X	X	X						EB

Sampled By: Chris Blundy

Date/Time

Relinquished by:

Date/Time

Additional Samplers: Jeremy Hilliard

Received By Lab.

Date/Time

Relinquished by:

Date/Time

Received By:

Date/Time

Shipped Via: UPS FedEx Hand Other Tracking#:

Remarks: 2/19 Pilla 3/8

Temperature:

Receipt Exceptions:

CH2M HILL Chain of Custody/ Laboratory Analysis Form

COC Tracking #: **ZK166-020802-01** page 1 of 2

Laboratory:	GEL
Project Name:	Charleston Navy Complex
Site Name:	Zone K, SWMU 166
Project Number:	158814.PM.04
TAT:	standard
Project Manager:	
QA Level:	3
Address:	GNV: 3011 SW Williston Rd., Gainesville, FL 32605
	ATL: 115 Perimeter Center Place NE, Suite 700, Atlanta, GA 30346-1278
Send Report To:	see last page of COC
EDD:	CNC format

Lab Batch/SDG: 56330

Sample ID	Station ID	Sample Description	Depth Begin	Depth End	Date & Time Collected	Matrix	# of containers	VOCs (SW8260B) 3 - 40mL vial, HCl	Sulfate (E300), nitrate (E300), chloride (SW9056) 1 - 500 mL HDPE	Iron (SW6010B) 250 mL HDPE, HNO3							Comments
166GW27DM1	K166GW27D				2-14-02/ 1505	WG	5	X	X	X				Relinquished			2-15-02
166GW28DM1	K166GW28D				2-14-02/ 1150	WG	5	X	X	X							
166GW29DM1	K166GW29D				2-14-02/ 0955	WG	5	X	X	X							
166GW30DM1	K166GW30D				2-14-02/ 1020	WG	5	X	X	X							
166HW30DM1	K166GW30D				2-14-02/ 1025	WG	5	X	X	X							
166GW31DM1	K166GW31D				2-14-02/ 1310	WG	5	X	X	X							Relq'd 2-15-02
166GW32DM1	K166GW32D				2-14-02/ 1410	WG	5	X	X	X							Relq'd 2-15-02
166EW27DM1	K166EW27D				2-14-02/ 1420	WQ	5	X	X	X							EB Relq'd 2-15-02
166TW27DM1	K166TW29D				Lab Supplied	WQ	3	X									TB Relq'd 2-15-02
166EW28DM1	K166EW28D				2-14-02/ 1055	WQ	5	X	X	X							EB
166TW28DM1	K166TW28D				Lab Supplied	WQ	3	X									TB
																	RCRA
																	Complete

Sampled By: Chris Blundy Date/Time: 2-14-02 & 2-19-02 Relinquished by: Date/Time

Additional Samplers: Jeremy Hilliard / Andrew O'Conor

Received By Lab: Date/Time Relinquished by: Date/Time

Received By: Date/Time Shipped Via: UPS FedEx Hand Other Tracking#:

Remarks: Temperature:

Receipt Exceptions:

SEVERN TRENT SERVICES

ANALYSIS REQUEST AND CHAIN OF CUSTODY RECORD

STL Savannah GEL

~~STL Savannah~~
5102 LaRoche Avenue
Savannah, GA 31404

Website: www.stl-inc.com
Phone: (912) 354-7858
Fax: (912) 352-0165

Alternate Laboratory Name/Location: GEL

Phone:
Fax: 506: 56341

PROJECT REFERENCE: SWMU166 IDW	PROJECT NO.	PROJECT LOCATION (STATE): SC	PAGE 1 OF 1
STL (LAB) PROJECT MANAGER: Gina Anderson	P.O. NUMBER	CONTRACT NO.	STANDARD REPORT DELIVERY (X)
CLIENT (SITE) PM: ~~Sam Marie~~ Chris Blundy	CLIENT PHONE: 740-2780	CLIENT FAX	DATE DUE
CLIENT NAME: CH2M-JONES	CLIENT E-MAIL		EXPEDITED REPORT DELIVERY (SURCHARGE) ( )
CLIENT ADDRESS			DATE DUE
COMPANY CONTRACTING THIS WORK (if applicable): Navy			NUMBER OF COOLERS SUBMITTED PER SHIPMENT:

MATRIX TYPE (COMPOSITE (C) OR GRAB (G) INDICATE): AQUEOUS (WATER); SOLID OR SEMISOLID; AIR; NONAQUEOUS LIQUID (OIL, SOLVENT, ...)

REQUIRED ANALYSIS: VOC 8260; VOC TCLP 1311/8260

PRESERVATIVE: – –

SAMPLE DATE	SAMPLE TIME	SAMPLE IDENTIFICATION	SOLID OR SEMISOLID	VOC 8260	VOC TCLP 1311/8260	REMARKS
2-19-02	1525	166VDRM001M2	X	3	1	Wells 27D & 28D
2-19-02	1530	166VDRM002M2	X	3	1	Wells 29D & 30D
2-19-02	1535	166VDRM003M2	X	3	1	Wells 31D & 32D
						RCRA Complete

RELINQUISHED BY: (SIGNATURE)	DATE	TIME	RELINQUISHED BY: (SIGNATURE)	DATE	TIME	RELINQUISHED BY: (SIGNATURE)	DATE	TIME
EMPTY CONTAINERS								

RECEIVED BY: (SIGNATURE)	DATE	TIME	RECEIVED BY: (SIGNATURE)	DATE	TIME	RECEIVED BY: (SIGNATURE)	DATE	TIME
EMPTY CONTAINERS								

LABORATORY USE ONLY

RECEIVED FOR LABORATORY BY: (SIGNATURE)	DATE	TIME	CUSTODY INTACT	CUSTODY SEAL NO.	STL SAVANNAH LOG NO.	LABORATORY REMARKS
			YES ( ) NO ( )			

CLIENT'S FIELD COPY

CH2M HILL Chain of Custody/ Laboratory Analysis Form

COC Tracking #: ZK166-030502-01

Laboratory: GEL

Project Name: Charleston Navy Complex

Site Name: Zone K, SWMU 166

Project Number: 158814.PM.04

TAT: standard

Project Manager:

QA Level: 3

Address: GNV: 3011 SW Williston Rd., Gainesville, FL 32605

ATL: 115 Perimeter Center Place NE, Suite 700, Atlanta, GA 30346-1278

Send Report To: see last page of COC

EDD: CNC format

Lab Batch/SDG: 57725

Sample ID	Station ID	Sample Description	Depth Begin	Depth End	Date & Time Collected	Matrix	# of containers	VOCs (SW8260B) 3 - 40mL vial, HCl	Sulfate (E300), nitrate (E300), chloride (SW9056) 1 - 500 mL HDPE	Iron (SW6010B) 250 mL HDPE, HNO3							Comments
166GW27DM2	K166GW27D				3-18-02/1100	WG	5	X	X	X							
166GW28DM2	K166GW28D				3-18-02/1005	WG	5	X	X	X							Samples
166GW29DM2	K166GW29D				3-18-02/1200	WG	5	X	X	X							complete
166GW30DM2	K166GW30D				3-18-02/1400	WG	5	X	X	X							
166HW30DM2	K166GW30D				3-18-02/1405	WG	5	X	X	X							
166GW31DM2	K166GW31D				3-18-02/1450	WG	5	X	X	X							RCRA
166GW32DM2	K166GW32D				3-18-02/1555	WG	5	X	X	X							
166EW27DM2	K166EW27D				3-18-02/1125	WG	5	X	X	X							EB
166TW27DM2	K166TW29D				LAB SUPPLIED	WG	3	X									TB

Sampled By: ANDREW O'CONOR Date/Time: 3-18-02

Relinquished by: Date/Time

Additional Samplers: C. DIAZ

Received By Lab: Date/Time

Relinquished by: Date/Time

Received By: Date/Time

Shipped Via: UPS FedEx Hand Other Tracking#:

Remarks:

Temperature:

Receipt Exceptions:

PVI. n/a

C((HILL Chain of Custody/ Laboratory Analysis Form

COC Tracking #: ZK166-030602-01

Laboratory: GEL

Project Name: Charleston Navy Complex

Site Name: Zone K, SWMU 166

Project Number: 158814.PM.04

TAT:

Project Manager:

QA Level: 3

Address: GNV: 3011 SW Williston Rd., Gainesville, FL 32605

ATL: 115 Perimeter Center Place NE, Suite 700, Atlanta, GA 30346-1278

Send Report To: see last page of COC

EDD: CNC format

Lab Batch/SDG: 58856

Sample ID	Station ID	Sample Description	Depth Begin	Depth End	Date & Time Collected	Matrix	# of containers	VOCs (SW8260B) 3 - 40mL vial, HCl	Sulfate (E300), nitrate (E300), chloride (SW9056) 1 - 500 mL HDPE	Iron (SW6010B) 250 mL HDPE, HNO3						Comments
166GW27DM3	K166GW27D				4-11-02 / 1020	WG	5	X	X	X						
166GW27DM3MS	K166GW27D				4-11-02 / 1025	WG	5	X	X	X						MS
166GW27DM3SD	K166GW27D				4-11-02 / 1030	WG	5	X	X	X						MSD
166GW28DM3	K166GW28D				4-11-02 / 1150	WG	5	X	X	X					#	samples
166GW29DM3	K166GW29D				4-11-02 / 1255	WG	5	X	X	X						complete
166GW30DM3	K166GW30D				4-11-02 / 1505	WG	5	X	X	X						
166GW31DM3	K166GW31D				4-11-02 / 1525	WG	5	X	X	X					*	RCRA
166HW31DM3	K166GW31D				4-11-02 / 1530	WG	5	X	X	X						
166GW32DM3	K166GW32D				4-11-02 / 1625	WG	5	X	X	X						
166EW27DM3	K166EW27D				4-11-02 / 1120	WG	5	X	X	X						EB
166TW27DM3	K166TW29D				LAB supplied	WG	3	X								TB

Sampled By: Andrew O'Connor

Date/Time: 4-11-02

Relinquished by:

Date/Time

Additional Samplers: A. Strokes ; D. Gates

Received By Lab:

Date/Time

Relinquished by:

Date/Time

Received By:

Date/Time

Shipped Via: UPS FedEx Hand Other Tracking#:

Temperature:

Receipt Exceptions: FAX 4/19 pch 5/3

CH2M HILL Chain of Custody/ Laboratory Analysis Form

COC Tracking #: ZK166-051002-01 page 1 of 4

Laboratory: GEL

Project Name: Charleston Navy Complex

Site Name: Zone K, SWMU 166

Project Number: 158814.PM.04

TAT: STANDARD

Project Manager: Tom Beisel

QA Level: 3

Address: GNV: 3011 SW Williston Rd., Gainesville, FL 32605

ATL: 115 Perimeter Center Place NE, Suite 700, Atlanta, GA 30346-1278

Send Report To: see last page of COC

EDD: CNC format

Lab Batch/SDG: 60789/60790 dld Blue

Sample ID	Station ID	Sample Description	Depth Begin	Depth End	Date & Time Collected	Matrix	# of containers	VOCs (SW8260B) 3 - 40mL vial, HCl	Sulfate (E300), nitrate (E300) 1 - 500 mL HDPE								Comments
166GW33DM4	K166GW33D	new, expect TD = 36'			5-20-02/1520	WG	4	X	X								
166GW34DM4	K166GW34D	new, expect TD = 32'			5-21-02/1110	WG	4	X	X								
166GW35DM4	K166GW35D	new, expect TD = 37'			5-21-02/1120	WG	4	X	X								
166GW36DM4	K166GW36D	new, expect TD = 30'				WG		X	X								
166GW37DM4	K166GW37D	new, expect TD = 35'			5-21-02/1210	WG	4	X	X								
166GW38DM4	K166GW38D	new, expect TD = 35'				WG		X	X								
166GW39DM4	K166GW39D	new, expect TD = 37'			5-21-02/1345	WG	4	X	X								
166GW040M4	K166GW040	new, expect TD = 16'			5-21-02/1250	WG	4	X	X								
166HW040M4	K166GW040	new, expect TD = 16'			5-21-02/1255	WG	4	X	X								
166GW41DM4	K166GW41D	new, expect TD = 37'				WG		X	X								
166GW42DM4	K166GW42D	new, expect TD = 37'				WG		X	X								
166GW43DM4	K166GW43D	new, expect TD = 36'				WG		X	X								
166GW44DM4	K166GW44D	new, expect TD = 36'				WG		X	X								
166GW45DM4	K166GW45D	new, expect TD = 36'				WG		X	X								
166GW46DM4	K166GW46D	new, expect TD = 36'				WG		X	X								
166GW47DM4	K166GW47D	new, expect TD = 31'				WG		X	X								
166GW48DM4	K166GW48D	new, expect TD = 36'				WG		X	X								
166GW49DM4	K166GW49D	new, expect TD = 37'				WG		X	X								
166GW50DM4	K166GW50D	new, expect TD = 37'				WG		X	X								
166HW50DM4	K166GW050D	new, expect TD = 37'				WG		X	X								

Sampled By Andrew D. A. Stokes, C Dees, BC Date/Time 5-20/5-21-02

Relinquished by: Date/Time

Additional Samplers:

Received By Lab: Date/Time

Relinquished by: Date/Time

Receipt Exceptions: [illegible] 5/8

CH2M HILL Chain of Custody/ Laboratory Analysis Form

COC Tracking #: **ZK166-051002-01** page 2 of 4

Received By: Date/Time

Remarks:

Shipped Via: UPS FedEx Hand Other Tracking#:

Temperature:

Laboratory:	GEL		
Project Name:	Charleston Navy Complex	Site Name:	Zone K, SWMU 166
Project Number:	158814.PM.04	TAT:	STANDARD
Project Manager:	Tom Beisel	QA Level:	3
Address:	GNV: 3011 SW Williston Rd., Gainesville, FL 32605		
	ATL: 115 Perimeter Center Place NE, Suite 700, Atlanta, GA 30346-1278		
Send Report To:	see last page of COC	EDD:	CNC format

Lab Batch/SDG:

Sample ID	Station ID	Sample Description	Depth Begin	Depth End	Date & Time Collected	Matrix	# of containers	VOCs (SW8260B) 3 - 40mL vial, HCl	Sulfate (E300), nitrate (E300) 1 - 500 mL HDPE								Comments
166GW51DM4	K166GW51D	new, expect TD = 37'				WG		X	X								
166GW52DM4	K166GW52D	new, expect TD = 30'				WG		X	X								
163GW03MM4	K163GW03M	multi-well, sample @ 8'			5-20-02/ 0845	WG	3	X	~~X~~ 10								NO WATER - only
166GW16DM4	K166GW16D					WG		X	X								
166GWIN3M4	K166GWIN3					WG		X	X								
166GWTM3M4	K166GWTM3					WG		X	X								
166GWTM4M4	K166GWTM4					WG		X	X								
166GW026M4	K166GW026				5-20-02/1520	WG	3	X									
166GW026M4MS	K166GW026				5-20-02/1525	WG	3	X									MS
166GW026M4SD	K166GW026				5-20-02/1530	WG	3	X									MSD
166GW26DM4	K166GW26D				5-21-02/1050	WG	3	X									
166GW053M4	K166GW053	multi-well K166GW05M	14	28		WG		X									
166GW054M4	K166GW054	multi-well K166GW05M	28	29		WG		X									
166GW055M4	K166GW055	multi-well K166GW05M	29	31.5		WG		X									
166GW056M4	K166GW056	multi-well K166GW05M	31.5	33		WG		X									
166HW056M4	K166GW056	multi-well K166GW05M	33	35		WG		X									
166GW13DM4	K166GW13D					WG		X									
166GW25DM4	K166GW25D				5-20-02/1215	WG	3	X									
166GW25DM4	K166GW25D	change to "H"			5-20-02/1210	WG	3	X									
166HW14DM4	K166GW14D					WG		X									

Sampled By A.O, A.S, B.C, C.D Date/Time 5-20 ; 5-21-02 Relinquished by: Date/Time

Receipt Exceptions:

CH2M HILL Chain of Custody/ Laboratory Analysis Form

Additional Samplers:

Received By Lab: Date/Time

Received By: Date/Time

Remarks:

Relinquished by: Date/Time

Shipped Via: UPS FedEx Hand Other Tracking#:

Temperature:

Laboratory: GEL

Project Name: Charleston Navy Complex

Site Name: Zone K, SWMU 166

Project Number: 158814.PM.04

TAT: STANDARD

Project Manager: Tom Beisel

QA Level: 3

Address: GNV: 3011 SW Williston Rd., Gainesville, FL 32605

ATL: 115 Perimeter Center Place NE, Suite 700, Atlanta, GA 30348-1278

Send Report To: see last page of COC

EDD: CNC format

Lab Batch/SDG:

Sample ID	Station ID	Sample Description	Depth Begin	Depth End	Date & Time Collected	Matrix	# of containers	VOCs (SW8260B) 3 - 40mL vial, HCl	Sulfate (E300), nitrate (E300) 1 - 500 mL HDPE								Comments
166GW14DM4	K166GW14D					WG		X									
166GW017M4	K166GW017					WG		X									
166GW17DM4	K166GW17D					WG		X									
166GW17DM4MS	K166GW17D					WG		X									MS
166GW17DM4SD	K166GW17D					WG		X									MSD
166GW19DM4	K166GW19D					WG		X									
166GW21DM4	K166GW21D					WG		X									
698GW001M4	K698GW001					WG		X									
698HW001M4	K698GW001					WG		X									
163GW001M4	K163GW001					WG		X									
166EW33DM4	~~K166EW33D~~					WQ		X	X								EB
~~166TW33DM4~~	~~K166TW33D~~					WQ		X									TB
166EW34DM4	K166EW34D				5-20-02/1645	WQ	3	X	X								EB
166TW34DM4	K166TW34D				LAB supplied	WQ	3	X									TB
166EW026M4	K166EW026				5-21-02/1550	WQ	3	X									EB
166TW026M4	K166TW026				LAB supplied	WQ	3	X									TB
166GW06DM4	K166GW06D					WG		X									
166GW07DM4	K166GW07D				5-20-02/1300	WG	3	X									
166GW08D[illegible]	K166GW08D					WG		X									

Receipt Exceptions:

CH2M HILL Chain of Custody/ Laboratory Analysis Form

COC Tracking #: ZK166-051002-01 page 3 of 4

Laboratory: GEL

Project Name: Charleston Navy Complex

Site Name: Zone K, SWMU 166

Project Number: 158814.PM.04

TAT: STANDARD

Project Manager: Tom Beisel

QA Level: 3

Address: GNV: 3011 SW Williston Rd., Gainesville, FL 32605
ATL: 115 Perimeter Center Place NE, Suite 700, Atlanta, GA 30346-1278

Send Report To: see last page of COC

EDD: CNC format

Lab Batch/SDG: 60789% / 60790%

789%/60790%

Sample ID	Station ID	Sample Description	Depth Begin	Depth End	Date & Time Collected	Matrix	# of containers	VOCs (SW8260B) 3 - 40mL vial, HCl	Sulfate (E300), nitrate (E300) 1 - 500 mL HDPE								Comments
~~66GW14DM4~~	~~K166GW14D~~					WG		X									
~~66GW017M4~~	~~K166GW017~~					WG		X									
~~66GW17DM4~~	~~K166GW17D~~					WG		X									
~~6GW17DM4MS~~	~~K166GW17D~~					WG		X									MS
~~6GW17DM4SD~~	~~K166GW17D~~					WG		X									MSD
~~66GW19DM4~~	~~K166GW19D~~					WG		X									
~~698GW001M4~~	~~K698GW001~~					WG		X									
~~698HW001M4~~	~~K698GW001~~					WG		X									
163GW001M4	K163GW001				05-17-2002 / 0930	WG	3	X									
166EW33DM4	K166EW33D				05-17-2002 / 0935	WQ	3	X									EB
166EW33DM4	K166EW33D				5/20/2002 / 1530	WQ	1		X								See remarks
166TW33DM4	K166TW33D				5-17-2002 / 0800	WQ	3	X									TB
~~66EW34DM4~~	~~K166EW34D~~					WQ		X	X								EB
~~66TW34DM4~~	~~K166TW34D~~					WQ		X									TB
~~166EW026M4~~	~~K166EW026~~					WQ		X									EB
~~166TW026M4~~	~~K166TW026~~					WQ		X									TB
~~66GW06DM4~~	~~K166GW06D~~					WG		X									
~~66GW07DM4~~	~~K166GW07D~~					WG		X									
163GW003M4	K163GW003				5-20-2002 / 1530	WG	1	X	X								See remarks
163GW003M4	K163GW003				05-17-2001 / 1005	WG	3	X									

Gates Date/Time As Noted Relinquished by: [signature] Date/Time 5/21/02 1800

onal Samplers:

ved By Lab: [signature] Date/Time 5/21/02 1800 Relinquished by: / Date/Time

ved By Date/Time Shipped Via: UPS FedEx Hand Other Tracking#:

rks: Sulfate / Nitrate sample recollected on 5-20-2002 due to exceedence of holding time. Temperature:

Receipt Exceptions:

CH2M HILL Chain of Custody/ Laboratory Analysis Form

COC Tracking #: ZK166-051002-01 page 1 of 4

Laboratory:	GEL
Project Name:	Charleston Navy Complex
Site Name:	Zone K, SWMU 166
Project Number:	158814.PM.04
TAT:	STANDARD
Project Manager:	Tom Belsel
QA Level:	3
Address:	GNV: 3011 SW Williston Rd., Gainesville, FL 32605
	ATL: 115 Perimeter Center Place NE, Suite 700, Atlanta, GA 30346-1278
Send Report To:	see last page of COC
EDD:	CNC format

Lab Batch/SDG: 66879

Sample ID	Station ID	Sample Description	Depth Begin	Depth End	Date & Time Collected	Matrix	# of containers	VOCs (SW8260B) 3 - 40mL vial, HCl	Sulfate (E300), nitrate (E300) 1 - 500 mL HDPE	Comments
166GW33DM4	K166GW33D	new, expect TD = 36'				WG		X	X	RCRA
166GW34DM4	K166GW34D	new, expect TD = 32'				WG		X	X	
166GW35DM4	K166GW35D	new, expect TD = 37'				WG		X	X	
166GW36DM4	K166GW36D	new, expect TD = 30'				WG		X	X	
166GW37DM4	K166GW37D	new, expect TD = 35'				WG		X	X	
166GW38DM4	K166GW38D	new, expect TD = 35'				WG		X	X	Samples
166GW39DM4	K166GW39D	new, expect TD = 37'				WG		X	X	Still
166GW040M4	K166GW040	new, expect TD = 16'				WG		X	X	Not
166HW040M4	K166GW040	new, expect TD = 16'				WG		X	X	complete
166GW41DM4	K166GW41D	new, expect TD = 37'			5-22-02/0935	WG	4	X	X	on site.
166GW42DM4	K166GW42D	new, expect TD = 37'			5-22-02/0940	WG	4	X	X	
166GW43DM4	K166GW43D	new, expect TD = 36'			5-22-02/1000	WG	4	X	X	
166GW44DM4	K166GW44D	new, expect TD = 36'			5-22-02/0950	WG	4	X	X	
166GW45DM4	K166GW45D	new, expect TD = 36'				WG		X	X	
166GW46DM4	K166GW46D	new, expect TD = 36'				WG		X	X	
166GW47DM4	K166GW47D	new, expect TD = 31'				WG		X	X	
166GW48DM4	K166GW48D	new, expect TD = 36'				WG		X	X	
166GW49DM4	K166GW49D	new, expect TD = 37'				WG		X	X	
166GW50DM4	K166GW50D	new, expect TD = 37'				WG		X	X	
166HW50DM4	K166GW050D	new, expect TD = 37'				WG		X	X	

Sampled By Andrews, O. A. Stokes, C. Dees, B.C. Date/Time 5-22-02

Relinquished by: Date/Time

Additional Samplers:

Received By Lab: Date/Time

Relinquished by: Date/Time

Recei[illegible]ceptions: PKG 6/6

CH2M HILL Chain of Custody/ Laboratory Analysis Form

COC Tracking #: ZK166-051002-01 page 2 of 4

Received By: Date/Time

Remarks:

Shipped Via: UPS FedEx Hand Other Tracking#:

Temperature:

Laboratory: GEL

Project Name: Charleston Navy Complex

Site Name: Zone K, SWMU 166

Project Number: 158814.PM.04

TAT: STANDARD

Project Manager: Tom Beisel

QA Level: 3

Address: GNV: 3011 SW Williston Rd., Gainesville, FL 32605

ATL: 115 Perimeter Center Place NE, Suite 700, Atlanta, GA 30346-1278

Send Report To: see last page of COC

EDD: CNC format

Lab Batch/SDG:

Sample ID	Station ID	Sample Description	Depth Begin	Depth End	Date & Time Collected	Matrix	# of containers	VOCs (SW8260B) 3 - 40mL vial, HCl	Sulfate (E300), nitrate (E300) 1 - 500 mL HDPE								Comments
166GW51DM4	K166GW51D	new, expect TD = 37'				WG		X	X								
166GW52DM4	K166GW52D	new, expect TD = 30'				WG		X	X								RCRA
163GW03MM4	K163GW03M	multi-well, sample @ 8'				WG		X	X								
166GW16DM4	K166GW16D					WG		X	X								
166GWIN3M4	K166GWIN3					WG		X	X								
166GWTM3M4	K166GWTM3					WG		X	X								
166GWTM4M4	K166GWTM4					WG		X	X								
166GW026M4	K166GW026					WG		X									
166GW026M4MS	K166GW026					WG		X									MS
166GW026M4SD	K166GW026					WG		X									MSD
166GW26DM4	K166GW26D					WG		X									
166GW053M4	K166GW053	multi-well K166GW05M	14	18		WG		X									
166GW054M4	K166GW054	multi-well K166GW05M	18	29		WG		X									
166GW055M4	K166GW055	multi-well K166GW05M	29	31.5		WG		X									
166GW056M4	K166GW056	multi-well K166GW05M	31.5	33		WG		X									
166HW056M4	K166GW056	multi-well K166GW05M	33	35		WG		X									
166GW13DM4	K166GW13D				5-22-02/1140	WG	3	X									
166GW25DM4	K166GW25D					WG		X									
166GW25DM4	K166GW25D					WG		X									
166HW14DM4	K166GW14D					WG		X									

Sampled By A.O, A.S, B.C, C.D Date/Time 5-22-02

Relinquished by: Date/Time

Receipt Exceptions:

CH2M HILL Chain of Custody/ Laboratory Analysis Form

COC Tracking #: ZK166-051002-01 page 3 of 4

Additional Samplers:

Received By Lab: Date/Time

Received By: Date/Time

Remarks:

Relinquished by: Date/Time

Shipped Via: UPS FedEx Hand Other Tracking#:

Temperature:

Laboratory: GEL

Project Name: Charleston Navy Complex

Site Name: Zone K, SWMU 166

Project Number: 158814.PM.04

TAT: STANDARD

Project Manager: Tom Beisel

QA Level: 3

Address: GNV: 3011 SW Williston Rd., Gainesville, FL 32605

ATL: 115 Perimeter Center Place NE, Suite 700, Atlanta, GA 30346-1278

Send Report To: see last page of COC

EDD: CNC format

Lab Batch/SDG:

Sample ID	Station ID	Sample Description	Depth Begin	Depth End	Date & Time Collected	Matrix	# of containers	VOCs (SW8260B) 3 - 40mL vial, HCl	Sulfate (E300), nitrate (E300) 1 - 500 mL, HDPE	Comments
166GW14DM4	K166GW14D					WG		X		ALRA
166GW017M4	K166GW017					WG		X		
166GW17DM4	K166GW17D					WG		X		
166GW17DM4MS	K166GW17D					WG		X		MS
166GW17DM4SD	K166GW17D					WG		X		MSD
166GW19DM4	K166GW19D					WG		X		
166GW21DM4	K166GW21D					WG		X		
698GW001M4	K698GW001					WG		X		
698HW001M4	K698GW001					WG		X		
163GW001M4	K163GW001					WG		X		
166EW33DM4	K166EW33D					WQ		X	X	EB
166TW33DM4	K166TW33D					WQ		X		TB
166EW34DM4	K166EW34D					WQ		X	X	EB
166TW34DM4	K166TW34D					WQ		X		TB
166EW026M4	K166EW026					WQ		X		EB
166TW026M4	K166TW026					WQ		X		TB
166GW06DM4	K166GW06D					WG		X		
166GW07DM4	K166GW07D					WG		X		
166GW08DM4	K166GW08D				5-22-02/1425	WG	3	X		
166EW025DM4	K166EW35D				5-22-02/1431		3			

Recei ceptions:

NON . [illegible]

COC Tracking #: ZK166-051002-01 1 of 4

CH2M .L Chain of Custody/ Laboratory Analysis Form

Laboratory: GEL
Project Name: Charleston Navy Complex
Site Name: Zone K, SWMU 166
Project Number: 158814.PM.04
TAT: STANDARD
Project Manager: Tom Beisel
QA Level: 3
Address: GNV: 3011 SW Williston Rd., Gainesville, FL 32605
ATL: 115 Perimeter Center Place NE, Suite 700, Atlanta, GA 30346-1278
Send Report To: see last page of COC
EDD: CNC format

Lab Batch/SDG: 61044

Sample ID	Station ID	Sample Description	Depth Begin	Depth End	Date & Time Collected	Matrix	# of containers	VOCs (SW8260B) 3 - 40mL vial, HCl	Sulfate (E300), nitrate (E300) 1 - 500 mL HDPE								Comments
166GW33DM4	K166GW33D	new, expect TD = 36'				WG		X	X								
166GW34DM4	K166GW34D	new, expect TD = 32'				WG		X	X								
166GW35DM4	K166GW35D	new, expect TD = 37'				WG		X	X								
166GW36DM4	K166GW36D	new, expect TD = 30'				WG		X	X								
166GW37DM4	K166GW37D	new, expect TD = 35'				WG		X	X								
166GW38DM4	K166GW38D	new, expect TD = 35'			5-24-02/1420	WG	4	X	X								ADDED
166GW39DM4	K166GW39D	new, expect TD = 37'				WG		X	X								LATE @ GEL
166GW040M4	K166GW040	new, expect TD = 16'				WG		X	X								
166HW040M4	K166GW040	new, expect TD = 16'				WG		X	X								
166GW41DM4	K166GW41D	new, expect TD = 37'				WG		X	X								
166GW42DM4	K166GW42D	new, expect TD = 37'				WG		X	X								
166GW43DM4	K166GW43D	new, expect TD = 38'				WG		X	X								
166GW44DM4	K166GW44D	new, expect TD = 38'				WG		X	X								
166GW45DM4	K166GW45D	new, expect TD = 36'			5-23-02/1530	WG	4	X	X								
166GW46DM4	K166GW46D	new, expect TD = 38'				WG		X	X								
166GW47DM4	K166GW47D	new, expect TD = 31'			5-23-02/1025	WG	4	X	X								
166GW48DM4	K166GW48D	new, expect TD = 36'			5-23-02/1105	WG	4	X	X								
166GW49DM4	K166GW49D	new, expect TD = 37'				WG		X	X								
166GW50DM4	K166GW50D	new, expect TD = 37'				WG		X	X								
166HW50DM4	K166GW050D	new, expect TD = 37'				WG		X	X								

Sampled By: Andrew, O. A. Stokes, C. Deas, B.C. Date/Time: 5-23-02/5-22 Relinquished by: Date/Time:

Additional Samplers:

Received By Lab: [signature] Date/Time: 24 May 02/1425 Relinquished by: [signature] Date/Time: 5-24-02/1415

Receipt Exceptions: [initials] 6/10/02

C W HILL Chain of Custody/ Laboratory Analysis Form

COC Tracking #: ZK166-051002-01

of 4

Received By: Date/Time

Shipped Via: UPS FedEx Hand Other Tracking#:

Remarks:

Temperature:

Laboratory:	GEL		
Project Name:	Charleston Navy Complex	Site Name:	Zone K, SWMU 166
Project Number:	158814.PM.04	TAT:	STANDARD
Project Manager:	Tom Beisel	QA Level:	3
Address:	GNV: 3011 SW Williston Rd., Gainesville, FL 32605		
	ATL: 115 Perimeter Center Place NE, Suite 700, Atlanta, GA 30346-1278		
Send Report To:	see last page of COC	EDD:	CNC format

Lab Batch/SDG:

Sample ID	Station ID	Sample Description	Depth Begin	Depth End	Date & Time Collected	Matrix	# of containers	VOCs (SW8260B) 3 - 40mL vial, HCl	Sulfate (E300), nitrate (E300) 1 - 500 mL HDPE								Comments
166GW51DM4	K166GW51D	new, expect TD = 37'				WG		X	X								
166GW52DM4	K166GW52D	new, expect TD = 30'				WG		X	X								
163GW03MM4	K163GW03M	multi-well, sample @ 8'				WG		X	~~X~~								[illegible]
166GW16DM4	K166GW16D					WG		X	X								
166GWIN3M4	K166GWIN3					WG		X	X								RCRA
166GWTM3M4	K166GWTM3					WG		X	X								
166GWTM4M4	K166GWTM4				5-23-02/1550	WG	4	X	X								
166GW026M4	K166GW026					WG		X									
166GW026M4MS	K166GW026					WG		X									MS
166GW026M4SD	K166GW026					WG		X									MSD
166GW26DM4	K166GW26D					WG		X									
166GW053M4	K166GW053	multi-well K166GW05M	24	28		WG		X									
166GW054M4	K166GW054	multi-well K166GW05M	28	29		WG		X									
166GW055M4	K166GW055	multi-well K166GW05M	29	31.5		WG		X									
166GW056M4	K166GW056	multi-well K166GW05M	31.5	33		WG		X									
166HW056M4	K166GW056	multi-well K166GW05M	33	35		WG		X									
166GW13DM4	K166GW13D					WG		X									
166GW25DM4	K166GW25D					WG		X									
166GW25DM4	K166GW25D					WG		X									
166HW14DM4	K166GW14D				5-23-02/1230	WG	3	X									

Sampled By A.O, A.S, B.C, C.D Date/Time 5-21/22/02 Relinquished by: Date/Time

Receipt Exceptions:

C HILL Chain of Custody/ Laboratory Analysis Form

COC Tracking #: ZK166-051002-01 p 4

Additional Samplers:

Received By Lab: Date/Time

Received By: Date/Time

Remarks:

Relinquished by: Date/Time

Shipped Via: UPS FedEx Hand Other Tracking#:

Temperature.

Laboratory: GEL

Project Name: Charleston Navy Complex

Site Name: Zone K, SWMU 166

Project Number: 158814.PM.04

TAT: STANDARD

Project Manager: Tom Beisel

QA Level: 3

Address: GNV: 3011 SW Williston Rd., Gainesville, FL 32605

ATL: 115 Perimeter Center Place NE, Suite 700, Atlanta, GA 30346-1278

Send Report To: see last page of COC

EDD: CNC format

Lab Batch/SDG:

Sample ID	Station ID	Sample Description	Depth Begin	Depth End	Date & Time Collected	Matrix	# of containers	VOCs (SW8260B) 3 - 40mL vial, HCl	Sulfate (E300), nitrate (E300) 1 - 500 mL HDPE								Comments
166GW14DM4	K166GW14D	—			5-23-02/1230	WG	3	X									
166GW017M4	K166GW017					WG		X									
166GW17DM4	K166GW17D					WG		X									
166GW17DM4MS	K166GW17D					WG		X									MS
166GW17DM4SD	K166GW17D					WG		X									MSD
166GW19DM4	K166GW19D					WG		X									
166GW21DM4	K166GW21D					WG		X									
698GW001M4	K698GW001					WG		X									
698HW001M4	K698GW001					WG		X									
163GW001M4	K163GW001					WG		X									
166EW33DM4	K166EW33D					WQ		X	X								EB
166TW33DM4	K166TW33D					WQ		X									TB
166EW34DM4	K166EW34D					WQ		X	X								EB
166TW34DM4	K166TW34D					WQ		X									TB
166EW026M4	K166EW026					WQ		X									EB
166TW026M4	K166TW026					WQ		X									TB
166GW06DM4	K166GW06D	—			5-22-02/1400	WG	3	X									
166GW07DM4	K166GW07D					WG		X									
166GW08DM4	K166GW08D					WG		X									
166EW36DM4	K166EW36D	—			5-23-02/1610		3										AO ADDED EB

Receipt Exceptions:

166TW36DM4 added – vials received, but not listed on COC. AA

CH2M HILL Chain of Custody/ Laboratory Analysis Form

COC Tracking #: ZK166-051002-01 page

163GW005M4	K163GW005						WG	X						

Sampled By: Date/Time: Relinquished by: Date/Time:

Additional Samplers:

Received By Lab: Date/Time: Relinquished by: Date/Time:

Received By: Date/Time: Shipped Via: UPS FedEx Hand Other Tracking#:

Remarks: Temperature:

VOCs (SW8260B)
full CNC VOC list

Reports
Herb Kelly/GNV - 1 hardcopy, 1 CD
Tom Beisel/ATL - 1 CD
Brian Crawford/JAJ - 1 CD

Herb Kelly
3011 SW Williston Rd
Gainesville, FL 32608
Ph: (352) 335 - 5877 ext.2572
Fax: (352) 271 - 4811

Tom Beisel
115 Perimeter Center Place NE, Suite 700
Atlanta, GA 30346-1278
Ph: (770) 604 - 9182 ext.367
Fax: (770) 604 - 9183

JAJones - Brian Crawford and Jed Heames
CH2M-Jones, LLC
Charleston Naval Complex
1849 Avenue F
North Charleston, SC 29405

Receipt Exceptions:

Chain of Custody/ Laboratory Analysis Form

COC Tracking #: **ZK166-052302-01** page 1

Laboratory: GEL

Project Name: Charleston Navy Complex

Site Name: Zone K, SWMU 166

Project Number: 158814.PM.04

TAT: STANDARD

Project Manager: Tom Beisel

QA Level: 3

Address: GNV: 3011 SW Williston Rd., Gainesville, FL 32605

ATL: 115 Perimeter Center Place NE, Suite 700, Atlanta, GA 30346-1278

Send Report To: see last page of COC

EDD: CNC format

Lab Batch/SDG: 61044

Sample ID	Station ID	Sample Description	Depth Begin	Depth End	Date & Time Collected	Matrix	# of containers	VOCs (SW8260B) 3 - 40mL vial, HCl										Comments
K166ZDRM1MS	K166ZDRM1	166 water drum 1			5-24-02/1300	WW		X										Samples complete

Sampled By: Aaron Stokes

Date/Time: 5-24-02 1300

Relinquished by:

Date/Time

Additional Samplers:

Received By Lab:

Date/Time

Relinquished by:

Date/Time

Received By:

Date/Time

Shipped Via: UPS FedEx Hand Other Tracking#:

Remarks:

Temperature:

Receipt Exceptions: PMG

Kelly, Herb/GNA

From: Anna White [akw@gel.com]
Sent: May 24, 2002 5:15 PM
To: Kelly, Herb/GNA
Cc: Wendi Lane
Subject: Zone K, SWMU 166

Herb,

As we discussed, GEL received 2 COCs for this site today, which will be included under 1 SDG.

We received 3 VOA vials for Sample ID166TW36DM4, which was not documented on the COC. GEL will proceed with analysis on this sample.

--
Anna K. White
Federal Project Manager
General Engineering Laboratories, Inc.
2040 Savage Road
Charleston, SC 29407
(843) 556-8171
(843) 766-1178 (fax)

CH2M ' Chain of Custody/ Laboratory Analysis Form

COC Tracking #: ZK166-051002-01 page

Laboratory: GEL

Project Name: Charleston Navy Complex

Site Name: Zone K, SWMU 166

Project Number: 158814.PM.04

TAT: STANDARD

Project Manager: Tom Beisel

QA Level: 3

Address: GNV: 3011 SW Williston Rd., Gainesville, FL 32605

ATL: 115 Perimeter Center Place NE, Suite 700, Atlanta, GA 30346-1278

Send Report To: see last page of COC

EDD: CNC format

Lab Batch/SDG: 61134

Sample ID	Station ID	Sample Description	Depth Begin	Depth End	Date & Time Collected	Matrix	# of containers	VOCs (SW8260B) 3 - 40mL vial, HCl	Sulfate (E300), nitrate (E300) 1 - 500 mL HDPE							Comments
166GW33DM4	K166GW33D	new, expect TD = 36'				WG		X	X							
166GW34DM4	K166GW34D	new, expect TD = 32'				WG		X	X							RCRA
166GW35DM4	K166GW35D	new, expect TD = 37'				WG		X	X							
166GW36DM4	K166GW36D	new, expect TD = 30'			5-28-02/0925	WG	4	X	X							
166GW37DM4	K166GW37D	new, expect TD = 35'				WG		X	X							
166GW38DM4	K166GW38D	new, expect TD = 35'				WG		X	X							
166GW39DM4	K166GW39D	new, expect TD = 37'				WG		X	X							
166GW040M4	K166GW040	new, expect TD = 16'				WG		X	X							
166HW040M4	K166GW040	new, expect TD = 16'				WG		X	X							
166GW41DM4	K166GW41D	new, expect TD = 37'				WG		X	X							
166GW42DM4	K166GW42D	new, expect TD = 37'				WG		X	X							
166GW43DM4	K166GW43D	new, expect TD = 36'				WG		X	X							NOTE: EW
166GW44DM4	K166GW44D	new, expect TD = 36'				WG		X	X							166EW46D added
166GW45DM4	K166GW45D	new, expect TD = 36'				WG		X	X							
166GW46DM4	K166GW46D	new, expect TD = 36'			5-28-02/1205	WG	4	X	X							
166GW47DM4	K166GW47D	new, expect TD = 31'				WG		X	X							
166GW48DM4	K166GW48D	new, expect TD = 36'				WG		X	X							
166GW49DM4	K166GW49D	new, expect TD = 37'			5-28-02/1635	WG	4	X	X							
166GW50DM4	K166GW50D	new, expect TD = 37'				WG		X	X							
166HW50DM4	K166GW050D	new, expect TD = 37'			5/28/17:10	WG		X	X							

166EW46DM4, K166EW46D

Sampled By: A. O'Connor

Date/Time: 5-28-02

Relinquished by:

Date/Time

Additional Samplers: C. Deas

Received By Lab:

Date/Time

Relinquished by:

Date/Time

Received By:

Date/Time

Shipped Via: UPS FedEx Hand Other Tracking#:

Remarks:

Temperature:

Receipt Exceptions: PLa 6/15/02

C. I HILL Chain of Custody/ Laboratory Analysis Form

COC Tracking #: ZK166-051002-01 pag of 4

Lab Batch/SDG: 61170

Laboratory:	GEL
Project Name:	Charleston Navy Complex
Site Name:	Zone K, SWMU 166
Project Number:	158814.PM.04
TAT:	STANDARD
Project Manager:	Tom Beisel
QA Level:	3
Address:	GNV: 3011 SW Williston Rd., Gainesville, FL 32605
	ATL: 115 Perimeter Center Place NE, Suite 700, Atlanta, GA 30346-1278
Send Report To:	see last page of COC
EDD:	CNC format

Sample ID	Station ID	Sample Description	Depth Begin	Depth End	Date & Time Collected	Matrix	# of containers	VOCs (SW8260B) 3 - 40mL vial, HCl	Sulfate (E300), nitrate (E300) 1 - 500 mL HDPE							Comments
166GW33DM4	K166GW33D	new, expect TD = 36'				WG		X	X							
166GW34DM4	K166GW34D	new, expect TD = 32'				WG		X	X							RCRA
166GW35DM4	K166GW35D	new, expect TD = 37'				WG		X	X							
166GW36DM4	K166GW36D	new, expect TD = 30'				WG		X	X							
166GW37DM4	K166GW37D	new, expect TD = 36'				WG		X	X							
166GW38DM4	K166GW38D	new, expect TD = 36'				WG		X	X							
166GW39DM4	K166GW39D	new, expect TD = 37'				WG		X	X							
166GW040M4	K166GW040	new, expect TD = 16'				WG		X	X							
166HW040M4	K166GW040	new, expect TD = 16'				WG		X	X							
166GW41DM4	K166GW41D	new, expect TD = 37'				WG		X	X							
166GW42DM4	K166GW42D	new, expect TD = 37'				WG		X	X							
166GW43DM4	K166GW43D	new, expect TD = 36'				WG		X	X							
166GW44DM4	K166GW44D	new, expect TD = 36'				WG		X	X							
166GW45DM4	K166GW45D	new, expect TD = 36'				WG		X	X							
166GW46DM4	K166GW46D	new, expect TD = 36'				WG		X	X							
166GW47DM4	K166GW47D	new, expect TD = 31'				WG		X	X							
166GW48DM4	K166GW48D	new, expect TD = 36'				WG		X	X							
166GW49DM4	K166GW49D	new, expect TD = 37'				WG		X	X							
166GW50DM4	K166GW50D	new, expect TD = 37'			5-29-02/1315	WG	4	X	X							
~~166HW50DM4~~	~~K166GW050D~~	~~new, expect TD = 37'~~				~~WG~~		~~X~~	~~X~~							NO HW on 50 pm/AO

Sampled By: Andrew O'Connor Date/Time: 5-29-02

Relinquished by: Date/Time

Additional Samplers: C. Deas

Received By Lab: Date/Time

Relinquished by: Date/Time

Received By: Date/Time

Shipped Via: UPS FedEx Hand Other Tracking#:

Remarks:

Temperature:

Receipt Exceptions: PRG 6/15/02

C HILL Chain of Custody/ Laboratory Analysis Form

COC Tracking #: ZK166-051002-01 pe

Laboratory:	GEL
Project Name:	Charleston Navy Complex
Site Name:	Zone K, SWMU 166
Project Number:	158814.PM.04
TAT:	STANDARD
Project Manager:	Tom Beisel
QA Level:	3
Address:	GNV: 3011 SW Williston Rd., Gainesville, FL 32605
	ATL: 115 Perimeter Center Place NE, Suite 700, Atlanta, GA 30346-1278
Send Report To:	see last page of COC
EDD:	CNC format

Lab Batch/SDG:

Sample ID	Station ID	Sample Description	Depth Begin	Depth End	Date & Time Collected	Matrix	# of containers	VOCs (SW8260B) 3 - 40mL vial, HCl	Sulfate (E300), nitrate (E300) 1 - 500 mL HDPE								Comments
166GW51DM4	K166GW51D	new, expect TD = 37'			5-29-02/1125	WG	4	X	X								
166GW52DM4	K166GW52D	new, expect TD = 30'			5-29-02/1115	WG	4	X	X								
163GW03MM4	K163GW03M	multi-well, sample @ 8'				WG		X	X								
166GW16DM4	K166GW16D					WG		X	X								
166GWIN3M4	K166GWIN3					WG		X	X								
166GWTM3M4	K166GWTM3				5-29-02/1345	WG	4	X	X								
166GWTM4M4	K166GWTM4					WG		X	X								
166GW026M4	K166GW026					WG		X									
166GW026M4MS	K166GW026					WG		X									MS
166GW026M4SD	K166GW026					WG		X									MSD
166GW26DM4	K166GW26D					WG		X									
166GW053M4	K166GW053	multi-well K166GW05M				WG		X									
166GW054M4	K166GW054	multi-well K166GW05M				WG		X									
166GW055M4	K166GW055	multi-well K166GW05M				WG		X									
166GW056M4	K166GW056	multi-well K166GW05M				WG		X									
166HW056M4	K166GW056	multi-well K166GW05M				WG		X									
166GW13DM4	K166GW13D					WG		X									
166GW25DM4	K166GW25D					WG		X									
166GW25DM4	K166GW25D					WG		X									
166HW14DM4	K166GW14D					WG		X									

Sampled By: A. O Date/Time: 5-29-02 Relinquished by: Date/Time

Additional Samplers: C. D

Received By Lab: Date/Time Relinquished by: Date/Time

Received By: Date/Time Shipped Via: UPS FedEx Hand Other Tracking#:

Remarks: Temperature:

Receipt Exceptions:

C. I HILL Chain of Custody/ Laboratory Analysis Form

COC Tracking #: ZK166-051002-01 page ^ 14

Laboratory: GEL

Project Name: Charleston Navy Complex

Site Name: Zone K, SWMU 166

Project Number: 158814.PM.04

TAT: STANDARD

Project Manager: Tom Beisel

QA Level: 3

Address: GNV: 3011 SW Williston Rd., Gainesville, FL 32605

ATL: 115 Perimeter Center Place NE, Suite 700, Atlanta, GA 30346-1278

Send Report To: see last page of COC

EDD: CNC format

Lab Batch/SDG:

Sample ID	Station ID	Sample Description	Depth Begin	Depth End	Date & Time Collected	Matrix	# of containers	VOCs (SW8260B) 3 - 40mL vial, HCl	Sulfate (E300), nitrate (E300) 1 - 500 mL HDPE							Comments
166GW14DM4	K166GW14D					WG		X								
166GW017M4	K166GW017					WG		X								
166GW17DM4	K166GW17D					WG		X								
166GW17DM4MS	K166GW17D					WG		X								MS
166GW17DM4SD	K166GW17D					WG		X								MSD
166GW19DM4	K166GW19D					WG		X								
166GW21DM4	K166GW21D					WG		X								
698GW001M4	K698GW001					WG		X								
698HW001M4	K698GW001					WG		X								
163GW001M4	K163GW001					WG		X								
166EW33DM4	K166EW33D					WQ		X	X							EB
166TW33DM4	K166TW33D					WQ		X								TB
166EW34DM4	K166EW34D					WQ		X	X							EB
~~166TW34DM4~~	~~K166TW34D~~	166TWS1DM4			Lab Supplied	WQ	3	X								TB *
~~166EW026M4~~	~~K166EW026~~	166EN50DM4			5-29-02/1440	WQ	3	X								EB * ADDED TO CHAIN.
~~166TW026M4~~	~~K166TW026~~					WQ		X								TB
166GW06DM4	K166GW06D					WG		X								
166GW07DM4	K166GW07D					WG		X								
166GW08DM4	K166GW08D					WG		X								
163GW005M4	K163GW005					WG		X								

Sampled By: A.D

Date/Time: 5-29-02

Additional Samplers: C.D

Relinquished by: Date/Time

Received By Lab:

Received By: Date/Time

Relinquished by: Date/Time

Remarks: Date/Time

Shipped Via: UPS FedEx Hand Other Tracking#:

Receipt Exceptions:

Temperature:

CH. L Chain of Custody/ Laboratory Analysis Form

COC Tracking #: ZK166-051002-01 page 2 of 4

Laboratory: GEL

Project Name: Charleston Navy Complex

Site Name: Zone K, SWMU 166

Project Number: 158614.PM.04

TAT: STANDARD

Project Manager: Tom Beisel

QA Level: 3

Address: GNV: 3011 SW Williston Rd., Gainesville, FL 32605

ATL: 115 Perimeter Center Place NE, Suite 700, Atlanta, GA 30346-1278

Send Report To: see last page of COC

EDD: CNC format

Lab Batch/SDG: 61258

Sample ID	Station ID	Sample Description	Depth Begin	Depth End	Date & Time Collected	Matrix	# of containers	VOCs (SW8260B) 3 - 40mL vial, HCl	Sulfate (E300), nitrate (E300) 1 - 500 mL HDPE								Comments
166GW51DM4	K166GW51D	new, expect TD = 37'				WG		X	X								RUSH
166GW52DM4	K166GW52D	new, expect TD = 30'				WG		X	X								
AO ~~163GW03MM4~~	~~K166GW03M~~	~~multi-well sample~~			5-30-02/1645	WG	4	X	X								16D Duplicate
166GW16DM4	K166GW16D				5-30-02/1640	WG	4	X	X								Sample
166GWIN3M4	K166GWIN3				5-30-02/1135	WG	4	X	X								
166GWTM3M4	K166GWTM3					WG		X	X								
166GWTM4M4	K166GWTM4					WG		X	X								
166GW026M4	K166GW026					WG		X									
166GW026M4MS	K166GW026					WG		X									MS
166GW026M4SD	K166GW026					WG		X									MSD
166GW26DM4	K166GW26D					WG		X									
166GW053M4	K166GW053	multi-well K166GW05M			5-30-02/1905	WG	3	X									
166GW054M4	K166GW054	multi-well K166GW05M			5-30-02/1435	WG	3	X									
166GW055M4	K166GW055	multi-well K166GW05M			5-30-02/1455	WG	3	X									
166GW~~056~~55M4	K166GW~~056~~55	multi-well K166GW05M			5-30-02/1500	WG	3	X									Dup is 55
166HW056M4	K166GW056	multi-well K166GW05M				WG		X									
166GW13DM4	K166GW13D					WG		X									
166GW25DM4	K166GW25D					WG		X									
166GW25DM4	K166GW25D					WG		X									
166HW14DM4	K166GW14D					WG		X									

Sampled By: Andrew O'Connor Date/Time: 5-30-02/

Additional Samplers: C. DEAS

Received By Lab: Date/Time

Received By: Date/Time

Remarks:

Relinquished by: Date/Time

Relinquished by: Date/Time

Shipped Via: UPS FedEx Hand Other Tracking#:

Temperature:

Receipt Exceptions: PLE 6/17

Laboratory: GEL

Project Name: Charleston Navy Complex

Site Name: Zone K, SWMU 168

Project Number: 158814.PM.04

TAT: STANDARD

Project Manager: Tom Beisel

QA Level: 3

Address: GNV: 3011 SW Williston Rd., Gainesville, FL 32608

ATL: 115 Perimeter Center Place NE, Suite 700, Atlanta, GA 30346-1278

Send Report To: see last page of COC

EDD: CNC format

Lab Batch/SDG:

Sample ID	Station ID	Sample Description	Depth Begin	Depth End	Date & Time Collected	Matrix	# of containers	VOCs (SW8260B) 3 - 40mL vial, HCl	Sulfate (E300), nitrate (E300) 1 - 500 mL HDPE								Comments
166GW14DM4	K166GW14D					WG		X									
166GW017M4	K166GW017					WG		X									
166GW17DM4	K166GW17D					WG		X									
166GW17DM4MS	K166GW17D					WG		X									MS
166GW17DM4SD	K166GW17D					WG		X									MSD
166GW19DM4	K166GW19D					WG		X									
166GW21DM4	K166GW21D					WG		X									
698GW001M4	K698GW001				5-30-02/1205	WG	3	X									
698HW001M4	K698GW001				5-30-02/1210	WG	3	X									
163GW001M4	K163GW001					WG		X									
166EW33DM4	K166EW33D					WQ		X	X								EB
166TW33DM4	K166TW33D					WQ		X									TB
166EW34DM4	K166EW34D					WQ		X	X								EB
166TW34DM4	K166TW34D					WQ		X									TB
~~166EW026M4~~	~~K166EW026~~	166EW6DM4			K166EW26D	WQ	3	X	5-30-02/1730								EB New EB
166TW026M4	K166TW026					WQ		X									TB
166GW06DM4	K166GW06D					WG		X									
166GW07DM4	K166GW07D					WG		X									
166GW08DM4	K166GW08D					WG		X									
163GW005M4	K163GW005				5-30-02/1310	WG	3	X									

Sampled By: AO

Date/Time: 5-30-02

Relinquished by:

Date/Time

Additional Samplers: CP

Received By Lab.

Date/Time

Relinquished by:

Date/Time

Received By:

Date/Time

Shipped Via: UPS FedEx Hand Other Tracking#:

Remarks:

Temperature:

R t Exceptions:

CH2M HILL Chain of Custody/ Laboratory Analysis Form

COC Tracking #: ZK166-051002-01 page 3 of 4

Laboratory: GEL

Project Name: Charleston Navy Complex

Site Name: Zone K, SWMU 166

Project Number: 158814.PM.04

TAT: STANDARD

Project Manager: Tom Beisel

QA Level: 3

Address: GNV: 3011 SW Williston Rd., Gainesville, FL 32605

ATL: 115 Perimeter Center Place NE, Suite 700, Atlanta, GA 30346-1278

Send Report To: see last page of COC

EDD: CNC format

Lab Batch/SDG: 61326

Sample ID	Station ID	Sample Description	Depth Begin	Depth End	Date & Time Collected	Matrix	# of containers	VOCs (SW8260B) 3 - 40mL Vial, HCl	Sulfate (E300), nitrate (E300) 1 - 500 mL HDPE								Comments
166GW14DM4	K166GW14D					WG		X									RLRA
166GW017M4	K166GW017				5-31-02/1040	WG	3	X									
166GW17DM4	K166GW17D				5-31-02/1025	WG	3	X									
166GW17DM4MS	K166GW17D				5-31-02/1030	WG		X									MS
166GW17DM4SD	K166GW17D				5-31-02/1035	WG		X									MSD
166GW19DM4	K166GW19D				5-31-02/1205	WG	3	X									
166GW21DM4	K166GW21D				5-31-02/1235	WG	3	X									
698GW001M4	K698GW001					WG		X									
698HW001M4	K698GW001					WG		X									
163GW001M4	K163GW001					WG		X									
166EW33DM4	K166EW33D					WQ		X	X								EB
166TW33DM4	K166TW33D					WQ		X									TB
166EW34DM4	K166EW34D					WQ		X	X								EB
166TW34DM4	K166TW34D					WQ		X									TB
~~166EW026M4~~	~~K166EW026~~	166EW17M4			5-31-02 / 1240	WQ	3	X									EB ADD EW17
~~166TW026M4~~	~~K166TW026~~	166TW21DM4			Lab supplied	WQ	3	X									TB ADD TW21C
166GW06DM4	K166GW06D					WG		X									TO CHAIN
166GW07DM4	K166GW07D					WG		X									
166GW08DM4	K166GW08D					WG		X									
163GW005M4	K163GW005					WG		X									

Sampled By: ANDREW O'CONNOR Date/Time: 5-31-02

Additional Samplers: C. DEAS

Relinquished by: Date/Time

Received By Lab: Date/Time

Relinquished by: Date/Time

Received By: Date/Time

Shipped Via: UPS FedEx Hand Other Tracking#:

Remarks: PLL 6/17

Temperature:

CH2M HILL Chain of Custody/ Laboratory Analysis Form

COC Tracking #: **ZK166-060602-01** page 1 of 2

Laboratory: GEL

Project Name: Charleston Navy Complex

Site Name: Zone K, SWMU 166

Project Number: 158814.PM.04

TAT: 7 day TAT

Project Manager:

QA Level: 3

Address: GNV: 3011 SW Williston Rd., Gainesville, FL 32605

ATL: 115 Perimeter Center Place NE, Suite 700, Atlanta, GA 30346-1278

Send Report To: see last page of COC

EDD: CNC format

Lab Batch/SDG: 67650

Sample ID	Station ID	Sample Description	Depth Begin	Depth End	Date & Time Collected	Matrix	# of containers	VOCs (SW8260B) 3 - 40mL vial, HCl	Sulfate (E300), nitrate (E300), chloride (SW9056) 1 - 500 mL HDPE	Iron (SW6010B) 250 mL HDPE, HNO3							Comments
166GW27DM6	K166GW27D				6-24-02/1145	WG	5	X	X	X							
166GW27DM6MS	K166GW27D				6-24-02/1150	WG	5	X	X	X							MS
166GW27DM6SD	K166GW27D				6-24-02/1155	WG	5	X	X	X							MSD
166GW28DM6	K166GW28D				6-24-02/1220	WG	5	X	X	X							samples
166GW29DM6	K166GW29D				6-24-02/1425	WG	5	X	X	X							complete
166GW30DM6	K166GW30D				6-24-02/1455	WG	5	X	X	X							
166GW31DM6	K166GW31D				6-25-02/1005	WG	5	X	X	X							RCRA
166HW31DM6	K166GW31D				6-25-02/1010	WG	5	X	X	X							
166GW32DM6	K166GW32D				6-25-02/1015	WG	5	X	X	X							
166EW27DM6	K166EW27D				6-24-02/1530	WG	5	X	X	X							EB
166TW27DM6	K166TW29D				LAB supplied	WG	3	X									TB

Sampled By: Andrew O'Connor

Date/Time: 6-24/6-25-02

Relinquished by:

Date/Time

Additional Samplers: A. Sather, C. Dean, R. Bitely

Received By Lab:

Date/Time

Relinquished by:

Date/Time

Received By:

Date/Time

Shipped Via: UPS FedEx Hand Other Tracking#:

Remarks:

Temperature:

M HILL Chain of Custody/ Laboratory Analysis Form

COC Tracking #: ZK166-072202-01

Laboratory: GEL

Project Name: Charleston Navy Complex

Site Name: Zone K, SWMU 168

Project Number: 158814.PM.04

TAT: STANDARD

Project Manager: Tom Beisel

QA Level: 3

Address: GNV: 3011 SW Williston Rd., Gainesville, FL 32605

ATL: 115 Perimeter Center Place NE, Suite 700, Atlanta, GA 30346-1278

Send Report To: see last page of COC

EDD: CNC format

Lab Batch/SDG: 64473

Sample ID	Station ID	Sample Description	Depth Begin	Depth End	Date & Time Collected	Matrix	# of containers	VOCs (SW8260B) 3 - 40mL vial, HCl	Sulfate (E300), nitrate (E300) 1 - 500 mL HDPE							Comments
163GW003M7	K163GW003					WG		X	X							
163GW03MM7	K163GW03M					WG		X	X							
166GW040M7	K166GW040					WG		X	X							
166HW040M7	K166GW040					WG		X	X							RCRA
166GW16DM7	K166GW16D				7/30/02 0920	WG	4	X	X							site
166GW33DM7	K166GW33D					WG		X	X							
166GW34DM7	K166GW34D					WG		X	X							Sampling
166GW35DM7	K166GW35D					WG		X	X							in
166GW36DM7	K166GW36D					WG		X	X							progress
166GW37DM7	K166GW37D					WG		X	X							
166GW38DM7	K166GW38D					WG		X	X							
166GW39DM7	K166GW39D					WG		X	X							
166GW41DM7	K166GW41D					WG		X	X							
166GW42DM7	K166GW42D					WG		X	X							
166GW43DM7	K166GW43D					WG		X	X							
166GW44DM7	K166GW44D					WG		X	X							
166GW45DM7	K166GW45D					WG		X	X							
166GW46DM7	K166GW46D					WG		X	X							
166GW47DM7	K166GW47D					WG		X	X							
166GW48DM7	K166GW48D					WG		X	X							

Sampled By: Guy D Hillis

Date/Time: 7/30/02 1830

Relinquished by: Guy D Hillis

Date/Time: 7/31/02 0830

Additional Samplers: Ryan Bittly, Kim Murphy

Received By Lab:

Date/Time

Relinquished by:

Date/Time

Received By:

Date/Time

Remarks:

Shipped Via: UPS FedEx ~~Hand~~ Other Tracking#:

Temperature:

Receipt Exceptions: PKG 8/7/02

CH2M HILL Chain of Custody/ Laboratory Analysis Form

COC Tracking #: ZK166-072202-01

Laboratory: GEL

Project Name: Charleston Navy Complex

Site Name: Zone K, SWMU 166

Project Number: 158814.PM.04

TAT: STANDARD

Project Manager: Tom Beisel

QA Level: 3

Address: GNV: 3011 SW Williston Rd., Gainesville, FL 32605

ATL: 115 Perimeter Center Place NE, Suite 700, Atlanta, GA 30348-1278

Send Report To: see last page of COC

EDD: CNC format

Lab Batch/SDG:

Sample ID	Station ID	Sample Description	Depth Begin	Depth End	Date & Time Collected	Matrix	# of containers	VOCs (SW8260B) 3 - 40mL vial, HCl	Sulfate (E300), nitrate (E300) 1 - 500 mL HDPE							Comments
166GW49DM7	K166GW49D					WG		X	X							
166GW50DM7	K166GW50D				7/30/02 1630	WG	4	X	X							
166HW50DM7	K166GW50D				7/30/02 [illegible]	WG	4	X	X							
166GW51DM7	K166GW51D				7/30/02 1150	WG	4	X	X							
166GW52DM7	K166GW52D				7/30/02 1210	WG	4	X	X							
166GWIN3M7	K166GWIN3				7/30/02 1640	WG	4	X	X							
166GWTM3M7	K166GWTM3				7/30/02 1445	WG	4	X	X							
166GWTM4M7	K166GWTM4				7/30/02 1420	WG	4	X	X							
163EW003M7	K163EW003				7/30/02 1800	WQ	4	X	X							EB
163TW003M7	K163TW003				7/30/02 [illegible]	WQ	3	X								TB
166EW040M7	K166EW040					WQ		X	X							EB
166TW040M7	K166TW040					WQ		X								TB

Sampled By: Guy Drilling

Date/Time: 7/30/02 1630

Relinquished by: Guy Drilling

Date/Time: 7/31/02 [illegible]

Additional Samplers: Ryan Bitely, Kim Murphy

Received By Lab:

Date/Time

Relinquished by:

Date/Time

Received By:

Date/Time

Shipped Via: UPS FedEx Hand Other Tracking#:

Remarks:

Temperature:

Point Exceptions:

CH2M HILL Chain of Custody/ Laboratory Analysis Form

COC Tracking #: ZK166-072202-03 page 1 of 3

Laboratory: GEL

Project Name: Charleston Navy Complex

Site Name: Zone K, SWMU 166

Project Number: 158814.PM.04

TAT: STANDARD

Project Manager: Tom Beisel

QA Level: 3

Address: GNV: 3011 SW Williston Rd., Gainesville, FL 32605

ATL: 115 Perimeter Center Place NE, Suite 700, Atlanta, GA 30346-1278

Send Report To: see last page of COC

EDD: CNC format

Lab Batch/SDG: 64475

Sample ID	Station ID	Sample Description	Depth Begin	Depth End	Date & Time Collected	Matrix	# of containers	VOCs (SW8260B) 3 - 40mL vial, HCl	Sulfate (E300), nitrate (E300) 1 - 500 mL HDPE	Comments
163GW001M7	K163GW001				7/29/02 1620	WG	3	X		
163GW005M7	K163GW005				7/29/02 1630	WG	3	X		
166GW017M7	K166GW017				7/30/02 1025	WG	3	X		
166GW026M7	K166GW026				7/29/02 1150	WG	3	X		RCRA S.6
166GW026M7MS	K166GW026				7/29/02 1150	WG	3	X		Sampling
166GW026M7SD	K166GW026				7/29/02 1150	WG	3	X		in
166GW053M7	K166GW053				7/29/02 1255	WG	3	X		progress
166GW054M7	K166GW054				7/29/02 1245	WG	3	X		
166GW055M7	K166GW055				7/29/02 1235	WG	3	X		
~~166GW056M7~~	~~K166GW056~~				~~7/29/02~~	~~WG~~	~~3~~	~~X~~		no water ~~[illegible]~~
#10 166GW055M7	K166GW055	changed to "HW"			7/29/02 1235	WG	3	X		
166GW06DM7	K166GW06D					WG		X		
166GW07DM7	K166GW07D				7/29/02 1705	WG	3	X		
166GW08DM7	K166GW08D				7/30/02 1815	WG	3	X		
166GW13DM7	K166GW13D				7/29/02 1520	WG	3	X		
166HW13DM7	K166GW13D				7/29/02 —	WG	3	X		
166GW14DM7	K166GW14D				7/29/02 1800	WG	3	X		
166GW17DM7	K166GW17D				7/30/02 0950	WG	3	X		
166GW17DM7MS	K166GW17D				7/30/02 0950	WG	3	X		
166GW17DM7SD	K166GW17D				7/30/02 0950	WG	3	X		

Sampled By: [signature] Date/Time: 7/29-30/02 1830 Relinquished by: [signature] Date/Time: 7/30/02 0830

Additional Samplers: Ryan Bitely, Kim Murphy

Received By Lab: Date/Time: Relinquished by: Date/Time:

Received By: Date/Time: Shipped Via: UPS FedEx Hand Other Tracking#:

Remarks: PKG 8/17/02 Temperature:

Receipt Exceptions:

CH2M HILL Chain of Custody/ Laboratory Analysis Form

Laboratory: GEL

Project Name: Charleston Navy Complex

Site Name: Zone K, SWMU 166

Project Number: 158814.PM.04

TAT: STANDARD

Project Manager: Tom Beisel

QA Level: 3

Address: GNV: 3011 SW Williston Rd., Gainesville, FL 32605

ATL: 115 Perimeter Center Place NE, Suite 700, Atlanta, GA 30346-1278

Send Report To: see last page of COC

EDD: CNC format

Lab Batch/SDG:

Sample ID	Station ID	Sample Description	Depth Begin	Depth End	Date & Time Collected	Matrix	# of containers	VOCs (SW8260B) 3 - 40mL vial, HCl	Sulfate (E300), nitrate (E300) 1 - 500 mL HDPE	Comments
166GW19DM7	K166GW19D					WG		X		
166GW21DM7	K166GW21D					WG		X		
166GW25DM7	K166GW25D					WG		X		
166GW26DM7	K166GW26D				7/29/02 1225	WG	3	X		
698GW001M7	K698GW001					WG		X		
698HW001M7	K698GW001					WG		X		
166EW017M7	K166EW017				7/29/02 1810	WG	3	X		EB
166TW017M7	K166TW017					WG		X		TB See chain
166EW026M7	K166EW026					WG		X		EB w/ nitrate
166TW026M7	K166TW026					WG		X		TB

Sampled By: [signature] Date/Time: ~~7/29/02~~ 7/30/02 1830

Relinquished by: [signature] Date/Time: 7/31/02 0830

Additional Samplers: Ryan Bitely Kim Murphy

Received By Lab: Date/Time:

Relinquished by: Date/Time:

Received By: Date/Time:

Shipped Via: UPS FedEx Hand Other Tracking#:

Remarks:

Temperature:

Shipment Exceptions:

CH2M HILL Chain of Custody/ Laboratory Analysis Form

COC Tracking #: ZK166-072202 page 1 of 3

Laboratory: GEL

Project Name: Charleston Navy Complex

Site Name: Zone K, SWMU 166

Project Number: 158814.PM.04

TAT: STANDARD

Project Manager: Tom Beisel

QA Level: 3

Address: GNV: 3011 SW Williston Rd., Gainesville, FL 32605

ATL: 115 Perimeter Center Place NE, Suite 700, Atlanta, GA 30346-1278

Send Report To: see last page of COC

EDD: CNC format

Lab Batch/SDG: 64550%

64550%

	Sample ID	Station ID	Sample Description	Depth Begin	Depth End	Date & Time Collected	Matrix	# of containers	VOCs (SW8260B) 3 - 40mL vial, HCl	Sulfate (E300), nitrate (E300) 1 - 500 mL HDPE								Comments
	163GW003M7	K163GW003					WG		X	X								
	163GW03MM7	K163GW03M					WG		X	X								
	166GW040M7	K166GW040					WG		X	X								
	166HW040M7	K166GW040					WG		X	X								
	~~166GW16DM7~~	~~K166GW16D~~				~~7/30/02 0920~~	~~WG~~	~~4~~	~~X~~	~~X~~								
	166GW33DM7	K166GW33D					WG		X	X								
003	~~166GW34DM7~~	~~K166GW34D~~				~~7/31/02 1735~~	~~WG~~	~~4~~	~~X~~	~~X~~							*	Valid Sam
	166GW35DM7	K166GW35D					WG		X	X								on 7/31/02
004	166GW36DM7	K166GW36D				7/31/02 1550	WG		X	X								
005	166GW37DM7	K166GW37D				7/31/02 1635	WG	4	X	X								
	166GW38DM7	K166GW38D					WG		X	X								
	166GW39DM7	K166GW39D				~~7/31/02 1950~~	WG	~~4~~	X	X								
	166GW41DM7	K166GW41D					WG		X	X								
	166GW42DM7	K166GW42D					WG		X	X								
	166GW43DM7	K166GW43D					WG		X	X								
	166GW44DM7	K166GW44D					WG		X	X								
006	166GW45DM7	K166GW45D				7/31/02 1405	WG	4	X	X								
007	166GW46DM7	K166GW46D				7/31/02 1150	WG	4	X	X								
008	166GW47DM7	K166GW47D				7/31/02 1000	WG	4	X	X								
009	166GW48DM7	K166GW48D				7/31/02 1100	WG	4	X	X								

Sampled By: Guy D Willis Date/Time: 7/31/02

Relinquished by: Guy D Willis Date/Time: 8/1/02

Additional Samplers: Ryan Bitely, Kim Murphy

Received By Lab: J M Harley Date/Time: 8/1/02 0900

Relinquished by: Date/Time:

Received By: Date/Time:

Shipped Via: UPS FedEx Hand Other Tracking#:

Remarks:

Temperature: 3

Receipt Exceptions: PM 8/18/02

CH2M HILL Chain of Custody/ Laboratory Analysis Form

COC Tracking #: **ZK166-072202-01** page 2 of 3

Laboratory:	GEL
Project Name:	Charleston Navy Complex
Site Name:	Zone K, SWMU 166
Project Number:	158814.PM.04
TAT:	STANDARD
Project Manager:	Tom Beisel
QA Level:	3
Address:	GNV: 3011 SW Williston Rd., Gainesville, FL 32605
	ATL: 115 Perimeter Center Place NE, Suite 700, Atlanta, GA 30346-1278
Send Report To:	see last page of COC
EDD:	CNC format

Lab Batch/SDG:

Sample ID	Station ID	Sample Description	Depth Begin	Depth End	Date & Time Collected	Matrix	# of containers	VOCs (SW8260B) 3 - 40mL vial, HCl	Sulfate (E300), nitrate (E300) 1 - 500 mL HDPE	Comments
166GW49DM7	K166GW49D				7/31/02 1350	WG	4	X	X	
~~166GW50DM7~~	~~K166GW50D~~				~~7/30/02 1630~~	~~WG~~	~~4~~	~~X~~	~~X~~	
~~166GW50DM7~~	~~K166GW50D~~				~~7/30/02~~	~~WG~~	~~4~~	~~X~~	~~X~~	
~~166GW51DM7~~	~~K166GW51D~~				~~7/30/02 1150~~	~~WG~~	~~4~~	~~X~~	~~X~~	
~~166GW52DM7~~	~~K166GW52D~~				~~7/30/02 1210~~	~~WG~~	~~4~~	~~X~~	~~X~~	
~~166GWIN3M7~~	~~K166GWIN3~~				~~7/30/02 1640~~	~~WG~~	~~4~~	~~X~~	~~X~~	
~~166GWTM3M7~~	~~K166GWTM3~~				~~7/30/02 1440~~	~~WG~~	~~4~~	~~X~~	~~X~~	
~~166GWTM4M7~~	~~K166GWTM4~~				~~7/30/02 1420~~	~~WG~~	~~4~~	~~X~~	~~X~~	
~~163EW003M7~~	~~K163EW003~~				~~7/30/02 1700~~	~~WQ~~	~~4~~	~~X~~	~~X~~	EB
~~163TW003M7~~	~~K163TW003~~				~~7/30/02 —~~	~~WQ~~	~~3~~	~~X~~		TB
166EW040M7	K166EW040				7/31/02 1810	WQ	4	X	X	EB
166TW040M7	K166TW040				7/31/02	WQ	3	X		TB

Sampled By: [signature] Date/Time: 7/31/02

Relinquished by: [signature] Date/Time: 8-1-02 0830

Additional Samplers: Ryan Bitely, Kim Murphy

Received By Lab: Date/Time

Relinquished by: Date/Time

Received By: Date/Time

Shipped Via: UPS FedEx Hand Other Tracking#:

Remarks:

Temperature:

CH2M HILL Chain of Custody/ Laboratory Analysis Form

COC Tracking #: **ZK166-072202-01** page 1 of 3

Laboratory:	GEL
Project Name:	Charleston Navy Complex
Site Name:	Zone K, SWMU 166
Project Number:	158814.PM.04
TAT:	STANDARD
Project Manager:	Tom Beisel
QA Level:	3
Address:	GNV: 3011 SW Williston Rd., Gainesville, FL 32605
	ATL: 115 Perimeter Center Place NE, Suite 700, Atlanta, GA 30346-1278
Send Report To:	see last page of COC
EDD:	CNC format

Lab Batch/SDG: 64676

Sample ID	Station ID	Sample Description	Depth Begin	Depth End	Date & Time Collected	Matrix	# of containers	VOCs (SW8260B) 3 - 40mL vial, HCl	Sulfate (E300), nitrate (E300) 1 - 500 mL HDPE								Comments
163GW003M7	K163GW003				8-1-02 1440	WG	4	X	X								Samples complete
163GW03MM7	K163GW03M				8-1-02 1435	WG	3	X	—								
166GW040M7	K166GW040				8-1-02 0945	WG	4	X	X								
166HW040M7	K166GW040				8-1-02 —	WG	4	X	X								
~~166GW16DM7~~	~~K166GW16D~~				~~7/31/02 0900~~	~~WG~~	~~4~~	~~X~~	~~X~~								
166GW33DM7	K166GW33D				8-1-02 1555	WG	4	X	X								
* ~~166GW34DM7~~	~~K166GW34D~~				~~7/31/02 1725~~	~~WG~~	~~4~~	~~X~~	~~X~~							*	Valid Samp
166GW35DM7	K166GW35D				8/01/02 0855	WG	4	X	X								on 7/31/02
~~166GW36DM7~~	~~K166GW36D~~				~~7/31/02 1550~~	~~WG~~	~~4~~	~~X~~	~~X~~								
~~166GW37DM7~~	~~K166GW37D~~				~~7/31/02 1655~~	~~WG~~	~~4~~	~~X~~	~~X~~								
166GW38DM7	K166GW38D				8-1-02 1350	WG	4	X	X								
166GW39DM7	K166GW39D				8/01/02 1135	WG	4	X	X								
166GW41DM7	K166GW41D				8/01/02 1215	WG	4	X	X								
166GW42DM7	K166GW42D				8-1-02 1120	WG	4	X	X								
166GW43DM7	K166GW43D				8-1-02 1105	WG	4	X	X								
166GW44DM7	K166GW44D				8-1-02 1230	WG	4	X	X								
~~166GW45DM7~~	~~K166GW45D~~				~~7/31/02 1405~~	~~WG~~	~~4~~	~~X~~	~~X~~								
~~166GW46DM7~~	~~K166GW46D~~				~~7/31/02 1150~~	~~WG~~	~~4~~	~~X~~	~~X~~								
~~166GW47DM7~~	~~K166GW47D~~				~~7/31/02 1000~~	~~WG~~	~~4~~	~~X~~	~~X~~								
~~166GW48DM7~~	~~K166GW48D~~				~~7/31/02 1100~~	~~WG~~	~~4~~	~~X~~	~~X~~								

Sampled By: Greg D. Willis Date/Time: 8/01/02

Relinquished by: Greg D. Willis Date/Time: 8/02/02 0800

Additional Samplers: Ryan Bitely, Kim Murphy

Received By Lab: Date/Time

Relinquished by: Date/Time

Received By: Date/Time

Shipped Via: UPS FedEx Hand Other Tracking#:

Remarks: PKG 08/19/02

Temperature:

Receipt Exceptions:

CH2M HILL Chain of Custody/ Laboratory Analysis Form

COC Tracking #: ZK166-072202-01 page 2 of 3

Laboratory: GEL

Project Name: Charleston Navy Complex

Site Name: Zone K, SWMU 166

Project Number: 158814.PM.04

TAT: STANDARD

Project Manager: Tom Beisel

QA Level: 3

Address: GNV: 3011 SW Williston Rd., Gainesville, FL 32605

ATL: 115 Perimeter Center Place NE, Suite 700, Atlanta, GA 30346-1278

Send Report To: see last page of COC

EDD: CNC format

Lab Batch/SDG:

Sample ID	Station ID	Sample Description	Depth Begin	Depth End	Date & Time Collected	Matrix	# of containers	VOCs (SW8260B) 3 - 40mL vial, HCl	Sulfate (E300), nitrate (E300) 1 - 500 mL HDPE							Comments
~~166GW49DM7~~	~~K166GW49D~~				~~7/31/02 1150~~	~~WG~~	~~4~~	~~X~~	~~X~~							
~~166GW50DM7~~	~~K166GW50D~~				~~7/30/02 1630~~	~~WG~~	~~4~~	~~X~~	~~X~~							
~~166TW50DM7~~	~~K166GW50D~~				~~7/30/02~~	~~WG~~	~~4~~	~~X~~	~~X~~							
~~166GW51DM7~~	~~K166GW51D~~				~~7/30/02 [illegible]~~	~~WG~~	~~4~~	~~X~~	~~X~~							
~~166GW52DM7~~	~~K166GW52D~~				~~7/30/02 1310~~	~~WG~~	~~4~~	~~X~~	~~X~~							
~~166GWIN3M7~~	~~K166GWIN3~~				~~7/30/02 1640~~	~~WG~~	~~4~~	~~X~~	~~X~~							
~~166GWTM3M7~~	~~K166GWTM3~~				~~7/30/02 1745~~	~~WG~~	~~4~~	~~X~~	~~X~~							
~~166GWTM4M7~~	~~K166GWTM4~~				~~7/30/02 1720~~	~~WG~~	~~4~~	~~X~~	~~X~~							
~~163EW003M7~~	~~K163EW003~~				~~7/30/02 1700~~	~~WQ~~	~~4~~	~~X~~	~~X~~							EB
~~163TW003M7~~	~~K163TW003~~				~~7/30/02 —~~	~~WQ~~	~~3~~	~~X~~								TB
~~166EW040M7~~	~~K166EW040~~				~~7/31/02 1500~~	~~WQ~~	~~4~~	~~X~~	~~X~~							EB
~~166TW040M7~~	~~K166TW040~~				~~7/31/02~~	~~WQ~~	~~3~~	~~X~~								TB
166TW085M7	K166TW085				8/1/02	WQ	3	X								TB

Sampled By: [signature] Date/Time: 8/01/02

Relinquished by: [signature] Date/Time: 8-2-02 0800

Additional Samplers: Ryan Bitely, Kim Murphy

Received By Lab: Date/Time

Relinquished by: Date/Time

Received By: Date/Time

Shipped Via: UPS FedEx Hand Other Tracking#:

Remar

Temperatur

Receipt Exceptions:

HILL Chain of Custody/ Laboratory Analysis Form

COC Tracking #: ZK166-072202-03 page 1 of 3

GEL

Name: Charleston Navy Complex

Site Name: Zone K, SWMU 166

Project Number: 158814.PM.04

TAT: STANDARD

Project Manager: Tom Beisel

QA Level: 3

Address: GNV: 3011 SW Williston Rd., Gainesville, FL 32605

ATL: 115 Perimeter Center Place NE, Suite 700, Atlanta, GA 30346-1278

Send Report To: see last page of COC

EDD: CNC format

Lab Batch/SDG: 64677

Sample ID	Station ID	Sample Description	Depth Begin	Depth End	Date & Time Collected	Matrix	# of containers	VOCs (SW8260B) 3 - 40mL vial, HCl	Sulfate (E300), nitrate (E300) 1 - 500 mL HDPE								Comments
163GW001M7	K163GW001 ✓				~~8-1-02 1755~~	WG	3	X									
163GW005M7	K163GW005 ✓					WG		X									
166GW017M7	K166GW017 ✓					WG		X									RCRA
166GW026M7	K166GW026 ✓					WG		X									Complete
166GW026M7MS	K166GW026 ✓					WG		X									
166GW026M7SD	K166GW026 ✓					WG		X									
166GW053M7	K166GW053 ✓					WG		X									
166GW054M7	K166GW054 ✓					WG		X									
166GW055M7	K166GW055 ✓					WG		X									
166GW056M7	K166GW056 -					WG		X									
166GW056M7	K166GW056 -					WG		X									
166GW06DM7	K166GW06D ✓				8.01.02 1900	WG	3	X									
166GW07DM7	K166GW07D ✓					WG		X									
166GW08DM7	K166GW08D ✓					WG		X									
166GW13DM7	K166GW13D ✓					WG		X									
166HW13DM7	K166GW13D ✓					WG		X									
166GW14DM7	K166GW14D ✓					WG		X									
166GW17DM7	K166GW17D ✓					WG		X									
166GW17DM7MS	K166GW17D ✓					WG		X									
166GW17DM7SD	K166GW17D ✓					WG		X									

Sampled By: Guy D Hill Date/Time: 7-31-02/F.

Relinquished by: Guy D Hill Date/Time: 8/1/02 0830

Additional Samplers: Ryan Bitely Kim Murphy

Received By Lab: Date/Time

Relinquished by: Date/Time

Received By: Date/Time

Shipped Via: UPS FedEx Hand Other Tracking#:

Remark: PKG 08/19/02

Temperature:

CH2M HILL Chain of Custody/ Laboratory Analysis Form

Laboratory: GEL

Project Name: Charleston Navy Complex

Site Name: Zone K, SWMU 166

Project Number: 158814.PM.04

TAT: STANDARD

Project Manager: Tom Beisel

QA Level: 3

Address: GNV: 3011 SW Williston Rd., Gainesville, FL 32605

ATL: 115 Perimeter Center Place NE, Suite 700, Atlanta, GA 30346-1278

Send Report To: see last page of COC

EDD: CNC format

Lab Batch/SDG:

Sample ID	Station ID	Sample Description	Depth Begin	Depth End	Date & Time Collected	Matrix	# of containers	VOCs (SW8260B) 3 - 40mL vial, HCl	Sulfate (E300), nitrate (E300) 1 - 500 mL HDPE							Comments
166GW19DM7	K166GW19D				8-2-02 0925	WG	3	X								
166GW21DM7	K166GW21D				8-1-02 2010	WG	3	X								
166GW25DM7	K166GW25D				7/31/02 0930	WG	3	X								
166GW26DM7	K166GW26D					WG		X								
696GW001M7	K696GW001				8-1-02 1755	WG	3	X								
696HW001M7	K696GW001				8-1-02 —	WG	3	X								
166EW017M7	K166EW017					WG		X								EB
166TW017M7	K166TW017				8-1-02 —	WG	3	X								TB
166EW026M7	K166EW026				8-1-02 1875	WG	3	X								EB
166TW026M7	K166TW026					WG		X								TB

Sampled By: [illegible] Date/Time: 8-1-8-2-02

Relinquished by: [illegible] Date/Time: 8-2-02 0800

Additional Samplers: Ryan Bibely, Kim Murphy

Received By Lab: Date/Time

Relinquished by: Date/Time

Received By: Date/Time

Shipped Via: UPS FedEx Hand Other Tracking#:

Remarks:

Temperature:

HILL Chain of Custody/ Laboratory Analysis Form

COC Tracking #: ZK166-112502-03

Laboratory: GEL

Project Name: Charleston Navy Complex

Site Name: Zone K, SWMU 166

Project Number: 158814.PM.04

TAT: STANDARD

Project Manager: Tom Beisel

QA Level: 3

Address: GNV: 3011 SW Williston Rd., Gainesville, FL 32608

ATL: 115 Perimeter Center Place NE, Suite 700, Atlanta, GA 30346-1278

Send Report To: see last page of COC

EDD: CNC format

Lab Batch/SDG: 71659% 71658% 71658 71659

Sample ID	Station ID	Sample Description	Depth Begin	Depth End	Date & Time Collected	Matrix	# of containers	VOCs (SW8260B) 3 - 40mL vial, HCl	Sulfate (E300), nitrate (E300) 1 - 500 mL HDPE								Comments
163GW001M8 ✓	K163GW001				12-02-2002 / 1145	WG	3	X									
166GW005M8 ✓	K166GW005				12-02-2002 / 1305	WG	3	X									
166GW017M8 ✓	K166GW017				12-03-2002 / 1425	WG	3	X									
166GW026M8 ✓	K166GW026				12-02-2002 / 1158	WG	3	X									
166GW026M8MS	K166GW026				12-02-2002 / 1158	WG	3	X									
166GW026M8SD	K166GW026				12-02-2002 / 1158	WG	3	X									
166GW053M8 ✓	K166GW053				12-02-2002 / 1430	WG	2	X									
166GW054M8 ✓	K166GW054				12-02-2002 / 1455	WG	3	X									
166GW055M8 ✓	K166GW055				12-02-2002 / 1540	WG	3	X									
166GW056M8 ✓	K166GW056				12-02-2002 / 1615	WG	3	X									
166GW06DM8 ✓	K166GW06D				12-03-2002 / 1036	WG	3	X									
166GW07DM8 ✓	K166GW07D				12-03-2002 / 0940	WG	3	X									
166GW08DM8 ✓	K166GW08D				12-03-3003 / 1220	WG	3	X									
166GW13DM8 ✓	K166GW13D				12-02-2002 / 1530	WG	3	X									
166HW13DM8 ✓	K166GW13D				12-02-2002 / 1530	WG	3	X									
166GW14DM8 ✓	K166GW14D				12-03-2002 / 1055	WG	3	X									
166GW17DM8 ✓	K166GW17D	71659%			12-03-2002 / 1535	WG	3										
166GW17DM8MS	K166GW17D				12-03-2002 / 1535	WG	3										
166GW17DM8SD	K166GW17D				12-03-2002 / 1535	WG	3										

Sampled By: Darryl Gates Date/Time As noted

Relinquished by: Andrew O'Connor Date/Time 12-5-02/1615

Additional Samplers: Andrew O'Connor

Received By Lab: Date/Time

Relinquished by: Date/Time

Received By: [signature] Date/Time 12-5-02 1615

Shipped Via: UPS FedEx Hand Other Tracking#:

Remarks:

Temperature:

Laboratory: GEL

Receipt Exceptions: PKG Due: 12-22-02

C W HILL Chain of Custody/ Laboratory Analysis Form

COC Tracking #: ZK166-112502-03

Project Name: Charleston Navy Complex	Site Name: Zone K, SWMU 166
Project Number: 158814.PM.04	TAT: STANDARD
Project Manager: Tom Beisel	QA Level: 3
Address: GNV: 3011 SW Williston Rd., Gainesville, FL 32605	
ATL: 115 Perimeter Center Place NE, Suite 700, Atlanta, GA 30346-1278	
Send Report To: see last page of COC	EDD: CNC format

Lab Batch/SDG: 71659% 71658%

71659% Sample ID	Station ID	Sample Description	Depth Begin	Depth End	Date & Time Collected	Matrix	# of containers	VOCs (SW8260B) 3 - 40mL vial HCl	Sulfate (E300), nitrate (E300) 1 - 500 mL HDPE								Comments
166GW19DM8 ✓	K166GW19D				12-04-2002 / 1050	WG	3	X									
166GW21DM8 ✓	K166GW21D				12-03-2002 / 1535	WG	3	X									
166GW25DM8 ✓	K166GW25D				12-03-2002 / 1220	WG	3	X									
166GW26DM8 ✓	K166GW26D				12-02-2002 / 1330	WG	3	X									
698GW001M8 ✓	K698GW001				12-03-2002 / 1040	WG	3	X									
698HW001M8 ✓	K698GW001				12-03-2002 / 1040	WG	3	X									
166EW017M8 ✓	K166EW017				12/02/2002 / 1620	WQ	3	X									EB
166TW017M8	K166TW017	did not receive			12-04-2002/ 1650	WQ	3	X									TB
166EW026M8 ✓	K166EW026				12-03-2002 / 1545	WQ	3	X									EB
166TW026M8	K166TW026	Did not Receive				WQ		X									TB
166EW027M8	K166EW027	Did not Receive			[redacted]	WQ	[redacted]	X									EB

Sampled By: Darryl Gates Date/Time As noted

Relinquished by: Andrew O'Connor Date/Time 12-5-02/1615

Additional Samplers: Andrew O'Connor

Received By Lab: Mike [illegible] Date/Time 12-5-02 1615

Relinquished by: Date/Time

Received By: Date/Time

Shipped Via: UPS FedEx Hand Other Tracking#:

Remarks:

Temperature:

Receipt Exceptions:

C' HILL Chain of Custody/ Laboratory Analysis Form

COC Tracking #: ZK166-112502-01 Page 1 of 3

Laboratory: GEL

Project Name: Charleston Navy Complex

Site Name: Zone K, SWMU 166

Project Number: 158814.PM.04

TAT: STANDARD

Project Manager: Tom Beisel

QA Level: 3

Address: GNV: 3011 SW Williston Rd., Gainesville, FL 32605

ATL: 115 Perimeter Center Place NE, Suite 700, Atlanta, GA 30348-1278

Send Report To: see last page of COC

EDD: CNC format

Lab Batch/SDG: 71766

Sample ID 71766?	Station ID	Sample Description	Depth Begin	Depth End	Date & Time Collected	Matrix	# of containers	VOCs (SW8260B) 3 - 40mL vial, HCl	Sulfate (E300), nitrate (E300) 1 - 500 mL HDPE							Comments
163GW003M8	K163GW003					WG		X	X							
163GW03MM8	K163GW03M					WG		X	X							
166GW040M8	K166GW040					WG		X	X							
166HW040M8	K166GW040					WG		X	X							
166GW16DM8	K166GW16D					WG		X	X							
166GW33DM8	K166GW33D					WG		X	X							
166GW34DM8	K166GW34D					WG		X	X							
166GW35DM8	K166GW35D					WG		X	X							
166GW36DM8	K166GW36D					WG		X	X							
166GW37DM8	K166GW37D					WG		X	X							
166GW38DM8	K166GW38D					WG		X	X							
166GW39DM8	K166GW39D					WG		X	X							
166GW41DM8	K166GW41D					WG		X	X							
166GW42DM8	K166GW42D					WG		X	X							
166GW43DM8	K166GW43D					WG		X	X							
166GW44DM8	K166GW44D					WG		X	X							
166GW45DM8 ✓	K166GW45D				12-6-2002 / 1410	WG	4	X	X							
166GW46DM8 ✓	K166GW46D				12-6-2002 / 1305	WG	4	X	X							
166GW47DM8 ✓	K166GW47D				12-6-2002 / 1340	WG	4	X	X							
166GW48DM8 ✓	K166GW48D				12-6-2002 / 1230	WG	4	X	X							

Sampled By Darryl Gates Date/Time As noted

Relinquished by: [signature] Date/Time 12-6-02 / 163

Additional Samplers: Andrew O'Connor

Received By Lab: J M Harley Date/Time 12/6/02 1635

Relinquished by: Date/Time

Received By: Date/Time

Shipped Via: UPS FedEx Hand Other Tracking#:

Remarks:

Temperature: 5°C

Receipt Exceptions: PKG Due: 12-23-02

Laboratory: GEL

Project Name: Charleston Navy Complex

Site Name: Zone K, SWMU 166

Project Number: 158814.PM.04

TAT: STANDARD

Project Manager: Tom Beisel

QA Level: 3

Address: GNV: 3011 SW Williston Rd., Gainesville, FL 32608

ATL: 115 Perimeter Center Place NE, Suite 700, Atlanta, GA 30346-1278

Send Report To: see last page of COC

EDD: CNC format

Lab Batch/SDG: 71766%

71766%

Sample ID	Station ID	Sample Description	Depth Begin	Depth End	Date & Time Collected	Matrix	# of containers	VOCs (SW8260B) 3 - 40mL vial, HCl	Sulfate (E300), nitrate (E300) 1 - 500 mL HDPE							Comments
003 166GW49DM8 ✓	K166GW49D				12-6-2002 / 1145	WG	4	X	X							
004 166GW50DM8 ✓	K166GW50D				12-6-2002 / 1115	WG	4	X	X							
005 166HW50DM8 ✓	K166GW50D				12-6-2002 / 1115	WG	4	X	X							
006 166GW51DM8 ✓	K166GW51D				12-4-2002 / 1435	WG	4	X	X							
007 166GW52DM8 ✓	K166GW52D				12-4-2002 / 1158	WG	4	X	X							
008 166GWIN3M8 ✓	K166GWIN3				12-06-2002 / 0935	WG	4	X	X							
009 166GWTM3M8 ✓	K166GWTM3				12-4-2002 / 1550	WG	4	X	X							
010 166GWTM4M8 ✓	K166GWTM4				12-4-2002 / 1455	WG	4	X	X							
002 163EW003M8 ✓	K163EW003				12-6-2002 / 1520	WQ	4	X	X							EB
001 163TW003M8 ✓	K163TW003				12/06/2002	WQ	3	X								TB lab provided
009 166EW040M8	K166EW040					WQ		X	X							EB
001 166TW040M8	K166TW040					WQ		X								TB

Sampled By : Darryl Gates

Date/Time As noted

Relinquished by: [signature] Date/Time 12-6-02/163

Additional Samplers: Andrew O'Connor

Received By Lab: J M Hanley

Date/Time 12/6/02 16 33

Relinquished by:

Date/Time

Received By:

Date/Time

Shipped Via: UPS FedEx Hand Other Tracking#:

Remarks:

Temperature: 5 C

Receipt Exceptions:

Laboratory: GEL

Project Name: Charleston Navy Complex

Site Name: Zone K, SWMU 168

Project Number: 158814.PM.04

TAT: STANDARD

Project Manager: Tom Beisel

QA Level: 3

Address: GNV: 3011 SW Williston Rd., Gainesville, FL 32605

ATL: 115 Perimeter Center Place NE, Suite 700, Atlanta, GA 30346-1278

Send Report To: see last page of COC

EDD: CNC format

Lab Batch/SDG: 71852% 71852

Sample ID	Station ID	Sample Description	Depth Begin	Depth End	Date & Time Collected	Matrix	# of containers	VOCs (SW8260B) 3 - 40mL vial, HCl	Sulfate (E300), nitrate (E300) 1 - 500 mL HDPE								Comments
~~166GW49DM8~~	~~K166GW49D~~				~~12-6-2002 / 1145~~	WG		X	X								
~~166GW50DM8~~	~~K166GW50D~~				~~12-6-2002 / 1115~~	WG		X	X								
~~166HW50DM8~~	~~K166GW50D~~				~~12-6-2002 / 1115~~	WG		X	X								
~~166GW51DM8~~	~~K166GW51D~~				~~12-4-2002 / 1435~~	WG		X	X								
~~166GW52DM8~~	~~K166GW52D~~				~~12-4-2002 / 1158~~	WG		X	X								
~~166GWIN3M8~~	~~K166GWIN3~~				~~12-06-2002 / 0035~~	WG		X	X								
~~166GWTM3M8~~	~~K166GWTM3~~				~~12-4-2002 / 1550~~	WG		X	X								
~~166GWTM4M8~~	~~K166GWTM4~~				~~12-4-2002 / 1455~~	WG		X	X								
~~163EW003M8~~	~~K163EW003~~				~~12-6-2002 / 1520~~	WQ		X	X								EB
~~163TW003M8~~	~~K163TW003~~				~~12/06/2002~~	WQ		X									TB lab provided
166EW040M8 ✓	K166EW040				12-9-2002 / 1550	WQ	4	X	X								EB
166TW040M8 ✓	K166TW040				12-9-2002 / 1600	WQ	3	X									TB

Sampled By: Darryl Gates

Date/Time As noted

Relinquished by: Andrew O'Connor

Date/Time 12-10-02 / 123

Additional Samplers: Andrew O'Connor

Received By Lab: Julie Robinson

Date/Time 12-10-02 1235

Relinquished by:

Date/Time

Received By:

Date/Time

Shipped Via: UPS FedEx Hand Other Tracking#:

Remarks:

Temperature: 3 C

Receipt Exceptions: PKG Due: 12-27-02

CH HILL Chain of Custody/ Laboratory Analysis Form

COC Tracking #: ZK166-112502-01 page 1 of 3

Laboratory: GEL

Project Name: Charleston Navy Complex

Site Name: Zone K, SWMU 166

Project Number: 158814.PM.04

TAT: STANDARD

Project Manager: Tom Beisel

QA Level: 3

Address: GNV: 3011 SW Williston Rd., Gainesville, FL 32605

ATL: 115 Perimeter Center Place NE, Suite 700, Atlanta, GA 30346-1278

Send Report To: see last page of COC

EDD: CNC format

Lab Batch/SDG: 71852 %

Sample ID (71852 %)	Station ID	Sample Description	Depth Begin	Depth End	Date & Time Collected	Matrix	# of containers	VOCs (SW8260B) 3 - 40mL vial, HCl	Sulfate (E300), nitrate (E300) 1 - 500 mL HDPE								Comments
163GW003M8	K163GW003					WG		X	X								
163GW03MM8	K163GW03M					WG		X	X								
166GW040M8 ✓	K166GW040				12-9-2002 / 1202	WG	4	X	X								
166HW040M8 ✓	K166GW040				12-9-2002 / 1202	WG	4	X	X								
166GW16DM8	K166GW16D					WG		X	X								
166GW33DM8	K166GW33D					WG		X	X								
166GW34DM8 ✓	K166GW34D				12-9-2002 / 1430	WG	4	X	X								
166GW35DM8 ✓	K166GW35D				12-9-2002 / 1410	WG	4	X	X								
166GW36DM8 ✓	K166GW36D				12-9-2002 / 1555	WG	4	X	X								
166GW37DM8 ✓	K166GW37D				12-9-2002 / 1535	WG	4	X	X								
166GW38DM8	K166GW38D					WG		X	X								
166GW39DM8 ✓	K166GW39D				12-9-2002 / 1250	WG	4	X	X								
166GW41DM8 ✓	K166GW41D				12-9-2002 / 0950	WG	4	X	X								
166GW42DM8 ✓	K166GW42D				12-9-2002 / 1115	WG	4	X	X								
166GW43DM8 ✓	K166GW43D				12-9-2002 / 1125	WG	4	X	X								
166GW44DM8 ✓	K166GW44D				12-9-2002 / 0950	WG	4	X	X								
~~166GW45DM8~~	~~K166GW45D~~				~~12-6-2002 / 1410~~	WG		X	X								
~~166GW46DM8~~	~~K166GW46D~~				~~12-6-2002 / 1305~~	WG		X	X								
~~166GW47DM8~~	~~K166GW47D~~				~~12-6-2002 / 1340~~	WG		X	X								
~~166GW48DM8~~	~~K166GW48D~~				~~12-6-2002 / 1230~~	WG		X	X								

Sampled By: Darryl Gales Date/Time: As noted

Relinquished by: Andrew O'Connor Date/Time: 12.10.02 / 123

Additional Samplers: Andrew O'Connor

Received By Lab: Julie Robinson Date/Time: 12-10-02 1235

Relinquished by: Date/Time:

Received By: Date/Time:

Shipped Via: UPS FedEx Hand Other Tracking#:

Remarks:

Temperature: 3°C

Receipt Exceptions:

Laboratory: GEL

Project Name: Charleston Navy Complex

Site Name: Zone K, SWMU 166

Project Number: 168814.PM.04

TAT: STANDARD

Project Manager: Tom Beisel

QA Level: 3

Address: GNV: 3011 SW Williston Rd., Gainesville, FL 32605

ATL: 115 Perimeter Center Place NE, Suite 700, Atlanta, GA 30346-1278

Send Report To: see last page of COC

EDD: CNC format

Lab Batch/SDG: 72055%

72055

Sample ID 72055%	Station ID	Sample Description	Depth Begin	Depth End	Date & Time Collected	Matrix	# of containers	VOCs (SW8260B) 3 - 40mL vial, HCl	Sulfate (E300), nitrate (E300) 1 - 500 mL HDPE	Comments
~~166GW49DM8~~	~~K166GW49D~~				~~12-6-2002 / 1145~~	WG		X	X	
~~166GW50DM8~~	~~K166GW50D~~				~~12-6-2002 / 1115~~	WG		X	X	
~~166HW50DM8~~	~~K166GW50D~~				~~12-6-2002 / 1115~~	WG		X	X	
~~166GW51DM8~~	~~K166GW51D~~				~~12-4-2002 / 1425~~	WG		X	X	
~~166GW52DM8~~	~~K166GW52D~~				~~12-4-2002 / 1158~~	WG		X	X	
~~166GWIN3M8~~	~~K166GWIN3~~				~~12-06-2002 / 0935~~	WG		X	X	
~~166GWTM3M8~~	~~K166GWTM3~~				~~12-4-2002 / 1550~~	WG		X	X	
~~166GWTM4M8~~	~~K166GWTM4~~				~~12-4-2002 / 1455~~	WG		X	X	
~~163EW003M8~~	~~K163EW003~~				~~12-6-2002 / 1620~~	WQ		X	X	EB
~~163TW003M8~~	~~K163TW003~~				~~12/06/2002~~	WQ		X		TB lab provided
~~166EW040M8~~	~~K166EW040~~				~~12-9-2002 / 1550~~	WQ		X	X	EB
~~166TW040M8~~	~~K166TW040~~				~~12-9-2002 / 1600~~	WQ		X		TB
001 166EB041M8 ✓	K166EB041				12-11-2002 / 1300	WQ	4	X	X	EB
002 166TW041M8 ✓	K166TW041				12-11-2002 / 1305	WQ	3	X		TB

Sampled By: Darryl Gates Date/Time As noted

Relinquished by: [signature] Date/Time 12-12-02/1325

Additional Samplers: Andrew O'Connor

Received By Lab: Pauletta Wendell Date/Time 12/12/02 1330

Relinquished by: Date/Time

Received By: Date/Time

Shipped Via: UPS FedEx Hand Other Tracking#:

Remarks:

Temperature:

Receipt Exceptions: PKG Due: 12-29-02

CH2M HILL Chain of Custody/ Laboratory Analysis Form

Laboratory: GEL

Project Name: Charleston Navy Complex

Site Name: Zone K, SWMU 166

Project Number: 158814.PM.04

TAT: STANDARD

Project Manager: Tom Beisel

QA Level: 3

GNV: 3011 SW Williston Rd., Gainesville, FL 32605

ATL: 115 Perimeter Center Place NE, Suite 700, Atlanta, GA 30346-1278

Send Report To: see last page of COC

EDD: CNC format

Lab Batch/SDG:

	Sample ID	Station ID	Sample Description	Depth Begin	Depth End	Date & Time Collected	Matrix	# of containers	VOCs (SW8260B) 3 - 40ml vial, HCl	Sulfate (E300), nitrate (E300) 1 - 500 mL HDPE							Comments
003	163GW003M8 ✓	K163GW003				12-11-2002 / 0935	WG	4	X	X							
004	163GW03MM8 ✓	K163GW03M				12-11-2002 / 0955	WG	4	X	X							
	~~166GW040M8~~	~~K166GW040~~				~~12-9-2002 / 1203~~	WG		X	X							
	~~166HW040M8~~	~~K166GW040~~				~~12-9-2002 / 1202~~	WG		X	X							
005	166GW16DM8 ✓	K166GW16D				12-11-2002 / 1212	WG	4	X	X							
006	166GW33DM8 ✓	K166GW33D				12-11-2002 / 1135	WG	4	X	X							
	~~166GW34DM8~~	~~K166GW34D~~				~~12-9-2002 / 1430~~	WG		X	X							
	~~166GW35DM8~~	~~K166GW35D~~				~~12-9-2002 / 1410~~	WG		X	X							
	~~166GW36DM8~~	~~K166GW36D~~				~~12-9-2002 / 1555~~	WG		X	X							
	~~166GW37DM8~~	~~K166GW37D~~				~~12-9-2002 / 1535~~	WG		X	X							
007	166GW38DM8 ✓	K166GW38D				12-11-2002 / 1000	WG	4	X	X							
	~~166GW39DM8~~	~~K166GW39D~~				~~12-9-2002 / 1250~~	WG		X	X							
	~~166GW41DM8~~	~~K166GW41D~~				~~12-9-2002 / 0950~~	WG		X	X							
	~~166GW42DM8~~	~~K166GW42D~~				~~12-9-2002 / 1115~~	WG		X	X							
	~~166GW43DM8~~	~~K166GW43D~~				~~12-9-2002 / 1128~~	WG		X	X							
	~~166GW44DM8~~	~~K166GW44D~~				~~12-9-2002 / 0950~~	WG		X	X							
	~~166GW45DM8~~	~~K166GW45D~~				~~12-8-2002 / 1410~~	WG		X	X							
	~~166GW46DM8~~	~~K166GW46D~~				~~12-8-2002 / 1305~~	WG		X	X							
	~~166GW47DM8~~	~~K166GW47D~~				~~12-8-2002 / 1340~~	WG		X	X							
008	163GW005M8 ✓	K163GW005				12-11-2002 / 1045	WG	3	X								

Sampled By Darryl Gates

Date/Time As noted

Relinquished by: [signature]

Date/Time 12-12-02 / 1325

Additional Samplers: Andrew O'Connor

Received By Lab: Paulette Wendell

Date/Time 12/12/02 1350

Relinquished by:

Date/Time

Received By:

Date/Time

Shipped Via: UPS FedEx Hand Other Tracking#:

Remarks:

Temperature:

Receipt Exceptions:

CH2M HILL Chain of Custody/ Laboratory Analysis Form

COC Tracking #: **ZK166-020802-02** page 1 of 2

Laboratory: Microseeps

Project Name: Charleston Navy Complex

Site Name: Zone K, SWMU 166

Project Number: 158814.PM.04

TAT: standard

Project Manager:

QA Level: 3

Address: GNV: 3011 SW Williston Rd., Gainesville, FL 32605

ATL: 115 Perimeter Center Place NE, Suite 700, Atlanta, GA 30346-1278

Send Report To: see last page of COC

EDD: CNC format

Lab Batch/SDG: P0202323

Sample ID	Station ID	Sample Description	Depth Begin	Depth End	Date & Time Collected	Matrix	# of containers	Methane, Hydrogen (Hydrogen container & amber VOC vial)	Comments
166GW27DM1	K166GW27D				2-14-02/1525	WG	2	X	
166GW28DM1	K166GW28D				2-19-02/1207	WG	2	X	
166GW29DM1	K166GW29D				2-19-02/1022	WG	2	X	
166GW30DM1	K166GW30D				2-19-02/1103	WG	2	X	
166HW30DM1	K166GW30D				2-19-02/1122	WG	2	X	
166GW31DM1	K166GW31D				2-14-02/1330	WG	2	X	
166GW32DM1	K166GW32D				2-14-02/1434	WG	2	X	
									RCRA Complete

Sampled By: Chris Blundy Date/Time: 2-14-02 & 2-19-02

Relinquished by: Date/Time

Additional Samplers: Andrew Olcono ~~Jeany~~ J. Hilliard

Received By Lab: Date/Time

Relinquished by: Date/Time

Received By: Date/Time

Shipped Via: UPS FedEx Hand Other Tracking#:

Remarks:

Temperature:

Receipt Exceptions: PKB due 3/13/02

PO203360

CH2M HILL Chain of Custody/ Laboratory Analysis Form

COC Tracking #: **ZK166-030602-02** page 1 of 2

MAR-21-2002 14:03 MICROSEEPS 412 826 3433 P.05

Laboratory:	Microseeps
Project Name:	Charleston Navy Complex
Site Name:	Zone K, SWMU 166
Project Number:	158814.PM.04
TAT:	standard
Project Manager:	
QA Level:	3
Address:	GNV: 3011 SW Williston Rd., Gainesville, FL 32605
	ATL: 115 Perimeter Center Place NE, Suite 700, Atlanta, GA 30346-1278
Send Report To:	see last page of COC
EDD:	CNC format
Lab Batch/SDG:	

Sample ID	Station ID	Sample Description	Depth Begin	Depth End	Date & Time Collected	Matrix	# of containers	Methane, Hydrogen	Hydrogen container & amber VOC vial	Comments
01 166GW27DM2	K166GW27D				3-18-02/1120	WG	2	X		
02 166GW28DM2	K166GW28D				3-18-02/1025	WG	2	X		
03 166GW29DM2	K166GW29D				3-18-02/1220	WG	2	X		
04 166GW30DM2	K166GW30D				3-18-02/1420	WG	2	X		
~~166HW30DM2~~	~~K166GW30D~~				~~3-18-02/1420~~	~~WG~~		~~X~~	~~40~~	~~DUP NOT COLL~~
05 166GW31DM2	K166GW31D			1510	3-18-02/~~1615~~	WG	2	X		
06 166GW32DM2	K166GW32D				3-18-02/1615	WG	2	X		RCRA

Sampled By: ANDREW O'CONNOR Date/Time: 3-18-02 Relinquished by: [signature] Date/Time: 3-19-02/1

Additional Samplers: C. DIAZ

Received By Lab: [signature] Date/Time: 3/20/02 1243 Relinquished by: Date/Time:

Received By: Date/Time: Shipped Via: UPS FedEx Hand Other Tracking#:

Remarks: Temperature:

Receipt Exceptions:

CH2M HILL Chain of Custody/ Laboratory Analysis Form

COC Tracking #: ZK166-051002-02 page 1 of 3

Laboratory:	Microseeps
Project Name:	Charleston Navy Complex
Site Name:	Zone K, SWMU 166
Project Number:	158814.PM.04
TAT:	STANDARD
Project Manager:	Tom Beisel
QA Level:	3
Address:	GNV: 3011 SW Williston Rd., Gainesville, FL 32605
	ATL: 115 Perimeter Center Place NE, Suite 700, Atlanta, GA 30346-1278
Send Report To:	see last page of COC
EDD:	CNC format
Lab Batch/SDG:	80205578

	Sample ID	Station ID	Sample Description	Depth Begin	Depth End	Date & Time Collected	Matrix	# of containers	Methane, Hydrogen	Hydrogen container & amber VOC vial	Comments
1	166GW33DM4	K166GW33D	new, expect TD = 36'			5-20-02/1600	WG	2	X		
2	166GW34DM4	K166GW34D	new, expect TD = 32'			5-21-02/1205	WG	2	X		RCRA
3	166GW35DM4	K166GW35D	new, expect TD = 37'			5-21-02/1351	WG	2	X		
4	166GW36DM4	K166GW36D	new, expect TD = 30'			5-28-02/1005	WG	2	X		
5	166GW37DM4	K166GW37D	new, expect TD = 35'			5-21-02/1425	WG	2	X		Samples complete
6	166GW38DM4	K166GW38D	new, expect TD = 35'			5-24-02/1522	WG	2	X		
7	166GW39DM4	K166GW39D	new, expect TD = 37'			5-21-02/1500	WG	2	X		
8	166GW040M4	K166GW040	new, expect TD = 16'			5-21-02/1527	WG	2	X		
	166HW040M4	K166GW040	new, expect TD = 16'			5-21-02/1545	WG	2	X		
	166GW41DM4	K166GW41D	new, expect TD = 37'			5-22-02/1040	WG	2	X		
11	166GW42DM4	K166GW42D	new, expect TD = 37'			5-22-02/1120	WG	2	X		
	166GW43DM4	K166GW43D	new, expect TD = 36'			5-22-02/1200	WG	2	X		
	166GW44DM4	K166GW44D	new, expect TD = 36'			5-22-02/1440	WG	2	X		
	166GW45DM4	K166GW45D	new, expect TD = 36'			5-23-02/1555	WG	2	X		
18	166GW46DM4	K166GW46D	new, expect TD = 38'			5-28-02/1225	WG	2	X		
	166GW47DM4	K166GW47D	new, expect TD = 31'			5-23-02/1125	WG	2	X		
	166GW48DM4	K166GW48D	new, expect TD = 36'			5-23-02/1150	WG	2	X		
	166GW49DM4	K166GW49D	new, expect TD = 37'			5-28-02/1700	WG	2	X		
19	166GW50DM4	K166GW50D	new, expect TD = 37'			5-29-02/1420	WG	2	X		
	~~166HW50DM4~~	~~K166GW050D~~	~~new, expect TD = 37'~~				~~WG~~		~~X~~		NO duplicate taken

Sampled By: ANDREW O'CONOR Date/Time: 5-17 to 5-30-02 Relinquished by: [signature] Date/Time: 5-30-02/1600

Additional Samplers: D. GATES

Received By Lab: Date/Time: Relinquished by: Date/Time:

Receipt Exceptions: _____

CH2M HILL Chain of Custody/ Laboratory Analysis Form

COC Tracking #: ZK166-051002-02 pa ' of 3

Received By: Date/Time

Remarks.

Shipped Via: UPS FedEx Hand Other Tracking#:

Temperature:

Laboratory: Microseeps

Project Name: Charleston Navy Complex

Site Name: Zone K, SWMU 166

Project Number: 158814.PM.04

TAT:

Project Manager:

QA Level: 3

Address: GNV: 3011 SW Williston Rd., Gainesville, FL 32605

ATL: 115 Perimeter Center Place NE, Suite 700, Atlanta, GA 30346-1278

Send Report To: see last page of COC

EDD: CNC format

Lab Batch/SDG:

	Sample ID	Station ID	Sample Description	Depth Begin	Depth End	Date & Time Collected	Matrix	# of containers	Methane, Hydrogen (Hydrogen container & amber VOC vial)	Comments
20	166GW51DM4	K166GW51D	new, expect TD = 37'			5-29-02/1200	WG	2	X	RCRA
21	166GW52DM4	K166GW52D	new, expect TD = 30'			5-29-02/1140	WG	2	X	
	~~163GW03MM4~~	~~K163GW03M~~	~~multi-well, sample @ 6'~~				~~WG~~		~~X~~	No sample /
22	166GW16DM4	K166GW16D				5-30-02/1705	WG	2	X	0.6 GATES
23	166GWIN3M4	K166GWIN3				5-30-02/1215	WG	2	X	
24	166GWTM3M4	K166GWTM3				5-29-02/1400	WG	2	X	
25	166GWTM4M4	K166GWTM4				5-30-02/1115	WG	2	X	
	~~166EW33DM4~~	~~K166EW33D~~					~~WQ~~		~~X~~	EB NO/0.6 GATES
	~~166EW34DM4~~	~~K166EW34D~~					~~WQ~~		~~X~~	EB NO/0.6 GATES
26	163GW003	K163GW003				5-17-02/1005	WQ	2	X	ADD 163GW003 pri/0.6 GATES

Sampled By AD & D.G Date/Time 5-17 - 5-30-02

Relinquished by: Date/Time

Receipt Exceptions:

CH2M HILL Chain of Custody/ Laboratory Analysis Form

COC Tracking #: ZK166-~~[illegible]~~-02 (060602) page 1 of 2

Laboratory:	Microseeps
Project Name:	Charleston Navy Complex
Site Name:	Zone K, SWMU 166
Project Number:	158814.PM.04
TAT:	
Project Manager:	
QA Level:	3
Address:	GNV: 3011 SW Williston Rd., Gainesville, FL 32605
	ATL: 115 Perimeter Center Place NE, Suite 700, Atlanta, GA 30346-1278
Send Report To:	see last page of COC
EDD:	CNC format

Lab Batch/SDG: PO20644

Sample ID	Station ID	Sample Description	Depth Begin	Depth End	Date & Time Collected	Matrix	# of containers	Hydrogen container & amber VOC vial	Methane, Hydrogen	Comments
166GW27DM6	K166GW27D				6-24-02/1230	WG	2		X	RCRA
166GW28DM6	K166GW28D				6-24-02/1320	WG	2		X	
166GW29DM6	K166GW29D				6-24-02/1440	WG	2		X	
166GW30DM6	K166GW30D				6-24-02/1520	WG	2		X	Samples complete
166GW31DM6	K166GW31D				6-25-02/1103	WG	2		X	
166HW31DM6	K166GW31D				6-25-02/1120	WG	2		X	
166GW32DM6	K166GW32D				6-25-02/1035	WG	2		X	

Sampled By: Andrew O'Connor Date/Time: 6-24/6-25-02 Relinquished by: [signature] Date/Time: 6-25-02

Additional Samplers: R. Bitely

Received By Lab: Date/Time: Relinquished by: Date/Time:

Received By: Date/Time: Shipped Via: UPS FedEx Hand Other Tracking#:

Remarks: Temperature:

Special Instructions: [illegible]

CH HILL Chain of Custody/ Laboratory Analysis Form

COC Tracking #: ZK166-072202-02 pag of 3

Laboratory: Microseeps

Project Name: Charleston Navy Complex

Site Name: Zone K, SWMU 166

Project Number: 158814.PM.04

TAT: STANDARD

Project Manager: Tom Beisel

QA Level:

Address: GNV: 3011 SW Williston Rd., Gainesville, FL 32605

ATL: 115 Perimeter Center Place NE, Suite 700, Atlanta, GA 30346-1278

Send Report To: see last page of COC

EDD: CNC format

Lab Batch/SDG: P0208049

Sample ID	Station ID	Sample Description	Depth Begin	Depth End	Date & Time Collected	Matrix	# of containers	Methane, Hydrogen (Hydrogen container & amber VOC vial)									Comments
163GW003M7	K163GW003				8-1-02 1445	WG	2	X									
~~163GW03MM7~~	~~K163GW03M~~					WG	—	X									no H2O
166GW040M7	K166GW040				8-1 02 0915	WG	2	X									
166HW040M7	K166GW040				8-1 02 —	WG	2	X									
166GW16DM7	K166GW16D				7/30/02 0920	WG	2	X									
166GW33DM7	K166GW33D				8-1-02 1555	WG	2	X									
166GW34DM7	K166GW34D				7-31-02 1725	WG	2	X									
166GW35DM7	K166GW35D				8/01/02 0830	WG	2	X									
166GW36DM7	K166GW36D				7/31/02 1550	WG	2	X									
166GW37DM7	K166GW37D				7/31/02 1635	WG	2	X									
166GW38DM7	K166GW38D				8-1-02 1350	WG	2	X									
166GW39DM7	K166GW39D				8/01/02 0935	WG	2	X									
166GW41DM7	K166GW41D				8-1-02 1215	WG	2	X									
166GW42DM7	K166GW42D				8-1-02 1120	WG	2	X									
166GW43DM7	K166GW43D				8-1-02 1105	WG	2	X									
166GW44DM7	K166GW44D				8-1-02 1230	WG	2	X									
166GW45DM7	K166GW45D				7/31/02 1405	WG	2	X									
166GW46DM7	K166GW46D				7/31/02 1150	WG	2	X									
166GW47DM7	K166GW47D				7/31/02 1000	WG	2	X									
166GW48DM7	K166GW48D				7/31/02 1100	WG	2	X									

Sampled By: [signature] Date/Time: 7-30-8-1-02

Relinquished by: [signature] Date/Time: 8-2-02 1330

Additional Samplers: Ryan Bitely Kim Murphy

Received By Lab: Date/Time

Relinquished by: Date/Time

Received By: Date/Time

Shipped Via: UPS FedEx Hand Other Tracking#:

Remarks:

Temperature:

Receipt Exceptions: [initials] 8/19/02

CH HILL Chain of Custody/ Laboratory Analysis Form

COC Tracking #: ZK166-072202-02 pa. of 3

Laboratory: Microseeps

Project Name: Charleston Navy Complex

Site Name: Zone K, SWMU 166

Project Number: 158814.PM.04

TAT: STANDARD

Project Manager: Tom Beisel

QA Level:

Address: GNV: 3011 SW Williston Rd., Gainesville, FL 32605

ATL: 115 Perimeter Center Place NE, Suite 700, Atlanta, GA 30346-1278

Send Report To: see last page of COC

EDD: CNC format

Lab Batch/SDG:

	Sample ID	Station ID	Sample Description	Depth Begin	Depth End	Date & Time Collected	Matrix	# of containers	Hydrogen container & amber VOC vial	Methane, Hydrogen								Comments
1A	166GW49DM7	K166GW49D				7/31/02 1250	WG	2		X								
1A	166GW50DM7	K166GW50D				7/30/02 1630	WG	2		X								
2A	166HW50DM7	K166GW50D				7/30/02	WG	2		X								
3A	166GW51DM7	K166GW51D				7/30/02 1150	WG	2		X								
4A	166GW52DM7	K166GW52D				7/30/02 1210	WG	2		X								
5A	166GWIN3M7	K166GWIN3				7/30/02 1640	WG	2		X								
6A	166GWTM3M7	K166GWTM3				7/30/02 1445	WG	2		X								
7A	166GWTM4M7	K166GWTM4				7/30/02 1430	WG	2		X								

Sampled By: Gary Dwillis

Date/Time: 7/30-8/1/02

Relinquished by: Gary Dwillis

Date/Time: 8-1-02 1800

Additional Samplers: Ryan Bitely, Kim Murphy

Received By Lab:

Date/Time

Relinquished by:

Date/Time

Received By:

Date/Time

Shipped Via: UPS FedEx Hand Other Tracking#:

Remarks:

Temperature:

Receipt Exceptions:

Laboratory:	Microseeps
Project Name:	Charleston Navy Complex
Site Name:	Zone K, SWMU 166
Project Number:	158814.PM.04
TAT:	STANDARD
Project Manager:	Tom Beisel
QA Level:	
Address:	GNV: 3011 SW Williston Rd., Gainesville, FL 32605
	ATL: 115 Perimeter Center Place NE, Suite 700, Atlanta, GA 30346-1278
Send Report To:	see last page of COC
EDD:	CNC format

Lab Batch/SDG: P0212230

Sample ID	Station ID	Sample Description	Depth Begin	Depth End	Date & Time Collected	Matrix	# of containers	Methane, Hydrogen (Hydrogen container & amber VOC vial)									Comments
163GW003M8	K163GW003				12/11/2002 / 1145	WG	2	X									
163GW03MM8	K163GW03M				12-11-2002 / 1125	WG	2	X									
166GW040M8	K166GW040				12-09-2002 / 1215	WG	2	X									
166GW16DM8	K166GW16D				12-11-2002 / 1245	WG	2	X									
166GW33DM8	K166GW33D				12-11-2002 / 1220	WG	2	X									
166GW34DM8	K166GW34D				12-09-2002 / 1445	WG	2	X									
166GW35DM8	K166GW35D				12-09-2002 / 1425	WG	2	X									
166GW36DM8	K166GW36D				12-09-2002 / 1605	WG	2	X									
166GW37DM8	K166GW37D				12-09-2002 / 1505	WG	2	X									
166GW38DM8	K166GW38D				12-11-2002 / 1055	WG	2	X									
166GW39DM8	K166GW39D				12-09-2002 / 1305	WG	2	X									
166GW41DM8	K166GW41D				12-09-2002 / 1020	WG	2	X									
166HW41DM8	K166GW41D				12-09-2002 / 1020	WG	2	X									
166GW42DM8	K166GW42D				12-09-2002 / 1125	WG	2	X									
166GW43DM8	K166GW43D				12-09-2002 / 1140	WG	2	X									
166GW44DM8	K166GW44D				12-09-2002 / 1000	WG	2	X									
166GW45DM8	K166GW45D				12-06-2002 / 1425	WG	2	X									
166GW46DM8	K166GW46D				12/06/2002 / 1315	WG	2	X									
166GW47DM8	K166GW47D				12-06-2002 / 1355	WG	2	X									
166GW48DM8	K166GW48D				12-06-2002 / 1245	WG	2	X									

Sampled By Darryl Gales Date/Time As Noted Relinquished by: [signature] Date/Time 12-12-02

Additional Samplers:

Received By Lab: R. Welsh Microseeps Date/Time 12/13/02 1100 Relinquished by: Date/Time

Received By: Date/Time Shipped Via: UPS FedEx Hand Other Tracking#:

Remarks: Temperature:

Receipt Exceptions:

Laboratory: Microseeps

Project Name: Charleston Navy Complex

Site Name: Zone K, SWMU 166

Lab Batch/SDG:

Project Number: 158814.PM.04

TAT: STANDARD

Project Manager: Tom Beisel

QA Level:

Address: GNV: 3011 SW Williston Rd., Gainesville, FL 32605

ATL: 115 Perimeter Center Place NE, Suite 700, Atlanta, GA 30346-1278

Send Report To: see last page of COC

EDD: CNC format

	Sample ID	Station ID	Sample Description	Depth Begin	Depth End	Date & Time Collected	Matrix	# of containers	Methane, Hydrogen (Hydrogen container & amber VOC vial)									Comments
1	166GW49DM8	K166GW49D				12/04/2002 / 1200	WG	2	X									
2	166GW50DM8	K166GW50D				12-06-2002 / 1130	WG	2	X									
3	166HW50DM8	K166GW50D				12-06-2002 / 1130	WG	2	X									
4	166GW51DM8	K166GW51D				12-04-2002 / 1450	WG	2	X									
5	166GW52DM8	K166GW52D				12-04-2002 / 1215	WG	2	X									
6	166GWIN3M8	K166GWIN3				12/06/2002 / 0950	WG	2	X									
7	166GWTM3M8	K166GWTM3				12-04-2002 / 1605	WG	2	X									
8	166GWTM4M8	K166GWTM4				12-04-2002 / 1510	WG	2	X									

Sampled By Darryl Gates Date/Time As Noted

Relinquished by: [signature] Date/Time 12-12-02

Additional Samplers:

Received By Lab: R. Welsh Microseeps Date/Time 12/13/02 1100

Relinquished by: Date/Time

Received By: Date/Time

Shipped Via: UPS FedEx Hand Other Tracking#:

Remarks:

Temperature:

Receipt Exceptions:

APPENDIX A

Phase I IM Analytical Data

	StationID	K163GW003		K166GW040		K166GW040		K166GW16D		K166G
	SampleID	163GW003M7		166GW040M7		166HW040M7		166GW16DM7		166GW
	DateCollected	8/1/2002		8/1/2002		8/1/2002		7/30/2002		8/1/2
	DateExtracted									
	DateAnalyzed	8/13/2002		8/13/2002		8/13/2002		8/13/2002		8/13/
	SDGNumber	P0208049		P0208049		P0208049		P0208049		P020
Parameter	**Units**									
Hydrogen	nM	1.9	=	13	=	20	=	2.8	=	1200
Methane	ug/L	0.04	=	0.48	=	0.95	=	52	=	34

Analytical Data Summary

	StationID	W33D	K166GW34D		K166GW35D		K166GW36D		K166GW37D	
	SampleID	33DM7	166GW34DM7		166GW35DM7		166GW36DM7		166GW37DM7	
	DateCollected	2002	7/31/2002		8/1/2002		7/31/2002		7/31/2002	
	DateExtracted									
	DateAnalyzed	2002	8/13/2002		8/13/2002		8/13/2002		8/13/2002	
	SDGNumber	8049	P0208049		P0208049		P0208049		P0208049	
Parameter	**Units**									
Hydrogen	nM	=	26	=	9400	=	12000	=	32000	=
Methane	ug/L	=	55	=	8.8	=	160	=	12	=

	StationID	K166GW38D		K166GW39D		K166GW41D		K166GW42D		K166G
	SampleID	166GW38DM7		166GW39DM7		166GW41DM7		166GW42DM7		166GW
	DateCollected	8/1/2002		8/1/2002		8/1/2002		8/1/2002		8/1/2
	DateExtracted									
	DateAnalyzed	8/13/2002		8/13/2002		8/13/2002		8/13/2002		8/13/
	SDGNumber	P0208049		P0208049		P0208049		P0208049		P020
Parameter	**Units**									
Hydrogen	nM	4.3	=	9	=	2.4	=	2.1	=	2.2
Methane	ug/L	61	=	370	=	440	=	41	=	49

	StationID	W43D	K166GW44D		K166GW45D		K166GW46D		K166GW47D	
	SampleID	43DM7	166GW44DM7		166GW45DM7		166GW46DM7		166GW47DM7	
	DateCollected	2002	8/1/2002		7/31/2002		7/31/2002		7/31/2002	
	DateExtracted									
	DateAnalyzed	2002	8/13/2002		8/13/2002		8/9/2002		8/9/2002	
	SDGNumber	8049	P0208049		P0208049		P0208049		P0208049	
Parameter	**Units**									
Hydrogen	nM	=	6.3	=	40	=	3400	=	3.3	=
Methane	ug/L	=	17	=	28	=	18	=	0.41	=

	StationID	K166GW48D		K166GW49D		K166GW50D		K166GW50D		K166G
	SampleID	166GW48DM7		166GW49DM7		166GW50DM7		166HW50DM7		166GW
	DateCollected	7/31/2002		7/31/2002		7/30/2002		7/30/2002		7/30/
	DateExtracted									
	DateAnalyzed	8/9/2002		8/9/2002		8/9/2002		8/9/2002		8/9/2
	SDGNumber	P0208049		P0208049		P0208049		P0208049		P020
Parameter	**Units**									
Hydrogen	nM	2.2	=	1200	=	3.3	=	2.7	=	9.2
Methane	ug/L	14	=	66	=	14	=	11	=	170

Analytical Data Summary

	StationID	W51D	K166GW52D		K166GWIN3		K166GWTM3		K166GWTM4	
	SampleID	51DM7	166GW52DM7		166GWIN3M7		166GWTM3M7		166GWTM4M7	
	DateCollected	2002	7/30/2002		7/30/2002		7/30/2002		7/30/2002	
	DateExtracted									
	DateAnalyzed	2002	8/9/2002		8/9/2002		8/9/2002		8/9/2002	
	SDGNumber	8049	P0208049		P0208049		P0208049		P0208049	
Parameter	**Units**									
Hydrogen	nM	=	4	=	10	=	6800	=	2.2	=
Methane	ug/L	=	180	=	560	=	82	=	32	=

	StationID	K163GW003		K166GW040		K166GW040		K166GW16D	
	SampleID	163GW003M7		166GW040M7		166HW040M7		166GW16DM7	
	DateCollected	8/1/2002		8/1/2002		8/1/2002		7/30/2002	
	DateExtracted								
	DateAnalyzed	8/2/2002		8/2/2002		8/2/2002		8/1/2002	
	SDGNumber	64676		64676		64676		64473	
Parameter	**Units**								
Nitrogen, Nitrate (as N)	mg/L	0.1	U	0.1	U	0.1	U	0.1	U
Sulfate (as SO4)	mg/L	10	=	879	=	882	=	5.59	=

	StationID	K166GW33D		K166GW34D		K166GW35D		K166GW36D	
	SampleID	166GW33DM7		166GW34DM7		166GW35DM7		166GW36DM7	
	DateCollected	8/1/2002		7/31/2002		8/1/2002		7/31/2002	
	DateExtracted								
	DateAnalyzed	8/2/2002		8/1/2002		8/3/2002		8/2/2002	
	SDGNumber	64676		64550		64676		64550	
Parameter	**Units**								
Nitrogen, Nitrate (as N)	mg/L	0.1	U	0.1	U	0.1	U	0.1	U
Sulfate (as SO4)	mg/L	1.67	=	0.701	=	3.23	=	1.19	=

	StationID	K166GW37D		K166GW38D		K166GW39D		K166GW41D	
	SampleID	166GW37DM7		166GW38DM7		166GW39DM7		166GW41DM7	
	DateCollected	7/31/2002		8/1/2002		8/1/2002		8/1/2002	
	DateExtracted								
	DateAnalyzed	8/2/2002		8/2/2002		8/2/2002		8/3/2002	
	SDGNumber	64550		64676		64676		64676	
Parameter	**Units**								
Nitrogen, Nitrate (as N)	mg/L	0.1	U	0.1	U	0.1	U	0.2	U
Sulfate (as SO4)	mg/L	7.59	=	20.2	=	4.43	=	45.4	=

Analytical Data Summary

	StationID	K166GW42D		K166GW43D		K166GW44D		K166GW45D	
	SampleID	166GW42DM7		166GW43DM7		166GW44DM7		166GW45DM7	
	DateCollected	8/1/2002		8/1/2002		8/1/2002		7/31/2002	
	DateExtracted								
	DateAnalyzed	8/3/2002		8/3/2002		8/3/2002		8/2/2002	
	SDGNumber	64676		64676		64676		64550	
Parameter	**Units**								
Nitrogen, Nitrate (as N)	mg/L	0.1	U	0.1	U	0.2	U	0.1	U
Sulfate (as SO4)	mg/L	31.4	=	9.27	=	43.9	=	39.9	=

	StationID	K166GW46D		K166GW47D		K166GW48D		K166GW49D	
	SampleID	166GW46DM7		166GW47DM7		166GW48DM7		166GW49DM7	
	DateCollected	7/31/2002		7/31/2002		7/31/2002		7/31/2002	
	DateExtracted								
	DateAnalyzed	8/2/2002		8/2/2002		8/2/2002		8/2/2002	
	SDGNumber	64550		64550		64550		64550	
Parameter	**Units**								
Nitrogen, Nitrate (as N)	mg/L	0.1	U	0.209	=	0.1	U	0.1	U
Sulfate (as SO4)	mg/L	10.5	=	35.3	=	17.9	=	12.9	=

	StationID	K166GW50D		K166GW50D		K166GW51D		K166GW52D	
	SampleID	166GW50DM7		166HW50DM7		166GW51DM7		166GW52DM7	
	DateCollected	7/30/2002		7/30/2002		7/30/2002		7/30/2002	
	DateExtracted								
	DateAnalyzed	8/1/2002		8/1/2002		8/1/2002		8/1/2002	
	SDGNumber	64473		64473		64473		64473	
Parameter	**Units**								
Nitrogen, Nitrate (as N)	mg/L	0.1	U	0.1	U	0.1	U	0.1	U
Sulfate (as SO4)	mg/L	10.6	=	10.6	=	6.01	=	5.42	=

	StationID	K166GWIN3		K166GWTM3		K166GWTM4	
	SampleID	166GWIN3M7		166GWTM3M7		166GWTM4M7	
	DateCollected	7/30/2002		7/30/2002		7/30/2002	
	DateExtracted						
	DateAnalyzed	8/1/2002		8/1/2002		8/1/2002	
	SDGNumber	64473		64473		64473	
Parameter	**Units**						
Nitrogen, Nitrate (as N)	mg/L	0.1	U	0.1	U	0.1	U
Sulfate (as SO4)	mg/L	0.634	=	1.3	=	5.74	=

Analytical Data Summary

	StationID	K163GW001		K163GW003		K163GW005	
	SampleID	163GW001M7		163GW003M7		163GW005M7	
	DateCollected	7/29/2002		8/1/2002		7/29/2002	
	DateExtracted	8/7/2002		8/5/2002		8/7/2002	
	DateAnalyzed	8/7/2002		8/5/2002		8/7/2002	
	SDGNumber	64475		64676		64475	
Parameter	**Units**						
Chloromethane	ug/L	10	U	10	U	10	U
Vinyl chloride	ug/L	10	U	10	U	10	U
Bromomethane	ug/L	10	U	10	U	10	U
Chloroethane	ug/L	10	U	10	U	10	U
1,1-Dichloroethene	ug/L	5	U	5	U	5	U
Acetone	ug/L	10	U	10	U	10	U
Carbon Disulfide	ug/L	5	U	5	U	5	U
Methylene Chloride	ug/L	5	U	5	U	5	U
trans-1,2-Dichloroethene	ug/L	5	U	4.7	J	5	U
1,1-Dichloroethane	ug/L	5	U	5	U	5	U
Vinyl acetate	ug/L	10	U	10	U	10	U
Methyl ethyl ketone (2-Butanone)	ug/L	10	U	10	U	10	U
cis-1,2-Dichloroethylene	ug/L	5	U	145	=	5	U
1,2-Dichloroethene (total)	ug/L	5	U	150	=	5	U
Chloroform	ug/L	5	U	5	U	5	U
1,1,1-Trichloroethane	ug/L	5	U	5	U	5	U
Carbon Tetrachloride	ug/L	5	U	5	U	5	U
1,2-Dichloroethane	ug/L	5	U	5	U	5	U
Benzene	ug/L	5	U	5	U	5	U
Trichloroethylene (TCE)	ug/L	0.43	J	205	=	5	U
1,2-Dichloropropane	ug/L	5	U	5	U	5	U
Bromodichloromethane	ug/L	5	U	5	U	5	U
2-Chloroethyl vinyl ether	ug/L	10	UJ	10	UJ	10	UJ
cis-1,3-Dichloropropene	ug/L	5	UJ	5	U	5	UJ
Methyl isobutyl ketone (4-Methyl-2-pentanone)	ug/L	10	U	10	U	10	U
Toluene	ug/L	5	U	5	U	5	U
trans-1,3-Dichloropropene	ug/L	5	UJ	5	U	5	UJ
1,1,2-Trichloroethane	ug/L	5	U	5	U	5	U
2-Hexanone	ug/L	10	U	10	U	10	U
Tetrachloroethylene (PCE)	ug/L	0.6	J	94	=	5	U
Dibromochloromethane	ug/L	5	U	5	U	5	U
Chlorobenzene	ug/L	5	U	5	U	5	U
Ethylbenzene	ug/L	5	U	5	U	5	U
m+p Xylene	ug/L	5	U	5	U	5	U
o-Xylene	ug/L	5	U	5	U	5	U

	StationID	K163GW03M		K166GW017		K166GW026	
	SampleID	163GW03MM7		166GW017M7		166GW026M7	
	DateCollected	8/1/2002		7/30/2002		7/29/2002	
	DateExtracted	8/5/2002		8/7/2002		8/7/2002	
	DateAnalyzed	8/5/2002		8/7/2002		8/7/2002	
	SDGNumber	64676		64475		64475	
Parameter	**Units**						
Chloromethane	ug/L	10	U	10	U	10	U
Vinyl chloride	ug/L	10	U	10	U	10	U
Bromomethane	ug/L	10	U	10	U	10	U
Chloroethane	ug/L	10	U	10	U	10	U
1,1-Dichloroethene	ug/L	5	U	1.5	J	5	U
Acetone	ug/L	10	U	10	U	10	U
Carbon Disulfide	ug/L	5	U	5	U	5	U
Methylene Chloride	ug/L	5	U	5	U	5	U
trans-1,2-Dichloroethene	ug/L	5	U	5	U	5	U
1,1-Dichloroethane	ug/L	5	U	5	U	5	U
Vinyl acetate	ug/L	10	UJ	10	U	10	U
Methyl ethyl ketone (2-Butanone)	ug/L	10	U	10	U	10	U
cis-1,2-Dichloroethylene	ug/L	8.2	=	0.3	J	5	U
1,2-Dichloroethene (total)	ug/L	8.2	=	5	U	5	U
Chloroform	ug/L	5	U	5	U	5	U
1,1,1-Trichloroethane	ug/L	5	U	5	U	5	U
Carbon Tetrachloride	ug/L	5	U	5	U	5	U
1,2-Dichloroethane	ug/L	5	U	5	U	5	U
Benzene	ug/L	5	U	5	U	5	U
Trichloroethylene (TCE)	ug/L	4.9	J	3.8	J	2.4	J
1,2-Dichloropropane	ug/L	5	U	5	U	5	U
Bromodichloromethane	ug/L	5	U	5	U	5	U
2-Chloroethyl vinyl ether	ug/L	10	UJ	10	UJ	10	R
cis-1,3-Dichloropropene	ug/L	5	U	5	UJ	5	UJ
Methyl isobutyl ketone (4-Methyl-2-pentanone)	ug/L	10	U	10	U	10	U
Toluene	ug/L	5	U	5	U	5	U
trans-1,3-Dichloropropene	ug/L	5	U	5	UJ	5	UJ
1,1,2-Trichloroethane	ug/L	5	U	5	U	5	U
2-Hexanone	ug/L	10	U	10	U	10	U
Tetrachloroethylene (PCE)	ug/L	1.6	J	46.7	=	5	U
Dibromochloromethane	ug/L	5	U	5	U	5	U
Chlorobenzene	ug/L	5	U	5	U	5	U
Ethylbenzene	ug/L	5	U	5	U	5	U
m+p Xylene	ug/L	5	U	5	U	5	U
o-Xylene	ug/L	5	U	5	U	5	U

	StationID	K166GW040		K166GW040		K166GW053	
	SampleID	166GW040M7		166HW040M7		166GW053M7	
	DateCollected	8/1/2002		8/1/2002		7/29/2002	
	DateExtracted	8/5/2002		8/6/2002		8/5/2002	
	DateAnalyzed	8/5/2002		8/6/2002		8/5/2002	
	SDGNumber	64676		64676		64475	
Parameter	**Units**						
Chloromethane	ug/L	10	U	10000	U	10	U
Vinyl chloride	ug/L	4.4	J	10000	U	1.7	J
Bromomethane	ug/L	10	U	10000	U	10	U
Chloroethane	ug/L	10	U	10000	U	10	U
1,1-Dichloroethene	ug/L	12.4	=	5000	U	2.7	J
Acetone	ug/L	17.7	=	10000	U	10	U
Carbon Disulfide	ug/L	5	U	5000	U	5	U
Methylene Chloride	ug/L	5	U	5000	U	5	U
trans-1,2-Dichloroethene	ug/L	13.8	=	5000	U	8.8	=
1,1-Dichloroethane	ug/L	5	U	5000	U	5	U
Vinyl acetate	ug/L	10	U	10000	UJ	10	U
Methyl ethyl ketone (2-Butanone)	ug/L	10	U	10000	U	10	U
cis-1,2-Dichloroethylene	ug/L	5130	=	4570	J	167	J
1,2-Dichloroethene (total)	ug/L	5130	=	4570	J	167	J
Chloroform	ug/L	33.8	=	5000	U	5	U
1,1,1-Trichloroethane	ug/L	5	U	5000	U	5	U
Carbon Tetrachloride	ug/L	5	U	5000	U	5	UJ
1,2-Dichloroethane	ug/L	5	U	5000	U	5	U
Benzene	ug/L	69	=	5000	U	5	U
Trichloroethylene (TCE)	ug/L	90800	=	85300	=	4330	=
1,2-Dichloropropane	ug/L	5	U	5000	U	5	U
Bromodichloromethane	ug/L	5	U	5000	U	5	U
2-Chloroethyl vinyl ether	ug/L	10	UJ	10000	UJ	10	UJ
cis-1,3-Dichloropropene	ug/L	5	U	5000	U	5	U
Methyl isobutyl ketone (4-Methyl-2-pentanone)	ug/L	10.1	=	10000	U	10	U
Toluene	ug/L	2180	J	2150	J	5	U
trans-1,3-Dichloropropene	ug/L	5	U	5000	U	5	U
1,1,2-Trichloroethane	ug/L	25.8	=	5000	U	5	U
2-Hexanone	ug/L	10	U	10000	U	10	U
Tetrachloroethylene (PCE)	ug/L	22.9	=	5000	U	5	U
Dibromochloromethane	ug/L	5	U	5000	U	5	U
Chlorobenzene	ug/L	5	U	5000	U	5	U
Ethylbenzene	ug/L	540	J	544	J	5	U
m+p Xylene	ug/L	1690	J	1590	J	5	U
o-Xylene	ug/L	1020	J	1080	J	5	U

	StationID	K166GW054		K166GW055		K166GW055	
	SampleID	166GW054M7		166GW055M7		166HW055M7	
	DateCollected	7/29/2002		7/29/2002		7/29/2002	
	DateExtracted	8/7/2002		8/5/2002		8/5/2002	
	DateAnalyzed	8/7/2002		8/5/2002		8/5/2002	
	SDGNumber	64475		64475		64475	
Parameter	**Units**						
Chloromethane	ug/L	100	U	10	U	10	U
Vinyl chloride	ug/L	100	U	0.55	J	0.89	J
Bromomethane	ug/L	100	U	10	U	10	U
Chloroethane	ug/L	100	U	10	U	10	U
1,1-Dichloroethene	ug/L	50	U	1.4	J	1.8	J
Acetone	ug/L	100	U	10	U	10	U
Carbon Disulfide	ug/L	50	U	5	U	5	U
Methylene Chloride	ug/L	50	U	5	U	5	U
trans-1,2-Dichloroethene	ug/L	50	U	3.3	J	3.6	J
1,1-Dichloroethane	ug/L	50	U	5	U	5	U
Vinyl acetate	ug/L	100	U	10	U	10	U
Methyl ethyl ketone (2-Butanone)	ug/L	100	U	10	U	10	U
cis-1,2-Dichloroethylene	ug/L	102	=	108	J	105	J
1,2-Dichloroethene (total)	ug/L	102	=	108	J	105	J
Chloroform	ug/L	50	U	5	U	5	U
1,1,1-Trichloroethane	ug/L	50	U	5	U	5	U
Carbon Tetrachloride	ug/L	50	U	5	UJ	5	UJ
1,2-Dichloroethane	ug/L	50	U	5	U	5	U
Benzene	ug/L	50	U	0.64	J	5	U
Trichloroethylene (TCE)	ug/L	841	=	2110	=	1850	=
1,2-Dichloropropane	ug/L	50	U	5	U	5	U
Bromodichloromethane	ug/L	50	U	5	U	5	U
2-Chloroethyl vinyl ether	ug/L	100	UJ	10	UJ	10	UJ
cis-1,3-Dichloropropene	ug/L	50	UJ	5	U	5	U
Methyl isobutyl ketone (4-Methyl-2-pentanone)	ug/L	100	U	10	U	10	U
Toluene	ug/L	50	U	1	J	5	U
trans-1,3-Dichloropropene	ug/L	50	UJ	5	U	5	U
1,1,2-Trichloroethane	ug/L	50	U	5	U	5	U
2-Hexanone	ug/L	100	U	10	U	10	U
Tetrachloroethylene (PCE)	ug/L	50	U	5	U	5	U
Dibromochloromethane	ug/L	50	U	5	U	5	U
Chlorobenzene	ug/L	50	U	5	U	5	U
Ethylbenzene	ug/L	50	U	5	U	5	U
m+p Xylene	ug/L	50	U	5	U	5	U
o-Xylene	ug/L	50	U	5	U	5	U

	StationID	K166GW06D		K166GW07D		K166GW08D	
	SampleID	166GW06DM7		166GW07DM7		166GW08DM7	
	DateCollected	8/1/2002		7/29/2002		7/30/2002	
	DateExtracted	8/8/2002		8/5/2002		8/7/2002	
	DateAnalyzed	8/8/2002		8/5/2002		8/7/2002	
	SDGNumber	64677		64475		64475	
Parameter	**Units**						
Chloromethane	ug/L	10	U	10	U	10	U
Vinyl chloride	ug/L	10	U	10	U	10	U
Bromomethane	ug/L	10	U	10	U	10	U
Chloroethane	ug/L	10	U	10	U	10	U
1,1-Dichloroethene	ug/L	5	U	0.79	J	5	U
Acetone	ug/L	10	U	10	U	10	U
Carbon Disulfide	ug/L	5	U	5	U	5	U
Methylene Chloride	ug/L	5	U	5	U	5	U
trans-1,2-Dichloroethene	ug/L	5	U	4.6	J	1.2	J
1,1-Dichloroethane	ug/L	5	U	5	U	5	U
Vinyl acetate	ug/L	10	UJ	10	U	10	U
Methyl ethyl ketone (2-Butanone)	ug/L	10	U	10	U	10	U
cis-1,2-Dichloroethylene	ug/L	5	U	30.6	=	7.7	=
1,2-Dichloroethene (total)	ug/L	5	U	35.2	=	8.9	=
Chloroform	ug/L	5	U	5	U	5	U
1,1,1-Trichloroethane	ug/L	5	U	5	U	5	U
Carbon Tetrachloride	ug/L	5	U	5	UJ	5	U
1,2-Dichloroethane	ug/L	5	U	5	U	5	U
Benzene	ug/L	5	U	0.38	J	5	U
Trichloroethylene (TCE)	ug/L	0.58	J	798	=	69.1	=
1,2-Dichloropropane	ug/L	5	U	5	U	5	U
Bromodichloromethane	ug/L	5	U	5	U	5	U
2-Chloroethyl vinyl ether	ug/L	10	U	10	UJ	10	UJ
cis-1,3-Dichloropropene	ug/L	5	U	5	U	5	UJ
Methyl isobutyl ketone (4-Methyl-2-pentanone)	ug/L	10	U	10	U	10	U
Toluene	ug/L	5	U	5	U	5	U
trans-1,3-Dichloropropene	ug/L	5	U	5	U	5	UJ
1,1,2-Trichloroethane	ug/L	5	U	5	U	5	U
2-Hexanone	ug/L	10	U	10	U	10	U
Tetrachloroethylene (PCE)	ug/L	5	U	5	U	5	U
Dibromochloromethane	ug/L	5	U	5	U	5	U
Chlorobenzene	ug/L	5	U	5	U	5	U
Ethylbenzene	ug/L	5	U	5	U	5	U
m+p Xylene	ug/L	5	U	5	U	5	U
o-Xylene	ug/L	5	U	5	U	5	U

	StationID	K166GW13D		K166GW13D		K166GW13D	
	SampleID	166GW13DM7		166GW13DM7DL		166HW13DM7	
	DateCollected	7/29/2002		7/29/2002		7/29/2002	
	DateExtracted	8/5/2002		8/8/2002		8/5/2002	
	DateAnalyzed	8/5/2002		8/8/2002		8/5/2002	
	SDGNumber	64475		64475		64475	
Parameter	**Units**						
Chloromethane	ug/L	10	U	1000	R	10	U
Vinyl chloride	ug/L	1.8	J	1000	R	1.9	J
Bromomethane	ug/L	10	U	1000	R	10	U
Chloroethane	ug/L	10	U	1000	R	10	U
1,1-Dichloroethene	ug/L	2.6	J	500	R	3	J
Acetone	ug/L	10	U	1000	R	10	U
Carbon Disulfide	ug/L	5	U	500	R	5	U
Methylene Chloride	ug/L	5	U	500	R	5	U
trans-1,2-Dichloroethene	ug/L	10.5	=	500	R	8.2	=
1,1-Dichloroethane	ug/L	5	U	500	R	5	U
Vinyl acetate	ug/L	10	U	1000	R	10	U
Methyl ethyl ketone (2-Butanone)	ug/L	10	U	1000	R	10	U
cis-1,2-Dichloroethylene	ug/L	197	R	255	J	184	J
1,2-Dichloroethene (total)	ug/L	208	R	255	J	184	J
Chloroform	ug/L	5	U	500	R	5	U
1,1,1-Trichloroethane	ug/L	5	U	500	R	5	U
Carbon Tetrachloride	ug/L	5	UJ	500	R	5	UJ
1,2-Dichloroethane	ug/L	5	U	500	R	5	U
Benzene	ug/L	5	U	500	R	5	U
Trichloroethylene (TCE)	ug/L	3960	=	3960	=	4780	=
1,2-Dichloropropane	ug/L	5	U	500	R	5	U
Bromodichloromethane	ug/L	5	U	500	R	5	U
2-Chloroethyl vinyl ether	ug/L	10	UJ	1000	R	10	UJ
cis-1,3-Dichloropropene	ug/L	5	U	500	R	5	U
Methyl isobutyl ketone (4-Methyl-2-pentanone)	ug/L	10	U	1000	R	10	U
Toluene	ug/L	5	U	500	R	5	U
trans-1,3-Dichloropropene	ug/L	5	U	500	R	5	U
1,1,2-Trichloroethane	ug/L	5	U	500	R	5	U
2-Hexanone	ug/L	10	U	1000	R	10	U
Tetrachloroethylene (PCE)	ug/L	5	U	500	R	5	U
Dibromochloromethane	ug/L	5	U	500	R	5	U
Chlorobenzene	ug/L	5	U	500	R	5	U
Ethylbenzene	ug/L	5	U	500	R	5	U
m+p Xylene	ug/L	5	U	500	R	5	U
o-Xylene	ug/L	5	U	500	R	5	U

	StationID	K166GW14D		K166GW16D		K166GW17D	
	SampleID	166GW14DM7		166GW16DM7		166GW17DM7	
	DateCollected	7/29/2002		7/30/2002		7/30/2002	
	DateExtracted	8/5/2002		8/7/2002		8/7/2002	
	DateAnalyzed	8/5/2002		8/7/2002		8/7/2002	
	SDGNumber	64475		64473		64475	
Parameter	Units						
Chloromethane	ug/L	10	U	500	U	10	U
Vinyl chloride	ug/L	10	U	500	U	10	U
Bromomethane	ug/L	10	U	500	U	10	U
Chloroethane	ug/L	10	U	500	U	10	U
1,1-Dichloroethene	ug/L	5	U	250	U	5	U
Acetone	ug/L	10	U	500	U	10	U
Carbon Disulfide	ug/L	5	U	250	U	5	U
Methylene Chloride	ug/L	5	U	250	U	5	U
trans-1,2-Dichloroethene	ug/L	1.6	J	250	U	5	U
1,1-Dichloroethane	ug/L	5	U	250	U	5	U
Vinyl acetate	ug/L	10	U	500	UJ	10	UJ
Methyl ethyl ketone (2-Butanone)	ug/L	10	U	500	U	10	U
cis-1,2-Dichloroethylene	ug/L	19.6	=	3040	=	5	U
1,2-Dichloroethene (total)	ug/L	21.2	=	3040	=	5	U
Chloroform	ug/L	5	U	250	U	5	U
1,1,1-Trichloroethane	ug/L	5	U	250	U	5	U
Carbon Tetrachloride	ug/L	5	UJ	250	U	5	U
1,2-Dichloroethane	ug/L	5	U	250	U	5	U
Benzene	ug/L	5	U	250	U	5	U
Trichloroethylene (TCE)	ug/L	119	=	270	=	5	U
1,2-Dichloropropane	ug/L	5	U	250	U	5	U
Bromodichloromethane	ug/L	5	U	250	U	5	U
2-Chloroethyl vinyl ether	ug/L	10	UJ	500	UJ	10	R
cis-1,3-Dichloropropene	ug/L	5	U	250	U	5	UJ
Methyl isobutyl ketone (4-Methyl-2-pentanone)	ug/L	10	U	500	U	10	U
Toluene	ug/L	5	U	250	U	5	U
trans-1,3-Dichloropropene	ug/L	5	U	250	U	5	UJ
1,1,2-Trichloroethane	ug/L	5	U	250	U	5	U
2-Hexanone	ug/L	10	U	500	U	10	U
Tetrachloroethylene (PCE)	ug/L	5	U	250	U	5	U
Dibromochloromethane	ug/L	5	U	250	U	5	U
Chlorobenzene	ug/L	5	U	250	U	5	U
Ethylbenzene	ug/L	5	U	250	U	5	U
m+p Xylene	ug/L	5	U	250	U	5	U
o-Xylene	ug/L	5	U	250	U	5	U

	StationID	K166GW19D		K166GW21D		K166GW25D	
	SampleID	166GW19DM7		166GW21DM7		166GW25DM7	
	DateCollected	8/2/2002		8/1/2002		7/31/2002	
	DateExtracted	8/8/2002		8/8/2002		8/8/2002	
	DateAnalyzed	8/8/2002		8/8/2002		8/8/2002	
	SDGNumber	64677		64677		64677	
Parameter	**Units**						
Chloromethane	ug/L	20	U	10	U	1000	U
Vinyl chloride	ug/L	2.4	J	10	U	1000	U
Bromomethane	ug/L	20	U	10	U	1000	U
Chloroethane	ug/L	20	U	10	U	1000	U
1,1-Dichloroethene	ug/L	10	U	5	U	500	U
Acetone	ug/L	20	U	10	U	1000	U
Carbon Disulfide	ug/L	10	U	5	U	500	U
Methylene Chloride	ug/L	10	U	5	U	500	U
trans-1,2-Dichloroethene	ug/L	10	U	5	U	500	U
1,1-Dichloroethane	ug/L	10	U	5	U	500	U
Vinyl acetate	ug/L	20	UJ	10	UJ	1000	UJ
Methyl ethyl ketone (2-Butanone)	ug/L	20	U	10	U	1000	U
cis-1,2-Dichloroethylene	ug/L	37.3	=	5	U	178	J
1,2-Dichloroethene (total)	ug/L	37.3	=	5	U	178	J
Chloroform	ug/L	10	U	5	U	500	U
1,1,1-Trichloroethane	ug/L	10	U	5	U	500	U
Carbon Tetrachloride	ug/L	10	U	5	U	500	U
1,2-Dichloroethane	ug/L	10	U	5	U	500	U
Benzene	ug/L	10	U	5	U	500	U
Trichloroethylene (TCE)	ug/L	103	=	2.3	J	7630	=
1,2-Dichloropropane	ug/L	10	U	5	U	500	U
Bromodichloromethane	ug/L	10	U	5	U	500	U
2-Chloroethyl vinyl ether	ug/L	20	U	10	U	1000	U
cis-1,3-Dichloropropene	ug/L	10	U	5	U	500	U
Methyl isobutyl ketone (4-Methyl-2-pentanone)	ug/L	20	U	10	U	1000	U
Toluene	ug/L	10	U	5	U	500	U
trans-1,3-Dichloropropene	ug/L	10	U	5	U	500	U
1,1,2-Trichloroethane	ug/L	10	U	5	U	500	U
2-Hexanone	ug/L	20	U	10	U	1000	U
Tetrachloroethylene (PCE)	ug/L	105	=	5	U	500	U
Dibromochloromethane	ug/L	10	U	5	U	500	U
Chlorobenzene	ug/L	10	U	5	U	500	U
Ethylbenzene	ug/L	10	U	5	U	500	U
m+p Xylene	ug/L	10	U	5	U	500	U
o-Xylene	ug/L	10	U	5	U	500	U

Analytical Data Summary

	StationID	K166GW26D		K166GW33D		K166GW34D	
	SampleID	166GW26DM7		166GW33DM7		166GW34DM7	
	DateCollected	7/29/2002		8/1/2002		7/31/2002	
	DateExtracted	8/5/2002		8/7/2002		8/7/2002	
	DateAnalyzed	8/5/2002		8/7/2002		8/7/2002	
	SDGNumber	64475		64676		64550	
Parameter	**Units**						
Chloromethane	ug/L	10	U	10	U	500	U
Vinyl chloride	ug/L	0.97	J	10	U	500	U
Bromomethane	ug/L	10	U	10	U	500	U
Chloroethane	ug/L	10	U	10	U	500	U
1,1-Dichloroethene	ug/L	1.7	J	5	U	250	U
Acetone	ug/L	10	U	10	U	500	U
Carbon Disulfide	ug/L	5	U	5	U	250	U
Methylene Chloride	ug/L	5	U	5	U	250	U
trans-1,2-Dichloroethene	ug/L	36.7	=	4.9	J	250	U
1,1-Dichloroethane	ug/L	5	U	5	U	250	U
Vinyl acetate	ug/L	10	U	10	UJ	500	UJ
Methyl ethyl ketone (2-Butanone)	ug/L	10	U	10	U	500	U
cis-1,2-Dichloroethylene	ug/L	355	=	12.8	=	545	=
1,2-Dichloroethene (total)	ug/L	381	=	17.7	=	545	=
Chloroform	ug/L	5	U	5	U	250	U
1,1,1-Trichloroethane	ug/L	5	U	5	U	250	U
Carbon Tetrachloride	ug/L	5	UJ	5	U	250	U
1,2-Dichloroethane	ug/L	5	U	0.49	J	250	U
Benzene	ug/L	5	U	3.6	J	250	U
Trichloroethylene (TCE)	ug/L	1640	=	84.8	=	70000	=
1,2-Dichloropropane	ug/L	5	U	5	U	250	U
Bromodichloromethane	ug/L	5	U	5	U	250	U
2-Chloroethyl vinyl ether	ug/L	10	UJ	10	UJ	500	UJ
cis-1,3-Dichloropropene	ug/L	5	U	5	U	250	U
Methyl isobutyl ketone (4-Methyl-2-pentanone)	ug/L	10	U	10	U	500	U
Toluene	ug/L	5	U	5	U	250	U
trans-1,3-Dichloropropene	ug/L	5	U	5	U	250	U
1,1,2-Trichloroethane	ug/L	5	U	5	U	250	U
2-Hexanone	ug/L	10	U	10	U	500	U
Tetrachloroethylene (PCE)	ug/L	5	U	5	U	250	U
Dibromochloromethane	ug/L	5	U	5	U	250	U
Chlorobenzene	ug/L	5	U	5	U	250	U
Ethylbenzene	ug/L	5	U	5	U	250	U
m+p Xylene	ug/L	5	U	5	U	250	U
o-Xylene	ug/L	5	U	5	U	250	U

	StationID	K166GW35D		K166GW36D		K166GW37D	
	SampleID	166GW35DM7		166GW36DM7		166GW37DM7	
	DateCollected	8/1/2002		7/31/2002		7/31/2002	
	DateExtracted	8/6/2002		8/7/2002		8/7/2002	
	DateAnalyzed	8/6/2002		8/7/2002		8/7/2002	
	SDGNumber	64676		64550		64550	
Parameter	**Units**						
Chloromethane	ug/L	100	U	500	U	500	U
Vinyl chloride	ug/L	100	U	500	U	500	U
Bromomethane	ug/L	100	U	500	U	500	U
Chloroethane	ug/L	100	U	500	U	500	U
1,1-Dichloroethene	ug/L	50	U	250	U	250	U
Acetone	ug/L	100	U	500	U	500	U
Carbon Disulfide	ug/L	50	U	250	U	250	U
Methylene Chloride	ug/L	50	U	250	U	250	U
trans-1,2-Dichloroethene	ug/L	50	U	250	U	250	U
1,1-Dichloroethane	ug/L	50	U	250	U	250	U
Vinyl acetate	ug/L	100	UJ	500	UJ	500	UJ
Methyl ethyl ketone (2-Butanone)	ug/L	100	U	500	U	500	U
cis-1,2-Dichloroethylene	ug/L	55.6	=	2860	=	2330	=
1,2-Dichloroethene (total)	ug/L	55.6	=	2860	=	2330	=
Chloroform	ug/L	50	U	250	U	250	U
1,1,1-Trichloroethane	ug/L	50	U	250	U	250	U
Carbon Tetrachloride	ug/L	50	U	250	U	250	U
1,2-Dichloroethane	ug/L	50	U	250	U	250	U
Benzene	ug/L	50	U	250	U	250	U
Trichloroethylene (TCE)	ug/L	2410	=	24800	=	3580	=
1,2-Dichloropropane	ug/L	50	U	250	U	250	U
Bromodichloromethane	ug/L	50	U	250	U	250	U
2-Chloroethyl vinyl ether	ug/L	100	UJ	500	UJ	500	UJ
cis-1,3-Dichloropropene	ug/L	50	U	250	U	250	U
Methyl isobutyl ketone (4-Methyl-2-pentanone)	ug/L	100	U	500	U	500	U
Toluene	ug/L	50	U	250	U	250	U
trans-1,3-Dichloropropene	ug/L	50	U	250	U	250	U
1,1,2-Trichloroethane	ug/L	50	U	250	U	250	U
2-Hexanone	ug/L	100	U	500	U	500	U
Tetrachloroethylene (PCE)	ug/L	50	U	250	U	250	U
Dibromochloromethane	ug/L	50	U	250	U	250	U
Chlorobenzene	ug/L	50	U	250	U	250	U
Ethylbenzene	ug/L	50	U	250	U	250	U
m+p Xylene	ug/L	50	U	250	U	250	U
o-Xylene	ug/L	50	U	250	U	250	U

Analytical Data Summary

	StationID	K166GW38D		K166GW39D		K166GW41D	
	SampleID	166GW38DM7		166GW39DM7		166GW41DM7	
	DateCollected	8/1/2002		8/1/2002		8/1/2002	
	DateExtracted	8/6/2002		8/7/2002		8/6/2002	
	DateAnalyzed	8/6/2002		8/7/2002		8/6/2002	
	SDGNumber	64676		64676		64676	
Parameter	**Units**						
Chloromethane	ug/L	100	U	10	U	50	U
Vinyl chloride	ug/L	100	U	10	U	50	U
Bromomethane	ug/L	100	U	10	U	50	U
Chloroethane	ug/L	100	U	10	U	50	U
1,1-Dichloroethene	ug/L	50	U	5	U	25	U
Acetone	ug/L	100	U	10	U	50	U
Carbon Disulfide	ug/L	50	U	5	U	25	U
Methylene Chloride	ug/L	50	U	5	U	25	U
trans-1,2-Dichloroethene	ug/L	4.4	J	5	U	13.8	J
1,1-Dichloroethane	ug/L	50	U	5	U	25	U
Vinyl acetate	ug/L	100	UJ	10	UJ	50	UJ
Methyl ethyl ketone (2-Butanone)	ug/L	100	U	10	U	50	U
cis-1,2-Dichloroethylene	ug/L	55.1	=	5	U	169	=
1,2-Dichloroethene (total)	ug/L	59.5	=	5	U	183	=
Chloroform	ug/L	50	U	5	U	25	U
1,1,1-Trichloroethane	ug/L	50	U	5	U	25	U
Carbon Tetrachloride	ug/L	50	U	5	U	25	U
1,2-Dichloroethane	ug/L	50	U	5	U	25	U
Benzene	ug/L	50	U	5	U	25	U
Trichloroethylene (TCE)	ug/L	774	=	0.82	J	712	=
1,2-Dichloropropane	ug/L	50	U	5	U	25	U
Bromodichloromethane	ug/L	50	U	5	U	25	U
2-Chloroethyl vinyl ether	ug/L	100	UJ	10	UJ	50	UJ
cis-1,3-Dichloropropene	ug/L	50	U	5	U	25	U
Methyl isobutyl ketone (4-Methyl-2-pentanone)	ug/L	100	U	10	U	50	U
Toluene	ug/L	50	U	5	U	25	U
trans-1,3-Dichloropropene	ug/L	50	U	5	U	25	U
1,1,2-Trichloroethane	ug/L	50	U	5	U	25	U
2-Hexanone	ug/L	100	U	10	U	50	U
Tetrachloroethylene (PCE)	ug/L	50	U	5	U	25	U
Dibromochloromethane	ug/L	50	U	5	U	25	U
Chlorobenzene	ug/L	50	U	5	U	25	U
Ethylbenzene	ug/L	50	U	5	U	25	U
m+p Xylene	ug/L	50	U	5	U	25	U
o-Xylene	ug/L	50	U	5	U	25	U

	StationID	K166GW42D		K166GW43D		K166GW44D	
	SampleID	166GW42DM7		166GW43DM7DL		166GW44DM7	
	DateCollected	8/1/2002		8/1/2002		8/1/2002	
	DateExtracted	8/6/2002		8/6/2002		8/6/2002	
	DateAnalyzed	8/6/2002		8/6/2002		8/6/2002	
	SDGNumber	64676		64676		64676	
Parameter	**Units**						
Chloromethane	ug/L	100	U	2000	U	100	U
Vinyl chloride	ug/L	100	U	2000	U	100	U
Bromomethane	ug/L	100	U	2000	U	100	U
Chloroethane	ug/L	100	U	2000	U	100	U
1,1-Dichloroethene	ug/L	50	U	1000	U	50	U
Acetone	ug/L	100	U	2000	U	100	U
Carbon Disulfide	ug/L	50	U	1000	U	50	U
Methylene Chloride	ug/L	50	U	1000	U	50	U
trans-1,2-Dichloroethene	ug/L	5.6	J	1000	U	50	U
1,1-Dichloroethane	ug/L	50	U	1000	U	50	U
Vinyl acetate	ug/L	100	UJ	2000	UJ	100	UJ
Methyl ethyl ketone (2-Butanone)	ug/L	100	U	2000	U	100	U
cis-1,2-Dichloroethylene	ug/L	447	=	2500	=	54.3	=
1,2-Dichloroethene (total)	ug/L	452	=	2500	=	54.3	=
Chloroform	ug/L	50	U	1000	U	50	U
1,1,1-Trichloroethane	ug/L	50	U	1000	U	50	U
Carbon Tetrachloride	ug/L	50	U	1000	U	50	U
1,2-Dichloroethane	ug/L	50	U	1000	U	50	U
Benzene	ug/L	50	U	1000	U	50	U
Trichloroethylene (TCE)	ug/L	2620	=	13500	=	2370	=
1,2-Dichloropropane	ug/L	50	U	1000	U	50	U
Bromodichloromethane	ug/L	50	U	1000	U	50	U
2-Chloroethyl vinyl ether	ug/L	100	UJ	2000	UJ	100	UJ
cis-1,3-Dichloropropene	ug/L	50	U	1000	U	50	U
Methyl isobutyl ketone (4-Methyl-2-pentanone)	ug/L	100	U	2000	U	100	U
Toluene	ug/L	50	U	1000	U	50	U
trans-1,3-Dichloropropene	ug/L	50	U	1000	U	50	U
1,1,2-Trichloroethane	ug/L	50	U	1000	U	50	U
2-Hexanone	ug/L	100	U	2000	U	100	U
Tetrachloroethylene (PCE)	ug/L	50	U	1000	U	50	U
Dibromochloromethane	ug/L	50	U	1000	U	50	U
Chlorobenzene	ug/L	50	U	1000	U	50	U
Ethylbenzene	ug/L	50	U	1000	U	50	U
m+p Xylene	ug/L	50	U	1000	U	50	U
o-Xylene	ug/L	50	U	1000	U	50	U

Analytical Data Summary

	StationID	K166GW45D		K166GW46D		K166GW47D	
	SampleID	166GW45DM7		166GW46DM7		166GW47DM7	
	DateCollected	7/31/2002		7/31/2002		7/31/2002	
	DateExtracted	8/7/2002		8/7/2002		8/7/2002	
	DateAnalyzed	8/7/2002		8/7/2002		8/7/2002	
	SDGNumber	64550		64550		64550	
Parameter	**Units**						
Chloromethane	ug/L	250	U	500	U	10	U
Vinyl chloride	ug/L	250	U	500	U	10	U
Bromomethane	ug/L	250	U	500	U	10	U
Chloroethane	ug/L	250	U	500	U	10	U
1,1-Dichloroethene	ug/L	125	U	250	U	5	U
Acetone	ug/L	250	U	500	U	10	U
Carbon Disulfide	ug/L	125	U	250	U	5	U
Methylene Chloride	ug/L	125	U	250	U	5	U
trans-1,2-Dichloroethene	ug/L	13.8	J	250	U	5	U
1,1-Dichloroethane	ug/L	125	U	250	U	5	U
Vinyl acetate	ug/L	250	UJ	500	UJ	10	UJ
Methyl ethyl ketone (2-Butanone)	ug/L	250	U	500	U	10	U
cis-1,2-Dichloroethylene	ug/L	96.6	J	66	J	0.51	J
1,2-Dichloroethene (total)	ug/L	110	J	66	J	0.51	J
Chloroform	ug/L	125	U	250	U	5	U
1,1,1-Trichloroethane	ug/L	125	U	250	U	5	U
Carbon Tetrachloride	ug/L	125	U	250	U	5	U
1,2-Dichloroethane	ug/L	125	U	250	U	5	U
Benzene	ug/L	125	U	250	U	5	U
Trichloroethylene (TCE)	ug/L	1540	=	4110	=	35.5	=
1,2-Dichloropropane	ug/L	125	U	250	U	5	U
Bromodichloromethane	ug/L	125	U	250	U	5	U
2-Chloroethyl vinyl ether	ug/L	250	UJ	500	UJ	10	UJ
cis-1,3-Dichloropropene	ug/L	125	U	250	U	5	U
Methyl isobutyl ketone (4-Methyl-2-pentanone)	ug/L	250	U	500	U	10	U
Toluene	ug/L	125	U	250	U	5	U
trans-1,3-Dichloropropene	ug/L	125	U	250	U	5	U
1,1,2-Trichloroethane	ug/L	125	U	250	U	5	U
2-Hexanone	ug/L	250	U	500	U	10	U
Tetrachloroethylene (PCE)	ug/L	125	U	250	U	5	U
Dibromochloromethane	ug/L	125	U	250	U	5	U
Chlorobenzene	ug/L	125	U	250	U	5	U
Ethylbenzene	ug/L	125	U	250	U	5	U
m+p Xylene	ug/L	125	U	250	U	5	U
o-Xylene	ug/L	125	U	250	U	5	U

	StationID	K166GW48D		K166GW49D		K166GW50D	
	SampleID	166GW48DM7		166GW49DM7		166GW50DM7	
	DateCollected	7/31/2002		7/31/2002		7/30/2002	
	DateExtracted	8/7/2002		8/7/2002		8/6/2002	
	DateAnalyzed	8/7/2002		8/7/2002		8/6/2002	
	SDGNumber	64550		64550		64473	
Parameter	**Units**						
Chloromethane	ug/L	500	U	500	U	500	U
Vinyl chloride	ug/L	500	U	500	U	500	U
Bromomethane	ug/L	500	U	500	U	500	U
Chloroethane	ug/L	500	U	500	U	500	U
1,1-Dichloroethene	ug/L	250	U	250	U	250	U
Acetone	ug/L	500	U	500	U	500	U
Carbon Disulfide	ug/L	250	U	250	U	250	U
Methylene Chloride	ug/L	250	U	250	U	250	U
trans-1,2-Dichloroethene	ug/L	250	U	250	U	250	U
1,1-Dichloroethane	ug/L	250	U	250	U	250	U
Vinyl acetate	ug/L	500	UJ	500	UJ	500	UJ
Methyl ethyl ketone (2-Butanone)	ug/L	500	U	500	U	500	U
cis-1,2-Dichloroethylene	ug/L	42.6	J	85.7	J	338	=
1,2-Dichloroethene (total)	ug/L	42.6	J	85.7	J	338	=
Chloroform	ug/L	250	U	250	U	250	U
1,1,1-Trichloroethane	ug/L	250	U	250	U	250	U
Carbon Tetrachloride	ug/L	250	U	250	U	250	U
1,2-Dichloroethane	ug/L	250	U	250	U	250	U
Benzene	ug/L	250	U	250	U	250	U
Trichloroethylene (TCE)	ug/L	3390	=	3000	=	10600	=
1,2-Dichloropropane	ug/L	250	U	250	U	250	U
Bromodichloromethane	ug/L	250	U	250	U	250	U
2-Chloroethyl vinyl ether	ug/L	500	UJ	500	UJ	500	UJ
cis-1,3-Dichloropropene	ug/L	250	U	250	U	250	U
Methyl isobutyl ketone (4-Methyl-2-pentanone)	ug/L	500	U	500	U	500	U
Toluene	ug/L	250	U	250	U	250	U
trans-1,3-Dichloropropene	ug/L	250	U	250	U	250	U
1,1,2-Trichloroethane	ug/L	250	U	250	U	250	U
2-Hexanone	ug/L	500	U	500	U	500	U
Tetrachloroethylene (PCE)	ug/L	250	U	250	U	250	U
Dibromochloromethane	ug/L	250	U	250	U	250	U
Chlorobenzene	ug/L	250	U	250	U	250	U
Ethylbenzene	ug/L	250	U	250	U	250	U
m+p Xylene	ug/L	250	U	250	U	250	U
o-Xylene	ug/L	250	U	250	U	250	U

Analytical Data Summary

	StationID	K166GW51D		K166GW52D		K166GWIN3	
	SampleID	166GW51DM7		166GW52DM7		166GWIN3M7	
	DateCollected	7/30/2002		7/30/2002		7/30/2002	
	DateExtracted	8/7/2002		8/6/2002		8/7/2002	
	DateAnalyzed	8/7/2002		8/6/2002		8/7/2002	
	SDGNumber	64473		64473		64473	
Parameter	**Units**						
Chloromethane	ug/L	250	U	500	U	10	U
Vinyl chloride	ug/L	250	U	500	U	50.3	=
Bromomethane	ug/L	250	U	500	U	10	U
Chloroethane	ug/L	250	U	500	U	10	U
1,1-Dichloroethene	ug/L	125	U	250	U	5	U
Acetone	ug/L	250	U	500	U	10	U
Carbon Disulfide	ug/L	125	U	250	U	5	U
Methylene Chloride	ug/L	125	U	250	U	5	U
trans-1,2-Dichloroethene	ug/L	125	U	250	U	5	U
1,1-Dichloroethane	ug/L	125	U	250	U	5	U
Vinyl acetate	ug/L	250	UJ	500	UJ	10	UJ
Methyl ethyl ketone (2-Butanone)	ug/L	250	U	500	U	10	U
cis-1,2-Dichloroethylene	ug/L	2210	=	2690	=	42	=
1,2-Dichloroethene (total)	ug/L	2210	=	2690	=	42	=
Chloroform	ug/L	125	U	250	U	5	U
1,1,1-Trichloroethane	ug/L	125	U	250	U	5	U
Carbon Tetrachloride	ug/L	125	U	250	U	5	U
1,2-Dichloroethane	ug/L	125	U	250	U	5	U
Benzene	ug/L	125	U	250	U	5	U
Trichloroethylene (TCE)	ug/L	1790	=	590	=	5	U
1,2-Dichloropropane	ug/L	125	U	250	U	5	U
Bromodichloromethane	ug/L	125	U	250	U	5	U
2-Chloroethyl vinyl ether	ug/L	250	UJ	500	UJ	10	UJ
cis-1,3-Dichloropropene	ug/L	125	U	250	U	5	U
Methyl isobutyl ketone (4-Methyl-2-pentanone)	ug/L	250	U	500	U	10	U
Toluene	ug/L	125	U	250	U	5	U
trans-1,3-Dichloropropene	ug/L	125	U	250	U	5	U
1,1,2-Trichloroethane	ug/L	125	U	250	U	5	U
2-Hexanone	ug/L	250	U	500	U	10	U
Tetrachloroethylene (PCE)	ug/L	125	U	250	U	5	U
Dibromochloromethane	ug/L	125	U	250	U	5	U
Chlorobenzene	ug/L	125	U	250	U	5	U
Ethylbenzene	ug/L	125	U	250	U	5	U
m+p Xylene	ug/L	125	U	250	U	5	U
o-Xylene	ug/L	125	U	250	U	0.26	J

	StationID	K166GWTM3		K166GWTM4		K696GW001	
	SampleID	166GWTM3M7		166GWTM4M7		696GW001M7	
	DateCollected	7/30/2002		7/30/2002		8/1/2002	
	DateExtracted	8/7/2002		8/7/2002		8/8/2002	
	DateAnalyzed	8/7/2002		8/7/2002		8/8/2002	
	SDGNumber	64473		64473		64677	
Parameter	**Units**						
Chloromethane	ug/L	100	U	500	U	10	U
Vinyl chloride	ug/L	440	=	500	U	10	U
Bromomethane	ug/L	100	U	500	U	10	U
Chloroethane	ug/L	100	U	500	U	10	U
1,1-Dichloroethene	ug/L	50	U	250	U	5	U
Acetone	ug/L	100	U	500	U	10	U
Carbon Disulfide	ug/L	50	U	250	U	5	U
Methylene Chloride	ug/L	50	U	250	U	5	U
trans-1,2-Dichloroethene	ug/L	50	U	250	U	5	U
1,1-Dichloroethane	ug/L	50	U	250	U	5	U
Vinyl acetate	ug/L	100	UJ	500	UJ	10	UJ
Methyl ethyl ketone (2-Butanone)	ug/L	100	U	500	U	10	U
cis-1,2-Dichloroethylene	ug/L	605	=	2510	=	5	U
1,2-Dichloroethene (total)	ug/L	605	=	2510	=	5	U
Chloroform	ug/L	50	U	250	U	5	U
1,1,1-Trichloroethane	ug/L	50	U	250	U	5	U
Carbon Tetrachloride	ug/L	50	U	250	U	5	U
1,2-Dichloroethane	ug/L	50	U	250	U	5	U
Benzene	ug/L	50	U	250	U	5	U
Trichloroethylene (TCE)	ug/L	50	U	1340	=	0.56	J
1,2-Dichloropropane	ug/L	50	U	250	U	5	U
Bromodichloromethane	ug/L	50	U	250	U	5	U
2-Chloroethyl vinyl ether	ug/L	100	UJ	500	UJ	10	R
cis-1,3-Dichloropropene	ug/L	50	U	250	U	5	U
Methyl isobutyl ketone (4-Methyl-2-pentanone)	ug/L	100	U	500	U	10	U
Toluene	ug/L	50	U	250	U	5	U
trans-1,3-Dichloropropene	ug/L	50	U	250	U	5	U
1,1,2-Trichloroethane	ug/L	50	U	250	U	5	U
2-Hexanone	ug/L	100	U	500	U	10	U
Tetrachloroethylene (PCE)	ug/L	50	U	250	U	5	U
Dibromochloromethane	ug/L	50	U	250	U	5	U
Chlorobenzene	ug/L	50	U	250	U	5	U
Ethylbenzene	ug/L	50	U	250	U	5	U
m+p Xylene	ug/L	50	U	250	U	5	U
o-Xylene	ug/L	50	U	250	U	5	U

Analytical Data Summary

	StationID	K696GW001	
	SampleID	696HW001M7	
	DateCollected	8/1/2002	
	DateExtracted	8/8/2002	
	DateAnalyzed	8/8/2002	
	SDGNumber	64677	
Parameter	**Units**		
Chloromethane	ug/L	10	U
Vinyl chloride	ug/L	10	U
Bromomethane	ug/L	10	U
Chloroethane	ug/L	10	U
1,1-Dichloroethene	ug/L	5	U
Acetone	ug/L	10	U
Carbon Disulfide	ug/L	5	U
Methylene Chloride	ug/L	5	U
trans-1,2-Dichloroethene	ug/L	5	U
1,1-Dichloroethane	ug/L	5	U
Vinyl acetate	ug/L	10	UJ
Methyl ethyl ketone (2-Butanone)	ug/L	10	U
cis-1,2-Dichloroethylene	ug/L	5	U
1,2-Dichloroethene (total)	ug/L	5	U
Chloroform	ug/L	5	U
1,1,1-Trichloroethane	ug/L	5	U
Carbon Tetrachloride	ug/L	5	U
1,2-Dichloroethane	ug/L	5	U
Benzene	ug/L	5	U
Trichloroethylene (TCE)	ug/L	0.55	J
1,2-Dichloropropane	ug/L	5	U
Bromodichloromethane	ug/L	5	U
2-Chloroethyl vinyl ether	ug/L	10	U
cis-1,3-Dichloropropene	ug/L	5	U
Methyl isobutyl ketone (4-Methyl-2-pentanone)	ug/L	10	U
Toluene	ug/L	5	U
trans-1,3-Dichloropropene	ug/L	5	U
1,1,2-Trichloroethane	ug/L	5	U
2-Hexanone	ug/L	10	U
Tetrachloroethylene (PCE)	ug/L	5	U
Dibromochloromethane	ug/L	5	U
Chlorobenzene	ug/L	5	U
Ethylbenzene	ug/L	5	U
m+p Xylene	ug/L	5	U
o-Xylene	ug/L	5	U

	StationID	K163GW001		K163GW003		K163GW005	
	SampleID	163GW001M7		163GW003M7		163GW005M7	
	DateCollected	7/29/2002		8/1/2002		7/29/2002	
	DateExtracted	8/7/2002		8/5/2002		8/7/2002	
	DateAnalyzed	8/7/2002		8/5/2002		8/7/2002	
	SDGNumber	64475		64676		64475	
Parameter	**Units**						
Xylenes, Total	ug/L	5	U	5	U	5	U
Styrene	ug/L	5	U	5	U	5	U
Bromoform	ug/L	5	U	5	U	5	U
1,1,2,2-Tetrachloroethane	ug/L	5	U	5	U	5	U
1,3-Dichlorobenzene	ug/L	5	U	5	U	5	U
1,4-Dichlorobenzene	ug/L	5	U	5	U	5	U
1,2-Dichlorobenzene	ug/L	5	U	5	U	5	U
1,2,4-Trichlorobenzene	ug/L	5	U	5	U	5	U
1,2,3-Trichlorobenzene	ug/L	5	U	5	U	5	U

	StationID	K163GW03M		K166GW017		K166GW026	
	SampleID	163GW03MM7		166GW017M7		166GW026M7	
	DateCollected	8/1/2002		7/30/2002		7/29/2002	
	DateExtracted	8/5/2002		8/7/2002		8/7/2002	
	DateAnalyzed	8/5/2002		8/7/2002		8/7/2002	
	SDGNumber	64676		64475		64475	
Parameter	Units						
Xylenes, Total	ug/L	5	U	5	U	5	U
Styrene	ug/L	5	U	5	U	5	U
Bromoform	ug/L	5	U	5	U	5	U
1,1,2,2-Tetrachloroethane	ug/L	5	U	5	U	5	U
1,3-Dichlorobenzene	ug/L	5	U	5	U	5	U
1,4-Dichlorobenzene	ug/L	5	U	5	U	5	U
1,2-Dichlorobenzene	ug/L	5	U	5	U	5	U
1,2,4-Trichlorobenzene	ug/L	5	U	5	U	5	U
1,2,3-Trichlorobenzene	ug/L	5	U	5	U	5	U

	StationID	K166GW040		K166GW040		K166GW053	
	SampleID	166GW040M7		166HW040M7		166GW053M7	
	DateCollected	8/1/2002		8/1/2002		7/29/2002	
	DateExtracted	8/5/2002		8/6/2002		8/5/2002	
	DateAnalyzed	8/5/2002		8/6/2002		8/5/2002	
	SDGNumber	64676		64676		64475	
Parameter	**Units**						
Xylenes, Total	ug/L	2710	J	2670	J	5	U
Styrene	ug/L	5	U	5000	U	5	U
Bromoform	ug/L	5	U	5000	U	5	U
1,1,2,2-Tetrachloroethane	ug/L	1.8	J	5000	U	5	U
1,3-Dichlorobenzene	ug/L	5	U	5000	U	5	U
1,4-Dichlorobenzene	ug/L	5	U	5000	U	5	U
1,2-Dichlorobenzene	ug/L	5	U	5000	U	5	U
1,2,4-Trichlorobenzene	ug/L	2.1	J	5000	U	5	U
1,2,3-Trichlorobenzene	ug/L	5	U	5000	U	5	U

	StationID	K166GW054		K166GW055		K166GW055	
	SampleID	166GW054M7		166GW055M7		166HW055M7	
	DateCollected	7/29/2002		7/29/2002		7/29/2002	
	DateExtracted	8/7/2002		8/5/2002		8/5/2002	
	DateAnalyzed	8/7/2002		8/5/2002		8/5/2002	
	SDGNumber	64475		64475		64475	
Parameter	**Units**						
Xylenes, Total	ug/L	50	U	5	U	5	U
Styrene	ug/L	50	U	5	U	5	U
Bromoform	ug/L	50	U	5	U	5	U
1,1,2,2-Tetrachloroethane	ug/L	50	U	5	U	5	U
1,3-Dichlorobenzene	ug/L	50	U	5	U	5	U
1,4-Dichlorobenzene	ug/L	50	U	5	U	5	U
1,2-Dichlorobenzene	ug/L	50	U	5	U	5	U
1,2,4-Trichlorobenzene	ug/L	50	U	5	U	5	U
1,2,3-Trichlorobenzene	ug/L	50	U	5	U	5	U

	StationID	K166GW06D		K166GW07D		K166GW08D	
	SampleID	166GW06DM7		166GW07DM7		166GW08DM7	
	DateCollected	8/1/2002		7/29/2002		7/30/2002	
	DateExtracted	8/8/2002		8/5/2002		8/7/2002	
	DateAnalyzed	8/8/2002		8/5/2002		8/7/2002	
	SDGNumber	64677		64475		64475	
Parameter	**Units**						
Xylenes, Total	ug/L	5	U	5	U	5	U
Styrene	ug/L	5	U	5	U	5	U
Bromoform	ug/L	5	U	5	U	5	U
1,1,2,2-Tetrachloroethane	ug/L	5	U	5	U	5	U
1,3-Dichlorobenzene	ug/L	5	U	5	U	5	U
1,4-Dichlorobenzene	ug/L	5	U	5	U	5	U
1,2-Dichlorobenzene	ug/L	5	U	5	U	5	U
1,2,4-Trichlorobenzene	ug/L	5	U	5	U	5	U
1,2,3-Trichlorobenzene	ug/L	5	U	5	U	5	U

	StationID	K166GW13D		K166GW13D		K166GW13D	
	SampleID	166GW13DM7		166GW13DM7DL		166HW13DM7	
	DateCollected	7/29/2002		7/29/2002		7/29/2002	
	DateExtracted	8/5/2002		8/8/2002		8/5/2002	
	DateAnalyzed	8/5/2002		8/8/2002		8/5/2002	
	SDGNumber	64475		64475		64475	
Parameter	Units						
Xylenes, Total	ug/L	5	U	500	R	5	U
Styrene	ug/L	5	U	500	R	5	U
Bromoform	ug/L	5	U	500	R	5	U
1,1,2,2-Tetrachloroethane	ug/L	5	U	500	R	5	U
1,3-Dichlorobenzene	ug/L	5	U	500	R	5	U
1,4-Dichlorobenzene	ug/L	5	U	500	R	5	U
1,2-Dichlorobenzene	ug/L	5	U	500	R	5	U
1,2,4-Trichlorobenzene	ug/L	5	U	500	R	5	U
1,2,3-Trichlorobenzene	ug/L	5	U	500	R	5	U

	StationID	K166GW14D		K166GW16D		K166GW17D	
	SampleID	166GW14DM7		166GW16DM7		166GW17DM7	
	DateCollected	7/29/2002		7/30/2002		7/30/2002	
	DateExtracted	8/5/2002		8/7/2002		8/7/2002	
	DateAnalyzed	8/5/2002		8/7/2002		8/7/2002	
	SDGNumber	64475		64473		64475	
Parameter	**Units**						
Xylenes, Total	ug/L	5	U	250	U	5	U
Styrene	ug/L	5	U	250	U	5	U
Bromoform	ug/L	5	U	250	U	5	U
1,1,2,2-Tetrachloroethane	ug/L	5	U	250	U	5	U
1,3-Dichlorobenzene	ug/L	5	U	250	U	5	U
1,4-Dichlorobenzene	ug/L	5	U	250	U	5	U
1,2-Dichlorobenzene	ug/L	5	U	250	U	5	U
1,2,4-Trichlorobenzene	ug/L	5	U	250	U	5	U
1,2,3-Trichlorobenzene	ug/L	5	U	250	U	5	U

	StationID	K166GW19D		K166GW21D		K166GW25D	
	SampleID	166GW19DM7		166GW21DM7		166GW25DM7	
	DateCollected	8/2/2002		8/1/2002		7/31/2002	
	DateExtracted	8/8/2002		8/8/2002		8/8/2002	
	DateAnalyzed	8/8/2002		8/8/2002		8/8/2002	
	SDGNumber	64677		64677		64677	
Parameter	Units						
Xylenes, Total	ug/L	10	U	5	U	500	U
Styrene	ug/L	10	U	5	U	500	U
Bromoform	ug/L	10	U	5	U	500	U
1,1,2,2-Tetrachloroethane	ug/L	10	U	5	U	500	U
1,3-Dichlorobenzene	ug/L	10	U	5	U	500	U
1,4-Dichlorobenzene	ug/L	10	U	5	U	500	U
1,2-Dichlorobenzene	ug/L	10	U	5	U	500	U
1,2,4-Trichlorobenzene	ug/L	10	U	5	U	500	U
1,2,3-Trichlorobenzene	ug/L	10	U	5	U	500	U

	StationID	K166GW26D		K166GW33D		K166GW34D	
	SampleID	166GW26DM7		166GW33DM7		166GW34DM7	
	DateCollected	7/29/2002		8/1/2002		7/31/2002	
	DateExtracted	8/5/2002		8/7/2002		8/7/2002	
	DateAnalyzed	8/5/2002		8/7/2002		8/7/2002	
	SDGNumber	64475		64676		64550	
Parameter	**Units**						
Xylenes, Total	ug/L	5	U	5	U	250	U
Styrene	ug/L	5	U	5	U	250	U
Bromoform	ug/L	5	U	5	U	250	U
1,1,2,2-Tetrachloroethane	ug/L	5	U	5	U	250	U
1,3-Dichlorobenzene	ug/L	5	U	5	U	250	U
1,4-Dichlorobenzene	ug/L	5	U	5	U	250	U
1,2-Dichlorobenzene	ug/L	5	U	5	U	250	U
1,2,4-Trichlorobenzene	ug/L	5	U	5	U	250	U
1,2,3-Trichlorobenzene	ug/L	5	U	5	U	250	U

	StationID	K166GW35D		K166GW36D		K166GW37D	
	SampleID	166GW35DM7		166GW36DM7		166GW37DM7	
	DateCollected	8/1/2002		7/31/2002		7/31/2002	
	DateExtracted	8/6/2002		8/7/2002		8/7/2002	
	DateAnalyzed	8/6/2002		8/7/2002		8/7/2002	
	SDGNumber	64676		64550		64550	
Parameter	**Units**						
Xylenes, Total	ug/L	50	U	250	U	250	U
Styrene	ug/L	50	U	250	U	250	U
Bromoform	ug/L	50	U	250	U	250	U
1,1,2,2-Tetrachloroethane	ug/L	50	U	250	U	250	U
1,3-Dichlorobenzene	ug/L	50	U	250	U	250	U
1,4-Dichlorobenzene	ug/L	50	U	250	U	250	U
1,2-Dichlorobenzene	ug/L	50	U	250	U	250	U
1,2,4-Trichlorobenzene	ug/L	50	U	250	U	250	U
1,2,3-Trichlorobenzene	ug/L	50	U	250	U	250	U

	StationID	K166GW38D		K166GW39D		K166GW41D	
	SampleID	166GW38DM7		166GW39DM7		166GW41DM7	
	DateCollected	8/1/2002		8/1/2002		8/1/2002	
	DateExtracted	8/6/2002		8/7/2002		8/6/2002	
	DateAnalyzed	8/6/2002		8/7/2002		8/6/2002	
	SDGNumber	64676		64676		64676	
Parameter	Units						
Xylenes, Total	ug/L	50	U	5	U	25	U
Styrene	ug/L	50	U	5	U	25	U
Bromoform	ug/L	50	U	5	U	25	U
1,1,2,2-Tetrachloroethane	ug/L	50	U	5	U	25	U
1,3-Dichlorobenzene	ug/L	50	U	5	U	25	U
1,4-Dichlorobenzene	ug/L	50	U	5	U	25	U
1,2-Dichlorobenzene	ug/L	50	U	5	U	25	U
1,2,4-Trichlorobenzene	ug/L	50	U	5	U	25	U
1,2,3-Trichlorobenzene	ug/L	50	U	5	U	25	U

	StationID	K166GW42D		K166GW43D		K166GW44D	
	SampleID	166GW42DM7		166GW43DM7DL		166GW44DM7	
	DateCollected	8/1/2002		8/1/2002		8/1/2002	
	DateExtracted	8/6/2002		8/6/2002		8/6/2002	
	DateAnalyzed	8/6/2002		8/6/2002		8/6/2002	
	SDGNumber	64676		64676		64676	
Parameter	**Units**						
Xylenes, Total	ug/L	50	U	1000	U	50	U
Styrene	ug/L	50	U	1000	U	50	U
Bromoform	ug/L	50	U	1000	U	50	U
1,1,2,2-Tetrachloroethane	ug/L	50	U	1000	U	50	U
1,3-Dichlorobenzene	ug/L	50	U	1000	U	50	U
1,4-Dichlorobenzene	ug/L	50	U	1000	U	50	U
1,2-Dichlorobenzene	ug/L	50	U	1000	U	50	U
1,2,4-Trichlorobenzene	ug/L	50	U	1000	U	50	U
1,2,3-Trichlorobenzene	ug/L	50	U	1000	U	50	U

	StationID	K166GW45D		K166GW46D		K166GW47D	
	SampleID	166GW45DM7		166GW46DM7		166GW47DM7	
	DateCollected	7/31/2002		7/31/2002		7/31/2002	
	DateExtracted	8/7/2002		8/7/2002		8/7/2002	
	DateAnalyzed	8/7/2002		8/7/2002		8/7/2002	
	SDGNumber	64550		64550		64550	
Parameter	Units						
Xylenes, Total	ug/L	125	U	250	U	5	U
Styrene	ug/L	125	U	250	U	5	U
Bromoform	ug/L	125	U	250	U	5	U
1,1,2,2-Tetrachloroethane	ug/L	125	U	250	U	5	U
1,3-Dichlorobenzene	ug/L	125	U	250	U	5	U
1,4-Dichlorobenzene	ug/L	125	U	250	U	5	U
1,2-Dichlorobenzene	ug/L	125	U	250	U	5	U
1,2,4-Trichlorobenzene	ug/L	125	U	250	U	5	U
1,2,3-Trichlorobenzene	ug/L	125	U	250	U	5	U

	StationID	K166GW48D		K166GW49D		K166GW50D	
	SampleID	166GW48DM7		166GW49DM7		166GW50DM7	
	DateCollected	7/31/2002		7/31/2002		7/30/2002	
	DateExtracted	8/7/2002		8/7/2002		8/6/2002	
	DateAnalyzed	8/7/2002		8/7/2002		8/6/2002	
	SDGNumber	64550		64550		64473	
Parameter	**Units**						
Xylenes, Total	ug/L	250	U	250	U	250	U
Styrene	ug/L	250	U	250	U	250	U
Bromoform	ug/L	250	U	250	U	250	U
1,1,2,2-Tetrachloroethane	ug/L	250	U	250	U	250	U
1,3-Dichlorobenzene	ug/L	250	U	250	U	250	U
1,4-Dichlorobenzene	ug/L	250	U	250	U	250	U
1,2-Dichlorobenzene	ug/L	250	U	250	U	250	U
1,2,4-Trichlorobenzene	ug/L	250	U	250	U	250	U
1,2,3-Trichlorobenzene	ug/L	250	U	250	U	250	U

	StationID	K166GW51D		K166GW52D		K166GWIN3	
	SampleID	166GW51DM7		166GW52DM7		166GWIN3M7	
	DateCollected	7/30/2002		7/30/2002		7/30/2002	
	DateExtracted	8/7/2002		8/6/2002		8/7/2002	
	DateAnalyzed	8/7/2002		8/6/2002		8/7/2002	
	SDGNumber	64473		64473		64473	
Parameter	**Units**						
Xylenes, Total	ug/L	125	U	250	U	5	U
Styrene	ug/L	125	U	250	U	5	U
Bromoform	ug/L	125	U	250	U	5	U
1,1,2,2-Tetrachloroethane	ug/L	125	U	250	U	5	U
1,3-Dichlorobenzene	ug/L	125	U	250	U	5	U
1,4-Dichlorobenzene	ug/L	125	U	250	U	5	U
1,2-Dichlorobenzene	ug/L	125	U	250	U	5	U
1,2,4-Trichlorobenzene	ug/L	125	U	250	U	5	U
1,2,3-Trichlorobenzene	ug/L	125	U	250	U	5	U

	StationID	K166GWTM3		K166GWTM4		K696GW001	
	SampleID	166GWTM3M7		166GWTM4M7		696GW001M7	
	DateCollected	7/30/2002		7/30/2002		8/1/2002	
	DateExtracted	8/7/2002		8/7/2002		8/8/2002	
	DateAnalyzed	8/7/2002		8/7/2002		8/8/2002	
	SDGNumber	64473		64473		64677	
Parameter	**Units**						
Xylenes, Total	ug/L	50	U	250	U	5	U
Styrene	ug/L	50	U	250	U	5	U
Bromoform	ug/L	50	U	250	U	5	U
1,1,2,2-Tetrachloroethane	ug/L	50	U	250	U	5	U
1,3-Dichlorobenzene	ug/L	50	U	250	U	5	U
1,4-Dichlorobenzene	ug/L	50	U	250	U	5	U
1,2-Dichlorobenzene	ug/L	50	U	250	U	5	U
1,2,4-Trichlorobenzene	ug/L	50	U	250	U	5	U
1,2,3-Trichlorobenzene	ug/L	50	U	250	U	5	U

	StationID	K696GW001	
	SampleID	696HW001M7	
	DateCollected	8/1/2002	
	DateExtracted	8/8/2002	
	DateAnalyzed	8/8/2002	
	SDGNumber	64677	
Parameter	**Units**		
Xylenes, Total	ug/L	5	U
Styrene	ug/L	5	U
Bromoform	ug/L	5	U
1,1,2,2-Tetrachloroethane	ug/L	5	U
1,3-Dichlorobenzene	ug/L	5	U
1,4-Dichlorobenzene	ug/L	5	U
1,2-Dichlorobenzene	ug/L	5	U
1,2,4-Trichlorobenzene	ug/L	5	U
1,2,3-Trichlorobenzene	ug/L	5	U

	StationID	K163GW003		K163GW003		K163GW005	
	SampleID	163GW003M8		163GW003M8DL		163GW005M8	
	DateCollected	12/11/2002		12/11/2002		12/11/2002	
	DateExtracted	12/19/2002		12/20/2002		12/20/2002	
	DateAnalyzed	12/19/2002		12/20/2002		12/20/2002	
	SDGNumber	72055		72055		72055	
Parameter	**Units**						
Chloromethane	ug/L	10	UJ	100	R	10	UJ
Vinyl chloride	ug/L	10	UJ	100	R	10	UJ
Bromomethane	ug/L	10	UJ	100	R	10	UJ
Chloroethane	ug/L	10	UJ	100	R	10	UJ
1,1-Dichloroethene	ug/L	5	UJ	50	R	5	UJ
Acetone	ug/L	10	UJ	100	R	10	UJ
Carbon Disulfide	ug/L	5	UJ	50	R	5	UJ
Methylene Chloride	ug/L	5	UJ	50	R	5	UJ
trans-1,2-Dichloroethene	ug/L	5	UJ	50	R	5	UJ
1,1-Dichloroethane	ug/L	5	UJ	50	R	5	UJ
Vinyl acetate	ug/L	10	UJ	100	R	10	UJ
Methyl ethyl ketone (2-Butanone)	ug/L	10	UJ	100	R	10	UJ
cis-1,2-Dichloroethylene	ug/L	11.9	J	9.6	R	5	UJ
1,2-Dichloroethene (total)	ug/L	11.9	J	9.6	R	5	UJ
Chloroform	ug/L	5	UJ	50	R	5	UJ
1,1,1-Trichloroethane	ug/L	5	UJ	50	R	5	UJ
Carbon Tetrachloride	ug/L	5	UJ	50	R	5	UJ
1,2-Dichloroethane	ug/L	5	UJ	50	R	5	UJ
Benzene	ug/L	5	UJ	50	R	5	UJ
Trichloroethylene (TCE)	ug/L	235	R	188	J	5	UJ
1,2-Dichloropropane	ug/L	5	UJ	50	R	5	UJ
Bromodichloromethane	ug/L	5	UJ	50	R	5	UJ
2-Chloroethyl vinyl ether	ug/L	10	UJ	100	R	10	UJ
cis-1,3-Dichloropropene	ug/L	5	UJ	50	R	5	UJ
Methyl isobutyl ketone (4-Methyl-2-pentanone)	ug/L	10	UJ	100	R	10	UJ
Toluene	ug/L	5	UJ	50	R	5	UJ
trans-1,3-Dichloropropene	ug/L	5	UJ	50	R	5	UJ
1,1,2-Trichloroethane	ug/L	5	UJ	50	R	5	UJ
2-Hexanone	ug/L	10	UJ	100	R	10	UJ
Tetrachloroethylene (PCE)	ug/L	356	R	285	J	5	UJ

	StationID	K163GW03M		K166GW001		K166GW005	
	SampleID	163GW03MM8		166GW001M8		166GW005M8	
	DateCollected	12/11/2002		12/2/2002		12/2/2002	
	DateExtracted	12/20/2002		12/9/2002		12/9/2002	
	DateAnalyzed	12/20/2002		12/9/2002		12/9/2002	
	SDGNumber	72055		71658		71658	
Parameter	**Units**						
Chloromethane	ug/L	10	UJ	10	U	10	U
Vinyl chloride	ug/L	10	UJ	10	U	10	U
Bromomethane	ug/L	10	UJ	10	U	10	U
Chloroethane	ug/L	10	UJ	10	U	10	U
1,1-Dichloroethene	ug/L	5	UJ	5	U	5	U
Acetone	ug/L	10	UJ	10	U	10	U
Carbon Disulfide	ug/L	5	UJ	5	U	5	U
Methylene Chloride	ug/L	5	UJ	5	U	5	U
trans-1,2-Dichloroethene	ug/L	5	UJ	5	U	5	U
1,1-Dichloroethane	ug/L	5	UJ	5	U	5	U
Vinyl acetate	ug/L	10	UJ	10	U	10	UJ
Methyl ethyl ketone (2-Butanone)	ug/L	10	UJ	10	U	10	U
cis-1,2-Dichloroethylene	ug/L	4.1	J	0.39	J	5	U
1,2-Dichloroethene (total)	ug/L	4.1	J	0.39	J	5	U
Chloroform	ug/L	5	UJ	5	U	0.8	J
1,1,1-Trichloroethane	ug/L	5	UJ	5	U	5	U
Carbon Tetrachloride	ug/L	5	UJ	5	U	5	U
1,2-Dichloroethane	ug/L	5	UJ	5	U	5	U
Benzene	ug/L	5	UJ	5	U	5	U
Trichloroethylene (TCE)	ug/L	2.3	J	0.74	J	3.5	J
1,2-Dichloropropane	ug/L	5	UJ	5	U	5	U
Bromodichloromethane	ug/L	5	UJ	5	U	5	U
2-Chloroethyl vinyl ether	ug/L	10	UJ	10	U	10	R
cis-1,3-Dichloropropene	ug/L	5	UJ	5	U	5	U
Methyl isobutyl ketone (4-Methyl-2-pentanone)	ug/L	10	UJ	10	U	10	U
Toluene	ug/L	5	UJ	5	U	5	U
trans-1,3-Dichloropropene	ug/L	5	UJ	5	U	5	U
1,1,2-Trichloroethane	ug/L	5	UJ	5	U	5	U
2-Hexanone	ug/L	10	UJ	10	U	10	U
Tetrachloroethylene (PCE)	ug/L	5	UJ	1.2	J	5	U

	StationID	K166GW017		K166GW026		K166GW040	
	SampleID	166GW017M8		166GW026M8		166GW040M8	
	DateCollected	12/3/2002		12/2/2002		12/9/2002	
	DateExtracted	12/10/2002		12/9/2002		12/12/2002	
	DateAnalyzed	12/10/2002		12/9/2002		12/12/2002	
	SDGNumber	71658		71658		71852	
Parameter	**Units**						
Chloromethane	ug/L	10	U	10	U	500	U
Vinyl chloride	ug/L	10	U	10	U	500	U
Bromomethane	ug/L	10	U	10	U	500	U
Chloroethane	ug/L	10	U	10	U	500	U
1,1-Dichloroethene	ug/L	5	U	5	U	250	U
Acetone	ug/L	10	U	10	U	500	U
Carbon Disulfide	ug/L	5	U	5	U	250	U
Methylene Chloride	ug/L	5	U	5	U	250	U
trans-1,2-Dichloroethene	ug/L	5	U	5	U	250	U
1,1-Dichloroethane	ug/L	5	U	5	U	250	U
Vinyl acetate	ug/L	10	U	10	UJ	500	U
Methyl ethyl ketone (2-Butanone)	ug/L	10	U	10	U	500	U
cis-1,2-Dichloroethylene	ug/L	3.8	J	5	U	8640	R
1,2-Dichloroethene (total)	ug/L	3.8	J	5	U	8640	R
Chloroform	ug/L	5	U	5	U	250	U
1,1,1-Trichloroethane	ug/L	5	U	5	U	250	U
Carbon Tetrachloride	ug/L	5	U	5	U	250	U
1,2-Dichloroethane	ug/L	5	U	5	U	250	U
Benzene	ug/L	5	U	5	U	250	U
Trichloroethylene (TCE)	ug/L	5	J	11.6	J	19200	R
1,2-Dichloropropane	ug/L	5	U	5	U	250	U
Bromodichloromethane	ug/L	5	U	5	U	250	U
2-Chloroethyl vinyl ether	ug/L	10	U	10	R	500	UJ
cis-1,3-Dichloropropene	ug/L	5	U	5	U	250	U
Methyl isobutyl ketone (4-Methyl-2-pentanone)	ug/L	10	U	10	U	500	U
Toluene	ug/L	5	U	5	U	245	J
trans-1,3-Dichloropropene	ug/L	5	U	5	U	250	U
1,1,2-Trichloroethane	ug/L	5	U	5	U	250	U
2-Hexanone	ug/L	10	U	10	U	500	U
Tetrachloroethylene (PCE)	ug/L	10.3	J	5	U	250	U

	StationID	K166GW040		K166GW040		K166GW040	
	SampleID	166GW040M8DL		166HW040M8		166HW040M8DL	
	DateCollected	12/9/2002		12/9/2002		12/9/2002	
	DateExtracted	12/13/2002		12/12/2002		12/13/2002	
	DateAnalyzed	12/13/2002		12/12/2002		12/13/2002	
	SDGNumber	71852		71852		71852	
Parameter	**Units**						
Chloromethane	ug/L	2500	R	500	U	2500	R
Vinyl chloride	ug/L	2500	R	500	U	2500	R
Bromomethane	ug/L	2500	R	500	U	2500	R
Chloroethane	ug/L	2500	R	500	U	2500	R
1,1-Dichloroethene	ug/L	1250	R	250	U	1250	R
Acetone	ug/L	2500	R	500	U	2500	R
Carbon Disulfide	ug/L	1250	R	250	U	1250	R
Methylene Chloride	ug/L	1250	R	250	U	1250	R
trans-1,2-Dichloroethene	ug/L	1250	R	250	U	1250	R
1,1-Dichloroethane	ug/L	1250	R	250	U	1250	R
Vinyl acetate	ug/L	2500	R	500	U	2500	R
Methyl ethyl ketone (2-Butanone)	ug/L	2500	R	500	U	2500	R
cis-1,2-Dichloroethylene	ug/L	8400	J	9000	R	9210	J
1,2-Dichloroethene (total)	ug/L	8400	J	9000	R	9210	J
Chloroform	ug/L	1250	R	250	U	1250	R
1,1,1-Trichloroethane	ug/L	1250	R	250	U	1250	R
Carbon Tetrachloride	ug/L	1250	R	250	U	1250	R
1,2-Dichloroethane	ug/L	1250	R	250	U	1250	R
Benzene	ug/L	1250	R	250	U	1250	R
Trichloroethylene (TCE)	ug/L	18600	J	18800	R	19300	J
1,2-Dichloropropane	ug/L	1250	R	250	U	1250	R
Bromodichloromethane	ug/L	1250	R	250	U	1250	R
2-Chloroethyl vinyl ether	ug/L	2500	R	500	UJ	2500	R
cis-1,3-Dichloropropene	ug/L	1250	R	250	U	1250	R
Methyl isobutyl ketone (4-Methyl-2-pentanone)	ug/L	2500	R	500	U	2500	R
Toluene	ug/L	213	R	266	=	282	R
trans-1,3-Dichloropropene	ug/L	1250	R	250	U	1250	R
1,1,2-Trichloroethane	ug/L	1250	R	250	U	1250	R
2-Hexanone	ug/L	2500	R	500	U	2500	R
Tetrachloroethylene (PCE)	ug/L	1250	R	250	U	1250	R

	StationID	K166GW053		K166GW053		K166GW054	
	SampleID	166GW053M8		166GW053M8DL		166GW054M8	
	DateCollected	12/2/2002		12/2/2002		12/2/2002	
	DateExtracted	12/10/2002		12/10/2002		12/10/2002	
	DateAnalyzed	12/10/2002		12/10/2002		12/10/2002	
	SDGNumber	71658		71658		71658	
Parameter	**Units**						
Chloromethane	ug/L	100	U	500	R	100	U
Vinyl chloride	ug/L	100	U	500	R	100	U
Bromomethane	ug/L	100	U	500	R	100	U
Chloroethane	ug/L	100	U	500	R	100	U
1,1-Dichloroethene	ug/L	50	U	250	R	50	U
Acetone	ug/L	100	U	500	R	100	U
Carbon Disulfide	ug/L	50	U	250	R	50	U
Methylene Chloride	ug/L	50	U	250	R	50	U
trans-1,2-Dichloroethene	ug/L	50	U	250	R	50	U
1,1-Dichloroethane	ug/L	50	U	250	R	50	U
Vinyl acetate	ug/L	100	U	500	R	100	U
Methyl ethyl ketone (2-Butanone)	ug/L	100	U	500	R	100	U
cis-1,2-Dichloroethylene	ug/L	83.5	J	90.8	R	165	J
1,2-Dichloroethene (total)	ug/L	83.5	J	90.8	R	165	J
Chloroform	ug/L	50	U	250	R	50	U
1,1,1-Trichloroethane	ug/L	50	U	250	R	50	U
Carbon Tetrachloride	ug/L	50	U	250	R	50	U
1,2-Dichloroethane	ug/L	50	U	250	R	50	U
Benzene	ug/L	50	U	250	R	50	U
Trichloroethylene (TCE)	ug/L	1840	R	2030	J	1580	R
1,2-Dichloropropane	ug/L	50	U	250	R	50	U
Bromodichloromethane	ug/L	50	U	250	R	50	U
2-Chloroethyl vinyl ether	ug/L	100	U	500	R	100	U
cis-1,3-Dichloropropene	ug/L	50	U	250	R	50	U
Methyl isobutyl ketone (4-Methyl-2-pentanone)	ug/L	100	U	500	R	100	U
Toluene	ug/L	50	U	250	R	50	U
trans-1,3-Dichloropropene	ug/L	50	U	250	R	50	U
1,1,2-Trichloroethane	ug/L	50	U	250	R	50	U
2-Hexanone	ug/L	100	U	500	R	100	U
Tetrachloroethylene (PCE)	ug/L	50	U	250	R	50	U

	StationID	K166GW054		K166GW055		K166GW055	
	SampleID	166GW054M8DL		166GW055M8		166GW055M8DL	
	DateCollected	12/2/2002		12/2/2002		12/2/2002	
	DateExtracted	12/10/2002		12/10/2002		12/10/2002	
	DateAnalyzed	12/10/2002		12/10/2002		12/10/2002	
	SDGNumber	71658		71658		71658	
Parameter	**Units**						
Chloromethane	ug/L	250	R	50	U	1000	R
Vinyl chloride	ug/L	250	R	50	U	1000	R
Bromomethane	ug/L	250	R	50	U	1000	R
Chloroethane	ug/L	250	R	50	U	1000	R
1,1-Dichloroethene	ug/L	125	R	25	U	500	R
Acetone	ug/L	250	R	50	U	1000	R
Carbon Disulfide	ug/L	125	R	25	U	500	R
Methylene Chloride	ug/L	125	R	25	U	500	R
trans-1,2-Dichloroethene	ug/L	125	R	4.1	J	500	R
1,1-Dichloroethane	ug/L	125	R	25	U	500	R
Vinyl acetate	ug/L	250	R	50	U	1000	R
Methyl ethyl ketone (2-Butanone)	ug/L	250	R	50	U	1000	R
cis-1,2-Dichloroethylene	ug/L	162	R	234	J	226	R
1,2-Dichloroethene (total)	ug/L	162	R	238	J	226	R
Chloroform	ug/L	125	R	25	U	500	R
1,1,1-Trichloroethane	ug/L	125	R	25	U	500	R
Carbon Tetrachloride	ug/L	125	R	25	U	500	R
1,2-Dichloroethane	ug/L	125	R	25	U	500	R
Benzene	ug/L	125	R	25	U	500	R
Trichloroethylene (TCE)	ug/L	1740	J	5050	R	6000	J
1,2-Dichloropropane	ug/L	125	R	25	U	500	R
Bromodichloromethane	ug/L	125	R	25	U	500	R
2-Chloroethyl vinyl ether	ug/L	250	R	50	U	1000	R
cis-1,3-Dichloropropene	ug/L	125	R	25	U	500	R
Methyl isobutyl ketone (4-Methyl-2-pentanone)	ug/L	250	R	50	U	1000	R
Toluene	ug/L	125	R	25	U	500	R
trans-1,3-Dichloropropene	ug/L	125	R	25	U	500	R
1,1,2-Trichloroethane	ug/L	125	R	25	U	500	R
2-Hexanone	ug/L	250	R	50	U	1000	R
Tetrachloroethylene (PCE)	ug/L	125	R	25	U	500	R

	StationID	K166GW056		K166GW056		K166GW06D	
	SampleID	166GW056M8		166GW056M8DL		166GW06DM8	
	DateCollected	12/2/2002		12/2/2002		12/3/2002	
	DateExtracted	12/10/2002		12/10/2002		12/10/2002	
	DateAnalyzed	12/10/2002		12/10/2002		12/10/2002	
	SDGNumber	71658		71658		71658	
Parameter	**Units**						
Chloromethane	ug/L	10	U	1000	R	10	U
Vinyl chloride	ug/L	1.9	J	1000	R	10	U
Bromomethane	ug/L	10	U	1000	R	10	U
Chloroethane	ug/L	10	U	1000	R	10	U
1,1-Dichloroethene	ug/L	3.5	J	500	R	5	U
Acetone	ug/L	10	U	1000	R	10	U
Carbon Disulfide	ug/L	5	U	500	R	5	U
Methylene Chloride	ug/L	5	U	500	R	5	U
trans-1,2-Dichloroethene	ug/L	11.4	J	500	R	5	U
1,1-Dichloroethane	ug/L	5	U	500	R	5	U
Vinyl acetate	ug/L	10	U	1000	R	10	U
Methyl ethyl ketone (2-Butanone)	ug/L	10	U	1000	R	10	U
cis-1,2-Dichloroethylene	ug/L	240	R	240	J	5	U
1,2-Dichloroethene (total)	ug/L	251	R	240	J	5	U
Chloroform	ug/L	5	U	500	R	5	U
1,1,1-Trichloroethane	ug/L	5	U	500	R	5	U
Carbon Tetrachloride	ug/L	5	U	500	R	5	U
1,2-Dichloroethane	ug/L	5	U	500	R	5	U
Benzene	ug/L	5	U	500	R	5	U
Trichloroethylene (TCE)	ug/L	4800	R	7840	J	0.52	J
1,2-Dichloropropane	ug/L	5	U	500	R	5	U
Bromodichloromethane	ug/L	5	U	500	R	5	U
2-Chloroethyl vinyl ether	ug/L	10	U	1000	R	10	U
cis-1,3-Dichloropropene	ug/L	5	U	500	R	5	U
Methyl isobutyl ketone (4-Methyl-2-pentanone)	ug/L	10	U	1000	R	10	U
Toluene	ug/L	5	U	500	R	5	U
trans-1,3-Dichloropropene	ug/L	5	U	500	R	5	U
1,1,2-Trichloroethane	ug/L	5	U	500	R	5	U
2-Hexanone	ug/L	10	U	1000	R	10	U
Tetrachloroethylene (PCE)	ug/L	5	U	500	R	5	U

	StationID	K166GW07D		K166GW07D		K166GW08D	
	SampleID	166GW07DM8		166GW07DM8DL		166GW08DM8	
	DateCollected	12/3/2002		12/3/2002		12/3/2002	
	DateExtracted	12/10/2002		12/10/2002		12/10/2002	
	DateAnalyzed	12/10/2002		12/10/2002		12/10/2002	
	SDGNumber	71658		71658		71658	
Parameter	Units						
Chloromethane	ug/L	50	U	250	R	10	U
Vinyl chloride	ug/L	50	U	250	R	10	U
Bromomethane	ug/L	50	U	250	R	10	U
Chloroethane	ug/L	50	U	250	R	10	U
1,1-Dichloroethene	ug/L	25	U	125	R	5	U
Acetone	ug/L	50	U	250	R	10	U
Carbon Disulfide	ug/L	25	U	125	R	5	U
Methylene Chloride	ug/L	25	U	125	R	5	U
trans-1,2-Dichloroethene	ug/L	3.4	J	125	R	1.5	J
1,1-Dichloroethane	ug/L	25	U	125	R	5	U
Vinyl acetate	ug/L	50	U	250	R	10	U
Methyl ethyl ketone (2-Butanone)	ug/L	50	U	250	R	10	U
cis-1,2-Dichloroethylene	ug/L	31.5	J	28.1	R	10.4	J
1,2-Dichloroethene (total)	ug/L	35	J	28.1	R	12	J
Chloroform	ug/L	25	U	125	R	5	U
1,1,1-Trichloroethane	ug/L	25	U	125	R	5	U
Carbon Tetrachloride	ug/L	25	U	125	R	5	U
1,2-Dichloroethane	ug/L	25	U	125	R	5	U
Benzene	ug/L	25	U	125	R	5	U
Trichloroethylene (TCE)	ug/L	898	R	985	J	88.4	J
1,2-Dichloropropane	ug/L	25	U	125	R	5	U
Bromodichloromethane	ug/L	25	U	125	R	5	U
2-Chloroethyl vinyl ether	ug/L	50	U	250	R	10	U
cis-1,3-Dichloropropene	ug/L	25	U	125	R	5	U
Methyl isobutyl ketone (4-Methyl-2-pentanone)	ug/L	50	U	250	R	10	U
Toluene	ug/L	25	U	125	R	5	U
trans-1,3-Dichloropropene	ug/L	25	U	125	R	5	U
1,1,2-Trichloroethane	ug/L	25	U	125	R	5	U
2-Hexanone	ug/L	50	U	250	R	10	U
Tetrachloroethylene (PCE)	ug/L	25	U	125	R	5	U

	StationID	K166GW13D		K166GW13D		K166GW13D	
	SampleID	166GW13DM8		166GW13DM8DL		166HW13DM8	
	DateCollected	12/2/2002		12/2/2002		12/2/2002	
	DateExtracted	12/10/2002		12/10/2002		12/10/2002	
	DateAnalyzed	12/10/2002		12/10/2002		12/10/2002	
	SDGNumber	71658		71658		71658	
Parameter	**Units**						
Chloromethane	ug/L	500	U	1000	R	500	U
Vinyl chloride	ug/L	500	U	1000	R	500	U
Bromomethane	ug/L	500	U	1000	R	500	U
Chloroethane	ug/L	500	U	1000	R	500	U
1,1-Dichloroethene	ug/L	250	U	500	R	250	U
Acetone	ug/L	500	U	1000	R	500	U
Carbon Disulfide	ug/L	250	U	500	R	250	U
Methylene Chloride	ug/L	250	U	500	R	250	U
trans-1,2-Dichloroethene	ug/L	250	U	500	R	250	U
1,1-Dichloroethane	ug/L	250	U	500	R	250	U
Vinyl acetate	ug/L	500	U	1000	R	500	U
Methyl ethyl ketone (2-Butanone)	ug/L	500	U	1000	R	500	U
cis-1,2-Dichloroethylene	ug/L	223	J	209	R	164	J
1,2-Dichloroethene (total)	ug/L	223	J	209	R	164	J
Chloroform	ug/L	250	U	500	R	250	U
1,1,1-Trichloroethane	ug/L	250	U	500	R	250	U
Carbon Tetrachloride	ug/L	250	U	500	R	250	U
1,2-Dichloroethane	ug/L	250	U	500	R	250	U
Benzene	ug/L	250	U	500	R	250	U
Trichloroethylene (TCE)	ug/L	5840	R	6560	J	3960	J
1,2-Dichloropropane	ug/L	250	U	500	R	250	U
Bromodichloromethane	ug/L	250	U	500	R	250	U
2-Chloroethyl vinyl ether	ug/L	500	U	1000	R	500	U
cis-1,3-Dichloropropene	ug/L	250	U	500	R	250	U
Methyl isobutyl ketone (4-Methyl-2-pentanone)	ug/L	500	U	1000	R	500	U
Toluene	ug/L	250	U	500	R	250	U
trans-1,3-Dichloropropene	ug/L	250	U	500	R	250	U
1,1,2-Trichloroethane	ug/L	250	U	500	R	250	U
2-Hexanone	ug/L	500	U	1000	R	500	U
Tetrachloroethylene (PCE)	ug/L	250	U	500	R	250	U

	StationID	K166GW14D		K166GW14D		K166GW16D	
	SampleID	166GW14DM8		166GW14DM8DL		166GW16DM8	
	DateCollected	12/3/2002		12/3/2002		12/11/2002	
	DateExtracted	12/10/2002		12/10/2002		12/19/2002	
	DateAnalyzed	12/10/2002		12/10/2002		12/19/2002	
	SDGNumber	71658		71658		72055	
Parameter	**Units**						
Chloromethane	ug/L	10	U	20	R	10	UJ
Vinyl chloride	ug/L	10	U	20	R	28	J
Bromomethane	ug/L	10	U	20	R	10	UJ
Chloroethane	ug/L	10	U	20	R	10	UJ
1,1-Dichloroethene	ug/L	5	U	10	R	4.4	J
Acetone	ug/L	10	U	20	R	10	UJ
Carbon Disulfide	ug/L	5	U	10	R	5	UJ
Methylene Chloride	ug/L	5	U	10	R	5	UJ
trans-1,2-Dichloroethene	ug/L	1.4	J	1.5	R	5.6	J
1,1-Dichloroethane	ug/L	5	U	10	R	5	UJ
Vinyl acetate	ug/L	10	U	20	R	10	UJ
Methyl ethyl ketone (2-Butanone)	ug/L	10	U	20	R	10	UJ
cis-1,2-Dichloroethylene	ug/L	23.7	J	24.8	R	1750	R
1,2-Dichloroethene (total)	ug/L	25.1	J	26.3	R	1760	R
Chloroform	ug/L	5	U	10	R	5	UJ
1,1,1-Trichloroethane	ug/L	5	U	10	R	5	UJ
Carbon Tetrachloride	ug/L	5	U	10	R	5	UJ
1,2-Dichloroethane	ug/L	5	U	10	R	5	UJ
Benzene	ug/L	5	U	10	R	0.69	J
Trichloroethylene (TCE)	ug/L	130	R	139	J	29.8	J
1,2-Dichloropropane	ug/L	5	U	10	R	5	UJ
Bromodichloromethane	ug/L	5	U	10	R	5	UJ
2-Chloroethyl vinyl ether	ug/L	10	U	20	R	10	UJ
cis-1,3-Dichloropropene	ug/L	5	U	10	R	5	UJ
Methyl isobutyl ketone (4-Methyl-2-pentanone)	ug/L	10	U	20	R	10	UJ
Toluene	ug/L	5	U	10	R	5	UJ
trans-1,3-Dichloropropene	ug/L	5	U	10	R	5	UJ
1,1,2-Trichloroethane	ug/L	5	U	10	R	5	UJ
2-Hexanone	ug/L	10	U	20	R	10	UJ
Tetrachloroethylene (PCE)	ug/L	5	U	10	R	5	UJ

	StationID	K166GW16D		K166GW17D		K166GW19D	
	SampleID	166GW16DM8DL		166GW17DM8		166GW19DM8	
	DateCollected	12/11/2002		12/3/2002		12/4/2002	
	DateExtracted	12/20/2002		12/11/2002		12/11/2002	
	DateAnalyzed	12/20/2002		12/11/2002		12/11/2002	
	SDGNumber	72055		71659		71659	
Parameter	**Units**						
Chloromethane	ug/L	500	R	10	UJ	10	UJ
Vinyl chloride	ug/L	500	R	10	U	0.92	J
Bromomethane	ug/L	500	R	10	U	10	U
Chloroethane	ug/L	500	R	10	U	10	U
1,1-Dichloroethene	ug/L	250	R	5	U	5	U
Acetone	ug/L	500	R	10	UJ	10	UJ
Carbon Disulfide	ug/L	250	R	5	U	5	U
Methylene Chloride	ug/L	250	R	5	U	5	U
trans-1,2-Dichloroethene	ug/L	250	R	5	U	0.77	J
1,1-Dichloroethane	ug/L	250	R	5	U	5	U
Vinyl acetate	ug/L	500	R	10	UJ	10	UJ
Methyl ethyl ketone (2-Butanone)	ug/L	500	R	10	UJ	10	UJ
cis-1,2-Dichloroethylene	ug/L	3020	J	5	U	43.5	J
1,2-Dichloroethene (total)	ug/L	3020	J	5	U	44.3	J
Chloroform	ug/L	250	R	5	U	5	U
1,1,1-Trichloroethane	ug/L	250	R	5	U	5	U
Carbon Tetrachloride	ug/L	250	R	5	U	5	U
1,2-Dichloroethane	ug/L	250	R	5	UJ	5	UJ
Benzene	ug/L	250	R	5	U	5	U
Trichloroethylene (TCE)	ug/L	32.6	R	7.3	J	106	R
1,2-Dichloropropane	ug/L	250	R	5	U	5	U
Bromodichloromethane	ug/L	250	R	5	U	5	U
2-Chloroethyl vinyl ether	ug/L	500	R	10	R	10	UJ
cis-1,3-Dichloropropene	ug/L	250	R	5	U	5	U
Methyl isobutyl ketone (4-Methyl-2-pentanone)	ug/L	500	R	10	UJ	10	UJ
Toluene	ug/L	250	R	5	U	5	U
trans-1,3-Dichloropropene	ug/L	250	R	5	U	5	U
1,1,2-Trichloroethane	ug/L	250	R	5	U	5	U
2-Hexanone	ug/L	500	R	10	UJ	10	UJ
Tetrachloroethylene (PCE)	ug/L	250	R	5	U	103	R

	StationID	K166GW19D		K166GW21D		K166GW25D	
	SampleID	166GW19DM8DL		166GW21DM8		166GW25DM8	
	DateCollected	12/4/2002		12/3/2002		12/3/2002	
	DateExtracted	12/11/2002		12/11/2002		12/10/2002	
	DateAnalyzed	12/11/2002		12/11/2002		12/10/2002	
	SDGNumber	71659		71659		71659	
Parameter	**Units**						
Chloromethane	ug/L	20	R	10	UJ	500	U
Vinyl chloride	ug/L	20	R	10	U	500	U
Bromomethane	ug/L	20	R	10	U	500	U
Chloroethane	ug/L	20	R	10	U	500	U
1,1-Dichloroethene	ug/L	10	R	5	U	250	U
Acetone	ug/L	20	R	10	UJ	500	U
Carbon Disulfide	ug/L	10	R	5	U	250	U
Methylene Chloride	ug/L	10	R	5	U	250	U
trans-1,2-Dichloroethene	ug/L	10	R	5	U	250	U
1,1-Dichloroethane	ug/L	10	R	5	U	250	U
Vinyl acetate	ug/L	20	R	10	UJ	500	U
Methyl ethyl ketone (2-Butanone)	ug/L	20	R	10	UJ	500	U
cis-1,2-Dichloroethylene	ug/L	45.2	R	5	U	147	J
1,2-Dichloroethene (total)	ug/L	45.2	R	5	U	147	J
Chloroform	ug/L	10	R	5	U	250	U
1,1,1-Trichloroethane	ug/L	10	R	5	U	250	U
Carbon Tetrachloride	ug/L	10	R	5	U	250	U
1,2-Dichloroethane	ug/L	10	R	5	UJ	250	U
Benzene	ug/L	10	R	5	U	250	U
Trichloroethylene (TCE)	ug/L	114	J	1.3	J	7310	R
1,2-Dichloropropane	ug/L	10	R	5	U	250	U
Bromodichloromethane	ug/L	10	R	5	U	250	U
2-Chloroethyl vinyl ether	ug/L	20	R	10	UJ	500	U
cis-1,3-Dichloropropene	ug/L	10	R	5	U	250	U
Methyl isobutyl ketone (4-Methyl-2-pentanone)	ug/L	20	R	10	UJ	500	U
Toluene	ug/L	10	R	5	U	250	U
trans-1,3-Dichloropropene	ug/L	10	R	5	U	250	U
1,1,2-Trichloroethane	ug/L	10	R	5	U	250	U
2-Hexanone	ug/L	20	R	10	UJ	500	U
Tetrachloroethylene (PCE)	ug/L	114	J	5	U	250	U

	StationID	K166GW25D		K166GW26D		K166GW33D	
	SampleID	166GW25DM8DL		166GW26DM8		166GW33DM8	
	DateCollected	12/3/2002		12/2/2002		12/11/2002	
	DateExtracted	12/11/2002		12/11/2002		12/20/2002	
	DateAnalyzed	12/11/2002		12/11/2002		12/20/2002	
	SDGNumber	71659		71659		72055	
Parameter	**Units**						
Chloromethane	ug/L	1000	R	250	UJ	10	UJ
Vinyl chloride	ug/L	1000	R	250	U	10	UJ
Bromomethane	ug/L	1000	R	250	U	10	UJ
Chloroethane	ug/L	1000	R	250	U	10	UJ
1,1-Dichloroethene	ug/L	500	R	125	U	5	UJ
Acetone	ug/L	1000	R	250	UJ	10	UJ
Carbon Disulfide	ug/L	500	R	125	U	5	UJ
Methylene Chloride	ug/L	500	R	125	U	5	UJ
trans-1,2-Dichloroethene	ug/L	500	R	22.3	J	1.2	J
1,1-Dichloroethane	ug/L	500	R	125	U	5	UJ
Vinyl acetate	ug/L	1000	R	250	UJ	10	UJ
Methyl ethyl ketone (2-Butanone)	ug/L	1000	R	250	UJ	10	UJ
cis-1,2-Dichloroethylene	ug/L	139	R	416	J	6.2	J
1,2-Dichloroethene (total)	ug/L	139	R	439	J	7.4	J
Chloroform	ug/L	500	R	125	U	5	UJ
1,1,1-Trichloroethane	ug/L	500	R	125	U	5	UJ
Carbon Tetrachloride	ug/L	500	R	125	U	0.39	J
1,2-Dichloroethane	ug/L	500	R	125	UJ	5	UJ
Benzene	ug/L	500	R	125	U	1.7	J
Trichloroethylene (TCE)	ug/L	7030	J	2110	J	40.9	J
1,2-Dichloropropane	ug/L	500	R	125	U	5	UJ
Bromodichloromethane	ug/L	500	R	125	U	5	UJ
2-Chloroethyl vinyl ether	ug/L	1000	R	250	UJ	10	UJ
cis-1,3-Dichloropropene	ug/L	500	R	125	U	5	UJ
Methyl isobutyl ketone (4-Methyl-2-pentanone)	ug/L	1000	R	250	UJ	10	UJ
Toluene	ug/L	500	R	125	U	5	UJ
trans-1,3-Dichloropropene	ug/L	500	R	125	U	5	UJ
1,1,2-Trichloroethane	ug/L	500	R	125	U	5	UJ
2-Hexanone	ug/L	1000	R	250	UJ	10	UJ
Tetrachloroethylene (PCE)	ug/L	500	R	125	U	5	UJ

	StationID	K166GW34D		K166GW34D		K166GW35D	
	SampleID	166GW34DM8		166GW34DM8DL		166GW35DM8	
	DateCollected	12/9/2002		12/9/2002		12/9/2002	
	DateExtracted	12/12/2002		12/13/2002		12/13/2002	
	DateAnalyzed	12/12/2002		12/13/2002		12/13/2002	
	SDGNumber	71852		71852		71852	
Parameter	**Units**						
Chloromethane	ug/L	500	U	10000	R	250	UJ
Vinyl chloride	ug/L	500	U	10000	R	250	U
Bromomethane	ug/L	500	U	10000	R	250	U
Chloroethane	ug/L	500	U	10000	R	250	U
1,1-Dichloroethene	ug/L	250	U	5000	R	125	U
Acetone	ug/L	500	U	10000	R	250	UJ
Carbon Disulfide	ug/L	250	U	5000	R	125	U
Methylene Chloride	ug/L	250	U	5000	R	125	U
trans-1,2-Dichloroethene	ug/L	250	U	5000	R	125	U
1,1-Dichloroethane	ug/L	250	U	5000	R	125	U
Vinyl acetate	ug/L	500	U	10000	R	250	U
Methyl ethyl ketone (2-Butanone)	ug/L	500	U	10000	R	250	UJ
cis-1,2-Dichloroethylene	ug/L	14800	R	16100	J	397	=
1,2-Dichloroethene (total)	ug/L	14800	R	16100	J	397	=
Chloroform	ug/L	250	U	5000	R	125	U
1,1,1-Trichloroethane	ug/L	250	U	5000	R	125	U
Carbon Tetrachloride	ug/L	250	U	5000	R	125	U
1,2-Dichloroethane	ug/L	250	U	5000	R	125	U
Benzene	ug/L	250	U	5000	R	125	U
Trichloroethylene (TCE)	ug/L	49300	R	56800	J	1660	=
1,2-Dichloropropane	ug/L	250	U	5000	R	125	U
Bromodichloromethane	ug/L	250	U	5000	R	125	U
2-Chloroethyl vinyl ether	ug/L	500	UJ	10000	R	250	UJ
cis-1,3-Dichloropropene	ug/L	250	U	5000	R	125	U
Methyl isobutyl ketone (4-Methyl-2-pentanone)	ug/L	500	U	10000	R	250	UJ
Toluene	ug/L	250	U	5000	R	125	U
trans-1,3-Dichloropropene	ug/L	250	U	5000	R	125	U
1,1,2-Trichloroethane	ug/L	250	U	5000	R	125	U
2-Hexanone	ug/L	500	U	10000	R	250	UJ
Tetrachloroethylene (PCE)	ug/L	250	U	5000	R	125	U

	StationID	K166GW36D		K166GW36D		K166GW37D	
	SampleID	166GW36DM8		166GW36DM8DL		166GW37DM8	
	DateCollected	12/9/2002		12/9/2002		12/9/2002	
	DateExtracted	12/12/2002		12/13/2002		12/13/2002	
	DateAnalyzed	12/12/2002		12/13/2002		12/13/2002	
	SDGNumber	71852		71852		71852	
Parameter	**Units**						
Chloromethane	ug/L	500	U	2500	R	10	UJ
Vinyl chloride	ug/L	500	U	2500	R	10	U
Bromomethane	ug/L	500	U	2500	R	10	U
Chloroethane	ug/L	500	U	2500	R	10	U
1,1-Dichloroethene	ug/L	250	U	1250	R	1.7	J
Acetone	ug/L	500	U	2500	R	10	UJ
Carbon Disulfide	ug/L	250	U	1250	R	5	U
Methylene Chloride	ug/L	250	U	1250	R	5	U
trans-1,2-Dichloroethene	ug/L	250	U	1250	R	5	U
1,1-Dichloroethane	ug/L	250	U	1250	R	5	U
Vinyl acetate	ug/L	500	U	2500	R	10	U
Methyl ethyl ketone (2-Butanone)	ug/L	500	U	2500	R	10	UJ
cis-1,2-Dichloroethylene	ug/L	6790	R	7240	J	322	R
1,2-Dichloroethene (total)	ug/L	6790	R	7240	J	322	R
Chloroform	ug/L	250	U	1250	R	5	U
1,1,1-Trichloroethane	ug/L	250	U	1250	R	5	U
Carbon Tetrachloride	ug/L	250	U	1250	R	5	U
1,2-Dichloroethane	ug/L	250	U	1250	R	5	U
Benzene	ug/L	250	U	1250	R	5	U
Trichloroethylene (TCE)	ug/L	18800	R	21200	J	78	=
1,2-Dichloropropane	ug/L	250	U	1250	R	5	U
Bromodichloromethane	ug/L	250	U	1250	R	5	U
2-Chloroethyl vinyl ether	ug/L	500	UJ	2500	R	10	UJ
cis-1,3-Dichloropropene	ug/L	250	U	1250	R	5	U
Methyl isobutyl ketone (4-Methyl-2-pentanone)	ug/L	500	U	2500	R	10	UJ
Toluene	ug/L	250	U	1250	R	5	U
trans-1,3-Dichloropropene	ug/L	250	U	1250	R	5	U
1,1,2-Trichloroethane	ug/L	250	U	1250	R	5	U
2-Hexanone	ug/L	500	U	2500	R	10	UJ
Tetrachloroethylene (PCE)	ug/L	250	U	1250	R	5	U

	StationID	K166GW37D		K166GW38D		K166GW38D	
	SampleID	166GW37DM8DL		166GW38DM8		166GW38DM8DL	
	DateCollected	12/9/2002		12/11/2002		12/11/2002	
	DateExtracted	12/13/2002		12/19/2002		12/20/2002	
	DateAnalyzed	12/13/2002		12/19/2002		12/20/2002	
	SDGNumber	71852		72055		72055	
Parameter	**Units**						
Chloromethane	ug/L	50	R	10	UJ	100	R
Vinyl chloride	ug/L	50	R	10	UJ	100	R
Bromomethane	ug/L	50	R	10	UJ	100	R
Chloroethane	ug/L	50	R	10	UJ	100	R
1,1-Dichloroethene	ug/L	25	R	0.59	J	50	R
Acetone	ug/L	50	R	10	UJ	100	R
Carbon Disulfide	ug/L	25	R	5	UJ	50	R
Methylene Chloride	ug/L	25	R	5	UJ	50	R
trans-1,2-Dichloroethene	ug/L	25	R	2.5	J	50	R
1,1-Dichloroethane	ug/L	25	R	5	UJ	50	R
Vinyl acetate	ug/L	50	R	10	UJ	100	R
Methyl ethyl ketone (2-Butanone)	ug/L	50	R	10	UJ	100	R
cis-1,2-Dichloroethylene	ug/L	340	J	316	R	327	J
1,2-Dichloroethene (total)	ug/L	340	J	318	R	327	J
Chloroform	ug/L	25	R	5	UJ	50	R
1,1,1-Trichloroethane	ug/L	25	R	5	UJ	50	R
Carbon Tetrachloride	ug/L	25	R	5	UJ	50	R
1,2-Dichloroethane	ug/L	25	R	5	UJ	50	R
Benzene	ug/L	25	R	5	UJ	50	R
Trichloroethylene (TCE)	ug/L	75.2	R	21.4	J	24.5	R
1,2-Dichloropropane	ug/L	25	R	5	UJ	50	R
Bromodichloromethane	ug/L	25	R	5	UJ	50	R
2-Chloroethyl vinyl ether	ug/L	50	R	10	UJ	100	R
cis-1,3-Dichloropropene	ug/L	25	R	5	UJ	50	R
Methyl isobutyl ketone (4-Methyl-2-pentanone)	ug/L	50	R	10	UJ	100	R
Toluene	ug/L	25	R	5	UJ	50	R
trans-1,3-Dichloropropene	ug/L	25	R	5	UJ	50	R
1,1,2-Trichloroethane	ug/L	25	R	5	UJ	50	R
2-Hexanone	ug/L	50	R	10	UJ	100	R
Tetrachloroethylene (PCE)	ug/L	25	R	5	UJ	50	R

	StationID	K166GW39D		K166GW41D		K166GW42D	
	SampleID	166GW39DM8		166GW41DM8		166GW42DM8	
	DateCollected	12/9/2002		12/9/2002		12/9/2002	
	DateExtracted	12/13/2002		12/16/2002		12/12/2002	
	DateAnalyzed	12/13/2002		12/16/2002		12/12/2002	
	SDGNumber	71852		71852		71852	
Parameter	**Units**						
Chloromethane	ug/L	10	UJ	200	U	500	U
Vinyl chloride	ug/L	10	U	200	U	500	U
Bromomethane	ug/L	10	U	200	U	500	U
Chloroethane	ug/L	10	U	200	U	500	U
1,1-Dichloroethene	ug/L	5	U	100	U	250	U
Acetone	ug/L	10	UJ	200	U	500	U
Carbon Disulfide	ug/L	5	U	100	U	250	U
Methylene Chloride	ug/L	5	U	100	U	250	U
trans-1,2-Dichloroethene	ug/L	5	U	19.1	J	250	U
1,1-Dichloroethane	ug/L	5	U	100	U	250	U
Vinyl acetate	ug/L	10	U	200	U	500	U
Methyl ethyl ketone (2-Butanone)	ug/L	10	UJ	200	U	500	U
cis-1,2-Dichloroethylene	ug/L	2.2	J	1330	=	3690	=
1,2-Dichloroethene (total)	ug/L	2.2	J	1350	=	3690	=
Chloroform	ug/L	5	U	100	U	250	U
1,1,1-Trichloroethane	ug/L	5	U	100	U	250	U
Carbon Tetrachloride	ug/L	5	U	100	U	250	U
1,2-Dichloroethane	ug/L	5	U	100	U	250	U
Benzene	ug/L	5	U	100	U	250	U
Trichloroethylene (TCE)	ug/L	3.3	J	204	=	2000	=
1,2-Dichloropropane	ug/L	5	U	100	U	250	U
Bromodichloromethane	ug/L	5	U	100	U	250	U
2-Chloroethyl vinyl ether	ug/L	10	R	200	UJ	500	UJ
cis-1,3-Dichloropropene	ug/L	5	U	100	U	250	U
Methyl isobutyl ketone (4-Methyl-2-pentanone)	ug/L	10	UJ	200	U	500	U
Toluene	ug/L	5	U	100	U	250	U
trans-1,3-Dichloropropene	ug/L	5	U	100	U	250	U
1,1,2-Trichloroethane	ug/L	5	U	100	U	250	U
2-Hexanone	ug/L	10	UJ	200	U	500	U
Tetrachloroethylene (PCE)	ug/L	5	U	100	U	250	U

	StationID	K166GW43D		K166GW43D		K166GW44D	
	SampleID	166GW43DM8		166GW43DM8DL		166GW44DM8	
	DateCollected	12/9/2002		12/9/2002		12/9/2002	
	DateExtracted	12/12/2002		12/13/2002		12/13/2002	
	DateAnalyzed	12/12/2002		12/13/2002		12/13/2002	
	SDGNumber	71852		71852		71852	
Parameter	**Units**						
Chloromethane	ug/L	500	U	1000	R	250	UJ
Vinyl chloride	ug/L	500	U	1000	R	250	U
Bromomethane	ug/L	500	U	1000	R	250	U
Chloroethane	ug/L	500	U	1000	R	250	U
1,1-Dichloroethene	ug/L	250	U	500	R	125	U
Acetone	ug/L	500	U	1000	R	250	UJ
Carbon Disulfide	ug/L	250	U	500	R	125	U
Methylene Chloride	ug/L	250	U	500	R	125	U
trans-1,2-Dichloroethene	ug/L	250	U	500	R	125	U
1,1-Dichloroethane	ug/L	250	U	500	R	125	U
Vinyl acetate	ug/L	500	U	1000	R	250	U
Methyl ethyl ketone (2-Butanone)	ug/L	500	U	1000	R	250	UJ
cis-1,2-Dichloroethylene	ug/L	8330	R	8530	J	783	=
1,2-Dichloroethene (total)	ug/L	8330	R	8530	J	783	=
Chloroform	ug/L	250	U	500	R	125	U
1,1,1-Trichloroethane	ug/L	250	U	500	R	125	U
Carbon Tetrachloride	ug/L	250	U	500	R	125	U
1,2-Dichloroethane	ug/L	250	U	500	R	125	U
Benzene	ug/L	250	U	500	R	125	U
Trichloroethylene (TCE)	ug/L	5380	R	5510	J	1910	=
1,2-Dichloropropane	ug/L	250	U	500	R	125	U
Bromodichloromethane	ug/L	250	U	500	R	125	U
2-Chloroethyl vinyl ether	ug/L	500	UJ	1000	R	250	UJ
cis-1,3-Dichloropropene	ug/L	250	U	500	R	125	U
Methyl isobutyl ketone (4-Methyl-2-pentanone)	ug/L	500	U	1000	R	250	UJ
Toluene	ug/L	250	U	500	R	125	U
trans-1,3-Dichloropropene	ug/L	250	U	500	R	125	U
1,1,2-Trichloroethane	ug/L	250	U	500	R	125	U
2-Hexanone	ug/L	500	U	1000	R	250	UJ
Tetrachloroethylene (PCE)	ug/L	250	U	500	R	125	U

	StationID	K166GW45D		K166GW45D		K166GW46D	
	SampleID	166GW45DM8		166GW45DM8DL		166GW46DM8	
	DateCollected	12/6/2002		12/6/2002		12/6/2002	
	DateExtracted	12/11/2002		12/13/2002		12/16/2002	
	DateAnalyzed	12/11/2002		12/13/2002		12/16/2002	
	SDGNumber	71766		71766		71766	
Parameter	**Units**						
Chloromethane	ug/L	10	U	500	R	10	U
Vinyl chloride	ug/L	10	U	500	R	1	J
Bromomethane	ug/L	10	U	500	R	10	U
Chloroethane	ug/L	10	U	500	R	10	U
1,1-Dichloroethene	ug/L	5	U	250	R	5	U
Acetone	ug/L	10	U	500	R	10	U
Carbon Disulfide	ug/L	5	U	250	R	5	U
Methylene Chloride	ug/L	5	U	250	R	5	U
trans-1,2-Dichloroethene	ug/L	1.6	J	250	R	2.5	J
1,1-Dichloroethane	ug/L	5	U	250	R	5	U
Vinyl acetate	ug/L	10	U	500	R	10	U
Methyl ethyl ketone (2-Butanone)	ug/L	10	U	500	R	10	U
cis-1,2-Dichloroethylene	ug/L	66.9	=	61.7	R	814	R
1,2-Dichloroethene (total)	ug/L	68.4	=	61.7	R	817	R
Chloroform	ug/L	1.1	J	250	R	5	U
1,1,1-Trichloroethane	ug/L	5	U	250	R	5	U
Carbon Tetrachloride	ug/L	5	U	250	R	5	U
1,2-Dichloroethane	ug/L	5	U	250	R	5	U
Benzene	ug/L	1.4	J	250	R	5	U
Trichloroethylene (TCE)	ug/L	2780	R	2750	J	3200	R
1,2-Dichloropropane	ug/L	5	U	250	R	5	U
Bromodichloromethane	ug/L	5	U	250	R	5	U
2-Chloroethyl vinyl ether	ug/L	10	U	500	R	10	UJ
cis-1,3-Dichloropropene	ug/L	5	U	250	R	5	U
Methyl isobutyl ketone (4-Methyl-2-pentanone)	ug/L	10	U	500	R	10	U
Toluene	ug/L	5	U	250	R	5	U
trans-1,3-Dichloropropene	ug/L	5	U	250	R	5	U
1,1,2-Trichloroethane	ug/L	5	U	250	R	5	U
2-Hexanone	ug/L	10	U	500	R	10	U
Tetrachloroethylene (PCE)	ug/L	1.1	J	250	R	5	U

	StationID	K166GW46D		K166GW47D		K166GW48D	
	SampleID	166GW46DM8DL		166GW47DM8		166GW48DM8	
	DateCollected	12/6/2002		12/6/2002		12/6/2002	
	DateExtracted	12/18/2002		12/14/2002		12/11/2002	
	DateAnalyzed	12/18/2002		12/14/2002		12/11/2002	
	SDGNumber	71766		71766		71766	
Parameter	**Units**						
Chloromethane	ug/L	500	R	10	U	10	U
Vinyl chloride	ug/L	500	R	10	U	10	U
Bromomethane	ug/L	500	R	10	U	10	U
Chloroethane	ug/L	500	R	10	U	10	U
1,1-Dichloroethene	ug/L	250	R	5	U	5	U
Acetone	ug/L	500	R	10	U	10	U
Carbon Disulfide	ug/L	250	R	5	U	5	U
Methylene Chloride	ug/L	250	R	5	U	5	U
trans-1,2-Dichloroethene	ug/L	250	R	5	U	5.1	=
1,1-Dichloroethane	ug/L	250	R	5	U	5	U
Vinyl acetate	ug/L	500	R	10	U	10	U
Methyl ethyl ketone (2-Butanone)	ug/L	500	R	10	U	10	U
cis-1,2-Dichloroethylene	ug/L	904	J	5	U	191	R
1,2-Dichloroethene (total)	ug/L	904	J	5	U	196	R
Chloroform	ug/L	250	R	5	U	5	U
1,1,1-Trichloroethane	ug/L	250	R	5	U	5	U
Carbon Tetrachloride	ug/L	250	R	5	U	5	U
1,2-Dichloroethane	ug/L	250	R	5	U	5	U
Benzene	ug/L	250	R	5	U	5	U
Trichloroethylene (TCE)	ug/L	2340	J	8.4	J	4540	R
1,2-Dichloropropane	ug/L	250	R	5	U	5	U
Bromodichloromethane	ug/L	250	R	5	U	5	U
2-Chloroethyl vinyl ether	ug/L	500	R	10	U	10	U
cis-1,3-Dichloropropene	ug/L	250	R	5	U	5	U
Methyl isobutyl ketone (4-Methyl-2-pentanone)	ug/L	500	R	10	U	10	U
Toluene	ug/L	250	R	5	U	5	U
trans-1,3-Dichloropropene	ug/L	250	R	5	U	5	U
1,1,2-Trichloroethane	ug/L	250	R	5	U	5	U
2-Hexanone	ug/L	500	R	10	U	10	U
Tetrachloroethylene (PCE)	ug/L	250	R	5	U	5	U

	StationID	K166GW48D		K166GW49D		K166GW49D	
	SampleID	166GW48DM8DL		166GW49DM8		166GW49DM8DL	
	DateCollected	12/6/2002		12/6/2002		12/6/2002	
	DateExtracted	12/14/2002		12/10/2002		12/13/2002	
	DateAnalyzed	12/14/2002		12/10/2002		12/13/2002	
	SDGNumber	71766		71766		71766	
Parameter	Units						
Chloromethane	ug/L	1000	R	10	U	500	R
Vinyl chloride	ug/L	1000	R	0.72	J	500	R
Bromomethane	ug/L	1000	R	10	U	500	R
Chloroethane	ug/L	1000	R	10	U	500	R
1,1-Dichloroethene	ug/L	500	R	5	U	250	R
Acetone	ug/L	1000	R	10	U	500	R
Carbon Disulfide	ug/L	500	R	5	U	250	R
Methylene Chloride	ug/L	500	R	5	U	250	R
trans-1,2-Dichloroethene	ug/L	500	R	1.4	J	250	R
1,1-Dichloroethane	ug/L	500	R	5	U	250	R
Vinyl acetate	ug/L	1000	R	10	U	500	R
Methyl ethyl ketone (2-Butanone)	ug/L	1000	R	10	U	500	R
cis-1,2-Dichloroethylene	ug/L	213	J	458	R	474	J
1,2-Dichloroethene (total)	ug/L	213	J	459	R	474	J
Chloroform	ug/L	500	R	5	U	250	R
1,1,1-Trichloroethane	ug/L	500	R	5	U	250	R
Carbon Tetrachloride	ug/L	500	R	5	U	250	R
1,2-Dichloroethane	ug/L	500	R	5	U	250	R
Benzene	ug/L	500	R	5	U	250	R
Trichloroethylene (TCE)	ug/L	6920	J	1360	R	1330	J
1,2-Dichloropropane	ug/L	500	R	5	U	250	R
Bromodichloromethane	ug/L	500	R	5	U	250	R
2-Chloroethyl vinyl ether	ug/L	1000	R	10	U	500	R
cis-1,3-Dichloropropene	ug/L	500	R	5	U	250	R
Methyl isobutyl ketone (4-Methyl-2-pentanone)	ug/L	1000	R	10	U	500	R
Toluene	ug/L	500	R	5	U	250	R
trans-1,3-Dichloropropene	ug/L	500	R	5	U	250	R
1,1,2-Trichloroethane	ug/L	500	R	5	U	250	R
2-Hexanone	ug/L	1000	R	10	U	500	R
Tetrachloroethylene (PCE)	ug/L	500	R	5	U	250	R

	StationID	K166GW50D		K166GW50D		K166GW50D	
	SampleID	166GW50DM8		166GW50DM8DL		166HW50DM8	
	DateCollected	12/6/2002		12/6/2002		12/6/2002	
	DateExtracted	12/10/2002		12/14/2002		12/18/2002	
	DateAnalyzed	12/10/2002		12/14/2002		12/18/2002	
	SDGNumber	71766		71766		71766	
Parameter	**Units**						
Chloromethane	ug/L	10	U	2000	R	500	UJ
Vinyl chloride	ug/L	2.7	J	2000	R	500	U
Bromomethane	ug/L	10	U	2000	R	500	U
Chloroethane	ug/L	10	U	2000	R	500	U
1,1-Dichloroethene	ug/L	5	U	1000	R	250	U
Acetone	ug/L	10	U	2000	R	500	UJ
Carbon Disulfide	ug/L	5	U	1000	R	250	U
Methylene Chloride	ug/L	5	U	1000	R	250	U
trans-1,2-Dichloroethene	ug/L	9.5	=	1000	R	250	U
1,1-Dichloroethane	ug/L	5	U	1000	R	250	U
Vinyl acetate	ug/L	10	U	2000	R	500	UJ
Methyl ethyl ketone (2-Butanone)	ug/L	10	U	2000	R	500	UJ
cis-1,2-Dichloroethylene	ug/L	424	R	408	J	620	J
1,2-Dichloroethene (total)	ug/L	434	R	408	J	620	J
Chloroform	ug/L	5	U	1000	R	250	U
1,1,1-Trichloroethane	ug/L	5	U	1000	R	250	U
Carbon Tetrachloride	ug/L	5	U	1000	R	250	U
1,2-Dichloroethane	ug/L	5	U	1000	R	250	U
Benzene	ug/L	5	U	1000	R	250	U
Trichloroethylene (TCE)	ug/L	4350	R	9310	J	14800	R
1,2-Dichloropropane	ug/L	5	U	1000	R	250	U
Bromodichloromethane	ug/L	5	U	1000	R	250	U
2-Chloroethyl vinyl ether	ug/L	10	U	2000	R	500	U
cis-1,3-Dichloropropene	ug/L	5	U	1000	R	250	U
Methyl isobutyl ketone (4-Methyl-2-pentanone)	ug/L	10	U	2000	R	500	U
Toluene	ug/L	5	U	1000	R	250	U
trans-1,3-Dichloropropene	ug/L	5	U	1000	R	250	U
1,1,2-Trichloroethane	ug/L	5	U	1000	R	250	U
2-Hexanone	ug/L	10	U	2000	R	500	UJ
Tetrachloroethylene (PCE)	ug/L	5	U	1000	R	250	U

	StationID	K166GW50D		K166GW51D		K166GW51D	
	SampleID	166HW50DM8DL		166GW51DM8		166GW51DM8DL	
	DateCollected	12/6/2002		12/4/2002		12/4/2002	
	DateExtracted	12/14/2002		12/11/2002		12/13/2002	
	DateAnalyzed	12/14/2002		12/11/2002		12/13/2002	
	SDGNumber	71766		71766		71766	
Parameter	**Units**						
Chloromethane	ug/L	5000	R	10	U	1000	R
Vinyl chloride	ug/L	5000	R	10	U	1000	R
Bromomethane	ug/L	5000	R	10	U	1000	R
Chloroethane	ug/L	5000	R	10	U	1000	R
1,1-Dichloroethene	ug/L	2500	R	5	U	500	R
Acetone	ug/L	5000	R	10	U	1000	R
Carbon Disulfide	ug/L	2500	R	5	U	500	R
Methylene Chloride	ug/L	2500	R	5	U	500	R
trans-1,2-Dichloroethene	ug/L	2500	R	2.7	J	500	R
1,1-Dichloroethane	ug/L	2500	R	5	U	500	R
Vinyl acetate	ug/L	5000	R	10	U	1000	R
Methyl ethyl ketone (2-Butanone)	ug/L	5000	R	10	U	1000	R
cis-1,2-Dichloroethylene	ug/L	553	R	1880	R	1870	J
1,2-Dichloroethene (total)	ug/L	553	R	1880	R	1870	J
Chloroform	ug/L	2500	R	5	U	500	R
1,1,1-Trichloroethane	ug/L	2500	R	5	U	500	R
Carbon Tetrachloride	ug/L	2500	R	5	U	500	R
1,2-Dichloroethane	ug/L	2500	R	5	U	500	R
Benzene	ug/L	2500	R	1.2	J	500	R
Trichloroethylene (TCE)	ug/L	16100	J	2660	R	2630	J
1,2-Dichloropropane	ug/L	2500	R	5	U	500	R
Bromodichloromethane	ug/L	2500	R	5	U	500	R
2-Chloroethyl vinyl ether	ug/L	5000	R	10	U	1000	R
cis-1,3-Dichloropropene	ug/L	2500	R	5	U	500	R
Methyl isobutyl ketone (4-Methyl-2-pentanone)	ug/L	5000	R	10	U	1000	R
Toluene	ug/L	2500	R	5	U	500	R
trans-1,3-Dichloropropene	ug/L	2500	R	5	U	500	R
1,1,2-Trichloroethane	ug/L	2500	R	5	U	500	R
2-Hexanone	ug/L	5000	R	10	U	1000	R
Tetrachloroethylene (PCE)	ug/L	2500	R	5	U	500	R

	StationID	K166GW52D		K166GW52D		K166GWIN3	
	SampleID	166GW52DM8		166GW52DM8DL		166GWIN3M8	
	DateCollected	12/4/2002		12/4/2002		12/6/2002	
	DateExtracted	12/11/2002		12/13/2002		12/14/2002	
	DateAnalyzed	12/11/2002		12/13/2002		12/14/2002	
	SDGNumber	71766		71766		71766	
Parameter	**Units**						
Chloromethane	ug/L	10	U	1000	R	10	U
Vinyl chloride	ug/L	0.89	J	1000	R	8.6	J
Bromomethane	ug/L	10	U	1000	R	10	U
Chloroethane	ug/L	10	U	1000	R	10	U
1,1-Dichloroethene	ug/L	5	U	500	R	5	U
Acetone	ug/L	10	U	1000	R	10	U
Carbon Disulfide	ug/L	5	U	500	R	5	U
Methylene Chloride	ug/L	5	U	500	R	5	U
trans-1,2-Dichloroethene	ug/L	4.3	J	500	R	5	U
1,1-Dichloroethane	ug/L	5	U	500	R	5	U
Vinyl acetate	ug/L	10	U	1000	R	10	U
Methyl ethyl ketone (2-Butanone)	ug/L	10	U	1000	R	10	U
cis-1,2-Dichloroethylene	ug/L	2710	R	3190	J	29.6	J
1,2-Dichloroethene (total)	ug/L	2710	R	3190	J	29.6	J
Chloroform	ug/L	5	U	500	R	5	U
1,1,1-Trichloroethane	ug/L	5	U	500	R	5	U
Carbon Tetrachloride	ug/L	5	U	500	R	5	U
1,2-Dichloroethane	ug/L	5	U	500	R	5	U
Benzene	ug/L	0.68	J	500	R	5	U
Trichloroethylene (TCE)	ug/L	1600	R	1650	J	5	U
1,2-Dichloropropane	ug/L	5	U	500	R	5	U
Bromodichloromethane	ug/L	5	U	500	R	5	U
2-Chloroethyl vinyl ether	ug/L	10	U	1000	R	10	U
cis-1,3-Dichloropropene	ug/L	5	U	500	R	5	U
Methyl isobutyl ketone (4-Methyl-2-pentanone)	ug/L	10	U	1000	R	10	U
Toluene	ug/L	5	U	500	R	5	U
trans-1,3-Dichloropropene	ug/L	5	U	500	R	5	U
1,1,2-Trichloroethane	ug/L	5	U	500	R	5	U
2-Hexanone	ug/L	10	U	1000	R	10	U
Tetrachloroethylene (PCE)	ug/L	5	U	500	R	5	U

	StationID	K166GWTM3		K166GWTM3		K166GWTM4	
	SampleID	166GWTM3M8		166GWTM3M8DL		166GWTM4M8	
	DateCollected	12/4/2002		12/4/2002		12/4/2002	
	DateExtracted	12/11/2002		12/13/2002		12/11/2002	
	DateAnalyzed	12/11/2002		12/13/2002		12/11/2002	
	SDGNumber	71766		71766		71766	
Parameter	**Units**						
Chloromethane	ug/L	10	U	100	R	10	U
Vinyl chloride	ug/L	146	R	144	J	7.6	J
Bromomethane	ug/L	10	U	100	R	10	U
Chloroethane	ug/L	10	U	100	R	10	U
1,1-Dichloroethene	ug/L	5	U	50	R	7.5	U
Acetone	ug/L	10	U	100	R	10	U
Carbon Disulfide	ug/L	5	U	50	R	5	U
Methylene Chloride	ug/L	5	U	50	R	5	U
trans-1,2-Dichloroethene	ug/L	1.2	J	50	R	5.8	=
1,1-Dichloroethane	ug/L	5	U	50	R	5	U
Vinyl acetate	ug/L	10	U	100	R	10	U
Methyl ethyl ketone (2-Butanone)	ug/L	10	U	100	R	10	U
cis-1,2-Dichloroethylene	ug/L	755	R	813	J	4140	R
1,2-Dichloroethene (total)	ug/L	756	R	813	J	4150	R
Chloroform	ug/L	5	U	50	R	5	U
1,1,1-Trichloroethane	ug/L	5	U	50	R	5	U
Carbon Tetrachloride	ug/L	5	U	50	R	5	U
1,2-Dichloroethane	ug/L	5	U	50	R	5	U
Benzene	ug/L	5	U	50	R	5	U
Trichloroethylene (TCE)	ug/L	8.9	=	6.1	R	1250	R
1,2-Dichloropropane	ug/L	5	U	50	R	5	U
Bromodichloromethane	ug/L	5	U	50	R	5	U
2-Chloroethyl vinyl ether	ug/L	10	U	100	R	10	U
cis-1,3-Dichloropropene	ug/L	5	U	50	R	5	U
Methyl isobutyl ketone (4-Methyl-2-pentanone)	ug/L	10	U	100	R	10	U
Toluene	ug/L	5	U	50	R	5	U
trans-1,3-Dichloropropene	ug/L	5	U	50	R	5	U
1,1,2-Trichloroethane	ug/L	5	U	50	R	5	U
2-Hexanone	ug/L	10	U	100	R	10	U
Tetrachloroethylene (PCE)	ug/L	5	U	50	R	5	U

	StationID	K166GWTM4		K698GW001		K698GW001	
	SampleID	166GWTM4M8DL		698GW001M8		698HW001M8	
	DateCollected	12/4/2002		12/3/2002		12/3/2002	
	DateExtracted	12/14/2002		12/11/2002		12/11/2002	
	DateAnalyzed	12/14/2002		12/11/2002		12/11/2002	
	SDGNumber	71766		71659		71659	
Parameter	**Units**						
Chloromethane	ug/L	2000	R	10	UJ	10	UJ
Vinyl chloride	ug/L	2000	R	10	U	10	U
Bromomethane	ug/L	2000	R	10	U	10	U
Chloroethane	ug/L	2000	R	10	U	10	U
1,1-Dichloroethene	ug/L	1000	R	5	U	5	U
Acetone	ug/L	2000	R	11.7	J	10.8	J
Carbon Disulfide	ug/L	1000	R	5	U	5	U
Methylene Chloride	ug/L	1000	R	5	U	5	U
trans-1,2-Dichloroethene	ug/L	1000	R	5	U	5	U
1,1-Dichloroethane	ug/L	1000	R	5	U	5	U
Vinyl acetate	ug/L	2000	R	10	UJ	10	UJ
Methyl ethyl ketone (2-Butanone)	ug/L	2000	R	10	UJ	2.3	J
cis-1,2-Dichloroethylene	ug/L	4630	J	5	U	5	U
1,2-Dichloroethene (total)	ug/L	4630	J	5	U	5	U
Chloroform	ug/L	1000	R	5	U	5	U
1,1,1-Trichloroethane	ug/L	1000	R	5	U	5	U
Carbon Tetrachloride	ug/L	1000	R	5	U	5	U
1,2-Dichloroethane	ug/L	1000	R	5	UJ	5	UJ
Benzene	ug/L	1000	R	2	J	1.6	J
Trichloroethylene (TCE)	ug/L	1180	J	1.7	J	5	U
1,2-Dichloropropane	ug/L	1000	R	5	U	5	U
Bromodichloromethane	ug/L	1000	R	5	U	5	U
2-Chloroethyl vinyl ether	ug/L	2000	R	10	UJ	10	UJ
cis-1,3-Dichloropropene	ug/L	1000	R	5	U	5	U
Methyl isobutyl ketone (4-Methyl-2-pentanone)	ug/L	2000	R	10	UJ	10	UJ
Toluene	ug/L	1000	R	5	U	5	U
trans-1,3-Dichloropropene	ug/L	1000	R	5	U	5	U
1,1,2-Trichloroethane	ug/L	1000	R	5	U	5	U
2-Hexanone	ug/L	2000	R	10	UJ	10	UJ
Tetrachloroethylene (PCE)	ug/L	1000	R	5	U	5	U

	StationID	K163GW003		K163GW003		K163GW005	
	SampleID	163GW003M8		163GW003M8DL		163GW005M8	
	DateCollected	12/11/2002		12/11/2002		12/11/2002	
	DateExtracted	12/19/2002		12/20/2002		12/20/2002	
	DateAnalyzed	12/19/2002		12/20/2002		12/20/2002	
	SDGNumber	72055		72055		72055	
Parameter	**Units**						
Dibromochloromethane	ug/L	5	UJ	50	R	5	UJ
Chlorobenzene	ug/L	5	UJ	50	R	5	UJ
Ethylbenzene	ug/L	5	UJ	50	R	5	UJ
m+p Xylene	ug/L	5	UJ	50	R	5	UJ
o-Xylene	ug/L	5	UJ	50	R	5	UJ
Xylenes, Total	ug/L	5	UJ	50	R	5	UJ
Styrene	ug/L	5	UJ	50	R	5	UJ
Bromoform	ug/L	5	UJ	50	R	5	UJ
1,1,2,2-Tetrachloroethane	ug/L	5	UJ	50	R	5	UJ
1,3-Dichlorobenzene	ug/L						
1,4-Dichlorobenzene	ug/L						
1,2-Dichlorobenzene	ug/L						
1,2,4-Trichlorobenzene	ug/L						
1,2,3-Trichlorobenzene	ug/L						

	StationID	K163GW03M		K166GW001		K166GW005	
	SampleID	163GW03MM8		166GW001M8		166GW005M8	
	DateCollected	12/11/2002		12/2/2002		12/2/2002	
	DateExtracted	12/20/2002		12/9/2002		12/9/2002	
	DateAnalyzed	12/20/2002		12/9/2002		12/9/2002	
	SDGNumber	72055		71658		71658	
Parameter	**Units**						
Dibromochloromethane	ug/L	5	UJ	5	U	5	U
Chlorobenzene	ug/L	5	UJ	5	U	5	U
Ethylbenzene	ug/L	5	UJ	5	U	5	U
m+p Xylene	ug/L	5	UJ	5	U	5	U
o-Xylene	ug/L	5	UJ	5	U	5	U
Xylenes, Total	ug/L	5	UJ	5	U	5	U
Styrene	ug/L	5	UJ	5	U	5	U
Bromoform	ug/L	5	UJ	5	U	5	U
1,1,2,2-Tetrachloroethane	ug/L	5	UJ	5	U	5	U
1,3-Dichlorobenzene	ug/L			5	U	5	U
1,4-Dichlorobenzene	ug/L			5	U	5	U
1,2-Dichlorobenzene	ug/L			5	U	5	U
1,2,4-Trichlorobenzene	ug/L			5	U	5	U
1,2,3-Trichlorobenzene	ug/L			5	U	5	U

	StationID	K166GW017		K166GW026		K166GW040	
	SampleID	166GW017M8		166GW026M8		166GW040M8	
	DateCollected	12/3/2002		12/2/2002		12/9/2002	
	DateExtracted	12/10/2002		12/9/2002		12/12/2002	
	DateAnalyzed	12/10/2002		12/9/2002		12/12/2002	
	SDGNumber	71658		71658		71852	
Parameter	**Units**						
Dibromochloromethane	ug/L	5	U	5	U	250	U
Chlorobenzene	ug/L	5	U	5	U	250	U
Ethylbenzene	ug/L	5	U	5	U	195	J
m+p Xylene	ug/L	5	U	5	U	502	J
o-Xylene	ug/L	5	U	5	U	231	J
Xylenes, Total	ug/L	5	U	5	U	733	J
Styrene	ug/L	5	U	5	U	250	U
Bromoform	ug/L	5	U	5	U	250	U
1,1,2,2-Tetrachloroethane	ug/L	5	U	5	U	250	U
1,3-Dichlorobenzene	ug/L	5	U	5	U		
1,4-Dichlorobenzene	ug/L	5	U	5	U		
1,2-Dichlorobenzene	ug/L	5	U	5	U		
1,2,4-Trichlorobenzene	ug/L	5	U	5	U		
1,2,3-Trichlorobenzene	ug/L	5	U	5	U		

	StationID	K166GW040		K166GW040		K166GW040	
	SampleID	166GW040M8DL		166HW040M8		166HW040M8DL	
	DateCollected	12/9/2002		12/9/2002		12/9/2002	
	DateExtracted	12/13/2002		12/12/2002		12/13/2002	
	DateAnalyzed	12/13/2002		12/12/2002		12/13/2002	
	SDGNumber	71852		71852		71852	
Parameter	**Units**						
Dibromochloromethane	ug/L	1250	R	250	U	1250	R
Chlorobenzene	ug/L	1250	R	250	U	1250	R
Ethylbenzene	ug/L	176	R	204	J	182	R
m+p Xylene	ug/L	443	R	520	=	496	R
o-Xylene	ug/L	193	R	247	J	233	R
Xylenes, Total	ug/L	636	R	767	=	730	R
Styrene	ug/L	1250	R	250	U	1250	R
Bromoform	ug/L	1250	R	250	U	1250	R
1,1,2,2-Tetrachloroethane	ug/L	1250	R	250	U	1250	R
1,3-Dichlorobenzene	ug/L						
1,4-Dichlorobenzene	ug/L						
1,2-Dichlorobenzene	ug/L						
1,2,4-Trichlorobenzene	ug/L						
1,2,3-Trichlorobenzene	ug/L						

	StationID	K166GW053		K166GW053		K166GW054	
	SampleID	166GW053M8		166GW053M8DL		166GW054M8	
	DateCollected	12/2/2002		12/2/2002		12/2/2002	
	DateExtracted	12/10/2002		12/10/2002		12/10/2002	
	DateAnalyzed	12/10/2002		12/10/2002		12/10/2002	
	SDGNumber	71658		71658		71658	
Parameter	**Units**						
Dibromochloromethane	ug/L	50	U	250	R	50	U
Chlorobenzene	ug/L	50	U	250	R	50	U
Ethylbenzene	ug/L	50	U	250	R	50	U
m+p Xylene	ug/L	50	U	250	R	50	U
o-Xylene	ug/L	50	U	250	R	50	U
Xylenes, Total	ug/L	50	U	250	R	50	U
Styrene	ug/L	50	U	250	R	50	U
Bromoform	ug/L	50	U	250	R	50	U
1,1,2,2-Tetrachloroethane	ug/L	50	U	250	R	50	U
1,3-Dichlorobenzene	ug/L	50	U	250	R	50	U
1,4-Dichlorobenzene	ug/L	50	U	250	R	50	U
1,2-Dichlorobenzene	ug/L	50	U	250	R	50	U
1,2,4-Trichlorobenzene	ug/L	50	U	250	R	50	U
1,2,3-Trichlorobenzene	ug/L	50	U	250	R	50	U

	StationID	K166GW054		K166GW055		K166GW055	
	SampleID	166GW054M8DL		166GW055M8		166GW055M8DL	
	DateCollected	12/2/2002		12/2/2002		12/2/2002	
	DateExtracted	12/10/2002		12/10/2002		12/10/2002	
	DateAnalyzed	12/10/2002		12/10/2002		12/10/2002	
	SDGNumber	71658		71658		71658	
Parameter	Units						
Dibromochloromethane	ug/L	125	R	25	U	500	R
Chlorobenzene	ug/L	125	R	25	U	500	R
Ethylbenzene	ug/L	125	R	25	U	500	R
m+p Xylene	ug/L	125	R	25	U	500	R
o-Xylene	ug/L	125	R	25	U	500	R
Xylenes, Total	ug/L	125	R	25	U	500	R
Styrene	ug/L	125	R	25	U	500	R
Bromoform	ug/L	125	R	25	U	500	R
1,1,2,2-Tetrachloroethane	ug/L	125	R	25	U	500	R
1,3-Dichlorobenzene	ug/L	125	R	25	U	500	R
1,4-Dichlorobenzene	ug/L	125	R	25	U	500	R
1,2-Dichlorobenzene	ug/L	125	R	25	U	500	R
1,2,4-Trichlorobenzene	ug/L	125	R	25	U	500	R
1,2,3-Trichlorobenzene	ug/L	125	R	25	U	500	R

	StationID	K166GW056		K166GW056		K166GW06D	
	SampleID	166GW056M8		166GW056M8DL		166GW06DM8	
	DateCollected	12/2/2002		12/2/2002		12/3/2002	
	DateExtracted	12/10/2002		12/10/2002		12/10/2002	
	DateAnalyzed	12/10/2002		12/10/2002		12/10/2002	
	SDGNumber	71658		71658		71658	
Parameter	**Units**						
Dibromochloromethane	ug/L	5	U	500	R	5	U
Chlorobenzene	ug/L	5	U	500	R	5	U
Ethylbenzene	ug/L	5	U	500	R	5	U
m+p Xylene	ug/L	5	U	500	R	5	U
o-Xylene	ug/L	5	U	500	R	5	U
Xylenes, Total	ug/L	5	U	500	R	5	U
Styrene	ug/L	5	U	500	R	5	U
Bromoform	ug/L	5	U	500	R	5	U
1,1,2,2-Tetrachloroethane	ug/L	5	U	500	R	5	U
1,3-Dichlorobenzene	ug/L	5	U	500	R	5	U
1,4-Dichlorobenzene	ug/L	5	U	500	R	5	U
1,2-Dichlorobenzene	ug/L	5	U	500	R	5	U
1,2,4-Trichlorobenzene	ug/L	5	U	500	R	5	U
1,2,3-Trichlorobenzene	ug/L	5	U	500	R	5	U

	StationID	K166GW07D		K166GW07D		K166GW08D	
	SampleID	166GW07DM8		166GW07DM8DL		166GW08DM8	
	DateCollected	12/3/2002		12/3/2002		12/3/2002	
	DateExtracted	12/10/2002		12/10/2002		12/10/2002	
	DateAnalyzed	12/10/2002		12/10/2002		12/10/2002	
	SDGNumber	71658		71658		71658	
Parameter	**Units**						
Dibromochloromethane	ug/L	25	U	125	R	5	U
Chlorobenzene	ug/L	25	U	125	R	5	U
Ethylbenzene	ug/L	25	U	125	R	5	U
m+p Xylene	ug/L	25	U	125	R	5	U
o-Xylene	ug/L	25	U	125	R	5	U
Xylenes, Total	ug/L	25	U	125	R	5	U
Styrene	ug/L	25	U	125	R	5	U
Bromoform	ug/L	25	U	125	R	5	U
1,1,2,2-Tetrachloroethane	ug/L	25	U	125	R	5	U
1,3-Dichlorobenzene	ug/L	25	U	125	R	5	U
1,4-Dichlorobenzene	ug/L	25	U	125	R	5	U
1,2-Dichlorobenzene	ug/L	25	U	125	R	5	U
1,2,4-Trichlorobenzene	ug/L	25	U	125	R	5	U
1,2,3-Trichlorobenzene	ug/L	25	U	125	R	5	U

	StationID	K166GW13D		K166GW13D		K166GW13D	
	SampleID	166GW13DM8		166GW13DM8DL		166HW13DM8	
	DateCollected	12/2/2002		12/2/2002		12/2/2002	
	DateExtracted	12/10/2002		12/10/2002		12/10/2002	
	DateAnalyzed	12/10/2002		12/10/2002		12/10/2002	
	SDGNumber	71658		71658		71658	
Parameter	**Units**						
Dibromochloromethane	ug/L	250	U	500	R	250	U
Chlorobenzene	ug/L	250	U	500	R	250	U
Ethylbenzene	ug/L	250	U	500	R	250	U
m+p Xylene	ug/L	250	U	500	R	250	U
o-Xylene	ug/L	250	U	500	R	250	U
Xylenes, Total	ug/L	250	U	500	R	250	U
Styrene	ug/L	250	U	500	R	250	U
Bromoform	ug/L	250	U	500	R	250	U
1,1,2,2-Tetrachloroethane	ug/L	250	U	500	R	250	U
1,3-Dichlorobenzene	ug/L	250	U	500	R	250	U
1,4-Dichlorobenzene	ug/L	250	U	500	R	250	U
1,2-Dichlorobenzene	ug/L	250	U	500	R	250	U
1,2,4-Trichlorobenzene	ug/L	250	U	500	R	250	U
1,2,3-Trichlorobenzene	ug/L	250	U	500	R	250	U

	StationID	K166GW14D		K166GW14D		K166GW16D	
	SampleID	166GW14DM8		166GW14DM8DL		166GW16DM8	
	DateCollected	12/3/2002		12/3/2002		12/11/2002	
	DateExtracted	12/10/2002		12/10/2002		12/19/2002	
	DateAnalyzed	12/10/2002		12/10/2002		12/19/2002	
	SDGNumber	71658		71658		72055	
Parameter	**Units**						
Dibromochloromethane	ug/L	5	U	10	R	5	UJ
Chlorobenzene	ug/L	5	U	10	R	5	UJ
Ethylbenzene	ug/L	5	U	10	R	5	UJ
m+p Xylene	ug/L	5	U	10	R	5	UJ
o-Xylene	ug/L	5	U	10	R	5	UJ
Xylenes, Total	ug/L	5	U	10	R	5	UJ
Styrene	ug/L	5	U	10	R	5	UJ
Bromoform	ug/L	5	U	10	R	5	UJ
1,1,2,2-Tetrachloroethane	ug/L	5	U	10	R	5	UJ
1,3-Dichlorobenzene	ug/L	5	U	10	R		
1,4-Dichlorobenzene	ug/L	5	U	10	R		
1,2-Dichlorobenzene	ug/L	5	U	10	R		
1,2,4-Trichlorobenzene	ug/L	5	U	10	R		
1,2,3-Trichlorobenzene	ug/L	5	U	10	R		

	StationID	K166GW16D		K166GW17D		K166GW19D	
	SampleID	166GW16DM8DL		166GW17DM8		166GW19DM8	
	DateCollected	12/11/2002		12/3/2002		12/4/2002	
	DateExtracted	12/20/2002		12/11/2002		12/11/2002	
	DateAnalyzed	12/20/2002		12/11/2002		12/11/2002	
	SDGNumber	72055		71659		71659	
Parameter	**Units**						
Dibromochloromethane	ug/L	250	R	5	U	5	U
Chlorobenzene	ug/L	250	R	5	U	5	U
Ethylbenzene	ug/L	250	R	5	U	5	U
m+p Xylene	ug/L	250	R	5	U	5	U
o-Xylene	ug/L	250	R	5	U	5	U
Xylenes, Total	ug/L	250	R	5	U	5	U
Styrene	ug/L	250	R	5	U	5	U
Bromoform	ug/L	250	R	5	U	5	U
1,1,2,2-Tetrachloroethane	ug/L	250	R	5	U	5	U
1,3-Dichlorobenzene	ug/L			5	U	5	U
1,4-Dichlorobenzene	ug/L			5	U	5	U
1,2-Dichlorobenzene	ug/L			5	U	5	U
1,2,4-Trichlorobenzene	ug/L			5	U	5	U
1,2,3-Trichlorobenzene	ug/L			5	U	5	U

	StationID	K166GW19D		K166GW21D		K166GW25D	
	SampleID	166GW19DM8DL		166GW21DM8		166GW25DM8	
	DateCollected	12/4/2002		12/3/2002		12/3/2002	
	DateExtracted	12/11/2002		12/11/2002		12/10/2002	
	DateAnalyzed	12/11/2002		12/11/2002		12/10/2002	
	SDGNumber	71659		71659		71659	
Parameter	**Units**						
Dibromochloromethane	ug/L	10	R	5	U	250	U
Chlorobenzene	ug/L	10	R	5	U	250	U
Ethylbenzene	ug/L	10	R	5	U	250	U
m+p Xylene	ug/L	10	R	5	U	250	U
o-Xylene	ug/L	10	R	5	U	250	U
Xylenes, Total	ug/L	10	R	5	U	250	U
Styrene	ug/L	10	R	5	U	250	U
Bromoform	ug/L	10	R	5	U	250	U
1,1,2,2-Tetrachloroethane	ug/L	10	R	5	U	250	U
1,3-Dichlorobenzene	ug/L	10	R	5	U	250	U
1,4-Dichlorobenzene	ug/L	10	R	5	U	250	U
1,2-Dichlorobenzene	ug/L	10	R	5	U	250	U
1,2,4-Trichlorobenzene	ug/L	10	R	5	U	250	U
1,2,3-Trichlorobenzene	ug/L	10	R	5	U	250	U

	StationID	K166GW25D		K166GW26D		K166GW33D	
	SampleID	166GW25DM8DL		166GW26DM8		166GW33DM8	
	DateCollected	12/3/2002		12/2/2002		12/11/2002	
	DateExtracted	12/11/2002		12/11/2002		12/20/2002	
	DateAnalyzed	12/11/2002		12/11/2002		12/20/2002	
	SDGNumber	71659		71659		72055	
Parameter	**Units**						
Dibromochloromethane	ug/L	500	R	125	U	5	UJ
Chlorobenzene	ug/L	500	R	125	U	5	UJ
Ethylbenzene	ug/L	500	R	125	U	5	UJ
m+p Xylene	ug/L	500	R	125	U	5	UJ
o-Xylene	ug/L	500	R	125	U	5	UJ
Xylenes, Total	ug/L	500	R	125	U	5	UJ
Styrene	ug/L	500	R	125	U	5	UJ
Bromoform	ug/L	500	R	125	U	5	UJ
1,1,2,2-Tetrachloroethane	ug/L	500	R	125	U	5	UJ
1,3-Dichlorobenzene	ug/L	500	R	125	U		
1,4-Dichlorobenzene	ug/L	500	R	125	U		
1,2-Dichlorobenzene	ug/L	500	R	125	U		
1,2,4-Trichlorobenzene	ug/L	500	R	125	U		
1,2,3-Trichlorobenzene	ug/L	500	R	125	U		

	StationID	K166GW34D		K166GW34D		K166GW35D	
	SampleID	166GW34DM8		166GW34DM8DL		166GW35DM8	
	DateCollected	12/9/2002		12/9/2002		12/9/2002	
	DateExtracted	12/12/2002		12/13/2002		12/13/2002	
	DateAnalyzed	12/12/2002		12/13/2002		12/13/2002	
	SDGNumber	71852		71852		71852	
Parameter	**Units**						
Dibromochloromethane	ug/L	250	U	5000	R	125	U
Chlorobenzene	ug/L	250	U	5000	R	125	U
Ethylbenzene	ug/L	250	U	5000	R	125	U
m+p Xylene	ug/L	250	U	5000	R	125	U
o-Xylene	ug/L	250	U	5000	R	125	U
Xylenes, Total	ug/L	250	U	5000	R	125	U
Styrene	ug/L	250	U	5000	R	125	U
Bromoform	ug/L	250	U	5000	R	125	U
1,1,2,2-Tetrachloroethane	ug/L	250	U	5000	R	125	U
1,3-Dichlorobenzene	ug/L						
1,4-Dichlorobenzene	ug/L						
1,2-Dichlorobenzene	ug/L						
1,2,4-Trichlorobenzene	ug/L						
1,2,3-Trichlorobenzene	ug/L						

	StationID	K166GW36D		K166GW36D		K166GW37D	
	SampleID	166GW36DM8		166GW36DM8DL		166GW37DM8	
	DateCollected	12/9/2002		12/9/2002		12/9/2002	
	DateExtracted	12/12/2002		12/13/2002		12/13/2002	
	DateAnalyzed	12/12/2002		12/13/2002		12/13/2002	
	SDGNumber	71852		71852		71852	
Parameter	**Units**						
Dibromochloromethane	ug/L	250	U	1250	R	5	U
Chlorobenzene	ug/L	250	U	1250	R	5	U
Ethylbenzene	ug/L	250	U	1250	R	5	U
m+p Xylene	ug/L	250	U	1250	R	5	U
o-Xylene	ug/L	250	U	1250	R	5	U
Xylenes, Total	ug/L	250	U	1250	R	5	U
Styrene	ug/L	250	U	1250	R	5	U
Bromoform	ug/L	250	U	1250	R	5	U
1,1,2,2-Tetrachloroethane	ug/L	250	U	1250	R	5	U
1,3-Dichlorobenzene	ug/L						
1,4-Dichlorobenzene	ug/L						
1,2-Dichlorobenzene	ug/L						
1,2,4-Trichlorobenzene	ug/L						
1,2,3-Trichlorobenzene	ug/L						

	StationID	K166GW37D		K166GW38D		K166GW38D	
	SampleID	166GW37DM8DL		166GW38DM8		166GW38DM8DL	
	DateCollected	12/9/2002		12/11/2002		12/11/2002	
	DateExtracted	12/13/2002		12/19/2002		12/20/2002	
	DateAnalyzed	12/13/2002		12/19/2002		12/20/2002	
	SDGNumber	71852		72055		72055	
Parameter	**Units**						
Dibromochloromethane	ug/L	25	R	5	UJ	50	R
Chlorobenzene	ug/L	25	R	5	UJ	50	R
Ethylbenzene	ug/L	25	R	5	UJ	50	R
m+p Xylene	ug/L	25	R	5	UJ	50	R
o-Xylene	ug/L	25	R	5	UJ	50	R
Xylenes, Total	ug/L	25	R	5	UJ	50	R
Styrene	ug/L	25	R	5	UJ	50	R
Bromoform	ug/L	25	R	5	UJ	50	R
1,1,2,2-Tetrachloroethane	ug/L	25	R	5	UJ	50	R
1,3-Dichlorobenzene	ug/L						
1,4-Dichlorobenzene	ug/L						
1,2-Dichlorobenzene	ug/L						
1,2,4-Trichlorobenzene	ug/L						
1,2,3-Trichlorobenzene	ug/L						

	StationID	K166GW39D		K166GW41D		K166GW42D	
	SampleID	166GW39DM8		166GW41DM8		166GW42DM8	
	DateCollected	12/9/2002		12/9/2002		12/9/2002	
	DateExtracted	12/13/2002		12/16/2002		12/12/2002	
	DateAnalyzed	12/13/2002		12/16/2002		12/12/2002	
	SDGNumber	71852		71852		71852	
Parameter	**Units**						
Dibromochloromethane	ug/L	5	U	100	U	250	U
Chlorobenzene	ug/L	5	U	100	U	250	U
Ethylbenzene	ug/L	5	U	100	U	250	U
m+p Xylene	ug/L	5	U	100	U	250	U
o-Xylene	ug/L	5	U	100	U	250	U
Xylenes, Total	ug/L	5	U	100	U	250	U
Styrene	ug/L	5	U	100	U	250	U
Bromoform	ug/L	5	U	100	U	250	U
1,1,2,2-Tetrachloroethane	ug/L	5	U	100	U	250	U
1,3-Dichlorobenzene	ug/L						
1,4-Dichlorobenzene	ug/L						
1,2-Dichlorobenzene	ug/L						
1,2,4-Trichlorobenzene	ug/L						
1,2,3-Trichlorobenzene	ug/L						

	StationID	K166GW43D		K166GW43D		K166GW44D	
	SampleID	166GW43DM8		166GW43DM8DL		166GW44DM8	
	DateCollected	12/9/2002		12/9/2002		12/9/2002	
	DateExtracted	12/12/2002		12/13/2002		12/13/2002	
	DateAnalyzed	12/12/2002		12/13/2002		12/13/2002	
	SDGNumber	71852		71852		71852	
Parameter	**Units**						
Dibromochloromethane	ug/L	250	U	500	R	125	U
Chlorobenzene	ug/L	250	U	500	R	125	U
Ethylbenzene	ug/L	250	U	500	R	125	U
m+p Xylene	ug/L	250	U	500	R	125	U
o-Xylene	ug/L	250	U	500	R	125	U
Xylenes, Total	ug/L	250	U	500	R	125	U
Styrene	ug/L	250	U	500	R	125	U
Bromoform	ug/L	250	U	500	R	125	U
1,1,2,2-Tetrachloroethane	ug/L	250	U	500	R	125	U
1,3-Dichlorobenzene	ug/L						
1,4-Dichlorobenzene	ug/L						
1,2-Dichlorobenzene	ug/L						
1,2,4-Trichlorobenzene	ug/L						
1,2,3-Trichlorobenzene	ug/L						

	StationID	K166GW45D		K166GW45D		K166GW46D	
	SampleID	166GW45DM8		166GW45DM8DL		166GW46DM8	
	DateCollected	12/6/2002		12/6/2002		12/6/2002	
	DateExtracted	12/11/2002		12/13/2002		12/16/2002	
	DateAnalyzed	12/11/2002		12/13/2002		12/16/2002	
	SDGNumber	71766		71766		71766	
Parameter	**Units**						
Dibromochloromethane	ug/L	5	U	250	R	5	U
Chlorobenzene	ug/L	5	U	250	R	5	U
Ethylbenzene	ug/L	2.1	J	250	R	5	U
m+p Xylene	ug/L	5	U	250	R	5	U
o-Xylene	ug/L	5	U	250	R	5	U
Xylenes, Total	ug/L	5	U	250	R	5	U
Styrene	ug/L	5	U	250	R	5	U
Bromoform	ug/L	5	U	250	R	5	U
1,1,2,2-Tetrachloroethane	ug/L	5	U	250	R	5	U
1,3-Dichlorobenzene	ug/L	5	U	250	R	5	U
1,4-Dichlorobenzene	ug/L	5	U	250	R	5	U
1,2-Dichlorobenzene	ug/L	5	U	250	R	5	U
1,2,4-Trichlorobenzene	ug/L	5	U	250	R	5	U
1,2,3-Trichlorobenzene	ug/L	5	U	250	R	5	U

	StationID	K166GW46D		K166GW47D		K166GW48D	
	SampleID	166GW46DM8DL		166GW47DM8		166GW48DM8	
	DateCollected	12/6/2002		12/6/2002		12/6/2002	
	DateExtracted	12/18/2002		12/14/2002		12/11/2002	
	DateAnalyzed	12/18/2002		12/14/2002		12/11/2002	
	SDGNumber	71766		71766		71766	
Parameter	**Units**						
Dibromochloromethane	ug/L	250	R	5	U	5	U
Chlorobenzene	ug/L	250	R	5	U	5	U
Ethylbenzene	ug/L	250	R	5	U	5	U
m+p Xylene	ug/L	250	R	5	U	5	U
o-Xylene	ug/L	250	R	5	U	5	U
Xylenes, Total	ug/L	250	R	5	U	5	U
Styrene	ug/L	250	R	5	U	5	U
Bromoform	ug/L	250	R	5	U	5	U
1,1,2,2-Tetrachloroethane	ug/L	250	R	5	U	5	U
1,3-Dichlorobenzene	ug/L	250	R	5	U	5	U
1,4-Dichlorobenzene	ug/L	250	R	5	U	5	U
1,2-Dichlorobenzene	ug/L	250	R	5	U	5	U
1,2,4-Trichlorobenzene	ug/L	250	R	5	U	5	U
1,2,3-Trichlorobenzene	ug/L	250	R	5	U	5	U

	StationID	K166GW48D		K166GW49D		K166GW49D	
	SampleID	166GW48DM8DL		166GW49DM8		166GW49DM8DL	
	DateCollected	12/6/2002		12/6/2002		12/6/2002	
	DateExtracted	12/14/2002		12/10/2002		12/13/2002	
	DateAnalyzed	12/14/2002		12/10/2002		12/13/2002	
	SDGNumber	71766		71766		71766	
Parameter	**Units**						
Dibromochloromethane	ug/L	500	R	5	U	250	R
Chlorobenzene	ug/L	500	R	5	U	250	R
Ethylbenzene	ug/L	500	R	5	U	250	R
m+p Xylene	ug/L	500	R	5	U	250	R
o-Xylene	ug/L	500	R	5	U	250	R
Xylenes, Total	ug/L	500	R	5	U	250	R
Styrene	ug/L	500	R	5	U	250	R
Bromoform	ug/L	500	R	5	U	250	R
1,1,2,2-Tetrachloroethane	ug/L	500	R	5	U	250	R
1,3-Dichlorobenzene	ug/L	500	R	5	U	250	R
1,4-Dichlorobenzene	ug/L	500	R	5	U	250	R
1,2-Dichlorobenzene	ug/L	500	R	5	U	250	R
1,2,4-Trichlorobenzene	ug/L	500	R	5	U	250	R
1,2,3-Trichlorobenzene	ug/L	500	R	5	U	250	R

	StationID	K166GW50D		K166GW50D		K166GW50D	
	SampleID	166GW50DM8		166GW50DM8DL		166HW50DM8	
	DateCollected	12/6/2002		12/6/2002		12/6/2002	
	DateExtracted	12/10/2002		12/14/2002		12/18/2002	
	DateAnalyzed	12/10/2002		12/14/2002		12/18/2002	
	SDGNumber	71766		71766		71766	
Parameter	**Units**						
Dibromochloromethane	ug/L	5	U	1000	R	250	U
Chlorobenzene	ug/L	5	U	1000	R	250	U
Ethylbenzene	ug/L	5	U	1000	R	250	U
m+p Xylene	ug/L	5	U	1000	R	250	U
o-Xylene	ug/L	5	U	1000	R	250	U
Xylenes, Total	ug/L	5	U	1000	R	250	U
Styrene	ug/L	5	U	1000	R	250	U
Bromoform	ug/L	5	U	1000	R	250	U
1,1,2,2-Tetrachloroethane	ug/L	5	U	1000	R	250	U
1,3-Dichlorobenzene	ug/L	5	U	1000	R	250	U
1,4-Dichlorobenzene	ug/L	5	U	1000	R	250	U
1,2-Dichlorobenzene	ug/L	5	U	1000	R	250	U
1,2,4-Trichlorobenzene	ug/L	5	U	1000	R	250	U
1,2,3-Trichlorobenzene	ug/L	5	U	1000	R	250	U

	StationID	K166GW50D		K166GW51D		K166GW51D	
	SampleID	166HW50DM8DL		166GW51DM8		166GW51DM8DL	
	DateCollected	12/6/2002		12/4/2002		12/4/2002	
	DateExtracted	12/14/2002		12/11/2002		12/13/2002	
	DateAnalyzed	12/14/2002		12/11/2002		12/13/2002	
	SDGNumber	71766		71766		71766	
Parameter	**Units**						
Dibromochloromethane	ug/L	2500	R	5	U	500	R
Chlorobenzene	ug/L	2500	R	5	U	500	R
Ethylbenzene	ug/L	2500	R	5	U	500	R
m+p Xylene	ug/L	2500	R	5	U	500	R
o-Xylene	ug/L	2500	R	5	U	500	R
Xylenes, Total	ug/L	2500	R	5	U	500	R
Styrene	ug/L	2500	R	5	U	500	R
Bromoform	ug/L	2500	R	5	U	500	R
1,1,2,2-Tetrachloroethane	ug/L	2500	R	5	U	500	R
1,3-Dichlorobenzene	ug/L	2500	R	5	U	500	R
1,4-Dichlorobenzene	ug/L	2500	R	5	U	500	R
1,2-Dichlorobenzene	ug/L	2500	R	5	U	500	R
1,2,4-Trichlorobenzene	ug/L	2500	R	5	U	500	R
1,2,3-Trichlorobenzene	ug/L	2500	R	5	U	500	R

	StationID	K166GW52D		K166GW52D		K166GWIN3	
	SampleID	166GW52DM8		166GW52DM8DL		166GWIN3M8	
	DateCollected	12/4/2002		12/4/2002		12/6/2002	
	DateExtracted	12/11/2002		12/13/2002		12/14/2002	
	DateAnalyzed	12/11/2002		12/13/2002		12/14/2002	
	SDGNumber	71766		71766		71766	
Parameter	**Units**						
Dibromochloromethane	ug/L	5	U	500	R	5	U
Chlorobenzene	ug/L	5	U	500	R	5	U
Ethylbenzene	ug/L	5	U	500	R	0.23	J
m+p Xylene	ug/L	5	U	500	R	5	U
o-Xylene	ug/L	5	U	500	R	0.27	J
Xylenes, Total	ug/L	5	U	500	R	0.27	J
Styrene	ug/L	5	U	500	R	5	U
Bromoform	ug/L	5	U	500	R	5	U
1,1,2,2-Tetrachloroethane	ug/L	5	U	500	R	5	U
1,3-Dichlorobenzene	ug/L	5	U	500	R	5	U
1,4-Dichlorobenzene	ug/L	5	U	500	R	5	U
1,2-Dichlorobenzene	ug/L	5	U	500	R	5	U
1,2,4-Trichlorobenzene	ug/L	5	U	500	R	5	U
1,2,3-Trichlorobenzene	ug/L	5	U	500	R	5	U

	StationID	K166GWTM3		K166GWTM3		K166GWTM4	
	SampleID	166GWTM3M8		166GWTM3M8DL		166GWTM4M8	
	DateCollected	12/4/2002		12/4/2002		12/4/2002	
	DateExtracted	12/11/2002		12/13/2002		12/11/2002	
	DateAnalyzed	12/11/2002		12/13/2002		12/11/2002	
	SDGNumber	71766		71766		71766	
Parameter	**Units**						
Dibromochloromethane	ug/L	5	U	50	R	5	U
Chlorobenzene	ug/L	5	U	50	R	5	U
Ethylbenzene	ug/L	5	U	50	R	0.33	J
m+p Xylene	ug/L	5	U	50	R	5	U
o-Xylene	ug/L	0.39	J	50	R	5	U
Xylenes, Total	ug/L	0.39	J	50	R	5	U
Styrene	ug/L	5	U	50	R	5	U
Bromoform	ug/L	5	U	50	R	5	U
1,1,2,2-Tetrachloroethane	ug/L	5	U	50	R	5	U
1,3-Dichlorobenzene	ug/L	5	U	50	R	5	U
1,4-Dichlorobenzene	ug/L	5	U	50	R	5	U
1,2-Dichlorobenzene	ug/L	5	U	50	R	5	U
1,2,4-Trichlorobenzene	ug/L	5	U	50	R	5	U
1,2,3-Trichlorobenzene	ug/L	5	U	50	R	5	U

	StationID	K166GWTM4		K698GW001		K698GW001	
	SampleID	166GWTM4M8DL		698GW001M8		698HW001M8	
	DateCollected	12/4/2002		12/3/2002		12/3/2002	
	DateExtracted	12/14/2002		12/11/2002		12/11/2002	
	DateAnalyzed	12/14/2002		12/11/2002		12/11/2002	
	SDGNumber	71766		71659		71659	
Parameter	**Units**						
Dibromochloromethane	ug/L	1000	R	5	U	5	U
Chlorobenzene	ug/L	1000	R	5	U	5	U
Ethylbenzene	ug/L	1000	R	1.9	J	1.5	J
m+p Xylene	ug/L	1000	R	1.6	J	1.1	J
o-Xylene	ug/L	1000	R	5	U	5	U
Xylenes, Total	ug/L	1000	R	2.5	J	1.6	J
Styrene	ug/L	1000	R	5	U	5	U
Bromoform	ug/L	1000	R	5	U	5	U
1,1,2,2-Tetrachloroethane	ug/L	1000	R	5	U	5	U
1,3-Dichlorobenzene	ug/L	1000	R	5	U	5	U
1,4-Dichlorobenzene	ug/L	1000	R	5	U	5	U
1,2-Dichlorobenzene	ug/L	1000	R	5	U	5	U
1,2,4-Trichlorobenzene	ug/L	1000	R	5	U	5	U
1,2,3-Trichlorobenzene	ug/L	1000	R	5	U	5	U

	StationID	K163GW003		K163GW03M		K166GW040		K166GW040	
	SampleID	163GW003M8		163GW03MM8		166GW040M8		166HW040M8	
	DateCollected	12/11/2002		12/11/2002		12/9/2002		12/9/2002	
	DateExtracted								
	DateAnalyzed	12/12/2002		12/13/2002		12/10/2002		12/10/2002	
	SDGNumber	72055		72055		71852		71852	
Parameter	**Units**								
Nitrogen, Nitrate (as N)	mg/L	0.1	U	0.1	U	0.1	U	0.1	U
Sulfate (as SO4)	mg/L	9.09	=	8.41	=	219	=	217	=

Analytical Data Summary

	StationID	K166GW16D		K166GW33D		K166GW34D		K166GW35D	
	SampleID	166GW16DM8		166GW33DM8		166GW34DM8		166GW35DM8	
	DateCollected	12/11/2002		12/11/2002		12/9/2002		12/9/2002	
	DateExtracted								
	DateAnalyzed	12/13/2002		12/13/2002		12/10/2002		12/10/2002	
	SDGNumber	72055		72055		71852		71852	
Parameter	**Units**								
Nitrogen, Nitrate (as N)	mg/L	0.1	U	0.1	U	0.1	U	0.1	U
Sulfate (as SO4)	mg/L	5.89	=	1.59	=	0.516	J	1.95	J

	StationID	K166GW36D		K166GW37D		K166GW38D		K166GW39D	
	SampleID	166GW36DM8		166GW37DM8		166GW38DM8		166GW39DM8	
	DateCollected	12/9/2002		12/9/2002		12/11/2002		12/9/2002	
	DateExtracted								
	DateAnalyzed	12/10/2002		12/11/2002		12/13/2002		12/11/2002	
	SDGNumber	71852		71852		72055		71852	
Parameter	**Units**								
Nitrogen, Nitrate (as N)	mg/L	0.1	U	0.1	U	0.1	U	0.1	U
Sulfate (as SO4)	mg/L	0.4	U	4.02	J	41.4	=	29.6	J

	StationID	K166GW41D		K166GW42D		K166GW43D		K166GW44D	
	SampleID	166GW41DM8		166GW42DM8		166GW43DM8		166GW44DM8	
	DateCollected	12/9/2002		12/9/2002		12/9/2002		12/9/2002	
	DateExtracted								
	DateAnalyzed	12/11/2002		12/11/2002		12/11/2002		12/11/2002	
	SDGNumber	71852		71852		71852		71852	
Parameter	**Units**								
Nitrogen, Nitrate (as N)	mg/L	0.1	U	0.1	U	0.1	U	0.1	U
Sulfate (as SO4)	mg/L	14.7	J	7.18	J	24.8	J	37.6	J

	StationID	K166GW45D		K166GW46D		K166GW47D		K166GW48D	
	SampleID	166GW45DM8		166GW46DM8		166GW47DM8		166GW48DM8	
	DateCollected	12/6/2002		12/6/2002		12/6/2002		12/6/2002	
	DateExtracted								
	DateAnalyzed	12/7/2002		12/7/2002		12/7/2002		12/7/2002	
	SDGNumber	71766		71766		71766		71766	
Parameter	**Units**								
Nitrogen, Nitrate (as N)	mg/L	0.1	U	0.1	U	0.1	U	0.1	U
Sulfate (as SO4)	mg/L	65.7	J	8.32	J	28.3	J	12.4	J

	StationID	K166GW49D		K166GW50D		K166GW50D		K166GW51D	
	SampleID	166GW49DM8		166GW50DM8		166HW50DM8		166GW51DM8	
	DateCollected	12/6/2002		12/6/2002		12/6/2002		12/4/2002	
	DateExtracted								
	DateAnalyzed	12/7/2002		12/7/2002		12/7/2002		12/7/2002	
	SDGNumber	71766		71766		71766		71766	
Parameter	**Units**								
Nitrogen, Nitrate (as N)	mg/L	0.1	U	0.1	U	0.1	U	0.1	UJ
Sulfate (as SO4)	mg/L	6.64	J	7.29	J	8.01	J	7.46	J

	StationID	K166GW52D		K166GWIN3		K166GWTM3		K166GWTM4	
	SampleID	166GW52DM8		166GWIN3M8		166GWTM3M8		166GWTM4M8	
	DateCollected	12/4/2002		12/6/2002		12/4/2002		12/4/2002	
	DateExtracted								
	DateAnalyzed	12/7/2002		12/7/2002		12/7/2002		12/7/2002	
	SDGNumber	71766		71766		71766		71766	
Parameter	**Units**								
Nitrogen, Nitrate (as N)	mg/L	0.1	UJ	0.1	U	0.1	UJ	0.1	UJ
Sulfate (as SO4)	mg/L	6.94	J	4.43	J	3.04	J	5.43	J

	StationID	K163GW003		K163GW03M		K166G
	SampleID	163GW003M8		163GW03MM8		166GW
	DateCollected	12/11/2002		12/11/2002		12/9/
	DateExtracted	12/17/2002		12/17/2002		12/17
	DateAnalyzed					
	SDGNumber	P0212230		P0212230		P021
Parameter	**Units**					
Hydrogen	nM	6.7	=	6.8	=	4
Methane	ug/L	26	=	59	=	1.9

	StationID	W040	K166GW16D		K166GW33D	
	SampleID	040M8	166GW16DM8		166GW33DM8	
	DateCollected	2002	12/11/2002		12/11/2002	
	DateExtracted	/2002	12/18/2002		12/18/2002	
	DateAnalyzed					
	SDGNumber	2230	P0212230		P0212230	
Parameter	**Units**					
Hydrogen	nM	=	1.3	=	86	=
Methane	ug/L	=	270	=	28	=

	StationID	K166GW34D		K166GW35D		K166G
	SampleID	166GW34DM8		166GW35DM8		166GW
	DateCollected	12/9/2002		12/9/2002		12/9/
	DateExtracted	12/18/2002		12/18/2002		12/18
	DateAnalyzed					
	SDGNumber	P0212230		P0212230		P021
Parameter	**Units**					
Hydrogen	nM	560	=	77000	=	21000
Methane	ug/L	160	=	180	=	150

	StationID	W36D	K166GW37D		K166GW38D	
	SampleID	36DM8	166GW37DM8		166GW38DM8	
	DateCollected	2002	12/9/2002		12/11/2002	
	DateExtracted	/2002	12/18/2002		12/18/2002	
	DateAnalyzed					
	SDGNumber	2230	P0212230		P0212230	
Parameter	Units					
Hydrogen	nM	=	7600	=	1.6	=
Methane	ug/L	=	290	=	41	=

	StationID	K166GW39D		K166GW41D		K166G
	SampleID	166GW39DM8		166GW41DM8		166HW
	DateCollected	12/9/2002		12/9/2002		12/9/
	DateExtracted	12/18/2002		12/18/2002		12/18
	DateAnalyzed					
	SDGNumber	P0212230		P0212230		P021
Parameter	**Units**					
Hydrogen	nM	1.4	=	3.2	=	3.9
Methane	ug/L	270	=	290	=	410

	StationID	W41D	K166GW42D		K166GW43D	
	SampleID	41DM8	166GW42DM8		166GW43DM8	
	DateCollected	2002	12/9/2002		12/9/2002	
	DateExtracted	/2002	12/18/2002		12/18/2002	
	DateAnalyzed					
	SDGNumber	2230	P0212230		P0212230	
Parameter	Units					
Hydrogen	nM	=	3.4	=	71	=
Methane	ug/L	=	610	=	46	=

	StationID	K166GW44D		K166GW45D		K166G
	SampleID	166GW44DM8		166GW45DM8		166GW
	DateCollected	12/9/2002		12/6/2002		12/6/
	DateExtracted	12/18/2002		12/18/2002		12/18
	DateAnalyzed					
	SDGNumber	P0212230		P0212230		P021
Parameter	**Units**					
Hydrogen	nM	1.5	=	5	=	2300
Methane	ug/L	16	=	46	=	39

	StationID	W46D	K166GW47D		K166GW48D	
	SampleID	46DM8	166GW47DM8		166GW48DM8	
	DateCollected	2002	12/6/2002		12/6/2002	
	DateExtracted	/2002	12/19/2002		12/19/2002	
	DateAnalyzed					
	SDGNumber	2230	P0212230		P0212230	
Parameter	**Units**					
Hydrogen	nM	=	2.6	=	45	=
Methane	ug/L	=	2.1	=	18	=

	StationID	K166GW49D		K166GW50D		K166G
	SampleID	166GW49DM8		166GW50DM8		166HW
	DateCollected	12/6/2002		12/6/2002		12/6/
	DateExtracted	12/19/2002		12/19/2002		12/19
	DateAnalyzed					
	SDGNumber	P0212230		P0212230		P021
Parameter	**Units**					
Hydrogen	nM	94000	=	2	=	1.8
Methane	ug/L	220	=	14	=	11

	StationID	W50D	K166GW51D		K166GW52D	
	SampleID	50DM8	166GW51DM8		166GW52DM8	
	DateCollected	2002	12/4/2002		12/4/2002	
	DateExtracted	/2002	12/19/2002		12/19/2002	
	DateAnalyzed					
	SDGNumber	2230	P0212230		P0212230	
Parameter	Units					
Hydrogen	nM	=	1.5	=	1.4	=
Methane	ug/L	=	310	=	280	=

	StationID	K166GWIN3		K166GWTM3		K166GV
	SampleID	166GWIN3M8		166GWTM3M8		166GWT
	DateCollected	12/6/2002		12/4/2002		12/4/2
	DateExtracted	12/19/2002		12/19/2002		12/19/
	DateAnalyzed					
	SDGNumber	P0212230		P0212230		P0212
Parameter	**Units**					
Hydrogen	nM	13000	=	3800	=	2
Methane	ug/L	2100	=	130	=	20

	StationID	VTM4
	SampleID	M4M8
	DateCollected	002
	DateExtracted	2002
	DateAnalyzed	
	SDGNumber	230
Parameter	**Units**	
Hydrogen	nM	=
Methane	ug/L	=

71766	163EW003M8LR	Nitrogen, Nitrate (as N)	0.543	mg/L
71766	163EW003M8LR	Sulfate (as SO4)	37.8	mg/L
72055	163GW003M8	1,1,1-Trichloroethane	5	ug/L
72055	163GW003M8	1,1,2,2-Tetrachloroethane	5	ug/L
72055	163GW003M8	1,1,2-Trichloroethane	5	ug/L
72055	163GW003M8	1,1-Dichloroethane	5	ug/L
72055	163GW003M8	1,1-Dichloroethene	5	ug/L
72055	163GW003M8	1,2-Dichloroethane	5	ug/L
72055	163GW003M8	1,2-Dichloroethene (total)	11.9	ug/L
72055	163GW003M8	1,2-Dichloropropane	5	ug/L
72055	163GW003M8	1-Bromo-4-Fluorobenzene (4-Bromofluorobenzene)	75	PERCENT
72055	163GW003M8	2-Chloroethyl vinyl ether	10	ug/L
72055	163GW003M8	2-Hexanone	10	ug/L
72055	163GW003M8	Acetone	10	ug/L
72055	163GW003M8	Benzene	5	ug/L
72055	163GW003M8	Bromodichloromethane	5	ug/L
72055	163GW003M8	Bromoform	5	ug/L
72055	163GW003M8	Bromomethane	10	ug/L
72055	163GW003M8	Carbon Disulfide	5	ug/L
72055	163GW003M8	Carbon Tetrachloride	5	ug/L
72055	163GW003M8	Chlorobenzene	5	ug/L
72055	163GW003M8	Chloroethane	10	ug/L
72055	163GW003M8	Chloroform	5	ug/L
72055	163GW003M8	Chloromethane	10	ug/L
72055	163GW003M8	cis-1,2-Dichloroethylene	11.9	ug/L
72055	163GW003M8	cis-1,3-Dichloropropene	5	ug/L
72055	163GW003M8	Dibromochloromethane	5	ug/L
72055	163GW003M8	Dibromofluoromethane	87	PERCENT
72055	163GW003M8	Ethylbenzene	5	ug/L
P0212230	163GW003M8	Hydrogen	6.7	nM
72055	163GW003M8	m+p Xylene	5	ug/L
P0212230	163GW003M8	Methane	26	ug/L
72055	163GW003M8	Methyl ethyl ketone (2-Butanone)	10	ug/L
72055	163GW003M8	Methyl isobutyl ketone (4-Methyl-2-pentanone)	10	ug/L
72055	163GW003M8	Methylene Chloride	5	ug/L
72055	163GW003M8	Nitrogen, Nitrate (as N)	0.1	mg/L
72055	163GW003M8	o-Xylene	5	ug/L
72055	163GW003M8	Styrene	5	ug/L
72055	163GW003M8	Sulfate (as SO4)	9.09	mg/L
72055	163GW003M8	Tetrachloroethylene (PCE)	356	ug/L
72055	163GW003M8	Toluene	5	ug/L
72055	163GW003M8	Toluene-d8	80	PERCENT
72055	163GW003M8	trans-1,2-Dichloroethene	5	ug/L
72055	163GW003M8	trans-1,3-Dichloropropene	5	ug/L
72055	163GW003M8	Trichloroethylene (TCE)	235	ug/L
72055	163GW003M8	Vinyl acetate	10	ug/L
72055	163GW003M8	Vinyl chloride	10	ug/L
72055	163GW003M8	Xylenes, Total	5	ug/L
72055	163GW003M8DL	1,1,1-Trichloroethane	50	ug/L
72055	163GW003M8DL	1,1,2,2-Tetrachloroethane	50	ug/L

	StationID	K163GW003		K163GW03M		K166GW040		K166GW053	
	SampleID	163GW003N1		163GW03MN1		166GW040N1		166GW053N1	
	DateCollected	5/30/2003		5/30/2003		5/30/2003		5/27/2003	
	DateExtracted	6/5/2003		6/4/2003		6/4/2003		6/4/2003	
	DateAnalyzed	6/5/2003		6/4/2003		6/4/2003		6/4/2003	
	SDGNumber	81287		81287		81287		81287	
Parameter	**Units**								
Vinyl chloride	ug/L	10	U	10	U	2500	U	1000	U
1,1-Dichloroethene	ug/L	5	U	5	U	1250	U	500	U
trans-1,2-Dichloroethene	ug/L	5	U	5	U	1250	U	500	U
cis-1,2-Dichloroethylene	ug/L	5	U	3.9	J	9020	=	286	J
1,2-Dichloroethene (total)	ug/L	5	U	3.9	J	9020	=	286	J
Trichloroethylene (TCE)	ug/L	3.3	J	1.8	J	14300	=	6880	=
Tetrachloroethylene (PCE)	ug/L	9.2	=	0.6	J	1250	U	500	U

	StationID	K166GW054		K166GW055		K166GW07D		K166GW07D	
	SampleID	166GW054N1		166GW055N1		166GW07DN1		166HW07DN1	
	DateCollected	5/27/2003		5/27/2003		5/28/2003		5/28/2003	
	DateExtracted	6/4/2003		6/4/2003		6/4/2003		6/4/2003	
	DateAnalyzed	6/4/2003		6/4/2003		6/4/2003		6/4/2003	
	SDGNumber	81287		81287		81287		81287	
Parameter	**Units**								
Vinyl chloride	ug/L	1000	U	250	U	200	U	200	U
1,1-Dichloroethene	ug/L	500	U	125	U	100	U	100	U
trans-1,2-Dichloroethene	ug/L	500	U	125	U	100	U	100	U
cis-1,2-Dichloroethylene	ug/L	212	J	150	=	28.8	J	31.4	J
1,2-Dichloroethene (total)	ug/L	212	J	150	=	28.8	J	31.4	J
Trichloroethylene (TCE)	ug/L	5560	=	1630	=	988	=	1030	=
Tetrachloroethylene (PCE)	ug/L	500	U	125	U	100	U	100	U

	StationID	K166GW13D		K166GW16D		K166GW25D		K166GW26D	
	SampleID	166GW13DN1		166GW16DN1		166GW25DN1		166GW26DN1	
	DateCollected	5/27/2003		5/30/2003		5/28/2003		5/27/2003	
	DateExtracted	6/4/2003		6/4/2003		6/4/2003		6/4/2003	
	DateAnalyzed	6/4/2003		6/4/2003		6/4/2003		6/4/2003	
	SDGNumber	81287		81287		81287		81287	
Parameter	**Units**								
Vinyl chloride	ug/L	1000	U	500	U	500	U	100	U
1,1-Dichloroethene	ug/L	500	U	250	U	250	U	50	U
trans-1,2-Dichloroethene	ug/L	500	U	250	U	250	U	17.7	J
cis-1,2-Dichloroethylene	ug/L	244	J	3260	=	4750	=	946	=
1,2-Dichloroethene (total)	ug/L	244	J	3260	=	4750	=	963	=
Trichloroethylene (TCE)	ug/L	6380	=	250	U	1990	=	965	=
Tetrachloroethylene (PCE)	ug/L	500	U	250	U	250	U	50	U

	StationID	K166GW26D		K166GW27D		K166GW28D		K166GW29D	
	SampleID	166HW26DN1		166GW27DN1		166GW28DN1		166GW29DN1	
	DateCollected	5/27/2003		5/28/2003		5/28/2003		5/28/2003	
	DateExtracted	6/4/2003		6/5/2003		6/4/2003		6/5/2003	
	DateAnalyzed	6/4/2003		6/5/2003		6/4/2003		6/5/2003	
	SDGNumber	81287		81287		81287		81287	
Parameter	**Units**								
Vinyl chloride	ug/L	100	U	10	U	50	U	10	U
1,1-Dichloroethene	ug/L	50	U	5	U	25	U	5	U
trans-1,2-Dichloroethene	ug/L	18.3	J	5	U	12.1	J	5	U
cis-1,2-Dichloroethylene	ug/L	882	=	0.38	J	97	=	3.9	J
1,2-Dichloroethene (total)	ug/L	900	=	0.38	J	109	=	3.9	J
Trichloroethylene (TCE)	ug/L	778	=	4.3	J	248	=	76.3	=
Tetrachloroethylene (PCE)	ug/L	50	U	5	U	25	U	5	U

	StationID	K166GW30D		K166GW31D		K166GW32D		K166GW33D	
	SampleID	166GW30DN1		166GW31DN1		166GW32DN1		166GW33DN1	
	DateCollected	5/28/2003		5/28/2003		5/28/2003		5/27/2003	
	DateExtracted	6/4/2003		6/4/2003		6/6/2003		6/5/2003	
	DateAnalyzed	6/4/2003		6/4/2003		6/6/2003		6/5/2003	
	SDGNumber	81287		81287		81288		81287	
Parameter	**Units**								
Vinyl chloride	ug/L	100	U	100	U	250	U	10	U
1,1-Dichloroethene	ug/L	50	U	50	U	125	U	5	U
trans-1,2-Dichloroethene	ug/L	44.8	J	50	U	125	U	2.3	J
cis-1,2-Dichloroethylene	ug/L	485	=	27.2	J	105	J	9.3	=
1,2-Dichloroethene (total)	ug/L	530	=	27.2	J	105	J	11.6	=
Trichloroethylene (TCE)	ug/L	512	=	504	=	1670	=	70.3	=
Tetrachloroethylene (PCE)	ug/L	50	U	50	U	125	U	5	U

	StationID	K166GW34D		K166GW35D		K166GW36D		K166GW37D	
	SampleID	166GW34DN1		166GW35DN1		166GW36DN1		166GW37DN1	
	DateCollected	5/30/2003		5/30/2003		5/30/2003		5/30/2003	
	DateExtracted	6/5/2003		6/5/2003		6/6/2003		6/5/2003	
	DateAnalyzed	6/5/2003		6/5/2003		6/6/2003		6/5/2003	
	SDGNumber	81288		81288		81288		81288	
Parameter	**Units**								
Vinyl chloride	ug/L	5000	U	200	U	100	U	2000	U
1,1-Dichloroethene	ug/L	2500	U	100	U	50	U	1000	U
trans-1,2-Dichloroethene	ug/L	2500	U	100	U	50	U	1000	U
cis-1,2-Dichloroethylene	ug/L	20400	=	369	=	431	=	10600	=
1,2-Dichloroethene (total)	ug/L	20400	=	369	=	431	=	10600	=
Trichloroethylene (TCE)	ug/L	45700	=	1120	=	68.7	=	14500	=
Tetrachloroethylene (PCE)	ug/L	2500	U	100	U	50	U	1000	U

	StationID	K166GW37D		K166GW39D		K166GW41D		K166GW42D	
	SampleID	166HW37DN1		166GW39DN1		166GW41DN1		166GW42DN1	
	DateCollected	5/30/2003		5/30/2003		5/29/2003		5/29/2003	
	DateExtracted	6/5/2003		6/6/2003		6/6/2003		6/5/2003	
	DateAnalyzed	6/5/2003		6/6/2003		6/6/2003		6/5/2003	
	SDGNumber	81288		81288		81288		81288	
Parameter	**Units**								
Vinyl chloride	ug/L	2000	U	10	U	200	U	500	U
1,1-Dichloroethene	ug/L	1000	U	5	U	100	U	250	U
trans-1,2-Dichloroethene	ug/L	1000	U	5	U	35.7	J	250	U
cis-1,2-Dichloroethylene	ug/L	9850	=	1.4	J	1490	=	2680	=
1,2-Dichloroethene (total)	ug/L	9850	=	1.4	J	1530	=	2680	=
Trichloroethylene (TCE)	ug/L	13100	=	2.5	J	375	=	1850	=
Tetrachloroethylene (PCE)	ug/L	1000	U	5	U	100	U	250	U

	StationID	K166GW43D		K166GW44D		K166GW45D		K166GW46D	
	SampleID	166GW43DN1		166GW44DN1		166GW45DN1		166GW46DN1	
	DateCollected	5/29/2003		5/29/2003		5/28/2003		5/28/2003	
	DateExtracted	6/5/2003		6/5/2003		6/5/2003		6/5/2003	
	DateAnalyzed	6/5/2003		6/5/2003		6/5/2003		6/5/2003	
	SDGNumber	81288		81288		81288		81288	
Parameter	**Units**								
Vinyl chloride	ug/L	1000	U	250	U	500	U	500	U
1,1-Dichloroethene	ug/L	500	U	125	U	250	U	250	U
trans-1,2-Dichloroethene	ug/L	500	U	125	U	250	U	250	U
cis-1,2-Dichloroethylene	ug/L	7220	=	1050	=	498	=	716	=
1,2-Dichloroethene (total)	ug/L	7220	=	1050	=	498	=	716	=
Trichloroethylene (TCE)	ug/L	2710	=	1970	=	3340	=	2790	=
Tetrachloroethylene (PCE)	ug/L	500	U	125	U	250	U	250	U

	StationID	K166GW48D		K166GW49D		K166GW50D		K166GW51D	
	SampleID	166GW48DN1		166GW49DN1		166GW50DN1		166GW51DN1	
	DateCollected	5/29/2003		5/29/2003		5/29/2003		5/29/2003	
	DateExtracted	6/5/2003		6/5/2003		6/5/2003		6/5/2003	
	DateAnalyzed	6/5/2003		6/5/2003		6/5/2003		6/5/2003	
	SDGNumber	81288		81288		81288		81288	
Parameter	**Units**								
Vinyl chloride	ug/L	1000	U	14.6	J	2000	U	500	U
1,1-Dichloroethene	ug/L	500	U	100	U	1000	U	250	U
trans-1,2-Dichloroethene	ug/L	500	U	100	U	1000	U	250	U
cis-1,2-Dichloroethylene	ug/L	582	=	508	=	509	J	1420	=
1,2-Dichloroethene (total)	ug/L	582	=	508	=	509	J	1420	=
Trichloroethylene (TCE)	ug/L	4950	=	1170	=	11600	=	2500	=
Tetrachloroethylene (PCE)	ug/L	500	U	100	U	1000	U	250	U

	StationID	K166GW52D		K166GWIN3		K166GWTM3		K166GWTM4	
	SampleID	166GW52DN1		166GWIN3N1		166GWTM3N1		166GWTM4N1	
	DateCollected	5/29/2003		5/29/2003		5/29/2003		5/29/2003	
	DateExtracted	6/6/2003		6/6/2003		6/7/2003		6/6/2003	
	DateAnalyzed	6/6/2003		6/6/2003		6/7/2003		6/6/2003	
	SDGNumber	81288		81288		81288		81289	
Parameter	**Units**								
Vinyl chloride	ug/L	250	U	17.7	=	152	=	1000	U
1,1-Dichloroethene	ug/L	125	U	5	U	50	U	500	U
trans-1,2-Dichloroethene	ug/L	125	U	0.42	J	50	U	500	U
cis-1,2-Dichloroethylene	ug/L	2150	=	35.4	=	982	=	4990	=
1,2-Dichloroethene (total)	ug/L	2150	=	35.8	=	982	=	4990	=
Trichloroethylene (TCE)	ug/L	2040	=	1.9	J	3.8	J	2930	=
Tetrachloroethylene (PCE)	ug/L	125	U	5	U	50	U	500	U

	StationID	K166GW040		K166GW27D		K166GW30D		K166GW32D		K166G
	SampleID	166GW040N1		166GW27DN1		166GW30DN1		166GW32DN1		166GW
	DateCollected	5/30/2003		5/28/2003		5/28/2003		5/28/2003		5/30/
	DateExtracted									
	DateAnalyzed	6/6/2003		6/6/2003		6/6/2003		6/6/2003		6/6/2
	SDGNumber	P0306033		P0306033		P0306033		P0306033		P030
Parameter	Units									
Hydrogen	nM	1.9	=	0.67	=	2600	=	1.2	=	5700

	StationID	W37D	K166GW37D		K166GW39D		K166GW41D		K166GW43D	
	SampleID	37DN1	166HW37DN1		166GW39DN1		166GW41DN1		166GW43DN1	
	DateCollected	2003	5/30/2003		5/30/2003		5/29/2003		5/29/2003	
	DateExtracted									
	DateAnalyzed	2003	6/6/2003		6/6/2003		6/6/2003		6/6/2003	
	SDGNumber	6033	P0306033		P0306033		P0306033		P0306033	
Parameter	**Units**									
Hydrogen	nM	=	4500	=	0.92	=	1.6	=	1	=

	StationID	K166GWTM3	
	SampleID	166GWTM3N1	
	DateCollected	5/29/2003	
	DateExtracted		
	DateAnalyzed	6/6/2003	
	SDGNumber	P0306033	
Parameter	**Units**		
Hydrogen	nM	170	=

	StationID	K166GW017		K166GW026		K166GW040		K166GW040		K166GW053		K166GW054		K166GW055	
	SampleID	166GW017M4		166GW026M4		166GW040M4		166HW040M4		166GW053M4		166GW054M4		166GW055M4	
	DateCollected	5/31/2002		5/20/2002		5/21/2002		5/21/2002		5/30/2002		5/30/2002		5/30/2002	
	DateExtracted	6/5/2002		5/28/2002		5/25/2002		5/25/2002		6/5/2002		6/5/2002		6/5/2002	
	DateAnalyzed	6/5/2002		5/28/2002		5/25/2002		5/25/2002		6/5/2002		6/5/2002		6/5/2002	
	SDGNumber	61326		60790		60789		60789		61258		61258		61258	
Parameter	**Units**														
Chloromethane	ug/L	10	U	10	U	250	U	250	U	1000	U	1000	U	250	U
Vinyl chloride	ug/L	10	U	10	U	250	U	250	U	1000	U	1000	U	250	U
Bromomethane	ug/L	10	U	10	U	250	U	250	U	1000	U	1000	U	250	U
Chloroethane	ug/L	10	U	10	U	250	U	250	U	1000	U	1000	U	250	U
1,1-Dichloroethene	ug/L	5	U	5	U	125	U	125	U	500	U	500	U	125	U
Acetone	ug/L	10	U	10	U	250	U	250	U	1000	UJ	1000	UJ	250	U
Carbon Disulfide	ug/L	5	U	5	U	125	U	125	U	500	U	500	U	125	U
Methylene Chloride	ug/L	5	UJ	5	U	257	U	249	U	500	UJ	500	UJ	125	UJ
trans-1,2-Dichloroethene	ug/L	5	U	5	U	125	U	125	U	500	U	500	U	125	U
1,1-Dichloroethane	ug/L	5	U	5	U	125	U	125	U	500	U	500	U	125	U
Vinyl acetate	ug/L	10	U	10	U	250	U	250	U	1000	U	1000	U	250	U
Methyl ethyl ketone (2-Butanone)	ug/L	10	U	10	U	250	U	250	U	1000	U	1000	U	250	U
cis-1,2-Dichloroethylene	ug/L	5	U	5	U	309	=	332	=	216	J	199	J	135	=
1,2-Dichloroethene (total)	ug/L	5	U	5	U	309	=	332	=	216	J	199	J	135	=
Chloroform	ug/L	5	U	5	U	125	U	125	U	500	U	500	U	125	U
1,1,1-Trichloroethane	ug/L	5	U	5	U	125	U	125	U	500	U	500	U	125	U
Carbon Tetrachloride	ug/L	5	U	5	U	125	U	125	U	500	U	500	U	125	U
1,2-Dichloroethane	ug/L	5	U	5	U	125	U	125	U	500	U	500	U	125	U
Benzene	ug/L	5	U	5	U	125	U	125	U	500	U	500	U	125	U
Trichloroethylene (TCE)	ug/L	1.8	J	11.6	=	1950	=	2120	=	8290	=	6350	=	1890	=
1,2-Dichloropropane	ug/L	5	U	5	U	125	U	125	U	500	U	500	U	125	U
Bromodichloromethane	ug/L	5	U	5	U	125	U	125	U	500	U	500	U	125	U
2-Chloroethyl vinyl ether	ug/L	5	UJ	5	R	125	U	125	U	500	UJ	500	UJ	125	UJ
cis-1,3-Dichloropropene	ug/L	5	U	5	U	125	U	125	U	500	U	500	U	125	U
Methyl isobutyl ketone (4-Methyl-2-pentanone)	ug/L	10	U	10	U	250	U	250	U	1000	U	1000	U	250	U
Toluene	ug/L	5	U	5	U	43.2	J	50.5	J	500	U	500	U	125	U
trans-1,3-Dichloropropene	ug/L	5	U	5	U	125	U	125	U	500	U	500	U	125	U
1,1,2-Trichloroethane	ug/L	5	U	5	U	125	U	125	U	500	U	500	U	125	U
2-Hexanone	ug/L	10	U	10	U	250	U	250	U	1000	U	1000	U	250	U
Tetrachloroethylene (PCE)	ug/L	3.5	J	5	U	125	U	125	U	500	U	500	U	125	U
Dibromochloromethane	ug/L	5	U	5	U	125	U	125	U	500	U	500	U	125	U
Chlorobenzene	ug/L	5	U	5	U	125	U	125	U	500	U	500	U	125	U
Ethylbenzene	ug/L	5	U	5	U	46.8	J	46.8	J	500	U	500	U	125	U
m+p Xylene	ug/L	5	U	5	U	61.3	J	63.8	J	500	U	500	U	125	U
o-Xylene	ug/L	5	U	5	U	88	J	87.5	J	500	U	500	U	125	U
Xylenes, Total	ug/L	5	U	5	U	149	=	151	=	500	U	500	U	125	U
Styrene	ug/L	5	U	5	U	125	U	125	U	500	U	500	U	125	U
Bromoform	ug/L	5	UJ	5	U	125	U	125	U	500	UJ	500	UJ	125	UJ
1,1,2,2-Tetrachloroethane	ug/L	5	U	5	U	125	U	125	U	500	UJ	500	UJ	125	U
1,3-Dichlorobenzene	ug/L	5	U	5	U	125	U	125	U	500	UJ	500	UJ	125	U
1,4-Dichlorobenzene	ug/L	5	U	5	U	125	U	125	U	500	UJ	500	UJ	125	U
1,2-Dichlorobenzene	ug/L	5	U	5	U	125	U	125	U	500	UJ	500	UJ	125	U
1,2,4-Trichlorobenzene	ug/L	5	U	5	U	125	U	125	U	500	UJ	500	UJ	125	U
1,2,3-Trichlorobenzene	ug/L	5	U	5	U	125	U	125	U	500	UJ	500	UJ	125	U

	StationID	K166GW055		K166GW06D		K166GW07D		K166GW07D		K166GW08D		K166GW13D		K166GW13D	
	SampleID	166HW055M4		166GW06DM4		166GW07DM4		166GW07DM4DL		166GW08DM4		166GW13DM4		166GW13DM4DL	
	DateCollected	5/30/2002		5/22/2002		5/20/2002		5/20/2002		5/22/2002		5/22/2002		5/22/2002	
	DateExtracted	6/5/2002		6/1/2002		5/28/2002		5/30/2002		6/3/2002		5/31/2002		6/4/2002	
	DateAnalyzed	6/5/2002		6/1/2002		5/28/2002		5/30/2002		6/3/2002		5/31/2002		6/4/2002	
	SDGNumber	61258		61044		60790		60790		60879		60879		60879	
Parameter	**Units**														
Chloromethane	ug/L	250	U	10	U	10	U	100	R	20	U	10	U	1000	R
Vinyl chloride	ug/L	250	U	10	U	10	U	100	R	20	U	1.9	J	1000	R
Bromomethane	ug/L	250	U	10	U	10	U	100	R	20	U	10	U	1000	R
Chloroethane	ug/L	250	U	10	U	10	U	100	R	20	U	10	U	1000	R
1,1-Dichloroethene	ug/L	125	U	5	U	0.64	J	50	R	10	U	2.3	J	500	R
Acetone	ug/L	250	U	10	UJ	10	U	100	R	20	U	10	U	1000	R
Carbon Disulfide	ug/L	125	U	5	U	5	U	50	R	10	U	5	U	500	R
Methylene Chloride	ug/L	125	UJ	5	UJ	5	U	21.3	R	10	U	5	U	500	R
trans-1,2-Dichloroethene	ug/L	125	U	5	U	4.4	J	3.7	R	0.96	J	12	=	500	R
1,1-Dichloroethane	ug/L	125	U	5	U	5	U	50	R	10	U	5	U	500	R
Vinyl acetate	ug/L	250	U	10	U	10	U	100	R	20	U	10	U	1000	R
Methyl ethyl ketone (2-Butanone)	ug/L	250	U	10	U	10	U	100	R	20	U	10	U	1000	R
cis-1,2-Dichloroethylene	ug/L	129	=	0.49	J	29.6	=	25.6	R	9	J	205	R	211	J
1,2-Dichloroethene (total)	ug/L	129	=	0.49	J	34	=	29.4	R	10	=	217	R	211	J
Chloroform	ug/L	125	U	5	U	5	U	50	R	10	U	5	U	500	R
1,1,1-Trichloroethane	ug/L	125	U	5	U	5	U	50	R	10	U	5	U	500	R
Carbon Tetrachloride	ug/L	125	U	5	U	5	U	50	R	10	U	5	U	500	R
1,2-Dichloroethane	ug/L	125	U	5	U	5	U	50	R	10	U	5	U	500	R
Benzene	ug/L	125	U	5	U	5	U	50	R	10	U	5	U	500	R
Trichloroethylene (TCE)	ug/L	1780	=	80.9	=	447	R	749	=	115	=	3780	R	7190	=
1,2-Dichloropropane	ug/L	125	U	5	U	5	U	50	R	10	U	5	U	500	R
Bromodichloromethane	ug/L	125	U	5	U	5	U	50	R	10	U	5	U	500	R
2-Chloroethyl vinyl ether	ug/L	125	UJ	5	UJ	5	U	50	R	10	UJ	5	UJ	500	R
cis-1,3-Dichloropropene	ug/L	125	U	5	U	5	U	50	R	10	U	5	U	500	R
Methyl isobutyl ketone (4-Methyl-2-pentanone)	ug/L	250	U	10	U	10	U	100	R	20	U	10	U	1000	R
Toluene	ug/L	125	U	5	U	5	U	50	R	10	U	5	U	500	R
trans-1,3-Dichloropropene	ug/L	125	U	5	U	5	U	50	R	10	U	5	U	500	R
1,1,2-Trichloroethane	ug/L	125	U	5	U	5	U	50	R	10	U	5	U	500	R
2-Hexanone	ug/L	250	U	10	U	10	U	100	R	20	U	10	U	1000	R
Tetrachloroethylene (PCE)	ug/L	125	U	5	U	5	U	50	R	10	U	5	U	500	R
Dibromochloromethane	ug/L	125	U	5	U	5	U	50	R	10	U	5	U	500	R
Chlorobenzene	ug/L	125	U	5	U	5	U	50	R	10	U	5	U	500	R
Ethylbenzene	ug/L	125	U	5	U	5	U	50	R	10	U	5	U	500	R
m+p Xylene	ug/L	125	U	5	U	5	U	50	R	10	U	5	U	500	R
o-Xylene	ug/L	125	U	5	U	5	U	50	R	10	U	5	U	500	R
Xylenes, Total	ug/L	125	U	5	U	5	U	50	R	10	U	5	U	500	R
Styrene	ug/L	125	U	5	U	5	U	50	R	10	U	5	U	500	R
Bromoform	ug/L	125	UJ	5	U	5	U	50	R	10	U	5	U	500	R
1,1,2,2-Tetrachloroethane	ug/L	125	U	5	U	5	U	50	R	10	U	5	U	500	R
1,3-Dichlorobenzene	ug/L	125	U	5	U	5	U	50	R	10	U	5	U	500	R
1,4-Dichlorobenzene	ug/L	125	U	5	U	5	U	50	R	10	U	5	U	500	R
1,2-Dichlorobenzene	ug/L	125	U	5	U	5	U	50	R	10	U	5	U	500	R
1,2,4-Trichlorobenzene	ug/L	125	U	5	UJ	5	U	50	R	10	U	5	U	500	R
1,2,3-Trichlorobenzene	ug/L	125	U	5	U	5	U	50	R	10	U	5	U	500	R

	StationID	K166GW14D		K166GW14D		K166GW14D		K166GW16D		K166GW16D		K166GW17D		K166GW19D	
	SampleID	166GW14DM4		166GW14DM4DL		166HW14DM4		166GW16DM4		166HW16DM4		166GW17DM4		166GW19DM4	
	DateCollected	5/23/2002		5/23/2002		5/23/2002		5/30/2002		5/30/2002		5/31/2002		5/31/2002	
	DateExtracted	6/1/2002		6/3/2002		6/3/2002		6/5/2002		6/5/2002		6/5/2002		6/5/2002	
	DateAnalyzed	6/1/2002		6/3/2002		6/3/2002		6/5/2002		6/5/2002		6/5/2002		6/5/2002	
	SDGNumber	61044		61044		61044		61258		61258		61326		61326	
Parameter	Units														
Chloromethane	ug/L	10	U	20	R	20	U	500	U	500	U	0.55	J	10	U
Vinyl chloride	ug/L	10	U	20	R	20	U	30.6	J	28.6	J	10	U	1.6	J
Bromomethane	ug/L	10	U	20	R	20	U	500	U	500	U	10	U	10	U
Chloroethane	ug/L	10	U	20	R	20	U	500	U	500	U	10	UJ	10	U
1,1-Dichloroethene	ug/L	5	U	10	R	10	U	250	U	250	U	5	U	5	U
Acetone	ug/L	10	UJ	20	R	20	U	500	U	500	U	10	U	10	U
Carbon Disulfide	ug/L	5	U	10	R	10	U	250	U	250	U	5	U	5	U
Methylene Chloride	ug/L	5	UJ	10	R	10	U	250	UJ	250	UJ	5	UJ	5	UJ
trans-1,2-Dichloroethene	ug/L	1	J	10	R	10	U	250	U	250	U	5	U	0.71	J
1,1-Dichloroethane	ug/L	5	U	10	R	10	U	250	U	250	U	5	U	5	U
Vinyl acetate	ug/L	10	U	20	R	20	U	500	U	500	U	10	U	10	U
Methyl ethyl ketone (2-Butanone)	ug/L	10	U	20	R	20	U	500	U	500	U	10	U	10	U
cis-1,2-Dichloroethylene	ug/L	17.1	=	16.8	R	16.6	=	3420	=	3180	=	1.1	J	35.1	=
1,2-Dichloroethene (total)	ug/L	18.2	=	16.8	R	16.6	=	3420	=	3180	=	1.1	J	35.8	=
Chloroform	ug/L	5	U	10	R	10	U	21.2	J	250	U	5	U	5	U
1,1,1-Trichloroethane	ug/L	5	U	10	R	10	U	250	U	250	U	5	U	5	U
Carbon Tetrachloride	ug/L	5	U	10	R	10	U	250	U	250	U	5	U	5	U
1,2-Dichloroethane	ug/L	5	U	10	R	10	U	250	U	250	U	5	U	5	U
Benzene	ug/L	5	U	10	R	10	U	250	U	250	U	5	U	5	U
Trichloroethylene (TCE)	ug/L	103	R	101	=	170	=	272	=	222	J	2.5	J	93.8	=
1,2-Dichloropropane	ug/L	5	U	10	R	10	U	250	U	250	U	5	U	5	U
Bromodichloromethane	ug/L	5	U	10	R	10	U	250	U	250	U	5	U	5	U
2-Chloroethyl vinyl ether	ug/L	5	UJ	10	R	10	UJ	250	UJ	250	UJ	5	R	5	UJ
cis-1,3-Dichloropropene	ug/L	5	U	10	R	10	U	250	U	250	U	5	U	5	U
Methyl isobutyl ketone (4-Methyl-2-pentanone)	ug/L	10	U	20	R	20	U	500	U	500	U	10	U	10	U
Toluene	ug/L	5	U	10	R	10	U	250	U	250	U	5	U	5	U
trans-1,3-Dichloropropene	ug/L	5	U	10	R	10	U	250	U	250	U	5	U	5	U
1,1,2-Trichloroethane	ug/L	5	U	10	R	10	U	250	U	250	U	5	U	5	U
2-Hexanone	ug/L	10	U	20	R	20	U	500	U	500	U	10	U	10	U
Tetrachloroethylene (PCE)	ug/L	5	U	10	R	10	U	250	U	250	U	5	U	83.8	=
Dibromochloromethane	ug/L	5	U	10	R	10	U	250	U	250	U	5	U	5	U
Chlorobenzene	ug/L	5	U	10	R	10	U	250	U	250	U	5	U	5	U
Ethylbenzene	ug/L	5	U	10	R	10	U	250	U	250	U	5	U	5	U
m+p Xylene	ug/L	5	U	10	R	10	U	250	U	250	U	5	U	5	U
o-Xylene	ug/L	5	U	10	R	10	U	250	U	250	U	5	U	5	U
Xylenes, Total	ug/L	5	U	10	R	10	U	250	U	250	U	5	U	5	U
Styrene	ug/L	5	U	10	R	10	U	250	U	250	U	5	U	5	U
Bromoform	ug/L	5	U	10	R	10	U	250	UJ	250	UJ	5	UJ	5	UJ
1,1,2,2-Tetrachloroethane	ug/L	5	U	10	R	10	U	250	U	250	U	5	U	5	U
1,3-Dichlorobenzene	ug/L	5	U	10	R	10	U	250	U	250	U	5	U	5	U
1,4-Dichlorobenzene	ug/L	5	U	10	R	10	U	250	U	250	U	5	U	5	U
1,2-Dichlorobenzene	ug/L	5	U	10	R	10	U	250	U	250	U	5	U	5	U
1,2,4-Trichlorobenzene	ug/L	5	UJ	10	R	10	U	250	U	250	U	5	U	5	U
1,2,3-Trichlorobenzene	ug/L	5	U	10	R	10	U	250	U	250	U	5	U	5	U

	StationID	K166GW21D		K166GW25D		K166GW25D		K166GW25D		K166GW25D		K166GW26D		K166GW26D	
	SampleID	166GW21DM4		166GW25DM4		166GW25DM4DL		166HW25DM4		166HW25DM4DL		166GW26DM4		166GW26DM4DL	
	DateCollected	5/31/2002		5/20/2002		5/20/2002		5/20/2002		5/20/2002		5/21/2002		5/21/2002	
	DateExtracted	6/5/2002		5/29/2002		5/30/2002		5/28/2002		5/30/2002		5/28/2002		5/30/2002	
	DateAnalyzed	6/5/2002		5/29/2002		5/30/2002		5/28/2002		5/30/2002		5/28/2002		5/30/2002	
	SDGNumber	61326		60790		60790		60790		60790		60790		60790	
Parameter	Units														
Chloromethane	ug/L	10	U	10	U	1000	R	10	U	1000	R	10	U	500	R
Vinyl chloride	ug/L	10	U	1.4	J	1000	R	0.73	J	1000	R	10	U	500	R
Bromomethane	ug/L	10	U	10	U	1000	R	10	U	1000	R	10	U	500	R
Chloroethane	ug/L	10	U	10	U	1000	R	10	U	1000	R	10	U	500	R
1,1-Dichloroethene	ug/L	5	U	3.1	J	500	R	2.3	J	500	R	1.2	J	250	R
Acetone	ug/L	10	U	10	U	1000	R	10	U	1000	R	10	U	500	R
Carbon Disulfide	ug/L	5	U	5	U	500	R	5	U	500	R	5	U	250	R
Methylene Chloride	ug/L	5	UJ	5	U	500	R	5	U	203	R	5	U	124	R
trans-1,2-Dichloroethene	ug/L	5	U	2	J	500	R	2.6	J	500	R	5	=	250	R
1,1-Dichloroethane	ug/L	5	U	5	U	500	R	5	U	500	R	5	U	250	R
Vinyl acetate	ug/L	10	U	10	U	1000	R	10	U	1000	R	10	U	500	R
Methyl ethyl ketone (2-Butanone)	ug/L	10	U	10	U	1000	R	10	U	1000	R	10	U	500	R
cis-1,2-Dichloroethylene	ug/L	5	U	140	R	121	J	129	R	127	J	151	R	129	J
1,2-Dichloroethene (total)	ug/L	5	U	142	=	121	R	132	=	127	R	156	=	129	R
Chloroform	ug/L	5	U	5	U	500	R	5	U	500	R	5	U	250	R
1,1,1-Trichloroethane	ug/L	5	U	5	U	500	R	5	U	500	R	5	U	250	R
Carbon Tetrachloride	ug/L	5	U	5	U	500	R	5	U	500	R	5	U	250	R
1,2-Dichloroethane	ug/L	5	U	5	U	500	R	5	U	500	R	5	U	250	R
Benzene	ug/L	5	U	5	U	500	R	5	U	500	R	5	U	250	R
Trichloroethylene (TCE)	ug/L	0.45	J	1710	R	7320	=	1590	R	7160	=	775	R	1330	=
1,2-Dichloropropane	ug/L	5	U	5	U	500	R	5	U	500	R	5	U	250	R
Bromodichloromethane	ug/L	5	U	5	U	500	R	5	U	500	R	5	U	250	R
2-Chloroethyl vinyl ether	ug/L	5	UJ	5	U	500	R	5	U	500	R	5	U	250	R
cis-1,3-Dichloropropene	ug/L	5	U	5	U	500	R	5	U	500	R	5	U	250	R
Methyl isobutyl ketone (4-Methyl-2-pentanone)	ug/L	10	U	10	U	1000	R	10	U	1000	R	10	U	500	R
Toluene	ug/L	5	U	5	U	500	R	5	U	500	R	5	U	250	R
trans-1,3-Dichloropropene	ug/L	5	U	5	U	500	R	5	U	500	R	5	U	250	R
1,1,2-Trichloroethane	ug/L	5	U	5	U	500	R	5	U	500	R	5	U	250	R
2-Hexanone	ug/L	10	U	10	U	1000	R	10	U	1000	R	10	U	500	R
Tetrachloroethylene (PCE)	ug/L	5	U	5	U	500	R	5	U	500	R	5	U	250	R
Dibromochloromethane	ug/L	5	U	5	U	500	R	5	U	500	R	5	U	250	R
Chlorobenzene	ug/L	5	U	5	U	500	R	5	U	500	R	5	U	250	R
Ethylbenzene	ug/L	5	U	5	U	500	R	5	U	500	R	5	U	250	R
m+p Xylene	ug/L	5	U	5	U	500	R	5	U	500	R	5	U	250	R
o-Xylene	ug/L	5	U	5	U	500	R	5	U	500	R	5	U	250	R
Xylenes, Total	ug/L	5	U	5	U	500	R	5	U	500	R	5	U	250	R
Styrene	ug/L	5	U	5	U	500	R	5	U	500	R	5	U	250	R
Bromoform	ug/L	5	UJ	5	U	500	R	5	U	500	R	5	U	250	R
1,1,2,2-Tetrachloroethane	ug/L	5	U	5	U	500	R	5	U	500	R	5	U	250	R
1,3-Dichlorobenzene	ug/L	5	U	5	U	500	R	5	U	500	R	5	U	250	R
1,4-Dichlorobenzene	ug/L	5	U	5	U	500	R	5	U	500	R	5	U	250	R
1,2-Dichlorobenzene	ug/L	5	U	5	U	500	R	5	U	500	R	5	U	250	R
1,2,4-Trichlorobenzene	ug/L	5	U	5	U	500	R	5	U	500	R	5	U	250	R
1,2,3-Trichlorobenzene	ug/L	5	U	5	U	500	R	5	U	500	R	5	U	250	R

	StationID	K166GW27D		K166GW28D		K166GW28D		K166GW29D		K166GW30D		K166GW31D		K166GW31D	
	SampleID	166GW27DM6		166GW28DM6		166GW28DM6DL		166GW29DM6		166GW30DM6		166GW31DM6		166HW31DM6	
	DateCollected	6/24/2002		6/24/2002		6/24/2002		6/24/2002		6/24/2002		6/25/2002		6/25/2002	
	DateExtracted	7/1/2002		7/1/2002		7/1/2002		7/1/2002		7/1/2002		7/1/2002		7/1/2002	
	DateAnalyzed	7/1/2002		7/1/2002		7/1/2002		7/1/2002		7/1/2002		7/1/2002		7/1/2002	
	SDGNumber	62650		62650		62650		62650		62650		62650		62650	
Parameter	**Units**														
Chloromethane	ug/L	10	UJ	20	UJ	50	R	20	UJ	200	UJ	40	UJ	40	UJ
Vinyl chloride	ug/L	10	U	20	U	50	R	20	U	200	U	40	U	40	U
Bromomethane	ug/L	10	U	20	U	50	R	20	U	200	U	40	U	40	U
Chloroethane	ug/L	10	U	20	U	50	R	20	U	200	U	40	U	40	U
1,1-Dichloroethene	ug/L	5	U	10	U	25	R	10	U	100	U	20	U	20	U
Acetone	ug/L	10	U	6.6	J	12	R	20	U	200	U	40	U	40	U
Carbon Disulfide	ug/L	5	U	10	U	25	R	10	U	100	U	20	U	20	U
Methylene Chloride	ug/L	5	UJ	10	UJ	25	R	10	UJ	100	UJ	20	UJ	20	UJ
trans-1,2-Dichloroethene	ug/L	5	U	12	J	12.3	R	10	U	64	J	2.2	J	2	J
1,1-Dichloroethane	ug/L	5	U	10	U	25	R	10	U	100	U	20	U	20	U
Vinyl acetate	ug/L	10	UJ	20	UJ	50	R	20	UJ	200	UJ	40	UJ	40	UJ
Methyl ethyl ketone (2-Butanone)	ug/L	10	U	20	U	50	R	20	U	200	U	40	U	40	U
cis-1,2-Dichloroethylene	ug/L	5	U	67.6	J	69.6	R	4.2	J	484	J	61.8	J	56.8	J
1,2-Dichloroethene (total)	ug/L	5	U	79.6	J	81.9	R	4.2	J	548	J	64	J	58.7	J
Chloroform	ug/L	5	U	10	U	25	R	10	U	100	U	20	U	20	U
1,1,1-Trichloroethane	ug/L	5	U	10	U	25	R	10	U	100	U	20	U	20	U
Carbon Tetrachloride	ug/L	5	U	10	U	25	R	10	U	100	U	20	U	20	U
1,2-Dichloroethane	ug/L	5	U	10	U	25	R	10	U	100	U	20	U	20	U
Benzene	ug/L	5	U	10	U	25	R	10	U	100	U	20	U	20	U
Trichloroethylene (TCE)	ug/L	5.2	J	213	R	221	=	121	J	1290	J	381	J	348	J
1,2-Dichloropropane	ug/L	5	U	10	U	25	R	10	U	100	U	20	U	20	U
Bromodichloromethane	ug/L	5	U	10	U	25	R	10	U	100	U	20	U	20	U
2-Chloroethyl vinyl ether	ug/L	5	U	10	U	25	R	10	U	100	U	20	U	20	U
cis-1,3-Dichloropropene	ug/L	5	U	10	U	25	R	10	U	100	U	20	U	20	U
Methyl isobutyl ketone (4-Methyl-2-pentanone)	ug/L	10	U	20	U	50	R	20	U	200	U	40	U	40	U
Toluene	ug/L	5	U	10	U	25	R	10	U	100	U	20	U	20	U
trans-1,3-Dichloropropene	ug/L	5	U	10	U	25	R	10	U	100	U	20	U	20	U
1,1,2-Trichloroethane	ug/L	5	U	10	U	25	R	10	U	100	U	20	U	20	U
2-Hexanone	ug/L	10	U	20	U	50	R	20	U	200	U	40	U	40	U
Tetrachloroethylene (PCE)	ug/L	5	U	10	U	25	R	10	U	100	U	20	U	20	U
Dibromochloromethane	ug/L	5	U	10	U	25	R	10	U	100	U	20	U	20	U
Chlorobenzene	ug/L	5	U	10	U	25	R	10	U	100	U	20	U	20	U
Ethylbenzene	ug/L	5	U	10	U	25	R	10	U	100	U	20	U	20	U
m+p Xylene	ug/L	5	U	10	U	25	R	10	U	100	U	20	U	20	U
o-Xylene	ug/L	5	U	10	U	25	R	10	U	100	U	20	U	20	U
Xylenes, Total	ug/L	5	U	10	U	25	R	10	U	100	U	20	U	20	U
Styrene	ug/L	5	U	10	U	25	R	10	U	100	U	20	U	20	U
Bromoform	ug/L	5	U	10	U	25	R	10	U	100	U	20	U	20	U
1,1,2,2-Tetrachloroethane	ug/L	5	U	10	U	25	R	10	U	100	U	20	U	20	U
1,3-Dichlorobenzene	ug/L	5	U	10	U	25	R	10	U	100	U	20	U	20	U
1,4-Dichlorobenzene	ug/L	5	U	10	U	25	R	10	U	100	U	20	U	20	U
1,2-Dichlorobenzene	ug/L	5	U	10	U	25	R	10	U	100	U	20	U	20	U
1,2,4-Trichlorobenzene	ug/L	5	U	10	U	25	R	10	U	100	U	20	U	20	U
1,2,3-Trichlorobenzene	ug/L	5	U	10	U	25	R	10	U	100	U	20	U	20	U

	StationID	K166GW32D		K166GW33D		K166GW33D		K166GW34D		K166GW34D		K166GW35D		K166GW35D	
	SampleID	166GW32DM6		166GW33DM4		166GW33DM4DL		166GW34DM4		166GW34DM4DL		166GW35DM4		166GW35DM4DL	
	DateCollected	6/25/2002		5/20/2002		5/20/2002		5/21/2002		5/21/2002		5/21/2002		5/21/2002	
	DateExtracted	7/1/2002		5/24/2002		5/25/2002		5/24/2002		5/25/2002		5/24/2002		5/25/2002	
	DateAnalyzed	7/1/2002		5/24/2002		5/25/2002		5/24/2002		5/25/2002		5/24/2002		5/25/2002	
	SDGNumber	62650		60789		60789		60789		60789		60789		60789	
Parameter	**Units**														
Chloromethane	ug/L	250	UJ	10	U	20	R	500	U	5000	R	10	U	100	R
Vinyl chloride	ug/L	250	U	10	U	20	R	500	U	5000	R	10	U	100	R
Bromomethane	ug/L	250	U	10	U	20	R	500	U	5000	R	10	U	100	R
Chloroethane	ug/L	250	U	10	U	20	R	500	U	5000	R	10	U	100	R
1,1-Dichloroethene	ug/L	125	U	0.43	J	10	R	250	U	2500	R	5	U	50	R
Acetone	ug/L	250	U	10	U	20	R	500	U	5000	R	10	U	41.6	R
Carbon Disulfide	ug/L	125	U	5	U	10	R	250	U	2500	R	5	U	50	R
Methylene Chloride	ug/L	125	UJ	5	U	18.7	R	250	U	4860	R	5	U	102	R
trans-1,2-Dichloroethene	ug/L	17.8	J	6.9	=	6.8	R	250	U	2500	R	5	U	50	R
1,1-Dichloroethane	ug/L	125	U	5	U	10	R	250	U	2500	R	5	U	50	R
Vinyl acetate	ug/L	250	UJ	10	UJ	20	R	500	U	5000	R	10	U	100	R
Methyl ethyl ketone (2-Butanone)	ug/L	250	U	10	U	20	R	500	U	5000	R	24.8	=	24.1	R
cis-1,2-Dichloroethylene	ug/L	185	J	18.2	=	18.3	R	456	=	392	R	5.6	=	5.6	R
1,2-Dichloroethene (total)	ug/L	202	J	25.1	=	25	R	456	=	392	R	5.6	=	5.6	R
Chloroform	ug/L	125	U	0.94	J	0.95	R	250	U	2500	R	0.48	J	50	R
1,1,1-Trichloroethane	ug/L	125	U	5	U	10	R	250	U	2500	R	5	U	50	R
Carbon Tetrachloride	ug/L	125	U	5	U	10	R	250	U	2500	R	5	U	50	R
1,2-Dichloroethane	ug/L	125	U	5	U	10	R	250	U	2500	R	5	U	50	R
Benzene	ug/L	125	U	4.4	J	4.4	R	250	U	2500	R	5	U	50	R
Trichloroethylene (TCE)	ug/L	1800	J	101	R	110	=	26100	R	42300	=	408	R	642	=
1,2-Dichloropropane	ug/L	125	U	5	U	10	R	250	U	2500	R	5	U	50	R
Bromodichloromethane	ug/L	125	U	5	U	10	R	250	U	2500	R	5	U	50	R
2-Chloroethyl vinyl ether	ug/L	125	U	5	R	10	R	250	U	2500	R	5	U	50	R
cis-1,3-Dichloropropene	ug/L	125	U	5	U	10	R	250	U	2500	R	5	U	50	R
Methyl isobutyl ketone (4-Methyl-2-pentanone)	ug/L	250	U	10	U	20	R	500	U	5000	R	10	U	100	R
Toluene	ug/L	125	U	5	U	10	R	250	U	2500	R	5	U	50	R
trans-1,3-Dichloropropene	ug/L	125	U	5	U	10	R	250	U	2500	R	5	U	50	R
1,1,2-Trichloroethane	ug/L	125	U	5	U	10	R	250	U	2500	R	5	U	50	R
2-Hexanone	ug/L	250	U	10	U	20	R	500	U	5000	R	10	U	100	R
Tetrachloroethylene (PCE)	ug/L	125	U	5	U	10	R	250	U	2500	R	5	U	50	R
Dibromochloromethane	ug/L	125	U	0.33	J	10	R	250	U	2500	R	1	J	50	R
Chlorobenzene	ug/L	125	U	5	U	10	R	250	U	2500	R	5	U	50	R
Ethylbenzene	ug/L	125	U	5	U	10	R	250	U	2500	R	5	U	50	R
m+p Xylene	ug/L	125	U	5	U	10	R	250	U	2500	R	5	U	50	R
o-Xylene	ug/L	125	U	5	U	10	R	250	U	2500	R	5	U	50	R
Xylenes, Total	ug/L	125	U	5	U	10	R	250	U	2500	R	5	U	50	R
Styrene	ug/L	125	U	5	U	10	R	250	U	2500	R	5	U	50	R
Bromoform	ug/L	125	U	5	U	10	R	250	U	2500	R	1.6	J	50	R
1,1,2,2-Tetrachloroethane	ug/L	125	U	5	U	10	R	250	U	2500	R	5	U	50	R
1,3-Dichlorobenzene	ug/L	125	U	5	U	10	R	250	U	2500	R	5	U	50	R
1,4-Dichlorobenzene	ug/L	125	U	5	U	10	R	250	U	2500	R	5	U	50	R
1,2-Dichlorobenzene	ug/L	125	U	5	U	10	R	250	U	2500	R	5	U	50	R
1,2,4-Trichlorobenzene	ug/L	125	U	5	U	10	R	250	U	2500	R	5	U	50	R
1,2,3-Trichlorobenzene	ug/L	125	U	5	U	10	R	250	U	2500	R	5	U	50	R

	StationID	K166GW36D		K166GW36D		K166GW37D		K166GW37D		K166GW38D		K166GW38D		K166GW39D	
	SampleID	166GW36DM4		166GW36DM4DL		166GW37DM4		166GW37DM4DL		166GW38DM4		166GW38DM4DL		166GW39DM4	
	DateCollected	5/28/2002		5/28/2002		5/21/2002		5/21/2002		5/24/2002		5/24/2002		5/21/2002	
	DateExtracted	6/3/2002		6/4/2002		5/24/2002		5/25/2002		5/31/2002		6/3/2002		5/24/2002	
	DateAnalyzed	6/3/2002		6/4/2002		5/24/2002		5/25/2002		5/31/2002		6/3/2002		5/24/2002	
	SDGNumber	61134		61134		60789		60789		61044		61044		60789	
Parameter	**Units**														
Chloromethane	ug/L	1000	U	5000	R	500	U	5000	R	10	U	200	R	10	U
Vinyl chloride	ug/L	1000	U	5000	R	500	U	5000	R	10	U	200	R	10	U
Bromomethane	ug/L	1000	U	5000	R	500	U	5000	R	10	U	200	R	10	U
Chloroethane	ug/L	1000	U	5000	R	500	U	5000	R	10	U	200	R	10	U
1,1-Dichloroethene	ug/L	500	U	2500	R	250	U	2500	R	5	U	100	R	5	U
Acetone	ug/L	1000	UJ	5000	R	500	U	5000	R	10	U	200	R	10	U
Carbon Disulfide	ug/L	500	U	2500	R	250	U	2500	R	5	U	100	R	5	U
Methylene Chloride	ug/L	500	UJ	2500	R	250	U	5010	R	5	U	100	R	5	U
trans-1,2-Dichloroethene	ug/L	500	U	2500	R	250	U	2500	R	6.9	=	100	R	5	U
1,1-Dichloroethane	ug/L	500	U	2500	R	250	U	2500	R	5	U	100	R	5	U
Vinyl acetate	ug/L	1000	U	5000	R	500	U	5000	R	10	U	200	R	10	U
Methyl ethyl ketone (2-Butanone)	ug/L	1000	U	5000	R	500	U	5000	R	10	U	200	R	10	U
cis-1,2-Dichloroethylene	ug/L	521	=	432	R	817	=	788	R	147	R	148	=	13.4	=
1,2-Dichloroethene (total)	ug/L	521	=	432	R	817	=	788	R	154	=	148	R	13.4	=
Chloroform	ug/L	500	U	2500	R	250	U	2500	R	1.1	J	100	R	0.4	J
1,1,1-Trichloroethane	ug/L	500	U	2500	R	250	U	2500	R	5	U	100	R	5	U
Carbon Tetrachloride	ug/L	500	U	2500	R	250	U	2500	R	5	U	100	R	5	U
1,2-Dichloroethane	ug/L	500	U	2500	R	250	U	2500	R	5	U	100	R	5	U
Benzene	ug/L	500	U	2500	R	250	U	2500	R	5	U	100	R	5	U
Trichloroethylene (TCE)	ug/L	38500	R	31900	=	16400	R	24200	=	727	R	710	=	313	R
1,2-Dichloropropane	ug/L	500	U	2500	R	250	U	2500	R	5	U	100	R	5	U
Bromodichloromethane	ug/L	500	U	2500	R	250	U	2500	R	5	U	100	R	5	U
2-Chloroethyl vinyl ether	ug/L	500	UJ	2500	R	250	U	2500	R	5	R	100	R	5	U
cis-1,3-Dichloropropene	ug/L	500	U	2500	R	250	U	2500	R	5	U	100	R	5	U
Methyl isobutyl ketone (4-Methyl-2-pentanone)	ug/L	1000	U	5000	R	500	U	5000	R	10	U	200	R	10	U
Toluene	ug/L	500	U	2500	R	250	U	2500	R	5	U	100	R	0.99	J
trans-1,3-Dichloropropene	ug/L	500	U	2500	R	250	U	2500	R	5	U	100	R	5	U
1,1,2-Trichloroethane	ug/L	500	U	2500	R	250	U	2500	R	5	U	100	R	5	U
2-Hexanone	ug/L	1000	U	5000	R	500	U	5000	R	10	U	200	R	10	U
Tetrachloroethylene (PCE)	ug/L	500	U	2500	R	250	U	2500	R	5	U	100	R	0.62	J
Dibromochloromethane	ug/L	500	U	2500	R	250	U	2500	R	5	U	100	R	5	U
Chlorobenzene	ug/L	500	U	2500	R	250	U	2500	R	5	U	100	R	0.91	J
Ethylbenzene	ug/L	500	U	2500	R	250	U	2500	R	5	U	100	R	0.45	J
m+p Xylene	ug/L	500	U	2500	R	250	U	2500	R	5	U	100	R	0.87	J
o-Xylene	ug/L	500	U	2500	R	250	U	2500	R	5	U	100	R	0.84	J
Xylenes, Total	ug/L	500	U	2500	R	250	U	2500	R	5	U	100	R	1.7	J
Styrene	ug/L	500	U	2500	R	250	U	2500	R	5	U	100	R	5	U
Bromoform	ug/L	500	U	2500	R	250	U	2500	R	5	U	100	R	5	U
1,1,2,2-Tetrachloroethane	ug/L	500	U	2500	R	250	U	2500	R	5	U	100	R	5	U
1,3-Dichlorobenzene	ug/L	500	U	2500	R	250	U	2500	R	5	U	100	R	5	U
1,4-Dichlorobenzene	ug/L	500	U	2500	R	250	U	2500	R	5	U	100	R	5	U
1,2-Dichlorobenzene	ug/L	500	U	2500	R	250	U	2500	R	5	U	100	R	1.2	J
1,2,4-Trichlorobenzene	ug/L	500	UJ	2500	R	250	U	2500	R	5	U	100	R	5	U
1,2,3-Trichlorobenzene	ug/L	500	U	2500	R	250	U	2500	R	5	U	100	R	5	U

	StationID	K166GW39D		K166GW41D		K166GW41D		K166GW42D		K166GW42D		K166GW43D		K166GW43D	
	SampleID	166GW39DM4DL		166GW41DM4		166GW41DM4DL		166GW42DM4		166GW42DM4DL		166GW43DM4		166GW43DM4DL	
	DateCollected	5/21/2002		5/22/2002		5/22/2002		5/22/2002		5/22/2002		5/22/2002		5/22/2002	
	DateExtracted	5/25/2002		5/31/2002		6/3/2002		5/31/2002		6/3/2002		5/31/2002		6/3/2002	
	DateAnalyzed	5/25/2002		5/31/2002		6/3/2002		5/31/2002		6/3/2002		5/31/2002		6/3/2002	
	SDGNumber	60789		60879		60879		60879		60879		60879		60879	
Parameter	**Units**														
Chloromethane	ug/L	100	R	10	U	500	R	10	U	1000	R	10	U	2500	R
Vinyl chloride	ug/L	100	R	1.2	J	500	R	0.75	J	1000	R	5.1	J	2500	R
Bromomethane	ug/L	100	R	10	U	500	R	10	U	1000	R	10	U	2500	R
Chloroethane	ug/L	100	R	10	U	500	R	10	U	1000	R	10	U	2500	R
1,1-Dichloroethene	ug/L	50	R	1.1	J	250	R	1.1	J	500	R	7.2	=	1250	R
Acetone	ug/L	100	R	10	U	500	R	10	U	1000	R	10	U	2500	R
Carbon Disulfide	ug/L	50	R	5	U	250	R	5	U	500	R	5	U	1250	R
Methylene Chloride	ug/L	125	R	5	U	250	R	5	U	500	R	5	U	1250	R
trans-1,2-Dichloroethene	ug/L	50	R	9.7	=	250	R	4.6	J	500	R	0.85	J	1250	R
1,1-Dichloroethane	ug/L	50	R	5	U	250	R	5	U	500	R	5	U	1250	R
Vinyl acetate	ug/L	100	R	10	U	500	R	10	U	1000	R	10	U	2500	R
Methyl ethyl ketone (2-Butanone)	ug/L	100	R	10	U	500	R	10	U	1000	R	10	U	2500	R
cis-1,2-Dichloroethylene	ug/L	5.6	R	236	R	223	J	81.3	=	62.8	R	324	R	319	J
1,2-Dichloroethene (total)	ug/L	5.6	R	246	R	223	J	85.9	=	62.8	R	325	R	319	J
Chloroform	ug/L	50	R	0.82	J	250	R	5	U	500	R	0.36	J	1250	R
1,1,1-Trichloroethane	ug/L	50	R	5	U	250	R	5	U	500	R	5	U	1250	R
Carbon Tetrachloride	ug/L	50	R	5	U	250	R	5	U	500	R	5	U	1250	R
1,2-Dichloroethane	ug/L	50	R	5	U	250	R	5	U	500	R	5	U	1250	R
Benzene	ug/L	50	R	0.47	J	250	R	5	U	500	R	5	U	1250	R
Trichloroethylene (TCE)	ug/L	240	=	1210	R	1110	=	2570	R	2570	=	4370	R	12900	=
1,2-Dichloropropane	ug/L	50	R	5	U	250	R	5	U	500	R	5	U	1250	R
Bromodichloromethane	ug/L	50	R	5	U	250	R	5	U	500	R	5	U	1250	R
2-Chloroethyl vinyl ether	ug/L	50	R	5	UJ	250	R	5	UJ	500	R	5	UJ	1250	R
cis-1,3-Dichloropropene	ug/L	50	R	5	U	250	R	5	U	500	R	5	U	1250	R
Methyl isobutyl ketone (4-Methyl-2-pentanone)	ug/L	100	R	10	U	500	R	10	U	1000	R	10	U	2500	R
Toluene	ug/L	50	R	0.46	J	250	R	5	U	500	R	5	U	1250	R
trans-1,3-Dichloropropene	ug/L	50	R	5	U	250	R	5	U	500	R	5	U	1250	R
1,1,2-Trichloroethane	ug/L	50	R	5	U	250	R	5	U	500	R	5	U	1250	R
2-Hexanone	ug/L	100	R	10	U	500	R	10	U	1000	R	10	U	2500	R
Tetrachloroethylene (PCE)	ug/L	50	R	5	U	250	R	5	U	500	R	5	U	1250	R
Dibromochloromethane	ug/L	50	R	5	U	250	R	5	U	500	R	5	U	1250	R
Chlorobenzene	ug/L	50	R	5	U	250	R	5	U	500	R	5	U	1250	R
Ethylbenzene	ug/L	50	R	5	U	250	R	5	U	500	R	5	U	1250	R
m+p Xylene	ug/L	50	R	5	U	250	R	5	U	500	R	5	U	1250	R
o-Xylene	ug/L	50	R	5	U	250	R	5	U	500	R	5	U	1250	R
Xylenes, Total	ug/L	50	R	5	U	250	R	5	U	500	R	5	U	1250	R
Styrene	ug/L	50	R	5	U	250	R	5	U	500	R	5	U	1250	R
Bromoform	ug/L	50	R	5	U	250	R	5	U	500	R	5	U	1250	R
1,1,2,2-Tetrachloroethane	ug/L	50	R	5	U	250	R	5	U	500	R	5	U	1250	R
1,3-Dichlorobenzene	ug/L	50	R	5	U	250	R	5	U	500	R	5	U	1250	R
1,4-Dichlorobenzene	ug/L	50	R	5	U	250	R	5	U	500	R	5	U	1250	R
1,2-Dichlorobenzene	ug/L	50	R	5	U	250	R	0.52	J	500	R	5	U	1250	R
1,2,4-Trichlorobenzene	ug/L	50	R	5	U	250	R	5	U	500	R	5	U	1250	R
1,2,3-Trichlorobenzene	ug/L	50	R	5	U	250	R	5	U	500	R	5	U	1250	R

	StationID	K166GW44D		K166GW44D		K166GW45D		K166GW45D		K166GW46D		K166GW47D		K166GW48D	
	SampleID	166GW44DM4		166GW44DM4DL		166GW45DM4		166GW45DM4DL		166GW46DM4		166GW47DM4		166GW48DM4	
	DateCollected	5/22/2002		5/22/2002		5/23/2002		5/23/2002		5/28/2002		5/23/2002		5/23/2002	
	DateExtracted	5/31/2002		6/3/2002		5/31/2002		6/3/2002		6/4/2002		6/3/2002		5/31/2002	
	DateAnalyzed	5/31/2002		6/3/2002		5/31/2002		6/3/2002		6/4/2002		6/3/2002		5/31/2002	
	SDGNumber	60879		60879		61044		61044		61134		61044		61044	
Parameter	Units														
Chloromethane	ug/L	10	U	500	R	10	U	1000	R	500	U	10	U	10	U
Vinyl chloride	ug/L	10	U	500	R	10	U	1000	R	500	U	10	U	0.89	J
Bromomethane	ug/L	10	U	500	R	10	U	1000	R	500	U	10	U	10	U
Chloroethane	ug/L	10	U	500	R	10	U	1000	R	500	U	10	U	10	U
1,1-Dichloroethene	ug/L	0.63	J	250	R	0.82	J	500	R	250	U	5	U	1.2	J
Acetone	ug/L	10	U	500	R	7.7	J	1000	R	500	U	10	U	10	UJ
Carbon Disulfide	ug/L	5	U	250	R	5	U	500	R	250	U	5	U	5	U
Methylene Chloride	ug/L	5	U	250	R	5	U	500	R	250	UJ	5	U	5	UJ
trans-1,2-Dichloroethene	ug/L	4.5	J	250	R	4	J	500	R	250	U	5	U	2.5	J
1,1-Dichloroethane	ug/L	5	U	250	R	5	U	500	R	250	U	5	U	5	U
Vinyl acetate	ug/L	10	U	500	R	10	U	1000	R	500	U	10	U	10	U
Methyl ethyl ketone (2-Butanone)	ug/L	10	U	500	R	10	U	1000	R	500	U	10	U	10	U
cis-1,2-Dichloroethylene	ug/L	43.9	=	43.5	R	44.6	=	500	R	57.2	J	0.7	J	60.6	=
1,2-Dichloroethene (total)	ug/L	48.4	=	43.5	R	48.6	=	500	R	57.2	J	0.7	J	63.2	=
Chloroform	ug/L	1.6	J	250	R	5	U	500	R	250	U	5	U	1.1	J
1,1,1-Trichloroethane	ug/L	5	U	250	R	5	U	500	R	250	U	5	U	5	U
Carbon Tetrachloride	ug/L	5	U	250	R	5	U	500	R	250	U	5	U	5	U
1,2-Dichloroethane	ug/L	5	U	250	R	5	U	500	R	250	U	5	U	5	U
Benzene	ug/L	5	U	250	R	5	U	500	R	250	U	5	U	5	U
Trichloroethylene (TCE)	ug/L	2140	R	2040	=	2230	R	2200	=	3530	=	22.7	=	2930	R
1,2-Dichloropropane	ug/L	5	U	250	R	5	U	500	R	250	U	5	U	5	U
Bromodichloromethane	ug/L	1.7	J	250	R	5	U	500	R	250	U	5	U	1.2	J
2-Chloroethyl vinyl ether	ug/L	5	UJ	250	R	5	U	500	R	250	UJ	5	UJ	5	UJ
cis-1,3-Dichloropropene	ug/L	5	U	250	R	5	U	500	R	250	U	5	U	5	U
Methyl isobutyl ketone (4-Methyl-2-pentanone)	ug/L	10	U	500	R	10	U	1000	R	500	U	10	U	10	U
Toluene	ug/L	5	U	250	R	5	U	500	R	250	U	5	U	5	U
trans-1,3-Dichloropropene	ug/L	5	U	250	R	5	U	500	R	250	U	5	U	5	U
1,1,2-Trichloroethane	ug/L	5	U	250	R	5	U	500	R	250	U	5	U	5	U
2-Hexanone	ug/L	10	U	500	R	10	U	1000	R	500	U	10	U	10	U
Tetrachloroethylene (PCE)	ug/L	5	U	250	R	5	U	500	R	250	U	5	U	5	U
Dibromochloromethane	ug/L	1.9	J	250	R	5	U	500	R	250	U	5	U	1.4	J
Chlorobenzene	ug/L	5	U	250	R	5	U	500	R	250	U	5	U	5	U
Ethylbenzene	ug/L	5	U	250	R	5	U	500	R	250	U	5	U	5	U
m+p Xylene	ug/L	5	U	250	R	5	U	500	R	250	U	5	U	5	U
o-Xylene	ug/L	5	U	250	R	5	U	500	R	250	U	5	U	5	U
Xylenes, Total	ug/L	5	U	250	R	5	U	500	R	250	U	5	U	5	U
Styrene	ug/L	5	U	250	R	5	U	500	R	250	U	5	U	5	U
Bromoform	ug/L	2.3	J	250	R	5	U	500	R	250	U	5	U	2.2	J
1,1,2,2-Tetrachloroethane	ug/L	5	U	250	R	5	U	500	R	250	U	5	U	5	U
1,3-Dichlorobenzene	ug/L	5	U	250	R	5	U	500	R	250	U	5	U	5	U
1,4-Dichlorobenzene	ug/L	5	U	250	R	5	U	500	R	250	U	5	U	5	U
1,2-Dichlorobenzene	ug/L	5	U	250	R	5	U	500	R	250	U	5	U	5	U
1,2,4-Trichlorobenzene	ug/L	5	U	250	R	5	U	500	R	250	U	5	U	5	UJ
1,2,3-Trichlorobenzene	ug/L	5	U	250	R	5	U	500	R	250	U	5	U	5	U

	StationID	K166GW48D		K166GW49D		K166GW50D		K166GW50D		K166GW51D		K166GW52D		K166GWIN3	
	SampleID	166GW48DM4DL		166GW49DM4		166GW50DM4		166GW50DM4DL		166GW51DM4		166GW52DM4		166GWIN3M4	
	DateCollected	5/23/2002		5/28/2002		5/29/2002		5/29/2002		5/29/2002		5/29/2002		5/30/2002	
	DateExtracted	6/3/2002		6/4/2002		6/4/2002		6/4/2002		6/4/2002		6/4/2002		6/5/2002	
	DateAnalyzed	6/3/2002		6/4/2002		6/4/2002		6/4/2002		6/4/2002		6/4/2002		6/5/2002	
	SDGNumber	61044		61134		61170		61170		61170		61170		61258	
Parameter	**Units**														
Chloromethane	ug/L	1000	R	500	U	1000	U	2500	R	200	U	500	U	10	U
Vinyl chloride	ug/L	1000	R	500	U	1000	U	2500	R	200	U	500	U	18.7	=
Bromomethane	ug/L	1000	R	500	U	1000	U	2500	R	200	U	500	U	10	U
Chloroethane	ug/L	1000	R	500	U	1000	U	2500	R	200	U	500	U	10	U
1,1-Dichloroethene	ug/L	500	R	250	U	500	U	1250	R	100	U	250	U	5	U
Acetone	ug/L	1000	R	500	U	1000	UJ	2500	R	200	U	500	U	10	U
Carbon Disulfide	ug/L	500	R	250	U	500	U	1250	R	100	U	250	U	5	U
Methylene Chloride	ug/L	500	R	250	UJ	500	UJ	1250	R	100	UJ	250	UJ	5	UJ
trans-1,2-Dichloroethene	ug/L	500	R	250	U	500	U	1250	R	100	U	250	U	5	U
1,1-Dichloroethane	ug/L	500	R	250	U	500	U	1250	R	100	U	250	U	5	U
Vinyl acetate	ug/L	1000	R	500	U	1000	U	2500	R	200	U	500	U	10	U
Methyl ethyl ketone (2-Butanone)	ug/L	1000	R	500	U	1000	U	2500	R	200	U	500	U	10	U
cis-1,2-Dichloroethylene	ug/L	500	R	44.8	J	282	J	230	R	1120	=	3680	=	15.6	=
1,2-Dichloroethene (total)	ug/L	500	R	44.8	J	282	J	230	R	1120	=	3680	=	15.6	=
Chloroform	ug/L	500	R	250	U	500	U	1250	R	100	U	250	U	5	U
1,1,1-Trichloroethane	ug/L	500	R	250	U	500	U	1250	R	100	U	250	U	5	U
Carbon Tetrachloride	ug/L	500	R	250	U	500	U	1250	R	100	U	250	U	5	U
1,2-Dichloroethane	ug/L	500	R	250	U	500	U	1250	R	100	U	250	U	5	U
Benzene	ug/L	500	R	250	U	500	U	1250	R	100	U	250	U	5	U
Trichloroethylene (TCE)	ug/L	3570	=	2960	=	13100	R	11500	=	1330	=	345	=	5	U
1,2-Dichloropropane	ug/L	500	R	250	U	500	U	1250	R	100	U	250	U	5	U
Bromodichloromethane	ug/L	500	R	250	U	500	U	1250	R	100	U	250	U	5	U
2-Chloroethyl vinyl ether	ug/L	500	R	250	UJ	500	UJ	1250	R	100	U	250	U	5	UJ
cis-1,3-Dichloropropene	ug/L	500	R	250	U	500	U	1250	R	100	U	250	U	5	U
Methyl isobutyl ketone (4-Methyl-2-pentanone)	ug/L	1000	R	500	U	1000	U	2500	R	200	U	500	U	10	U
Toluene	ug/L	500	R	250	U	500	U	1250	R	100	U	250	U	5	U
trans-1,3-Dichloropropene	ug/L	500	R	250	U	500	U	1250	R	100	U	250	U	5	U
1,1,2-Trichloroethane	ug/L	500	R	250	U	500	U	1250	R	100	U	250	U	5	U
2-Hexanone	ug/L	1000	R	500	U	1000	U	2500	R	200	U	500	U	10	U
Tetrachloroethylene (PCE)	ug/L	500	R	250	U	500	U	1250	R	100	U	250	U	5	U
Dibromochloromethane	ug/L	500	R	250	U	500	U	1250	R	100	U	250	U	5	U
Chlorobenzene	ug/L	500	R	250	U	500	U	1250	R	100	U	250	U	5	U
Ethylbenzene	ug/L	500	R	250	U	500	U	1250	R	100	U	250	U	0.31	J
m+p Xylene	ug/L	500	R	250	U	500	U	1250	R	100	U	250	U	0.84	J
o-Xylene	ug/L	500	R	250	U	500	U	1250	R	100	U	250	U	0.36	J
Xylenes, Total	ug/L	500	R	250	U	500	U	1250	R	100	U	250	U	1.2	J
Styrene	ug/L	500	R	250	U	500	U	1250	R	100	U	250	U	5	U
Bromoform	ug/L	500	R	250	U	500	U	1250	R	100	U	250	U	5	UJ
1,1,2,2-Tetrachloroethane	ug/L	500	R	250	U	500	U	1250	R	100	U	250	U	5	U
1,3-Dichlorobenzene	ug/L	500	R	250	U	500	U	1250	R	100	U	250	U	5	U
1,4-Dichlorobenzene	ug/L	500	R	250	U	500	U	1250	R	100	U	250	U	5	U
1,2-Dichlorobenzene	ug/L	500	R	250	U	500	U	1250	R	100	U	250	U	5	U
1,2,4-Trichlorobenzene	ug/L	500	R	250	U	500	UJ	1250	R	100	U	250	U	5	U
1,2,3-Trichlorobenzene	ug/L	500	R	250	U	500	U	1250	R	100	U	250	U	5	U

	StationID	K166GWTM3		K166GWTM4		K166GWTM4	
	SampleID	166GWTM3M4		166GWTM4M4		166GWTM4M4DL	
	DateCollected	5/29/2002		5/23/2002		5/23/2002	
	DateExtracted	6/4/2002		5/31/2002		6/3/2002	
	DateAnalyzed	6/4/2002		5/31/2002		6/3/2002	
	SDGNumber	61170		61044		61044	
Parameter	Units						
Chloromethane	ug/L	200	U	10	U	1000	R
Vinyl chloride	ug/L	346	=	6	J	1000	R
Bromomethane	ug/L	200	U	10	U	1000	R
Chloroethane	ug/L	200	U	10	U	1000	R
1,1-Dichloroethene	ug/L	100	U	3.5	J	500	R
Acetone	ug/L	200	U	10	UJ	1000	R
Carbon Disulfide	ug/L	100	U	5	U	500	R
Methylene Chloride	ug/L	100	UJ	5	UJ	500	R
trans-1,2-Dichloroethene	ug/L	100	U	7.6	=	500	R
1,1-Dichloroethane	ug/L	100	U	5	U	500	R
Vinyl acetate	ug/L	200	U	10	U	1000	R
Methyl ethyl ketone (2-Butanone)	ug/L	200	U	10	U	1000	R
cis-1,2-Dichloroethylene	ug/L	1150	=	2680	R	2610	=
1,2-Dichloroethene (total)	ug/L	1150	=	2680	R	2610	=
Chloroform	ug/L	100	U	5	U	500	R
1,1,1-Trichloroethane	ug/L	100	U	5	U	500	R
Carbon Tetrachloride	ug/L	100	U	5	U	500	R
1,2-Dichloroethane	ug/L	100	U	5	U	500	R
Benzene	ug/L	100	U	5	U	500	R
Trichloroethylene (TCE)	ug/L	100	U	256	R	252	J
1,2-Dichloropropane	ug/L	100	U	5	U	500	R
Bromodichloromethane	ug/L	100	U	5	U	500	R
2-Chloroethyl vinyl ether	ug/L	100	U	5	UJ	500	R
cis-1,3-Dichloropropene	ug/L	100	U	5	U	500	R
Methyl isobutyl ketone (4-Methyl-2-pentanone)	ug/L	200	U	10	U	1000	R
Toluene	ug/L	100	U	5	U	500	R
trans-1,3-Dichloropropene	ug/L	100	U	5	U	500	R
1,1,2-Trichloroethane	ug/L	100	U	5	U	500	R
2-Hexanone	ug/L	200	U	10	U	1000	R
Tetrachloroethylene (PCE)	ug/L	100	U	5	U	500	R
Dibromochloromethane	ug/L	100	U	5	U	500	R
Chlorobenzene	ug/L	100	U	5	U	500	R
Ethylbenzene	ug/L	100	U	0.22	J	500	R
m+p Xylene	ug/L	100	U	5	U	500	R
o-Xylene	ug/L	100	U	5	U	500	R
Xylenes, Total	ug/L	100	U	5	U	500	R
Styrene	ug/L	100	U	5	U	500	R
Bromoform	ug/L	100	U	5	U	500	R
1,1,2,2-Tetrachloroethane	ug/L	100	U	5	U	500	R
1,3-Dichlorobenzene	ug/L	100	U	5	U	500	R
1,4-Dichlorobenzene	ug/L	100	U	5	U	500	R
1,2-Dichlorobenzene	ug/L	100	U	5	U	500	R
1,2,4-Trichlorobenzene	ug/L	100	U	5	UJ	500	R
1,2,3-Trichlorobenzene	ug/L	100	U	5	U	500	R

	StationID	K166GW040		K166GW040		K166GW16D		K166GW16D	
	SampleID	166GW040M4		166HW040M4		166GW16DM4		166HW16DM4	
	DateCollected	5/21/2002		5/21/2002		5/30/2002		5/30/2002	
	DateExtracted								
	DateAnalyzed	5/22/2002		5/22/2002		6/1/2002		5/31/2002	
	SDGNumber	60789		60789		61258		61258	
Parameter	**Units**								
Chloride	mg/L								
Nitrogen, Nitrate (as N)	mg/L	0.1	U	0.1	U	0.1	U	0.1	U
Sulfate (as SO4)	mg/L	540	=	716	=	6.32	=	6.28	=

	StationID	K166GW27D		K166GW28D		K166GW29D		K166GW30D	
	SampleID	166GW27DM6		166GW28DM6		166GW29DM6		166GW30DM6	
	DateCollected	6/24/2002		6/24/2002		6/24/2002		6/24/2002	
	DateExtracted								
	DateAnalyzed	6/26/2002		6/26/2002		6/26/2002		6/26/2002	
	SDGNumber	62650		62650		62650		62650	
Parameter	**Units**								
Chloride	mg/L	2.84	=	4.27	=	2.8	=	6.51	=
Nitrogen, Nitrate (as N)	mg/L	0.1	U	0.1	U	0.1	U	0.1	U
Sulfate (as SO4)	mg/L	31.7	=	11.3	=	36.8	=	1.03	=

	StationID	K166GW31D		K166GW31D		K166GW32D		K166GW33D	
	SampleID	166GW31DM6		166HW31DM6		166GW32DM6		166GW33DM4	
	DateCollected	6/25/2002		6/25/2002		6/25/2002		5/20/2002	
	DateExtracted								
	DateAnalyzed	6/26/2002		6/26/2002		6/26/2002		5/22/2002	
	SDGNumber	62650		62650		62650		60789	
Parameter	**Units**								
Chloride	mg/L	3.38	=	3.35	=	4.21	=		
Nitrogen, Nitrate (as N)	mg/L	0.1	U	0.1	U	0.1	U	0.1	U
Sulfate (as SO4)	mg/L	8.77	=	8.46	=	6.58	=	7.03	=

	StationID	K166GW34D		K166GW35D		K166GW36D		K166GW37D	
	SampleID	166GW34DM4		166GW35DM4		166GW36DM4		166GW37DM4	
	DateCollected	5/21/2002		5/21/2002		5/28/2002		5/21/2002	
	DateExtracted								
	DateAnalyzed	5/22/2002		5/22/2002		5/30/2002		5/22/2002	
	SDGNumber	60789		60789		61134		60789	
Parameter	**Units**								
Chloride	mg/L								
Nitrogen, Nitrate (as N)	mg/L	0.1	U	0.1	U	0.1	U	0.1	U
Sulfate (as SO4)	mg/L	8.51	=	17.1	=	2.57	=	28.6	=

	StationID	K166GW38D		K166GW39D		K166GW41D		K166GW42D	
	SampleID	166GW38DM4		166GW39DM4		166GW41DM4		166GW42DM4	
	DateCollected	5/24/2002		5/21/2002		5/22/2002		5/22/2002	
	DateExtracted								
	DateAnalyzed	5/25/2002		5/22/2002		5/22/2002		5/23/2002	
	SDGNumber	61044		60789		60879		60879	
Parameter	**Units**								
Chloride	mg/L								
Nitrogen, Nitrate (as N)	mg/L	0.1	U	0.1	U	0.1	U	0.1	U
Sulfate (as SO4)	mg/L	21.6	=	8.16	=	15.3	=	18.8	=

	StationID	K166GW43D		K166GW44D		K166GW45D		K166GW46D	
	SampleID	166GW43DM4		166GW44DM4		166GW45DM4		166GW46DM4	
	DateCollected	5/22/2002		5/22/2002		5/23/2002		5/28/2002	
	DateExtracted								
	DateAnalyzed	5/23/2002		5/23/2002		5/25/2002		5/30/2002	
	SDGNumber	60879		60879		61044		61134	
Parameter	**Units**								
Chloride	mg/L								
Nitrogen, Nitrate (as N)	mg/L	0.1	U	0.1	U	0.1	U	0.1	U
Sulfate (as SO4)	mg/L	14	=	46.3	=	31.7	=	13.6	=

	StationID	K166GW47D		K166GW48D		K166GW49D		K166GW50D	
	SampleID	166GW47DM4		166GW48DM4		166GW49DM4		166GW50DM4	
	DateCollected	5/23/2002		5/23/2002		5/28/2002		5/29/2002	
	DateExtracted								
	DateAnalyzed	5/25/2002		5/25/2002		5/30/2002		5/30/2002	
	SDGNumber	61044		61044		61134		61170	
Parameter	**Units**								
Chloride	mg/L								
Nitrogen, Nitrate (as N)	mg/L	0.1	U	0.1	U	0.1	U	0.1	U
Sulfate (as SO4)	mg/L	52.5	=	23.7	=	18.7	=	21.2	=

	StationID	K166GW51D		K166GW52D		K166GWIN3		K166GWTM3	
	SampleID	166GW51DM4		166GW52DM4		166GWIN3M4		166GWTM3M4	
	DateCollected	5/29/2002		5/29/2002		5/30/2002		5/29/2002	
	DateExtracted								
	DateAnalyzed	5/30/2002		5/30/2002		6/1/2002		5/30/2002	
	SDGNumber	61170		61170		61258		61170	
Parameter	**Units**								
Chloride	mg/L								
Nitrogen, Nitrate (as N)	mg/L	0.1	U	0.1	U	0.1	U	0.1	U
Sulfate (as SO4)	mg/L	20.2	=	8.31	=	0.342	J	2.39	=

	StationID	K166GWTM4	
	SampleID	166GWTM4M4	
	DateCollected	5/23/2002	
	DateExtracted		
	DateAnalyzed	5/25/2002	
	SDGNumber	61044	
Parameter	**Units**		
Chloride	mg/L		
Nitrogen, Nitrate (as N)	mg/L	0.1	U
Sulfate (as SO4)	mg/L	5.46	=

	StationID	K166GW040		K166GW040		K166G
	SampleID	166GW040M4		166HW040M4		166GW
	DateCollected	5/21/2002		5/21/2002		5/30/
	DateExtracted					
	DateAnalyzed	6/5/2002		6/5/2002		6/5/2
	SDGNumber	P0205578		P0205578		P020
Parameter	**Units**					
Hydrogen	nM	2.5	=	2.1	=	1.8
Methane	ug/L	1.3	=	0.9	=	220

	StationID	W16D	K166GW27D		K166GW28D	
	SampleID	16DM4	166GW27DM6		166GW28DM6	
	DateCollected	2002	6/24/2002		6/24/2002	
	DateExtracted					
	DateAnalyzed	2002	6/28/2002		6/28/2002	
	SDGNumber	5578	P0206447		P0206447	
Parameter	**Units**					
Hydrogen	nM	=	3.7	=	25	=
Methane	ug/L	=	12	=	870	=

	StationID	K166GW29D		K166GW30D		K166G
	SampleID	166GW29DM6		166GW30DM6		166GW
	DateCollected	6/24/2002		6/24/2002		6/25/
	DateExtracted					
	DateAnalyzed	6/28/2002		6/28/2002		6/28/
	SDGNumber	P0206447		P0206447		P020
Parameter	**Units**					
Hydrogen	nM	4.9	=	5300	=	280
Methane	ug/L	74	=	1800	=	110

	StationID	W31D	K166GW31D		K166GW32D	
	SampleID	31DM6	166HW31DM6		166GW32DM6	
	DateCollected	2002	6/25/2002		6/25/2002	
	DateExtracted					
	DateAnalyzed	2002	6/28/2002		6/28/2002	
	SDGNumber	6447	P0206447		P0206447	
Parameter	**Units**					
Hydrogen	nM	=	350	=	1.8	=
Methane	ug/L	=	140	=	880	=

	StationID	K166GW33D		K166GW34D		K166G
	SampleID	166GW33DM4		166GW34DM4		166GW
	DateCollected	5/20/2002		5/21/2002		5/21/
	DateExtracted					
	DateAnalyzed	6/4/2002		6/4/2002		6/4/2
	SDGNumber	P0205578		P0205578		P020
Parameter	**Units**					
Hydrogen	nM	14000	=	810	=	110
Methane	ug/L	1.6	=	130	=	16

	StationID	W35D	K166GW36D		K166GW37D	
	SampleID	35DM4	166GW36DM4		166GW37DM4	
	DateCollected	2002	5/28/2002		5/21/2002	
	DateExtracted					
	DateAnalyzed	2002	6/4/2002		6/5/2002	
	SDGNumber	5578	P0205578		P0205578	
Parameter	Units					
Hydrogen	nM	=	76000	=	11000	=
Methane	ug/L	=	20	=	92	=

	StationID	K166GW38D		K166GW39D		K166G
	SampleID	166GW38DM4		166GW39DM4		166GW
	DateCollected	5/24/2002		5/21/2002		5/22/
	DateExtracted					
	DateAnalyzed	6/5/2002		6/5/2002		6/5/
	SDGNumber	P0205578		P0205578		P020
Parameter	Units					
Hydrogen	nM	56000	=	28	=	15000
Methane	ug/L	24	=	90	=	660

	StationID	W41D	K166GW42D		K166GW43D	
	SampleID	41DM4	166GW42DM4		166GW43DM4	
	DateCollected	2002	5/22/2002		5/22/2002	
	DateExtracted					
	DateAnalyzed	2002	6/5/2002		6/5/2002	
	SDGNumber	5578	P0205578		P0205578	
Parameter	Units					
Hydrogen	nM	=	23	=	2200	=
Methane	ug/L	=	53	=	53	=

	StationID	K166GW44D		K166GW45D		K166G
	SampleID	166GW44DM4		166GW45DM4		166GW
	DateCollected	5/22/2002		5/23/2002		5/28/
	DateExtracted					
	DateAnalyzed	6/5/2002		6/5/2002		6/5/
	SDGNumber	P0205578		P0205578		P020
Parameter	**Units**					
Hydrogen	nM	49000	=	29	=	96
Methane	ug/L	19	=	74	=	21

	StationID	W46D	K166GW47D		K166GW48D	
	SampleID	46DM4	166GW47DM4		166GW48DM4	
	DateCollected	2002	5/23/2002		5/23/2002	
	DateExtracted					
	DateAnalyzed	2002	6/5/2002		6/5/2002	
	SDGNumber	5578	P0205578		P0205578	
Parameter	**Units**					
Hydrogen	nM	=	61000	=	230	=
Methane	ug/L	=	3.1	=	24	=

	StationID	K166GW49D		K166GW50D		K166G
	SampleID	166GW49DM4		166GW50DM4		166GW
	DateCollected	5/28/2002		5/29/2002		5/29/
	DateExtracted					
	DateAnalyzed	6/5/2002		6/5/2002		6/5/
	SDGNumber	P0205578		P0205578		P020
Parameter	**Units**					
Hydrogen	nM	14	=	4	=	7000
Methane	ug/L	150	=	21	=	250

	StationID	W51D	K166GW52D		K166GWIN3	
	SampleID	51DM4	166GW52DM4		166GWIN3M4	
	DateCollected	2002	5/29/2002		5/30/2002	
	DateExtracted					
	DateAnalyzed	2002	6/5/2002		6/5/2002	
	SDGNumber	5578	P0205578		P0205578	
Parameter	**Units**					
Hydrogen	nM	=	61000	=	3.1	=
Methane	ug/L	=	210	=	1100	=

	StationID	K166GWTM3		K166GWTM4	
	SampleID	166GWTM3M4		166GWTM4M4	
	DateCollected	5/29/2002		5/23/2002	
	DateExtracted				
	DateAnalyzed	6/5/2002		6/6/2002	
	SDGNumber	P0205578		P0205578	
Parameter	**Units**				
Hydrogen	nM	1.3	=	1.2	=
Methane	ug/L	40	=	29	=

Analytical Data Summary

	StationID	K166GW27D		K166GW28D		K166GW28D		K166GW29D		K166GW30D		K166GW30D		K166GW30D		K166G
	SampleID	166GW27DM1		166GW28DM1		166GW28DM1DL		166GW29DM1		166GW30DM1		166GW30DM1LR		166HW30DM1		166HW3
	DateCollected	2/14/2002		2/19/2002		2/19/2002		2/19/2002		2/19/2002		2/19/2002		2/19/2002		2/19/
	DateExtracted	2/18/2002		2/27/2002		2/28/2002		2/27/2002		2/27/2002		2/28/2002		2/27/2002		2/28/
	DateAnalyzed	2/18/2002		2/27/2002		2/28/2002		2/27/2002		2/27/2002		2/28/2002		2/27/2002		2/28/
	SDGNumber	56223		56330		56330		56330		56330		56330		56330		563
Parameter	Units															
Chloromethane	ug/L	10	UJ	10	U	50	R	10	U	10	U	500	R	10	U	500
Vinyl chloride	ug/L	10	U	0.4	J	50	R	10	U	1	J	500	R	1.3	J	500
Bromomethane	ug/L	10	U	10	U	50	R	10	U	10	U	500	R	10	U	500
Chloroethane	ug/L	10	U	10	U	50	R	10	U	10	U	500	R	10	U	500
1,1-Dichloroethene	ug/L	5	U	0.75	J	25	R	5	U	2	J	250	R	2.1	J	250
Acetone	ug/L	2.4	J	37.9	=	20.4	R	5.1	J	10	U	500	R	10.9	=	500
Carbon Disulfide	ug/L	5	U	5	U	25	R	5	U	5	U	250	R	5	U	250
Methylene Chloride	ug/L	5	U	5	U	13.8	R	5	U	5	U	122	R	5	U	168
trans-1,2-Dichloroethene	ug/L	5	U	13.4	=	14.8	R	5	U	9	=	250	R	8.4	=	250
1,1-Dichloroethane	ug/L	5	U	5	U	25	R	5	U	5	U	250	R	5	U	250
Vinyl acetate	ug/L	10	UJ	10	UJ	50	R	10	U	10	U	500	R	10	U	500
Methyl ethyl ketone (2-Butanone)	ug/L	10	U	2.9	J	50	R	10	U	10	U	500	R	10	U	500
cis-1,2-Dichloroethylene	ug/L	0.47	J	61	=	62.7	R	2	J	97.9	=	104	R	102	R	118
1,2-Dichloroethene (total)	ug/L	0.47	J	74.5	=	77.5	R	2	J	107	=	104	R	111	=	118
Chloroform	ug/L	5	U	5	U	25	R	5	U	5	U	250	R	5	U	250
1,1,1-Trichloroethane	ug/L	5	U	5	U	25	R	5	U	5	U	250	R	5	U	250
Carbon Tetrachloride	ug/L	5	U	5	U	25	R	5	U	5	U	250	R	5	U	250
1,2-Dichloroethane	ug/L	5	U	5	U	25	R	5	U	5	U	250	R	5	U	250
Benzene	ug/L	5	U	0.34	J	25	R	5	U	0.67	J	250	R	0.68	J	250
Trichloroethylene (TCE)	ug/L	18.5	=	258	R	280	=	89.8	=	1770	R	3010	=	1700	R	2770
1,2-Dichloropropane	ug/L	5	U	5	U	25	R	5	U	5	U	250	R	5	U	250
Bromodichloromethane	ug/L	5	U	5	U	25	R	5	U	5	U	250	R	5	U	250
2-Chloroethyl vinyl ether	ug/L	5	U	5	UJ	25	R	5	U	5	U	250	R	5	U	250
cis-1,3-Dichloropropene	ug/L	5	U	5	U	25	R	5	U	5	U	250	R	5	U	250
Methyl isobutyl ketone (4-Methyl-2	ug/L	10	U	9.6	J	8.7	R	10	U	10	U	500	R	10	U	500
Toluene	ug/L	5	U	5	U	25	R	5	U	5	U	250	R	5	U	250
trans-1,3-Dichloropropene	ug/L	5	U	5	U	25	R	5	U	5	U	250	R	5	U	250
1,1,2-Trichloroethane	ug/L	5	U	5	U	25	R	5	U	5	U	250	R	5	U	250
2-Hexanone	ug/L	10	U	10	U	50	R	10	U	10	U	500	R	10	U	500
Tetrachloroethylene (PCE)	ug/L	5	U	5	U	25	R	5	U	5	U	250	R	5	U	250
Dibromochloromethane	ug/L	5	U	5	U	25	R	5	U	5	U	250	R	5	U	250
Chlorobenzene	ug/L	5	U	5	U	25	R	5	U	5	U	250	R	5	U	250
Ethylbenzene	ug/L	5	U	5	U	25	R	5	U	5	U	250	R	5	U	250
m+p Xylene	ug/L	5	U	5	U	25	R	5	U	5	U	250	R	5	U	250
o-Xylene	ug/L	5	U	5	U	25	R	5	U	5	U	250	R	5	U	250
Xylenes, Total	ug/L	5	U	5	U	25	R	5	U	5	U	250	R	5	U	250
Styrene	ug/L	5	U	5	U	25	R	5	U	5	U	250	R	5	U	250
Bromoform	ug/L	5	U	5	U	25	R	5	U	5	U	250	R	5	U	250
1,1,2,2-Tetrachloroethane	ug/L	5	U	5	U	25	R	5	U	5	U	250	R	5	U	250
1,3-Dichlorobenzene	ug/L	5	U	5	U	25	R	5	U	5	U	250	R	5	U	250
1,4-Dichlorobenzene	ug/L	5	U	5	U	25	R	5	U	5	U	250	R	5	U	250
1,2-Dichlorobenzene	ug/L	5	U	5	U	25	R	5	U	5	U	250	R	5	U	250
1,2,4--Trichlorobenzene	ug/L	5	U	5	U	25	R	5	U	5	U	250	R	5	U	250
1,2,3-Trichlorobenzene	ug/L	5	U	5	U	25	R	5	U	5	U	250	R	5	U	250
Bromofluorobenzene	PERCENT					104						102				102
Dibromofluoromethane	PERCENT					91						93				94
Toluene-d8	PERCENT					101						100				100

Analytical Data Summary

	StationID	W30D	K166GW31D		K166GW32D		K166GW32D	
	SampleID	0DM1LR	166GW31DM1		166GW32DM1		166GW32DM1LR	
	DateCollected	2002	2/14/2002		2/14/2002		2/14/2002	
	DateExtracted	2002	2/18/2002		2/18/2002		2/18/2002	
	DateAnalyzed	2002	2/18/2002		2/18/2002		2/18/2002	
	SDGNumber	330	56223		56223		56223	
Parameter	**Units**							
Chloromethane	ug/L	R	100	UJ	250	UJ	500	R
Vinyl chloride	ug/L	R	100	U	250	U	500	R
Bromomethane	ug/L	R	100	U	250	U	500	R
Chloroethane	ug/L	R	100	U	250	U	500	R
1,1-Dichloroethene	ug/L	R	50	U	125	U	250	R
Acetone	ug/L	R	100	U	250	U	500	R
Carbon Disulfide	ug/L	R	50	U	125	U	250	R
Methylene Chloride	ug/L	R	50	U	125	U	250	R
trans-1,2-Dichloroethene	ug/L	R	50	U	125	U	250	R
1,1-Dichloroethane	ug/L	R	50	U	125	U	250	R
Vinyl acetate	ug/L	R	100	UJ	250	UJ	500	R
Methyl ethyl ketone (2-Butanone)	ug/L	R	100	U	250	U	500	R
cis-1,2-Dichloroethylene	ug/L	J	23.5	J	57	J	59.3	R
1,2-Dichloroethene (total)	ug/L	R	23.5	J	57	J	59.3	R
Chloroform	ug/L	R	50	U	125	U	250	R
1,1,1-Trichloroethane	ug/L	R	50	U	125	U	250	R
Carbon Tetrachloride	ug/L	R	50	U	125	U	250	R
1,2-Dichloroethane	ug/L	R	50	U	125	U	250	R
Benzene	ug/L	R	50	U	125	U	250	R
Trichloroethylene (TCE)	ug/L	=	757	=	2610	R	2700	=
1,2-Dichloropropane	ug/L	R	50	U	125	U	250	R
Bromodichloromethane	ug/L	R	50	U	125	U	250	R
2-Chloroethyl vinyl ether	ug/L	R	50	U	125	U	250	R
cis-1,3-Dichloropropene	ug/L	R	50	U	125	U	250	R
Methyl isobutyl ketone (4-Methyl-2	ug/L	R	100	U	250	U	500	R
Toluene	ug/L	R	3	J	6.3	J	10.3	R
trans-1,3-Dichloropropene	ug/L	R	50	U	125	U	250	R
1,1,2-Trichloroethane	ug/L	R	50	U	125	U	250	R
2-Hexanone	ug/L	R	100	U	250	U	500	R
Tetrachloroethylene (PCE)	ug/L	R	50	U	125	U	250	R
Dibromochloromethane	ug/L	R	50	U	125	U	250	R
Chlorobenzene	ug/L	R	3.9	J	125	U	250	R
Ethylbenzene	ug/L	R	50	U	125	U	250	R
m+p Xylene	ug/L	R	50	U	125	U	250	R
o-Xylene	ug/L	R	50	U	125	U	250	R
Xylenes, Total	ug/L	R	50	U	125	U	250	R
Styrene	ug/L	R	50	U	125	U	250	R
Bromoform	ug/L	R	50	U	125	U	250	R
1,1,2,2-Tetrachloroethane	ug/L	R	50	U	125	U	250	R
1,3-Dichlorobenzene	ug/L	R	50	U	125	U	250	R
1,4-Dichlorobenzene	ug/L	R	50	U	125	U	8.9	R
1,2-Dichlorobenzene	ug/L	R	4	J	125	U	250	R
1,2,4--Trichlorobenzene	ug/L	R	50	U	125	U	250	R
1,2,3-Trichlorobenzene	ug/L	R	50	U	125	U	250	R
Bromofluorobenzene	PERCENT						98	
Dibromofluoromethane	PERCENT						97	
Toluene-d8	PERCENT						97	

	StationID	K166GW27D		K166GW28D		K166GW29D		K166GW30D		K166G
	SampleID	166GW27DM1		166GW28DM1		166GW29DM1		166GW30DM1		166HW
	DateCollected	2/14/2002		2/19/2002		2/19/2002		2/19/2002		2/19/
	DateExtracted	2/18/2002		2/20/2002		2/20/2002		2/20/2002		2/20/
	DateAnalyzed	2/18/2002		2/21/2002		2/21/2002		2/21/2002		2/21/
	SDGNumber	56223		56330		56330		56330		563
Parameter	Units									
Iron	ug/L	5940	=	65.3	U	11400	=	2510	=	2550

	StationID	W30D	K166GW31D		K166GW32D	
	SampleID	30DM1	166GW31DM1		166GW32DM1	
	DateCollected	2002	2/14/2002		2/14/2002	
	DateExtracted	2002	2/18/2002		2/18/2002	
	DateAnalyzed	2002	2/18/2002		2/18/2002	
	SDGNumber	30	56223		56223	
Parameter	**Units**					
Iron	ug/L	=	1820	=	1480	=

	StationID	K166GW27D		K166GW28D		K166GW29D		K166GW30D	
	SampleID	166GW27DM1		166GW28DM1		166GW29DM1		166GW30DM1	
	DateCollected	2/14/2002		2/19/2002		2/19/2002		2/19/2002	
	DateExtracted								
	DateAnalyzed	2/18/2002		2/20/2002		2/20/2002		2/20/2002	
	SDGNumber	56223		56330		56330		56330	
Parameter	**Units**								
Chloride	mg/L	2.73	=	7.77	U	9.08	U	11.1	U
Nitrate-Nitrite-N	mg/L	0.01	U	0.01	U	0.01	U	0.01	U
Sulfate (as SO4)	mg/L	33.8	=	16.2	=	42.5	=	7.79	=

Analytical Data Summary

	StationID	K166GW30D		K166GW31D		K166GW32D	
	SampleID	166HW30DM1		166GW31DM1		166GW32DM1	
	DateCollected	2/19/2002		2/14/2002		2/14/2002	
	DateExtracted						
	DateAnalyzed	2/20/2002		2/18/2002		2/20/2002	
	SDGNumber	56330		56223		56223	
Parameter	**Units**						
Chloride	mg/L	9.86	U	2.81	=	3.94	=
Nitrate-Nitrite-N	mg/L	0.164	=	0.01	U	0.01	U
Sulfate (as SO4)	mg/L	7.92	=	30.2	=	16.8	=

	StationID	K166GW27D		K166GW28D		K166GW29D		K166GW30D		K166G
	SampleID	166GW27DM1		166GW28DM1		166GW29DM1		166GW30DM1		166HW
	DateCollected	2/14/2002		2/19/2002		2/19/2002		2/19/2002		2/19/
	DateExtracted									
	DateAnalyzed	2/25/2002		2/25/2002		2/25/2002		2/25/2002		2/25/
	SDGNumber	P0202323		P0202323		P0202323		P0202323		P020
Parameter	**Units**									
Hydrogen	nM	68	=	110	=	1.2	=	25	=	14
Methane	ug/L	20	=	460	=	14	=	1600	=	1000

	StationID	W30D	K166GW31D		K166GW32D	
	SampleID	30DM1	166GW31DM1		166GW32DM1	
	DateCollected	2002	2/14/2002		2/14/2002	
	DateExtracted					
	DateAnalyzed	2002	2/25/2002		2/25/2002	
	SDGNumber	2323	P0202323		P0202323	
Parameter	**Units**					
Hydrogen	nM	=	46	=	44	=
Methane	ug/L	=	240	=	670	=

IDW SAMPLING

	StationID	99999		99999		99999	
	SampleID	166VDRM001M2		166VDRM001M2		166VDRM002M2	
	DateCollected	2/19/2002		2/19/2002		2/19/2002	
	DateExtracted			2/20/2002			
	DateAnalyzed	3/6/2002		3/4/2002		3/6/2002	
	SDGNumber	56341		56341		56341	
Parameter	**Units**						
Benzene, TCLP	mg/L	0.1	U			0.1	U
Chloromethane	ug/kg			11.2	UJ		
Vinyl chloride, TCLP	mg/L	0.1	U			0.1	U
Vinyl chloride	ug/kg			11.2	UJ		
Bromomethane	ug/kg			11.2	UJ		
Chloroethane	ug/kg			11.2	UJ		
1,1-Dichloroethene, TCLP	mg/L	0.1	U			0.1	U
1,1-Dichloroethene	ug/kg			5.6	UJ		
Acetone	ug/kg			11.6	J		
Carbon Disulfide	ug/kg			5.6	UJ		
Methylene Chloride	ug/kg			9.3	UJ		
trans-1,2-Dichloroethene	ug/kg			5.6	UJ		
1,1-Dichloroethane	ug/kg			5.6	UJ		
Vinyl acetate	ug/kg			11.2	UJ		
Methyl ethyl ketone (2-Butanone), TCLP	mg/L	0.4	U			0.4	U
Methyl ethyl ketone (2-Butanone)	ug/kg			11.2	UJ		
cis-1,2-Dichloroethylene	ug/kg			5.6	UJ		
1,2-Dichloroethene (total)	ug/kg			5.6	UJ		
Chloroform	mg/L	0.1	U			0.1	U
Chloroform	ug/kg			5.6	UJ		
1,1,1-Trichloroethane	ug/kg			5.6	UJ		
Carbon Tetrachloride, TCLP	mg/L	0.1	U			0.1	U
Carbon Tetrachloride	ug/kg			5.6	UJ		
1,2-Dichloroethane, TCLP	mg/L	0.1	U			0.1	U
1,2-Dichloroethane	ug/kg			5.6	UJ		
Benzene	ug/kg			5.6	UJ		
Trichloroethylene (TCE), TCLP	mg/L	0.1	U			0.1	U
Trichloroethylene (TCE)	ug/kg			5.6	UJ		
1,2-Dichloropropane	ug/kg			5.6	UJ		
Bromodichloromethane	ug/kg			5.6	UJ		

IDW SAMPLING

	StationID	99999		99999		99999	
	SampleID	166VDRM002M2		166VDRM003M2		166VDRM003M2	
	DateCollected	2/19/2002		2/19/2002		2/19/2002	
	DateExtracted	2/20/2002				2/20/2002	
	DateAnalyzed	3/4/2002		3/6/2002		3/4/2002	
	SDGNumber	56341		56341		56341	
Parameter	**Units**						
Benzene, TCLP	mg/L			0.1	U		
Chloromethane	ug/kg	12.3	UJ			11.8	UJ
Vinyl chloride, TCLP	mg/L			0.1	U		
Vinyl chloride	ug/kg	12.3	U			11.8	U
Bromomethane	ug/kg	12.3	U			11.8	U
Chloroethane	ug/kg	12.3	U			11.8	U
1,1-Dichloroethene, TCLP	mg/L			0.1	U		
1,1-Dichloroethene	ug/kg	6.2	U			5.9	U
Acetone	ug/kg	5.4	J			6.1	J
Carbon Disulfide	ug/kg	6.2	U			5.9	U
Methylene Chloride	ug/kg	10.5	U			6.6	U
trans-1,2-Dichloroethene	ug/kg	6.2	U			5.9	U
1,1-Dichloroethane	ug/kg	6.2	U			5.9	U
Vinyl acetate	ug/kg	12.3	UJ			11.8	UJ
Methyl ethyl ketone (2-Butanone), TCLP	mg/L			0.4	U		
Methyl ethyl ketone (2-Butanone)	ug/kg	12.3	UJ			11.8	UJ
cis-1,2-Dichloroethylene	ug/kg	6.2	U			5.9	U
1,2-Dichloroethene (total)	ug/kg	6.2	U			5.9	U
Chloroform	mg/L			0.1	U		
Chloroform	ug/kg	6.2	U			5.9	U
1,1,1-Trichloroethane	ug/kg	6.2	U			5.9	U
Carbon Tetrachloride, TCLP	mg/L			0.1	U		
Carbon Tetrachloride	ug/kg	6.2	U			5.9	U
1,2-Dichloroethane, TCLP	mg/L			0.1	U		
1,2-Dichloroethane	ug/kg	6.2	U			5.9	U
Benzene	ug/kg	6.2	U			5.9	U
Trichloroethylene (TCE), TCLP	mg/L			0.1	U		
Trichloroethylene (TCE)	ug/kg	6.2	U			4.7	J
1,2-Dichloropropane	ug/kg	6.2	U			5.9	U
Bromodichloromethane	ug/kg	6.2	U			5.9	U

IDW SAMPLING	StationID	99999		99999		99999	
	SampleID	166VDRM001M2		166VDRM001M2		166VDRM002M2	
	DateCollected	2/19/2002		2/19/2002		2/19/2002	
	DateExtracted			2/20/2002			
	DateAnalyzed	3/6/2002		3/4/2002		3/6/2002	
	SDGNumber	56341		56341		56341	
Parameter	**Units**						
2-Chloroethyl vinyl ether	ug/kg			11.2	UJ		
cis-1,3-Dichloropropene	ug/kg			5.6	UJ		
Methyl isobutyl ketone (4-Methyl-2-pentanone)	ug/kg			5.6	UJ		
Toluene	ug/kg			1	J		
trans-1,3-Dichloropropene	ug/kg			5.6	UJ		
1,1,2-Trichloroethane	ug/kg			5.6	UJ		
2-Hexanone	ug/kg			11.2	UJ		
Tetrachloroethylene (PCE), TCLP	mg/L	0.1	U			0.1	U
Tetrachloroethylene (PCE)	ug/kg			5.6	UJ		
Dibromochloromethane	ug/kg			5.6	UJ		
Chlorobenzene, TCLP	mg/L	0.1	U			0.1	U
Chlorobenzene	ug/kg			5.6	UJ		
Ethylbenzene	ug/kg			0.6	J		
m+p Xylene	ug/kg			1.6	J		
o-Xylene	ug/kg			5.6	UJ		
Xylenes, Total	ug/kg			1.6	J		
Styrene	ug/kg			5.6	UJ		
Bromoform	ug/kg			5.6	UJ		
1,1,2,2-Tetrachloroethane	ug/kg			5.6	UJ		
1,3-Dichlorobenzene	ug/kg			0.37	J		
1,4-Dichlorobenzene, TCLP	mg/L	0.1	U			0.1	U
1,4-Dichlorobenzene	ug/kg			0.83	J		
1,2-Dichlorobenzene	ug/kg			5.6	UJ		
1,2,4--Trichlorobenzene	ug/kg			5.6	UJ		
1,2,3-Trichlorobenzene	ug/kg			5.6	UJ		

IDW SAMPLING

	StationID	99999		99999		99999	
	SampleID	166VDRM002M2		166VDRM003M2		166VDRM003M2	
	DateCollected	2/19/2002		2/19/2002		2/19/2002	
	DateExtracted	2/20/2002				2/20/2002	
	DateAnalyzed	3/4/2002		3/6/2002		3/4/2002	
	SDGNumber	56341		56341		56341	
Parameter	**Units**						
2-Chloroethyl vinyl ether	ug/kg	12.3	U			11.8	U
cis-1,3-Dichloropropene	ug/kg	6.2	U			5.9	U
Methyl isobutyl ketone (4-Methyl-2-pentanone)	ug/kg	6.2	U			5.9	U
Toluene	ug/kg	0.6	J			5.9	U
trans-1,3-Dichloropropene	ug/kg	6.2	U			5.9	U
1,1,2-Trichloroethane	ug/kg	6.2	U			5.9	U
2-Hexanone	ug/kg	12.3	UJ			11.8	UJ
Tetrachloroethylene (PCE), TCLP	mg/L			0.1	U		
Tetrachloroethylene (PCE)	ug/kg	6.2	U			5.9	U
Dibromochloromethane	ug/kg	6.2	U			5.9	U
Chlorobenzene, TCLP	mg/L			0.1	U		
Chlorobenzene	ug/kg	6.2	U			5.9	U
Ethylbenzene	ug/kg	6.2	U			5.9	U
m+p Xylene	ug/kg	0.65	J			5.9	U
o-Xylene	ug/kg	6.2	U			5.9	U
Xylenes, Total	ug/kg	0.65	J			5.9	U
Styrene	ug/kg	6.2	U			5.9	U
Bromoform	ug/kg	6.2	U			5.9	U
1,1,2,2-Tetrachloroethane	ug/kg	6.2	U			5.9	U
1,3-Dichlorobenzene	ug/kg	6.2	U			5.9	U
1,4-Dichlorobenzene, TCLP	mg/L			0.1	U		
1,4-Dichlorobenzene	ug/kg	0.31	J			5.9	U
1,2-Dichlorobenzene	ug/kg	6.2	U			5.9	U
1,2,4--Trichlorobenzene	ug/kg	6.2	U			5.9	U
1,2,3-Trichlorobenzene	ug/kg	6.2	U			5.9	U

	StationID	K166GW27D		K166GW28D		K166GW29D		K166GW30D	
	SampleID	166GW27DM2		166GW28DM2		166GW29DM2		166GW30DM2	
	DateCollected	3/18/2002		3/18/2002		3/18/2002		3/18/2002	
	DateExtracted								
	DateAnalyzed	3/19/2002		3/19/2002		3/19/2002		3/19/2002	
	SDGNumber	57725		57725		57725		57725	
Parameter	**Units**								
Chloride	mg/L	2.96	=	4.31	=	2.6	=	5.37	=
Nitrate-Nitrite-N	mg/L	0.1	U	0.1	U	0.1	U	0.1	U
Sulfate (as SO4)	mg/L	21.9	=	13.7	=	33.8	=	3.12	=

Analytical Data Summary

	StationID	K166GW30D		K166GW31D		K166GW32D	
	SampleID	166HW30DM2		166GW31DM2		166GW32DM2	
	DateCollected	3/18/2002		3/18/2002		3/18/2002	
	DateExtracted						
	DateAnalyzed	3/19/2002		3/20/2002		3/20/2002	
	SDGNumber	57725		57725		57725	
Parameter	**Units**						
Chloride	mg/L	5.37	=	4.65	=	4.06	=
Nitrate-Nitrite-N	mg/L	0.1	U	0.1	U	0.1	U
Sulfate (as SO4)	mg/L	2.86	=	15.1	=	15.3	=

	StationID	K166GW27D		K166GW28D		K166GW29D		K166GW30D		K166G
	SampleID	166GW27DM2		166GW28DM2		166GW29DM2		166GW30DM2		166HW
	DateCollected	3/18/2002		3/18/2002		3/18/2002		3/18/2002		3/18/
	DateExtracted	3/26/2002		3/26/2002		3/26/2002		3/26/2002		3/26/
	DateAnalyzed	3/27/2002		3/27/2002		3/27/2002		3/27/2002		3/27/
	SDGNumber	57725		57725		57725		57725		57
Parameter	Units									
Iron	ug/L	4340	=	396	=	7090	=	11700	=	9700

	StationID	W30D	K166GW31D		K166GW32D	
	SampleID	30DM2	166GW31DM2		166GW32DM2	
	DateCollected	2002	3/18/2002		3/18/2002	
	DateExtracted	2002	3/26/2002		3/26/2002	
	DateAnalyzed	2002	3/27/2002		3/27/2002	
	SDGNumber	725	57725		57725	
Parameter	Units					
Iron	ug/L	=	6980	=	772	=

	StationID	K166GW27D		K166GW28D		K166GW28D	
	SampleID	166GW27DM2		166GW28DM2		166GW28DM2DL	
	DateCollected	3/18/2002		3/18/2002		3/18/2002	
	DateExtracted	3/26/2002		3/26/2002		3/26/2002	
	DateAnalyzed	3/26/2002		3/26/2002		3/26/2002	
	SDGNumber	57725		57725		57725	
Parameter	**Units**						
Chloromethane	ug/L	1	U	1	U	10	R
Vinyl chloride	ug/L	1	U	1	U	10	R
Bromomethane	ug/L	1	U	1	U	10	R
Chloroethane	ug/L	1	U	1	U	10	R
1,1-Dichloroethene	ug/L	1	U	1	U	10	R
Acetone	ug/L	5	U	24.6	U	43.5	R
Carbon Disulfide	ug/L	5	U	5	U	50	R
Methylene Chloride	ug/L	5	U	5	U	50	R
trans-1,2-Dichloroethene	ug/L	1	U	11.9	=	12.1	R
1,1-Dichloroethane	ug/L	1	U	1	U	10	R
Vinyl acetate	ug/L	5	U	5	U	50	R
Methyl ethyl ketone (2-Butanone)	ug/L	5	U	2.2	J	50	R
cis-1,2-Dichloroethylene	ug/L	1	U	57.2	=	56.7	R
1,2-Dichloroethene (total)	ug/L	2	U	69.2	=	68.8	R
Chloroform	ug/L	1	U	1	U	10	R
1,1,1-Trichloroethane	ug/L	1	U	1	U	10	R
Carbon Tetrachloride	ug/L	1	U	1	U	10	R
1,2-Dichloroethane	ug/L	1	U	1	U	10	R
Benzene	ug/L	1	U	0.28	J	10	R
Trichloroethylene (TCE)	ug/L	10.7	=	236	R	247	=
1,2-Dichloropropane	ug/L	1	U	1	U	10	R
Bromodichloromethane	ug/L	1	U	1	U	10	R
2-Chloroethyl vinyl ether	ug/L	5	UJ	5	U	50	R
cis-1,3-Dichloropropene	ug/L	1	U	1	U	10	R
Methyl isobutyl ketone (4-Methyl-2-pentanone)	ug/L	5	U	3.9	J	50	R
Toluene	ug/L	1	U	1	U	10	R
trans-1,3-Dichloropropene	ug/L	1	U	1	U	10	R
1,1,2-Trichloroethane	ug/L	1	U	1	U	10	R
2-Hexanone	ug/L	5	U	5	U	50	R
Tetrachloroethylene (PCE)	ug/L	1	U	1	U	10	R

	StationID	K166GW29D		K166GW29D		K166GW30D	
	SampleID	166GW29DM2		166GW29DM2DL		166GW30DM2	
	DateCollected	3/18/2002		3/18/2002		3/18/2002	
	DateExtracted	3/26/2002		3/26/2002		3/26/2002	
	DateAnalyzed	3/26/2002		3/26/2002		3/26/2002	
	SDGNumber	57725		57725		57725	
Parameter	**Units**						
Chloromethane	ug/L	1	U	10	R	1	U
Vinyl chloride	ug/L	1	U	10	R	2.3	=
Bromomethane	ug/L	1	U	10	R	1	U
Chloroethane	ug/L	1	U	10	R	1	U
1,1-Dichloroethene	ug/L	1	U	10	R	2.8	=
Acetone	ug/L	5.4	U	25.1	R	7.7	U
Carbon Disulfide	ug/L	5	U	50	R	5	U
Methylene Chloride	ug/L	5	U	50	R	5	U
trans-1,2-Dichloroethene	ug/L	1	U	10	R	38.4	=
1,1-Dichloroethane	ug/L	1	U	10	R	1	U
Vinyl acetate	ug/L	5	U	50	R	5	U
Methyl ethyl ketone (2-Butanone)	ug/L	5	U	50	R	5	U
cis-1,2-Dichloroethylene	ug/L	5	=	4.9	R	267	R
1,2-Dichloroethene (total)	ug/L	5	=	4.9	R	306	R
Chloroform	ug/L	1	U	10	R	1	U
1,1,1-Trichloroethane	ug/L	1	U	10	R	1	U
Carbon Tetrachloride	ug/L	1	U	10	R	1	U
1,2-Dichloroethane	ug/L	1	U	10	R	1	U
Benzene	ug/L	1	U	10	R	0.68	J
Trichloroethylene (TCE)	ug/L	155	R	164	=	1800	R
1,2-Dichloropropane	ug/L	1	U	10	R	1	U
Bromodichloromethane	ug/L	1	U	10	R	1	U
2-Chloroethyl vinyl ether	ug/L	5	U	50	R	5	U
cis-1,3-Dichloropropene	ug/L	1	U	10	R	1	U
Methyl isobutyl ketone (4-Methyl-2-pentanone)	ug/L	5	U	50	R	5	U
Toluene	ug/L	1	U	10	R	1	U
trans-1,3-Dichloropropene	ug/L	1	U	10	R	1	U
1,1,2-Trichloroethane	ug/L	1	U	10	R	1	U
2-Hexanone	ug/L	5	U	50	R	5	U
Tetrachloroethylene (PCE)	ug/L	1	U	10	R	1	U

	StationID	K166GW30D		K166GW30D		K166GW30D	
	SampleID	166GW30DM2DL		166HW30DM2		166HW30DM2DL	
	DateCollected	3/18/2002		3/18/2002		3/18/2002	
	DateExtracted	3/26/2002		3/26/2002		3/26/2002	
	DateAnalyzed	3/26/2002		3/26/2002		3/26/2002	
	SDGNumber	57725		57725		57725	
Parameter	**Units**						
Chloromethane	ug/L	50	R	1	U	50	R
Vinyl chloride	ug/L	50	R	2.3	=	50	R
Bromomethane	ug/L	50	R	1	U	50	R
Chloroethane	ug/L	50	R	1	U	50	R
1,1-Dichloroethene	ug/L	50	R	3	=	50	R
Acetone	ug/L	250	R	6.9	U	250	R
Carbon Disulfide	ug/L	250	R	5	U	250	R
Methylene Chloride	ug/L	250	R	5	U	250	R
trans-1,2-Dichloroethene	ug/L	35.6	R	51.9	=	79.7	R
1,1-Dichloroethane	ug/L	50	R	1	U	50	R
Vinyl acetate	ug/L	250	R	5	U	250	R
Methyl ethyl ketone (2-Butanone)	ug/L	250	R	5	U	250	R
cis-1,2-Dichloroethylene	ug/L	274	=	330	R	504	=
1,2-Dichloroethene (total)	ug/L	310	=	382	R	583	=
Chloroform	ug/L	50	R	1	U	50	R
1,1,1-Trichloroethane	ug/L	50	R	1	U	50	R
Carbon Tetrachloride	ug/L	50	R	1	U	50	R
1,2-Dichloroethane	ug/L	50	R	1	U	50	R
Benzene	ug/L	50	R	0.69	J	50	R
Trichloroethylene (TCE)	ug/L	3010	=	1750	R	2380	=
1,2-Dichloropropane	ug/L	50	R	1	U	50	R
Bromodichloromethane	ug/L	50	R	1	U	50	R
2-Chloroethyl vinyl ether	ug/L	250	R	5	U	250	R
cis-1,3-Dichloropropene	ug/L	50	R	1	U	50	R
Methyl isobutyl ketone (4-Methyl-2-pentanone)	ug/L	250	R	5	U	250	R
Toluene	ug/L	50	R	1	U	50	R
trans-1,3-Dichloropropene	ug/L	50	R	1	U	50	R
1,1,2-Trichloroethane	ug/L	50	R	1	U	50	R
2-Hexanone	ug/L	250	R	5	U	250	R
Tetrachloroethylene (PCE)	ug/L	50	R	1	U	50	R

	StationID	K166GW31D		K166GW31D		K166GW32D	
	SampleID	166GW31DM2		166GW31DM2DL		166GW32DM2	
	DateCollected	3/18/2002		3/18/2002		3/18/2002	
	DateExtracted	3/26/2002		3/26/2002		3/26/2002	
	DateAnalyzed	3/26/2002		3/26/2002		3/26/2002	
	SDGNumber	57725		57725		57725	
Parameter	**Units**						
Chloromethane	ug/L	1	U	10	R	1	U
Vinyl chloride	ug/L	1	U	10	R	1	U
Bromomethane	ug/L	1	U	10	R	1	U
Chloroethane	ug/L	1	U	10	R	1	U
1,1-Dichloroethene	ug/L	0.78	J	10	R	0.98	J
Acetone	ug/L	6.4	U	50	R	5	U
Carbon Disulfide	ug/L	5	U	50	R	5	U
Methylene Chloride	ug/L	5	U	50	R	5	U
trans-1,2-Dichloroethene	ug/L	1.9	=	10	R	3	=
1,1-Dichloroethane	ug/L	1	U	10	R	1	U
Vinyl acetate	ug/L	5	U	50	R	5	U
Methyl ethyl ketone (2-Butanone)	ug/L	5	U	50	R	5	U
cis-1,2-Dichloroethylene	ug/L	22.5	=	23.2	R	49.1	=
1,2-Dichloroethene (total)	ug/L	24.4	=	23.2	R	52.1	=
Chloroform	ug/L	1	U	10	R	1	U
1,1,1-Trichloroethane	ug/L	1	U	10	R	1	U
Carbon Tetrachloride	ug/L	1	U	10	R	1	U
1,2-Dichloroethane	ug/L	1	U	10	R	1	U
Benzene	ug/L	0.3	J	10	R	0.6	J
Trichloroethylene (TCE)	ug/L	490	R	569	=	1220	R
1,2-Dichloropropane	ug/L	1	U	10	R	1	U
Bromodichloromethane	ug/L	1	U	10	R	1	U
2-Chloroethyl vinyl ether	ug/L	5	U	50	R	5	U
cis-1,3-Dichloropropene	ug/L	1	U	10	R	1	U
Methyl isobutyl ketone (4-Methyl-2-pentanone)	ug/L	5	U	50	R	5	U
Toluene	ug/L	1	U	10	R	1	U
trans-1,3-Dichloropropene	ug/L	1	U	10	R	1	U
1,1,2-Trichloroethane	ug/L	1	U	10	R	1	U
2-Hexanone	ug/L	5	U	50	R	5	U
Tetrachloroethylene (PCE)	ug/L	0.28	J	10	R	1	U

	StationID	K166GW32D	
	SampleID	166GW32DM2DL	
	DateCollected	3/18/2002	
	DateExtracted	3/26/2002	
	DateAnalyzed	3/26/2002	
	SDGNumber	57725	
Parameter	**Units**		
Chloromethane	ug/L	50	R
Vinyl chloride	ug/L	50	R
Bromomethane	ug/L	50	R
Chloroethane	ug/L	50	R
1,1-Dichloroethene	ug/L	50	R
Acetone	ug/L	116	R
Carbon Disulfide	ug/L	250	R
Methylene Chloride	ug/L	250	R
trans-1,2-Dichloroethene	ug/L	50	R
1,1-Dichloroethane	ug/L	50	R
Vinyl acetate	ug/L	250	R
Methyl ethyl ketone (2-Butanone)	ug/L	250	R
cis-1,2-Dichloroethylene	ug/L	48.4	R
1,2-Dichloroethene (total)	ug/L	48.4	R
Chloroform	ug/L	50	R
1,1,1-Trichloroethane	ug/L	50	R
Carbon Tetrachloride	ug/L	50	R
1,2-Dichloroethane	ug/L	50	R
Benzene	ug/L	50	R
Trichloroethylene (TCE)	ug/L	1960	=
1,2-Dichloropropane	ug/L	50	R
Bromodichloromethane	ug/L	50	R
2-Chloroethyl vinyl ether	ug/L	250	R
cis-1,3-Dichloropropene	ug/L	50	R
Methyl isobutyl ketone (4-Methyl-2-pentanone)	ug/L	250	R
Toluene	ug/L	50	R
trans-1,3-Dichloropropene	ug/L	50	R
1,1,2-Trichloroethane	ug/L	50	R
2-Hexanone	ug/L	250	R
Tetrachloroethylene (PCE)	ug/L	50	R

	StationID	K166GW27D		K166GW28D		K166GW28D	
	SampleID	166GW27DM2		166GW28DM2		166GW28DM2DL	
	DateCollected	3/18/2002		3/18/2002		3/18/2002	
	DateExtracted	3/26/2002		3/26/2002		3/26/2002	
	DateAnalyzed	3/26/2002		3/26/2002		3/26/2002	
	SDGNumber	57725		57725		57725	
Parameter	**Units**						
Dibromochloromethane	ug/L	1	U	1	U	10	R
Chlorobenzene	ug/L	1	U	1	U	10	R
Ethylbenzene	ug/L	1	U	1	U	1.7	R
m+p Xylene	ug/L	2	U	2	U	20	R
o-Xylene	ug/L	1	U	1	U	10	R
Xylenes, Total	ug/L	3	U	3	U	30	R
Styrene	ug/L	1	U	1	U	10	R
Bromoform	ug/L	1	U	1	U	10	R
1,1,2,2-Tetrachloroethane	ug/L	1	U	1	U	10	R
1,3-Dichlorobenzene	ug/L	1	U	1	U	3.5	R
1,4-Dichlorobenzene	ug/L	1	U	1	U	4.4	R
1,2-Dichlorobenzene	ug/L	1	U	1	U	2.6	R
1,2,4--Trichlorobenzene	ug/L	1	U	1	U	5.5	R
1,2,3-Trichlorobenzene	ug/L	1	U	1	U	10	R
Bromofluorobenzene	PERCENT					98	
Dibromofluoromethane	PERCENT					101	
Toluene-d8	PERCENT					94	

	StationID	K166GW29D		K166GW29D		K166GW30D	
	SampleID	166GW29DM2		166GW29DM2DL		166GW30DM2	
	DateCollected	3/18/2002		3/18/2002		3/18/2002	
	DateExtracted	3/26/2002		3/26/2002		3/26/2002	
	DateAnalyzed	3/26/2002		3/26/2002		3/26/2002	
	SDGNumber	57725		57725		57725	
Parameter	**Units**						
Dibromochloromethane	ug/L	1	U	10	R	1	U
Chlorobenzene	ug/L	1	U	10	R	1	U
Ethylbenzene	ug/L	1	U	10	R	1	U
m+p Xylene	ug/L	2	U	20	R	2	U
o-Xylene	ug/L	1	U	10	R	1	U
Xylenes, Total	ug/L	3	U	30	R	3	U
Styrene	ug/L	1	U	10	R	1	U
Bromoform	ug/L	1	U	10	R	1	U
1,1,2,2-Tetrachloroethane	ug/L	1	U	10	R	1	U
1,3-Dichlorobenzene	ug/L	1	U	10	R	1	U
1,4-Dichlorobenzene	ug/L	1	U	10	R	1	U
1,2-Dichlorobenzene	ug/L	1	U	10	R	1	U
1,2,4--Trichlorobenzene	ug/L	1	U	10	R	1	U
1,2,3-Trichlorobenzene	ug/L	1	U	10	R	1	U
Bromofluorobenzene	PERCENT			96			
Dibromofluoromethane	PERCENT			102			
Toluene-d8	PERCENT			94			

	StationID	K166GW30D		K166GW30D		K166GW30D	
	SampleID	166GW30DM2DL		166HW30DM2		166HW30DM2DL	
	DateCollected	3/18/2002		3/18/2002		3/18/2002	
	DateExtracted	3/26/2002		3/26/2002		3/26/2002	
	DateAnalyzed	3/26/2002		3/26/2002		3/26/2002	
	SDGNumber	57725		57725		57725	
Parameter	**Units**						
Dibromochloromethane	ug/L	50	R	1	U	50	R
Chlorobenzene	ug/L	50	R	1	U	50	R
Ethylbenzene	ug/L	50	R	1	U	50	R
m+p Xylene	ug/L	100	R	2	U	100	R
o-Xylene	ug/L	50	R	1	U	50	R
Xylenes, Total	ug/L	150	R	3	U	150	R
Styrene	ug/L	50	R	1	U	50	R
Bromoform	ug/L	50	R	1	U	50	R
1,1,2,2-Tetrachloroethane	ug/L	50	R	1	U	50	R
1,3-Dichlorobenzene	ug/L	50	R	1	U	50	R
1,4-Dichlorobenzene	ug/L	50	R	1	U	50	R
1,2-Dichlorobenzene	ug/L	50	R	1	U	50	R
1,2,4--Trichlorobenzene	ug/L	50	R	1	U	50	R
1,2,3-Trichlorobenzene	ug/L	50	R	1	U	50	R
Bromofluorobenzene	PERCENT	97				97	
Dibromofluoromethane	PERCENT	101				102	
Toluene-d8	PERCENT	95				94	

	StationID	K166GW31D		K166GW31D		K166GW32D	
	SampleID	166GW31DM2		166GW31DM2DL		166GW32DM2	
	DateCollected	3/18/2002		3/18/2002		3/18/2002	
	DateExtracted	3/26/2002		3/26/2002		3/26/2002	
	DateAnalyzed	3/26/2002		3/26/2002		3/26/2002	
	SDGNumber	57725		57725		57725	
Parameter	**Units**						
Dibromochloromethane	ug/L	1	U	10	R	1	U
Chlorobenzene	ug/L	1	U	10	R	1	U
Ethylbenzene	ug/L	1	U	10	R	1	U
m+p Xylene	ug/L	2	U	20	R	2	U
o-Xylene	ug/L	1	U	10	R	1	U
Xylenes, Total	ug/L	3	U	30	R	3	U
Styrene	ug/L	1	U	10	R	1	U
Bromoform	ug/L	1	U	10	R	1	U
1,1,2,2-Tetrachloroethane	ug/L	1	U	10	R	1	U
1,3-Dichlorobenzene	ug/L	1	U	10	R	1	U
1,4-Dichlorobenzene	ug/L	1	U	10	R	1	U
1,2-Dichlorobenzene	ug/L	1	U	10	R	1	U
1,2,4--Trichlorobenzene	ug/L	1	U	10	R	1	U
1,2,3-Trichlorobenzene	ug/L	1	U	10	R	1	U
Bromofluorobenzene	PERCENT			99			
Dibromofluoromethane	PERCENT			101			
Toluene-d8	PERCENT			93			

	StationID	K166GW32D	
	SampleID	166GW32DM2DL	
	DateCollected	3/18/2002	
	DateExtracted	3/26/2002	
	DateAnalyzed	3/26/2002	
	SDGNumber	57725	
Parameter	**Units**		
Dibromochloromethane	ug/L	50	R
Chlorobenzene	ug/L	50	R
Ethylbenzene	ug/L	50	R
m+p Xylene	ug/L	100	R
o-Xylene	ug/L	50	R
Xylenes, Total	ug/L	150	R
Styrene	ug/L	50	R
Bromoform	ug/L	50	R
1,1,2,2-Tetrachloroethane	ug/L	50	R
1,3-Dichlorobenzene	ug/L	50	R
1,4-Dichlorobenzene	ug/L	8.5	R
1,2-Dichlorobenzene	ug/L	50	R
1,2,4--Trichlorobenzene	ug/L	50	R
1,2,3-Trichlorobenzene	ug/L	50	R
Bromofluorobenzene	PERCENT	97	
Dibromofluoromethane	PERCENT	102	
Toluene-d8	PERCENT	94	

	StationID	K166GW27D		K166GW28D		K166GW28D	
	SampleID	166GW27DM3		166GW28DM3		166GW28DM3DL	
	DateCollected	4/11/2002		4/11/2002		4/11/2002	
	DateExtracted	4/16/2002		4/16/2002		4/16/2002	
	DateAnalyzed	4/16/2002		4/16/2002		4/16/2002	
	SDGNumber	58856		58856		58856	
Parameter	**Units**						
Chloromethane	ug/L	10	U	10	U	100	R
Vinyl chloride	ug/L	10	U	10	U	100	R
Bromomethane	ug/L	10	U	10	U	100	R
Chloroethane	ug/L	10	U	10	U	100	R
1,1-Dichloroethene	ug/L	5	U	5	U	50	R
Acetone	ug/L	10	U	19.6	U	39.3	R
Carbon Disulfide	ug/L	5	U	5	U	50	R
Methylene Chloride	ug/L	5	U	5	U	7.1	R
trans-1,2-Dichloroethene	ug/L	5	U	11.8	=	9.1	R
1,1-Dichloroethane	ug/L	5	U	5	U	50	R
Vinyl acetate	ug/L	10	U	10	U	100	R
Methyl ethyl ketone (2-Butanone)	ug/L	10	U	2.1	J	100	R
cis-1,2-Dichloroethylene	ug/L	5	U	57.9	=	43	R
1,2-Dichloroethene (total)	ug/L	5	U	69.7	=	52.1	R
Chloroform	ug/L	5	U	5	U	50	R
1,1,1-Trichloroethane	ug/L	5	U	5	U	50	R
Carbon Tetrachloride	ug/L	5	U	5	U	50	R
1,2-Dichloroethane	ug/L	5	U	5	U	50	R
Benzene	ug/L	5	U	5	U	50	R
Trichloroethylene (TCE)	ug/L	8.4	=	220	R	198	=
1,2-Dichloropropane	ug/L	5	U	5	U	50	R
Bromodichloromethane	ug/L	5	U	5	U	50	R
2-Chloroethyl vinyl ether	ug/L	5	R	5	U	50	R
cis-1,3-Dichloropropene	ug/L	5	U	5	U	50	R
Methyl isobutyl ketone (4-Methyl-2-pentanone)	ug/L	10	U	2.2	J	100	R
Toluene	ug/L	5	U	5	U	2.5	R
trans-1,3-Dichloropropene	ug/L	5	U	5	U	50	R
1,1,2-Trichloroethane	ug/L	5	U	5	U	50	R
2-Hexanone	ug/L	10	U	10	U	100	R
Tetrachloroethylene (PCE)	ug/L	5	U	5	U	50	R

	StationID	K166GW29D		K166GW29D		K166GW30D	
	SampleID	166GW29DM3		166GW29DM3DL		166GW30DM3	
	DateCollected	4/11/2002		4/11/2002		4/11/2002	
	DateExtracted	4/16/2002		4/16/2002		4/16/2002	
	DateAnalyzed	4/16/2002		4/16/2002		4/16/2002	
	SDGNumber	58856		58856		58856	
Parameter	**Units**						
Chloromethane	ug/L	10	U	20	R	10	U
Vinyl chloride	ug/L	10	U	20	R	4.2	J
Bromomethane	ug/L	10	U	20	R	10	U
Chloroethane	ug/L	10	U	20	R	10	U
1,1-Dichloroethene	ug/L	5	U	10	R	3.5	J
Acetone	ug/L	10	U	20	R	10	U
Carbon Disulfide	ug/L	5	U	10	R	5	U
Methylene Chloride	ug/L	5	U	10	R	5	U
trans-1,2-Dichloroethene	ug/L	0.34	J	10	R	57.2	=
1,1-Dichloroethane	ug/L	5	U	10	R	5	U
Vinyl acetate	ug/L	10	U	20	R	10	U
Methyl ethyl ketone (2-Butanone)	ug/L	10	U	20	R	10	U
cis-1,2-Dichloroethylene	ug/L	4.7	J	5.2	R	373	R
1,2-Dichloroethene (total)	ug/L	5	=	5.2	R	431	R
Chloroform	ug/L	5	U	10	R	5	U
1,1,1-Trichloroethane	ug/L	5	U	10	R	5	U
Carbon Tetrachloride	ug/L	5	U	10	R	5	U
1,2-Dichloroethane	ug/L	5	U	10	R	5	U
Benzene	ug/L	5	U	10	R	0.72	J
Trichloroethylene (TCE)	ug/L	142	R	153	=	1720	R
1,2-Dichloropropane	ug/L	5	U	10	R	5	U
Bromodichloromethane	ug/L	5	U	10	R	5	U
2-Chloroethyl vinyl ether	ug/L	5	U	10	R	5	U
cis-1,3-Dichloropropene	ug/L	5	U	10	R	5	U
Methyl isobutyl ketone (4-Methyl-2-pentanone)	ug/L	10	U	20	R	10	U
Toluene	ug/L	5	U	0.56	R	5	U
trans-1,3-Dichloropropene	ug/L	5	U	10	R	5	U
1,1,2-Trichloroethane	ug/L	5	U	10	R	5	U
2-Hexanone	ug/L	10	U	20	R	10	U
Tetrachloroethylene (PCE)	ug/L	5	U	10	R	5	U

	StationID	K166GW30D		K166GW31D		K166GW31D	
	SampleID	166GW30DM3DL		166GW31DM3		166GW31DM3DL	
	DateCollected	4/11/2002		4/11/2002		4/11/2002	
	DateExtracted	4/16/2002		4/16/2002		4/16/2002	
	DateAnalyzed	4/16/2002		4/16/2002		4/16/2002	
	SDGNumber	58856		58856		58856	
Parameter	**Units**						
Chloromethane	ug/L	500	R	10	U	50	R
Vinyl chloride	ug/L	500	R	10	U	50	R
Bromomethane	ug/L	500	R	10	U	50	R
Chloroethane	ug/L	500	R	10	U	50	R
1,1-Dichloroethene	ug/L	250	R	0.6	J	25	R
Acetone	ug/L	500	R	10	U	11.9	R
Carbon Disulfide	ug/L	250	R	5	U	25	R
Methylene Chloride	ug/L	250	R	5	U	1.9	R
trans-1,2-Dichloroethene	ug/L	56.3	R	1.8	J	2	R
1,1-Dichloroethane	ug/L	250	R	5	U	25	R
Vinyl acetate	ug/L	500	R	10	U	50	R
Methyl ethyl ketone (2-Butanone)	ug/L	500	R	10	U	50	R
cis-1,2-Dichloroethylene	ug/L	387	=	20.3	=	21.2	R
1,2-Dichloroethene (total)	ug/L	443	=	22.1	=	23.2	R
Chloroform	ug/L	250	R	5	U	25	R
1,1,1-Trichloroethane	ug/L	250	R	5	U	25	R
Carbon Tetrachloride	ug/L	250	R	5	U	25	R
1,2-Dichloroethane	ug/L	250	R	5	U	25	R
Benzene	ug/L	250	R	5	U	25	R
Trichloroethylene (TCE)	ug/L	2470	=	402	R	435	=
1,2-Dichloropropane	ug/L	250	R	5	U	25	R
Bromodichloromethane	ug/L	250	R	5	U	25	R
2-Chloroethyl vinyl ether	ug/L	250	R	5	U	25	R
cis-1,3-Dichloropropene	ug/L	250	R	5	U	25	R
Methyl isobutyl ketone (4-Methyl-2-pentanone)	ug/L	500	R	10	U	50	R
Toluene	ug/L	10.4	R	5	U	25	R
trans-1,3-Dichloropropene	ug/L	250	R	5	U	25	R
1,1,2-Trichloroethane	ug/L	250	R	5	U	25	R
2-Hexanone	ug/L	500	R	10	U	50	R
Tetrachloroethylene (PCE)	ug/L	250	R	5	U	25	R

	StationID	K166GW31D		K166GW31D		K166GW32D	
	SampleID	166HW31DM3		166HW31DM3DL		166GW32DM3	
	DateCollected	4/11/2002		4/11/2002		4/11/2002	
	DateExtracted	4/16/2002		4/16/2002		4/16/2002	
	DateAnalyzed	4/16/2002		4/16/2002		4/16/2002	
	SDGNumber	58856		58856		58856	
Parameter	**Units**						
Chloromethane	ug/L	10	U	100	R	10	U
Vinyl chloride	ug/L	10	U	100	R	0.68	J
Bromomethane	ug/L	10	U	100	R	10	U
Chloroethane	ug/L	10	U	100	R	10	U
1,1-Dichloroethene	ug/L	0.58	J	50	R	1.5	J
Acetone	ug/L	10	U	100	R	10.2	U
Carbon Disulfide	ug/L	5	U	50	R	5	U
Methylene Chloride	ug/L	5	U	50	R	5	U
trans-1,2-Dichloroethene	ug/L	1.7	J	50	R	11.4	=
1,1-Dichloroethane	ug/L	5	U	50	R	5	U
Vinyl acetate	ug/L	10	U	100	R	10	U
Methyl ethyl ketone (2-Butanone)	ug/L	10	U	100	R	10	U
cis-1,2-Dichloroethylene	ug/L	19.6	=	20	R	99.5	=
1,2-Dichloroethene (total)	ug/L	21.2	=	20	R	111	=
Chloroform	ug/L	5	U	50	R	5	U
1,1,1-Trichloroethane	ug/L	5	U	50	R	5	U
Carbon Tetrachloride	ug/L	5	U	50	R	5	U
1,2-Dichloroethane	ug/L	5	U	50	R	5	U
Benzene	ug/L	5	U	50	R	0.67	J
Trichloroethylene (TCE)	ug/L	381	R	412	=	1420	R
1,2-Dichloropropane	ug/L	5	U	50	R	5	U
Bromodichloromethane	ug/L	5	U	50	R	5	U
2-Chloroethyl vinyl ether	ug/L	5	U	50	R	5	U
cis-1,3-Dichloropropene	ug/L	5	U	50	R	5	U
Methyl isobutyl ketone (4-Methyl-2-pentanone)	ug/L	10	U	100	R	10	U
Toluene	ug/L	5	U	1.8	R	5	U
trans-1,3-Dichloropropene	ug/L	5	U	50	R	5	U
1,1,2-Trichloroethane	ug/L	5	U	50	R	5	U
2-Hexanone	ug/L	10	U	100	R	10	U
Tetrachloroethylene (PCE)	ug/L	5	U	50	R	0.37	J

Analytical Data Summary

	StationID	K166GW32D	
	SampleID	166GW32DM3DL	
	DateCollected	4/11/2002	
	DateExtracted	4/16/2002	
	DateAnalyzed	4/16/2002	
	SDGNumber	58856	
Parameter	**Units**		
Chloromethane	ug/L	500	R
Vinyl chloride	ug/L	500	R
Bromomethane	ug/L	500	R
Chloroethane	ug/L	500	R
1,1-Dichloroethene	ug/L	250	R
Acetone	ug/L	500	R
Carbon Disulfide	ug/L	250	R
Methylene Chloride	ug/L	250	R
trans-1,2-Dichloroethene	ug/L	16.2	R
1,1-Dichloroethane	ug/L	250	R
Vinyl acetate	ug/L	500	R
Methyl ethyl ketone (2-Butanone)	ug/L	500	R
cis-1,2-Dichloroethylene	ug/L	143	R
1,2-Dichloroethene (total)	ug/L	160	R
Chloroform	ug/L	250	R
1,1,1-Trichloroethane	ug/L	250	R
Carbon Tetrachloride	ug/L	250	R
1,2-Dichloroethane	ug/L	250	R
Benzene	ug/L	250	R
Trichloroethylene (TCE)	ug/L	1910	=
1,2-Dichloropropane	ug/L	250	R
Bromodichloromethane	ug/L	250	R
2-Chloroethyl vinyl ether	ug/L	250	R
cis-1,3-Dichloropropene	ug/L	250	R
Methyl isobutyl ketone (4-Methyl-2-pentanone)	ug/L	500	R
Toluene	ug/L	250	R
trans-1,3-Dichloropropene	ug/L	250	R
1,1,2-Trichloroethane	ug/L	250	R
2-Hexanone	ug/L	500	R
Tetrachloroethylene (PCE)	ug/L	250	R

	StationID	K166GW27D		K166GW28D		K166GW28D	
	SampleID	166GW27DM3		166GW28DM3		166GW28DM3DL	
	DateCollected	4/11/2002		4/11/2002		4/11/2002	
	DateExtracted	4/16/2002		4/16/2002		4/16/2002	
	DateAnalyzed	4/16/2002		4/16/2002		4/16/2002	
	SDGNumber	58856		58856		58856	
Parameter	**Units**						
Dibromochloromethane	ug/L	5	U	5	U	50	R
Chlorobenzene	ug/L	5	U	5	U	50	R
Ethylbenzene	ug/L	5	U	5	U	50	R
m+p Xylene	ug/L	5	U	5	U	50	R
o-Xylene	ug/L	5	U	5	U	50	R
Xylenes, Total	ug/L	5	U	5	U	50	R
Styrene	ug/L	5	U	5	U	50	R
Bromoform	ug/L	5	U	5	U	50	R
1,1,2,2-Tetrachloroethane	ug/L	5	U	5	U	50	R
1,3-Dichlorobenzene	ug/L	5	U	5	U	50	R
1,4-Dichlorobenzene	ug/L	5	U	5	U	2	R
1,2-Dichlorobenzene	ug/L	5	U	5	U	50	R
1,2,4--Trichlorobenzene	ug/L	5	U	5	U	50	R
1,2,3-Trichlorobenzene	ug/L	5	U	5	U	50	R
Bromofluorobenzene	PERCENT					96	
Dibromofluoromethane	PERCENT					103	
Toluene-d8	PERCENT					94	

	StationID	K166GW29D		K166GW29D		K166GW30D	
	SampleID	166GW29DM3		166GW29DM3DL		166GW30DM3	
	DateCollected	4/11/2002		4/11/2002		4/11/2002	
	DateExtracted	4/16/2002		4/16/2002		4/16/2002	
	DateAnalyzed	4/16/2002		4/16/2002		4/16/2002	
	SDGNumber	58856		58856		58856	
Parameter	**Units**						
Dibromochloromethane	ug/L	5	U	10	R	5	U
Chlorobenzene	ug/L	5	U	10	R	5	U
Ethylbenzene	ug/L	5	U	10	R	5	U
m+p Xylene	ug/L	5	U	10	R	5	U
o-Xylene	ug/L	5	U	10	R	5	U
Xylenes, Total	ug/L	5	U	10	R	5	U
Styrene	ug/L	5	U	10	R	5	U
Bromoform	ug/L	5	U	10	R	5	U
1,1,2,2-Tetrachloroethane	ug/L	5	U	10	R	5	U
1,3-Dichlorobenzene	ug/L	5	U	10	R	5	U
1,4-Dichlorobenzene	ug/L	5	U	0.35	R	5	U
1,2-Dichlorobenzene	ug/L	5	U	10	R	5	U
1,2,4--Trichlorobenzene	ug/L	5	U	10	R	5	U
1,2,3-Trichlorobenzene	ug/L	5	U	10	R	5	U
Bromofluorobenzene	PERCENT			94			
Dibromofluoromethane	PERCENT			103			
Toluene-d8	PERCENT			94			

	StationID	K166GW30D		K166GW31D		K166GW31D	
	SampleID	166GW30DM3DL		166GW31DM3		166GW31DM3DL	
	DateCollected	4/11/2002		4/11/2002		4/11/2002	
	DateExtracted	4/16/2002		4/16/2002		4/16/2002	
	DateAnalyzed	4/16/2002		4/16/2002		4/16/2002	
	SDGNumber	58856		58856		58856	
Parameter	**Units**						
Dibromochloromethane	ug/L	250	R	5	U	25	R
Chlorobenzene	ug/L	250	R	5	U	25	R
Ethylbenzene	ug/L	250	R	5	U	25	R
m+p Xylene	ug/L	250	R	5	U	25	R
o-Xylene	ug/L	250	R	5	U	25	R
Xylenes, Total	ug/L	250	R	5	U	25	R
Styrene	ug/L	250	R	5	U	25	R
Bromoform	ug/L	250	R	5	U	25	R
1,1,2,2-Tetrachloroethane	ug/L	250	R	5	U	25	R
1,3-Dichlorobenzene	ug/L	250	R	5	U	25	R
1,4-Dichlorobenzene	ug/L	250	R	5	U	0.83	R
1,2-Dichlorobenzene	ug/L	250	R	5	U	25	R
1,2,4--Trichlorobenzene	ug/L	250	R	5	U	25	R
1,2,3-Trichlorobenzene	ug/L	250	R	5	U	25	R
Bromofluorobenzene	PERCENT	96				98	
Dibromofluoromethane	PERCENT	102				104	
Toluene-d8	PERCENT	94				95	

	StationID	K166GW31D		K166GW31D		K166GW32D	
	SampleID	166HW31DM3		166HW31DM3DL		166GW32DM3	
	DateCollected	4/11/2002		4/11/2002		4/11/2002	
	DateExtracted	4/16/2002		4/16/2002		4/16/2002	
	DateAnalyzed	4/16/2002		4/16/2002		4/16/2002	
	SDGNumber	58856		58856		58856	
Parameter	**Units**						
Dibromochloromethane	ug/L	5	U	50	R	5	U
Chlorobenzene	ug/L	5	U	50	R	5	U
Ethylbenzene	ug/L	5	U	50	R	5	U
m+p Xylene	ug/L	5	U	50	R	5	U
o-Xylene	ug/L	5	U	50	R	5	U
Xylenes, Total	ug/L	5	U	50	R	5	U
Styrene	ug/L	5	U	50	R	5	U
Bromoform	ug/L	5	U	50	R	5	U
1,1,2,2-Tetrachloroethane	ug/L	5	U	50	R	5	U
1,3-Dichlorobenzene	ug/L	5	U	50	R	5	U
1,4-Dichlorobenzene	ug/L	5	U	2.1	R	5	U
1,2-Dichlorobenzene	ug/L	5	U	50	R	5	U
1,2,4--Trichlorobenzene	ug/L	5	U	50	R	5	U
1,2,3-Trichlorobenzene	ug/L	5	U	50	R	5	U
Bromofluorobenzene	PERCENT			95			
Dibromofluoromethane	PERCENT			102			
Toluene-d8	PERCENT			95			

	StationID	K166GW32D	
	SampleID	166GW32DM3DL	
	DateCollected	4/11/2002	
	DateExtracted	4/16/2002	
	DateAnalyzed	4/16/2002	
	SDGNumber	58856	
Parameter	**Units**		
Dibromochloromethane	ug/L	250	R
Chlorobenzene	ug/L	250	R
Ethylbenzene	ug/L	250	R
m+p Xylene	ug/L	250	R
o-Xylene	ug/L	250	R
Xylenes, Total	ug/L	250	R
Styrene	ug/L	250	R
Bromoform	ug/L	250	R
1,1,2,2-Tetrachloroethane	ug/L	250	R
1,3-Dichlorobenzene	ug/L	250	R
1,4-Dichlorobenzene	ug/L	9.3	R
1,2-Dichlorobenzene	ug/L	250	R
1,2,4--Trichlorobenzene	ug/L	250	R
1,2,3-Trichlorobenzene	ug/L	250	R
Bromofluorobenzene	PERCENT	95	
Dibromofluoromethane	PERCENT	103	
Toluene-d8	PERCENT	94	

	StationID	K166GW27D		K166GW28D		K166GW29D		K166GW30D		K166G
	SampleID	166GW27DM3		166GW28DM3		166GW29DM3		166GW30DM3		166GW
	DateCollected	4/11/2002		4/11/2002		4/11/2002		4/11/2002		4/11/
	DateExtracted	4/16/2002		4/16/2002		4/16/2002		4/16/2002		4/16/
	DateAnalyzed	4/16/2002		4/16/2002		4/16/2002		4/16/2002		4/16/
	SDGNumber	58856		58856		58856		58856		58
Parameter	Units									
Iron	ug/L	6830	=	298	=	6470	=	3710	=	7320

	StationID	W31D	K166GW31D		K166GW32D	
	SampleID	31DM3	166HW31DM3		166GW32DM3	
	DateCollected	2002	4/11/2002		4/11/2002	
	DateExtracted	2002	4/16/2002		4/16/2002	
	DateAnalyzed	2002	4/16/2002		4/16/2002	
	SDGNumber	856	58856		58856	
Parameter	**Units**					
Iron	ug/L	=	7320	=	1670	=

	StationID	K166GW27D		K166GW28D		K166GW29D		K166GW30D	
	SampleID	166GW27DM3		166GW28DM3		166GW29DM3		166GW30DM3	
	DateCollected	4/11/2002		4/11/2002		4/11/2002		4/11/2002	
	DateExtracted								
	DateAnalyzed	4/13/2002		4/13/2002		4/13/2002		4/13/2002	
	SDGNumber	58856		58856		58856		58856	
Parameter	**Units**								
Chloride	mg/L	9.56	J	10	J	9.28	J	13.1	J
Nitrate-Nitrite-N	mg/L	0.1	U	0.1	U	0.1	U	0.1	U
Sulfate (as SO4)	mg/L	31.8	J	12.4	J	35.7	J	1.76	J

	StationID	K166GW31D		K166GW31D		K166GW32D	
	SampleID	166GW31DM3		166HW31DM3		166GW32DM3	
	DateCollected	4/11/2002		4/11/2002		4/11/2002	
	DateExtracted						
	DateAnalyzed	4/13/2002		4/13/2002		4/13/2002	
	SDGNumber	58856		58856		58856	
Parameter	**Units**						
Chloride	mg/L	10.9	J	11.2	J	8.38	J
Nitrate-Nitrite-N	mg/L	0.1	U	0.1	U	0.1	U
Sulfate (as SO4)	mg/L	8.97	J	9.4	J	10.1	J

	StationID	K166GW27D		K166GW28D		K166GW29D		K166GW30D		K166G
	SampleID	166GW27DM3		166GW28DM3		166GW29DM3		166GW30DM3		166GW
	DateCollected	4/11/2002		4/11/2002		4/11/2002		4/11/2002		4/11/
	DateExtracted									
	DateAnalyzed	4/18/2002		4/18/2002		4/18/2002		4/18/2002		4/18/
	SDGNumber	P0204264		P0204264		P0204264		P0204264		P020
Parameter	**Units**									
Hydrogen	nM	1.4	=	22	=	0.56	=	650	=	13000
Methane	ug/L	8.6	=	510	=	34	=	640	=	110

	StationID	W31D	K166GW31D		K166GW32D	
	SampleID	31DM3	166HW31DM3		166GW32DM3	
	DateCollected	2002	4/11/2002		4/11/2002	
	DateExtracted					
	DateAnalyzed	2002	4/18/2002		4/18/2002	
	SDGNumber	4264	P0204264		P0204264	
Parameter	**Units**					
Hydrogen	nM	=	16000	=	3.5	=
Methane	ug/L	=	88	=	610	=

CH2MHILL

PROJECT NUMBER	BORING NUMBER	
158814	166GW27D	SHEET 1 OF 1

SOIL BORING LOG

PROJECT : Charleston Naval Complex | LOCATION : SWMU 166 | NORTHING: 388255.9

ELEVATION : 41.19 | DRILLING CONTRACTOR : Columbia Technologies | EASTING: 2300406

DRILLING METHOD AND EQUIPMENT USED : License # 1485

WATER LEVELS : 7.5 | START : 2/5/2002 | END : 2/5/2002 | LOGGER : Darryl Gates

DEPTH BELOW SURFACE (FT)	INTERVAL (FT)	RECOVERY (IN)	#/TYPE	STANDARD PENETRATION TEST RESULTS 6"-6"-6"-6" (N)	SOIL DESCRIPTION: SOIL NAME, USCS GROUP SYMBOL, COLOR, MOISTURE CONTENT, RELATIVE DENSITY, OR CONSISTENCY, SOIL STRUCTURE, MINERALOGY.	COMMENTS: DEPTH OF CASING, DRILLING RATE, DRILLING FLUID LOSS, TESTS, AND INSTRUMENTATION. OVM (ppm): Breathing Zone / Headspace
	surface				Grass	0
5						
	0-6				Brown fine slightly silty sand, loose, damp	0
10						
15						
20	6.0-20				Gray fine silty sand w/ black mica, wet at 7.0, loose	0
	20-24				Orange fine to medium slightly silty sand, saturated	0
25						
	24-26				Gray fine slightly silty sand, saturated, loose	0
					End of Boring	

PROJECT NUMBER	BORING NUMBER	
158814	166GW28D	SHEET OF

CH2MHILL

SOIL BORING LOG

PROJECT : Charleston Naval Complex | LOCATION : SWMU 166 | NORTHING: 388262.6

ELEVATION : 41.22 | DRILLING CONTRACTOR : Columbia Technologies | EASTING: 2300406.7

DRILLING METHOD AND EQUIPMENT USED : | License # 1485

WATER LEVELS : 7.52 | START : 2/4/2002 | END : 2/4/2002 | LOGGER : Darryl Gates

DEPTH BELOW SURFACE (FT)	INTERVAL (FT)	RECOVERY (IN)	#/TYPE	STANDARD PENETRATION TEST RESULTS 6"-6"-6"-6" (N)	SOIL DESCRIPTION: SOIL NAME, USCS GROUP SYMBOL, COLOR, MOISTURE CONTENT, RELATIVE DENSITY, OR CONSISTENCY, SOIL STRUCTURE, MINERALOGY.	COMMENTS: DEPTH OF CASING, DRILLING RATE, DRILLING FLUID LOSS, TESTS, AND INSTRUMENTATION. OVM (ppm): Breathing Zone / Headspace
	surface				Grass	0
5						
	0-6				Brown fine slightly silty sand, loose, damp	0
10						
15						
20	6.0-20				Gray fine silty sand w/ black mica, wet at 7.0, loose	0
	20-24				Orange fine to medium slightly silty sand, saturated	0
25						
					Gray fine slightly silty sand, saturated, loose	0

CH2MHILL

PROJECT NUMBER	BORING NUMBER SHEET OF

SOIL BORING LOG

PROJECT : Charleston Naval Complex LOCATION : SWMU 166

ELEVATION : DRILLING CONTRACTOR : Columbia Technologies

DRILLING METHOD AND EQUIPMENT USED :

WATER LEVELS : 7.52 START : 2/4/2002 END : 2/4/2002 LOGGER : Darryl Gates

DEPTH BELOW SURFACE (FT)	INTERVAL (FT)	RECOVERY (IN)	#/TYPE	STANDARD PENETRATION TEST RESULTS 6"-6"-6"-6" (N)	SOIL DESCRIPTION SOIL NAME, USCS GROUP SYMBOL, COLOR, MOISTURE CONTENT, RELATIVE DENSITY, OR CONSISTENCY, SOIL STRUCTURE, MINERALOGY.	COMMENTS DEPTH OF CASING, DRILLING RATE, DRILLING FLUID LOSS, TESTS, AND INSTRUMENTATION. OVM (ppm): Breathing Zone Headspace
30						
	24-32				Gray fine slightly silty sand, saturated, loose	
					End of Boring	
35						
40						
45						
50						

CH2MHILL

PROJECT NUMBER	BORING NUMBER	
158814	166GW29D	SHEET 1 OF 1

SOIL BORING LOG

PROJECT : Charleston Naval Complex | LOCATION : SWMU 166 | NORTHING: 388259.2

ELEVATION : 41.03 | DRILLING CONTRACTOR : Columbia Technologies | EASTING: 2300438.9

DRILLING METHOD AND EQUIPMENT USED : | License # 1485

WATER LEVELS : 7.37 | START : 2/1/2002 | END : 2/1/2002 | LOGGER : Darryl Gates

DEPTH BELOW SURFACE (FT)	INTERVAL (FT)	RECOVERY (IN)	#/TYPE	STANDARD PENETRATION TEST RESULTS 6"-6"-6"-6" (N)	SOIL DESCRIPTION: SOIL NAME, USCS GROUP SYMBOL, COLOR, MOISTURE CONTENT, RELATIVE DENSITY, OR CONSISTENCY, SOIL STRUCTURE, MINERALOGY.	COMMENTS: DEPTH OF CASING, DRILLING RATE, DRILLING FLUID LOSS, TESTS, AND INSTRUMENTATION. OVM (ppm): Breathing Zone / Headspace
	surface				Grass	0
5						
	0-6				Brown fine slightly silty sand, loose, damp	0
10						
15						
20	6.0-20				Gray fine silty sand w/ black mica, wet at 7.0, loose	0
	20-24				Orange fine to medium slightly silty sand, saturated	0
25						
	24-27				Gray fine slightly silty sand, saturated, loose	0
					End of Boring	

CH2MHILL

PROJECT NUMBER	BORING NUMBER	
158814	166GW30D	SHEET 1 OF 1

SOIL BORING LOG

PROJECT : Charleston Naval Complex | LOCATION : SWMU 166 | NORTHING: 388264.4

ELEVATION : 40.89 | DRILLING CONTRACTOR : Columbia Technologies | EASTING: 2300434.7

DRILLING METHOD AND EQUIPMENT USED : License # 1485

WATER LEVELS : 7.49 | START : 2/4/2002 | END : 2/4/2002 | LOGGER : Darryl Gates

DEPTH BELOW SURFACE (FT)	INTERVAL (FT)	RECOVERY (IN)	#/TYPE	STANDARD PENETRATION TEST RESULTS 6"-6"-6"-6" (N)	SOIL DESCRIPTION: SOIL NAME, USCS GROUP SYMBOL, COLOR, MOISTURE CONTENT, RELATIVE DENSITY, OR CONSISTENCY, SOIL STRUCTURE, MINERALOGY.	COMMENTS: DEPTH OF CASING, DRILLING RATE, DRILLING FLUID LOSS, TESTS, AND INSTRUMENTATION. OVM (ppm): Breathing Zone / Headspace
	surface				Grass	0
5						
	0-6				Brown fine slightly silty sand, loose, damp	0
10						
15						
20	6.0-20				Gray fine silty sand w/ black mica, wet at 7.0, loose	0
	20-24				Orange fine to medium slightly silty sand, saturated	0
25						
					Gray fine slightly silty sand, saturated, loose	0

CH2MHILL

PROJECT NUMBER	BORING NUMBER	SHEET 2 OF 2

SOIL BORING LOG

PROJECT : Charleston Naval Complex LOCATION : SWMU 166

ELEVATION : DRILLING CONTRACTOR : Columbia Technologies

DRILLING METHOD AND EQUIPMENT USED :

WATER LEVELS : 7.49 START : 2/4/2002 END : 2/4/2002 LOGGER : Darryl Gates

DEPTH BELOW SURFACE (FT).	INTERVAL (FT)	RECOVERY (IN)	#/TYPE	STANDARD PENETRATION TEST RESULTS 6"-6"-6"-6" (N)	SOIL DESCRIPTION: SOIL NAME, USCS GROUP SYMBOL, COLOR, MOISTURE CONTENT, RELATIVE DENSITY, OR CONSISTENCY, SOIL STRUCTURE, MINERALOGY.	COMMENTS: DEPTH OF CASING, DRILLING RATE, DRILLING FLUID LOSS, TESTS, AND INSTRUMENTATION. OVM (ppm): Breathing Zone Headspace
30						
	24-34				Gray fine slightly silty sand, saturated, loose	
35					End of Boring	
40						
45						
50						

CH2MHILL

PROJECT NUMBER	BORING NUMBER	
158814	166GW31D	SHEET 1 OF 2

SOIL BORING LOG

PROJECT : Charleston Naval Complex | LOCATION : SWMU 166 | NORTHING: 388313.5

ELEVATION : 41.26 | DRILLING CONTRACTOR : Columbia Technologies | EASTING: 2300495.2

DRILLING METHOD AND EQUIPMENT USED : | License # 1485

WATER LEVELS : 8.27 | START : 1/30/2002 | END : 1/30/2002 | LOGGER : Darryl Gates

DEPTH BELOW SURFACE (FT)	INTERVAL (FT)	RECOVERY (IN)	#/TYPE	STANDARD PENETRATION TEST RESULTS 6"-6"-6"-6" (N)	SOIL DESCRIPTION: SOIL NAME, USCS GROUP SYMBOL, COLOR, MOISTURE CONTENT, RELATIVE DENSITY, OR CONSISTENCY, SOIL STRUCTURE, MINERALOGY.	COMMENTS: DEPTH OF CASING, DRILLING RATE, DRILLING FLUID LOSS, TESTS, AND INSTRUMENTATION. OVM (ppm): Breathing Zone / Headspace
	surface				Grass	0
5						
	0-6				Brown fine slightly silty sand, loose, damp	0
10						
15						
20	6.0-20				Gray fine silty sand w/ black mica, wet at 7.0, loose	0
	20-24				Orange fine to medium slightly silty sand, saturated	0
25						
					Gray fine slightly silty sand, saturated, loose	0

CH2MHILL

PROJECT NUMBER	BORING NUMBER	SHEET OF

SOIL BORING LOG

PROJECT : Charleston Naval Complex LOCATION : SWMU 166

ELEVATION : DRILLING CONTRACTOR : Columbia Technologies

DRILLING METHOD AND EQUIPMENT USED :

WATER LEVELS : 8.27 START : 1/30/2002 END : 1/30/2002 LOGGER : Darryl Gates

DEPTH BELOW SURFACE (FT)	INTERVAL (FT)	RECOVERY (IN)	#/TYPE	STANDARD PENETRATION TEST RESULTS 6"-6"-6"-6" (N)	SOIL DESCRIPTION: SOIL NAME, USCS GROUP SYMBOL, COLOR, MOISTURE CONTENT, RELATIVE DENSITY, OR CONSISTENCY, SOIL STRUCTURE, MINERALOGY.	COMMENTS: DEPTH OF CASING, DRILLING RATE, DRILLING FLUID LOSS, TESTS, AND INSTRUMENTATION. OVM (ppm): Breathing Zone Headspace
30	24-30				Gray fine slightly silty sand, saturated, loose	
					End of Boring	
35						
40						
45						
50						

CH2MHILL

PROJECT NUMBER	BORING NUMBER	
158814	166GW32D	SHEET 1 OF 2

SOIL BORING LOG

PROJECT : Charleston Naval Complex | LOCATION : SWMU 166 | NORTHING: 388309.2

ELEVATION : 41.24 | DRILLING CONTRACTOR : Columbia Technologies | EASTING: 2300498.7

DRILLING METHOD AND EQUIPMENT USED : | License # 1485

WATER LEVELS : 8.05 | START : 2/1/2002 | END : 2/1/2002 | LOGGER : Darryl Gates

DEPTH BELOW SURFACE (FT)	INTERVAL (FT)	RECOVERY (IN)	#/TYPE	STANDARD PENETRATION TEST RESULTS 6"-6"-6"-6" (N)	SOIL DESCRIPTION: SOIL NAME, USCS GROUP SYMBOL, COLOR, MOISTURE CONTENT, RELATIVE DENSITY, OR CONSISTENCY, SOIL STRUCTURE, MINERALOGY.	COMMENTS: DEPTH OF CASING, DRILLING RATE, DRILLING FLUID LOSS, TESTS, AND INSTRUMENTATION. OVM (ppm): Breathing Zone / Headspace
	surface				Grass	0
5						
	0-6				Brown fine slightly silty sand, loose, damp	0
10						
15						
20	6.0-20				Gray fine silty sand w/ black mica, wet at 7.0, loose	0
	20-24				Orange fine to medium slightly silty sand, saturated	0
25						
					Gray fine slightly silty sand, saturated, loose	0

CH2MHILL

PROJECT NUMBER	BORING NUMBER
	SHEET 2 OF 2

SOIL BORING LOG

PROJECT : Charleston Naval Complex LOCATION : SWMU 166

ELEVATION : DRILLING CONTRACTOR : Columbia Technologies

DRILLING METHOD AND EQUIPMENT USED :

WATER LEVELS : 8.05 START : 2/1/2002 END : 2/1/2002 LOGGER : Darryl Gates

DEPTH BELOW SURFACE (FT)	INTERVAL (FT)	RECOVERY (IN)	#/TYPE	STANDARD PENETRATION TEST RESULTS 6"-6"-6"-6" (N)	SOIL DESCRIPTION: SOIL NAME, USCS GROUP SYMBOL, COLOR, MOISTURE CONTENT, RELATIVE DENSITY, OR CONSISTENCY, SOIL STRUCTURE, MINERALOGY.	COMMENTS: DEPTH OF CASING, DRILLING RATE, DRILLING FLUID LOSS, TESTS, AND INSTRUMENTATION. OVM (ppm): Breathing Zone Headspace
30						
34	24-34				Gray fine slightly silty sand, saturated, loose	
35	34-35				Gray fine slightly silty sand with clay stringers, med dense.	
					End of Boring	
40						
45						
50						

CH2MHILL

PROJECT NUMBER	BORING NUMBER
158814.ZA.EX.07	166GW033D

SOIL BORING LOG

PROJECT : Charleston Naval Complex - Zone K SWMU 166 LOCATION : Charleston, SC NORTHING: 388093.3

ELEVATION : 41.57 feet MSL DRILLING CONTRACTOR : Prosonic Corporation License # 1435 EASTING: 2299508

DRILLING METHOD AND EQUIPMENT USED : Rotosonic (standard 4- and 6-inch casings)

WATER LEVELS : Not Measured START : 5/16/2002 END: 5/16/2002 LOGGER : D Beverly

DEPTH BELOW SURFACE (FT)	INTERVAL (FT)	RECOVERY (IN)	#/TYPE	STANDARD PENETRATION TEST RESULTS 6"-6"-6"-6" (N)	SOIL DESCRIPTION: SOIL NAME, USCS GROUP SYMBOL, COLOR, MOISTURE CONTENT, RELATIVE DENSITY, OR CONSISTENCY, SOIL STRUCTURE, MINERALOGY.	COMMENTS: DEPTH OF CASING, DRILLING RATE, DRILLING FLUID LOSS, TESTS, AND INSTRUMENTATION.
	0 - 2.8			Used rotosonic drilling method no penetration test results	Silt (ML) trace fine sand, loose, dry, dark gray (2.5Y;3/1)	
	2.8 - 6.4				Sand (SP) fine grained, some silt, moist ot wet, very dark grayish brown (10YR,3/7)	
5						
	6 - 34.3				Sand (SW) fine grained, loose, wet, light gray (2.5Y;7/2)	
10						
15						
					pale yellow (2.5Y;6/6)	
20					brownish yellow (10YR;6/6)	
25					pale yellow (2.5YR;7/4)	
30						
	34.3 - 35				Clayey Sand (SC) fine to coarse grained, black limestone fragments, wet, dark greenish gray (1 GLEY;4/1)	
35						

Boring Terminated at 35 Feet

CH2MHILL

PROJECT NUMBER	BORING NUMBER
158814.ZA.EX.07	166GW034D

SOIL BORING LOG

PROJECT : Charleston Naval Complex - Zone K SWMU 166 LOCATION : Charleston, SC NORTHING: 388051.8

ELEVATION : 40.81 feet MSL DRILLING CONTRACTOR : Prosonic Corporation License # 1435 EASTING: 2300216.8

DRILLING METHOD AND EQUIPMENT USED : Hollow Stem Auger (7 1/4-inch)

WATER LEVELS : Not Measured START : 5/16/2002 END: 5/16/2002 LOGGER : D Beverly

DEPTH BELOW SURFACE (FT)	INTERVAL (FT)	RECOVERY (IN)	#/TYPE	STANDARD PENETRATION TEST RESULTS 6"-6"-6"-6" (N)	SOIL DESCRIPTION: SOIL NAME, USCS GROUP SYMBOL, COLOR, MOISTURE CONTENT, RELATIVE DENSITY, OR CONSISTENCY, SOIL STRUCTURE, MINERALOGY.	COMMENTS: DEPTH OF CASING, DRILLING RATE, DRILLING FLUID LOSS, TESTS, AND INSTRUMENTATION.
					See Boring log from 166GW035D	
5						
10						
15						
20						
25						

Boring Terminated at 27.5 Feet

CH2MHILL

PROJECT NUMBER	BORING NUMBER
158814.ZA.EX.07	166GW035D

SOIL BORING LOG

PROJECT : Charleston Naval Complex - Zone K SWMU 166 | LOCATION : Charleston, SC | NORTHING: 388048.(

ELEVATION : 40.81 feet MSL | DRILLING CONTRACTOR : Prosonic Corporation License # 1435 | EASTING: 2300214.2

DRILLING METHOD AND EQUIPMENT USED : Rotosonic (standard 4- and 6-inch casings)

WATER LEVELS : Not Measured | START : 5/14/2002 | END: 5/14/2002 | LOGGER : D Beverly

DEPTH BELOW SURFACE (FT)	INTERVAL (FT)	RECOVERY (IN)	#/TYPE	STANDARD PENETRATION TEST RESULTS 6"-6"-6"-6" (N)	SOIL DESCRIPTION: SOIL NAME, USCS GROUP SYMBOL, COLOR, MOISTURE CONTENT, RELATIVE DENSITY, OR CONSISTENCY, SOIL STRUCTURE, MINERALOGY.	COMMENTS: DEPTH OF CASING, DRILLING RATE, DRILLING FLUID LOSS, TESTS, AND INSTRUMENTATION.
	0 - 1.2			Used rotosonic drilling method no penetration test results	Asphalt 0-0.3 feet, sand/gravel (FILL) 0.3-1.2 feet,	
	1.2 - 17.5				Sand (SW) very fine grained, loose, dry, yellow (10YR;7/8) with black	
5						
					wet, color change with depth from yellow (5Y;7/6) to gray (5Y;6/1)	
10						
15						
	17.5 - 30.8				Sand (SP) fine grained, some clay, mica, wet, greenish gray (1 GLEY;5/1)	
20						
25						
					increase clay with depth, medium stiff	
30						
	30.8 - 32				Clayey Sand (SC) fine to coarse grained, black limestone fragments, white shell fragments, wet, greenish gray (1 GLEY;5/1)	
	32 - 35				Clayey Silt (ML) some fine sand, stiff, low plasticity, shell fragments, wet, greenish gray (1 GLEY;5/1) and light olive gray (5Y;6/1)	
35						

Boring Terminated at 35 Feet

CH2MHILL

PROJECT NUMBER	BORING NUMBER
158814.ZA.EX.07	166GW036D

SOIL BORING LOG

PROJECT : Charleston Naval Complex - Zone K SWMU 166 LOCATION : Charleston, SC

ELEVATION : 40.48 feet MSL DRILLING CONTRACTOR : Prosonic Corporation License # 1435

DRILLING METHOD AND EQUIPMENT USED : Hollow Stem Auger (7 1/4-inch) and Rotosonic (standard 4- and 6-inch casings)

WATER LEVELS : Not Measured START : 5/16/2002 END: 5/16/2002 LOGGER : D Beverly

DEPTH BELOW SURFACE (FT)	INTERVAL (FT)	RECOVERY (IN)	#/TYPE	STANDARD PENETRATION TEST RESULTS 6"-6"-6"-6" (N)	SOIL DESCRIPTION: SOIL NAME, USCS GROUP SYMBOL, COLOR, MOISTURE CONTENT, RELATIVE DENSITY, OR CONSISTENCY, SOIL STRUCTURE, MINERALOGY.	COMMENTS: DEPTH OF CASING, DRILLING RATE, DRILLING FLUID LOSS, TESTS, AND INSTRUMENTATION.
					See Boring log from 166GW037D	
5						
10						
15						
20						
25						

Boring Terminated at 27 Feet

CH2MHILL

PROJECT NUMBER	BORING NUMBER
158814.ZA.EX.07	166GW037D

SOIL BORING LOG

PROJECT : Charleston Naval Complex - Zone K SWMU 166 LOCATION : Charleston, SC NORTHING: 388058.4

ELEVATION : 40.48 feet MSL DRILLING CONTRACTOR : Prosonic Corporation License # 1435 EASTING: 2300250.2

DRILLING METHOD AND EQUIPMENT USED : Rotosonic (standard 4- and 6-inch casings)

WATER LEVELS : Not Measured START : 5/15/2002 END: 5/15/2002 LOGGER : D Beverly

DEPTH BELOW SURFACE (FT)	INTERVAL (FT)	RECOVERY (IN)	#/TYPE	STANDARD PENETRATION TEST RESULTS 6"-6"-6"-6" (N)	SOIL DESCRIPTION: SOIL NAME, USCS GROUP SYMBOL, COLOR, MOISTURE CONTENT, RELATIVE DENSITY, OR CONSISTENCY, SOIL STRUCTURE, MINERALOGY.	COMMENTS: DEPTH OF CASING, DRILLING RATE, DRILLING FLUID LOSS, TESTS, AND INSTRUMENTATION.
	0 - 0.9			Used rotosonic drilling method no penetration test results	Silty Sand (SM) fill, very dark brown (5Y;3/1)	
	0.9 - 16				Sand (SW) very fine grained, loose, dry, yellow (10YR;7/8)	
5						
					wet, color change with depth from yellow (5Y;7/8) to light gray (5Y;7/2)	
10						
15						
	16 - 30.5				Sand (SP) fine grained, trace clay, mica, wet, greenish gray (1 GLEY;5/1)	
20						
25						
					increase clay and silt with depth, medium stiff	
30						
	30.5 - 32.3				Clayey Sand (SC) fine to coarse grained, black limestone fragments, white shell fragments, stiff, wet, greenish gray (1 GLEY;5/1)	
	32.3 - 35				Clayey Silt (ML) some fine sand, stiff, low plasticity,shell fragments, wet, greenish gray (1 GLEY;5/1) and light olive gray (5Y;6/1) black limestone fragments from 32.3 to 32.8	
35						

Boring Terminated at 35 Feet

CH2MHILL

PROJECT NUMBER	BORING NUMBER
158814.ZA.EX.07	166GW038D

SOIL BORING LOG

PROJECT : Charleston Naval Complex - Zone K SWMU 166 LOCATION : Charleston, SC NORTHING: 388009

ELEVATION : 40.85 feet MSL DRILLING CONTRACTOR : Prosonic Corporation License # 1435 EASTING: 2300293.5

DRILLING METHOD AND EQUIPMENT USED : Rotosonic (standard 4- and 6-inch casings)

WATER LEVELS : Not Measured START : 5/17/2002 END: 5/17/2002 LOGGER : D Beverly

DEPTH BELOW SURFACE (FT)	INTERVAL (FT)	RECOVERY (IN)	#/TYPE	STANDARD PENETRATION TEST RESULTS 6"-6"-6" (N)	SOIL DESCRIPTION: SOIL NAME, USCS GROUP SYMBOL, COLOR, MOISTURE CONTENT, RELATIVE DENSITY, OR CONSISTENCY, SOIL STRUCTURE, MINERALOGY.	COMMENTS: DEPTH OF CASING, DRILLING RATE, DRILLING FLUID LOSS, TESTS, AND INSTRUMENTATION.
	0 - 18.3			Used rotosonic drilling method no penetration test results	Sand (SW) fine grained, moist, pale yellow (2.5YR;7/3)	
5						
					trace silt, wet, light gray (2.5Y;7/2)	
10						
15						
	18.3 - 20.4				Sand (SW) fine grained, mica, wet, light olive brown (2.5Y;5/6)	
20						
	20.4 - 26				Sand (SW) fine grained, trace silt, mica, wet, greenish gray (1 GLEY,6/1)	
25						
	26 - 30.6				Sand (SP) fine grained, some clay, wet, greenish gray (1 GLEY,6/1)	
30					white shell fragments	
	30.6 - 32.7				Clayey Sand (SC) fine to coarse grained, black limestone fragments, wet, greenish gray (1 GLEY,5/1)	
	32.7 - 35				Clayey Silt (ML) some fine sand, very stiff, low plasticity, wet greenish gray (1 GLEY;5/1)	
35						

Boring Terminated at 35 Feet

CH2MHILL

PROJECT NUMBER	BORING NUMBER
158814.ZA.EX.07	166GW039D

SOIL BORING LOG

PROJECT : Charleston Naval Complex - Zone K SWMU 166 LOCATION : Charleston, SC NORTHING: 388061.6

ELEVATION : 41.05 feet MSL DRILLING CONTRACTOR : Prosonic Corporation License # 1435 EASTING: 2300254.4

DRILLING METHOD AND EQUIPMENT USED : Rotosonic (standard 4- and 6-inch casings)

WATER LEVELS : Not Measured START : 5/13/2002 END: 5/13/2002 LOGGER : D. Beverly/ATL

DEPTH BELOW SURFACE (FT)	INTERVAL (FT)	RECOVERY (IN)	#/TYPE	STANDARD PENETRATION TEST RESULTS 6"-6"-6"-6" (N)	SOIL DESCRIPTION: SOIL NAME, USCS GROUP SYMBOL, COLOR, MOISTURE CONTENT, RELATIVE DENSITY, OR CONSISTENCY, SOIL STRUCTURE, MINERALOGY.	COMMENTS: DEPTH OF CASING, DRILLING RATE, DRILLING FLUID LOSS, TESTS, AND INSTRUMENTATION.
	0 - 4.2			Used rotosonic drilling method no penetration test results	Sand (SP) fine grained, moist, dark brown (7.5Y;3/4)	
	4.2 - 4.7				Gravel (GP) light gray	
5	4.7 -7.3				Sand (SP) fine-grained, trace silt, slightly stiff, moist to wet dark gray (5Y;4/1)	
	7.3 - 23.5				Sand (SW) fine grained, loose, wet, light gray (5Y;7/2)	
10						
15					color change to greenish gray (1GLEY; 7/1)	
					trace clay	
20						
	23.5 - 34.5				Sand (SP) with clay, fine grained, slightly stiff, mica, wet, greenish gray (1GLEY; 5/1)	
25						
30						
35	34.5 - 35.0				Clayey Sand (SC) fine to coarse grained, black limestone fragments, wet, greenish gray (1 GLEY;6/1)	
					Clayey Silt (ML) trace fine sand, medium stiff, slightly plastic, wet, greenish gray (1 GLEY;5/1) and light olive gray (5Y;6/2)	

Boring Terminated at 37 Feet

CH2MHILL

PROJECT NUMBER	BORING NUMBER
158814.ZA.EX.07	166GW040D

SOIL BORING LOG

PROJECT : Charleston Naval Complex - Zone K SWMU 166 LOCATION : Charleston, SC NORTHING: 388009

ELEVATION : 40.85 feet MSL DRILLING CONTRACTOR : Prosonic Corporation License # 1435 EASTING: 2300293.5

DRILLING METHOD AND EQUIPMENT USED : Hollow Stem Auger (7 1/4-inch)

WATER LEVELS : Not Measured START : 5/14/2002 END: 5/14/2002 LOGGER : D Beverly

DEPTH BELOW SURFACE (FT)	INTERVAL (FT)	RECOVERY (IN)	#/TYPE	STANDARD PENETRATION TEST RESULTS 6"-6"-6"-6" (N)	SOIL DESCRIPTION: SOIL NAME, USCS GROUP SYMBOL, COLOR, MOISTURE CONTENT, RELATIVE DENSITY, OR CONSISTENCY, SOIL STRUCTURE, MINERALOGY.	COMMENTS: DEPTH OF CASING, DRILLING RATE, DRILLING FLUID LOSS, TESTS, AND INSTRUMENTATION.
				Used rotosonic drilling method no penetration test results	See Boring log from 166GW039D	
5	5					
10	10					

Boring Terminated at 13 Feet

CH2MHILL

PROJECT NUMBER	BORING NUMBER
158814.ZA.EX.07	166GW041D

SOIL BORING LOG

PROJECT : Charleston Naval Complex - Zone K SWMU 166 LOCATION : Charleston, SC NORTHING: 388203.9

ELEVATION : 41.03 feet MSL DRILLING CONTRACTOR : Prosonic Corporation License # 1435 EASTING: 2300363.7

DRILLING METHOD AND EQUIPMENT USED : Rotosonic (standard 4- and 6-inch casings)

WATER LEVELS : Not Measured START : 5/14/2002 END: 5/14/2002 LOGGER : D Beverly

DEPTH BELOW SURFACE (FT)	INTERVAL (FT)	RECOVERY (IN)	#/TYPE	STANDARD PENETRATION TEST RESULTS 6"-6"-6"-6" (N)	SOIL DESCRIPTION: SOIL NAME, USCS GROUP SYMBOL, COLOR, MOISTURE CONTENT, RELATIVE DENSITY, OR CONSISTENCY, SOIL STRUCTURE, MINERALOGY.	COMMENTS: DEPTH OF CASING, DRILLING RATE, DRILLING FLUID LOSS, TESTS, AND INSTRUMENTATION.
	0 - 0.9			Used rotosonic drilling method no penetration test results	Asphalt 0-0.3-feet, concrete/gravel (FILL) 0.3-0.9-feet,	
	0.9 - 6.6				Sand (SP) fine grained, moist, light olive brown (5Y;6/4)	
5						
	6.6 - 16				Sand (SW) fine grained, trace silt, wet, light gray (5Y,7/2)	
10						
15						
	16 - 26				Sand (SP) fine to medium grained, increased clay content, wet, pale olive (5Y,6/3)	
20						
25						
	26 - 30.5				Sand (SP) with clay, fine grained, wet, greenish gray (1 GLEY;6/1)	
30						
	30.5 - 32.2				Clayey Sand (SC) fine to medium grained, black limestone fragments, wet, greenish gray (1 GLEY;6/1)	
	32.2 - 36				Clayey Silt (ML) trace fine sand, medium stiff, slightly plastic, wet, greenish gray (1 GLEY;5/1) and olive (5Y;5/3)	
35						

Boring Terminated at 36 Feet

CH2MHILL

PROJECT NUMBER	BORING NUMBER
158814.ZA.EX.07	166GW042D

SOIL BORING LOG

PROJECT : Charleston Naval Complex - Zone K SWMU 166 LOCATION : Charleston, SC NORTHING: 388051.5

ELEVATION : 40.83 feet MSL DRILLING CONTRACTOR : Prosonic Corporation License # 1435 EASTING: 2300216.8

DRILLING METHOD AND EQUIPMENT USED : Hollow Stem Auger (7 1/4-inch)

WATER LEVELS : Not Measured START : 5/14/2002 END: 5/14/2002 LOGGER : D Beverly

DEPTH BELOW SURFACE (FT)	INTERVAL (FT)	RECOVERY (IN)	#/TYPE	STANDARD PENETRATION TEST RESULTS 6"-6"-6"-6" (N)	SOIL DESCRIPTION: SOIL NAME, USCS GROUP SYMBOL, COLOR, MOISTURE CONTENT, RELATIVE DENSITY, OR CONSISTENCY, SOIL STRUCTURE, MINERALOGY.	COMMENTS: DEPTH OF CASING, DRILLING RATE, DRILLING FLUID LOSS, TESTS, AND INSTRUMENTATION.
					See Boring logs from 166GW041D and 166GW043D	
5						
10						
15						
20						
25						
30						

Boring Terminated at 33.5 Feet

CH2MHILL

PROJECT NUMBER	BORING NUMBER
158814.ZA.EX.07	166GW043D

SOIL BORING LOG

PROJECT : Charleston Naval Complex - Zone K SWMU 166 LOCATION : Charleston, SC NORTHING: 388111.5

ELEVATION : 41.12 feet MSL DRILLING CONTRACTOR : Prosonic Corporation License # 1435 EASTING: 2300361.5

DRILLING METHOD AND EQUIPMENT USED : Rotosonic (standard 4- and 6-inch casings)

WATER LEVELS : Not Measured START : 5/14/2002 END: 5/14/2002 LOGGER : D Beverly

DEPTH BELOW SURFACE (FT)	INTERVAL (FT)	RECOVERY (IN)	#/TYPE	STANDARD PENETRATION TEST RESULTS 6"-6"-6"-6" (N)	SOIL DESCRIPTION: SOIL NAME, USCS GROUP SYMBOL, COLOR, MOISTURE CONTENT, RELATIVE DENSITY, OR CONSISTENCY, SOIL STRUCTURE, MINERALOGY.	COMMENTS: DEPTH OF CASING, DRILLING RATE, DRILLING FLUID LOSS, TESTS, AND INSTRUMENTATION.
	0 - 6.8			Used rotosonic drilling method no penetration test results	Asphalt 0-0.3-feet Sand (SP) fine grained, some silt, loose, dry to moist with depth, dark olive brown (2.5Y;4/2)	
5						
	6.8 - 16				Sand (SW) fine grained, trace silt, slightly stiff, wet, light gray (5Y;7/2)	
10						
15						
	16 - 32				Sand (SP) fine to medium grained, increased clay content, wet, light gray (5Y;7/2)	
20						
25					color change to greenish gray (1 GLEY;6/1)	
30						
	32 - 33.2				Clayey Sand (SC) fine to coarse grained, black limestone fragments, wet, greenish gray (1 GLEY;6/1)	
	33.2 - 35				Clayey Silt (ML) some fine sand, stiff, low plasticity,shell fragments, wet, greenish gray (1 GLEY;6/1)	
35						

Boring Terminated at 35 Feet

CH2MHILL

PROJECT NUMBER	BORING NUMBER
158814.ZA.EX.07	166GW044D

SOIL BORING LOG

PROJECT : Charleston Naval Complex - Zone K SWMU 166 LOCATION : Charleston, SC NORTHING: 388162.6

ELEVATION : 40.55 feet MSL DRILLING CONTRACTOR : Prosonic Corporation License # 1435 EASTING: 2300427.2

DRILLING METHOD AND EQUIPMENT USED : Rotosonic (standard 4- and 6-inch casings)

WATER LEVELS : Not Measured START : 5/15/2002 END: 5/15/2002 LOGGER : D Beverly

DEPTH BELOW SURFACE (FT)	INTERVAL (FT)	RECOVERY (IN)	#/TYPE	STANDARD PENETRATION TEST RESULTS 6"-6"-6"-6" (N)	SOIL DESCRIPTION: SOIL NAME, USCS GROUP SYMBOL, COLOR, MOISTURE CONTENT, RELATIVE DENSITY, OR CONSISTENCY, SOIL STRUCTURE, MINERALOGY.	COMMENTS: DEPTH OF CASING, DRILLING RATE, DRILLING FLUID LOSS, TESTS, AND INSTRUMENTATION.
	0 - 0.7			Used rotosonic drilling method no penetration test results	Silt (ML) dry, dark grayish brown (10YR;4/1)	
	0.7 - 26				Sand (SW) fine grained, dry, light yellowish brown (2.5YR;6/4)	
5						
					wet, color change with depth from grayish brown (2.5Y;6/2) to olive gray (2.5Y;6/6) to light gray (5Y;7/1)	
10						
15						
					greenish gray (1 GLEY;5/1)	
20						
25						
	26 - 30.2				Sand (SP) fine grained, some clay, wet, greenish gray (1 GLEY;6/1)	
30						
	30.2 - 31.8				Clayey Sand (SC) fine grained, black limestone fragments, wet, greenish gray (1 GLEY;5/1)	
	31.8 - 35				Clayey Silt (ML) some fine sand, stiff, low plasticity,shell fragments, wet, greenish gray (1 GLEY;5/1) and light olive gray (5Y;6/2)	
35						

Boring Terminated at 35 Feet

CH2MHILL

PROJECT NUMBER	BORING NUMBER
158814.ZA.EX.07	166GW045D

SOIL BORING LOG

PROJECT : Charleston Naval Complex - Zone K SWMU 166 LOCATION : Charleston, SC NORTHING: 388051.5

ELEVATION : 40.53 feet MSL DRILLING CONTRACTOR : Prosonic Corporation License # 1435 EASTING: 2300216.8

DRILLING METHOD AND EQUIPMENT USED : Hollow Stem Auger (7 1/4-inch)

WATER LEVELS : Not Measured START : 5/14/2002 END: 5/14/2002 LOGGER : D Beverly

DEPTH BELOW SURFACE (FT)	INTERVAL (FT)	RECOVERY (IN)	#/TYPE	STANDARD PENETRATION TEST RESULTS 6"-6"-6"-6" (N)	SOIL DESCRIPTION: SOIL NAME, USCS GROUP SYMBOL, COLOR, MOISTURE CONTENT, RELATIVE DENSITY, OR CONSISTENCY, SOIL STRUCTURE, MINERALOGY.	COMMENTS: DEPTH OF CASING, DRILLING RATE, DRILLING FLUID LOSS, TESTS, AND INSTRUMENTATION.
					See Boring logs from 166GW025D and 166GW029D	
5						
10						
15						
20						
25						
30						

Boring Terminated at 32.5 Feet

CH2MHILL

PROJECT NUMBER	BORING NUMBER
158814.ZA.EX.07	166GW046D

SOIL BORING LOG

PROJECT : Charleston Naval Complex - Zone K SWMU 166 LOCATION : Charleston, SC NORTHING: 388155.5

ELEVATION : 40.6 feet MSL DRILLING CONTRACTOR : Prosonic Corporation License # 1435 EASTING: 2300489.4

DRILLING METHOD AND EQUIPMENT USED : Rotosonic (standard 4- and 6-inch casings)

WATER LEVELS : Not Measured START : 5/15/2002 END: 5/15/2002 LOGGER : D Beverly

DEPTH BELOW SURFACE (FT)	INTERVAL (FT)	RECOVERY (IN)	#/TYPE	STANDARD PENETRATION TEST RESULTS 6"-6"-6"-6" (N)	SOIL DESCRIPTION: SOIL NAME, USCS GROUP SYMBOL, COLOR, MOISTURE CONTENT, RELATIVE DENSITY, OR CONSISTENCY, SOIL STRUCTURE, MINERALOGY.	COMMENTS: DEPTH OF CASING, DRILLING RATE, DRILLING FLUID LOSS, TESTS, AND INSTRUMENTATION.
	0 - 1.3			Used rotosonic drilling method no penetration test results	Silt (ML)) top soil, some fine grained sand, vegitation, dry, very dark brown (5Y;3/1)	
	0.9 - 23.5				Sand (SW) very fine grained, loose, dry to moist, light yellowish brown (2.5YR;6/4)	
5						
					wet, color change with depth from light yellowish brown (2.5Y;6/3) to light gray (2.5Y;7/1)	
10						
15						
					fine to medium grained, yellow (10YR;7/8) to brownish yellow (10 YR;6/6)	
20						
	23.5 - 30.7				Sand (SP) fine grained, some clay, wet, olive (5Y;5/4) to greenish gray (1 GLEY;6/1)	
25						
30						
	30.7 - 31.6				Clayey Sand (SC) fine to coarse grained, black limestone fragments, white shell fragments, stiff, wet, greenish gray (1 GLEY;5/1)	
	31.6 - 35				Clayey Silt (ML) some fine sand, stiff, low plasticity,shell fragments, wet, greenish gray (1 GLEY;5/1) and light olive gray (5Y;6/2)	
35						

Boring Terminated at 35 Feet

CH2MHILL

PROJECT NUMBER	BORING NUMBER
158814.ZA.EX.07	166GW047D

SOIL BORING LOG

PROJECT : Charleston Naval Complex - Zone K SWMU 166 LOCATION : Charleston, SC NORTHING: 388186.5

ELEVATION : 41.02 feet MSL DRILLING CONTRACTOR : Prosonic Corporation License # 1435 EASTING: 2300528.1

DRILLING METHOD AND EQUIPMENT USED : Rotosonic (standard 4- and 6-inch casings)

WATER LEVELS : Not Measured START : 5/15/2002 END: 5/15/2002 LOGGER : D Beverly

DEPTH BELOW SURFACE (FT)	INTERVAL (FT)	RECOVERY (IN)	#/TYPE	STANDARD PENETRATION TEST RESULTS 6"-6"-6"-6" (N)	SOIL DESCRIPTION: SOIL NAME, USCS GROUP SYMBOL, COLOR, MOISTURE CONTENT, RELATIVE DENSITY, OR CONSISTENCY, SOIL STRUCTURE, MINERALOGY.	COMMENTS: DEPTH OF CASING, DRILLING RATE, DRILLING FLUID LOSS, TESTS, AND INSTRUMENTATION.
					See Boring log from 166GW048D	
5						
10						
15						
20						
25						

Boring Terminated at 28 Feet

CH2MHILL

PROJECT NUMBER	BORING NUMBER
158814.ZA.EX.07	166GW048D

SOIL BORING LOG

PROJECT : Charleston Naval Complex - Zone K SWMU 166 LOCATION : Charleston, SC NORTHING: 388181.7

ELEVATION : 40.85 feet MSL DRILLING CONTRACTOR : Prosonic Corporation License # 1435 EASTING: 2300531.3

DRILLING METHOD AND EQUIPMENT USED : Rotosonic (standard 4- and 6-inch casings)

WATER LEVELS : Not Measured START : 5/14/2002 END: 5/14/2002 LOGGER : D Beverly

DEPTH BELOW SURFACE (FT)	INTERVAL (FT)	RECOVERY (IN)	#/TYPE	STANDARD PENETRATION TEST RESULTS 6"-6"-6"-6" (N)	SOIL DESCRIPTION: SOIL NAME, USCS GROUP SYMBOL, COLOR, MOISTURE CONTENT, RELATIVE DENSITY, OR CONSISTENCY, SOIL STRUCTURE, MINERALOGY.	COMMENTS: DEPTH OF CASING, DRILLING RATE, DRILLING FLUID LOSS, TESTS, AND INSTRUMENTATION.
	0 - 1.5			Used rotosonic drilling method no penetration test results	Sand (SP) fine grained, some silt, dry, very dark brown (7.5YR;2.5/2)	
	1.5 - 22.8				Sand (SW) fine grained, slightly moist, yellow brown (10YR;5/4)	
5						
					wet	
10						
					trace silt, mica, color change to light greenish gray (1 GLEY;7/1)	
15						
					some medium grained with depth	
20						
					brownish yellow (10YR;6/6)	
	22.8 - 24.9				Clayey Sand (SC) fine to medium grained, wet, olive (5Y;5/3)	
25						
	24.9 - 30.8				Sand (SP) fine to medium grained, some clay, wet, olive (10YR;6/3)	
					increase clay with depth, color change to greenish gray (1 GLEY;5/1)	
30						
	30.8 - 32.3				Clayey Sand (SC) fine to coarse grained, black limestone fragments, wet, greenish gray (1 GLEY;5/1)	
	32.3 - 35				Clayey Silt (ML) some fine sand, stiff, low plasticity,shell fragments, wet, greenish gray (1 GLEY;5/1) and pale olive (5Y;6/3)	
35						

Boring Terminated at 35 Feet

CH2MHILL

PROJECT NUMBER	BORING NUMBER
158814.ZA.EX.07	166GW049D

SOIL BORING LOG

PROJECT : Charleston Naval Complex - Zone K SWMU 166 LOCATION : Charleston, SC NORTHING: 388051.5

ELEVATION : 41.56 feet MSL DRILLING CONTRACTOR : Prosonic Corporation License # 1435 EASTING: 2300216.8

DRILLING METHOD AND EQUIPMENT USED : Hollow Stem Auger (7 1/4-inch)

WATER LEVELS : Not Measured START : 5/15/2002 END: 5/15/2002 LOGGER : D Beverly

DEPTH BELOW SURFACE (FT)	INTERVAL (FT)	RECOVERY (IN)	#/TYPE	STANDARD PENETRATION TEST RESULTS 6"-6"-6"-6" (N)	SOIL DESCRIPTION: SOIL NAME, USCS GROUP SYMBOL, COLOR, MOISTURE CONTENT, RELATIVE DENSITY, OR CONSISTENCY, SOIL STRUCTURE, MINERALOGY.	COMMENTS: DEPTH OF CASING, DRILLING RATE, DRILLING FLUID LOSS, TESTS, AND INSTRUMENTATION.
					See Boring logs from 166GW014D and 166GW031D	
5						
10						
15						
20						
25						
30						

Boring Terminated at 33.5 Feet

CH2MHILL

PROJECT NUMBER	BORING NUMBER
158814.ZA.EX.07	166GW050D

SOIL BORING LOG

PROJECT : Charleston Naval Complex - Zone K SWMU 166 LOCATION : Charleston, SC NORTHING: 388051.5

ELEVATION : 41.18 feet MSL DRILLING CONTRACTOR : Prosonic Corporation License # 1435 EASTING: 2300216.8

DRILLING METHOD AND EQUIPMENT USED : Hollow Stem Auger (7 1/4-inch)

WATER LEVELS : Not Measured START : 5/16/2002 END: 5/16/2002 LOGGER : D Beverly

DEPTH BELOW SURFACE (FT)	INTERVAL (FT)	RECOVERY (IN)	#/TYPE	STANDARD PENETRATION TEST RESULTS 6"-6"-6"-6" (N)	SOIL DESCRIPTION: SOIL NAME, USCS GROUP SYMBOL, COLOR, MOISTURE CONTENT, RELATIVE DENSITY, OR CONSISTENCY, SOIL STRUCTURE, MINERALOGY.	COMMENTS: DEPTH OF CASING, DRILLING RATE, DRILLING FLUID LOSS, TESTS, AND INSTRUMENTATION.
					See Boring logs from 166GW010D and 166GWAS2	
5						
10						
15						
20						
25						
30						

Boring Terminated at 33.5 Feet

CH2MHILL

PROJECT NUMBER	BORING NUMBER
158814.ZA.EX.07	166GW051D

SOIL BORING LOG

PROJECT : Charleston Naval Complex - Zone K SWMU 166 LOCATION : Charleston, SC NORTHING: 388422.7

ELEVATION : 42.11 feet MSL DRILLING CONTRACTOR : Prosonic Corporation License # 1436 EASTING: 2300703.9

DRILLING METHOD AND EQUIPMENT USED : Rotosonic (standard 4- and 6-inch casings)

WATER LEVELS : Not Measured START : 5/16/2002 END: 5/16/2002 LOGGER : D Beverly

DEPTH BELOW SURFACE (FT)	INTERVAL (FT)	RECOVERY (IN)	#/TYPE	STANDARD PENETRATION TEST RESULTS 6"-6"-6"-6" (N)	SOIL DESCRIPTION: SOIL NAME, USCS GROUP SYMBOL, COLOR, MOISTURE CONTENT, RELATIVE DENSITY, OR CONSISTENCY, SOIL STRUCTURE, MINERALOGY.	COMMENTS: DEPTH OF CASING, DRILLING RATE, DRILLING FLUID LOSS, TESTS, AND INSTRUMENTATION.
	0 - 1.5			Used rotosonic drilling method no penetration test results	Sand and Gravel Fill, dry, white	
	1.5 - 6				Sand (SP) fine grained, dry, alternating colors from top to bottom, very dark brown (10 YR;3/1) to brownish yellow (10YR;6/6) to very pale brown (10YR;7/4) to dark gray (10YR;4/1)	
5						
	6 - 30.3				Sand (SW) fine grained, wet, light gray (2.5Y;7/2) to light greenish gray (1 GLEY;7/1) with depth	
10						
15					trace clay, mica	
20						
25					yellow (5YR;7/7)	
30						
	30.3 - 32.6				Clayey Sand (SC) fine to coarse grained, black limestone fragments, wet, greenish gray (1 GLEY;5/1)	
	32.6 - 35				Clayey Silt (ML) some fine sand, stiff, low plasticity,shell fragments, wet, greenish gray (1 GLEY;5/1) and light olive gray (5Y;6/2)	
35						

Boring Terminated at 35 Feet

CH2MHILL

PROJECT NUMBER	BORING NUMBER
158814.ZA.EX.07	166GW052D

SOIL BORING LOG

PROJECT : Charleston Naval Complex - Zone K SWMU 166 LOCATION : Charleston, SC NORTHING: 388438.7

ELEVATION : 41.99 feet MSL DRILLING CONTRACTOR : Prosonic Corporation License # 1435 EASTING: 2300738.5

DRILLING METHOD AND EQUIPMENT USED : Rotosonic (standard 4- and 6-inch casings)

WATER LEVELS : Not Measured START : 5/16/2002 END: 5/16/2002 LOGGER : D Beverly

DEPTH BELOW SURFACE (FT)	INTERVAL (FT)	RECOVERY (IN)	#/TYPE	STANDARD PENETRATION TEST RESULTS 6"-6"-6"-6" (N)	SOIL DESCRIPTION: SOIL NAME, USCS GROUP SYMBOL, COLOR, MOISTURE CONTENT, RELATIVE DENSITY, OR CONSISTENCY, SOIL STRUCTURE, MINERALOGY.	COMMENTS: DEPTH OF CASING, DRILLING RATE, DRILLING FLUID LOSS, TESTS, AND INSTRUMENTATION. Corrected FID (ppm): *(Soil headspace)*
				Used rotosonic drilling method no penetration test results	See Boring log from 166GW051D	
5						
10						
15						
20						
25						
30						

Boring Terminated at 32.5 Feet

PROJECT NUMBER	WELL NUMBER	
158814	166GW27D	SHEET 1 OF 1

CH2MHILL

WELL COMPLETION DIAGRAM

PROJECT : Charleston Naval Complex | LOCATION : SWMU 166 | NORTHING 388255.9

DRILLING CONTRACTOR : Columbia Technologies | EASTING: 2300406.0

DRILLING METHOD AND EQUIPMENT USED : Hollow-Stem Auger

WATER LEVELS : 7.50 | START : 2/5/02 | END : 2/5/02 | LOGGER : Darryl Gates

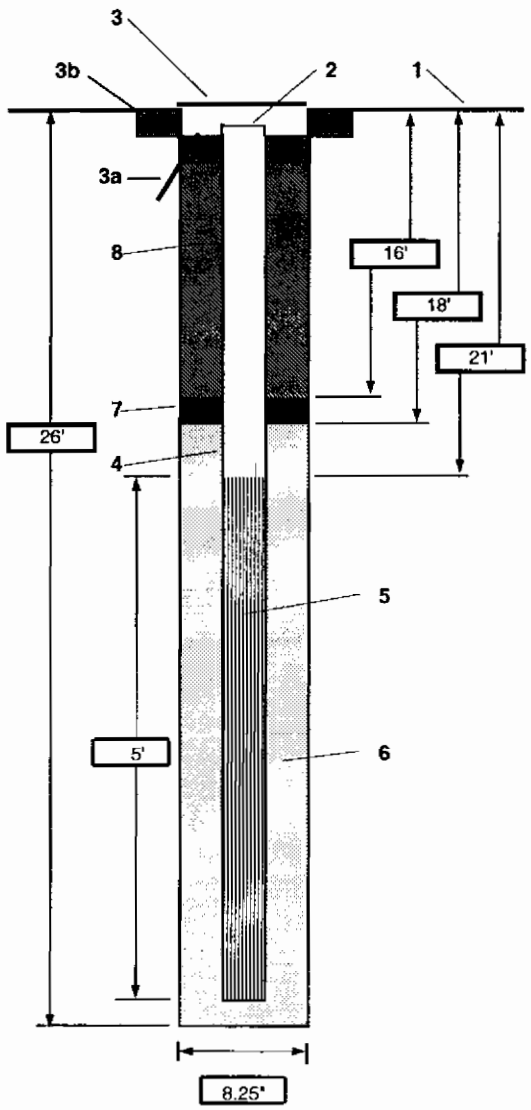

1- Ground elevation at well	not measured
2- Top of casing elevation	41.19
3- Wellhead protection cover type	Bolt-down manhole
4- Dia./type of well casing	2-inch PVC
5- Type/slot size of screen	PVC/.010-slot
6- Type screen filter	20/30 Slica
a) Quantity used	4 bags
7- Type of seal	Barroid bentonite
a) Quantity used	1/2 bucket
8- Grout	
a) Grout mix used	Type II Portland w/ 5% bentonite
b) Method of placement	Trimme
Development method	Swab and submersible pump

PROJECT NUMBER	WELL NUMBER		
158814	166GW28D	SHEET 1	OF 1

CH2MHILL

WELL COMPLETION DIAGRAM

PROJECT : Charleston Naval Complex | LOCATION : SWMU 166 | NORTHING 388262.6
DRILLING CONTRACTOR : Columbia Technologies | EASTING: 2300406.7
DRILLING METHOD AND EQUIPMENT USED : Hollow-Stem Auger
WATER LEVELS : 7.52 | START : 2/4/02 | END : 2/5/02 | LOGGER : Darryl Gates

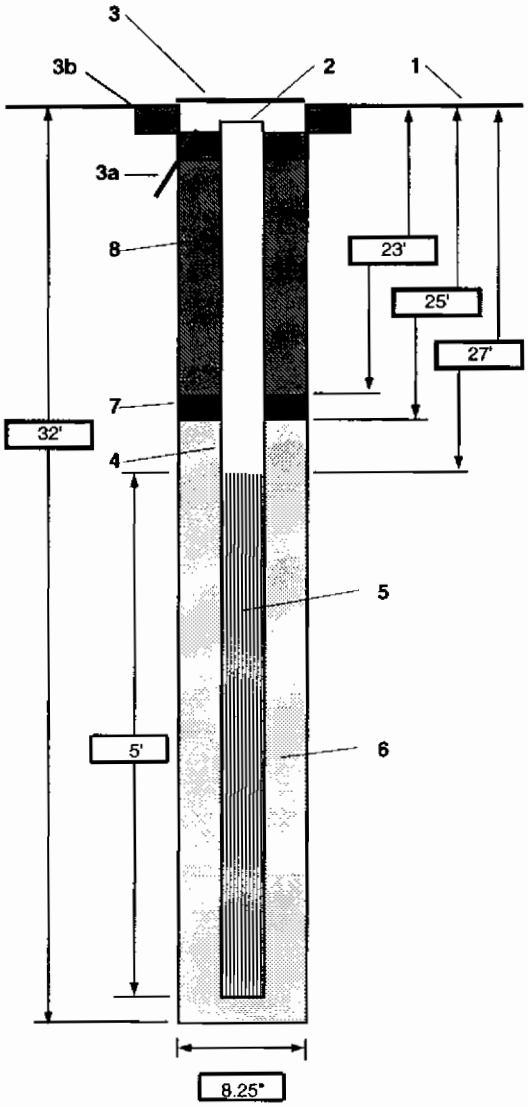

1- Ground elevation at well	not measured
2- Top of casing elevation	41.22
3- Wellhead protection cover type	Bolt-down manhole
4- Dia./type of well casing	2-inch PVC
5- Type/slot size of screen	PVC/.010-slot
6- Type screen filter	20/30 Slica
a) Quantity used	3 bags
7- Type of seal	Barroid bentonite
a) Quantity used	1/2 bucket
8- Grout	
a) Grout mix used	Type II Portland w/ 5% bentonite
b) Method of placement	Trimme
Development method	Swab and submersible pump

PROJECT NUMBER	WELL NUMBER		
158814	166GW29D	SHEET 1	OF 1

CH2MHILL

WELL COMPLETION DIAGRAM

PROJECT : Charleston Naval Complex | LOCATION : SWMU 166 | NORTHING 388259.2
DRILLING CONTRACTOR : Columbia Technologies | EASTING: 2300438.9
DRILLING METHOD AND EQUIPMENT USED : Hollow-Stem Auger
WATER LEVELS : 7.37 | START : 2/1/02 | END : 2/1/02 | LOGGER : Darryl Gates

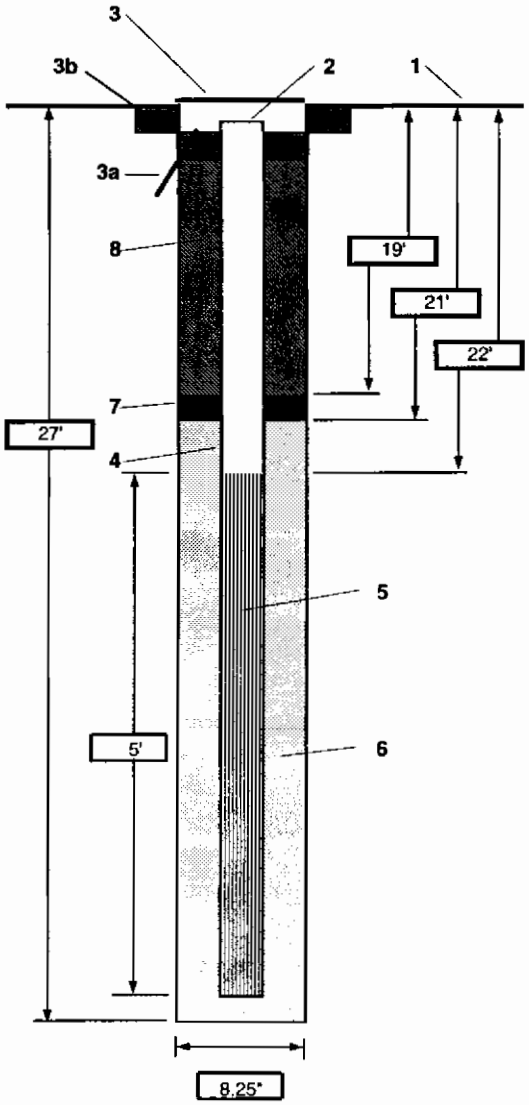

1- Ground elevation at well	not measured
2- Top of casing elevation	41.03
3- Wellhead protection cover type	Bolt-down manhole
4- Dia./type of well casing	2-inch PVC
5- Type/slot size of screen	PVC/.010-slot
6- Type screen filter	20/30 Slica
a) Quantity used	3 bags
7- Type of seal	Barroid bentonite
a) Quantity used	1/2 bucket
8- Grout	
a) Grout mix used	Type II Portland w/ 5% bentonite
b) Method of placement	Trimme
Development method	Swab and submersible pump

PROJECT NUMBER	WELL NUMBER		
158814	166GW30D	SHEET 1	OF 1

CH2MHILL

WELL COMPLETION DIAGRAM

PROJECT : Charleston Naval Complex | LOCATION : SWMU 166 | NORTHING 388264.4
DRILLING CONTRACTOR : Columbia Technologies | EASTING: 2300434.7
DRILLING METHOD AND EQUIPMENT USED : Hollow-Stem Auger
WATER LEVELS : 7.49 | START : 2/4/02 | END : 2/4/02 | LOGGER : Darryl Gates

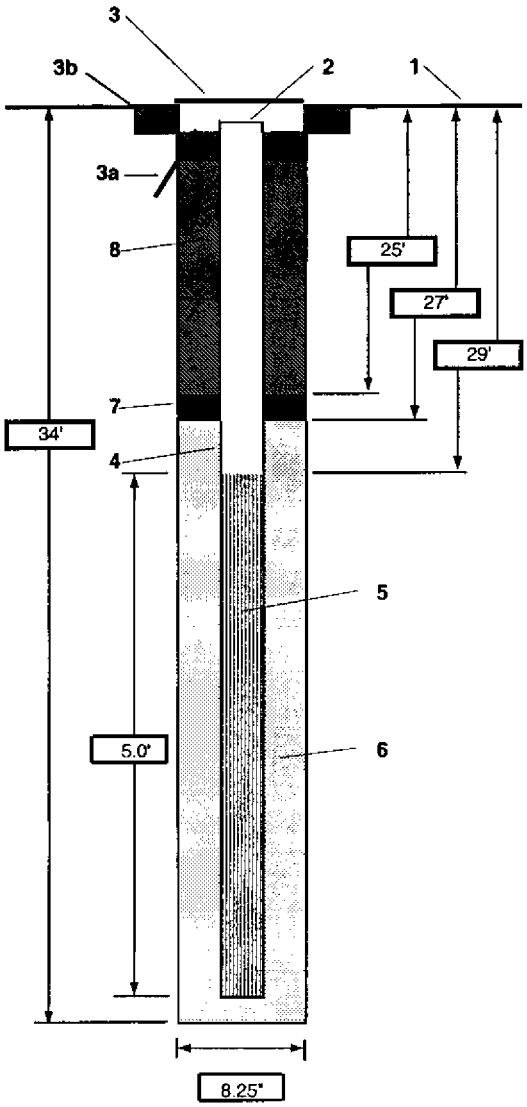

1- Ground elevation at well	not measured
2- Top of casing elevation	40.89
3- Wellhead protection cover type	Bolt-down manhole
4- Dia./type of well casing	2-inch PVC
5- Type/slot size of screen	PVC/.010-slot
6- Type screen filter	20/30 Slica
a) Quantity used	3 bags
7- Type of seal	Barroid bentonite
a) Quantity used	1/2 bucket
8- Grout	
a) Grout mix used	Type II Portland w/ 5% bentonite
b) Method of placement	Trimme
Development method	Swab and submersible pump

PROJECT NUMBER	WELL NUMBER	
158814	166GW31D	SHEET 1 OF 1

CH2MHILL

WELL COMPLETION DIAGRAM

PROJECT : Charleston Naval Complex | LOCATION : SWMU 166 | NORTHING 388313.5
DRILLING CONTRACTOR : Columbia Technologies | EASTING: 2300495.2
DRILLING METHOD AND EQUIPMENT USED : Hollow-Stem Auger
WATER LEVELS : 8.27 | START : 1/30/02 | END : 1/30/02 | LOGGER : Darryl Gates

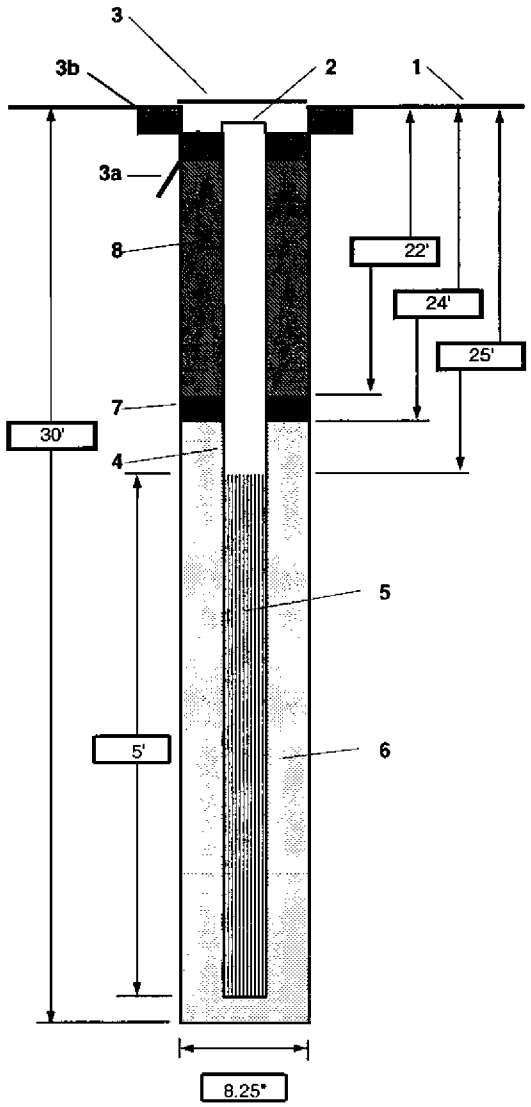

1- Ground elevation at well	not measured
2- Top of casing elevation	41.26
3- Wellhead protection cover type	Bolt-down manhole
4- Dia./type of well casing	2-inch PVC
5- Type/slot size of screen	PVC/.010-slot
6- Type screen filter	20/30 Slica
a) Quantity used	3 bags
7- Type of seal	Barroid bentonite
a) Quantity used	1/2 bucket
8- Grout	
a) Grout mix used	Type II Portland w/ 5% bentonite
b) Method of placement	Trimme
Development method	Swab and submersible pump

PROJECT NUMBER	WELL NUMBER		
158814	166GW32D	SHEET 1	OF 1

CH2MHILL

WELL COMPLETION DIAGRAM

PROJECT : Charleston Naval Complex | LOCATION : SWMU 166 | NORTHING 388309.2
DRILLING CONTRACTOR : Columbia Technologies | EASTING: 2300498.7
DRILLING METHOD AND EQUIPMENT USED : Hollow-Stem Auger
WATER LEVELS : 8.05 | START : 2/1/02 | END : 2/1/02 | LOGGER : Darryl Gates

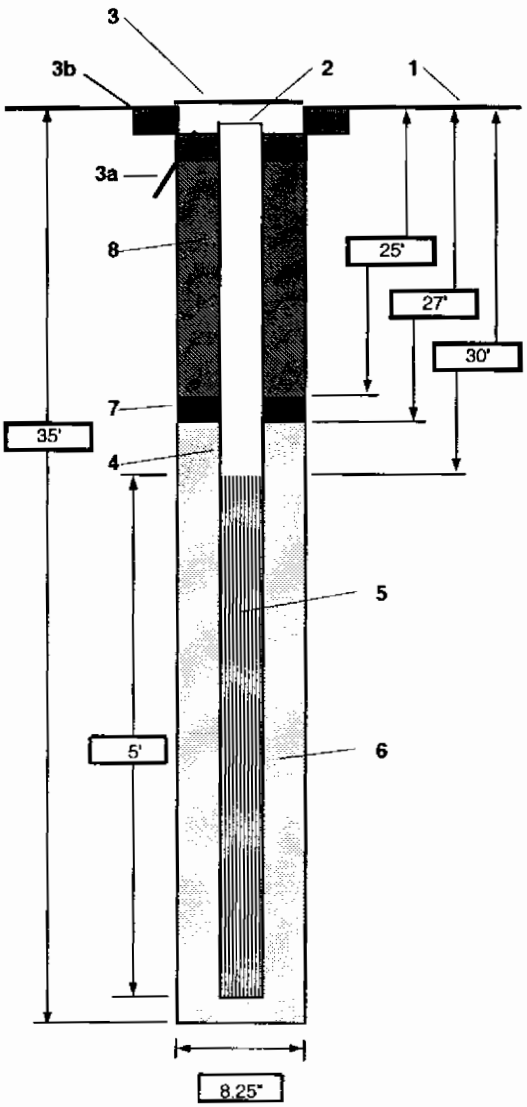

1- Ground elevation at well	not measured
2- Top of casing elevation	41.24
3- Wellhead protection cover type	Bolt-down manhole
4- Dia./type of well casing	2-inch PVC
5- Type/slot size of screen	PVC/.010-slot
6- Type screen filter	20/30 Slica
a) Quantity used	3 bags
7- Type of seal	Barroid bentonite
a) Quantity used	1/2 bucket
8- Grout	
a) Grout mix used	Type II Portland w/ 5% bentonite
b) Method of placement	Trimme
Development method	Swab and submersible pump

PROJECT NUMBER	WELL NUMBER	
158814.ZA.EX.07	166GW033D	SHEET 1 OF 1

CH2MHILL

WELL COMPLETION DIAGRAM

PROJECT : SWMU 166, Zone K, Charleston Naval Complex — LOCATION : Charleston, South Carolina

DRILLING CONTRACTOR : Prosonic Corporation License # 1435 — NORTHING: 388093.3

DRILLING METHOD AND EQUIPMENT USED : Rotosonic (standard 4- and 6-inch casings) — EASTING: 2299508

WATER LEVELS : [redacted] START : 5/16/2002 END: 5/17/2002 — LOGGER : David Beverly

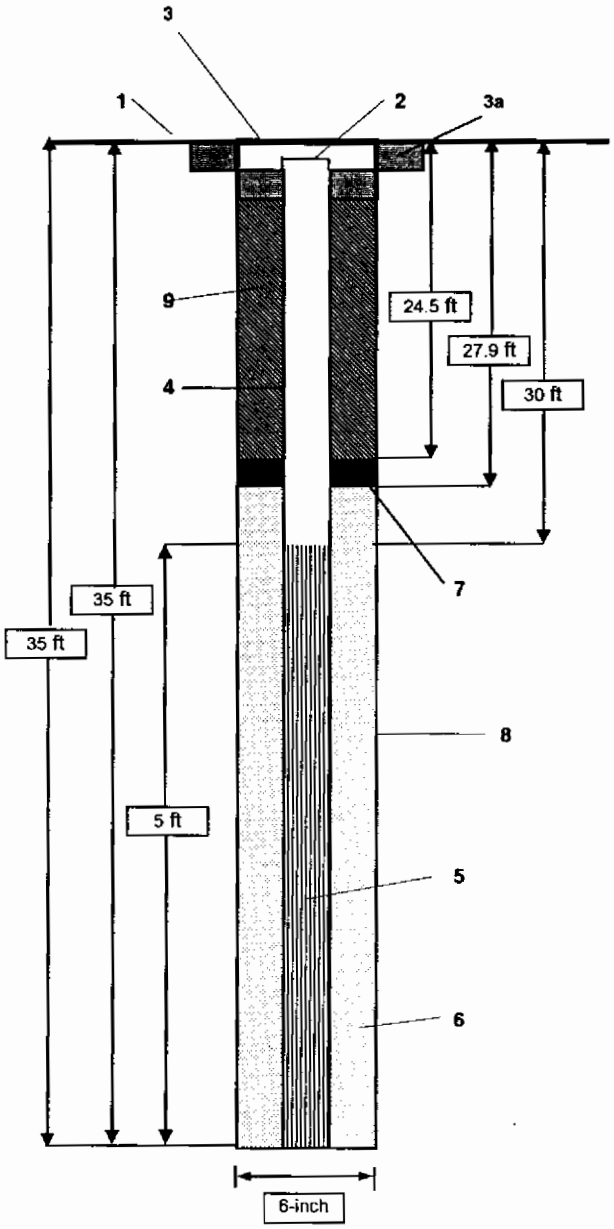

1- Ground elevation at well	[redacted]
2- Top of casing elevation	41.57
3- Protective cover type	8-ich dia. flush mount manhole vault
a) concrete pad dimensions	2 ft x 2 ft x 6-inches deep
4- Dia./type of well casing	2-inch inside diameter schedule 40 PVC
5- Type/slot size of screen	0.010-inch dia. machine slotted PVC
6- Type filter pack	20/40 Sieve Size Silica Sand
7- Type of seal	3/8-inch bentonite pellets
8- Borehole diameter	6-inch
9- Grout	Portland Cement/Bentonite Slurry

Note: Diagram not to scale.

PROJECT NUMBER	WELL NUMBER	
158814.ZA.EX.07	166GW034D	SHEET 1 OF 1

CH2MHILL

WELL COMPLETION DIAGRAM

PROJECT : SWMU 166, Zone K, Charleston Naval Complex — LOCATION : Charleston, South Carolina

DRILLING CONTRACTOR : Prosonic Corporation License # 1435 — NORTHING: 388051.5

DRILLING METHOD AND EQUIPMENT USED : Hollow stem augers (7 1/4-inch outside diameter) — EASTING: 2300216.8

WATER LEVELS : [redacted] START : 5/15/2002 END: 5/15/2002 LOGGER : David Beverly

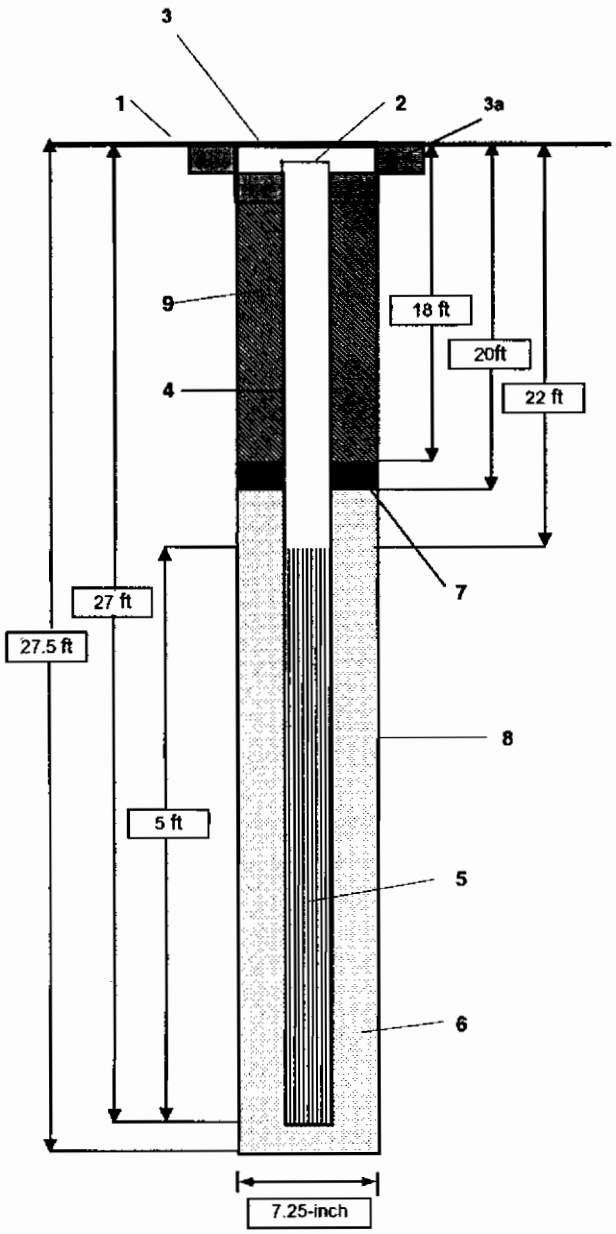

1- Ground elevation at well	[redacted]
2- Top of casing elevation	40.81
3- Protective cover type	8-ich dia. flush mount manhole vault
a) concrete pad dimensions	2 ft x 2 ft x 6-inches deep
4- Dia./type of well casing	2-inch inside diameter schedule 40 PVC
5- Type/slot size of screen	0.010-inch dia. machine slotted PVC
6- Type filter pack	20/40 Sieve Size Silica Sand
7- Type of seal	3/8-inch bentonite chips
8- Borehole diameter	7.25-inch
9- Grout	Bentonite grout

Note: Diagram not to scale.

PROJECT NUMBER	WELL NUMBER	
158814.ZA.EX.07	166GW035D	SHEET 1 OF 1

CH2MHILL

WELL COMPLETION DIAGRAM

PROJECT : SWMU 166, Zone K, Charleston Naval Complex — LOCATION : Charleston, South Carolina

DRILLING CONTRACTOR : Prosonic Corporation License # 1435 — NORTHING: 388048.6

DRILLING METHOD AND EQUIPMENT USED : Rotosonic (standard 4- and 6-inch casings) — EASTING: 2300214.2

WATER LEVELS : [redacted] START : 5/14/2002 END: 5/14/2002 LOGGER : David Beverly

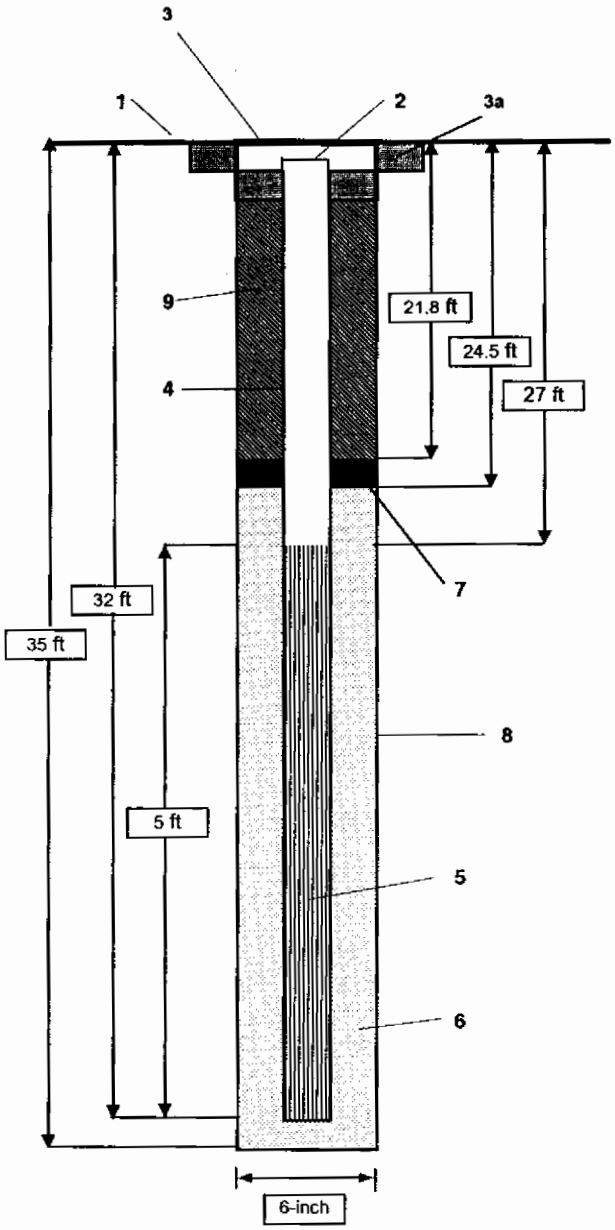

1- Ground elevation at well	[redacted]
2- Top of casing elevation	40.81
3- Protective cover type	8-ich dia. flush mount manhole vault
a) concrete pad dimensions	2 ft x 2 ft x 6-inches deep
4- Dia./type of well casing	2-inch inside diameter schedule 40 PVC
5- Type/slot size of screen	0.010-inch dia. machine slotted PVC
6- Type filter pack	20/40 Sieve Size Silica Sand
7- Type of seal	3/8-inch bentonite pellets
8- Borehole diameter	6-inch
9- Grout	Bentonite grout

Note: Diagram not to scale.

PROJECT NUMBER	WELL NUMBER	
158814.ZA.EX.07	166GW036D	SHEET 1 OF 1

CH2MHILL

WELL COMPLETION DIAGRAM

PROJECT : SWMU 166, Zone K, Charleston Naval Complex — LOCATION : Charleston, South Carolina

DRILLING CONTRACTOR : Prosonic Corporation License # 1435

DRILLING METHOD AND EQUIPMENT USED : HSA (7.25-inch dia) and Rotosonic (standard 4- and 6-inch casings)

WATER LEVELS : [redacted] START : 5/16/2002 END: 5/16/2002 LOGGER : David Beverly

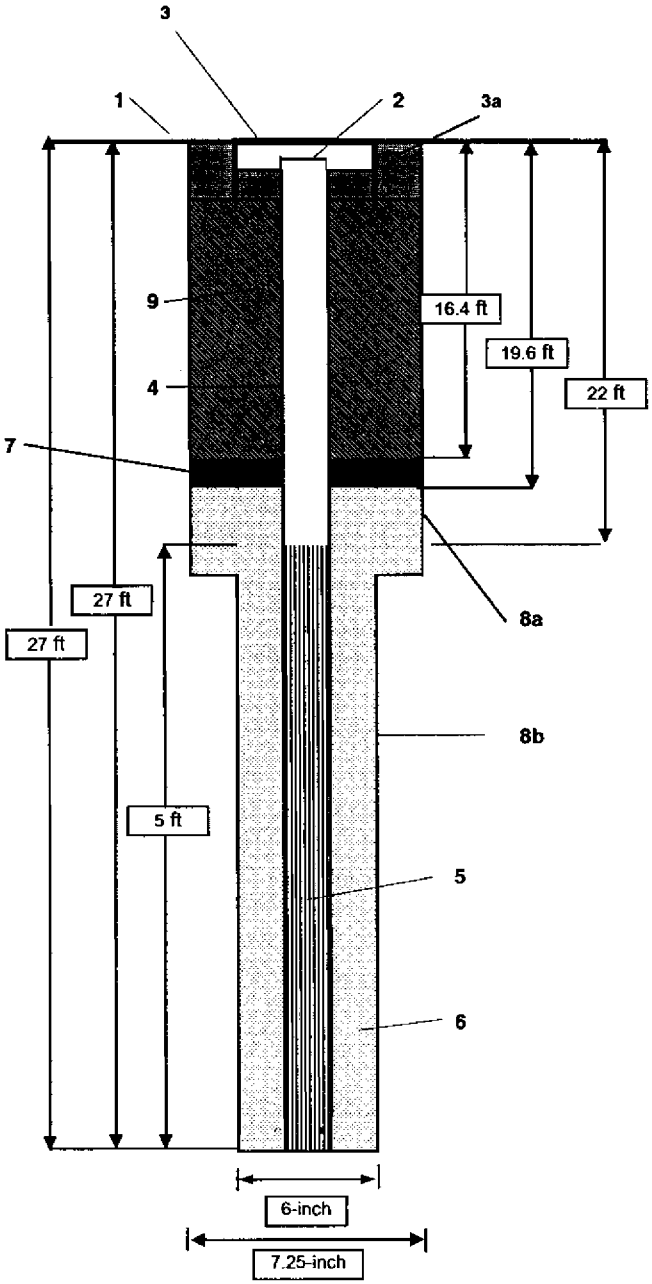

1- Ground elevation at well		[redacted]
2- Top of casing elevation		40.48
3- Protective cover type		8-ich dia. flush mount manhole vault
a) concrete pad dimensions		2 ft x 2 ft x 6-inches deep
4- Dia./type of well casing		2-inch inside diameter schedule 40 PVC
5- Type/slot size of screen		0.010-inch dia. machine slotted PVC
6- Type filter pack		20/40 Sieve Size Silica Sand
7- Type of seal		3/8-inch bentonite chips
8- Borehole diameter	a)	7.25-inch
	b)	6-inch
9- Grout		Bentonite grout

Note: Diagram not to scale.

PROJECT NUMBER	WELL NUMBER	
158814.ZA.EX.07	166GW037D	SHEET 1 OF 1

CH2MHILL

WELL COMPLETION DIAGRAM

PROJECT : SWMU 166, Zone K, Charleston Naval Complex — LOCATION : Charleston, South Carolina

DRILLING CONTRACTOR : Prosonic Corporation License # 1435 — NORTHING: 388058.4

DRILLING METHOD AND EQUIPMENT USED : Rotosonic (standard 4- and 6-inch casings) — EASTING: 2300250.2

WATER LEVELS : [redacted] START : 5/15/2002 END: 5/15/2002 LOGGER : David Beverly

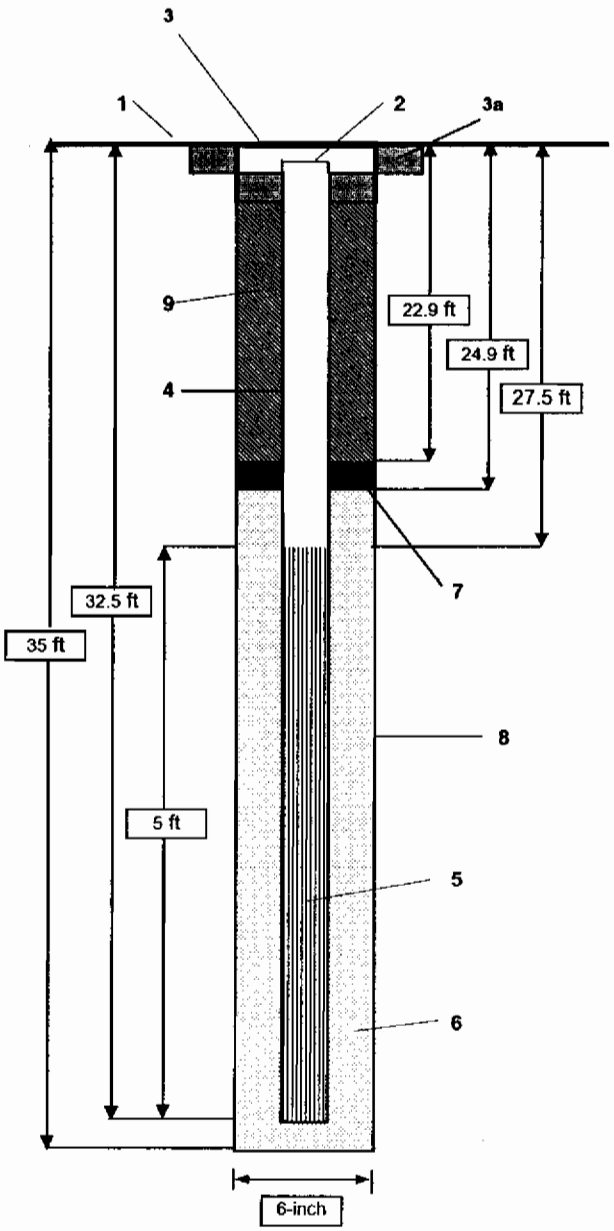

1- Ground elevation at well	[redacted]
2- Top of casing elevation	41.05
3- Protective cover type	8-ich dia. flush mount manhole vault
a) concrete pad dimensions	2 ft x 2 ft x 6-inches deep
4- Dia./type of well casing	2-inch inside diameter schedule 40 PVC
5- Type/slot size of screen	0.010-inch dia. machine slotted PVC
6- Type filter pack	20/40 Sieve Size Silica Sand
7- Type of seal	3/8-inch bentonite pellets
8- Borehole diameter	6-inch
9- Grout	Bentonite grout

Note: Diagram not to scale.

PROJECT NUMBER	WELL NUMBER	
158814.ZA.EX.07	166GW038D	SHEET 1 OF 1

CH2MHILL

WELL COMPLETION DIAGRAM

PROJECT : SWMU 166, Zone K, Charleston Naval Complex — LOCATION : Charleston, South Carolina

DRILLING CONTRACTOR : Prosonic Corporation License # 1435 — NORTHING: 388009

DRILLING METHOD AND EQUIPMENT USED : Rotosonic (standard 4- and 6-inch casings) — EASTING:2300293.5

WATER LEVELS : [redacted] START : 5/17/2002 END: 5/17/2002 LOGGER : David Beverly

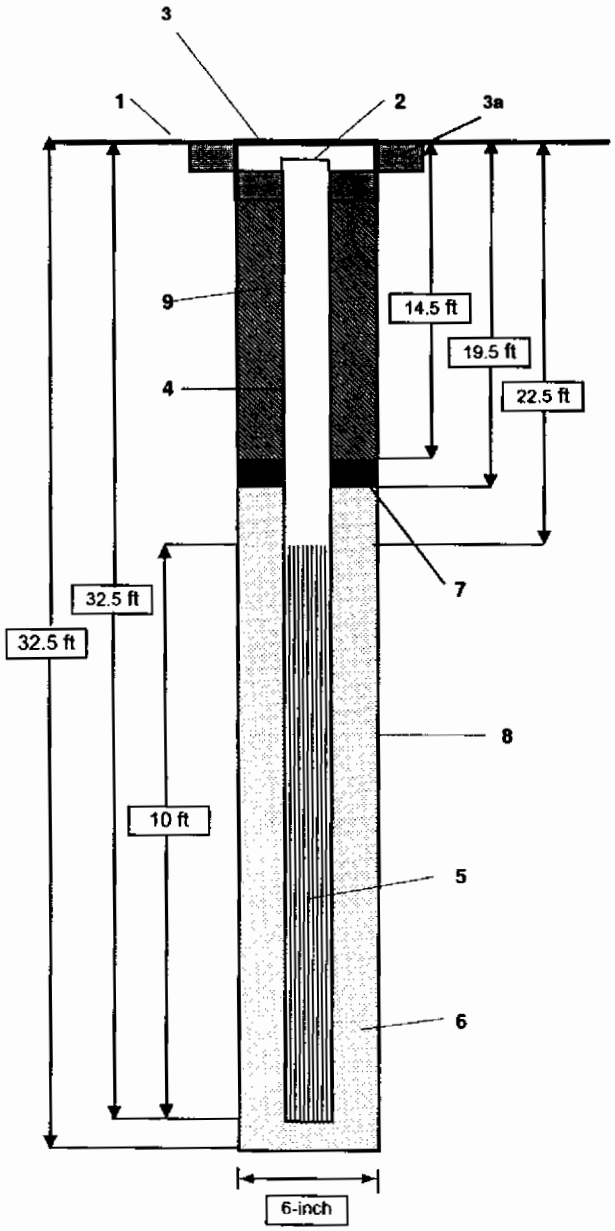

1- Ground elevation at well	[redacted]
2- Top of casing elevation	40.85
3- Protective cover type	8-ich dia. flush mount manhole vault
a) concrete pad dimensions	2 ft x 2 ft x 6-inches deep
4- Dia./type of well casing	2-inch inside diameter schedule 40 PVC
5- Type/slot size of screen	0.010-inch dia. machine slotted PVC
6- Type filter pack	20/40 Sieve Size Silica Sand
7- Type of seal	3/8-inch bentonite chips
8- Borehole diameter	6-inch
9- Grout	Bentonite grout

Note: Diagram not to scale.

PROJECT NUMBER	WELL NUMBER	
158814.ZA.EX.07	166GW039D	SHEET 1 OF 1

CH2MHILL

WELL COMPLETION DIAGRAM

PROJECT : SWMU 166, Zone K, Charleston Naval Complex — LOCATION : Charleston, South Carolina

DRILLING CONTRACTOR : Prosonic Corporation License # 1435 — NORTHING: 388061.6

DRILLING METHOD AND EQUIPMENT USED : Rotosonic (standard 4- and 6-inch casings) — EASTING: 2300254.4

WATER LEVELS : [redacted] START : 5/13/2002 END: 5/13/2002 LOGGER : David Beverly

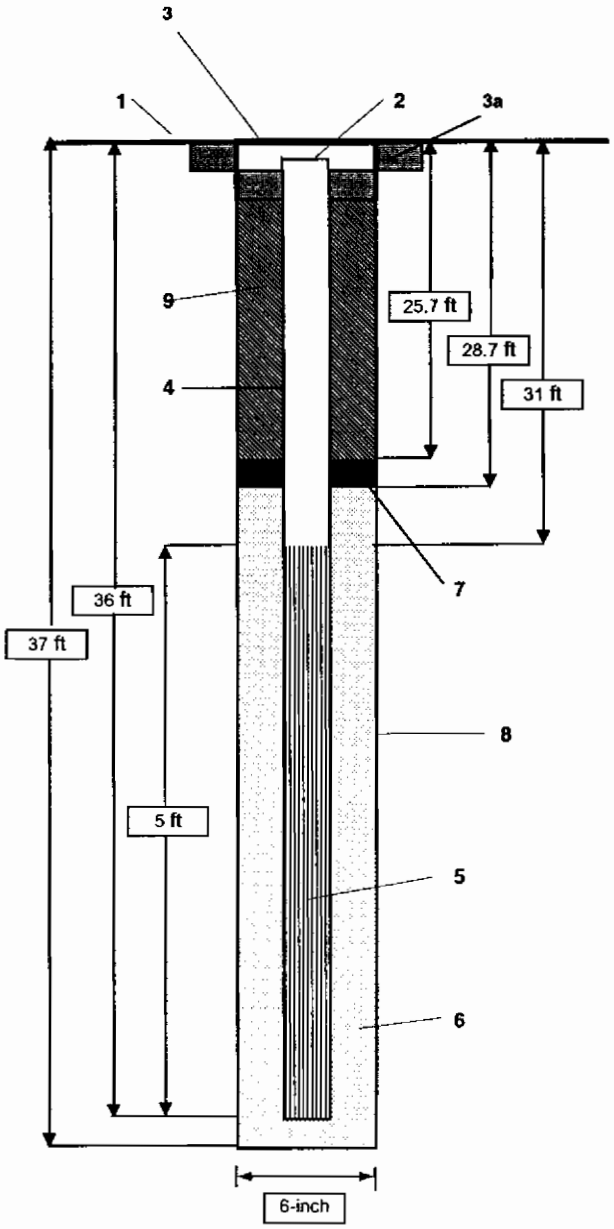

1- Ground elevation at well	[redacted]
2- Top of casing elevation	41.02
3- Protective cover type	8-ich dia. flush mount manhole vault
a) concrete pad dimensions	2 ft x 2 ft x 6-inches deep
4- Dia./type of well casing	2-inch inside diameter schedule 40 PVC
5- Type/slot size of screen	0.010-inch dia. machine slotted PVC
6- Type filter pack	20/40 Sieve Size Silica Sand
7- Type of seal	3/8-inch bentonite pellets
8- Borehole diameter	6-inch
9- Grout	Bentonite grout

Note: Diagram not to scale.

PROJECT NUMBER	WELL NUMBER	
158814.ZA.EX.07	166GW040D	SHEET 1 OF 1

CH2MHILL

WELL COMPLETION DIAGRAM

PROJECT : SWMU 166, Zone K, Charleston Naval Complex — LOCATION : Charleston, South Carolina

DRILLING CONTRACTOR : Prosonic Corporation License # 1435

DRILLING METHOD AND EQUIPMENT USED : Hollow stem augers (7 1/4-inch outside diameter)

WATER LEVELS : [redacted] START : 5/14/2002 END: 5/14/2002 LOGGER : David Beverly

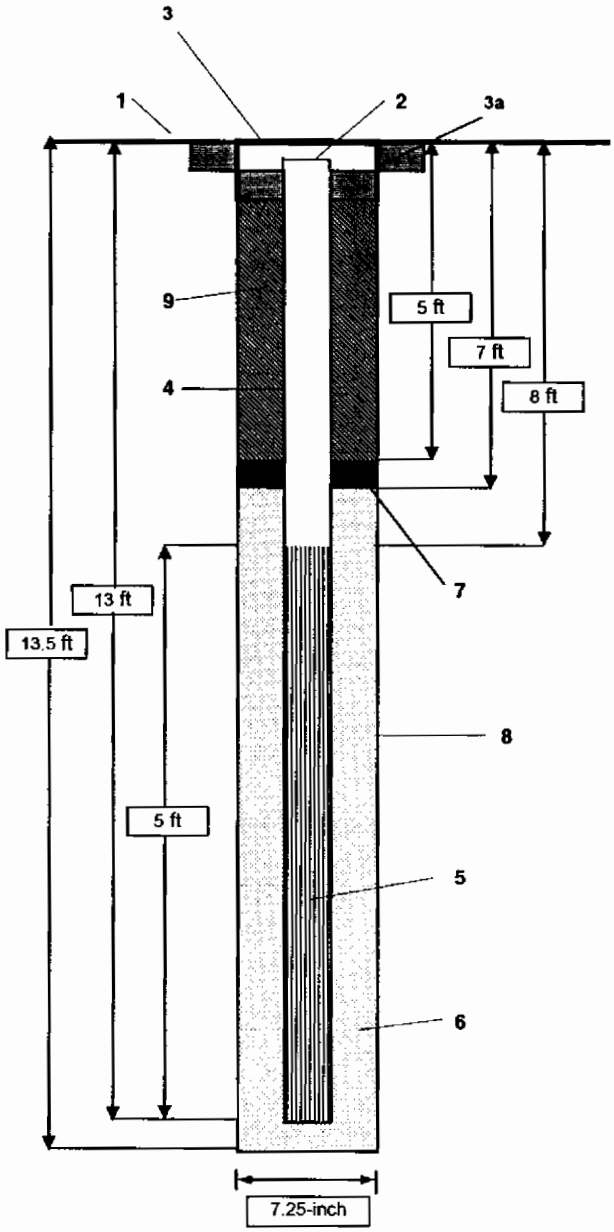

1- Ground elevation at well	[redacted]
2- Top of casing elevation	[redacted]
3- Protective cover type	8-ich dia. flush mount manhole vault
a) concrete pad dimensions	2 ft x 2 ft x 6-inches deep
4- Dia./type of well casing	2-inch inside diameter schedule 40 PVC
5- Type/slot size of screen	0.010-inch dia. machine slotted PVC
6- Type filter pack	20/40 Sieve Size Silica Sand
7- Type of seal	3/8-inch bentonite chips
8- Borehole diameter	7.25-inch
9- Grout	Bentonite grout

Note: Diagram not to scale.

PROJECT NUMBER	WELL NUMBER	
158814.ZA.EX.07	166GW041D	SHEET 1 OF 1

CH2MHILL

WELL COMPLETION DIAGRAM

PROJECT : SWMU 166, Zone K, Charleston Naval Complex — LOCATION : Charleston, South Carolina

DRILLING CONTRACTOR : Prosonic Corporation License # 1435 — NORTHING: 388203.9

DRILLING METHOD AND EQUIPMENT USED : Rotosonic (standard 4- and 6-inch casings) — EASTING: 2300363.7

WATER LEVELS : [redacted] START : 5/14/2002 END: 5/14/2002 LOGGER : David Beverly

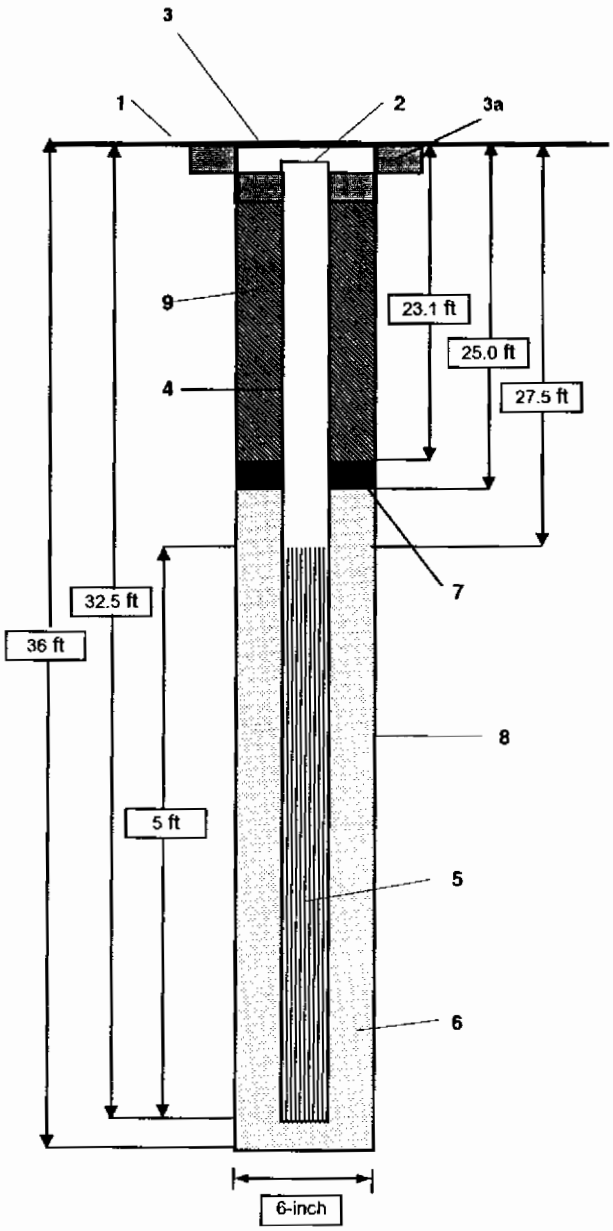

1- Ground elevation at well	[redacted]
2- Top of casing elevation	41.03
3- Protective cover type	8-ich dia. flush mount manhole vault
a) concrete pad dimensions	2 ft x 2 ft x 6-inches deep
4- Dia./type of well casing	2-inch inside diameter schedule 40 PVC
5- Type/slot size of screen	0.010-inch dia. machine slotted PVC
6- Type filter pack	20/40 Sieve Size Silica Sand
7- Type of seal	3/8-inch bentonite pellets
8- Borehole diameter	6-inch
9- Grout	Bentonite grout

Note: Diagram not to scale.

PROJECT NUMBER	WELL NUMBER	
158814.ZK.EX.07	166GW042D	SHEET 1 OF 1

CH2MHILL

WELL COMPLETION DIAGRAM

PROJECT : SWMU 166, Zone K, Charleston Naval Complex — LOCATION : Charleston, South Carolina

DRILLING CONTRACTOR : Prosonic Corporation License # 1435 — NORTHING: 388154.7

DRILLING METHOD AND EQUIPMENT USED : Hollow stem augers (7 1/4-inch outside diameter) — EASTING: 2300362.2

WATER LEVELS : START : 5/14/2002 END: 5/14/2002 — LOGGER : David Beverly

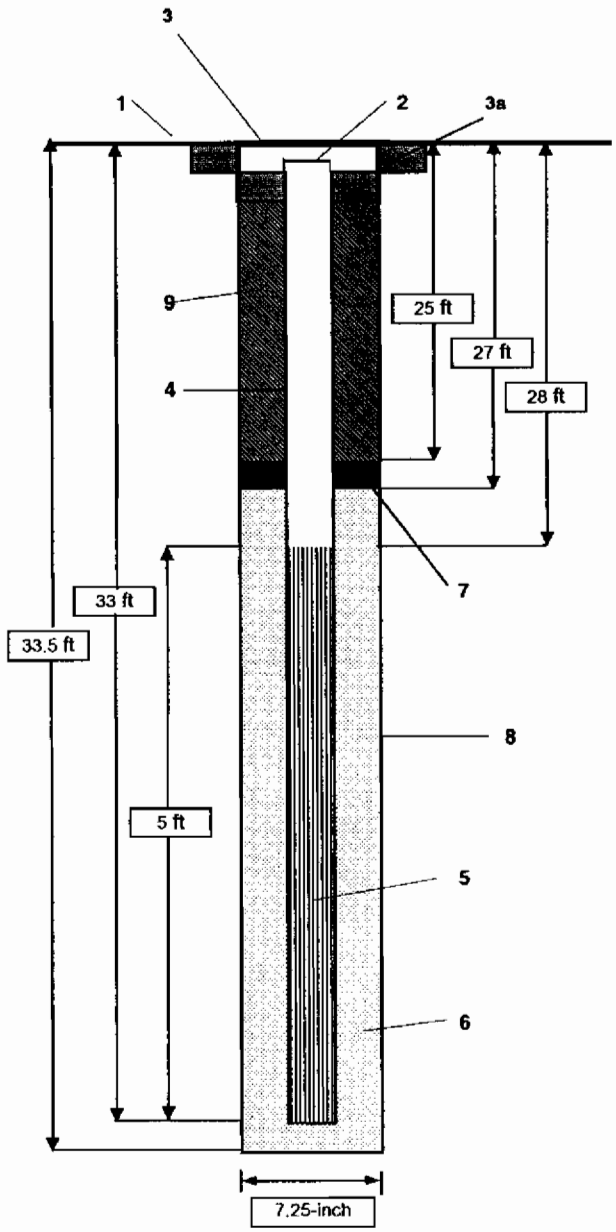

1- Ground elevation at well	
2- Top of casing elevation	40.83
3- Protective cover type	8-ich dia. flush mount manhole vault
a) concrete pad dimensions	2 ft x 2 ft x 6-inches deep
4- Dia./type of well casing	2-inch inside diameter schedule 40 PVC
5- Type/slot size of screen	0.010-inch dia. machine slotted PVC
6- Type filter pack	20/40 Sieve Size Silica Sand
7- Type of seal	3/8-inch bentonite chips
8- Borehole diameter	7.25-inch
9- Grout	Bentonite grout

Note: Diagram not to scale.

PROJECT NUMBER	WELL NUMBER	
158814.ZK.EX.07	166GW043D	SHEET 1 OF 1

CH2MHILL

WELL COMPLETION DIAGRAM

PROJECT : SWMU 166, Zone K, Charleston Naval Complex — LOCATION : Charleston, South Carolina

DRILLING CONTRACTOR : Prosonic Corporation License # 1435 — NORTHING: 388111.3

DRILLING METHOD AND EQUIPMENT USED : Rotosonic (standard 4- and 6-inch casings) — EASTING: 2300361.5

WATER LEVELS : START : 5/14/2002 END: 5/14/2002 — LOGGER : David Beverly

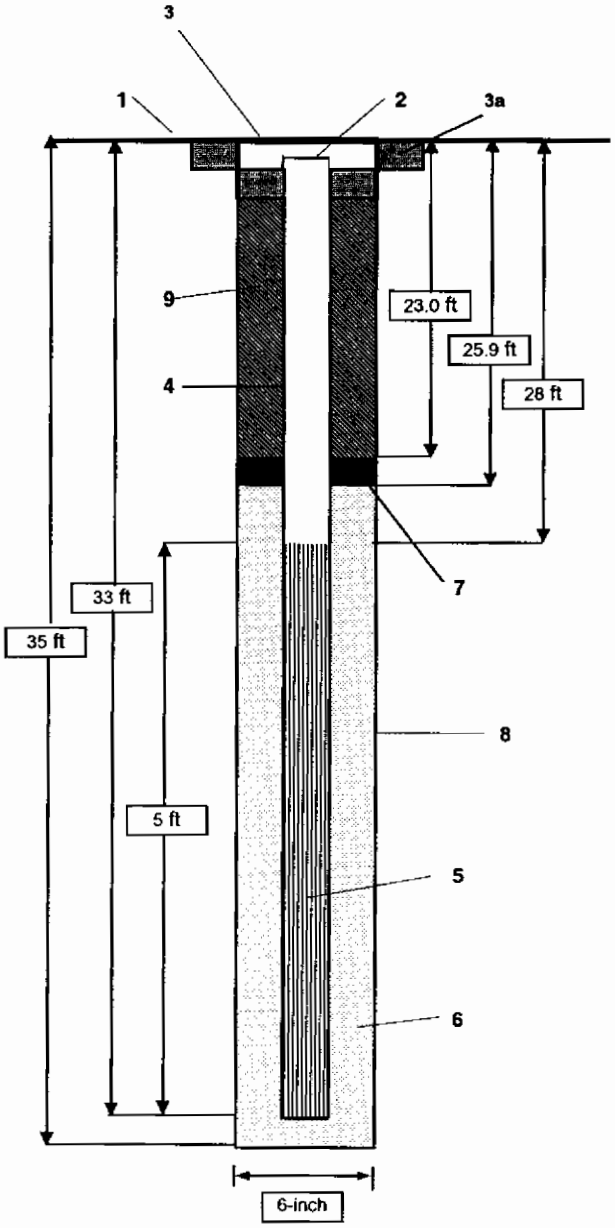

1- Ground elevation at well	
2- Top of casing elevation	41.12
3- Protective cover type	8-ich dia. flush mount manhole vault
a) concrete pad dimensions	2 ft x 2 ft x 6-inches deep
4- Dia./type of well casing	2-inch inside diameter schedule 40 PVC
5- Type/slot size of screen	0.010-inch dia. machine slotted PVC
6- Type filter pack	20/40 Sieve Size Silica Sand
7- Type of seal	3/8-inch bentonite pellets
8- Borehole diameter	6-inch
9- Grout	Bentonite grout

Note: Diagram not to scale.

PROJECT NUMBER	WELL NUMBER	
158814.ZA.EX.07	166GW044D	SHEET 1 OF 1

CH2MHILL

WELL COMPLETION DIAGRAM

PROJECT : SWMU 166, Zone K, Charleston Naval Complex — LOCATION : Charleston, South Carolina

DRILLING CONTRACTOR : Prosonic Corporation License # 1435 — NORTHING: 388162.8

DRILLING METHOD AND EQUIPMENT USED : Rotosonic (standard 4- and 6-inch casings) — EASTING: 2300427.2

WATER LEVELS : [redacted] START : 5/15/2002 END: 5/15/2002 LOGGER : David Beverly

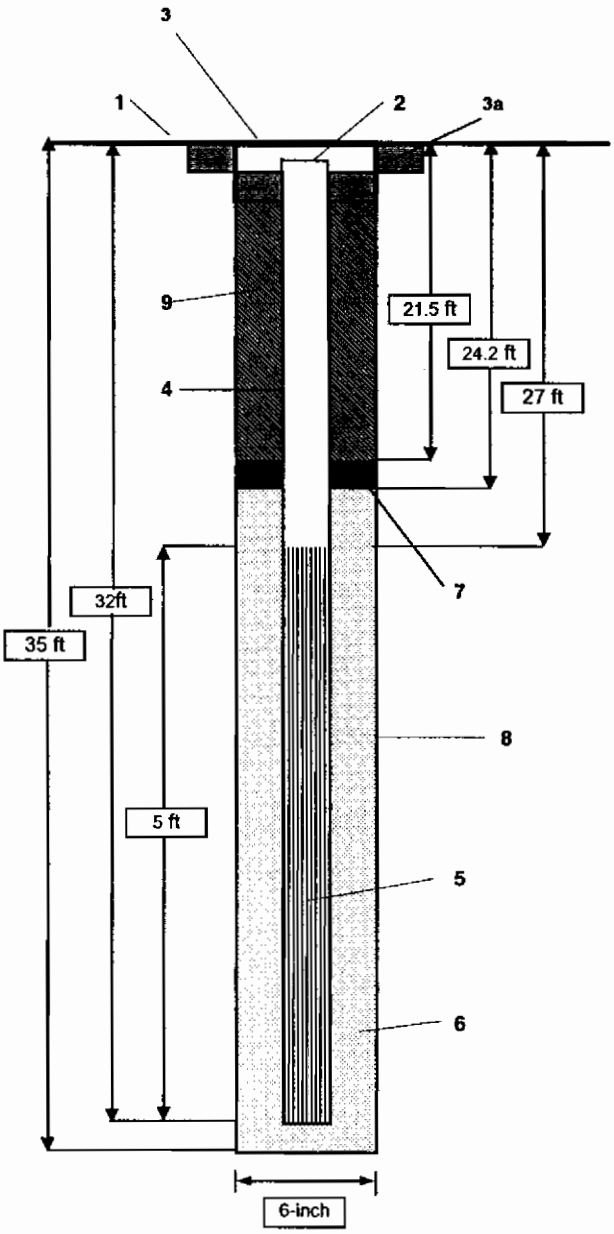

1- Ground elevation at well	[redacted]
2- Top of casing elevation	40.55
3- Protective cover type	8-ich dia. flush mount manhole vault
a) concrete pad dimensions	2 ft x 2 ft x 6-inches deep
4- Dia./type of well casing	2-inch inside diameter schedule 40 PVC
5- Type/slot size of screen	0.010-inch dia. machine slotted PVC
6- Type filter pack	20/40 Sieve Size Silica Sand
7- Type of seal	3/8-inch bentonite pellets
8- Borehole diameter	6-inch
9- Grout	Bentonite grout

Note: Diagram not to scale.

PROJECT NUMBER	WELL NUMBER	
158814.ZA.EX.07	166GW045D	SHEET 1 OF 1

CH2MHILL

WELL COMPLETION DIAGRAM

PROJECT : SWMU 166, Zone K, Charleston Naval Complex — LOCATION : Charleston, South Carolina

DRILLING CONTRACTOR : Prosonic Corporation License # 1435 — NORTHING: 388231.7

DRILLING METHOD AND EQUIPMENT USED : Hollow stem augers (7 1/4-inch outside diameter) — EASTING: 2300464

WATER LEVELS : [redacted] START : 5/14/2002 END: 5/15/2002 LOGGER : David Beverly

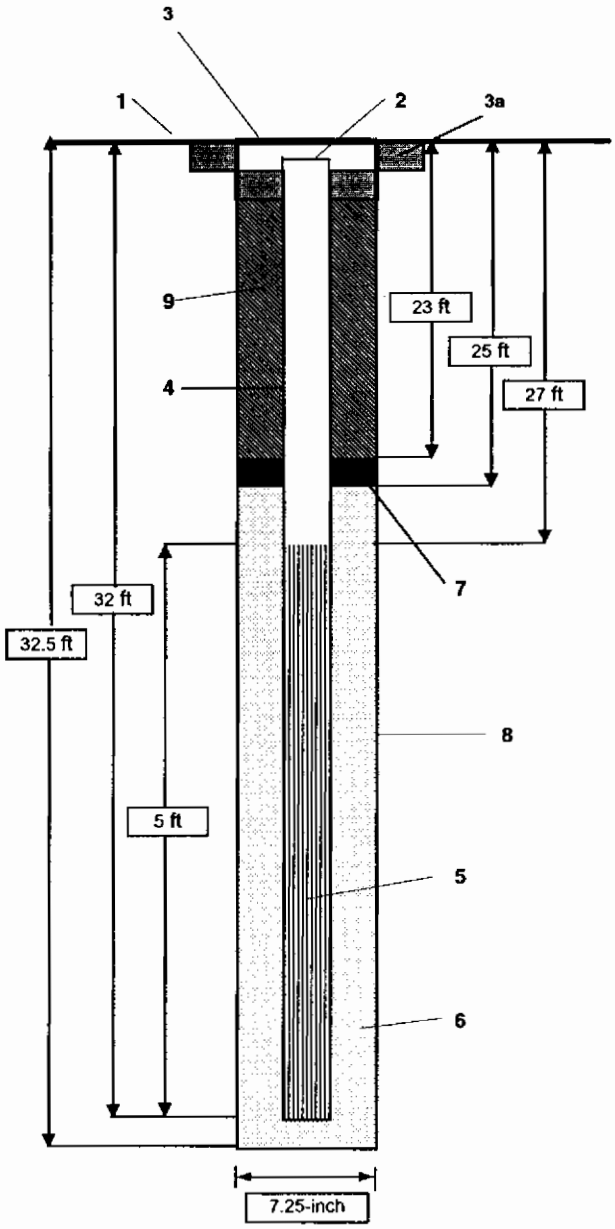

1- Ground elevation at well	[redacted]
2- Top of casing elevation	40.53
3- Protective cover type	8-ich dia. flush mount manhole vault
a) concrete pad dimensions	2 ft x 2 ft x 6-inches deep
4- Dia./type of well casing	2-inch inside diameter schedule 40 PVC
5- Type/slot size of screen	0.010-inch dia. machine slotted PVC
6- Type filter pack	20/40 Sieve Size Silica Sand
7- Type of seal	3/8-inch bentonite chips
8- Borehole diameter	7.25-inch
9- Grout	Bentonite grout

Note: Diagram not to scale.

PROJECT NUMBER	WELL NUMBER	
158814.ZA.EX.07	166GW046D	SHEET 1 OF 1

CH2MHILL

WELL COMPLETION DIAGRAM

PROJECT : SWMU 166, Zone K, Charleston Naval Complex — LOCATION : Charleston, South Carolina

DRILLING CONTRACTOR : Prosonic Corporation License # 1435 — NORTHING: 388155.5

DRILLING METHOD AND EQUIPMENT USED : Rotosonic (standard 4- and 6-inch casings) — EASTING: 2300489.4

WATER LEVELS : [redacted] START : 5/15/2002 END: 5/15/2002 LOGGER : David Beverly

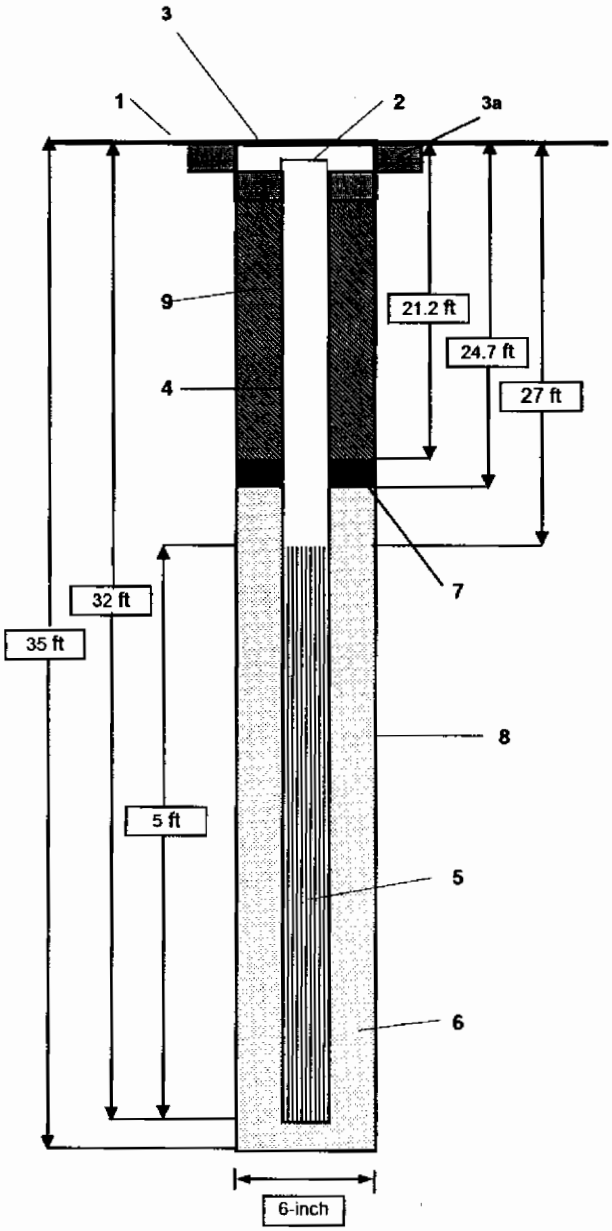

1- Ground elevation at well	[redacted]
2- Top of casing elevation	40.6
3- Protective cover type	8-ich dia. flush mount manhole vault
a) concrete pad dimensions	2 ft x 2 ft x 6-inches deep
4- Dia./type of well casing	2-inch inside diameter schedule 40 PVC
5- Type/slot size of screen	0.010-inch dia. machine slotted PVC
6- Type filter pack	20/40 Sieve Size Silica Sand
7- Type of seal	3/8-inch bentonite pellets
8- Borehole diameter	6-inch
9- Grout	Bentonite grout

Note: Diagram not to scale.

PROJECT NUMBER	WELL NUMBER	
158814.ZA.EX.07	166GW047D	SHEET 1 OF 1

CH2MHILL

WELL COMPLETION DIAGRAM

PROJECT : SWMU 166, Zone K, Charleston Naval Complex — LOCATION : Charleston, South Carolina

DRILLING CONTRACTOR : Prosonic Corporation License # 1435 — NORTHING: 388186.5

DRILLING METHOD AND EQUIPMENT USED : Rotosonic (standard 4- and 6-inch casings) — EASTING: 2300528.1

WATER LEVELS : [redacted] START : 5/15/2002 END: 5/15/2002 LOGGER : David Beverly

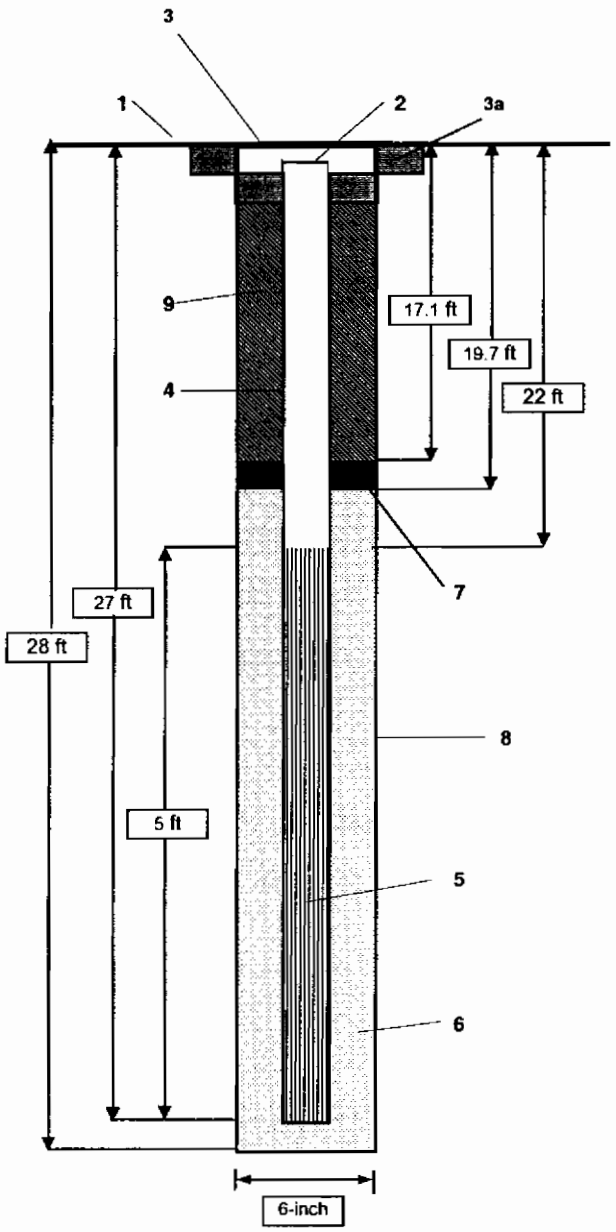

1- Ground elevation at well	[redacted]
2- Top of casing elevation	41.02
3- Protective cover type	8-ich dia. flush mount manhole vault
a) concrete pad dimensions	2 ft x 2 ft x 6-inches deep
4- Dia./type of well casing	2-inch inside diameter schedule 40 PVC
5- Type/slot size of screen	0.010-inch dia. machine slotted PVC
6- Type filter pack	20/40 Sieve Size Silica Sand
7- Type of seal	3/8-inch bentonite pellets
8- Borehole diameter	6-inch
9- Grout	Bentonite grout

Note: Diagram not to scale.

PROJECT NUMBER	WELL NUMBER	
158814.ZA.EX.07	166GW048D	SHEET 1 OF 1

CH2MHILL

WELL COMPLETION DIAGRAM

PROJECT : SWMU 166, Zone K, Charleston Naval Complex — LOCATION : Charleston, South Carolina

DRILLING CONTRACTOR : Prosonic Corporation License # 1435 — NORTHING: 388181.7

DRILLING METHOD AND EQUIPMENT USED : Rotosonic (standard 4- and 6-inch casings) — EASTING: 2300531.3

WATER LEVELS : [redacted] START : 5/14/2002 END: 5/14/2002 LOGGER : David Beverly

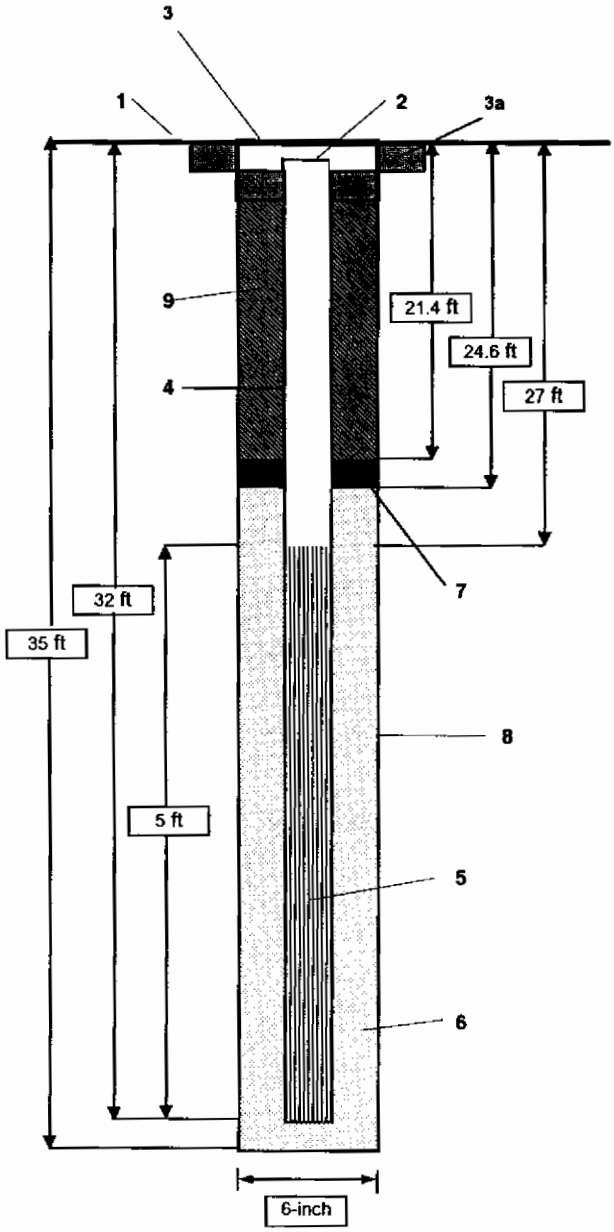

1- Ground elevation at well	[redacted]
2- Top of casing elevation	40.85
3- Protective cover type	8-ich dia. flush mount manhole vault
a) concrete pad dimensions	2 ft x 2 ft x 6-inches deep
4- Dia./type of well casing	2-inch inside diameter schedule 40 PVC
5- Type/slot size of screen	0.010-inch dia. machine slotted PVC
6- Type filter pack	20/40 Sieve Size Silica Sand
7- Type of seal	3/8-inch bentonite pellets
8- Borehole diameter	6-inch
9- Grout	Bentonite grout

Note: Diagram not to scale.

PROJECT NUMBER	WELL NUMBER	
158814.ZA.EX.07	166GW049D	SHEET 1 OF 1

CH2MHILL

WELL COMPLETION DIAGRAM

PROJECT : SWMU 166, Zone K, Charleston Naval Complex — LOCATION : Charleston, South Carolina

DRILLING CONTRACTOR : Prosonic Corporation License # 1435 — NORTHING: 388292.1

DRILLING METHOD AND EQUIPMENT USED : Hollow stem augers (7 1/4-inch outside diameter) — EASTING: 2300567.5

WATER LEVELS : [redacted] START : 5/15/2002 END: 5/15/2002 LOGGER : David Beverly

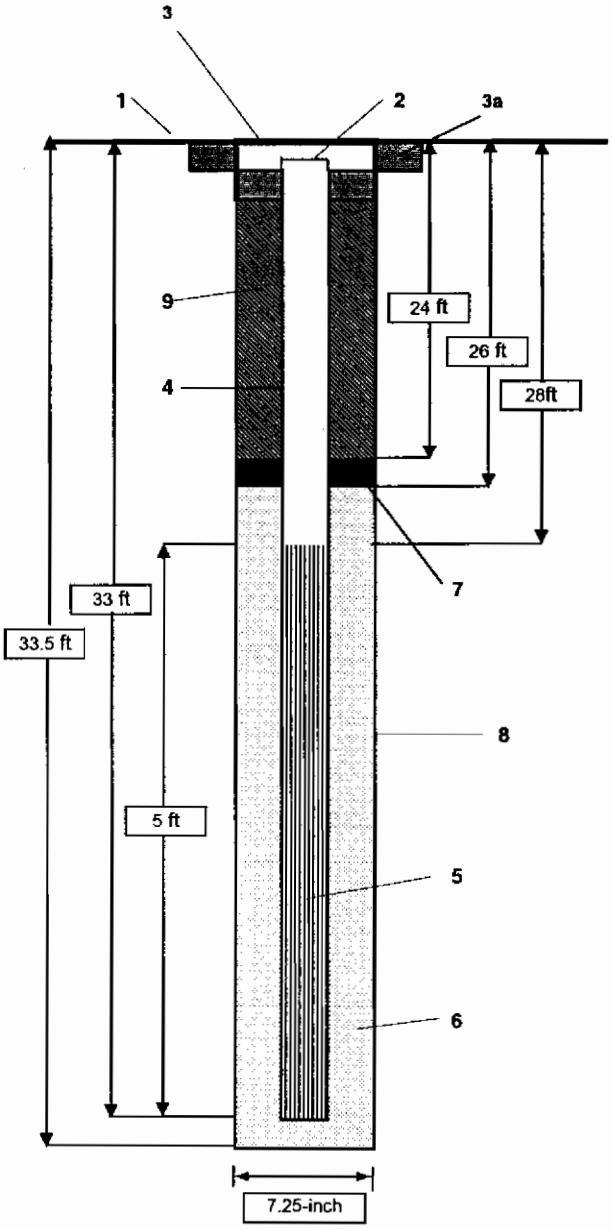

1- Ground elevation at well	[redacted]
2- Top of casing elevation	41.56
3- Protective cover type	8-ich dia. flush mount manhole vault
a) concrete pad dimensions	2 ft x 2 ft x 6-inches deep
4- Dia./type of well casing	2-inch inside diameter schedule 40 PVC
5- Type/slot size of screen	0.010-inch dia. machine slotted PVC
6- Type filter pack	20/40 Sieve Size Silica Sand
7- Type of seal	3/8-inch bentonite chips
8- Borehole diameter	7.25-inch
9- Grout	Bentonite grout

Note: Diagram not to scale.

PROJECT NUMBER	WELL NUMBER	
158814.ZA.EX.07	166GW050D	SHEET 1 OF 1

CH2MHILL

WELL COMPLETION DIAGRAM

PROJECT : SWMU 166, Zone K, Charleston Naval Complex — LOCATION : Charleston, South Carolina

DRILLING CONTRACTOR : Prosonic Corporation License # 1435 — NORTHING: 388267.8

DRILLING METHOD AND EQUIPMENT USED : Hollow stem augers (7 1/4-inch outside diameter) — EASTING: 2300666.3

WATER LEVELS : [redacted] START : 5/16/2002 END: 5/16/2002 LOGGER : David Beverly

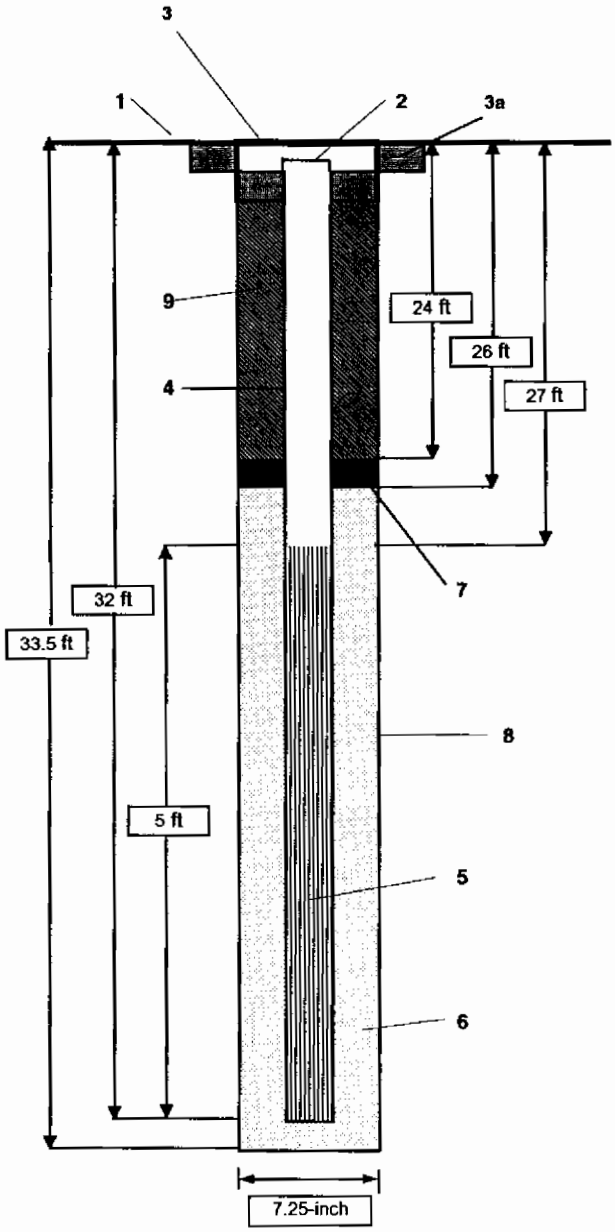

1- Ground elevation at well	[redacted]
2- Top of casing elevation	41.48
3- Protective cover type	8-ich dia. flush mount manhole vault
a) concrete pad dimensions	2 ft x 2 ft x 6-inches deep
4- Dia./type of well casing	2-inch inside diameter schedule 40 PVC
5- Type/slot size of screen	0.010-inch dia. machine slotted PVC
6- Type filter pack	20/40 Sieve Size Silica Sand
7- Type of seal	3/8-inch bentonite chips
8- Borehole diameter	7.25-inch
9- Grout	Bentonite grout

Note: Diagram not to scale.

PROJECT NUMBER	WELL NUMBER	
158814.ZA.EX.07	166GW051D	SHEET 1 OF 1

CH2MHILL

WELL COMPLETION DIAGRAM

PROJECT : SWMU 166, Zone K, Charleston Naval Complex — LOCATION : Charleston, South Carolina

DRILLING CONTRACTOR : Prosonic Corporation License # 1435 — NORTHING: 388422.7

DRILLING METHOD AND EQUIPMENT USED : Rotosonic (standard 4- and 6-inch casings) — EASTING: 2300703.9

WATER LEVELS : [redacted] START : 5/14/2002 END: 5/14/2002 LOGGER : David Beverly

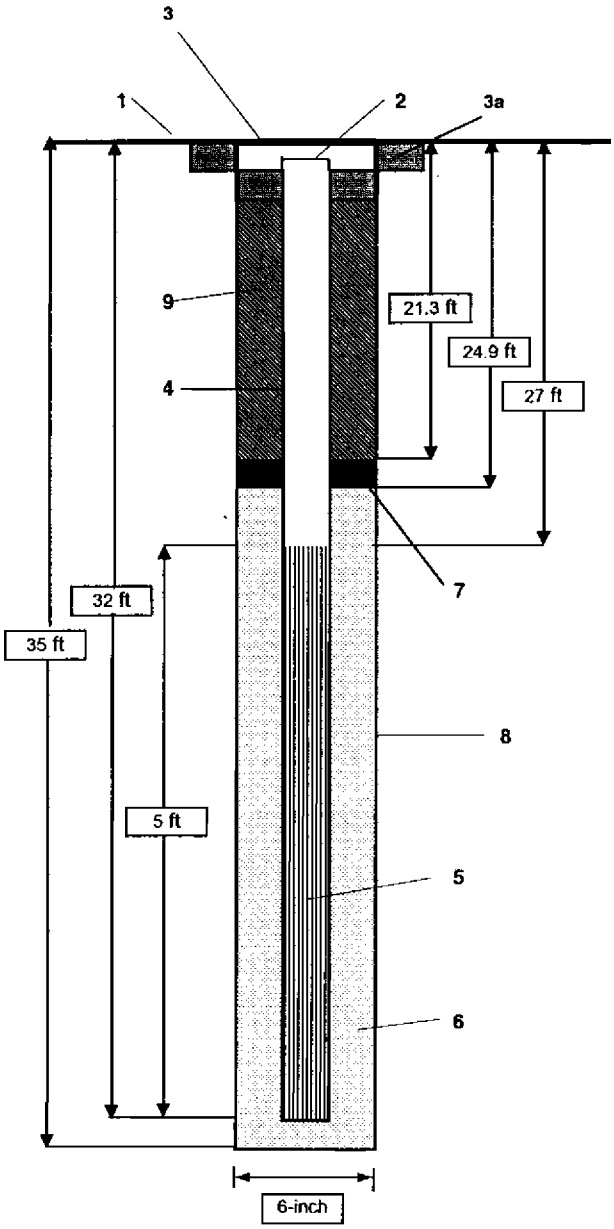

1- Ground elevation at well	[redacted]
2- Top of casing elevation	42.11
3- Protective cover type	8-ich dia. flush mount manhole vault
a) concrete pad dimensions	2 ft x 2 ft x 6-inches deep
4- Dia./type of well casing	2-inch inside diameter schedule 40 PVC
5- Type/slot size of screen	0.010-inch dia. machine slotted PVC
6- Type filter pack	20/40 Sieve Size Silica Sand
7- Type of seal	3/8-inch bentonite chips
8- Borehole diameter	6-inch
9- Grout	Bentonite grout

Note: Diagram not to scale.

PROJECT NUMBER	WELL NUMBER	
158814.ZA.EX.07	166GW052D	SHEET 1 OF 1

CH2MHILL

WELL COMPLETION DIAGRAM

PROJECT : SWMU 166, Zone K, Charleston Naval Complex — LOCATION : Charleston, South Carolina

DRILLING CONTRACTOR : Prosonic Corporation License # 1435 — NORTHING: 388438.7

DRILLING METHOD AND EQUIPMENT USED : Rotosonic (standard 4- and 6-inch casings) — EASTING: 2300738.5

WATER LEVELS : START : 5/16/2002 END: 5/16/2002 — LOGGER : David Beverly

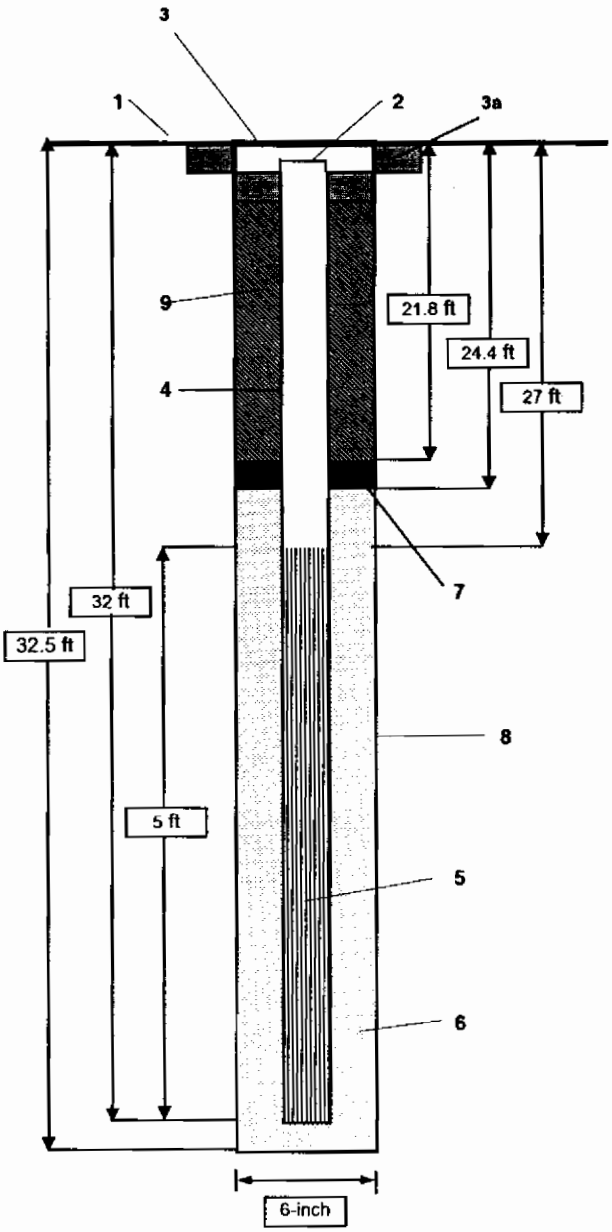

1- Ground elevation at well	
2- Top of casing elevation	41.99
3- Protective cover type	8-ich dia. flush mount manhole vault
a) concrete pad dimensions	2 ft x 2 ft x 6-inches deep
4- Dia./type of well casing	2-inch inside diameter schedule 40 PVC
5- Type/slot size of screen	0.010-inch dia. machine slotted PVC
6- Type filter pack	20/40 Sieve Size Silica Sand
7- Type of seal	3/8-inch bentonite chips
8- Borehole diameter	6-inch
9- Grout	Bentonite grout

Note: Diagram not to scale.

TABLE C-1
PHASE 1 TTA-1
INJECTION SUMMARY

Table C-1 Injection Parameters- Phase I Injections- TTA 1, SWMU 166, Zone K, CNC										Pressure Influence (PSI)				Comments/Observations
Date	Location	Injection Well Sequence	Interval (ft bgs)	Duration (min)	Pressure (PSI)	Measured Flowrate (SCFM)	Actual Flowrate (SCFM)	Target ZVI Dosage (lbs)	Actual ZVI Dosage (lbs)	MW-34D	MW-33D	MW-36D	MW-37D	
5/22/2002	TTA-1	PF-1	27 - 30 5	NR	50	NR	NR		550	3	5	NM	NM	Packer blew due to borehole errosion
5/23/2002		PF-2	31 - 34	NR	50	NR	NR	2000	1210	NM	NM	6	4 5	New packer assembly created because a packer blew during previous injection
			28 - 31	NR	50	NR	NR	2000	1155	8	NM	5	4	Packer in MW-36D blew out of the well. Reading may out be accurate
			26 - 29	NR	50	NR	NR	2000	1155	NM	NM	5	2	Good injection with pressure influence at targeted monitoring wells
5/28/2002		PF-4	31 - 34	NR	100	NR	NR	1500	825	2	9	NM	NM	Good injection with pressure influence at targeted monitoring wells
			28 - 31	NR	50	NR	NR	1500	825	PV	9	NM	NM	Good injection with pressure influence at targeted monitoring wells
			27 - 30	NR	50	130	NR	1500	825	3	16	NM	NM	Off-gasing observed around casing
			26 - 29	NR	50	NR	NR	1500	825	ND	ND	NM	NM	
5/29/2002		PF-3	30.5 - 33.5	NR	50	150	NR	2000	2750	2	9	NM	NM	Good injection with pressure influence at targeted monitoring wells
			28.5 - 31 5	NR	50	NR	NR	2000	1375	ND	5	NM	NM	Gas flow pressure reached 140 psig because of nozzle clog
			25.5 - 28.5	NR	75	NR	NR	2000	1375	ND	ND	NM	NM	Pulsing method used because of mounding issues
5/30/2002		PF-1R	31 - 34	NR	55 - 60	200	NR	1500	1375	1	4	NM	NM	PF-1R(offset) was relocated approxmately 8' from original injection borehole in a south southeast direction Nozzle was tremmied because it was clogged with iron
			28 - 31	NR	60	NR	NR	1500	1375	ND	ND	NM	NM	Influence was observed at the monitoring during lowest injection event but was not observed after that. This indicaqtes propagation in the upwards direction
			27 - 30	NR	75	150 - 200	NR	1500	1375	ND	ND	NM	NM	
			26 - 29	NR	50	NR	NR	1500	770	ND	ND	NM	NM	
							Total:	24000	17765					

NR - Denotes "Not Recorded"

NM - Denotes "Not Monitored"

PV - Denotes "Pressure Response and Vented"

ND - Denotes "Non - Detect"

TABLI
PHASE 1 ı ıA-2
INJECTION SUMMARY

Table C-2 Injection Parameters- Phase I Injections- TTA 2, SWMU 166, Zone K, CNC										Pressure Influence (PSI)			Comments/Observations
[illegible]	[illegible]	[illegible]	[illegible]	[illegible]	[illegible]	[illegible]	[illegible]	[illegible]	[illegible]	[illegible]	[illegible]	[illegible]	
5/31/2002	TTA-2	PF-1	33.5 - 36.5	NR	50	150 - 200	NR	1133	2200	2	NM	NM	At PF-1, daylighting occurred at a depth interval of 13-15 ft. At PF-2, daylighting occurred at a depth interval of 30.5-33.5 ft. As a results of the daylighting observed at both of these locations and in order to complete the injections, the shallow intervals for PF-1 and PF-2 were offset 5 ft away from the deeper locations.
			31.5 - 35	NR	50	NR	NR	1133	1100	2	NM	NM	
			29.5 - 33	NR	50	NR	NR	1133	1100	ND	NM	NM	
			26.5 - 31.5	NR	50	NR	NR	1133	1100	ND	NM	NM	
		PF-2	33.5 - 36.5	NR	55	100 - 150	NR	1416	1100	NM	15+	NM	
			31.5 - 34.5	NR	50	100 - 150	NR	1416	1100	NM	ND	NM	
			30.5 - 33.5	NR	85	100 - 150	NR	1416	1100	NM	NM	NM	
		PF-1R	11.5 - 15	NR	50	NR	NR	1133	1980	NM	NM	NM	
6/4/2002		PF-2R	11.5 - 15	NR	50	NR	NR	1416	2200	NM	NM	NM	
		PF-4	17 - 19	NR	50	NR	NR	1416	1100	NM	NM	4	Had to tremmie nozzle 5 times because of running sands
			15 - 17	NR	50	NR	NR	1416	1100	NM	NM	ND	
			13 - 15	NR	50	NR	NR	1416	1100	NM	NM	1.5	GW-40D is located approximately 10' for the borehole
			11 - 13	NR	50	NR	NR	1416	550	NM	NM	ND	Ground surface heave observed around PF-4 at a depth of 11-13 ft resulting in only 550 lbs injected at that interval.
		PF-3	16 - 19	NR	50	NR	NR	1133	1100	NM	NM	NM	
			14 - 17	NR	50	NR	NR	1133	1100	NM	NM	NM	Injection took place without a bottom packer because the packer line became disconnected
6/7/2002		PF-3	12 - 15	NR	50	50 - 100	NR	1133	1100	NM	NM	NM	
		PF-3R	10 - 13	NR	50	50 - 100	NR	1133	1100	NM	NM	NM	During initial injections at PF-3, the injection assembly had to be removed for repairs, as a result the borehole collapsed and in order to finish the injections an offset borehole was installed. At PF-3 offset, surface heave was noted at 9-11 ft.
			9 - 12	NR	50	50 - 100	NR	1133	1265	NM	NM	NM	
		PF-5	17 - 19	NR	50	50 - 100	NR	1133	1100	NM	NM	NM	PF-5R and PF-6 are additional injection locations. At PF-5 from 15-17 ft daylighting occurred, therefore, an offset borehole was installed to finish the upper intervals.
			15 - 17	NR	50	50 - 100	NR	1133	1100	NM	NM	NM	
6/8/2002		PF-5	13 - 15	NR	40	NR	NR	1133	550	NM	NM	NM	
		PF-6	17 - 19	NR	50	NR	NR	1416	1100	NM	NM	NM	
			14 - 16	NR	50	NR	NR	1416	1100	NM	NM	NM	
			12 - 14	NR	50	NR	NR	1416	1100	NM	NM	NM	
			9 - 11	NR	50	NR	NR	1416	385	NM	NM	NM	
6/10/2002		PF-5R	12 - 15	NR	50	NR	NR	1133	550	NM	NM	NM	
			10 - 13	NR	50	NR	NR	1133	1100	NM	NM	NM	
			9 - 11	NR	50	NR	NR	1133	1100	NM	NM	NM	
							Total:	34000	31680				

NR - Denotes "Not Recorded"

NM - Denotes "Not Monitored"

PV - Denotes "Pressure Response and Vented"

ND - Denotes "Non - Detect"

TABLE C-3
PHASE 1 TTA-3
INJECTION SUMMARY

Table C-3 Injection Parameters- Phase 1 Injections- TTA 3, SWMU 166, Zone K, CRC										Pressure Influence (PSI)												Comments/Observations
Date	Location	Injection and Sequence	Interval (ft bgs)	Duration (min)	Pressure (psi)	Measured Flowrate (lb/hr)	Actual Flowrate (lb/hr)	Target Fe Dosage (lbs)	Actual Fe Dosage (lbs)	MW-10	MW-13	MW-10D	MW-13D	MW-46	MW-20	PM-5	MW-9	PM-2	PM-4	PM-7	PM-8	
9/25/2002	TTA-3	PF-10	31.5 - 34.5	NR	75 - 100	200	NR	437	448	12	5	NM	NM	12.5	NM	NM	NM	NM	NM	NM	NM	Good injection with pressure influence at targeted monitoring wells
			29.5 - 32.5	NR	75 - 100	200	NR	437	448	ND	3	NM	NM	ND	NM	NM	NM	NM	NM	NM	NM	
			26.5 - 31.5	NR	50	NR	NR	437	275	ND	ND	NM	NM	ND	NM	NM	NM	NM	NM	NM	NM	Hydraulicly pumped in because of surface heave
9/26/2002		PF-9	31.5 - 34.5	NR	125	200	NR	437	448	3	ND	NM	NM	5	NM	NM	NM	NM	NM	NM	NM	Good injection with pressure influence at targeted monitoring wells
			29.5 - 32.5	NR	50-70	NR	NR	437	440	ND	ND	NM	NM	ND	NM	NM	NM	NM	NM	NM	NM	Off-gassing around injection well
			26.5 - 31.5	NR	65-90	NR	NR	437	440	ND	ND	NM	NM	ND	NM	NM	NM	NM	NM	NM	NM	
		PF-4	31.5 - 34.5	6.5	50-100	200	657	437	440	NM	NM	7.5	NM	NM	NM	NM	NM	NM	NM	NM	NM	Good injection with minimal pressure influence at monitoring wells
			29.5 - 32.5	7.25	80-95	200	478	437	440	NM	NM	NM	NM	NM	NM	NM	NM	NM	NM	NM	NM	
			26.5 - 31.5	4.5	75-95	200	348	437	440	NM	NM	NM	NM	NM	NM	NM	NM	NM	NM	NM	NM	
9/27/2002		PF-3	31.5 - 34.5	3.5	100	200	495	437	440	NM	NM	NM	NM	NM	NM	NM	NM	NM	NM	NM	NM	Good injections without pressure influence at monitoring wells
			29.5 - 32.5	4	100	200	542	437	440	NM	NM	NM	NM	NM	NM	NM	NM	NM	NM	NM	NM	
			26.5 - 31.5	3.5	50	NR	NR	437	440	NM	NM	NM	NM	NM	NM	NM	NM	NM	NM	NM	NM	
9/28/2002		PF-13	31.5 - 34.5	4.75	100	200	456	437	440	15	NM	NM	NM	NM	NM	NM	NM	9	NM	NM	NM	Good injection with pressure influence at targeted monitoring wells
			29.5 - 32.5	3.75	90-100	200	236	437	440	NM	NM	NM	NM	NM	NM	NM	NM	NM	NM	NM	NM	Daylighting occurred approximately 5' away from the injection borehole
			26.5 - 31.5	8.5	100-125	200	975	437	440	NM	NM	NM	NM	NM	NM	NM	NM	NM	NM	NM	NM	Good injection without pressure influence at targeted monitoring wells
9/30/2002		PF-16	31.5 - 34.5	4.5	100	200	793	437	440	NM	NM	NM	NM	NM	NM	NM	NM	3.3	NM	NM	NM	Good injection with pressure influence at targeted monitoring wells
			29.5 - 32.5	4.5	60	200	440	437	440	NM	NM	NM	NM	NM	NM	NM	NM	NM	NM	NM		Injection pressure was lowered due to major mounding around injection borehole
			26.5 - 31.5	3.5	20	NR	186	437	440	NM	NM	NM	NM	NM	NM	NM	NM	NM	NM	NM		
		PF-14	31.5 - 34.5	4	100-110	NR	NR	437	440	NM	NM	NM	NM	NM	PV	NM	NM	NM	NM	NM	10	Good injection with pressure influence at targeted monitoring wells
			29.5 - 32.5	NR	95	NR	NR	437	440	NM	NM	NM	NM	NM	NM	NM	NM	NM	NM	NM	ND	Daylighting occurred approximately 2.5' from the injection borehole
			26.5 - 31.5	NR	70	NR	NR	437	275	NM	NM	NM	NM	NM	NM	NM	NM	NM	NM	NM	ND	Injection pressure decreased because of mounding around the injection borehole
10/1/2002		PF-17	31.5 - 34.5	8.5	100-110	NR	NR	437	440	NM	NM	NM	NM	NM	NM	5	NM	NM	NM	NM	5	Major heave on concrete slab. After initial injection gas was pulsed because of surface mounding
			29.5 - 32.5	4	75	NR	NR	437	440	NM	NM	NM	NM	NM	NM	NM	NM	NM	NM	NM	ND	
			26.5 - 31.5	4	75	NR	NR	437	440	NM	NM	NM	NM	NM	NM	NM	NM	NM	NM	NM	ND	
		PF-15	31.5 - 34.5	4.75	95	NR	NR	437	440	NM	NM	NM	NM	NM	NM	NM	NM	NM	NM	NM	NM	Good injections without pressure influence at monitoring wells
			29.5 - 32.5	4.5	100	NR	NR	437	440	NM	NM	NM	NM	NM	NM	NM	NM	NM	NM	NM	NM	
			26.5 - 31.5	5	100-115	NR	NR	437	440	NM	NM	NM	NM	NM	NM	NM	NM	NM	NM	NM	NM	
10/2/2002		PF-5	33 - 35	3.5	85-100	NR	NR	437	440	NM	NM	NM	NM	NM	NM	NM	26.5	NM	NM	NM	NM	3 intervals were targeted with lower Fe dosage to minimize surface heave
			31 - 33	NR	80	NR	NR	437	440	NM	NM	NM	NM	NM	NM	NM	NM	NM	NM	NM	NM	
			29 - 31	NR	80	NR	NR	437	440	NM	NM	NM	NM	NM	NM	NM	NM	NM	NM	NM	NM	
		PF-7	33 - 35	3.5	60-75	NR	NR	437	825	NM	NM	NM	26	NM	NM	NM	NM	NM	NM	NM	NM	Due to significant surface heave, injection intervals at PF-7 were limited
			31 - 33	NR	85	NR	NR	437	440	NM	NM	NM	ND	NM	NM	NM	NM	NM	NM	NM	NM	
10/3/2002		PF-11	31.5 - 34.5	2.5	85-100	NR	NR	437	440	NM	NM	NM	NM	NM	NM	NM	NM	NM	NM	4	NM	3 intervals were targeted with lower Fe dosage to minimize surface heave
			29.5 - 32.5	3.75	100	NR	NR	437	440	NM	NM	NM	NM	NM	NM	NM	NM	NM	NM	5	NM	Daylighting occurred approximately 2' from the injection borehole
			26.5 - 31.5	2	100	NR	NR	437	440	NM	NM	NM	NM	NM	NM	NM	NM	NM	NM	NM	NM	
		PF-6	31.5 - 34.5	3.75	100	NR	NR	437	550	NM	NM	NM	NM	NM	NM	NM	NM	NM	NM	NM	NM	Due to significant surface heave, injection intervals at PF-6 were limited
			29.5 - 32.5	NR	50	NR	NR	437	385	NM	NM	NM	NM	NM	NM	NM	NM	NM	NM	NM	NM	
10/7/2002		PF-12	31.5 - 34.5	NR	75	150-200	NR	437	440	NM	NM	NM	NM	NM	NM	NM	NM	NM	NM	NM	NM	Water jetted out of MW166-005
			29.5 - 32.5	NR	75	150-200	NR	437	440	NM	NM	NM	NM	NM	NM	NM	NM	NM	NM	NM	NM	
			26.5 - 31.5	NR	50	200	NR	437	440	NM	NM	NM	NM	NM	NM	NM	NM	NM	NM	NM	NM	
10/8/2002		PF-12	33 - 35	4	50	NR	NR	437	440	NM	NM	NM	NM	NM	NM	NM	NM	NM	NM	NM	NM	Presence of flowing sands at shallow interval prevented injections, at 26.5-30.5 ft bgs
			31 - 33	NR	50	NR	NR	437	385	NM	NM	NM	NM	NM	NM	NM	NM	NM	NM	NM	NM	
		PF-6	31.5 - 34.5	NR	50	NR	NR	437	385	NM	NM	NM	NM	NM	NM	NM	NM	NM	NM	NM	NM	Good injection witout pressure influence at monitoring wells
			29.5 - 32.5	NR	75-100	150-200	NR	437	440	NM	NM	NM	NM	NM	NM	NM	NM	NM	NM	NM	NM	
			26.5 - 31.5	NR	75	150	NR	437	440	NM	NM	NM	NM	NM	NM	NM	NM	NM	NM	NM	NM	
10/9/2002		PF-1	31.5 - 34.5	NR	50	NR	NR	437	440	NM	NM	NM	NM	NM	NM	NM	NM	NM	NM	NM	NM	Good injection witout pressure influence at monitoring wells
			29.5 - 32.5	NR	50	NR	NR	437	440	NM	NM	NM	NM	NM	NM	NM	NM	NM	NM	NM	NM	
			26.5 - 31.5	NR	50	NR	NR	437	440	NM	NM	NM	NM	NM	NM	NM	NM	NM	NM	NM	NM	
10/11/2002		PF-2	31.5 - 34.5	NR	50	NR	NR	437	440	NM	NM	NM	NM	NM	NM	NM	NM	NM	NM	NM	NM	Good injection witout pressure influence at monitoring wells
			29.5 - 32.5	NR	50	NR	NR	437	440	NM	NM	NM	NM	NM	NM	NM	NM	NM	NM	NM	NM	
			26.5 - 31.5	NR	50	NR	NR	437	223	NM	NM	NM	NM	NM	NM	NM	NM	NM	NM	NM	NM	Significant surface heave resulted in the injection of 223 lbs iron from 26.5-30.5 feet bgs
		PF-18	31.5 - 34.5	NR	50	NR	NR	437	440	NM	NM	NM	NM	NM	NM	NM	NM	NM	NM	NM	NM	Good injection witout pressure influence at monitoring wells
			29.5 - 32.5	NR	50	NR	NR	437	440	NM	NM	NM	NM	NM	NM	NM	NM	NM	NM	NM	NM	
			26.5 - 31.5	NR	50	NR	NR	437	223	NM	NM	NM	NM	NM	NM	NM	NM	NM	NM	NM	NM	
							Total	23598	23326													

NR - Denotes "Not Recorded"

NM - Denotes "Not Monitored"

PV - Denotes "Pressure Response Not Visited"

ND - Denotes "Non - Detect"

TABLE C-4
PHASE 1 TTA-4
INJECTION SUMMARY

Table C-4 Injection Parameters- Phase I Injections- TTA-4, SWMU 106, Zone K, CNC

Date	Location	Injection Well Sequence	Interval (ft bgs)	Pressure (psig)	Pressure (psig)	Measured Flowrate (GPM)	Actual Flowrate (GPM)	Fixed FW Dosage (lbs)	Actual FW Dosage (lbs)	ESP-01	Pressure Influence (PSI)						Comments/Observations
											GW-280	GW-281	Bw-001	MW-310	GW-320	GW-2	
2/25/2002	TTA-4	PF-1	33 - 35	NR	75	NR	NR	649	715	ND	14	13.5	36+	ND	ND	ND	Pressure influence may not have been recorded at GW 270 due to a clogged packer line.
			30 - 33	NR	75	NR	NR	669	650	ND	ND	4	ND	ND	ND	ND	Nozzle was clogged and had to be terminated out.
			27 - 30	NR	75	NR	NR	669	650	ND	ND	ND	ND	ND	ND	ND	Pulled Packer after injections were completed.
			25 - 28	NR	90	NR	NR	665	690	ND	ND	ND	ND	ND	ND	ND	Pad on neck of port nozzle.
			22 - 25	NR	90	NR	NR	659	690	ND	ND	ND	ND	ND	ND	ND	Good injection with pressure influence at targeted monitoring wells.
		PF-2	19 - 22	NR	60	NR	NR	506	660	2	ND	2	ND	ND	ND	ND	Good injection with pressure influence at targeted monitoring wells.
			32 - 35	NR	75	NR	NR	506	715	ND	3	ND	ND	ND	ND	ND	Daylighting occurred approximately 5 from injection borehole.
			30 - 33	NR	35 - 50	NR	NR	506	660	9	ND	9	ND	ND	ND	ND	Switched to hydraulic injection half way through the injection because of daylighting.
		PF-3	26 - 29	NR	10	NR	NR	506	330	ND	ND	ND	ND	ND	ND	ND	Hydraulically pumped slurry in because of daylighting.
			24 - 27	NR	50	NR	NR	506	275	ND	ND	ND	ND	ND	ND	ND	Hydraulically pumped slurry in because of daylighting.
			21 - 24	NR	50	NR	NR	506	650	ND	ND	ND	ND	ND	ND	ND	Good injection with pressure influence at targeted monitoring wells.
			33 - 32	NR	50	NR	NR	506	715	ND	ND	ND	ND	ND	ND	ND	Large void formed around PF-3 approximately 2 feet bgs.
			29 - 28	NR	50	NR	NR	506	650	ND	ND	ND	ND	ND	ND	ND	
						Total	7870	6671	7520		12	3	6	ND			

NR - Denotes "Not Recorded"
NM - Denotes "Not Monitored"
FW - Denotes "Fresh Water"
ND - Denotes "Not Detect"

TABLE C-5
PHASE 1 TTA-5
INJECTION SUMMARY

Table C-5 Injection Parameters- Phase I Injections- TTA 5, SWMU 166, Zone K, CNC										Pressure Influence (PSI)							Comments/Observations
Date	Location	Injection Well Sequence	Interval (ft bgs)	Duration (min)	Pressure (PSI)	Measured Flowrate (SCFM)	Actual Flowrate (SCFM)	Target ZVI Dosage (lbs)	Actual ZVI Dosage (lbs)	MW-46D	MW-47D	MW-25D	MW-4	MW-48D	MW-49D	MW-25	
7/9/2002	TTA5	PF-7	32 - 35	NR	60	NR	NR	935	935	25	NM	NM	NM	NM	NM	NM	Good injections with pressure influence at MW-46D
			30 - 33	NR	55	NR	NR	935	935	4	NM	NM	NM	NM	NM	NM	
			28 - 31	NR	55	NR	NR	935	935	1	NM	NM	NM	NM	NM	NM	
			27 - 30	NR	50	100 - 150	NR	935	935	ND	NM	NM	NM	NM	NM	NM	
			25 - 28	NR	60	NR	NR	935	935	3	NM	NM	NM	NM	NM	NM	Daylighting occurred at the end of this injection approximately 7' away
7/10/2002		PF-8	32 - 35	NR	55	NR	NR	935	935	NM	NM	NM	NM	NM	NM	NM	Good injections without pressure influence
			30 - 33	NR	55	NR	NR	935	935	NM	NM	NM	NM	NM	NM	NM	
			28 - 31	NR	55	NR	NR	935	935	NM	NM	NM	NM	NM	NM	NM	
			27 - 30	NR	60	NR	NR	935	935	NM	NM	NM	NM	NM	NM	NM	Iron was pulsed into the formation because of major ground surface heave
			25 - 28	NR	60	NR	NR	935	935	NM	NM	NM	NM	NM	NM	NM	
7/11/2002		PF-5	32 - 35	NR	65	100 - 150	NR	935	935	NM	PV	7	ND	NM	NM	PV	Good injections with pressure influence at targeted monitoring wells
			30 - 33	NR	55	100 - 150	NR	935	935	NM	PV	ND	ND	NM	NM	2	
			28 - 31	NR	65	100 - 125	NR	935	935	NM	ND	ND	2	NM	NM	ND	
			27 - 30	NR	60	100 - 150	NR	935	935	NM	ND	ND	3	NM	NM	ND	
			25 - 28	NR	65	125 - 150	NR	935	935	NM	ND	ND	ND	NM	NM	ND	
7/12/2002		PF-4	32 - 35	NR	65	100 - 150	NR	935	935	NM	7	NM	NM	NM	30	NM	Packer blew out of MW-48D during the injection, pressure influence may not be accurate
			30 - 33	NR	55	125	NR	935	935	NM	13	NM	NM	6	NM	NM	Good injections with pressure influence at targeted monitoring wells
			28 - 31	NR	55	125	NR	935	935	NM	7	NM	NM	NM	NM	NM	
			27 - 30	NR	50	100 - 150	NR	935	935	NM	11	NM	NM	13	NM	NM	
			25 - 28	NR	55	100 - 150	NR	935	935	NM	7	NM	NM	NM	NM	NM	
7/13/2002		PF-3	32 - 35	NR	55	100 - 150	NR	935	935	NM	NM	NM	NM	NM	NM	NM	Good injections without pressure influence
			30 - 33	NR	50	100 - 150	NR	935	935	NM	NM	NM	NM	NM	NM	NM	
			28 - 31	NR	50	100 - 150	NR	935	935	NM	NM	NM	NM	NM	NM	NM	
			27 - 30	NR	50	100 - 150	NR	935	935	NM	NM	NM	NM	NM	NM	NM	
			25 - 28	NR	50	100 - 150	NR	935	935	NM	NM	NM	NM	NM	NM	NM	
7/15/2002		PF-2	32 - 35	NR	60	100 - 150	NR	935	935	NM	NM	NM	NM	NM	19	NM	Good injection with pressure influence at targeted monitoring well
			30 - 33	NR	55	100 - 150	NR	935	935	NM	NM	NM	NM	NM	PV	NM	Packer was pulled out of MW-49D because of off-gassing around well. Pulsed injection because of ground heave
			28 - 31	NR	55	100 - 150	NR	935	935	NM	NM	NM	NM	NM	PV	NM	
			27 - 30	NR	55	100 - 150	NR	935	935	NM	NM	NM	NM	NM	PV	NM	
			25 - 28	NR	55	100 - 150	NR	935	935	NM	NM	NM	NM	NM	PV	NM	
7/16/2002		PF-1	33 - 36	NR	55	100 - 150	NR	575	550	NM	NM	NM	NM	NM	30	NM	Good injection with pressure influence at targeted monitoring well
			32 - 35	NR	55	100 - 150	NR	575	550	NM	NM	NM	NM	NM	ND	NM	
7/2/2002		PF-6	32 - 35	NR	65	100 - 150	NR	935	935	NM	NM	NM	NM	NM	NM	NM	Good injections without pressure influence
			30 - 33	NR	60	100 - 150	NR	935	935	NM	NM	NM	NM	NM	NM	NM	
			28 - 31	NR	55	100 - 150	NR	935	935	NM	NM	NM	NM	NM	NM	NM	
			27 - 30	NR	55	100 - 150	NR	935	935	NM	NM	NM	NM	NM	NM	NM	
			25 - 28	NR	55	100 - 150	NR	935	935	NM	NM	NM	NM	NM	NM	NM	
							Total	33875	33825								

NR - Denotes "Not Recorded"

NM - Denotes "Not Monitored"

PV - Denotes "Pressure Response and Vented"

ND - Denotes "Non - Detect"

TABLE C-6
PHASE 1 TTA-6
INJECTION SUMMARY

Table C-6 Injection Parameters- Phase I Injections- TTA 6, SWNU 166, Zone K, CNC										Pressure Influence (PSI)									Comments/Observations
Date	Location	Injection Well Designation	Interval Pumped	Duration (min)	Pressure (PSI)	Measured Flowrate (SCFM)	Actual Flowrate (SCFM)	Target 2M Pressure (lbs)	Actual 2M Pressure (lbs)	MW-NE	MW-NW	PF-8	MW-VB	TM-1	TM-2	TM-3	TM-4	MW-SE	
6/12/2002	TTA-6	PF-8	26-30	NR	50	50 - 100	NR	916	1100	NM	NM	NM	NM	NM	NM	NM	NM	NM	Packers were stuck downhole because of a blown packer
6/13/2002		PF-7	26.5 - 29.5	NR	60	100 - 150	NR	916	1540	5	NM	NM	NM	NM	NM	NM	NM	NM	New injection assembly used from this point forward. Bottom packer was not installed
			23.5 - 26.5	NR	60	100	NR	916	1100	NM	NM	NM	NM	NM	NM	NM	NM	NM	
			20.5 - 23.5	NR	50	50 - 100	NR	916	1100	NM	NM	NM	NM	NM	NM	NM	NM	NM	
		PF-6	27 -29	NR	50	100	NR	916	1100	NM	NM	NM	NM	NM	NM	NM	NM	NM	
			25 -27	NR	50	50 - 100	NR	916	1100	NM	NM	NM	NM	NM	NM	NM	NM	NM	Daylighting occurred approximately 20' away at PF-7
			23 - 25	NR	50	50 - 100	NR	916	1100	NM	NM	NM	NM	NM	NM	NM	NM	NM	Off-gassing at a monitoring well 15' away
			22 -24	NR	60	50	NR	916	1100	NM	NM	NM	NM	NM	NM	NM	NM	NM	Off-gassing at a monitoring well 15' away
		PF-3	27 - 30	NR	60	100 - 150	NR	916	1100	NM	3	NM	NM	NM	NM	NM	NM	NM	Pressure influence of 3 psi approximately 7' away from the injection borehole
			25 - 28	NR	60	100	NR	916	1100	NM	NM	NM	NM	NM	NM	NM	NM	NM	Good injections without pressure influence at monitoring wells
			23 -26	NR	60	50 - 100	NR	916	1100	NM	NM	NM	NM	NM	NM	NM	NM	NM	
			22 -25	NR	60	100	NR	916	1100	NM	NM	NM	NM	NM	NM	NM	NM	NM	
6/17/2002		PF-6	27 - 30	NR	50	NR	NR	916	1100	NM	NM	NM	NM	NM	NM	NM	NM	NM	Pressure influence not seen because there were a limited amount of monitoring wells in the vicinity
			25 - 28	NR	50	NR	NR	916	1100	NM	NM	NM	NM	NM	NM	NM	NM	NM	
			23 - 26	NR	50	NR	NR	916	1100	NM	NM	NM	NM	NM	NM	NM	NM	NM	
			22 - 25	NR	50	NR	NR	916	1100	NM	NM	NM	NM	NM	NM	NM	NM	NM	
		PF-4	27 - 30	NR	60	NR	NR	916	1100	NM	NM	NM	NM	NM	NM	NM	NM	NM	
			25 - 28	NR	60	NR	NR	916	1100	NM	NM	NM	NM	NM	NM	NM	NM	NM	
6/18/2002		PF-4	23 - 26	NR	60	NR	NR	916	1100	NM	NM	NM	NM	NM	NM	NM	NM	NM	Off-gassing approximately 6' away
			22 - 25	NR	50	NR	NR	916	1100	NM	NM	NM	NM	NM	NM	NM	NM	NM	Off-gassing approximately 6' away
		PF-9	29 - 31	NR	50	NR	NR	1235	1100	NM	NM	NM	NM	NM	NM	NM	NM	NM	Good injections without pressure influence at monitoring wells
			26 - 29	NR	50	NR	NR	1235	1100	NM	NM	NM	NM	NM	NM	NM	NM	NM	
6/19/2002		PF-8R	27 - 30	NR	60	NR	NR	916	1100	NM	NM	NM	NM	NM	NM	NM	NM	NM	Good injections without pressure influence at monitoring wells
			24 - 27	NR	50	NR	NR	916	1100	NM	NM	NM	NM	NM	NM	NM	NM	NM	
			22 - 25	NR	50	NR	NR	916	1100	NM	NM	NM	NM	NM	NM	NM	NM	NM	
		PF-2	27 - 30	NR	50	NR	NR	916	1100	NM	PV	NM	NM	NM	NM	NM	NM	NM	Injection wells were located along the roadway. Signs were place to alert motorist of work being performed
			25 - 28	NR	50	NR	NR	916	1100	NM	PV	NM	NM	NM	NM	NM	NM	NM	
			23 - 26	NR	50	NR	NR	916	1100	NM	NM	NM	NM	NM	NM	NM	NM	NM	
			21 - 24	NR	50	NR	NR	916	1100	NM	NM	NM	NM	NM	NM	NM	NM	NM	
		PF-1	27 - 30	NR	50	NR	NR	916	1100	NM	PV	NM	NM	NM	NM	NM	NM	NM	
			25 - 28	NR	50	NR	NR	916	1100	NM	NM	PV	NM	NM	NM	NM	NM	NM	
			23 - 25	NR	50	NR	NR	916	1100	NM	NM	PV	NM	NM	NM	NM	NM	NM	
			22 - 25	NR	50	NR	NR	916	1100	NM	NM	PV	NM	NM	NM	NM	NM	NM	
6/24/2002		PF-7R	27 - 30	NR	65	100 - 150	NR	916	1100	NM	10	NM	NM	NM	NM	NM	NM	NM	Good injection with pressure influence at targeted monitoring wells
6/26/2002		PF-10	27-30	NR	60	100 - 150	NR	1235	1210	NM	NM	NM	NM	10	NM	NM	NM	5	Good injection with pressure influence at targeted monitoring wells
			26 - 29	NR	65	100 - 150	NR	1235	1210	NM	NM	NM	NM	7	NM	NM	NM	5	
		PF-11	27-30	NR	60	100 - 150	NR	1235	1210	NM	NM	NM	NM	NM	NM	5	NM	NM	
			26 - 29	NR	65	150 - 200	NR	1235	1210	NM	NM	NM	NM	NM	NM	18.5	NM	NM	
		PF-13	27-30	NR	65	100 - 150	NR	1285	1265	NM	NM	NM	NM	NM	NM	15	1	NM	
			26 - 29	NR	70	100 - 150	NR	1285	1265	NM	NM	NM	NM	NM	NM	NM	NM	NM	Daylighting occurred round the telephone pole approximately 5' away
		PF-14	27-30	NR	70	100 - 150	NR	1285	1265	NM	NM	NM	NM	NM	NM	NM	10	NM	Good injection with pressure influence at targeted monitoring wells
			26 - 29	NR	70	100 - 150	NR	1285	1265	NM	NM	NM	NM	NM	NM	NM	NM	NM	Daylighting occurred around SVE box
6/28/2002		PF-15	27-30	NR	65	100 - 150	NR	1285	1265	NM	NM	NM	NM	NM	NM	NM	NM	NM	Good injections without pressure influence at monitoring wells
			26 - 29	NR	60-65	100 - 150	NR	1285	1265	NM	NM	NM	NM	NM	NM	NM	NM	NM	Good injections without pressure influence at monitoring wells
6/29/2002		PF-12	27-30	NR	60	100	NR	1285	1265	NM	NM	NM	NM	NM	NM	NM	NM	NM	Good injections without pressure influence at monitoring wells
			26 - 29	NR	60	100	NR	1285	660	NM	NM	NM	NM	NM	NM	NM	NM	NM	Could not inject 11 bags due to regulator malfunction
		PF-12R	26 - 29	NR	60	150 - 200	NR		1100	NM	NM	NM	NM	NM	NM	NM	NM	NM	Good injections without pressure influence at monitoring wells
							Total	47302	57295										

NR - Denotes "Not Recorded"

NM - Denotes "Not Monitored"

PV - Denotes "Pressure Response and Vented"

ND - Denotes "Non - Detect"

TABLE C-7
PHASE 1 TTA-7
INJECTION SUMMARY

Table C-7 Injection Parameters- Phase I Injections- TTA 7, SWMU 166, Zone K, CNC										Pressure Influence (PSI)	Comments/Observations
Date	Location	Injection Well Sequence	Interval (ft bgs)	Duration (min)	Pressure (PSI)	Measured Flowrate (SCFM)	Actual Flowrate (SCFM)	Target ZVI Dosage (lbs)	Actual ZVI Dosage (lbs)	KGDKGP011	
5/20/2002	TTA-7	PF-1	7 - 9	NR	NR	NR	NR	650	660	5	Daylighting of slurry observed about 15 ft at end of injection. Took bottom packer off the injection assembly.
							Total:	650	660		

NR - Denotes "Not Recorded"

NM - Denotes "Not Monitored"

PV - Denotes "Pressure Response and Vented"

ND - Denotes "Non - Detect"

TABLE C-8
PHASE 1 TTA-8
INJECTION SUMMARY

Table C-8 Injection Parameters- Phase I Injections- TTA 8, SWMU 166, Zone K, CNC										Pressure Influence (PSI)	Comments/Observations
Date	Location	Injection Well Sequence	Interval (ft bgs)	Duration (mins)	Pressure (PSI)	Measured Flowrate (SCFM)	Actual Flowrate (SCFM)	Target ZVI Dosage (lbs)	Actual ZVI Dosage (lbs)	MW-33D	
5/21/2002	TTA-8	PF-1	33 - 35	NR	50	NR	NR	500	550	5	Good injection with pressure influence at targeted monitoring wells
							Total:	500	550		

NR - Denotes "Not Recorded"

NM - Denotes "Not Monitored"

PV - Denotes "Pressure Response and Vented"

ND - Denotes "Non - Detect"

TABLE C-9
PHASE 2 TTA-1
INJECTION SUMMARY

Table C-9 Injection Parameters- Phase II Injections- TTA 1, SWMU 166, Zone K, CNC										Pressure Influence (PSI)				Comments/Observations
Date	Location	Injection Well Sequence	Interval (ft bgs)	Duration (min)	Pressure (PSI)	Measured Flowrate (SCFM)	Actual Flowrate (SCFM)	Target ZVI Dosage (lbs)	Actual ZVI Dosage (lbs)	MW-34D	MW-35D	MW-36	MW-37	
4/30/2004	TTA - 1	IW-2	31 - 33.5	Injection times = 6 - 8 min.	100 -125	200+	NR	525	450	15+	15+	NM	NM	Good injections with significant pressure influence at targeted monitoring wells
			33 5 - 36.0		100 - 125	200+	NR	525	600	15+	15+	NM	NM	
5/2/2004		IW-1	31 - 33.5		85 - 125	200+	NR	525	550	15+	15+	NM	NM	Good injections with significant pressure influence at targeted monitoring wells
			33 5 - 36.0		85 - 125	200+	NR	525	550	15+	15+	NM	NM	
		IW-3	31 - 33.5		NR	NR	NR	525	550	ND	NM	NM	NM	Direct hydraulic influence at IW-1
			33.5 - 35 5		NR	NR	NR	525	350	ND	ND	NM	NM	Heaving soil issues resulted in injecting 1/2 the target batch
		IW-6	31 - 33.5		75 - 100	200+	NR	675	650	NM	NM	PV	PV	Flowrate was reduced from 200+ to 150 cfm at 90 psi to minimize heave
			34 - 36 5		90	150	NR	675	650	NM	NM	PV	PV	
		IW-4	31 - 33.5		100	200+	NR	675	650	NM	NM	10	10	Good injections with significant pressure influence at targeted monitoring wells Wells vented.
			33 - 36 5		100	200+	NR	675	650	NM	NM	10	10	
5/3/2004		IW-5 (offset)	32 5 - 35		100	200+	NR	675	650	NM	NM	PV 6	PV 6	Offset was required due to presence of unknown subsurface utility
			34.5 - 37		100	200+	NR	675	650	NM	NM	PV 6	PV 6	
							Totals	7200	6950					

NR - Denotes "Not Recorded"

NM - Denotes "Not Monitored"

PV - Denotes "Pressure Response and Vented"

ND - Denotes "Non - Detect"

TABLE C-10
PHASE 2 TTA-3
INJECTION SUMMARY

Table C-10 Injection Parameters- Phase II Injections- TTA 3, SWMU 166, Zone K, CNC

Date	Location	Injection Well Perforations	Interval ft bgs	Duration (min)	Pressure (PSI)	Measured Volume (SCFM)	Actual Volume (SCFM)	Target 2/4 Inches (pounds)	Actual 2/4 Inches (pounds)	Pressure Influence (PSI) MW-450	MW-450	MW-008	639-008	639-009	MW-410	MW-410D	MW-420	MW-150	Comments/Observations
5/3/2004	TTA-3	IW-5	31 - 33.5	Injection times: 2 - 8 min	100 - 120	200+	400	525	550	15+	ND	ND	NM	NM	NM	NM	NM	NM	Good injection with significant pressure influence at targeted monitoring wells
			33 - 33.5		75 - 100	200+	400		550	NR	ND	ND	NM	NM	NM	NM	NM	NM	Hicave 1/2 thru injection resulted in 100 gal. to be pumped hydraulically
		IW-4	31 - 33.5		100 - 110	200+	350		550	7	14	1.5	NM	NM	NM	NM	NM	NM	Towards end of injection heave occurred resulting in pumping the remaining 100 gal hydraulically
		IW-2	31 - 33.5		100 - 150	200+	380		550	PV	PV	PV	NM	NM	NM	NM	NM	NM	
			33 - 35.5		NR	100 - 150	NR		550	PV	PV	PV	NM	NM	NM	NM	NM	NM	Daylighting thru existing cracks in road (8 ft away)
5/4/2004		IW-4 (offset)	33 - 35.5		110	200+	1200		550	NM	PV	PV	NM	NM	NM	NM	NM	NM	
		IW-1	31 - 33.5		100	200+	NR		550	NM	NM	NM	6	4	NM	NM	NM	NM	Daylighting 3/4 way through injections resulted in 50 gallons pumped hydraulically
		IW-3	31 - 33.5		100 - 110	200+	380		550	NM	PV	PV	NM	NM	NM	NM	PV	NM	Appr. 150 gal. atomized and 50 gal. hydraulically pumped due to daylighting
			33 - 35.5		80 - 125	200+	NR		550	NM	NM	NM	PV	PV	NM	NM	NM	NM	Good injection with significant pressure influence at targeted monitoring wells
		IW-1 (offset)	33 - 35.5		NR	NR	NR		550	NM	NM	NM	NM	NM	NM	NM	NM	NM	
5/5/2004		IW-6	31 - 33.5		NR	NR	NR		550	NM	NM	NM	NM	NM	15+	NM	NM	NM	Good injection with significant pressure influence at targeted monitoring wells
		IW-6 (offset)	33 - 35.5		100 - 120	200+	807		550	NM	NM	NM	NM	NM	PV	NM	NM	NM	1/2 batch injected hydraulically as a result of daylighting through cracks
		IW-8	31 - 33.5		100 - 110	200+	NR		550	NM	NM	NM	NM	NM	NM	NM	NM	NM	Good injection with significant pressure influence at targeted monitoring wells
			33 - 36.5		75	200+	NR		550	NM	NM	NM	NM	NM	NM	NM	NM	NM	
		IW-9	31 - 33.5		150	200+	NR		550	NM	NM	NM	NM	NM	NM	NM	NM	PV	No wells within vicinity of injection well, therefore no wells monitored
		IW-9 (offset)	31 - 36.5		NR	NR	NR		550	NM	NM	NM	NM	NM	NM	NM	PV	PV	Good injection with significant pressure influence at targeted monitoring wells
		IW-7	31 - 33.5		100 - 120	NR	NR		550	NM	NM	NM	NM	NM	PV	NM	NM	NM	Good injection with significant pressure influence at targeted monitoring wells
			33 - 36.5		100 - 120	NR	NR		550	NM	NM	NM	NM	PV	NM	NM	NM	NM	Good injection with significant pressure influence at targeted monitoring wells
					Totals	9450		9850											

NR - Denotes "Not Recorded"

NM - Denotes "Not Monitored"

PV - Denotes "Pressure Response and Vented"

ND - Denotes "Non - Detect"

TABLE C-11
PHASE 2 TTA-4
INJECTION SUMMARY

Table C-11 Injection Parameters- Phase II Injections- TTA 4, SWMU 166, Zone K, CNC										Pressure Influence (PSI)				Comments/Observations
Date	Location		Interval (ft bgs)	Duration (min)	Pressure (PSI)	Measured Flowrate (SCFM)	Actual Flowrate (SCFM)	Target ZVI Dosage (lbs)	Actual ZVI Dosage (lbs)	GW-07D	GW-31	GW-32	GW-01D	
5/12/2004	TTA-4	IW-1	25 - 28	5	60 - 75	200	NM	550	550	PV	PV	PV	PV	Water was being emitted from all of the monitoring wells in the vicinity of the injection well. Major heave around two well pads.
			28 - 31	5	60 - 75	200	NM	550	550	PV	PV	PV	PV	
			30 - 33	5	65 - 85	200	NM	550	550	PV	PV	PV	PV	
			33 - 36	7	100	200	NM	550	550	PV	PV	PV	PV	
							Total:	2200	2200					

NR - Denotes "Not Recorded"
NM - Denotes "Not Monitored"
PV - Denotes "Pressure Response and Vented"
ND - Denotes "Non - Detect"

TABLE C-12
PHASE 2 TTA-5
INJECTION SUMMARY

Table C-12 Injection Parameters- Phase II Injections- TTA 5, SWMU 166, Zone K, CNC

Date	Location	Injection Well Sequence	Interval (ft bgs)	Duration (min)	Pressure (PSI)	Measured Flowrate (SCFM)	Actual Flowrate (SCFM)	Target ZVI Dosage (lbs)	Actual ZVI Dosage (lbs)	Pressure Influence MW-46D	MW-47D	MW-48D	MW-49D	MW-25D	MW-25	MW-26	Comments/Observations
5/10/2004	TTA-5	IW-7	30 - 32.5	6 - 8	75 - 100	200+	265	550	550	15+	NM	NM	NM	NM	NM	NM	Injection pressure decreased due to daylighting behind back right corner of shed
			33 - 35.5	6 - 8	25 - 100	200+	662		550	15+	NM	NM	NM	NM	NM	NM	Good injection, no daylighting or ground surface heave
		IW-6	30 - 32.5	6 - 8	100	200+	530		550	15+	NM	NM	NM	NM	NM	NM	Daylighting observed approximately 10' away from injection borehole
			33 - 35.5	6 - 8	50 - 110	200+	266		550	ND	NM	NM	NM	NM	NM	NM	Water influence at MW-47D and MW-48D
		IW-9	30 - 32.5	6 - 8	100	200+	NR		550	ND	PV	NM	NM	NM	NM	NM	Daylighting observed in three different directions
			33 - 35.5	6 - 8	75 - 100	200+	NR		550	NM	PV	PV	NM	NM	NM	NM	Daylighting issues limited atomized injections. Majority was hydraulic
5/11/2004		IW-8	30 - 32.5	7	100	200	182		550	ND	15+	5.5 V	NM	NM	NM	NM	mounding issues around well limited full gas injections
		IW-5	30 - 32.5	5	50 - 100	NR	212		550	ND	ND	ND	NM	ND	NM	NM	Water influence at wells MW-25D and MW-25
			33 - 35.5	6 - 8	50	NR	NR		550	NM	NM	NM	14 psi V	NM	NM	ND	Water influence at wells MW-25D and MW-25 Mounding and offgassing occurred approximately 15' away
		IW-2	30 -32.5	7	50 - 100	200+	242		550	NM	NM	NM	ND	NM	NM	ND	Good injections with significant pressure influence at targeted monitoring wells
			33 - 35.5	7	50 - 90	NR	212		550	NM	NM	NM	ND	PV	NM	NM	Good injections with significant pressure influence at targeted monitoring wells
		IW-3	30 -32.5	6	100	200+	494		550	NM	FV	FV	ND	PV	NM	PV	Pressure influence observed in two different directions
			33 - 35.5	6	75 - 100	200+	363		550	NM	NM	NM	NM	NM	NM	FV	Major pressure influence at monitoring well
		IW -8 (offset)	33 - 35.5	5	75 -100	200+	340		550	NM	NM	NM	8 psi V	NM	NM	NM	Significant mounding resulted in the last 50 gallons pumped hydraulically
		IW-1	30 - 32.5	6	100	200+	600		550	NM	PV	ND	10 psi V	NM	NM	NM	
			33 - 35.5	8	110 -135	200+	689		550	NM	NM	ND	NM	PV	NM	PV	
		IW-4	30 - 32.5	7	100	200+	454		550	NM	NM	NM	NM	NM	NM	PV	
			33 - 35.5	7	100 - 140	200+	515		550	NM	NM	NM	15+ V	NM	NM	NM	
		IW-10	31-33.5	7	90 - 100	200+	484		550	NM	NM	NM	NM	NM	NM	NM	
			34 - 36.5	6 - 8	80 - 100	200+	283		550	NM	NM	NM	NM	NM	NM	NM	
					Totals		11000		11000								

NR - Denotes "Not Recorded"

NM - Denotes "Not Monitored"

PV - Denotes "Pressure Response and Vented"

ND - Denotes "Non - Detect"

TABLE C-13
PHASE 2 TTA-6
INJECTION SUMMARY

Table C-13 Injection Parameters- Phase II Injections- TTA 6, SWMU 166, Zone K, CNC										Pressure Influence (PSI)				Comments/Observations
Date	Location	Injection Well Sequence	Interval (ft bgs)	Duration (min)	Pressure (PSI)	Measured Flowrate (SCFM)	Actual Flowrate (SCFM)	Target ZVI Dosage (lbs)	Actual ZVI Dosage (lbs)	MW-61C	MW-62D	GW-TM4	GW-IN4	
5/13/2004	TTA - 6	IW-5	25 - 27.5	8	110	200+	585	450	450	NM	ND	NM	NM	Slight blowby around injection well (water) Stopped 1/2 thru injection
			27 - 29.5	8	110	200+	425		450	NM	ND	NM	NM	Slight blowby around injection well (water) Lasted thru injection.
		IW-4	25 -27.5	8	110	200+	531		450	NM	ND	NM	NM	Daylighting 10 ft from injection well
			27 - 29.5	10	130	200+	595		450	NM	1	NM	NM	Pressure influence at IW-5 (3 psi) Slight bubbling around injection well
5/14/2004		IW-6	25 - 27.5	6	110	200+	425		450	NM	ND	NM	NM	Slurry daylighting app. 5 feet from injection well
		IW-6 (offset)	27 - 29.5	6	105	200+	567		450	NM	2	NM	NM	Offset performed to minimize infl. At previous daylighting point. Pumped in remaining 50 gal hydraulically
		IW-2	25 - 27.5	8	100	200+	372		450	ND	9	NM	NM	Good injections with significant pressure influence at targeted monitoring wells
			28 - 30.5	8	100	200+	372		450	ND	9	NM	NM	
		IW-3	26 - 28.5	9	100	200+	283		450	PV	PV	NM	NM	Good injections with significant pressure influence at targeted monitoring wells
			28 - 30.5	8	110	200+	378		450	PV	PV	NM	NM	
		IW-1	26 - 28.5	8	110	200+	425		450	PV	PV	NM	NM	Good injections with significant pressure influence at targeted monitoring wells
			28 - 30.5	8	125	200+	531		450	PV	PV	NM	NM	
5/17/2004		IW-7	25 - 27.5	7	120	200+	425		600	NM	NM	PV-30	NM	Good injections with significant pressure influence at targeted monitoring wells
			28 - 30.5	7	100	200+	485		700	NM	NM	PV-30	NM	
		IW-8	25 - 27.5	7	90	200+	NR		650	NM	NM	PV 24	NM	Good injections with significant pressure influence at targeted monitoring wells
			28 - 30.5	13	75	200+	NR		800	NM	NM	PV-23	PV-12	
		IW-9	25 -27.5	11	75	200+	NR		700	NM	NM	PV-23	PV-10	Good injections with significant pressure influence at targeted monitoring wells
			28 - 30.5	11	75	200+	NR		550	NM	NM	PV-23	PV-8	
							Totals	8100	9400					

NR - Denotes "Not Recorded"

NM - Denotes "Not Monitored"

PV - Denotes "Pressure Response and Vented"

ND - Denotes "Non - Detect"

Drawing Source: email from Sam Nalk on 12/19/01

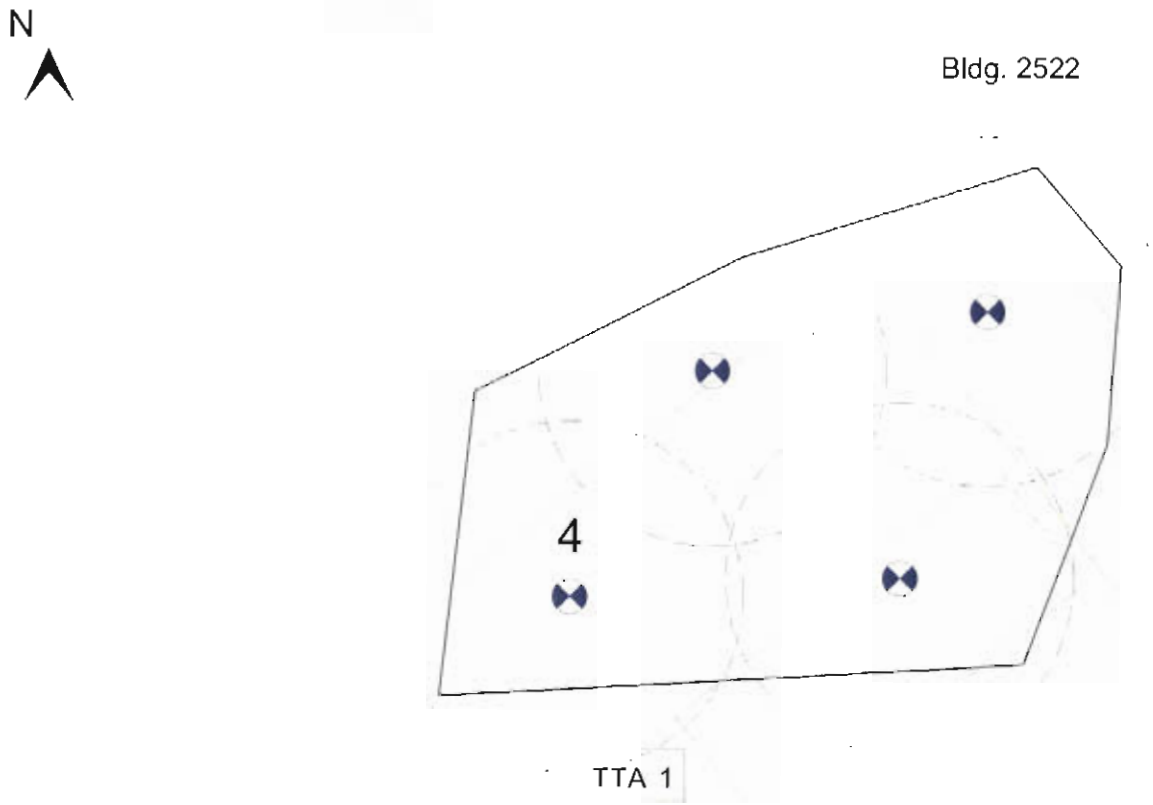

Legend

Target Treatment Area

Radius of Influence (20 ft.)

Injection Borehole Location

20 40

Approx. Scale (feet)

Figure C-1

Approx. Target Treatment Area 1
SWMU 166 Area, Zone K
Charleston Naval Complex
Charleston, South Carolina

ARS Technologies, Inc.

Drawing Source: email from Sam Naik on 12/19/01

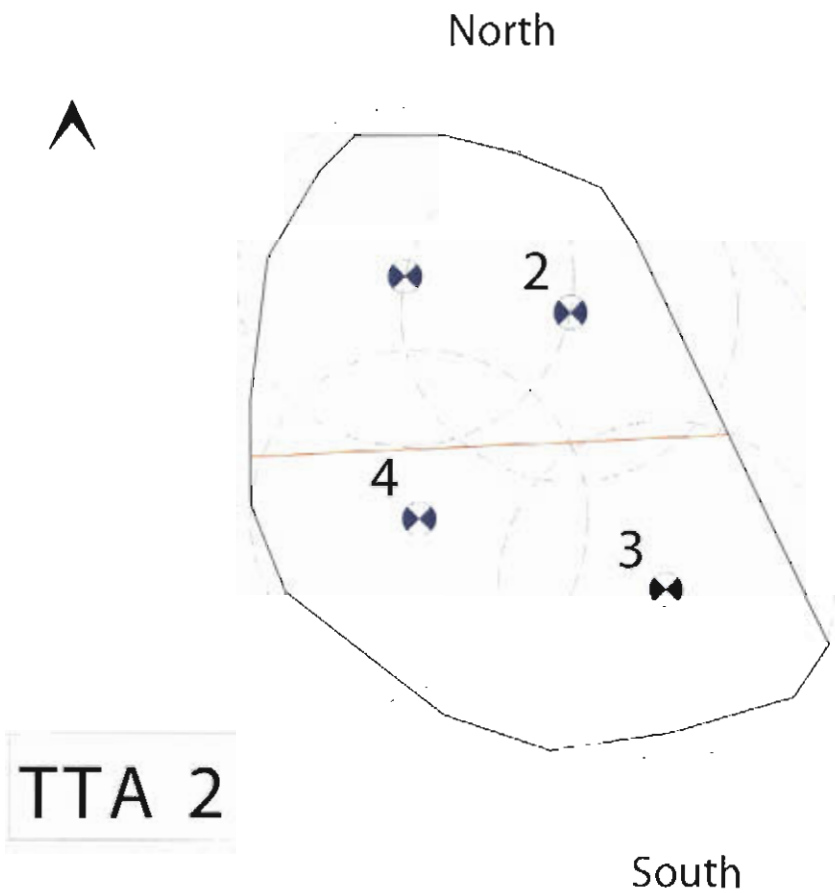

Legend

Target Treatment Area

Radius of Influence (20 ft.)

Injection Borehole Location

0 20 40

Approx. Scale (feet)

Figure C-2

Approx. Target Treatment Area 2
SWMU 166, Zone K
Charleston Naval Complex
Charleston, South Carolina

ARS Technologies, Inc.

Drawing Source: email from Sam Naik on 12/19/01

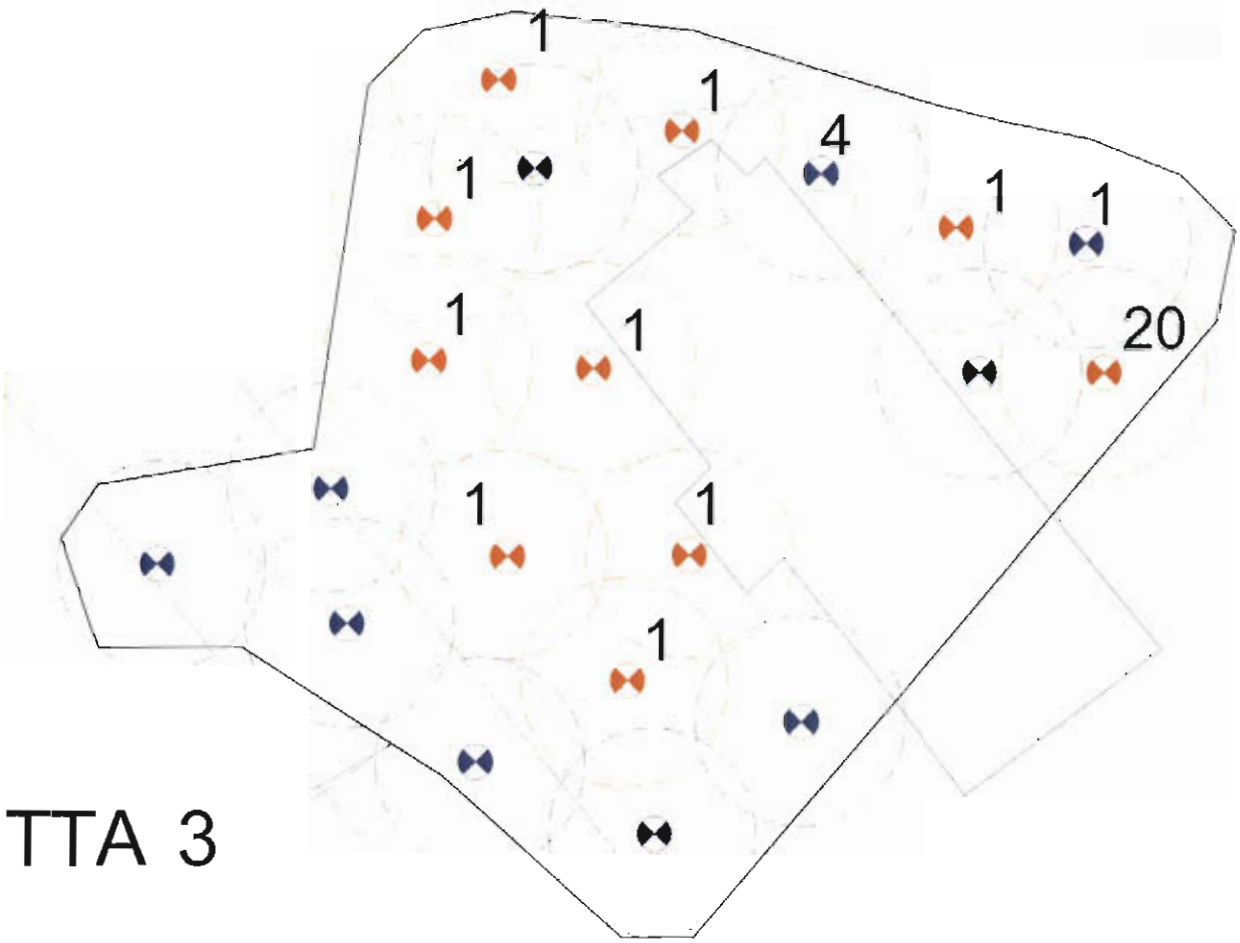

Legend

Target Treatment Area

Radius of Influence (20 ft.)

New Injection Borehole Location

Old Injection Borehole Location

20 40

Approx. Scale (feet)

Figure C-3

Approx. Target Treatment Area 3
SWMU 166, Zone K
Charleston Naval Complex
Charleston, South Carolina

ARS Technologies, Inc.

Drawing Source: email from Sam Naik on 12/19/01

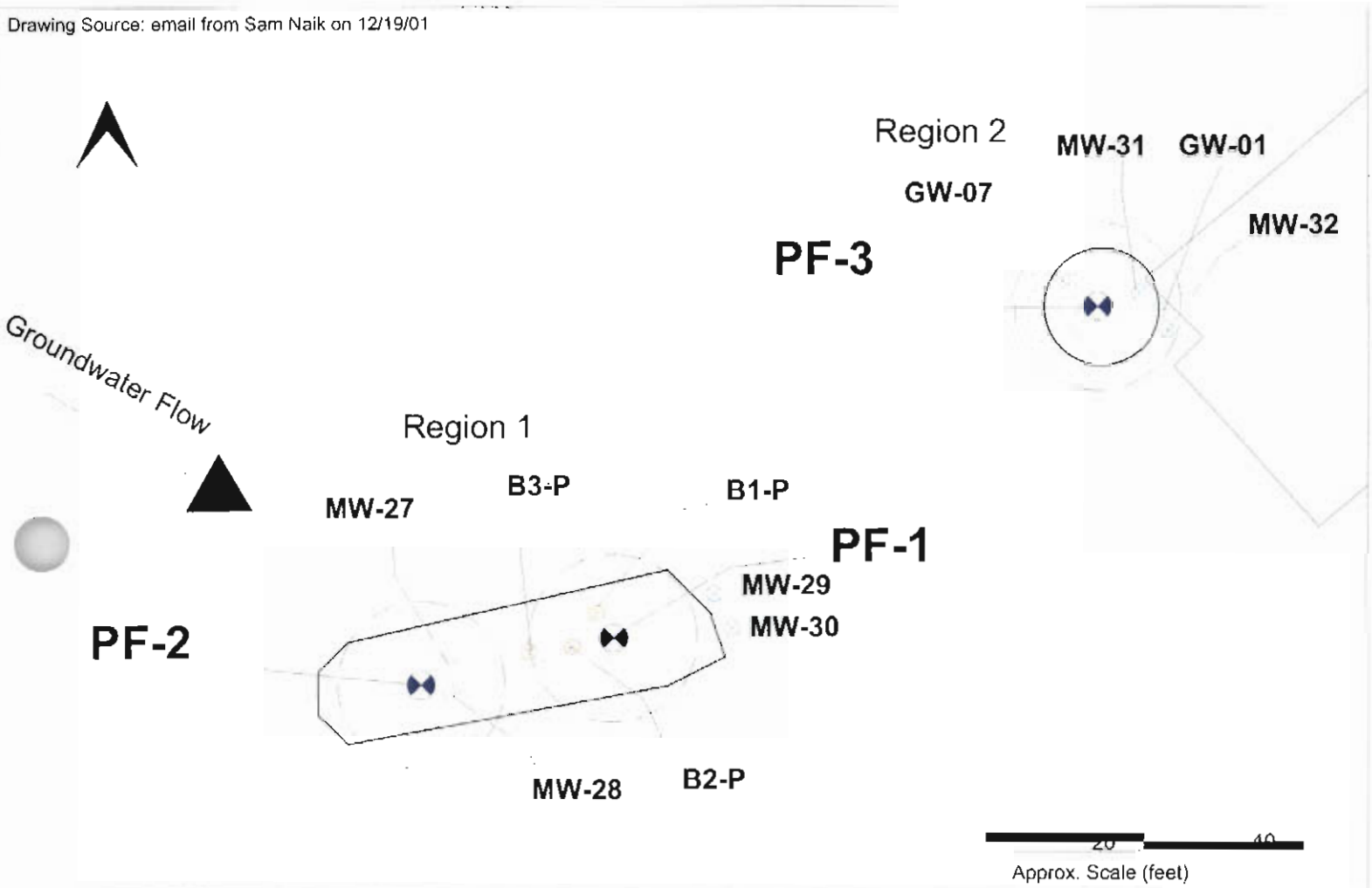

Legend

Target Treatment Area

Radius of Influence (12 ft.)

Injection Borehole Location

Approximate Monitoring Well Location

Soil Sample Location

Figure C-4

Approx. Target Treatment Area 4
SWMU 166, Zone K
Charleston Naval Complex
Charleston, South Carolina

ARS Technologies, Inc.

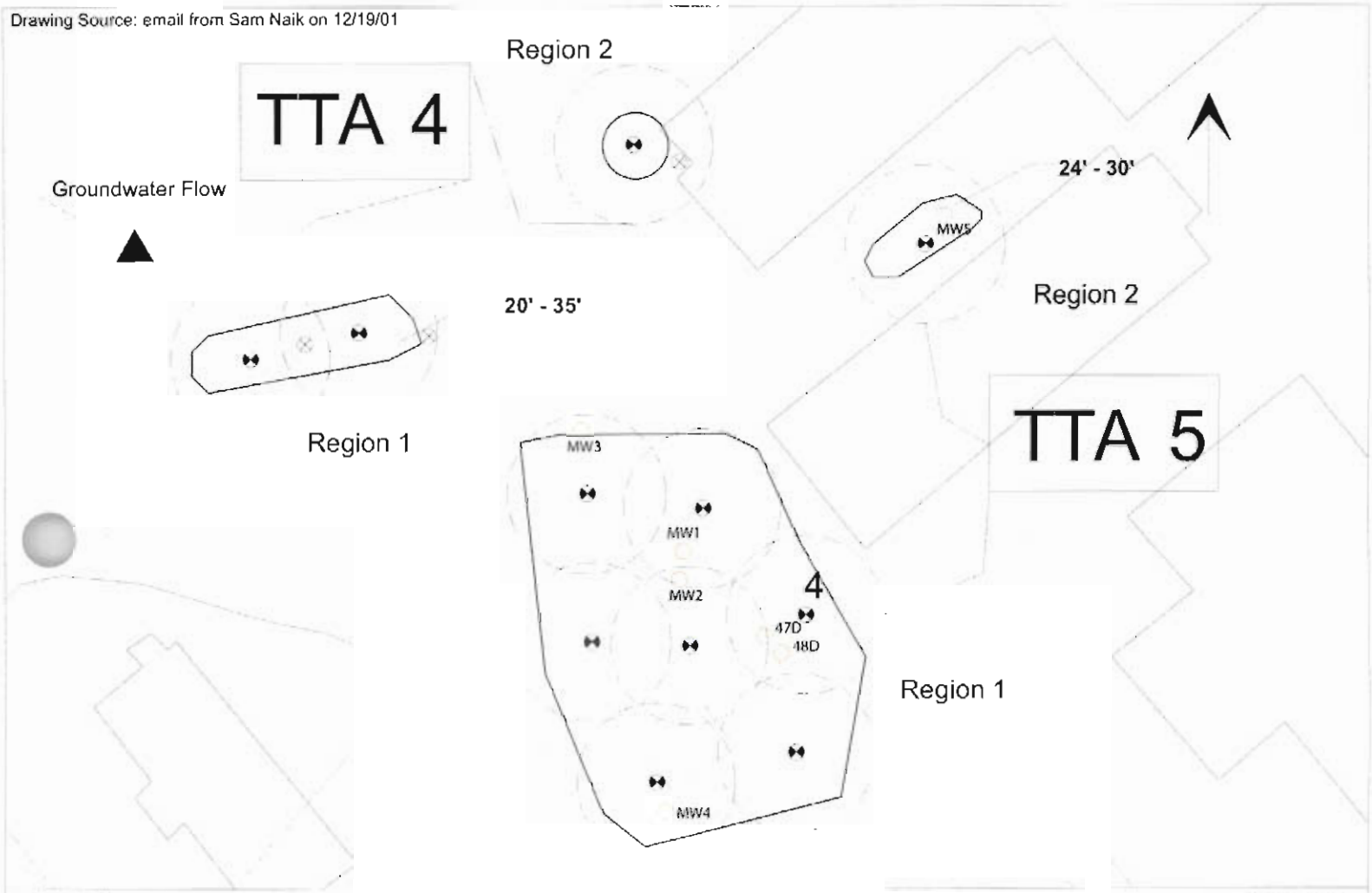

Legend

Target Treatment Area

Radius of Influence (20 ft.)

Injection Borehole Location

Monitoring Well Location

40 80

Approx. Scale (feet)

Figure C-5

Approx. Target Treatment Area 4 & 5
SWMU 166, Zone K
Charleston Naval Complex
Charleston, South Carolina

ARS Technologies, Inc.

Drawing Source: email from Sam Naik on 12/19/01

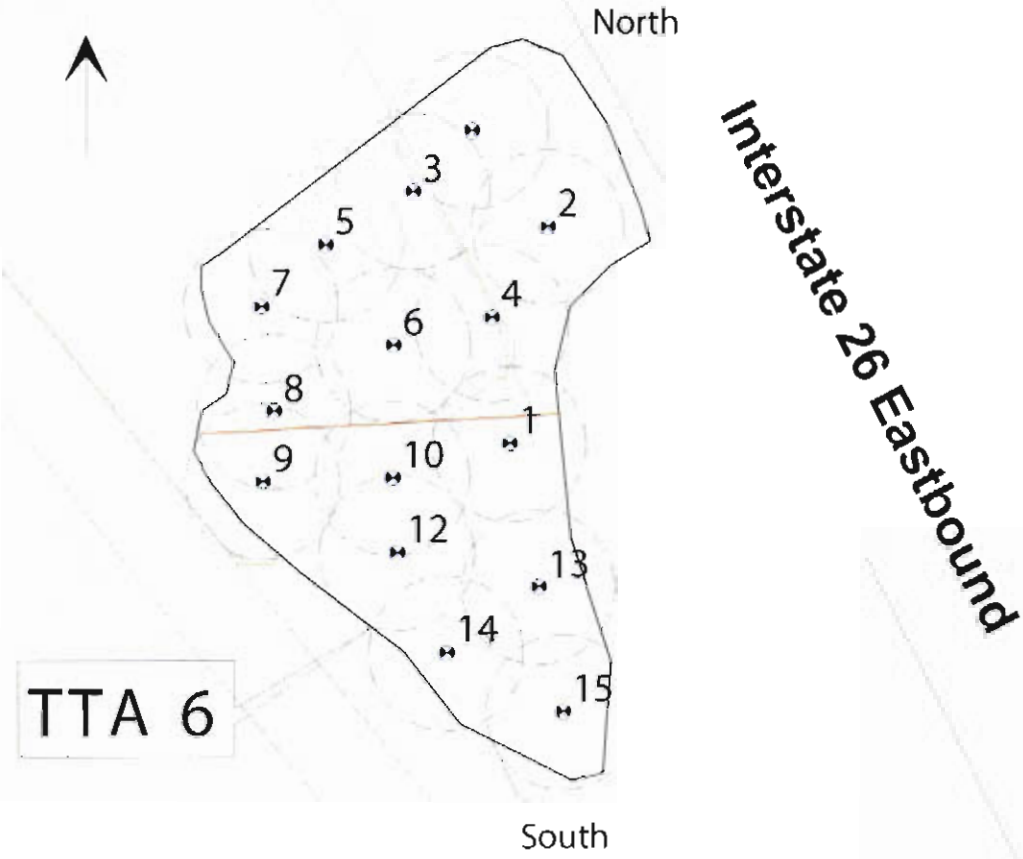

Legend

Target Treatment Area

Radius of Influence (20 ft.)

Injection Borehole Location

0 40 80

Approx. Scale (feet)

FigureC-6

Approx. Target Treatment Area 6
SWMU 166, Zone K
Charleston Naval Complex
Charleston, South Carolina

ARS Technologies, Inc.

Drawing Source: email from Sam Naik on 12/19/01

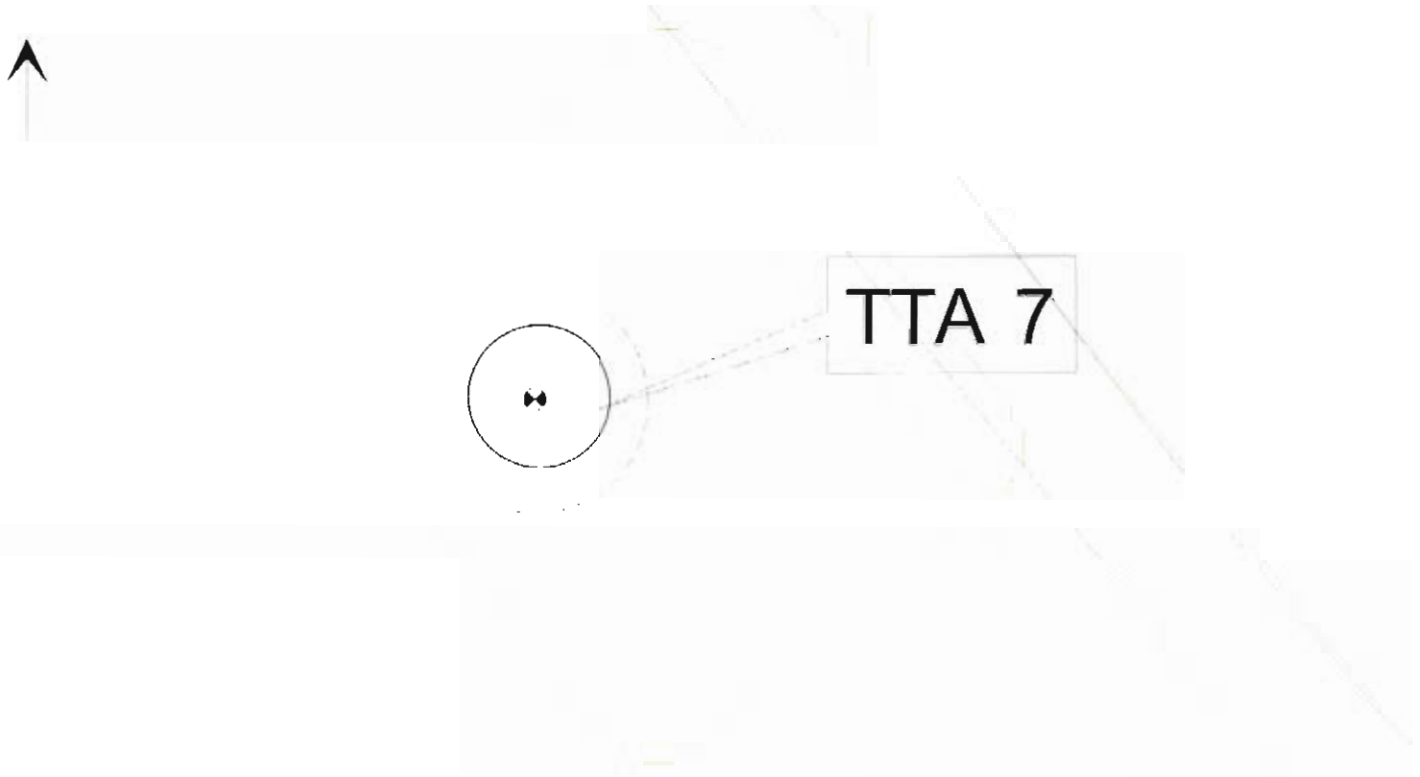

Legend

Target Treatment Area

Radius of Influence (20 ft.)

Injection Borehole Location

30 60

Approx. Scale (feet)

Figure C-7

Approx. Target Treatment Area 7
SWMU 166, Zone K
Charleston Naval Complex
Charleston, South Carolina

ARS Technologies, Inc.

Drawing Source: email from Sam Naik on 12/19/01

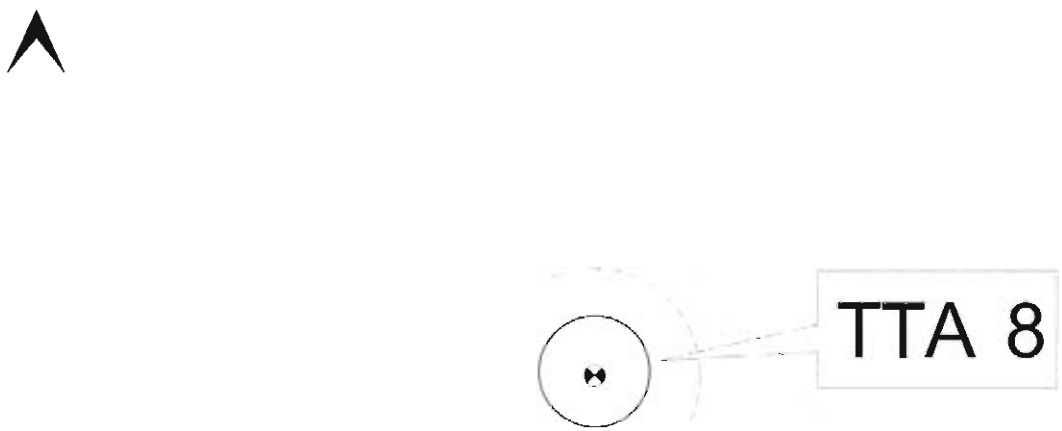

Legend

Target Treatment Area

Radius of Influence (20 ft.)

Injection Borehole Location

30 60

Approx. Scale (feet)

Figure C-8

Approx. Target Treatment Area 8
SWMU 166, Zone K
Charleston Naval Complex
Charleston, South Carolina

ARS Technologies, Inc.

APPENDIX D

Phase II IM Data Validation Reports

Data Validation Summary - Charleston Naval Complex - Zone K, SWMU 166

TO: Sam Naik/CH2M HILL/ATL

FROM: Dan Lucas/CH2M HILL/GNV
Herb Kelly/CH2M HILL/GNV

DATE: January 14, 2004

The purpose of this memorandum is to present the results of the data validation process for the samples collected in Zone K, SWMU 166. The samples were collected between the dates of October 11 and 29, 2004.

The specific samples and analytical fractions reviewed are summarized below in Table 1.

The Quality Control areas that were reviewed and the resulting findings are documented within each subsection that follows. This data was validated for compliance with the analytical method requirements. This process also included a review of the data to assess the accuracy, precision, and completeness based upon procedures described in the guidance documents such as the Environmental Protection Agency (EPA) *National Functional Guidelines for Organic Data Review (EPA 1999)*. Quality assurance/quality control (QA/QC) summary forms and data reports were reviewed.

Samples were submitted to General Engineering Laboratories, Inc., in Charleston, South Carolina, for the following analyses: Volatile Organic Compounds (VOC) by method SW-846 8260B.

Sample results that were not within the acceptance limits were appended with a qualifying flag, which consisted of a single- or double-letter code that indicated a possible problem with the data. The qualifying flags originated during the data review and validation processes. These also include the secondary, or the two/three-digit "sub-qualifier" flags. The secondary qualifiers provide the reasoning behind the assignment of a qualifier flag to the data. The secondary qualifiers are presented and defined below.

Attachment 1 lists the changes in data qualifiers based upon the validation process, excluding those that were "rejected" due to dilutions or re-runs only, where there is a valid result for that parameter.

The following primary flags were used to qualify the data:

[=] Detected. The analyte was analyzed for and detected at the concentration shown.

[J] Estimated. The analyte was present but the reported value may not be accurate or precise.

[U] Undetected. The analyte was analyzed for but not detected above the method detection limit.

[UJ] Detection limit estimated. The analyte was analyzed for but qualified as not detected; the result is estimated.

[R] Rejected. The data is not useable.

Secondary Data Validation Qualifiers

Code	Definition
2C	Second Column (Confirmation)
2SH	Second Source Accuracy High
2SL	Second Source Accuracy Low
BD	Blank Spike/Blank Spike Duplicate (LCS/LCSD) Precision
BL	Blank
BSH	Blank Spike/LCS Recovery High
BSL	Blank Spike/LCS Recovery Low
CCH	Continuing Calibration Verification Accuracy High
CCL	Continuing Calibration Verification Accuracy Low
DL	Dilution
FD	Field Duplicate
HT	Holding Time
IB	In Between (Metals - B's □ J's)
ICH	Initial Calibration High
ICL	Initial Calibration Low
ISH	Internal Standard Area Response High
ISL	Internal Standard Area Response Low
LD	Lab Duplicate
LR	Linear Range (Exceeded calibration range)
MD	Matrix Spike/Matrix Spike Duplicate Precision
MSH	Matrix Spike and/or Matrix Spike Duplicate Recovery High
MSL	Matrix Spike and/or Matrix Spike Duplicate Recovery Low
OT	Other
PD	Pesticide Degradation
PSH	Post Spike Recovery High
PSL	Post Spike Recovery Low
RE	Re-extraction
SSH	Spiked Surrogate Recovery High
SSL	Spiked Surrogate Recovery Low
TN	Tune

Table 1 - Chemical Analytical Methods – Field and Quality Control Samples

TABLE 1
Chemical Analytical Methods – Field and Quality Control Samples
Charleston Naval Complex, Zone K, SWMU 166, Charleston, SC

SDG	Sample ID	Lab Sample ID	Matrix	Sample Type	[illegible]	[illegible]	[illegible]
123470	166GW053P2	123470001	WG	N		10/11/04	X
123470	166GW053P2MS	1200726442	WG	MS		10/11/04	X
123470	166GW053P2MSD	1200726442	WG	SD		10/11/04	X
123470	166GW054P2	123470002	WG	N		10/11/04	X
123470	166GW055P2	123470003	WG	N		10/11/04	X
123470	166GW056P2	123470004	WG	N		10/11/04	X
123470	166HW056P2	123470005	WG	FD		10/11/04	X
123470	166GW057P2	123470006	WG	N		10/11/04	X
123470	166GW07DP2	123470007	WG	N		10/12/04	X
123470	166GW13DP2	123470008	WG	N		10/11/04	X
123470	166GW16DP2	123470009	WG	N		10/12/04	X
123470	166GW31DP2	123470010	WG	N		10/12/04	X
123470	166GW41DP2	123470011	WG	N		10/11/04	X
123470	166GW42DP2	123470012	WG	N		10/11/04	X
123470	166GW43DP2	123470013	WG	N		10/11/04	X
123470	166GW44DP2	123470014	WG	N		10/11/04	X

TABLE 1
Chemical Analytical Methods – Field and Quality Control Samples
Charleston Naval Complex, Zone K, SWMU 166, Charleston, SC

[illegible]	[illegible]	[illegible]	[illegible]	[illegible]	[illegible]	[illegible]	[illegible]
123470	166GW48DP2	123470015	WG	N		10/12/04	X
123470	166GW49DP2	123470016	WG	N		10/12/04	X
123470	166GW50DP2	123470017	WG	N		10/12/04	X
123470	166GW51DP2	123470018	WG	N		10/12/04	X
123470	166GW52DP2	123470019	WG	N		10/12/04	X
123470	166GWTM3P2	123470020	WG	N		10/12/04	X
123473	166GWTM4P2	123473001	WG	N		10/12/04	X
123474	166GWTM4P2DL	123473001	WG	N	DL	10/12/04	X
123474	166GWTM4P2MS	1200726854	WG	MS		10/12/04	X
123474	166GWTM4P2MSD	1200726855	WG	SD		10/12/04	X
123473	166EW33DP2	123473002	WQ	EB		10/12/04	X
123473	166TW33DP2	123473003	WQ	TB			X
123724	166GW040P2	123724001	WG	N		10/14/04	X
123724	166GW25DP2	123724002	WG	N		10/14/04	X
123724	166GW26DP2	123724003	WG	N		10/14/04	X
123724	166HW26DP2	123724004	WG	FD		10/14/04	X
123724	166GW27DP2	123724005	WG	N		10/14/04	X
123724	166GW28DP2	123724006	WG	N		10/14/04	X

TABLE 1
Chemical Analytical Methods – Field and Quality Control Samples
Charleston Naval Complex, Zone K, SWMU 166, Charleston, SC

SDG	Sample ID	Lab Sample ID	Matrix	Sample Type	[illegible]	[illegible]	[illegible]
123724	166GW29DP2	123724007	WG	N		10/14/04	X
123724	166GW30DP2	123724008	WG	N		10/14/04	X
123724	166GW32DP2	123724009	WG	N		10/14/04	X
123724	166GW33DP2	123724010	WG	N		10/15/04	X
123724	166GW33DP2MS	1200728944	WG	MS		10/15/04	X
123724	166GW33DP2MSD	1200728945	WG	SD		10/15/04	X
123724	166GW34DP2	12374011	WG	N		10/14/04	X
123724	166GW35DP2	123724012	WG	N		10/15/04	X
123724	166GW36DP2	123724013	WG	N		10/14/04	X
123724	166HW36DP2	123724014	WG	FD		10/14/04	X
123724	166GW39DP2	123724015	WG	N		10/14/04	X
123724	166GW45DP2	123724016	WG	N		10/14/04	X
123724	166GW46DP2	123724017	WG	N		10/14/04	X
123724	166EW34DP2	123724018	WG	EB		10/15/04	X
123724	166TW34DP2	123724019	WG	TB			X
124548	166GW22DP3	124548001	WG	N		10/28/04	X
124548	166GW22DP3MS	1200737256	WG	MS		10/28/04	X
124548	166GW22DP3MSD	1200737257	WG	SD		10/28/04	X

TABLE 1
Chemical Analytical Methods – Field and Quality Control Samples
Charleston Naval Complex, Zone K, SWMU 166, Charleston, SC

[illegible]	[illegible]	[illegible]	[illegible]	[illegible]	[illegible]	[illegible]	[illegible]
124548	166GW001P3	124548002	WG	N		10/27/04	X
124548	166GW004P3	124548003	WG	N		10/29/04	X
124548	166GW008P3	124548004	WG	N		10/29/04	X
124548	166GW015P3	124548005	WG	N		12/27/04	X
124548	166HW016P3	124548006	WG	FD		10/27/04	X
124548	166HW016P3DL	124548006	WG	FD	DL	10/27/04	X
124548	166GW016P3	124548007	WG	N		10/27/04	X
124548	166GW017P3	124548008	WG	N		10/27/04	X
124548	166GW09DP3	124548009	WG	N		10/28/04	X
124548	166GW11DP3	124548010	WG	N		10/29/04	X
124548	166GW15DP3	124548011	WG	N		10/27/04	V
124548	GDKGW002P3	124548012	WG	N		10/28/04	X
124548	GDKGW03DP3	124548013	WG	N		10/27/04	X
124548	GDKGW04DP3	124548014	WG	N		10/27/04	X
124548	166EW001P3	124548015	WQ	EB		10/29/04	X
124548	166TW001P3	124548016	WQ	TB			X

TABLE 1
Chemical Analytical Methods – Field and Quality Control Samples
Charleston Naval Complex, Zone K, SWMU 166, Charleston, SC

[illegible]	[illegible]	[illegible]	[illegible]	[illegible]	[illegible]	[illegible]	[illegible]

MATRIX CODE

WG – Water Sample
WQ – Water QC Sample

SAMPLE TYPE CODE

EB - Equipment Blank
TB – Trip Blank
N - Native Sample
FD – Field Duplicate
MS – Matrix Spike
SD – Matrix Spike Duplicate

LR TYPE

DL - Dilution

ANALYSIS CODE

VOC – Volatile Organic Compounds

Organic Parameters

Quality Control Review

The following list represents the QA/QC measures that were reviewed during the data quality evaluation procedure for organic data.

- **Holding Times** – The holding times are evaluated to verify that samples were extracted and analyzed within holding times.
- **Blank samples** – Method blanks, equipment blanks, and trip blanks were provided for this project. Blank samples enable the reviewer to determine if an analyte may be attributed to sampling or laboratory procedures, rather than environmental contamination from site activities.
- **Surrogate Recoveries** – Surrogate Compounds are added to each sample and the recoveries are used to monitor lab performance and possible matrix interference.
- **Lab Control Sample (LCS)** – This sample is a "controlled matrix", either laboratory reagent water or Ottawa sand, in which target compounds have been added prior to extraction/analysis. The recoveries serve as a monitor of the overall performance of each step during the analysis, including sample preparation.
- **Matrix Spike/Matrix Spike Duplicate (MS/MSD) Samples** – Spike recovery is used to evaluate potential matrix interferences, as well as accuracy. Precision information is also determined by calculating the reproducibility between the recoveries of each spiked parameter.
- **Field Duplicate Samples** – These samples are collected to determine precision between a native and its duplicate. This information can only be determined when target compounds are detected.
- **GC/MS Tuning** – The mass spectrum of the tuning compound is evaluated for method compliance. The criteria are established to verify the proper mass assignment and mass resolution.
- **Initial Calibration** – The initial calibration ensures that the instrument is capable of producing acceptable qualitative and quantitative data for the compounds of interest.
- **Continuing Calibration** – The continuing calibration checks satisfactory performance of the instrument and its predicted response to the target compounds.
- **Internal Standards** – The internal standards (retention time and response) are evaluated for method compliance. The internal standards are used in quantitation of the target parameters and monitor the instrument sensitivity and response for stability during each analysis.

Volatile Organic Compounds (VOC) Analyses

The QA/QC parameters for VOC analyses for all of the samples were within acceptable control limits, except as noted below:

Recoveries - Surrogate, MS/MSD and LCS

All Surrogate, Matrix Spike (MS), Matrix Spike Duplicate (MSD), and Laboratory Control Sample (LCS) recoveries were within acceptable quality control limits, except as noted in Table 2 below.

TABLE 2
Surrogate and MS/MSD Recoveries Out of QC Limits: VOC
Charleston Naval Complex, Zone K, SWMU 166, Charleston, SC

[illegible]	[illegible]	[illegible]	[illegible]	[illegible]	[illegible]	[illegible]
124548	166GW22DP3 MS/MSD	2-Chloroethyl vinyl ether	0%* / 0%*	70-130	166GW22DP3	Detects – J; non-detects – R
123470	166GW07DP2	Toluene-d8	85% Low	88-110	166GW07DP2	Detects – J; non-detects – UJ
123470	166GW31DP2	Toluene-d8	86% Low	88-110	166GW31DP2	Detects – J; non-detects – UJ
123470	166GW42DP2	Toluene-d8	85% Low	88-110	166GW42DP2	Detects – J; non-detects – UJ
123470	166GW48DP2	Toluene-d8	86% Low	88-110	166GW48DP2	Detects – J; non-detects – UJ
123470	166GW49DP2	Toluene-d8	85% Low	88-110	166GW49DP2	Detects – J; non-detects – UJ
123470	166GWTM4P2	Toluene-d8	85% Low	88-110	166GWTM4P2	Detects – J; non-detects – UJ
123470	166GW52DP2	Toluene-d8	87% Low	88-110	166GW52DP2	Detects – J; non-detects – UJ

* - out of control limits

Holding Times

In SDG 124548, sample 166HW016P3DL was analyzed 1 day beyond the 14 day sample analysis holding time. The reported results were flagged "J" and non-detected results "UJ" for exceeding holding time, as estimated.

Rejected Data

As discussed in the sections above, there was only a single result rejected for 2-CEVE, in sample 166GW22DP3, such that there is not a valid result.

Conclusion

A review of the analytical data submitted regarding the investigation of Zone K, SWMU 166 at the Charleston Naval Complex, Charleston, South Carolina by CH2M HILL has been completed. An overall evaluation of the data indicates that the sample handling, shipment, and analytical procedures have been adequately completed, and that the analytical results should be considered usable as qualified.

As discussed above, there were specific results that were rejected, in which the data cannot be used. With the exception of these results, the validation review demonstrated that the analytical systems were generally in control and the data can be used in the decision making process.

Attachment 1 - Changed Qualifiers and Results
Charleston Navel Complex - Zone K, SWMU 166 - January 13, 2005.

Parameter Class	Analytical Method	Parameter	SDG	Sample ID	Lab Sample ID	Matrix	Lab Result	Lab Qual	Final Result	Final Qual	Units	Reasons
VOC	SW-846 8260B	Vinyl Chloride	123470	166GW07DP2	123470007	WG	100	U	100	UJ	ug/L	SSL
VOC	SW-846 8260B	1,1-Dichloroethylene	123470	166GW07DP2	123470007	WG	50	U	50	UJ	ug/L	SSL
VOC	SW-846 8260B	trans-1,2-Dichloroethylene	123470	166GW07DP2	123470007	WG	50	U	50	UJ	ug/L	SSL
VOC	SW-846 8260B	cis-1,2-Dichloroethylene	123470	166GW07DP2	123470007	WG	171	=	171	J	ug/L	SSL
VOC	SW-846 8260B	1,2-Dichloroethylene (total)	123470	166GW07DP2	123470007	WG	171	=	171	J	ug/L	SSL
VOC	SW-846 8260B	Trichloroethylene	123470	166GW07DP2	123470007	WG	594	=	594	J	ug/L	SSL
VOC	SW-846 8260B	Tetrachloroethylene	123470	166GW07DP2	123470007	WG	50	U	50	UJ	ug/L	SSL
VOC	SW-846 8260B	Vinyl Chloride	123470	166GW31DP2	123470010	WG	50	U	50	UJ	ug/L	SSL
VOC	SW-846 8260B	1,1-Dichloroethylene	123470	166GW31DP2	123470010	WG	25	U	25	UJ	ug/L	SSL
VOC	SW-846 8260B	trans-1,2-Dichloroethylene	123470	166GW31DP2	123470010	WG	25	U	25	UJ	ug/L	SSL
VOC	SW-846 8260B	cis-1,2-Dichloroethylene	123470	166GW31DP2	123470010	WG	265	=	265	J	ug/L	SSL
VOC	SW-846 8260B	1,2-Dichloroethylene (total)	123470	166GW31DP2	123470010	WG	265	=	265	J	ug/L	SSL
VOC	SW-846 8260B	Trichloroethylene	123470	166GW31DP2	123470010	WG	263	=	263	J	ug/L	SSL
VOC	SW-846 8260B	Tetrachloroethylene	123470	166GW31DP2	123470010	WG	25	U	25	UJ	ug/L	SSL
VOC	SW-846 8260B	Vinyl Chloride	123470	166GW42DP2	123470012	WG	754	=	754	J	ug/L	SSL
VOC	SW-846 8260B	1,1-Dichloroethylene	123470	166GW42DP2	123470012	WG	250	U	250	UJ	ug/L	SSL
VOC	SW-846 8260B	trans-1,2-Dichloroethylene	123470	166GW42DP2	123470012	WG	250	U	250	UJ	ug/L	SSL

Attachment 1 - Changed Qualifiers and Results
Charleston Navel Complex - Zone K, SWMU 166 - January 13, 2005.

Parameter Class	Analytical Method	Parameter	SDG	Sample ID	Lab Sample ID	Matrix	Lab Result	Lab Qual	Final Result	Final Qual	Units	Reasons
VOC	SW-846 8260B	cis-1,2-Dichloroethylene	123470	166GW42DP2	123470012	WG	2740	=	2740	J	ug/L	SSL
VOC	SW-846 8260B	1,2-Dichloroethylene (total)	123470	166GW42DP2	123470012	WG	2740	=	2740	J	ug/L	SSL
VOC	SW-846 8260B	Trichloroethylene	123470	166GW42DP2	123470012	WG	28.3	J	28.3	J	ug/L	SSL
VOC	SW-846 8260B	Tetrachloroethylene	123470	166GW42DP2	123470012	WG	250	U	250	UJ	ug/L	SSL
VOC	SW-846 8260B	Vinyl Chloride	123470	166GW48DP2	123470015	WG	500	U	500	UJ	ug/L	SSL
VOC	SW-846 8260B	1,1-Dichloroethylene	123470	166GW48DP2	123470015	WG	250	U	250	UJ	ug/L	SSL
VOC	SW-846 8260B	trans-1,2-Dichloroethylene	123470	166GW48DP2	123470015	WG	250	U	250	UJ	ug/L	SSL
VOC	SW-846 8260B	cis-1,2-Dichloroethylene	123470	166GW48DP2	123470015	WG	3520	=	3520	J	ug/L	SSL
VOC	SW-846 8260B	1,2-Dichloroethylene (total)	123470	166GW48DP2	123470015	WG	3520	=	3520	J	ug/L	SSL
VOC	SW-846 8260B	Trichloroethylene	123470	166GW48DP2	123470015	WG	270	=	270	J	ug/L	SSL
VOC	SW-846 8260B	Tetrachloroethylene	123470	166GW48DP2	123470015	WG	250	U	250	UJ	ug/L	SSL
VOC	SW-846 8260B	Vinyl Chloride	123470	166GW49DP2	123470016	WG	63.6	J	63.6	J	ug/L	SSL
VOC	SW-846 8260B	1,1-Dichloroethylene	123470	166GW49DP2	123470016	WG	100	U	100	UJ	ug/L	SSL
VOC	SW-846 8260B	trans-1,2-Dichloroethylene	123470	166GW49DP2	123470016	WG	100	U	100	UJ	ug/L	SSL
VOC	SW-846 8260B	cis-1,2-Dichloroethylene	123470	166GW49DP2	123470016	WG	1000	=	1000	J	ug/L	SSL
VOC	SW-846 8260B	1,2-Dichloroethylene (total)	123470	166GW49DP2	123470016	WG	1000	=	1000	J	ug/L	SSL
VOC	SW-846 8260B	Trichloroethylene	123470	166GW49DP2	123470016	WG	186	=	186	J	ug/L	SSL

Attachment 1 - Change. ualifiers and Results
Charleston Navel Complex - Zone K, SWMU 166 - January 13, 2005.

Parameter Class	Analytical Method	Parameter	SDG	Sample ID	Lab Sample ID	Matrix	Lab Result	Lab Qual	Final Result	Final Qual	Units	Reason
VOC	SW-846 8260B	Tetrachloroethylene	123470	166GW49DP2	123470016	WG	100	U	100	UJ	ug/L	SSL
VOC	SW-846 8260B	Vinyl Chloride	123470	166GW52DP2	123470019	WG	500	U	500	UJ	ug/L	SSL
VOC	SW-846 8260B	1,1-Dichloroethylene	123470	166GW52DP2	123470019	WG	250	U	250	UJ	ug/L	SSL
VOC	SW-846 8260B	trans-1,2-Dichloroethylene	123470	166GW52DP2	123470019	WG	250	U	250	UJ	ug/L	SSL
VOC	SW-846 8260B	cis-1,2-Dichloroethylene	123470	166GW52DP2	123470019	WG	1600	=	1600	J	ug/L	SSL
VOC	SW-846 8260B	1,2-Dichloroethylene (total)	123470	166GW52DP2	123470019	WG	1600	=	1600	J	ug/L	SSL
VOC	SW-846 8260B	Trichloroethylene	123470	166GW52DP2	123470019	WG	1930	=	1930	J	ug/L	SSL
VOC	SW-846 8260B	Tetrachloroethylene	123470	166GW52DP2	123470019	WG	250	U	250	UJ	ug/L	SSL
VOC	SW-846 8260B	Vinyl Chloride	123470	166GWTM3P2	123470020	WG	191	J	191	J	ug/L	SSL
VOC	SW-846 8260B	1,1-Dichloroethylene	123470	166GWTM3P2	123470020	WG	125	U	125	UJ	ug/L	SSL
VOC	SW-846 8260B	trans-1,2-Dichloroethylene	123470	166GWTM3P2	123470020	WG	125	U	125	UJ	ug/L	SSL
VOC	SW-846 8260B	cis-1,2-Dichloroethylene	123470	166GWTM3P2	123470020	WG	1410	=	1410	J	ug/L	SSL
VOC	SW-846 8260B	1,2-Dichloroethylene (total)	123470	166GWTM3P2	123470020	WG	1410	=	1410	J	ug/L	SSL
VOC	SW-846 8260B	Trichloroethylene	123470	166GWTM3P2	123470020	WG	309	=	309	J	ug/L	SSL
VOC	SW-846 8260B	Tetrachloroethylene	123470	166GWTM3P2	123470020	WG	125	U	125	UJ	ug/L	SSL
VOC	SW-846 8260B	cis-1,2-Dichloroethylene	123473	166GWTM4P2	123473001	WG	5500	E	5500	R	ug/L	LR
VOC	SW-846 8260B	1,2-Dichloroethylene (total)	123473	166GWTM4P2	123473001	WG	5500	E	5500	R	ug/L	LR
VOC	SW-846 8260B	2-Chloroethylvinyl ether	124548	166GW22DP3	124548001	WG	10	U	10	R	ug/L	MSL
VOC	SW-846 8260B	cis-1,2-Dichloroethylene	124548	166HW016P3	124548006	WG	473	E	473	R	ug/L	LR
VOC	SW-846 8260B	1,2-Dichloroethylene (total)	124548	166HW016P3	124548006	WG	473	E	473	R	ug/L	LR

Attachment 1 - Changed Qualifiers and Results
Charleston Navel Complex - Zone K, SWMU 166 - January 13, 2005.

Parameter Class	Analytical Method	Parameter	SDG	Sample ID	Lab Sample ID	Matrix	Lab Result	Lab Qual	Final Result	Final Qual	Unit	Reason
VOC	SW-846 8260B	cis-1,2-Dichloroethylene	124548	166HW016P3DL	124548006	WG	489	D	489	J	ug/L	HT
VOC	SW-846 8260B	1,2-Dichloroethylene (total)	124548	166HW016P3DL	124548006	WG	489	D	489	J	ug/L	HT

APPENDIX D

Phase II IM Analytical Data

Analytical Data Summary

	StationID	K166GW001		K166GW004		K166GW007		K166GW008		K166GW015		K166GW016		K166GW017	
	SampleID	166GW001P3		166GW004P3		166HW016P3		166GW008P3		166GW015P3		166GW016P3		166GW017P3	
	DateCollected	October 28, 2004		October 29, 2004		October 27, 2004		October 29, 2004		October 27, 2004		October 27, 2004		October 27, 2004	
	DateAnalyzed	November 10, 2004		November 10, 2004		November 10, 2004		November 10, 2004		November 10, 2004		November 10, 2004		November 10, 2004	
	DateExtracted	November 10, 2004		November 10, 2004		November 10, 2004		November 10, 2004		November 10, 2004		November 10, 2004		November 10, 2004	
	SDGNumber	124548		124548		124548		124548		124548		124548		124548	
Chloromethane	ug/L	10	U	10	U	10	U	10	U	10	U	50	U	10	U
Vinyl chloride	ug/L	10	U	10	U	31.7	=	10	U	10	U	38.8	J	10	U
Bromomethane	ug/L	10	U	10	U	10	U	10	U	10	U	50	U	10	U
Chloroethane	ug/L	10	U	10	U	10	U	10	U	10	U	50	U	10	U
1,1-Dichloroethene	ug/L	5	U	5	U	5	U	5	U	5	U	25	U	5	U
Acetone	ug/L	10	U	10	U	10	U	10	U	10	U	50	U	10	U
Carbon Disulfide	ug/L	5	U	5	U	5	U	5	U	5	U	25	U	5	U
Methylene Chloride	ug/L	5	U	5	U	5	U	5	U	5	U	25	U	5	U
trans-1,2-Dichloroethene	ug/L	5	U	5	U	5	U	5	U	5	U	25	U	5	U
1,1-Dichloroethane	ug/L	5	U	5	U	5	U	5	U	5	U	25	U	5	U
Vinyl acetate	ug/L	10	U	10	U	10	U	10	U	10	U	50	U	10	U
Methyl ethyl ketone (2-Butanone)	ug/L	10	U	10	U	10	U	10	U	10	U	50	U	10	U
cis-1,2-Dichloroethylene	ug/L	5	U	5	U	489	J	5	U	5	U	497	=	5	U
1,2-Dichloroethene (total)	ug/L	5	U	5	U	489	J	5	U	5	U	497	=	5	U
Chloroform	ug/L	5	U	5	U	5	U	5	U	5	U	25	U	5	U
1,1,1-Trichloroethane	ug/L	5	U	5	U	5	U	5	U	5	U	25	U	5	U
Carbon Tetrachloride	ug/L	5	U	5	U	5	U	5	U	5	U	25	U	5	U
1,2-Dichloroethane	ug/L	5	U	5	U	5	U	5	U	5	U	25	U	5	U
Benzene	ug/L	5	U	5	U	5	U	5	U	5	U	25	U	5	U
Trichloroethylene (TCE)	ug/L	5	U	5	U	2.9	J	5	U	5	U	3.1	J	2	J
1,2-Dichloropropane	ug/L	5	U	5	U	5	U	5	U	5	U	25	U	5	U
Bromodichloromethane	ug/L	5	U	5	U	5	U	5	U	5	U	25	U	5	U
2-Chloroethyl vinyl ether	ug/L	10	U	10	U	10	U	10	U	10	U	50	U	10	U
cis-1,3-Dichloropropene	ug/L	5	U	5	U	5	U	5	U	5	U	25	U	5	U
Methyl isobutyl ketone (4-Methyl-2-pentanone)	ug/L	10	U	10	U	10	U	10	U	10	U	50	U	10	U
Toluene	ug/L	5	U	5	U	5	U	5	U	5	U	25	U	5	U
trans-1,3-Dichloropropene	ug/L	5	U	5	U	5	U	5	U	5	U	25	U	5	U
1,1,2-Trichloroethane	ug/L	5	U	5	U	5	U	5	U	5	U	25	U	5	U
2-Hexanone	ug/L	10	U	10	U	10	U	10	U	10	U	50	U	10	U
Tetrachloroethylene (PCE)	ug/L	5	U	5	U	5	U	5	U	5	U	25	U	82	=
Dibromochloromethane	ug/L	5	U	5	U	5	U	5	U	5	U	25	U	5	U
Chlorobenzene	ug/L	5	U	5	U	5	U	5	U	5	U	25	U	5	U
Ethylbenzene	ug/L	5	U	5	U	5	U	5	U	5	U	25	U	5	U
o-Xylene	ug/L	5	U	5	U	5	U	5	U	5	U	25	U	5	U
m+p Xylene	ug/L	5	U	5	U	5	U	5	U	5	U	25	U	5	U
Xylenes, Total	ug/L	5	U	5	U	5	U	5	U	5	U	25	U	5	U
Styrene	ug/L	5	U	5	U	5	U	5	U	5	U	25	U	5	U
Bromoform	ug/L	5	U	5	U	5	U	5	U	5	U	25	U	5	U
1,1,2,2-Tetrachloroethane	ug/L	5	U	5	U	5	U	5	U	5	U	25	U	5	U
1,3-Dichlorobenzene	ug/L	5	U	5	U	5	U	5	U	5	U	25	U	5	U
1,4-Dichlorobenzene	ug/L	5	U	5	U	5	U	5	U	5	U	25	U	5	U
1,2-Dichlorobenzene	ug/L	5	U	5	U	5	U	5	U	5	U	25	U	5	U
1,2,4-Trichlorobenzene	ug/L	5	U	5	U	5	U	5	U	5	U	25	U	5	U
1,2,3-Trichlorobenzene	ug/L	5	U	5	U	5	U	5	U	5	U	25	U	5	U

Analytical Data Summary

		StationID		K166GW053		K166GW054		K166GW055		K166GW055		K166GW056		K166GW057	
		SampleID		166GW053P2		166GW054P2		166GW055P2		166HW056P2		166GW056P2		166GW057P2	
		DateCollected		October 11, 2004		October 11, 2004		October 11, 2004		October 11, 2004		October 11, 2004		October 11, 2004	
		DateAnalyzed		October 25, 2004		October 24, 2004		October 24, 2004		October 24, 2004		October 24, 2004		October 24, 2004	
		DateExtracted		October 25, 2004		October 24, 2004		October 24, 2004		October 24, 2004		October 24, 2004		October 24, 2004	
		SDGNumber		123470		123470		123470		123470		123470		123470	
Chloromethane	ug/L														
Vinyl chloride	ug/L	25000	U	143	=	405	J	350	J	370	J	339	J	276	=
Bromomethane	ug/L														
Chloroethane	ug/L														
1,1-Dichloroethene	ug/L	12500	U	25	U	250	U	250	U	250	U	250	U	125	U
Acetone	ug/L														
Carbon Disulfide	ug/L														
Methylene Chloride	ug/L														
trans-1,2-Dichloroethene	ug/L	12500	U	25	U	250	U	250	U	250	U	250	U	125	U
1,1-Dichloroethane	ug/L														
Vinyl acetate	ug/L														
Methyl ethyl ketone (2-Butanone)	ug/L														
cis-1,2-Dichloroethylene	ug/L	59200	=	377	=	3500	=	4880	=	3890	=	3700	=	1800	=
1,2-Dichloroethene (total)	ug/L	59200	=	377	=	3500	=	4880	=	3890	=	3700	=	1800	=
Chloroform	ug/L														
1,1,1-Trichloroethane	ug/L														
Carbon Tetrachloride	ug/L														
1,2-Dichloroethane	ug/L														
Benzene	ug/L														
Trichloroethylene (TCE)	ug/L	79500	=	332	=	723	=	304	=	43.4	J	79.8	J	433	=
1,2-Dichloropropane	ug/L														
Bromodichloromethane	ug/L														
2-Chloroethyl vinyl ether	ug/L														
cis-1,3-Dichloropropene	ug/L														
Methyl isobutyl ketone (4-Methyl-2-pentanone)	ug/L														
Toluene	ug/L														
trans-1,3-Dichloropropene	ug/L														
1,1,2-Trichloroethane	ug/L														
2-Hexanone	ug/L														
Tetrachloroethylene (PCE)	ug/L	12500	U	25	U	250	U	250	U	250	U	250	U	125	U
Dibromochloromethane	ug/L														
Chlorobenzene	ug/L														
Ethylbenzene	ug/L														
o-Xylene	ug/L														
m+p Xylene	ug/L														
Xylenes, Total	ug/L														
Styrene	ug/L														
Bromoform	ug/L														
1,1,2,2-Tetrachloroethane	ug/L														
1,3-Dichlorobenzene	ug/L														
1,4-Dichlorobenzene	ug/L														
1,2-Dichlorobenzene	ug/L														
1,2,4-Trichlorobenzene	ug/L														
1,2,3-Trichlorobenzene	ug/L														

Analytical Data Summary

StationID		K166GW07D		K166GW09D		K166GW11D		K166GW13D		K166GW15D		K166GW16D		K166GW22D	
SampleID		166GW07DP2		166GW09DP3		166GW11DP3		166GW13DP2		166GW15DP3		166GW16DP2		166GW22DP3	
DateCollected		October 12, 2004		October 28, 2004		October 29, 2004		October 11, 2004		October 27, 2004		October 12, 2004		October 28, 2004	
DateAnalyzed		October 24, 2004		November 10, 2004		November 10, 2004		October 24, 2004		November 10, 2004		October 24, 2004		November 9, 2004	
DateExtracted		October 24, 2004		November 10, 2004		November 10, 2004		October 24, 2004		November 10, 2004		October 24, 2004		November 9, 2004	
SDGNumber		123470		124548		124548		123470		124548		123470		124548	
Chloromethane	ug/L			10	U	10	U			10	U			10	U
Vinyl chloride	ug/L	100	UJ	10	U	10	U	359	J	10	U	38.4	J	10	U
Bromomethane	ug/L			10	U	10	U			10	U			10	U
Chloroethane	ug/L			10	U	10	U			10	U			10	U
1,1-Dichloroethene	ug/L	50	UJ	5	U	5	U	250	U	5	U	250	U	5	U
Acetone	ug/L			10	U	10	U			10	U			10	U
Carbon Disulfide	ug/L			5	U	5	U			5	U			5	U
Methylene Chloride	ug/L			5	U	5	U			5	U			5	U
trans-1,2-Dichloroethene	ug/L	50	UJ	5	U	0.64	J	250	U	5	U	250	U	5	U
1,1-Dichloroethane	ug/L			5	U	5	U			5	U			5	U
Vinyl acetate	ug/L			10	U	10	U			10	U			10	U
Methyl ethyl ketone (2-Butanone)	ug/L			10	U	10	U			10	U			10	U
cis-1,2-Dichloroethylene	ug/L	171	J	5	U	7.5	=	4000	=	5	U	3530	=	1.1	J
1,2-Dichloroethene (total)	ug/L	171	J	5	U	8.2	=	4000	=	5	U	3530	=	1.1	J
Chloroform	ug/L			5	U	5	U			5	U			5	U
1,1,1-Trichloroethane	ug/L			5	U	5	U			5	U			5	U
Carbon Tetrachloride	ug/L			5	U	5	U			5	U			5	U
1,2-Dichloroethane	ug/L			5	U	5	U			5	U			5	U
Benzene	ug/L			5	U	5	U			5	U			5	U
Trichloroethylene (TCE)	ug/L	594	J	5	U	29.2	=	497	=	5	U	250	U	0.6	J
1,2-Dichloropropane	ug/L			5	U	5	U			5	U			5	U
Bromodichloromethane	ug/L			5	U	5	U			5	U			5	U
2-Chloroethyl vinyl ether	ug/L			10	U	10	U			10	U			10	R
cis-1,3-Dichloropropene	ug/L			5	U	5	U			5	U			5	U
Methyl isobutyl ketone (4-Methyl-2-pentanone)	ug/L			10	U	10	U			10	U			10	U
Toluene	ug/L			5	U	5	U			5	U			5	U
trans-1,3-Dichloropropene	ug/L			5	U	5	U			5	U			5	U
1,1,2-Trichloroethane	ug/L			5	U	5	U			5	U			5	U
2-Hexanone	ug/L			10	U	10	U			10	U			10	U
Tetrachloroethylene (PCE)	ug/L	50	UJ	5	U	5	U	250	U	5	U	250	U	5	U
Dibromochloromethane	ug/L			5	U	5	U			5	U			5	U
Chlorobenzene	ug/L			5	U	5	U			5	U			5	U
Ethylbenzene	ug/L			5	U	5	U			5	U			5	U
o-Xylene	ug/L			5	U	5	U			5	U			5	U
m+p Xylene	ug/L			5	U	5	U			5	U			5	U
Xylenes, Total	ug/L			5	U	5	U			5	U			5	U
Styrene	ug/L			5	U	5	U			5	U			5	U
Bromoform	ug/L			5	U	5	U			5	U			5	U
1,1,2,2-Tetrachloroethane	ug/L			5	U	5	U			5	U			5	U
1,3-Dichlorobenzene	ug/L			5	U	5	U			5	U			5	U
1,4-Dichlorobenzene	ug/L			5	U	5	U			5	U			5	U
1,2-Dichlorobenzene	ug/L			5	U	5	U			5	U			5	U
1,2,4-Trichlorobenzene	ug/L			5	U	5	U			5	U			5	U
1,2,3-Trichlorobenzene	ug/L			5	U	5	U			5	U			5	U

Analytical Data Summary

	StationID	K166GW25D		K166GW26D		K166GW26D		K166GW27D		K166GW28D		K166GW29D		K166GW30D	
	SampleID	166GW25DP2		166GW26DP2		166HW26DP2		166GW27DP2		166GW28DP2		166GW29DP2		166GW30DP2	
	DateCollected	October 14, 2004		October 14, 2004		October 14, 2004		October 14, 2004		October 14, 2004		October 14, 2004		October 14, 2004	
	DateAnalyzed	October 27, 2004		October 27, 2004		October 27, 2004		October 27, 2004		October 28, 2004		October 27, 2004		October 27, 2004	
	DateExtracted	October 27, 2004		October 27, 2004		October 27, 2004		October 27, 2004		October 28, 2004		October 27, 2004		October 27, 2004	
	SDGNumber	123724		123724		123724		123724		123724		123724		123724	
Chloromethane	ug/L														
Vinyl chloride	ug/L	500	U	220	=	201	=	10	U	10	U	20	U	50	U
Bromomethane	ug/L														
Chloroethane	ug/L														
1,1-Dichloroethene	ug/L	250	U	50	U	50	U	5	U	5	U	10	U	25	U
Acetone	ug/L														
Carbon Disulfide	ug/L														
Methylene Chloride	ug/L														
trans-1,2-Dichloroethene	ug/L	250	U	13.2	J	13.2	J	0.68	J	4.2	J	0.87	J	16.1	J
1,1-Dichloroethane	ug/L														
Vinyl acetate	ug/L														
Methyl ethyl ketone (2-Butanone)	ug/L														
cis-1,2-Dichloroethylene	ug/L	3590	=	755	=	748	=	15.8	=	51.1	=	23	=	488	=
1,2-Dichloroethene (total)	ug/L	3590	=	768	=	761	=	16.5	=	55.3	=	23.9	=	504	=
Chloroform	ug/L														
1,1,1-Trichloroethane	ug/L														
Carbon Tetrachloride	ug/L														
1,2-Dichloroethane	ug/L														
Benzene	ug/L														
Trichloroethylene (TCE)	ug/L	161	J	134	=	130	=	45.4	=	94.7	=	117	=	257	=
1,2-Dichloropropane	ug/L														
Bromodichloromethane	ug/L														
2-Chloroethyl vinyl ether	ug/L														
cis-1,3-Dichloropropene	ug/L														
Methyl isobutyl ketone (4-Methyl-2-pentanone)	ug/L														
Toluene	ug/L														
trans-1,3-Dichloropropene	ug/L														
1,1,2-Trichloroethane	ug/L														
2-Hexanone	ug/L														
Tetrachloroethylene (PCE)	ug/L	250	U	50	U	50	U	5	U	5	U	10	U	25	U
Dibromochloromethane	ug/L														
Chlorobenzene	ug/L														
Ethylbenzene	ug/L														
o-Xylene	ug/L														
m+p Xylene	ug/L														
Xylenes, Total	ug/L														
Styrene	ug/L														
Bromoform	ug/L														
1,1,2,2-Tetrachloroethane	ug/L														
1,3-Dichlorobenzene	ug/L														
1,4-Dichlorobenzene	ug/L														
1,2-Dichlorobenzene	ug/L														
1,2,4-Trichlorobenzene	ug/L														
1,2,3-Trichlorobenzene	ug/L														

Analytical Data Summary

	StationID	K166GW31D		K166GW31D		K166GW32D		K166GW33D		K166GW34D		K166GW35D		K166GW36D	
	SampleID	166GW31DP2		166HW36DP2		166GW32DP2		166GW33DP2		166GW34DP2		166GW35DP2		166GW36DP2	
	DateCollected	October 12, 2004		October 14, 2004		October 14, 2004		October 15, 2004		October 14, 2004		October 15, 2004		October 14, 2004	
	DateAnalyzed	October 24, 2004		October 28, 2004		October 27, 2004		October 27, 2004		October 27, 2004		October 27, 2004		October 27, 2004	
	DateExtracted	October 24, 2004		October 28, 2004		October 27, 2004		October 27, 2004		October 27, 2004		October 27, 2004		October 27, 2004	
	SDGNumber	123470		123724		123724		123724		123724		123724		123724	
Chloromethane	ug/L														
Vinyl chloride	ug/L	50	UJ	2	J	17	J	10	U	5000	U	250	U	50	U
Bromomethane	ug/L														
Chloroethane	ug/L														
1,1-Dichloroethene	ug/L	25	UJ	10	U	25	U	5	U	2500	U	125	U	25	U
Acetone	ug/L														
Carbon Disulfide	ug/L														
Methylene Chloride	ug/L														
trans-1,2-Dichloroethene	ug/L	25	UJ	10	U	8.9	J	5	U	2500	U	125	U	25	U
1,1-Dichloroethane	ug/L														
Vinyl acetate	ug/L														
Methyl ethyl ketone (2-Butanone)	ug/L														
cis-1,2-Dichloroethylene	ug/L	265	J	108	=	409	=	1.5	J	40500	=	1180	=	128	=
1,2-Dichloroethene (total)	ug/L	265	J	108	=	418	=	1.5	J	40500	=	1180	=	128	=
Chloroform	ug/L														
1,1,1-Trichloroethane	ug/L														
Carbon Tetrachloride	ug/L														
1,2-Dichloroethane	ug/L														
Benzene	ug/L														
Trichloroethylene (TCE)	ug/L	263	J	2.5	J	104	=	10.1	=	1680	J	125	U	3	J
1,2-Dichloropropane	ug/L														
Bromodichloromethane	ug/L														
2-Chloroethyl vinyl ether	ug/L														
cis-1,3-Dichloropropene	ug/L														
Methyl isobutyl ketone (4-Methyl-2-pentanone)	ug/L														
Toluene	ug/L														
trans-1,3-Dichloropropene	ug/L														
1,1,2-Trichloroethane	ug/L														
2-Hexanone	ug/L														
Tetrachloroethylene (PCE)	ug/L	25	UJ	10	U	25	U	5	U	2500	U	125	U	25	U
Dibromochloromethane	ug/L														
Chlorobenzene	ug/L														
Ethylbenzene	ug/L														
o-Xylene	ug/L														
m+p Xylene	ug/L														
Xylenes, Total	ug/L														
Styrene	ug/L														
Bromoform	ug/L														
1,1,2,2-Tetrachloroethane	ug/L														
1,3-Dichlorobenzene	ug/L														
1,4-Dichlorobenzene	ug/L														
1,2-Dichlorobenzene	ug/L														
1,2,4-Trichlorobenzene	ug/L														
1,2,3-Trichlorobenzene	ug/L														

		StationID		K166GW41D		K166GW42D		K166GW43D		K166GW44D		K166GW45D		K166GW46D	
		SampleID		166GW41DP2		166GW42DP2		166GW43DP2		166GW44DP2		166GW45DP2		166GW46DP2	
		DateCollected		October 11, 2004		October 11, 2004		October 11, 2004		October 11, 2004		October 14, 2004		October 14, 2004	
		DateAnalyzed		October 24, 2004		October 24, 2004		October 24, 2004		October 24, 2004		October 28, 2004		October 28, 2004	
		DateExtracted		October 24, 2004		October 24, 2004		October 24, 2004		October 24, 2004		October 28, 2004		October 28, 2004	
		SDGNumber		123470		123470		123470		123470		123724		123724	
Chloromethane	ug/L														
Vinyl chloride	ug/L		10	U	251	=	754	J	2000	U	200	U	250	U	500	U
Bromomethane	ug/L														
Chloroethane	ug/L														
1,1-Dichloroethene	ug/L		5	U	50	U	250	UJ	1000	U	100	U	125	U	250	U
Acetone	ug/L														
Carbon Disulfide	ug/L														
Methylene Chloride	ug/L														
trans-1,2-Dichloroethene	ug/L		5	U	13.8	J	250	UJ	1000	U	100	U	125	U	250	U
1,1-Dichloroethane	ug/L														
Vinyl acetate	ug/L														
Methyl ethyl ketone (2-Butanone)	ug/L														
cis-1,2-Dichloroethylene	ug/L		0.87	J	552	=	2740	J	9590	=	494	=	610	=	2860	=
1,2-Dichloroethene (total)	ug/L		0.87	J	565	=	2740	J	9590	=	494	=	610	=	2860	=
Chloroform	ug/L														
1,1,1-Trichloroethane	ug/L														
Carbon Tetrachloride	ug/L														
1,2-Dichloroethane	ug/L														
Benzene	ug/L														
Trichloroethylene (TCE)	ug/L		0.91	J	126	=	28.3	J	2480	=	1260	=	1740	=	414	=
1,2-Dichloropropane	ug/L														
Bromodichloromethane	ug/L														
2-Chloroethyl vinyl ether	ug/L														
cis-1,3-Dichloropropene	ug/L														
Methyl isobutyl ketone (4-Methyl-2-pentanone)	ug/L														
Toluene	ug/L														
trans-1,3-Dichloropropene	ug/L														
1,1,2-Trichloroethane	ug/L														
2-Hexanone	ug/L														
Tetrachloroethylene (PCE)	ug/L		5	U	50	U	250	UJ	1000	U	100	U	125	U	250	U
Dibromochloromethane	ug/L														
Chlorobenzene	ug/L														
Ethylbenzene	ug/L														
o-Xylene	ug/L														
m+p Xylene	ug/L														
Xylenes, Total	ug/L														
Styrene	ug/L														
Bromoform	ug/L														
1,1,2,2-Tetrachloroethane	ug/L														
1,3-Dichlorobenzene	ug/L														
1,4-Dichlorobenzene	ug/L														
1,2-Dichlorobenzene	ug/L														
1,2,4-Trichlorobenzene	ug/L														
1,2,3-Trichlorobenzene	ug/L														

Analytical Data Summary

StationID		K166GW48D		K166GW49D		K166GW50D		K166GW51D		K166GW52D		K166GWTM3		K166GWTM4	
SampleID		166GW48DP2		166GW49DP2		166GW50DP2		166GW51DP2		166GW52DP2		166GWTM3P2		166GWTM4P2	
DateCollected		October 12, 2004		October 12, 2004		October 12, 2004		October 12, 2004		October 12, 2004		October 12, 2004		October 12, 2004	
DateAnalyzed		October 24, 2004		October 24, 2004		October 22, 2004		October 25, 2004		October 25, 2004		October 24, 2004		October 22, 2004	
DateExtracted		October 24, 2004		October 24, 2004		October 22, 2004		October 25, 2004		October 25, 2004		October 24, 2004		October 22, 2004	
SDGNumber		123470		123470		123470		123470		123470		123470		123473	
Chloromethane	ug/L														
Vinyl chloride	ug/L	500	UJ	63.6	J	1000	U	250	U	500	UJ	191	J	34.2	J
Bromomethane	ug/L														
Chloroethane	ug/L														
1,1-Dichloroethene	ug/L	250	UJ	100	UJ	500	U	125	U	250	UJ	125	UJ	250	U
Acetone	ug/L														
Carbon Disulfide	ug/L														
Methylene Chloride	ug/L														
trans-1,2-Dichloroethene	ug/L	250	UJ	100	UJ	500	U	125	U	250	UJ	125	UJ	250	U
1,1-Dichloroethane	ug/L														
Vinyl acetate	ug/L														
Methyl ethyl ketone (2-Butanone)	ug/L														
cis-1,2-Dichloroethylene	ug/L	3520	J	1000	J	2600	=	1660	=	1600	J	1410	J	6130	=
1,2-Dichloroethene (total)	ug/L	3520	J	1000	J	2600	=	1660	=	1600	J	1410	J	6130	=
Chloroform	ug/L														
1,1,1-Trichloroethane	ug/L														
Carbon Tetrachloride	ug/L														
1,2-Dichloroethane	ug/L														
Benzene	ug/L														
Trichloroethylene (TCE)	ug/L	270	J	186	J	8200	=	2010	=	1930	J	309	J	616	=
1,2-Dichloropropane	ug/L														
Bromodichloromethane	ug/L														
2-Chloroethyl vinyl ether	ug/L														
cis-1,3-Dichloropropene	ug/L														
Methyl isobutyl ketone (4-Methyl-2-pentanone)	ug/L														
Toluene	ug/L														
trans-1,3-Dichloropropene	ug/L														
1,1,2-Trichloroethane	ug/L														
2-Hexanone	ug/L														
Tetrachloroethylene (PCE)	ug/L	250	UJ	100	UJ	500	U	125	U	250	UJ	125	UJ	250	U
Dibromochloromethane	ug/L														
Chlorobenzene	ug/L														
Ethylbenzene	ug/L														
o-Xylene	ug/L														
m+p Xylene	ug/L														
Xylenes, Total	ug/L														
Styrene	ug/L														
Bromoform	ug/L														
1,1,2,2-Tetrachloroethane	ug/L														
1,3-Dichlorobenzene	ug/L														
1,4-Dichlorobenzene	ug/L														
1,2-Dichlorobenzene	ug/L														
1,2,4-Trichlorobenzene	ug/L														
1,2,3-Trichlorobenzene	ug/L														

		StationID		KGDKGW03D		KGDKGW04D	
		SampleID	GDKGW002P3	GDKGW03DP3		GDKGW04DP3	
		DateCollected	October 28, 2004	October 27, 2004		October 27, 2004	
		DateAnalyzed	November 10, 2004	November 10, 2004		November 10, 2004	
		DateExtracted	November 10, 2004	November 10, 2004		November 10, 2004	
		SDGNumber	124548	124548		124548	
Chloromethane	ug/L		10	U	10	U	10	U
Vinyl chloride	ug/L		10	U	10	U	10	U
Bromomethane	ug/L		10	U	10	U	10	U
Chloroethane	ug/L		10	U	10	U	10	U
1,1-Dichloroethene	ug/L		5	U	5	U	5	U
Acetone	ug/L		10	U	10	U	10	U
Carbon Disulfide	ug/L		5	U	5	U	5	U
Methylene Chloride	ug/L		5	U	5	U	5	U
trans-1,2-Dichloroethene	ug/L		5	U	5	U	5	U
1,1-Dichloroethane	ug/L		5	U	5	U	5	U
Vinyl acetate	ug/L		10	U	10	U	10	U
Methyl ethyl ketone (2-Butanone)	ug/L		10	U	10	U	10	U
cis-1,2-Dichloroethylene	ug/L		5	U	5	U	1.2	J
1,2-Dichloroethene (total)	ug/L		5	U	5	U	1.2	J
Chloroform	ug/L		5	U	5	U	5	U
1,1,1-Trichloroethane	ug/L		5	U	5	U	5	U
Carbon Tetrachloride	ug/L		5	U	5	U	5	U
1,2-Dichloroethane	ug/L		5	U	5	U	5	U
Benzene	ug/L		5	U	5	U	5	U
Trichloroethylene (TCE)	ug/L		5	U	6.5	=	26.2	=
1,2-Dichloropropane	ug/L		5	U	5	U	5	U
Bromodichloromethane	ug/L		5	U	5	U	5	U
2-Chloroethyl vinyl ether	ug/L		10	U	10	U	10	U
cis-1,3-Dichloropropene	ug/L		5	U	5	U	5	U
Methyl isobutyl ketone (4-Methyl-2-pentanone)	ug/L		10	U	10	U	10	U
Toluene	ug/L		5	U	5	U	5	U
trans-1,3-Dichloropropene	ug/L		5	U	5	U	5	U
1,1,2-Trichloroethane	ug/L		5	U	5	U	5	U
2-Hexanone	ug/L		10	U	10	U	10	U
Tetrachloroethylene (PCE)	ug/L		5	U	5	U	5	U
Dibromochloromethane	ug/L		5	U	5	U	5	U
Chlorobenzene	ug/L		5	U	5	U	5	U
Ethylbenzene	ug/L		5	U	5	U	5	U
o-Xylene	ug/L		5	U	5	U	5	U
m+p Xylene	ug/L		5	U	5	U	5	U
Xylenes, Total	ug/L		5	U	5	U	5	U
Styrene	ug/L		5	U	5	U	5	U
Bromoform	ug/L		5	U	5	U	5	U
1,1,2,2-Tetrachloroethane	ug/L		5	U	5	U	5	U
1,3-Dichlorobenzene	ug/L		5	U	5	U	5	U
1,4-Dichlorobenzene	ug/L		5	U	5	U	5	U
1,2-Dichlorobenzene	ug/L		5	U	5	U	5	U
1,2,4-Trichlorobenzene	ug/L		5	U	5	U	5	U
1,2,3-Trichlorobenzene	ug/L		5	U	5	U	5	U

APPENDIX E

Responses to SCDHEC Comments

This document presents CH2M-Jones' responses to the South Carolina Department of Health and Environmental Control's (SCDHEC's) comments on the *Interim Measure Completion Report/Corrective Measures Study Work Plan/Pilot Study Work Plan, SWMU 166, Zone K, Revision 0* (CH2M-Jones, 2005).

Responses to Engineering Comments Prepared by Jerry Stamps

1. **Table 3-2:**
   The Department recommends presenting the information contained within this table in graphical format. This will facilitate review of the overall performance of the zero-valent iron injections. Furthermore, please present the performance data for the proposed pilot study in graphical format in the pilot study report.

   CH2M-Jones Response:
   Figures 3-1 to 3-8 present the information contained in Tables 3-2 to 3-9 in chart format. These figures will be included in the Revision 1 document.

2. **Section 4.1:**
   This section states, "...the general VOC plume morphology and extent are reasonably well defined." The Department agrees with this statement for the purpose of this pilot study. However, the RFI Report for SWMU 166 has not yet been approved; therefore, additional investigation may be necessary contingent upon review of the RFI Report.

   CH2M-Jones Response:
   Comment noted. However, we believe that SCDHEC's focus for reviewing the RFI Report should be evaluating the responses we provided to SCDHEC's most recent set of comments on the RFI report, and whether these comments have been adequately addressed rather than providing new and additional comments on the RFI report.

3. **Section 5.2.1:**
   As stated in the text, the significant increase in contaminant concentrations in monitoring well K166GW040 (screened from 8 to 13 feet bgs) may be attributed to a residual DNAPL source near this well. The Department is aware of the soil removal conducted by the Navy in the past to remove contaminated soils in this area. However, given the possibility of residual DNAPL present in this shallow well, additional soil investigation may be necessary to identify the location and extent of this DNAPL. Additionally, please describe the effect of the injections on residual DNAPL that may exist in the soil column.

   CH2M-Jones Response:
   We don't believe that additional soil investigation is required or necessary at this time. The previous soil removal (Interim Measure) by the Navy successfully removed potentially impacted soil in this area down to the water table. Investigation of saturated zone soil in an attempt to identify chlorinated solvent contamination in shallow saturated soil at SWMU 166 would not be efficient or very effective since the site data suggest that the volume of DNAPL-impacted soil at the site is very small; it would therefore be difficult, perhaps nearly impossible, to find. In addition, activities to delineate DNAPL in saturated soil in this area have already been completed. An extensive Membrane Interface Probe (MIP) investigation was conducted in two

phases (Phase I and Phase II) by the Navy-CH2M-Jones team during 2000 and at SWMU 166. The MIP utilizes an electron capture detector which detects VOC gases captured from soil and groundwater as the downhole tool is advanced. The horizontal and vertical extent of the elevated TCE concentrations (which indicated a potential DNAPL source) were adequately delineated at all Target Treatment Areas (TTAs) at SWMU 166, including the area around K166GW040 which is part of TTA2. Details of the MIP study are included in two reports: CMS Work Plan, MIP Phase II Pilot Study, Revision 1 (CH2M-Jones, February 2001) and CMS Report, MIP Phase II Pilot Study, SWMU 166, Zone K (CH2M-Jones, January 2002). For these reasons, no further delineation of soil contamination is deemed necessary at this site.

The small amount of DNAPL in the shallow saturated soil in this area is expected to be in the form of small, immobile residual ganglia or isolated droplets. The FerOx injections likely slightly changed the physical configuration of these ganglia or droplets, allowing greater contact between groundwater moving through this zone and the TCE ganglia, thus increasing the rate of TCE dissolution. The observed increase in TCE concentrations is likely a result of increased dissolution of these ganglia. The best way to remediate this small TCE source area is to inject a soluble substrate slightly upgradient of it and allow the substrate migrate into this area and stimulate natural bacteria to degrade the TCE. Biodegradation of the TCE will further accelerate its dissolution and the remediation process. The proposed pilot test in this area is intended to begin this biodegradation process and to assess the optimal conditions for TCE biodegradation in this area.

4. <u>Section 5.2.1:</u>
   Please be advised that the Department has received several requests from the Department of Transportation (DOT) regarding the location of wells in the vicinity of the planned I-26 expansion. The Department suggests that the Navy coordinate with the DOT regarding the expansion of I-26 and its impact to the wells proposed for the biobarrier.

   CH2M-Jones Response:
   The Navy/CH2M-Jones team will coordinate the biobarrier installation activities with the DOT as necessary.

5. <u>Section 5.2.3, Well Installation, Construction, and Development:</u>
   The Navy must ensure that the appropriate permit is obtained prior to commencing injections.

   CH2M-Jones Response:
   The Navy/CH2M-Jones team will obtain the appropriate permits from SCDHEC prior to commencing injections, as done before for injections performed at other CNC sites.

Hydrogeology Comments Prepared by Donald C. Hargrove

1. **Interim Measure Completion Report:**

   a) Pilot Study, Baseline Characterization, Page 5-5, Line 16: The dissolved gases "ethane" are redundant. The text should be revised to include ethene.

   CH2M-Jones Response:
   The inadvertent typographical error will be corrected, and the revised text will be included in the Revision 1 document.

   b) Pilot Study, Well Installation, Construction, and Development, Page 5-4, Line 19: This reviewer is not familiar with Well Record Form HDI (9-77). Please provide a copy of this form for review.

   CH2M-Jones Response:
   The text will be revised to say that "appropriate well record forms will be provided after well installation and development."

   c) Pilot Study, Groundwater Monitoring Procedures, Page 5-7: This section states "(...purging will continue until the basic groundwater parameters stabilize (pH, temperature, and specific conductance) or until the well has been purged for 30 minutes)." The proposed purging procedure is not acceptable. The basic groundwater parameters typically used to judge when purging is complete are specific conductance, temperature, pH, and turbidity. Purging is considered complete after the following:

      i) at least three (3) well volumes have been removed.
      ii) specific conductance, temperature, pH, and turbidity readings have stabilized (3 consecutive measurements within ten percent of each other). It is preferred that the final turbidity is less than ten nephelometric turbidity units (NTUs). The EPA SOPQAM, section seven, has more information about purging. It does not specify a time limit for purging, but rather says that three to five well volumes are usually sufficient. The text should be revised to include purge procedures that are dependant upon meeting the measurement criteria, rather than simply specifying purging time limits.

   CH2M-Jones Response:
   The text will be revised to omit the words "or until the well has been purged for 30 minutes" to clarify that the purging will take place until after at least three well volumes have been removed and specific conductance, pH, and turbidity readings have stabilized. This procedure has been followed during all sampling events at the CNC so far.

   d) The text does not elaborate on any specific problems that were encountered during this IM. Appendix C lists numerous observations where mounding and heaving occurred, "daylighting" was observed, packers were blown out of the casings, and off-gassing was observed around well casings. Each of these observations should be explained. The term "daylighting" should be explained. A possible remedy for the observations should also be proposed. The text should also discuss the possibility

that the integrity of the wells that experienced mounding and heaving are now in question. Each of the wells should be inspected and repaired or replaced as necessary. Since all of the wells were installed essentially the same way that a permanent monitoring well would be installed, the surveyed elevations should be reviewed. After a new survey has been performed, the current pad elevations should be compared to the pad elevations surveyed after installation. Any discrepancies between the original and current elevations will require further scrutiny.

There are wells listed in Appendix C where water was observed being emitted from the monitoring wells (e.g.: Table C-11, TTA-4 IW-1). This phenomenon should be explained. In addition, an explanation is required concerning how the emitted water (IDW) was collected and properly disposed.

CH2M-Jones Response:
The term "daylighting" describes a situation where compressed nitrogen, which is pumped into the subsurface before the ZVI slurry is introduced, finds a vertical path of high permeability, often around the annular space of a nearby historic well and escapes to the ground surface. Since the nitrogen is introduced under significant pressure to create a pathway for the ZVI slurry, small amounts of ZVI slurry were noticed at the ground surface at a few locations shortly after injection occurred. Off-gassing refers to the slow release of the injected nitrogen from the subsurface.

Packers were attached with a pressure gauge and placed in monitoring wells located around injection wells, to measure pressure influence around injection wells and to prevent groundwater from escaping to the surface. Due to wear and tear, these packers occasionally do not seal perfectly and allow a small quantity of gas or water to allow leak through or in some cases the packer to blow out of well. When this occurred, injection was stopped and the packers were replaced. Injection of ZVI was then resumed at a lower pressure.

No monitoring wells were dislodged from their boreholes or damaged as a result of the pressure influence from the injection operations. The amount of water emitted from a few wells was minor and insufficient to allow collection.

Based on verification with CH2M-Jones personnel who oversaw the injection work, the daylighting, ground surface heaving, and off-gassing were not as dramatic as described by subcontractor field personnel in the Comments column of Tables C1-C13 of Appendix C.

No repairs or surveys are deemed necessary for the site monitoring wells since as indicated above, none of the permanent monitoring wells were damaged.

These clarifications will be added to the Revision 1 document.

TABLE 3-5

Comparison of Pre-Injection and Post-Injection Concentrations of Selected CVOCs at Target Treatment Area 4

IM Completion Report/CMS Work Plan/Pilot Study Work Plan, SWMU 166, Zone K, Charleston Naval Complex

StationID		K166GW27D						K166GW28D						K166GW29D						K166GW30D					
		PRE-INJECTION		POST-PHASE I		POST-PHASE II		PRE-INJECTION		POST-PHASE I		POST-PHASE II		PRE-INJECTION		POST-PHASE I		POST-PHASE II		PRE-INJECTION		POST-PHASE I		POST-PHASE II	
SampleID		166GW27DM1				166GW27DP2		166GW28DM1				166GW28DP2		166GW29DM1				166GW29DP2		166GW30DM1				166GW30DP2	
DateCollected		2/14/2002		6/5/2003		10/14/2004		2/19/2002		6/4/2003		10/14/2004		2/19/2002		6/4/2003		10/14/2004		2/19/2002		6/4/2003		10/14/2004	
DateExtracted						10/27/2004						10/28/2004						10/27/2004						10/27/2004	
DateAnalyzed						10/27/2004						10/28/2004						10/27/2004						10/27/2004	
SDGNumber						123724						123724						123724				81287		123724	
Parameter	**Units**																								
Vinyl chloride	ug/L	10	U	10	U	10	U	0.4	J	50	U	10	U	10	U	10	U	20	U	1	J	100	U	50	U
1,1-Dichloroethene	ug/L	5	U	5	U	5	U	0.75	J	25	U	5	U	5	U	5	U	10	U	2	J	50	U	25	U
trans-1,2-Dichloroethene	ug/L	5	U	5	U	0.68	J	13.4	=	12.1	J	4.2	J	5	U	5	U	0.87	J	9	=	44.8	J	16.1	J
cis-1,2-Dichloroethylene	ug/L	0.47	J	0.38	J	15.8	=	61	=	97	=	51.1	=	2	J	3.9	J	23	=	97.9	=	485	=	488	=
1,2-Dichloroethene (total)	ug/L	0.47	J	0.38	J	16.5	=	74.5	=	109	=	55.3	=	2	J	3.9	J	23.9	=	107	=	530	=	504	=
Trichloroethylene (TCE)	ug/L	18.5	=	4.3	J	45.4	=	280	=	248	=	94.7	=	89.8	=	76.3	=	117	=	3010	=	512	=	257	=
Tetrachloroethylene (PCE)	ug/L	5	U	5	U	5	U	5	U	25	U	5	U	5	U	5	U	10	U	5	U	50	U	25	U
Concentrations Used to Calculate Total CVOC Concentrations.																									
Vinyl chloride	ug/L	0		0		0		0.4		0		0		0		0		0		1		0		0	
1,1-Dichloroethene	ug/L	0		0		0		0.75		0		2.5		0		0		0		2		0		0	
1,2-Dichloroethene (total)	ug/L	0.47		0.38		16.5		74.5		109		55.3		2		3.9		23.9		107		530		504	
Trichloroethylene (TCE)	ug/L	18.5		4.3		45.4		280		248		94.7		89.8		76.3		117		3010		512		257	
Tetrachloroethylene (PCE)	ug/L	0		0		0		0		0		0		0		0		0		0		0		0	
Total CVOC Conc	**ug/L**	**18.97**		**4.68**		**61.9**		**355.65**		**357**		**152.5**		**91.8**		**80.2**		**140.9**		**3120**		**1042**		**761**	

PERCENT REDUCTIONS OF GROUNDWATER CONTAMINANTS AFTER IM		
	Average	**Total**
TTA4 Pre-Injection CVOC Conc:	1,134	7,937
TTA4 June '03 CVOC Conc:	651	4,555
Percent reduction of CVOC After Phase I	**43%**	**43%**
TTA4 Oct '04 CVOC Conc:	421	2,948
Percent reduction of CVOC After Phase II	**63%**	**63%**
TTA4 Pre-Injection TCE Conc:	1,086	7,604
TTA4 June '03 TCE Conc:	578	4,045
Percent reduction in TCE After Phase I	**47%**	**47%**
TTA4 Oct '04 TCE Conc:	211	1,475
Percent reduction in TCE After Phase II	**81%**	**81%**

TABLE 3-5 (CONTINUED)

Comparison of Pre-Injection and Post-Injection Concentrations of Selected CVOCs at Target Treatment Area 4

IM Completion Report/CMS Work Plan/Pilot Study Work Plan, SWMU 166, Zone K, Charleston Naval Complex

	StationID	K166GW31D						K166GW32D						K166GW07D (inside TTA 4)					
		PRE-INJECTION		POST-PHASE I		POST-PHASE II		PRE-INJECTION		POST-PHASE I		POST-PHASE II		PRE-INJECTION		POST-PHASE I		POST-PHASE II	
	SampleID	166GW31DM1				166GW31DP2		166GW32DM1				166GW32DP2		166GW07DM4				166GW07DP2	
	DateCollected	2/14/2002		6/4/2003		10/12/2004		2/14/2002		6/6/2003		10/14/2004		5/20/2002		6/6/2003		10/12/2004	
	DateExtracted					10/24/2004				5/28/2003		10/27/2004						10/24/2004	
	DateAnalyzed					10/24/2004				6/6/2003		10/27/2004						10/24/2004	
	SDGNumber			81287		123470				81288		123724						123470	
Parameter	**Units**																		
Vinyl chloride	ug/L	100	U	100	U	50	UJ	250	U	250	U	17	J	5	U	200	U	100	UJ
1,1-Dichloroethene	ug/L	50	U	50	U	25	UJ	125	U	125	U	25	U	10	U	100	U	50	UJ
trans-1,2-Dichloroethene	ug/L	50	U	50	U	25	UJ	125	U	125	U	8.9	J	4.4	J	100	U	50	UJ
cis-1,2-Dichloroethylene	ug/L	23 5	J	27.2	J	265	J	57	J	105	J	409	=	0.64	J	31.4	J	171	J
1,2-Dichloroethene (total)	ug/L	23 5	J	27.2	J	265	J	57	J	105	J	418	=	29.6	=	31.4	J	171	J
Trichloroethylene (TCE)	ug/L	757	=	504	=	263	J	2700	=	1670	=	104	=	749	=	1030	=	594	J
Tetrachloroethylene (PCE)	ug/L	50	U	50	U	25	UJ	125	U	125	U	25	U	34	=	100	U	50	UJ
Concentrations Used to Calculate Total CVOC Concentrations.																			
Vinyl chloride	ug/L	0		0		0		0		0		17		0		0		0	
1,1-Dichloroethene	ug/L	0		0		0		0		0		0		0		0		0	
1,2-Dichloroethene (total)	ug/L	23.5		27.2		265		57		105		418		29.6		31.4		171	
Trichloroethylene (TCE)	ug/L	757		504		263		2700		1670		104		749		1030		594	
Tetrachloroethylene (PCE)	ug/L	0		0		0		0		0		0		34		0		0	
Total CVOC Conc	**ug/L**	**780.5**		**531.2**		**528**		**2757**		**1775**		**539**		**812.6**		**1061.4**		**765**	

TABLE 3-6
Summary of CVOC Detections during Pre-injection and Post-injection Sampling Events
TTA-5, SWMU 166 IM, Zone K, Charleston Naval Complex

StationID		K166GW25D						K166GW45D						K166GW46D					
		PRE-INJECTION		POST-PHASE I		POST-PHASE II		PRE-INJECTION		POST-PHASE I		POST-PHASE II		PRE-INJECTION		POST-PHASE I		POST-PHASE II	
SampleID		166GW25DM4		166GW25DN1		166GW25DP2		166GW45DM4		166GW45DN1		166GW45DP2		166GW46DM4		166GW46DN1		166GW46DP2	
DateCollected		5/20/2002		05/28/2003		10/14/2004		5/23/2002		05/28/2003		10/14/2004		5/28/2002		05/28/2003		10/14/2004	
DateExtracted		5/29/2002		06/04/2003		10/27/2004		5/31/2002		06/05/2003		10/28/2004		6/4/2002		06/05/2003		10/28/2004	
DateAnalyzed		5/29/2002		06/04/2003		10/27/2004		5/31/2002		06/05/2003		10/28/2004		6/4/2002		06/05/2003		10/28/2004	
SDGNumber		60790		81287		123724		61044		81288		123724		61134		81288		123724	
Parameter																			
Vinyl chloride	ug/L	1.4	J	500	U	500	U	10	U	500	U	250	U	500	U	500	U	500	U
1,1-Dichloroethene	ug/L	3.1	J	250	U	250	U	0.82	J	250	U	125	U	250	U	250	U	250	U
trans-1,2-Dichloroethene	ug/L	2	J	250	U	250	U	4	J	250	U	125	U	250	U	250	U	250	U
cis-1,2-Dichloroethylene	ug/L	121	J	4750	=	3590	=	44.6	=	498	=	610	=	57.2	J	716	=	2860	=
1,2-Dichloroethene (total)	ug/L	142	=	4750	=	3590	=	48.6	=	498	=	610	=	57.2	J	716	=	2860	=
Trichloroethylene (TCE)	ug/L	7320	=	1990	=	161	J	2200	=	3340	=	1740	=	3530	=	2790	=	414	=
Tetrachloroethylene (PCE)	ug/L	5	U	250	U	250	U	5	U	250	U	125	U	250	U	250	U	250	U
Concentrations Used to Calculate Total CVOC Concentrations.																			
Vinyl chloride	ug/L	1.4		0		0		0		0		0		0		0		0	
1,1 Dichloroethene	ug/L	3.1		0		0		0.82		0		0		0		0		0	
1,2-Dichloroethene (total)	ug/L	142		4750		3590		48.6		498		610		57.2		716		2860	
Trichloroethylene (TCE)	ug/L	7320		1990		161		2200		3340		1740		3530		2790		414	
Tetrachloroethylene (PCE)	ug/L	0		0		0		0		0		0		0		0		0	
Total CVOC Conc		**7466.5**		**6740**		**3751**		**2249.42**		**3838**		**2350**		**3587.2**		**3506**		**3274**	

PERCENT REDUCTIONS OF GROUNDWATER CONTAMINANTS AFTER IM		
	Average	**Total**
TTA 5 Pre-Injection CVOC Conc:	3,328	19,967
TTA 5 June '03 CVOC Conc:	3,553	21,320
Percent reduction of CVOCs After Phase I	**-7%**	**-7%**
TTA 5 Oct '04 CVOC Conc:	2,404	14,426
Percent reduction of CVOCs After Phase II	**28%**	**28%**
TTA5 Pre-Injection TCE Conc	3,267	19,603
TTA 5 June '03 TCE Conc:	2,375	14,248
Percent reduction of TCE After Phase I	**27%**	**27%**
TTA5 Oct '04 TCE Conc	397	2,779
Percent reduction in TCE	**88%**	**86%**

TABLE 3-6 (CONTINUED)

Summary of CVOC Detections during Pre-injection and Post-injection Sampling Events

TTA-5, SWMU 166 IM, Zone K, Charleston Naval Complex

StationID		K166GW47D				K166GW48D						K166GW49D					
		PRE-INJECTION		POST-PHASE I		PRE-INJECTION		POST-PHASE I		POST-PHASE II		PRE-INJECTION		POST-PHASE I		POST-PHASE II	
SampleID		166GW47DM4		166GW47DM8		166GW48DM4		166GW48DN1		166GW48DP2		166GW49DM4		166GW49DN1		166GW49DP2	
DateCollected		5/23/2002		12/6/2002		5/23/2002		05/29/2003		10/12/2004		5/28/2002		05/29/2003		10/12/2004	
DateExtracted		6/3/2002		12/14/2002		5/31/2002		06/05/2003		10/24/2004		6/4/2002		06/05/2003		10/24/2004	
DateAnalyzed		6/3/2002		12/14/2002		5/31/2002		06/05/2003		10/24/2004		6/4/2002		06/05/2003		10/24/2004	
SDGNumber		61044		71766		61044		81288		123470		61134		81288		123470	
Parameter																	
Vinyl chloride	ug/L	10	U	10	U	0 89	J	1000	U	500	UJ	500	U	14.6	J	63.6	J
1,1-Dichloroethene	ug/L	5	U	5	U	1.2	J	500	U	250	UJ	250	U	100	U	100	UJ
trans-1,2-Dichloroethene	ug/L	5	U	5	U	2 5	J	500	U	250	UJ	250	U	100	U	100	UJ
cis-1,2-Dichloroethylene	ug/L	0.7	J	5	U	60.6	=	582	=	3520	J	44.8	J	508	=	1000	J
1,2-Dichloroethene (total)	ug/L	0.7	J	5	U	63.2	=	582	=	3520	J	44.8	J	508	=	1000	J
Trichloroethylene (TCE)	ug/L	22.7	=	8.4	J	3570	=	4950	=	270	J	2960	=	1170	=	186	J
Tetrachloroethylene (PCE)	ug/L	5	U	5	U	5	U	500	U	250	UJ	250	U	100	U	100	UJ
Concentrations Used to Calculate Total CVOC Concentrations.																	
Vinyl chloride	ug/L	0		0		0.89		0		0		0		14.6		63.6	
1,1-Dichloroethene	ug/L	0		0		1.2		0		0		0		0		0	
1,2-Dichloroethene (total)	ug/L	0.7		2.5		63.2		582		3520		44.8		508		1000	
Trichloroethylene (TCE)	ug/L	22.7		8.4		3570		4950		270		2960		1170		186	
Tetrachloroethylene (PCE)	ug/L	0		0		0		0		0		0		0		0	
Total CVOC Conc		**23.4**		**10.9**		**3635.29**		**5532**		**3790**		**3004.8**		**1692.6**		**1249.6**	

TABLE 3-7

Comparison of Pre-Injection and Post-Injection Concentrations of Selected CVOCs at Target Treatment Area 6

IM Completion Report/CMS Work Plan/Pilot Study Work Plan, SWMU 166, Zone K, Charleston Naval Complex

	StationID	K166GW16D						K166GW51D						K166GW52D					
		PRE-INJECTION		POST-PHASE I		POST-PHASE II		PRE-INJECTION		POST-PHASE I		POST-PHASE II		PRE-INJECTION		POST-PHASE I		POST-PHASE II	
	SampleID	166GW16DM4		166GW16DN1		166GW16DP2		166GW51DM4		166GW51DN1		166GW51DP2		166GW52DM4		166GW52DN1		166GW52DP2	
	DateCollected	5/30/2002		5/30/2003		10/12/2004		5/29/2002		5/29/2003		10/12/2004		5/29/2002		5/29/2003		10/12/2004	
	DateExtracted	6/5/2002		6/4/2003		10/24/2004		6/4/2002		6/5/2003		10/25/2004		6/4/2002		6/6/2003		10/25/2004	
	DateAnalyzed	6/5/2002		6/4/2003		10/24/2004		6/4/2002		6/5/2003		10/25/2004		6/4/2002		6/6/2003		10/25/2004	
	SDGNumber	61258		81287		123470		61170		81288		123470		61170		81288		123470	
Parameter	Units																		
Vinyl chloride	µg/L	30.6	J	500	U	38.4	J	200	U	500	U	250	U	500	U	250	U	500	UJ
1,1-Dichloroethene	µg/L	250	U	250	U	250	U	100	U	250	U	125	U	250	U	125	U	250	UJ
trans-1,2-Dichloroethene	µg/L	250	U	250	U	250	U	100	U	250	U	125	U	250	U	125	U	250	UJ
1,1-Dichloroethane	µg/L	250	U					100	U					250	U				
cis-1,2-Dichloroethylene	µg/L	3420	=	3260	=	3530	=	1120	=	1420	=	1660	=	3680	=	2150	=	1600	J
1,2-Dichloroethene (total)	µg/L	3420	=	3260	=	3530	=	1120	=	1420	=	1660	=	3680	=	2150	=	1600	J
Trichloroethylene (TCE)	µg/L	272	=	250	U	250	U	1330	=	2500	=	2010	=	345	=	2040	=	1930	J
Tetrachloroethylene (PCE)	µg/L	250	U	250	U	250	U	100	U	250	U	125	U	250	U	125	U	250	UJ
Concentrations Used to Calculate Total CVOC Concentrations.																			
Vinyl chloride	µg/L	30.6		0		38.4		0		0		0		0		0		0	
1,1-Dichloroethene	µg/L	0		0		0		0		0		0		0		0		0	
1,2-Dichloroethene (total)	µg/L	3420		3260		3530		1120		1420		1660		3680		2150		1600	
Trichloroethylene (TCE)	µg/L	272		125		125		1330		2500		2010		345		2040		1930	
Tetrachloroethylene (PCE)	µg/L	0		0		0		0		0		0		0		0		0	
Total CVOC Conc	**µg/L**	**3722.6**		**3385**		**3693.4**		**2450**		**3920**		**3670**		**4025**		**4190**		**3530**	

PERCENT REDUCTIONS OF GROUNDWATER CONTAMINANTS AFTER IM		
	Average	Total
TTA 6 Pre-Injection CVOC Conc:	2,433	14,599
TTA 6 June '03 CVOC Conc:	3,435	20,608
Percent reduction of CVOC After Phase I	**-41%**	**-41%**
TTA 6 Oct '04 CVOC Conc:	3,273	19,639
Percent reduction of CVOC After Phase II	**-35%**	**-35%**
TTA6 Pre-Injection TCE Conc	367	2,199
TTA 6 June '03 TCE Conc:	1,267	7,601
Percent reduction of TCE After Phase I	**-246%**	**-246%**
TTA6 Oct '04 TCE Conc	832	4,992
Percent reduction of TCE After Phase II	**-127%**	**-127%**

TABLE 3-7 (CONTINUED)

Comparison of Pre-Injection and Post-Injection Concentrations of Selected CVOCs at Target Treatment Area 6

IM Completion Report/CMS Work Plan/Pilot Study Work Plan, SWMU 166, Zone K, Charleston Naval Complex

	StationID	K166GWIN3				K166GWTM3						K166GWTM4					
		PRE-INJECTION		POST-PHASE I		PRE-INJECTION		POST-PHASE I		POST-PHASE II		PRE-INJECTION		POST-PHASE I		POST-PHASE II	
	SampleID	166GWIN3M4		166GWIN3N1		166GWTM3M4		166GWTM3N1		166GWTM3P2		166GWTM4M4		166GWTM4N1		166GWTM4P2	
	DateCollected	5/30/2002		5/29/2003		5/29/2002		5/29/2003		10/12/2004		5/23/2002		5/29/2003		10/12/2004	
	DateExtracted	6/5/2002		6/6/2003		6/4/2002		6/7/2003		10/24/2004		5/31/2002		6/6/2003		10/22/2004	
	DateAnalyzed	6/5/2002		6/6/2003		6/4/2002		6/7/2003		10/24/2004		5/31/2002		6/6/2003		10/22/2004	
	SDGNumber	61258		81288		61170		81288		123470		61044		81289		123473	
Parameter	Units																
Vinyl chloride	µg/L	18.7	=	17.7	=	346	=	152	=	191	J	6	J	1000	U	34.2	J
1,1-Dichloroethene	µg/L	5	U	5	U	100	U	50	U	125	UJ	3.5	J	500	U	250	U
trans-1,2-Dichloroethene	µg/L	5	U	0.42	J	100	U	50	U	125	UJ	7.6	=	500	U	250	U
1,1-Dichloroethane	µg/L	5	U			100	U					5	U				
cis-1,2-Dichloroethylene	µg/L	15.6	=	35.4	=	1150	=	982	=	1410	J	2610	=	4990	=	6130	=
1,2-Dichloroethene (total)	µg/L	15.6	=	35.8	=	1150	=	982	=	1410	J	2610	=	4990	=	6130	=
Trichloroethylene (TCE)	µg/L	5	U	1.9	J	100	U	3.8	J	309	J	252	J	2930	=	616	=
Tetrachloroethylene (PCE)	µg/L	5	U	5	U	100	U	50	U	125	UJ	5	U	500	U	250	U
Concentrations Used to Calculate Total CVOC Concentrations.																	
Vinyl chloride	µg/L	18.7		17.7		346		152		191		6		0		34.2	
1,1-Dichloroethene	µg/L	0		0		0		0		0		3.5		0		0	
1,2-Dichloroethene (total)	µg/L	15.6		35.8		1150		982		1410		2610		4990		6130	
Trichloroethylene (TCE)	µg/L	0		1.9		0		3.8		309		252		2930		616	
Tetrachloroethylene (PCE)	µg/L	0		0		0		0		0		0		0		0	
Total CVOC Conc	**µg/L**	**34.3**		**55.4**		**1496**		**1137.8**		**1910**		**2871.5**		**7920**		**6780.2**	

TABLE 3-8
Comparison of Pre-Injection and Post-Injection Concentrations of Selected CVOCs at Target Treatment Area 7
IM Completion Report/CMS Work Plan/Pilot Study Work Plan, SWMU 166, Zone K, Charleston Naval Complex

	StationID	K163GW001				K163GW003				K163GW03M				K163GW005			
		PRE-INJECTION		POST-PHASE I		PRE-INJECTION		POST-PHASE I		PRE-INJECTION		POST-PHASE I		PRE-INJECTION		POST-PHASE I	
	SampleID	163GW001M4		163GW001M7		163GW003M4		163GW003N1		163GW03MM4		163GW03MN1		163GW005M4		163GW005M8	
	DateCollected	5/17/2002		07/29/2002		5/20/2002		05/30/2003		5/20/2002		05/30/2003		5/30/2002		12/11/2002	
	DateExtracted	5/30/2002		08/07/2002		5/28/2002		06/05/2003		5/28/2002		06/04/2003		6/5/2002		12/20/2002	
	DateAnalyzed	5/30/2002		08/07/2002		5/28/2002		06/05/2003		5/28/2002		06/04/2003		6/5/2002		12/20/2002	
	SDGNumber	60790		64475		60790		81287		60790		81287		61258		72055	
Parameter	**Units**																
Vinyl chloride	µg/L	10	U	10	U	10	U	10	U	10	U	10	U	10	U	10	UJ
1,1-Dichloroethene	µg/L	5	U	5	U	5	U	5	U	0.84	J	5	U	5	U	5	UJ
trans-1,2-Dichloroethene	µg/L	5	U	5	U	1.1	J	5	U	10.4	=	5	U	5	U	5	UJ
1,1-Dichloroethane	µg/L	5	U	5	U	5	U			5	U			5	U	5	UJ
cis-1,2-Dichloroethylene	µg/L	5	U	5	U	18	=	5	U	559	=	3.9	J	4.6	J	5	UJ
1,2-Dichloroethene (total)	µg/L	5	U	5	U	19.1	=	5	U	559	=	3.9	J	4.6	J	5	UJ
Trichloroethylene (TCE)	µg/L	0.58	J	0.43	J	8.7	=	3.3	J	178	J	1.8	J	28.6	=	5	UJ
Tetrachloroethylene (PCE)	µg/L	0.99	J	0.6	J	1.8	J	9.2	=	9.8	=	0.6	J	5	U	5	UJ
Concentrations Used to Calculate Total CVOC Concentrations.																	
Vinyl chloride	µg/L	0		0		0		0		0		0		0		0	
1,1-Dichloroethene	µg/L	0		0		0		0		0.84		0		0		0	
1,2-Dichloroethene (total)	µg/L	2.5		2.5		19.1		2.5		559		3.9		4.6		0	
Trichloroethylene (TCE)	µg/L	0.58		0.43		8.7		3.3		178		1.8		28.6		0	
Tetrachloroethylene (PCE)	µg/L	0.99		0.6		1.8		9.2		9.8		0.6		0		0	
Total CVOC Conc	**µg/L**	**4.07**		**3.53**		**29.6**		**15**		**747.64**		**6.3**		**33.2**		**0**	