N61165.AR.003421
CNC CHARLESTON
5090.3a

RESOURCE CONSERVATION AND RECOVERY ACT FACILITY INVESTIGATION REPORT ADDENDUM AREA OF CONCERN 701 (AOC 701) ZONE E CNC CHARLESTON SC

10/4/2002

CH2M HILL

RFI REPORT ADDENDUM

Area of Concern 701, Zone E

Charleston Naval Complex
North Charleston, South Carolina

SUBMITTED TO
U.S. Navy Southern Division
Naval Facilities Engineering Command

CH2M Jones

October 2002

Revision 0
Contract N62467-99-C-0960

CH2M HILL
3011 S.W. Williston Road
Gainesville, FL
32608-3928
Mailing address:
P.O. Box 147009
Gainesville, FL
32614-7009
Tel 352.335.7991
Fax 352.335.2959

CH2MHILL

October 4, 2002

Mr. David Scaturo
South Carolina Department of Health and
Environmental Control
Bureau of Land and Waste Management
2600 Bull Street
Columbia, SC 29201

Re: RFI Report Addendum (Revision 0) – AOC 701, Zone E

Dear Mr. Scaturo:

Enclosed please find two copies of the RFI Report Addendum (Revision 0) for AOC 701 in Zone E of the Charleston Naval Complex (CNC). This report has been prepared pursuant to agreements by the CNC BRAC Cleanup Team for completing the RCRA Corrective Action process.

The principal author of this document is Kris Garcia. Please do not hesitate to contact her at 770/604-9182, extension 476, should you have any questions or comments.

Sincerely,

CH2M HILL

Dean Williamson, P.E.

cc: Tim Frederick/Gannett Fleming, Inc., w/att
Rob Harrell/Navy, w/att
Gary Foster/CH2M HILL, w/att

RFI REPORT ADDENDUM

Area of Concern 701, Zone E

Charleston Naval Complex
North Charleston, South Carolina

SUBMITTED TO
U.S. Navy Southern Division
Naval Facilities Engineering Command

PREPARED BY
CH2M-Jones

October 2002

Revision 0
Contract N62467-99-C-0960
158814.ZE.PR.01

Contents

Section **Page**

Acronyms and Abbreviations ..... **vii**
1.0 Introduction **1-1**
1.1 Background 1-1
1.1.1 Site History 1-1
1.1.2 Summary of Interim Measures and UST/AST Removals at AOC 701 1-2
1.2 Purpose of the RFI Report Addendum 1-2
1.3 Report Organization 1-3
Figure 1-1 Location of AOC 701, Zone E 1-5
Figure 1-2 Aerial Photograph of AOC 701 1-6
Figure 1-3 Area of Geophysical Investigation for USTs 1-7
Figure 1-4 Historical Features of AOC 701 1-8
2.0 Site Setting **2-1**
2.1 Geologic Setting 2-1
2.2 Hydrogeologic Setting 2-2
Figure 2-1 Shallow Groundwater Contour Map (September 2002) 2-3
3.0 Field Investigation and Data Validation **3-1**
3.1 Investigation Objectives 3-1
3.2 Sampling Procedures, Protocols, and Analyses 3-1
3.2.1 Sample Identification 3-1
3.2.2 Asphalt Coring 3-2
3.2.3 Soil Sampling 3-2
3.2.4 Groundwater Sampling 3-2
3.2.5 Decontamination Procedures 3-3
3.3 Analytical Parameters 3-4
3.3.1 Soil Samples 3-4
3.3.2 Groundwater Samples 3-4
3.4 Sample Analysis Protocols 3-4
3.5 Data Verification and Validation 3-4
3.6 Data Management 3-5
Table 3-1 CSI Field Investigation Coordinates 3-6
Figure 3-1 Surface and Subsurface Soil Sample Locations 3-7
Figure 3-2 Shallow and Deep Monitoring Well Locations 3-8

Contents, Continued

4.0 COPC Screening 4-1
4.1 Constituents Detected in the Surface and Subsurface Soil Samples 4-1
4.1.1 VOCs in Surface and Subsurface Soils 4-1
4.1.2 SVOCs in Surface and Subsurface Soils 4-1
4.1.3 Pesticides and PCBs in Surface and Subsurface Soils 4-2
4.1.4 Inorganic Constituents Detected in Soil Samples 4-2
4.2 Constituents Detected in Shallow and Deep Groundwater Samples 4-2
4.2.1 VOCs in Shallow and Deep Groundwater 4-2
4.2.2 SVOCs in Shallow and Deep Groundwater 4-3
4.2.3 Pesticides and PCBs in Shallow and Deep Groundwater 4-3
4.2.4 Inorganic Constituents Detected in Shallow and Deep Groundwater 4-3
4.3 Data Evaluation Summary 4-4
Table 4-1 VOCs Detected in Surface Soil at AOC 701 4-5
Table 4-2 SVOCS Detected in Surface Soil at AOC 701 4-6
Table 4-3 Pesticides and PCBs Detected in Surface Soil at AOC 701 4-13
Table 4-4 Pesticides and PCBs Detected in Subsurface Soil at AOC 701 4-17
Table 4-5 Inorganic Constituents Detected in Surface Soil at AOC 701 4-19
Table 4-6 Inorganic Constituents Detected in Subsurface Soil at AOC 701 4-28
Table 4-7 VOCs Detected in Shallow Groundwater at AOC 701 4-33
Table 4-8 VOCs Detected in Deep Groundwater at AOC 701 4-34
Table 4-9 SVOCs Detected in Shallow Groundwater at AOC 701 4-35
Table 4-10 Inorganic Constituents Detected in Shallow Groundwater at AOC 701 4-36
Table 4-11 Inorganic Constituents Detected in Deep Groundwater at AOC 701 4-41
5.0 COPC/COC Refinement 5-1
5.1 COPCS in Groundwater 5-1
5.1.1 Indeno[1,2,3-cd]pyrene in Shallow Groundwater 5-1
5.1.2 Vanadium in Shallow Groundwater 5-2
5.1.3 Iron in Shallow and Deep Groundwater 5-2
5.2 COC Summary 5-3
6.0 Summary of Information Related to Site Closeout Issues 6-1
6.1 RFI Status 6-1
6.2 Presence of Inorganics in Groundwater 6-1
6.3 Potential Linkage to SWMU 37, Investigated Sanitary Sewers at the CNC 6-1

Contents, Continued

6.4 Potential Linkage to AOC 699, Investigated Storm Sewers at the CNC 6-2
6.5 Potential Linkage to AOC 504, Investigated Railroad Lines at the CNC 6-2
6.6 Potential Migration Pathways to Surface Water Bodies at the CNC 6-2
6.7 Potential Contamination in Oil/Water Separators 6-2
6.8 Land Use Controls (LUCs) 6-2
7.0 Conclusions and Recommendations 7-1
8.0 References 8-1

Appendices

A As-built Drawings (1942), Original Structure at AOC 701
B Geophysical Survey Results
C Boring Logs from Monitoring Well Installation at AOC 701
D Well Construction Diagrams for Monitoring Wells at AOC 701
E Analytical Results for Soil Samples at AOC 701
F Analytical Results for Groundwater Samples at AOC 701
G Data Validation Report for Samples at AOC 701

Acronyms and Abbreviations

AOC	Area of concern
AST	Aboveground storage tank
BCT	BRAC Cleanup Team
BEQ	Benzo[a]pyrene equivalent
BRAC	Base Realignment and Closure Act
CA	Corrective action
CMS	Corrective measures study
CNC	Charleston Naval Complex
COC	Chemical of concern
COPC	Chemical of potential concern
CSI	Confirmatory sampling investigation
DAF	Dilution attenuation factor
DMP	Data Management Plan
EnSafe	EnSafe Inc.
EPA	U.S. Environmental Protection Agency
ft bls	Feet below land surface
GIS	Ceographic information system
IM	Interim measure
HI	Hazard index
LUC	Land use control
MCL	Maximum contaminant level
µg/kg	Microgram per kilogram
mg/kg	Milligram per kilogram
µg/L	Microgram per liter
NAVBASE	Naval Base
NFA	No further action

Acronyms and Abbreviations, Continued

OWS	Oil/water separator
PAH	Polycyclic aromatic hydrocarbon
PCB	Polychlorinated biphenyl
QAP	Quality Assurance Plan
RBC	Risk-based concentration
RCRA	Resource Conservation and Recovery Act
RFI	RCRA Facility Investigation
SB	Soil boring
SCDHEC	South Carolina Department of Health and Environmental Control
SSL	Soil screening level
SVOC	Semivolatile organic compound
SWMU	Solid waste management unit
TEF	Toxicity equivalency factor
UST	Underground storage tank
VOC	Volatile organic compound

Section 1.0

1.0 Introduction

In 1993, Naval Base (NAVBASE) Charleston was added to the list of bases scheduled for closure as part of the Defense Base Realignment and Closure Act (BRAC), which regulates closure and transition of property to the community. The Charleston Naval Complex (CNC) was formed as a result of the dis-establishment of the Charleston Naval Shipyard and NAVBASE on April 1, 1996.

Corrective Action (CA) activities are being conducted under the Resource Conservation and Recovery Act (RCRA) with the South Carolina Department of Health and Environmental Control (SCDHEC) as the lead agency for CA activities at the CNC. All RCRA CA activities are performed in accordance with the Final Permit (Permit No. SC0 170 022 560).

In April 2000, CH2M-Jones was awarded a contract to provide environmental investigation and remediation services at the CNC. This submittal has been prepared by CH2M-Jones to complete the RCRA Facility Investigation (RFI) for Area of Concern (AOC) 701 in Zone E of the CNC. The site is recommended for No Further Action (NFA). The area of the CNC in which AOC 701 is located is zoned as Commercial Redevelopment District (CRD). Figure 1-1 illustrates the location of AOC 701 within Zone E. Figure 1-2 is an aerial photograph of AOC 701 taken in 1997.

1.1 Background

1.1.1 Site History

AOC 701 is the former McMillan Avenue gasoline station which was located in Building 1141 (see Figures 1-1 and 1-2). A service station/cafeteria combination was built in 1941 and operated until 1979 when the building was expanded, renovated, and converted into a security building. According to the *Final RCRA Facility Assessment Report* (EnSafe Inc. [EnSafe]/Allen & Hoshall, 1995), two underground storage tanks (USTs) were located at the northwestern corner of AOC 701 and were closed in place by filling with sand in 1973. In reviewing the 1942 as-built drawings of the original structure, the location of these tanks appears to be near the front door of Building 1141, along the northern side of the building. The as-built drawings also indicate that there were onsite vehicle maintenance operations that included a grease pit, wash rack, and four vehicle bays. Copies of the as-built drawings are provided in Appendix A.

The RCRA Facility Assessment (RFA) recommended that a Confirmatory Sampling Investigation (CSI) be conducted at AOC 701.

In January 2002, CH2M-Jones subcontracted with Associated Technical Support, a firm specializing in locating underground utilities, metallic anomalies, and other buried anomalies, to perform a geophysical survey at the site to verify the presence or absence of USTs (see Figure 1-3 and Appendix B). As a result of the geophysical investigation, it appears that USTs were located along the northern side of Building 1141, where the as-built drawings indicate the tanks were installed (see Figure 1-4).

CH2M-Jones submitted an addendum to the *RFI Addendum Sampling Plan* for Zone E for the investigation of AOC 701 (CH2M-Jones, 2002), which was amended based on the findings of the geophysical survey and approved by SCDHEC. The CSI sampling event for AOC 701 was conducted from June to August 2002.

1.1.2 Summary of Interim Measures and UST/AST Removals at AOC 701

UST/AST Removals

According to information provided in the *Final RCRA Facility Assessment Report* (EnSafe/Allen & Hoshall, 1995), USTs at the site were closed in place rather than being removed. No documentation of any tank removals was found.

Interim Measures

No interim measures (IMs) are known to have been conducted at the site.

1.2 Purpose of the RFI Report Addendum

This RFI Report Addendum provides information about AOC 701, including the results of the sampling performed for the CSI. Based on review of these results, AOC 701 is recommended for NFA.

Prior to changing the status of any site in the CNC RCRA CA permit, the BRAC Cleanup Team (BCT) agreed that the following issues should be considered:

- Status of the RFI
- Presence of metals (inorganics) in groundwater
- Potential linkage to SWMU 37, Investigated Sanitary Sewers at the CNC
- Potential linkage to Area of Concern (AOC) 699, Investigated Storm Sewers at the CNC
- Potential linkage of AOC 504, Investigated Railroad Lines at the CNC

- Potential linkage to surface water bodies (Zone J)
- Potential contamination associated with oil/water separators (OWSs)
- Relevance or need for land use controls (LUCs) at the site

Information regarding these issues is provided in this RFI Report Addendum to expedite evaluation of closure of the site.

Provided that the information presented in this report is adequate to address these site closeout items, it is expected that the BCT will concur that NFA is appropriate for AOC 701. At that time, a Statement of Basis will be prepared and made available for public comment in accordance with SCDHEC policy. This will allow for public participation in the final remedy selection.

1.3 Report Organization

This RFI Report Addendum consists of the following sections, including this introductory section:

1.0 Introduction – Presents the purpose of and background information relating to this RFI Report Addendum.

2.0 Site Setting – Summarizes the geologic and hydrogeologic setting of AOC 701.

3.0 Field Investigation and Data Validation – Summarizes the conclusions from the CSI field investigation and data validation for AOC 701.

4.0 COPC Screening – Describes the results from the comparison of analytical results to COPC screening criteria.

5.0 COPC/COC Refinement – Includes the evaluation of COPCs to determine whether they are defined as chemicals of concern (COCs) for AOC 701.

6.0 Summary of Information Related to Site Closeout Issues – Discusses the various issues that the BCT agreed to evaluate prior to site closeout.

7.0 Conclusions and Recommendations – Summarizes the conclusions and recommendations of the CSI field investigation at AOC 701.

8.0 References – Lists the references used in this document.

Appendix A contains the 1942 as-built drawings of the original structure at AOC 701.

Appendix B contains the results of the geophyscial survey of AOC 701.

Appendix C contains the boring logs for the soil borings collected during monitoring well installation at AOC 701.

Appendix D contains the well construction diagrams for the monitoring wells installed at AOC 701.

Appendix E contains the analytical results for the soil samples collected at AOC 701.

Appendix F contains the analytical results for the groundwater samples collected at AOC 701.

Appendix G contains the data validation and summary report for the samples collected at AOC 701.

All tables and figures appear at the end of their respective sections.

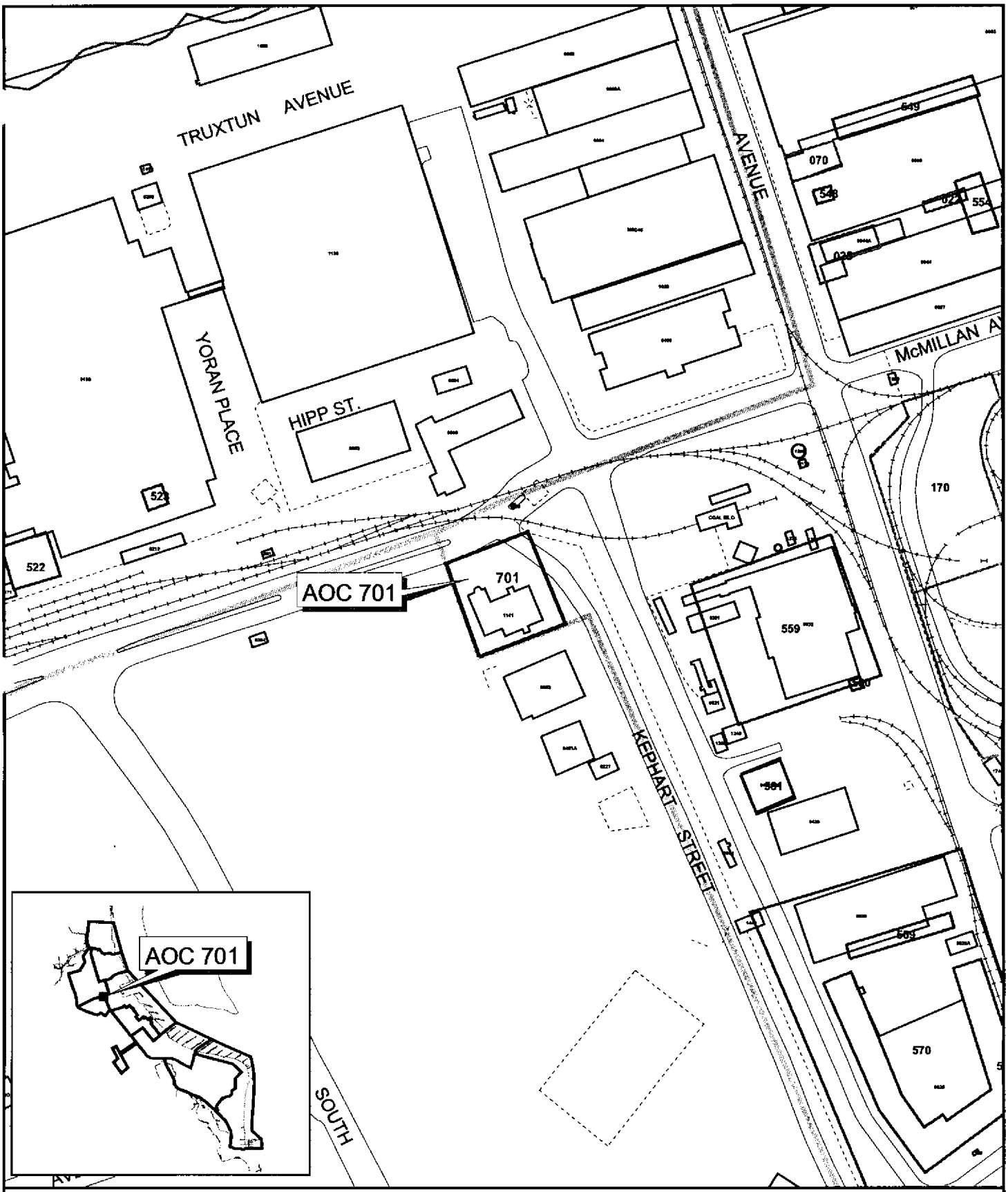

Fence
Railroads
Roads
AOC Boundary
SWMU Boundary
Buildings
Zone Boundary

N

0 100 200 300 Feet

1 inch = 200 feet

Figure 1-1
AOC 701
Location Map
Charleston Naval Complex

CH2MHILL

File Path: C:\18gis\Projects\Zone_E\AOC701\aoc701figures.apr, Date: 16 Aug 2001 8:04, User: NMOUDRY

NOTE: Aerial Photo Date is 1997

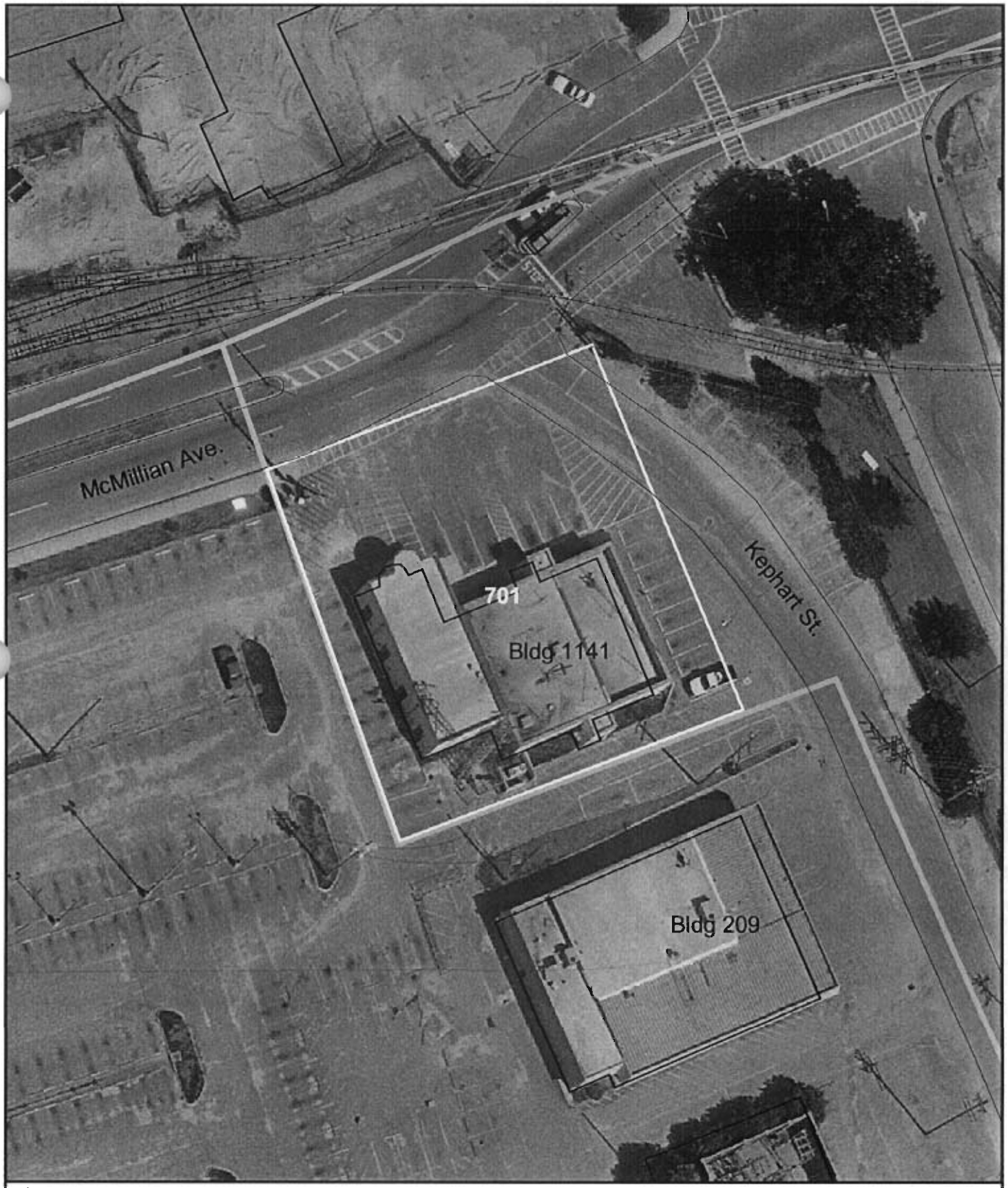

Fence
Railroads
Roads
Shoreline
AOC/SWMU Boundary
Buildings
Zone Boundary

N

0 40 80 Feet

1 inch = 50 feet

Figure 1-2
Site Map
AOC 701
Charleston Naval Complex

CH2MHILL

File Path: C:\18gis\Projects\Zone_E\non_priority\non_pro_fig2.apr, Date: 19 Sep 2002 7:17, User: NMOUDRY, AOC 701

NOTE: Aerial Photo Date is 1997

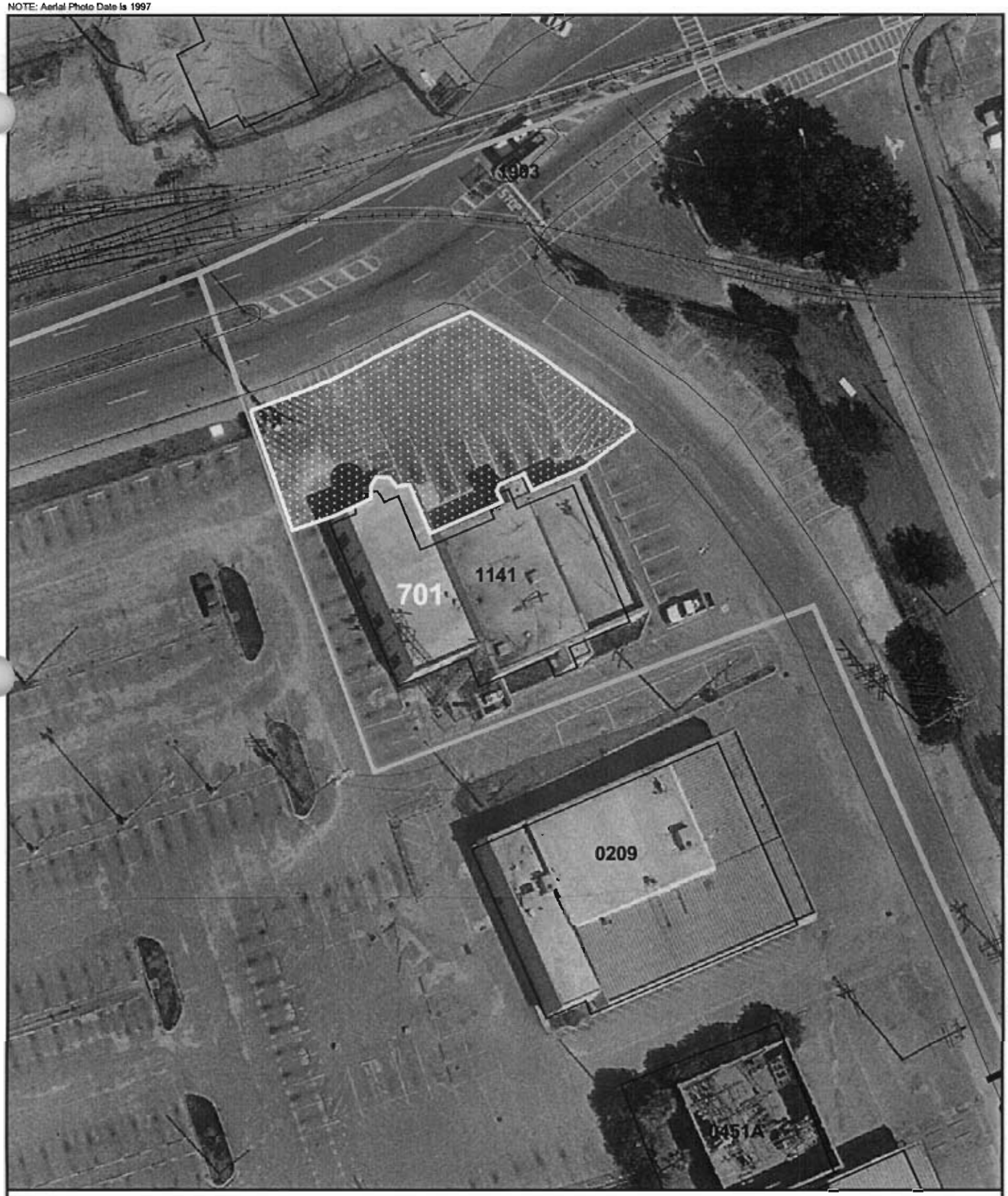

Survey Area
Fence
Railroads
Roads - Lines
AOC Boundary
SWMU Boundary
Buildings
Zone Boundary

N

0 40 80 Feet

1 inch = 50 feet

Figure 1-3
Area of Geophysical Investigation for USTs
AOC 701, Zone E
Charleston Naval Complex

CH2MHILL

File Path: C:\18gis\Projects\Zone_E\AOC701\aoc701figures.apr, Date: 13 Dec 2001 12:54, User: NMOUDRY, Figure 7-3 Proposesd Area fo Geophysical Investigation for USTs

NOTE: Aerial Photo Date is 1997

Pipes
Suspected Storage Tank Location
Historical Cafeteria / Gas Station
Fence
Railroads
Roads

AOC Boundary
SWMU Boundary
Buildings
Zone Boundary

N

0 40 80 Feet

1 inch = 50 feet

Figure 1-4
Historical Features of AOC 701
AOC 701, Zone E
Charleston Naval Complex

CH2MHILL

File Path: C:\18gis\Projects\Zone_E\AOC701\aoc701figures.apr, Date: 17 Sep 2002 11:25, User: NMOUDRY, SAP Figure 1-4

Section 2.0

2.0 Site Setting

The regional physiographic and geologic setting for the CNC area is described in the *Final Zone A RFI Report, Revision 0* (EnSafe/Allen & Hoshall, 1996). The regional hydrology and hydrogeology for the CNC area is also described in the Zone A RFI Report.

2.1 Geologic Setting

Detailed descriptions of the Quaternary- and Tertiary-age sediments encountered during the Zone E RFI, along with a detailed discussion of the various lithologic units encountered in Zone E, are presented in Section 2.2.1 of the *Zone E RFI Report, Revision 0* (EnSafe, 1997).

Due to extensive surface soil disturbance at the CNC during its operational history, approximately the upper 5 feet (ft) of the subsurface are typically a mixture of artificial fill and native sediments. However, the extent of fill placement varies within Zone E. Areas where extensive excavations have been performed or where native soils may have been unsuitable for foundation support may have undergone more extensive fill placement. Detailed descriptions of the soil types encountered in Zone E are presented in Section 2.2.3.3 of the RFI report.

At AOC 701, the area is covered with asphalt and is situated at the intersection of McMillan Avenue and Kephart Street. During the field investigation, the asphalt was found to be up to 6 inches thick. Immediately underlying the asphalt were yellow-tan, fine-grained sands.

A review of the historical maps from 1909 to the present indicates that the whole area has been subjected to a series of construction, demolition, and expansion activities over the years. By 1909, an electric rail station, a freight house, and a restaurant were present at or near the site. The rail station appears to have marked the terminus of a railway line that extended southward along Avenue D (currently Kephart Street). By 1920, the restaurant had been removed and the railway line had been extended to the west along Third Street (currently McMillan Avenue), and extended into North Charleston.

No other significant changes appear to have occurred until sometime between 1929 and 1935, when the railway lines, station, and freight house were removed. The property remained vacant until at least 1940, and site records indicate that the original portion of the existing building (Building 1141) was constructed in 1942. The site remained generally unchanged until 1979, when the gas station was removed from service. At that time, the

building was expanded and converted into a base security office, which currently occupies the site.

2.2 Hydrogeologic Setting

Based on information presented in Section 2.3 of the RFI report and a recent reevaluation of the groundwater flow patterns in the area, it appears that the groundwater flow environment in Zone E is complex and is influenced by several factors:

- The eastern boundary of Zone E is the Cooper River, a regional groundwater discharge zone.
- The Cooper River is tidally influenced.
- A quay wall of sheet pilings and concrete lies along the waterfront; the hydraulic integrity of the quay wall is largely unknown.
- The shallow subsurface has been heavily disturbed by anthropogenic activities related to industrial work within Zone E in the form of utilities, non-native fill material, support pilings, railroad lines, crane rails, etc.
- Geologic heterogeneity predominates the subsurface.

Detailed descriptions of the surficial aquifer, groundwater flow patterns, horizontal and vertical hydraulic gradients, horizontal hydraulic conductivities, grain-size distribution, and tidal influences are presented in Section 2.3 of the *Zone E RFI Report, Revision 0*. The types of information, documentation, and descriptions of various methodologies used in developing this information are also presented in Section 2.3 of the RFI report.

A recent shallow groundwater contour map has been developed for Zone E (see Figure 2-1), using contemporaneous water level elevation data collected in September 2002. Based on the data, groundwater in the vicinity of AOC 701 appears to flow locally toward a groundwater depression that is located along the western side of the Power Plant building (Building 32). It is believed that this depression is the localized result of a leak in a sewer line that is dewatering the immediate area.

The depth to groundwater in the vicinity of AOC 701 is estimated to be approximately 6 to 7 feet below land surface (ft bls).

NOTE: Original figure printed in color

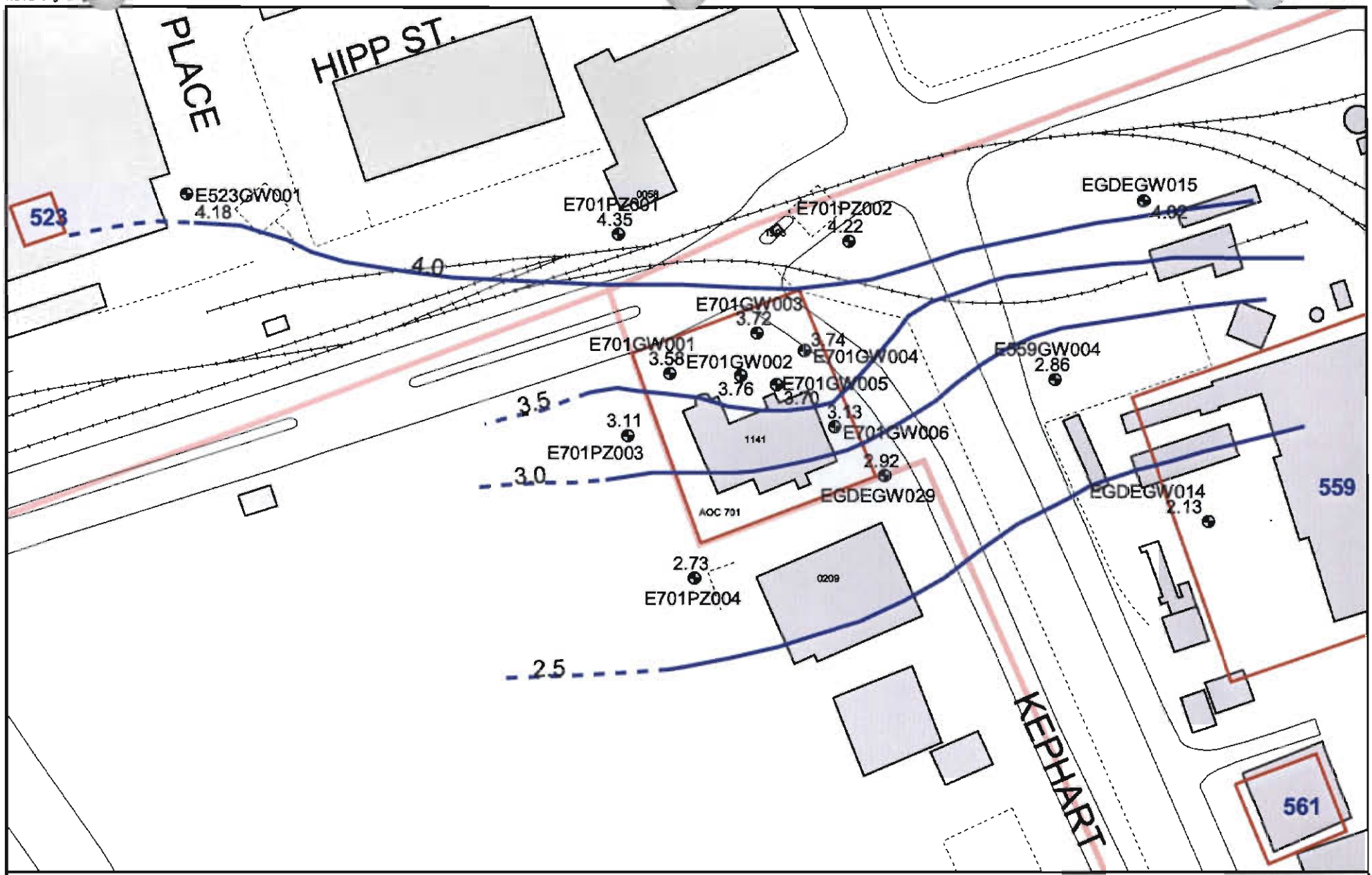

Groundwater Well
Known Groundwater Contour (ft above msl)
Inferred Groundwater Contour (ft above msl)
Fence
Railroads
Roads
Buildings
AOC Boundary
SWMU Boundary
Zone Boundary

N

0 80 160 Feet

1 inch = 100 feet

Figure 2-1
Shallow Groundwater Contour Map
(September 2002)
AOC 701, Zone E
Charleston Naval Complex

CH2MHILL

File Path: C:\18gis\Projects\Zone_E\AOC701\aoc701figures.apr, Date: 25 Sep 2002 13:36, User: NMOUDRY, EGIS: Charleston Naval Complex - Figure x-x Shallow Wells

Section 3.0

3.0 Field Investigation and Data Validation

3.1 Investigation Objectives

The sampling strategy for AOC 701, as described in the *RFI Addendum Sampling Plan: Uninvestigated Sites – Zone E, Revision 1* (CH2M-Jones, 2001a), was designed to collect sufficient environmental media data to accomplish the following:

- Characterize site conditions
- Define the nature and extent of contamination, if any
- Assess human health and ecological risk
- Assess the need for additional investigation or corrective measures

3.2 Sampling Procedures, Protocols, and Analyses

The sampling activities were performed in accordance with the Environmental Services Division *Standard Operating Procedures and Quality Assurance Manual* (ESDSOPQAM) (U.S. Environmental Protection Agency [EPA], 1996a); the *Final Comprehensive RFI Work Plan* (EnSafe/Allen & Hoshall, 1994); the *RFI Addendum Sampling Plan – Uninvestigated Sites, Zone E, Revision 1* (CH2M-Jones, 2001a); and the *Charleston Naval Complex Project Team Notebook and Instructions, Revision 1A* (CH2M-Jones, 2001b).

3.2.1 Sample Identification

Soil Sample Identification

Surface and subsurface soil samples collected during the CSI were labeled in accordance with the 10 character protocol established in the *Final Comprehensive RFI Work Plan* (EnSafe/Allen & Hoshall, 1994), which provides a unique sample identification using the following format:

AAAbbCCCdd

- AAA = SWMU/AOC number
- bb = Environmental medium
- CCC = Location
- dd = Sample interval in feet

Groundwater Sample Identification

Groundwater samples collected during the CSI were labeled in accordance with the 10 character protocol established in the *Final Comprehensive RFI Work Plan* (EnSafe/Allen & Hoshall, 1994), which provides a unique sample identification using the following format:

EAAAbbCCC#

- E = Zone
- AAA = SWMU/AOC number
- bb = Environmental medium
- CCC = Location
- # = Blank for shallow groundwater samples, D for deep groundwater samples

3.2.2 Asphalt Coring

Due to the location of AOC 701 in a parking area associated with an office building, no asphalt coring was necessary. The asphalt could be penetrated by the drill rig. During the CSI field investigation, it was found that the thickness of the asphalt was less than six inches and the soil beneath the asphalt was accessible for sampling and monitoring well installation.

3.2.3 Soil Sampling

Ten soil borings (SBs), identified as E701SB001 through E701SB010, were advanced by CH2M-Jones at the locations shown on Figure 3-1. Stainless-steel hand augers were used to collect surface and subsurface soil samples from the 0 to 1-ft interval below the concrete/soil interface for the surface soil interval and the 3 to 5-ft interval below the concrete/soil interface for the subsurface soil interval. All samples were placed in appropriate containers, labeled, and stored on ice before being shipped to the laboratory for analysis. Proper custody procedures were maintained throughout the sampling and shipping process.

The completed sample auger holes were backfilled with excess cuttings and grouted. A bituminous cold patch was placed flush with the surface.

Each location was surveyed for positioning in the CNC geographic information system (GIS). The coordinate information is presented in Table 3-1.

3.2.4 Groundwater Sampling

A total of six shallow/deep well pairs were installed at AOC 701 as part of this CSI. In addition, four piezometers were constructed to provide data on local groundwater elevations.

Monitoring Well Installation

Two wells were placed at each of six locations: one shallow (across the water table) and one deeper (screen midpoint approximately 15 ft bls) (see Figure 3-2). The wells were constructed with 5-ft screens. Sand was installed typically to a minimum of 2 ft above the screen and a bentonite seal was added. The remainder of the annular space was grouted to within 18 inches of land surface, and the wells were completed using flush-mount casings with locking caps.

The monitoring wells were developed and allowed to equilibrate for a minimum of 24 hours prior to sampling. The wells were also checked for signs of free product using an oil/water interface probe prior to sampling. Because no free product was encountered, the wells were purged using the low flow method and sampled in accordance with South Carolina regulations.

The boring logs and well construction diagrams for the monitoring wells are presented in Appendices C and D, respectively.

Water Level Elevation Piezometers

Prior to the CSI, there were few water level elevation measuring points available near the site to provide adequate detail of local hydrogeologic characteristics and groundwater flow patterns. There are also known areas east of AOC 701 where an existing sewer line is believed to be causing localized dewatering of the shallow aquifer, and which are creating a groundwater depression south east of the site.

In addition to the monitoring wells, four new piezometers were installed in the vicinity of AOC 701 (see Figure 3-2). All piezometers were constructed of 1-inch diameter PVC riser with a 5-ft screen positioned across the water table. The piezometers were completed in accordance with the procedures described above for monitoring wells.

Boring logs and well construction diagrams for the piezometers are presented in Appendices C and D, respectively.

3.2.5 Decontamination Procedures

All decontamination activities were conducted in accordance with the procedures outlined in the *Final Comprehensive RFI Work Plan* (EnSafe/Allen & Hoshall, 1994) and the *RFI Addendum Sampling Plan – Uninvestigated Sites, Zone E, Revision 1* (CH2M-Jones, 2001a).

3.3 Analytical Parameters

3.3.1 Soil Samples

All soil samples collected as part of the AOC 701 CSI were analyzed for the following:

- Volatile organic compounds (VOCs) (EPA Method 8260)
- Semivolatile organic compounds (SVOCs) (EPA Method 8270C)
- Metals (EPA Method SW 846, as appropriate)
- Polychlorinated biphenyls (PCBs) (EPA Method 8082)
- Pesticides (EPA Method 8081A)

The samples were sent via overnight carrier to an offsite laboratory, where they were analyzed on a standard (21-day) turnaround time. Analytical results for all soil samples are presented in Appendix E.

3.3.2 Groundwater Samples

All groundwater samples collected as part of the AOC 701 CSI were analyzed for the following:

- VOCs (EPA Method 8260)
- SVOCs (EPA Method 8270C)
- Metals (EPA Method SW 846, as appropriate)

The samples were sent via overnight carrier to an offsite laboratory, where they were analyzed on a standard (21-day) turnaround time. Analytical results for all groundwater samples are presented in Appendix F.

3.4 Sample Analysis Protocols

Sample analyses were conducted consistent with the guidance in the EPA's *Test Methods for Evaluating Solid Waste, SW-846, Revision 4*, Office of Solid Waste and Emergency Response (SW846) (EPA, 1996b) and in the EPA Environmental Services Division *Laboratory Operations and Quality Control Manual* (ESDLOQCM) (EPA, 1997).

The analyses also followed the procedures provided in the approved *Final Comprehensive RFI Work Plan* (EnSafe/Allen & Hoshall, 1994).

3.5 Data Verification and Validation

Data verification and validation practices were conducted consistent with Quality Assurance Plan (QAP) and the Data Management Plan (DMP) in the approved *Final*

Comprehensive RFI Work Plan (EnSafe/Allen & Hoshall, 1994) portion of the *Final Comprehensive RFI Work Plan* to verify that all information and data were valid and properly documented.

In addition, verification and validation procedures were also conducted consistent with the following guidelines:

- *Contract Laboratory Program National Functional Guidelines for Organic Data Review* (EPA, 1994a)
- *Contract Laboratory Program National Functional Guidelines for Inorganic Data Review* (EPA, 1994b)

The data validation summary report is presented in Appendix G.

3.6 Data Management

Record keeping and data management practices for both field data and analytical data were maintained consistent with the DMP in the approved *Final Comprehensive RFI Work Plan* (EnSafe/Allen & Hoshall, 1994) to verify that all information and data were properly recorded and documented. Electronic data will be maintained in a database by CH2M-Jones for long-term data storage and management.

TABLE 3-1
CSI Field Investigation Sampling Location Coordinates
RFI Report Addendum, AOC 701, Zone E, Charleston Naval Complex

New Sample ID	Northing	Easting
Soil Borings Coordinates		
E701SB001	376,059.4	2,316,122.4
E701SB002	376,070.4	2,316,120.0
E701SB003	376,066.3	2,316,140.9
E701SB004	376,085.6	2,316,142.1
E701SB005	376,077.1	2,316,161.5
E701SB006	376,059.7	2,316,176.1
E701SB007	376,065.7	2,316,158.5
E701SB008	376,038.2	2,316,166.6
E701SB009	376,005.8	2,316,188.6
E701SB010	376,968.9	2,316,169.9
Monitoring Well Coordinates – Shallow		
E701MW001	376,062.7	2,316,056.4
E701MW002	376,061.1	2,316,108.0
E701MW003	376,092.1	2,316,120.2
E701MW004	376,079.3	2,316,154.8
E701MW005	376,054.3	2,316,134.4
E701MW006	376,023.3	2,316,177.0
Monitoring Well Coordinates – Deep		
E701MW001D	376,065.9	2,316,065.9
E701MW002D	376,063.4	2,316,108.7
E701MW003D	376,093.9	2,316,188.6
E701MW004D	376,078.3	2,316,153.5
E701MW005D	376,056.9	2,316,133.3
E701MW006D	376,021.6	2,316,173.9
Piezometer Coordinates		
E701PZ001	376,165.4	2,316,018.8
E701PZ002	376,160.3	2,316,187.7
E701PZ003	376,016.9	2,316,025.5
E701PZ004	376,910.9	2,316,074.0

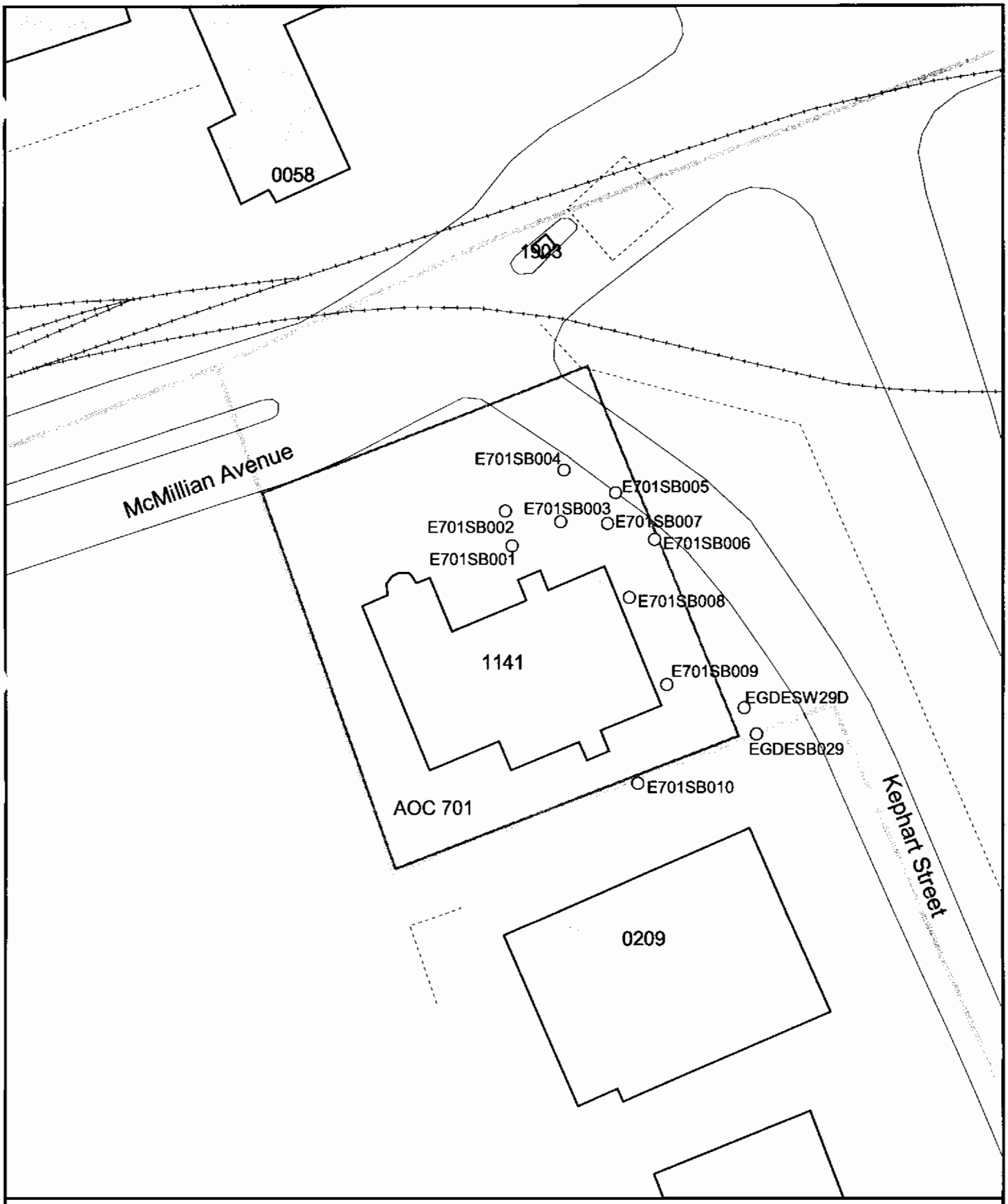

Soil Boring
Fence
Railroads
Roads
Buildings
AOC Boundary

SWMU Boundary
Zone Boundary

N

0 40 80 Feet

1 inch = 50 feet

Figure 3-1
Surface and Subsurface Soil Sampling Locations
AOC 701, Zone E
Charleston Naval Complex

CH2MHILL

File Path: C:\18gis\Projects\Zone_E\AOC701\aoc701figures.apr, Date: 17 Sep 2002 12:07, User: NMOUDRY, Figure 3-1 Soil Sample Locations

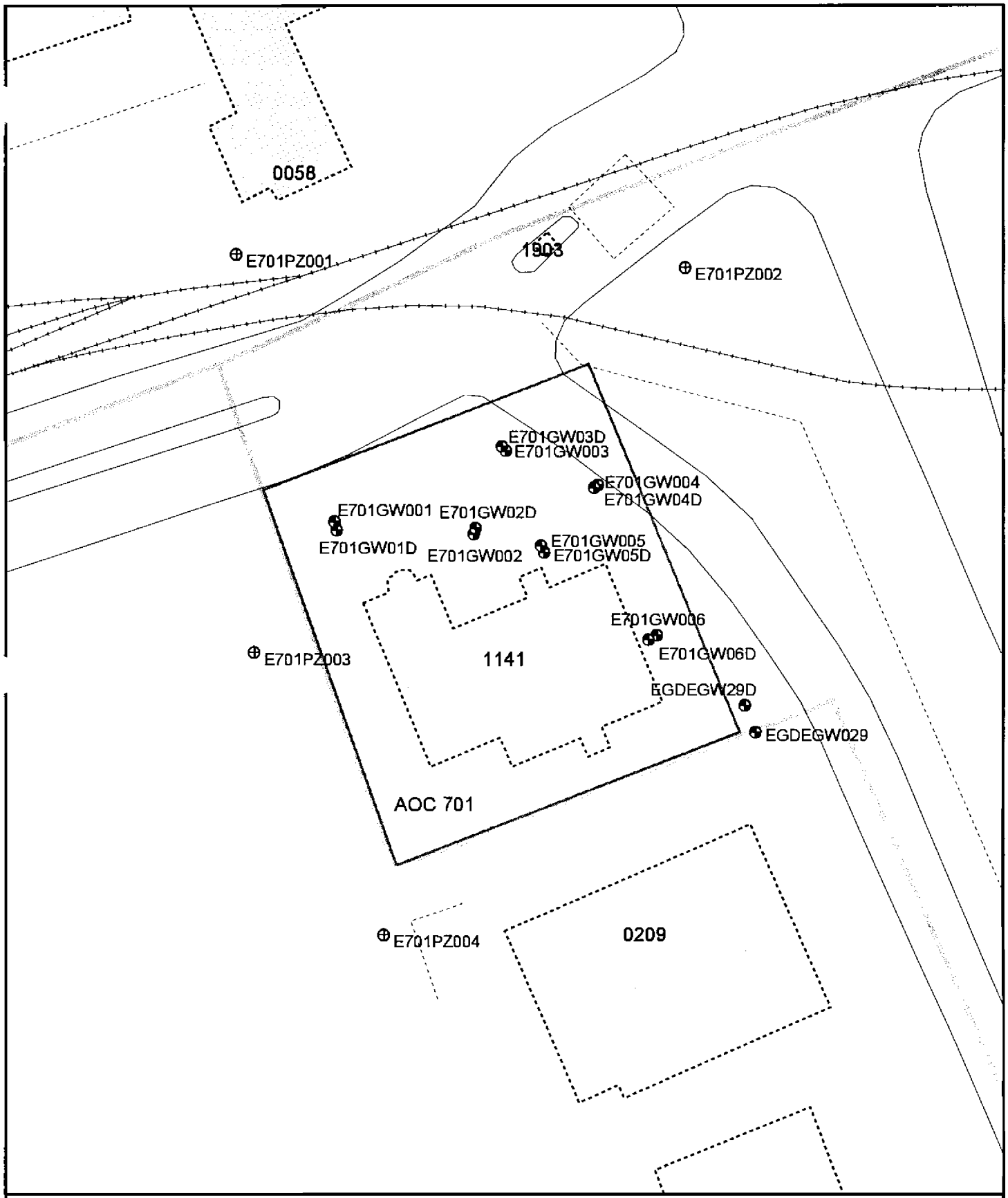

Piezometer
Monitoring Well
Buildings.shp
Fence
Railroads
Roads
AOC Boundary
Zone Boundary

N

0 40 80 Feet

1 inch = 50 feet

Figure 3-2
Shallow and Deep Monitoring Well Locations
AOC 701, Zone E
Charleston Naval Complex

CH2MHILL

File Path: C:\18gis\Projects\Zone_E\AOC701\aoc701figures.apr, Date: 19 Sep 2002 10:42, User: NMOUDRY, V2 Figure 3-2 Shallow and Deep Monitoring Well Locations

Section 4.0

4.0 COPC Screening

Data evaluation and COPC screening were conducted as agreed to by the BCT and as described in the *Charleston Naval Complex Project Team Notebook and Instructions, Revision 1A* (CH2M-Jones, December 2001).

This section discusses chemicals that were detected in surface and subsurface soils collected during the CSI sampling conducted at AOC 701 in April 2002.

4.1 Constituents Detected in the Surface and Subsurface Soil Samples

The results of organic and inorganic analyses for surface soil samples were compared to the EPA Region III residential and industrial risk-based concentrations (RBCs) using a hazard index (HI)=0.1 for non-carcinogens. In addition, both the surface soil and subsurface soil results were screened against their respective generic soil screening levels (SSLs). If a generic SSL was not available, then the EPA Region III SSL values were used for screening. With both the generic SSLs and the EPA Region III SSLs, screening criteria were specified using a dilution attenuation factor (DAF)=1 for VOCs and a DAF=10 for non-VOCs. In addition, detected inorganic chemicals were compared to the range of detections in background (grid-based) samples collected in Zone E.

4.1.1 VOCs in Surface and Subsurface Soils

One VOC (1,2-dichlorobenzene) was detected in a single surface soil sample (see Table 4-1) and no VOCs were detected in the subsurface soil samples.

Based on a review of the data, the single detection of 1,2-dichlorobenzene in the surface soil at AOC 701 was not present at levels exceeding applicable COPC screening criteria.

For this reason, no VOCs were identified as surface or subsurface soil COPCs for AOC 701.

4.1.2 SVOCs in Surface and Subsurface Soils

A total of 14 SVOCs were detected in the surface soil samples, but none were detected in subsurface soil samples collected from beneath the asphalt paving at AOC 701 (see Table 4-2).

The only SVOCs detected in soil were polycyclic aromatic hydrocarbons (PAHs), at concentrations within the range previously detected in background (grid-based) surface soil samples. Therefore, no SVOCs were identified as COPCs.

4.1.3 Pesticides and PCBs in Surface and Subsurface Soils

Eight pesticides were detected in the surface soil samples and four pesticides were detected in the subsurface soil samples collected from beneath the asphalt paving at AOC 701. No PCBs were detected (See Tables 4-3 and 4-4.) Based on a review of the data, no pesticides or PCBs were present at levels exceeding their respective screening criteria. Therefore, no pesticides or PCBs were identified as soil COPCs for AOC 701.

4.1.4 Inorganic Constituents Detected in Soil Samples

Nineteen inorganic constituents were detected in surface soil samples and 17 inorganic constituents were detected in subsurface soil samples collected at AOC 701 (see Tables 4-5 and 4-6). Based on a review of the data, none of the inorganic chemicals detected in the soils at AOC 701 were present at levels exceeding their respective screening criteria.

For this reason, no inorganic constituents were identified as soil COPCs for AOC 701.

4.2 Constituents Detected in Shallow and Deep Groundwater Samples

The results of organic and inorganic analyses for groundwater samples were compared to maximum contaminant levels (MCLs) or, for those chemicals that do not have MCLs, to EPA Region III tap water RBCs using a HI=0.1 for non-carcinogens. In addition, detected inorganic chemicals were compare to the range of detections in background (grid) wells in Zone E.

4.2.1 VOCs in Shallow and Deep Groundwater

Two VOCs (1,2-dichloroethene and carbon disulfide) were detected in shallow groundwater samples (see Table 4-7) and one VOC (carbon disulfide) was detected in the deep groundwater samples (see Table 4-8).

Based on a review of the data, none of these compounds was present at levels exceeding applicable COPC screening criteria.

For this reason, no VOCs were identified as groundwater COPCs for AOC 701.

4.2.2 SVOCs in Shallow and Deep Groundwater

Four SVOCs were detected in the shallow groundwater samples, but only indeno[1,2,3-cd]pyrene was detected at concentrations exceeding its tap water RBC of 0.092 micrograms per liter (µg/L) (see Table 4-9). No SVOCs were found at detectable concentrations in the deep groundwater samples. Indeno[1,2,3-cd]pyrene is discussed further below.

Indeno[1,2,3-cd]pyrene

Indeno[1,2,3-cd]pyrene was detected in two of the six shallow groundwater samples collected at AOC 701. There is no MCL for this chemical. Both detections (0.88 µg/L in E701GW002M1 and 0.7 µg/L in E701GW04M1) exceeded the tap water RBC of 0.092 micrograms per kilogram (µg/kg). Indeno[1,2,3-cd]pyrene was not detected in any deep groundwater samples.

Indeno[1,2,3-cd]pyrene is retained as a shallow groundwater COPC for AOC 701.

4.2.3 Pesticides and PCBs in Shallow and Deep Groundwater

No pesticides or PCBs were detected in either the shallow or deep groundwater samples collected at AOC 701. For this reason, no pesticides or PCBs were identified as groundwater COPCs for AOC 701.

4.2.4 Inorganic Constituents Detected in Shallow and Deep Groundwater

Eighteen inorganic constituents were detected in shallow groundwater samples and 13 inorganic constituents were detected in deep groundwater samples collected at AOC 701 (see Tables 4-10 and 4-11). Based on a review of the data, two inorganic constituents detected in the shallow groundwater at AOC 701 (iron and vanadium) were present at levels exceeding their respective screening criteria (see Table 4-10). One inorganic chemical was detected in deep groundwater at AOC 701 (iron) at a concentration exceeding its COPC screening criteria (see Table 4-11).

These occurrences are discussed further, below.

Iron

Iron was detected in all six shallow groundwater samples and all six deep groundwater samples. All detected concentrations were below their respective COPC screening criteria, except for one shallow groundwater sample and one deep groundwater sample. The shallow groundwater sample had an iron concentration of 88,000 µg/L (E701GW006), which exceeded both the Zone E shallow groundwater concentration range of 144 µg/L to 76,600 µg/L and the EPA Region III tap water RBC of 1,100 µg/L. The deep groundwater

sample, which is paired with the shallow well with an iron exceedance, had an iron concentration of 60,000 µg/L (E701GW006), which exceeded both the Zone E deep groundwater concentration range of 19 µg/L to 26,000 µg/L and the EPA Region III tap water RBC of 1,100 µg/L.

For these reasons, iron is retained as a shallow and deep groundwater COPC for AOC 701.

Vanadium

Vanadium was detected in two of the six shallow groundwater samples, but not in any of the six deep groundwater samples. One of the two shallow groundwater concentrations exceeded the shallow groundwater screening criteria. The sample collected from shallow well E701GW004 had vanadium detected at 42 J µg/L, which exceeded both the Zone E shallow groundwater concentration range of 0.6 µg/L to 26 µg/L and the EPA Region III tap water RBC of 26 µg/L (based on a HI=0.1).

For this reason, vanadium is retained as a shallow groundwater COPC for AOC 701.

4.3 Data Evaluation Summary

No COPCs were identified in surface or subsurface soil at AOC 701.

One SVOC (indeno[1,2,3-cd]pyrene) and two inorganics (iron and vanadium) were identified as groundwater COPCs. Indeno[1,2,3-cd]pyrene and vanadium are considered to be COPCs for shallow groundwater, and iron is considered to be a COPC for both shallow and deep groundwater.

These COPCs are discussed in Section 5.0.

TABLE 4-1
Volatile Organic Compounds Detected in Surface Soil at AOC 701
RFI Report Addendum, AOC 701, Zone E, Charleston Naval Complex

Parameter	Sample ID	Station ID	Date Collected	Concentration (mg/kg)	Qualifier	EPA Region III Industrial RBC[a]	EPA Region III Residential RBC[a]	SSL[b] (DAF=1)
1,2-Dichlorobenzene	701SB00101	E701SB001	07/01/02	0.0056	U	18,000	700	0.9
	701SB00102	E701SB001	07/01/02	0.0057	U			
	701SB00201	E701SB002	07/01/02	0.0064	U			
	701SB00202	E701SB002	07/01/02	0.0068	U			
	701SB00301	E701SB003	07/01/02	0.006	U			
	701SB00302	E701SB003	07/01/02	0.0065	U			
	701SB00401	E701SB004	07/01/02	0.0064	U			
	701SB00402	E701SB004	07/01/02	0.0066	U			
	701SB00501	E701SB005	07/01/02	0.0066	U			
	701SB00502	E701SB005	07/01/02	0.0064	U			
	701SB00601	E701SB006	07/01/02	0.0026	J			
	701SB00602	E701SB006	07/01/02	0.0064	U			
	701SB00701	E701SB007	07/01/02	0.0063	U			
	701SB00702	E701SB007	07/01/02	0.0074	U			
	701SB00801	E701SB008	07/01/02	0.0064	U			
	701SB00802	E701SB008	07/01/02	0.0066	U			
	701SB00901	E701SB009	07/01/02	0.0062	U			
	701SB00902	E701SB009	07/01/02	0.0065	U			
	701SB01001	E701SB010	07/01/02	0.0062	U			
	701SB01002	E701SB010	07/01/02	0.0056	U			

All values are presented in units of milligrams per kilogram (mg/kg).

[a] EPA Region III RBC value based on HI = 1 for non-carcinogens.

[b] SSLs from EPA SSL guidance document, or, if no SSL provided in that document, from EPA Region III RBC tables.

J Indicates an estimated value. One or more quality control (QC) parameters were outside control limits or the value was detected below the laboratory's quantification limit.

U Indicates that the chemical was not detected.

TABLE 4-2
Semivolatile Organic Compounds Detected in Surface Soil at AOC 701
RFI Report Addendum, AOC 701, Zone E, Charleston Naval Complex

Parameter	Sample ID	Station ID	Concentration (mg/kg)	Qualifier	Date Collected	EPA Region III Industrial RBC	EPA Region III Residential RBC	SSL (DAF=10)	Site-wide Reference Concentration
Acenaphthene	701SB00101	E701SB001	1.8	U	07/01/02	12,000	470	285	NA
	701SB00201	E701SB002	0.037	J	07/01/02				
	701SB00301	E701SB003	0.35	U	07/01/02				
	701SB00401	E701SB004	0.34	U	07/01/02				
	701SB00501	E701SB005	0.36	U	07/01/02				
	701SB00601	E701SB006	0.37	U	07/01/02				
	701SB00701	E701SB007	0.36	U	07/01/02				
	701SB00801	E701SB008	0.35	U	07/01/02				
	701SB00901	E701SB009	0.36	U	07/01/02				
	701SB01001	E701SB010	0.36	U	07/01/02				
Anthracene	701SB00101	E701SB001	1.8	U	07/01/02	61,000	2,300	6,000	NA
	701SB00201	E701SB002	0.098	J	07/01/02				
	701SB00301	E701SB003	0.35	U	07/01/02				
	701SB00401	E701SB004	0.34	U	07/01/02				
	701SB00501	E701SB005	0.36	U	07/01/02				
	701SB00601	E701SB006	0.37	U	07/01/02				
	701SB00701	E701SB007	0.36	U	07/01/02				
	701SB00801	E701SB008	0.35	U	07/01/02				
	701SB00901	E701SB009	0.36	U	07/01/02				
	701SB01001	E701SB010	0.36	U	07/01/02				
Benzo[a]anthracene	701SB00101	E701SB001	1.8	U	07/01/02	7.8	0.87	1	0.616
	701SB00201	E701SB002	0.35	J	07/01/02				
	701SB00301	E701SB003	0.35	U	07/01/02				
	701SB00401	E701SB004	0.34	U	07/01/02				

TABLE 4-2
Semivolatile Organic Compounds Detected in Surface Soil at AOC 701
RFI Report Addendum, AOC 701, Zone E, Charleston Naval Complex

Parameter	Sample ID	Station ID	Concentration (mg/kg)	Qualifier	Date Collected	EPA Region III Industrial RBC	EPA Region III Residential RBC	SSL (DAF=10)	Site-wide Reference Concentration
Benzo[a[anthracene	701SB00501	E701SB005	0.36	U	07/01/02	7.8	0.87	1	0.616
	701SB00601	E701SB006	0.37	U	07/01/02				
	701SB00701	E701SB007	0.36	U	07/01/02				
	701SB00801	E701SB008	0.35	U	07/01/02				
	701SB00901	E701SB009	0.36	U	07/01/02				
	701SB01001	E701SB010	0.36	U	07/01/02				
Benzo[a]pyrene	701SB00101	E701SB001	1.8	U	07/01/02	0.78	0.087	4	0.593
	701SB00201	E701SB002	0.36	J	07/01/02				
	701SB00301	E701SB003	0.35	U	07/01/02				
	701SB00401	E701SB004	0.34	U	07/01/02				
	701SB00501	E701SB005	0.36	U	07/01/02				
	701SB00601	E701SB006	0.37	U	07/01/02				
	701SB00701	E701SB007	0.36	U	07/01/02				
	701SB00801	E701SB008	0.35	U	07/01/02				
	701SB00901	E701SB009	0.36	U	07/01/02				
	701SB01001	E701SB010	0.36	U	07/01/02				
Benzo[b]fluoranthene	701SB00101	E701SB001	1.8	U	07/01/02	7.8	0.87	2.5	0.608
	701SB00201	E701SB002	0.35	J	07/01/02				
	701SB00301	E701SB003	0.35	U	07/01/02				
	701SB00401	E701SB004	0.34	U	07/01/02				
	701SB00501	E701SB005	0.36	U	07/01/02				
	701SB00601	E701SB006	0.36	J	07/01/02				
	701SB00701	E701SB007	0.36	U	07/01/02				
	701SB00801	E701SB008	0.35	U	07/01/02				

TABLE 4-2
Semivolatile Organic Compounds Detected in Surface Soil at AOC 701
RFI Report Addendum, AOC 701, Zone E, Charleston Naval Complex

Parameter	Sample ID	Station ID	Concentration (mg/kg)	Qualifier	Date Collected	EPA Region III Industrial RBC	EPA Region III Residential RBC	SSL (DAF=10)	Site-wide Reference Concentration
Benzo[b]fluoranthene	701SB00901	E701SB009	0.36	U	07/01/02	7.8	0.87	2.5	0.608
	701SB01001	E701SB010	0.36	U	07/01/02				
Benzo[g,h,I]perylene	701SB00101	E701SB001	1.8	U	07/01/02	NA	NA	NA	NA
	701SB00201	E701SB002	0.26	J	07/01/02				
	701SB00301	E701SB003	0.35	U	07/01/02				
	701SB00401	E701SB004	0.34	U	07/01/02				
	701SB00501	E701SB005	0.36	U	07/01/02				
	701SB00601	E701SB006	0.37	U	07/01/02				
	701SB00701	E701SB007	0.36	U	07/01/02				
	701SB00801	E701SB008	0.35	U	07/01/02				
	701SB00901	E701SB009	0.36	U	07/01/02				
	701SB01001	E701SB010	0.36	U	07/01/02				
Benzo[k]fluoranthene	701SB00101	E701SB001	1.8	U	07/01/02	78	7.8	24.5	0.596
	701SB00201	E701SB002	0.36	J	07/01/02				
	701SB00301	E701SB003	0.35	U	07/01/02				
	701SB00401	E701SB004	0.34	U	07/01/02				
	701SB00501	E701SB005	0.36	U	07/01/02				
	701SB00601	E701SB006	0.37	U	07/01/02				
	701SB00701	E701SB007	0.36	U	07/01/02				
	701SB00801	E701SB008	0.35	U	07/01/02				
	701SB00901	E701SB009	0.36	U	07/01/02				
	701SB01001	E701SB010	0.36	U	07/01/02				
Carbazole	701SB00101	E701SB001	1.8	U	07/01/02	290	32	0.3	NA
	701SB00201	E701SB002	0.061	J	07/01/02				

TABLE 4-2
Semivolatile Organic Compounds Detected in Surface Soil at AOC 701
RFI Report Addendum, AOC 701, Zone E, Charleston Naval Complex

Parameter	Sample ID	Station ID	Concentration (mg/kg)	Qualifier	Date Collected	EPA Region III Industrial RBC	EPA Region III Residential RBC	SSL (DAF=10)	Site-wide Reference Concentration
Carbazole	701SB00301	E701SB003	0.35	U	07/01/02	290	32	0.3	NA
	701SB00401	E701SB004	0.34	U	07/01/02				
	701SB00501	E701SB005	0.36	U	07/01/02				
	701SB00601	E701SB006	0.37	U	07/01/02				
	701SB00701	E701SB007	0.36	U	07/01/02				
	701SB00801	E701SB008	0.35	U	07/01/02				
	701SB00901	E701SB009	0.36	U	07/01/02				
	701SB01001	E701SB010	0.36	U	07/01/02				
Chrysene	701SB00101	E701SB001	1.8	U	07/01/02	780	87	80	0.62
	701SB00201	E701SB002	0.37	J	07/01/02				
	701SB00301	E701SB003	0.35	U	07/01/02				
	701SB00401	E701SB004	0.34	U	07/01/02				
	701SB00501	E701SB005	0.36	U	07/01/02				
	701SB00601	E701SB006	0.054	J	07/01/02				
	701SB00701	E701SB007	0.36	U	07/01/02				
	701SB00801	E701SB008	0.35	U	07/01/02				
	701SB00901	E701SB009	0.36	U	07/01/02				
	701SB01001	E701SB010	0.36	U	07/01/02				
Dibenz[a,h]anthracene	701SB00101	E701SB001	1.8	U	07/01/02	0.78	0.087	1	0.394
	701SB00201	E701SB002	0.11	J	07/01/02				
	701SB00301	E701SB003	0.35	U	07/01/02				
	701SB00401	E701SB004	0.34	U	07/01/02				
	701SB00501	E701SB005	0.36	U	07/01/02				
	701SB00601	E701SB006	0.37	U	07/01/02				

TABLE 4-2
Semivolatile Organic Compounds Detected in Surface Soil at AOC 701
RFI Report Addendum, AOC 701, Zone E, Charleston Naval Complex

Parameter	Sample ID	Station ID	Concentration (mg/kg)	Qualifier	Date Collected	EPA Region III Industrial RBC	EPA Region III Residential RBC	SSL (DAF=10)	Site-wide Reference Concentration
Dibenz[a,h]anthracene	701SB00701	E701SB007	0.36	U	07/01/02	0.78	0.087	1	0.394
	701SB00801	E701SB008	0.35	U	07/01/02				
	701SB00901	E701SB009	0.36	U	07/01/02				
	701SB01001	E701SB010	0.36	U	07/01/02				
Fluoranthene	701SB00101	E701SB001	1.8	U	07/01/02	8,200	310	2,150	NA
	701SB00201	E701SB002	0.68	=	07/01/02				
	701SB00301	E701SB003	0.35	U	07/01/02				
	701SB00401	E701SB004	0.34	U	07/01/02				
	701SB00501	E701SB005	0.36	U	07/01/02				
	701SB00601	E701SB006	0.37	U	07/01/02				
	701SB00701	E701SB007	0.36	U	07/01/02				
	701SB00801	E701SB008	0.35	U	07/01/02				
	701SB00901	E701SB009	0.36	U	07/01/02				
	701SB01001	E701SB010	0.36	U	07/01/02				
Indeno[1,2,3-cd]pyrene	701SB00101	E701SB001	1.8	U	07/01/02	7.8	0.87	7	0.525
	701SB00201	E701SB002	0.24	J	07/01/02				
	701SB00301	E701SB003	0.35	U	07/01/02				
	701SB00401	E701SB004	0.34	U	07/01/02				
	701SB00501	E701SB005	0.36	U	07/01/02				
	701SB00601	E701SB006	0.37	U	07/01/02				
	701SB00701	E701SB007	0.36	U	07/01/02				
	701SB00801	E701SB008	0.35	U	07/01/02				
	701SB00901	E701SB009	0.36	U	07/01/02				
	701SB01001	E701SB010	0.36	U	07/01/02				

TABLE 4-2
Semivolatile Organic Compounds Detected in Surface Soil at AOC 701
RFI Report Addendum, AOC 701, Zone E, Charleston Naval Complex

Parameter	Sample ID	Station ID	Concentration (mg/kg)	Qualifier	Date Collected	EPA Region III Industrial RBC	EPA Region III Residential RBC	SSL (DAF=10)	Site-wide Reference Concentration
Phenanthrene	701SB00101	E701SB001	1.8	U	07/01/02	NA	NA	NA	NA
	701SB00201	E701SB002	0.48	=	07/01/02				
	701SB00301	E701SB003	0.35	U	07/01/02				
	701SB00401	E701SB004	0.34	U	07/01/02				
	701SB00501	E701SB005	0.36	U	07/01/02				
	701SB00601	E701SB006	0.036	J	07/01/02				
	701SB00701	E701SB007	0.36	U	07/01/02	NA	NA	NA	NA
	701SB00801	E701SB008	0.35	U	07/01/02				
	701SB00901	E701SB009	0.36	U	07/01/02				
	701SB01001	E701SB010	0.36	U	07/01/02				
Pyrene	701SB00101	E701SB001	1.8	U	07/01/02	6,100	230	2,100	NA
	701SB00201	E701SB002	0.7	=	07/01/02				
	701SB00301	E701SB003	0.35	U	07/01/02				
	701SB00401	E701SB004	0.34	U	07/01/02				
	701SB00501	E701SB005	0.36	U	07/01/02				
	701SB00601	E701SB006	0.37	U	07/01/02				
	701SB00701	E701SB007	0.36	U	07/01/02				
	701SB00801	E701SB008	0.35	U	07/01/02				
	701SB00901	E701SB009	0.36	U	07/01/02				
	701SB01001	E701SB010	0.36	U	07/01/02				
BEQs	701SB00201	E701SB002	0.568	=	07/01/02	0.78	0.087	NA	1.304
	701SB00601	E701SB006	0.413	=	07/01/02				

All values are presented in units of milligrams per kilogram (mg/kg).

TABLE 4-2
Semivolatile Organic Compounds Detected in Surface Soil at AOC 701
RFI Report Addendum, AOC 701, Zone E, Charleston Naval Complex

Parameter	Sample ID	Station ID	Concentration (mg/kg)	Qualifier	Date Collected	EPA Region III Industrial RBC	EPA Region III Residential RBC	SSL (DAF=10)	Site-wide Reference Concentration

Site-wide reference concentrations from Background PAH Study Report (CH2M Jones, 2001).

= The analyte was detected at the concentration shown.

J Indicates an estimated value. One or more quality control (QC) parameters were outside control limits or the value was detected below the laboratory's quantification limit.

NA No applicable SSL or RBC

U Indicates that the chemical was not detected.

TABLE 4-3
Pesticides and PCBs Detected in Surface Soil at AOC 701
RFI Report Addendum, AOC 701, Zone E, Charleston Naval Complex

Parameter	Sample ID	Station ID	Concentration (mg/kg)	Qualifier	Date Collected	EPA Region III Industrial RBC	EPA Region III Residential RBC	SSL (DAF=10)
Alpha-chlordane	701SB00101RE	E701SB001	0.002	J	07/01/02	16	1.8	5
	701SB00201RE	E701SB002	0.0058	U	07/01/02			
	701SB00301	E701SB003	0.0014	U	07/01/02			
	701SB00401RE	E701SB004	0.0013	UJ	07/01/02			
	701SB00501RE	E701SB005	0.0056	UJ	07/01/02			
	701SB00601RE	E701SB006	0.0029	U	07/01/02			
	701SB00701RE	E701SB007	0.0014	UJ	07/01/02			
	701SB00801RE	E701SB008	0.0014	UJ	07/01/02			
	701SB00901RE	E701SB009	0.0028	U	07/01/02			
	701SB01001RE	E701SB010	0.0014	UJ	07/01/02			
Endrin Aldehyde	701SB00101RE	E701SB001	0.011	UJ	07/01/02	NA	NA	NA
	701SB00201RE	E701SB002	0.011	UJ	07/01/02			
	701SB00301	E701SB003	0.0026	UJ	07/01/02			
	701SB00401RE	E701SB004	0.0026	UJ	07/01/02			
	701SB00501RE	E701SB005	0.011	UJ	07/01/02			
	701SB00601RE	E701SB006	0.00073	J	07/01/02			
	701SB00701RE	E701SB007	0.0027	UJ	07/01/02			
	701SB00801RE	E701SB008	0.0027	UJ	07/01/02			
	701SB00901RE	E701SB009	0.0055	UJ	07/01/02			
	701SB01001RE	E701SB010	0.002	J	07/01/02			
Gamma-chlordane	701SB00101RE	E701SB001	0.0019	J	07/01/02	16	1.8	5
	701SB00201RE	E701SB002	0.0058	U	07/01/02			
	701SB00301	E701SB003	0.0014	U	07/01/02			
	701SB00401RE	E701SB004	0.0013	UJ	07/01/02			

TABLE 4-3
Pesticides and PCBs Detected in Surface Soil at AOC 701
RFI Report Addendum, AOC 701, Zone E, Charleston Naval Complex

Parameter	Sample ID	Station ID	Concentration (mg/kg)	Qualifier	Date Collected	EPA Region III Industrial RBC	EPA Region III Residential RBC	SSL (DAF=10)
Gamma-chlordane	701SB00501RE	E701SB005	0.00088	J	07/01/02	16	1.8	5
	701SB00601RE	E701SB006	0.0029	U	07/01/02			
	701SB00701RE	E701SB007	0.0014	UJ	07/01/02			
	701SB00801RE	E701SB008	0.0014	UJ	07/01/02			
	701SB00901RE	E701SB009	0.00049	J	07/01/02			
	701SB01001RE	E701SB010	0.0014	UJ	07/01/02			
Heptachlor Epoxide	701SB00101RE	E701SB001	0.0055	U	07/01/02	0.63	0.07	0.35
	701SB00201RE	E701SB002	0.0058	U	07/01/02			
	701SB00301	E701SB003	0.0014	U	07/01/02			
	701SB00401RE	E701SB004	0.0013	UJ	07/01/02			
	701SB00501RE	E701SB005	0.0056	UJ	07/01/02			
	701SB00601RE	E701SB006	0.0029	U	07/01/02			
	701SB00701RE	E701SB007	0.0014	UJ	07/01/02			
	701SB00801RE	E701SB008	0.0014	UJ	07/01/02			
	701SB00901RE	E701SB009	0.00062	J	07/01/02			
	701SB01001RE	E701SB010	0.0014	UJ	07/01/02			
p,p'-DDD	701SB00101RE	E701SB001	0.011	U	07/01/02	6,100	230	8
	701SB00201RE	E701SB002	0.011	U	07/01/02			
	701SB00301	E701SB003	0.0026	U	07/01/02			
	701SB00401RE	E701SB004	0.0026	UJ	07/01/02			
	701SB00501RE	E701SB005	0.014	J	07/01/02			
	701SB00601RE	E701SB006	0.0056	U	07/01/02			
	701SB00701RE	E701SB007	0.0027	UJ	07/01/02			
	701SB00801RE	E701SB008	0.0027	UJ	07/01/02			

TABLE 4-3
Pesticides and PCBs Detected in Surface Soil at AOC 701
RFI Report Addendum, AOC 701, Zone E, Charleston Naval Complex

Parameter	Sample ID	Station ID	Concentration (mg/kg)	Qualifier	Date Collected	EPA Region III Industrial RBC	EPA Region III Residential RBC	SSL (DAF=10)
p,p'-DDD	701SB00901RE	E701SB009	0.0013	J	07/01/02	6,100	230	8
	701SB01001RE	E701SB010	0.0027	UJ	07/01/02			
p,p'-DDE	701SB00101RE	E701SB001	0.011	U	07/01/02	17	1.9	27
	701SB00201RE	E701SB002	0.011	U	07/01/02			
	701SB00301	E701SB003	0.0026	U	07/01/02			
	701SB00401RE	E701SB004	0.0026	UJ	07/01/02			
	701SB00501RE	E701SB005	0.0093	J	07/01/02			
	701SB00601RE	E701SB006	0.0056	U	07/01/02			
	701SB00701RE	E701SB007	0.0027	UJ	07/01/02			
	701SB00801RE	E701SB008	0.0027	UJ	07/01/02			
	701SB00901RE	E701SB009	0.0023	J	07/01/02			
	701SB01001RE	E701SB010	0.0027	UJ	07/01/02			
p,p'-DDT	701SB00101RE	E701SB001	0.011	UJ	07/01/02	17	1.9	16
	701SB00201RE	E701SB002	0.011	UJ	07/01/02			
	701SB00301	E701SB003	0.0026	UJ	07/01/02			
	701SB00401RE	E701SB004	0.0026	UJ	07/01/02			
	701SB00501RE	E701SB005	0.0097	J	07/01/02			
	701SB00601RE	E701SB006	0.0056	UJ	07/01/02			
	701SB00701RE	E701SB007	0.0027	UJ	07/01/02			
	701SB00801RE	E701SB008	0.0027	UJ	07/01/02			
	701SB00901RE	E701SB009	0.0022	J	07/01/02			
	701SB01001RE	E701SB010	0.00056	J	07/01/02			

All values are presented in units of milligrams per kilogram (mg/kg).

J Indicates an estimated value. One or more quality control (QC) parameters were outside control limits or the value was detected below the laboratory's quantification limit.

TABLE 4-3
Pesticides and PCBs Detected in Surface Soil at AOC 701
RFI Report Addendum, AOC 701, Zone E, Charleston Naval Complex

Parameter	Sample ID	Station ID	Concentration (mg/kg)	Qualifier	Date Collected	EPA Region III Industrial RBC	EPA Region III Residential RBC	SSL (DAF=10)

NA No applicable SSL or RBC.

ND No comparative data available.

U Indicates that the chemical was not detected.

UJ Indicates that the chemical was not detected and the reporting limit is estimated.

TABLE 4-4
Pesticides and PCBs Detected in Subsurface Soil at AOC 701
RFI Report Addendum, AOC 701, Zone E, Charleston Naval Complex

Parameter	Sample ID	Station ID	Concentration (mg/kg)	Qualifier	Date Collected	SSL (DAF=10)
Endrin Aldehyde	701SB00102RE	E701SB001	0.003	UJ	07/01/02	NA
	701SB00202RE	E701SB002	0.0028	UJ	07/01/02	
	701SB00302RE	E701SB003	0.0027	UJ	07/01/02	
	701SB00402	E701SB004	0.0026	UJ	07/01/02	
	701SB00502	E701SB005	0.0028	UJ	07/01/02	
	701SB00602RE	E701SB006	0.0029	UJ	07/01/02	
	701SB00702RE	E701SB007	0.0029	UJ	07/01/02	
	701SB00802RE	E701SB008	0.0026	UJ	07/01/02	
	701SB00902RE	E701SB009	0.0027	UJ	07/01/02	
	701SB01002RE	E701SB010	0.0026	J	07/01/02	
Gamma-chlordane	701SB00102RE	E701SB001	0.0016	UJ	07/01/02	5
	701SB00202RE	E701SB002	0.0015	UJ	07/01/02	
	701SB00302RE	E701SB003	0.0014	UJ	07/01/02	
	701SB00402	E701SB004	0.0014	U	07/01/02	
	701SB00502	E701SB005	0.0015	U	07/01/02	
	701SB00602RE	E701SB006	0.0015	UJ	07/01/02	
	701SB00702RE	E701SB007	0.0015	UJ	07/01/02	
	701SB00802RE	E701SB008	0.0014	U	07/01/02	
	701SB00902RE	E701SB009	0.0014	UJ	07/01/02	
	701SB01002RE	E701SB010	0.00038	J	07/01/02	
p,p'-DDE	701SB00102RE	E701SB001	0.003	UJ	07/01/02	8
	701SB00202RE	E701SB002	0.0028	UJ	07/01/02	
	701SB00302RE	E701SB003	0.0027	UJ	07/01/02	
	701SB00402	E701SB004	0.0026	U	07/01/02	
	701SB00502	E701SB005	0.0028	U	07/01/02	
	701SB00602RE	E701SB006	0.0029	UJ	07/01/02	
	701SB00702RE	E701SB007	0.0029	UJ	07/01/02	
	701SB00802RE	E701SB008	0.0026	U	07/01/02	
	701SB00902RE	E701SB009	0.0027	UJ	07/01/02	
	701SB01002RE	E701SB010	0.0003	J	07/01/02	
p,p'-DDT	701SB00102RE	E701SB001	0.003	UJ	07/01/02	16
	701SB00202RE	E701SB002	0.0028	UJ	07/01/02	
	701SB00302RE	E701SB003	0.0027	UJ	07/01/02	
	701SB00402	E701SB004	0.0026	UJ	07/01/02	
	701SB00502	E701SB005	0.0028	UJ	07/01/02	
	701SB00602RE	E701SB006	0.0029	UJ	07/01/02	
	701SB00702RE	E701SB007	0.0029	UJ	07/01/02	
	701SB00802RE	E701SB008	0.0026	UJ	07/01/02	
	701SB00902RE	E701SB009	0.0027	UJ	07/01/02	

TABLE 4-4
Pesticides and PCBs Detected in Subsurface Soil at AOC 701
RFI Report Addendum, AOC 701, Zone E, Charleston Naval Complex

Parameter	Sample ID	Station ID	Concentration (mg/kg)	Qualifier	Date Collected	SSL (DAF=10)
	701SB01002RE	E701SB010	0.0019	J	07/01/02	

All values are presented in units of milligrams per kilogram (mg/kg).

J Indicates an estimated value. One or more quality control (QC) parameters were outside control limits or the value was detected below the laboratory's quantification limit.

NA No applicable SSL or RBC.

U Indicates that the chemical was not detected.

UJ Indicates that the chemical was not detected and the reporting limit is estimated.

TABLE 4-5
Inorganic Constituents Detected in Surface Soil at AOC 701
RFI Report Addendum, AOC 701, Zone E, Charleston Naval Complex

Parameter	Sample ID	Station ID	Concentration (mg/kg)	Qualifier	Date Collected	EPA Region III Industrial RBC	EPA Region III Residential RBC	Zone E Surface Soil Background Concentration Range	SSL (DAF=10)
Aluminum	701SB00101	E701SB001	5,600	=	07/01/02	200,000	7,800	261 - 20,500	NA
	701SB00201	E701SB002	4,200	=	07/01/02				
	701SB00301	E701SB003	4,200	=	07/01/02				
	701SB00401	E701SB004	3,900	=	07/01/02				
	701SB00501	E701SB005	5,700	=	07/01/02				
	701SB00601	E701SB006	5,100	=	07/01/02				
	701SB00701	E701SB007	4,600	=	07/01/02				
	701SB00801	E701SB008	8,100	=	07/01/02				
	701SB00901	E701SB009	6,000	=	07/01/02				
	701SB01001	E701SB010	2,600	=	07/01/02				
Antimony	701SB00101	E701SB001	0.48	UJ	07/01/02	82	3.1	0.5 – 7.4	0.66[a]
	701SB00201	E701SB002	0.51	UJ	07/01/02				
	701SB00301	E701SB003	0.53	UJ	07/01/02				
	701SB00401	E701SB004	0.52	J	07/01/02				
	701SB00501	E701SB005	0.49	UJ	07/01/02				
	701SB00601	E701SB006	0.51	UJ	07/01/02				
	701SB00701	E701SB007	0.49	UJ	07/01/02				
	701SB00801	E701SB008	0.49	UJ	07/01/02				
	701SB00901	E701SB009	0.55	UJ	07/01/02				
	701SB01001	E701SB010	0.49	UJ	07/01/02				
Arsenic	701SB00101	E701SB001	0.78	J	07/01/02	3.8	0.43	0.95 - 68	14.5
	701SB00201	E701SB002	1.2	J	07/01/02				
	701SB00301	E701SB003	0.96	J	07/01/02				
	701SB00401	E701SB004	2.7	=	07/01/02				

TABLE 4-5
Inorganic Constituents Detected in Surface Soil at AOC 701
RFI Report Addendum, AOC 701, Zone E, Charleston Naval Complex

Parameter	Sample ID	Station ID	Concentration (mg/kg)	Qualifier	Date Collected	EPA Region III Industrial RBC	EPA Region III Residential RBC	Zone E Surface Soil Background Concentration Range	SSL (DAF=10)
Arsenic	701SB00501	E701SB005	2	J	07/01/02	3.8	0.43	0.95 - 68	14.5
	701SB00601	E701SB006	0.46	U	07/01/02				
	701SB00701	E701SB007	0.44	U	07/01/02				
	701SB00801	E701SB008	0.46	J	07/01/02				
	701SB00901	E701SB009	3	=	07/01/02				
	701SB01001	E701SB010	4.9	=	07/01/02				
Barium	701SB00101	E701SB001	10	J	07/01/02	14,000	550	1.8 - 1,980	800
	701SB00201	E701SB002	13	J	07/01/02				
	701SB00301	E701SB003	14	J	07/01/02				
	701SB00401	E701SB004	22	J	07/01/02				
	701SB00501	E701SB005	19	J	07/01/02				
	701SB00601	E701SB006	3.7	J	07/01/02				
	701SB00701	E701SB007	4.6	J	07/01/02				
	701SB00801	E701SB008	10	J	07/01/02				
	701SB00901	E701SB009	8.1	J	07/01/02				
	701SB01001	E701SB010	10	J	07/01/02				
Beryllium	701SB00101	E701SB001	0.061	J	07/01/02	410	16	0.13 - 1.6	31.5
	701SB00201	E701SB002	0.077	J	07/01/02				
	701SB00301	E701SB003	0.075	J	07/01/02				
	701SB00401	E701SB004	0.43	J	07/01/02				
	701SB00501	E701SB005	0.13	J	07/01/02				
	701SB00601	E701SB006	0.058	U	07/01/02				
	701SB00701	E701SB007	0.056	U	07/01/02				
	701SB00801	E701SB008	0.064	J	07/01/02				

TABLE 4-5
Inorganic Constituents Detected in Surface Soil at AOC 701
RFI Report Addendum, AOC 701, Zone E, Charleston Naval Complex

Parameter	Sample ID	Station ID	Concentration (mg/kg)	Qualifier	Date Collected	EPA Region III Industrial RBC	EPA Region III Residential RBC	Zone E Surface Soil Background Concentration Range	SSL (DAF=10)
Beryllium	701SB00901	E701SB009	0.063	U	07/01/02	410	16	0.13 - 1.6	31.5
	701SB01001	E701SB010	0.056	U	07/01/02				
Cadmium	701SB00101	E701SB001	0.084	U	07/01/02	100	4	0.06 - 1.5	4
	701SB00201	E701SB002	0.089	U	07/01/02				
	701SB00301	E701SB003	0.13	J	07/01/02				
	701SB00401	E701SB004	0.16	J	07/01/02				
	701SB00501	E701SB005	0.33	J	07/01/02				
	701SB00601	E701SB006	0.089	U	07/01/02				
	701SB00701	E701SB007	0.086	U	07/01/02				
	701SB00801	E701SB008	0.085	U	07/01/02				
	701SB00901	E701SB009	0.15	J	07/01/02				
	701SB01001	E701SB010	0.086	U	07/01/02				
Calcium	701SB00101	E701SB001	12,000	=	07/01/02	NA	NA	167 - 182,000	NA
	701SB00201	E701SB002	1,200	=	07/01/02				
	701SB00301	E701SB003	6,300	=	07/01/02				
	701SB00401	E701SB004	22,000	=	07/01/02				
	701SB00501	E701SB005	1,200	=	07/01/02				
	701SB00601	E701SB006	200	J	07/01/02				
	701SB00701	E701SB007	330	J	07/01/02				
	701SB00801	E701SB008	790	J	07/01/02				
	701SB00901	E701SB009	1,900	=	07/01/02				
	701SB01001	E701SB010	120	J	07/01/02				
Chromium, Total	701SB00101	E701SB001	5.1	=	07/01/02	610	23	2.6 - 567	19
	701SB00201	E701SB002	5.4	=	07/01/02				

TABLE 4-5
Inorganic Constituents Detected in Surface Soil at AOC 701
RFI Report Addendum, AOC 701, Zone E, Charleston Naval Complex

Parameter	Sample ID	Station ID	Concentration (mg/kg)	Qualifier	Date Collected	EPA Region III Industrial RBC	EPA Region III Residential RBC	Zone E Surface Soil Background Concentration Range	SSL (DAF=10)
Chromium, Total	701SB00301	E701SB003	4.9	=	07/01/02	610	23	2.6 - 567	19
	701SB00401	E701SB004	8.6	=	07/01/02				
	701SB00501	E701SB005	5.5	=	07/01/02				
	701SB00601	E701SB006	4.6	=	07/01/02				
	701SB00701	E701SB007	5.1	=	07/01/02				
	701SB00801	E701SB008	6.3	=	07/01/02				
	701SB00901	E701SB009	11	=	07/01/02				
	701SB01001	E701SB010	4.3	=	07/01/02				
Cobalt	701SB00101	E701SB001	0.71	J	07/01/02	12,000	470	0.35 - 111	NA
	701SB00201	E701SB002	0.7	J	07/01/02				
	701SB00301	E701SB003	0.7	J	07/01/02				
	701SB00401	E701SB004	1.7	J	07/01/02				
	701SB00501	E701SB005	0.93	J	07/01/02				
	701SB00601	E701SB006	0.76	J	07/01/02				
	701SB00701	E701SB007	0.39	J	07/01/02				
	701SB00801	E701SB008	0.89	J	07/01/02				
	701SB00901	E701SB009	1.9	J	07/01/02				
	701SB01001	E701SB010	0.19	U	07/01/02				
Copper	701SB00101	E701SB001	5.1	=	07/01/02	8,200	310	0.47 - 866	5,500[a]
	701SB00201	E701SB002	16	=	07/01/02				
	701SB00301	E701SB003	11	=	07/01/02				
	701SB00401	E701SB004	9.8	=	07/01/02				
	701SB00501	E701SB005	29	=	07/01/02				
	701SB00601	E701SB006	0.74	U	07/01/02				

TABLE 4-5
Inorganic Constituents Detected in Surface Soil at AOC 701
RFI Report Addendum, AOC 701, Zone E, Charleston Naval Complex

Parameter	Sample ID	Station ID	Concentration (mg/kg)	Qualifier	Date Collected	EPA Region III Industrial RBC	EPA Region III Residential RBC	Zone E Surface Soil Background Concentration Range	SSL (DAF=10)
Copper	701SB00701	E701SB007	0.71	U	07/01/02	8,200	310	0.47 - 866	5,500[a]
	701SB00801	E701SB008	8	=	07/01/02				
	701SB00901	E701SB009	8.7	=	07/01/02				
	701SB01001	E701SB010	4.3	J	07/01/02				
Iron	701SB00101	E701SB001	1,500	=	07/01/02	61,000	2,300	1,050 - 30,600	NA
	701SB00201	E701SB002	1,900	=	07/01/02				
	701SB00301	E701SB003	2,900	=	07/01/02				
	701SB00401	E701SB004	3,300	=	07/01/02				
	701SB00501	E701SB005	4,000	=	07/01/02				
	701SB00601	E701SB006	2,000	=	07/01/02				
	701SB00701	E701SB007	1,300	=	07/01/02				
	701SB00801	E701SB008	2,200	=	07/01/02				
	701SB00901	E701SB009	25,000	=	07/01/02				
	701SB01001	E701SB010	2,900	=	07/01/02				
Lead	701SB00101	E701SB001	11	=	07/01/02	1200	400	1 - 400	400
	701SB00201	E701SB002	36	=	07/01/02				
	701SB00301	E701SB003	58	=	07/01/02				
	701SB00401	E701SB004	30	=	07/01/02				
	701SB00501	E701SB005	40	=	07/01/02				
	701SB00601	E701SB006	2.2	=	07/01/02				
	701SB00701	E701SB007	2.7	=	07/01/02				
	701SB00801	E701SB008	4.6	=	07/01/02				
	701SB00901	E701SB009	4.6	=	07/01/02				
	701SB01001	E701SB010	6.2	=	07/01/02				

TABLE 4-5
Inorganic Constituents Detected in Surface Soil at AOC 701
RFI Report Addendum, AOC 701, Zone E, Charleston Naval Complex

Parameter	Sample ID	Station ID	Concentration (mg/kg)	Qualifier	Date Collected	EPA Region III Industrial RBC	EPA Region III Residential RBC	Zone E Surface Soil Background Concentration Range	SSL (DAF=10)
Magnesium	701SB00101	E701SB001	330	J	07/01/02	NA	NA	31 - 14,800	NA
	701SB00201	E701SB002	180	J	07/01/02				
	701SB00301	E701SB003	370	J	07/01/02				
	701SB00401	E701SB004	420	J	07/01/02				
	701SB00501	E701SB005	200	J	07/01/02				
	701SB00601	E701SB006	180	J	07/01/02				
	701SB00701	E701SB007	95	J	07/01/02				
	701SB00801	E701SB008	250	J	07/01/02				
	701SB00901	E701SB009	170	J	07/01/02				
	701SB01001	E701SB010	110	J	07/01/02				
Manganese	701SB00101	E701SB001	17	=	07/01/02	4,100	160	0.93 - 508	475
	701SB00201	E701SB002	9.3	=	07/01/02				
	701SB00301	E701SB003	23	=	07/01/02				
	701SB00401	E701SB004	38	=	07/01/02				
	701SB00501	E701SB005	21	=	07/01/02				
	701SB00601	E701SB006	5.5	=	07/01/02				
	701SB00701	E701SB007	4.9	=	07/01/02				
	701SB00801	E701SB008	10	=	07/01/02				
	701SB00901	E701SB009	90	=	07/01/02				
	701SB01001	E701SB010	3.5	=	07/01/02				
Mercury	701SB00101	E701SB001	0.038	J	07/01/02	61	2.3	0.3 - 2.7	1
	701SB00201	E701SB002	0.2	J	07/01/02				
	701SB00301	E701SB003	0.58	J	07/01/02				
	701SB00401	E701SB004	0.058	J	07/01/02				

TABLE 4-5
Inorganic Constituents Detected in Surface Soil at AOC 701
RFI Report Addendum, AOC 701, Zone E, Charleston Naval Complex

Parameter	Sample ID	Station ID	Concentration (mg/kg)	Qualifier	Date Collected	EPA Region III Industrial RBC	EPA Region III Residential RBC	Zone E Surface Soil Background Concentration Range	SSL (DAF=10)
Mercury	701SB00501	E701SB005	0.091	J	07/01/02	61	2.3	0.3 - 2.7	1
	701SB00601	E701SB006	0.0097	J	07/01/02				
	701SB00701	E701SB007	0.013	J	07/01/02				
	701SB00801	E701SB008	0.023	J	07/01/02				
	701SB00901	E701SB009	0.036	J	07/01/02				
	701SB01001	E701SB010	0.019	J	07/01/02				
Nickel	701SB00101	E701SB001	2	J	07/01/02	4,100	160	0.6 - 72	65
	701SB00201	E701SB002	2.1	J	07/01/02				
	701SB00301	E701SB003	2	J	07/01/02				
	701SB00401	E701SB004	5.5	J	07/01/02				
	701SB00501	E701SB005	2.3	J	07/01/02				
	701SB00601	E701SB006	1.9	J	07/01/02				
	701SB00701	E701SB007	1.4	J	07/01/02				
	701SB00801	E701SB008	2.4	J	07/01/02				
	701SB00901	E701SB009	5.2	J	07/01/02				
	701SB01001	E701SB010	0.7	J	07/01/02				
Potassium	701SB00101	E701SB001	190	J	07/01/02	NA	NA	46 - 2,620	NA
	701SB00201	E701SB002	120	J	07/01/02				
	701SB00301	E701SB003	220	J	07/01/02				
	701SB00401	E701SB004	310	J	07/01/02				
	701SB00501	E701SB005	130	J	07/01/02				
	701SB00601	E701SB006	110	J	07/01/02				
	701SB00701	E701SB007	72	J	07/01/02				
	701SB00801	E701SB008	190	J	07/01/02				

TABLE 4-5
Inorganic Constituents Detected in Surface Soil at AOC 701
RFI Report Addendum, AOC 701, Zone E, Charleston Naval Complex

Parameter	Sample ID	Station ID	Concentration (mg/kg)	Qualifier	Date Collected	EPA Region III Industrial RBC	EPA Region III Residential RBC	Zone E Surface Soil Background Concentration Range	SSL (DAF=10)
Potassium	701SB00901	E701SB009	88	J	07/01/02	NA	NA	46 - 2,620	NA
	701SB01001	E701SB010	92	J	07/01/02				
Vanadium	701SB00101	E701SB001	5.9	J	07/01/02	1,400	55	1.1 - 60	3,000
	701SB00201	E701SB002	5.3	J	07/01/02				
	701SB00301	E701SB003	5.2	J	07/01/02				
	701SB00401	E701SB004	18	=	07/01/02				
	701SB00501	E701SB005	9.1	J	07/01/02				
	701SB00601	E701SB006	5.7	J	07/01/02				
	701SB00701	E701SB007	5.3	J	07/01/02				
	701SB00801	E701SB008	7	J	07/01/02				
	701SB00901	E701SB009	8	J	07/01/02				
	701SB01001	E701SB010	3.7	J	07/01/02				
Zinc	701SB00101	E701SB001	18	=	07/01/02	61,000	2,300	1.9 - 855	6,000
	701SB00201	E701SB002	15	=	07/01/02				
	701SB00301	E701SB003	68	=	07/01/02				
	701SB00401	E701SB004	21	=	07/01/02				
	701SB00501	E701SB005	120	=	07/01/02				
	701SB00601	E701SB006	3.2	J	07/01/02				
	701SB00701	E701SB007	2.2	J	07/01/02				
	701SB00801	E701SB008	7	=	07/01/02				
	701SB00901	E701SB009	4.6	=	07/01/02				
	701SB01001	E701SB010	3	J	07/01/02				

All values are presented in units of milligrams per kilogram (mg/kg).

[a] In the absence of an EPA SSL, the EPA Region III SSL (DAF=10) is used.

TABLE 4-5
Inorganic Constituents Detected in Surface Soil at AOC 701
RFI Report Addendum, AOC 701, Zone E, Charleston Naval Complex

Parameter	Sample ID	Station ID	Concentration (mg/kg)	Qualifier	Date Collected	EPA Region III Industrial RBC	EPA Region III Residential RBC	Zone E Surface Soil Background Concentration Range	SSL (DAF=10)

= Indicates that the analyte was detected at the concentration shown.

J Indicates an estimated value. One or more quality control (QC) parameters were outside control limits or the value was detected below the laboratory's quantification limit.

NA No applicable SSL or RBC.

ND No comparative data available.

U Indicates that the chemical was not detected.

UJ Indicates that the chemical was not detected and the reporting limit is estimated.

TABLE 4-6
Inorganic Constituents Detected in Subsurface Soil at AOC 701
RFI Report Addendum, AOC 701, Zone E, Charleston Naval Complex

Parameter	Sample ID	Station ID	Concentration (mg/kg)	Qualifier	Date Collected	Zone E Subsurface Soil Background Concentration Range	SSL (DAF=10)
Aluminum	701SB00102	E701SB001	5,700	=	07/01/02	1,220 – 29,900	NA
	701SB00202	E701SB002	5,700	=	07/01/02		
	701SB00302	E701SB003	5,500	=	07/01/02		
	701SB00402	E701SB004	5,200	=	07/01/02		
	701SB00502	E701SB005	3,600	=	07/01/02		
	701SB00602	E701SB006	3,500	=	07/01/02		
	701SB00702	E701SB007	11,000	=	07/01/02		
	701SB00802	E701SB008	6,200	=	07/01/02		
	701SB00902	E701SB009	3,800	=	07/01/02		
	701SB01002	E701SB010	1,800	=	07/01/02		
Arsenic	701SB00102	E701SB001	0.59	J	07/01/02	0.83 - 26	14.5
	701SB00202	E701SB002	0.46	U	07/01/02		
	701SB00302	E701SB003	0.44	U	07/01/02		
	701SB00402	E701SB004	0.44	U	07/01/02		
	701SB00502	E701SB005	0.73	J	07/01/02		
	701SB00602	E701SB006	1.2	J	07/01/02		
	701SB00702	E701SB007	0.52	U	07/01/02		
	701SB00802	E701SB008	0.57	J	07/01/02		
	701SB00902	E701SB009	1.1	J	07/01/02		
	701SB01002	E701SB010	11	=	07/01/02		
Barium	701SB00102	E701SB001	7.8	J	07/01/02	6.1 - 91	800
	701SB00202	E701SB002	4.1	J	07/01/02		
	701SB00302	E701SB003	6.1	J	07/01/02		
	701SB00402	E701SB004	2.6	J	07/01/02		
	701SB00502	E701SB005	9.7	J	07/01/02		
	701SB00602	E701SB006	7.7	J	07/01/02		
	701SB00702	E701SB007	9.5	J	07/01/02		
	701SB00802	E701SB008	4.5	J	07/01/02		
	701SB00902	E701SB009	8	J	07/01/02		
	701SB01002	E701SB010	13	J	07/01/02		
Beryllium	701SB00102	E701SB001	0.056	U	07/01/02	0.15 - 1.6	31.5
	701SB00202	E701SB002	0.059	U	07/01/02		
	701SB00302	E701SB003	0.056	U	07/01/02		
	701SB00402	E701SB004	0.055	U	07/01/02		
	701SB00502	E701SB005	0.065	U	07/01/02		
	701SB00602	E701SB006	0.17	J	07/01/02		
	701SB00702	E701SB007	0.075	J	07/01/02		

TABLE 4-6
Inorganic Constituents Detected in Subsurface Soil at AOC 701
RFI Report Addendum, AOC 701, Zone E, Charleston Naval Complex

Parameter	Sample ID	Station ID	Concentration (mg/kg)	Qualifier	Date Collected	Zone E Subsurface Soil Background Concentration Range	SSL (DAF=10)
Beryllium	701SB00802	E701SB008	0.061	U	07/01/02	0.15 - 1.6	31.5
	701SB00902	E701SB009	0.083	J	07/01/02		
	701SB01002	E701SB010	0.063	U	07/01/02		
Calcium	701SB00102	E701SB001	2,600	=	07/01/02	323 - 229,000	NA
	701SB00202	E701SB002	290	J	07/01/02		
	701SB00302	E701SB003	320	J	07/01/02		
	701SB00402	E701SB004	200	J	07/01/02		
	701SB00502	E701SB005	320	J	07/01/02		
	701SB00602	E701SB006	300	J	07/01/02		
	701SB00702	E701SB007	260	J	07/01/02		
	701SB00802	E701SB008	350	J	07/01/02		
	701SB00902	E701SB009	100	J	07/01/02		
	701SB01002	E701SB010	150	J	07/01/02		
Chromium, Total	701SB00102	E701SB001	5.7	=	07/01/02	1.6 - 75	19
	701SB00202	E701SB002	6.3	=	07/01/02		
	701SB00302	E701SB003	5.5	=	07/01/02		
	701SB00402	E701SB004	5.2	=	07/01/02		
	701SB00502	E701SB005	4.9	=	07/01/02		
	701SB00602	E701SB006	5.2	=	07/01/02		
	701SB00702	E701SB007	6.9	=	07/01/02		
	701SB00802	E701SB008	5	=	07/01/02		
	701SB00902	E701SB009	4.5	=	07/01/02		
	701SB01002	E701SB010	4.6	=	07/01/02		
Cobalt	701SB00102	E701SB001	0.69	J	07/01/02	0.41 - 15	NA
	701SB00202	E701SB002	0.64	J	07/01/02		
	701SB00302	E701SB003	0.48	J	07/01/02		
	701SB00402	E701SB004	0.68	J	07/01/02		
	701SB00502	E701SB005	0.44	J	07/01/02		
	701SB00602	E701SB006	0.33	J	07/01/02		
	701SB00702	E701SB007	1.8	J	07/01/02		
	701SB00802	E701SB008	0.46	J	07/01/02		
	701SB00902	E701SB009	0.26	J	07/01/02		
	701SB01002	E701SB010	0.21	U	07/01/02		
Copper	701SB00102	E701SB001	4.8	J	07/01/02	1.3 - 192	5,500[a]
	701SB00202	E701SB002	0.99	J	07/01/02		
	701SB00302	E701SB003	0.71	U	07/01/02		
	701SB00402	E701SB004	0.7	U	07/01/02		

TABLE 4-6
Inorganic Constituents Detected in Subsurface Soil at AOC 701
RFI Report Addendum, AOC 701, Zone E, Charleston Naval Complex

Parameter	Sample ID	Station ID	Concentration (mg/kg)	Qualifier	Date Collected	Zone E Subsurface Soil Background Concentration Range	SSL (DAF=10)
Copper	701SB00502	E701SB005	1.7	J	07/01/02	1.3 - 192	5,500[a]
	701SB00602	E701SB006	0.77	U	07/01/02		
	701SB00702	E701SB007	1.1	J	07/01/02		
	701SB00802	E701SB008	1.2	J	07/01/02		
	701SB00902	E701SB009	4.8	J	07/01/02		
	701SB01002	E701SB010	4.7	J	07/01/02		
Iron	701SB00102	E701SB001	1,300	=	07/01/02	924 - 35,800	NA
	701SB00202	E701SB002	1,700	=	07/01/02		
	701SB00302	E701SB003	1,700	=	07/01/02		
	701SB00402	E701SB004	1,900	=	07/01/02		
	701SB00502	E701SB005	2,500	=	07/01/02		
	701SB00602	E701SB006	5,000	=	07/01/02		
	701SB00702	E701SB007	2,800	=	07/01/02		
	701SB00802	E701SB008	1,600	=	07/01/02		
	701SB00902	E701SB009	3,100	=	07/01/02		
	701SB01002	E701SB010	5,200	=	07/01/02		
Lead	701SB00102	E701SB001	8.4	=	07/01/02	1.8 - 322	400
	701SB00202	E701SB002	2.3	=	07/01/02		
	701SB00302	E701SB003	2.6	=	07/01/02		
	701SB00402	E701SB004	1.9	=	07/01/02		
	701SB00502	E701SB005	7.1	=	07/01/02		
	701SB00602	E701SB006	2	=	07/01/02		
	701SB00702	E701SB007	2.1	=	07/01/02		
	701SB00802	E701SB008	2.7	=	07/01/02		
	701SB00902	E701SB009	11	=	07/01/02		
	701SB01002	E701SB010	7.9	=	07/01/02		
Magnesium	701SB00102	E701SB001	220	J	07/01/02	77 - 9,140	NA
	701SB00202	E701SB002	190	J	07/01/02		
	701SB00302	E701SB003	140	J	07/01/02		
	701SB00402	E701SB004	170	J	07/01/02		
	701SB00502	E701SB005	200	J	07/01/02		
	701SB00602	E701SB006	180	J	07/01/02		
	701SB00702	E701SB007	500	J	07/01/02		
	701SB00802	E701SB008	130	J	07/01/02		
	701SB00902	E701SB009	120	J	07/01/02		
	701SB01002	E701SB010	120	J	07/01/02		
Manganese	701SB00102	E701SB001	8.4	=	07/01/02	4.9 - 625	475[a]

TABLE 4-6
Inorganic Constituents Detected in Subsurface Soil at AOC 701
RFI Report Addendum, AOC 701, Zone E, Charleston Naval Complex

Parameter	Sample ID	Station ID	Concentration (mg/kg)	Qualifier	Date Collected	Zone E Subsurface Soil Background Concentration Range	SSL (DAF=10)
Manganese	701SB00202	E701SB002	5.9	=	07/01/02	4.9 - 625	475[a]
	701SB00302	E701SB003	4.6	=	07/01/02		
	701SB00402	E701SB004	5.3	=	07/01/02		
	701SB00502	E701SB005	5.5	=	07/01/02		
	701SB00602	E701SB006	7	=	07/01/02		
	701SB00702	E701SB007	15	=	07/01/02		
	701SB00802	E701SB008	3.3	=	07/01/02		
	701SB00902	E701SB009	3.7	=	07/01/02		
	701SB01002	E701SB010	3.6	=	07/01/02		
Mercury	701SB00102	E701SB001	0.032	J	07/01/02	0.04 - 0.9	1
	701SB00202	E701SB002	0.0053	J	07/01/02		
	701SB00302	E701SB003	0.014	J	07/01/02		
	701SB00402	E701SB004	0.014	J	07/01/02		
	701SB00502	E701SB005	0.014	J	07/01/02		
	701SB00602	E701SB006	0.0098	J	07/01/02		
	701SB00702	E701SB007	0.014	J	07/01/02		
	701SB00802	E701SB008	0.021	J	07/01/02		
	701SB00902	E701SB009	0.09	J	07/01/02		
	701SB01002	E701SB010	0.075	J	07/01/02		
Nickel	701SB00102	E701SB001	1.6	J	07/01/02	0.85 - 20	65
	701SB00202	E701SB002	2.1	J	07/01/02		
	701SB00302	E701SB003	1.7	J	07/01/02		
	701SB00402	E701SB004	1.3	J	07/01/02		
	701SB00502	E701SB005	1.2	J	07/01/02		
	701SB00602	E701SB006	1.1	J	07/01/02		
	701SB00702	E701SB007	2.6	J	07/01/02		
	701SB00802	E701SB008	2	J	07/01/02		
	701SB00902	E701SB009	0.88	J	07/01/02		
	701SB01002	E701SB010	0.57	J	07/01/02		
Potassium	701SB00102	E701SB001	180	J	07/01/02	106 - 3,440	NA
	701SB00202	E701SB002	140	J	07/01/02		
	701SB00302	E701SB003	130	J	07/01/02		
	701SB00402	E701SB004	100	J	07/01/02		
	701SB00502	E701SB005	100	J	07/01/02		
	701SB00602	E701SB006	100	J	07/01/02		
	701SB00702	E701SB007	270	J	07/01/02		
	701SB00802	E701SB008	100	J	07/01/02		

TABLE 4-6
Inorganic Constituents Detected in Subsurface Soil at AOC 701
RFI Report Addendum, AOC 701, Zone E, Charleston Naval Complex

Parameter	Sample ID	Station ID	Concentration (mg/kg)	Qualifier	Date Collected	Zone E Subsurface Soil Background Concentration Range	SSL (DAF=10)
Potassium	701SB00902	E701SB009	81	J	07/01/02	106 - 3,440	NA
	701SB01002	E701SB010	180	J	07/01/02		
Vanadium	701SB00102	E701SB001	5	J	07/01/02	1.6 - 71	3,000
	701SB00202	E701SB002	5.5	J	07/01/02		
	701SB00302	E701SB003	7.1	J	07/01/02		
	701SB00402	E701SB004	5.5	J	07/01/02		
	701SB00502	E701SB005	5.2	J	07/01/02		
	701SB00602	E701SB006	8.5	J	07/01/02		
	701SB00702	E701SB007	6.7	J	07/01/02		
	701SB00802	E701SB008	6	J	07/01/02		
	701SB00902	E701SB009	5.3	J	07/01/02		
	701SB01002	E701SB010	4.6	J	07/01/02		
Zinc	701SB00102	E701SB001	5.4	=	07/01/02	5.87 - 438	6,000
	701SB00202	E701SB002	3.1	J	07/01/02		
	701SB00302	E701SB003	2.1	J	07/01/02		
	701SB00402	E701SB004	2.8	J	07/01/02		
	701SB00502	E701SB005	8.4	=	07/01/02		
	701SB00602	E701SB006	2.5	J	07/01/02		
	701SB00702	E701SB007	6.4	=	07/01/02		
	701SB00802	E701SB008	2	J	07/01/02		
	701SB00902	E701SB009	5.4	=	07/01/02		
	701SB01002	E701SB010	3.2	J	07/01/02		

All values are presented in units of milligrams per kilogram (mg/kg).

[a] In the absence of an EPA SSL, the EPA Region III SSL (DAF=10) is used.

= Indicates that the analyte was detected at the concentration shown.

J Indicates an estimated value. One or more quality control (QC) parameters were outside control limits or the value was detected below the laboratory's quantification limit.

NA No applicable SSL or RBC.

U Indicates that the chemical was not detected.

TABLE 4-7
Volatile Organic Compounds Detected in Shallow Groundwater at AOC 701
RFI Report Addendum, AOC 701, Zone E, Charleston Naval Complex

Parameter	Sample ID	Station ID	Concentration (µg/L)	Qualifier	Date Collected	MCL/*RBC*
cis-1,2-Dichloroethylene	701GW001M1	E701GW001	0.68	J	07/29/02	70
	701GW002M1	E701GW002	5	U	07/29/02	
	701GW003M1	E701GW003	5	U	07/30/02	
	701GW004M1	E701GW004	5	U	07/30/02	
	701GW005M1	E701GW005	5	U	07/30/02	
	701GW006M1	E701GW006	5	U	07/30/02	
1,2-Dichloroethene (total)	701GW001M1	E701GW001	0.68	J	07/29/02	70
	701GW002M1	E701GW002	5	U	07/29/02	
	701GW003M1	E701GW003	5	U	07/30/02	
	701GW004M1	E701GW004	5	U	07/30/02	
	701GW005M1	E701GW005	5	U	07/30/02	
	701GW006M1	E701GW006	5	U	07/30/02	
Carbon Disulfide	701GW001M1	E701GW001	5	U	07/29/02	*100*[a]
	701GW002M1	E701GW002	5	U	07/29/02	
	701GW003M1	E701GW003	5	U	07/30/02	
	701GW004M1	E701GW004	5	U	07/30/02	
	701GW005M1	E701GW005	5	U	07/30/02	
	701GW006M1	E701GW006	5.1	=	07/30/02	

All values are presented in units of micrograms per liter (µg/L).

[a] In the absence of an MCL, the EPA Region III Tap Water RBC is used.

= Indicates that the analyte was detected at the concentration shown.

J Indicates an estimated value. One or more quality control (QC) parameters were outside control limits or the value was detected below the laboratory's quantification limit.

U Indicates that the chemical was not detected.

TABLE 4-8
Volatile Organic Compounds Detected in Deep Groundwater at AOC 701
RFI Report Addendum, AOC 701, Zone E, Charleston Naval Complex

Parameter	Sample ID	Station ID	Concentration (µg/L)	Qualifier	Date Collected	MCL/*RBC*
Carbon Disulfide	701GW01DM1	E701GW01D	5	U	07/29/02	*100*[a]
	701GW02DM1	E701GW02D	5	U	07/29/02	
	701GW03DM1	E701GW03D	1.9	J	07/30/02	
	701GW04DM1	E701GW04D	5	U	07/30/02	
	701GW05DM1	E701GW05D	5	U	07/30/02	
	701GW06DM1	E701GW06D	5	U	07/30/02	

All values are presented in units of micrograms per liter (µg/L).

[a] In the absence of an MCL, the EPA Region III Tap Water RBC is used.

J Indicates an estimated value. One or more quality control (QC) parameters were outside control limits or the value was detected below the laboratory's quantification limit.

U Indicates that the chemical was not detected.

UJ Indicates that the chemical was not detected and the reporting limit is estimated.

TABLE 4-9
Semivolatile Organic Compounds Detected in Shallow Groundwater at AOC 701
RFI Report Addendum, AOC 701, Zone E, Charleston Naval Complex

Parameter	Sample ID	Station ID	Concentration (µg/L)	Qualifier	Date Collected	MCL/RBC
Benzo[g,h,i]perylene	701GW001M1	E701GW001	10	UJ	07/29/02	NA
	701GW002M1	E701GW002	10	UJ	07/29/02	
	701GW003M1	E701GW003	10	UJ	07/30/02	
	701GW004M1	E701GW004	0.91	J	07/30/02	
	701GW005M1	E701GW005	10	UJ	07/30/02	
	701GW006M1	E701GW006	10	UJ	07/30/02	
Diethyl Phthalate	701GW001M1	E701GW001	10	U	07/29/02	*2,900*[a]
	701GW002M1	E701GW002	14	=	07/29/02	
	701GW003M1	E701GW003	10	U	07/30/02	
	701GW004M1	E701GW004	10	U	07/30/02	
	701GW005M1	E701GW005	10	U	07/30/02	
	701GW006M1	E701GW006	10	U	07/30/02	
Fluorene	701GW001M1	E701GW001	10	U	07/29/02	*24*[a]
	701GW002M1	E701GW002	0.71	J	07/29/02	
	701GW003M1	E701GW003	10	U	07/30/02	
	701GW004M1	E701GW004	10	U	07/30/02	
	701GW005M1	E701GW005	10	U	07/30/02	
	701GW006M1	E701GW006	10	U	07/30/02	
Indeno[1,2,3-cd]pyrene	701GW001M1	E701GW001	10	UJ	07/29/02	*0.092*
	701GW002M1	E701GW002	***0.88***	J	07/29/02	
	701GW003M1	E701GW003	10	UJ	07/30/02	
	701GW004M1	E701GW004	***0.7***	J	07/30/02	
	701GW005M1	E701GW005	10	UJ	07/30/02	
	701GW006M1	E701GW006	10	UJ	07/30/02	

All values are presented in units of micrograms per liter (µg/L).

Concentrations in bold and outlined within the table represent exceedances of appropriate screening criterion(a).

[a] In the absence of an MCL, the EPA Region III Tap Water RBC is used.

= Indicates that the analyte was detected at the concentration shown.

J Indicates an estimated value. One or more quality control (QC) parameters were outside control limits or the value was detected below the laboratory's quantification limit.

U Indicates that the chemical was not detected.

TABLE 4-10
Inorganic Constituents Detected in Shallow Groundwater at AOC 701
RFI Report Addendum, AOC 701, Zone E, Charleston Naval Complex

Parameter	Sample ID	Station ID	Concentration (µg/L)	Qualifier	Date Collected	Zone E Shallow Groundwater Background Concentration Range	MCL/*RBC*
Aluminum	701GW001M1	E701GW001	200	UJ	07/29/02	19 - 16,100	*3,400*[a]
	701GW002M1	E701GW002	110	UJ	07/29/02		
	701GW003M1	E701GW003	220	UJ	07/30/02		
	701GW004M1	E701GW004	14,000	J	07/30/02		
	701GW005M1	E701GW005	8,800	J	07/30/02		
	701GW006M1	E701GW006	920	J	07/30/02		
Arsenic	701GW001M1	E701GW001	1.9	J	07/29/02	3 - 316	50
	701GW002M1	E701GW002	1.6	U	07/29/02		
	701GW003M1	E701GW003	5.8	J	07/30/02		
	701GW004M1	E701GW004	8.1	J	07/30/02		
	701GW005M1	E701GW005	3.8	J	07/30/02		
	701GW006M1	E701GW006	1.6	U	07/30/02		
Barium	701GW001M1	E701GW001	14	U	07/29/02	6 - 398	2,000
	701GW002M1	E701GW002	11	U	07/29/02		
	701GW003M1	E701GW003	26	U	07/30/02		
	701GW004M1	E701GW004	55	U	07/30/02		
	701GW005M1	E701GW005	51	U	07/30/02		
	701GW006M1	E701GW006	180	J	07/30/02		
Beryllium	701GW001M1	E701GW001	0.27	U	07/29/02	0.3 – 0.9	4
	701GW002M1	E701GW002	0.27	U	07/29/02		
	701GW003M1	E701GW003	0.27	U	07/30/02		
	701GW004M1	E701GW004	0.38	J	07/30/02		
	701GW005M1	E701GW005	0.27	U	07/30/02		

TABLE 4-10
Inorganic Constituents Detected in Shallow Groundwater at AOC 701
RFI Report Addendum, AOC 701, Zone E, Charleston Naval Complex

Parameter	Sample ID	Station ID	Concentration (µg/L)	Qualifier	Date Collected	Zone E Shallow Groundwater Background Concentration Range	MCL/*RBC*
Beryllium	701GW006M1	E701GW006	0.27	U	07/30/02	0.3 – 0.9	4
Cadmium	701GW001M1	E701GW001	0.36	U	07/29/02	1.4 - 1.4	5
	701GW002M1	E701GW002	0.36	U	07/29/02		
	701GW003M1	E701GW003	0.36	U	07/30/02		
	701GW004M1	E701GW004	0.36	U	07/30/02		
	701GW005M1	E701GW005	0.36	U	07/30/02		
	701GW006M1	E701GW006	1.6	J	07/30/02		
Calcium	701GW001M1	E701GW001	110,000	=	07/29/02	1,170 - 260,000	NA
	701GW002M1	E701GW002	110,000	=	07/29/02		
	701GW003M1	E701GW003	170,000	=	07/30/02		
	701GW004M1	E701GW004	37,000	U	07/30/02		
	701GW005M1	E701GW005	93,000	U	07/30/02		
	701GW006M1	E701GW006	120,000	=	07/30/02		
Chromium, Total	701GW001M1	E701GW001	0.85	U	07/29/02	0.8 – 31	100
	701GW002M1	E701GW002	0.85	U	07/29/02		
	701GW003M1	E701GW003	0.85	U	07/30/02		
	701GW004M1	E701GW004	24	=	07/30/02		
	701GW005M1	E701GW005	11	=	07/30/02		
	701GW006M1	E701GW006	0.85	U	07/30/02		
Cobalt	701GW001M1	E701GW001	0.7	U	07/29/02	0.9 - 44	*220*[a]
	701GW002M1	E701GW002	0.7	U	07/29/02		
	701GW003M1	E701GW003	0.7	U	07/30/02		
	701GW004M1	E701GW004	1.1	J	07/30/02		
	701GW005M1	E701GW005	1.7	J	07/30/02		

TABLE 4-10
Inorganic Constituents Detected in Shallow Groundwater at AOC 701
RFI Report Addendum, AOC 701, Zone E, Charleston Naval Complex

Parameter	Sample ID	Station ID	Concentration (µg/L)	Qualifier	Date Collected	Zone E Shallow Groundwater Background Concentration Range	MCL/*RBC*
Cobalt	701GW006M1	E701GW006	0.7	U	07/30/02	0.9 - 44	*220*[a]
Copper	701GW001M1	E701GW001	0.75	U	07/29/02	0.9 - 8	*1,300*
	701GW002M1	E701GW002	0.6	U	07/29/02		
	701GW003M1	E701GW003	0.71	U	07/30/02		
	701GW004M1	E701GW004	15	J	07/30/02		
	701GW005M1	E701GW005	6.1	U	07/30/02		
	701GW006M1	E701GW006	1.3	U	07/30/02		
Iron	701GW001M1	E701GW001	2,900	=	07/29/02	144 - 76,600	*1,100*[a]
	701GW002M1	E701GW002	2,300	=	07/29/02		
	701GW003M1	E701GW003	6,600	=	07/30/02		
	701GW004M1	E701GW004	38,000	=	07/30/02		
	701GW005M1	E701GW005	24,000	=	07/30/02		
	701GW006M1	E701GW006	***88,000***	=	07/30/02		
Lead	701GW001M1	E701GW001	0.75	U	07/29/02	2 - 47	15
	701GW002M1	E701GW002	0.75	U	07/29/02		
	701GW003M1	E701GW003	0.79	J	07/30/02		
	701GW004M1	E701GW004	26	=	07/30/02		
	701GW005M1	E701GW005	7.8	=	07/30/02		
	701GW006M1	E701GW006	1.5	J	07/30/02		
Magnesium	701GW001M1	E701GW001	16,000	=	07/29/02	790 - 1,160,000	NA
	701GW002M1	E701GW002	16,000	=	07/29/02		
	701GW003M1	E701GW003	19,000	=	07/30/02		
	701GW004M1	E701GW004	14,000	=	07/30/02		

TABLE 4-10
Inorganic Constituents Detected in Shallow Groundwater at AOC 701
RFI Report Addendum, AOC 701, Zone E, Charleston Naval Complex

Parameter	Sample ID	Station ID	Concentration (µg/L)	Qualifier	Date Collected	Zone E Shallow Groundwater Background Concentration Range	MCL/*RBC*
Magnesium	701GW005M1	E701GW005	14,000	=	07/30/02	790 - 1,160,000	NA
	701GW006M1	E701GW006	180,000	=	07/30/02		
Manganese	701GW001M1	E701GW001	83	=	07/29/02	2 - 2,650	*510*[a]
	701GW002M1	E701GW002	170	=	07/29/02		
	701GW003M1	E701GW003	93	=	07/30/02		
	701GW004M1	E701GW004	68	=	07/30/02		
	701GW005M1	E701GW005	190	=	07/30/02		
	701GW006M1	E701GW006	150	J	07/30/02		
Potassium	701GW001M1	E701GW001	9,400	UJ	07/29/02	1,320 - 289,000	NA
	701GW002M1	E701GW002	11,000	J	07/29/02		
	701GW003M1RE	E701GW003	12,000	J	07/30/02		
	701GW004M1	E701GW004	12,000	J	07/30/02		
	701GW005M1	E701GW005	18,000	J	07/30/02		
	701GW006M1	E701GW006	64,000	J	07/30/02		
Selenium	701GW001M1	E701GW001	2.1	U	07/29/02	3 - 5	50
	701GW002M1	E701GW002	2.1	U	07/29/02		
	701GW003M1	E701GW003	2.1	U	07/30/02		
	701GW004M1	E701GW004	2.1	U	07/30/02		
	701GW005M1	E701GW005	2.3	J	07/30/02		
	701GW006M1	E701GW006	2.1	U	07/30/02		
Sodium	701GW001M1	E701GW001	51,000	UJ	07/29/02	NA	NA
	701GW002M1	E701GW002	29,000	UJ	07/29/02		
	701GW003M1RE	E701GW003	8,400	UJ	07/30/02		
	701GW004M1	E701GW004	33,000	UJ	07/30/02		

TABLE 4-10
Inorganic Constituents Detected in Shallow Groundwater at AOC 701
RFI Report Addendum, AOC 701, Zone E, Charleston Naval Complex

Parameter	Sample ID	Station ID	Concentration (µg/L)	Qualifier	Date Collected	Zone E Shallow Groundwater Background Concentration Range	MCL/*RBC*
Sodium	701GW005M1	E701GW005	14,000	UJ	07/30/02	NA	NA
	701GW006M1	E701GW006	1,100,000	J	07/30/02		
Vanadium	701GW001M1	E701GW001	1.2	U	07/29/02	0.6 - 26	*26*[a]
	701GW002M1	E701GW002	1.1	U	07/29/02		
	701GW003M1	E701GW003	1.3	U	07/30/02		
	701GW004M1	E701GW004	***42***	J	07/30/02		
	701GW005M1	E701GW005	19	J	07/30/02		
	701GW006M1	E701GW006	5.5	U	07/30/02		
Zinc	701GW001M1	E701GW001	3	U	07/29/02	5 - 141	*1,100*[a]
	701GW002M1	E701GW002	3	U	07/29/02		
	701GW003M1	E701GW003	4.5	J	07/30/02		
	701GW004M1	E701GW004	130	=	07/30/02		
	701GW005M1	E701GW005	15	J	07/30/02		
	701GW006M1	E701GW006	26	=	07/30/02		

All values are presented in units of micrograms per liter (µg/L).

Concentrations in bold and outlined within the table represent exceedances of appropriate screening criterion(a).

[a] In the absence of an MCL, the EPA Region III Tap Water RBC is used.

= Indicates that the analyte was detected at the concentration shown.

J Indicates an estimated value. One or more quality control (QC) parameters were outside control limits or the value was detected below the laboratory's quantification limit.

U Indicates that the chemical was not detected.

UJ Indicates that the chemical was not detected and the reporting limit is estimated.

TABLE 4-11
Inorganic Constituents Detected in Deep Groundwater at AOC 701
RFI Report Addendum, AOC 701, Zone E, Charleston Naval Complex

Parameter	Sample ID	Station ID	Concentration (µg/L)	Qualifier	Date Collected	Zone E Deep Groundwater Background Concentration Range	MCL/*RBC*
Aluminum	701GW01DM1	E701GW01D	200	UJ	07/29/02	19 - 461	*3,700*[a]
	701GW02DM1	E701GW02D	160	UJ	07/29/02		
	701GW03DM1	E701GW03D	320	J	07/30/02		
	701GW04DM1	E701GW04D	85	UJ	07/30/02		
	701GW05DM1	E701GW05D	89	UJ	07/30/02		
	701GW06DM1	E701GW06D	1,100	J	07/30/02		
Arsenic	701GW01DM1	E701GW01D	1.6	U	07/29/02	3 - 132	50
	701GW02DM1	E701GW02D	1.6	U	07/29/02		
	701GW03DM1	E701GW03D	1.6	U	07/30/02		
	701GW04DM1	E701GW04D	1.6	U	07/30/02		
	701GW05DM1	E701GW05D	5.5	J	07/30/02		
	701GW06DM1	E701GW06D	28	=	07/30/02		
Beryllium	701GW01DM1	E701GW01D	0.27	U	07/29/02	0.2 - 1.3	4
	701GW02DM1	E701GW02D	0.27	U	07/29/02		
	701GW03DM1	E701GW03D	0.27	U	07/30/02		
	701GW04DM1	E701GW04D	0.27	U	07/30/02		
	701GW05DM1	E701GW05D	0.27	U	07/30/02		
	701GW06DM1	E701GW06D	0.35	J	07/30/02		
Cadmium	701GW01DM1	E701GW01D	0.36	U	07/29/02	0.6 - 0.6	5
	701GW02DM1	E701GW02D	0.36	U	07/29/02		
	701GW03DM1	E701GW03D	0.36	U	07/30/02		
	701GW04DM1	E701GW04D	0.36	U	07/30/02		
	701GW05DM1	E701GW05D	0.36	U	07/30/02		
	701GW06DM1	E701GW06D	0.38	J	07/30/02		

TABLE 4-11
Inorganic Constituents Detected in Deep Groundwater at AOC 701
RFI Report Addendum, AOC 701, Zone E, Charleston Naval Complex

Parameter	Sample ID	Station ID	Concentration (µg/L)	Qualifier	Date Collected	Zone E Deep Groundwater Background Concentration Range	MCL/*RBC*
Chromium, Total	701GW01DM1	E701GW01D	0.85	U	07/29/02	0.8 - 27	100
	701GW02DM1	E701GW02D	0.85	U	07/29/02		
	701GW03DM1	E701GW03D	1.4	J	07/30/02		
	701GW04DM1	E701GW04D	0.86	J	07/30/02		
	701GW05DM1	E701GW05D	0.85	U	07/30/02		
	701GW06DM1	E701GW06D	2.5	J	07/30/02		
Cobalt	701GW01DM1	E701GW01D	0.7	U	07/29/02	1.1 - 14	*220*[a]
	701GW02DM1	E701GW02D	0.7	U	07/29/02		
	701GW03DM1	E701GW03D	0.7	U	07/30/02		
	701GW04DM1	E701GW04D	0.7	U	07/30/02		
	701GW05DM1	E701GW05D	0.7	U	07/30/02		
	701GW06DM1	E701GW06D	2.3	J	07/30/02		
Iron	701GW01DM1	E701GW01D	3,000	=	07/29/02	19 - 26,000	*1,100*[a]
	701GW02DM1	E701GW02D	2,500	=	07/29/02		
	701GW03DM1	E701GW03D	2,300	=	07/30/02		
	701GW04DM1	E701GW04D	4,100	=	07/30/02		
	701GW05DM1	E701GW05D	12,000	=	07/30/02		
	701GW06DM1	E701GW06D	***60,000***	=	07/30/02		
Lead	701GW01DM1	E701GW01D	1.1	J	07/29/02	2 - 3	15
	701GW02DM1	E701GW02D	0.75	U	07/29/02		
	701GW03DM1	E701GW03D	0.75	U	07/30/02		
	701GW04DM1	E701GW04D	0.75	U	07/30/02		
	701GW05DM1	E701GW05D	0.75	U	07/30/02		

TABLE 4-11
Inorganic Constituents Detected in Deep Groundwater at AOC 701
RFI Report Addendum, AOC 701, Zone E, Charleston Naval Complex

Parameter	Sample ID	Station ID	Concentration (µg/L)	Qualifier	Date Collected	Zone E Deep Groundwater Background Concentration Range	MCL/*RBC*
Lead	701GW06DM1	E701GW06D	0.94	J	07/30/02	2 - 3	15
Magnesium	701GW01DM1	E701GW01D	7,900	U	07/29/02	3,190 - 1,370,000	NA
	701GW02DM1	E701GW02D	21,000	=	07/29/02		
	701GW03DM1	E701GW03D	6,100	U	07/30/02		
	701GW04DM1	E701GW04D	13,000	=	07/30/02		
	701GW05DM1	E701GW05D	24,000	=	07/30/02		
	701GW06DM1	E701GW06D	94,000	=	07/30/02		
Manganese	701GW01DM1	E701GW01D	55	=	07/29/02	1.3 - 1,660	*73*[a]
	701GW02DM1	E701GW02D	110	=	07/29/02		
	701GW03DM1	E701GW03D	56	=	07/30/02		
	701GW04DM1	E701GW04D	70	=	07/30/02		
	701GW05DM1	E701GW05D	75	=	07/30/02		
	701GW06DM1	E701GW06D	1,200	=	07/30/02		
Potassium	701GW01DM1	E701GW01D	4,600	UJ	07/29/02	1,720 - 351,000	NA
	701GW02DM1	E701GW02D	11,000	J	07/29/02		
	701GW03DM1	E701GW03D	5,100	UJ	07/30/02		
	701GW04DM1	E701GW04D	12,000	J	07/30/02		
	701GW05DM1	E701GW05D	17,000	J	07/30/02		
	701GW06DM1	E701GW06D	36,000	J	07/30/02		
Sodium	701GW01DM1	E701GW01D	15,000	UJ	07/29/02	NA	NA
	701GW02DM1	E701GW02D	110,000	J	07/29/02		
	701GW03DM1	E701GW03D	4,100	UJ	07/30/02		
	701GW04DM1	E701GW04D	26,000	UJ	07/30/02		
	701GW05DM1	E701GW05D	110,000	J	07/30/02		

TABLE 4-11
Inorganic Constituents Detected in Deep Groundwater at AOC 701
RFI Report Addendum, AOC 701, Zone E, Charleston Naval Complex

Parameter	Sample ID	Station ID	Concentration (µg/L)	Qualifier	Date Collected	Zone E Deep Groundwater Background Concentration Range	MCL/*RBC*
Sodium	701GW06DM1	E701GW06D	580,000	J	07/30/02	NA	NA
Zinc	701GW01DM1	E701GW01D	3.1	J	07/29/02	4 - 21	*1,100*[a]
	701GW02DM1	E701GW02D	3	U	07/29/02		
	701GW03DM1	E701GW03D	3	U	07/30/02		
	701GW04DM1	E701GW04D	3	U	07/30/02		
	701GW05DM1	E701GW05D	3	U	07/30/02		
	701GW06DM1	E701GW06D	13	J	07/30/02		

All values are presented in units of micrograms per liter (µg/L).

Concentrations in bold and outlined within the table represent exceedances of appropriate screening criterion(a).

[a] In the absence of an MCL, the EPA Region III Tap Water RBC is used.

= Indicates that the analyte was detected at the concentration shown.

J Indicates an estimated value. One or more quality control (QC) parameters were outside control limits or the value was detected below the laboratory's quantification limit.

U Indicates that the chemical was not detected.

UJ Indicates that the chemical was not detected and the reporting limit is estimated.

Section 5.0

5.0 COPC/COC Refinement

Based on an evaluation of the CSI results for AOC 701, no COPCs were identified for surface or subsurface soil.

Two chemicals (indeno[1,2,3-cd]pyrene and vanadium) were identified as COPCs in shallow groundwater and one chemical (iron) was identified as a COPC for both shallow and deep groundwater.

The nature of these exceedance and the relevance of these compounds at this site are further discussed below.

5.1 COPCs in Groundwater

5.1.1 Indeno[1,2,3-cd]pyrene in Shallow Groundwater

There is no MCL for indeno[1,2,3-cd]pyrene, so this compound was identified as a COPC for shallow groundwater because two shallow groundwater samples had estimated concentrations that exceeded the EPA Region III tap water RBC of 0.092 µg/L: 0.88 J µg/L in E701GW002 and 0.7 J µg/L in E701GW004. Indeno[1,2,3-cd]pyrene was not detected in any of the deep groundwater samples collected at this site.

Indeno[1,2,3-cd[pyrene has a benzo[a]pyrene (BaP) toxicity equivalence factor (TEF) of 0.1, which indicates that it is ten times less toxic than BaP. BaP has a drinking water MCL of 0.2 µg/L. The detected concentrations of indeno[1,2,3-cd]pyrene can be converted into BEQs, using this TEF, and compared to the BaP MCL. On this basis, the two detections of indeno[1,2,3-cd]pyrene would have BEQ values of 0.08 and 0.07 µg/L. Both of these values are below the BaP MCL, indicating that the groundwater does not exceed the MCL on a benzo[a]pyrene equivalent (BEQ) basis.

Indeno]1,2,3-cd]pyrene is one of the heavier PAHs with a solubility of 0.022 µg/L and, like the other PAHs, not likely to leach, particularly in the organic-rich soils at the CNC. Because of its high affinity for organic material and soil, it would not be expected to be present in a dissolved form to a significant degree. Its reported presence in these groundwater samples may be a result of a small amount of particulates in the sample. Indeno[1,2,3-cd]pyrene is not widely present at the site, being detected in only a single surface soil sample at a concentration of 0.24 J milligrams per kilogram (mg/kg), which was well below the SSL (DAF=10) of 7 mg/kg, but was non-detect in all subsurface soil samples. This suggests that

indeno[1,2,3-cd]pyrene is not widely present at the site, is not leaching or likely to leach from the soils at AOC 701 and that a source area is not present.

For these reasons, indeno[1,2,3-cd]pyrene is not considered a COC for shallow groundwater at AOC 701.

5.1.2 Vanadium in Shallow Groundwater

Vanadium was detected in two shallow groundwater samples collected at AOC 701, at estimated concentrations of 42 J µg/L in monitoring well E701GW004 and at 19 J µg/L in monitoring well E701GW005. There is no MCL for vanadium. The value obtained from E701GW004 exceeded the EPA Region III tap water RBC of 26 µg/L (HI=0.1) and the Zone E Shallow Groundwater Background Concentration Range of 0.6 µg/L to 26 µg/L. However, it is well below the tap water RBC (HI=1) of 260 µg/L. No specific target organ for this chemical is specified, therefore cumulative effects are likely a concern.

Vanadium was also detected in all ten surface soil samples and all ten subsurface soil samples, but not in any of the six the deep groundwater samples. All soil concentrations of vanadium were two to three orders of magnitude below the SSL of 3,000 mg/kg, and did not exceed any other relevant screening criteria (see Tables 4-5 and 4-6). Therefore, there is no indication that the soils at AOC 701 could potentially be the source of the single vanadium exceedance detected in shallow groundwater. In addition, the area is paved with asphalt, which provides a barrier to infiltration of stormwater and further reduces the potential for generation of vanadium-enriched leachate.

For these reasons, vanadium is not considered a COC for shallow groundwater at AOC 701.

5.1.3 Iron in Shallow and Deep Groundwater

Iron was detected in all six shallow groundwater samples and all six deep groundwater samples collected at AOC 701 (see Tables 4-10 and 4-11). However, only one shallow groundwater sample and one deep groundwater sample was present at concentrations their exceeded respective the Zone E Groundwater Background Concentration ranges (see Tables 4-5 and 4-6). There is no MCL for iron. The value obtained from deep well E701GW006D also exceeded the EPA Region III Tap Water RBC of 1,100 µg/L (HI=0.1).

Iron was detected in surface and subsurface soil samples at concentrations within its respective Zone E Background Concentration Ranges (see Tables 4-5 and 4-6). Iron is a naturally occurring element in soils and groundwater that is widely present in the Charleston area. The elevated iron in groundwater does not appear to be site-related and is likely due to the natural activity of iron-reducing bacteria.

For these reasons, iron is not considered a COC for groundwater at AOC 701.

5.2 COC Summary

Based on review of the data, no COCs are identified for AOC 701.

Section 6.0

6.0 Summary of Information Related to Site Closeout Issues

6.1 RFI Status

The CSI investigation findings, as reported herein, satisfy the requirements of the RFI. Based on review of the data obtained from the CSI field investigation conducted in April 2002, the nature and extent of the COPCs has been adequately defined.

AOC 701 was not included in the *Zone E RFI Report, Revision 0* (EnSafe, 1997), thus there have been no RFI comments issued with respect to this unit. With submittal of this RFI Report Addendum, the RFI requirements are considered to be complete.

The remaining subsections address the issues that the BCT agreed to evaluate prior to site closeout.

6.2 Presence of Inorganics in Groundwater

For the purpose of site closeout documentation, the inorganics in groundwater issue refers to the occasional or intermittent detection of several metals (primarily arsenic, thallium, and antimony) in groundwater at concentrations above the applicable MCL, preceded or followed by detections of these same metals below the MCL or below the practicable quantitation limit. None of the primary metals of concern were present in groundwater at a concentration exceeding its applicable screening criteria.

6.3 Potential Linkage to SWMU 37, Investigated Sanitary Sewers at the CNC

The sanitary sewer investigation (SWMU 37) was designed to include segments of the sewer where releases of contamination were known or considered likely to have occurred. No known or suspected linkage between SWMU 37 and AOC 701 exists. Further evaluation of this issue is not warranted.

6.4 Potential Linkage to AOC 699, Investigated Storm Sewers at the CNC

Investigated segments of the storm sewer (AOC 699) were identified in the *Zone L RFI Report, Revision 0* (EnSafe, 1998). The sections of the storm water sewer system in the vicinity of the site were not investigated as part of the AOC 699 investigations. There are no data or information to suggest that AOC 701 has impacted the storm sewer system and groundwater is not a medium of concern at this site. Further investigation of a linkage between the storm sewer system and AOC 701 is not warranted.

6.5 Potential Linkage to AOC 504, Investigated Railroad Lines at the CNC

Investigated segments of the CNC railroad lines (AOC 504) were identified in the *Zone L RFI Report, Revision 0* (EnSafe, 1998). No investigations related to AOC 504 were conducted at AOC 701.

There is no known linkage between AOC 701 and the investigated railroad lines. Further evaluation of this issue is not warranted.

6.6 Potential Migration Pathways to Surface Water Bodies at the CNC

The nearest surface water body to AOC 701 is the Cooper River, which lies approximately 1,400 feet to the east. There were no COCs identified for soil. Therefore, there are no migration pathways of concern. Further evaluation of this issue is not warranted.

6.7 Potential Contamination in Oil/Water Separators

There are no OWSs known to be associated with this site. In addition, there is no reference made to an OWS at this facility in the *Oil Water Separator Data* report (Department of the Navy, September 2000). Further evaluation of OWSs is not warranted.

6.8 Land Use Controls (LUCs)

There were no COCs identified under an unrestricted land use scenario during the risk-based screening of the data from AOC 701. Therefore, no land use restrictions are needed

for AOC 701. This site is zoned for CRD and will likely be used for non-residential future land use.

The CNC BCT has agreed that Zone E will have some LUCs. At a minimum, these LUCs are likely to include restrictions against residential land use. Therefore, although the site is recommended for NFA, LUCs that are applied across Zone E are expected to apply at this site.

Section 7.0

7.0 Conclusions and Recommendations

AOC 701 is the former McMillan Avenue gasoline station which was located in Building 1141 (see Figures 1-1 and 1-2). A station/cafeteria combination was built in 1941 and the gas station was operational until 1979, when the building was expanded, renovated, and converted into a security building. According to the RFA, two USTs were located at the northwestern corner of AOC 701 and were closed in place by filling with sand in 1973. In reviewing the 1942 as-built drawings of the original structure, the actual location of these tanks was reportedly near the front door of Building 1141, along the northern side of the building. The as-built drawings also indicate that there were onsite vehicle maintenance operations that included a grease pit, wash rack, and four vehicle bays.

Results of a geophysical investigation confirmed that there is no evidence of existing tanks in the northwestern corner of AOC 701. The geophysical investigation along the northern side of Building 1141, where the original tanks were installed, indicated that the tanks still appear to be present.

Evaluation of the data collected during the CSI is summarized in Section 4.0 and an evaluation of COPCs is provided in Section 5.0.

The conclusion for both soils and groundwater at AOC 701 is that there are no COCs for soil or groundwater at this site. This site is zoned CRD and will likely be designated for commercial/industrial future use. No actions are required to control exposures/risks under current or future unrestricted land use. This site is recommended for NFA.

The BCT has agreed that LUCs will be applied across the entire Zone E of the CNC. These LUCs are expected to include, at a minimum, restrictions limiting the future land use to non-residential activities. Because AOC 701 is located within Zone E, these LUCs are expected to apply at this AOC.

Section 8.0

8.0 References

CH2M-Jones. *RFI Addendum Sampling Plan: Uninvestigated Sites – Zone E Revision 1.* December 2001a.

CH2M-Jones. *Charleston Naval Complex Project Team Notebook and Instructions, Revision 1A.* December 2001b.

EnSafe Inc./Allen & Hoshall. *Final Comprehensive RFI Work Plan.* 1994.

EnSafe Inc./Allen & Hoshall. *Final RCRA Facility Assessment, Naval Base Charleston, Volume II.* June 6, 1995.

EnSafe Inc./Allen & Hoshall. *Final Zone A RFI Report, Revision 0.* 1996.

EnSafe Inc. *Zone E RFI Report, Revision 0.* November 1997.

EnSafe Inc. *Zone L RFI Report, Revision 0.* December 18, 1998.

U.S. Environmental Protection Agency (EPA). *Contract Laboratory Program National Functional Guidelines for Organic Data Review.* 1994a.

U.S. Environmental Protection Agency (EPA). *Contract Laboratory Program National Functional Guidelines for Inorganic Data Review.* 1994b.

U.S. Environmental Protection Agency (EPA). *Standard Operating Procedures and Quality Assurance Manual* (ESDSOPQAM). 1996a.

U.S. Environmental Protection Agency (EPA). Office of Solid Waste and Emergency Response (SW846). *Test Methods for Evaluating Solid Waste, SW-846.* Revision 4. 1996b.

U.S. Environmental Protection Agency (EPA). *Soil Screening Guidance: Technical Background Document.* May 1996.

U.S. Environmental Protection Agency (EPA). *Laboratory Operations and Quality Control Manual* (ESDLOQCM). 1997.

U.S. Environmental Protection Agency (EPA). *EPA Region III Risk-Based Concentration Table.* October 2000.

U.S. Navy. *Oil Water Separator Data.* September 2000.

Appendix A

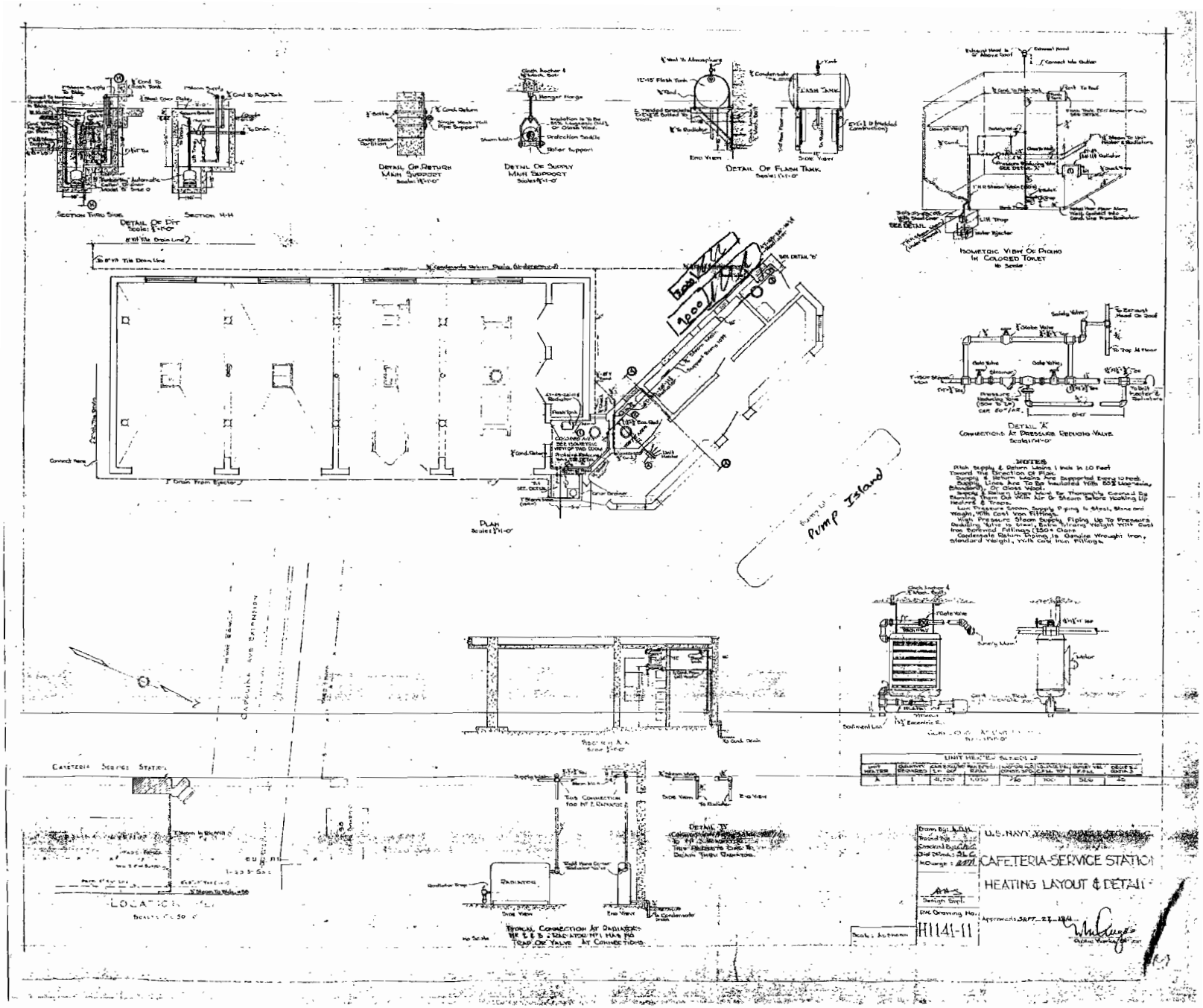

Detail Of Pit
Section Thru Side
Section H-H
Detail Of Return Main Support
Detail Of Supply Main Support
Detail Of Flash Tank
Flash Tank
End View
Side View
Isometric View Of Piping In Colored Toilet
Detail "A"
Connections At Pressure Reducing Valve
Plan
Pump Island
Notes
Pitch Supply & Return Mains 1 Inch In 10 Feet Toward The Direction Of Flow.
Supply & Return Mains Are Supported Every 10 Feet.
Supply Lines Are To Be Insulated With 80% Magnesia, Standard, Or Glass Wool.
Supply & Return Lines Must Be Thoroughly Cleaned By Blowing Them Out With Air Or Steam Before Hooking Up Heaters & Traps.
Low Pressure Steam Supply Piping Is Steel, Stone and Weight, With Cast Iron Fittings.
High Pressure Steam Supply Piping Up To Pressure Reducing Valve Is Steel, Extra Strong Weight With Cast Iron Screwed Fittings (250# Class.
Condensate Return Piping Is Genuine Wrought Iron, Standard Weight, With Cast Iron Fittings.
Cafeteria Service Station
Location
Detail "B"
Typical Connection At Radiators
Radiator
Side View
End View
Unit Heater Schedule
Drawn By: A.D.H.
Traced By:
Checked By:
Chief Dr'mn: S.L.C.
In Charge:
Design Supt.
RVC Drawing No.
H1141-11
Scale: As Shown
U.S. NAVY YARD
CAFETERIA-SERVICE STATION
HEATING LAYOUT & DETAILS
Approved: SEPT. 27, 1941

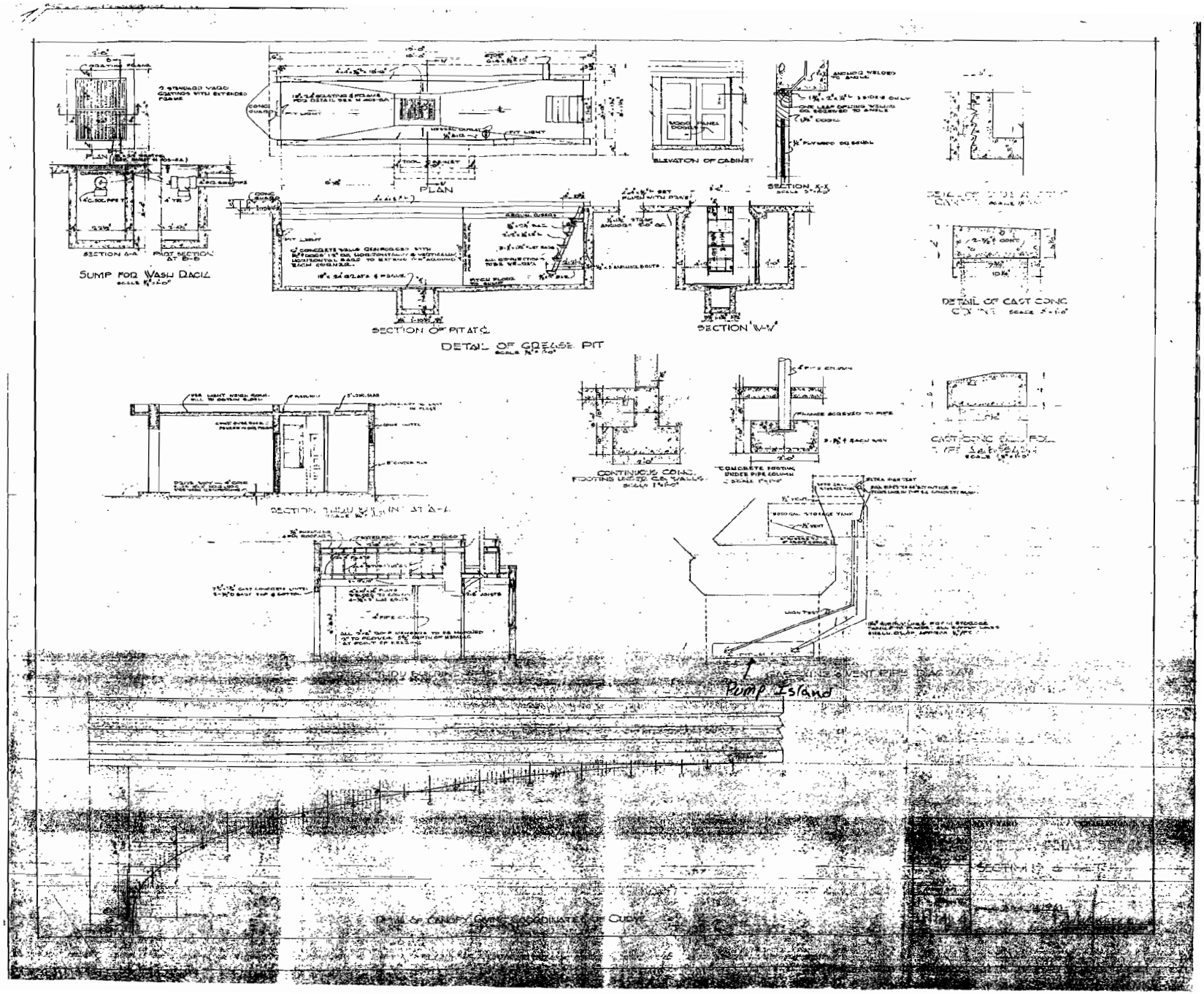
PLAN
SUMP FOR WASH RACK
SECTION OF PIT AT ℄
DETAIL OF GREASE PIT
SECTION 'W-W'
ELEVATION OF CABINET
SECTION X-X
DETAIL OF CAST CONC
CONTINUOUS CONC. FOOTING UNDER CB WALLS
CONCRETE FOOTING UNDER PIPE COLUMN
Pump Island
DETAIL OF CANOPY GIVING COORDINATES OF CURVE

Appendix B

Charleston Naval Complex - AOC 701, Zone E - Geophysical Investigation Results

PREPARED FOR: Kris Garcia/CH2M-Jones

PREPARED BY: Jed Heames, Site Superintendent/CH2M-Jones

DATE: April 8, 2002

CH2M-JONES, LLC, subcontracted the services of *Associated Technical Support, a* firm specializing in locating underground utilities, metallic objects, and anomalies. *Associated Technical Support* was contacted for their technical expertise to verify the location of an Underground Storage Tank (UST) system at Building 1141 (former gas station). The RCRA Facility Investigation at Charleston Naval Base, Charleston SC showed the UST located on the northwest side of Building 1141 while the as-built drawing showed the tank system near the northeast corner of the building (See Figure 7-1). On 11 January 2002, Mr. Keith Jackson of *Associated Technical Support* performed an electromagnetic resonance-imaging scan of the parking area on the northeast, north, and northwest sides of Building 1141. The CH2M-Jones' Site Superintendent was present while Mr. Jackson conducted the geophysical investigation.

Mr. Jackson's survey revealed underground anomalies on the northeast corner of Building 1141 that he marked with paint. Following the survey, Mr. Jackson's markings coincided with the as-built drawing, i.e., they revealed the gas pump island, the supply lines to the pump island, and a large anomaly believed to be the UST. Mr. Jackson's survey of the northwest area where the RFI showed the UST did not detect any anomalies below ground surface. Based on the survey's findings, Mr. Jackson felt confident that the as-built drawing was representative of the actual conditions.

Distribution: Dean Williamson/GNV
Sam Hair/ATR
Tom Beisel/ATR

NOTE: Aerial Photo Date is 1997

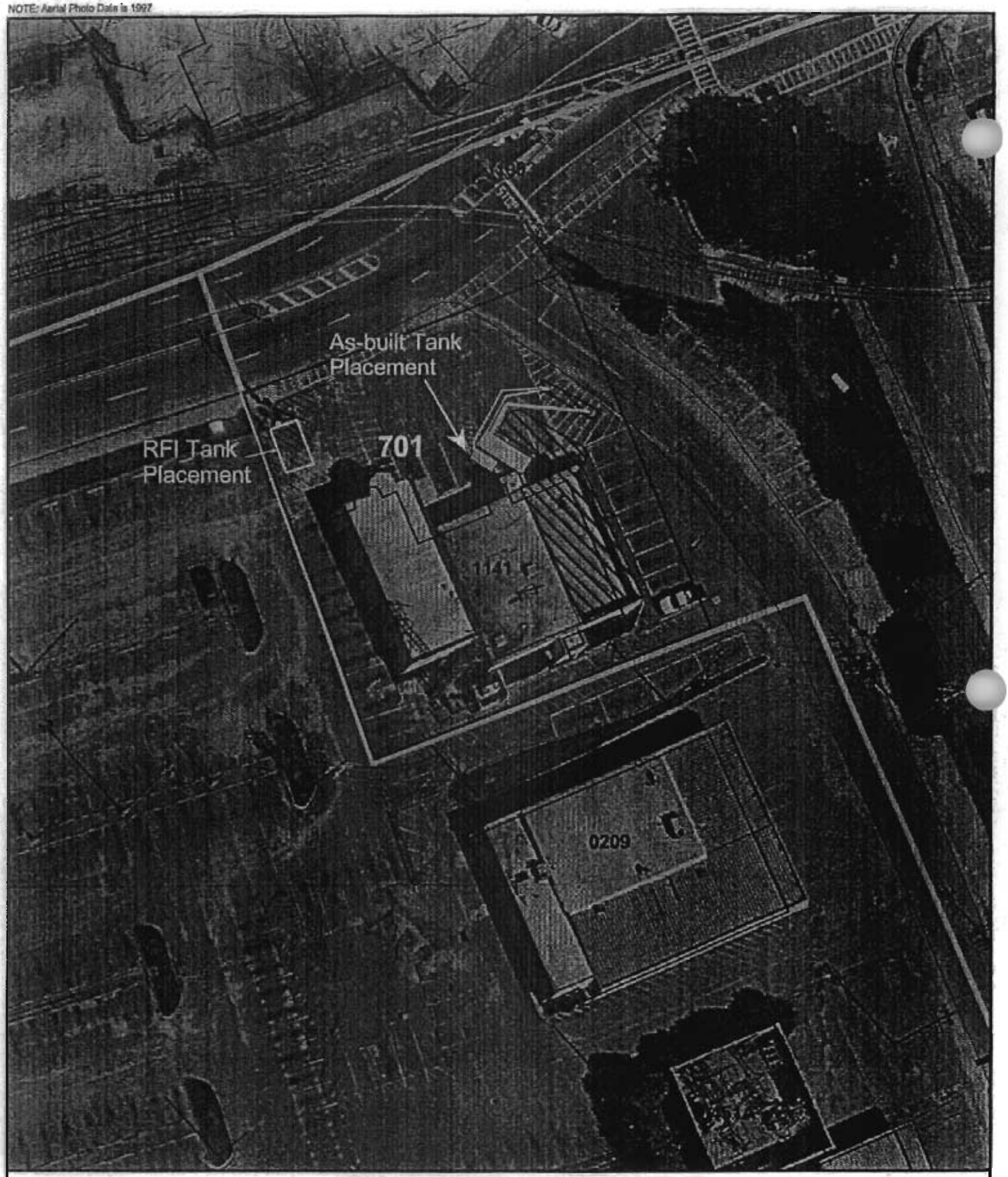

Pipes
Suspected Storage Tank Location
Historical Cafeteria / Gas Station
Fence
Railroads
Roads

AOC Boundary
SWMU Boundary
Buildings
Zone Boundary

N

0 40 80 Feet

1 inch = 50 feet

Figure 1
Historical Gas Station / Cafeteria Building Location
AOC 701, Zone E
Charleston Naval Complex

CH2MHILL

File Path: C:\18gis\Projects\Zone_E\AOC701\aoc701figures.apr, Date: 08 Apr 2002 11:01, User: NMOUDRY, Figure 1

Appendix C

CH2MHILL

PROJECT NUMBER	DPT NUMBER	
158814.ZE	E701GW01D	page 1 of 1

DPT SOIL SAMPLE LOG

PROJECT : Charleston Naval Complex (AOC 701) **LOCATION :** Charleston, SC **NORTHING:** 376065.9

ELEVATION : not measured **DRILLING CONTRACTOR :** Prosonic License # 1435 **EASTING:** 2316055.6

DRILLING METHOD AND EQUIPMENT USED : Direct-Push Sampling, 4 - ft screen

START : 6/19/2002 **END:** 6/19/2002 **LOGGER :** D. Gates/NVR

DEPTH BELOW SURFACE (FT)	SAMPLE INTERVAL	SOIL DESCRIPTION SOIL NAME, USCS GROUP SYMBOL, COLOR, MOISTURE CONTENT, RELATIVE DENSITY, OR CONSISTENCY, SOIL STRUCTURE, MINERALOGY.	COMMENTS TESTS, INSTRUMENTATION ABANDONMENT METHOD
	0-3'	surface: asphalt **SAND**: yellow - tan, fine grained, dry	
	3-4'	**SAND**: yellow - tan, with brown streaks, fine grained, moist at 4'	
5	4-6'	**SAND**: dark brown, fine grained, organic material, saturated at 4.5'	
	6-8'	**SAND**: brown, fine grained, saturated	
10 15	8-16'	**SAND**: dark brown, fine grained, organic material, saturated	Boring ended at 16'
20 25 30			

CH2MHILL

PROJECT NUMBER	DPT NUMBER	
158814.ZE	E701GW02D	page 1 of 1

DPT SOIL SAMPLE LOG

PROJECT : Charleston Naval Complex (AOC 701) **LOCATION :** Charleston, SC **NORTHING:** 376063.4

ELEVATION : not measured **DRILLING CONTRACTOR :** Prosonic License # 1435 **EASTING:** 2316108.7

DRILLING METHOD AND EQUIPMENT USED : Direct-Push Sampling, 4 - ft screen

START : 6/20/2002 **END:** 6/20/2002 **LOGGER :** D. Gates/NVR

DEPTH BELOW SURFACE (FT)	SAMPLE INTERVAL	SOIL DESCRIPTION SOIL NAME, USCS GROUP SYMBOL, COLOR, MOISTURE CONTENT, RELATIVE DENSITY, OR CONSISTENCY, SOIL STRUCTURE, MINERALOGY.	COMMENTS TESTS, INSTRUMENTATION ABANDONMENT METHOD
	0-2.5'	surface: asphalt **SAND**: yellow - tan, fine grained, dry	
	2.5-4.5'	**SAND**: tan - brown, fine grained, slightly silty, saturated at 4.5'	
5	4.5-6'	**SAND**: dark brown, fine grained, slightly silty, organic detritus (wood chips) throughout, saturated	
10	6-16'	**SAND**: gray to dark brown (darker with depth) slightly silty, saturated	
15			Boring ended at 16'
20			
25			
30			

CH2MHILL

PROJECT NUMBER	DPT NUMBER	
158814.ZE	E701GW03D	page 1 of 1

DPT SOIL SAMPLE LOG

PROJECT : Charleston Naval Complex (AOC 701) **LOCATION :** Charleston, SC **NORTHING:** 376093.9

ELEVATION : not measured **DRILLING CONTRACTOR :** Prosonic License # 1435 **EASTING:** 2316118.6

DRILLING METHOD AND EQUIPMENT USED : Direct-Push Sampling, 4 - ft screen

START : 6/20/2002 **END:** 6/20/2002 **LOGGER :** D. Gates/NVR

DEPTH BELOW SURFACE (FT)	SAMPLE INTERVAL	SOIL DESCRIPTION SOIL NAME, USCS GROUP SYMBOL, COLOR, MOISTURE CONTENT, RELATIVE DENSITY, OR CONSISTENCY, SOIL STRUCTURE, MINERALOGY.	COMMENTS TESTS, INSTRUMENTATION ABANDONMENT METHOD
	0-2.5'	surface: asphalt **SAND**: yellow - tan, fine grained, slightly silty, dry	
	2.5-4.5'	**SAND**: yellow tan - brown, slightly silty, dry to 4', saturated at 4.5'	
5	4.5-8'	**SAND**: dark brown, slightly silty, organic matter (roots/wood) saturated	
10 15		**SAND**: gray to brown, slightly silty, organic matter, saturated	Boring ended at 16'
20 25 30			

CH2MHILL

PROJECT NUMBER	DPT NUMBER	
158814.ZE	E701GW04D	page 1 of 1

DPT SOIL SAMPLE LOG

PROJECT : Charleston Naval Complex (AOC 701) **LOCATION :** Charleston, SC **NORTHING:** 376078.3

ELEVATION : not measured **DRILLING CONTRACTOR :** Prosonic License # 1435 **EASTING:** 2316153.5

DRILLING METHOD AND EQUIPMENT USED : Direct-Push Sampling, 4 - ft screen

START : 6/25/2002 **END:** 6/25/2002 **LOGGER :** D. Gates/NVR

DEPTH BELOW SURFACE (FT)	SAMPLE INTERVAL	SOIL DESCRIPTION SOIL NAME, USCS GROUP SYMBOL, COLOR, MOISTURE CONTENT, RELATIVE DENSITY, OR CONSISTENCY, SOIL STRUCTURE, MINERALOGY.	COMMENTS TESTS, INSTRUMENTATION ABANDONMENT METHOD
		surface: asphalt	
	0-2.5'	**SAND**: yellow - tan, fine grained, slightly silty, dry	
	2.5-4.5'	**SAND**: yellow tan - brown, slightly silty, dry to 4', saturated at 4.5'	
5	4.5-8'	**SAND**: dark brown, slightly silty, organic matter (roots/wood) saturated	
10		**SAND**: gray to brown, slightly silty, organic matter, saturated	
15			Boring ended at 16'
20			
25			
30			

CH2MHILL

PROJECT NUMBER	DPT NUMBER	
158814.ZE	E701GW05D	page 1 of 1

DPT SOIL SAMPLE LOG

PROJECT : Charleston Naval Complex (AOC 701) **LOCATION :** Charleston, SC **NORTHING:** 376056.9

ELEVATION : not measured **DRILLING CONTRACTOR :** Prosonic License # 1435 **EASTING:** 2316133.3

DRILLING METHOD AND EQUIPMENT USED : Direct-Push Sampling, 4 - ft screen

START : 6/20/2002 **END:** 6/20/2002 **LOGGER :** D. Gates/NVR

DEPTH BELOW SURFACE (FT)	SAMPLE INTERVAL	SOIL DESCRIPTION SOIL NAME, USCS GROUP SYMBOL, COLOR, MOISTURE CONTENT, RELATIVE DENSITY, OR CONSISTENCY, SOIL STRUCTURE, MINERALOGY.	COMMENTS TESTS, INSTRUMENTATION ABANDONMENT METHOD
		surface: asphalt	
	0-2.5'	**SAND**: yellow - tan, fine grained, slightly silty, dry	
	2.5-4'	**SAND**: yellow tan - brown, fine grained, slightly silty, dry to moist	
5	4-7'	**SAND**: brown, fine grained, slightly silty, saturated at 4.5'	
	7-8'	**CLAYEY SAND**: gray to brown, fine grained, medium stiff, moist	
10		**SAND**: gray to brown, fine grained, slightly silty, saturated	
15			Boring ended at 16'
20			
25			
30			

CH2MHILL

PROJECT NUMBER	DPT NUMBER	
158814.ZE	E701GW06D	page 1 of 1

DPT SOIL SAMPLE LOG

PROJECT : Charleston Naval Complex (AOC 701) **LOCATION :** Charleston, SC **NORTHING:** 376021.6

ELEVATION : not measured **DRILLING CONTRACTOR :** Prosonic License # 1435 **EASTING:** 2316173.9

DRILLING METHOD AND EQUIPMENT USED : Direct-Push Sampling, 4 - ft screen

START : 6/26/2002 **END:** 6/26/2002 **LOGGER :** D. Gates/NVR

DEPTH BELOW SURFACE (FT)	SAMPLE INTERVAL	SOIL DESCRIPTION SOIL NAME, USCS GROUP SYMBOL, COLOR, MOISTURE CONTENT, RELATIVE DENSITY, OR CONSISTENCY, SOIL STRUCTURE, MINERALOGY.	COMMENTS TESTS, INSTRUMENTATION ABANDONMENT METHOD
		surface: asphalt	
	0-2.5'	**SAND:** yellow - tan, fine grained, slightly silty, dry	
	2.5-5'	**SAND:** brown, fine grained, slightly silty, moist to saturated at 5'	
5			
	5-9'	**SAND:** dark brown, fine grained, slightly silty with organic matter (twigs), saturated	
10			
	9-16'	**SAND:** gray to brown, fine grained, slightly silty with organic matter, saturated	
15			Boring ended at 16'
20			
25			
30			

CH2MHILL

PROJECT NUMBER	DPT NUMBER	
158814.ZE	E701PZ001	page 1 of 1

DPT SOIL SAMPLE LOG

PROJECT : Charleston Naval Complex (AOC 701) **LOCATION :** Charleston, SC **NORTHING:** 376165.4

ELEVATION : not measured **DRILLING CONTRACTOR :** Prosonic License # 1435 **EASTING:** 2316018.8

DRILLING METHOD AND EQUIPMENT USED : Direct-Push Sampling, 4 - ft screen

START : 6/27/2002 **END:** 6/27/2002 **LOGGER :** D. Gates/NVR

DEPTH BELOW SURFACE (FT)	SAMPLE INTERVAL	SOIL DESCRIPTION SOIL NAME, USCS GROUP SYMBOL, COLOR, MOISTURE CONTENT, RELATIVE DENSITY, OR CONSISTENCY, SOIL STRUCTURE, MINERALOGY.	COMMENTS TESTS, INSTRUMENTATION ABANDONMENT METHOD
		surface: grass and granite gravel	
	0-4.5'	SAND: brown, fine grained, saturated at 4.5'	
5	4.5-8'	SAND: dark brown, fine grained, slightly silty, saturated	
			Boring ended at 8'
10			
15			
20			
25			
30			

CH2MHILL

PROJECT NUMBER	DPT NUMBER	
158814.ZE	E701PZ002	page 1 of 1

DPT SOIL SAMPLE LOG

PROJECT : Charleston Naval Complex (AOC 701) **LOCATION :** Charleston, SC **NORTHING:** 376160.3

ELEVATION : not measured **DRILLING CONTRACTOR :** Prosonic License # 1435 **EASTING:** 2316187.7

DRILLING METHOD AND EQUIPMENT USED : Direct-Push Sampling, 4 - ft screen

START : 6/27/2002 **END:** 6/27/2002 **LOGGER :** D. Gates/NVR

DEPTH BELOW SURFACE (FT)	SAMPLE INTERVAL	SOIL DESCRIPTION SOIL NAME, USCS GROUP SYMBOL, COLOR, MOISTURE CONTENT, RELATIVE DENSITY, OR CONSISTENCY, SOIL STRUCTURE, MINERALOGY.	COMMENTS TESTS, INSTRUMENTATION ABANDONMENT METHOD
		surface: asphalt	
	0-5'	**SAND**: brown, fine grained, saturated at 4.5'	
5			
	5-8'	**SAND**: dark brown, fine grained, saturated	
			Boring ended at 8'
10			
15			
20			
25			
30			

CH2MHILL

PROJECT NUMBER	DPT NUMBER	
158814.ZE	E701PZ003	page 1 of 1

DPT SOIL SAMPLE LOG

PROJECT : Charleston Naval Complex (AOC 701) **LOCATION :** Charleston, SC **NORTHING:** 376016.9

ELEVATION : not measured **DRILLING CONTRACTOR :** Prosonic License # 1435 **EASTING:** 2316025.5

DRILLING METHOD AND EQUIPMENT USED : Direct-Push Sampling, 4 - ft screen

START : 6/27/2002 **END:** 6/27/2002 **LOGGER :** D. Gates/NVR

DEPTH BELOW SURFACE (FT)	SAMPLE INTERVAL	SOIL DESCRIPTION SOIL NAME, USCS GROUP SYMBOL, COLOR, MOISTURE CONTENT, RELATIVE DENSITY, OR CONSISTENCY, SOIL STRUCTURE, MINERALOGY.	COMMENTS TESTS, INSTRUMENTATION ABANDONMENT METHOD
	0-2.5'	surface: asphalt **SAND:** tan, fine grained, dry	
	2.5-5'	**SAND:** brown, fine grained, slightly silty with organic material (wood), saturated at 5'	
5	5-8'	**SAND:** dark brown, fine grained, slightly silty, saturated	Boring ended at 8'
10			
15			
20			
25			
30			

CH2MHILL

PROJECT NUMBER	DPT NUMBER	
158814.ZE	E701PZ004	page 1 of 1

DPT SOIL SAMPLE LOG

PROJECT : Charleston Naval Complex (AOC 701) **LOCATION :** Charleston, SC **NORTHING:** 375910.9

ELEVATION : not measured **DRILLING CONTRACTOR :** Prosonic License # 1435 **EASTING:** 2316074.0

DRILLING METHOD AND EQUIPMENT USED : Direct-Push Sampling, 4 - ft screen

START : 6/27/2002 **END:** 6/27/2002 **LOGGER :** D. Gates/NVR

DEPTH BELOW SURFACE (FT)	SAMPLE INTERVAL	SOIL DESCRIPTION SOIL NAME, USCS GROUP SYMBOL, COLOR, MOISTURE CONTENT, RELATIVE DENSITY, OR CONSISTENCY, SOIL STRUCTURE, MINERALOGY.	COMMENTS TESTS, INSTRUMENTATION ABANDONMENT METHOD
		surface: asphalt	
	0-2.5'	**SAND**: yellow - tan, fine grained, dry	
	2.5-5'	**SAND**: brown, fine grained, slightly silty, moist to saturated at 5'	
5			
	5-8'	**SAND**: dark brown, fine grained, slightly silty, saturated	
			Boring ended at 8'
10			
15			
20			
25			
30			

Appendix D

PROJECT NUMBER	WELL NUMBER	
158814.ZE	E701GW001	SHEET 1 OF 1

CH2MHILL

WELL COMPLETION DIAGRAM

PROJECT : AOC 701, Zone E, Charleston Naval Complex — LOCATION : Charleston, South Carolina

DRILLING CONTRACTOR : Prosonic Corporation License # 1435 — NORTHING 376062.7

DRILLING METHOD AND EQUIPMENT USED : Hollow Stem Augering (4.25-inch diameter) — EASTING: 2316056.4

WATER LEVELS : not measured — START : 6/19/2002 — END: 6/19/2002 — LOGGER : D. Gates/NVR

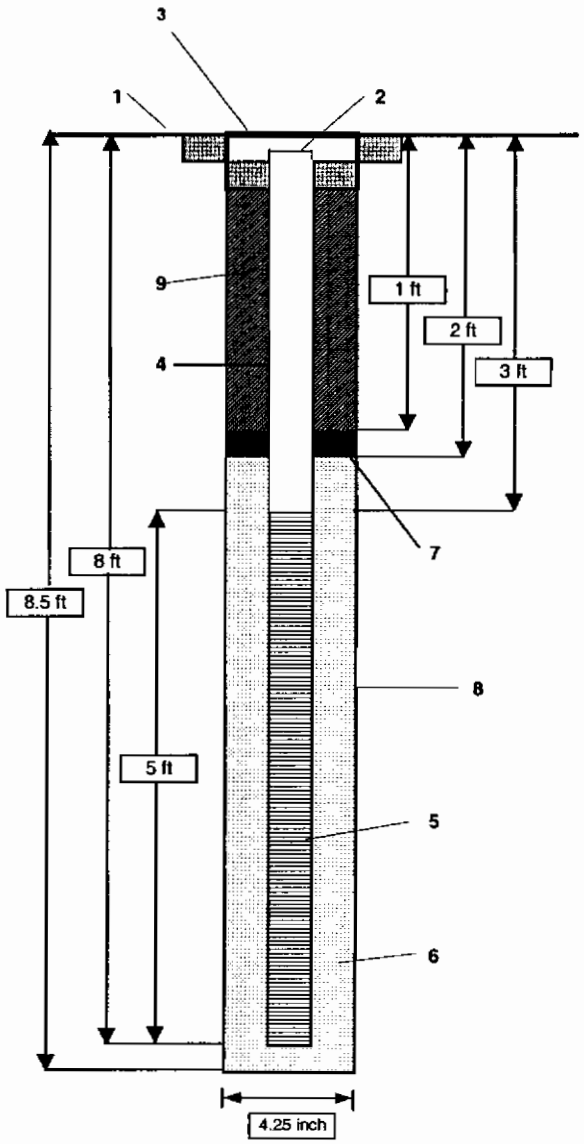

1- Ground elevation at well	not measured
2- Top of casing elevation	7.7'
3- Protective cover type	8-ich dia. flush mount manhole vault
a) concrete pad dimensions	2 ft x 2 ft
4- Dia./type of well casing	2-inch inside diameter schedule 40 PVC
5- Type/slot size of screen	0.010-inch dia. machine slotted PVC
6- Type filter pack	20/30 Sieve Size Silica Sand (2 bags)
7- Type of seal	3/8-inch bentonite chips, Baroid
8- Borehole diameter	4.25"
9- Grout	Portland Cement with 5% bentonite

Note: Diagram not to scale.

PROJECT NUMBER	WELL NUMBER	
158814.ZE	E701GW01D	SHEET 1 OF 1

CH2MHILL

WELL COMPLETION DIAGRAM

PROJECT : AOC 701, Zone E, Charleston Naval Complex — LOCATION : Charleston, South Carolina

DRILLING CONTRACTOR : Prosonic Corporation License # 1435 — NORTHING 376065.9

DRILLING METHOD AND EQUIPMENT USED : Hollow Stem Augering (4.25-inch diameter) — EASTING: 2316055.6

WATER LEVELS : not measured — START : 6/19/2002 — END: 6/19/2002 — LOGGER : D. Gates/NVR

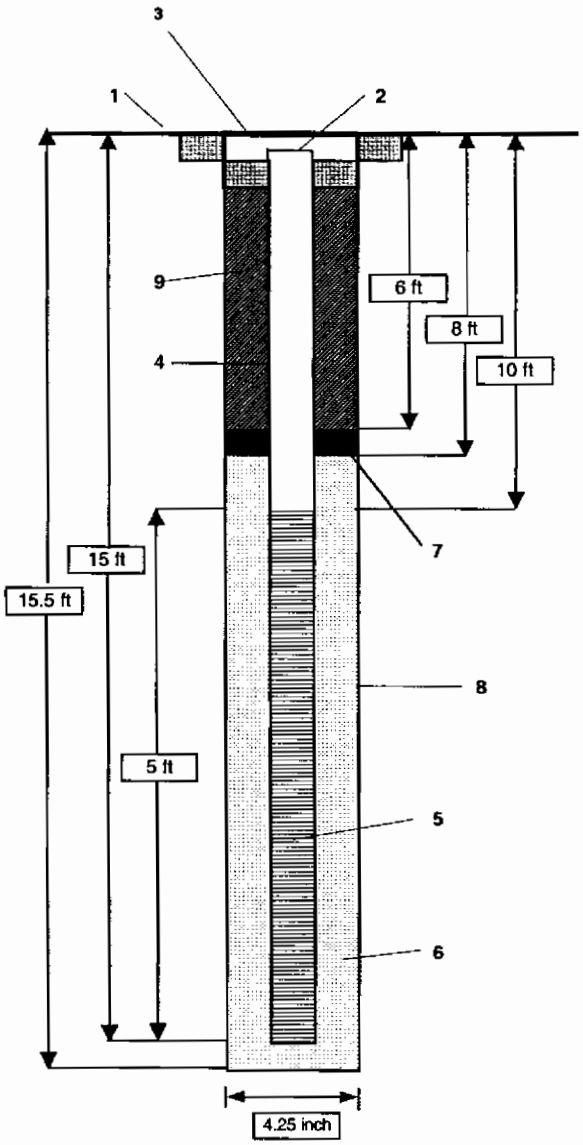

1- Ground elevation at well	not measured
2- Top of casing elevation	7.73
3- Protective cover type	8-ich dia. flush mount manhole vault
a) concrete pad dimensions	2 ft x 2 ft
4- Dia./type of well casing	2-inch inside diameter schedule 40 PVC
5- Type/slot size of screen	0.010-inch dia. machine slotted PVC
6- Type filter pack	20/30 Sieve Size Silica Sand (2 bags)
7- Type of seal	3/8-inch bentonite chips, Baroid
8- Borehole diameter	4.25"
9- Grout	Portland Cement with 5% bentonite

Note: Diagram not to scale.

PROJECT NUMBER	WELL NUMBER	
158814.ZE	E701GW002	SHEET 1 OF 1

CH2MHILL

WELL COMPLETION DIAGRAM

PROJECT : AOC 701, Zone E, Charleston Naval Complex — LOCATION : Charleston, South Carolina

DRILLING CONTRACTOR : Prosonic Corporation License # 1435 — NORTHING 376061.1

DRILLING METHOD AND EQUIPMENT USED : Hollow Stem Augering (4.25-inch diameter) — EASTING: 2316108

WATER LEVELS : not measured — START : 6/20/2002 — END: 6/20/2002 — LOGGER : D. Gates/NVR

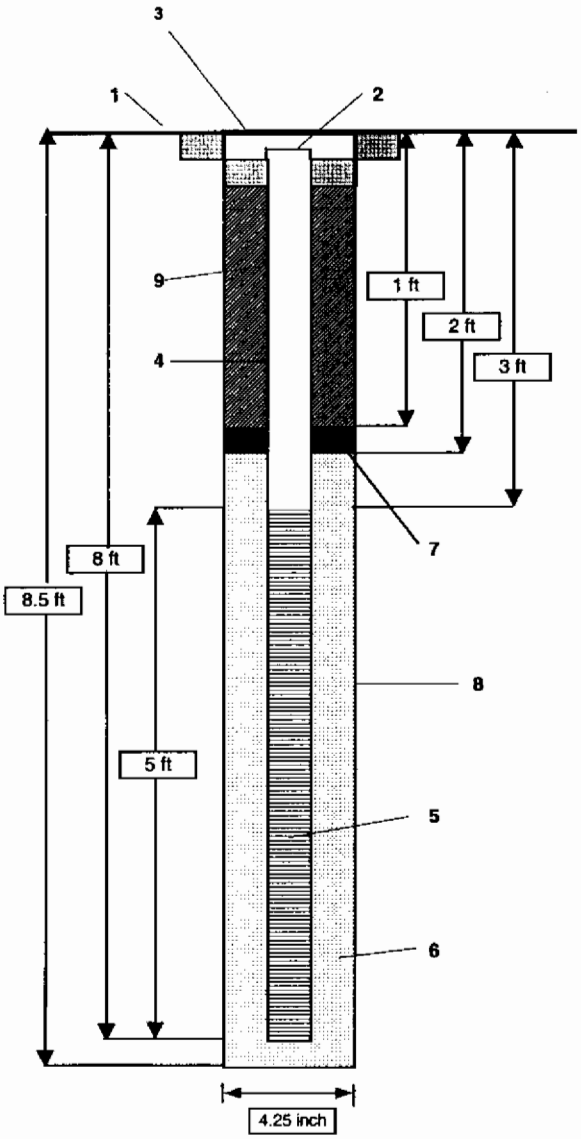

1- Ground elevation at well	not measured
2- Top of casing elevation	8.43'
3- Protective cover type	8-ich dia. flush mount manhole vault
a) concrete pad dimensions	2 ft x 2 ft
4- Dia./type of well casing	2-inch inside diameter schedule 40 PVC
5- Type/slot size of screen	0.010-inch dia. machine slotted PVC
6- Type filter pack	20/30 Sieve Size Silica Sand (2 bags)
7- Type of seal	3/8-inch bentonite chips, Baroid
8- Borehole diameter	4.25"
9- Grout	Portland Cement with 5% bentonite

Note: Diagram not to scale.

PROJECT NUMBER	WELL NUMBER	
158814.ZE	E701GW02D	SHEET 1 OF 1

CH2MHILL

WELL COMPLETION DIAGRAM

PROJECT : AOC 701, Zone E, Charleston Naval Complex — LOCATION : Charleston, South Carolina

DRILLING CONTRACTOR : Prosonic Corporation License # 1435 — NORTHING 376063.4

DRILLING METHOD AND EQUIPMENT USED : Hollow Stem Augering (4.25-inch diameter) — EASTING: 2316108.7

WATER LEVELS : not measured — START : 6/20/2002 — END: 6/20/2002 — LOGGER : D. Gates/NVR

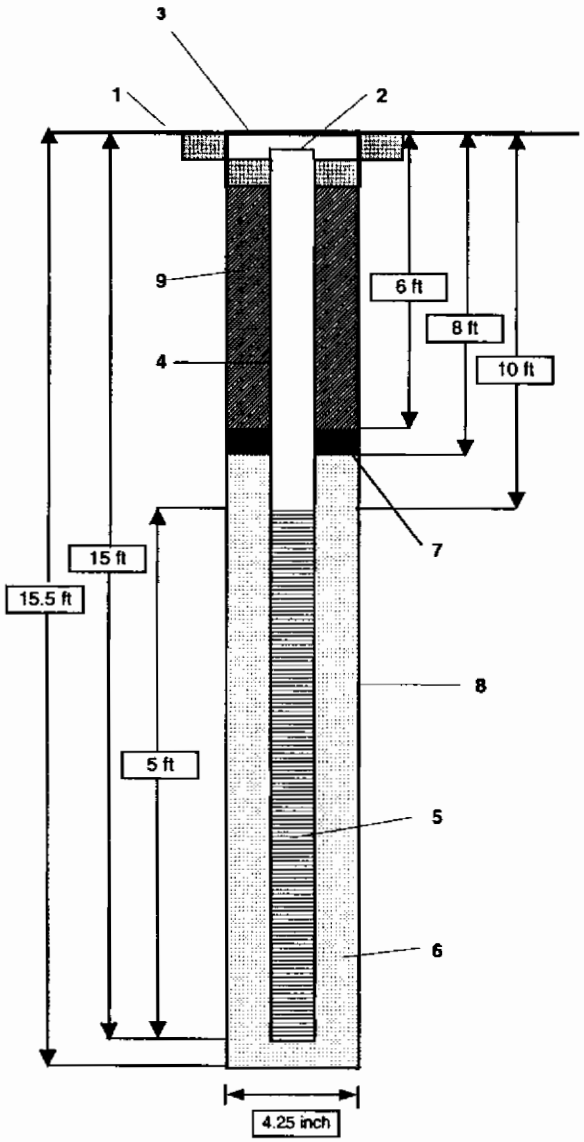

1- Ground elevation at well	not measured
2- Top of casing elevation	8.07'
3- Protective cover type	8-ich dia. flush mount manhole vault
a) concrete pad dimensions	2 ft x 2 ft
4- Dia./type of well casing	2-inch inside diameter schedule 40 PVC
5- Type/slot size of screen	0.010-inch dia. machine slotted PVC
6- Type filter pack	20/30 Sieve Size Silica Sand (2 bags)
7- Type of seal	3/8-inch bentonite chips, Baroid
8- Borehole diameter	4.25"
9- Grout	Portland Cement with 5% bentonite

Note: Diagram not to scale.

PROJECT NUMBER	WELL NUMBER	
158814.ZE	E701GW003	SHEET 1 OF 1

CH2MHILL

WELL COMPLETION DIAGRAM

PROJECT : AOC 701, Zone E, Charleston Naval Complex — LOCATION : Charleston, South Carolina

DRILLING CONTRACTOR : Prosonic Corporation License # 1435 — NORTHING 376092.1

DRILLING METHOD AND EQUIPMENT USED : Hollow Stem Augering (4.25-inch diameter) — EASTING: 2316120.2

WATER LEVELS : not measured — START : 6/20/2002 — END: 6/20/2002 — LOGGER : D. Gates/NVR

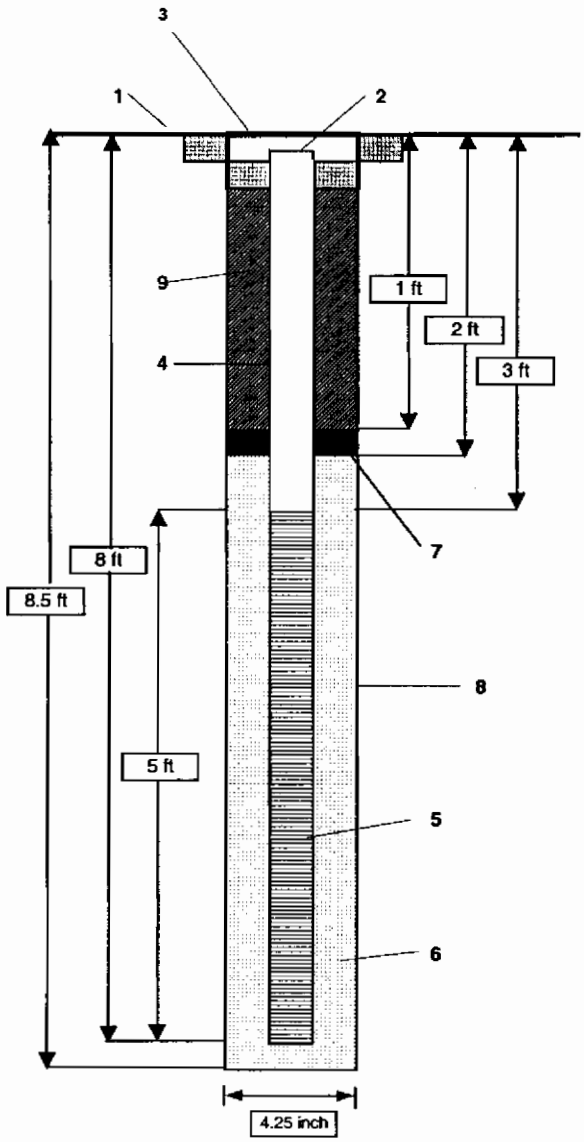

1- Ground elevation at well	not measured
2- Top of casing elevation	7.93'
3- Protective cover type	8-ich dia. flush mount manhole vault
a) concrete pad dimensions	2 ft x 2 ft
4- Dia./type of well casing	2-inch inside diameter schedule 40 PVC
5- Type/slot size of screen	0.010-inch dia. machine slotted PVC
6- Type filter pack	20/30 Sieve Size Silica Sand (2 bags)
7- Type of seal	3/8-inch bentonite chips, Baroid
8- Borehole diameter	4.25"
9- Grout	Portland Cement with 5% bentonite

Note: Diagram not to scale.

PROJECT NUMBER	WELL NUMBER	
158814.ZE	E701GW03D	SHEET 1 OF 1

CH2MHILL

WELL COMPLETION DIAGRAM

PROJECT : AOC 701, Zone E, Charleston Naval Complex — LOCATION : Charleston, South Carolina

DRILLING CONTRACTOR : Prosonic Corporation License # 1435 — NORTHING 376093.9

DRILLING METHOD AND EQUIPMENT USED : Hollow Stem Augering (4.25-inch diameter) — EASTING: 2316118.6

WATER LEVELS : not measured — START : 6/20/2002 — END: 6/20/2002 — LOGGER : D. Gates/NVR

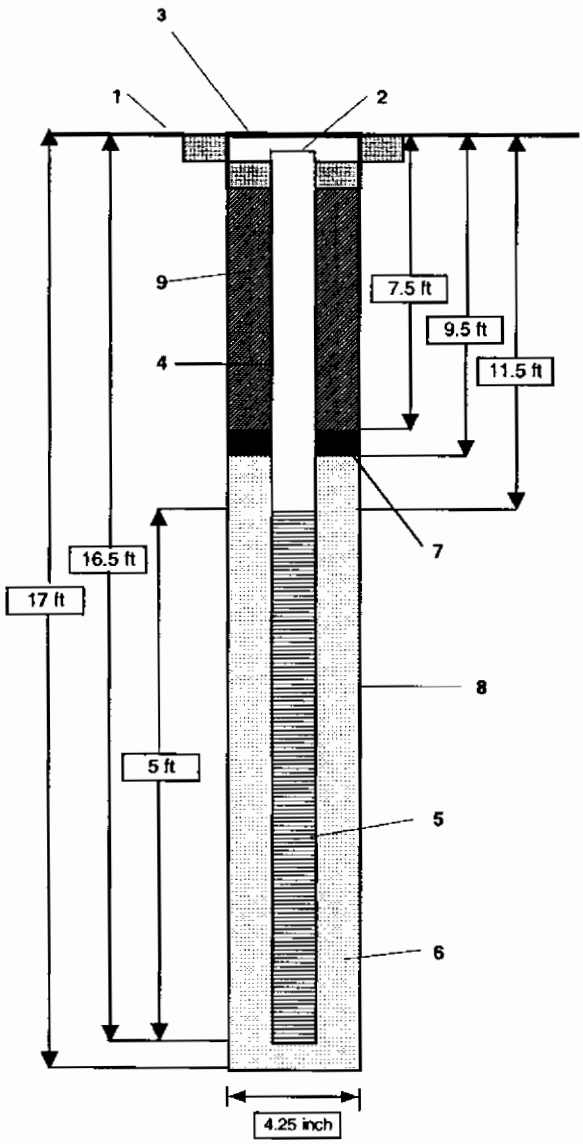

1- Ground elevation at well	not measured
2- Top of casing elevation	8.21'
3- Protective cover type	8-ich dia. flush mount manhole vault
a) concrete pad dimensions	2 ft x 2 ft
4- Dia./type of well casing	2-inch inside diameter schedule 40 PVC
5- Type/slot size of screen	0.010-inch dia. machine slotted PVC
6- Type filter pack	20/30 Sieve Size Silica Sand (2.5 bags)
7- Type of seal	3/8-inch bentonite chips, Baroid
8- Borehole diameter	4.25"
9- Grout	Portland Cement with 5% bentonite

Note: Diagram not to scale.

PROJECT NUMBER	WELL NUMBER	
158814.ZE	E701GW004	SHEET 1 OF 1

CH2MHILL

WELL COMPLETION DIAGRAM

PROJECT : AOC 701, Zone E, Charleston Naval Complex — LOCATION : Charleston, South Carolina

DRILLING CONTRACTOR : Prosonic Corporation License # 1435 — NORTHING 376079.3

DRILLING METHOD AND EQUIPMENT USED : Hollow Stem Augering (4.25-inch diameter) — EASTING: 2316154.8

WATER LEVELS : not measured — START : 6/25/2002 — END: 6/25/2002 — LOGGER : D. Gates/NVR

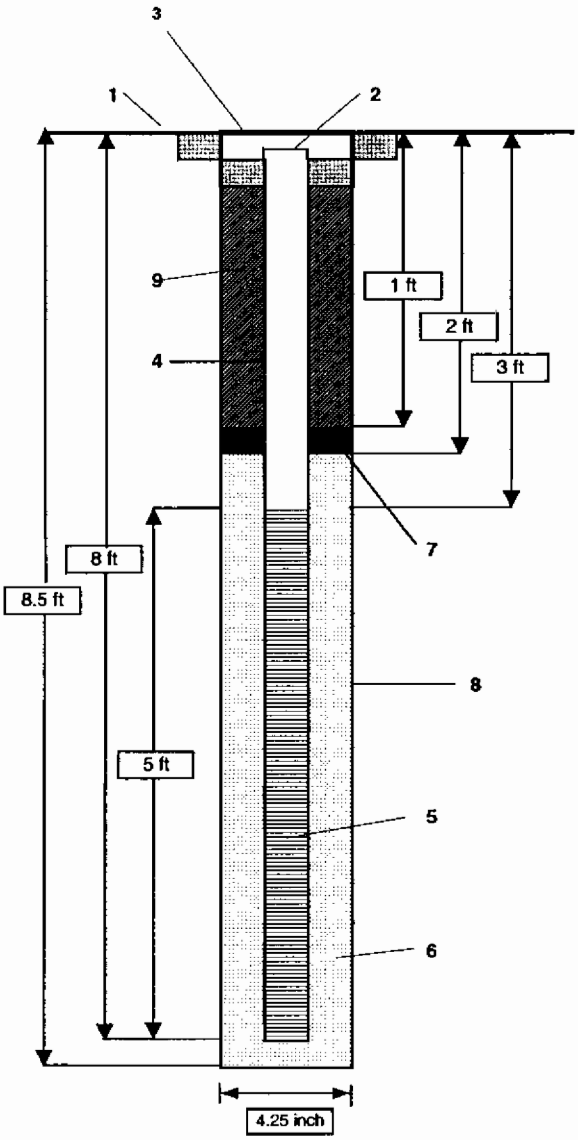

1- Ground elevation at well	not measured
2- Top of casing elevation	7.81'
3- Protective cover type	8-ich dia. flush mount manhole vault
a) concrete pad dimensions	2 ft x 2 ft
4- Dia./type of well casing	2-inch inside diameter schedule 40 PVC
5- Type/slot size of screen	0.010-inch dia. machine slotted PVC
6- Type filter pack	20/30 Sieve Size Silica Sand (2 bags)
7- Type of seal	3/8-inch bentonite chips, Baroid
8- Borehole diameter	4.25"
9- Grout	Portland Cement with 5% bentonite

Note: Diagram not to scale.

PROJECT NUMBER	WELL NUMBER	
158814.ZE	E701GW04D	SHEET 1 OF 1

CH2MHILL

WELL COMPLETION DIAGRAM

PROJECT : AOC 701, Zone E, Charleston Naval Complex	LOCATION : Charleston, South Carolina
DRILLING CONTRACTOR : Prosonic Corporation License # 1435	NORTHING 376078.3
DRILLING METHOD AND EQUIPMENT USED : Hollow Stem Augering (4.25-inch diameter)	EASTING: 2316153.5
WATER LEVELS : not measured START : 6/25/2002 END: 6/25/2002	LOGGER : D. Gates/NVR

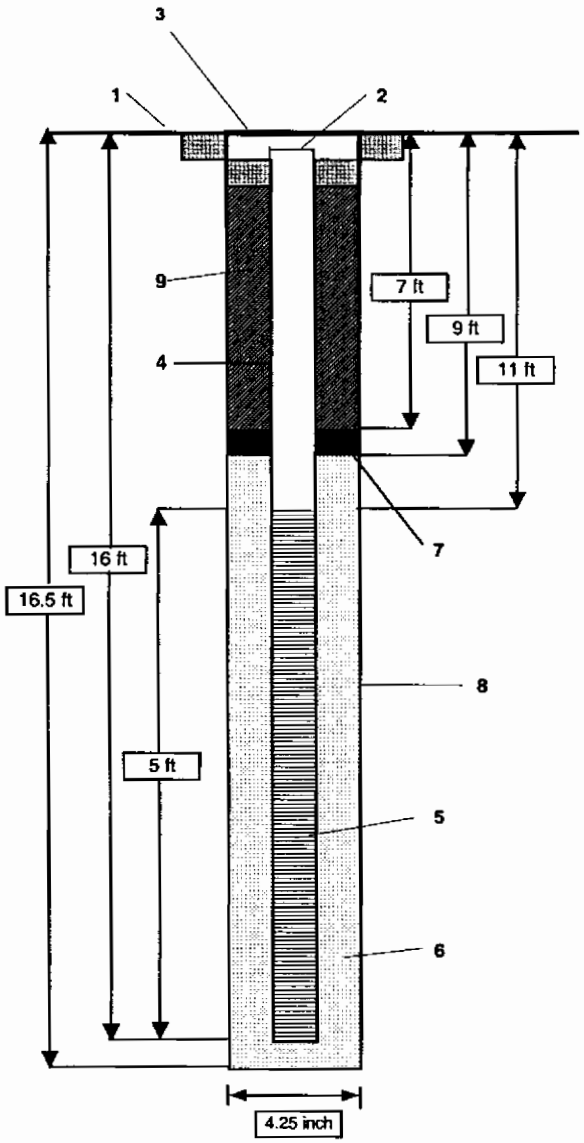

1- Ground elevation at well	not measured
2- Top of casing elevation	7.93'
3- Protective cover type	8-ich dia. flush mount manhole vault
a) concrete pad dimensions	2 ft x 2 ft
4- Dia./type of well casing	2-inch inside diameter schedule 40 PVC
5- Type/slot size of screen	0.010-inch dia. machine slotted PVC
6- Type filter pack	20/30 Sieve Size Silica Sand (2.5 bags)
7- Type of seal	3/8-inch bentonite chips, Baroid
8- Borehole diameter	4.25"
9- Grout	Portland Cement with 5% bentonite

Note: Diagram not to scale.

PROJECT NUMBER	WELL NUMBER	
158814.ZE	E701GW005	SHEET 1 OF 1

CH2MHILL

WELL COMPLETION DIAGRAM

PROJECT : AOC 701, Zone E, Charleston Naval Complex — LOCATION : Charleston, South Carolina
DRILLING CONTRACTOR : Prosonic Corporation License # 1435 — NORTHING 376054.3
DRILLING METHOD AND EQUIPMENT USED : Hollow Stem Augering (4.25-inch diameter) — EASTING: 2316134.4
WATER LEVELS : not measured — START : 6/20/2002 — END: 6/20/2002 — LOGGER : D. Gates/NVR

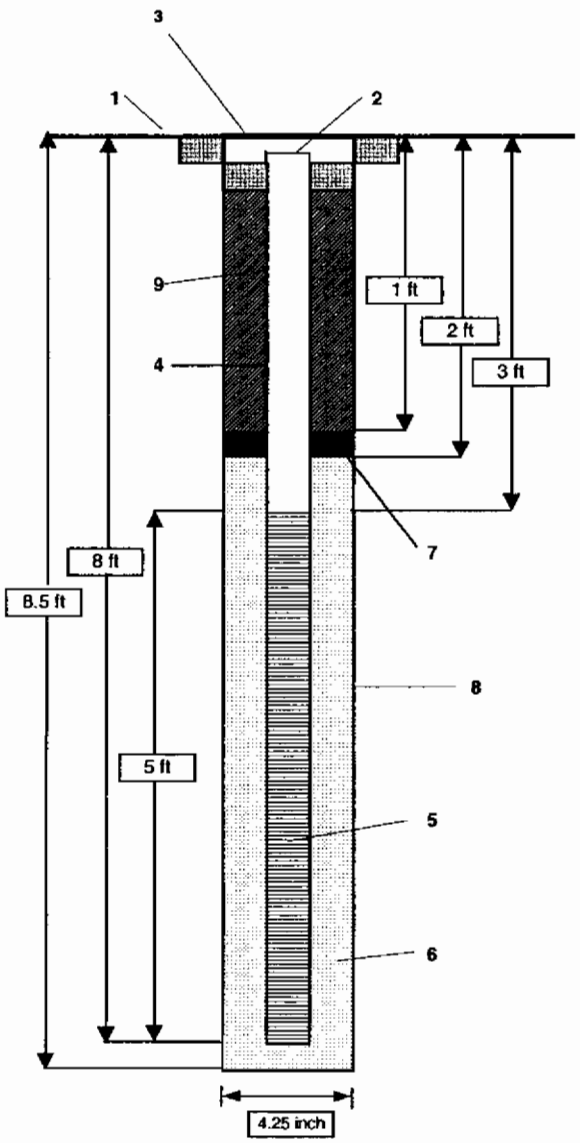

1- Ground elevation at well	not measured
2- Top of casing elevation	8.32'
3- Protective cover type	8-ich dia. flush mount manhole vault
a) concrete pad dimensions	2 ft x 2 ft
4- Dia./type of well casing	2-inch inside diameter schedule 40 PVC
5- Type/slot size of screen	0.010-inch dia. machine slotted PVC
6- Type filter pack	20/30 Sieve Size Silica Sand (2 bags)
7- Type of seal	3/8-inch bentonite chips, Baroid
8- Borehole diameter	4.25"
9- Grout	Portland Cement with 5% bentonite

Note: Diagram not to scale.

PROJECT NUMBER	WELL NUMBER	
158814.ZE	E701GW05D	SHEET 1 OF 1

CH2MHILL

WELL COMPLETION DIAGRAM

PROJECT : AOC 701, Zone E, Charleston Naval Complex — LOCATION : Charleston, South Carolina

DRILLING CONTRACTOR : Prosonic Corporation License # 1435 — NORTHING 376056.9

DRILLING METHOD AND EQUIPMENT USED : Hollow Stem Augering (4.25-inch diameter) — EASTING: 2316133.3

WATER LEVELS : not measured — START : 6/20/2002 — END: 6/20/2002 — LOGGER : D. Gates/NVR

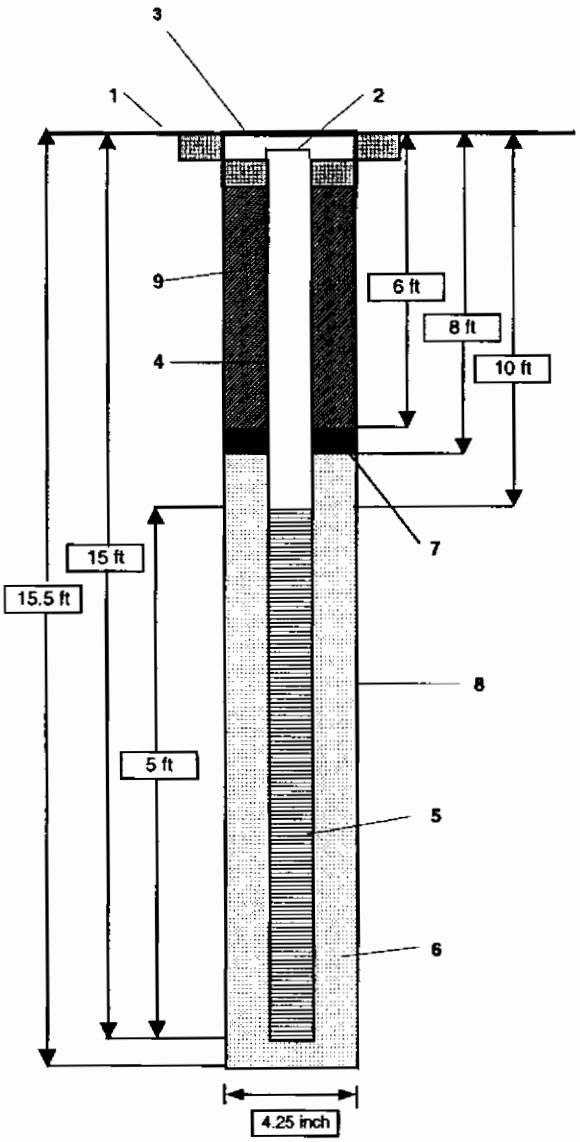

1- Ground elevation at well	not measured
2- Top of casing elevation	8.17'
3- Protective cover type	8-ich dia. flush mount manhole vault
a) concrete pad dimensions	2 ft x 2 ft
4- Dia./type of well casing	2-inch inside diameter schedule 40 PVC
5- Type/slot size of screen	0.010-inch dia. machine slotted PVC
6- Type filter pack	20/30 Sieve Size Silica Sand (2.5 bags)
7- Type of seal	3/8-inch bentonite chips, Baroid
8- Borehole diameter	4.25"
9- Grout	Portland Cement with 5% bentonite

Note: Diagram not to scale.

PROJECT NUMBER	WELL NUMBER	
158814.ZE	E701GW006	SHEET 1 OF 1

CH2MHILL

WELL COMPLETION DIAGRAM

PROJECT : AOC 701, Zone E, Charleston Naval Complex — LOCATION : Charleston, South Carolina

DRILLING CONTRACTOR : Prosonic Corporation License # 1435 — NORTHING 376023.3

DRILLING METHOD AND EQUIPMENT USED : Hollow Stem Augering (4.25-inch diameter) — EASTING: 2316177

WATER LEVELS : not measured — START : 6/26/2002 — END: 6/26/2002 — LOGGER : D. Gates/NVR

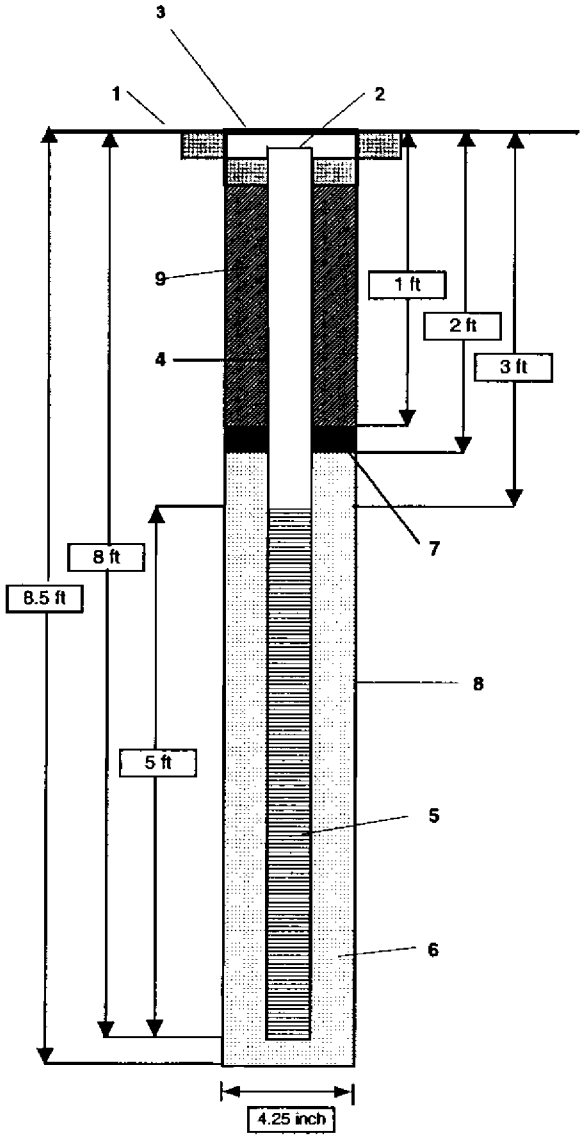

1- Ground elevation at well	not measured
2- Top of casing elevation	7.82'
3- Protective cover type	8-ich dia. flush mount manhole vault
a) concrete pad dimensions	2 ft x 2 ft
4- Dia./type of well casing	2-inch inside diameter schedule 40 PVC
5- Type/slot size of screen	0.010-inch dia. machine slotted PVC
6- Type filter pack	20/30 Sieve Size Silica Sand (2 bags)
7- Type of seal	3/8-inch bentonite chips, Baroid
8- Borehole diameter	4.25"
9- Grout	Portland Cement with 5% bentonite

Note: Diagram not to scale.

PROJECT NUMBER	WELL NUMBER	
158814.ZE	E701GW06D	SHEET 1 OF 1

CH2MHILL

WELL COMPLETION DIAGRAM

PROJECT : AOC 701, Zone E, Charleston Naval Complex — LOCATION : Charleston, South Carolina

DRILLING CONTRACTOR : Prosonic Corporation License # 1435 — NORTHING 376021.6

DRILLING METHOD AND EQUIPMENT USED : Hollow Stem Augering (4.25-inch diameter) — EASTING: 2316173.9

WATER LEVELS : not measured — START : 6/26/2002 — END: 6/26/2002 — LOGGER : D. Gates/NVR

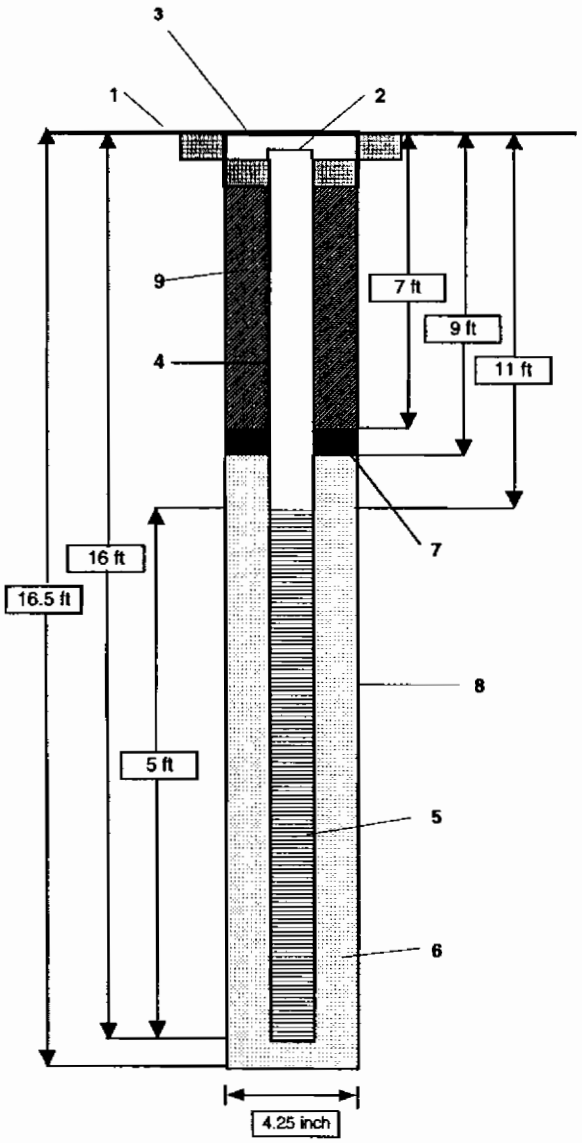

1- Ground elevation at well	not measured
2- Top of casing elevation	7.6'
3- Protective cover type	8-ich dia. flush mount manhole vault
a) concrete pad dimensions	2 ft x 2 ft
4- Dia./type of well casing	2-inch inside diameter schedule 40 PVC
5- Type/slot size of screen	0.010-inch dia. machine slotted PVC
6- Type filter pack	20/30 Sieve Size Silica Sand (2.5 bags)
7- Type of seal	3/8-inch bentonite chips, Baroid
8- Borehole diameter	4.25"
9- Grout	Portland Cement with 5% bentonite

Note: Diagram not to scale.

PROJECT NUMBER	WELL NUMBER	
158814.ZE	E701PZ001	SHEET 1 OF 1

CH2MHILL

WELL COMPLETION DIAGRAM

PROJECT : AOC 701, Zone E, Charleston Naval Complex — LOCATION : Charleston, South Carolina

DRILLING CONTRACTOR : Prosonic Corporation License # 1435 — NORTHING 376165.4

DRILLING METHOD AND EQUIPMENT USED : Hollow Stem Augering (3.25-inch diameter) — EASTING: 2316018.8

WATER LEVELS : not measured — START : 6/27/2002 — END: 6/27/2002 — LOGGER : D. Gates/NVR

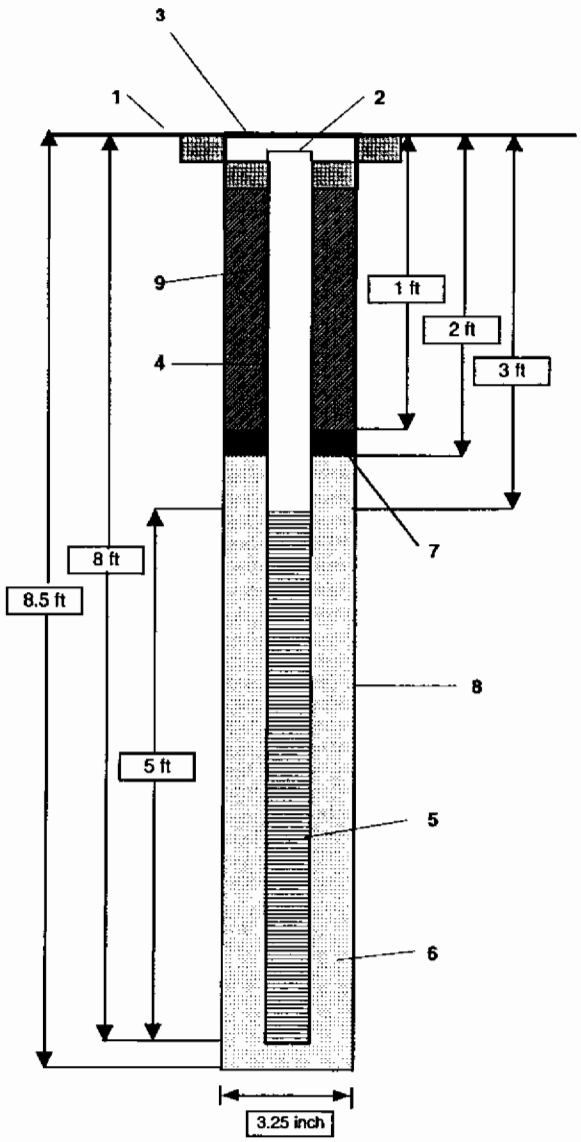

1- Ground elevation at well	not measured
2- Top of casing elevation	7.7'
3- Protective cover type	8-ich dia. flush mount manhole vault
a) concrete pad dimensions	2 ft x 2 ft
4- Dia./type of well casing	1-inch inside diameter schedule 40 PVC
5- Type/slot size of screen	0.010-inch dia. machine slotted PVC
6- Type filter pack	20/30 Sieve Size Silica Sand (2 bags)
7- Type of seal	3/8-inch bentonite chips, Baroid
8- Borehole diameter	3.25"
9- Grout	Portland Cement with 5% bentonite

Note: Diagram not to scale.

PROJECT NUMBER	WELL NUMBER	
158814.ZE	E701PZ002	SHEET 1 OF 1

CH2MHILL

WELL COMPLETION DIAGRAM

PROJECT : AOC 701, Zone E, Charleston Naval Complex — LOCATION : Charleston, South Carolina

DRILLING CONTRACTOR : Prosonic Corporation License # 1435 — NORTHING 376160.3

DRILLING METHOD AND EQUIPMENT USED : Hollow Stem Augering (3.25-inch diameter) — EASTING: 2316187.7

WATER LEVELS : not measured — START : 6/27/2002 — END: 6/27/2002 — LOGGER : D. Gates/NVR

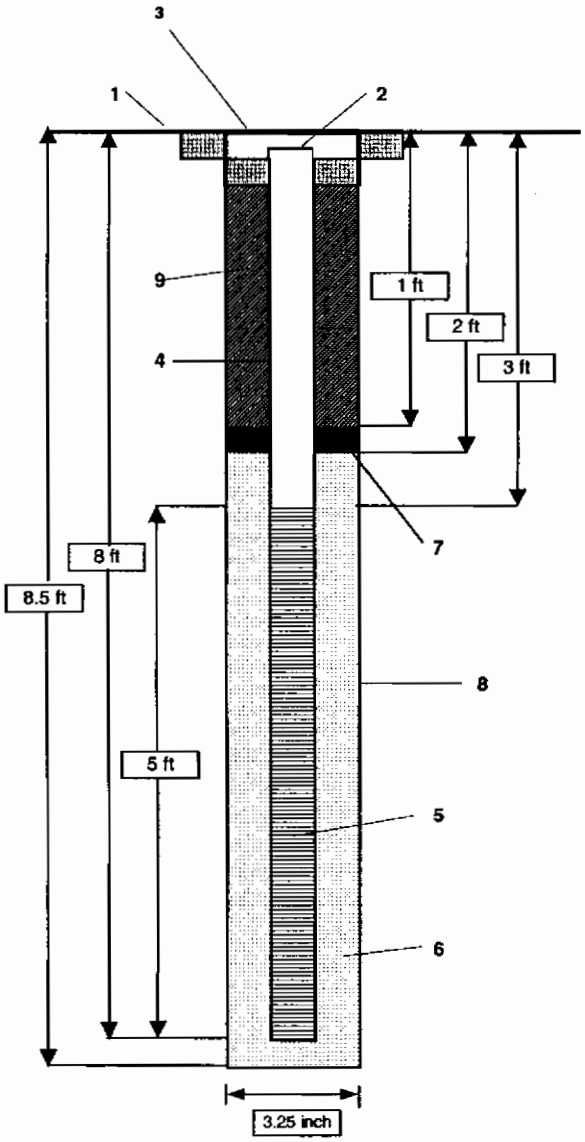

1- Ground elevation at well	not measured
2- Top of casing elevation	8.16'
3- Protective cover type	8-ich dia. flush mount manhole vault
a) concrete pad dimensions	2 ft x 2 ft
4- Dia./type of well casing	1-inch inside diameter schedule 40 PVC
5- Type/slot size of screen	0.010-inch dia. machine slotted PVC
6- Type filter pack	20/30 Sieve Size Silica Sand (2 bags)
7- Type of seal	3/8-inch bentonite chips, Baroid
8- Borehole diameter	3.25"
9- Grout	Portland Cement with 5% bentonite

Note: Diagram not to scale.

PROJECT NUMBER	WELL NUMBER	
158814.ZE	E701PZ003	SHEET 1 OF 1

CH2MHILL

WELL COMPLETION DIAGRAM

PROJECT : AOC 701, Zone E, Charleston Naval Complex — LOCATION : Charleston, South Carolina

DRILLING CONTRACTOR : Prosonic Corporation License # 1435 — NORTHING 376016.9

DRILLING METHOD AND EQUIPMENT USED : Hollow Stem Augering (3.25-inch diameter) — EASTING: 2316025.5

WATER LEVELS : not measured — START : 6/27/2002 — END: 6/27/2002 — LOGGER : D. Gates/NVR

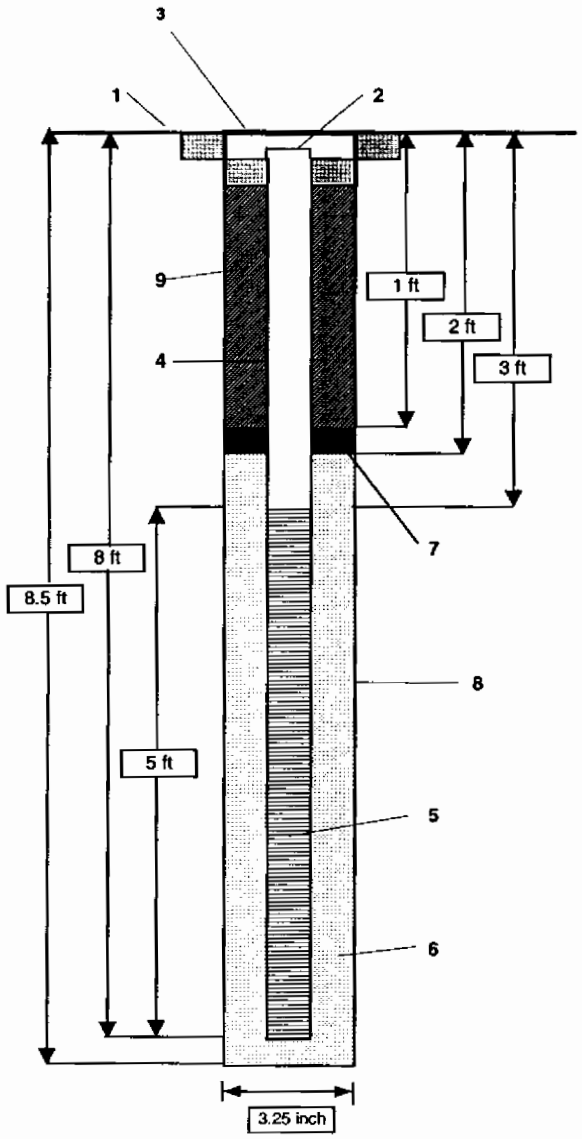

1- Ground elevation at well	not measured
2- Top of casing elevation	7.01'
3- Protective cover type	8-ich dia. flush mount manhole vault
a) concrete pad dimensions	2 ft x 2 ft
4- Dia./type of well casing	1-inch inside diameter schedule 40 PVC
5- Type/slot size of screen	0.010-inch dia. machine slotted PVC
6- Type filter pack	20/30 Sieve Size Silica Sand (2 bags)
7- Type of seal	3/8-inch bentonite chips, Baroid
8- Borehole diameter	3.25"
9- Grout	Portland Cement with 5% bentonite

Note: Diagram not to scale.

PROJECT NUMBER	WELL NUMBER	
158814.ZE	E701PZ004	SHEET 1 OF 1

CH2MHILL

WELL COMPLETION DIAGRAM

PROJECT : AOC 701, Zone E, Charleston Naval Complex	LOCATION : Charleston, South Carolina
DRILLING CONTRACTOR : Prosonic Corporation License # 1435	NORTHING 375910.9
DRILLING METHOD AND EQUIPMENT USED : Hollow Stem Augering (3.25-inch diameter)	EASTING: 2316074.0
WATER LEVELS : not measured START : 6/27/2002 END: 6/27/2002	LOGGER : D. Gates/NVR

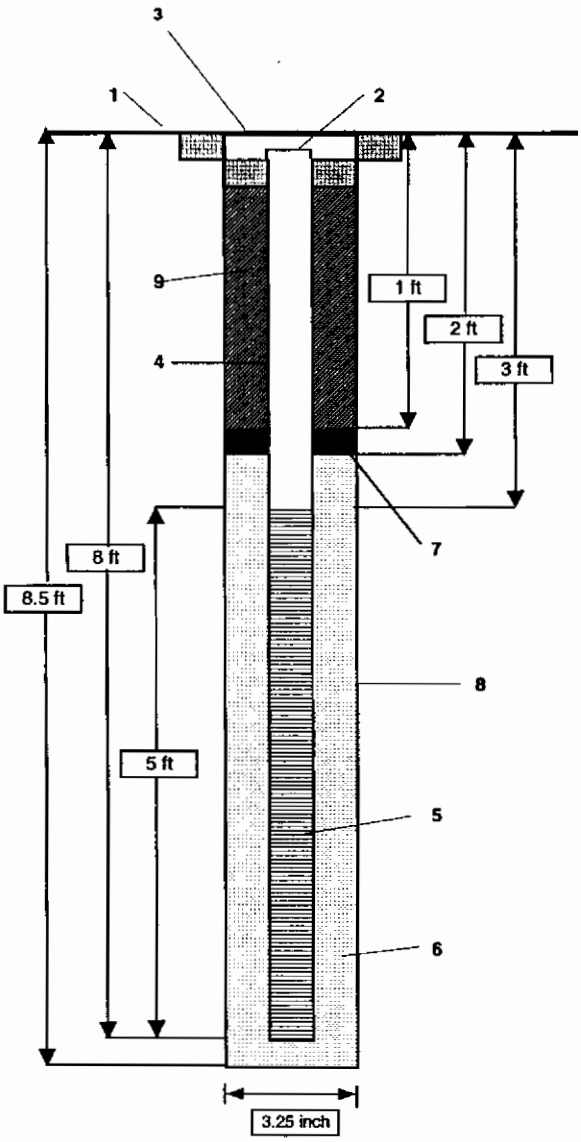

1- Ground elevation at well	not measured
2- Top of casing elevation	7.48'
3- Protective cover type	8-ich dia. flush mount manhole vault
a) concrete pad dimensions	2 ft x 2 ft
4- Dia./type of well casing	1-inch inside diameter schedule 40 PVC
5- Type/slot size of screen	0.010-inch dia. machine slotted PVC
6- Type filter pack	20/30 Sieve Size Silica Sand (2 bags)
7- Type of seal	3/8-inch bentonite chips, Baroid
8- Borehole diameter	3.25"
9- Grout	Portland Cement with 5% bentonite

Note: Diagram not to scale.

Appendix E

Appendix E-1

Volatile Organic Compound Analytical Results for Surface Soils

RFI Report Addendum, AOC 701, Zone E, Charleston Naval Complex

	StationID	E701SB001		E701SB002		E701SB003		E701SB004	
	SampleID	701SB00101 (0-1ft)		701SB00201 (0-1ft)		701SB00301 (0-1ft)		701SB00401 (0-1ft)	
	DateCollected	07/01/2002		07/01/2002		07/01/2002		07/01/2002	
	DateExtracted	07/09/2002		07/09/2002		07/09/2002		07/09/2002	
	DateAnalyzed	07/09/2002		07/09/2002		07/09/2002		07/09/2002	
	SDGNumber	CNC126		CNC126		CNC126		CNC126	
Parameter	**Units**								
Chloromethane	ug/kg	11	U	13	U	12	U	13	U
Vinyl chloride	ug/kg	11	U	13	U	12	U	13	U
Bromomethane	ug/kg	11	U	13	U	12	U	13	U
Chloroethane	ug/kg	11	U	13	U	12	U	13	U
1,1-Dichloroethene	ug/kg	5.6	U	6.4	U	6	U	6.4	U
Acetone	ug/kg	11	UJ	13	UJ	12	UJ	13	UJ
Carbon Disulfide	ug/kg	5.6	UJ	6.4	UJ	6	UJ	6.4	UJ
Methylene Chloride	ug/kg	5.6	UJ	6.4	UJ	6	UJ	6.4	UJ
trans-1,2-Dichloroethene	ug/kg	5.6	U	6.4	U	6	U	6.4	U
1,1-Dichloroethane	ug/kg	5.6	U	6.4	U	6	U	6.4	U
Vinyl acetate	ug/kg	11	UJ	13	UJ	12	UJ	13	UJ
Methyl ethyl ketone (2-Butanone)	ug/kg	11	U	13	U	12	U	13	U
cis-1,2-Dichloroethylene	ug/kg	5.6	U	6.4	U	6	U	6.4	U
1,2-Dichloroethene (total)	ug/kg	5.6	U	6.4	U	6	U	6.4	U
Chloroform	ug/kg	5.6	U	6.4	U	6	U	6.4	U
1,1,1-Trichloroethane	ug/kg	5.6	U	6.4	U	6	U	6.4	U
Carbon Tetrachloride	ug/kg	5.6	U	6.4	U	6	U	6.4	U
1,2-Dichloroethane	ug/kg	5.6	U	6.4	U	6	U	6.4	U
Benzene	ug/kg	5.6	U	6.4	U	6	U	6.4	U
Trichloroethylene (TCE)	ug/kg	5.6	U	6.4	U	6	U	6.4	U
1,2-Dichloropropane	ug/kg	5.6	U	6.4	U	6	U	6.4	U
Bromodichloromethane	ug/kg	5.6	U	6.4	U	6	U	6.4	U
2-Chloroethyl vinyl ether	ug/kg	11	UJ	13	UJ	12	UJ	13	UJ
cis-1,3-Dichloropropene	ug/kg	5.6	U	6.4	U	6	U	6.4	U
Methyl isobutyl ketone (4-Methyl-2-pentanone)	ug/kg	11	U	13	U	12	U	13	U
Toluene	ug/kg	5.6	U	6.4	U	6	U	6.4	U
trans-1,3-Dichloropropene	ug/kg	5.6	U	6.4	U	6	U	6.4	U
1,1,2-Trichloroethane	ug/kg	5.6	U	6.4	U	6	U	6.4	U
2-Hexanone	ug/kg	11	U	13	U	12	U	13	U
Tetrachloroethylene (PCE)	ug/kg	5.6	U	6.4	U	6	U	6.4	U
Dibromochloromethane	ug/kg	5.6	U	6.4	U	6	U	6.4	U
Chlorobenzene	ug/kg	5.6	U	6.4	U	6	U	6.4	U
Ethylbenzene	ug/kg	5.6	U	6.4	U	6	U	6.4	U

Appendix E-1
Volatile Organic Compound Analytical Results for Surface Soils
RFI Report Addendum, AOC 701, Zone E, Charleston Naval Complex

	StationID	E701SB001		E701SB002		E701SB003		E701SB004	
	SampleID	701SB00101 (0-1ft)		701SB00201 (0-1ft)		701SB00301 (0-1ft)		701SB00401 (0-1ft)	
	DateCollected	07/01/2002		07/01/2002		07/01/2002		07/01/2002	
	DateExtracted	07/09/2002		07/09/2002		07/09/2002		07/09/2002	
	DateAnalyzed	07/09/2002		07/09/2002		07/09/2002		07/09/2002	
	SDGNumber	CNC126		CNC126		CNC126		CNC126	
Parameter	**Units**								
m+p Xylene	ug/kg	5.6	U	6.4	U	6	U	6.4	U
o-Xylene	ug/kg	5.6	U	6.4	U	6	U	6.4	U
Xylenes, Total	ug/kg	5.6	U	6.4	U	6	U	6.4	U
Styrene	ug/kg	5.6	U	6.4	U	6	U	6.4	U
Bromoform	ug/kg	5.6	U	6.4	U	6	U	6.4	U
1,1,2,2-Tetrachloroethane	ug/kg	5.6	U	6.4	U	6	U	6.4	U
1,3-Dichlorobenzene	ug/kg	5.6	U	6.4	U	6	U	6.4	U
1,4-Dichlorobenzene	ug/kg	5.6	U	6.4	U	6	U	6.4	U
1,2-Dichlorobenzene	ug/kg	5.6	U	6.4	U	6	U	6.4	U
1,2,4-Trichlorobenzene	ug/kg	5.6	U	6.4	U	6	U	6.4	U
1,2,3-Trichlorobenzene	ug/kg	5.6	U	6.4	U	6	U	6.4	U

Notes:
U indicates that the consitutent was not detected. The method detection limit is reported.
UJ indicates that the consitutent was not detected. The reported method detection limit is estimated.

Appendix E-1
Volatile Organic Compound Analytical Results for Surface Soil
RFI Report Addendum, AOC 701, Zone E, Charleston Naval Center

	StationID	E701SB005		E701SB006		E701SB007		E701SB008	
	SampleID	701SB00501 (0-1ft)		701SB00601 (0-1ft)		701SB00701 (0-1ft)		701SB00801 (0-1ft)	
	DateCollected	07/01/2002		07/01/2002		07/01/2002		07/01/2002	
	DateExtracted	07/09/2002		07/09/2002		07/09/2002		07/10/2002	
	DateAnalyzed	07/09/2002		07/09/2002		07/09/2002		07/10/2002	
	SDGNumber	CNC126		CNC126		CNC126		CNC126	
Parameter	**Units**								
Chloromethane	ug/kg	13	U	13	U	13	U	13	U
Vinyl chloride	ug/kg	13	U	13	U	13	U	13	U
Bromomethane	ug/kg	13	U	13	U	13	U	13	U
Chloroethane	ug/kg	13	U	13	U	13	U	13	U
1,1-Dichloroethene	ug/kg	6.6	U	6.5	U	6.3	U	6.4	U
Acetone	ug/kg	13	UJ	13	UJ	13	UJ	13	UJ
Carbon Disulfide	ug/kg	6.6	UJ	6.5	UJ	6.3	UJ	6.4	UJ
Methylene Chloride	ug/kg	6.6	UJ	6.5	UJ	6.3	U	6.4	U
trans-1,2-Dichloroethene	ug/kg	6.6	U	6.5	U	6.3	U	6.4	U
1,1-Dichloroethane	ug/kg	6.6	U	6.5	U	6.3	U	6.4	U
Vinyl acetate	ug/kg	13	UJ	13	UJ	13	UJ	13	UJ
Methyl ethyl ketone (2-Butanone)	ug/kg	13	U	13	U	13	U	13	U
cis-1,2-Dichloroethylene	ug/kg	6.6	U	6.5	U	6.3	U	6.4	U
1,2-Dichloroethene (total)	ug/kg	6.6	U	6.5	U	6.3	U	6.4	U
Chloroform	ug/kg	6.6	U	6.5	U	6.3	U	6.4	U
1,1,1-Trichloroethane	ug/kg	6.6	U	6.5	U	6.3	U	6.4	U
Carbon Tetrachloride	ug/kg	6.6	U	6.5	U	6.3	U	6.4	U
1,2-Dichloroethane	ug/kg	6.6	U	6.5	U	6.3	U	6.4	U
Benzene	ug/kg	6.6	U	6.5	U	6.3	U	6.4	U
Trichloroethylene (TCE)	ug/kg	6.6	U	6.5	U	6.3	U	6.4	U
1,2-Dichloropropane	ug/kg	6.6	U	6.5	U	6.3	U	6.4	U
Bromodichloromethane	ug/kg	6.6	U	6.5	U	6.3	U	6.4	U
2-Chloroethyl vinyl ether	ug/kg	13	UJ	13	UJ	13	U	13	U
cis-1,3-Dichloropropene	ug/kg	6.6	U	6.5	U	6.3	U	6.4	U
Methyl isobutyl ketone (4-Methyl-2-pentanone)	ug/kg	13	U	13	U	13	U	13	U
Toluene	ug/kg	6.6	U	6.5	U	6.3	U	6.4	U
trans-1,3-Dichloropropene	ug/kg	6.6	U	6.5	U	6.3	U	6.4	U
1,1,2-Trichloroethane	ug/kg	6.6	U	6.5	U	6.3	U	6.4	U
2-Hexanone	ug/kg	13	U	13	U	13	U	13	U
Tetrachloroethylene (PCE)	ug/kg	6.6	U	6.5	U	6.3	U	6.4	U
Dibromochloromethane	ug/kg	6.6	U	6.5	U	6.3	U	6.4	U
Chlorobenzene	ug/kg	6.6	U	6.5	U	6.3	U	6.4	U
Ethylbenzene	ug/kg	6.6	U	6.5	U	6.3	U	6.4	U

Appendix E-1
Volatile Organic Compound Analytical Results for Surface So
RFI Report Addendum, AOC 701, Zone E, Charleston Naval Com

	StationID	E701SB005		E701SB006		E701SB007		E701SB008	
	SampleID	701SB00501 (0-1ft)		701SB00601 (0-1ft)		701SB00701 (0-1ft)		701SB00801 (0-1ft)	
	DateCollected	07/01/2002		07/01/2002		07/01/2002		07/01/2002	
	DateExtracted	07/09/2002		07/09/2002		07/09/2002		07/10/2002	
	DateAnalyzed	07/09/2002		07/09/2002		07/09/2002		07/10/2002	
	SDGNumber	CNC126		CNC126		CNC126		CNC126	
Parameter	**Units**								
m+p Xylene	ug/kg	6.6	U	6.5	U	6.3	U	6.4	U
o-Xylene	ug/kg	6.6	U	6.5	U	6.3	U	6.4	U
Xylenes, Total	ug/kg	6.6	U	6.5	U	6.3	U	6.4	U
Styrene	ug/kg	6.6	U	6.5	U	6.3	U	6.4	U
Bromoform	ug/kg	6.6	U	6.5	U	6.3	U	6.4	U
1,1,2,2-Tetrachloroethane	ug/kg	6.6	U	6.5	U	6.3	U	6.4	U
1,3-Dichlorobenzene	ug/kg	6.6	U	6.5	U	6.3	U	6.4	U
1,4-Dichlorobenzene	ug/kg	6.6	U	6.5	U	6.3	U	6.4	U
1,2-Dichlorobenzene	ug/kg	6.6	U	2.6	J	6.3	U	6.4	U
1,2,4-Trichlorobenzene	ug/kg	6.6	U	6.5	U	6.3	U	6.4	U
1,2,3-Trichlorobenzene	ug/kg	6.6	U	6.5	U	6.3	UJ	6.4	UJ

Notes:
U indicates that the consitutent was not detected. The method de
UJ indicates that the consitutent was not detected. The reported r

Ap dix E-1

Vo..le Organic Compound Analytical Results for Surface So

RFI Report Addendum, AOC 701, Zone E, Charleston Naval Com

	StationID	E701SB009		E701SB010	
	SampleID	701SB00901 (0-1ft)		701SB01001 (0-1ft)	
	DateCollected	07/01/2002		07/01/2002	
	DateExtracted	07/10/2002		07/10/2002	
	DateAnalyzed	07/10/2002		07/10/2002	
	SDGNumber	CNC126		CNC126	
Parameter	**Units**				
Chloromethane	ug/kg	12	U	12	U
Vinyl chloride	ug/kg	12	U	12	U
Bromomethane	ug/kg	12	U	12	U
Chloroethane	ug/kg	12	U	12	U
1,1-Dichloroethene	ug/kg	6.2	U	6.2	U
Acetone	ug/kg	12	UJ	12	UJ
Carbon Disulfide	ug/kg	6.2	UJ	6.2	UJ
Methylene Chloride	ug/kg	6.2	U	6.2	U
trans-1,2-Dichloroethene	ug/kg	6.2	U	6.2	U
1,1-Dichloroethane	ug/kg	6.2	U	6.2	U
Vinyl acetate	ug/kg	12	UJ	12	UJ
Methyl ethyl ketone (2-Butanone)	ug/kg	12	U	12	U
cis-1,2-Dichloroethylene	ug/kg	6.2	U	6.2	U
1,2-Dichloroethene (total)	ug/kg	6.2	U	6.2	U
Chloroform	ug/kg	6.2	U	6.2	U
1,1,1-Trichloroethane	ug/kg	6.2	U	6.2	U
Carbon Tetrachloride	ug/kg	6.2	U	6.2	U
1,2-Dichloroethane	ug/kg	6.2	U	6.2	U
Benzene	ug/kg	6.2	U	6.2	U
Trichloroethylene (TCE)	ug/kg	6.2	U	6.2	U
1,2-Dichloropropane	ug/kg	6.2	U	6.2	U
Bromodichloromethane	ug/kg	6.2	U	6.2	U
2-Chloroethyl vinyl ether	ug/kg	12	U	12	U
cis-1,3-Dichloropropene	ug/kg	6.2	U	6.2	U
Methyl isobutyl ketone (4-Methyl-2-pentanone)	ug/kg	12	U	12	U
Toluene	ug/kg	6.2	U	6.2	U
trans-1,3-Dichloropropene	ug/kg	6.2	U	6.2	U
1,1,2-Trichloroethane	ug/kg	6.2	U	6.2	U
2-Hexanone	ug/kg	12	U	12	U
Tetrachloroethylene (PCE)	ug/kg	6.2	U	6.2	U
Dibromochloromethane	ug/kg	6.2	U	6.2	U
Chlorobenzene	ug/kg	6.2	U	6.2	U
Ethylbenzene	ug/kg	6.2	U	6.2	U

Appendix E-1
Volatile Organic Compound Analytical Results for Surface So
RFI Report Addendum, AOC 701, Zone E, Charleston Naval Com

	StationID	E701SB009		E701SB010	
	SampleID	701SB00901 (0-1ft)		701SB01001 (0-1ft)	
	DateCollected	07/01/2002		07/01/2002	
	DateExtracted	07/10/2002		07/10/2002	
	DateAnalyzed	07/10/2002		07/10/2002	
	SDGNumber	CNC126		CNC126	
Parameter	**Units**				
m+p Xylene	ug/kg	6.2	U	6.2	U
o-Xylene	ug/kg	6.2	U	6.2	U
Xylenes, Total	ug/kg	6.2	U	6.2	U
Styrene	ug/kg	6.2	U	6.2	U
Bromoform	ug/kg	6.2	U	6.2	U
1,1,2,2-Tetrachloroethane	ug/kg	6.2	U	6.2	U
1,3-Dichlorobenzene	ug/kg	6.2	U	6.2	U
1,4-Dichlorobenzene	ug/kg	6.2	U	6.2	U
1,2-Dichlorobenzene	ug/kg	6.2	U	6.2	U
1,2,4-Trichlorobenzene	ug/kg	6.2	U	6.2	U
1,2,3-Trichlorobenzene	ug/kg	6.2	UJ	6.2	UJ

Notes:
U indicates that the consitutent was not detected. The method de
UJ indicates that the consitutent was not detected. The reported r

A dix E-1

Semi-volatile Organic Compound Analytical Results for Surface Soils

RFI Report Addendum, AOC 701, Zone E, Charleston Naval Complex

	StationID	E701SB001		E701SB002		E701SB003		E701SB003	
	SampleID	701SB00101 (0-1ft)		701SB00201 (0-1ft)		701SB00301 (0-1ft)		701SB00301RE (0-1ft)	
	DateCollected	07/01/2002		07/01/2002		07/01/2002		07/01/2002	
	DateExtracted	07/12/2002		07/12/2002		07/12/2002		07/12/2002	
	DateAnalyzed	07/16/2002		07/16/2002		07/15/2002		07/15/2002	
	SDGNumber	CNC126		CNC126		CNC126		CNC126	
Parameter	**Units**								
N-Nitrosodiphenylamine	ug/kg	1800	U	370	U	350	U	350	R
Phenol	ug/kg	1800	U	370	U	350	U	350	R
bis(2-Chloroethyl) ether (2-Chloroethyl Ether)	ug/kg	1800	U	370	U	350	U	350	R
Bis(2-Chloroisopropyl)Ether	ug/kg	1800	U	370	U	350	U	350	R
2-Chlorophenol	ug/kg	1800	U	370	U	350	U	350	R
Benzyl alcohol	ug/kg	1800	U	370	U	350	U	350	R
2-Methylphenol (o-Cresol)	ug/kg	1800	U	370	U	350	U	350	R
N-Nitrosodi-n-propylamine	ug/kg	1800	U	370	U	350	U	350	R
3-Methylphenol/4-Methylphenol (mp-Cresol)	ug/kg	1800	U	370	U	350	U	350	R
Hexachloroethane	ug/kg	1800	U	370	U	350	U	350	R
Nitrobenzene	ug/kg	1800	U	370	U	350	UJ	350	R
Isophorone	ug/kg	1800	U	370	U	350	UJ	350	R
2-Nitrophenol	ug/kg	1800	U	370	U	350	UJ	350	R
2,4-Dimethylphenol	ug/kg	1800	U	370	U	350	UJ	350	R
bis(2-Chloroethoxy) Methane	ug/kg	1800	U	370	U	350	UJ	350	R
2,4-Dichlorophenol	ug/kg	1800	U	370	U	350	UJ	350	R
Benzoic acid	ug/kg	8500	U	1800	U	1700	UJ	1700	R
Naphthalene	ug/kg	1800	U	370	U	350	UJ	350	R
4-Chloroaniline	ug/kg	1800	U	370	U	350	UJ	350	R
Hexachlorobutadiene	ug/kg	1800	U	370	U	350	UJ	350	R
4-Chloro-3-methylphenol	ug/kg	1800	U	370	U	350	UJ	350	R
2-Methylnaphthalene	ug/kg	1800	U	370	U	350	UJ	350	R
Hexachlorocyclopentadiene	ug/kg	1800	U	370	U	350	U	350	R
2,4,6-Trichlorophenol	ug/kg	1800	U	370	U	350	U	350	R
2,4,5-Trichlorophenol	ug/kg	8500	U	1800	U	1700	U	1700	R
2-Chloronaphthalene	ug/kg	1800	U	370	U	350	U	350	R
2-Nitroaniline	ug/kg	8500	U	1800	U	1700	U	1700	R
3-Nitroaniline	ug/kg	8500	U	1800	U	1700	U	1700	R
Dimethyl Phthalate	ug/kg	1800	U	370	U	350	U	350	R
2,6-Dinitrotoluene	ug/kg	1800	U	370	U	350	U	350	R
Acenaphthylene	ug/kg	1800	U	370	U	350	U	350	R
Acenaphthene	ug/kg	1800	U	37	J	350	U	350	R
2,4-Dinitrophenol	ug/kg	8500	U	1800	U	1700	U	1700	R
Dibenzofuran	ug/kg	1800	U	370	U	350	U	350	R
2,4-Dinitrotoluene	ug/kg	1800	U	370	U	350	U	350	R
Diethyl Phthalate	ug/kg	1800	U	370	U	350	U	350	R

Appendix E-1
Semi-volatile Organic Compound Analytical Results for Surface Soils
RFI Report Addendum, AOC 701, Zone E, Charleston Naval Complex

	StationID	E701SB001		E701SB002		E701SB003		E701SB003	
	SampleID	701SB00101 (0-1ft)		701SB00201 (0-1ft)		701SB00301 (0-1ft)		701SB00301RE (0-1ft)	
	DateCollected	07/01/2002		07/01/2002		07/01/2002		07/01/2002	
	DateExtracted	07/12/2002		07/12/2002		07/12/2002		07/12/2002	
	DateAnalyzed	07/16/2002		07/16/2002		07/15/2002		07/15/2002	
	SDGNumber	CNC126		CNC126		CNC126		CNC126	
Parameter	**Units**								
4-Nitrophenol	ug/kg	8500	U	1800	U	1700	U	1700	R
Fluorene	ug/kg	1800	U	370	U	350	U	350	R
4-Chlorophenyl Phenyl Ether	ug/kg	1800	U	370	U	350	U	350	R
4,6-Dinitro-2-methylphenol	ug/kg	8500	U	1800	U	1700	U	1700	R
4-Nitroaniline	ug/kg	8500	U	1800	U	1700	U	1700	R
4-Bromophenyl Phenyl Ether	ug/kg	1800	U	370	U	350	U	350	R
Hexachlorobenzene	ug/kg	1800	U	370	U	350	U	350	R
Pentachlorophenol	ug/kg	8500	U	1800	U	1700	U	1700	R
Phenanthrene	ug/kg	1800	U	480	=	350	U	350	R
Anthracene	ug/kg	1800	U	98	J	350	U	350	R
Di-n-butyl Phthalate	ug/kg	1800	U	370	U	350	U	350	R
Fluoranthene	ug/kg	1800	U	680	=	350	U	350	R
Pyrene	ug/kg	1800	U	700	=	350	U	350	R
Benzyl Butyl Phthalate	ug/kg	1800	U	370	U	350	U	350	R
Benzo(a)Anthracene	ug/kg	1800	U	350	J	350	U	350	R
3,3'-Dichlorobenzidine	ug/kg	3500	U	740	U	690	U	690	R
Chrysene	ug/kg	1800	U	370	J	350	U	350	R
bis(2-Ethylhexyl) Phthalate	ug/kg	1800	U	370	U	350	U	350	R
Di-n-octylphthalate	ug/kg	1800	U	370	U	350	U	350	R
Benzo(b)Fluoranthene	ug/kg	1800	U	350	J	350	U	350	R
Benzo(k)Fluoranthene	ug/kg	1800	U	360	J	350	U	350	R
Benzo(a)Pyrene	ug/kg	1800	U	360	J	350	U	350	R
Indeno(1,2,3-c,d)pyrene	ug/kg	1800	U	240	J	350	U	350	R
Dibenz(a,h)anthracene	ug/kg	1800	U	110	J	350	U	350	R
Benzo(g,h,i)Perylene	ug/kg	1800	U	260	J	350	U	350	R
Carbazole	ug/kg	1800	U	61	J	350	U	350	R

Notes:
= indicates that the analyte was detected at the concentration reported.
J indicates an estimated value. One or more quality control (QC) parrameters were outside control limits or the value was detected at a concentration below the laboral
U indicates that the consitutent was not detected. The method detection limit is reported.
UJ indicates that the consitutent was not detected. The reported method detection limit is estimated.

Appendix E-1
Semi-volatile Organic Compound Analytical Results for Surface Sc
RFI Report Addendum, AOC 701, Zone E, Charleston Naval Complex

	StationID	E701SB004		E701SB005		E701SB006		E701SB007	
	SampleID	701SB00401 (0-1ft)		701SB00501 (0-1ft)		701SB00601 (0-1ft)		701SB00701 (0-1ft)	
	DateCollected	07/01/2002		07/01/2002		07/01/2002		07/01/2002	
	DateExtracted	07/12/2002		07/12/2002		07/12/2002		07/12/2002	
	DateAnalyzed	07/15/2002		07/16/2002		07/16/2002		07/16/2002	
	SDGNumber	CNC126		CNC126		CNC126		CNC126	
Parameter	**Units**								
N-Nitrosodiphenylamine	ug/kg	340	U	360	U	370	U	360	U
Phenol	ug/kg	340	U	360	U	370	U	360	U
bis(2-Chloroethyl) ether (2-Chloroethyl Ether)	ug/kg	340	U	360	U	370	U	360	U
Bis(2-Chloroisopropyl)Ether	ug/kg	340	U	360	U	370	U	360	U
2-Chlorophenol	ug/kg	340	U	360	U	370	U	360	U
Benzyl alcohol	ug/kg	340	U	360	U	370	U	360	U
2-Methylphenol (o-Cresol)	ug/kg	340	U	360	U	370	U	360	U
N-Nitrosodi-n-propylamine	ug/kg	340	U	360	U	370	U	360	U
3-Methylphenol/4-Methylphenol (mp-Cresol)	ug/kg	340	U	360	U	370	U	360	U
Hexachloroethane	ug/kg	340	U	360	U	370	U	360	U
Nitrobenzene	ug/kg	340	U	360	U	370	U	360	U
Isophorone	ug/kg	340	U	360	U	370	U	360	U
2-Nitrophenol	ug/kg	340	U	360	U	370	U	360	U
2,4-Dimethylphenol	ug/kg	340	U	360	U	370	U	360	U
bis(2-Chloroethoxy) Methane	ug/kg	340	U	360	U	370	U	360	U
2,4-Dichlorophenol	ug/kg	340	U	360	U	370	U	360	U
Benzoic acid	ug/kg	1600	U	1700	U	1800	U	1700	U
Naphthalene	ug/kg	340	U	360	U	370	U	360	U
4-Chloroaniline	ug/kg	340	U	360	U	370	U	360	U
Hexachlorobutadiene	ug/kg	340	U	360	U	370	U	360	U
4-Chloro-3-methylphenol	ug/kg	340	U	360	U	370	U	360	U
2-Methylnaphthalene	ug/kg	340	U	360	U	370	U	360	U
Hexachlorocyclopentadiene	ug/kg	340	U	360	U	370	U	360	U
2,4,6-Trichlorophenol	ug/kg	340	U	360	U	370	U	360	U
2,4,5-Trichlorophenol	ug/kg	1600	U	1700	U	1800	U	1700	U
2-Chloronaphthalene	ug/kg	340	U	360	U	370	U	360	U
2-Nitroaniline	ug/kg	1600	U	1700	U	1800	U	1700	U
3-Nitroaniline	ug/kg	1600	U	1700	U	1800	U	1700	U
Dimethyl Phthalate	ug/kg	340	U	360	U	370	U	360	U
2,6-Dinitrotoluene	ug/kg	340	U	360	U	370	U	360	U
Acenaphthylene	ug/kg	340	U	360	U	370	U	360	U
Acenaphthene	ug/kg	340	U	360	U	370	U	360	U
2,4-Dinitrophenol	ug/kg	1600	U	1700	U	1800	U	1700	U
Dibenzofuran	ug/kg	340	U	360	U	370	U	360	U
2,4-Dinitrotoluene	ug/kg	340	U	360	U	370	U	360	U
Diethyl Phthalate	ug/kg	340	U	360	U	370	U	360	U

Appendix E-1
Semi-volatile Organic Compound Analytical Results for Surface Sc
RFI Report Addendum, AOC 701, Zone E, Charleston Naval Complex

	StationID	E701SB004		E701SB005		E701SB006		E701SB007	
	SampleID	701SB00401 (0-1ft)		701SB00501 (0-1ft)		701SB00601 (0-1ft)		701SB00701 (0-1ft)	
	DateCollected	07/01/2002		07/01/2002		07/01/2002		07/01/2002	
	DateExtracted	07/12/2002		07/12/2002		07/12/2002		07/12/2002	
	DateAnalyzed	07/15/2002		07/16/2002		07/16/2002		07/16/2002	
	SDGNumber	CNC126		CNC126		CNC126		CNC126	
Parameter	**Units**								
4-Nitrophenol	ug/kg	1600	U	1700	U	1800	U	1700	U
Fluorene	ug/kg	340	U	360	U	370	U	360	U
4-Chlorophenyl Phenyl Ether	ug/kg	340	U	360	U	370	U	360	U
4,6-Dinitro-2-methylphenol	ug/kg	1600	U	1700	U	1800	U	1700	U
4-Nitroaniline	ug/kg	1600	U	1700	U	1800	U	1700	U
4-Bromophenyl Phenyl Ether	ug/kg	340	U	360	U	370	U	360	U
Hexachlorobenzene	ug/kg	340	U	360	U	370	U	360	U
Pentachlorophenol	ug/kg	1600	U	1700	U	1800	U	1700	U
Phenanthrene	ug/kg	340	U	360	U	36	J	360	U
Anthracene	ug/kg	340	U	360	U	370	U	360	U
Di-n-butyl Phthalate	ug/kg	340	U	360	U	370	U	360	U
Fluoranthene	ug/kg	340	U	360	U	370	U	360	U
Pyrene	ug/kg	340	U	360	U	370	U	360	U
Benzyl Butyl Phthalate	ug/kg	340	U	360	U	370	U	360	U
Benzo(a)Anthracene	ug/kg	340	U	360	U	370	U	360	U
3,3'-Dichlorobenzidine	ug/kg	680	U	720	U	740	U	720	U
Chrysene	ug/kg	340	U	360	U	54	J	360	U
bis(2-Ethylhexyl) Phthalate	ug/kg	340	U	360	U	370	U	360	U
Di-n-octylphthalate	ug/kg	340	U	360	U	370	U	360	U
Benzo(b)Fluoranthene	ug/kg	340	U	360	U	36	J	360	U
Benzo(k)Fluoranthene	ug/kg	340	U	360	U	370	U	360	U
Benzo(a)Pyrene	ug/kg	340	U	360	U	370	U	360	U
Indeno(1,2,3-c,d)pyrene	ug/kg	340	U	360	U	370	U	360	U
Dibenz(a,h)anthracene	ug/kg	340	U	360	U	370	U	360	U
Benzo(g,h,i)Perylene	ug/kg	340	U	360	U	370	U	360	U
Carbazole	ug/kg	340	U	360	U	370	U	360	U

Notes:
= indicates that the analyte was detected at the concentration reported.
J indicates an estimated value. One or more quality control (QC) parratory's quantitation limit
U indicates that the consitutent was not detected. The method detectio
UJ indicates that the consitutent was not detected. The reported methc

Appendix E-1
Semi-volatile Organic Compound Analytical Results for Surface Sc
RFI Report Addendum, AOC 701, Zone E, Charleston Naval Complex

	StationID	E701SB008		E701SB009		E701SB010	
	SampleID	701SB00801 (0-1ft)		701SB00901 (0-1ft)		701SB01001 (0-1ft)	
	DateCollected	07/01/2002		07/01/2002		07/01/2002	
	DateExtracted	07/12/2002		07/12/2002		07/12/2002	
	DateAnalyzed	07/16/2002		07/16/2002		07/16/2002	
	SDGNumber	CNC126		CNC126		CNC126	
Parameter	**Units**						
N-Nitrosodiphenylamine	ug/kg	350	U	360	U	360	U
Phenol	ug/kg	350	U	360	U	360	U
bis(2-Chloroethyl) ether (2-Chloroethyl Ether)	ug/kg	350	U	360	U	360	U
Bis(2-Chloroisopropyl)Ether	ug/kg	350	U	360	U	360	U
2-Chlorophenol	ug/kg	350	U	360	U	360	U
Benzyl alcohol	ug/kg	350	U	360	U	360	U
2-Methylphenol (o-Cresol)	ug/kg	350	U	360	U	360	U
N-Nitrosodi-n-propylamine	ug/kg	350	U	360	U	360	U
3-Methylphenol/4-Methylphenol (mp-Cresol)	ug/kg	350	U	360	U	360	U
Hexachloroethane	ug/kg	350	U	360	U	360	U
Nitrobenzene	ug/kg	350	U	360	U	360	U
Isophorone	ug/kg	350	U	360	U	360	U
2-Nitrophenol	ug/kg	350	U	360	U	360	U
2,4-Dimethylphenol	ug/kg	350	U	360	U	360	U
bis(2-Chloroethoxy) Methane	ug/kg	350	U	360	U	360	U
2,4-Dichlorophenol	ug/kg	350	U	360	U	360	U
Benzoic acid	ug/kg	1700	U	1800	U	1700	U
Naphthalene	ug/kg	350	U	360	U	360	U
4-Chloroaniline	ug/kg	350	U	360	U	360	U
Hexachlorobutadiene	ug/kg	350	U	360	U	360	U
4-Chloro-3-methylphenol	ug/kg	350	U	360	U	360	U
2-Methylnaphthalene	ug/kg	350	U	360	U	360	U
Hexachlorocyclopentadiene	ug/kg	350	U	360	U	360	U
2,4,6-Trichlorophenol	ug/kg	350	U	360	U	360	U
2,4,5-Trichlorophenol	ug/kg	1700	U	1800	U	1700	U
2-Chloronaphthalene	ug/kg	350	U	360	U	360	U
2-Nitroaniline	ug/kg	1700	U	1800	U	1700	U
3-Nitroaniline	ug/kg	1700	U	1800	U	1700	U
Dimethyl Phthalate	ug/kg	350	U	360	U	360	U
2,6-Dinitrotoluene	ug/kg	350	U	360	U	360	U
Acenaphthylene	ug/kg	350	U	360	U	360	U
Acenaphthene	ug/kg	350	U	360	U	360	U
2,4-Dinitrophenol	ug/kg	1700	U	1800	U	1700	U
Dibenzofuran	ug/kg	350	U	360	U	360	U
2,4-Dinitrotoluene	ug/kg	350	U	360	U	360	U
Diethyl Phthalate	ug/kg	350	U	360	U	360	U

Appendix E-1
Semi-volatile Organic Compound Analytical Results for Surface Sc
RFI Report Addendum, AOC 701, Zone E, Charleston Naval Complex

	StationID	E701SB008		E701SB009		E701SB010	
	SampleID	701SB00801 (0-1ft)		701SB00901 (0-1ft)		701SB01001 (0-1ft)	
	DateCollected	07/01/2002		07/01/2002		07/01/2002	
	DateExtracted	07/12/2002		07/12/2002		07/12/2002	
	DateAnalyzed	07/16/2002		07/16/2002		07/16/2002	
	SDGNumber	CNC126		CNC126		CNC126	
Parameter	**Units**						
4-Nitrophenol	ug/kg	1700	U	1800	U	1700	U
Fluorene	ug/kg	350	U	360	U	360	U
4-Chlorophenyl Phenyl Ether	ug/kg	350	U	360	U	360	U
4,6-Dinitro-2-methylphenol	ug/kg	1700	U	1800	U	1700	U
4-Nitroaniline	ug/kg	1700	U	1800	U	1700	U
4-Bromophenyl Phenyl Ether	ug/kg	350	U	360	U	360	U
Hexachlorobenzene	ug/kg	350	U	360	U	360	U
Pentachlorophenol	ug/kg	1700	U	1800	U	1700	U
Phenanthrene	ug/kg	350	U	360	U	360	U
Anthracene	ug/kg	350	U	360	U	360	U
Di-n-butyl Phthalate	ug/kg	350	U	360	U	360	U
Fluoranthene	ug/kg	350	U	360	U	360	U
Pyrene	ug/kg	350	U	360	U	360	U
Benzyl Butyl Phthalate	ug/kg	350	U	360	U	360	U
Benzo(a)Anthracene	ug/kg	350	U	360	U	360	U
3,3'-Dichlorobenzidine	ug/kg	710	U	720	U	720	U
Chrysene	ug/kg	350	U	360	U	360	U
bis(2-Ethylhexyl) Phthalate	ug/kg	350	U	360	U	360	U
Di-n-octylphthalate	ug/kg	350	U	360	U	360	U
Benzo(b)Fluoranthene	ug/kg	350	U	360	U	360	U
Benzo(k)Fluoranthene	ug/kg	350	U	360	U	360	U
Benzo(a)Pyrene	ug/kg	350	U	360	U	360	U
Indeno(1,2,3-c,d)pyrene	ug/kg	350	U	360	U	360	U
Dibenz(a,h)anthracene	ug/kg	350	U	360	U	360	U
Benzo(g,h,i)Perylene	ug/kg	350	U	360	U	360	U
Carbazole	ug/kg	350	U	360	U	360	U

Notes:
= indicates that the analyte was detected at the concentration reported.
J indicates an estimated value. One or more quality control (QC) parra
U indicates that the consitutent was not detected. The method detectio
UJ indicates that the consitutent was not detected. The reported methc

Appendix E-1
Pesticide Analytical Results for Surface Soils
RFI Report Addendum, AOC 701, Zone E, Charleston Naval Complex

	StationID	E701SB001		E701SB001		E701SB002		E701SB002	
	SampleID	701SB00101 (0-1ft)		701SB00101RE (0-1ft)		701SB00201 (0-1ft)		701SB00201RE (0-1ft)	
	DateCollected	07/01/2002		07/01/2002		07/01/2002		07/01/2002	
	DateExtracted	07/09/2002		07/15/2002		07/09/2002		07/15/2002	
	DateAnalyzed	07/10/2002		07/22/2002		07/10/2002		07/22/2002	
	SDGNumber	CNC126		CNC126		CNC126		CNC126	
Parameter	**Units**								
Aldrin	ug/kg	2.8	R	5.5	U	0.48	R	5.8	U
Alpha BHC (Alpha Hexachlorocyclohexane)	ug/kg	2.8	R	5.5	U	1.5	R	5.8	U
Alpha-chlordane	ug/kg	2.2	R	2	J	1.5	R	5.8	U
Beta BHC (Beta Hexachlorocyclohexane)	ug/kg	2.8	R	5.5	U	1.5	R	5.8	U
Chlordane	ug/kg	28	R	55	U	15	R	58	U
Delta BHC (Delta Hexachlorocyclohexane)	ug/kg	2.8	R	5.5	U	1.5	R	5.8	U
Dieldrin	ug/kg	5.3	R	11	U	2.8	R	11	U
Endosulfan I	ug/kg	0.91	R	5.5	U	1.5	R	5.8	U
Endosulfan II	ug/kg	5.3	R	11	U	2.8	R	11	U
Endosulfan Sulfate	ug/kg	5.3	R	11	U	2.8	R	11	U
Endrin Aldehyde	ug/kg	5.3	R	11	UJ	1.2	R	11	UJ
Endrin Ketone	ug/kg	5.3	R	11	U	0.96	R	11	U
Endrin	ug/kg	5.3	R	11	U	2.8	R	11	U
Gamma BHC (Lindane)	ug/kg	2.8	R	5.5	U	1.5	R	5.8	U
Gamma-chlordane	ug/kg	1.7	R	1.9	J	1.5	R	5.8	U
Heptachlor Epoxide	ug/kg	0.43	R	5.5	U	0.24	R	5.8	U
Heptachlor	ug/kg	2.8	R	5.5	UJ	1.5	R	5.8	UJ
Methoxychlor	ug/kg	28	R	55	UJ	15	R	58	UJ
p,p'-DDD	ug/kg	5.3	R	11	U	2.8	R	11	U
p,p'-DDE	ug/kg	5.3	R	11	U	2.8	R	11	U
p,p'-DDT	ug/kg	1.2	R	11	UJ	1	R	11	UJ
Toxaphene	ug/kg	180	R	350	U	93	R	370	U

Notes:
J indicates an estimated value. One or more quality control (QC) parrameters were outside control limits or the value was detected at a concentration below the laborat
R indicates that the sample was reanalyzed.
U indicates that the consitutent was not detected. The method detection limit is reported.
UJ indicates that the consitutent was not detected. The reported method detection limit is estimated.

Appendix E-1
Pesticide Analytical Results for Surface Soils
RFI Report Addendum, AOC 701, Zone E, Charleston Naval Com

	StationID	E701SB003		E701SB004		E701SB004		E701SB005	
	SampleID	701SB00301 (0-1ft)		701SB00401 (0-1ft)		701SB00401RE (0-1ft)		701SB00501 (0-1ft)	
	DateCollected	07/01/2002		07/01/2002		07/01/2002		07/01/2002	
	DateExtracted	07/15/2002		07/09/2002		07/15/2002		07/09/2002	
	DateAnalyzed	07/17/2002		07/11/2002		07/17/2002		07/10/2002	
	SDGNumber	CNC126		CNC126		CNC126		CNC126	
Parameter	**Units**								
Aldrin	ug/kg	1.4	U	1.3	R	1.3	UJ	0.29	R
Alpha BHC (Alpha Hexachlorocyclohexane)	ug/kg	1.4	U	1.3	R	1.3	UJ	1.4	R
Alpha-chlordane	ug/kg	1.4	U	1.3	R	1.3	UJ	1.4	R
Beta BHC (Beta Hexachlorocyclohexane)	ug/kg	1.4	U	1.3	R	1.3	UJ	1.4	R
Chlordane	ug/kg	14	U	13	R	13	UJ	14	R
Delta BHC (Delta Hexachlorocyclohexane)	ug/kg	1.4	U	1.3	R	1.3	UJ	1.4	R
Dieldrin	ug/kg	2.6	U	2.6	R	2.6	UJ	2.7	R
Endosulfan I	ug/kg	1.4	U	1.3	R	1.3	UJ	1.4	R
Endosulfan II	ug/kg	2.6	U	2.6	R	2.6	UJ	2.7	R
Endosulfan Sulfate	ug/kg	2.6	U	2.6	R	2.6	UJ	2.7	R
Endrin Aldehyde	ug/kg	2.6	UJ	2.6	R	2.6	UJ	2.7	R
Endrin Ketone	ug/kg	2.6	U	2.6	R	2.6	UJ	2.7	R
Endrin	ug/kg	2.6	U	2.6	R	2.6	UJ	2.7	R
Gamma BHC (Lindane)	ug/kg	1.4	U	1.3	R	1.3	UJ	1.4	R
Gamma-chlordane	ug/kg	1.4	U	1.3	R	1.3	UJ	0.4	R
Heptachlor Epoxide	ug/kg	1.4	U	1.3	R	1.3	UJ	0.41	R
Heptachlor	ug/kg	1.4	UJ	1.3	R	1.3	UJ	1.4	R
Methoxychlor	ug/kg	14	UJ	13	R	13	UJ	14	R
p,p'-DDD	ug/kg	2.6	U	2.6	R	2.6	UJ	7	R
p,p'-DDE	ug/kg	2.6	U	2.6	R	2.6	UJ	4.3	R
p,p'-DDT	ug/kg	2.6	UJ	2.6	R	2.6	UJ	4.1	R
Toxaphene	ug/kg	87	U	86	R	86	UJ	90	R

Notes:
J indicates an estimated value. One or more quality control (QC) ory's quantitation limit
R indicates that the sample was reanalyzed.
U indicates that the consitutent was not detected. The method de
UJ indicates that the consitutent was not detected. The reported

Appendix E-1
Pesticide Analytical Results for Surface Soils
RFI Report Addendum, AOC 701, Zone E, Charleston Naval Com

	StationID	E701SB005		E701SB006		E701SB006		E701SB007	
	SampleID	701SB00501RE (0-1ft)		701SB00601 (0-1ft)		701SB00601RE (0-1ft)		701SB00701 (0-1ft)	
	DateCollected	07/01/2002		07/01/2002		07/01/2002		07/01/2002	
	DateExtracted	07/15/2002		07/09/2002		07/15/2002		07/09/2002	
	DateAnalyzed	07/22/2002		07/10/2002		07/22/2002		07/11/2002	
	SDGNumber	CNC126		CNC126		CNC126		CNC126	
Parameter	**Units**								
Aldrin	ug/kg	5.6	UJ	1.5	R	2.9	U	1.4	R
Alpha BHC (Alpha Hexachlorocyclohexane)	ug/kg	5.6	UJ	1.5	R	2.9	U	1.4	R
Alpha-chlordane	ug/kg	5.6	UJ	1.5	R	2.9	U	1.4	R
Beta BHC (Beta Hexachlorocyclohexane)	ug/kg	5.6	UJ	1.5	R	2.9	U	1.4	R
Chlordane	ug/kg	56	UJ	15	R	29	U	14	R
Delta BHC (Delta Hexachlorocyclohexane)	ug/kg	5.6	UJ	1.5	R	2.9	U	1.4	R
Dieldrin	ug/kg	11	UJ	2.8	R	5.6	U	2.7	R
Endosulfan I	ug/kg	5.6	UJ	0.36	R	2.9	U	1.4	R
Endosulfan II	ug/kg	11	UJ	2.8	R	5.6	U	2.7	R
Endosulfan Sulfate	ug/kg	11	UJ	2.8	R	5.6	U	2.7	R
Endrin Aldehyde	ug/kg	11	UJ	2.8	R	0.73	J	2.7	R
Endrin Ketone	ug/kg	11	UJ	1.4	R	5.6	U	2.7	R
Endrin	ug/kg	11	UJ	2.8	R	5.6	U	2.7	R
Gamma BHC (Lindane)	ug/kg	5.6	UJ	1.5	R	2.9	U	1.4	R
Gamma-chlordane	ug/kg	0.88	J	1.5	R	2.9	U	1.4	R
Heptachlor Epoxide	ug/kg	5.6	UJ	0.46	R	2.9	U	1.4	R
Heptachlor	ug/kg	5.6	UJ	1.5	R	2.9	UJ	1.4	R
Methoxychlor	ug/kg	56	UJ	15	R	29	UJ	14	R
p,p'-DDD	ug/kg	14	J	1.3	R	5.6	U	2.7	R
p,p'-DDE	ug/kg	9.3	J	0.4	R	5.6	U	2.7	R
p,p'-DDT	ug/kg	9.7	J	0.72	R	5.6	UJ	0.4	R
Toxaphene	ug/kg	360	UJ	93	R	190	U	90	R

Notes:
J indicates an estimated value. One or more quality control (QC)
R indicates that the sample was reanalyzed.
U indicates that the consitutent was not detected. The method de
UJ indicates that the consitutent was not detected. The reported i

Appendix E-1
Pesticide Analytical Results for Surface Soils
RFI Report Addendum, AOC 701, Zone E, Charleston Naval Com

	StationID	E701SB007		E701SB008		E701SB008		E701SB009	
	SampleID	701SB00701RE (0-1ft)		701SB00801 (0-1ft)		701SB00801RE (0-1ft)		701SB00901 (0-1ft)	
	DateCollected	07/01/2002		07/01/2002		07/01/2002		07/01/2002	
	DateExtracted	07/15/2002		07/09/2002		07/15/2002		07/09/2002	
	DateAnalyzed	07/17/2002		07/11/2002		07/17/2002		07/10/2002	
	SDGNumber	CNC126		CNC126		CNC126		CNC126	
Parameter	**Units**								
Aldrin	ug/kg	1.4	UJ	1.4	R	1.4	UJ	1.4	R
Alpha BHC (Alpha Hexachlorocyclohexane)	ug/kg	1.4	UJ	1.4	R	1.4	UJ	1.4	R
Alpha-chlordane	ug/kg	1.4	UJ	1.4	R	1.4	UJ	1.4	R
Beta BHC (Beta Hexachlorocyclohexane)	ug/kg	1.4	UJ	1.4	R	1.4	UJ	1.4	R
Chlordane	ug/kg	14	UJ	14	R	14	UJ	14	R
Delta BHC (Delta Hexachlorocyclohexane)	ug/kg	1.4	UJ	1.4	R	1.4	UJ	1.4	R
Dieldrin	ug/kg	2.7	UJ	2.7	R	2.7	UJ	2.7	R
Endosulfan I	ug/kg	1.4	UJ	1.4	R	1.4	UJ	1.4	R
Endosulfan II	ug/kg	2.7	UJ	2.7	R	2.7	UJ	2.7	R
Endosulfan Sulfate	ug/kg	2.7	UJ	2.7	R	2.7	UJ	2.7	R
Endrin Aldehyde	ug/kg	2.7	UJ	2.7	R	2.7	UJ	2.7	R
Endrin Ketone	ug/kg	2.7	UJ	2.7	R	2.7	UJ	2.7	R
Endrin	ug/kg	2.7	UJ	2.7	R	2.7	UJ	2.7	R
Gamma BHC (Lindane)	ug/kg	1.4	UJ	1.4	R	1.4	UJ	1.4	R
Gamma-chlordane	ug/kg	1.4	UJ	1.4	R	1.4	UJ	1.4	R
Heptachlor Epoxide	ug/kg	1.4	UJ	1.4	R	1.4	UJ	0.52	R
Heptachlor	ug/kg	1.4	UJ	1.4	R	1.4	UJ	1.4	R
Methoxychlor	ug/kg	14	UJ	14	R	14	UJ	14	R
p,p'-DDD	ug/kg	2.7	UJ	2.7	R	2.7	UJ	1.3	R
p,p'-DDE	ug/kg	2.7	UJ	2.7	R	2.7	UJ	1.9	R
p,p'-DDT	ug/kg	2.7	UJ	2.7	R	2.7	UJ	2.4	R
Toxaphene	ug/kg	90	UJ	89	R	89	UJ	91	R

Notes:
J indicates an estimated value. One or more quality control (QC)
R indicates that the sample was reanalyzed.
U indicates that the consitutent was not detected. The method de
UJ indicates that the consitutent was not detected. The reported i

Appendix E-1
Pesticide Analytical Results for Surface Soils
RFI Report Addendum, AOC 701, Zone E, Charleston Naval Com

	StationID	E701SB009		E701SB010		E701SB010	
	SampleID	701SB00901RE (0-1ft)		701SB01001 (0-1ft)		701SB01001RE (0-1ft)	
	DateCollected	07/01/2002		07/01/2002		07/01/2002	
	DateExtracted	07/15/2002		07/09/2002		07/15/2002	
	DateAnalyzed	07/22/2002		07/11/2002		07/17/2002	
	SDGNumber	CNC126		CNC126		CNC126	
Parameter	**Units**						
Aldrin	ug/kg	2.8	U	1.4	R	1.4	UJ
Alpha BHC (Alpha Hexachlorocyclohexane)	ug/kg	2.8	U	1.4	R	1.4	UJ
Alpha-chlordane	ug/kg	2.8	U	1.4	R	1.4	UJ
Beta BHC (Beta Hexachlorocyclohexane)	ug/kg	2.8	U	1.4	R	1.4	UJ
Chlordane	ug/kg	28	U	14	R	14	UJ
Delta BHC (Delta Hexachlorocyclohexane)	ug/kg	2.8	U	1.4	R	1.4	UJ
Dieldrin	ug/kg	5.5	U	2.7	R	2.7	UJ
Endosulfan I	ug/kg	2.8	U	1.4	R	1.4	UJ
Endosulfan II	ug/kg	5.5	U	2.7	R	2.7	UJ
Endosulfan Sulfate	ug/kg	5.5	U	2.7	R	2.7	UJ
Endrin Aldehyde	ug/kg	5.5	UJ	2.7	R	2	J
Endrin Ketone	ug/kg	5.5	U	2.7	R	2.7	UJ
Endrin	ug/kg	5.5	U	2.7	R	2.7	UJ
Gamma BHC (Lindane)	ug/kg	2.8	U	1.4	R	1.4	UJ
Gamma-chlordane	ug/kg	0.49	J	1.4	R	1.4	UJ
Heptachlor Epoxide	ug/kg	0.62	J	1.4	R	1.4	UJ
Heptachlor	ug/kg	2.8	UJ	1.4	R	1.4	UJ
Methoxychlor	ug/kg	28	UJ	14	R	14	UJ
p,p'-DDD	ug/kg	1.3	J	2.7	R	2.7	UJ
p,p'-DDE	ug/kg	2.3	J	2.7	R	2.7	UJ
p,p'-DDT	ug/kg	2.2	J	0.49	R	0.56	J
Toxaphene	ug/kg	180	U	90	R	90	UJ

Notes:
J indicates an estimated value. One or more quality control (QC)
R indicates that the sample was reanalyzed.
U indicates that the consitutent was not detected. The method de
UJ indicates that the consitutent was not detected. The reported

Appendix E-1
PCB Analytical Results for Surface Soils
RFI Report Addendum, AOC 701, Zone E, Charleston Naval Complex

	StationID	E701SB001		E701SB001		E701SB002		E701SB002	
	SampleID	701SB00101 (0-1ft)		701SB00101RE (0-1ft)		701SB00201 (0-1ft)		701SB00201RE (0-1ft)	
	DateCollected	07/01/2002		07/01/2002		07/01/2002		07/01/2002	
	DateExtracted	07/09/2002		07/15/2002		07/09/2002		07/15/2002	
	DateAnalyzed	07/10/2002		07/22/2002		07/10/2002		07/22/2002	
	SDGNumber	CNC126		CNC126		CNC126		CNC126	
Parameter	**Units**								
PCB-1016 (Arochlor 1016)	ug/kg	70	R	140	U	37	R	150	U
PCB-1221 (Arochlor 1221)	ug/kg	70	R	140	U	37	R	150	U
PCB-1232 (Arochlor 1232)	ug/kg	70	R	140	U	37	R	150	U
PCB-1242 (Arochlor 1242)	ug/kg	70	R	140	U	37	R	150	U
PCB-1248 (Arochlor 1248)	ug/kg	70	R	140	U	37	R	150	U
PCB-1254 (Arochlor 1254)	ug/kg	140	R	280	U	75	R	300	U
PCB-1260 (Arochlor 1260)	ug/kg	140	R	280	U	75	R	300	U

Notes:
U indicates that the consitutent was not detected. The method detection limit is reported.
UJ indicates that the consitutent was not detected. The reported method detection limit is estimated.

Appendix E-1
PCB Analytical Results for Surface Soils
RFI Report Addendum, AOC 701, Zone E, Charle

	StationID	E701SB003		E701SB004		E701SB004		E701SB005	
	SampleID	701SB00301 (0-1ft)		701SB00401 (0-1ft)		701SB00401RE (0-1ft)		701SB00501 (0-1ft)	
	DateCollected	07/01/2002		07/01/2002		07/01/2002		07/01/2002	
	DateExtracted	07/15/2002		07/09/2002		07/15/2002		07/09/2002	
	DateAnalyzed	07/17/2002		07/11/2002		07/17/2002		07/10/2002	
	SDGNumber	CNC126		CNC126		CNC126		CNC126	
Parameter	**Units**								
PCB-1016 (Arochlor 1016)	ug/kg	35	U	34	R	34	UJ	36	R
PCB-1221 (Arochlor 1221)	ug/kg	35	U	34	R	34	UJ	36	R
PCB-1232 (Arochlor 1232)	ug/kg	35	U	34	R	34	UJ	36	R
PCB-1242 (Arochlor 1242)	ug/kg	35	U	34	R	34	UJ	36	R
PCB-1248 (Arochlor 1248)	ug/kg	35	U	34	R	34	UJ	36	R
PCB-1254 (Arochlor 1254)	ug/kg	70	U	69	R	69	UJ	73	R
PCB-1260 (Arochlor 1260)	ug/kg	70	U	69	R	69	UJ	73	R

Notes:
U indicates that the consitutent was not detected.
UJ indicates that the consitutent was not detectec

Appendix E-1
PCB Analytical Results for Surface Soils
RFI Report Addendum, AOC 701, Zone E, Charle

	StationID	E701SB005		E701SB006		E701SB006		E701SB007	
	SampleID	701SB00501RE (0-1ft)		701SB00601 (0-1ft)		701SB00601RE (0-1ft)		701SB00701 (0-1ft)	
	DateCollected	07/01/2002		07/01/2002		07/01/2002		07/01/2002	
	DateExtracted	07/15/2002		07/09/2002		07/15/2002		07/09/2002	
	DateAnalyzed	07/22/2002		07/10/2002		07/22/2002		07/11/2002	
	SDGNumber	CNC126		CNC126		CNC126		CNC126	
Parameter	**Units**								
PCB-1016 (Arochlor 1016)	ug/kg	140	UJ	37	R	74	U	36	R
PCB-1221 (Arochlor 1221)	ug/kg	140	UJ	37	R	74	U	36	R
PCB-1232 (Arochlor 1232)	ug/kg	140	UJ	37	R	74	U	36	R
PCB-1242 (Arochlor 1242)	ug/kg	140	UJ	37	R	74	U	36	R
PCB-1248 (Arochlor 1248)	ug/kg	140	UJ	37	R	74	U	36	R
PCB-1254 (Arochlor 1254)	ug/kg	290	UJ	75	R	150	U	73	R
PCB-1260 (Arochlor 1260)	ug/kg	290	UJ	75	R	150	U	73	R

Notes:
U indicates that the consitutent was not detected.
UJ indicates that the consitutent was not detectec

Appendix E-1
PCB Analytical Results for Surface Soils
RFI Report Addendum, AOC 701, Zone E, Charle

	StationID	E701SB007		E701SB008		E701SB008		E701SB009	
	SampleID	701SB00701RE (0-1ft)		701SB00801 (0-1ft)		701SB00801RE (0-1ft)		701SB00901 (0-1ft)	
	DateCollected	07/01/2002		07/01/2002		07/01/2002		07/01/2002	
	DateExtracted	07/15/2002		07/09/2002		07/15/2002		07/09/2002	
	DateAnalyzed	07/17/2002		07/11/2002		07/17/2002		07/10/2002	
	SDGNumber	CNC126		CNC126		CNC126		CNC126	
Parameter	**Units**								
PCB-1016 (Arochlor 1016)	ug/kg	36	UJ	35	R	35	UJ	36	R
PCB-1221 (Arochlor 1221)	ug/kg	36	UJ	35	R	35	UJ	36	R
PCB-1232 (Arochlor 1232)	ug/kg	36	UJ	35	R	35	UJ	36	R
PCB-1242 (Arochlor 1242)	ug/kg	36	UJ	35	R	35	UJ	36	R
PCB-1248 (Arochlor 1248)	ug/kg	36	UJ	35	R	35	UJ	36	R
PCB-1254 (Arochlor 1254)	ug/kg	73	UJ	72	R	72	UJ	74	R
PCB-1260 (Arochlor 1260)	ug/kg	73	UJ	72	R	72	UJ	74	R

Notes:
U indicates that the consitutent was not detected.
UJ indicates that the consitutent was not detectec

Appendix E-1
PCB Analytical Results for Surface Soils
RFI Report Addendum, AOC 701, Zone E, Charle

	StationID	E701SB009		E701SB010		E701SB010	
	SampleID	701SB00901RE (0-1ft)		701SB01001 (0-1ft)		701SB01001RE (0-1ft)	
	DateCollected	07/01/2002		07/01/2002		07/01/2002	
	DateExtracted	07/15/2002		07/09/2002		07/15/2002	
	DateAnalyzed	07/22/2002		07/11/2002		07/17/2002	
	SDGNumber	CNC126		CNC126		CNC126	
Parameter	**Units**						
PCB-1016 (Arochlor 1016)	ug/kg	72	U	36	R	36	UJ
PCB-1221 (Arochlor 1221)	ug/kg	72	U	36	R	36	UJ
PCB-1232 (Arochlor 1232)	ug/kg	72	U	36	R	36	UJ
PCB-1242 (Arochlor 1242)	ug/kg	72	U	36	R	36	UJ
PCB-1248 (Arochlor 1248)	ug/kg	72	U	36	R	36	UJ
PCB-1254 (Arochlor 1254)	ug/kg	150	U	73	R	73	UJ
PCB-1260 (Arochlor 1260)	ug/kg	150	U	73	R	73	UJ

Notes:
U indicates that the consitutent was not detected.
UJ indicates that the consitutent was not detectec

Appendix E-1
Inorganic Constituent Analytical Results for Surface Soils
RFI Report Addendum, AOC 701, Zone E, Charleston Naval Complex

	StationID	E701SB001		E701SB002		E701SB003		E701SB004	
	SampleID	701SB00101 (0-1ft)		701SB00201 (0-1ft)		701SB00301 (0-1ft)		701SB00401 (0-1ft)	
	DateCollected	07/01/2002		07/01/2002		07/01/2002		07/01/2002	
	DateExtracted	07/10/2002		07/10/2002		07/10/2002		07/10/2002	
	DateAnalyzed	07/11/2002		07/11/2002		07/11/2002		07/11/2002	
	SDGNumber	CNC126		CNC126		CNC126		CNC126	
Parameter	**Units**								
Aluminum	mg/kg	5600	=	4200	=	4200	=	3900	=
Antimony	mg/kg	0.48	UJ	0.51	UJ	0.53	UJ	0.52	J
Arsenic	mg/kg	0.78	J	1.2	J	0.96	J	2.7	=
Barium	mg/kg	10	J	13	J	14	J	22	J
Beryllium	mg/kg	0.061	J	0.077	J	0.075	J	0.43	J
Cadmium	mg/kg	0.084	U	0.089	U	0.13	J	0.16	J
Calcium	mg/kg	12000	=	1200	=	6300	=	22000	=
Chromium, Total	mg/kg	5.1	=	5.4	=	4.9	=	8.6	=
Cobalt	mg/kg	0.71	J	0.7	J	0.7	J	1.7	J
Copper	mg/kg	5.1	=	16	=	11	=	9.8	=
Iron	mg/kg	1500	=	1900	=	2900	=	3300	=
Lead	mg/kg	11	=	36	=	58	=	30	=
Magnesium	mg/kg	330	J	180	J	370	J	420	J
Manganese	mg/kg	17	=	9.3	=	23	=	38	=
Nickel	mg/kg	2	J	2.1	J	2	J	5.5	J
Potassium	mg/kg	190	J	120	J	220	J	310	J
Selenium	mg/kg	0.42	U	0.44	U	0.45	U	0.44	U
Silver	mg/kg	0.18	U	0.19	U	0.2	U	0.2	U
Sodium	mg/kg	56	U	50	U	69	U	440	U
Thallium	mg/kg	0.55	U	0.58	U	0.6	U	0.59	U
Vanadium	mg/kg	5.9	J	5.3	J	5.2	J	18	=
Zinc	mg/kg	18	=	15	=	68	=	21	=
Mercury	mg/kg	0.038	J	0.2	J	0.58	J	0.058	J

Notes:
(1) All mercury samples were extracted on 7/12/2002 and analyzed on 10/15/2002.
= indicates that the analyte was detected at the concentration reported.
J indicates an estimated value. One or more quality control (QC) parrameters were outside control limits or the value was detected at a concentration below
U indicates that the consitutent was not detected. The method detection limit is reported.
UJ indicates that the consitutent was not detected. The reported method detection limit is estimated.

Appendix E-1
Inorganic Constituent Analytical Re:
RFI Report Addendum, AOC 701, Zon

	StationID	E701SB005		E701SB006		E701SB007		E701SB008	
	SampleID	701SB00501 (0-1ft)		701SB00601 (0-1ft)		701SB00701 (0-1ft)		701SB00801 (0-1ft)	
	DateCollected	07/01/2002		07/01/2002		07/01/2002		07/01/2002	
	DateExtracted	07/10/2002		07/10/2002		07/10/2002		07/10/2002	
	DateAnalyzed	07/11/2002		07/11/2002		07/11/2002		07/11/2002	
	SDGNumber	CNC126		CNC126		CNC126		CNC126	
Parameter	**Units**								
Aluminum	mg/kg	5700	=	5100	=	4600	=	8100	=
Antimony	mg/kg	0.49	UJ	0.51	UJ	0.49	UJ	0.49	UJ
Arsenic	mg/kg	2	J	0.46	U	0.44	U	0.46	J
Barium	mg/kg	19	J	3.7	J	4.6	J	10	J
Beryllium	mg/kg	0.13	J	0.058	U	0.056	U	0.064	J
Cadmium	mg/kg	0.33	J	0.089	U	0.086	U	0.085	U
Calcium	mg/kg	1200	=	200	J	330	J	790	J
Chromium, Total	mg/kg	5.5	=	4.6	=	5.1	=	6.3	=
Cobalt	mg/kg	0.93	J	0.76	J	0.39	J	0.89	J
Copper	mg/kg	29	=	0.74	U	0.71	U	8	=
Iron	mg/kg	4000	=	2000	=	1300	=	2200	=
Lead	mg/kg	40	=	2.2	=	2.7	=	4.6	=
Magnesium	mg/kg	200	J	180	J	95	J	250	J
Manganese	mg/kg	21	=	5.5	=	4.9	=	10	=
Nickel	mg/kg	2.3	J	1.9	J	1.4	J	2.4	J
Potassium	mg/kg	130	J	110	J	72	J	190	J
Selenium	mg/kg	0.42	U	0.44	U	0.42	U	0.42	U
Silver	mg/kg	0.19	U	0.19	U	0.19	U	0.19	U
Sodium	mg/kg	48	U	50	U	48	U	48	U
Thallium	mg/kg	0.56	U	0.58	U	0.56	U	0.56	U
Vanadium	mg/kg	9.1	J	5.7	J	5.3	J	7	J
Zinc	mg/kg	120	=	3.2	J	2.2	J	7	=
Mercury	mg/kg	0.091	J	0.0097	J	0.013	J	0.023	J

Notes:
(1) All mercury samples were extracte
= indicates that the analyte was detect
J indicates an estimated value. One othe laboratory's quantitation limit
U indicates that the consitutent was nc
UJ indicates that the consitutent was r

Appendix E-1
Inorganic Constituent Analytical Re
RFI Report Addendum, AOC 701, Zon

	StationID	E701SB009		E701SB010	
	SampleID	701SB00901 (0-1ft)		701SB01001 (0-1ft)	
	DateCollected	07/01/2002		07/01/2002	
	DateExtracted	07/10/2002		07/10/2002	
	DateAnalyzed	07/11/2002		07/11/2002	
	SDGNumber	CNC126		CNC126	
Parameter	**Units**				
Aluminum	mg/kg	6000	=	2600	=
Antimony	mg/kg	0.55	UJ	0.49	UJ
Arsenic	mg/kg	3	=	4.9	=
Barium	mg/kg	8.1	J	10	J
Beryllium	mg/kg	0.063	U	0.056	U
Cadmium	mg/kg	0.15	J	0.086	U
Calcium	mg/kg	1900	=	120	J
Chromium, Total	mg/kg	11	=	4.3	=
Cobalt	mg/kg	1.9	J	0.19	U
Copper	mg/kg	8.7	=	4.3	J
Iron	mg/kg	25000	=	2900	=
Lead	mg/kg	4.6	=	6.2	=
Magnesium	mg/kg	170	J	110	J
Manganese	mg/kg	90	=	3.5	=
Nickel	mg/kg	5.2	J	0.7	J
Potassium	mg/kg	88	J	92	J
Selenium	mg/kg	0.47	U	0.42	U
Silver	mg/kg	0.21	U	0.19	U
Sodium	mg/kg	54	U	48	U
Thallium	mg/kg	0.63	U	0.56	U
Vanadium	mg/kg	8	J	3.7	J
Zinc	mg/kg	4.6	=	3	J
Mercury	mg/kg	0.036	J	0.019	J

Notes:
(1) All mercury samples were extracte
= indicates that the analyte was detect
J indicates an estimated value. One o
U indicates that the consitutent was nc
UJ indicates that the consitutent was r

Appendix E-2
Volatile Organic Compound Analytical Results for Subsurface Soils
RFI Report Addendum, AOC 701, Zone E, Charleston Naval Complex

	StationID	E701SB001		E701SB002		E701SB003		E701SB004	
	SampleID	701SB00102 (3-5ft)		701SB00202 (3-5ft)		701SB00302 (3-5ft)		701SB00402 (3-5ft)	
	DateCollected	07/01/2002		07/01/2002		07/01/2002		07/01/2002	
	DateExtracted	07/09/2002		07/09/2002		07/09/2002		07/09/2002	
	DateAnalyzed	07/09/2002		07/09/2002		07/09/2002		07/09/2002	
	SDGNumber	CNC126		CNC126		CNC126		CNC126	
Parameter	**Units**								
Chloromethane	ug/kg	11	U	14	U	13	U	13	U
Vinyl chloride	ug/kg	11	U	14	U	13	U	13	U
Bromomethane	ug/kg	11	U	14	U	13	U	13	U
Chloroethane	ug/kg	11	U	14	U	13	U	13	U
1,1-Dichloroethene	ug/kg	5.7	U	6.8	U	6.5	U	6.6	U
Acetone	ug/kg	11	UJ	14	UJ	13	UJ	13	UJ
Carbon Disulfide	ug/kg	5.7	UJ	6.8	UJ	6.5	UJ	6.6	UJ
Methylene Chloride	ug/kg	5.7	UJ	6.8	UJ	6.5	UJ	6.6	UJ
trans-1,2-Dichloroethene	ug/kg	5.7	U	6.8	U	6.5	U	6.6	U
1,1-Dichloroethane	ug/kg	5.7	U	6.8	U	6.5	U	6.6	U
Vinyl acetate	ug/kg	11	UJ	14	UJ	13	UJ	13	UJ
Methyl ethyl ketone (2-Butanone)	ug/kg	11	U	14	U	13	U	13	U
cis-1,2-Dichloroethylene	ug/kg	5.7	U	6.8	U	6.5	U	6.6	U
1,2-Dichloroethene (total)	ug/kg	5.7	U	6.8	U	6.5	U	6.6	U
Chloroform	ug/kg	5.7	U	6.8	U	6.5	U	6.6	U
1,1,1-Trichloroethane	ug/kg	5.7	U	6.8	U	6.5	U	6.6	U
Carbon Tetrachloride	ug/kg	5.7	U	6.8	U	6.5	U	6.6	U
1,2-Dichloroethane	ug/kg	5.7	U	6.8	U	6.5	U	6.6	U
Benzene	ug/kg	5.7	U	6.8	U	6.5	U	6.6	U
Trichloroethylene (TCE)	ug/kg	5.7	U	6.8	U	6.5	U	6.6	U
1,2-Dichloropropane	ug/kg	5.7	U	6.8	U	6.5	U	6.6	U
Bromodichloromethane	ug/kg	5.7	U	6.8	U	6.5	U	6.6	U
2-Chloroethyl vinyl ether	ug/kg	11	UJ	14	UJ	13	UJ	13	UJ
cis-1,3-Dichloropropene	ug/kg	5.7	U	6.8	U	6.5	U	6.6	U
Methyl isobutyl ketone (4-Methyl-2-pentanone)	ug/kg	11	U	14	U	13	U	13	U
Toluene	ug/kg	5.7	U	6.8	U	6.5	U	6.6	U
trans-1,3-Dichloropropene	ug/kg	5.7	U	6.8	U	6.5	U	6.6	U
1,1,2-Trichloroethane	ug/kg	5.7	U	6.8	U	6.5	U	6.6	U
2-Hexanone	ug/kg	11	U	14	U	13	U	13	U
Tetrachloroethylene (PCE)	ug/kg	5.7	U	6.8	U	6.5	U	6.6	U
Dibromochloromethane	ug/kg	5.7	U	6.8	U	6.5	U	6.6	U
Chlorobenzene	ug/kg	5.7	U	6.8	U	6.5	U	6.6	U
Ethylbenzene	ug/kg	5.7	U	6.8	U	6.5	U	6.6	U
m+p Xylene	ug/kg	5.7	U	6.8	U	6.5	U	6.6	U
o-Xylene	ug/kg	5.7	U	6.8	U	6.5	U	6.6	U
Xylenes, Total	ug/kg	5.7	U	6.8	U	6.5	U	6.6	U

Appe . E-2

Volatile Organic Compound Analytical Results for Subsurface Soils

RFI Report Addendum, AOC 701, Zone E, Charleston Naval Complex

	StationID	E701SB001		E701SB002		E701SB003		E701SB004	
	SampleID	701SB00102 (3-5ft)		701SB00202 (3-5ft)		701SB00302 (3-5ft)		701SB00402 (3-5ft)	
	DateCollected	07/01/2002		07/01/2002		07/01/2002		07/01/2002	
	DateExtracted	07/09/2002		07/09/2002		07/09/2002		07/09/2002	
	DateAnalyzed	07/09/2002		07/09/2002		07/09/2002		07/09/2002	
	SDGNumber	CNC126		CNC126		CNC126		CNC126	
Parameter	**Units**								
Styrene	ug/kg	5.7	U	6.8	U	6.5	U	6.6	U
Bromoform	ug/kg	5.7	U	6.8	U	6.5	U	6.6	U
1,1,2,2-Tetrachloroethane	ug/kg	5.7	U	6.8	U	6.5	U	6.6	U
1,3-Dichlorobenzene	ug/kg	5.7	U	6.8	U	6.5	U	6.6	U
1,4-Dichlorobenzene	ug/kg	5.7	U	6.8	U	6.5	U	6.6	U
1,2-Dichlorobenzene	ug/kg	5.7	U	6.8	U	6.5	U	6.6	U
1,2,4-Trichlorobenzene	ug/kg	5.7	U	6.8	U	6.5	U	6.6	U
1,2,3-Trichlorobenzene	ug/kg	5.7	U	6.8	U	6.5	U	6.6	U

Notes:

U indicates that the consitutent was not detected. The method detection limit is reported.

UJ indicates that the consitutent was not detected. The reported method detection limit is estimated.

Appendix E-2
Volatile Organic Compound Analytical Results for Subsurface Soils
RFI Report Addendum, AOC 701, Zone E, Charleston Naval Complex

	StationID	E701SB005		E701SB006		E701SB007		E701SB008	
	SampleID	701SB00502 (3-5ft)		701SB00602 (3-5ft)		701SB00702 (3-5ft)		701SB00802 (3-5ft)	
	DateCollected	07/01/2002		07/01/2002		07/01/2002		07/01/2002	
	DateExtracted	07/09/2002		07/09/2002		07/10/2002		07/10/2002	
	DateAnalyzed	07/09/2002		07/09/2002		07/10/2002		07/10/2002	
	SDGNumber	CNC126		CNC126		CNC126		CNC126	
Parameter	**Units**								
Chloromethane	ug/kg	13	U	13	U	15	U	13	U
Vinyl chloride	ug/kg	13	U	13	U	15	U	13	U
Bromomethane	ug/kg	13	U	13	U	15	U	13	U
Chloroethane	ug/kg	13	U	13	U	15	U	13	U
1,1-Dichloroethene	ug/kg	6.4	U	6.4	U	7.4	U	6.6	U
Acetone	ug/kg	13	UJ	13	UJ	15	UJ	13	UJ
Carbon Disulfide	ug/kg	6.4	UJ	6.4	UJ	7.4	UJ	6.6	UJ
Methylene Chloride	ug/kg	6.4	UJ	6.4	UJ	7.4	U	6.6	U
trans-1,2-Dichloroethene	ug/kg	6.4	U	6.4	U	7.4	U	6.6	U
1,1-Dichloroethane	ug/kg	6.4	U	6.4	U	7.4	U	6.6	U
Vinyl acetate	ug/kg	13	UJ	13	UJ	15	UJ	13	UJ
Methyl ethyl ketone (2-Butanone)	ug/kg	13	U	13	U	15	U	13	U
cis-1,2-Dichloroethylene	ug/kg	6.4	U	6.4	U	7.4	U	6.6	U
1,2-Dichloroethene (total)	ug/kg	6.4	U	6.4	U	7.4	U	6.6	U
Chloroform	ug/kg	6.4	U	6.4	U	7.4	U	6.6	U
1,1,1-Trichloroethane	ug/kg	6.4	U	6.4	U	7.4	U	6.6	U
Carbon Tetrachloride	ug/kg	6.4	U	6.4	U	7.4	U	6.6	U
1,2-Dichloroethane	ug/kg	6.4	U	6.4	U	7.4	U	6.6	U
Benzene	ug/kg	6.4	U	6.4	U	7.4	U	6.6	U
Trichloroethylene (TCE)	ug/kg	6.4	U	6.4	U	7.4	U	6.6	U
1,2-Dichloropropane	ug/kg	6.4	U	6.4	U	7.4	U	6.6	U
Bromodichloromethane	ug/kg	6.4	U	6.4	U	7.4	U	6.6	U
2-Chloroethyl vinyl ether	ug/kg	13	UJ	13	UJ	15	U	13	U
cis-1,3-Dichloropropene	ug/kg	6.4	U	6.4	U	7.4	U	6.6	U
Methyl isobutyl ketone (4-Methyl-2-pentanone)	ug/kg	13	U	13	U	15	U	13	U
Toluene	ug/kg	6.4	U	6.4	U	7.4	U	6.6	U
trans-1,3-Dichloropropene	ug/kg	6.4	U	6.4	U	7.4	U	6.6	U
1,1,2-Trichloroethane	ug/kg	6.4	U	6.4	U	7.4	U	6.6	U
2-Hexanone	ug/kg	13	U	13	U	15	U	13	U
Tetrachloroethylene (PCE)	ug/kg	6.4	U	6.4	U	7.4	U	6.6	U
Dibromochloromethane	ug/kg	6.4	U	6.4	U	7.4	U	6.6	U
Chlorobenzene	ug/kg	6.4	U	6.4	U	7.4	U	6.6	U
Ethylbenzene	ug/kg	6.4	U	6.4	U	7.4	U	6.6	U
m+p Xylene	ug/kg	6.4	U	6.4	U	7.4	U	6.6	U
o-Xylene	ug/kg	6.4	U	6.4	U	7.4	U	6.6	U
Xylenes, Total	ug/kg	6.4	U	6.4	U	7.4	U	6.6	U

Appe . E-2

Volatile Organic Compound Analytical Results for Subsurface Soils

RFI Report Addendum, AOC 701, Zone E, Charleston Naval Complex

	StationID	E701SB005		E701SB006		E701SB007		E701SB008	
	SampleID	701SB00502 (3-5ft)		701SB00602 (3-5ft)		701SB00702 (3-5ft)		701SB00802 (3-5ft)	
	DateCollected	07/01/2002		07/01/2002		07/01/2002		07/01/2002	
	DateExtracted	07/09/2002		07/09/2002		07/10/2002		07/10/2002	
	DateAnalyzed	07/09/2002		07/09/2002		07/10/2002		07/10/2002	
	SDGNumber	CNC126		CNC126		CNC126		CNC126	
Parameter	**Units**								
Styrene	ug/kg	6.4	U	6.4	U	7.4	U	6.6	U
Bromoform	ug/kg	6.4	U	6.4	U	7.4	U	6.6	U
1,1,2,2-Tetrachloroethane	ug/kg	6.4	U	6.4	U	7.4	U	6.6	U
1,3-Dichlorobenzene	ug/kg	6.4	U	6.4	U	7.4	U	6.6	U
1,4-Dichlorobenzene	ug/kg	6.4	U	6.4	U	7.4	U	6.6	U
1,2-Dichlorobenzene	ug/kg	6.4	U	6.4	U	7.4	U	6.6	U
1,2,4-Trichlorobenzene	ug/kg	6.4	U	6.4	U	7.4	U	6.6	U
1,2,3-Trichlorobenzene	ug/kg	6.4	U	6.4	U	7.4	UJ	6.6	UJ

Notes:

U indicates that the consitutent was not detected. The method detection

UJ indicates that the consitutent was not detected. The reported method

Appendix E-2
Volatile Organic Compound Analytical Results for Subsurface Soils
RFI Report Addendum, AOC 701, Zone E, Charleston Naval Complex

	StationID	E701SB009		E701SB010	
	SampleID	701SB00902 (3-5ft)		701SB01002 (3-5ft)	
	DateCollected	07/01/2002		07/01/2002	
	DateExtracted	07/10/2002		07/10/2002	
	DateAnalyzed	07/10/2002		07/10/2002	
	SDGNumber	CNC126		CNC126	
Parameter	**Units**				
Chloromethane	ug/kg	13	U	11	U
Vinyl chloride	ug/kg	13	U	11	U
Bromomethane	ug/kg	13	U	11	U
Chloroethane	ug/kg	13	U	11	U
1,1-Dichloroethene	ug/kg	6.5	U	5.6	U
Acetone	ug/kg	13	UJ	11	UJ
Carbon Disulfide	ug/kg	6.5	UJ	5.6	UJ
Methylene Chloride	ug/kg	6.5	U	5.6	U
trans-1,2-Dichloroethene	ug/kg	6.5	U	5.6	U
1,1-Dichloroethane	ug/kg	6.5	U	5.6	U
Vinyl acetate	ug/kg	13	UJ	11	UJ
Methyl ethyl ketone (2-Butanone)	ug/kg	13	U	11	UJ
cis-1,2-Dichloroethylene	ug/kg	6.5	U	5.6	U
1,2-Dichloroethene (total)	ug/kg	6.5	U	5.6	U
Chloroform	ug/kg	6.5	U	5.6	U
1,1,1-Trichloroethane	ug/kg	6.5	U	5.6	U
Carbon Tetrachloride	ug/kg	6.5	U	5.6	U
1,2-Dichloroethane	ug/kg	6.5	U	5.6	U
Benzene	ug/kg	6.5	U	5.6	U
Trichloroethylene (TCE)	ug/kg	6.5	U	5.6	U
1,2-Dichloropropane	ug/kg	6.5	U	5.6	U
Bromodichloromethane	ug/kg	6.5	U	5.6	U
2-Chloroethyl vinyl ether	ug/kg	13	U	11	UJ
cis-1,3-Dichloropropene	ug/kg	6.5	U	5.6	U
Methyl isobutyl ketone (4-Methyl-2-pentanone)	ug/kg	13	U	11	UJ
Toluene	ug/kg	6.5	U	5.6	U
trans-1,3-Dichloropropene	ug/kg	6.5	U	5.6	U
1,1,2-Trichloroethane	ug/kg	6.5	U	5.6	U
2-Hexanone	ug/kg	13	U	11	UJ
Tetrachloroethylene (PCE)	ug/kg	6.5	U	5.6	U
Dibromochloromethane	ug/kg	6.5	U	5.6	U
Chlorobenzene	ug/kg	6.5	U	5.6	U
Ethylbenzene	ug/kg	6.5	U	5.6	U
m+p Xylene	ug/kg	6.5	U	5.6	U
o-Xylene	ug/kg	6.5	U	5.6	U
Xylenes, Total	ug/kg	6.5	U	5.6	U

Appe x E-2

Volatile Organic Compound Analytical Results for Subsurface Soils

RFI Report Addendum, AOC 701, Zone E, Charleston Naval Complex

	StationID	E701SB009		E701SB010	
	SampleID	701SB00902 (3-5ft)		701SB01002 (3-5ft)	
	DateCollected	07/01/2002		07/01/2002	
	DateExtracted	07/10/2002		07/10/2002	
	DateAnalyzed	07/10/2002		07/10/2002	
	SDGNumber	CNC126		CNC126	
Parameter	**Units**				
Styrene	ug/kg	6.5	U	5.6	U
Bromoform	ug/kg	6.5	U	5.6	U
1,1,2,2-Tetrachloroethane	ug/kg	6.5	U	5.6	U
1,3-Dichlorobenzene	ug/kg	6.5	U	5.6	U
1,4-Dichlorobenzene	ug/kg	6.5	U	5.6	U
1,2-Dichlorobenzene	ug/kg	6.5	U	5.6	U
1,2,4-Trichlorobenzene	ug/kg	6.5	U	5.6	U
1,2,3-Trichlorobenzene	ug/kg	6.5	UJ	5.6	UJ

Notes:

U indicates that the consitutent was not detected. The method detection

UJ indicates that the consitutent was not detected. The reported method

Appendix E-2
Semi-volatile Organic Compound Analytical Results for Subsurface Soils
RFI Report Addendum, AOC 701, Zone E, Charleston Naval Complex

	StationID	E701SB001		E701SB002		E701SB003		E701SB004	
	SampleID	701SB00102 (3-5ft)		701SB00202 (3-5ft)		701SB00302 (3-5ft)		701SB00402 (3-5ft)	
	DateCollected	07/01/2002		07/01/2002		07/01/2002		07/01/2002	
	DateExtracted	07/12/2002		07/12/2002		07/12/2002		07/12/2002	
	DateAnalyzed	07/15/2002		07/15/2002		07/15/2002		07/15/2002	
	SDGNumber	CNC126		CNC126		CNC126		CNC126	
Parameter	**Units**								
N-Nitrosodiphenylamine	ug/kg	350	U	380	U	360	U	350	U
Phenol	ug/kg	350	U	380	U	360	U	350	U
bis(2-Chloroethyl) ether (2-Chloroethyl Ether)	ug/kg	350	U	380	U	360	U	350	U
Bis(2-Chloroisopropyl)Ether	ug/kg	350	U	380	U	360	U	350	U
2-Chlorophenol	ug/kg	350	U	380	U	360	U	350	U
Benzyl alcohol	ug/kg	350	U	380	U	360	U	350	U
2-Methylphenol (o-Cresol)	ug/kg	350	U	380	U	360	U	350	U
N-Nitrosodi-n-propylamine	ug/kg	350	U	380	U	360	U	350	U
3-Methylphenol/4-Methylphenol (mp-Cresol)	ug/kg	350	U	380	U	360	U	350	U
Hexachloroethane	ug/kg	350	U	380	U	360	U	350	U
Nitrobenzene	ug/kg	350	U	380	U	360	U	350	U
Isophorone	ug/kg	350	U	380	U	360	U	350	U
2-Nitrophenol	ug/kg	350	U	380	U	360	U	350	U
2,4-Dimethylphenol	ug/kg	350	U	380	U	360	U	350	U
bis(2-Chloroethoxy) Methane	ug/kg	350	U	380	U	360	U	350	U
2,4-Dichlorophenol	ug/kg	350	U	380	U	360	U	350	U
Benzoic acid	ug/kg	1700	U	1800	U	1700	U	1700	U
Naphthalene	ug/kg	350	U	380	U	360	U	350	U
4-Chloroaniline	ug/kg	350	U	380	U	360	U	350	U
Hexachlorobutadiene	ug/kg	350	U	380	U	360	U	350	U
4-Chloro-3-methylphenol	ug/kg	350	U	380	U	360	U	350	U
2-Methylnaphthalene	ug/kg	350	U	380	U	360	U	350	U
Hexachlorocyclopentadiene	ug/kg	350	U	380	U	360	U	350	U
2,4,6-Trichlorophenol	ug/kg	350	U	380	UJ	360	U	350	U
2,4,5-Trichlorophenol	ug/kg	1700	U	1800	U	1700	U	1700	U
2-Chloronaphthalene	ug/kg	350	U	380	U	360	U	350	U
2-Nitroaniline	ug/kg	1700	U	1800	U	1700	U	1700	U
3-Nitroaniline	ug/kg	1700	U	1800	U	1700	U	1700	U
Dimethyl Phthalate	ug/kg	350	U	380	U	360	U	350	U
2,6-Dinitrotoluene	ug/kg	350	U	380	U	360	U	350	U
Acenaphthylene	ug/kg	350	U	380	U	360	U	350	U
Acenaphthene	ug/kg	350	U	380	UJ	360	U	350	U
2,4-Dinitrophenol	ug/kg	1700	U	1800	U	1700	U	1700	U
Dibenzofuran	ug/kg	350	U	380	U	360	U	350	U
2,4-Dinitrotoluene	ug/kg	350	U	380	U	360	U	350	U
Diethyl Phthalate	ug/kg	350	U	380	U	360	U	350	U

Appendix E-2

Semi-volatile Organic Compound Analytical Results for Subsurface Soils

RFI Report Addendum, AOC 701, Zone E, Charleston Naval Complex

	StationID	E701SB001		E701SB002		E701SB003		E701SB004	
	SampleID	701SB00102 (3-5ft)		701SB00202 (3-5ft)		701SB00302 (3-5ft)		701SB00402 (3-5ft)	
	DateCollected	07/01/2002		07/01/2002		07/01/2002		07/01/2002	
	DateExtracted	07/12/2002		07/12/2002		07/12/2002		07/12/2002	
	DateAnalyzed	07/15/2002		07/15/2002		07/15/2002		07/15/2002	
	SDGNumber	CNC126		CNC126		CNC126		CNC126	
Parameter	**Units**								
4-Nitrophenol	ug/kg	1700	U	1800	U	1700	U	1700	U
Fluorene	ug/kg	350	U	380	U	360	U	350	U
4-Chlorophenyl Phenyl Ether	ug/kg	350	U	380	U	360	U	350	U
4,6-Dinitro-2-methylphenol	ug/kg	1700	U	1800	U	1700	U	1700	U
4-Nitroaniline	ug/kg	1700	U	1800	U	1700	U	1700	U
4-Bromophenyl Phenyl Ether	ug/kg	350	U	380	UJ	360	U	350	U
Hexachlorobenzene	ug/kg	350	U	380	U	360	U	350	U
Pentachlorophenol	ug/kg	1700	U	1800	U	1700	U	1700	U
Phenanthrene	ug/kg	350	U	380	U	360	U	350	U
Anthracene	ug/kg	350	U	380	U	360	U	350	U
Di-n-butyl Phthalate	ug/kg	350	U	380	U	360	U	350	U
Fluoranthene	ug/kg	350	U	380	U	360	U	350	U
Pyrene	ug/kg	350	U	380	U	360	U	350	U
Benzyl Butyl Phthalate	ug/kg	350	U	380	U	360	U	350	U
Benzo(a)Anthracene	ug/kg	350	U	380	U	360	U	350	U
3,3'-Dichlorobenzidine	ug/kg	710	U	750	U	720	U	700	U
Chrysene	ug/kg	350	U	380	U	360	U	350	U
bis(2-Ethylhexyl) Phthalate	ug/kg	350	U	380	UJ	360	U	350	U
Di-n-octylphthalate	ug/kg	350	U	380	U	360	U	350	U
Benzo(b)Fluoranthene	ug/kg	350	U	380	U	360	U	350	U
Benzo(k)Fluoranthene	ug/kg	350	U	380	U	360	U	350	U
Benzo(a)Pyrene	ug/kg	350	U	380	U	360	U	350	U
Indeno(1,2,3-c,d)pyrene	ug/kg	350	U	380	UJ	360	U	350	U
Dibenz(a,h)anthracene	ug/kg	350	U	380	UJ	360	U	350	U
Benzo(g,h,i)Perylene	ug/kg	350	U	380	U	360	U	350	U
Carbazole	ug/kg	350	U	380	U	360	U	350	U

Notes:

U indicates that the consitutent was not detected. The method detection limit is reported.

UJ indicates that the consitutent was not detected. The reported method detection limit is estimated.

Appendix E-2
Semi-volatile Organic Compound Analytical Results for Subsurf
RFI Report Addendum, AOC 701, Zone E, Charleston Naval Comple

	StationID	E701SB005		E701SB006		E701SB007		E701SB008	
	SampleID	701SB00502 (3-5ft)		701SB00602 (3-5ft)		701SB00702 (3-5ft)		701SB00802 (3-5ft)	
	DateCollected	07/01/2002		07/01/2002		07/01/2002		07/01/2002	
	DateExtracted	07/12/2002		07/12/2002		07/12/2002		07/12/2002	
	DateAnalyzed	07/15/2002		07/16/2002		07/16/2002		07/16/2002	
	SDGNumber	CNC126		CNC126		CNC126		CNC126	
Parameter	**Units**								
N-Nitrosodiphenylamine	ug/kg	380	U	390	U	380	U	350	U
Phenol	ug/kg	380	U	390	U	380	U	350	U
bis(2-Chloroethyl) ether (2-Chloroethyl Ether)	ug/kg	380	U	390	U	380	U	350	U
Bis(2-Chloroisopropyl)Ether	ug/kg	380	U	390	U	380	U	350	U
2-Chlorophenol	ug/kg	380	U	390	U	380	U	350	U
Benzyl alcohol	ug/kg	380	U	390	U	380	U	350	U
2-Methylphenol (o-Cresol)	ug/kg	380	U	390	U	380	U	350	U
N-Nitrosodi-n-propylamine	ug/kg	380	U	390	U	380	U	350	U
3-Methylphenol/4-Methylphenol (mp-Cresol)	ug/kg	380	U	390	U	380	U	350	U
Hexachloroethane	ug/kg	380	U	390	U	380	U	350	U
Nitrobenzene	ug/kg	380	U	390	U	380	U	350	U
Isophorone	ug/kg	380	U	390	U	380	U	350	U
2-Nitrophenol	ug/kg	380	U	390	U	380	U	350	U
2,4-Dimethylphenol	ug/kg	380	U	390	U	380	U	350	U
bis(2-Chloroethoxy) Methane	ug/kg	380	U	390	U	380	U	350	U
2,4-Dichlorophenol	ug/kg	380	U	390	U	380	U	350	U
Benzoic acid	ug/kg	1800	U	1900	U	1800	U	1700	U
Naphthalene	ug/kg	380	U	390	U	380	U	350	U
4-Chloroaniline	ug/kg	380	U	390	U	380	U	350	U
Hexachlorobutadiene	ug/kg	380	U	390	U	380	U	350	U
4-Chloro-3-methylphenol	ug/kg	380	U	390	U	380	U	350	U
2-Methylnaphthalene	ug/kg	380	U	390	U	380	U	350	U
Hexachlorocyclopentadiene	ug/kg	380	U	390	U	380	U	350	U
2,4,6-Trichlorophenol	ug/kg	380	U	390	U	380	U	350	U
2,4,5-Trichlorophenol	ug/kg	1800	U	1900	U	1800	U	1700	U
2-Chloronaphthalene	ug/kg	380	U	390	U	380	U	350	U
2-Nitroaniline	ug/kg	1800	U	1900	U	1800	U	1700	U
3-Nitroaniline	ug/kg	1800	U	1900	U	1800	U	1700	U
Dimethyl Phthalate	ug/kg	380	U	390	U	380	U	350	U
2,6-Dinitrotoluene	ug/kg	380	U	390	U	380	U	350	U
Acenaphthylene	ug/kg	380	U	390	U	380	U	350	U
Acenaphthene	ug/kg	380	U	390	U	380	U	350	U
2,4-Dinitrophenol	ug/kg	1800	U	1900	U	1800	U	1700	U
Dibenzofuran	ug/kg	380	U	390	U	380	U	350	U
2,4-Dinitrotoluene	ug/kg	380	U	390	U	380	U	350	U
Diethyl Phthalate	ug/kg	380	U	390	U	380	U	350	U

Appendix E-2
Semi-volatile Organic Compound Analytical Results for Subsurf
RFI Report Addendum, AOC 701, Zone E, Charleston Naval Comple

	StationID	E701SB005		E701SB006		E701SB007		E701SB008	
	SampleID	701SB00502 (3-5ft)		701SB00602 (3-5ft)		701SB00702 (3-5ft)		701SB00802 (3-5ft)	
	DateCollected	07/01/2002		07/01/2002		07/01/2002		07/01/2002	
	DateExtracted	07/12/2002		07/12/2002		07/12/2002		07/12/2002	
	DateAnalyzed	07/15/2002		07/16/2002		07/16/2002		07/16/2002	
	SDGNumber	CNC126		CNC126		CNC126		CNC126	
Parameter	**Units**								
4-Nitrophenol	ug/kg	1800	U	1900	U	1800	U	1700	U
Fluorene	ug/kg	380	U	390	U	380	U	350	U
4-Chlorophenyl Phenyl Ether	ug/kg	380	U	390	U	380	U	350	U
4,6-Dinitro-2-methylphenol	ug/kg	1800	U	1900	U	1800	U	1700	U
4-Nitroaniline	ug/kg	1800	U	1900	U	1800	U	1700	U
4-Bromophenyl Phenyl Ether	ug/kg	380	U	390	U	380	U	350	U
Hexachlorobenzene	ug/kg	380	U	390	U	380	U	350	U
Pentachlorophenol	ug/kg	1800	U	1900	U	1800	U	1700	U
Phenanthrene	ug/kg	380	U	390	U	380	U	350	U
Anthracene	ug/kg	380	U	390	U	380	U	350	U
Di-n-butyl Phthalate	ug/kg	380	U	390	U	380	U	350	U
Fluoranthene	ug/kg	380	U	390	U	380	U	350	U
Pyrene	ug/kg	380	U	390	U	380	U	350	U
Benzyl Butyl Phthalate	ug/kg	380	U	390	U	380	U	350	U
Benzo(a)Anthracene	ug/kg	380	U	390	U	380	U	350	U
3,3'-Dichlorobenzidine	ug/kg	750	U	780	U	760	U	700	U
Chrysene	ug/kg	380	U	390	U	380	U	350	U
bis(2-Ethylhexyl) Phthalate	ug/kg	380	U	390	U	380	U	350	U
Di-n-octylphthalate	ug/kg	380	U	390	U	380	U	350	U
Benzo(b)Fluoranthene	ug/kg	380	U	390	U	380	U	350	U
Benzo(k)Fluoranthene	ug/kg	380	U	390	U	380	U	350	U
Benzo(a)Pyrene	ug/kg	380	U	390	U	380	U	350	U
Indeno(1,2,3-c,d)pyrene	ug/kg	380	U	390	U	380	U	350	U
Dibenz(a,h)anthracene	ug/kg	380	U	390	U	380	U	350	U
Benzo(g,h,i)Perylene	ug/kg	380	U	390	U	380	U	350	U
Carbazole	ug/kg	380	U	390	U	380	U	350	U

Notes:
U indicates that the consitutent was not detected. The method detec
UJ indicates that the consitutent was not detected. The reported me

Appendix E-2
Semi-volatile Organic Compound Analytical Results for Subsurf
RFI Report Addendum, AOC 701, Zone E, Charleston Naval Comple

	StationID	E701SB009		E701SB010	
	SampleID	701SB00902 (3-5ft)		701SB01002 (3-5ft)	
	DateCollected	07/01/2002		07/01/2002	
	DateExtracted	07/12/2002		07/12/2002	
	DateAnalyzed	07/16/2002		07/16/2002	
	SDGNumber	CNC126		CNC126	
Parameter	**Units**				
N-Nitrosodiphenylamine	ug/kg	360	U	370	U
Phenol	ug/kg	360	U	370	U
bis(2-Chloroethyl) ether (2-Chloroethyl Ether)	ug/kg	360	U	370	U
Bis(2-Chloroisopropyl)Ether	ug/kg	360	U	370	U
2-Chlorophenol	ug/kg	360	U	370	U
Benzyl alcohol	ug/kg	360	U	370	U
2-Methylphenol (o-Cresol)	ug/kg	360	U	370	U
N-Nitrosodi-n-propylamine	ug/kg	360	U	370	U
3-Methylphenol/4-Methylphenol (mp-Cresol)	ug/kg	360	U	370	U
Hexachloroethane	ug/kg	360	U	370	U
Nitrobenzene	ug/kg	360	U	370	U
Isophorone	ug/kg	360	U	370	U
2-Nitrophenol	ug/kg	360	U	370	U
2,4-Dimethylphenol	ug/kg	360	U	370	U
bis(2-Chloroethoxy) Methane	ug/kg	360	U	370	U
2,4-Dichlorophenol	ug/kg	360	U	370	U
Benzoic acid	ug/kg	1800	U	1800	U
Naphthalene	ug/kg	360	U	370	U
4-Chloroaniline	ug/kg	360	U	370	U
Hexachlorobutadiene	ug/kg	360	U	370	U
4-Chloro-3-methylphenol	ug/kg	360	U	370	U
2-Methylnaphthalene	ug/kg	360	U	370	U
Hexachlorocyclopentadiene	ug/kg	360	U	370	U
2,4,6-Trichlorophenol	ug/kg	360	U	370	U
2,4,5-Trichlorophenol	ug/kg	1800	U	1800	U
2-Chloronaphthalene	ug/kg	360	U	370	U
2-Nitroaniline	ug/kg	1800	U	1800	U
3-Nitroaniline	ug/kg	1800	U	1800	U
Dimethyl Phthalate	ug/kg	360	U	370	U
2,6-Dinitrotoluene	ug/kg	360	U	370	U
Acenaphthylene	ug/kg	360	U	370	U
Acenaphthene	ug/kg	360	U	370	U
2,4-Dinitrophenol	ug/kg	1800	U	1800	U
Dibenzofuran	ug/kg	360	U	370	U
2,4-Dinitrotoluene	ug/kg	360	U	370	U
Diethyl Phthalate	ug/kg	360	U	370	U

Appendix E-2
Semi-volatile Organic Compound Analytical Results for Subsurf
RFI Report Addendum, AOC 701, Zone E, Charleston Naval Comple

	StationID	E701SB009		E701SB010	
	SampleID	701SB00902 (3-5ft)		701SB01002 (3-5ft)	
	DateCollected	07/01/2002		07/01/2002	
	DateExtracted	07/12/2002		07/12/2002	
	DateAnalyzed	07/16/2002		07/16/2002	
	SDGNumber	CNC126		CNC126	
Parameter	**Units**				
4-Nitrophenol	ug/kg	1800	U	1800	U
Fluorene	ug/kg	360	U	370	U
4-Chlorophenyl Phenyl Ether	ug/kg	360	U	370	U
4,6-Dinitro-2-methylphenol	ug/kg	1800	U	1800	U
4-Nitroaniline	ug/kg	1800	U	1800	U
4-Bromophenyl Phenyl Ether	ug/kg	360	U	370	U
Hexachlorobenzene	ug/kg	360	U	370	U
Pentachlorophenol	ug/kg	1800	U	1800	U
Phenanthrene	ug/kg	360	U	370	U
Anthracene	ug/kg	360	U	370	U
Di-n-butyl Phthalate	ug/kg	360	U	370	U
Fluoranthene	ug/kg	360	U	370	U
Pyrene	ug/kg	360	U	370	U
Benzyl Butyl Phthalate	ug/kg	360	U	370	U
Benzo(a)Anthracene	ug/kg	360	U	370	U
3,3'-Dichlorobenzidine	ug/kg	720	U	730	U
Chrysene	ug/kg	360	U	370	U
bis(2-Ethylhexyl) Phthalate	ug/kg	360	U	370	U
Di-n-octylphthalate	ug/kg	360	U	370	U
Benzo(b)Fluoranthene	ug/kg	360	U	370	U
Benzo(k)Fluoranthene	ug/kg	360	U	370	U
Benzo(a)Pyrene	ug/kg	360	U	370	U
Indeno(1,2,3-c,d)pyrene	ug/kg	360	U	370	U
Dibenz(a,h)anthracene	ug/kg	360	U	370	U
Benzo(g,h,i)Perylene	ug/kg	360	U	370	U
Carbazole	ug/kg	360	U	370	U

Notes:
U indicates that the consitutent was not detected. The method detec
UJ indicates that the consitutent was not detected. The reported me

Appendix E-2
Pesticide Analytical Results for Subsurface Soils
RFI Report Addendum, AOC 701, Zone E, Charleston Naval Complex

	StationID	E701SB001		E701SB001		E701SB002		E701SB002	
	SampleID	701SB00102 (3-5ft)		701SB00102RE (3-5ft)		701SB00202 (3-5ft)		701SB00202RE (3-5ft)	
	DateCollected	07/01/2002		07/01/2002		07/01/2002		07/01/2002	
	DateExtracted	07/09/2002		07/15/2002		07/09/2002		07/15/2002	
	DateAnalyzed	07/10/2002		07/17/2002		07/10/2002		07/17/2002	
	SDGNumber	CNC126		CNC126		CNC126		CNC126	
Parameter	**Units**								
Aldrin	ug/kg	1.4	R	1.6	UJ	1.5	R	1.5	UJ
Alpha BHC (Alpha Hexachlorocyclohexane)	ug/kg	1.4	R	1.6	UJ	1.5	R	1.5	UJ
Alpha-chlordane	ug/kg	1.4	R	1.6	UJ	1.5	R	1.5	UJ
Beta BHC (Beta Hexachlorocyclohexane)	ug/kg	1.4	R	1.6	UJ	1.5	R	1.5	UJ
Chlordane	ug/kg	14	R	16	U	15	R	15	UJ
Delta BHC (Delta Hexachlorocyclohexane)	ug/kg	1.4	R	1.6	UJ	1.5	R	1.5	UJ
Dieldrin	ug/kg	2.7	R	3	UJ	2.8	R	2.8	UJ
Endosulfan I	ug/kg	1.4	R	1.6	UJ	1.5	R	1.5	UJ
Endosulfan II	ug/kg	2.7	R	3	U	2.8	R	2.8	UJ
Endosulfan Sulfate	ug/kg	2.7	R	3	UJ	2.8	R	2.8	UJ
Endrin Aldehyde	ug/kg	2.7	R	3	UJ	2.8	R	2.8	UJ
Endrin Ketone	ug/kg	2.7	R	3	UJ	2.8	R	2.8	UJ
Endrin	ug/kg	2.7	R	3	UJ	2.8	R	2.8	UJ
Gamma BHC (Lindane)	ug/kg	1.4	R	1.6	UJ	1.5	R	1.5	UJ
Gamma-chlordane	ug/kg	1.4	R	1.6	UJ	1.5	R	1.5	UJ
Heptachlor Epoxide	ug/kg	1.4	R	1.6	UJ	1.5	R	1.5	UJ
Heptachlor	ug/kg	1.4	R	1.6	UJ	1.5	R	1.5	UJ
Methoxychlor	ug/kg	14	R	16	UJ	15	R	15	UJ
p,p'-DDD	ug/kg	2.7	R	3	UJ	2.8	R	2.8	UJ
p,p'-DDE	ug/kg	2.7	R	3	UJ	2.8	R	2.8	UJ
p,p'-DDT	ug/kg	2.7	R	3	UJ	2.8	R	2.8	UJ
Toxaphene	ug/kg	89	R	99	U	94	R	94	UJ

Notes:
(1) All mercury samples were extracted on 7/12/2002 and analyzed on 10/15/2002.
= indicates that the analyte was detected at the concentration reported.
J indicates an estimated value. One or more quality control (QC) parrameters were outside control limits or the value was detected at a concentration below the laborat
R indicates that the sample was reanalyzed.
U indicates that the consitutent was not detected. The method detection limit is reported.
UJ indicates that the consitutent was not detected. The reported method detection limit is estimated.

Appendix E-2
Pesticide Analytical Results for Subsurface Soils
RFI Report Addendum, AOC 701, Zone E, Charleston Naval Com

	StationID	E701SB003		E701SB003		E701SB004		E701SB005	
	SampleID	701SB00302 (3-5ft)		701SB00302RE (3-5ft)		701SB00402 (3-5ft)		701SB00502 (3-5ft)	
	DateCollected	07/01/2002		07/01/2002		07/01/2002		07/01/2002	
	DateExtracted	07/09/2002		07/15/2002		07/15/2002		07/15/2002	
	DateAnalyzed	07/11/2002		07/17/2002		07/17/2002		07/17/2002	
	SDGNumber	CNC126		CNC126		CNC126		CNC126	
Parameter	**Units**								
Aldrin	ug/kg	1.4	R	1.4	UJ	1.4	U	1.5	U
Alpha BHC (Alpha Hexachlorocyclohexane)	ug/kg	1.4	R	1.4	UJ	1.4	U	1.5	U
Alpha-chlordane	ug/kg	1.4	R	1.4	UJ	1.4	U	1.5	U
Beta BHC (Beta Hexachlorocyclohexane)	ug/kg	1.4	R	1.4	UJ	1.4	U	1.5	U
Chlordane	ug/kg	14	R	14	UJ	14	U	15	U
Delta BHC (Delta Hexachlorocyclohexane)	ug/kg	1.4	R	1.4	UJ	1.4	U	1.5	U
Dieldrin	ug/kg	2.7	R	2.7	UJ	2.6	U	2.8	U
Endosulfan I	ug/kg	1.4	R	1.4	UJ	1.4	U	1.5	U
Endosulfan II	ug/kg	2.7	R	2.7	UJ	2.6	U	2.8	U
Endosulfan Sulfate	ug/kg	2.7	R	2.7	UJ	2.6	U	2.8	U
Endrin Aldehyde	ug/kg	2.7	R	2.7	UJ	2.6	UJ	2.8	UJ
Endrin Ketone	ug/kg	2.7	R	2.7	UJ	2.6	U	2.8	U
Endrin	ug/kg	2.7	R	2.7	UJ	2.6	U	2.8	U
Gamma BHC (Lindane)	ug/kg	1.4	R	1.4	UJ	1.4	U	1.5	U
Gamma-chlordane	ug/kg	1.4	R	1.4	UJ	1.4	U	1.5	U
Heptachlor Epoxide	ug/kg	1.4	R	1.4	UJ	1.4	U	1.5	U
Heptachlor	ug/kg	1.4	R	1.4	UJ	1.4	UJ	1.5	UJ
Methoxychlor	ug/kg	14	R	14	UJ	14	UJ	15	UJ
p,p'-DDD	ug/kg	2.7	R	2.7	UJ	2.6	U	2.8	U
p,p'-DDE	ug/kg	2.7	R	2.7	UJ	2.6	U	2.8	U
p,p'-DDT	ug/kg	2.7	R	2.7	UJ	2.6	UJ	2.8	UJ
Toxaphene	ug/kg	90	R	90	UJ	88	U	94	U

Notes:
(1) All mercury samples were extracted on 7/12/2002 and analyz
= indicates that the analyte was detected at the concentration rep
J indicates an estimated value. One or more quality control (QC) ory's quantitation limit
R indicates that the sample was reanalyzed.
U indicates that the consitutent was not detected. The method de
UJ indicates that the consitutent was not detected. The reported

Appendix E-2
Pesticide Analytical Results for Subsurface Soils
RFI Report Addendum, AOC 701, Zone E, Charleston Naval Com

	StationID	E701SB006		E701SB006		E701SB007		E701SB007	
	SampleID	701SB00602 (3-5ft)		701SB00602RE (3-5ft)		701SB00702 (3-5ft)		701SB00702RE (3-5ft)	
	DateCollected	07/01/2002		07/01/2002		07/01/2002		07/01/2002	
	DateExtracted	07/09/2002		07/15/2002		07/09/2002		07/15/2002	
	DateAnalyzed	07/11/2002		07/17/2002		07/11/2002		07/17/2002	
	SDGNumber	CNC126		CNC126		CNC126		CNC126	
Parameter	**Units**								
Aldrin	ug/kg	1.5	R	1.5	UJ	1.5	R	1.5	UJ
Alpha BHC (Alpha Hexachlorocyclohexane)	ug/kg	1.5	R	1.5	UJ	1.5	R	1.5	UJ
Alpha-chlordane	ug/kg	1.5	R	1.5	UJ	1.5	R	1.5	UJ
Beta BHC (Beta Hexachlorocyclohexane)	ug/kg	1.5	R	1.5	UJ	1.5	R	1.5	UJ
Chlordane	ug/kg	15	R	15	UJ	15	R	15	UJ
Delta BHC (Delta Hexachlorocyclohexane)	ug/kg	1.5	R	1.5	UJ	1.5	R	1.5	UJ
Dieldrin	ug/kg	2.9	R	2.9	UJ	2.9	R	2.9	UJ
Endosulfan I	ug/kg	1.5	R	1.5	UJ	1.5	R	1.5	UJ
Endosulfan II	ug/kg	2.9	R	2.9	UJ	2.9	R	2.9	UJ
Endosulfan Sulfate	ug/kg	2.9	R	2.9	UJ	2.9	R	2.9	UJ
Endrin Aldehyde	ug/kg	2.9	R	2.9	UJ	2.9	R	2.9	UJ
Endrin Ketone	ug/kg	2.9	R	2.9	UJ	2.9	R	2.9	UJ
Endrin	ug/kg	2.9	R	2.9	UJ	2.9	R	2.9	UJ
Gamma BHC (Lindane)	ug/kg	1.5	R	1.5	UJ	1.5	R	1.5	UJ
Gamma-chlordane	ug/kg	1.5	R	1.5	UJ	1.5	R	1.5	UJ
Heptachlor Epoxide	ug/kg	1.5	R	1.5	UJ	1.5	R	1.5	UJ
Heptachlor	ug/kg	1.5	R	1.5	UJ	1.5	R	1.5	UJ
Methoxychlor	ug/kg	15	R	15	UJ	15	R	15	UJ
p,p'-DDD	ug/kg	2.9	R	2.9	UJ	2.9	R	2.9	UJ
p,p'-DDE	ug/kg	2.9	R	2.9	UJ	2.9	R	2.9	UJ
p,p'-DDT	ug/kg	2.9	R	2.9	UJ	2.9	R	2.9	UJ
Toxaphene	ug/kg	98	R	98	UJ	95	R	95	UJ

Notes:
(1) All mercury samples were extracted on 7/12/2002 and analyze
= indicates that the analyte was detected at the concentration rep
J indicates an estimated value. One or more quality control (QC)
R indicates that the sample was reanalyzed.
U indicates that the consitutent was not detected. The method de
UJ indicates that the consitutent was not detected. The reported

Appendix E-2
Pesticide Analytical Results for Subsurface Soils
RFI Report Addendum, AOC 701, Zone E, Charleston Naval Com

	StationID	E701SB008		E701SB008		E701SB009		E701SB009	
	SampleID	701SB00802 (3-5ft)		701SB00802RE (3-5ft)		701SB00902 (3-5ft)		701SB00902RE (3-5ft)	
	DateCollected	07/01/2002		07/01/2002		07/01/2002		07/01/2002	
	DateExtracted	07/09/2002		07/15/2002		07/09/2002		07/15/2002	
	DateAnalyzed	07/11/2002		07/17/2002		07/11/2002		07/17/2002	
	SDGNumber	CNC126		CNC126		CNC126		CNC126	
Parameter	**Units**								
Aldrin	ug/kg	1.4	R	1.4	U	1.4	R	1.4	UJ
Alpha BHC (Alpha Hexachlorocyclohexane)	ug/kg	1.4	R	1.4	U	1.4	R	1.4	UJ
Alpha-chlordane	ug/kg	1.4	R	1.4	U	1.4	R	1.4	UJ
Beta BHC (Beta Hexachlorocyclohexane)	ug/kg	1.4	R	1.4	U	1.4	R	1.4	UJ
Chlordane	ug/kg	14	R	14	U	14	R	14	UJ
Delta BHC (Delta Hexachlorocyclohexane)	ug/kg	1.4	R	1.4	U	1.4	R	1.4	UJ
Dieldrin	ug/kg	2.6	R	2.6	U	2.7	R	2.7	UJ
Endosulfan I	ug/kg	1.4	R	1.4	U	1.4	R	1.4	UJ
Endosulfan II	ug/kg	2.6	R	2.6	U	2.7	R	2.7	UJ
Endosulfan Sulfate	ug/kg	2.6	R	2.6	U	2.7	R	2.7	UJ
Endrin Aldehyde	ug/kg	2.6	R	2.6	UJ	2.7	R	2.7	UJ
Endrin Ketone	ug/kg	2.6	R	2.6	U	2.7	R	2.7	UJ
Endrin	ug/kg	2.6	R	2.6	U	2.7	R	2.7	UJ
Gamma BHC (Lindane)	ug/kg	1.4	R	1.4	U	1.4	R	1.4	UJ
Gamma-chlordane	ug/kg	1.4	R	1.4	U	1.4	R	1.4	UJ
Heptachlor Epoxide	ug/kg	1.4	R	1.4	U	1.4	R	1.4	UJ
Heptachlor	ug/kg	1.4	R	1.4	UJ	1.4	R	1.4	UJ
Methoxychlor	ug/kg	14	R	14	UJ	14	R	14	UJ
p,p'-DDD	ug/kg	2.6	R	2.6	U	2.7	R	2.7	UJ
p,p'-DDE	ug/kg	2.6	R	2.6	U	2.7	R	2.7	UJ
p,p'-DDT	ug/kg	2.6	R	2.6	UJ	2.7	R	2.7	UJ
Toxaphene	ug/kg	88	R	88	U	91	R	91	UJ

Notes:
(1) All mercury samples were extracted on 7/12/2002 and analyz
= indicates that the analyte was detected at the concentration rep
J indicates an estimated value. One or more quality control (QC)
R indicates that the sample was reanalyzed.
U indicates that the consitutent was not detected. The method de
UJ indicates that the consitutent was not detected. The reported

Appendix E-2
Pesticide Analytical Results for Subsurface Soils
RFI Report Addendum, AOC 701, Zone E, Charleston Naval Com

	StationID	E701SB010		E701SB010	
	SampleID	701SB01002 (3-5ft)		701SB01002RE (3-5ft)	
	DateCollected	07/01/2002		07/01/2002	
	DateExtracted	07/09/2002		07/15/2002	
	DateAnalyzed	07/11/2002		07/17/2002	
	SDGNumber	CNC126		CNC126	
Parameter	**Units**				
Aldrin	ug/kg	1.4	R	1.4	UJ
Alpha BHC (Alpha Hexachlorocyclohexane)	ug/kg	1.4	R	1.4	UJ
Alpha-chlordane	ug/kg	1.4	R	1.4	UJ
Beta BHC (Beta Hexachlorocyclohexane)	ug/kg	1.4	R	1.4	UJ
Chlordane	ug/kg	14	R	14	UJ
Delta BHC (Delta Hexachlorocyclohexane)	ug/kg	1.4	R	1.4	UJ
Dieldrin	ug/kg	2.8	R	2.8	UJ
Endosulfan I	ug/kg	1.4	R	1.4	UJ
Endosulfan II	ug/kg	2.8	R	2.8	UJ
Endosulfan Sulfate	ug/kg	1	R	2.8	UJ
Endrin Aldehyde	ug/kg	3.8	R	2.6	J
Endrin Ketone	ug/kg	2.8	R	2.8	UJ
Endrin	ug/kg	2.8	R	2.8	UJ
Gamma BHC (Lindane)	ug/kg	1.4	R	1.4	UJ
Gamma-chlordane	ug/kg	0.69	R	0.38	J
Heptachlor Epoxide	ug/kg	1.4	R	1.4	UJ
Heptachlor	ug/kg	1.4	R	1.4	UJ
Methoxychlor	ug/kg	14	R	14	UJ
p,p'-DDD	ug/kg	2.8	R	2.8	UJ
p,p'-DDE	ug/kg	0.59	R	0.3	J
p,p'-DDT	ug/kg	2.2	R	1.9	J
Toxaphene	ug/kg	92	R	92	UJ

Notes:
(1) All mercury samples were extracted on 7/12/2002 and analyze
= indicates that the analyte was detected at the concentration rep
J indicates an estimated value. One or more quality control (QC)
R indicates that the sample was reanalyzed.
U indicates that the consitutent was not detected. The method de
UJ indicates that the consitutent was not detected. The reported

Appendix E-2
PCB Analytical Results for Subsurface Soils
RFI Report Addendum, AOC 701, Zone E, Charleston Naval Complex

	StationID	E701SB001		E701SB001		E701SB002		E701SB002	
	SampleID	701SB00102 (3-5ft)		701SB00102RE (3-5ft)		701SB00202 (3-5ft)		701SB00202RE (3-5ft)	
	DateCollected	07/01/2002		07/01/2002		07/01/2002		07/01/2002	
	DateExtracted	07/09/2002		07/15/2002		07/09/2002		07/15/2002	
	DateAnalyzed	07/10/2002		07/17/2002		07/10/2002		07/17/2002	
	SDGNumber	CNC126		CNC126		CNC126		CNC126	
Parameter	**Units**								
PCB-1016 (Arochlor 1016)	ug/kg	35	R	39	UJ	38	R	38	UJ
PCB-1221 (Arochlor 1221)	ug/kg	35	R	39	U	38	R	38	UJ
PCB-1232 (Arochlor 1232)	ug/kg	35	R	39	U	38	R	38	UJ
PCB-1242 (Arochlor 1242)	ug/kg	35	R	39	U	38	R	38	UJ
PCB-1248 (Arochlor 1248)	ug/kg	35	R	39	U	38	R	38	UJ
PCB-1254 (Arochlor 1254)	ug/kg	72	R	80	U	76	R	76	UJ
PCB-1260 (Arochlor 1260)	ug/kg	72	R	80	UJ	76	R	76	UJ

Notes:
U indicates that the consitutent was not detected. The method detection limit is reported.
UJ indicates that the consitutent was not detected. The reported method detection limit is estimated.

Appendix E-2
PCB Analytical Results for Subsurface Soils
RFI Report Addendum, AOC 701, Zone E, Charle

	StationID	E701SB003		E701SB003		E701SB004		E701SB005	
	SampleID	701SB00302 (3-5ft)		701SB00302RE (3-5ft)		701SB00402 (3-5ft)		701SB00502 (3-5ft)	
	DateCollected	07/01/2002		07/01/2002		07/01/2002		07/01/2002	
	DateExtracted	07/09/2002		07/15/2002		07/15/2002		07/15/2002	
	DateAnalyzed	07/11/2002		07/17/2002		07/17/2002		07/17/2002	
	SDGNumber	CNC126		CNC126		CNC126		CNC126	
Parameter	**Units**								
PCB-1016 (Arochlor 1016)	ug/kg	36	R	36	UJ	35	U	38	U
PCB-1221 (Arochlor 1221)	ug/kg	36	R	36	UJ	35	U	38	U
PCB-1232 (Arochlor 1232)	ug/kg	36	R	36	UJ	35	U	38	U
PCB-1242 (Arochlor 1242)	ug/kg	36	R	36	UJ	35	U	38	U
PCB-1248 (Arochlor 1248)	ug/kg	36	R	36	UJ	35	U	38	U
PCB-1254 (Arochlor 1254)	ug/kg	73	R	73	UJ	71	U	76	U
PCB-1260 (Arochlor 1260)	ug/kg	73	R	73	UJ	71	U	76	U

Notes:
U indicates that the consitutent was not detected.
UJ indicates that the consitutent was not detectec

Appendix E-2
PCB Analytical Results for Subsurface Soils
RFI Report Addendum, AOC 701, Zone E, Charle

	StationID	E701SB006		E701SB006		E701SB007		E701SB007	
	SampleID	701SB00602 (3-5ft)		701SB00602RE (3-5ft)		701SB00702 (3-5ft)		701SB00702RE (3-5ft)	
	DateCollected	07/01/2002		07/01/2002		07/01/2002		07/01/2002	
	DateExtracted	07/09/2002		07/15/2002		07/09/2002		07/15/2002	
	DateAnalyzed	07/11/2002		07/17/2002		07/11/2002		07/17/2002	
	SDGNumber	CNC126		CNC126		CNC126		CNC126	
Parameter	**Units**								
PCB-1016 (Arochlor 1016)	ug/kg	39	R	39	UJ	38	R	38	UJ
PCB-1221 (Arochlor 1221)	ug/kg	39	R	39	UJ	38	R	38	UJ
PCB-1232 (Arochlor 1232)	ug/kg	39	R	39	UJ	38	R	38	UJ
PCB-1242 (Arochlor 1242)	ug/kg	39	R	39	UJ	38	R	38	UJ
PCB-1248 (Arochlor 1248)	ug/kg	39	R	39	UJ	38	R	38	UJ
PCB-1254 (Arochlor 1254)	ug/kg	79	R	79	UJ	77	R	77	UJ
PCB-1260 (Arochlor 1260)	ug/kg	79	R	79	UJ	77	R	77	UJ

Notes:
U indicates that the consitutent was not detected.
UJ indicates that the consitutent was not detectec

Appendix E-2
PCB Analytical Results for Subsurface Soils
RFI Report Addendum, AOC 701, Zone E, Charle

	StationID	E701SB008		E701SB008		E701SB009		E701SB009	
	SampleID	701SB00802 (3-5ft)		701SB00802RE (3-5ft)		701SB00902 (3-5ft)		701SB00902RE (3-5ft)	
	DateCollected	07/01/2002		07/01/2002		07/01/2002		07/01/2002	
	DateExtracted	07/09/2002		07/15/2002		07/09/2002		07/15/2002	
	DateAnalyzed	07/11/2002		07/17/2002		07/11/2002		07/17/2002	
	SDGNumber	CNC126		CNC126		CNC126		CNC126	
Parameter	**Units**								
PCB-1016 (Arochlor 1016)	ug/kg	35	R	35	U	36	R	36	UJ
PCB-1221 (Arochlor 1221)	ug/kg	35	R	35	U	36	R	36	UJ
PCB-1232 (Arochlor 1232)	ug/kg	35	R	35	U	36	R	36	UJ
PCB-1242 (Arochlor 1242)	ug/kg	35	R	35	U	36	R	36	UJ
PCB-1248 (Arochlor 1248)	ug/kg	35	R	35	U	36	R	36	UJ
PCB-1254 (Arochlor 1254)	ug/kg	71	R	71	U	74	R	74	UJ
PCB-1260 (Arochlor 1260)	ug/kg	71	R	71	U	74	R	74	UJ

Notes:
U indicates that the consitutent was not detected.
UJ indicates that the consitutent was not detectec

Appendix E-2
PCB Analytical Results for Subsurface Soils
RFI Report Addendum, AOC 701, Zone E, Charle

	StationID	E701SB010		E701SB010	
	SampleID	701SB01002 (3-5ft)		701SB01002RE (3-5ft)	
	DateCollected	07/01/2002		07/01/2002	
	DateExtracted	07/09/2002		07/15/2002	
	DateAnalyzed	07/11/2002		07/17/2002	
	SDGNumber	CNC126		CNC126	
Parameter	**Units**				
PCB-1016 (Arochlor 1016)	ug/kg	37	R	37	UJ
PCB-1221 (Arochlor 1221)	ug/kg	37	R	37	UJ
PCB-1232 (Arochlor 1232)	ug/kg	37	R	37	UJ
PCB-1242 (Arochlor 1242)	ug/kg	37	R	37	UJ
PCB-1248 (Arochlor 1248)	ug/kg	37	R	37	UJ
PCB-1254 (Arochlor 1254)	ug/kg	74	R	74	UJ
PCB-1260 (Arochlor 1260)	ug/kg	74	R	74	UJ

Notes:
U indicates that the consitutent was not detected.
UJ indicates that the consitutent was not detectec

Appendix E-2
Inorganic Constituent Analytical Results for Subsurface Soils
RFI Report Addendum, AOC 701, Zone E, Charleston Naval Complex

	StationID	E701SB001		E701SB002		E701SB003		E701SB004	
	SampleID	701SB00102 (3-5ft)		701SB00202 (3-5ft)		701SB00302 (3-5ft)		701SB00402 (3-5ft)	
	DateCollected	07/01/2002		07/01/2002		07/01/2002		07/01/2002	
	DateExtracted	07/10/2002		07/10/2002		07/10/2002		07/10/2002	
	DateAnalyzed	07/11/2002		07/11/2002		07/11/2002		07/11/2002	
	SDGNumber	CNC126		CNC126		CNC126		CNC126	
Parameter	**Units**								
Aluminum	mg/kg	5700	=	5700	=	5500	=	5200	=
Antimony	mg/kg	0.49	UJ	0.52	UJ	0.49	UJ	0.48	UJ
Arsenic	mg/kg	0.59	J	0.46	U	0.44	U	0.44	U
Barium	mg/kg	7.8	J	4.1	J	6.1	J	2.6	J
Beryllium	mg/kg	0.056	U	0.059	U	0.056	U	0.055	U
Cadmium	mg/kg	0.085	U	0.09	U	0.086	U	0.084	U
Calcium	mg/kg	2600	=	290	J	320	J	200	J
Chromium, Total	mg/kg	5.7	=	6.3	=	5.5	=	5.2	=
Cobalt	mg/kg	0.69	J	0.64	J	0.48	J	0.68	J
Copper	mg/kg	4.8	J	0.99	J	0.71	U	0.7	U
Iron	mg/kg	1300	=	1700	=	1700	=	1900	=
Lead	mg/kg	8.4	=	2.3	=	2.6	=	1.9	=
Magnesium	mg/kg	220	J	190	J	140	J	170	J
Manganese	mg/kg	8.4	=	5.9	=	4.6	=	5.3	=
Mercury (1)	mg/kg	0.032	J	0.0053	J	0.014	J	0.014	J
Nickel	mg/kg	1.6	J	2.1	J	1.7	J	1.3	J
Potassium	mg/kg	180	J	140	J	130	J	100	J
Selenium	mg/kg	0.42	U	0.44	U	0.42	U	0.42	U
Silver	mg/kg	0.19	U	0.2	U	0.19	U	0.18	U
Sodium	mg/kg	51	U	51	U	48	U	47	U
Thallium	mg/kg	0.56	U	0.59	U	0.56	U	0.55	U
Vanadium	mg/kg	5	J	5.5	J	7.1	J	5.5	J
Zinc	mg/kg	5.4	=	3.1	J	2.1	J	2.8	J

Notes:
(1) All mercury samples were extracted on 7/12/2002 and analyzed on 10/15/2002.
= indicates that the analyte was detected at the concentration reported.
J indicates an estimated value. One or more quality control (QC) parrameters were outside control limits or the value was detected at a concentration below
U indicates that the consitutent was not detected. The method detection limit is reported.
UJ indicates that the consitutent was not detected. The reported method detection limit is estimated.

Appendix E-2
Inorganic Constituent Analytical Re:
RFI Report Addendum, AOC 701, Zon

	StationID	E701SB005		E701SB006		E701SB007		E701SB008	
	SampleID	701SB00502 (3-5ft)		701SB00602 (3-5ft)		701SB00702 (3-5ft)		701SB00802 (3-5ft)	
	DateCollected	07/01/2002		07/01/2002		07/01/2002		07/01/2002	
	DateExtracted	07/10/2002		07/10/2002		07/10/2002		07/10/2002	
	DateAnalyzed	07/11/2002		07/11/2002		07/11/2002		07/11/2002	
	SDGNumber	CNC126		CNC126		CNC126		CNC126	
Parameter	**Units**								
Aluminum	mg/kg	3600	=	3500	=	11000	=	6200	=
Antimony	mg/kg	0.57	UJ	0.53	UJ	0.57	UJ	0.53	UJ
Arsenic	mg/kg	0.73	J	1.2	J	0.52	U	0.57	J
Barium	mg/kg	9.7	J	7.7	J	9.5	J	4.5	J
Beryllium	mg/kg	0.065	U	0.17	J	0.075	J	0.061	U
Cadmium	mg/kg	0.099	U	0.093	U	0.1	U	0.093	U
Calcium	mg/kg	320	J	300	J	260	J	350	J
Chromium, Total	mg/kg	4.9	=	5.2	=	6.9	=	5	=
Cobalt	mg/kg	0.44	J	0.33	J	1.8	J	0.46	J
Copper	mg/kg	1.7	J	0.77	U	1.1	J	1.2	J
Iron	mg/kg	2500	=	5000	=	2800	=	1600	=
Lead	mg/kg	7.1	=	2	=	2.1	=	2.7	=
Magnesium	mg/kg	200	J	180	J	500	J	130	J
Manganese	mg/kg	5.5	=	7	=	15	=	3.3	=
Mercury (1)	mg/kg	0.014	J	0.0098	J	0.014	J	0.021	J
Nickel	mg/kg	1.2	J	1.1	J	2.6	J	2	J
Potassium	mg/kg	100	J	100	J	270	J	100	J
Selenium	mg/kg	0.49	U	0.46	U	0.49	U	0.46	U
Silver	mg/kg	0.22	U	0.2	U	0.22	U	0.2	U
Sodium	mg/kg	160	U	52	U	56	U	52	U
Thallium	mg/kg	0.65	U	0.61	U	0.66	U	0.61	U
Vanadium	mg/kg	5.2	J	8.5	J	6.7	J	6	J
Zinc	mg/kg	8.4	=	2.5	J	6.4	=	2	J

Notes:
(1) All mercury samples were extracte
= indicates that the analyte was detect
J indicates an estimated value. One othe laboratory's quantitation limit
U indicates that the consitutent was nc
UJ indicates that the consitutent was r

Appendix E-2
Inorganic Constituent Analytical Re:
RFI Report Addendum, AOC 701, Zon

	StationID	E701SB009		E701SB010	
	SampleID	701SB00902 (3-5ft)		701SB01002 (3-5ft)	
	DateCollected	07/01/2002		07/01/2002	
	DateExtracted	07/10/2002		07/10/2002	
	DateAnalyzed	07/11/2002		07/11/2002	
	SDGNumber	CNC126		CNC126	
Parameter	**Units**				
Aluminum	mg/kg	3800	=	1800	=
Antimony	mg/kg	0.5	UJ	0.56	UJ
Arsenic	mg/kg	1.1	J	11	=
Barium	mg/kg	8	J	13	J
Beryllium	mg/kg	0.083	J	0.063	U
Cadmium	mg/kg	0.087	U	0.097	U
Calcium	mg/kg	100	J	150	J
Chromium, Total	mg/kg	4.5	=	4.6	=
Cobalt	mg/kg	0.26	J	0.21	U
Copper	mg/kg	4.8	J	4.7	J
Iron	mg/kg	3100	=	5200	=
Lead	mg/kg	11	=	7.9	=
Magnesium	mg/kg	120	J	120	J
Manganese	mg/kg	3.7	=	3.6	=
Mercury (1)	mg/kg	0.09	J	0.075	J
Nickel	mg/kg	0.88	J	0.57	J
Potassium	mg/kg	81	J	180	J
Selenium	mg/kg	0.43	U	0.48	U
Silver	mg/kg	0.19	U	0.21	U
Sodium	mg/kg	56	U	54	U
Thallium	mg/kg	0.57	U	0.63	U
Vanadium	mg/kg	5.3	J	4.6	J
Zinc	mg/kg	5.4	=	3.2	J

Notes:
(1) All mercury samples were extracte
= indicates that the analyte was detect
J indicates an estimated value. One o
U indicates that the consitutent was nc
UJ indicates that the consitutent was r

Appendix F

Appendix F-1
Volatile Organic Compound Analytical Results for Shallow Groundwater
RFI Report Addendum, AOC 701, Zone E, Charleston Naval Complex

	StationID	E701GW001		E701GW002		E701GW003		E701GW003	
	SampleID	701GW001M1		701GW002M1		701GW003M1		701HW003M1	
	DateCollected	07/29/2002		07/29/2002		07/30/2002		07/30/2002	
	DateExtracted	08/08/2002		08/08/2002		08/08/2002		08/08/2002	
	DateAnalyzed	08/08/2002		08/08/2002		08/08/2002		08/08/2002	
	SDGNumber	CNC134		CNC134		CNC134		CNC134	
Parameter	**Units**								
Chloromethane	ug/l	10	U	10	U	10	U	10	U
Vinyl chloride	ug/l	10	U	10	U	10	U	10	U
Bromomethane	ug/l	10	UJ	10	UJ	10	UJ	10	UJ
Chloroethane	ug/l	10	UJ	10	UJ	10	UJ	10	UJ
1,1-Dichloroethene	ug/l	5	U	5	U	5	U	5	U
Acetone	ug/l	10	U	10	U	10	U	10	U
Carbon Disulfide	ug/l	5	U	5	U	5	U	5	U
Methylene Chloride	ug/l	5	U	5	U	5	U	5	U
trans-1,2-Dichloroethene	ug/l	5	U	5	U	5	U	5	U
1,1-Dichloroethane	ug/l	5	UJ	5	UJ	5	UJ	5	UJ
Vinyl acetate	ug/l	10	U	10	U	10	U	10	U
Methyl ethyl ketone (2-Butanone)	ug/l	10	U	10	U	10	U	10	U
cis-1,2-Dichloroethylene	ug/l	0.68	J	5	U	5	U	5	U
1,2-Dichloroethene (total)	ug/l	0.68	J	5	U	5	U	5	U
Chloroform	ug/l	5	U	5	U	5	U	5	U
1,1,1-Trichloroethane	ug/l	5	U	5	U	5	U	5	U
Carbon Tetrachloride	ug/l	5	U	5	U	5	U	5	U
1,2-Dichloroethane	ug/l	5	U	5	U	5	U	5	U
Benzene	ug/l	5	U	5	U	5	U	5	U
Trichloroethylene (TCE)	ug/l	5	U	5	U	5	U	5	U
1,2-Dichloropropane	ug/l	5	U	5	U	5	U	5	U
Bromodichloromethane	ug/l	5	U	5	U	5	U	5	U
2-Chloroethyl vinyl ether	ug/l	10	UJ	10	U	10	U	10	U
cis-1,3-Dichloropropene	ug/l	5	U	5	U	5	U	5	U
Methyl isobutyl ketone (4-Methyl-2-pentanone)	ug/l	10	U	10	U	10	U	10	U
Toluene	ug/l	5	U	5	U	5	U	5	U
trans-1,3-Dichloropropene	ug/l	5	U	5	U	5	U	5	U
1,1,2-Trichloroethane	ug/l	5	U	5	U	5	U	5	U
2-Hexanone	ug/l	10	UJ	10	UJ	10	UJ	10	UJ
Tetrachloroethylene (PCE)	ug/l	5	U	5	U	5	U	5	U
Dibromochloromethane	ug/l	5	U	5	U	5	U	5	U
Chlorobenzene	ug/l	5	U	5	U	5	U	5	U
Ethylbenzene	ug/l	5	U	5	U	5	U	5	U
m+p Xylene	ug/l	5	U	5	U	5	U	5	U
o-Xylene	ug/l	5	U	5	U	5	U	5	U
Xylenes, Total	ug/l	5	U	5	U	5	U	5	U

Appendix F-1
Volatile Organic Compound Analytical Results for Shallow Groundwater
RFI Report Addendum, AOC 701, Zone E, Charleston Naval Complex

	StationID	E701GW001		E701GW002		E701GW003		E701GW003	
	SampleID	701GW001M1		701GW002M1		701GW003M1		701HW003M1	
	DateCollected	07/29/2002		07/29/2002		07/30/2002		07/30/2002	
	DateExtracted	08/08/2002		08/08/2002		08/08/2002		08/08/2002	
	DateAnalyzed	08/08/2002		08/08/2002		08/08/2002		08/08/2002	
	SDGNumber	CNC134		CNC134		CNC134		CNC134	
Parameter	**Units**								
Styrene	ug/l	5	U	5	U	5	U	5	U
Bromoform	ug/l	5	UJ	5	U	5	U	5	U
1,1,2,2-Tetrachloroethane	ug/l	5	UJ	5	UJ	5	UJ	5	UJ
1,3-Dichlorobenzene	ug/l	5	U	5	U	5	U	5	U
1,4-Dichlorobenzene	ug/l	5	U	5	U	5	U	5	U
1,2-Dichlorobenzene	ug/l	5	U	5	U	5	U	5	U
1,2,4-Trichlorobenzene	ug/l	5	UJ	5	U	5	U	5	U
1,2,3-Trichlorobenzene	ug/l	5	UJ	5	U	5	U	5	U

Notes:
= indicates that the analyte was detected at the concentration reported.
J indicates an estimated value. One or more quality control (QC) parrameters were outside control limits or the value was detected at a concentration below the labo
U indicates that the consitutent was not detected. The method detection limit is reported.
UJ indicates that the consitutent was not detected. The reported method detection limit is estimated.

Appendix F-1
Volatile Organic Compound Analytical Results for Shallow Grou
RFI Report Addendum, AOC 701, Zone E, Charleston Naval Comple

	StationID	E701GW004		E701GW005		E701GW006	
	SampleID	701GW004M1		701GW005M1		701GW006M1	
	DateCollected	07/30/2002		07/30/2002		07/30/2002	
	DateExtracted	08/08/2002		08/08/2002		08/13/2002	
	DateAnalyzed	08/08/2002		08/08/2002		08/13/2002	
	SDGNumber	CNC134		CNC134		CNC134	
Parameter	**Units**						
Chloromethane	ug/l	10	U	10	U	10	U
Vinyl chloride	ug/l	10	U	10	U	10	U
Bromomethane	ug/l	10	UJ	10	UJ	10	UJ
Chloroethane	ug/l	10	UJ	10	UJ	10	UJ
1,1-Dichloroethene	ug/l	5	U	5	U	5	U
Acetone	ug/l	10	U	10	U	10	U
Carbon Disulfide	ug/l	5	U	5	U	5.1	=
Methylene Chloride	ug/l	5	U	5	U	5	U
trans-1,2-Dichloroethene	ug/l	5	U	5	U	5	U
1,1-Dichloroethane	ug/l	5	UJ	5	UJ	5	U
Vinyl acetate	ug/l	10	U	10	U	10	U
Methyl ethyl ketone (2-Butanone)	ug/l	10	U	10	U	10	U
cis-1,2-Dichloroethylene	ug/l	5	U	5	U	5	U
1,2-Dichloroethene (total)	ug/l	5	U	5	U	5	U
Chloroform	ug/l	5	U	5	U	5	U
1,1,1-Trichloroethane	ug/l	5	U	5	U	5	U
Carbon Tetrachloride	ug/l	5	U	5	U	5	U
1,2-Dichloroethane	ug/l	5	U	5	U	5	U
Benzene	ug/l	5	U	5	U	5	U
Trichloroethylene (TCE)	ug/l	5	U	5	U	5	U
1,2-Dichloropropane	ug/l	5	U	5	U	5	U
Bromodichloromethane	ug/l	5	U	5	U	5	U
2-Chloroethyl vinyl ether	ug/l	10	UJ	10	U	10	UJ
cis-1,3-Dichloropropene	ug/l	5	U	5	U	5	U
Methyl isobutyl ketone (4-Methyl-2-pentanone)	ug/l	10	U	10	U	10	U
Toluene	ug/l	5	U	5	U	5	U
trans-1,3-Dichloropropene	ug/l	5	U	5	U	5	U
1,1,2-Trichloroethane	ug/l	5	U	5	U	5	U
2-Hexanone	ug/l	10	UJ	10	UJ	10	UJ
Tetrachloroethylene (PCE)	ug/l	5	U	5	U	5	U
Dibromochloromethane	ug/l	5	U	5	U	5	U
Chlorobenzene	ug/l	5	U	5	U	5	U
Ethylbenzene	ug/l	5	U	5	U	5	U
m+p Xylene	ug/l	5	U	5	U	5	U
o-Xylene	ug/l	5	U	5	U	5	U
Xylenes, Total	ug/l	5	U	5	U	5	U

Appendix F-1
Volatile Organic Compound Analytical Results for Shallow Grou
RFI Report Addendum, AOC 701, Zone E, Charleston Naval Comple

	StationID	E701GW004		E701GW005		E701GW006	
	SampleID	701GW004M1		701GW005M1		701GW006M1	
	DateCollected	07/30/2002		07/30/2002		07/30/2002	
	DateExtracted	08/08/2002		08/08/2002		08/13/2002	
	DateAnalyzed	08/08/2002		08/08/2002		08/13/2002	
	SDGNumber	CNC134		CNC134		CNC134	
Parameter	**Units**						
Styrene	ug/l	5	U	5	U	5	U
Bromoform	ug/l	5	UJ	5	U	5	U
1,1,2,2-Tetrachloroethane	ug/l	5	UJ	5	UJ	5	UJ
1,3-Dichlorobenzene	ug/l	5	U	5	U	5	U
1,4-Dichlorobenzene	ug/l	5	U	5	U	5	U
1,2-Dichlorobenzene	ug/l	5	U	5	U	5	U
1,2,4-Trichlorobenzene	ug/l	5	UJ	5	U	5	U
1,2,3-Trichlorobenzene	ug/l	5	UJ	5	U	5	U

Notes:
= indicates that the analyte was detected at the concentration reporte
J indicates an estimated value. One or more quality control (QC) pairatory's quantitation limit
U indicates that the consitutent was not detected. The method detec
UJ indicates that the consitutent was not detected. The reported me

App : F-1

Semi-Volatile Organic Compound Analytical Results for Shallow Groundwater

RFI Report Addendum, AOC 701, Zone E, Charleston Naval Complex

	StationID	E701GW001		E701GW001		E701GW002		E701GW003	
	SampleID	701GW001M1		701GW001M1RE		701GW002M1		701GW003M1	
	DateCollected	07/29/2002		07/29/2002		07/29/2002		07/30/2002	
	DateExtracted	08/02/2002		08/08/2002		08/02/2002		08/02/2002	
	DateAnalyzed	08/06/2002		08/12/2002		08/06/2002		08/06/2002	
	SDGNumber	CNC134		CNC134		CNC134		CNC134	
Parameter	**Units**								
N-Nitrosodiphenylamine	ug/l	10	U	10	R	10	U	10	U
Phenol	ug/l	10	U	10	R	10	U	10	U
bis(2-Chloroethyl) ether (2-Chloroethyl Ether)	ug/l	10	U	10	R	10	U	10	U
2-Chlorophenol	ug/l	10	U	10	R	10	U	10	U
Benzyl alcohol	ug/l	10	U	10	R	10	U	10	U
Bis(2-Chloroisopropyl)Ether	ug/l	10	U	10	R	10	U	10	U
2-Methylphenol (o-Cresol)	ug/l	10	U	10	R	10	U	10	U
N-Nitrosodi-n-propylamine	ug/l	10	U	10	R	10	U	10	U
3-Methylphenol/4-Methylphenol (mp-Cresol)	ug/l	10	U	10	R	10	U	10	U
Hexachloroethane	ug/l	10	U	10	R	10	U	10	U
Nitrobenzene	ug/l	10	U	10	R	10	U	10	U
Isophorone	ug/l	10	U	10	R	10	U	10	U
2-Nitrophenol	ug/l	10	U	10	R	10	U	10	U
2,4-Dimethylphenol	ug/l	10	U	10	R	10	U	10	U
bis(2-Chloroethoxy) Methane	ug/l	10	U	10	R	10	U	10	U
2,4-Dichlorophenol	ug/l	10	U	10	R	10	U	10	U
Benzoic acid	ug/l	50	U	50	R	50	U	50	U
Naphthalene	ug/l	10	U	10	R	10	U	10	U
4-Chloroaniline	ug/l	10	U	10	R	10	U	10	U
Hexachlorobutadiene	ug/l	10	U	10	R	10	U	10	U
4-Chloro-3-methylphenol	ug/l	10	U	10	R	10	U	10	U
2-Methylnaphthalene	ug/l	10	U	10	R	10	U	10	U
Hexachlorocyclopentadiene	ug/l	10	U	10	R	10	U	10	U
2,4,6-Trichlorophenol	ug/l	10	U	10	R	10	U	10	U
2,4,5-Trichlorophenol	ug/l	50	U	50	R	50	U	50	U
2-Chloronaphthalene	ug/l	10	U	10	R	10	U	10	U
2-Nitroaniline	ug/l	50	U	50	R	50	U	50	U
3-Nitroaniline	ug/l	50	U	50	R	50	U	50	U
Dimethyl Phthalate	ug/l	10	U	10	R	10	U	10	U
2,6-Dinitrotoluene	ug/l	10	U	10	R	10	U	10	U
Acenaphthylene	ug/l	10	U	10	R	10	U	10	U
Acenaphthene	ug/l	10	U	10	R	10	U	10	U
2,4-Dinitrophenol	ug/l	50	U	50	R	50	U	50	U
Dibenzofuran	ug/l	10	U	10	R	10	U	10	U
2,4-Dinitrotoluene	ug/l	10	U	10	R	10	U	10	U
Diethyl Phthalate	ug/l	10	U	10	R	14	=	10	U

Appendix F-1
Semi-volatile Organic Compound Analytical Results for Shallow Groundwater
RFI Report Addendum, AOC 701, Zone E, Charleston Naval Complex

	StationID	E701GW001		E701GW001		E701GW002		E701GW003	
	SampleID	701GW001M1		701GW001M1RE		701GW002M1		701GW003M1	
	DateCollected	07/29/2002		07/29/2002		07/29/2002		07/30/2002	
	DateExtracted	08/02/2002		08/08/2002		08/02/2002		08/02/2002	
	DateAnalyzed	08/06/2002		08/12/2002		08/06/2002		08/06/2002	
	SDGNumber	CNC134		CNC134		CNC134		CNC134	
Parameter	**Units**								
4-Nitrophenol	ug/l	50	U	50	R	50	U	50	U
Fluorene	ug/l	10	U	10	R	0.71	J	10	U
4-Chlorophenyl Phenyl Ether	ug/l	10	U	10	R	10	U	10	U
4,6-Dinitro-2-methylphenol	ug/l	50	U	50	R	50	U	50	U
4-Nitroaniline	ug/l	50	U	50	R	50	U	50	U
4-Bromophenyl Phenyl Ether	ug/l	10	U	10	R	10	U	10	U
Hexachlorobenzene	ug/l	10	U	10	R	10	U	10	U
Pentachlorophenol	ug/l	50	U	50	R	50	U	50	U
Phenanthrene	ug/l	10	U	10	R	10	U	10	U
Anthracene	ug/l	10	U	10	R	10	U	10	U
Di-n-butyl Phthalate	ug/l	10	U	10	R	10	U	10	U
Fluoranthene	ug/l	10	U	10	R	10	U	10	U
Pyrene	ug/l	10	U	10	R	10	U	10	U
Benzyl Butyl Phthalate	ug/l	10	U	10	R	10	U	10	U
Benzo(a)Anthracene	ug/l	10	U	10	R	10	U	10	U
3,3'-Dichlorobenzidine	ug/l	20	UJ	20	R	20	U	20	UJ
Chrysene	ug/l	10	U	10	R	10	U	10	U
bis(2-Ethylhexyl) Phthalate	ug/l	10	U	10	R	10	U	10	U
Di-n-octylphthalate	ug/l	10	U	10	R	10	U	10	U
Benzo(b)Fluoranthene	ug/l	10	U	10	R	10	UJ	10	U
Benzo(k)Fluoranthene	ug/l	10	UJ	10	R	10	UJ	10	UJ
Benzo(a)Pyrene	ug/l	10	U	10	R	10	U	10	U
Indeno(1,2,3-c,d)pyrene	ug/l	10	UJ	10	R	0.88	J	10	UJ
Dibenz(a,h)anthracene	ug/l	10	UJ	10	R	10	UJ	10	UJ
Benzo(g,h,i)Perylene	ug/l	10	UJ	10	R	10	UJ	10	UJ
Carbazole	ug/l	10	U	10	R	10	U	10	U

Notes:
(1) All mercury samples were extracted on 7/12/2002 and analyzed on 10/15/2002.
= indicates that the analyte was detected at the concentration reported.
J indicates an estimated value. One or more quality control (QC) parrameters were outside control limits or the value was detected at a concentration below the labo
R indicates that the sample was reanalyzed.
U indicates that the consitutent was not detected. The method detection limit is reported.
UJ indicates that the consitutent was not detected. The reported method detection limit is estimated.

App[illegible]x F-1
Sem[illegible]olatile Organic Compound Analytical Results for Shallow
RFI Report Addendum, AOC 701, Zone E, Charleston Naval Comple

	StationID	E701GW003		E701GW003		E701GW003		E701GW004	
	SampleID	701GW003M1RE		701HW003M1		701HW003M1RE		701GW004M1	
	DateCollected	07/30/2002		07/30/2002		07/30/2002		07/30/2002	
	DateExtracted	08/08/2002		08/02/2002		08/08/2002		08/05/2002	
	DateAnalyzed	08/10/2002		08/06/2002		08/10/2002		08/08/2002	
	SDGNumber	CNC134		CNC134		CNC134		CNC134	
Parameter	**Units**								
N-Nitrosodiphenylamine	ug/l	10	R	10	U	10	R	10	U
Phenol	ug/l	10	R	10	U	10	R	10	U
bis(2-Chloroethyl) ether (2-Chloroethyl Ether)	ug/l	10	R	10	U	10	R	10	UJ
2-Chlorophenol	ug/l	10	R	10	U	10	R	10	U
Benzyl alcohol	ug/l	10	R	10	U	10	R	10	U
Bis(2-Chloroisopropyl)Ether	ug/l	10	R	10	U	10	R	10	U
2-Methylphenol (o-Cresol)	ug/l	10	R	10	U	10	R	10	U
N-Nitrosodi-n-propylamine	ug/l	10	R	10	U	10	R	10	U
3-Methylphenol/4-Methylphenol (mp-Cresol)	ug/l	10	R	10	U	10	R	10	U
Hexachloroethane	ug/l	10	R	10	U	10	R	10	U
Nitrobenzene	ug/l	10	R	10	U	10	R	10	U
Isophorone	ug/l	10	R	10	U	10	R	10	U
2-Nitrophenol	ug/l	10	R	10	U	10	R	10	U
2,4-Dimethylphenol	ug/l	10	R	10	U	10	R	10	U
bis(2-Chloroethoxy) Methane	ug/l	10	R	10	U	10	R	10	U
2,4-Dichlorophenol	ug/l	10	R	10	U	10	R	10	U
Benzoic acid	ug/l	50	R	50	U	50	R	50	U
Naphthalene	ug/l	10	R	10	U	10	R	10	U
4-Chloroaniline	ug/l	10	R	10	U	10	R	10	U
Hexachlorobutadiene	ug/l	10	R	10	U	10	R	10	U
4-Chloro-3-methylphenol	ug/l	10	R	10	U	10	R	10	U
2-Methylnaphthalene	ug/l	10	R	10	U	10	R	10	U
Hexachlorocyclopentadiene	ug/l	10	R	10	U	10	R	10	U
2,4,6-Trichlorophenol	ug/l	10	R	10	U	10	R	10	U
2,4,5-Trichlorophenol	ug/l	50	R	50	U	50	R	50	U
2-Chloronaphthalene	ug/l	10	R	10	U	10	R	10	U
2-Nitroaniline	ug/l	50	R	50	U	50	R	50	U
3-Nitroaniline	ug/l	50	R	50	U	50	R	50	U
Dimethyl Phthalate	ug/l	10	R	10	U	10	R	10	U
2,6-Dinitrotoluene	ug/l	10	R	10	U	10	R	10	U
Acenaphthylene	ug/l	10	R	10	U	10	R	10	U
Acenaphthene	ug/l	10	R	10	U	10	R	10	U
2,4-Dinitrophenol	ug/l	50	R	50	U	50	R	50	U
Dibenzofuran	ug/l	10	R	10	U	10	R	10	U
2,4-Dinitrotoluene	ug/l	10	R	10	U	10	R	10	U
Diethyl Phthalate	ug/l	10	R	10	U	10	R	10	U

Appendix F-1
Semi-volatile Organic Compound Analytical Results for Shallow
RFI Report Addendum, AOC 701, Zone E, Charleston Naval Comple

	StationID	E701GW003		E701GW003		E701GW003		E701GW004	
	SampleID	701GW003M1RE		701HW003M1		701HW003M1RE		701GW004M1	
	DateCollected	07/30/2002		07/30/2002		07/30/2002		07/30/2002	
	DateExtracted	08/08/2002		08/02/2002		08/08/2002		08/05/2002	
	DateAnalyzed	08/10/2002		08/06/2002		08/10/2002		08/08/2002	
	SDGNumber	CNC134		CNC134		CNC134		CNC134	
Parameter	**Units**								
4-Nitrophenol	ug/l	50	R	50	U	50	R	50	U
Fluorene	ug/l	10	R	10	U	10	R	10	U
4-Chlorophenyl Phenyl Ether	ug/l	10	R	10	U	10	R	10	U
4,6-Dinitro-2-methylphenol	ug/l	50	R	50	U	50	R	50	U
4-Nitroaniline	ug/l	50	R	50	U	50	R	50	U
4-Bromophenyl Phenyl Ether	ug/l	10	R	10	U	10	R	10	U
Hexachlorobenzene	ug/l	10	R	10	U	10	R	10	U
Pentachlorophenol	ug/l	50	R	50	U	50	R	50	U
Phenanthrene	ug/l	10	R	10	U	10	R	10	U
Anthracene	ug/l	10	R	10	U	10	R	10	U
Di-n-butyl Phthalate	ug/l	10	R	10	U	10	R	10	U
Fluoranthene	ug/l	10	R	10	U	10	R	10	U
Pyrene	ug/l	10	R	10	U	10	R	10	U
Benzyl Butyl Phthalate	ug/l	10	R	10	U	10	R	10	U
Benzo(a)Anthracene	ug/l	10	R	10	U	10	R	10	U
3,3'-Dichlorobenzidine	ug/l	20	R	20	UJ	20	R	20	U
Chrysene	ug/l	10	R	10	U	10	R	10	U
bis(2-Ethylhexyl) Phthalate	ug/l	10	R	10	U	10	R	10	U
Di-n-octylphthalate	ug/l	10	R	10	U	10	R	10	U
Benzo(b)Fluoranthene	ug/l	10	R	10	U	10	R	10	U
Benzo(k)Fluoranthene	ug/l	10	R	10	UJ	10	R	10	U
Benzo(a)Pyrene	ug/l	10	R	10	U	10	R	10	U
Indeno(1,2,3-c,d)pyrene	ug/l	1.1	R	10	UJ	0.58	R	0.7	J
Dibenz(a,h)anthracene	ug/l	1.1	R	10	UJ	10	R	10	U
Benzo(g,h,i)Perylene	ug/l	1.3	R	10	UJ	0.68	R	0.91	J
Carbazole	ug/l	10	R	10	U	10	R	10	U

Notes:
(1) All mercury samples were extracted on 7/12/2002 and analyzed
= indicates that the analyte was detected at the concentration report
J indicates an estimated value. One or more quality control (QC) paratory's quantitation limit
R indicates that the sample was reanalyzed.
U indicates that the consitutent was not detected. The method detec
UJ indicates that the consitutent was not detected. The reported me

App[illegible] F-1

Semi-volatile Organic Compound Analytical Results for Shallow

RFI Report Addendum, AOC 701, Zone E, Charleston Naval Comple

	StationID	E701GW005		E701GW005		E701GW006		E701GW006	
	SampleID	701GW005M1		701GW005M1RE		701GW006M1		701GW006M1RE	
	DateCollected	07/30/2002		07/30/2002		07/30/2002		07/30/2002	
	DateExtracted	08/02/2002		08/08/2002		08/02/2002		08/08/2002	
	DateAnalyzed	08/06/2002		08/10/2002		08/06/2002		08/10/2002	
	SDGNumber	CNC134		CNC134		CNC134		CNC134	
Parameter	**Units**								
N-Nitrosodiphenylamine	ug/l	10	U	13	R	10	U	18	R
Phenol	ug/l	10	U	13	R	10	U	18	R
bis(2-Chloroethyl) ether (2-Chloroethyl Ether)	ug/l	10	U	13	R	10	U	18	R
2-Chlorophenol	ug/l	10	U	13	R	10	U	18	R
Benzyl alcohol	ug/l	10	U	13	R	10	U	18	R
Bis(2-Chloroisopropyl)Ether	ug/l	10	U	13	R	10	U	18	R
2-Methylphenol (o-Cresol)	ug/l	10	U	13	R	10	U	18	R
N-Nitrosodi-n-propylamine	ug/l	10	U	13	R	10	U	18	R
3-Methylphenol/4-Methylphenol (mp-Cresol)	ug/l	10	U	13	R	10	U	18	R
Hexachloroethane	ug/l	10	U	13	R	10	U	18	R
Nitrobenzene	ug/l	10	U	13	R	10	U	18	R
Isophorone	ug/l	10	U	13	R	10	U	18	R
2-Nitrophenol	ug/l	10	U	13	R	10	U	18	R
2,4-Dimethylphenol	ug/l	10	U	13	R	10	U	18	R
bis(2-Chloroethoxy) Methane	ug/l	10	U	13	R	10	U	18	R
2,4-Dichlorophenol	ug/l	10	U	13	R	10	U	18	R
Benzoic acid	ug/l	50	U	64	R	50	U	91	R
Naphthalene	ug/l	10	U	13	R	10	U	18	R
4-Chloroaniline	ug/l	10	U	13	R	10	U	18	R
Hexachlorobutadiene	ug/l	10	U	13	R	10	U	18	R
4-Chloro-3-methylphenol	ug/l	10	U	13	R	10	U	18	R
2-Methylnaphthalene	ug/l	10	U	13	R	10	U	18	R
Hexachlorocyclopentadiene	ug/l	10	U	13	R	10	U	18	R
2,4,6-Trichlorophenol	ug/l	10	U	13	R	10	U	18	R
2,4,5-Trichlorophenol	ug/l	50	U	64	R	50	U	91	R
2-Chloronaphthalene	ug/l	10	U	13	R	10	U	18	R
2-Nitroaniline	ug/l	50	U	64	R	50	U	91	R
3-Nitroaniline	ug/l	50	U	64	R	50	U	91	R
Dimethyl Phthalate	ug/l	10	U	13	R	10	U	18	R
2,6-Dinitrotoluene	ug/l	10	U	13	R	10	U	18	R
Acenaphthylene	ug/l	10	U	13	R	10	U	18	R
Acenaphthene	ug/l	10	U	13	R	10	U	18	R
2,4-Dinitrophenol	ug/l	50	U	64	R	50	U	91	R
Dibenzofuran	ug/l	10	U	13	R	10	U	18	R
2,4-Dinitrotoluene	ug/l	10	U	13	R	10	U	18	R
Diethyl Phthalate	ug/l	10	U	13	R	10	U	18	R

Appendix F-1
Semi-volatile Organic Compound Analytical Results for Shallow
RFI Report Addendum, AOC 701, Zone E, Charleston Naval Comple

	StationID	E701GW005		E701GW005		E701GW006		E701GW006	
	SampleID	701GW005M1		701GW005M1RE		701GW006M1		701GW006M1RE	
	DateCollected	07/30/2002		07/30/2002		07/30/2002		07/30/2002	
	DateExtracted	08/02/2002		08/08/2002		08/02/2002		08/08/2002	
	DateAnalyzed	08/06/2002		08/10/2002		08/06/2002		08/10/2002	
	SDGNumber	CNC134		CNC134		CNC134		CNC134	
Parameter	**Units**								
4-Nitrophenol	ug/l	50	U	64	R	50	U	91	R
Fluorene	ug/l	10	U	13	R	10	U	18	R
4-Chlorophenyl Phenyl Ether	ug/l	10	U	13	R	10	U	18	R
4,6-Dinitro-2-methylphenol	ug/l	50	U	64	R	50	U	91	R
4-Nitroaniline	ug/l	50	U	64	R	50	U	91	R
4-Bromophenyl Phenyl Ether	ug/l	10	U	13	R	10	U	18	R
Hexachlorobenzene	ug/l	10	U	13	R	10	U	18	R
Pentachlorophenol	ug/l	50	U	64	R	50	U	91	R
Phenanthrene	ug/l	10	U	13	R	10	U	18	R
Anthracene	ug/l	10	U	13	R	10	U	18	R
Di-n-butyl Phthalate	ug/l	10	U	1.4	R	10	U	18	R
Fluoranthene	ug/l	10	U	13	R	10	U	18	R
Pyrene	ug/l	10	U	13	R	10	U	18	R
Benzyl Butyl Phthalate	ug/l	10	U	13	R	10	U	18	R
Benzo(a)Anthracene	ug/l	10	U	13	R	10	U	18	R
3,3'-Dichlorobenzidine	ug/l	20	UJ	26	R	20	UJ	36	R
Chrysene	ug/l	10	U	13	R	10	U	18	R
bis(2-Ethylhexyl) Phthalate	ug/l	10	U	13	R	10	U	1.1	R
Di-n-octylphthalate	ug/l	10	U	13	R	10	U	18	R
Benzo(b)Fluoranthene	ug/l	10	U	13	R	10	U	18	R
Benzo(k)Fluoranthene	ug/l	10	UJ	13	R	10	UJ	18	R
Benzo(a)Pyrene	ug/l	10	U	13	R	10	U	18	R
Indeno(1,2,3-c,d)pyrene	ug/l	10	UJ	13	R	10	UJ	18	R
Dibenz(a,h)anthracene	ug/l	10	UJ	13	R	10	UJ	18	R
Benzo(g,h,i)Perylene	ug/l	10	UJ	13	R	10	UJ	18	R
Carbazole	ug/l	10	U	13	R	10	U	18	R

Notes:
(1) All mercury samples were extracted on 7/12/2002 and analyzed
= indicates that the analyte was detected at the concentration report
J indicates an estimated value. One or more quality control (QC) pa
R indicates that the sample was reanalyzed.
U indicates that the consitutent was not detected. The method detec
UJ indicates that the consitutent was not detected. The reported me

Appendix F-1
Inorganic Consitituent Analytical Results for Shallow Groundwater
RFI Report Addendum, AOC 701, Zone E, Charleston Naval Complex

	StationID	E701GW001		E701GW002		E701GW003		E701GW003		E701GW004		E701GW005		E701GW006	
	SampleID	701GW001M1		701GW002M1		701GW003M1		701GW003M1RE		701GW004M1		701GW005M1		701GW006M1	
	DateCollected	07/29/2002		07/29/2002		07/30/2002		07/30/2002		07/30/2002		07/30/2002		07/30/2002	
	DateExtracted	08/08/2002		08/08/2002		08/08/2002		08/08/2002		08/08/2002		08/08/2002		08/08/2002	
	DateAnalyzed	08/09/2002		08/09/2002		08/09/2002		08/14/2002		08/09/2002		08/09/2002		08/09/2002	
	SDGNumber	CNC134		CNC134		CNC134		CNC134		CNC134		CNC134		CNC134	
Parameter	**Units**														
Aluminum	mg/l	0.2	UJ	0.11	UJ	0.22	UJ			14	J	8.8	J	0.92	J
Antimony	mg/l	0.0025	U	0.0025	U	0.0025	U			0.0025	U	0.0025	U	0.0025	U
Arsenic	mg/l	0.0019	J	0.0016	U	0.0058	J			0.0081	J	0.0038	J	0.0016	U
Barium	mg/l	0.014	U	0.011	U	0.026	U			0.055	U	0.051	U	0.18	J
Beryllium	mg/l	0.00027	U	0.00027	U	0.00027	U			0.00038	J	0.00027	U	0.00027	U
Cadmium	mg/l	0.00036	U	0.00036	U	0.00036	U			0.00036	U	0.00036	U	0.0016	J
Calcium	mg/l	110	=	110	=	170	=			37	U	93	U	120	=
Chromium, Total	mg/l	0.00085	U	0.00085	U	0.00085	U			0.024	=	0.011	=	0.00085	U
Cobalt	mg/l	0.0007	U	0.0007	U	0.0007	U			0.0011	J	0.0017	J	0.0007	U
Copper	mg/l	0.00075	U	0.0006	U	0.00071	U			0.015	J	0.0061	U	0.0013	U
Iron	mg/l	2.9	=	3.3	=	6.6	=			38	=	24	=	88	=
Lead	mg/l	0.00075	U	0.00075	U	0.00079	J			0.026	=	0.0078	=	0.0015	J
Magnesium	mg/l	16	=	16	=	19	=			14	=	14	=	180	=
Manganese	mg/l	0.083	=	0.17	=	0.093	=			0.068	=	0.19	=	0.15	J
Mercury (1)	mg/l	7.2E-05	U	7.2E-05	U	7.2E-05	U			7.2E-05	U	7.2E-05	U	7.2E-05	U
Nickel	mg/l	0.0024	U	0.0024	U	0.0024	U			0.0043	U	0.0041	U	0.0024	U
Potassium	mg/l	9.4	UJ	11	J			12	J	12	J	18	J	64	J
Selenium	mg/l	0.0021	U	0.0021	U	0.0021	U			0.0021	U	0.0023	J	0.0021	U
Silver	mg/l	0.00095	U	0.00095	U	0.00095	U			0.00095	U	0.00095	U	0.00095	U
Sodium	mg/l	51	UJ	29	UJ			8.4	UJ	33	UJ	14	UJ	1100	J
Thallium	mg/l	0.0025	U	0.0025	U	0.0025	U			0.0025	U	0.0025	U	0.0025	U
Vanadium	mg/l	0.0012	U	0.0011	U	0.0013	U			0.042	J	0.019	J	0.0055	U
Zinc	mg/l	0.003	U	0.003	U	0.0045	J			0.13	=	0.015	J	0.026	=

Notes:
(1) All mercury samples were extracted on 7/12/2002 and analyzed on 10/15/2002.
= indicates that the analyte was detected at the concentration reported.
J indicates an estimated value. One or more quality control (QC) parrameters were outside control limits or the value was detected at a concentration below the laboratory's quantitation limit
U indicates that the consitutent was not detected. The method detection limit is reported.
UJ indicates that the consitutent was not detected. The reported method detection limit is estimated.

Appendix F-2
Volatile Organic Compound Analytical Results for Deep Groundwater
RFI Report Addendum, AOC 701, Zone E, Charleston Naval Complex

	StationID	E701GW01D		E701GW02D		E701GW03D	
	SampleID	701GW01DM1		701GW02DM1		701GW03DM1	
	DateCollected	07/29/2002		07/29/2002		07/30/2002	
	DateExtracted	08/08/2002		08/08/2002		08/08/2002	
	DateAnalyzed	08/08/2002		08/08/2002		08/08/2002	
	SDGNumber	CNC134		CNC134		CNC134	
Parameter	**Units**						
Chloromethane	ug/l	10	U	10	U	10	U
Vinyl chloride	ug/l	10	U	10	U	10	U
Bromomethane	ug/l	10	UJ	10	UJ	10	UJ
Chloroethane	ug/l	10	UJ	10	UJ	10	UJ
1,1-Dichloroethene	ug/l	5	U	5	U	5	U
Acetone	ug/l	10	U	10	U	10	U
Carbon Disulfide	ug/l	5	U	5	U	1.9	J
Methylene Chloride	ug/l	5	U	5	U	5	U
trans-1,2-Dichloroethene	ug/l	5	U	5	U	5	U
1,1-Dichloroethane	ug/l	5	UJ	5	UJ	5	UJ
Vinyl acetate	ug/l	10	U	10	U	10	U
Methyl ethyl ketone (2-Butanone)	ug/l	10	U	10	U	10	U
cis-1,2-Dichloroethylene	ug/l	5	U	5	U	5	U
1,2-Dichloroethene (total)	ug/l	5	U	5	U	5	U
Chloroform	ug/l	5	U	5	U	5	U
1,1,1-Trichloroethane	ug/l	5	U	5	U	5	U
Carbon Tetrachloride	ug/l	5	U	5	U	5	U
1,2-Dichloroethane	ug/l	5	U	5	U	5	U
Benzene	ug/l	5	U	5	U	5	U
Trichloroethylene (TCE)	ug/l	5	U	5	U	5	U
1,2-Dichloropropane	ug/l	5	U	5	U	5	U
Bromodichloromethane	ug/l	5	U	5	U	5	U
2-Chloroethyl vinyl ether	ug/l	10	UJ	10	UJ	10	UJ
cis-1,3-Dichloropropene	ug/l	5	U	5	U	5	U
Methyl isobutyl ketone (4-Methyl-2-pentanone)	ug/l	10	U	10	U	10	U
Toluene	ug/l	5	U	5	U	5	U
trans-1,3-Dichloropropene	ug/l	5	U	5	U	5	U
1,1,2-Trichloroethane	ug/l	5	U	5	U	5	U
2-Hexanone	ug/l	10	UJ	10	UJ	10	UJ
Tetrachloroethylene (PCE)	ug/l	5	U	5	U	5	U
Dibromochloromethane	ug/l	5	U	5	U	5	U
Chlorobenzene	ug/l	5	U	5	U	5	U
Ethylbenzene	ug/l	5	U	5	U	5	U
m+p Xylene	ug/l	5	U	5	U	5	U
o-Xylene	ug/l	5	U	5	U	5	U
Xylenes, Total	ug/l	5	U	5	U	5	U

Appendix F-2
Volatile Organic Compound Analytical Results for Deep Groundwater
RFI Report Addendum, AOC 701, Zone E, Charleston Naval Complex

	StationID	E701GW01D		E701GW02D		E701GW03D	
	SampleID	701GW01DM1		701GW02DM1		701GW03DM1	
	DateCollected	07/29/2002		07/29/2002		07/30/2002	
	DateExtracted	08/08/2002		08/08/2002		08/08/2002	
	DateAnalyzed	08/08/2002		08/08/2002		08/08/2002	
	SDGNumber	CNC134		CNC134		CNC134	
Parameter	**Units**						
Styrene	ug/l	5	U	5	U	5	U
Bromoform	ug/l	5	UJ	5	UJ	5	UJ
1,1,2,2-Tetrachloroethane	ug/l	5	UJ	5	UJ	5	UJ
1,3-Dichlorobenzene	ug/l	5	U	5	U	5	U
1,4-Dichlorobenzene	ug/l	5	U	5	U	5	U
1,2-Dichlorobenzene	ug/l	5	U	5	U	5	U
1,2,4-Trichlorobenzene	ug/l	5	UJ	5	UJ	5	UJ
1,2,3-Trichlorobenzene	ug/l	5	UJ	5	UJ	5	UJ

Notes:
(1) All mercury samples were extracted on 7/12/2002 and analyzed on 10/15/2002.
= indicates that the analyte was detected at the concentration reported.
J indicates an estimated value. One or more quality control (QC) parrameters were outside control limits or the value was detected at a concentration below t
U indicates that the consitutent was not detected. The method detection limit is reported.
UJ indicates that the consitutent was not detected. The reported method detection limit is estimated.

Appendix F-2
Volatile Organic Compound Analytical Results for Deep Groundw
RFI Report Addendum, AOC 701, Zone E, Charleston Naval Comple

	StationID	E701GW04D		E701GW05D		E701GW06D	
	SampleID	701GW04DM1		701GW05DM1		701GW06DM1	
	DateCollected	07/30/2002		07/30/2002		07/30/2002	
	DateExtracted	08/08/2002		08/08/2002		08/08/2002	
	DateAnalyzed	08/08/2002		08/08/2002		08/08/2002	
	SDGNumber	CNC134		CNC134		CNC134	
Parameter	**Units**						
Chloromethane	ug/l	10	U	10	U	10	U
Vinyl chloride	ug/l	10	U	10	U	10	U
Bromomethane	ug/l	10	UJ	10	UJ	10	UJ
Chloroethane	ug/l	10	UJ	10	UJ	10	UJ
1,1-Dichloroethene	ug/l	5	U	5	U	5	U
Acetone	ug/l	10	U	10	U	10	U
Carbon Disulfide	ug/l	5	U	5	U	5	U
Methylene Chloride	ug/l	5	U	5	U	5	U
trans-1,2-Dichloroethene	ug/l	5	U	5	U	5	U
1,1-Dichloroethane	ug/l	5	UJ	5	UJ	5	UJ
Vinyl acetate	ug/l	10	U	10	U	10	U
Methyl ethyl ketone (2-Butanone)	ug/l	10	U	10	U	10	U
cis-1,2-Dichloroethylene	ug/l	5	U	5	U	5	U
1,2-Dichloroethene (total)	ug/l	5	U	5	U	5	U
Chloroform	ug/l	5	U	5	U	5	U
1,1,1-Trichloroethane	ug/l	5	U	5	U	5	U
Carbon Tetrachloride	ug/l	5	U	5	U	5	U
1,2-Dichloroethane	ug/l	5	U	5	U	5	U
Benzene	ug/l	5	U	5	U	5	U
Trichloroethylene (TCE)	ug/l	5	U	5	U	5	U
1,2-Dichloropropane	ug/l	5	U	5	U	5	U
Bromodichloromethane	ug/l	5	U	5	U	5	U
2-Chloroethyl vinyl ether	ug/l	10	UJ	10	UJ	10	UJ
cis-1,3-Dichloropropene	ug/l	5	U	5	U	5	U
Methyl isobutyl ketone (4-Methyl-2-pentanone)	ug/l	10	U	10	U	10	U
Toluene	ug/l	5	U	5	U	5	U
trans-1,3-Dichloropropene	ug/l	5	U	5	U	5	U
1,1,2-Trichloroethane	ug/l	5	U	5	U	5	U
2-Hexanone	ug/l	10	UJ	10	UJ	10	UJ
Tetrachloroethylene (PCE)	ug/l	5	U	5	U	5	U
Dibromochloromethane	ug/l	5	U	5	U	5	U
Chlorobenzene	ug/l	5	U	5	U	5	U
Ethylbenzene	ug/l	5	U	5	U	5	U
m+p Xylene	ug/l	5	U	5	U	5	U
o-Xylene	ug/l	5	U	5	U	5	U
Xylenes, Total	ug/l	5	U	5	U	5	U

A dix F-2

Volatile Organic Compound Analytical Results for Deep Ground

RFI Report Addendum, AOC 701, Zone E, Charleston Naval Comple

	StationID	E701GW04D		E701GW05D		E701GW06D	
	SampleID	701GW04DM1		701GW05DM1		701GW06DM1	
	DateCollected	07/30/2002		07/30/2002		07/30/2002	
	DateExtracted	08/08/2002		08/08/2002		08/08/2002	
	DateAnalyzed	08/08/2002		08/08/2002		08/08/2002	
	SDGNumber	CNC134		CNC134		CNC134	
Parameter	**Units**						
Styrene	ug/l	5	U	5	U	5	U
Bromoform	ug/l	5	UJ	5	UJ	5	UJ
1,1,2,2-Tetrachloroethane	ug/l	5	UJ	5	UJ	5	UJ
1,3-Dichlorobenzene	ug/l	5	U	5	U	5	U
1,4-Dichlorobenzene	ug/l	5	U	5	U	5	U
1,2-Dichlorobenzene	ug/l	5	U	5	U	5	U
1,2,4-Trichlorobenzene	ug/l	5	UJ	5	UJ	5	UJ
1,2,3-Trichlorobenzene	ug/l	5	UJ	5	UJ	5	UJ

Notes:

(1) All mercury samples were extracted on 7/12/2002 and analyzed

= indicates that the analyte was detected at the concentration reporte

J indicates an estimated value. One or more quality control (QC) parhe laboratory's quantitation limit

U indicates that the consitutent was not detected. The method detec

UJ indicates that the consitutent was not detected. The reported met

Appendix F-2
Semi-volatile Organic Compound Analytical Results for Deep Groundwater
RFI Report Addendum, AOC 701, Zone E, Charleston Naval Complex

	StationID	E701GW01D		E701GW02D		E701GW03D		E701GW04D	
	SampleID	701GW01DM1		701GW02DM1		701GW03DM1		701GW04DM1	
	DateCollected	07/29/2002		07/29/2002		07/30/2002		07/30/2002	
	DateExtracted	08/02/2002		08/02/2002		08/02/2002		08/02/2002	
	DateAnalyzed	08/06/2002		08/06/2002		08/06/2002		08/06/2002	
	SDGNumber	CNC134		CNC134		CNC134		CNC134	
Parameter	**Units**								
N-Nitrosodiphenylamine	ug/l	10	U	10	U	10	U	10	U
Phenol	ug/l	10	U	10	U	10	U	10	U
bis(2-Chloroethyl) ether (2-Chloroethyl Ether)	ug/l	10	U	10	U	10	U	10	U
2-Chlorophenol	ug/l	10	U	10	U	10	U	10	U
Benzyl alcohol	ug/l	10	U	10	U	10	U	10	U
Bis(2-Chloroisopropyl)Ether	ug/l	10	U	10	U	10	U	10	U
2-Methylphenol (o-Cresol)	ug/l	10	U	10	U	10	U	10	U
N-Nitrosodi-n-propylamine	ug/l	10	U	10	U	10	U	10	U
3-Methylphenol/4-Methylphenol (mp-Cresol)	ug/l	10	U	10	U	10	U	10	U
Hexachloroethane	ug/l	10	U	10	U	10	U	10	U
Nitrobenzene	ug/l	10	U	10	U	10	U	10	U
Isophorone	ug/l	10	U	10	U	10	U	10	U
2-Nitrophenol	ug/l	10	U	10	U	10	U	10	U
2,4-Dimethylphenol	ug/l	10	U	10	U	10	U	10	U
bis(2-Chloroethoxy) Methane	ug/l	10	U	10	U	10	U	10	U
2,4-Dichlorophenol	ug/l	10	U	10	U	10	U	10	U
Benzoic acid	ug/l	50	U	50	U	50	U	50	U
Naphthalene	ug/l	10	U	10	U	10	U	10	U
4-Chloroaniline	ug/l	10	U	10	U	10	U	10	U
Hexachlorobutadiene	ug/l	10	U	10	U	10	U	10	U
4-Chloro-3-methylphenol	ug/l	10	U	10	U	10	U	10	U
2-Methylnaphthalene	ug/l	10	U	10	U	10	U	10	U
Hexachlorocyclopentadiene	ug/l	10	U	10	U	10	U	10	U
2,4,6-Trichlorophenol	ug/l	10	U	10	U	10	U	10	U
2,4,5-Trichlorophenol	ug/l	50	U	50	U	50	U	50	U
2-Chloronaphthalene	ug/l	10	U	10	U	10	U	10	U
2-Nitroaniline	ug/l	50	U	50	U	50	U	50	U
3-Nitroaniline	ug/l	50	U	50	U	50	U	50	U
Dimethyl Phthalate	ug/l	10	U	10	U	10	U	10	U
2,6-Dinitrotoluene	ug/l	10	U	10	U	10	U	10	U
Acenaphthylene	ug/l	10	U	10	U	10	U	10	U
Acenaphthene	ug/l	10	U	10	U	10	U	10	U
2,4-Dinitrophenol	ug/l	50	U	50	U	50	U	50	U
Dibenzofuran	ug/l	10	U	10	U	10	U	10	U
2,4-Dinitrotoluene	ug/l	10	U	10	U	10	U	10	U
Diethyl Phthalate	ug/l	10	U	10	U	10	U	10	U
4-Nitrophenol	ug/l	50	U	50	U	50	U	50	U

A dix F-2

Sé olatile Organic Compound Analytical Results for Deep Groundwate

RFI Report Addendum, AOC 701, Zone E, Charleston Naval Complex

	StationID	E701GW01D		E701GW02D		E701GW03D		E701GW04D	
	SampleID	701GW01DM1		701GW02DM1		701GW03DM1		701GW04DM1	
	DateCollected	07/29/2002		07/29/2002		07/30/2002		07/30/2002	
	DateExtracted	08/02/2002		08/02/2002		08/02/2002		08/02/2002	
	DateAnalyzed	08/06/2002		08/06/2002		08/06/2002		08/06/2002	
	SDGNumber	CNC134		CNC134		CNC134		CNC134	
Parameter	**Units**								
Fluorene	ug/l	10	U	10	U	10	U	10	U
4-Chlorophenyl Phenyl Ether	ug/l	10	U	10	U	10	U	10	U
4,6-Dinitro-2-methylphenol	ug/l	50	U	50	U	50	U	50	U
4-Nitroaniline	ug/l	50	U	50	U	50	U	50	U
4-Bromophenyl Phenyl Ether	ug/l	10	U	10	U	10	U	10	U
Hexachlorobenzene	ug/l	10	U	10	U	10	U	10	U
Pentachlorophenol	ug/l	50	U	50	U	50	U	50	U
Phenanthrene	ug/l	10	U	10	U	10	U	10	U
Anthracene	ug/l	10	U	10	U	10	U	10	U
Di-n-butyl Phthalate	ug/l	10	U	10	U	10	U	10	U
Fluoranthene	ug/l	10	U	10	U	10	U	10	U
Pyrene	ug/l	10	U	10	U	10	U	10	U
Benzyl Butyl Phthalate	ug/l	10	U	10	U	10	U	10	U
Benzo(a)Anthracene	ug/l	10	U	10	U	10	U	10	U
3,3'-Dichlorobenzidine	ug/l	20	U	20	U	20	U	20	U
Chrysene	ug/l	10	U	10	U	10	U	10	U
bis(2-Ethylhexyl) Phthalate	ug/l	10	U	10	U	10	U	10	U
Di-n-octylphthalate	ug/l	10	U	10	U	10	U	10	U
Benzo(b)Fluoranthene	ug/l	10	UJ	10	UJ	10	UJ	10	UJ
Benzo(k)Fluoranthene	ug/l	10	UJ	10	UJ	10	UJ	10	UJ
Benzo(a)Pyrene	ug/l	10	U	10	U	10	U	10	U
Indeno(1,2,3-c,d)pyrene	ug/l	10	U	10	U	10	U	10	U
Dibenz(a,h)anthracene	ug/l	10	UJ	10	UJ	10	UJ	10	UJ
Benzo(g,h,i)Perylene	ug/l	10	UJ	10	UJ	10	UJ	10	UJ
Carbazole	ug/l	10	U	10	U	10	U	10	U

Notes:

= indicates that the analyte was detected at the concentration reported.

J indicates an estimated value. One or more quality control (QC) parrameters were outside control limits or the value was detected at a concentration below the labo

R indicated that the sample was reanalyzed

U indicates that the consitutent was not detected. The method detection limit is reported.

UJ indicates that the consitutent was not detected. The reported method detection limit is estimated.

Appendix F-2
Semi-volatile Organic Compound Analytical Results for Deep Gr
RFI Report Addendum, AOC 701, Zone E, Charleston Naval Comple

	StationID	E701GW05D		E701GW06D	
	SampleID	701GW05DM1		701GW06DM1	
	DateCollected	07/30/2002		07/30/2002	
	DateExtracted	08/02/2002		08/02/2002	
	DateAnalyzed	08/06/2002		08/06/2002	
	SDGNumber	CNC134		CNC134	
Parameter	**Units**				
N-Nitrosodiphenylamine	ug/l	10	U	10	U
Phenol	ug/l	10	U	10	U
bis(2-Chloroethyl) ether (2-Chloroethyl Ether)	ug/l	10	U	10	U
2-Chlorophenol	ug/l	10	U	10	U
Benzyl alcohol	ug/l	10	U	10	U
Bis(2-Chloroisopropyl)Ether	ug/l	10	U	10	U
2-Methylphenol (o-Cresol)	ug/l	10	U	10	U
N-Nitrosodi-n-propylamine	ug/l	10	U	10	U
3-Methylphenol/4-Methylphenol (mp-Cresol)	ug/l	10	U	10	U
Hexachloroethane	ug/l	10	U	10	U
Nitrobenzene	ug/l	10	U	10	U
Isophorone	ug/l	10	U	10	U
2-Nitrophenol	ug/l	10	U	10	U
2,4-Dimethylphenol	ug/l	10	U	10	U
bis(2-Chloroethoxy) Methane	ug/l	10	U	10	U
2,4-Dichlorophenol	ug/l	10	U	10	U
Benzoic acid	ug/l	50	U	50	U
Naphthalene	ug/l	10	U	10	U
4-Chloroaniline	ug/l	10	U	10	U
Hexachlorobutadiene	ug/l	10	U	10	U
4-Chloro-3-methylphenol	ug/l	10	U	10	U
2-Methylnaphthalene	ug/l	10	U	10	U
Hexachlorocyclopentadiene	ug/l	10	U	10	U
2,4,6-Trichlorophenol	ug/l	10	U	10	U
2,4,5-Trichlorophenol	ug/l	50	U	50	U
2-Chloronaphthalene	ug/l	10	U	10	U
2-Nitroaniline	ug/l	50	U	50	U
3-Nitroaniline	ug/l	50	U	50	U
Dimethyl Phthalate	ug/l	10	U	10	U
2,6-Dinitrotoluene	ug/l	10	U	10	U
Acenaphthylene	ug/l	10	U	10	U
Acenaphthene	ug/l	10	U	10	U
2,4-Dinitrophenol	ug/l	50	U	50	U
Dibenzofuran	ug/l	10	U	10	U
2,4-Dinitrotoluene	ug/l	10	U	10	U
Diethyl Phthalate	ug/l	10	U	10	U
4-Nitrophenol	ug/l	50	U	50	U

A dix F-2

Semi-volatile Organic Compound Analytical Results for Deep Gr

RFI Report Addendum, AOC 701, Zone E, Charleston Naval Comple

	StationID	E701GW05D		E701GW06D	
	SampleID	701GW05DM1		701GW06DM1	
	DateCollected	07/30/2002		07/30/2002	
	DateExtracted	08/02/2002		08/02/2002	
	DateAnalyzed	08/06/2002		08/06/2002	
	SDGNumber	CNC134		CNC134	
Parameter	**Units**				
Fluorene	ug/l	10	U	10	U
4-Chlorophenyl Phenyl Ether	ug/l	10	U	10	U
4,6-Dinitro-2-methylphenol	ug/l	50	U	50	U
4-Nitroaniline	ug/l	50	U	50	U
4-Bromophenyl Phenyl Ether	ug/l	10	U	10	U
Hexachlorobenzene	ug/l	10	U	10	U
Pentachlorophenol	ug/l	50	U	50	U
Phenanthrene	ug/l	10	U	10	U
Anthracene	ug/l	10	U	10	U
Di-n-butyl Phthalate	ug/l	10	U	10	U
Fluoranthene	ug/l	10	U	10	U
Pyrene	ug/l	10	U	10	U
Benzyl Butyl Phthalate	ug/l	10	U	10	U
Benzo(a)Anthracene	ug/l	10	U	10	U
3,3'-Dichlorobenzidine	ug/l	20	U	20	U
Chrysene	ug/l	10	U	10	U
bis(2-Ethylhexyl) Phthalate	ug/l	10	U	10	U
Di-n-octylphthalate	ug/l	10	U	10	U
Benzo(b)Fluoranthene	ug/l	10	UJ	10	UJ
Benzo(k)Fluoranthene	ug/l	10	UJ	10	UJ
Benzo(a)Pyrene	ug/l	10	U	10	U
Indeno(1,2,3-c,d)pyrene	ug/l	10	U	10	U
Dibenz(a,h)anthracene	ug/l	10	UJ	10	UJ
Benzo(g,h,i)Perylene	ug/l	10	UJ	10	UJ
Carbazole	ug/l	10	U	10	U

Notes:

= indicates that the analyte was detected at the concentration report

J indicates an estimated value. One or more quality control (QC) paratory's quantitation limit

R indicated that the sample was reanalyzed

U indicates that the consitutent was not detected. The method detec

UJ indicates that the consitutent was not detected. The reported me

Appendix F-2
Inorganic Consitituent Analytical Results for Deep Groundwater
RFI Report Addendum, AOC 701, Zone E, Charleston Naval Complex

	StationID	E701GW01D		E701GW02D		E701GW03D		E701GW04D		E701GW05D		E701GW06D	
	SampleID	701GW01DM1		701GW02DM1		701GW03DM1		701GW04DM1		701GW05DM1		701GW06DM1	
	DateCollected	07/29/2002		07/29/2002		07/30/2002		07/30/2002		07/30/2002		07/30/2002	
	DateExtracted	08/08/2002		08/08/2002		08/08/2002		08/08/2002		08/08/2002		08/08/2002	
	DateAnalyzed	08/09/2002		08/09/2002		08/09/2002		08/09/2002		08/09/2002		08/09/2002	
	SDGNumber	CNC134		CNC134		CNC134		CNC134		CNC134		CNC134	
Parameter	**Units**												
Aluminum	mg/l	0.2	UJ	0.16	UJ	0.32	J	0.085	UJ	0.089	UJ	1.1	J
Antimony	mg/l	0.0025	U	0.0025	U	0.0025	U	0.0025	U	0.0025	U	0.0025	U
Arsenic	mg/l	0.0016	U	0.0016	U	0.0016	U	0.0016	U	0.0055	J	0.028	=
Barium	mg/l	0.0059	U	0.0069	U	0.0056	U	0.012	U	0.012	U	0.05	U
Beryllium	mg/l	0.00027	U	0.00027	U	0.00027	U	0.00027	U	0.00027	U	0.00035	J
Cadmium	mg/l	0.00036	U	0.00036	U	0.00036	U	0.00036	U	0.00036	U	0.00038	J
Calcium	mg/l	65	U	80	U	48	U	81	U	80	U	94	U
Chromium, Total	mg/l	0.00085	U	0.00085	U	0.0014	J	0.00086	J	0.00085	U	0.0025	J
Cobalt	mg/l	0.0007	U	0.0007	U	0.0007	U	0.0007	U	0.0007	U	0.0023	J
Copper	mg/l	0.00073	U	0.00045	U	0.00059	U	0.00047	U	0.00061	U	0.0013	U
Iron	mg/l	3	=	2.5	=	2.3	=	4.1	=	12	=	60	=
Lead	mg/l	0.0011	J	0.00075	U	0.00075	U	0.00075	U	0.00075	U	0.00094	J
Magnesium	mg/l	7.9	U	21	=	6.1	U	13	=	24	=	94	=
Manganese	mg/l	0.055	=	0.11	=	0.056	=	0.07	=	0.075	=	1.2	=
Mercury (1)	mg/l	7.2E-05	U	7.2E-05	U	7.2E-05	U	7.2E-05	U	7.2E-05	U	7.2E-05	U
Nickel	mg/l	0.0024	U	0.0024	U	0.0024	U	0.0024	U	0.0024	U	0.0024	U
Potassium	mg/l	4.6	UJ	11	J	5.1	UJ	12	J	17	J	36	J
Selenium	mg/l	0.0021	U	0.0021	U	0.0021	U	0.0021	U	0.0021	U	0.0021	U
Silver	mg/l	0.00095	U	0.00095	U	0.00095	U	0.00095	U	0.00095	U	0.00095	U
Sodium	mg/l	15	UJ	110	J	4.1	UJ	26	UJ	110	J	580	J
Thallium	mg/l	0.0025	U	0.0025	U	0.0025	U	0.0025	U	0.0025	U	0.0025	U
Vanadium	mg/l	0.0015	U	0.0018	U	0.003	U	0.0032	U	0.0025	U	0.0052	U
Zinc	mg/l	0.0031	J	0.003	U	0.003	U	0.003	U	0.003	U	0.013	J

Notes:
(1) All mercury samples were extracted on 7/12/2002 and analyzed on 10/15/2002.
= indicates that the analyte was detected at the concentration reported.
J indicates an estimated value. One or more quality control (QC) parrameters were outside control limits or the value was detected at a concentration below the laborat
U indicates that the consitutent was not detected. The method detection limit is reported.
UJ indicates that the consitutent was not detected. The reported method detection limit is estimated.

Appendix G

Data Validation Summary - Charleston Naval Complex - Zone E, AOC 701

TO: Kris Garcia/CH2M HILL/ATL

FROM: Amy Juchem/CH2M HILL/GNA
Herb Kelly/CH2M HILL/GNA

DATE: September 5, 2002

The purpose of this memorandum is to present the results of the data validation process for the samples collected at AOC 701 in Zone E. The samples were collected between the dates of July 1 and July 30, 2002.

The specific samples and analytical fractions reviewed are summarized below in Table 1.

The Quality Control areas that were reviewed and the resulting findings are documented within each subsection that follows. This data was validated for compliance with the analytical method requirements. This process also included a review of the data to assess the accuracy, precision, and completeness based upon procedures described in the guidance documents such as the Environmental Protection Agency (EPA) *National Functional Guidelines for Inorganic Data Review (EPA 1994) and National Functional Guidelines for Organic Data Review (EPA 1999)*. Quality assurance/quality control (QA/QC) summary forms and data reports were reviewed.

Samples were submitted to Severn Trent Services, STL Savannah Laboratories, Inc., in Savannah, Georgia, for the following analyses: SW-846 8260 Volatile Organic Compounds (VOC), SW-846 8270 Semivolatile Organic Compounds (SVOC),), SW-846 8081A Organochlorine Pesticides and Polychlorinated Biphenyls, and Metals following SW-846 6010/7000 Series methodology.

Sample results that were not within the acceptance limits were appended with a qualifying flag, which consisted of a single- or double-letter code that indicated a possible problem with the data. The qualifying flags originated during the data review and validation processes. These also include the secondary, or the two-digit "sub-qualifier" flags. The secondary qualifiers provide the reasoning behind the assignment of a qualifier flag to the data. The secondary qualifiers are presented and defined below.

Attachment 1 lists the changes in data qualifiers, due to the validation process.

The following primary flags were used to qualify the data:

[=] Detected. The analyte was analyzed for and detected at the concentration shown.

[J] Estimated. The analyte was present but the reported value may not be accurate or precise.

[U] Undetected. The analyte was analyzed for but not detected above the method detection limit.

[UJ] Detection limit estimated. The analyte was analyzed for but qualified as not detected; the result is estimated.

[R] Rejected. The data is not useable.

Secondary Data Validation Qualifiers

Code	Definition
2S	Second Source
BL	Blank
BD	Blank Spike/Blank Spike Duplicate or (LCS/LCSD) Precision
BS	Blank Spike/LCS
CC	Continuing Calibration Verification
DL	Dilution
FD	Field Duplicate
HT	Holding Time
IB	In-Between (metals - B's → J's)
IC	Initial Calibration
IS	Internal Standard
LD	Lab Duplicate
LR	Concentration exceeded Linear Range
MD	MS/MSD or LCS/LCSD Precision
MS	Matrix Spike/Matrix Spike Duplicate
OT	Other (see DV worksheet)
PD	Pesticide Degradation
PS	Post Spike
RE	Re-extraction/Re-analysis
SD	Serial Dilution
SS	Spiked Surrogate
TN	Tune

Table 1 - Chemical Analytical Methods – Field and Quality Control Samples

SDG	Station ID	Sample ID	Lab Sample ID	Matrix	Sample Type	LR Type	Upper Depth	Lower Depth	Date Collected	VOC SW8260B	SVOC SW8270C	Pesticides SW8081A	PCBs SW8082	Metals SW6010B	Mercury SW7471A
CNC126	E701SB001	701SB00101	S244767*1	SO	N		0	1	07/01/02	X	X	X	X	X	X
CNC126	E701SB001	701SB00101RE	S244767*1*RE	SO	LR	RE	0	1	07/01/02			X	X		
CNC126	E701SB001	701SB00102	S244767*2	SO	N		3	5	07/01/02	X	X	X	X	X	X
CNC126	E701SB001	701SB00102RE	S244767*2*RE	SO	LR	RE	3	5	07/01/02			X	X		
CNC126	E701SB002	701SB00201	S244767*3	SO	N		0	1	07/01/02	X	X	X	X	X	X
CNC126	E701SB002	701SB00201RE	S244767*3*RE	SO	LR	RE	0	1	07/01/02			X	X		
CNC126	E701SB002	701SB00202	S244767*4	SO	N		3	5	07/01/02	X	X	X	X	X	X
CNC126	E701SB002	701SB00202RE	S244767*4*RE	SO	LR	RE	3	5	07/01/02			X	X		
CNC126	E701SB003	701SB00301	S244767*5	SO	N		0	1	07/01/02	X	X	X	X	X	X
CNC126	E701SB003	701SB00301RE	S244767*5*RE	SO	LR	RE	0	1	07/01/02		X				
CNC126	E701SB003	701SB00302	S244767*6	SO	N		3	5	07/01/02	X	X	X	X	X	X
CNC126	E701SB003	701SB00302RE	S244767*6*RE	SO	LR	RE	3	5	07/01/02			X	X		
CNC126	E701SB004	701SB00401	S244767*7	SO	N		0	1	07/01/02	X	X	X	X	X	X
CNC126	E701SB004	701SB00401RE	S244767*7*RE	SO	LR	RE	0	1	07/01/02			X	X		
CNC126	E701SB004	701SB00402	S244767*8	SO	N		3	5	07/01/02	X	X	X	X	X	X
CNC126	E701SB005	701SB00501	S244767*9	SO	N		0	1	07/01/02	X	X	X	X	X	X
CNC126	E701SB005	701SB00501RE	S244767*9*RE	SO	LR	RE	0	1	07/01/02			X	X		
CNC126	E701SB005	701SB00502	S244767*10	SO	N		3	5	07/01/02	X	X	X	X	X	X
CNC126	E701SB006	701SB00601	S244767*11	SO	N		0	1	07/01/02	X	X	X	X	X	X
CNC126	E701SB006	701SB00601RE	S244767*11*RE	SO	LR	RE	0	1	07/01/02			X	X		
CNC126	E701SB006	701SB00602	S244767*12	SO	N		3	5	07/01/02	X	X	X	X	X	X

SDG	Station ID	Sample ID	Lab Sample ID	Matrix	Sample Type	LR Type	Upper Depth	Lower Depth	Date Collected	VOC SW8260B	SVOC SW8270C	Pesticides SW8081A	PCBs SW8082	Metals SW6010B	Mercury SW7471A
CNC126	E701SB006	701SB00602RE	S244767*12*RE	SO	LR	RE	3	5	07/01/02			X	X		
CNC126	E701SB007	701SB00701	S244767*13	SO	N		0	1	07/01/02	X	X	X	X	X	X
CNC126	E701SB007	701SB00701RE	S244767*13*RE	SO	LR	RE	0	1	07/01/02			X	X		
CNC126	E701SB007	701SB00702	S244767*14	SO	N		3	5	07/01/02	X	X	X	X	X	X
CNC126	E701SB007	701SB00702RE	S244767*14*RE	SO	LR	RE	3	5	07/01/02			X	X		
CNC126	E701SB008	701SB00801	S244767*15	SO	N		0	1	07/01/02	X	X	X	X	X	X
CNC126	E701SB008	701SB00801RE	S244767*15*RE	SO	LR	RE	0	1	07/01/02			X	X		
CNC126	E701SB008	701SB00802	S244767*16	SO	N		3	5	07/01/02	X	X	X	X	X	X
CNC126	E701SB008	701SB00802RE	S244767*16*RE	SO	LR	RE	3	5	07/01/02			X	X		
CNC126	E701SB009	701SB00901	S244767*17	SO	N		0	1	07/01/02	X	X	X	X	X	X
CNC126	E701SB009	701SB00901RE	S244767*17*RE	SO	LR	RE	0	1	07/01/02			X	X		
CNC126	E701SB009	701SB00902	S244767*18	SO	N		3	5	07/01/02	X	X	X	X	X	X
CNC126	E701SB009	701SB00902RE	S244767*18*RE	SO	LR	RE	3	5	07/01/02			X	X		
CNC126	E701SB010	701SB01001	S244767*19	SO	N		0	1	07/01/02	X	X	X	X	X	X
CNC126	E701SB010	701SB01001RE	S244767*19*RE	SO	LR	RE	0	1	07/01/02			X	X		
CNC126	E701SB010	701SB01002	S244767*20	SO	N		3	5	07/01/02	X	X	X	X	X	X
CNC126	E701SB010	701SB01002RE	S244767*20*RE	SO	LR	RE	3	5	07/01/02			X	X		
CNC126	FIELDQC	701EB001M1	S244767*21	WQ	EB				07/01/02	X	X	X	X	X	X
CNC126	FIELDQC	009TW004M6	S244767*22	WQ	TB				07/01/02	X					
CNC126	LABQC	4476723LB	S244767*23	WQ	LB					X	X	X	X	X	X
CNC126	LABQC	4476724BS	S244767*24	WQ	BS					X	X	X	X	X	X
CNC126	LABQC	4476730LB	S244767*30	SQ	LB					X	X	X	X	X	X
CNC126	LABQC	4476731BS	S244767*31	SQ	BS					X	X	X	X	X	X

SDG	Station ID	Sample ID	Lab Sample ID	Matrix	Sample Type	LR Type	Upper Depth	Lower Depth	Date Collected	VOCs SW8260B	SVOC SW8270C	Pesticides SW8081A	PCBs SW8082A	Metals SW6010B	Mercury SW7471A
CNC126	LABQC	4476737LB	S244767*37	SQ	LB					X					
CNC126	LABQC	4476738BS	S244767*38	SQ	BS					X					
CNC126	LABQC	4476740LB	S244767*40	SQ	LB					X					
CNC126	LABQC	4476741BS	S244767*41	SQ	BS					X					
CNC126	LABQC	4476743LB	S244767*43	SQ	LB							X	X		
CNC126	LABQC	4476744BS	S244767*44	SQ	BS							X	X		
CNC134	E701GW001	701GW001M1	S245441*1	WG	N				07/29/02	X	X			X	X
CNC134	E701GW001	701GW001M1RE	S245441*1*RE	WG	LR	RE			07/29/02		X				
CNC134	E701GW002	701GW002M1	S245441*2	WG	N				07/29/02	X	X			X	X
CNC134	E701GW003	701GW003M1	S245441*3	WG	N				07/30/02	X	X			X	X
CNC134	E701GW003	701GW003M1RE	S245441*3*RE	WG	LR	RE			07/30/02		X			X	
CNC134	E701GW003	701HW003M1	S245441*4	WG	FD				07/30/02	X	X			X	X
CNC134	E701GW003	701HW003M1RE	S245441*4*RE	WG	LR	RE			07/30/02		X				
CNC134	E701GW004	701GW004M1	S245441*5	WG	N				07/30/02	X	X			X	X
CNC134	E701GW005	701GW005M1	S245441*6	WG	N				07/30/02	X	X			X	X
CNC134	E701GW005	701GW005M1RE	S245441*6*RE	WG	LR	RE			07/30/02		X				
CNC134	E701GW006	701GW006M1	S245441*7	WG	N				07/30/02	X	X			X	X
CNC134	E701GW006	701GW006M1RE	S245441*7*RE	WG	LR	RE			07/30/02		X				
CNC134	E701GW01D	701GW01DM1	S245441*8	WG	N				07/29/02	X	X			X	X
CNC134	E701GW02D	701GW02DM1	S245441*9	WG	N				07/29/02	X	X			X	X
CNC134	E701GW03D	701GW03DM1	S245441*10	WG	N				07/30/02	X	X			X	X
CNC134	E701GW04D	701GW04DM1	S245441*11	WG	N				07/30/02	X	X			X	X
CNC134	E701GW05D	701GW05DM1	S245441*12	WG	N				07/30/02	X	X			X	X

SDG	Station ID	Sample ID	Lab Sample ID	Matrix	Sample Type	LR Type	Upper Depth	Lower Depth	Date Collected	VOC SW8260B	SVOC SW8270C	Pesticides SW8081A	PCBs SW8082	Metals SW6010B	Mercury SW7471A
CNC134	E701GW06D	701GW06DM1	S245441*13	WG	N				07/30/02	X	X			X	X
CNC134	FIELDQC	701EW001M1	S245441*14	WQ	EB				07/30/02	X	X			X	X
CNC134	FIELDQC	701TW001M1	S245441*15	WQ	TB				07/30/02	X					
CNC134	LABQC	4544116LB	S245441*16	WQ	LB					X	X			X	X
CNC134	LABQC	4544117BS	S245441*17	WQ	BS					X	X			X	X
CNC134	E701GW06D	701GW06DM1MS	S245441*23	WG	MS				07/30/02	X	X			X	X
CNC134	E701GW06D	701GW06DM1SD	S245441*25	WG	SD				07/30/02	X	X			X	X
CNC134	LABQC	4544130LB	S245441*30	WQ	LB					X	X				
CNC134	LABQC	4544131BS	S245441*31	WQ	BS					X	X				
CNC134	LABQC	4544133LB	S245441*33	WQ	LB					X	X				
CNC134	LABQC	4544134BS	S245441*34	WQ	BS					X	X				
CNC134	LABQC	4544136LB	S245441*36	WQ	LB					X					
CNC134	LABQC	4544137BS	S245441*37	WQ	BS					X					

SDG	Station ID	Sample ID	Lab Sample ID	Matrix	Sample Type	LR Type	Upper Depth	Lower Depth	Date Collected	VOC SW8260B	SVOC SW8270C	Pesticides SW8081A	PCBs SW8082	Metals SW6010B	Mercury SW7471A

MATRIX CODE

SO – Soil
SQ – Soil QC Samples
WG – Ground Water
WQ - Water QC Samples

SAMPLE TYPE CODE

BS - Blank Spike
EB - Equipment Blank
TB – Trip Blank
FD - Field Duplicate
N - Native Sample
LR – Laboratory Replicate
LB - Laboratory Blank
MS – Matrix Spike
SD – Matrix Spike Duplicate

LR TYPE CODE

RE - Reanalysis

ANALYSIS CODE

VOC - Volatile Organic Compounds
SVOC - Semivolatile Organic Compounds
PCBs - Polychlorinated Biphenyls

Organic Parameters

Quality Control Review

The following list represents the QA/QC measures that were reviewed during the data quality evaluation procedure for organic data.

- **Holding Times** – The holding times are evaluated to verify that samples were extracted and analyzed within holding times.
- **Blank samples** – Method blanks, equipment blanks, and trip blanks were provided for this project. Blank samples enable the reviewer to determine if an analyte may be attributed to sampling or laboratory procedures, rather than environmental contamination from site activities.
- **Surrogate Recoveries** – Surrogate Compounds are added to each sample and the recoveries are used to monitor lab performance and possible matrix interference.
- **Lab Control Sample (LCS)** – This sample is a "controlled matrix", either laboratory reagent water or Ottawa sand, in which target compounds have been added prior to extraction/analysis. The recoveries serve as a monitor of the overall performance of each step during the analysis, including sample preparation.
- **Matrix Spike/Matrix Spike Duplicate (MS/MSD) Samples** – Spike recovery is used to evaluate potential matrix interferences, as well as accuracy. Precision information is also determined by calculating the reproducibility between the recoveries of each spiked parameter.
- **Field Duplicate Samples** – These samples are collected to determine precision between a native and its duplicate. This information can only be determined when target compounds are detected.
- **GC/MS Tuning** – The mass spectrum of the tuning compound is evaluated for method compliance. The criteria are established to verify the proper mass assignment and mass resolution.
- **Initial Calibration** – The initial calibration ensures that the instrument is capable of producing acceptable qualitative and quantitative data for the compounds of interest.
- **Continuing Calibration** – The continuing calibration checks satisfactory performance of the instrument and its predicted response to the target compounds.
- **Pesticide Degradation** – Degradation checks on the gas chromatograph with electron capture detector system are performed to ensure minimal instrument breakdown of target compounds. These criteria are not sample specific.
- **Confirmation** – If GCMS methodology is not initially used for analysis, SW-846 method 8000 requires confirmation when the composition of samples is not well characterized. Therefore, even when the identification has been confirmed on a dissimilar column or detector, the agreement of the quantitative results on both columns is evaluated. For Pesticide and PCB analyses covered in this report, confirmation was performed using a

dissimilar analytical column. The laboratory analyzed samples with a gas chromatograph (GC) utilizing simultaneous primary and confirmation data acquisition. Per SW-86 method 8000, 40% RPD criteria was used as the acceptance limit.

- **Internal Standards** – The internal standards (retention time and response) are evaluated for method compliance. The internal standards are used in quantitation of the target parameters and monitor the instrument sensitivity and response for stability during each analysis.

Volatile Organic Compounds (VOC) Analyses

The QA/QC parameters for VOC analyses for all of the samples were within acceptable control limits, except as noted below:

Blanks

The VOC target parameters detected in blank samples are listed in Table 2.

TABLE 2
Blank Contamination: VOCs
Charleston Naval Complex, Zone E, AOC 701, Charleston, SC

[illegible]	[illegible]	[illegible]	[illegible]	[illegible]	[illegible]	[illegible]	[illegible]
CNC126	S244767*23	4476723LB	LB	Methylene chloride	2.8	µg/Kg	28.0 µg/Kg
CNC126	S244767*23	4476723LB	LB	Toluene	4.6	µg/Kg	23.0 µg/Kg
CNC126	S244767*30	4476730LB	LB	Toluene	1.9	µg/Kg	9.5 µg/Kg
CNC126	S244767*37	4476737LB	LB	Methylene chloride	2.6	µg/Kg	26.0 µg/Kg
CNC126	S244767*37	4476737LB	LB	Toluene	3.4	µg/Kg	17.0 µg/Kg
CNC126	S244767*21	701EB001M1	EB	Methylene chloride	2.5	µg/L	25.0 µg/Kg
CNC126	S244767*21	701EB001M1	EB	Toluene	4.0	µg/L	20.0 µg/Kg
CNC126	S244767*22	009TW004M6	TB	Methylene chloride	1.8	µg/L	18.0 µg/Kg
CNC126	S244767*22	009TW004M6	TB	Toluene	3.7	µg/L	18.5 µg/Kg
CNC134	S245441*30	4544130LB	LB	Methylene chloride	0.85	µg/L	8.5 µg/L
CNC134	S245441*30	4544130LB	LB	1,2,4-Trichlorobenzene	0.8	µg/L	4.0 µg/L
CNC134	S245441*30	4544130LB	LB	1,2,3-Trichlorobenzene	1.1	µg/L	5.5 µg/L
CNC134	S245441*14	701EW001M1	EB	1,2,4-Trichlorobenzene	0.64	µg/L	3.2 µg/L
CNC134	S245441*14	701EW001M1	EB	1,2,3-Trichlorobenzene	0.8	µg/L	4.0 µg/L
CNC134	S245441*15	701TW001M1	TB	Methylene chloride	0.87	µg/L	8.7 µg/L

If a target parameter determined to be a common contaminant was reported in a field sample, and the concentration was below the level determined to be due to blank contamination, the following actions were taken:

- If the concentration was above the reporting limit, the numeric result was unchanged, but it was flagged "U", as undetected.
- If the concentration was below the reporting limit, the numeric result was changed to the value of the reporting limit, and it was flagged "U", as undetected.

The results qualified due to blank contamination are listed in Attachment 1.

Recoveries – Surrogate, MS/MSD, and LCS

All Surrogate, Matrix Spike (MS), Matrix Spike Duplicate (MSD), and Laboratory Control Sample (LCS) recoveries were within acceptable quality control limits, except as noted in Table 3 below.

TABLE 3
LCS Recoveries Out of QC Limits: VOCs
Charleston Naval Complex, Zone E, AOC 701, Charleston, SC

SDG	Sample	Parameter	Recovery	Recovery Limits	Associated Samples	Flag
CNC126	S244767*24 LCS	Acetone	56*	70-130	S244767*1-12	Detects-J, non-detects-UJ
CNC126	S244767*31 LCS	Acetone	53*	70-130	S244767*13-19	Detects-J, non-detects-UJ
		Vinyl acetate	54*	70-130		
CNC126	S244767*38 LCS	Acetone	36*	70-130	S244767*20-22	Detects-J, non-detects-UJ
		Vinyl acetate	60*	70-130		
CNC134	S245441*17 LCS	2-Chloroethyl vinyl ether	48*	70-130	S245411*1, 5, 8-15	Detects-J, non-detects-UJ
		Bromoform	64*	70-130		
CNC134	S245441*31 LCS	2-Chloroethyl vinyl ether	170*	70-130	S245411*2-4, 6	Detects only - J
		4-Methyl-2-pentanone	140*	70-130		
CNC134	S245441*34 LCS	2-Chloroethyl vinyl ether	50-	70-130	S245411*7	Detects-J, non-detects-UJ

* - out of control limits

Initial and Continuing Calibration Criteria

All initial calibration criteria and continuing calibration criteria were met, except as listed in Table 4.

TABLE 4
Exceptions to Initial Calibration Criteria and Continuing Calibration Criteria: VOC
Charleston Naval Complex, Zone E, AOC 701, Charleston, SC

Instrument Calibration Date	Analyte	Relative Standard Deviation or Correlation Coefficient	Associated Samples
MSL5972-ICAL-07/03/02, 1344	Carbon disulfide	R^2=0.987	S244767*1-21
MSL5972-CCAL-07/09/02, 0726	Bromomethane	26.4% high	S244767*1-12
	Acetone	59.5% low	
	Carbon disulfide	29.5% low	
	Methylene chloride	28.0% low	
	Vinyl acetate	34.8% low	
	2-Chloroethyl vinyl ether	RRF=0.03747	
MSL5972-CCAL-07/09/02, 2023	Acetone	50.7% low	S244767*13-19
	Vinyl acetate	37.6% low	
	2-Chloroethyl vinyl ether	22.2% high	
	1,2 3-Trichlorobenzene	24.8% low	
MSL5972-CCAL-07/10/02, 0902	Acetone	67.9% low	S244767*20-21
	Vinyl acetate	49.6% low	
	2-Butanone	30.7% low	
	2-Chloroethyl vinyl ether	RRF=0.04004	
	4-Methyl-2-Pentanone	26.9% low	
	2-Hexanone	24.8% low	
	1,2,3-Trichlorobenzene	29.5% low	
MSA5973-ICAL-08/06/02, 1451	Bromomethane	28.2% RSD	S245441*1-15
	Chloroethane	R^2=0.987	
	2-Hexanone	R^2=0.987	
	1,1,2,2-Tetrachloroethane	R^2=0.988	
MSA5973-CCAL-08/08/02, 0647	Bromomethane	42.0% low	S245441*1, 5, 8-15
	Chloroethane	22.9% low	

TABLE 4
Exceptions to Initial Calibration Criteria and Continuing Calibration Criteria: VOC
Charleston Naval Complex, Zone E, AOC 701, Charleston, SC

Instrument/Calibration Date	Analyte	Relative Standard Deviation of RF (ICAL) or Difference (CCAL)	Associated Samples
MSA5973-CCAL-08/08/02, 0647	1,1-Dichloroethane	22.5% low	S245441*1, 5, 8-15
	Vinyl acetate	41.7% high	
	2-Butanone	20.4% high	
	1,2-Dichloroethane	29.1% high	
	2-Chloroethyl vinyl ether	85.0% high	
	cis-1,3-Dichloropropene	22.7% high	
	4-Methyl-2-pentanone	58.0% high	
	trans-1,3-Dichloropropene	25.0% high	
	1,1,2-Trichloroethane	25.8% high	
	2-Hexanone	50.1% high	
	1,1,2,2-Tetrachloroethane	42.9% high	
	1,2,4-Trichlorobenzene	39.0% low	
	1,2,3-Trichlorobenzene	28.0% low	
MSA5973-CCAL-08/08/02, 1910	1,1-Dichloroethane	21.2% low	S245441*2-4, 6
	Vinyl acetate	38.4% high	
	1,2-Dichloroethane	24.6% high	
	2-Chloroethyl vinyl ether	68.0% high	
	4-Methyl-2-pentanone	42.0% high	
	trans-1,3-Dichloropropene	23.3% high	
	1,1,2-Trichloroethane	20.8% high	
	2-Hexanone	29.6% high	
	1,1,2,2-Tetrachloroethane	33.1% high	
	1,2,3-Trichlorobenzene	30.5% high	
MSA5973-CCAL-08/13/02, 0916	2-Chloroethyl vinyl ether	32.1% low	S245441*7

Flags were applied to the compounds in the associated samples in the following manner:

- When the percent Relative Standard Deviation (%RSD) or correlation coefficient (R^2) was out in the initial calibration, all associated samples were qualified. Detected compounds were flagged "J" and non-detected compounds were flagged "UJ", as estimated.
- When the percent difference (%D) was low in the continuing calibration standards, detected compounds were flagged "J" and non-detected compounds were flagged "UJ", as estimated.
- When the percent difference (%D) was high in the continuing calibration standards, detected compounds were flagged "J", as estimated. Non-detected compounds were not flagged.
- When the Relative Response Factor (RRF) was low in the continuing calibration, detected compounds were flagged "J", and non-detected compounds were flagged "UJ", as estimated.

Semivolatile Organic Compounds (SVOC) Analyses

The QA/QC parameters for the SVOC analyses for all of the samples were within acceptable control limits, except as noted below.

Holding Times

Samples S245441*1RE, 3RE, 4RE, and 6RE were extracted outside of the 7 day holding time. The original analyses of these samples were used. The re-extracted samples were flagged "R-RE".

Blanks

The SVOC target parameters detected in blank samples are listed in Table 5.

TABLE 5
Blank Contamination: SVOCs
Charleston Naval Complex, Zone E, AOC 701, Charleston, SC

[illegible]	[illegible]	[illegible]	[illegible]	[illegible]	[illegible]	[illegible]	[illegible]
CNC134	S245441*16	4544116LB	LB	Benzo(g,h,i)perylene	0.78	µg/L	3.9 µg/L

If a target parameter determined to be a common contaminant was reported in a field sample, and the concentration was below the level determined to be due to blank contamination, the following actions were taken:

- If the concentration was above the reporting limit, the numeric result was unchanged, but it was flagged "U", as undetected.
- If the concentration was below the reporting limit, the numeric result was changed to the value of the reporting limit, and it was flagged "U", as undetected.

The results qualified due to blank contamination are listed in Attachment 1.

Recoveries – Surrogate, MS/MSD, and LCS

All Surrogate, Matrix Spike (MS), Matrix Spike Duplicate (MSD), and Laboratory Control Sample (LCS) recoveries and Relative Percent Deviations (RPDs) were within acceptable quality control limits, except as noted in Table 6 below.

TABLE 6
Surrogate, MS/MSD, and LCS Recoveries and RPDs Out of QC Limits: SVOC
Charleston Naval Complex, Zone E, AOC 701, Charleston, SC

SDG	Sample	Parameter	Recovery	Recovery Limits	RPD	RPD Limits	Associated Samples	Flag
CNC126	S244767*4 MS/MSD	2,4,6-Trichlorophenol			32*	30	S244767*4	Detects-J, non-detects-UJ
		Acenapthene			26*	19		
		4-Bromophenyl-phenyl ether			25*	19		
		Bis(2-ethylhexyl)phthalate			27*	22		
		Indeno(1,2,3-cd)pyrene			40*	28		
		Dibenzo(a,h)anthracene			35*	24		
CNC134	S245441*4	2-Fluorophenol	130*	21-110			S245441*4	Detects only-J
		Phenol-d5	140*	10-110				
		Nitrobenzene-d5	140*	35-114				
		2-Fluorobiphenyl	130*	43-116				
		2,4,6-Tribromophenol	130*	10-123				
CNC134	S245441*13 MS/MSD	4-Nitrophenol	100* / 110*	10-80			S245441*13	Detects only-J
		2,4-Dinitrophenol	99* / 99*	24-96				
CNC134	S245441*17 LCS	4-Nitrophenol	87*	10-80			S245441*1-4, 6-14	Detects only-J
CNC134	S245441*31 LCS	2,4-Dinitrotoluene	100*	24-96			S245441*5	Detects only-J
		Pentachlorophenol	110*	9-103				
CNC134	S245441*34	4-Nitrophenol	87*	10-80			S245441*1RE, 3RE, 4RE, 6RE, 7RE	Detects only-J
		2,4-Dinitrotoluene	110*	24-96				
		Pentachlorophenol	120*	9-103				

* - out of control limits

Initial and Continuing Calibration Criteria

All initial calibration criteria and continuing calibration criteria were met, except as noted in Table 7 below.

TABLE 7
Exceptions to Initial Calibration Criteria and Continuing Calibration Criteria: SVOC
Charleston Naval Complex, Zone E, AOC 701, Charleston, SC

Instrument/Calibration Date	Analyte	%Relative Standard Deviation of RF (%RSD), %Difference (CCAL)	Associated Samples
MSG5973-CCAL-07/16/02, 1020	Chrysene	21.7% high	S244767*1,3,9,11-18
MSD5973-CCAL-08/05/02, 2114	2,4-Dinitrophenol	25.6% high	S245441*2, 8-14
	Benzo(b)fluoranthene	20.6% low	
	Benzo(k)fluoranthene	27.3% low	
	Dibenzo(a,h)anthracene	21.7% low	
	Benzo(g,h,l)perylene	20.1% low	
MSD5973-CCAL-08/06/02, 1032	3,3'-Dichlorobenzidine	21.4% low	S245441*1,3,4,6,7
	Benzo(k)fluoranthene	24.4% low	
	Indeno(1,22,3-cd)pyrene	29.9% low	
	Dibenzo(a,h)anthracene	27.4% low	
	Benzo(g,h,l)perylene	30.4% low	
MSJ5971-CCAL-08/08/02, 1518	Bis(2-chloroisopropyl)ether	35.3% low	S245441*5
	2,4-Dinitrophenol	39.1% high	
MSJ5971-CCAL-08/10/02, 1240	Bis(2-chloroisopropyl)ether	32.0% low	S245441*4RE, 3RE, 6RE, 7RE
	2,4-Dinitrophenol	41.2% high	
	4,6-Dinitro-2-methylphenol	21.5% high	

Flags were applied to the compounds in the associated samples in the following manner:

- When the percent difference (%D) was low in the continuing calibration standards, detected compounds were flagged "J" and non-detected compounds were flagged "UJ", as estimated.
- When the percent difference (%D) was high in the continuing calibration standards, detected compounds were flagged "J", as estimated. Non-detected compounds were not flagged.

Internal Standard Area

All internal standard areas were within QC limits, except as noted in Table 8 below.

TABLE 8
Internal Standard Area out of Criteria: SVOC
Charleston Naval Complex, Zone E, AOC 701, Charleston, SC

SDG	Sample	Internal Standards	Flags applied to compounds associated with IS out
CNC126	S244767*5	Naphthalene-d8	Detects-J, non-detects-UJ
CNC126	S244767*5RE	Naphthalene-d8	None – data not used (R-RE)
CNC126	S244767*5RE	1,4-Dichlorobenzen-d4	None – data not used (R-RE)
CNC126	S244767*5RE	Perylene-d12	None – data not used (R-RE)

Organochlorine Pesticide / Polychlorinated Biphenyls (PCBs) Analyses

The QA/QC parameters for the PCB analyses by method SW-846 8081A for all of the samples were within acceptable control limits, except as noted below:

- Most samples in SDG CNC126 were re-extracted and reanalyzed due to surrogate failure of quality control samples (the lab blank and laboratory control sample) associated with the original analyses. The original sample data was flagged "R-RE" and the reanalyzed data was used.

Recoveries – Surrogate, MS/MSD, and LCS

All Surrogate, Matrix Spike (MS), Matrix Spike Duplicate (MSD), and Laboratory Control Sample (LCS) recoveries and Relative Percent Deviations (RPDs) were within acceptable quality control limits, except as noted in Table 9 below.

TABLE 9
Surrogate, MS/MSD, and LCS Recoveries and RPDs Out of QC Limits: Organochlorine Pesticides/PCBs
Charleston Naval Complex, Zone E, AOC 701, Charleston, SC

SDG	Sample	Parameter	Recovery	Recovery Limits	RPD	RPD Limits	Associated Samples	Flag
CNC126	S244767*6RE	Tetrachloro-m-xylene	32* / 32*	60-150			S244767*6RE	Detects-J, non-detects-UJ
		Decachlorobiphenyl	56* / 44/	60-150				
CNC126	S244767*7RE	2,4-DCAA	12* / 10*	60-150			S244767*7RE	Detects-J, non-detects-UJ
		Tetrachloro-m-xylene	16* / 15*	60-150				

TABLE 9
'rrogate, MS/MSD, and LCS Recoveries and RPDs Out of QC Limits: Organochlorine Pesticides/PCBs
,arleston Naval Complex, Zone E, AOC 701, Charleston, SC

Site	Sample	Analyte(s)	Recovery	Recovery Limits	RPD	RPD Limits	Affected Samples	Flag
CNC126	S244767*7RE	Decachlorobiphenyl	40* / 30*	60-150			S244767*7RE	Detects-J, non-detects-UJ
CNC126	S244767*24 LCS	gamma-BHC	30*	46-127			S244767*1-4, 6, 7, 9, 11-20	None – data not used (R-RE)
		alpha-Chlordane	39*	45-140				
		Endrin	36*	42-139				
CNC126	S244767*2 MS/MSD	gamma-BHC	20* / 33*	46-127			S244767*2	Detects-J, non-detects-UJ
		alpha-Chlordane	25* / 42*	45-140	51*	40		
		alpha-BHC			51*	40		
		beta-BHC			57*	40		
		Heptachlor			42*	31		
		delta-BHC			54*	47		
		Aldrin			44*	43		
		Heptachlor epoxide			56*	40		
		gamma-Chlordane			49*	40		
		Endosulfan I			51*	40		
		4,4'-DDE			52*	25		
		Dieldrin			52*	38		
		Endrin			55*	45		
		4,4'-DDD			60*	50		
		4,4'-DDT			56*	50		
		Endosulfan sulfate			60*	50		
		Methoxychlor			62*	40		
		Endrin ketone			50*	31		
		Aroclor-1016	36* / 30*	60-150				
		Aroclor-1260	42* / 36*	60-150				

* - out of control limits

Initial and Continuing Calibration Criteria

All initial calibration criteria and continuing calibration criteria were met, except as noted in Table 10 below.

TABLE 10
Initial and Continuing Calibration Criteria Exceptions: Organochlorine Pesticides/PCBs
Charleston Naval Complex, Zone E, AOC 701, Charleston, SC

Instrument Calibration Date	Analyte	% Difference	Affected Sample
SGIECD2-CCAL-07/17/02, 1002	Heptachlor	36.3% high	S244767*5,8,10, 2RE, 4RE, 6RE, 7RE, 12RE-16RE, 18RE, 20RE
	delta-BHC	18.4% low	
SGIECD2-CCAL-07/17/02, 1026	Aroclor-1016	20.5% low	S244767*5,8,10, 2RE, 4RE, 6RE, 7RE, 12RE-16RE, 18RE, 20RE
	Aroclor-1260	32.1% high	
SGIECD1-CCAL-07/17/02, 2020	Heptachlor	15.7% low	S244767*5,8,10, 2RE, 4RE, 6RE, 7RE, 12RE-16RE, 18RE, 20RE
	4,4'-DDT	29.7% low	
	Methoxychlor	16.6% low	
SGIECD2-CCAL-07/17/02, 2020	Heptachlor	21.2% high	S244767*5,8,10, 2RE, 4RE, 6RE, 7RE, 12RE-16RE, 18RE, 20RE
	4,4'-DDT	21.8% low	
	Methoxychlor	22.2% low	
	Endrin aldehyde	15.4% low	
SGIECD2-CCAL-07/17/02, 2044	Aroclor-1260	19.7% high	S244767*5,8,10, 2RE, 4RE, 6RE, 7RE, 12RE-16RE, 18RE, 20RE
SGIECD1-CCAL-07/22/02, 1203	Heptachlor	17.1% low	S244767*1RE, 3RE, 9RE, 11RE, 17RE
	4,4'-DDT	20.6% low	
SGIECD2-CCAL-07/22/02, 1203	Methoxychlor	19.1% low	S244767*1RE, 3RE, 9RE, 11RE, 17RE
SGIECD2-CCAL-07/22/02, 1227	Aroclor-1016	21.5% high	S244767*1RE, 3RE, 9RE, 11RE, 17RE
	Aroclor-1260	16.1% high	
SGIECD1-CCAL-07/22/02, 1911	Heptachlor	21.3% low	S244767*1RE, 3RE, 9RE, 11RE, 17RE
	4,4'-DDT	40.8% low	
	Methoxychlor	18.6% low	
	Endrin aldehyde	16.4% low	
SGIECD2-CCAL-07/22/02, 1911	delta-BHC	15.8% high	S244767*1RE, 3RE, 9RE, 11RE, 17RE
	4,4'-DDD	19.1% high	
	Methoxychlor	27.7% low	
	4,4'-DDT	35.7% low	

TABLE 10
Initial and Continuing Calibration Criteria Exceptions: Organochlorine Pesticides/PCBs
Charleston Naval Complex, Zone E, AOC 701, Charleston, SC

Calibration Date	Analyte	% Difference	Associated Samples
SGIECD2-CCAL-07/22/02, 1935	Aroclor-1016	22.5% high	S244767*1RE, 3RE, 9RE, 11RE, 17RE
	Aroclor-1260	16.6% high	

Flags were applied to the compounds in the associated samples in the following manner:

- When the percent difference (%D) was low in the continuing calibration standards, detected compounds were flagged "J" and non-detected compounds were flagged "UJ", as estimated.
- When the percent difference (%D) was high in the continuing calibration standards, detected compounds were flagged "J", as estimated. Non-detected compounds were not flagged.

Second Column Confirmation

The second column confirmation percent difference (%D) for some detected parameters, exceeded the 40 %D criteria. Those results were flagged "J", as estimated. The laboratory reported the lower of the two concentrations. The individual samples and specific compounds that were flagged are listed in Table 11 below.

TABLE 11
Second Column Confirmation out of Criteria: Organochlorine Pesticides/PCBs
Charleston Naval Complex, Zone E, AOC 701, Charleston, SC

Site	Sample ID	Lab Sample ID	Compound
CNC126	701SB00101RE	S244767*1RE	gamma-Chlordane
CNC126	701SB00101RE	S244767*1RE	alpha-Chlordane
CNC126	701SB00501RE	S244767*9RE	gamma-Chlordane
CNC126	701SB00601RE	S244767*11RE	Endrin aldehyde
CNC126	701SB00901RE	S244767*17RE	Heptachlor epoxide
CNC126	701SB00901RE	S244767*17RE	gamma-Chlordane
CNC126	701SB01001RE	S244767*19RE	4,4'-DDT
CNC126	701SB01002RE	S244767*20RE	gamma-Chlordane
CNC126	701SB01002RE	S244767*20RE	4,4'-DDT
CNC126	701SB01002RE	S244767*20RE	4,4'-DDE
CNC126	701SB01002RE	S244767*20RE	Endrin aldehyde

Inorganic Parameters

Quality Control Review

The following list represents the QA/QC measures that are typically reviewed during the data quality evaluation procedure for inorganic parameters.

- **Holding Times** – The holding times are evaluated to verify that samples were extracted and analyzed within holding times.
- **Blank samples** – Sample preparation, initial calibration blanks/continuing calibration blanks, and equipment blanks were provided for this project. Blank samples enable the reviewer to determine if an analyte may be attributed to sampling or laboratory procedures, rather than environmental contamination from site activities.
- **Lab Control Sample (LCS)** – This sample is a "controlled matrix", in which target parameters have been added prior to digestion/analysis. The recoveries serve as a monitor of the overall performance of each step during the analysis, including sample preparation.
- **Field Duplicate Samples** – These samples are collected to determine precision between a native and its duplicate. This information can only be determined when target compounds are detected.
- **Pre/Post Digestion Spike (MS/MSD)** – Spike recovery is used to evaluate potential matrix interferences, as well as accuracy. Precision information is also determined by calculating the reproducibility between the recoveries of each spiked parameter.
- **ICP Interference Check Sample** – This sample verifies the lab's interelement and background correction factors.
- **Initial Calibration Verification** – This parameter ensures that the instrument is capable of producing acceptable quantitative data for the target analyte list to be measured.
- **Continuing Calibration Verification** – This one-point, mid-range parameter establishes that the initial calibration is still valid by checking the performance of the instrument on a continual basis.
- **ICP Serial Dilution** – The serial dilution of samples quantitated by ICP determines whether or not significant physical or chemical interferences exist due to the sample matrix.

Metals Analyses

The QA/QC parameters for the Metals analyses for all of the samples were within acceptable control limits, except as noted below.

Blanks

The Metals target parameters detected in blank samples are listed in Table 12.

TABLE 12
Blank Contamination: Metals
Charleston Naval Complex, Zone E, AOC 701, Charleston, SC

SDG	Lab Sample ID	Sample ID	Sample Type	Parameter	Lab Result	Unit	Blank Contamination
CNC126	CCB		CCB	Selenium	5.88	ug/L	2.94 mg/Kg
CNC126	CCB		CCB	Vanadium	1.96	ug/L	0.98 mg/Kg
CNC126	S244767*21	701EB001M1	EB	Calcium	0.21	mg/L	105 mg/Kg
CNC126	S244767*21	701EB001M1	EB	Copper	0.00043	mg/L	0.215 mg/Kg
CNC126	S244767*21	701EB001M1	EB	Iron	0.0049	mg/L	2.45 mg/Kg
CNC126	S244767*21	701EB001M1	EB	Magnesium	0.057	mg/L	28.5 mg/Kg
CNC126	S244767*21	701EB001M1	EB	Sodium	4.5	mg/L	2250 mg/Kg
CNC126	S244767*21	701EB001M1	EB	Zinc	0.0026	mg/L	1.3 mg/Kg
CNC134	CCB		CCB	Aluminum	51.5	ug/L	0.2575 mg/L
CNC134	CCB		CCB	Copper	1.28	ug/L	0.0064 mg/L
CNC134	S245441*16	454116LB	LB	Calcium	29.0	ug/L	0.145 mg/L
CNC134	S245441*14	701EW001M1	EB	Aluminum	0.027	mg/L	0.2575 mg/L
CNC134	S245441*14	701EW001M1	EB	Barium	0.014	mg/L	0.07 mg/L
CNC134	S245441*14	701EW001M1	EB	Calcium	19	mg/L	95 mg/L
CNC134	S245441*14	701EW001M1	EB	Copper	0.00065	mg/L	0.00325 mg/L
CNC134	S245441*14	701EW001M1	EB	Iron	0.018	mg/L	0.09 mg/L
CNC134	S245441*14	701EW001M1	EB	Magnesium	1.9	mg/L	9.5 mg/L
CNC134	S245441*14	701EW001M1	EB	Nickel	0.0094	mg/L	0.047 mg/L
CNC134	S245441*14	701EW001M1	EB	Potassium	2.1	mg/L	10.5 mg/L
CNC134	S245441*14	701EW001M1	EB	Sodium	18	mg/L	90 mg/L
CNC134	S245441*14	701EW001M1	EB	Vanadium	0.0019	mg/L	0.0095 mg/L

If a target parameter was reported in a field sample, and the concentration was below the level determined to be due to blank contamination (5 times the concentration in the associated QC blank samples), it was flagged as "U", not detected. Initial and continuing calibration blanks were also evaluated for possible contamination.

The results qualified due to blank contamination are listed in Attachment 1.

Recoveries – Matrix Spike/Matrix Spike Duplicate (MS/MSD) and Laboratory Control Sample (LCS)

All Matrix Spike (MS), Matrix Spike Duplicate (MSD) and Laboratory Control Sample (LCS) recoveries and Relative Percent Deviations (RPDs) were within acceptable quality control limits, except as noted in Table 13 below.

TABLE 13
MS/MSD Recoveries and RPDs Out of QC Limits: Metals
Charleston Naval Complex, Zone E, AOC 701, Charleston, SC

Site	Sample	Parameter	Recovery	Recovery Limits	RPD	RPD Limits	Associated Samples	Flags
CNC126	S244767*1 MS/MSD	Antimony	73* / 66*	80-120			CNC126 – All	Detects-J, non-detects-UJ
CNC126	S244767*20 MS/MSD	Mercury	230* / 171*	80-120			CNC126 - All	Detects only-J
CNC134	S245441*13 MS/MSD	Aluminum	174* / 107	80-120	26.7*	20	CNC134 - All	Detects-J, non-detects-UJ

* - out of control limits

Field Duplicate Samples

All Field Duplicate Samples were within acceptable quality control limits, except as noted in Table 14 below. No flags are applied due to Field Duplicate precision.

TABLE 14
Field Duplicate RPDs Out of QC Limits: Metals
Charleston Naval Complex, Zone E, AOCs 701, Charleston, SC

Site	Sample	Parameter	Sample Concentration	Field Duplicate Concentration	RPD	RPD Limits
CNC134	701GW003M1 / 701HW003M1	Calcium	170 mg/L	130 mg/L	26.7*	20
		Iron	6.6 mg/L	4.4 mg/L	40.0*	20
		Sodium	8.4 mg/L	40 mg/L	130.6*	20

* - out of control limits

ICP Serial Dilution

All Serial Dilution recoveries were within acceptable quality control limits, except as noted in Table 15 below.

TABLE 15
Serial Dilution Recoveries Out of QC Limits: Metals
Charleston Naval Complex, Zone E, AOC 701, Charleston, SC

SDG	Parameter	Recovery	Recovery Limits	Associated Samples	Flag
CNC134	Potassium	12.6*	10	CNC134 - All	Detects-J, non-detects-UJ
	Sodium	10.9*	10		
* - out of control limits					

Rejected Data

All of the rejected data listed in Attachment 1 were associated with re-runs and dilutions (you can only have a single valid result per parameter per sample). No other data was rejected such that there is not a valid result for that parameter in each sample.

Conclusion

A review of the analytical data submitted regarding the investigation of Zone E, AOC 701, at the Charleston Naval Complex, Charleston, South Carolina by CH2M HILL has been completed. An overall evaluation of the data indicates that the sample handling, shipment, and analytical procedures have been adequately completed, and that the analytical results should be considered usable as qualified.

The analytical data had minor QC concerns as indicated above, however, it did not affect data usability for those specific results. The validation review demonstrated that the analytical systems were generally in control and the data results can be used in the decision making process.

Parameter Class	Analytical Method	Parameter	SDG	Sample ID	Lab Sample ID	Matrix	Lab Result	Lab Qual	Final Result	Final Qual	Units	Reasons
METAL	SW6010B	ALUMINUM	CNC134	701GW001M1	S245441*1	WG	0.2	N	0.2	UJ	mg/l	BL, MD
METAL	SW6010B	ALUMINUM	CNC134	701GW002M1	S245441*2	WG	0.11	BN	0.11	UJ	mg/l	BL, MD
METAL	SW6010B	ALUMINUM	CNC134	701GW003M1	S245441*3	WG	0.22	N	0.22	UJ	mg/l	BL, MD
METAL	SW6010B	ALUMINUM	CNC134	701HW003M1	S245441*4	WG	0.27	N	0.27	J	mg/l	MS, MD
METAL	SW6010B	ALUMINUM	CNC134	701GW004M1	S245441*5	WG	14	N	14	J	mg/l	MS, MD
METAL	SW6010B	ALUMINUM	CNC134	701GW005M1	S245441*6	WG	8.8	N	8.8	J	mg/l	MS, MD
METAL	SW6010B	ALUMINUM	CNC134	701GW006M1	S245441*7	WG	0.92	N	0.92	J	mg/l	MS, MD
METAL	SW6010B	ALUMINUM	CNC134	701GW01DM1	S245441*8	WG	0.2	BN	0.2	UJ	mg/l	BL, MD
METAL	SW6010B	ALUMINUM	CNC134	701GW02DM1	S245441*9	WG	0.16	BN	0.16	UJ	mg/l	BL, MD
METAL	SW6010B	ALUMINUM	CNC134	701GW03DM1	S245441*10	WG	0.32	N	0.32	J	mg/l	MS, MD
METAL	SW6010B	ALUMINUM	CNC134	701GW04DM1	S245441*11	WG	0.085	BN	0.085	UJ	mg/l	BL, MD
METAL	SW6010B	ALUMINUM	CNC134	701GW05DM1	S245441*12	WG	0.089	BN	0.089	UJ	mg/l	BL, MD
METAL	SW6010B	ALUMINUM	CNC134	701GW06DM1	S245441*13	WG	1.1	N	1.1	J	mg/l	MS, MD
METAL	SW6010B	ANTIMONY	CNC126	701SB00101	S244767*1	SO	0.48	UN	0.48	UJ	mg/kg	MS
METAL	SW6010B	ANTIMONY	CNC126	701SB00102	S244767*2	SO	0.49	UN	0.49	UJ	mg/kg	MS
METAL	SW6010B	ANTIMONY	CNC126	701SB00201	S244767*3	SO	0.51	UN	0.51	UJ	mg/kg	MS
METAL	SW6010B	ANTIMONY	CNC126	701SB00202	S244767*4	SO	0.52	UN	0.52	UJ	mg/kg	MS
METAL	SW6010B	ANTIMONY	CNC126	701SB00301	S244767*5	SO	0.53	UN	0.53	UJ	mg/kg	MS
METAL	SW6010B	ANTIMONY	CNC126	701SB00302	S244767*6	SO	0.49	UN	0.49	UJ	mg/kg	MS
METAL	SW6010B	ANTIMONY	CNC126	701SB00401	S244767*7	SO	0.52	BN	0.52	J	mg/kg	MS
METAL	SW6010B	ANTIMONY	CNC126	701SB00402	S244767*8	SO	0.48	UN	0.48	UJ	mg/kg	MS
METAL	SW6010B	ANTIMONY	CNC126	701SB00501	S244767*9	SO	0.49	UN	0.49	UJ	mg/kg	MS
METAL	SW6010B	ANTIMONY	CNC126	701SB00502	S244767*10	SO	0.57	UN	0.57	UJ	mg/kg	MS
METAL	SW6010B	ANTIMONY	CNC126	701SB00601	S244767*11	SO	0.51	UN	0.51	UJ	mg/kg	MS
METAL	SW6010B	ANTIMONY	CNC126	701SB00602	S244767*12	SO	0.53	UN	0.53	UJ	mg/kg	MS
METAL	SW6010B	ANTIMONY	CNC126	701SB00701	S244767*13	SO	0.49	UN	0.49	UJ	mg/kg	MS
METAL	SW6010B	ANTIMONY	CNC126	701SB00702	S244767*14	SO	0.57	UN	0.57	UJ	mg/kg	MS
METAL	SW6010B	ANTIMONY	CNC126	701SB00801	S244767*15	SO	0.49	UN	0.49	UJ	mg/kg	MS
METAL	SW6010B	ANTIMONY	CNC126	701SB00802	S244767*16	SO	0.53	UN	0.53	UJ	mg/kg	MS
METAL	SW6010B	ANTIMONY	CNC126	701SB00901	S244767*17	SO	0.55	UN	0.55	UJ	mg/kg	MS
METAL	SW6010B	ANTIMONY	CNC126	701SB00902	S244767*18	SO	0.5	UN	0.5	UJ	mg/kg	MS
METAL	SW6010B	ANTIMONY	CNC126	701SB01001	S244767*19	SO	0.49	UN	0.49	UJ	mg/kg	MS

Parameter Class	Analytical Method	Parameter	SDG	Sample ID	Lab Sample ID	Matrix	Lab Result	Lab Qual	Final Result	Final Qual	Units	Reasons
METAL	SW6010B	ANTIMONY	CNC126	701SB01002	S244767*20	SO	0.56	UN	0.56	UJ	mg/kg	MS
METAL	SW6010B	ARSENIC	CNC126	701SB00101	S244767*1	SO	0.78	B	0.78	J	mg/kg	IB
METAL	SW6010B	ARSENIC	CNC126	701SB00102	S244767*2	SO	0.59	B	0.59	J	mg/kg	IB
METAL	SW6010B	ARSENIC	CNC126	701SB00201	S244767*3	SO	1.2	B	1.2	J	mg/kg	IB
METAL	SW6010B	ARSENIC	CNC126	701SB00301	S244767*5	SO	0.96	B	0.96	J	mg/kg	IB
METAL	SW6010B	ARSENIC	CNC126	701SB00501	S244767*9	SO	2	B	2	J	mg/kg	IB
METAL	SW6010B	ARSENIC	CNC126	701SB00502	S244767*10	SO	0.73	B	0.73	J	mg/kg	IB
METAL	SW6010B	ARSENIC	CNC126	701SB00602	S244767*12	SO	1.2	B	1.2	J	mg/kg	IB
METAL	SW6010B	ARSENIC	CNC126	701SB00801	S244767*15	SO	0.46	B	0.46	J	mg/kg	IB
METAL	SW6010B	ARSENIC	CNC126	701SB00802	S244767*16	SO	0.57	B	0.57	J	mg/kg	IB
METAL	SW6010B	ARSENIC	CNC126	701SB00902	S244767*18	SO	1.1	B	1.1	J	mg/kg	IB
METAL	SW6010B	ARSENIC	CNC134	701GW001M1	S245441*1	WG	0.002	B	0.002	J	mg/l	IB
METAL	SW6010B	ARSENIC	CNC134	701GW003M1	S245441*3	WG	0.006	B	0.006	J	mg/l	IB
METAL	SW6010B	ARSENIC	CNC134	701HW003M1	S245441*4	WG	0.003	B	0.003	J	mg/l	IB
METAL	SW6010B	ARSENIC	CNC134	701GW004M1	S245441*5	WG	0.008	B	0.008	J	mg/l	IB
METAL	SW6010B	ARSENIC	CNC134	701GW005M1	S245441*6	WG	0.004	B	0.004	J	mg/l	IB
METAL	SW6010B	ARSENIC	CNC134	701GW05DM1	S245441*12	WG	0.006	B	0.006	J	mg/l	IB
METAL	SW6010B	BARIUM	CNC126	701SB00101	S244767*1	SO	10	B	10	J	mg/kg	IB
METAL	SW6010B	BARIUM	CNC126	701SB00102	S244767*2	SO	7.8	B	7.8	J	mg/kg	IB
METAL	SW6010B	BARIUM	CNC126	701SB00201	S244767*3	SO	13	B	13	J	mg/kg	IB
METAL	SW6010B	BARIUM	CNC126	701SB00202	S244767*4	SO	4.1	B	4.1	J	mg/kg	IB
METAL	SW6010B	BARIUM	CNC126	701SB00301	S244767*5	SO	14	B	14	J	mg/kg	IB
METAL	SW6010B	BARIUM	CNC126	701SB00302	S244767*6	SO	6.1	B	6.1	J	mg/kg	IB
METAL	SW6010B	BARIUM	CNC126	701SB00401	S244767*7	SO	22	B	22	J	mg/kg	IB
METAL	SW6010B	BARIUM	CNC126	701SB00402	S244767*8	SO	2.6	B	2.6	J	mg/kg	IB
METAL	SW6010B	BARIUM	CNC126	701SB00501	S244767*9	SO	19	B	19	J	mg/kg	IB
METAL	SW6010B	BARIUM	CNC126	701SB00502	S244767*10	SO	9.7	B	9.7	J	mg/kg	IB
METAL	SW6010B	BARIUM	CNC126	701SB00601	S244767*11	SO	3.7	B	3.7	J	mg/kg	IB
METAL	SW6010B	BARIUM	CNC126	701SB00602	S244767*12	SO	7.7	B	7.7	J	mg/kg	IB
METAL	SW6010B	BARIUM	CNC126	701SB00701	S244767*13	SO	4.6	B	4.6	J	mg/kg	IB
METAL	SW6010B	BARIUM	CNC126	701SB00702	S244767*14	SO	9.5	B	9.5	J	mg/kg	IB
METAL	SW6010B	BARIUM	CNC126	701SB00801	S244767*15	SO	10	B	10	J	mg/kg	IB

Attachment 1 - Changed Qualifiers and Results
Zone E, AOC 701 - Data Validation

Parameter Class	Analytical Method	Parameter	SDG	Sample ID	Lab Sample ID	Matrix	Lab Result	Lab Qual	Final Result	Final Qual	Units	Reasons
METAL	SW6010B	BARIUM	CNC126	701SB00802	S244767*16	SO	4.5	B	4.5	J	mg/kg	IB
METAL	SW6010B	BARIUM	CNC126	701SB00901	S244767*17	SO	8.1	B	8.1	J	mg/kg	IB
METAL	SW6010B	BARIUM	CNC126	701SB00902	S244767*18	SO	8	B	8	J	mg/kg	IB
METAL	SW6010B	BARIUM	CNC126	701SB01001	S244767*19	SO	10	B	10	J	mg/kg	IB
METAL	SW6010B	BARIUM	CNC126	701SB01002	S244767*20	SO	13	B	13	J	mg/kg	IB
METAL	SW6010B	BARIUM	CNC134	701GW001M1	S245441*1	WG	0.014	B	0.014	U	mg/l	BL
METAL	SW6010B	BARIUM	CNC134	701GW002M1	S245441*2	WG	0.011	B	0.011	U	mg/l	BL
METAL	SW6010B	BARIUM	CNC134	701GW003M1	S245441*3	WG	0.026	B	0.026	U	mg/l	BL
METAL	SW6010B	BARIUM	CNC134	701HW003M1	S245441*4	WG	0.019	B	0.019	U	mg/l	BL
METAL	SW6010B	BARIUM	CNC134	701GW004M1	S245441*5	WG	0.055	B	0.055	U	mg/l	BL
METAL	SW6010B	BARIUM	CNC134	701GW005M1	S245441*6	WG	0.051	B	0.051	U	mg/l	BL
METAL	SW6010B	BARIUM	CNC134	701GW006M1	S245441*7	WG	0.18	B	0.18	J	mg/l	IB
METAL	SW6010B	BARIUM	CNC134	701GW01DM1	S245441*8	WG	0.006	B	0.006	U	mg/l	BL
METAL	SW6010B	BARIUM	CNC134	701GW02DM1	S245441*9	WG	0.007	B	0.007	U	mg/l	BL
METAL	SW6010B	BARIUM	CNC134	701GW03DM1	S245441*10	WG	0.006	B	0.006	U	mg/l	BL
METAL	SW6010B	BARIUM	CNC134	701GW04DM1	S245441*11	WG	0.012	B	0.012	U	mg/l	BL
METAL	SW6010B	BARIUM	CNC134	701GW05DM1	S245441*12	WG	0.012	B	0.012	U	mg/l	BL
METAL	SW6010B	BARIUM	CNC134	701GW06DM1	S245441*13	WG	0.05	B	0.05	U	mg/l	BL
METAL	SW6010B	BERYLLIUM	CNC126	701SB00101	S244767*1	SO	0.061	B	0.061	J	mg/kg	IB
METAL	SW6010B	BERYLLIUM	CNC126	701SB00201	S244767*3	SO	0.077	B	0.077	J	mg/kg	IB
METAL	SW6010B	BERYLLIUM	CNC126	701SB00301	S244767*5	SO	0.075	B	0.075	J	mg/kg	IB
METAL	SW6010B	BERYLLIUM	CNC126	701SB00401	S244767*7	SO	0.43	B	0.43	J	mg/kg	IB
METAL	SW6010B	BERYLLIUM	CNC126	701SB00501	S244767*9	SO	0.13	B	0.13	J	mg/kg	IB
METAL	SW6010B	BERYLLIUM	CNC126	701SB00602	S244767*12	SO	0.17	B	0.17	J	mg/kg	IB
METAL	SW6010B	BERYLLIUM	CNC126	701SB00702	S244767*14	SO	0.075	B	0.075	J	mg/kg	IB
METAL	SW6010B	BERYLLIUM	CNC126	701SB00801	S244767*15	SO	0.064	B	0.064	J	mg/kg	IB
METAL	SW6010B	BERYLLIUM	CNC126	701SB00902	S244767*18	SO	0.083	B	0.083	J	mg/kg	IB
METAL	SW6010B	BERYLLIUM	CNC134	701GW004M1	S245441*5	WG	4E-04	B	4E-04	J	mg/l	IB
METAL	SW6010B	BERYLLIUM	CNC134	701GW06DM1	S245441*13	WG	4E-04	B	4E-04	J	mg/l	IB
METAL	SW6010B	CADMIUM	CNC126	701SB00301	S244767*5	SO	0.13	B	0.13	J	mg/kg	IB
METAL	SW6010B	CADMIUM	CNC126	701SB00401	S244767*7	SO	0.16	B	0.16	J	mg/kg	IB
METAL	SW6010B	CADMIUM	CNC126	701SB00501	S244767*9	SO	0.33	B	0.33	J	mg/kg	IB

Parameter Class	Analytical Method	Parameter	SDG	Sample ID	Lab Sample ID	Matrix	Lab Result	Lab Qual	Final Result	Final Qual	Units	Reasons
METAL	SW6010B	CADMIUM	CNC126	701SB00901	S244767*17	SO	0.15	B	0.15	J	mg/kg	IB
METAL	SW6010B	CADMIUM	CNC134	701GW006M1	S245441*7	WG	0.002	B	0.002	J	mg/l	IB
METAL	SW6010B	CADMIUM	CNC134	701GW06DM1	S245441*13	WG	4E-04	B	4E-04	J	mg/l	IB
METAL	SW6010B	CALCIUM	CNC126	701SB00202	S244767*4	SO	290	B	290	J	mg/kg	IB
METAL	SW6010B	CALCIUM	CNC126	701SB00302	S244767*6	SO	320	B	320	J	mg/kg	IB
METAL	SW6010B	CALCIUM	CNC126	701SB00402	S244767*8	SO	200	B	200	J	mg/kg	IB
METAL	SW6010B	CALCIUM	CNC126	701SB00502	S244767*10	SO	320	B	320	J	mg/kg	IB
METAL	SW6010B	CALCIUM	CNC126	701SB00601	S244767*11	SO	200	B	200	J	mg/kg	IB
METAL	SW6010B	CALCIUM	CNC126	701SB00602	S244767*12	SO	300	B	300	J	mg/kg	IB
METAL	SW6010B	CALCIUM	CNC126	701SB00701	S244767*13	SO	330	B	330	J	mg/kg	IB
METAL	SW6010B	CALCIUM	CNC126	701SB00702	S244767*14	SO	260	B	260	J	mg/kg	IB
METAL	SW6010B	CALCIUM	CNC126	701SB00801	S244767*15	SO	790	B	790	J	mg/kg	IB
METAL	SW6010B	CALCIUM	CNC126	701SB00802	S244767*16	SO	350	B	350	J	mg/kg	IB
METAL	SW6010B	CALCIUM	CNC126	701SB00902	S244767*18	SO	100	B	100	J	mg/kg	IB
METAL	SW6010B	CALCIUM	CNC126	701SB01001	S244767*19	SO	120	B	120	J	mg/kg	IB
METAL	SW6010B	CALCIUM	CNC126	701SB01002	S244767*20	SO	150	B	150	J	mg/kg	IB
METAL	SW6010B	CALCIUM	CNC134	701GW004M1	S245441*5	WG	37	=	37	U	mg/l	BL
METAL	SW6010B	CALCIUM	CNC134	701GW005M1	S245441*6	WG	93	=	93	U	mg/l	BL
METAL	SW6010B	CALCIUM	CNC134	701GW01DM1	S245441*8	WG	65	=	65	U	mg/l	BL
METAL	SW6010B	CALCIUM	CNC134	701GW02DM1	S245441*9	WG	80	=	80	U	mg/l	BL
METAL	SW6010B	CALCIUM	CNC134	701GW03DM1	S245441*10	WG	48	=	48	U	mg/l	BL
METAL	SW6010B	CALCIUM	CNC134	701GW04DM1	S245441*11	WG	81	=	81	U	mg/l	BL
METAL	SW6010B	CALCIUM	CNC134	701GW05DM1	S245441*12	WG	80	=	80	U	mg/l	BL
METAL	SW6010B	CALCIUM	CNC134	701GW06DM1	S245441*13	WG	94	=	94	U	mg/l	BL
METAL	SW6010B	CHROMIUM, TOTAL	CNC134	701GW03DM1	S245441*10	WG	0.001	B	0.001	J	mg/l	IB
METAL	SW6010B	CHROMIUM, TOTAL	CNC134	701GW04DM1	S245441*11	WG	9E-04	B	9E-04	J	mg/l	IB
METAL	SW6010B	CHROMIUM, TOTAL	CNC134	701GW06DM1	S245441*13	WG	0.003	B	0.003	J	mg/l	IB
METAL	SW6010B	COBALT	CNC126	701SB00101	S244767*1	SO	0.71	B	0.71	J	mg/kg	IB
METAL	SW6010B	COBALT	CNC126	701SB00102	S244767*2	SO	0.69	B	0.69	J	mg/kg	IB
METAL	SW6010B	COBALT	CNC126	701SB00201	S244767*3	SO	0.7	B	0.7	J	mg/kg	IB
METAL	SW6010B	COBALT	CNC126	701SB00202	S244767*4	SO	0.64	B	0.64	J	mg/kg	IB
METAL	SW6010B	COBALT	CNC126	701SB00301	S244767*5	SO	0.7	B	0.7	J	mg/kg	IB

Attachment 1 - Changed Qualifiers and Results
Zone E, AOC 701 - Data Validation

Parameter Class	Analytical Method	Parameter	SDG	Sample ID	Lab Sample ID	Matrix	Lab Result	Lab Qual	Final Result	Final Qual	Units	Reasons
METAL	SW6010B	COBALT	CNC126	701SB00302	S244767*6	SO	0.48	B	0.48	J	mg/kg	IB
METAL	SW6010B	COBALT	CNC126	701SB00401	S244767*7	SO	1.7	B	1.7	J	mg/kg	IB
METAL	SW6010B	COBALT	CNC126	701SB00402	S244767*8	SO	0.68	B	0.68	J	mg/kg	IB
METAL	SW6010B	COBALT	CNC126	701SB00501	S244767*9	SO	0.93	B	0.93	J	mg/kg	IB
METAL	SW6010B	COBALT	CNC126	701SB00502	S244767*10	SO	0.44	B	0.44	J	mg/kg	IB
METAL	SW6010B	COBALT	CNC126	701SB00601	S244767*11	SO	0.76	B	0.76	J	mg/kg	IB
METAL	SW6010B	COBALT	CNC126	701SB00602	S244767*12	SO	0.33	B	0.33	J	mg/kg	IB
METAL	SW6010B	COBALT	CNC126	701SB00701	S244767*13	SO	0.39	B	0.39	J	mg/kg	IB
METAL	SW6010B	COBALT	CNC126	701SB00702	S244767*14	SO	1.8	B	1.8	J	mg/kg	IB
METAL	SW6010B	COBALT	CNC126	701SB00801	S244767*15	SO	0.89	B	0.89	J	mg/kg	IB
METAL	SW6010B	COBALT	CNC126	701SB00802	S244767*16	SO	0.46	B	0.46	J	mg/kg	IB
METAL	SW6010B	COBALT	CNC126	701SB00901	S244767*17	SO	1.9	B	1.9	J	mg/kg	IB
METAL	SW6010B	COBALT	CNC126	701SB00902	S244767*18	SO	0.26	B	0.26	J	mg/kg	IB
METAL	SW6010B	COBALT	CNC134	701GW004M1	S245441*5	WG	0.001	B	0.001	J	mg/l	IB
METAL	SW6010B	COBALT	CNC134	701GW005M1	S245441*6	WG	0.002	B	0.002	J	mg/l	IB
METAL	SW6010B	COBALT	CNC134	701GW06DM1	S245441*13	WG	0.002	B	0.002	J	mg/l	IB
METAL	SW6010B	COPPER	CNC126	701SB00102	S244767*2	SO	4.8	B	4.8	J	mg/kg	IB
METAL	SW6010B	COPPER	CNC126	701SB00202	S244767*4	SO	0.99	B	0.99	J	mg/kg	IB
METAL	SW6010B	COPPER	CNC126	701SB00502	S244767*10	SO	1.7	B	1.7	J	mg/kg	IB
METAL	SW6010B	COPPER	CNC126	701SB00702	S244767*14	SO	1.1	B	1.1	J	mg/kg	IB
METAL	SW6010B	COPPER	CNC126	701SB00802	S244767*16	SO	1.2	B	1.2	J	mg/kg	IB
METAL	SW6010B	COPPER	CNC126	701SB00902	S244767*18	SO	4.8	B	4.8	J	mg/kg	IB
METAL	SW6010B	COPPER	CNC126	701SB01001	S244767*19	SO	4.3	B	4.3	J	mg/kg	IB
METAL	SW6010B	COPPER	CNC126	701SB01002	S244767*20	SO	4.7	B	4.7	J	mg/kg	IB
METAL	SW6010B	COPPER	CNC134	701GW001M1	S245441*1	WG	8E-04	B	8E-04	U	mg/l	BL
METAL	SW6010B	COPPER	CNC134	701GW002M1	S245441*2	WG	6E-04	B	6E-04	U	mg/l	BL
METAL	SW6010B	COPPER	CNC134	701GW003M1	S245441*3	WG	7E-04	B	7E-04	U	mg/l	BL
METAL	SW6010B	COPPER	CNC134	701HW003M1	S245441*4	WG	7E-04	B	7E-04	U	mg/l	BL
METAL	SW6010B	COPPER	CNC134	701GW004M1	S245441*5	WG	0.015	B	0.015	J	mg/l	IB
METAL	SW6010B	COPPER	CNC134	701GW005M1	S245441*6	WG	0.006	B	0.006	U	mg/l	BL
METAL	SW6010B	COPPER	CNC134	701GW006M1	S245441*7	WG	0.001	B	0.001	U	mg/l	BL
METAL	SW6010B	COPPER	CNC134	701GW01DM1	S245441*8	WG	7E-04	B	7E-04	U	mg/l	BL

Parameter Class	Analytical Method	Parameter	SDG	Sample ID	Lab Sample ID	Matrix	Lab Result	Lab Qual	Final Result	Final Qual	Units	Reasons
METAL	SW6010B	COPPER	CNC134	701GW03DM1	S245441*10	WG	6E-04	B	6E-04	U	mg/l	BL
METAL	SW6010B	COPPER	CNC134	701GW04DM1	S245441*11	WG	5E-04	B	5E-04	U	mg/l	BL
METAL	SW6010B	COPPER	CNC134	701GW05DM1	S245441*12	WG	6E-04	B	6E-04	U	mg/l	BL
METAL	SW6010B	COPPER	CNC134	701GW06DM1	S245441*13	WG	0.001	B	0.001	U	mg/l	BL
METAL	SW6010B	LEAD	CNC134	701GW003M1	S245441*3	WG	8E-04	B	8E-04	J	mg/l	IB
METAL	SW6010B	LEAD	CNC134	701GW01DM1	S245441*8	WG	0.001	B	0.001	J	mg/l	IB
METAL	SW6010B	LEAD	CNC134	701GW06DM1	S245441*13	WG	9E-04	B	9E-04	J	mg/l	SD
METAL	SW6010B	MAGNESIUM	CNC126	701SB00101	S244767*1	SO	330	B	330	J	mg/kg	IB
METAL	SW6010B	MAGNESIUM	CNC126	701SB00502	S244767*10	SO	200	B	200	J	mg/kg	IB
METAL	SW6010B	MAGNESIUM	CNC126	701SB00601	S244767*11	SO	180	B	180	J	mg/kg	IB
METAL	SW6010B	MAGNESIUM	CNC126	701SB00602	S244767*12	SO	180	B	180	J	mg/kg	IB
METAL	SW6010B	MAGNESIUM	CNC126	701SB00701	S244767*13	SO	95	B	95	J	mg/kg	IB
METAL	SW6010B	MAGNESIUM	CNC126	701SB00702	S244767*14	SO	500	B	500	J	mg/kg	IB
METAL	SW6010B	MAGNESIUM	CNC126	701SB00801	S244767*15	SO	250	B	250	J	mg/kg	IB
METAL	SW6010B	MAGNESIUM	CNC126	701SB00802	S244767*16	SO	130	B	130	J	mg/kg	IB
METAL	SW6010B	MAGNESIUM	CNC126	701SB00901	S244767*17	SO	170	B	170	J	mg/kg	IB
METAL	SW6010B	MAGNESIUM	CNC126	701SB00902	S244767*18	SO	120	B	120	J	mg/kg	IB
METAL	SW6010B	MAGNESIUM	CNC126	701SB01001	S244767*19	SO	110	B	110	J	mg/kg	IB
METAL	SW6010B	MAGNESIUM	CNC126	701SB00102	S244767*2	SO	220	B	220	J	mg/kg	IB
METAL	SW6010B	MAGNESIUM	CNC126	701SB01002	S244767*20	SO	120	B	120	J	mg/kg	IB
METAL	SW6010B	MAGNESIUM	CNC126	701SB00201	S244767*3	SO	180	B	180	J	mg/kg	IB
METAL	SW6010B	MAGNESIUM	CNC126	701SB00202	S244767*4	SO	190	B	190	J	mg/kg	IB
METAL	SW6010B	MAGNESIUM	CNC126	701SB00301	S244767*5	SO	370	B	370	J	mg/kg	IB
METAL	SW6010B	MAGNESIUM	CNC126	701SB00302	S244767*6	SO	140	B	140	J	mg/kg	IB
METAL	SW6010B	MAGNESIUM	CNC126	701SB00401	S244767*7	SO	420	B	420	J	mg/kg	IB
METAL	SW6010B	MAGNESIUM	CNC126	701SB00402	S244767*8	SO	170	B	170	J	mg/kg	IB
METAL	SW6010B	MAGNESIUM	CNC126	701SB00501	S244767*9	SO	200	B	200	J	mg/kg	IB
METAL	SW6010B	MAGNESIUM	CNC134	701GW03DM1	S245441*10	WG	6.1	=	6.1	U	mg/l	BL
METAL	SW6010B	MAGNESIUM	CNC134	701GW01DM1	S245441*8	WG	7.9	=	7.9	U	mg/l	BL
METAL	SW6010B	MANGANESE	CNC134	701GW006M1	S245441*7	WG	0.15	=	0.15	J	mg/l	IB
METAL	SW7471A	MERCURY	CNC126	701SB00101	S244767*1	SO	0.038	BN	0.038	J	mg/kg	MS
METAL	SW7471A	MERCURY	CNC126	701SB00502	S244767*10	SO	0.014	BN	0.014	J	mg/kg	MS

Attachment 1 - Changed Qualifiers and Results
Zone E, AOC 701 - Data Validation

Parameter Class	Analytical Method	Parameter	SDG	Sample ID	Lab Sample ID	Matrix	Lab Result	Lab Qual	Final Result	Final Qual	Units	Reasons
METAL	SW7471A	MERCURY	CNC126	701SB00601	S244767*11	SO	0.01	BN	0.01	J	mg/kg	MS
METAL	SW7471A	MERCURY	CNC126	701SB00602	S244767*12	SO	0.01	BN	0.01	J	mg/kg	MS
METAL	SW7471A	MERCURY	CNC126	701SB00701	S244767*13	SO	0.013	BN	0.013	J	mg/kg	MS
METAL	SW7471A	MERCURY	CNC126	701SB00702	S244767*14	SO	0.014	BN	0.014	J	mg/kg	MS
METAL	SW7471A	MERCURY	CNC126	701SB00801	S244767*15	SO	0.023	BN	0.023	J	mg/kg	MS
METAL	SW7471A	MERCURY	CNC126	701SB00802	S244767*16	SO	0.021	BN	0.021	J	mg/kg	MS
METAL	SW7471A	MERCURY	CNC126	701SB00901	S244767*17	SO	0.036	BN	0.036	J	mg/kg	MS
METAL	SW7471A	MERCURY	CNC126	701SB00902	S244767*18	SO	0.09	BN	0.09	J	mg/kg	MS
METAL	SW7471A	MERCURY	CNC126	701SB01001	S244767*19	SO	0.019	BN	0.019	J	mg/kg	MS
METAL	SW7471A	MERCURY	CNC126	701SB00102	S244767*2	SO	0.032	BN	0.032	J	mg/kg	MS
METAL	SW7471A	MERCURY	CNC126	701SB01002	S244767*20	SO	0.075	BN	0.075	J	mg/kg	MS
METAL	SW7471A	MERCURY	CNC126	701SB00201	S244767*3	SO	0.2	N	0.2	J	mg/kg	MS
METAL	SW7471A	MERCURY	CNC126	701SB00202	S244767*4	SO	0.005	BN	0.005	J	mg/kg	MS
METAL	SW7471A	MERCURY	CNC126	701SB00301	S244767*5	SO	0.58	BN	0.58	J	mg/kg	MS
METAL	SW7471A	MERCURY	CNC126	701SB00302	S244767*6	SO	0.014	BN	0.014	J	mg/kg	MS
METAL	SW7471A	MERCURY	CNC126	701SB00401	S244767*7	SO	0.058	BN	0.058	J	mg/kg	MS
METAL	SW7471A	MERCURY	CNC126	701SB00402	S244767*8	SO	0.014	BN	0.014	J	mg/kg	MS
METAL	SW7471A	MERCURY	CNC126	701SB00501	S244767*9	SO	0.091	BN	0.091	J	mg/kg	MS
METAL	SW6010B	NICKEL	CNC126	701SB00101	S244767*1	SO	2	B	2	J	mg/kg	IB
METAL	SW6010B	NICKEL	CNC126	701SB00502	S244767*10	SO	1.2	B	1.2	J	mg/kg	IB
METAL	SW6010B	NICKEL	CNC126	701SB00601	S244767*11	SO	1.9	B	1.9	J	mg/kg	IB
METAL	SW6010B	NICKEL	CNC126	701SB00602	S244767*12	SO	1.1	B	1.1	J	mg/kg	IB
METAL	SW6010B	NICKEL	CNC126	701SB00701	S244767*13	SO	1.4	B	1.4	J	mg/kg	IB
METAL	SW6010B	NICKEL	CNC126	701SB00702	S244767*14	SO	2.6	B	2.6	J	mg/kg	IB
METAL	SW6010B	NICKEL	CNC126	701SB00801	S244767*15	SO	2.4	B	2.4	J	mg/kg	IB
METAL	SW6010B	NICKEL	CNC126	701SB00802	S244767*16	SO	2	B	2	J	mg/kg	IB
METAL	SW6010B	NICKEL	CNC126	701SB00901	S244767*17	SO	5.2	B	5.2	J	mg/kg	IB
METAL	SW6010B	NICKEL	CNC126	701SB00902	S244767*18	SO	0.88	B	0.88	J	mg/kg	IB
METAL	SW6010B	NICKEL	CNC126	701SB01001	S244767*19	SO	0.7	B	0.7	J	mg/kg	IB
METAL	SW6010B	NICKEL	CNC126	701SB00102	S244767*2	SO	1.6	B	1.6	J	mg/kg	IB
METAL	SW6010B	NICKEL	CNC126	701SB01002	S244767*20	SO	0.57	B	0.57	J	mg/kg	IB
METAL	SW6010B	NICKEL	CNC126	701SB00201	S244767*3	SO	2.1	B	2.1	J	mg/kg	IB

Parameter Class	Analytical Method	Parameter	SDG	Sample ID	Lab Sample ID	Matrix	Lab Result	Lab Qual	Final Result	Final Qual	Units	Reasons
METAL	SW6010B	NICKEL	CNC126	701SB00202	S244767*4	SO	2.1	B	2.1	J	mg/kg	IB
METAL	SW6010B	NICKEL	CNC126	701SB00301	S244767*5	SO	2	B	2	J	mg/kg	IB
METAL	SW6010B	NICKEL	CNC126	701SB00302	S244767*6	SO	1.7	B	1.7	J	mg/kg	IB
METAL	SW6010B	NICKEL	CNC126	701SB00401	S244767*7	SO	5.5	B	5.5	J	mg/kg	IB
METAL	SW6010B	NICKEL	CNC126	701SB00402	S244767*8	SO	1.3	B	1.3	J	mg/kg	IB
METAL	SW6010B	NICKEL	CNC126	701SB00501	S244767*9	SO	2.3	B	2.3	J	mg/kg	IB
METAL	SW6010B	NICKEL	CNC134	701GW004M1	S245441*5	WG	0.004	B	0.004	U	mg/l	BL
METAL	SW6010B	NICKEL	CNC134	701GW005M1	S245441*6	WG	0.004	B	0.004	U	mg/l	BL
METAL	SW6010B	POTASSIUM	CNC126	701SB00101	S244767*1	SO	190	B	190	J	mg/kg	IB
METAL	SW6010B	POTASSIUM	CNC126	701SB00502	S244767*10	SO	100	B	100	J	mg/kg	IB
METAL	SW6010B	POTASSIUM	CNC126	701SB00601	S244767*11	SO	110	B	110	J	mg/kg	IB
METAL	SW6010B	POTASSIUM	CNC126	701SB00602	S244767*12	SO	100	B	100	J	mg/kg	IB
METAL	SW6010B	POTASSIUM	CNC126	701SB00701	S244767*13	SO	72	B	72	J	mg/kg	IB
METAL	SW6010B	POTASSIUM	CNC126	701SB00702	S244767*14	SO	270	B	270	J	mg/kg	IB
METAL	SW6010B	POTASSIUM	CNC126	701SB00801	S244767*15	SO	190	B	190	J	mg/kg	IB
METAL	SW6010B	POTASSIUM	CNC126	701SB00802	S244767*16	SO	100	B	100	J	mg/kg	IB
METAL	SW6010B	POTASSIUM	CNC126	701SB00901	S244767*17	SO	88	B	88	J	mg/kg	IB
METAL	SW6010B	POTASSIUM	CNC126	701SB00902	S244767*18	SO	81	B	81	J	mg/kg	IB
METAL	SW6010B	POTASSIUM	CNC126	701SB01001	S244767*19	SO	92	B	92	J	mg/kg	IB
METAL	SW6010B	POTASSIUM	CNC126	701SB00102	S244767*2	SO	180	B	180	J	mg/kg	IB
METAL	SW6010B	POTASSIUM	CNC126	701SB01002	S244767*20	SO	180	B	180	J	mg/kg	IB
METAL	SW6010B	POTASSIUM	CNC126	701SB00201	S244767*3	SO	120	B	120	J	mg/kg	IB
METAL	SW6010B	POTASSIUM	CNC126	701SB00202	S244767*4	SO	140	B	140	J	mg/kg	IB
METAL	SW6010B	POTASSIUM	CNC126	701SB00301	S244767*5	SO	220	B	220	J	mg/kg	IB
METAL	SW6010B	POTASSIUM	CNC126	701SB00302	S244767*6	SO	130	B	130	J	mg/kg	IB
METAL	SW6010B	POTASSIUM	CNC126	701SB00401	S244767*7	SO	310	B	310	J	mg/kg	IB
METAL	SW6010B	POTASSIUM	CNC126	701SB00402	S244767*8	SO	100	B	100	J	mg/kg	IB
METAL	SW6010B	POTASSIUM	CNC126	701SB00501	S244767*9	SO	130	B	130	J	mg/kg	IB
METAL	SW6010B	POTASSIUM	CNC134	701GW001M1	S245441*1	WG	9.4	E	9.4	UJ	mg/l	BL, SD
METAL	SW6010B	POTASSIUM	CNC134	701GW03DM1	S245441*10	WG	5.1	E	5.1	UJ	mg/l	BL, SD
METAL	SW6010B	POTASSIUM	CNC134	701GW04DM1	S245441*11	WG	12	E	12	J	mg/l	SD
METAL	SW6010B	POTASSIUM	CNC134	701GW05DM1	S245441*12	WG	17	E	17	J	mg/l	SD

Attachment 1 - Changed Qualifiers and Results
Zone E, AOC 701 - Data Validation

Parameter Class	Analytical Method	Parameter	SDG	Sample ID	Lab Sample ID	Matrix	Lab Result	Lab Qual	Final Result	Final Qual	Units	Reasons
METAL	SW6010B	POTASSIUM	CNC134	701GW06DM1	S245441*13	WG	36	E	36	J	mg/l	SD
METAL	SW6010B	POTASSIUM	CNC134	701GW002M1	S245441*2	WG	11	E	11	J	mg/l	SD
METAL	SW6010B	POTASSIUM	CNC134	701GW003M1RE	S245441*3*RE	WG	12	E	12	J	mg/l	SD
METAL	SW6010B	POTASSIUM	CNC134	701HW003M1	S245441*4	WG	11	E	11	J	mg/l	SD
METAL	SW6010B	POTASSIUM	CNC134	701GW004M1	S245441*5	WG	12	E	12	J	mg/l	SD
METAL	SW6010B	POTASSIUM	CNC134	701GW005M1	S245441*6	WG	18	E	18	J	mg/l	SD
METAL	SW6010B	POTASSIUM	CNC134	701GW006M1	S245441*7	WG	64	E	64	J	mg/l	SD
METAL	SW6010B	POTASSIUM	CNC134	701GW01DM1	S245441*8	WG	4.6	BE	4.6	UJ	mg/l	BL, SD
METAL	SW6010B	POTASSIUM	CNC134	701GW02DM1	S245441*9	WG	11	E	11	J	mg/l	SD
METAL	SW6010B	SELENIUM	CNC134	701GW005M1	S245441*6	WG	0.002	B	0.002	J	mg/l	IB
METAL	SW6010B	SODIUM	CNC126	701SB00101	S244767*1	SO	56	B	56	U	mg/kg	BL
METAL	SW6010B	SODIUM	CNC126	701SB00502	S244767*10	SO	160	B	160	U	mg/kg	BL
METAL	SW6010B	SODIUM	CNC126	701SB00902	S244767*18	SO	56	B	56	U	mg/kg	BL
METAL	SW6010B	SODIUM	CNC126	701SB00102	S244767*2	SO	51	B	51	U	mg/kg	BL
METAL	SW6010B	SODIUM	CNC126	701SB00301	S244767*5	SO	69	B	69	U	mg/kg	BL
METAL	SW6010B	SODIUM	CNC126	701SB00401	S244767*7	SO	440	B	440	U	mg/kg	BL
METAL	SW6010B	SODIUM	CNC134	701GW001M1	S245441*1	WG	51	E	51	UJ	mg/l	BL, SD
METAL	SW6010B	SODIUM	CNC134	701GW03DM1	S245441*10	WG	4.1	BE	4.1	UJ	mg/l	BL, SD
METAL	SW6010B	SODIUM	CNC134	701GW04DM1	S245441*11	WG	26	E	26	UJ	mg/l	BL, SD
METAL	SW6010B	SODIUM	CNC134	701GW05DM1	S245441*12	WG	110	E	110	J	mg/l	SD
METAL	SW6010B	SODIUM	CNC134	701GW06DM1	S245441*13	WG	580	E	580	J	mg/l	SD
METAL	SW6010B	SODIUM	CNC134	701GW002M1	S245441*2	WG	29	E	29	UJ	mg/l	BL, SD
METAL	SW6010B	SODIUM	CNC134	701GW003M1RE	S245441*3*RE	WG	8.4	E	8.4	UJ	mg/l	BL, SD
METAL	SW6010B	SODIUM	CNC134	701HW003M1	S245441*4	WG	40	E	40	UJ	mg/l	BL, SD
METAL	SW6010B	SODIUM	CNC134	701GW004M1	S245441*5	WG	33	E	33	UJ	mg/l	BL, SD
METAL	SW6010B	SODIUM	CNC134	701GW005M1	S245441*6	WG	14	E	14	UJ	mg/l	BL, SD
METAL	SW6010B	SODIUM	CNC134	701GW006M1	S245441*7	WG	1100	E	1100	J	mg/l	SD
METAL	SW6010B	SODIUM	CNC134	701GW01DM1	S245441*8	WG	15	E	15	UJ	mg/l	BL, SD
METAL	SW6010B	SODIUM	CNC134	701GW02DM1	S245441*9	WG	110	E	110	J	mg/l	SD
METAL	SW6010B	VANADIUM	CNC126	701SB00101	S244767*1	SO	5.9	B	5.9	J	mg/kg	IB
METAL	SW6010B	VANADIUM	CNC126	701SB00502	S244767*10	SO	5.2	B	5.2	J	mg/kg	IB
METAL	SW6010B	VANADIUM	CNC126	701SB00601	S244767*11	SO	5.7	B	5.7	J	mg/kg	IB

Parameter Class	Analytical Method	Parameter	SDG	Sample ID	Lab Sample ID	Matrix	Lab Result	Lab Qual	Final Result	Final Qual	Units	Reasons
METAL	SW6010B	VANADIUM	CNC126	701SB00602	S244767*12	SO	8.5	B	8.5	J	mg/kg	IB
METAL	SW6010B	VANADIUM	CNC126	701SB00701	S244767*13	SO	5.3	B	5.3	J	mg/kg	IB
METAL	SW6010B	VANADIUM	CNC126	701SB00702	S244767*14	SO	6.7	B	6.7	J	mg/kg	IB
METAL	SW6010B	VANADIUM	CNC126	701SB00801	S244767*15	SO	7	B	7	J	mg/kg	IB
METAL	SW6010B	VANADIUM	CNC126	701SB00802	S244767*16	SO	6	B	6	J	mg/kg	IB
METAL	SW6010B	VANADIUM	CNC126	701SB00901	S244767*17	SO	8	B	8	J	mg/kg	IB
METAL	SW6010B	VANADIUM	CNC126	701SB00902	S244767*18	SO	5.3	B	5.3	J	mg/kg	IB
METAL	SW6010B	VANADIUM	CNC126	701SB01001	S244767*19	SO	3.7	B	3.7	J	mg/kg	IB
METAL	SW6010B	VANADIUM	CNC126	701SB00102	S244767*2	SO	5	B	5	J	mg/kg	IB
METAL	SW6010B	VANADIUM	CNC126	701SB01002	S244767*20	SO	4.6	B	4.6	J	mg/kg	IB
METAL	SW6010B	VANADIUM	CNC126	701SB00201	S244767*3	SO	5.3	B	5.3	J	mg/kg	IB
METAL	SW6010B	VANADIUM	CNC126	701SB00202	S244767*4	SO	5.5	B	5.5	J	mg/kg	IB
METAL	SW6010B	VANADIUM	CNC126	701SB00301	S244767*5	SO	5.2	B	5.2	J	mg/kg	IB
METAL	SW6010B	VANADIUM	CNC126	701SB00302	S244767*6	SO	7.1	B	7.1	J	mg/kg	IB
METAL	SW6010B	VANADIUM	CNC126	701SB00402	S244767*8	SO	5.5	B	5.5	J	mg/kg	IB
METAL	SW6010B	VANADIUM	CNC126	701SB00501	S244767*9	SO	9.1	B	9.1	J	mg/kg	IB
METAL	SW6010B	VANADIUM	CNC134	701GW001M1	S245441*1	WG	0.001	B	0.001	U	mg/l	BL
METAL	SW6010B	VANADIUM	CNC134	701GW03DM1	S245441*10	WG	0.003	B	0.003	U	mg/l	BL
METAL	SW6010B	VANADIUM	CNC134	701GW04DM1	S245441*11	WG	0.003	B	0.003	U	mg/l	BL
METAL	SW6010B	VANADIUM	CNC134	701GW05DM1	S245441*12	WG	0.003	B	0.003	U	mg/l	BL
METAL	SW6010B	VANADIUM	CNC134	701GW06DM1	S245441*13	WG	0.005	B	0.005	U	mg/l	BL
METAL	SW6010B	VANADIUM	CNC134	701GW003M1	S245441*3	WG	0.001	B	0.001	U	mg/l	BL
METAL	SW6010B	VANADIUM	CNC134	701HW003M1	S245441*4	WG	0.002	B	0.002	U	mg/l	BL
METAL	SW6010B	VANADIUM	CNC134	701GW004M1	S245441*5	WG	0.042	B	0.042	J	mg/l	IB
METAL	SW6010B	VANADIUM	CNC134	701GW005M1	S245441*6	WG	0.019	B	0.019	J	mg/l	IB
METAL	SW6010B	VANADIUM	CNC134	701GW006M1	S245441*7	WG	0.006	B	0.006	U	mg/l	BL
METAL	SW6010B	VANADIUM	CNC134	701GW01DM1	S245441*8	WG	0.002	B	0.002	U	mg/l	BL
METAL	SW6010B	VANADIUM	CNC134	701GW02DM1	S245441*9	WG	0.002	B	0.002	U	mg/l	BL
METAL	SW6010B	ZINC	CNC126	701SB00601	S244767*11	SO	3.2	B	3.2	J	mg/kg	IB
METAL	SW6010B	ZINC	CNC126	701SB00602	S244767*12	SO	2.5	B	2.5	J	mg/kg	IB
METAL	SW6010B	ZINC	CNC126	701SB00701	S244767*13	SO	2.2	B	2.2	J	mg/kg	IB
METAL	SW6010B	ZINC	CNC126	701SB00802	S244767*16	SO	2	B	2	J	mg/kg	IB

Attachment 1 - Changed Qualifiers and Results
Zone E, AOC 701 - Data Validation

Parameter Class	Analytical Method	Parameter	SDG	Sample ID	Lab Sample ID	Matrix	Lab Result	Lab Qual	Final Result	Final Qual	Units	Reasons
METAL	SW6010B	ZINC	CNC126	701SB01001	S244767*19	SO	3	B	3	J	mg/kg	IB
METAL	SW6010B	ZINC	CNC126	701SB01002	S244767*20	SO	3.2	B	3.2	J	mg/kg	IB
METAL	SW6010B	ZINC	CNC126	701SB00202	S244767*4	SO	3.1	B	3.1	J	mg/kg	IB
METAL	SW6010B	ZINC	CNC126	701SB00302	S244767*6	SO	2.1	B	2.1	J	mg/kg	IB
METAL	SW6010B	ZINC	CNC126	701SB00402	S244767*8	SO	2.8	B	2.8	J	mg/kg	IB
METAL	SW6010B	ZINC	CNC134	701GW06DM1	S245441*13	WG	0.013	B	0.013	J	mg/l	IB
METAL	SW6010B	ZINC	CNC134	701GW003M1	S245441*3	WG	0.005	B	0.005	J	mg/l	IB
METAL	SW6010B	ZINC	CNC134	701HW003M1	S245441*4	WG	0.003	B	0.003	J	mg/l	IB
METAL	SW6010B	ZINC	CNC134	701GW005M1	S245441*6	WG	0.015	B	0.015	J	mg/l	IB
METAL	SW6010B	ZINC	CNC134	701GW01DM1	S245441*8	WG	0.003	B	0.003	J	mg/l	IB
PCB	SW8082	PCB-1016 (AROCHLOR 1016)	CNC126	701SB00101	S244767*1	SO	70	UZ	70	R	ug/kg	RE
PCB	SW8082	PCB-1016 (AROCHLOR 1016)	CNC126	701SB00102	S244767*2	SO	35	U	35	R	ug/kg	RE
PCB	SW8082	PCB-1016 (AROCHLOR 1016)	CNC126	701SB00102RE	S244767*2*RE	SO	39	U	39	UJ	ug/kg	MS
PCB	SW8082	PCB-1016 (AROCHLOR 1016)	CNC126	701SB00201	S244767*3	SO	37	UZ	37	R	ug/kg	RE
PCB	SW8082	PCB-1016 (AROCHLOR 1016)	CNC126	701SB00202	S244767*4	SO	38	U	38	R	ug/kg	RE
PCB	SW8082	PCB-1016 (AROCHLOR 1016)	CNC126	701SB00202RE	S244767*4*RE	SO	38	U	38	UJ	ug/kg	SS
PCB	SW8082	PCB-1016 (AROCHLOR 1016)	CNC126	701SB00302	S244767*6	SO	36	U	36	R	ug/kg	RE
PCB	SW8082	PCB-1016 (AROCHLOR 1016)	CNC126	701SB00302RE	S244767*6*RE	SO	36	U	36	UJ	ug/kg	SS
PCB	SW8082	PCB-1016 (AROCHLOR 1016)	CNC126	701SB00401	S244767*7	SO	34	U	34	R	ug/kg	RE
PCB	SW8082	PCB-1016 (AROCHLOR 1016)	CNC126	701SB00401RE	S244767*7*RE	SO	34	U	34	UJ	ug/kg	SS
PCB	SW8082	PCB-1016 (AROCHLOR 1016)	CNC126	701SB00501	S244767*9	SO	36	UZ	36	R	ug/kg	RE
PCB	SW8082	PCB-1016 (AROCHLOR 1016)	CNC126	701SB00501RE	S244767*9*RE	SO	140	UZ	140	UJ	ug/kg	SS
PCB	SW8082	PCB-1016 (AROCHLOR 1016)	CNC126	701SB00601	S244767*11	SO	37	UZ	37	R	ug/kg	RE
PCB	SW8082	PCB-1016 (AROCHLOR 1016)	CNC126	701SB00602	S244767*12	SO	39	U	39	R	ug/kg	RE
PCB	SW8082	PCB-1016 (AROCHLOR 1016)	CNC126	701SB00602RE	S244767*12*RE	SO	39	U	39	UJ	ug/kg	SS
PCB	SW8082	PCB-1016 (AROCHLOR 1016)	CNC126	701SB00701	S244767*13	SO	36	U	36	R	ug/kg	RE
PCB	SW8082	PCB-1016 (AROCHLOR 1016)	CNC126	701SB00701RE	S244767*13*RE	SO	36	U	36	UJ	ug/kg	SS
PCB	SW8082	PCB-1016 (AROCHLOR 1016)	CNC126	701SB00702	S244767*14	SO	38	U	38	R	ug/kg	RE
PCB	SW8082	PCB-1016 (AROCHLOR 1016)	CNC126	701SB00702RE	S244767*14*RE	SO	38	U	38	UJ	ug/kg	SS
PCB	SW8082	PCB-1016 (AROCHLOR 1016)	CNC126	701SB00801	S244767*15	SO	35	U	35	R	ug/kg	RE
PCB	SW8082	PCB-1016 (AROCHLOR 1016)	CNC126	701SB00801RE	S244767*15*RE	SO	35	U	35	UJ	ug/kg	SS
PCB	SW8082	PCB-1016 (AROCHLOR 1016)	CNC126	701SB00802	S244767*16	SO	35	U	35	R	ug/kg	RE

Parameter Class	Analytical Method	Parameter	SDG	Sample ID	Lab Sample ID	Matrix	Lab Result	Lab Qual	Final Result	Final Qual	Units	Reasons
PCB	SW8082	PCB-1016 (AROCHLOR 1016)	CNC126	701SB00901	S244767*17	SO	36	UZ	36	R	ug/kg	RE
PCB	SW8082	PCB-1016 (AROCHLOR 1016)	CNC126	701SB00902	S244767*18	SO	36	U	36	R	ug/kg	RE
PCB	SW8082	PCB-1016 (AROCHLOR 1016)	CNC126	701SB00902RE	S244767*18*RE	SO	36	U	36	UJ	ug/kg	SS
PCB	SW8082	PCB-1016 (AROCHLOR 1016)	CNC126	701SB01001	S244767*19	SO	36	U	36	R	ug/kg	RE
PCB	SW8082	PCB-1016 (AROCHLOR 1016)	CNC126	701SB01001RE	S244767*19*RE	SO	36	U	36	UJ	ug/kg	SS
PCB	SW8082	PCB-1016 (AROCHLOR 1016)	CNC126	701SB01002	S244767*20	SO	37	U	37	R	ug/kg	RE
PCB	SW8082	PCB-1016 (AROCHLOR 1016)	CNC126	701SB01002RE	S244767*20*RE	SO	37	U	37	UJ	ug/kg	SS
PCB	SW8082	PCB-1221 (AROCHLOR 1221)	CNC126	701SB00101	S244767*1	SO	70	U	70	R	ug/kg	RE
PCB	SW8082	PCB-1221 (AROCHLOR 1221)	CNC126	701SB00102	S244767*2	SO	35	U	35	R	ug/kg	RE
PCB	SW8082	PCB-1221 (AROCHLOR 1221)	CNC126	701SB00201	S244767*3	SO	37	U	37	R	ug/kg	RE
PCB	SW8082	PCB-1221 (AROCHLOR 1221)	CNC126	701SB00202	S244767*4	SO	38	U	38	R	ug/kg	RE
PCB	SW8082	PCB-1221 (AROCHLOR 1221)	CNC126	701SB00202RE	S244767*4*RE	SO	38	U	38	UJ	ug/kg	SS
PCB	SW8082	PCB-1221 (AROCHLOR 1221)	CNC126	701SB00302	S244767*6	SO	36	U	36	R	ug/kg	RE
PCB	SW8082	PCB-1221 (AROCHLOR 1221)	CNC126	701SB00302RE	S244767*6*RE	SO	36	U	36	UJ	ug/kg	SS
PCB	SW8082	PCB-1221 (AROCHLOR 1221)	CNC126	701SB00401	S244767*7	SO	34	U	34	R	ug/kg	RE
PCB	SW8082	PCB-1221 (AROCHLOR 1221)	CNC126	701SB00401RE	S244767*7*RE	SO	34	U	34	UJ	ug/kg	SS
PCB	SW8082	PCB-1221 (AROCHLOR 1221)	CNC126	701SB00501	S244767*9	SO	36	U	36	R	ug/kg	RE
PCB	SW8082	PCB-1221 (AROCHLOR 1221)	CNC126	701SB00501RE	S244767*9*RE	SO	140	U	140	UJ	ug/kg	SS
PCB	SW8082	PCB-1221 (AROCHLOR 1221)	CNC126	701SB00601	S244767*11	SO	37	U	37	R	ug/kg	RE
PCB	SW8082	PCB-1221 (AROCHLOR 1221)	CNC126	701SB00602	S244767*12	SO	39	U	39	R	ug/kg	RE
PCB	SW8082	PCB-1221 (AROCHLOR 1221)	CNC126	701SB00602RE	S244767*12*RE	SO	39	U	39	UJ	ug/kg	SS
PCB	SW8082	PCB-1221 (AROCHLOR 1221)	CNC126	701SB00701	S244767*13	SO	36	U	36	R	ug/kg	RE
PCB	SW8082	PCB-1221 (AROCHLOR 1221)	CNC126	701SB00701RE	S244767*13*RE	SO	36	U	36	UJ	ug/kg	SS
PCB	SW8082	PCB-1221 (AROCHLOR 1221)	CNC126	701SB00702	S244767*14	SO	38	U	38	R	ug/kg	RE
PCB	SW8082	PCB-1221 (AROCHLOR 1221)	CNC126	701SB00702RE	S244767*14*RE	SO	38	U	38	UJ	ug/kg	SS
PCB	SW8082	PCB-1221 (AROCHLOR 1221)	CNC126	701SB00801	S244767*15	SO	35	U	35	R	ug/kg	RE
PCB	SW8082	PCB-1221 (AROCHLOR 1221)	CNC126	701SB00801RE	S244767*15*RE	SO	35	U	35	UJ	ug/kg	SS
PCB	SW8082	PCB-1221 (AROCHLOR 1221)	CNC126	701SB00802	S244767*16	SO	35	U	35	R	ug/kg	RE
PCB	SW8082	PCB-1221 (AROCHLOR 1221)	CNC126	701SB00901	S244767*17	SO	36	U	36	R	ug/kg	RE
PCB	SW8082	PCB-1221 (AROCHLOR 1221)	CNC126	701SB00902	S244767*18	SO	36	U	36	R	ug/kg	RE
PCB	SW8082	PCB-1221 (AROCHLOR 1221)	CNC126	701SB00902RE	S244767*18*RE	SO	36	U	36	UJ	ug/kg	SS
PCB	SW8082	PCB-1221 (AROCHLOR 1221)	CNC126	701SB01001	S244767*19	SO	36	U	36	R	ug/kg	RE

Attachment 1 - Changed Qualifiers and Results
Zone E, AOC 701 - Data Validation

Parameter Class	Analytical Method	Parameter	SDG	Sample ID	Lab Sample ID	Matrix	Lab Result	Lab Qual	Final Result	Final Qual	Units	Reasons
PCB	SW8082	PCB-1221 (AROCHLOR 1221)	CNC126	701SB01001RE	S244767*19*RE	SO	36	U	36	UJ	ug/kg	SS
PCB	SW8082	PCB-1221 (AROCHLOR 1221)	CNC126	701SB01002	S244767*20	SO	37	U	37	R	ug/kg	RE
PCB	SW8082	PCB-1221 (AROCHLOR 1221)	CNC126	701SB01002RE	S244767*20*RE	SO	37	U	37	UJ	ug/kg	SS
PCB	SW8082	PCB-1232 (AROCHLOR 1232)	CNC126	701SB00101	S244767*1	SO	70	U	70	R	ug/kg	RE
PCB	SW8082	PCB-1232 (AROCHLOR 1232)	CNC126	701SB00102	S244767*2	SO	35	U	35	R	ug/kg	RE
PCB	SW8082	PCB-1232 (AROCHLOR 1232)	CNC126	701SB00201	S244767*3	SO	37	U	37	R	ug/kg	RE
PCB	SW8082	PCB-1232 (AROCHLOR 1232)	CNC126	701SB00202	S244767*4	SO	38	U	38	R	ug/kg	RE
PCB	SW8082	PCB-1232 (AROCHLOR 1232)	CNC126	701SB00202RE	S244767*4*RE	SO	38	U	38	UJ	ug/kg	SS
PCB	SW8082	PCB-1232 (AROCHLOR 1232)	CNC126	701SB00302	S244767*6	SO	36	U	36	R	ug/kg	RE
PCB	SW8082	PCB-1232 (AROCHLOR 1232)	CNC126	701SB00302RE	S244767*6*RE	SO	36	U	36	UJ	ug/kg	SS
PCB	SW8082	PCB-1232 (AROCHLOR 1232)	CNC126	701SB00401	S244767*7	SO	34	U	34	R	ug/kg	RE
PCB	SW8082	PCB-1232 (AROCHLOR 1232)	CNC126	701SB00401RE	S244767*7*RE	SO	34	U	34	UJ	ug/kg	SS
PCB	SW8082	PCB-1232 (AROCHLOR 1232)	CNC126	701SB00501	S244767*9	SO	36	U	36	R	ug/kg	RE
PCB	SW8082	PCB-1232 (AROCHLOR 1232)	CNC126	701SB00501RE	S244767*9*RE	SO	140	U	140	UJ	ug/kg	SS
PCB	SW8082	PCB-1232 (AROCHLOR 1232)	CNC126	701SB00601	S244767*11	SO	37	U	37	R	ug/kg	RE
PCB	SW8082	PCB-1232 (AROCHLOR 1232)	CNC126	701SB00602	S244767*12	SO	39	U	39	R	ug/kg	RE
PCB	SW8082	PCB-1232 (AROCHLOR 1232)	CNC126	701SB00602RE	S244767*12*RE	SO	39	U	39	UJ	ug/kg	SS
PCB	SW8082	PCB-1232 (AROCHLOR 1232)	CNC126	701SB00701	S244767*13	SO	36	U	36	R	ug/kg	RE
PCB	SW8082	PCB-1232 (AROCHLOR 1232)	CNC126	701SB00701RE	S244767*13*RE	SO	36	U	36	UJ	ug/kg	SS
PCB	SW8082	PCB-1232 (AROCHLOR 1232)	CNC126	701SB00702	S244767*14	SO	38	U	38	R	ug/kg	RE
PCB	SW8082	PCB-1232 (AROCHLOR 1232)	CNC126	701SB00702RE	S244767*14*RE	SO	38	U	38	UJ	ug/kg	SS
PCB	SW8082	PCB-1232 (AROCHLOR 1232)	CNC126	701SB00801	S244767*15	SO	35	U	35	R	ug/kg	RE
PCB	SW8082	PCB-1232 (AROCHLOR 1232)	CNC126	701SB00801RE	S244767*15*RE	SO	35	U	35	UJ	ug/kg	SS
PCB	SW8082	PCB-1232 (AROCHLOR 1232)	CNC126	701SB00802	S244767*16	SO	35	U	35	R	ug/kg	RE
PCB	SW8082	PCB-1232 (AROCHLOR 1232)	CNC126	701SB00901	S244767*17	SO	36	U	36	R	ug/kg	RE
PCB	SW8082	PCB-1232 (AROCHLOR 1232)	CNC126	701SB00902	S244767*18	SO	36	U	36	R	ug/kg	RE
PCB	SW8082	PCB-1232 (AROCHLOR 1232)	CNC126	701SB00902RE	S244767*18*RE	SO	36	U	36	UJ	ug/kg	SS
PCB	SW8082	PCB-1232 (AROCHLOR 1232)	CNC126	701SB01001	S244767*19	SO	36	U	36	R	ug/kg	RE
PCB	SW8082	PCB-1232 (AROCHLOR 1232)	CNC126	701SB01001RE	S244767*19*RE	SO	36	U	36	UJ	ug/kg	SS
PCB	SW8082	PCB-1232 (AROCHLOR 1232)	CNC126	701SB01002	S244767*20	SO	37	U	37	R	ug/kg	RE
PCB	SW8082	PCB-1232 (AROCHLOR 1232)	CNC126	701SB01002RE	S244767*20*RE	SO	37	U	37	UJ	ug/kg	SS
PCB	SW8082	PCB-1242 (AROCHLOR 1242)	CNC126	701SB00101	S244767*1	SO	70	U	70	R	ug/kg	RE

Parameter Class	Analytical Method	Parameter	SDG	Sample ID	Lab Sample ID	Matrix	Lab Result	Lab Qual	Final Result	Final Qual	Units	Reasons
PCB	SW8082	PCB-1242 (AROCHLOR 1242)	CNC126	701SB00102	S244767*2	SO	35	U	35	R	ug/kg	RE
PCB	SW8082	PCB-1242 (AROCHLOR 1242)	CNC126	701SB00201	S244767*3	SO	37	U	37	R	ug/kg	RE
PCB	SW8082	PCB-1242 (AROCHLOR 1242)	CNC126	701SB00202	S244767*4	SO	38	U	38	R	ug/kg	RE
PCB	SW8082	PCB-1242 (AROCHLOR 1242)	CNC126	701SB00202RE	S244767*4*RE	SO	38	U	38	UJ	ug/kg	SS
PCB	SW8082	PCB-1242 (AROCHLOR 1242)	CNC126	701SB00302	S244767*6	SO	36	U	36	R	ug/kg	RE
PCB	SW8082	PCB-1242 (AROCHLOR 1242)	CNC126	701SB00302RE	S244767*6*RE	SO	36	U	36	UJ	ug/kg	SS
PCB	SW8082	PCB-1242 (AROCHLOR 1242)	CNC126	701SB00401	S244767*7	SO	34	U	34	R	ug/kg	RE
PCB	SW8082	PCB-1242 (AROCHLOR 1242)	CNC126	701SB00401RE	S244767*7*RE	SO	34	U	34	UJ	ug/kg	SS
PCB	SW8082	PCB-1242 (AROCHLOR 1242)	CNC126	701SB00501	S244767*9	SO	36	U	36	R	ug/kg	RE
PCB	SW8082	PCB-1242 (AROCHLOR 1242)	CNC126	701SB00501RE	S244767*9*RE	SO	140	U	140	UJ	ug/kg	SS
PCB	SW8082	PCB-1242 (AROCHLOR 1242)	CNC126	701SB00601	S244767*11	SO	37	U	37	R	ug/kg	RE
PCB	SW8082	PCB-1242 (AROCHLOR 1242)	CNC126	701SB00602	S244767*12	SO	39	U	39	R	ug/kg	RE
PCB	SW8082	PCB-1242 (AROCHLOR 1242)	CNC126	701SB00602RE	S244767*12*RE	SO	39	U	39	UJ	ug/kg	SS
PCB	SW8082	PCB-1242 (AROCHLOR 1242)	CNC126	701SB00701	S244767*13	SO	36	U	36	R	ug/kg	RE
PCB	SW8082	PCB-1242 (AROCHLOR 1242)	CNC126	701SB00701RE	S244767*13*RE	SO	36	U	36	UJ	ug/kg	SS
PCB	SW8082	PCB-1242 (AROCHLOR 1242)	CNC126	701SB00702	S244767*14	SO	38	U	38	R	ug/kg	RE
PCB	SW8082	PCB-1242 (AROCHLOR 1242)	CNC126	701SB00702RE	S244767*14*RE	SO	38	U	38	UJ	ug/kg	SS
PCB	SW8082	PCB-1242 (AROCHLOR 1242)	CNC126	701SB00801	S244767*15	SO	35	U	35	R	ug/kg	RE
PCB	SW8082	PCB-1242 (AROCHLOR 1242)	CNC126	701SB00801RE	S244767*15*RE	SO	35	U	35	UJ	ug/kg	SS
PCB	SW8082	PCB-1242 (AROCHLOR 1242)	CNC126	701SB00802	S244767*16	SO	35	U	35	R	ug/kg	RE
PCB	SW8082	PCB-1242 (AROCHLOR 1242)	CNC126	701SB00901	S244767*17	SO	36	U	36	R	ug/kg	RE
PCB	SW8082	PCB-1242 (AROCHLOR 1242)	CNC126	701SB00902	S244767*18	SO	36	U	36	R	ug/kg	RE
PCB	SW8082	PCB-1242 (AROCHLOR 1242)	CNC126	701SB00902RE	S244767*18*RE	SO	36	U	36	UJ	ug/kg	SS
PCB	SW8082	PCB-1242 (AROCHLOR 1242)	CNC126	701SB01001	S244767*19	SO	36	U	36	R	ug/kg	RE
PCB	SW8082	PCB-1242 (AROCHLOR 1242)	CNC126	701SB01001RE	S244767*19*RE	SO	36	U	36	UJ	ug/kg	SS
PCB	SW8082	PCB-1242 (AROCHLOR 1242)	CNC126	701SB01002	S244767*20	SO	37	U	37	R	ug/kg	RE
PCB	SW8082	PCB-1242 (AROCHLOR 1242)	CNC126	701SB01002RE	S244767*20*RE	SO	37	U	37	UJ	ug/kg	SS
PCB	SW8082	PCB-1248 (AROCHLOR 1248)	CNC126	701SB00101	S244767*1	SO	70	U	70	R	ug/kg	RE
PCB	SW8082	PCB-1248 (AROCHLOR 1248)	CNC126	701SB00102	S244767*2	SO	35	U	35	R	ug/kg	RE
PCB	SW8082	PCB-1248 (AROCHLOR 1248)	CNC126	701SB00201	S244767*3	SO	37	U	37	R	ug/kg	RE
PCB	SW8082	PCB-1248 (AROCHLOR 1248)	CNC126	701SB00202	S244767*4	SO	38	U	38	R	ug/kg	RE
PCB	SW8082	PCB-1248 (AROCHLOR 1248)	CNC126	701SB00202RE	S244767*4*RE	SO	38	U	38	UJ	ug/kg	SS

Attachment 1 - Changed Qualifiers and Results
Zone E, AOC 701 - Data Validation

Parameter Class	Analytical Method	Parameter	SDG	Sample ID	Lab Sample ID	Matrix	Lab Result	Lab Qual	Final Result	Final Qual	Units	Reasons
PCB	SW8082	PCB-1248 (AROCHLOR 1248)	CNC126	701SB00302	S244767*6	SO	36	U	36	R	ug/kg	RE
PCB	SW8082	PCB-1248 (AROCHLOR 1248)	CNC126	701SB00302RE	S244767*6*RE	SO	36	U	36	UJ	ug/kg	SS
PCB	SW8082	PCB-1248 (AROCHLOR 1248)	CNC126	701SB00401	S244767*7	SO	34	U	34	R	ug/kg	RE
PCB	SW8082	PCB-1248 (AROCHLOR 1248)	CNC126	701SB00401RE	S244767*7*RE	SO	34	U	34	UJ	ug/kg	SS
PCB	SW8082	PCB-1248 (AROCHLOR 1248)	CNC126	701SB00501	S244767*9	SO	36	U	36	R	ug/kg	RE
PCB	SW8082	PCB-1248 (AROCHLOR 1248)	CNC126	701SB00501RE	S244767*9*RE	SO	140	U	140	UJ	ug/kg	SS
PCB	SW8082	PCB-1248 (AROCHLOR 1248)	CNC126	701SB00601	S244767*11	SO	37	U	37	R	ug/kg	RE
PCB	SW8082	PCB-1248 (AROCHLOR 1248)	CNC126	701SB00602	S244767*12	SO	39	U	39	R	ug/kg	RE
PCB	SW8082	PCB-1248 (AROCHLOR 1248)	CNC126	701SB00602RE	S244767*12*RE	SO	39	U	39	UJ	ug/kg	SS
PCB	SW8082	PCB-1248 (AROCHLOR 1248)	CNC126	701SB00701	S244767*13	SO	36	U	36	R	ug/kg	RE
PCB	SW8082	PCB-1248 (AROCHLOR 1248)	CNC126	701SB00701RE	S244767*13*RE	SO	36	U	36	UJ	ug/kg	SS
PCB	SW8082	PCB-1248 (AROCHLOR 1248)	CNC126	701SB00702	S244767*14	SO	38	U	38	R	ug/kg	RE
PCB	SW8082	PCB-1248 (AROCHLOR 1248)	CNC126	701SB00702RE	S244767*14*RE	SO	38	U	38	UJ	ug/kg	SS
PCB	SW8082	PCB-1248 (AROCHLOR 1248)	CNC126	701SB00801	S244767*15	SO	35	U	35	R	ug/kg	RE
PCB	SW8082	PCB-1248 (AROCHLOR 1248)	CNC126	701SB00801RE	S244767*15*RE	SO	35	U	35	UJ	ug/kg	SS
PCB	SW8082	PCB-1248 (AROCHLOR 1248)	CNC126	701SB00802	S244767*16	SO	35	U	35	R	ug/kg	RE
PCB	SW8082	PCB-1248 (AROCHLOR 1248)	CNC126	701SB00901	S244767*17	SO	36	U	36	R	ug/kg	RE
PCB	SW8082	PCB-1248 (AROCHLOR 1248)	CNC126	701SB00902	S244767*18	SO	36	U	36	R	ug/kg	RE
PCB	SW8082	PCB-1248 (AROCHLOR 1248)	CNC126	701SB00902RE	S244767*18*RE	SO	36	U	36	UJ	ug/kg	SS
PCB	SW8082	PCB-1248 (AROCHLOR 1248)	CNC126	701SB01001	S244767*19	SO	36	U	36	R	ug/kg	RE
PCB	SW8082	PCB-1248 (AROCHLOR 1248)	CNC126	701SB01001RE	S244767*19*RE	SO	36	U	36	UJ	ug/kg	SS
PCB	SW8082	PCB-1248 (AROCHLOR 1248)	CNC126	701SB01002	S244767*20	SO	37	U	37	R	ug/kg	RE
PCB	SW8082	PCB-1248 (AROCHLOR 1248)	CNC126	701SB01002RE	S244767*20*RE	SO	37	U	37	UJ	ug/kg	SS
PCB	SW8082	PCB-1254 (AROCHLOR 1254)	CNC126	701SB00101	S244767*1	SO	140	U	140	R	ug/kg	RE
PCB	SW8082	PCB-1254 (AROCHLOR 1254)	CNC126	701SB00102	S244767*2	SO	72	U	72	R	ug/kg	RE
PCB	SW8082	PCB-1254 (AROCHLOR 1254)	CNC126	701SB00201	S244767*3	SO	75	U	75	R	ug/kg	RE
PCB	SW8082	PCB-1254 (AROCHLOR 1254)	CNC126	701SB00202	S244767*4	SO	76	U	76	R	ug/kg	RE
PCB	SW8082	PCB-1254 (AROCHLOR 1254)	CNC126	701SB00202RE	S244767*4*RE	SO	76	U	76	UJ	ug/kg	SS
PCB	SW8082	PCB-1254 (AROCHLOR 1254)	CNC126	701SB00302	S244767*6	SO	73	U	73	R	ug/kg	RE
PCB	SW8082	PCB-1254 (AROCHLOR 1254)	CNC126	701SB00302RE	S244767*6*RE	SO	73	U	73	UJ	ug/kg	SS
PCB	SW8082	PCB-1254 (AROCHLOR 1254)	CNC126	701SB00401	S244767*7	SO	69	U	69	R	ug/kg	RE
PCB	SW8082	PCB-1254 (AROCHLOR 1254)	CNC126	701SB00401RE	S244767*7*RE	SO	69	U	69	UJ	ug/kg	SS

Parameter Class	Analytical Method	Parameter	SDG	Sample ID	Lab Sample ID	Matrix	Lab Result	Lab Qual	Final Result	Final Qual	Units	Reasons
PCB	SW8082	PCB-1254 (AROCHLOR 1254)	CNC126	701SB00501	S244767*9	SO	73	U	73	R	ug/kg	RE
PCB	SW8082	PCB-1254 (AROCHLOR 1254)	CNC126	701SB00501RE	S244767*9*RE	SO	290	U	290	UJ	ug/kg	SS
PCB	SW8082	PCB-1254 (AROCHLOR 1254)	CNC126	701SB00601	S244767*11	SO	75	U	75	R	ug/kg	RE
PCB	SW8082	PCB-1254 (AROCHLOR 1254)	CNC126	701SB00602	S244767*12	SO	79	U	79	R	ug/kg	RE
PCB	SW8082	PCB-1254 (AROCHLOR 1254)	CNC126	701SB00602RE	S244767*12*RE	SO	79	U	79	UJ	ug/kg	SS
PCB	SW8082	PCB-1254 (AROCHLOR 1254)	CNC126	701SB00701	S244767*13	SO	73	U	73	R	ug/kg	RE
PCB	SW8082	PCB-1254 (AROCHLOR 1254)	CNC126	701SB00701RE	S244767*13*RE	SO	73	U	73	UJ	ug/kg	SS
PCB	SW8082	PCB-1254 (AROCHLOR 1254)	CNC126	701SB00702	S244767*14	SO	77	U	77	R	ug/kg	RE
PCB	SW8082	PCB-1254 (AROCHLOR 1254)	CNC126	701SB00702RE	S244767*14*RE	SO	77	U	77	UJ	ug/kg	SS
PCB	SW8082	PCB-1254 (AROCHLOR 1254)	CNC126	701SB00801	S244767*15	SO	72	U	72	R	ug/kg	RE
PCB	SW8082	PCB-1254 (AROCHLOR 1254)	CNC126	701SB00801RE	S244767*15*RE	SO	72	U	72	UJ	ug/kg	SS
PCB	SW8082	PCB-1254 (AROCHLOR 1254)	CNC126	701SB00802	S244767*16	SO	71	U	71	R	ug/kg	RE
PCB	SW8082	PCB-1254 (AROCHLOR 1254)	CNC126	701SB00901	S244767*17	SO	74	U	74	R	ug/kg	RE
PCB	SW8082	PCB-1254 (AROCHLOR 1254)	CNC126	701SB00902	S244767*18	SO	74	U	74	R	ug/kg	RE
PCB	SW8082	PCB-1254 (AROCHLOR 1254)	CNC126	701SB00902RE	S244767*18*RE	SO	74	U	74	UJ	ug/kg	SS
PCB	SW8082	PCB-1254 (AROCHLOR 1254)	CNC126	701SB01001	S244767*19	SO	73	U	73	R	ug/kg	RE
PCB	SW8082	PCB-1254 (AROCHLOR 1254)	CNC126	701SB01001RE	S244767*19*RE	SO	73	U	73	UJ	ug/kg	SS
PCB	SW8082	PCB-1254 (AROCHLOR 1254)	CNC126	701SB01002	S244767*20	SO	74	U	74	R	ug/kg	RE
PCB	SW8082	PCB-1254 (AROCHLOR 1254)	CNC126	701SB01002RE	S244767*20*RE	SO	74	U	74	UJ	ug/kg	SS
PCB	SW8082	PCB-1260 (AROCHLOR 1260)	CNC126	701SB00101	S244767*1	SO	140	U	140	R	ug/kg	RE
PCB	SW8082	PCB-1260 (AROCHLOR 1260)	CNC126	701SB00102	S244767*2	SO	72	U	72	R	ug/kg	RE
PCB	SW8082	PCB-1260 (AROCHLOR 1260)	CNC126	701SB00102RE	S244767*2*RE	SO	80	U	80	UJ	ug/kg	MS
PCB	SW8082	PCB-1260 (AROCHLOR 1260)	CNC126	701SB00201	S244767*3	SO	75	U	75	R	ug/kg	RE
PCB	SW8082	PCB-1260 (AROCHLOR 1260)	CNC126	701SB00202	S244767*4	SO	76	U	76	R	ug/kg	RE
PCB	SW8082	PCB-1260 (AROCHLOR 1260)	CNC126	701SB00202RE	S244767*4*RE	SO	76	U	76	UJ	ug/kg	SS
PCB	SW8082	PCB-1260 (AROCHLOR 1260)	CNC126	701SB00302	S244767*6	SO	73	U	73	R	ug/kg	RE
PCB	SW8082	PCB-1260 (AROCHLOR 1260)	CNC126	701SB00302RE	S244767*6*RE	SO	73	U	73	UJ	ug/kg	SS
PCB	SW8082	PCB-1260 (AROCHLOR 1260)	CNC126	701SB00401	S244767*7	SO	69	U	69	R	ug/kg	RE
PCB	SW8082	PCB-1260 (AROCHLOR 1260)	CNC126	701SB00401RE	S244767*7*RE	SO	69	U	69	UJ	ug/kg	SS
PCB	SW8082	PCB-1260 (AROCHLOR 1260)	CNC126	701SB00501	S244767*9	SO	73	U	73	R	ug/kg	RE
PCB	SW8082	PCB-1260 (AROCHLOR 1260)	CNC126	701SB00501RE	S244767*9*RE	SO	290	U	290	UJ	ug/kg	SS
PCB	SW8082	PCB-1260 (AROCHLOR 1260)	CNC126	701SB00601	S244767*11	SO	75	U	75	R	ug/kg	RE

Attachment 1 - Changed Qualifiers and Results
Zone E, AOC 701 - Data Validation

Parameter Class	Analytical Method	Parameter	SDG	Sample ID	Lab Sample ID	Matrix	Lab Result	Lab Qual	Final Result	Final Qual	Units	Reasons
PCB	SW8082	PCB-1260 (AROCHLOR 1260)	CNC126	701SB00602	S244767*12	SO	79	U	79	R	ug/kg	RE
PCB	SW8082	PCB-1260 (AROCHLOR 1260)	CNC126	701SB00602RE	S244767*12*RE	SO	79	U	79	UJ	ug/kg	SS
PCB	SW8082	PCB-1260 (AROCHLOR 1260)	CNC126	701SB00701	S244767*13	SO	73	U	73	R	ug/kg	RE
PCB	SW8082	PCB-1260 (AROCHLOR 1260)	CNC126	701SB00701RE	S244767*13*RE	SO	73	U	73	UJ	ug/kg	SS
PCB	SW8082	PCB-1260 (AROCHLOR 1260)	CNC126	701SB00702	S244767*14	SO	77	U	77	R	ug/kg	RE
PCB	SW8082	PCB-1260 (AROCHLOR 1260)	CNC126	701SB00702RE	S244767*14*RE	SO	77	U	77	UJ	ug/kg	SS
PCB	SW8082	PCB-1260 (AROCHLOR 1260)	CNC126	701SB00801	S244767*15	SO	72	U	72	R	ug/kg	RE
PCB	SW8082	PCB-1260 (AROCHLOR 1260)	CNC126	701SB00801RE	S244767*15*RE	SO	72	U	72	UJ	ug/kg	SS
PCB	SW8082	PCB-1260 (AROCHLOR 1260)	CNC126	701SB00802	S244767*16	SO	71	U	71	R	ug/kg	RE
PCB	SW8082	PCB-1260 (AROCHLOR 1260)	CNC126	701SB00901	S244767*17	SO	74	U	74	R	ug/kg	RE
PCB	SW8082	PCB-1260 (AROCHLOR 1260)	CNC126	701SB00902	S244767*18	SO	74	U	74	R	ug/kg	RE
PCB	SW8082	PCB-1260 (AROCHLOR 1260)	CNC126	701SB00902RE	S244767*18*RE	SO	74	U	74	UJ	ug/kg	SS
PCB	SW8082	PCB-1260 (AROCHLOR 1260)	CNC126	701SB01001	S244767*19	SO	73	U	73	R	ug/kg	RE
PCB	SW8082	PCB-1260 (AROCHLOR 1260)	CNC126	701SB01001RE	S244767*19*RE	SO	73	U	73	UJ	ug/kg	SS
PCB	SW8082	PCB-1260 (AROCHLOR 1260)	CNC126	701SB01002	S244767*20	SO	74	U	74	R	ug/kg	RE
PCB	SW8082	PCB-1260 (AROCHLOR 1260)	CNC126	701SB01002RE	S244767*20*RE	SO	74	U	74	UJ	ug/kg	SS
PEST	SW8081A	ALDRIN	CNC126	701SB00101	S244767*1	SO	2.8	U	2.8	R	ug/kg	RE
PEST	SW8081A	ALDRIN	CNC126	701SB00102	S244767*2	SO	1.4	U	1.4	R	ug/kg	RE
PEST	SW8081A	ALDRIN	CNC126	701SB00102RE	S244767*2*RE	SO	1.6	U	1.6	UJ	ug/kg	MD
PEST	SW8081A	ALDRIN	CNC126	701SB00201	S244767*3	SO	0.48	J	0.48	R	ug/kg	RE
PEST	SW8081A	ALDRIN	CNC126	701SB00202	S244767*4	SO	1.5	U	1.5	R	ug/kg	RE
PEST	SW8081A	ALDRIN	CNC126	701SB00202RE	S244767*4*RE	SO	1.5	U	1.5	UJ	ug/kg	SS
PEST	SW8081A	ALDRIN	CNC126	701SB00302	S244767*6	SO	1.4	U	1.4	R	ug/kg	RE
PEST	SW8081A	ALDRIN	CNC126	701SB00302RE	S244767*6*RE	SO	1.4	U	1.4	UJ	ug/kg	SS
PEST	SW8081A	ALDRIN	CNC126	701SB00401	S244767*7	SO	1.3	U	1.3	R	ug/kg	RE
PEST	SW8081A	ALDRIN	CNC126	701SB00401RE	S244767*7*RE	SO	1.3	U	1.3	UJ	ug/kg	SS
PEST	SW8081A	ALDRIN	CNC126	701SB00501	S244767*9	SO	0.29	J	0.29	R	ug/kg	RE
PEST	SW8081A	ALDRIN	CNC126	701SB00501RE	S244767*9*RE	SO	5.6	U	5.6	UJ	ug/kg	SS
PEST	SW8081A	ALDRIN	CNC126	701SB00601	S244767*11	SO	1.5	U	1.5	R	ug/kg	RE
PEST	SW8081A	ALDRIN	CNC126	701SB00602	S244767*12	SO	1.5	U	1.5	R	ug/kg	RE
PEST	SW8081A	ALDRIN	CNC126	701SB00602RE	S244767*12*RE	SO	1.5	U	1.5	UJ	ug/kg	SS
PEST	SW8081A	ALDRIN	CNC126	701SB00701	S244767*13	SO	1.4	U	1.4	R	ug/kg	RE

Parameter Class	Analytical Method	Parameter	SDG	Sample ID	Lab Sample ID	Matrix	Lab Result	Lab Qual	Final Result	Final Qual	Units	Reasons
PEST	SW8081A	ALDRIN	CNC126	701SB00701RE	S244767*13*RE	SO	1.4	U	1.4	UJ	ug/kg	SS
PEST	SW8081A	ALDRIN	CNC126	701SB00702	S244767*14	SO	1.5	U	1.5	R	ug/kg	RE
PEST	SW8081A	ALDRIN	CNC126	701SB00702RE	S244767*14*RE	SO	1.5	U	1.5	UJ	ug/kg	SS
PEST	SW8081A	ALDRIN	CNC126	701SB00801	S244767*15	SO	1.4	U	1.4	R	ug/kg	RE
PEST	SW8081A	ALDRIN	CNC126	701SB00801RE	S244767*15*RE	SO	1.4	U	1.4	UJ	ug/kg	SS
PEST	SW8081A	ALDRIN	CNC126	701SB00802	S244767*16	SO	1.4	U	1.4	R	ug/kg	RE
PEST	SW8081A	ALDRIN	CNC126	701SB00901	S244767*17	SO	1.4	U	1.4	R	ug/kg	RE
PEST	SW8081A	ALDRIN	CNC126	701SB00902	S244767*18	SO	1.4	U	1.4	R	ug/kg	RE
PEST	SW8081A	ALDRIN	CNC126	701SB00902RE	S244767*18*RE	SO	1.4	U	1.4	UJ	ug/kg	SS
PEST	SW8081A	ALDRIN	CNC126	701SB01001	S244767*19	SO	1.4	U	1.4	R	ug/kg	RE
PEST	SW8081A	ALDRIN	CNC126	701SB01001RE	S244767*19*RE	SO	1.4	U	1.4	UJ	ug/kg	SS
PEST	SW8081A	ALDRIN	CNC126	701SB01002	S244767*20	SO	1.4	U	1.4	R	ug/kg	RE
PEST	SW8081A	ALDRIN	CNC126	701SB01002RE	S244767*20*RE	SO	1.4	U	1.4	UJ	ug/kg	SS
PEST	SW8081A	ALPHA BHC	CNC126	701SB00101	S244767*1	SO	2.8	UZ	2.8	R	ug/kg	RE
PEST	SW8081A	ALPHA BHC	CNC126	701SB00102	S244767*2	SO	1.4	U	1.4	R	ug/kg	RE
PEST	SW8081A	ALPHA BHC	CNC126	701SB00102RE	S244767*2*RE	SO	1.6	U	1.6	UJ	ug/kg	MD
PEST	SW8081A	ALPHA BHC	CNC126	701SB00201	S244767*3	SO	1.5	UZ	1.5	R	ug/kg	RE
PEST	SW8081A	ALPHA BHC	CNC126	701SB00202	S244767*4	SO	1.5	U	1.5	R	ug/kg	RE
PEST	SW8081A	ALPHA BHC	CNC126	701SB00202RE	S244767*4*RE	SO	1.5	U	1.5	UJ	ug/kg	SS
PEST	SW8081A	ALPHA BHC	CNC126	701SB00302	S244767*6	SO	1.4	U	1.4	R	ug/kg	RE
PEST	SW8081A	ALPHA BHC	CNC126	701SB00302RE	S244767*6*RE	SO	1.4	U	1.4	UJ	ug/kg	SS
PEST	SW8081A	ALPHA BHC	CNC126	701SB00401	S244767*7	SO	1.3	U	1.3	R	ug/kg	RE
PEST	SW8081A	ALPHA BHC	CNC126	701SB00401RE	S244767*7*RE	SO	1.3	U	1.3	UJ	ug/kg	SS
PEST	SW8081A	ALPHA BHC	CNC126	701SB00501	S244767*9	SO	1.4	UZ	1.4	R	ug/kg	RE
PEST	SW8081A	ALPHA BHC	CNC126	701SB00501RE	S244767*9*RE	SO	5.6	UZ	5.6	UJ	ug/kg	SS
PEST	SW8081A	ALPHA BHC	CNC126	701SB00601	S244767*11	SO	1.5	UZ	1.5	R	ug/kg	RE
PEST	SW8081A	ALPHA BHC	CNC126	701SB00602	S244767*12	SO	1.5	U	1.5	R	ug/kg	RE
PEST	SW8081A	ALPHA BHC	CNC126	701SB00602RE	S244767*12*RE	SO	1.5	U	1.5	UJ	ug/kg	SS
PEST	SW8081A	ALPHA BHC	CNC126	701SB00701	S244767*13	SO	1.4	U	1.4	R	ug/kg	RE
PEST	SW8081A	ALPHA BHC	CNC126	701SB00701RE	S244767*13*RE	SO	1.4	U	1.4	UJ	ug/kg	SS
PEST	SW8081A	ALPHA BHC	CNC126	701SB00702	S244767*14	SO	1.5	U	1.5	R	ug/kg	RE
PEST	SW8081A	ALPHA BHC	CNC126	701SB00702RE	S244767*14*RE	SO	1.5	U	1.5	UJ	ug/kg	SS

Parameter Class	Analytical Method	Parameter	SDG	Sample ID	Lab Sample ID	Matrix	Lab Result	Lab Qual	Final Result	Final Qual	Units	Reasons
PEST	SW8081A	ALPHA BHC	CNC126	701SB00801	S244767*15	SO	1.4	U	1.4	R	ug/kg	RE
PEST	SW8081A	ALPHA BHC	CNC126	701SB00801RE	S244767*15*RE	SO	1.4	U	1.4	UJ	ug/kg	SS
PEST	SW8081A	ALPHA BHC	CNC126	701SB00802	S244767*16	SO	1.4	U	1.4	R	ug/kg	RE
PEST	SW8081A	ALPHA BHC	CNC126	701SB00901	S244767*17	SO	1.4	UZ	1.4	R	ug/kg	RE
PEST	SW8081A	ALPHA BHC	CNC126	701SB00902	S244767*18	SO	1.4	U	1.4	R	ug/kg	RE
PEST	SW8081A	ALPHA BHC	CNC126	701SB00902RE	S244767*18*RE	SO	1.4	U	1.4	UJ	ug/kg	SS
PEST	SW8081A	ALPHA BHC	CNC126	701SB01001	S244767*19	SO	1.4	U	1.4	R	ug/kg	RE
PEST	SW8081A	ALPHA BHC	CNC126	701SB01001RE	S244767*19*RE	SO	1.4	U	1.4	UJ	ug/kg	SS
PEST	SW8081A	ALPHA BHC	CNC126	701SB01002	S244767*20	SO	1.4	U	1.4	R	ug/kg	RE
PEST	SW8081A	ALPHA BHC	CNC126	701SB01002RE	S244767*20*RE	SO	1.4	U	1.4	UJ	ug/kg	SS
PEST	SW8081A	ALPHA-CHLORDANE	CNC126	701SB00101	S244767*1	SO	2.2	J	2.2	R	ug/kg	RE
PEST	SW8081A	ALPHA-CHLORDANE	CNC126	701SB00101RE	S244767*1*RE	SO	2	JP	2	J	ug/kg	2C
PEST	SW8081A	ALPHA-CHLORDANE	CNC126	701SB00102	S244767*2	SO	1.4	U	1.4	R	ug/kg	RE
PEST	SW8081A	ALPHA-CHLORDANE	CNC126	701SB00102RE	S244767*2*RE	SO	1.6	U	1.6	UJ	ug/kg	MS,MD
PEST	SW8081A	ALPHA-CHLORDANE	CNC126	701SB00201	S244767*3	SO	1.5	U	1.5	R	ug/kg	RE
PEST	SW8081A	ALPHA-CHLORDANE	CNC126	701SB00202	S244767*4	SO	1.5	U	1.5	R	ug/kg	RE
PEST	SW8081A	ALPHA-CHLORDANE	CNC126	701SB00202RE	S244767*4*RE	SO	1.5	U	1.5	UJ	ug/kg	SS
PEST	SW8081A	ALPHA-CHLORDANE	CNC126	701SB00302	S244767*6	SO	1.4	U	1.4	R	ug/kg	RE
PEST	SW8081A	ALPHA-CHLORDANE	CNC126	701SB00302RE	S244767*6*RE	SO	1.4	U	1.4	UJ	ug/kg	SS
PEST	SW8081A	ALPHA-CHLORDANE	CNC126	701SB00401	S244767*7	SO	1.3	U	1.3	R	ug/kg	RE
PEST	SW8081A	ALPHA-CHLORDANE	CNC126	701SB00401RE	S244767*7*RE	SO	1.3	U	1.3	UJ	ug/kg	SS
PEST	SW8081A	ALPHA-CHLORDANE	CNC126	701SB00501	S244767*9	SO	1.4	U	1.4	R	ug/kg	RE
PEST	SW8081A	ALPHA-CHLORDANE	CNC126	701SB00501RE	S244767*9*RE	SO	5.6	U	5.6	UJ	ug/kg	SS
PEST	SW8081A	ALPHA-CHLORDANE	CNC126	701SB00601	S244767*11	SO	1.5	U	1.5	R	ug/kg	RE
PEST	SW8081A	ALPHA-CHLORDANE	CNC126	701SB00602	S244767*12	SO	1.5	U	1.5	R	ug/kg	RE
PEST	SW8081A	ALPHA-CHLORDANE	CNC126	701SB00602RE	S244767*12*RE	SO	1.5	U	1.5	UJ	ug/kg	SS
PEST	SW8081A	ALPHA-CHLORDANE	CNC126	701SB00701	S244767*13	SO	1.4	U	1.4	R	ug/kg	RE
PEST	SW8081A	ALPHA-CHLORDANE	CNC126	701SB00701RE	S244767*13*RE	SO	1.4	U	1.4	UJ	ug/kg	SS
PEST	SW8081A	ALPHA-CHLORDANE	CNC126	701SB00702	S244767*14	SO	1.5	U	1.5	R	ug/kg	RE
PEST	SW8081A	ALPHA-CHLORDANE	CNC126	701SB00702RE	S244767*14*RE	SO	1.5	U	1.5	UJ	ug/kg	SS
PEST	SW8081A	ALPHA-CHLORDANE	CNC126	701SB00801	S244767*15	SO	1.4	U	1.4	R	ug/kg	RE
PEST	SW8081A	ALPHA-CHLORDANE	CNC126	701SB00801RE	S244767*15*RE	SO	1.4	U	1.4	UJ	ug/kg	SS

Parameter Class	Analytical Method	Parameter	SDG	Sample ID	Lab Sample ID	Matrix	Lab Result	Lab Qual	Final Result	Final Qual	Units	Reasons
PEST	SW8081A	ALPHA-CHLORDANE	CNC126	701SB00802	S244767*16	SO	1.4	U	1.4	R	ug/kg	RE
PEST	SW8081A	ALPHA-CHLORDANE	CNC126	701SB00901	S244767*17	SO	1.4	U	1.4	R	ug/kg	RE
PEST	SW8081A	ALPHA-CHLORDANE	CNC126	701SB00902	S244767*18	SO	1.4	U	1.4	R	ug/kg	RE
PEST	SW8081A	ALPHA-CHLORDANE	CNC126	701SB00902RE	S244767*18*RE	SO	1.4	U	1.4	UJ	ug/kg	SS
PEST	SW8081A	ALPHA-CHLORDANE	CNC126	701SB01001	S244767*19	SO	1.4	U	1.4	R	ug/kg	RE
PEST	SW8081A	ALPHA-CHLORDANE	CNC126	701SB01001RE	S244767*19*RE	SO	1.4	U	1.4	UJ	ug/kg	SS
PEST	SW8081A	ALPHA-CHLORDANE	CNC126	701SB01002	S244767*20	SO	1.4	U	1.4	R	ug/kg	RE
PEST	SW8081A	ALPHA-CHLORDANE	CNC126	701SB01002RE	S244767*20*RE	SO	1.4	U	1.4	UJ	ug/kg	SS
PEST	SW8081A	BETA BHC	CNC126	701SB00101	S244767*1	SO	2.8	U	2.8	R	ug/kg	RE
PEST	SW8081A	BETA BHC	CNC126	701SB00102	S244767*2	SO	1.4	U	1.4	R	ug/kg	RE
PEST	SW8081A	BETA BHC	CNC126	701SB00102RE	S244767*2*RE	SO	1.6	U	1.6	UJ	ug/kg	MD
PEST	SW8081A	BETA BHC	CNC126	701SB00201	S244767*3	SO	1.5	U	1.5	R	ug/kg	RE
PEST	SW8081A	BETA BHC	CNC126	701SB00202	S244767*4	SO	1.5	U	1.5	R	ug/kg	RE
PEST	SW8081A	BETA BHC	CNC126	701SB00202RE	S244767*4*RE	SO	1.5	U	1.5	UJ	ug/kg	SS
PEST	SW8081A	BETA BHC	CNC126	701SB00302	S244767*6	SO	1.4	U	1.4	R	ug/kg	RE
PEST	SW8081A	BETA BHC	CNC126	701SB00302RE	S244767*6*RE	SO	1.4	U	1.4	UJ	ug/kg	SS
PEST	SW8081A	BETA BHC	CNC126	701SB00401	S244767*7	SO	1.3	U	1.3	R	ug/kg	RE
PEST	SW8081A	BETA BHC	CNC126	701SB00401RE	S244767*7*RE	SO	1.3	U	1.3	UJ	ug/kg	SS
PEST	SW8081A	BETA BHC	CNC126	701SB00501	S244767*9	SO	1.4	U	1.4	R	ug/kg	RE
PEST	SW8081A	BETA BHC	CNC126	701SB00501RE	S244767*9*RE	SO	5.6	U	5.6	UJ	ug/kg	SS
PEST	SW8081A	BETA BHC	CNC126	701SB00601	S244767*11	SO	1.5	U	1.5	R	ug/kg	RE
PEST	SW8081A	BETA BHC	CNC126	701SB00602	S244767*12	SO	1.5	U	1.5	R	ug/kg	RE
PEST	SW8081A	BETA BHC	CNC126	701SB00602RE	S244767*12*RE	SO	1.5	U	1.5	UJ	ug/kg	SS
PEST	SW8081A	BETA BHC	CNC126	701SB00701	S244767*13	SO	1.4	U	1.4	R	ug/kg	RE
PEST	SW8081A	BETA BHC	CNC126	701SB00701RE	S244767*13*RE	SO	1.4	U	1.4	UJ	ug/kg	SS
PEST	SW8081A	BETA BHC	CNC126	701SB00702	S244767*14	SO	1.5	U	1.5	R	ug/kg	RE
PEST	SW8081A	BETA BHC	CNC126	701SB00702RE	S244767*14*RE	SO	1.5	U	1.5	UJ	ug/kg	SS
PEST	SW8081A	BETA BHC	CNC126	701SB00801	S244767*15	SO	1.4	U	1.4	R	ug/kg	RE
PEST	SW8081A	BETA BHC	CNC126	701SB00801RE	S244767*15*RE	SO	1.4	U	1.4	UJ	ug/kg	SS
PEST	SW8081A	BETA BHC	CNC126	701SB00802	S244767*16	SO	1.4	U	1.4	R	ug/kg	RE
PEST	SW8081A	BETA BHC	CNC126	701SB00901	S244767*17	SO	1.4	U	1.4	R	ug/kg	RE
PEST	SW8081A	BETA BHC	CNC126	701SB00902	S244767*18	SO	1.4	U	1.4	R	ug/kg	RE

Attachment 1 - Changed Qualifiers and Results
Zone E, AOC 701 - Data Validation

Parameter Class	Analytical Method	Parameter	SDG	Sample ID	Lab Sample ID	Matrix	Lab Result	Lab Qual	Final Result	Final Qual	Units	Reasons
PEST	SW8081A	BETA BHC	CNC126	701SB00902RE	S244767*18*RE	SO	1.4	U	1.4	UJ	ug/kg	SS
PEST	SW8081A	BETA BHC	CNC126	701SB01001	S244767*19	SO	1.4	U	1.4	R	ug/kg	RE
PEST	SW8081A	BETA BHC	CNC126	701SB01001RE	S244767*19*RE	SO	1.4	U	1.4	UJ	ug/kg	SS
PEST	SW8081A	BETA BHC	CNC126	701SB01002	S244767*20	SO	1.4	U	1.4	R	ug/kg	RE
PEST	SW8081A	BETA BHC	CNC126	701SB01002RE	S244767*20*RE	SO	1.4	U	1.4	UJ	ug/kg	SS
PEST	SW8081A	Chlordane	CNC126	701SB00101	S244767*1	SO	28	U	28	R	ug/kg	RE
PEST	SW8081A	Chlordane	CNC126	701SB00102	S244767*2	SO	14	U	14	R	ug/kg	RE
PEST	SW8081A	Chlordane	CNC126	701SB00201	S244767*3	SO	15	U	15	R	ug/kg	RE
PEST	SW8081A	Chlordane	CNC126	701SB00202	S244767*4	SO	15	U	15	R	ug/kg	RE
PEST	SW8081A	Chlordane	CNC126	701SB00202RE	S244767*4*RE	SO	15	U	15	UJ	ug/kg	SS
PEST	SW8081A	Chlordane	CNC126	701SB00302	S244767*6	SO	14	U	14	R	ug/kg	RE
PEST	SW8081A	Chlordane	CNC126	701SB00302RE	S244767*6*RE	SO	14	U	14	UJ	ug/kg	SS
PEST	SW8081A	Chlordane	CNC126	701SB00401	S244767*7	SO	13	U	13	R	ug/kg	RE
PEST	SW8081A	Chlordane	CNC126	701SB00401RE	S244767*7*RE	SO	13	U	13	UJ	ug/kg	SS
PEST	SW8081A	Chlordane	CNC126	701SB00501	S244767*9	SO	14	U	14	R	ug/kg	RE
PEST	SW8081A	Chlordane	CNC126	701SB00501RE	S244767*9*RE	SO	56	U	56	UJ	ug/kg	SS
PEST	SW8081A	Chlordane	CNC126	701SB00601	S244767*11	SO	15	U	15	R	ug/kg	RE
PEST	SW8081A	Chlordane	CNC126	701SB00602	S244767*12	SO	15	U	15	R	ug/kg	RE
PEST	SW8081A	Chlordane	CNC126	701SB00602RE	S244767*12*RE	SO	15	U	15	UJ	ug/kg	SS
PEST	SW8081A	Chlordane	CNC126	701SB00701	S244767*13	SO	14	U	14	R	ug/kg	RE
PEST	SW8081A	Chlordane	CNC126	701SB00701RE	S244767*13*RE	SO	14	U	14	UJ	ug/kg	SS
PEST	SW8081A	Chlordane	CNC126	701SB00702	S244767*14	SO	15	U	15	R	ug/kg	RE
PEST	SW8081A	Chlordane	CNC126	701SB00702RE	S244767*14*RE	SO	15	U	15	UJ	ug/kg	SS
PEST	SW8081A	Chlordane	CNC126	701SB00801	S244767*15	SO	14	U	14	R	ug/kg	RE
PEST	SW8081A	Chlordane	CNC126	701SB00801RE	S244767*15*RE	SO	14	U	14	UJ	ug/kg	SS
PEST	SW8081A	Chlordane	CNC126	701SB00802	S244767*16	SO	14	U	14	R	ug/kg	RE
PEST	SW8081A	Chlordane	CNC126	701SB00901	S244767*17	SO	14	U	14	R	ug/kg	RE
PEST	SW8081A	Chlordane	CNC126	701SB00902	S244767*18	SO	14	U	14	R	ug/kg	RE
PEST	SW8081A	Chlordane	CNC126	701SB00902RE	S244767*18*RE	SO	14	U	14	UJ	ug/kg	SS
PEST	SW8081A	Chlordane	CNC126	701SB01001	S244767*19	SO	14	U	14	R	ug/kg	RE
PEST	SW8081A	Chlordane	CNC126	701SB01001RE	S244767*19*RE	SO	14	U	14	UJ	ug/kg	SS
PEST	SW8081A	Chlordane	CNC126	701SB01002	S244767*20	SO	14	U	14	R	ug/kg	RE

Parameter Class	Analytical Method	Parameter	SDG	Sample ID	Lab Sample ID	Matrix	Lab Result	Lab Qual	Final Result	Final Qual	Units	Reasons
PEST	SW8081A	Chlordane	CNC126	701SB01002RE	S244767*20*RE	SO	14	U	14	UJ	ug/kg	SS
PEST	SW8081A	DELTA BHC	CNC126	701SB00101	S244767*1	SO	2.8	U	2.8	R	ug/kg	RE
PEST	SW8081A	DELTA BHC	CNC126	701SB00102	S244767*2	SO	1.4	U	1.4	R	ug/kg	RE
PEST	SW8081A	DELTA BHC	CNC126	701SB00102RE	S244767*2*RE	SO	1.6	U	1.6	UJ	ug/kg	MD
PEST	SW8081A	DELTA BHC	CNC126	701SB00201	S244767*3	SO	1.5	U	1.5	R	ug/kg	RE
PEST	SW8081A	DELTA BHC	CNC126	701SB00202	S244767*4	SO	1.5	U	1.5	R	ug/kg	RE
PEST	SW8081A	DELTA BHC	CNC126	701SB00202RE	S244767*4*RE	SO	1.5	U	1.5	UJ	ug/kg	SS
PEST	SW8081A	DELTA BHC	CNC126	701SB00302	S244767*6	SO	1.4	U	1.4	R	ug/kg	RE
PEST	SW8081A	DELTA BHC	CNC126	701SB00302RE	S244767*6*RE	SO	1.4	U	1.4	UJ	ug/kg	SS
PEST	SW8081A	DELTA BHC	CNC126	701SB00401	S244767*7	SO	1.3	U	1.3	R	ug/kg	RE
PEST	SW8081A	DELTA BHC	CNC126	701SB00401RE	S244767*7*RE	SO	1.3	U	1.3	UJ	ug/kg	SS
PEST	SW8081A	DELTA BHC	CNC126	701SB00501	S244767*9	SO	1.4	U	1.4	R	ug/kg	RE
PEST	SW8081A	DELTA BHC	CNC126	701SB00501RE	S244767*9*RE	SO	5.6	U	5.6	UJ	ug/kg	SS
PEST	SW8081A	DELTA BHC	CNC126	701SB00601	S244767*11	SO	1.5	U	1.5	R	ug/kg	RE
PEST	SW8081A	DELTA BHC	CNC126	701SB00602	S244767*12	SO	1.5	U	1.5	R	ug/kg	RE
PEST	SW8081A	DELTA BHC	CNC126	701SB00602RE	S244767*12*RE	SO	1.5	U	1.5	UJ	ug/kg	SS
PEST	SW8081A	DELTA BHC	CNC126	701SB00701	S244767*13	SO	1.4	U	1.4	R	ug/kg	RE
PEST	SW8081A	DELTA BHC	CNC126	701SB00701RE	S244767*13*RE	SO	1.4	U	1.4	UJ	ug/kg	SS
PEST	SW8081A	DELTA BHC	CNC126	701SB00702	S244767*14	SO	1.5	U	1.5	R	ug/kg	RE
PEST	SW8081A	DELTA BHC	CNC126	701SB00702RE	S244767*14*RE	SO	1.5	U	1.5	UJ	ug/kg	SS
PEST	SW8081A	DELTA BHC	CNC126	701SB00801	S244767*15	SO	1.4	U	1.4	R	ug/kg	RE
PEST	SW8081A	DELTA BHC	CNC126	701SB00801RE	S244767*15*RE	SO	1.4	U	1.4	UJ	ug/kg	SS
PEST	SW8081A	DELTA BHC	CNC126	701SB00802	S244767*16	SO	1.4	U	1.4	R	ug/kg	RE
PEST	SW8081A	DELTA BHC	CNC126	701SB00901	S244767*17	SO	1.4	U	1.4	R	ug/kg	RE
PEST	SW8081A	DELTA BHC	CNC126	701SB00902	S244767*18	SO	1.4	U	1.4	R	ug/kg	RE
PEST	SW8081A	DELTA BHC	CNC126	701SB00902RE	S244767*18*RE	SO	1.4	U	1.4	UJ	ug/kg	SS
PEST	SW8081A	DELTA BHC	CNC126	701SB01001	S244767*19	SO	1.4	U	1.4	R	ug/kg	RE
PEST	SW8081A	DELTA BHC	CNC126	701SB01001RE	S244767*19*RE	SO	1.4	U	1.4	UJ	ug/kg	SS
PEST	SW8081A	DELTA BHC	CNC126	701SB01002	S244767*20	SO	1.4	U	1.4	R	ug/kg	RE
PEST	SW8081A	DELTA BHC	CNC126	701SB01002RE	S244767*20*RE	SO	1.4	U	1.4	UJ	ug/kg	SS
PEST	SW8081A	DIELDRIN	CNC126	701SB00101	S244767*1	SO	5.3	U	5.3	R	ug/kg	RE
PEST	SW8081A	DIELDRIN	CNC126	701SB00102	S244767*2	SO	2.7	U	2.7	R	ug/kg	RE

Attachment 1 - Changed Qualifiers and Results
Zone E, AOC 701 - Data Validation

Parameter Class	Analytical Method	Parameter	SDG	Sample ID	Lab Sample ID	Matrix	Lab Result	Lab Qual	Final Result	Final Qual	Units	Reasons
PEST	SW8081A	DIELDRIN	CNC126	701SB00102RE	S244767*2*RE	SO	3	U	3	UJ	ug/kg	MD
PEST	SW8081A	DIELDRIN	CNC126	701SB00201	S244767*3	SO	2.8	U	2.8	R	ug/kg	RE
PEST	SW8081A	DIELDRIN	CNC126	701SB00202	S244767*4	SO	2.8	U	2.8	R	ug/kg	RE
PEST	SW8081A	DIELDRIN	CNC126	701SB00202RE	S244767*4*RE	SO	2.8	U	2.8	UJ	ug/kg	SS
PEST	SW8081A	DIELDRIN	CNC126	701SB00302	S244767*6	SO	2.7	U	2.7	R	ug/kg	RE
PEST	SW8081A	DIELDRIN	CNC126	701SB00302RE	S244767*6*RE	SO	2.7	U	2.7	UJ	ug/kg	SS
PEST	SW8081A	DIELDRIN	CNC126	701SB00401	S244767*7	SO	2.6	U	2.6	R	ug/kg	RE
PEST	SW8081A	DIELDRIN	CNC126	701SB00401RE	S244767*7*RE	SO	2.6	U	2.6	UJ	ug/kg	SS
PEST	SW8081A	DIELDRIN	CNC126	701SB00501	S244767*9	SO	2.7	U	2.7	R	ug/kg	RE
PEST	SW8081A	DIELDRIN	CNC126	701SB00501RE	S244767*9*RE	SO	11	U	11	UJ	ug/kg	SS
PEST	SW8081A	DIELDRIN	CNC126	701SB00601	S244767*11	SO	2.8	U	2.8	R	ug/kg	RE
PEST	SW8081A	DIELDRIN	CNC126	701SB00602	S244767*12	SO	2.9	U	2.9	R	ug/kg	RE
PEST	SW8081A	DIELDRIN	CNC126	701SB00602RE	S244767*12*RE	SO	2.9	U	2.9	UJ	ug/kg	SS
PEST	SW8081A	DIELDRIN	CNC126	701SB00701	S244767*13	SO	2.7	U	2.7	R	ug/kg	RE
PEST	SW8081A	DIELDRIN	CNC126	701SB00701RE	S244767*13*RE	SO	2.7	U	2.7	UJ	ug/kg	SS
PEST	SW8081A	DIELDRIN	CNC126	701SB00702	S244767*14	SO	2.9	U	2.9	R	ug/kg	RE
PEST	SW8081A	DIELDRIN	CNC126	701SB00702RE	S244767*14*RE	SO	2.9	U	2.9	UJ	ug/kg	SS
PEST	SW8081A	DIELDRIN	CNC126	701SB00801	S244767*15	SO	2.7	U	2.7	R	ug/kg	RE
PEST	SW8081A	DIELDRIN	CNC126	701SB00801RE	S244767*15*RE	SO	2.7	U	2.7	UJ	ug/kg	SS
PEST	SW8081A	DIELDRIN	CNC126	701SB00802	S244767*16	SO	2.6	U	2.6	R	ug/kg	RE
PEST	SW8081A	DIELDRIN	CNC126	701SB00901	S244767*17	SO	2.7	U	2.7	R	ug/kg	RE
PEST	SW8081A	DIELDRIN	CNC126	701SB00902	S244767*18	SO	2.7	U	2.7	R	ug/kg	RE
PEST	SW8081A	DIELDRIN	CNC126	701SB00902RE	S244767*18*RE	SO	2.7	U	2.7	UJ	ug/kg	SS
PEST	SW8081A	DIELDRIN	CNC126	701SB01001	S244767*19	SO	2.7	U	2.7	R	ug/kg	RE
PEST	SW8081A	DIELDRIN	CNC126	701SB01001RE	S244767*19*RE	SO	2.7	U	2.7	UJ	ug/kg	SS
PEST	SW8081A	DIELDRIN	CNC126	701SB01002	S244767*20	SO	2.8	U	2.8	R	ug/kg	RE
PEST	SW8081A	DIELDRIN	CNC126	701SB01002RE	S244767*20*RE	SO	2.8	U	2.8	UJ	ug/kg	SS
PEST	SW8081A	ENDOSULFAN I	CNC126	701SB00101	S244767*1	SO	0.91	J	0.91	R	ug/kg	RE
PEST	SW8081A	ENDOSULFAN I	CNC126	701SB00102	S244767*2	SO	1.4	U	1.4	R	ug/kg	RE
PEST	SW8081A	ENDOSULFAN I	CNC126	701SB00102RE	S244767*2*RE	SO	1.6	U	1.6	UJ	ug/kg	MD
PEST	SW8081A	ENDOSULFAN I	CNC126	701SB00201	S244767*3	SO	1.5	U	1.5	R	ug/kg	RE
PEST	SW8081A	ENDOSULFAN I	CNC126	701SB00202	S244767*4	SO	1.5	U	1.5	R	ug/kg	RE

Parameter Class	Analytical Method	Parameter	SDG	Sample ID	Lab Sample ID	Matrix	Lab Result	Lab Qual	Final Result	Final Qual	Units	Reasons
PEST	SW8081A	ENDOSULFAN I	CNC126	701SB00202RE	S244767*4*RE	SO	1.5	U	1.5	UJ	ug/kg	SS
PEST	SW8081A	ENDOSULFAN I	CNC126	701SB00302	S244767*6	SO	1.4	U	1.4	R	ug/kg	RE
PEST	SW8081A	ENDOSULFAN I	CNC126	701SB00302RE	S244767*6*RE	SO	1.4	U	1.4	UJ	ug/kg	SS
PEST	SW8081A	ENDOSULFAN I	CNC126	701SB00401	S244767*7	SO	1.3	U	1.3	R	ug/kg	RE
PEST	SW8081A	ENDOSULFAN I	CNC126	701SB00401RE	S244767*7*RE	SO	1.3	U	1.3	UJ	ug/kg	SS
PEST	SW8081A	ENDOSULFAN I	CNC126	701SB00501	S244767*9	SO	1.4	U	1.4	R	ug/kg	RE
PEST	SW8081A	ENDOSULFAN I	CNC126	701SB00501RE	S244767*9*RE	SO	5.6	U	5.6	UJ	ug/kg	SS
PEST	SW8081A	ENDOSULFAN I	CNC126	701SB00601	S244767*11	SO	0.36	J	0.36	R	ug/kg	RE
PEST	SW8081A	ENDOSULFAN I	CNC126	701SB00602	S244767*12	SO	1.5	U	1.5	R	ug/kg	RE
PEST	SW8081A	ENDOSULFAN I	CNC126	701SB00602RE	S244767*12*RE	SO	1.5	U	1.5	UJ	ug/kg	SS
PEST	SW8081A	ENDOSULFAN I	CNC126	701SB00701	S244767*13	SO	1.4	U	1.4	R	ug/kg	RE
PEST	SW8081A	ENDOSULFAN I	CNC126	701SB00701RE	S244767*13*RE	SO	1.4	U	1.4	UJ	ug/kg	SS
PEST	SW8081A	ENDOSULFAN I	CNC126	701SB00702	S244767*14	SO	1.5	U	1.5	R	ug/kg	RE
PEST	SW8081A	ENDOSULFAN I	CNC126	701SB00702RE	S244767*14*RE	SO	1.5	U	1.5	UJ	ug/kg	SS
PEST	SW8081A	ENDOSULFAN I	CNC126	701SB00801	S244767*15	SO	1.4	U	1.4	R	ug/kg	RE
PEST	SW8081A	ENDOSULFAN I	CNC126	701SB00801RE	S244767*15*RE	SO	1.4	U	1.4	UJ	ug/kg	SS
PEST	SW8081A	ENDOSULFAN I	CNC126	701SB00802	S244767*16	SO	1.4	U	1.4	R	ug/kg	RE
PEST	SW8081A	ENDOSULFAN I	CNC126	701SB00901	S244767*17	SO	1.4	U	1.4	R	ug/kg	RE
PEST	SW8081A	ENDOSULFAN I	CNC126	701SB00902	S244767*18	SO	1.4	U	1.4	R	ug/kg	RE
PEST	SW8081A	ENDOSULFAN I	CNC126	701SB00902RE	S244767*18*RE	SO	1.4	U	1.4	UJ	ug/kg	SS
PEST	SW8081A	ENDOSULFAN I	CNC126	701SB01001	S244767*19	SO	1.4	U	1.4	R	ug/kg	RE
PEST	SW8081A	ENDOSULFAN I	CNC126	701SB01001RE	S244767*19*RE	SO	1.4	U	1.4	UJ	ug/kg	SS
PEST	SW8081A	ENDOSULFAN I	CNC126	701SB01002	S244767*20	SO	1.4	U	1.4	R	ug/kg	RE
PEST	SW8081A	ENDOSULFAN I	CNC126	701SB01002RE	S244767*20*RE	SO	1.4	U	1.4	UJ	ug/kg	SS
PEST	SW8081A	ENDOSULFAN II	CNC126	701SB00101	S244767*1	SO	5.3	U	5.3	R	ug/kg	RE
PEST	SW8081A	ENDOSULFAN II	CNC126	701SB00102	S244767*2	SO	2.7	U	2.7	R	ug/kg	RE
PEST	SW8081A	ENDOSULFAN II	CNC126	701SB00201	S244767*3	SO	2.8	U	2.8	R	ug/kg	RE
PEST	SW8081A	ENDOSULFAN II	CNC126	701SB00202	S244767*4	SO	2.8	U	2.8	R	ug/kg	RE
PEST	SW8081A	ENDOSULFAN II	CNC126	701SB00202RE	S244767*4*RE	SO	2.8	U	2.8	UJ	ug/kg	SS
PEST	SW8081A	ENDOSULFAN II	CNC126	701SB00302	S244767*6	SO	2.7	U	2.7	R	ug/kg	RE
PEST	SW8081A	ENDOSULFAN II	CNC126	701SB00302RE	S244767*6*RE	SO	2.7	U	2.7	UJ	ug/kg	SS
PEST	SW8081A	ENDOSULFAN II	CNC126	701SB00401	S244767*7	SO	2.6	U	2.6	R	ug/kg	RE

Parameter Class	Analytical Method	Parameter	SDG	Sample ID	Lab Sample ID	Matrix	Lab Result	Lab Qual	Final Result	Final Qual	Units	Reasons
PEST	SW8081A	ENDOSULFAN II	CNC126	701SB00401RE	S244767*7*RE	SO	2.6	U	2.6	UJ	ug/kg	SS
PEST	SW8081A	ENDOSULFAN II	CNC126	701SB00501	S244767*9	SO	2.7	U	2.7	R	ug/kg	RE
PEST	SW8081A	ENDOSULFAN II	CNC126	701SB00501RE	S244767*9*RE	SO	11	U	11	UJ	ug/kg	SS
PEST	SW8081A	ENDOSULFAN II	CNC126	701SB00601	S244767*11	SO	2.8	U	2.8	R	ug/kg	RE
PEST	SW8081A	ENDOSULFAN II	CNC126	701SB00602	S244767*12	SO	2.9	U	2.9	R	ug/kg	RE
PEST	SW8081A	ENDOSULFAN II	CNC126	701SB00602RE	S244767*12*RE	SO	2.9	U	2.9	UJ	ug/kg	SS
PEST	SW8081A	ENDOSULFAN II	CNC126	701SB00701	S244767*13	SO	2.7	U	2.7	R	ug/kg	RE
PEST	SW8081A	ENDOSULFAN II	CNC126	701SB00701RE	S244767*13*RE	SO	2.7	U	2.7	UJ	ug/kg	SS
PEST	SW8081A	ENDOSULFAN II	CNC126	701SB00702	S244767*14	SO	2.9	U	2.9	R	ug/kg	RE
PEST	SW8081A	ENDOSULFAN II	CNC126	701SB00702RE	S244767*14*RE	SO	2.9	U	2.9	UJ	ug/kg	SS
PEST	SW8081A	ENDOSULFAN II	CNC126	701SB00801	S244767*15	SO	2.7	U	2.7	R	ug/kg	RE
PEST	SW8081A	ENDOSULFAN II	CNC126	701SB00801RE	S244767*15*RE	SO	2.7	U	2.7	UJ	ug/kg	SS
PEST	SW8081A	ENDOSULFAN II	CNC126	701SB00802	S244767*16	SO	2.6	U	2.6	R	ug/kg	RE
PEST	SW8081A	ENDOSULFAN II	CNC126	701SB00901	S244767*17	SO	2.7	U	2.7	R	ug/kg	RE
PEST	SW8081A	ENDOSULFAN II	CNC126	701SB00902	S244767*18	SO	2.7	U	2.7	R	ug/kg	RE
PEST	SW8081A	ENDOSULFAN II	CNC126	701SB00902RE	S244767*18*RE	SO	2.7	U	2.7	UJ	ug/kg	SS
PEST	SW8081A	ENDOSULFAN II	CNC126	701SB01001	S244767*19	SO	2.7	U	2.7	R	ug/kg	RE
PEST	SW8081A	ENDOSULFAN II	CNC126	701SB01001RE	S244767*19*RE	SO	2.7	U	2.7	UJ	ug/kg	SS
PEST	SW8081A	ENDOSULFAN II	CNC126	701SB01002	S244767*20	SO	2.8	U	2.8	R	ug/kg	RE
PEST	SW8081A	ENDOSULFAN II	CNC126	701SB01002RE	S244767*20*RE	SO	2.8	U	2.8	UJ	ug/kg	SS
PEST	SW8081A	ENDOSULFAN SULFATE	CNC126	701SB00101	S244767*1	SO	5.3	U	5.3	R	ug/kg	RE
PEST	SW8081A	ENDOSULFAN SULFATE	CNC126	701SB00102	S244767*2	SO	2.7	U	2.7	R	ug/kg	RE
PEST	SW8081A	ENDOSULFAN SULFATE	CNC126	701SB00102RE	S244767*2*RE	SO	3	U	3	UJ	ug/kg	MD
PEST	SW8081A	ENDOSULFAN SULFATE	CNC126	701SB00201	S244767*3	SO	2.8	U	2.8	R	ug/kg	RE
PEST	SW8081A	ENDOSULFAN SULFATE	CNC126	701SB00202	S244767*4	SO	2.8	U	2.8	R	ug/kg	RE
PEST	SW8081A	ENDOSULFAN SULFATE	CNC126	701SB00202RE	S244767*4*RE	SO	2.8	U	2.8	UJ	ug/kg	SS
PEST	SW8081A	ENDOSULFAN SULFATE	CNC126	701SB00302	S244767*6	SO	2.7	U	2.7	R	ug/kg	RE
PEST	SW8081A	ENDOSULFAN SULFATE	CNC126	701SB00302RE	S244767*6*RE	SO	2.7	U	2.7	UJ	ug/kg	SS
PEST	SW8081A	ENDOSULFAN SULFATE	CNC126	701SB00401	S244767*7	SO	2.6	U	2.6	R	ug/kg	RE
PEST	SW8081A	ENDOSULFAN SULFATE	CNC126	701SB00401RE	S244767*7*RE	SO	2.6	U	2.6	UJ	ug/kg	SS
PEST	SW8081A	ENDOSULFAN SULFATE	CNC126	701SB00501	S244767*9	SO	2.7	U	2.7	R	ug/kg	RE
PEST	SW8081A	ENDOSULFAN SULFATE	CNC126	701SB00501RE	S244767*9*RE	SO	11	U	11	UJ	ug/kg	SS

Parameter Class	Analytical Method	Parameter	SDG	Sample ID	Lab Sample ID	Matrix	Lab Result	Lab Qual	Final Result	Final Qual	Units	Reasons
PEST	SW8081A	ENDOSULFAN SULFATE	CNC126	701SB00601	S244767*11	SO	2.8	U	2.8	R	ug/kg	RE
PEST	SW8081A	ENDOSULFAN SULFATE	CNC126	701SB00602	S244767*12	SO	2.9	U	2.9	R	ug/kg	RE
PEST	SW8081A	ENDOSULFAN SULFATE	CNC126	701SB00602RE	S244767*12*RE	SO	2.9	U	2.9	UJ	ug/kg	SS
PEST	SW8081A	ENDOSULFAN SULFATE	CNC126	701SB00701	S244767*13	SO	2.7	U	2.7	R	ug/kg	RE
PEST	SW8081A	ENDOSULFAN SULFATE	CNC126	701SB00701RE	S244767*13*RE	SO	2.7	U	2.7	UJ	ug/kg	SS
PEST	SW8081A	ENDOSULFAN SULFATE	CNC126	701SB00702	S244767*14	SO	2.9	U	2.9	R	ug/kg	RE
PEST	SW8081A	ENDOSULFAN SULFATE	CNC126	701SB00702RE	S244767*14*RE	SO	2.9	U	2.9	UJ	ug/kg	SS
PEST	SW8081A	ENDOSULFAN SULFATE	CNC126	701SB00801	S244767*15	SO	2.7	U	2.7	R	ug/kg	RE
PEST	SW8081A	ENDOSULFAN SULFATE	CNC126	701SB00801RE	S244767*15*RE	SO	2.7	U	2.7	UJ	ug/kg	SS
PEST	SW8081A	ENDOSULFAN SULFATE	CNC126	701SB00802	S244767*16	SO	2.6	U	2.6	R	ug/kg	RE
PEST	SW8081A	ENDOSULFAN SULFATE	CNC126	701SB00901	S244767*17	SO	2.7	U	2.7	R	ug/kg	RE
PEST	SW8081A	ENDOSULFAN SULFATE	CNC126	701SB00902	S244767*18	SO	2.7	U	2.7	R	ug/kg	RE
PEST	SW8081A	ENDOSULFAN SULFATE	CNC126	701SB00902RE	S244767*18*RE	SO	2.7	U	2.7	UJ	ug/kg	SS
PEST	SW8081A	ENDOSULFAN SULFATE	CNC126	701SB01001	S244767*19	SO	2.7	U	2.7	R	ug/kg	RE
PEST	SW8081A	ENDOSULFAN SULFATE	CNC126	701SB01001RE	S244767*19*RE	SO	2.7	U	2.7	UJ	ug/kg	SS
PEST	SW8081A	ENDOSULFAN SULFATE	CNC126	701SB01002	S244767*20	SO	1	JP	1	R	ug/kg	RE
PEST	SW8081A	ENDOSULFAN SULFATE	CNC126	701SB01002RE	S244767*20*RE	SO	2.8	U	2.8	UJ	ug/kg	SS
PEST	SW8081A	ENDRIN	CNC126	701SB00101	S244767*1	SO	5.3	U	5.3	R	ug/kg	RE
PEST	SW8081A	ENDRIN	CNC126	701SB00102	S244767*2	SO	2.7	U	2.7	R	ug/kg	RE
PEST	SW8081A	ENDRIN	CNC126	701SB00102RE	S244767*2*RE	SO	3	U	3	UJ	ug/kg	MD
PEST	SW8081A	ENDRIN	CNC126	701SB00201	S244767*3	SO	2.8	U	2.8	R	ug/kg	RE
PEST	SW8081A	ENDRIN	CNC126	701SB00202	S244767*4	SO	2.8	U	2.8	R	ug/kg	RE
PEST	SW8081A	ENDRIN	CNC126	701SB00202RE	S244767*4*RE	SO	2.8	U	2.8	UJ	ug/kg	SS
PEST	SW8081A	ENDRIN	CNC126	701SB00302	S244767*6	SO	2.7	U	2.7	R	ug/kg	RE
PEST	SW8081A	ENDRIN	CNC126	701SB00302RE	S244767*6*RE	SO	2.7	U	2.7	UJ	ug/kg	SS
PEST	SW8081A	ENDRIN	CNC126	701SB00401	S244767*7	SO	2.6	U	2.6	R	ug/kg	RE
PEST	SW8081A	ENDRIN	CNC126	701SB00401RE	S244767*7*RE	SO	2.6	U	2.6	UJ	ug/kg	SS
PEST	SW8081A	ENDRIN	CNC126	701SB00501	S244767*9	SO	2.7	U	2.7	R	ug/kg	RE
PEST	SW8081A	ENDRIN	CNC126	701SB00501RE	S244767*9*RE	SO	11	U	11	UJ	ug/kg	SS
PEST	SW8081A	ENDRIN	CNC126	701SB00601	S244767*11	SO	2.8	U	2.8	R	ug/kg	RE
PEST	SW8081A	ENDRIN	CNC126	701SB00602	S244767*12	SO	2.9	U	2.9	R	ug/kg	RE
PEST	SW8081A	ENDRIN	CNC126	701SB00602RE	S244767*12*RE	SO	2.9	U	2.9	UJ	ug/kg	SS

Attachment 1 - Changed Qualifiers and Results
Zone E, AOC 701 - Data Validation

Parameter Class	Analytical Method	Parameter	SDG	Sample ID	Lab Sample ID	Matrix	Lab Result	Lab Qual	Final Result	Final Qual	Units	Reasons
PEST	SW8081A	ENDRIN	CNC126	701SB00701	S244767*13	SO	2.7	U	2.7	R	ug/kg	RE
PEST	SW8081A	ENDRIN	CNC126	701SB00701RE	S244767*13*RE	SO	2.7	U	2.7	UJ	ug/kg	SS
PEST	SW8081A	ENDRIN	CNC126	701SB00702	S244767*14	SO	2.9	U	2.9	R	ug/kg	RE
PEST	SW8081A	ENDRIN	CNC126	701SB00702RE	S244767*14*RE	SO	2.9	U	2.9	UJ	ug/kg	SS
PEST	SW8081A	ENDRIN	CNC126	701SB00801	S244767*15	SO	2.7	U	2.7	R	ug/kg	RE
PEST	SW8081A	ENDRIN	CNC126	701SB00801RE	S244767*15*RE	SO	2.7	U	2.7	UJ	ug/kg	SS
PEST	SW8081A	ENDRIN	CNC126	701SB00802	S244767*16	SO	2.6	U	2.6	R	ug/kg	RE
PEST	SW8081A	ENDRIN	CNC126	701SB00901	S244767*17	SO	2.7	U	2.7	R	ug/kg	RE
PEST	SW8081A	ENDRIN	CNC126	701SB00902	S244767*18	SO	2.7	U	2.7	R	ug/kg	RE
PEST	SW8081A	ENDRIN	CNC126	701SB00902RE	S244767*18*RE	SO	2.7	U	2.7	UJ	ug/kg	SS
PEST	SW8081A	ENDRIN	CNC126	701SB01001	S244767*19	SO	2.7	U	2.7	R	ug/kg	RE
PEST	SW8081A	ENDRIN	CNC126	701SB01001RE	S244767*19*RE	SO	2.7	U	2.7	UJ	ug/kg	SS
PEST	SW8081A	ENDRIN	CNC126	701SB01002	S244767*20	SO	2.8	U	2.8	R	ug/kg	RE
PEST	SW8081A	ENDRIN	CNC126	701SB01002RE	S244767*20*RE	SO	2.8	U	2.8	UJ	ug/kg	SS
PEST	SW8081A	ENDRIN ALDEHYDE	CNC126	701SB00101	S244767*1	SO	5.3	U	5.3	R	ug/kg	RE
PEST	SW8081A	ENDRIN ALDEHYDE	CNC126	701SB00101RE	S244767*1*RE	SO	11	U	11	UJ	ug/kg	CC
PEST	SW8081A	ENDRIN ALDEHYDE	CNC126	701SB00102	S244767*2	SO	2.7	U	2.7	R	ug/kg	RE
PEST	SW8081A	ENDRIN ALDEHYDE	CNC126	701SB00102RE	S244767*2*RE	SO	3	U	3	UJ	ug/kg	CC
PEST	SW8081A	ENDRIN ALDEHYDE	CNC126	701SB00201	S244767*3	SO	1.2	J	1.2	R	ug/kg	RE
PEST	SW8081A	ENDRIN ALDEHYDE	CNC126	701SB00201RE	S244767*3*RE	SO	11	U	11	UJ	ug/kg	CC
PEST	SW8081A	ENDRIN ALDEHYDE	CNC126	701SB00202	S244767*4	SO	2.8	U	2.8	R	ug/kg	RE
PEST	SW8081A	ENDRIN ALDEHYDE	CNC126	701SB00202RE	S244767*4*RE	SO	2.8	U	2.8	UJ	ug/kg	CC,SS
PEST	SW8081A	ENDRIN ALDEHYDE	CNC126	701SB00301	S244767*5	SO	2.6	U	2.6	UJ	ug/kg	CC
PEST	SW8081A	ENDRIN ALDEHYDE	CNC126	701SB00302	S244767*6	SO	2.7	U	2.7	R	ug/kg	RE
PEST	SW8081A	ENDRIN ALDEHYDE	CNC126	701SB00302RE	S244767*6*RE	SO	2.7	U	2.7	UJ	ug/kg	CC,SS
PEST	SW8081A	ENDRIN ALDEHYDE	CNC126	701SB00401	S244767*7	SO	2.6	U	2.6	R	ug/kg	RE
PEST	SW8081A	ENDRIN ALDEHYDE	CNC126	701SB00401RE	S244767*7*RE	SO	2.6	U	2.6	UJ	ug/kg	CC,SS
PEST	SW8081A	ENDRIN ALDEHYDE	CNC126	701SB00402	S244767*8	SO	2.6	U	2.6	UJ	ug/kg	CC
PEST	SW8081A	ENDRIN ALDEHYDE	CNC126	701SB00501	S244767*9	SO	2.7	U	2.7	R	ug/kg	RE
PEST	SW8081A	ENDRIN ALDEHYDE	CNC126	701SB00501RE	S244767*9*RE	SO	11	U	11	UJ	ug/kg	CC,SS
PEST	SW8081A	ENDRIN ALDEHYDE	CNC126	701SB00502	S244767*10	SO	2.8	U	2.8	UJ	ug/kg	CC
PEST	SW8081A	ENDRIN ALDEHYDE	CNC126	701SB00601	S244767*11	SO	2.8	U	2.8	R	ug/kg	RE

Parameter Class	Analytical Method	Parameter	SDG	Sample ID	Lab Sample ID	Matrix	Lab Result	Lab Qual	Final Result	Final Qual	Units	Reasons
PEST	SW8081A	ENDRIN ALDEHYDE	CNC126	701SB00601RE	S244767*11*RE	SO	0.73	JP	0.73	J	ug/kg	2C
PEST	SW8081A	ENDRIN ALDEHYDE	CNC126	701SB00602	S244767*12	SO	2.9	U	2.9	R	ug/kg	RE
PEST	SW8081A	ENDRIN ALDEHYDE	CNC126	701SB00602RE	S244767*12*RE	SO	2.9	U	2.9	UJ	ug/kg	CC,SS
PEST	SW8081A	ENDRIN ALDEHYDE	CNC126	701SB00701	S244767*13	SO	2.7	U	2.7	R	ug/kg	RE
PEST	SW8081A	ENDRIN ALDEHYDE	CNC126	701SB00701RE	S244767*13*RE	SO	2.7	U	2.7	UJ	ug/kg	CC,SS
PEST	SW8081A	ENDRIN ALDEHYDE	CNC126	701SB00702	S244767*14	SO	2.9	U	2.9	R	ug/kg	RE
PEST	SW8081A	ENDRIN ALDEHYDE	CNC126	701SB00702RE	S244767*14*RE	SO	2.9	U	2.9	UJ	ug/kg	CC,SS
PEST	SW8081A	ENDRIN ALDEHYDE	CNC126	701SB00801	S244767*15	SO	2.7	U	2.7	R	ug/kg	RE
PEST	SW8081A	ENDRIN ALDEHYDE	CNC126	701SB00801RE	S244767*15*RE	SO	2.7	U	2.7	UJ	ug/kg	CC,SS
PEST	SW8081A	ENDRIN ALDEHYDE	CNC126	701SB00802	S244767*16	SO	2.6	U	2.6	R	ug/kg	RE
PEST	SW8081A	ENDRIN ALDEHYDE	CNC126	701SB00802RE	S244767*16*RE	SO	2.6	U	2.6	UJ	ug/kg	CC
PEST	SW8081A	ENDRIN ALDEHYDE	CNC126	701SB00901	S244767*17	SO	2.7	U	2.7	R	ug/kg	RE
PEST	SW8081A	ENDRIN ALDEHYDE	CNC126	701SB00901RE	S244767*17*RE	SO	5.5	U	5.5	UJ	ug/kg	CC
PEST	SW8081A	ENDRIN ALDEHYDE	CNC126	701SB00902	S244767*18	SO	2.7	U	2.7	R	ug/kg	RE
PEST	SW8081A	ENDRIN ALDEHYDE	CNC126	701SB00902RE	S244767*18*RE	SO	2.7	U	2.7	UJ	ug/kg	CC,SS
PEST	SW8081A	ENDRIN ALDEHYDE	CNC126	701SB01001	S244767*19	SO	2.7	U	2.7	R	ug/kg	RE
PEST	SW8081A	ENDRIN ALDEHYDE	CNC126	701SB01001RE	S244767*19*RE	SO	2	J	2	J	ug/kg	CC,SS
PEST	SW8081A	ENDRIN ALDEHYDE	CNC126	701SB01002	S244767*20	SO	3.8	P	3.8	R	ug/kg	RE
PEST	SW8081A	ENDRIN ALDEHYDE	CNC126	701SB01002RE	S244767*20*RE	SO	2.6	JP	2.6	J	ug/kg	2C,SS,CC
PEST	SW8081A	ENDRIN KETONE	CNC126	701SB00101	S244767*1	SO	5.3	U	5.3	R	ug/kg	RE
PEST	SW8081A	ENDRIN KETONE	CNC126	701SB00102	S244767*2	SO	2.7	U	2.7	R	ug/kg	RE
PEST	SW8081A	ENDRIN KETONE	CNC126	701SB00102RE	S244767*2*RE	SO	3	U	3	UJ	ug/kg	MD
PEST	SW8081A	ENDRIN KETONE	CNC126	701SB00201	S244767*3	SO	0.96	JP	0.96	R	ug/kg	RE
PEST	SW8081A	ENDRIN KETONE	CNC126	701SB00202	S244767*4	SO	2.8	U	2.8	R	ug/kg	RE
PEST	SW8081A	ENDRIN KETONE	CNC126	701SB00202RE	S244767*4*RE	SO	2.8	U	2.8	UJ	ug/kg	SS
PEST	SW8081A	ENDRIN KETONE	CNC126	701SB00302	S244767*6	SO	2.7	U	2.7	R	ug/kg	RE
PEST	SW8081A	ENDRIN KETONE	CNC126	701SB00302RE	S244767*6*RE	SO	2.7	U	2.7	UJ	ug/kg	SS
PEST	SW8081A	ENDRIN KETONE	CNC126	701SB00401	S244767*7	SO	2.6	U	2.6	R	ug/kg	RE
PEST	SW8081A	ENDRIN KETONE	CNC126	701SB00401RE	S244767*7*RE	SO	2.6	U	2.6	UJ	ug/kg	SS
PEST	SW8081A	ENDRIN KETONE	CNC126	701SB00501	S244767*9	SO	2.7	U	2.7	R	ug/kg	RE
PEST	SW8081A	ENDRIN KETONE	CNC126	701SB00501RE	S244767*9*RE	SO	11	U	11	UJ	ug/kg	SS
PEST	SW8081A	ENDRIN KETONE	CNC126	701SB00601	S244767*11	SO	1.4	J	1.4	R	ug/kg	RE

Attachment 1 - Changed Qualifiers and Results
Zone E, AOC 701 - Data Validation

Parameter Class	Analytical Method	Parameter	SDG	Sample ID	Lab Sample ID	Matrix	Lab Result	Lab Qual	Final Result	Final Qual	Units	Reasons
PEST	SW8081A	ENDRIN KETONE	CNC126	701SB00602	S244767*12	SO	2.9	U	2.9	R	ug/kg	RE
PEST	SW8081A	ENDRIN KETONE	CNC126	701SB00602RE	S244767*12*RE	SO	2.9	U	2.9	UJ	ug/kg	SS
PEST	SW8081A	ENDRIN KETONE	CNC126	701SB00701	S244767*13	SO	2.7	U	2.7	R	ug/kg	RE
PEST	SW8081A	ENDRIN KETONE	CNC126	701SB00701RE	S244767*13*RE	SO	2.7	U	2.7	UJ	ug/kg	SS
PEST	SW8081A	ENDRIN KETONE	CNC126	701SB00702	S244767*14	SO	2.9	U	2.9	R	ug/kg	RE
PEST	SW8081A	ENDRIN KETONE	CNC126	701SB00702RE	S244767*14*RE	SO	2.9	U	2.9	UJ	ug/kg	SS
PEST	SW8081A	ENDRIN KETONE	CNC126	701SB00801	S244767*15	SO	2.7	U	2.7	R	ug/kg	RE
PEST	SW8081A	ENDRIN KETONE	CNC126	701SB00801RE	S244767*15*RE	SO	2.7	U	2.7	UJ	ug/kg	SS
PEST	SW8081A	ENDRIN KETONE	CNC126	701SB00802	S244767*16	SO	2.6	U	2.6	R	ug/kg	RE
PEST	SW8081A	ENDRIN KETONE	CNC126	701SB00901	S244767*17	SO	2.7	U	2.7	R	ug/kg	RE
PEST	SW8081A	ENDRIN KETONE	CNC126	701SB00902	S244767*18	SO	2.7	U	2.7	R	ug/kg	RE
PEST	SW8081A	ENDRIN KETONE	CNC126	701SB00902RE	S244767*18*RE	SO	2.7	U	2.7	UJ	ug/kg	SS
PEST	SW8081A	ENDRIN KETONE	CNC126	701SB01001	S244767*19	SO	2.7	U	2.7	R	ug/kg	RE
PEST	SW8081A	ENDRIN KETONE	CNC126	701SB01001RE	S244767*19*RE	SO	2.7	U	2.7	UJ	ug/kg	SS
PEST	SW8081A	ENDRIN KETONE	CNC126	701SB01002	S244767*20	SO	2.8	U	2.8	R	ug/kg	RE
PEST	SW8081A	ENDRIN KETONE	CNC126	701SB01002RE	S244767*20*RE	SO	2.8	U	2.8	UJ	ug/kg	SS
PEST	SW8081A	GAMMA BHC (LINDANE)	CNC126	701SB00101	S244767*1	SO	2.8	U	2.8	R	ug/kg	RE
PEST	SW8081A	GAMMA BHC (LINDANE)	CNC126	701SB00102	S244767*2	SO	1.4	U	1.4	R	ug/kg	RE
PEST	SW8081A	GAMMA BHC (LINDANE)	CNC126	701SB00102RE	S244767*2*RE	SO	1.6	U	1.6	UJ	ug/kg	MS
PEST	SW8081A	GAMMA BHC (LINDANE)	CNC126	701SB00201	S244767*3	SO	1.5	U	1.5	R	ug/kg	RE
PEST	SW8081A	GAMMA BHC (LINDANE)	CNC126	701SB00202	S244767*4	SO	1.5	U	1.5	R	ug/kg	RE
PEST	SW8081A	GAMMA BHC (LINDANE)	CNC126	701SB00202RE	S244767*4*RE	SO	1.5	U	1.5	UJ	ug/kg	SS
PEST	SW8081A	GAMMA BHC (LINDANE)	CNC126	701SB00302	S244767*6	SO	1.4	U	1.4	R	ug/kg	RE
PEST	SW8081A	GAMMA BHC (LINDANE)	CNC126	701SB00302RE	S244767*6*RE	SO	1.4	U	1.4	UJ	ug/kg	SS
PEST	SW8081A	GAMMA BHC (LINDANE)	CNC126	701SB00401	S244767*7	SO	1.3	U	1.3	R	ug/kg	RE
PEST	SW8081A	GAMMA BHC (LINDANE)	CNC126	701SB00401RE	S244767*7*RE	SO	1.3	U	1.3	UJ	ug/kg	SS
PEST	SW8081A	GAMMA BHC (LINDANE)	CNC126	701SB00501	S244767*9	SO	1.4	U	1.4	R	ug/kg	RE
PEST	SW8081A	GAMMA BHC (LINDANE)	CNC126	701SB00501RE	S244767*9*RE	SO	5.6	U	5.6	UJ	ug/kg	SS
PEST	SW8081A	GAMMA BHC (LINDANE)	CNC126	701SB00601	S244767*11	SO	1.5	U	1.5	R	ug/kg	RE
PEST	SW8081A	GAMMA BHC (LINDANE)	CNC126	701SB00602	S244767*12	SO	1.5	U	1.5	R	ug/kg	RE
PEST	SW8081A	GAMMA BHC (LINDANE)	CNC126	701SB00602RE	S244767*12*RE	SO	1.5	U	1.5	UJ	ug/kg	SS
PEST	SW8081A	GAMMA BHC (LINDANE)	CNC126	701SB00701	S244767*13	SO	1.4	U	1.4	R	ug/kg	RE

Parameter Class	Analytical Method	Parameter	SDG	Sample ID	Lab Sample ID	Matrix	Lab Result	Lab Qual	Final Result	Final Qual	Units	Reasons
PEST	SW8081A	GAMMA BHC (LINDANE)	CNC126	701SB00701RE	S244767*13*RE	SO	1.4	U	1.4	UJ	ug/kg	SS
PEST	SW8081A	GAMMA BHC (LINDANE)	CNC126	701SB00702	S244767*14	SO	1.5	U	1.5	R	ug/kg	RE
PEST	SW8081A	GAMMA BHC (LINDANE)	CNC126	701SB00702RE	S244767*14*RE	SO	1.5	U	1.5	UJ	ug/kg	SS
PEST	SW8081A	GAMMA BHC (LINDANE)	CNC126	701SB00801	S244767*15	SO	1.4	U	1.4	R	ug/kg	RE
PEST	SW8081A	GAMMA BHC (LINDANE)	CNC126	701SB00801RE	S244767*15*RE	SO	1.4	U	1.4	UJ	ug/kg	SS
PEST	SW8081A	GAMMA BHC (LINDANE)	CNC126	701SB00802	S244767*16	SO	1.4	U	1.4	R	ug/kg	RE
PEST	SW8081A	GAMMA BHC (LINDANE)	CNC126	701SB00901	S244767*17	SO	1.4	U	1.4	R	ug/kg	RE
PEST	SW8081A	GAMMA BHC (LINDANE)	CNC126	701SB00902	S244767*18	SO	1.4	U	1.4	R	ug/kg	RE
PEST	SW8081A	GAMMA BHC (LINDANE)	CNC126	701SB00902RE	S244767*18*RE	SO	1.4	U	1.4	UJ	ug/kg	SS
PEST	SW8081A	GAMMA BHC (LINDANE)	CNC126	701SB01001	S244767*19	SO	1.4	U	1.4	R	ug/kg	RE
PEST	SW8081A	GAMMA BHC (LINDANE)	CNC126	701SB01001RE	S244767*19*RE	SO	1.4	U	1.4	UJ	ug/kg	SS
PEST	SW8081A	GAMMA BHC (LINDANE)	CNC126	701SB01002	S244767*20	SO	1.4	U	1.4	R	ug/kg	RE
PEST	SW8081A	GAMMA BHC (LINDANE)	CNC126	701SB01002RE	S244767*20*RE	SO	1.4	U	1.4	UJ	ug/kg	SS
PEST	SW8081A	GAMMA-CHLORDANE	CNC126	701SB00101	S244767*1	SO	1.7	JP	1.7	R	ug/kg	RE
PEST	SW8081A	GAMMA-CHLORDANE	CNC126	701SB00101RE	S244767*1*RE	SO	1.9	JP	1.9	J	ug/kg	2C
PEST	SW8081A	GAMMA-CHLORDANE	CNC126	701SB00102	S244767*2	SO	1.4	U	1.4	R	ug/kg	RE
PEST	SW8081A	GAMMA-CHLORDANE	CNC126	701SB00102RE	S244767*2*RE	SO	1.6	U	1.6	UJ	ug/kg	MD
PEST	SW8081A	GAMMA-CHLORDANE	CNC126	701SB00201	S244767*3	SO	1.5	U	1.5	R	ug/kg	RE
PEST	SW8081A	GAMMA-CHLORDANE	CNC126	701SB00202	S244767*4	SO	1.5	U	1.5	R	ug/kg	RE
PEST	SW8081A	GAMMA-CHLORDANE	CNC126	701SB00202RE	S244767*4*RE	SO	1.5	U	1.5	UJ	ug/kg	SS
PEST	SW8081A	GAMMA-CHLORDANE	CNC126	701SB00302	S244767*6	SO	1.4	U	1.4	R	ug/kg	RE
PEST	SW8081A	GAMMA-CHLORDANE	CNC126	701SB00302RE	S244767*6*RE	SO	1.4	U	1.4	UJ	ug/kg	SS
PEST	SW8081A	GAMMA-CHLORDANE	CNC126	701SB00401	S244767*7	SO	1.3	U	1.3	R	ug/kg	RE
PEST	SW8081A	GAMMA-CHLORDANE	CNC126	701SB00401RE	S244767*7*RE	SO	1.3	U	1.3	UJ	ug/kg	SS
PEST	SW8081A	GAMMA-CHLORDANE	CNC126	701SB00501	S244767*9	SO	0.4	JP	0.4	R	ug/kg	RE
PEST	SW8081A	GAMMA-CHLORDANE	CNC126	701SB00501RE	S244767*9*RE	SO	0.88	JP	0.88	J	ug/kg	2C,SS
PEST	SW8081A	GAMMA-CHLORDANE	CNC126	701SB00601	S244767*11	SO	1.5	U	1.5	R	ug/kg	RE
PEST	SW8081A	GAMMA-CHLORDANE	CNC126	701SB00602	S244767*12	SO	1.5	U	1.5	R	ug/kg	RE
PEST	SW8081A	GAMMA-CHLORDANE	CNC126	701SB00602RE	S244767*12*RE	SO	1.5	U	1.5	UJ	ug/kg	SS
PEST	SW8081A	GAMMA-CHLORDANE	CNC126	701SB00701	S244767*13	SO	1.4	U	1.4	R	ug/kg	RE
PEST	SW8081A	GAMMA-CHLORDANE	CNC126	701SB00701RE	S244767*13*RE	SO	1.4	U	1.4	UJ	ug/kg	SS
PEST	SW8081A	GAMMA-CHLORDANE	CNC126	701SB00702	S244767*14	SO	1.5	U	1.5	R	ug/kg	RE

Attachment 1 - Changed Qualifiers and Results
Zone E, AOC 701 - Data Validation

Parameter Class	Analytical Method	Parameter	SDG	Sample ID	Lab Sample ID	Matrix	Lab Result	Lab Qual	Final Result	Final Qual	Units	Reasons
PEST	SW8081A	GAMMA-CHLORDANE	CNC126	701SB00702RE	S244767*14*RE	SO	1.5	U	1.5	UJ	ug/kg	SS
PEST	SW8081A	GAMMA-CHLORDANE	CNC126	701SB00801	S244767*15	SO	1.4	U	1.4	R	ug/kg	RE
PEST	SW8081A	GAMMA-CHLORDANE	CNC126	701SB00801RE	S244767*15*RE	SO	1.4	U	1.4	UJ	ug/kg	SS
PEST	SW8081A	GAMMA-CHLORDANE	CNC126	701SB00802	S244767*16	SO	1.4	U	1.4	R	ug/kg	RE
PEST	SW8081A	GAMMA-CHLORDANE	CNC126	701SB00901	S244767*17	SO	1.4	U	1.4	R	ug/kg	RE
PEST	SW8081A	GAMMA-CHLORDANE	CNC126	701SB00901RE	S244767*17*RE	SO	0.49	JP	0.49	J	ug/kg	2C
PEST	SW8081A	GAMMA-CHLORDANE	CNC126	701SB00902	S244767*18	SO	1.4	U	1.4	R	ug/kg	RE
PEST	SW8081A	GAMMA-CHLORDANE	CNC126	701SB00902RE	S244767*18*RE	SO	1.4	U	1.4	UJ	ug/kg	SS
PEST	SW8081A	GAMMA-CHLORDANE	CNC126	701SB01001	S244767*19	SO	1.4	U	1.4	R	ug/kg	RE
PEST	SW8081A	GAMMA-CHLORDANE	CNC126	701SB01001RE	S244767*19*RE	SO	1.4	U	1.4	UJ	ug/kg	SS
PEST	SW8081A	GAMMA-CHLORDANE	CNC126	701SB01002	S244767*20	SO	0.69	J	0.69	R	ug/kg	RE
PEST	SW8081A	GAMMA-CHLORDANE	CNC126	701SB01002RE	S244767*20*RE	SO	0.38	JP	0.38	J	ug/kg	2C,SS
PEST	SW8081A	HEPTACHLOR	CNC126	701SB00101	S244767*1	SO	2.8	U	2.8	R	ug/kg	RE
PEST	SW8081A	HEPTACHLOR	CNC126	701SB00101RE	S244767*1*RE	SO	5.5	U	5.5	UJ	ug/kg	CC
PEST	SW8081A	HEPTACHLOR	CNC126	701SB00102	S244767*2	SO	1.4	U	1.4	R	ug/kg	RE
PEST	SW8081A	HEPTACHLOR	CNC126	701SB00102RE	S244767*2*RE	SO	1.6	U	1.6	UJ	ug/kg	CC,MD
PEST	SW8081A	HEPTACHLOR	CNC126	701SB00201	S244767*3	SO	1.5	U	1.5	R	ug/kg	RE
PEST	SW8081A	HEPTACHLOR	CNC126	701SB00201RE	S244767*3*RE	SO	5.8	U	5.8	UJ	ug/kg	CC
PEST	SW8081A	HEPTACHLOR	CNC126	701SB00202	S244767*4	SO	1.5	U	1.5	R	ug/kg	RE
PEST	SW8081A	HEPTACHLOR	CNC126	701SB00202RE	S244767*4*RE	SO	1.5	U	1.5	UJ	ug/kg	CC,SS
PEST	SW8081A	HEPTACHLOR	CNC126	701SB00301	S244767*5	SO	1.4	U	1.4	UJ	ug/kg	CC
PEST	SW8081A	HEPTACHLOR	CNC126	701SB00302	S244767*6	SO	1.4	U	1.4	R	ug/kg	RE
PEST	SW8081A	HEPTACHLOR	CNC126	701SB00302RE	S244767*6*RE	SO	1.4	U	1.4	UJ	ug/kg	CC,SS
PEST	SW8081A	HEPTACHLOR	CNC126	701SB00401	S244767*7	SO	1.3	U	1.3	R	ug/kg	RE
PEST	SW8081A	HEPTACHLOR	CNC126	701SB00401RE	S244767*7*RE	SO	1.3	U	1.3	UJ	ug/kg	CC,SS
PEST	SW8081A	HEPTACHLOR	CNC126	701SB00402	S244767*8	SO	1.4	U	1.4	UJ	ug/kg	CC
PEST	SW8081A	HEPTACHLOR	CNC126	701SB00501	S244767*9	SO	1.4	U	1.4	R	ug/kg	RE
PEST	SW8081A	HEPTACHLOR	CNC126	701SB00501RE	S244767*9*RE	SO	5.6	U	5.6	UJ	ug/kg	SS
PEST	SW8081A	HEPTACHLOR	CNC126	701SB00502	S244767*10	SO	1.5	U	1.5	UJ	ug/kg	CC
PEST	SW8081A	HEPTACHLOR	CNC126	701SB00601	S244767*11	SO	1.5	U	1.5	R	ug/kg	RE
PEST	SW8081A	HEPTACHLOR	CNC126	701SB00601RE	S244767*11*RE	SO	2.9	U	2.9	UJ	ug/kg	CC
PEST	SW8081A	HEPTACHLOR	CNC126	701SB00602	S244767*12	SO	1.5	U	1.5	R	ug/kg	RE

Parameter Class	Analytical Method	Parameter	SDG	Sample ID	Lab Sample ID	Matrix	Lab Result	Lab Qual	Final Result	Final Qual	Units	Reasons
PEST	SW8081A	HEPTACHLOR	CNC126	701SB00602RE	S244767*12*RE	SO	1.5	U	1.5	UJ	ug/kg	CC,SS
PEST	SW8081A	HEPTACHLOR	CNC126	701SB00701	S244767*13	SO	1.4	U	1.4	R	ug/kg	RE
PEST	SW8081A	HEPTACHLOR	CNC126	701SB00701RE	S244767*13*RE	SO	1.4	U	1.4	UJ	ug/kg	CC,SS
PEST	SW8081A	HEPTACHLOR	CNC126	701SB00702	S244767*14	SO	1.5	U	1.5	R	ug/kg	RE
PEST	SW8081A	HEPTACHLOR	CNC126	701SB00702RE	S244767*14*RE	SO	1.5	U	1.5	UJ	ug/kg	CC,SS
PEST	SW8081A	HEPTACHLOR	CNC126	701SB00801	S244767*15	SO	1.4	U	1.4	R	ug/kg	RE
PEST	SW8081A	HEPTACHLOR	CNC126	701SB00801RE	S244767*15*RE	SO	1.4	U	1.4	UJ	ug/kg	CC
PEST	SW8081A	HEPTACHLOR	CNC126	701SB00802	S244767*16	SO	1.4	U	1.4	R	ug/kg	RE
PEST	SW8081A	HEPTACHLOR	CNC126	701SB00802RE	S244767*16*RE	SO	1.4	U	1.4	UJ	ug/kg	CC
PEST	SW8081A	HEPTACHLOR	CNC126	701SB00901	S244767*17	SO	1.4	U	1.4	R	ug/kg	RE
PEST	SW8081A	HEPTACHLOR	CNC126	701SB00901RE	S244767*17*RE	SO	2.8	U	2.8	UJ	ug/kg	CC
PEST	SW8081A	HEPTACHLOR	CNC126	701SB00902	S244767*18	SO	1.4	U	1.4	R	ug/kg	RE
PEST	SW8081A	HEPTACHLOR	CNC126	701SB00902RE	S244767*18*RE	SO	1.4	U	1.4	UJ	ug/kg	CC,SS
PEST	SW8081A	HEPTACHLOR	CNC126	701SB01001	S244767*19	SO	1.4	U	1.4	R	ug/kg	RE
PEST	SW8081A	HEPTACHLOR	CNC126	701SB01001RE	S244767*19*RE	SO	1.4	U	1.4	UJ	ug/kg	CC,SS
PEST	SW8081A	HEPTACHLOR	CNC126	701SB01002	S244767*20	SO	1.4	U	1.4	R	ug/kg	RE
PEST	SW8081A	HEPTACHLOR	CNC126	701SB01002RE	S244767*20*RE	SO	1.4	U	1.4	UJ	ug/kg	CC,SS
PEST	SW8081A	HEPTACHLOR EPOXIDE	CNC126	701SB00101	S244767*1	SO	0.43	JP	0.43	R	ug/kg	RE
PEST	SW8081A	HEPTACHLOR EPOXIDE	CNC126	701SB00102	S244767*2	SO	1.4	U	1.4	R	ug/kg	RE
PEST	SW8081A	HEPTACHLOR EPOXIDE	CNC126	701SB00102RE	S244767*2*RE	SO	1.6	U	1.6	UJ	ug/kg	MD
PEST	SW8081A	HEPTACHLOR EPOXIDE	CNC126	701SB00201	S244767*3	SO	0.24	JP	0.24	R	ug/kg	RE
PEST	SW8081A	HEPTACHLOR EPOXIDE	CNC126	701SB00202	S244767*4	SO	1.5	U	1.5	R	ug/kg	RE
PEST	SW8081A	HEPTACHLOR EPOXIDE	CNC126	701SB00202RE	S244767*4*RE	SO	1.5	U	1.5	UJ	ug/kg	SS
PEST	SW8081A	HEPTACHLOR EPOXIDE	CNC126	701SB00302	S244767*6	SO	1.4	U	1.4	R	ug/kg	RE
PEST	SW8081A	HEPTACHLOR EPOXIDE	CNC126	701SB00302RE	S244767*6*RE	SO	1.4	U	1.4	UJ	ug/kg	SS
PEST	SW8081A	HEPTACHLOR EPOXIDE	CNC126	701SB00401	S244767*7	SO	1.3	U	1.3	R	ug/kg	RE
PEST	SW8081A	HEPTACHLOR EPOXIDE	CNC126	701SB00401RE	S244767*7*RE	SO	1.3	U	1.3	UJ	ug/kg	SS
PEST	SW8081A	HEPTACHLOR EPOXIDE	CNC126	701SB00501	S244767*9	SO	0.41	J	0.41	R	ug/kg	RE
PEST	SW8081A	HEPTACHLOR EPOXIDE	CNC126	701SB00501RE	S244767*9*RE	SO	5.6	U	5.6	UJ	ug/kg	SS
PEST	SW8081A	HEPTACHLOR EPOXIDE	CNC126	701SB00601	S244767*11	SO	0.46	J	0.46	R	ug/kg	RE
PEST	SW8081A	HEPTACHLOR EPOXIDE	CNC126	701SB00602	S244767*12	SO	1.5	U	1.5	R	ug/kg	RE
PEST	SW8081A	HEPTACHLOR EPOXIDE	CNC126	701SB00602RE	S244767*12*RE	SO	1.5	U	1.5	UJ	ug/kg	SS

Attachment 1 - Changed Qualifiers and Results
Zone E, AOC 701 - Data Validation

Parameter Class	Analytical Method	Parameter	SDG	Sample ID	Lab Sample ID	Matrix	Lab Result	Lab Qual	Final Result	Final Qual	Units	Reasons
PEST	SW8081A	HEPTACHLOR EPOXIDE	CNC126	701SB00701	S244767*13	SO	1.4	U	1.4	R	ug/kg	RE
PEST	SW8081A	HEPTACHLOR EPOXIDE	CNC126	701SB00701RE	S244767*13*RE	SO	1.4	U	1.4	UJ	ug/kg	SS
PEST	SW8081A	HEPTACHLOR EPOXIDE	CNC126	701SB00702	S244767*14	SO	1.5	U	1.5	R	ug/kg	RE
PEST	SW8081A	HEPTACHLOR EPOXIDE	CNC126	701SB00702RE	S244767*14*RE	SO	1.5	U	1.5	UJ	ug/kg	SS
PEST	SW8081A	HEPTACHLOR EPOXIDE	CNC126	701SB00801	S244767*15	SO	1.4	U	1.4	R	ug/kg	RE
PEST	SW8081A	HEPTACHLOR EPOXIDE	CNC126	701SB00801RE	S244767*15*RE	SO	1.4	U	1.4	UJ	ug/kg	SS
PEST	SW8081A	HEPTACHLOR EPOXIDE	CNC126	701SB00802	S244767*16	SO	1.4	U	1.4	R	ug/kg	RE
PEST	SW8081A	HEPTACHLOR EPOXIDE	CNC126	701SB00901	S244767*17	SO	0.52	J	0.52	R	ug/kg	RE
PEST	SW8081A	HEPTACHLOR EPOXIDE	CNC126	701SB00901RE	S244767*17*RE	SO	0.62	JP	0.62	J	ug/kg	2C
PEST	SW8081A	HEPTACHLOR EPOXIDE	CNC126	701SB00902	S244767*18	SO	1.4	U	1.4	R	ug/kg	RE
PEST	SW8081A	HEPTACHLOR EPOXIDE	CNC126	701SB00902RE	S244767*18*RE	SO	1.4	U	1.4	UJ	ug/kg	SS
PEST	SW8081A	HEPTACHLOR EPOXIDE	CNC126	701SB01001	S244767*19	SO	1.4	U	1.4	R	ug/kg	RE
PEST	SW8081A	HEPTACHLOR EPOXIDE	CNC126	701SB01001RE	S244767*19*RE	SO	1.4	U	1.4	UJ	ug/kg	SS
PEST	SW8081A	HEPTACHLOR EPOXIDE	CNC126	701SB01002	S244767*20	SO	1.4	U	1.4	R	ug/kg	RE
PEST	SW8081A	HEPTACHLOR EPOXIDE	CNC126	701SB01002RE	S244767*20*RE	SO	1.4	U	1.4	UJ	ug/kg	SS
PEST	SW8081A	METHOXYCHLOR	CNC126	701SB00101	S244767*1	SO	28	U	28	R	ug/kg	RE
PEST	SW8081A	METHOXYCHLOR	CNC126	701SB00101RE	S244767*1*RE	SO	55	U	55	UJ	ug/kg	CC
PEST	SW8081A	METHOXYCHLOR	CNC126	701SB00102	S244767*2	SO	14	U	14	R	ug/kg	RE
PEST	SW8081A	METHOXYCHLOR	CNC126	701SB00102RE	S244767*2*RE	SO	16	U	16	UJ	ug/kg	CC,MD
PEST	SW8081A	METHOXYCHLOR	CNC126	701SB00201	S244767*3	SO	15	U	15	R	ug/kg	RE
PEST	SW8081A	METHOXYCHLOR	CNC126	701SB00201RE	S244767*3*RE	SO	58	U	58	UJ	ug/kg	CC
PEST	SW8081A	METHOXYCHLOR	CNC126	701SB00202	S244767*4	SO	15	U	15	R	ug/kg	RE
PEST	SW8081A	METHOXYCHLOR	CNC126	701SB00202RE	S244767*4*RE	SO	15	U	15	UJ	ug/kg	CC,SS
PEST	SW8081A	METHOXYCHLOR	CNC126	701SB00301	S244767*5	SO	14	U	14	UJ	ug/kg	CC
PEST	SW8081A	METHOXYCHLOR	CNC126	701SB00302	S244767*6	SO	14	U	14	R	ug/kg	RE
PEST	SW8081A	METHOXYCHLOR	CNC126	701SB00302RE	S244767*6*RE	SO	14	U	14	UJ	ug/kg	CC,SS
PEST	SW8081A	METHOXYCHLOR	CNC126	701SB00401	S244767*7	SO	13	U	13	R	ug/kg	RE
PEST	SW8081A	METHOXYCHLOR	CNC126	701SB00401RE	S244767*7*RE	SO	13	U	13	UJ	ug/kg	CC,SS
PEST	SW8081A	METHOXYCHLOR	CNC126	701SB00402	S244767*8	SO	14	U	14	UJ	ug/kg	CC
PEST	SW8081A	METHOXYCHLOR	CNC126	701SB00501	S244767*9	SO	14	U	14	R	ug/kg	RE
PEST	SW8081A	METHOXYCHLOR	CNC126	701SB00501RE	S244767*9*RE	SO	56	U	56	UJ	ug/kg	CC,SS
PEST	SW8081A	METHOXYCHLOR	CNC126	701SB00502	S244767*10	SO	15	U	15	UJ	ug/kg	CC

Parameter Class	Analytical Method	Parameter	SDG	Sample ID	Lab Sample ID	Matrix	Lab Result	Lab Qual	Final Result	Final Qual	Units	Reasons
PEST	SW8081A	METHOXYCHLOR	CNC126	701SB00601	S244767*11	SO	15	U	15	R	ug/kg	RE
PEST	SW8081A	METHOXYCHLOR	CNC126	701SB00601RE	S244767*11*RE	SO	29	U	29	UJ	ug/kg	CC
PEST	SW8081A	METHOXYCHLOR	CNC126	701SB00602	S244767*12	SO	15	U	15	R	ug/kg	RE
PEST	SW8081A	METHOXYCHLOR	CNC126	701SB00602RE	S244767*12*RE	SO	15	U	15	UJ	ug/kg	CC,SS
PEST	SW8081A	METHOXYCHLOR	CNC126	701SB00701	S244767*13	SO	14	U	14	R	ug/kg	RE
PEST	SW8081A	METHOXYCHLOR	CNC126	701SB00701RE	S244767*13*RE	SO	14	U	14	UJ	ug/kg	CC,SS
PEST	SW8081A	METHOXYCHLOR	CNC126	701SB00702	S244767*14	SO	15	U	15	R	ug/kg	RE
PEST	SW8081A	METHOXYCHLOR	CNC126	701SB00702RE	S244767*14*RE	SO	15	U	15	UJ	ug/kg	CC,SS
PEST	SW8081A	METHOXYCHLOR	CNC126	701SB00801	S244767*15	SO	14	U	14	R	ug/kg	RE
PEST	SW8081A	METHOXYCHLOR	CNC126	701SB00801RE	S244767*15*RE	SO	14	U	14	UJ	ug/kg	CC,SS
PEST	SW8081A	METHOXYCHLOR	CNC126	701SB00802	S244767*16	SO	14	U	14	R	ug/kg	RE
PEST	SW8081A	METHOXYCHLOR	CNC126	701SB00802RE	S244767*16*RE	SO	14	U	14	UJ	ug/kg	CC
PEST	SW8081A	METHOXYCHLOR	CNC126	701SB00901	S244767*17	SO	14	U	14	R	ug/kg	RE
PEST	SW8081A	METHOXYCHLOR	CNC126	701SB00901RE	S244767*17*RE	SO	28	U	28	UJ	ug/kg	CC
PEST	SW8081A	METHOXYCHLOR	CNC126	701SB00902	S244767*18	SO	14	U	14	R	ug/kg	RE
PEST	SW8081A	METHOXYCHLOR	CNC126	701SB00902RE	S244767*18*RE	SO	14	U	14	UJ	ug/kg	CC,SS
PEST	SW8081A	METHOXYCHLOR	CNC126	701SB01001	S244767*19	SO	14	U	14	R	ug/kg	RE
PEST	SW8081A	METHOXYCHLOR	CNC126	701SB01001RE	S244767*19*RE	SO	14	U	14	UJ	ug/kg	CC,SS
PEST	SW8081A	METHOXYCHLOR	CNC126	701SB01002	S244767*20	SO	14	U	14	R	ug/kg	RE
PEST	SW8081A	METHOXYCHLOR	CNC126	701SB01002RE	S244767*20*RE	SO	14	U	14	UJ	ug/kg	CC,SS
PEST	SW8081A	p,p'-DDD	CNC126	701SB00101	S244767*1	SO	5.3	U	5.3	R	ug/kg	RE
PEST	SW8081A	p,p'-DDD	CNC126	701SB00102	S244767*2	SO	2.7	U	2.7	R	ug/kg	RE
PEST	SW8081A	p,p'-DDD	CNC126	701SB00102RE	S244767*2*RE	SO	3	U	3	UJ	ug/kg	MD
PEST	SW8081A	p,p'-DDD	CNC126	701SB00201	S244767*3	SO	2.8	U	2.8	R	ug/kg	RE
PEST	SW8081A	p,p'-DDD	CNC126	701SB00202	S244767*4	SO	2.8	U	2.8	R	ug/kg	RE
PEST	SW8081A	p,p'-DDD	CNC126	701SB00202RE	S244767*4*RE	SO	2.8	U	2.8	UJ	ug/kg	SS
PEST	SW8081A	p,p'-DDD	CNC126	701SB00302	S244767*6	SO	2.7	U	2.7	R	ug/kg	RE
PEST	SW8081A	p,p'-DDD	CNC126	701SB00302RE	S244767*6*RE	SO	2.7	U	2.7	UJ	ug/kg	SS
PEST	SW8081A	p,p'-DDD	CNC126	701SB00401	S244767*7	SO	2.6	U	2.6	R	ug/kg	RE
PEST	SW8081A	p,p'-DDD	CNC126	701SB00401RE	S244767*7*RE	SO	2.6	U	2.6	UJ	ug/kg	SS
PEST	SW8081A	p,p'-DDD	CNC126	701SB00501	S244767*9	SO	7	=	7	R	ug/kg	RE
PEST	SW8081A	p,p'-DDD	CNC126	701SB00501RE	S244767*9*RE	SO	14	=	14	J	ug/kg	SS

Attachment 1 - Changed Qualifiers and Results
Zone E, AOC 701 - Data Validation

Parameter Class	Analytical Method	Parameter	SDG	Sample ID	Lab Sample ID	Matrix	Lab Result	Lab Qual	Final Result	Final Qual	Units	Reasons
PEST	SW8081A	p,p'-DDD	CNC126	701SB00601	S244767*11	SO	1.3	J	1.3	R	ug/kg	RE
PEST	SW8081A	p,p'-DDD	CNC126	701SB00602	S244767*12	SO	2.9	U	2.9	R	ug/kg	RE
PEST	SW8081A	p,p'-DDD	CNC126	701SB00602RE	S244767*12*RE	SO	2.9	U	2.9	UJ	ug/kg	SS
PEST	SW8081A	p,p'-DDD	CNC126	701SB00701	S244767*13	SO	2.7	U	2.7	R	ug/kg	RE
PEST	SW8081A	p,p'-DDD	CNC126	701SB00701RE	S244767*13*RE	SO	2.7	U	2.7	UJ	ug/kg	SS
PEST	SW8081A	p,p'-DDD	CNC126	701SB00702	S244767*14	SO	2.9	U	2.9	R	ug/kg	RE
PEST	SW8081A	p,p'-DDD	CNC126	701SB00702RE	S244767*14*RE	SO	2.9	U	2.9	UJ	ug/kg	SS
PEST	SW8081A	p,p'-DDD	CNC126	701SB00801	S244767*15	SO	2.7	U	2.7	R	ug/kg	RE
PEST	SW8081A	p,p'-DDD	CNC126	701SB00801RE	S244767*15*RE	SO	2.7	U	2.7	UJ	ug/kg	SS
PEST	SW8081A	p,p'-DDD	CNC126	701SB00802	S244767*16	SO	2.6	U	2.6	R	ug/kg	RE
PEST	SW8081A	p,p'-DDD	CNC126	701SB00901	S244767*17	SO	1.3	J	1.3	R	ug/kg	RE
PEST	SW8081A	p,p'-DDD	CNC126	701SB00902	S244767*18	SO	2.7	U	2.7	R	ug/kg	RE
PEST	SW8081A	p,p'-DDD	CNC126	701SB00902RE	S244767*18*RE	SO	2.7	U	2.7	UJ	ug/kg	SS
PEST	SW8081A	p,p'-DDD	CNC126	701SB01001	S244767*19	SO	2.7	U	2.7	R	ug/kg	RE
PEST	SW8081A	p,p'-DDD	CNC126	701SB01001RE	S244767*19*RE	SO	2.7	U	2.7	UJ	ug/kg	SS
PEST	SW8081A	p,p'-DDD	CNC126	701SB01002	S244767*20	SO	2.8	U	2.8	R	ug/kg	RE
PEST	SW8081A	p,p'-DDD	CNC126	701SB01002RE	S244767*20*RE	SO	2.8	U	2.8	UJ	ug/kg	SS
PEST	SW8081A	p,p'-DDE	CNC126	701SB00101	S244767*1	SO	5.3	U	5.3	R	ug/kg	RE
PEST	SW8081A	p,p'-DDE	CNC126	701SB00102	S244767*2	SO	2.7	U	2.7	R	ug/kg	RE
PEST	SW8081A	p,p'-DDE	CNC126	701SB00102RE	S244767*2*RE	SO	3	U	3	UJ	ug/kg	MD
PEST	SW8081A	p,p'-DDE	CNC126	701SB00201	S244767*3	SO	2.8	U	2.8	R	ug/kg	RE
PEST	SW8081A	p,p'-DDE	CNC126	701SB00202	S244767*4	SO	2.8	U	2.8	R	ug/kg	RE
PEST	SW8081A	p,p'-DDE	CNC126	701SB00202RE	S244767*4*RE	SO	2.8	U	2.8	UJ	ug/kg	SS
PEST	SW8081A	p,p'-DDE	CNC126	701SB00302	S244767*6	SO	2.7	U	2.7	R	ug/kg	RE
PEST	SW8081A	p,p'-DDE	CNC126	701SB00302RE	S244767*6*RE	SO	2.7	U	2.7	UJ	ug/kg	SS
PEST	SW8081A	p,p'-DDE	CNC126	701SB00401	S244767*7	SO	2.6	U	2.6	R	ug/kg	RE
PEST	SW8081A	p,p'-DDE	CNC126	701SB00401RE	S244767*7*RE	SO	2.6	U	2.6	UJ	ug/kg	SS
PEST	SW8081A	p,p'-DDE	CNC126	701SB00501	S244767*9	SO	4.3	=	4.3	R	ug/kg	RE
PEST	SW8081A	p,p'-DDE	CNC126	701SB00501RE	S244767*9*RE	SO	9.3	J	9.3	J	ug/kg	SS
PEST	SW8081A	p,p'-DDE	CNC126	701SB00601	S244767*11	SO	0.4	JP	0.4	R	ug/kg	RE
PEST	SW8081A	p,p'-DDE	CNC126	701SB00602	S244767*12	SO	2.9	U	2.9	R	ug/kg	RE
PEST	SW8081A	p,p'-DDE	CNC126	701SB00602RE	S244767*12*RE	SO	2.9	U	2.9	UJ	ug/kg	SS

Parameter Class	Analytical Method	Parameter	SDG	Sample ID	Lab Sample ID	Matrix	Lab Result	Lab Qual	Final Result	Final Qual	Units	Reasons
PEST	SW8081A	p,p'-DDE	CNC126	701SB00701	S244767*13	SO	2.7	U	2.7	R	ug/kg	RE
PEST	SW8081A	p,p'-DDE	CNC126	701SB00701RE	S244767*13*RE	SO	2.7	U	2.7	UJ	ug/kg	SS
PEST	SW8081A	p,p'-DDE	CNC126	701SB00702	S244767*14	SO	2.9	U	2.9	R	ug/kg	RE
PEST	SW8081A	p,p'-DDE	CNC126	701SB00702RE	S244767*14*RE	SO	2.9	U	2.9	UJ	ug/kg	SS
PEST	SW8081A	p,p'-DDE	CNC126	701SB00801	S244767*15	SO	2.7	U	2.7	R	ug/kg	RE
PEST	SW8081A	p,p'-DDE	CNC126	701SB00801RE	S244767*15*RE	SO	2.7	U	2.7	UJ	ug/kg	SS
PEST	SW8081A	p,p'-DDE	CNC126	701SB00802	S244767*16	SO	2.6	U	2.6	R	ug/kg	RE
PEST	SW8081A	p,p'-DDE	CNC126	701SB00901	S244767*17	SO	1.9	J	1.9	R	ug/kg	RE
PEST	SW8081A	p,p'-DDE	CNC126	701SB00902	S244767*18	SO	2.7	U	2.7	R	ug/kg	RE
PEST	SW8081A	p,p'-DDE	CNC126	701SB00902RE	S244767*18*RE	SO	2.7	U	2.7	UJ	ug/kg	SS
PEST	SW8081A	p,p'-DDE	CNC126	701SB01001	S244767*19	SO	2.7	U	2.7	R	ug/kg	RE
PEST	SW8081A	p,p'-DDE	CNC126	701SB01001RE	S244767*19*RE	SO	2.7	U	2.7	UJ	ug/kg	SS
PEST	SW8081A	p,p'-DDE	CNC126	701SB01002	S244767*20	SO	0.59	J	0.59	R	ug/kg	RE
PEST	SW8081A	p,p'-DDE	CNC126	701SB01002RE	S244767*20*RE	SO	0.3	JP	0.3	J	ug/kg	2C,SS
PEST	SW8081A	p,p'-DDT	CNC126	701SB00101	S244767*1	SO	1.2	JP	1.2	R	ug/kg	RE
PEST	SW8081A	p,p'-DDT	CNC126	701SB00101RE	S244767*1*RE	SO	11	U	11	UJ	ug/kg	CC
PEST	SW8081A	p,p'-DDT	CNC126	701SB00102	S244767*2	SO	2.7	U	2.7	R	ug/kg	RE
PEST	SW8081A	p,p'-DDT	CNC126	701SB00102RE	S244767*2*RE	SO	3	U	3	UJ	ug/kg	CC,MD
PEST	SW8081A	p,p'-DDT	CNC126	701SB00201	S244767*3	SO	1	JP	1	R	ug/kg	RE
PEST	SW8081A	p,p'-DDT	CNC126	701SB00201RE	S244767*3*RE	SO	11	U	11	UJ	ug/kg	CC
PEST	SW8081A	p,p'-DDT	CNC126	701SB00202	S244767*4	SO	2.8	U	2.8	R	ug/kg	RE
PEST	SW8081A	p,p'-DDT	CNC126	701SB00202RE	S244767*4*RE	SO	2.8	U	2.8	UJ	ug/kg	CC,SS
PEST	SW8081A	p,p'-DDT	CNC126	701SB00301	S244767*5	SO	2.6	U	2.6	UJ	ug/kg	CC
PEST	SW8081A	p,p'-DDT	CNC126	701SB00302	S244767*6	SO	2.7	U	2.7	R	ug/kg	RE
PEST	SW8081A	p,p'-DDT	CNC126	701SB00302RE	S244767*6*RE	SO	2.7	U	2.7	UJ	ug/kg	CC,SS
PEST	SW8081A	p,p'-DDT	CNC126	701SB00401	S244767*7	SO	2.6	U	2.6	R	ug/kg	RE
PEST	SW8081A	p,p'-DDT	CNC126	701SB00401RE	S244767*7*RE	SO	2.6	U	2.6	UJ	ug/kg	CC,SS
PEST	SW8081A	p,p'-DDT	CNC126	701SB00402	S244767*8	SO	2.6	U	2.6	UJ	ug/kg	CC
PEST	SW8081A	p,p'-DDT	CNC126	701SB00501	S244767*9	SO	4.1	P	4.1	R	ug/kg	RE
PEST	SW8081A	p,p'-DDT	CNC126	701SB00501RE	S244767*9*RE	SO	9.7	J	9.7	J	ug/kg	CC,SS
PEST	SW8081A	p,p'-DDT	CNC126	701SB00502	S244767*10	SO	2.8	U	2.8	UJ	ug/kg	CC
PEST	SW8081A	p,p'-DDT	CNC126	701SB00601	S244767*11	SO	0.72	JP	0.72	R	ug/kg	RE

Attachment 1 - Changed Qualifiers and Results
Zone E, AOC 701 - Data Validation

Parameter Class	Analytical Method	Parameter	SDG	Sample ID	Lab Sample ID	Matrix	Lab Result	Lab Qual	Final Result	Final Qual	Units	Reasons
PEST	SW8081A	p,p'-DDT	CNC126	701SB00601RE	S244767*11*RE	SO	5.6	U	5.6	UJ	ug/kg	CC
PEST	SW8081A	p,p'-DDT	CNC126	701SB00602	S244767*12	SO	2.9	U	2.9	R	ug/kg	RE
PEST	SW8081A	p,p'-DDT	CNC126	701SB00602RE	S244767*12*RE	SO	2.9	U	2.9	UJ	ug/kg	CC,SS
PEST	SW8081A	p,p'-DDT	CNC126	701SB00701	S244767*13	SO	0.4	J	0.4	R	ug/kg	RE
PEST	SW8081A	p,p'-DDT	CNC126	701SB00701RE	S244767*13*RE	SO	2.7	U	2.7	UJ	ug/kg	CC,SS
PEST	SW8081A	p,p'-DDT	CNC126	701SB00702	S244767*14	SO	2.9	U	2.9	R	ug/kg	RE
PEST	SW8081A	p,p'-DDT	CNC126	701SB00702RE	S244767*14*RE	SO	2.9	U	2.9	UJ	ug/kg	CC,SS
PEST	SW8081A	p,p'-DDT	CNC126	701SB00801	S244767*15	SO	2.7	U	2.7	R	ug/kg	RE
PEST	SW8081A	p,p'-DDT	CNC126	701SB00801RE	S244767*15*RE	SO	2.7	U	2.7	UJ	ug/kg	CC,SS
PEST	SW8081A	p,p'-DDT	CNC126	701SB00802	S244767*16	SO	2.6	U	2.6	R	ug/kg	RE
PEST	SW8081A	p,p'-DDT	CNC126	701SB00802RE	S244767*16*RE	SO	2.6	U	2.6	UJ	ug/kg	CC
PEST	SW8081A	p,p'-DDT	CNC126	701SB00901	S244767*17	SO	2.4	J	2.4	R	ug/kg	RE
PEST	SW8081A	p,p'-DDT	CNC126	701SB00901RE	S244767*17*RE	SO	2.2	J	2.2	J	ug/kg	CC
PEST	SW8081A	p,p'-DDT	CNC126	701SB00902	S244767*18	SO	2.7	U	2.7	R	ug/kg	RE
PEST	SW8081A	p,p'-DDT	CNC126	701SB00902RE	S244767*18*RE	SO	2.7	U	2.7	UJ	ug/kg	CC,SS
PEST	SW8081A	p,p'-DDT	CNC126	701SB01001	S244767*19	SO	0.49	J	0.49	R	ug/kg	RE
PEST	SW8081A	p,p'-DDT	CNC126	701SB01001RE	S244767*19*RE	SO	0.56	JP	0.56	J	ug/kg	2C,CC,SS
PEST	SW8081A	p,p'-DDT	CNC126	701SB01002	S244767*20	SO	2.2	JP	2.2	R	ug/kg	RE
PEST	SW8081A	p,p'-DDT	CNC126	701SB01002RE	S244767*20*RE	SO	1.9	JP	1.9	J	ug/kg	2C,SS,CC
PEST	SW8081A	TOXAPHENE	CNC126	701SB00101	S244767*1	SO	180	U	180	R	ug/kg	RE
PEST	SW8081A	TOXAPHENE	CNC126	701SB00102	S244767*2	SO	89	U	89	R	ug/kg	RE
PEST	SW8081A	TOXAPHENE	CNC126	701SB00201	S244767*3	SO	93	U	93	R	ug/kg	RE
PEST	SW8081A	TOXAPHENE	CNC126	701SB00202	S244767*4	SO	94	U	94	R	ug/kg	RE
PEST	SW8081A	TOXAPHENE	CNC126	701SB00202RE	S244767*4*RE	SO	94	U	94	UJ	ug/kg	SS
PEST	SW8081A	TOXAPHENE	CNC126	701SB00302	S244767*6	SO	90	U	90	R	ug/kg	RE
PEST	SW8081A	TOXAPHENE	CNC126	701SB00302RE	S244767*6*RE	SO	90	U	90	UJ	ug/kg	SS
PEST	SW8081A	TOXAPHENE	CNC126	701SB00401	S244767*7	SO	86	U	86	R	ug/kg	RE
PEST	SW8081A	TOXAPHENE	CNC126	701SB00401RE	S244767*7*RE	SO	86	U	86	UJ	ug/kg	SS
PEST	SW8081A	TOXAPHENE	CNC126	701SB00501	S244767*9	SO	90	U	90	R	ug/kg	RE
PEST	SW8081A	TOXAPHENE	CNC126	701SB00501RE	S244767*9*RE	SO	360	U	360	UJ	ug/kg	SS
PEST	SW8081A	TOXAPHENE	CNC126	701SB00601	S244767*11	SO	93	U	93	R	ug/kg	RE
PEST	SW8081A	TOXAPHENE	CNC126	701SB00602	S244767*12	SO	98	U	98	R	ug/kg	RE

Parameter Class	Analytical Method	Parameter	SDG	Sample ID	Lab Sample ID	Matrix	Lab Result	Lab Qual	Final Result	Final Qual	Units	Reasons
PEST	SW8081A	TOXAPHENE	CNC126	701SB00602RE	S244767*12*RE	SO	98	U	98	UJ	ug/kg	SS
PEST	SW8081A	TOXAPHENE	CNC126	701SB00701	S244767*13	SO	90	U	90	R	ug/kg	RE
PEST	SW8081A	TOXAPHENE	CNC126	701SB00701RE	S244767*13*RE	SO	90	U	90	UJ	ug/kg	SS
PEST	SW8081A	TOXAPHENE	CNC126	701SB00702	S244767*14	SO	95	U	95	R	ug/kg	RE
PEST	SW8081A	TOXAPHENE	CNC126	701SB00702RE	S244767*14*RE	SO	95	U	95	UJ	ug/kg	SS
PEST	SW8081A	TOXAPHENE	CNC126	701SB00801	S244767*15	SO	89	U	89	R	ug/kg	RE
PEST	SW8081A	TOXAPHENE	CNC126	701SB00801RE	S244767*15*RE	SO	89	U	89	UJ	ug/kg	SS
PEST	SW8081A	TOXAPHENE	CNC126	701SB00802	S244767*16	SO	88	U	88	R	ug/kg	RE
PEST	SW8081A	TOXAPHENE	CNC126	701SB00901	S244767*17	SO	91	U	91	R	ug/kg	RE
PEST	SW8081A	TOXAPHENE	CNC126	701SB00902	S244767*18	SO	91	U	91	R	ug/kg	RE
PEST	SW8081A	TOXAPHENE	CNC126	701SB00902RE	S244767*18*RE	SO	91	U	91	UJ	ug/kg	SS
PEST	SW8081A	TOXAPHENE	CNC126	701SB01001	S244767*19	SO	90	U	90	R	ug/kg	RE
PEST	SW8081A	TOXAPHENE	CNC126	701SB01001RE	S244767*19*RE	SO	90	U	90	UJ	ug/kg	SS
PEST	SW8081A	TOXAPHENE	CNC126	701SB01002	S244767*20	SO	92	U	92	R	ug/kg	RE
PEST	SW8081A	TOXAPHENE	CNC126	701SB01002RE	S244767*20*RE	SO	92	U	92	UJ	ug/kg	SS
SVOA	SW8270C	2,4,5-TRICHLOROPHENOL	CNC126	701SB00301RE	S244767*5*RE	SO	1700	U	1700	R	ug/kg	RE
SVOA	SW8270C	2,4,5-TRICHLOROPHENOL	CNC134	701GW001M1RE	S245441*1*RE	WG	50	U	50	R	ug/l	RE
SVOA	SW8270C	2,4,5-TRICHLOROPHENOL	CNC134	701GW003M1RE	S245441*3*RE	WG	50	U	50	R	ug/l	RE
SVOA	SW8270C	2,4,5-TRICHLOROPHENOL	CNC134	701GW005M1RE	S245441*6*RE	WG	64	U	64	R	ug/l	RE
SVOA	SW8270C	2,4,5-TRICHLOROPHENOL	CNC134	701GW006M1RE	S245441*7*RE	WG	91	U	91	R	ug/l	RE
SVOA	SW8270C	2,4,5-TRICHLOROPHENOL	CNC134	701HW003M1RE	S245441*4*RE	WG	50	U	50	R	ug/l	RE
SVOA	SW8270C	2,4,6-TRICHLOROPHENOL	CNC126	701SB00202	S244767*4	SO	380	U	380	UJ	ug/kg	MD
SVOA	SW8270C	2,4,6-TRICHLOROPHENOL	CNC126	701SB00301RE	S244767*5*RE	SO	350	U	350	R	ug/kg	RE
SVOA	SW8270C	2,4,6-TRICHLOROPHENOL	CNC134	701GW001M1RE	S245441*1*RE	WG	10	U	10	R	ug/l	RE
SVOA	SW8270C	2,4,6-TRICHLOROPHENOL	CNC134	701GW003M1RE	S245441*3*RE	WG	10	U	10	R	ug/l	RE
SVOA	SW8270C	2,4,6-TRICHLOROPHENOL	CNC134	701GW005M1RE	S245441*6*RE	WG	13	U	13	R	ug/l	RE
SVOA	SW8270C	2,4,6-TRICHLOROPHENOL	CNC134	701GW006M1RE	S245441*7*RE	WG	18	U	18	R	ug/l	RE
SVOA	SW8270C	2,4,6-TRICHLOROPHENOL	CNC134	701HW003M1RE	S245441*4*RE	WG	10	U	10	R	ug/l	RE
SVOA	SW8270C	2,4-DICHLOROPHENOL	CNC126	701SB00301	S244767*5	SO	350	U	350	UJ	ug/kg	IS
SVOA	SW8270C	2,4-DICHLOROPHENOL	CNC126	701SB00301RE	S244767*5*RE	SO	350	U	350	R	ug/kg	RE
SVOA	SW8270C	2,4-DICHLOROPHENOL	CNC134	701GW001M1RE	S245441*1*RE	WG	10	U	10	R	ug/l	RE
SVOA	SW8270C	2,4-DICHLOROPHENOL	CNC134	701GW003M1RE	S245441*3*RE	WG	10	U	10	R	ug/l	RE

Parameter Class	Analytical Method	Parameter	SDG	Sample ID	Lab Sample ID	Matrix	Lab Result	Lab Qual	Final Result	Final Qual	Units	Reasons
SVOA	SW8270C	2,4-DICHLOROPHENOL	CNC134	701GW005M1RE	S245441*6*RE	WG	13	U	13	R	ug/l	RE
SVOA	SW8270C	2,4-DICHLOROPHENOL	CNC134	701GW006M1RE	S245441*7*RE	WG	18	U	18	R	ug/l	RE
SVOA	SW8270C	2,4-DICHLOROPHENOL	CNC134	701HW003M1RE	S245441*4*RE	WG	10	U	10	R	ug/l	RE
SVOA	SW8270C	2,4-DIMETHYLPHENOL	CNC126	701SB00301	S244767*5	SO	350	U	350	UJ	ug/kg	IS
SVOA	SW8270C	2,4-DIMETHYLPHENOL	CNC126	701SB00301RE	S244767*5*RE	SO	350	U	350	R	ug/kg	RE
SVOA	SW8270C	2,4-DIMETHYLPHENOL	CNC134	701GW001M1RE	S245441*1*RE	WG	10	U	10	R	ug/l	RE
SVOA	SW8270C	2,4-DIMETHYLPHENOL	CNC134	701GW003M1RE	S245441*3*RE	WG	10	U	10	R	ug/l	RE
SVOA	SW8270C	2,4-DIMETHYLPHENOL	CNC134	701GW005M1RE	S245441*6*RE	WG	13	U	13	R	ug/l	RE
SVOA	SW8270C	2,4-DIMETHYLPHENOL	CNC134	701GW006M1RE	S245441*7*RE	WG	18	U	18	R	ug/l	RE
SVOA	SW8270C	2,4-DIMETHYLPHENOL	CNC134	701HW003M1RE	S245441*4*RE	WG	10	U	10	R	ug/l	RE
SVOA	SW8270C	2,4-DINITROPHENOL	CNC126	701SB00301RE	S244767*5*RE	SO	1700	U	1700	R	ug/kg	RE
SVOA	SW8270C	2,4-DINITROPHENOL	CNC134	701GW001M1RE	S245441*1*RE	WG	50	U	50	R	ug/l	RE
SVOA	SW8270C	2,4-DINITROPHENOL	CNC134	701GW003M1RE	S245441*3*RE	WG	50	U	50	R	ug/l	RE
SVOA	SW8270C	2,4-DINITROPHENOL	CNC134	701GW005M1RE	S245441*6*RE	WG	64	U	64	R	ug/l	RE
SVOA	SW8270C	2,4-DINITROPHENOL	CNC134	701GW006M1RE	S245441*7*RE	WG	91	U	91	R	ug/l	RE
SVOA	SW8270C	2,4-DINITROPHENOL	CNC134	701HW003M1RE	S245441*4*RE	WG	50	U	50	R	ug/l	RE
SVOA	SW8270C	2,4-DINITROTOLUENE	CNC126	701SB00301RE	S244767*5*RE	SO	350	U	350	R	ug/kg	RE
SVOA	SW8270C	2,4-DINITROTOLUENE	CNC134	701GW001M1RE	S245441*1*RE	WG	10	U	10	R	ug/l	RE
SVOA	SW8270C	2,4-DINITROTOLUENE	CNC134	701GW003M1RE	S245441*3*RE	WG	10	U	10	R	ug/l	RE
SVOA	SW8270C	2,4-DINITROTOLUENE	CNC134	701GW005M1RE	S245441*6*RE	WG	13	U	13	R	ug/l	RE
SVOA	SW8270C	2,4-DINITROTOLUENE	CNC134	701GW006M1RE	S245441*7*RE	WG	18	U	18	R	ug/l	RE
SVOA	SW8270C	2,4-DINITROTOLUENE	CNC134	701HW003M1RE	S245441*4*RE	WG	10	U	10	R	ug/l	RE
SVOA	SW8270C	2,6-DINITROTOLUENE	CNC126	701SB00301RE	S244767*5*RE	SO	350	U	350	R	ug/kg	RE
SVOA	SW8270C	2,6-DINITROTOLUENE	CNC134	701GW001M1RE	S245441*1*RE	WG	10	U	10	R	ug/l	RE
SVOA	SW8270C	2,6-DINITROTOLUENE	CNC134	701GW003M1RE	S245441*3*RE	WG	10	U	10	R	ug/l	RE
SVOA	SW8270C	2,6-DINITROTOLUENE	CNC134	701GW005M1RE	S245441*6*RE	WG	13	U	13	R	ug/l	RE
SVOA	SW8270C	2,6-DINITROTOLUENE	CNC134	701GW006M1RE	S245441*7*RE	WG	18	U	18	R	ug/l	RE
SVOA	SW8270C	2,6-DINITROTOLUENE	CNC134	701HW003M1RE	S245441*4*RE	WG	10	U	10	R	ug/l	RE
SVOA	SW8270C	2-CHLOROETHYL ETHER	CNC126	701SB00301RE	S244767*5*RE	SO	350	U	350	R	ug/kg	RE
SVOA	SW8270C	2-CHLOROETHYL ETHER	CNC134	701GW001M1RE	S245441*1*RE	WG	10	U	10	R	ug/l	RE
SVOA	SW8270C	2-CHLOROETHYL ETHER	CNC134	701GW003M1RE	S245441*3*RE	WG	10	U	10	R	ug/l	RE
SVOA	SW8270C	2-CHLOROETHYL ETHER	CNC134	701GW004M1	S245441*5	WG	10	U	10	UJ	ug/l	CC

Parameter Class	Analytical Method	Parameter	SDG	Sample ID	Lab Sample ID	Matrix	Lab Result	Lab Qual	Final Result	Final Qual	Units	Reasons
SVOA	SW8270C	2-CHLOROETHYL ETHER	CNC134	701GW005M1RE	S245441*6*RE	WG	13	U	13	R	ug/l	RE
SVOA	SW8270C	2-CHLOROETHYL ETHER	CNC134	701GW006M1RE	S245441*7*RE	WG	18	U	18	R	ug/l	RE
SVOA	SW8270C	2-CHLOROETHYL ETHER	CNC134	701HW003M1RE	S245441*4*RE	WG	10	U	10	R	ug/l	RE
SVOA	SW8270C	2-CHLORONAPHTHALENE	CNC126	701SB00301RE	S244767*5*RE	SO	350	U	350	R	ug/kg	RE
SVOA	SW8270C	2-CHLORONAPHTHALENE	CNC134	701GW001M1RE	S245441*1*RE	WG	10	U	10	R	ug/l	RE
SVOA	SW8270C	2-CHLORONAPHTHALENE	CNC134	701GW003M1RE	S245441*3*RE	WG	10	U	10	R	ug/l	RE
SVOA	SW8270C	2-CHLORONAPHTHALENE	CNC134	701GW005M1RE	S245441*6*RE	WG	13	U	13	R	ug/l	RE
SVOA	SW8270C	2-CHLORONAPHTHALENE	CNC134	701GW006M1RE	S245441*7*RE	WG	18	U	18	R	ug/l	RE
SVOA	SW8270C	2-CHLORONAPHTHALENE	CNC134	701HW003M1RE	S245441*4*RE	WG	10	U	10	R	ug/l	RE
SVOA	SW8270C	2-CHLOROPHENOL	CNC126	701SB00301RE	S244767*5*RE	SO	350	U	350	R	ug/kg	RE
SVOA	SW8270C	2-CHLOROPHENOL	CNC134	701GW001M1RE	S245441*1*RE	WG	10	U	10	R	ug/l	RE
SVOA	SW8270C	2-CHLOROPHENOL	CNC134	701GW003M1RE	S245441*3*RE	WG	10	U	10	R	ug/l	RE
SVOA	SW8270C	2-CHLOROPHENOL	CNC134	701GW005M1RE	S245441*6*RE	WG	13	U	13	R	ug/l	RE
SVOA	SW8270C	2-CHLOROPHENOL	CNC134	701GW006M1RE	S245441*7*RE	WG	18	U	18	R	ug/l	RE
SVOA	SW8270C	2-CHLOROPHENOL	CNC134	701HW003M1RE	S245441*4*RE	WG	10	U	10	R	ug/l	RE
SVOA	SW8270C	2-METHYLNAPHTHALENE	CNC126	701SB00301	S244767*5	SO	350	U	350	UJ	ug/kg	IS
SVOA	SW8270C	2-METHYLNAPHTHALENE	CNC126	701SB00301RE	S244767*5*RE	SO	350	U	350	R	ug/kg	RE
SVOA	SW8270C	2-METHYLNAPHTHALENE	CNC134	701GW001M1RE	S245441*1*RE	WG	10	U	10	R	ug/l	RE
SVOA	SW8270C	2-METHYLNAPHTHALENE	CNC134	701GW003M1RE	S245441*3*RE	WG	10	U	10	R	ug/l	RE
SVOA	SW8270C	2-METHYLNAPHTHALENE	CNC134	701GW005M1RE	S245441*6*RE	WG	13	U	13	R	ug/l	RE
SVOA	SW8270C	2-METHYLNAPHTHALENE	CNC134	701GW006M1RE	S245441*7*RE	WG	18	U	18	R	ug/l	RE
SVOA	SW8270C	2-METHYLNAPHTHALENE	CNC134	701HW003M1RE	S245441*4*RE	WG	10	U	10	R	ug/l	RE
SVOA	SW8270C	2-METHYLPHENOL (o-CRESOL)	CNC126	701SB00301RE	S244767*5*RE	SO	350	U	350	R	ug/kg	RE
SVOA	SW8270C	2-METHYLPHENOL (o-CRESOL)	CNC134	701GW001M1RE	S245441*1*RE	WG	10	U	10	R	ug/l	RE
SVOA	SW8270C	2-METHYLPHENOL (o-CRESOL)	CNC134	701GW003M1RE	S245441*3*RE	WG	10	U	10	R	ug/l	RE
SVOA	SW8270C	2-METHYLPHENOL (o-CRESOL)	CNC134	701GW005M1RE	S245441*6*RE	WG	13	U	13	R	ug/l	RE
SVOA	SW8270C	2-METHYLPHENOL (o-CRESOL)	CNC134	701GW006M1RE	S245441*7*RE	WG	18	U	18	R	ug/l	RE
SVOA	SW8270C	2-METHYLPHENOL (o-CRESOL)	CNC134	701HW003M1RE	S245441*4*RE	WG	10	U	10	R	ug/l	RE
SVOA	SW8270C	2-NITROANILINE	CNC126	701SB00301RE	S244767*5*RE	SO	1700	U	1700	R	ug/kg	RE
SVOA	SW8270C	2-NITROANILINE	CNC134	701GW001M1RE	S245441*1*RE	WG	50	U	50	R	ug/l	RE
SVOA	SW8270C	2-NITROANILINE	CNC134	701GW003M1RE	S245441*3*RE	WG	50	U	50	R	ug/l	RE
SVOA	SW8270C	2-NITROANILINE	CNC134	701GW005M1RE	S245441*6*RE	WG	64	U	64	R	ug/l	RE

Attachment 1 - Changed Qualifiers and Results
Zone E, AOC 701 - Data Validation

Parameter Class	Analytical Method	Parameter	SDG	Sample ID	Lab Sample ID	Matrix	Lab Result	Lab Qual	Final Result	Final Qual	Units	Reasons
SVOA	SW8270C	2-NITROANILINE	CNC134	701GW006M1RE	S245441*7*RE	WG	91	U	91	R	ug/l	RE
SVOA	SW8270C	2-NITROANILINE	CNC134	701HW003M1RE	S245441*4*RE	WG	50	U	50	R	ug/l	RE
SVOA	SW8270C	2-NITROPHENOL	CNC126	701SB00301	S244767*5	SO	350	U	350	UJ	ug/kg	IS
SVOA	SW8270C	2-NITROPHENOL	CNC126	701SB00301RE	S244767*5*RE	SO	350	U	350	R	ug/kg	RE
SVOA	SW8270C	2-NITROPHENOL	CNC134	701GW001M1RE	S245441*1*RE	WG	10	U	10	R	ug/l	RE
SVOA	SW8270C	2-NITROPHENOL	CNC134	701GW003M1RE	S245441*3*RE	WG	10	U	10	R	ug/l	RE
SVOA	SW8270C	2-NITROPHENOL	CNC134	701GW005M1RE	S245441*6*RE	WG	13	U	13	R	ug/l	RE
SVOA	SW8270C	2-NITROPHENOL	CNC134	701GW006M1RE	S245441*7*RE	WG	18	U	18	R	ug/l	RE
SVOA	SW8270C	2-NITROPHENOL	CNC134	701HW003M1RE	S245441*4*RE	WG	10	U	10	R	ug/l	RE
SVOA	SW8270C	3,3'-DICHLOROBENZIDINE	CNC126	701SB00301RE	S244767*5*RE	SO	690	U	690	R	ug/kg	RE
SVOA	SW8270C	3,3'-DICHLOROBENZIDINE	CNC134	701GW001M1	S245441*1	WG	20	U	20	UJ	ug/l	CC
SVOA	SW8270C	3,3'-DICHLOROBENZIDINE	CNC134	701GW001M1RE	S245441*1*RE	WG	20	U	20	R	ug/l	RE
SVOA	SW8270C	3,3'-DICHLOROBENZIDINE	CNC134	701GW003M1	S245441*3	WG	20	U	20	UJ	ug/l	CC
SVOA	SW8270C	3,3'-DICHLOROBENZIDINE	CNC134	701GW003M1RE	S245441*3*RE	WG	20	U	20	R	ug/l	RE
SVOA	SW8270C	3,3'-DICHLOROBENZIDINE	CNC134	701GW005M1	S245441*6	WG	20	U	20	UJ	ug/l	CC
SVOA	SW8270C	3,3'-DICHLOROBENZIDINE	CNC134	701GW005M1RE	S245441*6*RE	WG	26	U	26	R	ug/l	RE
SVOA	SW8270C	3,3'-DICHLOROBENZIDINE	CNC134	701GW006M1	S245441*7	WG	20	U	20	UJ	ug/l	CC
SVOA	SW8270C	3,3'-DICHLOROBENZIDINE	CNC134	701GW006M1RE	S245441*7*RE	WG	36	U	36	R	ug/l	RE
SVOA	SW8270C	3,3'-DICHLOROBENZIDINE	CNC134	701HW003M1	S245441*4	WG	20	U	20	UJ	ug/l	CC
SVOA	SW8270C	3,3'-DICHLOROBENZIDINE	CNC134	701HW003M1RE	S245441*4*RE	WG	20	U	20	R	ug/l	RE
SVOA	SW8270C	3-NITROANILINE	CNC126	701SB00301RE	S244767*5*RE	SO	1700	U	1700	R	ug/kg	RE
SVOA	SW8270C	3-NITROANILINE	CNC134	701GW001M1RE	S245441*1*RE	WG	50	U	50	R	ug/l	RE
SVOA	SW8270C	3-NITROANILINE	CNC134	701GW003M1RE	S245441*3*RE	WG	50	U	50	R	ug/l	RE
SVOA	SW8270C	3-NITROANILINE	CNC134	701GW005M1RE	S245441*6*RE	WG	64	U	64	R	ug/l	RE
SVOA	SW8270C	3-NITROANILINE	CNC134	701GW006M1RE	S245441*7*RE	WG	91	U	91	R	ug/l	RE
SVOA	SW8270C	3-NITROANILINE	CNC134	701HW003M1RE	S245441*4*RE	WG	50	U	50	R	ug/l	RE
SVOA	SW8270C	4,6-DINITRO-2-METHYLPHENOL	CNC126	701SB00301RE	S244767*5*RE	SO	1700	U	1700	R	ug/kg	RE
SVOA	SW8270C	4,6-DINITRO-2-METHYLPHENOL	CNC134	701GW001M1RE	S245441*1*RE	WG	50	U	50	R	ug/l	RE
SVOA	SW8270C	4,6-DINITRO-2-METHYLPHENOL	CNC134	701GW003M1RE	S245441*3*RE	WG	50	U	50	R	ug/l	RE
SVOA	SW8270C	4,6-DINITRO-2-METHYLPHENOL	CNC134	701GW005M1RE	S245441*6*RE	WG	64	U	64	R	ug/l	RE
SVOA	SW8270C	4,6-DINITRO-2-METHYLPHENOL	CNC134	701GW006M1RE	S245441*7*RE	WG	91	U	91	R	ug/l	RE
SVOA	SW8270C	4,6-DINITRO-2-METHYLPHENOL	CNC134	701HW003M1RE	S245441*4*RE	WG	50	U	50	R	ug/l	RE

Parameter Class	Analytical Method	Parameter	SDG	Sample ID	Lab Sample ID	Matrix	Lab Result	Lab Qual	Final Result	Final Qual	Units	Reasons
SVOA	SW8270C	4-BROMOPHENYL PHENYL ETHER	CNC126	701SB00202	S244767*4	SO	380	U	380	UJ	ug/kg	MD
SVOA	SW8270C	4-BROMOPHENYL PHENYL ETHER	CNC126	701SB00301RE	S244767*5*RE	SO	350	U	350	R	ug/kg	RE
SVOA	SW8270C	4-BROMOPHENYL PHENYL ETHER	CNC134	701GW001M1RE	S245441*1*RE	WG	10	U	10	R	ug/l	RE
SVOA	SW8270C	4-BROMOPHENYL PHENYL ETHER	CNC134	701GW003M1RE	S245441*3*RE	WG	10	U	10	R	ug/l	RE
SVOA	SW8270C	4-BROMOPHENYL PHENYL ETHER	CNC134	701GW005M1RE	S245441*6*RE	WG	13	U	13	R	ug/l	RE
SVOA	SW8270C	4-BROMOPHENYL PHENYL ETHER	CNC134	701GW006M1RE	S245441*7*RE	WG	18	U	18	R	ug/l	RE
SVOA	SW8270C	4-BROMOPHENYL PHENYL ETHER	CNC134	701HW003M1RE	S245441*4*RE	WG	10	U	10	R	ug/l	RE
SVOA	SW8270C	4-CHLORO-3-METHYLPHENOL	CNC126	701SB00301	S244767*5	SO	350	U	350	UJ	ug/kg	IS
SVOA	SW8270C	4-CHLORO-3-METHYLPHENOL	CNC126	701SB00301RE	S244767*5*RE	SO	350	U	350	R	ug/kg	RE
SVOA	SW8270C	4-CHLORO-3-METHYLPHENOL	CNC134	701GW001M1RE	S245441*1*RE	WG	10	U	10	R	ug/l	RE
SVOA	SW8270C	4-CHLORO-3-METHYLPHENOL	CNC134	701GW003M1RE	S245441*3*RE	WG	10	U	10	R	ug/l	RE
SVOA	SW8270C	4-CHLORO-3-METHYLPHENOL	CNC134	701GW005M1RE	S245441*6*RE	WG	13	U	13	R	ug/l	RE
SVOA	SW8270C	4-CHLORO-3-METHYLPHENOL	CNC134	701GW006M1RE	S245441*7*RE	WG	18	U	18	R	ug/l	RE
SVOA	SW8270C	4-CHLORO-3-METHYLPHENOL	CNC134	701HW003M1RE	S245441*4*RE	WG	10	U	10	R	ug/l	RE
SVOA	SW8270C	4-CHLOROANILINE	CNC126	701SB00301	S244767*5	SO	350	U	350	UJ	ug/kg	IS
SVOA	SW8270C	4-CHLOROANILINE	CNC126	701SB00301RE	S244767*5*RE	SO	350	U	350	R	ug/kg	RE
SVOA	SW8270C	4-CHLOROANILINE	CNC134	701GW001M1RE	S245441*1*RE	WG	10	U	10	R	ug/l	RE
SVOA	SW8270C	4-CHLOROANILINE	CNC134	701GW003M1RE	S245441*3*RE	WG	10	U	10	R	ug/l	RE
SVOA	SW8270C	4-CHLOROANILINE	CNC134	701GW005M1RE	S245441*6*RE	WG	13	U	13	R	ug/l	RE
SVOA	SW8270C	4-CHLOROANILINE	CNC134	701GW006M1RE	S245441*7*RE	WG	18	U	18	R	ug/l	RE
SVOA	SW8270C	4-CHLOROANILINE	CNC134	701HW003M1RE	S245441*4*RE	WG	10	U	10	R	ug/l	RE
SVOA	SW8270C	4-CHLOROPHENYL PHENYL ETHER	CNC126	701SB00301RE	S244767*5*RE	SO	350	U	350	R	ug/kg	RE
SVOA	SW8270C	4-CHLOROPHENYL PHENYL ETHER	CNC134	701GW001M1RE	S245441*1*RE	WG	10	U	10	R	ug/l	RE
SVOA	SW8270C	4-CHLOROPHENYL PHENYL ETHER	CNC134	701GW003M1RE	S245441*3*RE	WG	10	U	10	R	ug/l	RE
SVOA	SW8270C	4-CHLOROPHENYL PHENYL ETHER	CNC134	701GW005M1RE	S245441*6*RE	WG	13	U	13	R	ug/l	RE
SVOA	SW8270C	4-CHLOROPHENYL PHENYL ETHER	CNC134	701GW006M1RE	S245441*7*RE	WG	18	U	18	R	ug/l	RE
SVOA	SW8270C	4-CHLOROPHENYL PHENYL ETHER	CNC134	701HW003M1RE	S245441*4*RE	WG	10	U	10	R	ug/l	RE
SVOA	SW8270C	4-NITROANILINE	CNC126	701SB00301RE	S244767*5*RE	SO	1700	U	1700	R	ug/kg	RE
SVOA	SW8270C	4-NITROANILINE	CNC134	701GW001M1RE	S245441*1*RE	WG	50	U	50	R	ug/l	RE
SVOA	SW8270C	4-NITROANILINE	CNC134	701GW003M1RE	S245441*3*RE	WG	50	U	50	R	ug/l	RE
SVOA	SW8270C	4-NITROANILINE	CNC134	701GW005M1RE	S245441*6*RE	WG	64	U	64	R	ug/l	RE
SVOA	SW8270C	4-NITROANILINE	CNC134	701GW006M1RE	S245441*7*RE	WG	91	U	91	R	ug/l	RE

Parameter Class	Analytical Method	Parameter	SDG	Sample ID	Lab Sample ID	Matrix	Lab Result	Lab Qual	Final Result	Final Qual	Units	Reasons
SVOA	SW8270C	4-NITROANILINE	CNC134	701HW003M1RE	S245441*4*RE	WG	50	U	50	R	ug/l	RE
SVOA	SW8270C	4-NITROPHENOL	CNC126	701SB00301RE	S244767*5*RE	SO	1700	U	1700	R	ug/kg	RE
SVOA	SW8270C	4-NITROPHENOL	CNC134	701GW001M1RE	S245441*1*RE	WG	50	U	50	R	ug/l	RE
SVOA	SW8270C	4-NITROPHENOL	CNC134	701GW003M1RE	S245441*3*RE	WG	50	U	50	R	ug/l	RE
SVOA	SW8270C	4-NITROPHENOL	CNC134	701GW005M1RE	S245441*6*RE	WG	64	U	64	R	ug/l	RE
SVOA	SW8270C	4-NITROPHENOL	CNC134	701GW006M1RE	S245441*7*RE	WG	91	U	91	R	ug/l	RE
SVOA	SW8270C	4-NITROPHENOL	CNC134	701HW003M1RE	S245441*4*RE	WG	50	U	50	R	ug/l	RE
SVOA	SW8270C	ACENAPHTHENE	CNC126	701SB00202	S244767*4	SO	380	U	380	UJ	ug/kg	MD
SVOA	SW8270C	ACENAPHTHENE	CNC126	701SB00301RE	S244767*5*RE	SO	350	U	350	R	ug/kg	RE
SVOA	SW8270C	ACENAPHTHENE	CNC134	701GW001M1RE	S245441*1*RE	WG	10	U	10	R	ug/l	RE
SVOA	SW8270C	ACENAPHTHENE	CNC134	701GW003M1RE	S245441*3*RE	WG	10	U	10	R	ug/l	RE
SVOA	SW8270C	ACENAPHTHENE	CNC134	701GW005M1RE	S245441*6*RE	WG	13	U	13	R	ug/l	RE
SVOA	SW8270C	ACENAPHTHENE	CNC134	701GW006M1RE	S245441*7*RE	WG	18	U	18	R	ug/l	RE
SVOA	SW8270C	ACENAPHTHENE	CNC134	701HW003M1RE	S245441*4*RE	WG	10	U	10	R	ug/l	RE
SVOA	SW8270C	ACENAPHTHYLENE	CNC126	701SB00301RE	S244767*5*RE	SO	350	U	350	R	ug/kg	RE
SVOA	SW8270C	ACENAPHTHYLENE	CNC134	701GW001M1RE	S245441*1*RE	WG	10	U	10	R	ug/l	RE
SVOA	SW8270C	ACENAPHTHYLENE	CNC134	701GW003M1RE	S245441*3*RE	WG	10	U	10	R	ug/l	RE
SVOA	SW8270C	ACENAPHTHYLENE	CNC134	701GW005M1RE	S245441*6*RE	WG	13	U	13	R	ug/l	RE
SVOA	SW8270C	ACENAPHTHYLENE	CNC134	701GW006M1RE	S245441*7*RE	WG	18	U	18	R	ug/l	RE
SVOA	SW8270C	ACENAPHTHYLENE	CNC134	701HW003M1RE	S245441*4*RE	WG	10	U	10	R	ug/l	RE
SVOA	SW8270C	ANTHRACENE	CNC126	701SB00301RE	S244767*5*RE	SO	350	U	350	R	ug/kg	RE
SVOA	SW8270C	ANTHRACENE	CNC134	701GW001M1RE	S245441*1*RE	WG	10	U	10	R	ug/l	RE
SVOA	SW8270C	ANTHRACENE	CNC134	701GW003M1RE	S245441*3*RE	WG	10	U	10	R	ug/l	RE
SVOA	SW8270C	ANTHRACENE	CNC134	701GW005M1RE	S245441*6*RE	WG	13	U	13	R	ug/l	RE
SVOA	SW8270C	ANTHRACENE	CNC134	701GW006M1RE	S245441*7*RE	WG	18	U	18	R	ug/l	RE
SVOA	SW8270C	ANTHRACENE	CNC134	701HW003M1RE	S245441*4*RE	WG	10	U	10	R	ug/l	RE
SVOA	SW8270C	BENZO(a)ANTHRACENE	CNC126	701SB00301RE	S244767*5*RE	SO	350	U	350	R	ug/kg	RE
SVOA	SW8270C	BENZO(a)ANTHRACENE	CNC134	701GW001M1RE	S245441*1*RE	WG	10	U	10	R	ug/l	RE
SVOA	SW8270C	BENZO(a)ANTHRACENE	CNC134	701GW003M1RE	S245441*3*RE	WG	10	U	10	R	ug/l	RE
SVOA	SW8270C	BENZO(a)ANTHRACENE	CNC134	701GW005M1RE	S245441*6*RE	WG	13	U	13	R	ug/l	RE
SVOA	SW8270C	BENZO(a)ANTHRACENE	CNC134	701GW006M1RE	S245441*7*RE	WG	18	U	18	R	ug/l	RE
SVOA	SW8270C	BENZO(a)ANTHRACENE	CNC134	701HW003M1RE	S245441*4*RE	WG	10	U	10	R	ug/l	RE

Parameter Class	Analytical Method	Parameter	SDG	Sample ID	Lab Sample ID	Matrix	Lab Result	Lab Qual	Final Result	Final Qual	Units	Reasons
SVOA	SW8270C	BENZO(a)PYRENE	CNC126	701SB00301RE	S244767*5*RE	SO	350	U	350	R	ug/kg	RE
SVOA	SW8270C	BENZO(a)PYRENE	CNC134	701GW001M1RE	S245441*1*RE	WG	10	U	10	R	ug/l	RE
SVOA	SW8270C	BENZO(a)PYRENE	CNC134	701GW003M1RE	S245441*3*RE	WG	10	U	10	R	ug/l	RE
SVOA	SW8270C	BENZO(a)PYRENE	CNC134	701GW005M1RE	S245441*6*RE	WG	13	U	13	R	ug/l	RE
SVOA	SW8270C	BENZO(a)PYRENE	CNC134	701GW006M1RE	S245441*7*RE	WG	18	U	18	R	ug/l	RE
SVOA	SW8270C	BENZO(a)PYRENE	CNC134	701HW003M1RE	S245441*4*RE	WG	10	U	10	R	ug/l	RE
SVOA	SW8270C	BENZO(b)FLUORANTHENE	CNC126	701SB00301RE	S244767*5*RE	SO	350	U	350	R	ug/kg	RE
SVOA	SW8270C	BENZO(b)FLUORANTHENE	CNC134	701GW001M1RE	S245441*1*RE	WG	10	U	10	R	ug/l	RE
SVOA	SW8270C	BENZO(b)FLUORANTHENE	CNC134	701GW002M1	S245441*2	WG	10	U	10	UJ	ug/l	CC
SVOA	SW8270C	BENZO(b)FLUORANTHENE	CNC134	701GW003M1RE	S245441*3*RE	WG	10	U	10	R	ug/l	RE
SVOA	SW8270C	BENZO(b)FLUORANTHENE	CNC134	701GW005M1RE	S245441*6*RE	WG	13	U	13	R	ug/l	RE
SVOA	SW8270C	BENZO(b)FLUORANTHENE	CNC134	701GW006M1RE	S245441*7*RE	WG	18	U	18	R	ug/l	RE
SVOA	SW8270C	BENZO(b)FLUORANTHENE	CNC134	701GW01DM1	S245441*8	WG	10	U	10	UJ	ug/l	CC
SVOA	SW8270C	BENZO(b)FLUORANTHENE	CNC134	701GW02DM1	S245441*9	WG	10	U	10	UJ	ug/l	CC
SVOA	SW8270C	BENZO(b)FLUORANTHENE	CNC134	701GW03DM1	S245441*10	WG	10	U	10	UJ	ug/l	CC
SVOA	SW8270C	BENZO(b)FLUORANTHENE	CNC134	701GW04DM1	S245441*11	WG	10	U	10	UJ	ug/l	CC
SVOA	SW8270C	BENZO(b)FLUORANTHENE	CNC134	701GW05DM1	S245441*12	WG	10	U	10	UJ	ug/l	CC
SVOA	SW8270C	BENZO(b)FLUORANTHENE	CNC134	701GW06DM1	S245441*13	WG	10	U	10	UJ	ug/l	CC
SVOA	SW8270C	BENZO(b)FLUORANTHENE	CNC134	701HW003M1RE	S245441*4*RE	WG	10	U	10	R	ug/l	RE
SVOA	SW8270C	BENZO(g,h,i)PERYLENE	CNC126	701SB00301RE	S244767*5*RE	SO	350	U	350	R	ug/kg	RE
SVOA	SW8270C	BENZO(g,h,i)PERYLENE	CNC134	701GW001M1	S245441*1	WG	10	U	10	UJ	ug/l	CC
SVOA	SW8270C	BENZO(g,h,i)PERYLENE	CNC134	701GW001M1RE	S245441*1*RE	WG	10	U	10	R	ug/l	RE
SVOA	SW8270C	BENZO(g,h,i)PERYLENE	CNC134	701GW002M1	S245441*2	WG	0.87	JB	10	UJ	ug/l	BL,CC
SVOA	SW8270C	BENZO(g,h,i)PERYLENE	CNC134	701GW003M1	S245441*3	WG	10	U	10	UJ	ug/l	CC
SVOA	SW8270C	BENZO(g,h,i)PERYLENE	CNC134	701GW003M1RE	S245441*3*RE	WG	1.3	J	1.3	R	ug/l	RE
SVOA	SW8270C	BENZO(g,h,i)PERYLENE	CNC134	701GW005M1	S245441*6	WG	10	U	10	UJ	ug/l	CC
SVOA	SW8270C	BENZO(g,h,i)PERYLENE	CNC134	701GW005M1RE	S245441*6*RE	WG	13	U	13	R	ug/l	RE
SVOA	SW8270C	BENZO(g,h,i)PERYLENE	CNC134	701GW006M1	S245441*7	WG	10	U	10	UJ	ug/l	CC
SVOA	SW8270C	BENZO(g,h,i)PERYLENE	CNC134	701GW006M1RE	S245441*7*RE	WG	18	U	18	R	ug/l	RE
SVOA	SW8270C	BENZO(g,h,i)PERYLENE	CNC134	701GW01DM1	S245441*8	WG	10	U	10	UJ	ug/l	CC
SVOA	SW8270C	BENZO(g,h,i)PERYLENE	CNC134	701GW02DM1	S245441*9	WG	10	U	10	UJ	ug/l	CC
SVOA	SW8270C	BENZO(g,h,i)PERYLENE	CNC134	701GW03DM1	S245441*10	WG	10	U	10	UJ	ug/l	CC

Attachment 1 - Changed Qualifiers and Results
Zone E, AOC 701 - Data Validation

Parameter Class	Analytical Method	Parameter	SDG	Sample ID	Lab Sample ID	Matrix	Lab Result	Lab Qual	Final Result	Final Qual	Units	Reasons
SVOA	SW8270C	BENZO(g,h,i)PERYLENE	CNC134	701GW04DM1	S245441*11	WG	10	U	10	UJ	ug/l	CC
SVOA	SW8270C	BENZO(g,h,i)PERYLENE	CNC134	701GW05DM1	S245441*12	WG	10	U	10	UJ	ug/l	CC
SVOA	SW8270C	BENZO(g,h,i)PERYLENE	CNC134	701GW06DM1	S245441*13	WG	10	U	10	UJ	ug/l	CC
SVOA	SW8270C	BENZO(g,h,i)PERYLENE	CNC134	701HW003M1	S245441*4	WG	10	U	10	UJ	ug/l	CC
SVOA	SW8270C	BENZO(g,h,i)PERYLENE	CNC134	701HW003M1RE	S245441*4*RE	WG	0.68	J	0.68	R	ug/l	RE
SVOA	SW8270C	BENZO(k)FLUORANTHENE	CNC126	701SB00301RE	S244767*5*RE	SO	350	U	350	R	ug/kg	RE
SVOA	SW8270C	BENZO(k)FLUORANTHENE	CNC134	701GW001M1	S245441*1	WG	10	U	10	UJ	ug/l	CC
SVOA	SW8270C	BENZO(k)FLUORANTHENE	CNC134	701GW001M1RE	S245441*1*RE	WG	10	U	10	R	ug/l	RE
SVOA	SW8270C	BENZO(k)FLUORANTHENE	CNC134	701GW002M1	S245441*2	WG	10	U	10	UJ	ug/l	CC
SVOA	SW8270C	BENZO(k)FLUORANTHENE	CNC134	701GW003M1	S245441*3	WG	10	U	10	UJ	ug/l	CC
SVOA	SW8270C	BENZO(k)FLUORANTHENE	CNC134	701GW003M1RE	S245441*3*RE	WG	10	U	10	R	ug/l	RE
SVOA	SW8270C	BENZO(k)FLUORANTHENE	CNC134	701GW005M1	S245441*6	WG	10	U	10	UJ	ug/l	CC
SVOA	SW8270C	BENZO(k)FLUORANTHENE	CNC134	701GW005M1RE	S245441*6*RE	WG	13	U	13	R	ug/l	RE
SVOA	SW8270C	BENZO(k)FLUORANTHENE	CNC134	701GW006M1	S245441*7	WG	10	U	10	UJ	ug/l	CC
SVOA	SW8270C	BENZO(k)FLUORANTHENE	CNC134	701GW006M1RE	S245441*7*RE	WG	18	U	18	R	ug/l	RE
SVOA	SW8270C	BENZO(k)FLUORANTHENE	CNC134	701GW01DM1	S245441*8	WG	10	U	10	UJ	ug/l	CC
SVOA	SW8270C	BENZO(k)FLUORANTHENE	CNC134	701GW02DM1	S245441*9	WG	10	U	10	UJ	ug/l	CC
SVOA	SW8270C	BENZO(k)FLUORANTHENE	CNC134	701GW03DM1	S245441*10	WG	10	U	10	UJ	ug/l	CC
SVOA	SW8270C	BENZO(k)FLUORANTHENE	CNC134	701GW04DM1	S245441*11	WG	10	U	10	UJ	ug/l	CC
SVOA	SW8270C	BENZO(k)FLUORANTHENE	CNC134	701GW05DM1	S245441*12	WG	10	U	10	UJ	ug/l	CC
SVOA	SW8270C	BENZO(k)FLUORANTHENE	CNC134	701GW06DM1	S245441*13	WG	10	U	10	UJ	ug/l	CC
SVOA	SW8270C	BENZO(k)FLUORANTHENE	CNC134	701HW003M1	S245441*4	WG	10	U	10	UJ	ug/l	CC
SVOA	SW8270C	BENZO(k)FLUORANTHENE	CNC134	701HW003M1RE	S245441*4*RE	WG	10	U	10	R	ug/l	RE
SVOA	SW8270C	Benzoic acid	CNC126	701SB00301	S244767*5	SO	1700	U	1700	UJ	ug/kg	IS
SVOA	SW8270C	Benzoic acid	CNC126	701SB00301RE	S244767*5*RE	SO	1700	U	1700	R	ug/kg	RE
SVOA	SW8270C	Benzoic acid	CNC134	701GW001M1RE	S245441*1*RE	WG	50	U	50	R	ug/l	RE
SVOA	SW8270C	Benzoic acid	CNC134	701GW003M1RE	S245441*3*RE	WG	50	U	50	R	ug/l	RE
SVOA	SW8270C	Benzoic acid	CNC134	701GW005M1RE	S245441*6*RE	WG	64	U	64	R	ug/l	RE
SVOA	SW8270C	Benzoic acid	CNC134	701GW006M1RE	S245441*7*RE	WG	91	U	91	R	ug/l	RE
SVOA	SW8270C	Benzoic acid	CNC134	701HW003M1RE	S245441*4*RE	WG	50	U	50	R	ug/l	RE
SVOA	SW8270C	Benzyl alcohol	CNC126	701SB00301RE	S244767*5*RE	SO	350	U	350	R	ug/kg	RE
SVOA	SW8270C	Benzyl alcohol	CNC134	701GW001M1RE	S245441*1*RE	WG	10	U	10	R	ug/l	RE

Parameter Class	Analytical Method	Parameter	SDG	Sample ID	Lab Sample ID	Matrix	Lab Result	Lab Qual	Final Result	Final Qual	Units	Reasons
SVOA	SW8270C	Benzyl alcohol	CNC134	701GW003M1RE	S245441*3*RE	WG	10	U	10	R	ug/l	RE
SVOA	SW8270C	Benzyl alcohol	CNC134	701GW005M1RE	S245441*6*RE	WG	13	U	13	R	ug/l	RE
SVOA	SW8270C	Benzyl alcohol	CNC134	701GW006M1RE	S245441*7*RE	WG	18	U	18	R	ug/l	RE
SVOA	SW8270C	Benzyl alcohol	CNC134	701HW003M1RE	S245441*4*RE	WG	10	U	10	R	ug/l	RE
SVOA	SW8270C	BENZYL BUTYL PHTHALATE	CNC126	701SB00301RE	S244767*5*RE	SO	350	U	350	R	ug/kg	RE
SVOA	SW8270C	BENZYL BUTYL PHTHALATE	CNC134	701GW001M1RE	S245441*1*RE	WG	10	U	10	R	ug/l	RE
SVOA	SW8270C	BENZYL BUTYL PHTHALATE	CNC134	701GW003M1RE	S245441*3*RE	WG	10	U	10	R	ug/l	RE
SVOA	SW8270C	BENZYL BUTYL PHTHALATE	CNC134	701GW005M1RE	S245441*6*RE	WG	13	U	13	R	ug/l	RE
SVOA	SW8270C	BENZYL BUTYL PHTHALATE	CNC134	701GW006M1RE	S245441*7*RE	WG	18	U	18	R	ug/l	RE
SVOA	SW8270C	BENZYL BUTYL PHTHALATE	CNC134	701HW003M1RE	S245441*4*RE	WG	10	U	10	R	ug/l	RE
SVOA	SW8270C	bis(2-CHLOROETHOXY) METHANE	CNC126	701SB00301	S244767*5	SO	350	U	350	UJ	ug/kg	IS
SVOA	SW8270C	bis(2-CHLOROETHOXY) METHANE	CNC126	701SB00301RE	S244767*5*RE	SO	350	U	350	R	ug/kg	RE
SVOA	SW8270C	bis(2-CHLOROETHOXY) METHANE	CNC134	701GW001M1RE	S245441*1*RE	WG	10	U	10	R	ug/l	RE
SVOA	SW8270C	bis(2-CHLOROETHOXY) METHANE	CNC134	701GW003M1RE	S245441*3*RE	WG	10	U	10	R	ug/l	RE
SVOA	SW8270C	bis(2-CHLOROETHOXY) METHANE	CNC134	701GW005M1RE	S245441*6*RE	WG	13	U	13	R	ug/l	RE
SVOA	SW8270C	bis(2-CHLOROETHOXY) METHANE	CNC134	701GW006M1RE	S245441*7*RE	WG	18	U	18	R	ug/l	RE
SVOA	SW8270C	bis(2-CHLOROETHOXY) METHANE	CNC134	701HW003M1RE	S245441*4*RE	WG	10	U	10	R	ug/l	RE
SVOA	SW8270C	Bis(2-Chloroisopropyl)Ether	CNC126	701SB00301RE	S244767*5*RE	SO	350	U	350	R	ug/kg	RE
SVOA	SW8270C	Bis(2-Chloroisopropyl)Ether	CNC134	701GW001M1RE	S245441*1*RE	WG	10	U	10	R	ug/l	RE
SVOA	SW8270C	Bis(2-Chloroisopropyl)Ether	CNC134	701GW003M1RE	S245441*3*RE	WG	10	U	10	R	ug/l	RE
SVOA	SW8270C	Bis(2-Chloroisopropyl)Ether	CNC134	701GW005M1RE	S245441*6*RE	WG	13	U	13	R	ug/l	RE
SVOA	SW8270C	Bis(2-Chloroisopropyl)Ether	CNC134	701GW006M1RE	S245441*7*RE	WG	18	U	18	R	ug/l	RE
SVOA	SW8270C	Bis(2-Chloroisopropyl)Ether	CNC134	701HW003M1RE	S245441*4*RE	WG	10	U	10	R	ug/l	RE
SVOA	SW8270C	bis(2-ETHYLHEXYL) PHTHALATE	CNC126	701SB00202	S244767*4	SO	380	U	380	UJ	ug/kg	MD
SVOA	SW8270C	bis(2-ETHYLHEXYL) PHTHALATE	CNC126	701SB00301RE	S244767*5*RE	SO	350	U	350	R	ug/kg	RE
SVOA	SW8270C	bis(2-ETHYLHEXYL) PHTHALATE	CNC134	701GW001M1RE	S245441*1*RE	WG	10	U	10	R	ug/l	RE
SVOA	SW8270C	bis(2-ETHYLHEXYL) PHTHALATE	CNC134	701GW003M1RE	S245441*3*RE	WG	10	U	10	R	ug/l	RE
SVOA	SW8270C	bis(2-ETHYLHEXYL) PHTHALATE	CNC134	701GW005M1RE	S245441*6*RE	WG	13	U	13	R	ug/l	RE
SVOA	SW8270C	bis(2-ETHYLHEXYL) PHTHALATE	CNC134	701GW006M1RE	S245441*7*RE	WG	1.1	J	1.1	R	ug/l	RE
SVOA	SW8270C	bis(2-ETHYLHEXYL) PHTHALATE	CNC134	701HW003M1RE	S245441*4*RE	WG	10	U	10	R	ug/l	RE
SVOA	SW8270C	CARBAZOLE	CNC126	701SB00301RE	S244767*5*RE	SO	350	U	350	R	ug/kg	RE
SVOA	SW8270C	CARBAZOLE	CNC134	701GW001M1RE	S245441*1*RE	WG	10	U	10	R	ug/l	RE

Attachment 1 - Changed Qualifiers and Results
Zone E, AOC 701 - Data Validation

Parameter Class	Analytical Method	Parameter	SDG	Sample ID	Lab Sample ID	Matrix	Lab Result	Lab Qual	Final Result	Final Qual	Units	Reasons
SVOA	SW8270C	CARBAZOLE	CNC134	701GW003M1RE	S245441*3*RE	WG	10	U	10	R	ug/l	RE
SVOA	SW8270C	CARBAZOLE	CNC134	701GW005M1RE	S245441*6*RE	WG	13	U	13	R	ug/l	RE
SVOA	SW8270C	CARBAZOLE	CNC134	701GW006M1RE	S245441*7*RE	WG	18	U	18	R	ug/l	RE
SVOA	SW8270C	CARBAZOLE	CNC134	701HW003M1RE	S245441*4*RE	WG	10	U	10	R	ug/l	RE
SVOA	SW8270C	CHRYSENE	CNC126	701SB00201	S244767*3	SO	370	J	370	J	ug/kg	CC
SVOA	SW8270C	CHRYSENE	CNC126	701SB00301RE	S244767*5*RE	SO	350	U	350	R	ug/kg	RE
SVOA	SW8270C	CHRYSENE	CNC126	701SB00601	S244767*11	SO	54	J	54	J	ug/kg	CC
SVOA	SW8270C	CHRYSENE	CNC134	701GW001M1RE	S245441*1*RE	WG	10	U	10	R	ug/l	RE
SVOA	SW8270C	CHRYSENE	CNC134	701GW003M1RE	S245441*3*RE	WG	10	U	10	R	ug/l	RE
SVOA	SW8270C	CHRYSENE	CNC134	701GW005M1RE	S245441*6*RE	WG	13	U	13	R	ug/l	RE
SVOA	SW8270C	CHRYSENE	CNC134	701GW006M1RE	S245441*7*RE	WG	18	U	18	R	ug/l	RE
SVOA	SW8270C	CHRYSENE	CNC134	701HW003M1RE	S245441*4*RE	WG	10	U	10	R	ug/l	RE
SVOA	SW8270C	DIBENZ(a,h)ANTHRACENE	CNC126	701SB00202	S244767*4	SO	380	U	380	UJ	ug/kg	MD
SVOA	SW8270C	DIBENZ(a,h)ANTHRACENE	CNC126	701SB00301RE	S244767*5*RE	SO	350	U	350	R	ug/kg	RE
SVOA	SW8270C	DIBENZ(a,h)ANTHRACENE	CNC134	701GW001M1	S245441*1	WG	10	U	10	UJ	ug/l	CC
SVOA	SW8270C	DIBENZ(a,h)ANTHRACENE	CNC134	701GW001M1RE	S245441*1*RE	WG	10	U	10	R	ug/l	RE
SVOA	SW8270C	DIBENZ(a,h)ANTHRACENE	CNC134	701GW002M1	S245441*2	WG	10	U	10	UJ	ug/l	CC
SVOA	SW8270C	DIBENZ(a,h)ANTHRACENE	CNC134	701GW003M1	S245441*3	WG	10	U	10	UJ	ug/l	CC
SVOA	SW8270C	DIBENZ(a,h)ANTHRACENE	CNC134	701GW003M1RE	S245441*3*RE	WG	1.1	J	1.1	R	ug/l	RE
SVOA	SW8270C	DIBENZ(a,h)ANTHRACENE	CNC134	701GW005M1	S245441*6	WG	10	U	10	UJ	ug/l	CC
SVOA	SW8270C	DIBENZ(a,h)ANTHRACENE	CNC134	701GW005M1RE	S245441*6*RE	WG	13	U	13	R	ug/l	RE
SVOA	SW8270C	DIBENZ(a,h)ANTHRACENE	CNC134	701GW006M1	S245441*7	WG	10	U	10	UJ	ug/l	CC
SVOA	SW8270C	DIBENZ(a,h)ANTHRACENE	CNC134	701GW006M1RE	S245441*7*RE	WG	18	U	18	R	ug/l	RE
SVOA	SW8270C	DIBENZ(a,h)ANTHRACENE	CNC134	701GW01DM1	S245441*8	WG	10	U	10	UJ	ug/l	CC
SVOA	SW8270C	DIBENZ(a,h)ANTHRACENE	CNC134	701GW02DM1	S245441*9	WG	10	U	10	UJ	ug/l	CC
SVOA	SW8270C	DIBENZ(a,h)ANTHRACENE	CNC134	701GW03DM1	S245441*10	WG	10	U	10	UJ	ug/l	CC
SVOA	SW8270C	DIBENZ(a,h)ANTHRACENE	CNC134	701GW04DM1	S245441*11	WG	10	U	10	UJ	ug/l	CC
SVOA	SW8270C	DIBENZ(a,h)ANTHRACENE	CNC134	701GW05DM1	S245441*12	WG	10	U	10	UJ	ug/l	CC
SVOA	SW8270C	DIBENZ(a,h)ANTHRACENE	CNC134	701GW06DM1	S245441*13	WG	10	U	10	UJ	ug/l	CC
SVOA	SW8270C	DIBENZ(a,h)ANTHRACENE	CNC134	701HW003M1	S245441*4	WG	10	U	10	UJ	ug/l	CC
SVOA	SW8270C	DIBENZ(a,h)ANTHRACENE	CNC134	701HW003M1RE	S245441*4*RE	WG	10	U	10	R	ug/l	RE
SVOA	SW8270C	DIBENZOFURAN	CNC126	701SB00301RE	S244767*5*RE	SO	350	U	350	R	ug/kg	RE

Parameter Class	Analytical Method	Parameter	SDG	Sample ID	Lab Sample ID	Matrix	Lab Result	Lab Qual	Final Result	Final Qual	Units	Reasons
SVOA	SW8270C	DIBENZOFURAN	CNC134	701GW001M1RE	S245441*1*RE	WG	10	U	10	R	ug/l	RE
SVOA	SW8270C	DIBENZOFURAN	CNC134	701GW003M1RE	S245441*3*RE	WG	10	U	10	R	ug/l	RE
SVOA	SW8270C	DIBENZOFURAN	CNC134	701GW005M1RE	S245441*6*RE	WG	13	U	13	R	ug/l	RE
SVOA	SW8270C	DIBENZOFURAN	CNC134	701GW006M1RE	S245441*7*RE	WG	18	U	18	R	ug/l	RE
SVOA	SW8270C	DIBENZOFURAN	CNC134	701HW003M1RE	S245441*4*RE	WG	10	U	10	R	ug/l	RE
SVOA	SW8270C	DIETHYL PHTHALATE	CNC126	701SB00301RE	S244767*5*RE	SO	350	U	350	R	ug/kg	RE
SVOA	SW8270C	DIETHYL PHTHALATE	CNC134	701GW001M1RE	S245441*1*RE	WG	10	U	10	R	ug/l	RE
SVOA	SW8270C	DIETHYL PHTHALATE	CNC134	701GW003M1RE	S245441*3*RE	WG	10	U	10	R	ug/l	RE
SVOA	SW8270C	DIETHYL PHTHALATE	CNC134	701GW005M1RE	S245441*6*RE	WG	13	U	13	R	ug/l	RE
SVOA	SW8270C	DIETHYL PHTHALATE	CNC134	701GW006M1RE	S245441*7*RE	WG	18	U	18	R	ug/l	RE
SVOA	SW8270C	DIETHYL PHTHALATE	CNC134	701HW003M1RE	S245441*4*RE	WG	10	U	10	R	ug/l	RE
SVOA	SW8270C	DIMETHYL PHTHALATE	CNC126	701SB00301RE	S244767*5*RE	SO	350	U	350	R	ug/kg	RE
SVOA	SW8270C	DIMETHYL PHTHALATE	CNC134	701GW001M1RE	S245441*1*RE	WG	10	U	10	R	ug/l	RE
SVOA	SW8270C	DIMETHYL PHTHALATE	CNC134	701GW003M1RE	S245441*3*RE	WG	10	U	10	R	ug/l	RE
SVOA	SW8270C	DIMETHYL PHTHALATE	CNC134	701GW005M1RE	S245441*6*RE	WG	13	U	13	R	ug/l	RE
SVOA	SW8270C	DIMETHYL PHTHALATE	CNC134	701GW006M1RE	S245441*7*RE	WG	18	U	18	R	ug/l	RE
SVOA	SW8270C	DIMETHYL PHTHALATE	CNC134	701HW003M1RE	S245441*4*RE	WG	10	U	10	R	ug/l	RE
SVOA	SW8270C	DI-n-BUTYL PHTHALATE	CNC126	701SB00301RE	S244767*5*RE	SO	350	U	350	R	ug/kg	RE
SVOA	SW8270C	DI-n-BUTYL PHTHALATE	CNC134	701GW001M1RE	S245441*1*RE	WG	10	U	10	R	ug/l	RE
SVOA	SW8270C	DI-n-BUTYL PHTHALATE	CNC134	701GW003M1RE	S245441*3*RE	WG	10	U	10	R	ug/l	RE
SVOA	SW8270C	DI-n-BUTYL PHTHALATE	CNC134	701GW005M1RE	S245441*6*RE	WG	1.4	J	1.4	R	ug/l	RE
SVOA	SW8270C	DI-n-BUTYL PHTHALATE	CNC134	701GW006M1RE	S245441*7*RE	WG	18	U	18	R	ug/l	RE
SVOA	SW8270C	DI-n-BUTYL PHTHALATE	CNC134	701HW003M1RE	S245441*4*RE	WG	10	U	10	R	ug/l	RE
SVOA	SW8270C	DI-n-OCTYLPHTHALATE	CNC126	701SB00301RE	S244767*5*RE	SO	350	U	350	R	ug/kg	RE
SVOA	SW8270C	DI-n-OCTYLPHTHALATE	CNC134	701GW001M1RE	S245441*1*RE	WG	10	U	10	R	ug/l	RE
SVOA	SW8270C	DI-n-OCTYLPHTHALATE	CNC134	701GW003M1RE	S245441*3*RE	WG	10	U	10	R	ug/l	RE
SVOA	SW8270C	DI-n-OCTYLPHTHALATE	CNC134	701GW005M1RE	S245441*6*RE	WG	13	U	13	R	ug/l	RE
SVOA	SW8270C	DI-n-OCTYLPHTHALATE	CNC134	701GW006M1RE	S245441*7*RE	WG	18	U	18	R	ug/l	RE
SVOA	SW8270C	DI-n-OCTYLPHTHALATE	CNC134	701HW003M1RE	S245441*4*RE	WG	10	U	10	R	ug/l	RE
SVOA	SW8270C	FLUORANTHENE	CNC126	701SB00301RE	S244767*5*RE	SO	350	U	350	R	ug/kg	RE
SVOA	SW8270C	FLUORANTHENE	CNC134	701GW001M1RE	S245441*1*RE	WG	10	U	10	R	ug/l	RE
SVOA	SW8270C	FLUORANTHENE	CNC134	701GW003M1RE	S245441*3*RE	WG	10	U	10	R	ug/l	RE

Attachment 1 - Changed Qualifiers and Results
Zone E, AOC 701 - Data Validation

Parameter Class	Analytical Method	Parameter	SDG	Sample ID	Lab Sample ID	Matrix	Lab Result	Lab Qual	Final Result	Final Qual	Units	Reasons
SVOA	SW8270C	FLUORANTHENE	CNC134	701GW005M1RE	S245441*6*RE	WG	13	U	13	R	ug/l	RE
SVOA	SW8270C	FLUORANTHENE	CNC134	701GW006M1RE	S245441*7*RE	WG	18	U	18	R	ug/l	RE
SVOA	SW8270C	FLUORANTHENE	CNC134	701HW003M1RE	S245441*4*RE	WG	10	U	10	R	ug/l	RE
SVOA	SW8270C	FLUORENE	CNC126	701SB00301RE	S244767*5*RE	SO	350	U	350	R	ug/kg	RE
SVOA	SW8270C	FLUORENE	CNC134	701GW001M1RE	S245441*1*RE	WG	10	U	10	R	ug/l	RE
SVOA	SW8270C	FLUORENE	CNC134	701GW003M1RE	S245441*3*RE	WG	10	U	10	R	ug/l	RE
SVOA	SW8270C	FLUORENE	CNC134	701GW005M1RE	S245441*6*RE	WG	13	U	13	R	ug/l	RE
SVOA	SW8270C	FLUORENE	CNC134	701GW006M1RE	S245441*7*RE	WG	18	U	18	R	ug/l	RE
SVOA	SW8270C	FLUORENE	CNC134	701HW003M1RE	S245441*4*RE	WG	10	U	10	R	ug/l	RE
SVOA	SW8270C	HEXACHLOROBENZENE	CNC126	701SB00301RE	S244767*5*RE	SO	350	U	350	R	ug/kg	RE
SVOA	SW8270C	HEXACHLOROBENZENE	CNC134	701GW001M1RE	S245441*1*RE	WG	10	U	10	R	ug/l	RE
SVOA	SW8270C	HEXACHLOROBENZENE	CNC134	701GW003M1RE	S245441*3*RE	WG	10	U	10	R	ug/l	RE
SVOA	SW8270C	HEXACHLOROBENZENE	CNC134	701GW005M1RE	S245441*6*RE	WG	13	U	13	R	ug/l	RE
SVOA	SW8270C	HEXACHLOROBENZENE	CNC134	701GW006M1RE	S245441*7*RE	WG	18	U	18	R	ug/l	RE
SVOA	SW8270C	HEXACHLOROBENZENE	CNC134	701HW003M1RE	S245441*4*RE	WG	10	U	10	R	ug/l	RE
SVOA	SW8270C	HEXACHLOROBUTADIENE	CNC126	701SB00301	S244767*5	SO	350	U	350	UJ	ug/kg	IS
SVOA	SW8270C	HEXACHLOROBUTADIENE	CNC126	701SB00301RE	S244767*5*RE	SO	350	U	350	R	ug/kg	RE
SVOA	SW8270C	HEXACHLOROBUTADIENE	CNC134	701GW001M1RE	S245441*1*RE	WG	10	U	10	R	ug/l	RE
SVOA	SW8270C	HEXACHLOROBUTADIENE	CNC134	701GW003M1RE	S245441*3*RE	WG	10	U	10	R	ug/l	RE
SVOA	SW8270C	HEXACHLOROBUTADIENE	CNC134	701GW005M1RE	S245441*6*RE	WG	13	U	13	R	ug/l	RE
SVOA	SW8270C	HEXACHLOROBUTADIENE	CNC134	701GW006M1RE	S245441*7*RE	WG	18	U	18	R	ug/l	RE
SVOA	SW8270C	HEXACHLOROBUTADIENE	CNC134	701HW003M1RE	S245441*4*RE	WG	10	U	10	R	ug/l	RE
SVOA	SW8270C	HEXACHLOROCYCLOPENTADIENE	CNC126	701SB00301RE	S244767*5*RE	SO	350	U	350	R	ug/kg	RE
SVOA	SW8270C	HEXACHLOROCYCLOPENTADIENE	CNC134	701GW001M1RE	S245441*1*RE	WG	10	U	10	R	ug/l	RE
SVOA	SW8270C	HEXACHLOROCYCLOPENTADIENE	CNC134	701GW003M1RE	S245441*3*RE	WG	10	U	10	R	ug/l	RE
SVOA	SW8270C	HEXACHLOROCYCLOPENTADIENE	CNC134	701GW005M1RE	S245441*6*RE	WG	13	U	13	R	ug/l	RE
SVOA	SW8270C	HEXACHLOROCYCLOPENTADIENE	CNC134	701GW006M1RE	S245441*7*RE	WG	18	U	18	R	ug/l	RE
SVOA	SW8270C	HEXACHLOROCYCLOPENTADIENE	CNC134	701HW003M1RE	S245441*4*RE	WG	10	U	10	R	ug/l	RE
SVOA	SW8270C	HEXACHLOROETHANE	CNC126	701SB00301RE	S244767*5*RE	SO	350	U	350	R	ug/kg	RE
SVOA	SW8270C	HEXACHLOROETHANE	CNC134	701GW001M1RE	S245441*1*RE	WG	10	U	10	R	ug/l	RE
SVOA	SW8270C	HEXACHLOROETHANE	CNC134	701GW003M1RE	S245441*3*RE	WG	10	U	10	R	ug/l	RE
SVOA	SW8270C	HEXACHLOROETHANE	CNC134	701GW005M1RE	S245441*6*RE	WG	13	U	13	R	ug/l	RE

Parameter Class	Analytical Method	Parameter	SDG	Sample ID	Lab Sample ID	Matrix	Lab Result	Lab Qual	Final Result	Final Qual	Units	Reasons
SVOA	SW8270C	HEXACHLOROETHANE	CNC134	701GW006M1RE	S245441*7*RE	WG	18	U	18	R	ug/l	RE
SVOA	SW8270C	HEXACHLOROETHANE	CNC134	701HW003M1RE	S245441*4*RE	WG	10	U	10	R	ug/l	RE
SVOA	SW8270C	INDENO(1,2,3-c,d)PYRENE	CNC126	701SB00202	S244767*4	SO	380	U	380	UJ	ug/kg	MD
SVOA	SW8270C	INDENO(1,2,3-c,d)PYRENE	CNC126	701SB00301RE	S244767*5*RE	SO	350	U	350	R	ug/kg	RE
SVOA	SW8270C	INDENO(1,2,3-c,d)PYRENE	CNC134	701GW001M1	S245441*1	WG	10	U	10	UJ	ug/l	CC
SVOA	SW8270C	INDENO(1,2,3-c,d)PYRENE	CNC134	701GW001M1RE	S245441*1*RE	WG	10	U	10	R	ug/l	RE
SVOA	SW8270C	INDENO(1,2,3-c,d)PYRENE	CNC134	701GW003M1	S245441*3	WG	10	U	10	UJ	ug/l	CC
SVOA	SW8270C	INDENO(1,2,3-c,d)PYRENE	CNC134	701GW003M1RE	S245441*3*RE	WG	1.1	J	1.1	R	ug/l	RE
SVOA	SW8270C	INDENO(1,2,3-c,d)PYRENE	CNC134	701GW005M1	S245441*6	WG	10	U	10	UJ	ug/l	CC
SVOA	SW8270C	INDENO(1,2,3-c,d)PYRENE	CNC134	701GW005M1RE	S245441*6*RE	WG	13	U	13	R	ug/l	RE
SVOA	SW8270C	INDENO(1,2,3-c,d)PYRENE	CNC134	701GW006M1	S245441*7	WG	10	U	10	UJ	ug/l	CC
SVOA	SW8270C	INDENO(1,2,3-c,d)PYRENE	CNC134	701GW006M1RE	S245441*7*RE	WG	18	U	18	R	ug/l	RE
SVOA	SW8270C	INDENO(1,2,3-c,d)PYRENE	CNC134	701HW003M1	S245441*4	WG	10	U	10	UJ	ug/l	CC
SVOA	SW8270C	INDENO(1,2,3-c,d)PYRENE	CNC134	701HW003M1RE	S245441*4*RE	WG	0.58	J	0.58	R	ug/l	RE
SVOA	SW8270C	ISOPHORONE	CNC126	701SB00301	S244767*5	SO	350	U	350	UJ	ug/kg	IS
SVOA	SW8270C	ISOPHORONE	CNC126	701SB00301RE	S244767*5*RE	SO	350	U	350	R	ug/kg	RE
SVOA	SW8270C	ISOPHORONE	CNC134	701GW001M1RE	S245441*1*RE	WG	10	U	10	R	ug/l	RE
SVOA	SW8270C	ISOPHORONE	CNC134	701GW003M1RE	S245441*3*RE	WG	10	U	10	R	ug/l	RE
SVOA	SW8270C	ISOPHORONE	CNC134	701GW005M1RE	S245441*6*RE	WG	13	U	13	R	ug/l	RE
SVOA	SW8270C	ISOPHORONE	CNC134	701GW006M1RE	S245441*7*RE	WG	18	U	18	R	ug/l	RE
SVOA	SW8270C	ISOPHORONE	CNC134	701HW003M1RE	S245441*4*RE	WG	10	U	10	R	ug/l	RE
SVOA	SW8270C	m,p-Cresols	CNC126	701SB00301RE	S244767*5*RE	SO	350	U	350	R	ug/kg	RE
SVOA	SW8270C	m,p-Cresols	CNC134	701GW001M1RE	S245441*1*RE	WG	10	U	10	R	ug/l	RE
SVOA	SW8270C	m,p-Cresols	CNC134	701GW003M1RE	S245441*3*RE	WG	10	U	10	R	ug/l	RE
SVOA	SW8270C	m,p-Cresols	CNC134	701GW005M1RE	S245441*6*RE	WG	13	U	13	R	ug/l	RE
SVOA	SW8270C	m,p-Cresols	CNC134	701GW006M1RE	S245441*7*RE	WG	18	U	18	R	ug/l	RE
SVOA	SW8270C	m,p-Cresols	CNC134	701HW003M1RE	S245441*4*RE	WG	10	U	10	R	ug/l	RE
SVOA	SW8270C	NAPHTHALENE	CNC126	701SB00301	S244767*5	SO	350	U	350	UJ	ug/kg	IS
SVOA	SW8270C	NAPHTHALENE	CNC126	701SB00301RE	S244767*5*RE	SO	350	U	350	R	ug/kg	RE
SVOA	SW8270C	NAPHTHALENE	CNC134	701GW001M1RE	S245441*1*RE	WG	10	U	10	R	ug/l	RE
SVOA	SW8270C	NAPHTHALENE	CNC134	701GW003M1RE	S245441*3*RE	WG	10	U	10	R	ug/l	RE
SVOA	SW8270C	NAPHTHALENE	CNC134	701GW005M1RE	S245441*6*RE	WG	13	U	13	R	ug/l	RE

Attachment 1 - Changed Qualifiers and Results
Zone E, AOC 701 - Data Validation

Parameter Class	Analytical Method	Parameter	SDG	Sample ID	Lab Sample ID	Matrix	Lab Result	Lab Qual	Final Result	Final Qual	Units	Reasons
SVOA	SW8270C	NAPHTHALENE	CNC134	701GW006M1RE	S245441*7*RE	WG	18	U	18	R	ug/l	RE
SVOA	SW8270C	NAPHTHALENE	CNC134	701HW003M1RE	S245441*4*RE	WG	10	U	10	R	ug/l	RE
SVOA	SW8270C	NITROBENZENE	CNC126	701SB00301	S244767*5	SO	350	U	350	UJ	ug/kg	IS
SVOA	SW8270C	NITROBENZENE	CNC126	701SB00301RE	S244767*5*RE	SO	350	U	350	R	ug/kg	RE
SVOA	SW8270C	NITROBENZENE	CNC134	701GW001M1RE	S245441*1*RE	WG	10	U	10	R	ug/l	RE
SVOA	SW8270C	NITROBENZENE	CNC134	701GW003M1RE	S245441*3*RE	WG	10	U	10	R	ug/l	RE
SVOA	SW8270C	NITROBENZENE	CNC134	701GW005M1RE	S245441*6*RE	WG	13	U	13	R	ug/l	RE
SVOA	SW8270C	NITROBENZENE	CNC134	701GW006M1RE	S245441*7*RE	WG	18	U	18	R	ug/l	RE
SVOA	SW8270C	NITROBENZENE	CNC134	701HW003M1RE	S245441*4*RE	WG	10	U	10	R	ug/l	RE
SVOA	SW8270C	N-NITROSODI-n-PROPYLAMINE	CNC126	701SB00301RE	S244767*5*RE	SO	350	U	350	R	ug/kg	RE
SVOA	SW8270C	N-NITROSODI-n-PROPYLAMINE	CNC134	701GW001M1RE	S245441*1*RE	WG	10	U	10	R	ug/l	RE
SVOA	SW8270C	N-NITROSODI-n-PROPYLAMINE	CNC134	701GW003M1RE	S245441*3*RE	WG	10	U	10	R	ug/l	RE
SVOA	SW8270C	N-NITROSODI-n-PROPYLAMINE	CNC134	701GW005M1RE	S245441*6*RE	WG	13	U	13	R	ug/l	RE
SVOA	SW8270C	N-NITROSODI-n-PROPYLAMINE	CNC134	701GW006M1RE	S245441*7*RE	WG	18	U	18	R	ug/l	RE
SVOA	SW8270C	N-NITROSODI-n-PROPYLAMINE	CNC134	701HW003M1RE	S245441*4*RE	WG	10	U	10	R	ug/l	RE
SVOA	SW8270C	N-NITROSODIPHENYLAMINE	CNC126	701SB00301RE	S244767*5*RE	SO	350	U	350	R	ug/kg	RE
SVOA	SW8270C	N-NITROSODIPHENYLAMINE	CNC134	701GW001M1RE	S245441*1*RE	WG	10	U	10	R	ug/l	RE
SVOA	SW8270C	N-NITROSODIPHENYLAMINE	CNC134	701GW003M1RE	S245441*3*RE	WG	10	U	10	R	ug/l	RE
SVOA	SW8270C	N-NITROSODIPHENYLAMINE	CNC134	701GW005M1RE	S245441*6*RE	WG	13	U	13	R	ug/l	RE
SVOA	SW8270C	N-NITROSODIPHENYLAMINE	CNC134	701GW006M1RE	S245441*7*RE	WG	18	U	18	R	ug/l	RE
SVOA	SW8270C	N-NITROSODIPHENYLAMINE	CNC134	701HW003M1RE	S245441*4*RE	WG	10	U	10	R	ug/l	RE
SVOA	SW8270C	PENTACHLOROPHENOL	CNC126	701SB00301RE	S244767*5*RE	SO	1700	U	1700	R	ug/kg	RE
SVOA	SW8270C	PENTACHLOROPHENOL	CNC134	701GW001M1RE	S245441*1*RE	WG	50	U	50	R	ug/l	RE
SVOA	SW8270C	PENTACHLOROPHENOL	CNC134	701GW003M1RE	S245441*3*RE	WG	50	U	50	R	ug/l	RE
SVOA	SW8270C	PENTACHLOROPHENOL	CNC134	701GW005M1RE	S245441*6*RE	WG	64	U	64	R	ug/l	RE
SVOA	SW8270C	PENTACHLOROPHENOL	CNC134	701GW006M1RE	S245441*7*RE	WG	91	U	91	R	ug/l	RE
SVOA	SW8270C	PENTACHLOROPHENOL	CNC134	701HW003M1RE	S245441*4*RE	WG	50	U	50	R	ug/l	RE
SVOA	SW8270C	PHENANTHRENE	CNC126	701SB00301RE	S244767*5*RE	SO	350	U	350	R	ug/kg	RE
SVOA	SW8270C	PHENANTHRENE	CNC134	701GW001M1RE	S245441*1*RE	WG	10	U	10	R	ug/l	RE
SVOA	SW8270C	PHENANTHRENE	CNC134	701GW003M1RE	S245441*3*RE	WG	10	U	10	R	ug/l	RE
SVOA	SW8270C	PHENANTHRENE	CNC134	701GW005M1RE	S245441*6*RE	WG	13	U	13	R	ug/l	RE
SVOA	SW8270C	PHENANTHRENE	CNC134	701GW006M1RE	S245441*7*RE	WG	18	U	18	R	ug/l	RE

Parameter Class	Analytical Method	Parameter	SDG	Sample ID	Lab Sample ID	Matrix	Lab Result	Lab Qual	Final Result	Final Qual	Units	Reasons
SVOA	SW8270C	PHENANTHRENE	CNC134	701HW003M1RE	S245441*4*RE	WG	10	U	10	R	ug/l	RE
SVOA	SW8270C	PHENOL	CNC126	701SB00301RE	S244767*5*RE	SO	350	U	350	R	ug/kg	RE
SVOA	SW8270C	PHENOL	CNC134	701GW001M1RE	S245441*1*RE	WG	10	U	10	R	ug/l	RE
SVOA	SW8270C	PHENOL	CNC134	701GW003M1RE	S245441*3*RE	WG	10	U	10	R	ug/l	RE
SVOA	SW8270C	PHENOL	CNC134	701GW005M1RE	S245441*6*RE	WG	13	U	13	R	ug/l	RE
SVOA	SW8270C	PHENOL	CNC134	701GW006M1RE	S245441*7*RE	WG	18	U	18	R	ug/l	RE
SVOA	SW8270C	PHENOL	CNC134	701HW003M1RE	S245441*4*RE	WG	10	U	10	R	ug/l	RE
SVOA	SW8270C	PYRENE	CNC126	701SB00301RE	S244767*5*RE	SO	350	U	350	R	ug/kg	RE
SVOA	SW8270C	PYRENE	CNC134	701GW001M1RE	S245441*1*RE	WG	10	U	10	R	ug/l	RE
SVOA	SW8270C	PYRENE	CNC134	701GW003M1RE	S245441*3*RE	WG	10	U	10	R	ug/l	RE
SVOA	SW8270C	PYRENE	CNC134	701GW005M1RE	S245441*6*RE	WG	13	U	13	R	ug/l	RE
SVOA	SW8270C	PYRENE	CNC134	701GW006M1RE	S245441*7*RE	WG	18	U	18	R	ug/l	RE
SVOA	SW8270C	PYRENE	CNC134	701HW003M1RE	S245441*4*RE	WG	10	U	10	R	ug/l	RE
VOA	SW8260B	1,1,2,2-TETRACHLOROETHANE	CNC134	701GW001M1	S245441*1	WG	5	U	5	UJ	ug/l	IC
VOA	SW8260B	1,1,2,2-TETRACHLOROETHANE	CNC134	701GW002M1	S245441*2	WG	5	U	5	UJ	ug/l	IC
VOA	SW8260B	1,1,2,2-TETRACHLOROETHANE	CNC134	701GW003M1	S245441*3	WG	5	U	5	UJ	ug/l	IC
VOA	SW8260B	1,1,2,2-TETRACHLOROETHANE	CNC134	701GW004M1	S245441*5	WG	5	U	5	UJ	ug/l	IC
VOA	SW8260B	1,1,2,2-TETRACHLOROETHANE	CNC134	701GW005M1	S245441*6	WG	5	U	5	UJ	ug/l	IC
VOA	SW8260B	1,1,2,2-TETRACHLOROETHANE	CNC134	701GW006M1	S245441*7	WG	5	U	5	UJ	ug/l	IC
VOA	SW8260B	1,1,2,2-TETRACHLOROETHANE	CNC134	701GW01DM1	S245441*8	WG	5	U	5	UJ	ug/l	IC
VOA	SW8260B	1,1,2,2-TETRACHLOROETHANE	CNC134	701GW02DM1	S245441*9	WG	5	U	5	UJ	ug/l	IC
VOA	SW8260B	1,1,2,2-TETRACHLOROETHANE	CNC134	701GW03DM1	S245441*10	WG	5	U	5	UJ	ug/l	IC
VOA	SW8260B	1,1,2,2-TETRACHLOROETHANE	CNC134	701GW04DM1	S245441*11	WG	5	U	5	UJ	ug/l	IC
VOA	SW8260B	1,1,2,2-TETRACHLOROETHANE	CNC134	701GW05DM1	S245441*12	WG	5	U	5	UJ	ug/l	IC
VOA	SW8260B	1,1,2,2-TETRACHLOROETHANE	CNC134	701GW06DM1	S245441*13	WG	5	U	5	UJ	ug/l	IC
VOA	SW8260B	1,1,2,2-TETRACHLOROETHANE	CNC134	701HW003M1	S245441*4	WG	5	U	5	UJ	ug/l	IC
VOA	SW8260B	1,1-DICHLOROETHANE	CNC134	701GW001M1	S245441*1	WG	5	U	5	UJ	ug/l	CC
VOA	SW8260B	1,1-DICHLOROETHANE	CNC134	701GW002M1	S245441*2	WG	5	U	5	UJ	ug/l	CC
VOA	SW8260B	1,1-DICHLOROETHANE	CNC134	701GW003M1	S245441*3	WG	5	U	5	UJ	ug/l	CC
VOA	SW8260B	1,1-DICHLOROETHANE	CNC134	701GW004M1	S245441*5	WG	5	U	5	UJ	ug/l	CC
VOA	SW8260B	1,1-DICHLOROETHANE	CNC134	701GW005M1	S245441*6	WG	5	U	5	UJ	ug/l	CC
VOA	SW8260B	1,1-DICHLOROETHANE	CNC134	701GW01DM1	S245441*8	WG	5	U	5	UJ	ug/l	CC

Attachment 1 - Changed Qualifiers and Results
Zone E, AOC 701 - Data Validation

Parameter Class	Analytical Method	Parameter	SDG	Sample ID	Lab Sample ID	Matrix	Lab Result	Lab Qual	Final Result	Final Qual	Units	Reasons
VOA	SW8260B	1,1-DICHLOROETHANE	CNC134	701GW02DM1	S245441*9	WG	5	U	5	UJ	ug/l	CC
VOA	SW8260B	1,1-DICHLOROETHANE	CNC134	701GW03DM1	S245441*10	WG	5	U	5	UJ	ug/l	CC
VOA	SW8260B	1,1-DICHLOROETHANE	CNC134	701GW04DM1	S245441*11	WG	5	U	5	UJ	ug/l	CC
VOA	SW8260B	1,1-DICHLOROETHANE	CNC134	701GW05DM1	S245441*12	WG	5	U	5	UJ	ug/l	CC
VOA	SW8260B	1,1-DICHLOROETHANE	CNC134	701GW06DM1	S245441*13	WG	5	U	5	UJ	ug/l	CC
VOA	SW8260B	1,1-DICHLOROETHANE	CNC134	701HW003M1	S245441*4	WG	5	U	5	UJ	ug/l	CC
VOA	SW8260B	1,2,3-Trichlorobenzene	CNC126	701SB00701	S244767*13	SO	6.3	U	6.3	UJ	ug/kg	CC
VOA	SW8260B	1,2,3-Trichlorobenzene	CNC126	701SB00702	S244767*14	SO	7.4	U	7.4	UJ	ug/kg	CC
VOA	SW8260B	1,2,3-Trichlorobenzene	CNC126	701SB00801	S244767*15	SO	6.4	U	6.4	UJ	ug/kg	CC
VOA	SW8260B	1,2,3-Trichlorobenzene	CNC126	701SB00802	S244767*16	SO	6.6	U	6.6	UJ	ug/kg	CC
VOA	SW8260B	1,2,3-Trichlorobenzene	CNC126	701SB00901	S244767*17	SO	6.2	U	6.2	UJ	ug/kg	CC
VOA	SW8260B	1,2,3-Trichlorobenzene	CNC126	701SB00902	S244767*18	SO	6.5	U	6.5	UJ	ug/kg	CC
VOA	SW8260B	1,2,3-Trichlorobenzene	CNC126	701SB01001	S244767*19	SO	6.2	U	6.2	UJ	ug/kg	CC
VOA	SW8260B	1,2,3-Trichlorobenzene	CNC126	701SB01002	S244767*20	SO	5.6	U	5.6	UJ	ug/kg	CC
VOA	SW8260B	1,2,3-Trichlorobenzene	CNC134	701GW001M1	S245441*1	WG	1.8	J	5	UJ	ug/l	BL,CC
VOA	SW8260B	1,2,3-Trichlorobenzene	CNC134	701GW004M1	S245441*5	WG	5	U	5	UJ	ug/l	CC
VOA	SW8260B	1,2,3-Trichlorobenzene	CNC134	701GW01DM1	S245441*8	WG	5	U	5	UJ	ug/l	CC
VOA	SW8260B	1,2,3-Trichlorobenzene	CNC134	701GW02DM1	S245441*9	WG	5	U	5	UJ	ug/l	CC
VOA	SW8260B	1,2,3-Trichlorobenzene	CNC134	701GW03DM1	S245441*10	WG	5	U	5	UJ	ug/l	CC
VOA	SW8260B	1,2,3-Trichlorobenzene	CNC134	701GW04DM1	S245441*11	WG	5	U	5	UJ	ug/l	CC
VOA	SW8260B	1,2,3-Trichlorobenzene	CNC134	701GW05DM1	S245441*12	WG	5	U	5	UJ	ug/l	CC
VOA	SW8260B	1,2,3-Trichlorobenzene	CNC134	701GW06DM1	S245441*13	WG	5	U	5	UJ	ug/l	CC
VOA	SW8260B	1,2,4-TRICHLOROBENZENE	CNC134	701GW001M1	S245441*1	WG	1.3	J	5	UJ	ug/l	BL,CC
VOA	SW8260B	1,2,4-TRICHLOROBENZENE	CNC134	701GW004M1	S245441*5	WG	5	U	5	UJ	ug/l	CC
VOA	SW8260B	1,2,4-TRICHLOROBENZENE	CNC134	701GW01DM1	S245441*8	WG	5	U	5	UJ	ug/l	CC
VOA	SW8260B	1,2,4-TRICHLOROBENZENE	CNC134	701GW02DM1	S245441*9	WG	5	U	5	UJ	ug/l	CC
VOA	SW8260B	1,2,4-TRICHLOROBENZENE	CNC134	701GW03DM1	S245441*10	WG	5	U	5	UJ	ug/l	CC
VOA	SW8260B	1,2,4-TRICHLOROBENZENE	CNC134	701GW04DM1	S245441*11	WG	5	U	5	UJ	ug/l	CC
VOA	SW8260B	1,2,4-TRICHLOROBENZENE	CNC134	701GW05DM1	S245441*12	WG	5	U	5	UJ	ug/l	CC
VOA	SW8260B	1,2,4-TRICHLOROBENZENE	CNC134	701GW06DM1	S245441*13	WG	5	U	5	UJ	ug/l	CC
VOA	SW8260B	2-BUTANONE (MEK)	CNC126	701SB01002	S244767*20	SO	11	U	11	UJ	ug/kg	CC
VOA	SW8260B	2-Chloroethyl vinyl ether	CNC126	701SB00101	S244767*1	SO	11	U	11	UJ	ug/kg	CC

Parameter Class	Analytical Method	Parameter	SDG	Sample ID	Lab Sample ID	Matrix	Lab Result	Lab Qual	Final Result	Final Qual	Units	Reasons
VOA	SW8260B	2-Chloroethyl vinyl ether	CNC126	701SB00102	S244767*2	SO	11	U	11	UJ	ug/kg	CC
VOA	SW8260B	2-Chloroethyl vinyl ether	CNC126	701SB00201	S244767*3	SO	13	U	13	UJ	ug/kg	CC
VOA	SW8260B	2-Chloroethyl vinyl ether	CNC126	701SB00202	S244767*4	SO	14	U	14	UJ	ug/kg	CC
VOA	SW8260B	2-Chloroethyl vinyl ether	CNC126	701SB00301	S244767*5	SO	12	U	12	UJ	ug/kg	CC
VOA	SW8260B	2-Chloroethyl vinyl ether	CNC126	701SB00302	S244767*6	SO	13	U	13	UJ	ug/kg	CC
VOA	SW8260B	2-Chloroethyl vinyl ether	CNC126	701SB00401	S244767*7	SO	13	U	13	UJ	ug/kg	CC
VOA	SW8260B	2-Chloroethyl vinyl ether	CNC126	701SB00402	S244767*8	SO	13	U	13	UJ	ug/kg	CC
VOA	SW8260B	2-Chloroethyl vinyl ether	CNC126	701SB00501	S244767*9	SO	13	U	13	UJ	ug/kg	CC
VOA	SW8260B	2-Chloroethyl vinyl ether	CNC126	701SB00502	S244767*10	SO	13	U	13	UJ	ug/kg	CC
VOA	SW8260B	2-Chloroethyl vinyl ether	CNC126	701SB00601	S244767*11	SO	13	U	13	UJ	ug/kg	CC
VOA	SW8260B	2-Chloroethyl vinyl ether	CNC126	701SB00602	S244767*12	SO	13	U	13	UJ	ug/kg	CC
VOA	SW8260B	2-Chloroethyl vinyl ether	CNC126	701SB01002	S244767*20	SO	11	U	11	UJ	ug/kg	CC
VOA	SW8260B	2-Chloroethyl vinyl ether	CNC134	701GW001M1	S245441*1	WG	10	U	10	UJ	ug/l	BS
VOA	SW8260B	2-Chloroethyl vinyl ether	CNC134	701GW004M1	S245441*5	WG	10	U	10	UJ	ug/l	BS
VOA	SW8260B	2-Chloroethyl vinyl ether	CNC134	701GW006M1	S245441*7	WG	10	U	10	UJ	ug/l	CC,BS
VOA	SW8260B	2-Chloroethyl vinyl ether	CNC134	701GW01DM1	S245441*8	WG	10	U	10	UJ	ug/l	BS
VOA	SW8260B	2-Chloroethyl vinyl ether	CNC134	701GW02DM1	S245441*9	WG	10	U	10	UJ	ug/l	BS
VOA	SW8260B	2-Chloroethyl vinyl ether	CNC134	701GW03DM1	S245441*10	WG	10	U	10	UJ	ug/l	BS
VOA	SW8260B	2-Chloroethyl vinyl ether	CNC134	701GW04DM1	S245441*11	WG	10	U	10	UJ	ug/l	BS
VOA	SW8260B	2-Chloroethyl vinyl ether	CNC134	701GW05DM1	S245441*12	WG	10	U	10	UJ	ug/l	BS
VOA	SW8260B	2-Chloroethyl vinyl ether	CNC134	701GW06DM1	S245441*13	WG	10	U	10	UJ	ug/l	BS
VOA	SW8260B	2-HEXANONE	CNC126	701SB01002	S244767*20	SO	11	U	11	UJ	ug/kg	CC
VOA	SW8260B	2-HEXANONE	CNC134	701GW001M1	S245441*1	WG	10	U	10	UJ	ug/l	IC
VOA	SW8260B	2-HEXANONE	CNC134	701GW002M1	S245441*2	WG	10	U	10	UJ	ug/l	IC
VOA	SW8260B	2-HEXANONE	CNC134	701GW003M1	S245441*3	WG	10	U	10	UJ	ug/l	IC
VOA	SW8260B	2-HEXANONE	CNC134	701GW004M1	S245441*5	WG	10	U	10	UJ	ug/l	IC
VOA	SW8260B	2-HEXANONE	CNC134	701GW005M1	S245441*6	WG	10	U	10	UJ	ug/l	IC
VOA	SW8260B	2-HEXANONE	CNC134	701GW006M1	S245441*7	WG	10	U	10	UJ	ug/l	IC
VOA	SW8260B	2-HEXANONE	CNC134	701GW01DM1	S245441*8	WG	10	U	10	UJ	ug/l	IC
VOA	SW8260B	2-HEXANONE	CNC134	701GW02DM1	S245441*9	WG	10	U	10	UJ	ug/l	IC
VOA	SW8260B	2-HEXANONE	CNC134	701GW03DM1	S245441*10	WG	10	U	10	UJ	ug/l	IC
VOA	SW8260B	2-HEXANONE	CNC134	701GW04DM1	S245441*11	WG	10	U	10	UJ	ug/l	IC

Parameter Class	Analytical Method	Parameter	SDG	Sample ID	Lab Sample ID	Matrix	Lab Result	Lab Qual	Final Result	Final Qual	Units	Reasons
VOA	SW8260B	2-HEXANONE	CNC134	701GW05DM1	S245441*12	WG	10	U	10	UJ	ug/l	IC
VOA	SW8260B	2-HEXANONE	CNC134	701GW06DM1	S245441*13	WG	10	U	10	UJ	ug/l	IC
VOA	SW8260B	2-HEXANONE	CNC134	701HW003M1	S245441*4	WG	10	U	10	UJ	ug/l	IC
VOA	SW8260B	4-METHYL-2-PENTANONE (MIBK)	CNC126	701SB01002	S244767*20	SO	11	U	11	UJ	ug/kg	CC
VOA	SW8260B	ACETONE	CNC126	701SB00101	S244767*1	SO	11	U	11	UJ	ug/kg	CC,BS
VOA	SW8260B	ACETONE	CNC126	701SB00102	S244767*2	SO	11	U	11	UJ	ug/kg	CC,BS
VOA	SW8260B	ACETONE	CNC126	701SB00201	S244767*3	SO	13	U	13	UJ	ug/kg	CC,BS
VOA	SW8260B	ACETONE	CNC126	701SB00202	S244767*4	SO	14	U	14	UJ	ug/kg	CC,BS
VOA	SW8260B	ACETONE	CNC126	701SB00301	S244767*5	SO	12	U	12	UJ	ug/kg	CC,BS
VOA	SW8260B	ACETONE	CNC126	701SB00302	S244767*6	SO	13	U	13	UJ	ug/kg	CC,BS
VOA	SW8260B	ACETONE	CNC126	701SB00401	S244767*7	SO	13	U	13	UJ	ug/kg	CC,BS
VOA	SW8260B	ACETONE	CNC126	701SB00402	S244767*8	SO	13	U	13	UJ	ug/kg	CC,BS
VOA	SW8260B	ACETONE	CNC126	701SB00501	S244767*9	SO	13	U	13	UJ	ug/kg	CC,BS
VOA	SW8260B	ACETONE	CNC126	701SB00502	S244767*10	SO	13	U	13	UJ	ug/kg	CC,BS
VOA	SW8260B	ACETONE	CNC126	701SB00601	S244767*11	SO	13	U	13	UJ	ug/kg	CC,BS
VOA	SW8260B	ACETONE	CNC126	701SB00602	S244767*12	SO	13	U	13	UJ	ug/kg	CC,BS
VOA	SW8260B	ACETONE	CNC126	701SB00701	S244767*13	SO	13	U	13	UJ	ug/kg	CC,BS
VOA	SW8260B	ACETONE	CNC126	701SB00702	S244767*14	SO	15	U	15	UJ	ug/kg	CC,BS
VOA	SW8260B	ACETONE	CNC126	701SB00801	S244767*15	SO	13	U	13	UJ	ug/kg	CC,BS
VOA	SW8260B	ACETONE	CNC126	701SB00802	S244767*16	SO	13	U	13	UJ	ug/kg	CC,BS
VOA	SW8260B	ACETONE	CNC126	701SB00901	S244767*17	SO	12	U	12	UJ	ug/kg	CC,BS
VOA	SW8260B	ACETONE	CNC126	701SB00902	S244767*18	SO	13	U	13	UJ	ug/kg	CC,BS
VOA	SW8260B	ACETONE	CNC126	701SB01001	S244767*19	SO	12	U	12	UJ	ug/kg	CC,BS
VOA	SW8260B	ACETONE	CNC126	701SB01002	S244767*20	SO	11	U	11	UJ	ug/kg	CC,BS
VOA	SW8260B	BROMOFORM	CNC134	701GW001M1	S245441*1	WG	5	U	5	UJ	ug/l	BS
VOA	SW8260B	BROMOFORM	CNC134	701GW004M1	S245441*5	WG	5	U	5	UJ	ug/l	BS
VOA	SW8260B	BROMOFORM	CNC134	701GW01DM1	S245441*8	WG	5	U	5	UJ	ug/l	BS
VOA	SW8260B	BROMOFORM	CNC134	701GW02DM1	S245441*9	WG	5	U	5	UJ	ug/l	BS
VOA	SW8260B	BROMOFORM	CNC134	701GW03DM1	S245441*10	WG	5	U	5	UJ	ug/l	BS
VOA	SW8260B	BROMOFORM	CNC134	701GW04DM1	S245441*11	WG	5	U	5	UJ	ug/l	BS
VOA	SW8260B	BROMOFORM	CNC134	701GW05DM1	S245441*12	WG	5	U	5	UJ	ug/l	BS
VOA	SW8260B	BROMOFORM	CNC134	701GW06DM1	S245441*13	WG	5	U	5	UJ	ug/l	BS

Parameter Class	Analytical Method	Parameter	SDG	Sample ID	Lab Sample ID	Matrix	Lab Result	Lab Qual	Final Result	Final Qual	Units	Reasons
VOA	SW8260B	BROMOMETHANE	CNC134	701GW001M1	S245441*1	WG	10	U	10	UJ	ug/l	IC,CC
VOA	SW8260B	BROMOMETHANE	CNC134	701GW002M1	S245441*2	WG	10	U	10	UJ	ug/l	IC
VOA	SW8260B	BROMOMETHANE	CNC134	701GW003M1	S245441*3	WG	10	U	10	UJ	ug/l	IC
VOA	SW8260B	BROMOMETHANE	CNC134	701GW004M1	S245441*5	WG	10	U	10	UJ	ug/l	IC,CC
VOA	SW8260B	BROMOMETHANE	CNC134	701GW005M1	S245441*6	WG	10	U	10	UJ	ug/l	IC
VOA	SW8260B	BROMOMETHANE	CNC134	701GW006M1	S245441*7	WG	10	U	10	UJ	ug/l	IC
VOA	SW8260B	BROMOMETHANE	CNC134	701GW01DM1	S245441*8	WG	10	U	10	UJ	ug/l	IC,CC
VOA	SW8260B	BROMOMETHANE	CNC134	701GW02DM1	S245441*9	WG	10	U	10	UJ	ug/l	IC,CC
VOA	SW8260B	BROMOMETHANE	CNC134	701GW03DM1	S245441*10	WG	10	U	10	UJ	ug/l	IC,CC
VOA	SW8260B	BROMOMETHANE	CNC134	701GW04DM1	S245441*11	WG	10	U	10	UJ	ug/l	IC,CC
VOA	SW8260B	BROMOMETHANE	CNC134	701GW05DM1	S245441*12	WG	10	U	10	UJ	ug/l	IC,CC
VOA	SW8260B	BROMOMETHANE	CNC134	701GW06DM1	S245441*13	WG	10	U	10	UJ	ug/l	IC,CC
VOA	SW8260B	BROMOMETHANE	CNC134	701HW003M1	S245441*4	WG	10	U	10	UJ	ug/l	IC
VOA	SW8260B	CARBON DISULFIDE	CNC126	701SB00101	S244767*1	SO	5.6	U	5.6	UJ	ug/kg	IC,CC
VOA	SW8260B	CARBON DISULFIDE	CNC126	701SB00102	S244767*2	SO	5.7	U	5.7	UJ	ug/kg	IC,CC
VOA	SW8260B	CARBON DISULFIDE	CNC126	701SB00201	S244767*3	SO	6.4	U	6.4	UJ	ug/kg	IC,CC
VOA	SW8260B	CARBON DISULFIDE	CNC126	701SB00202	S244767*4	SO	6.8	U	6.8	UJ	ug/kg	IC,CC
VOA	SW8260B	CARBON DISULFIDE	CNC126	701SB00301	S244767*5	SO	6	U	6	UJ	ug/kg	IC,CC
VOA	SW8260B	CARBON DISULFIDE	CNC126	701SB00302	S244767*6	SO	6.5	U	6.5	UJ	ug/kg	IC,CC
VOA	SW8260B	CARBON DISULFIDE	CNC126	701SB00401	S244767*7	SO	6.4	U	6.4	UJ	ug/kg	IC,CC
VOA	SW8260B	CARBON DISULFIDE	CNC126	701SB00402	S244767*8	SO	6.6	U	6.6	UJ	ug/kg	IC,CC
VOA	SW8260B	CARBON DISULFIDE	CNC126	701SB00501	S244767*9	SO	6.6	U	6.6	UJ	ug/kg	IC,CC
VOA	SW8260B	CARBON DISULFIDE	CNC126	701SB00502	S244767*10	SO	6.4	U	6.4	UJ	ug/kg	IC,CC
VOA	SW8260B	CARBON DISULFIDE	CNC126	701SB00601	S244767*11	SO	6.5	U	6.5	UJ	ug/kg	IC,CC
VOA	SW8260B	CARBON DISULFIDE	CNC126	701SB00602	S244767*12	SO	6.4	U	6.4	UJ	ug/kg	IC,CC
VOA	SW8260B	CARBON DISULFIDE	CNC126	701SB00701	S244767*13	SO	6.3	U	6.3	UJ	ug/kg	IC
VOA	SW8260B	CARBON DISULFIDE	CNC126	701SB00702	S244767*14	SO	7.4	U	7.4	UJ	ug/kg	IC
VOA	SW8260B	CARBON DISULFIDE	CNC126	701SB00801	S244767*15	SO	6.4	U	6.4	UJ	ug/kg	IC
VOA	SW8260B	CARBON DISULFIDE	CNC126	701SB00802	S244767*16	SO	6.6	U	6.6	UJ	ug/kg	IC
VOA	SW8260B	CARBON DISULFIDE	CNC126	701SB00901	S244767*17	SO	6.2	U	6.2	UJ	ug/kg	IC
VOA	SW8260B	CARBON DISULFIDE	CNC126	701SB00902	S244767*18	SO	6.5	U	6.5	UJ	ug/kg	IC
VOA	SW8260B	CARBON DISULFIDE	CNC126	701SB01001	S244767*19	SO	6.2	U	6.2	UJ	ug/kg	IC

Attachment 1 - Changed Qualifiers and Results
Zone E, AOC 701 - Data Validation

Parameter Class	Analytical Method	Parameter	SDG	Sample ID	Lab Sample ID	Matrix	Lab Result	Lab Qual	Final Result	Final Qual	Units	Reasons
VOA	SW8260B	CARBON DISULFIDE	CNC126	701SB01002	S244767*20	SO	5.6	U	5.6	UJ	ug/kg	IC
VOA	SW8260B	CHLOROETHANE	CNC134	701GW001M1	S245441*1	WG	10	U	10	UJ	ug/l	IC,CC
VOA	SW8260B	CHLOROETHANE	CNC134	701GW002M1	S245441*2	WG	10	U	10	UJ	ug/l	IC
VOA	SW8260B	CHLOROETHANE	CNC134	701GW003M1	S245441*3	WG	10	U	10	UJ	ug/l	IC
VOA	SW8260B	CHLOROETHANE	CNC134	701GW004M1	S245441*5	WG	10	U	10	UJ	ug/l	IC,CC
VOA	SW8260B	CHLOROETHANE	CNC134	701GW005M1	S245441*6	WG	10	U	10	UJ	ug/l	IC
VOA	SW8260B	CHLOROETHANE	CNC134	701GW006M1	S245441*7	WG	10	U	10	UJ	ug/l	IC
VOA	SW8260B	CHLOROETHANE	CNC134	701GW01DM1	S245441*8	WG	10	U	10	UJ	ug/l	IC,CC
VOA	SW8260B	CHLOROETHANE	CNC134	701GW02DM1	S245441*9	WG	10	U	10	UJ	ug/l	IC,CC
VOA	SW8260B	CHLOROETHANE	CNC134	701GW03DM1	S245441*10	WG	10	U	10	UJ	ug/l	IC,CC
VOA	SW8260B	CHLOROETHANE	CNC134	701GW04DM1	S245441*11	WG	10	U	10	UJ	ug/l	IC,CC
VOA	SW8260B	CHLOROETHANE	CNC134	701GW05DM1	S245441*12	WG	10	U	10	UJ	ug/l	IC,CC
VOA	SW8260B	CHLOROETHANE	CNC134	701GW06DM1	S245441*13	WG	10	U	10	UJ	ug/l	IC,CC
VOA	SW8260B	CHLOROETHANE	CNC134	701HW003M1	S245441*4	WG	10	U	10	UJ	ug/l	IC
VOA	SW8260B	METHYLENE CHLORIDE	CNC126	701SB00101	S244767*1	SO	5.6	U	5.6	UJ	ug/kg	CC
VOA	SW8260B	METHYLENE CHLORIDE	CNC126	701SB00102	S244767*2	SO	5.7	U	5.7	UJ	ug/kg	CC
VOA	SW8260B	METHYLENE CHLORIDE	CNC126	701SB00201	S244767*3	SO	6.4	U	6.4	UJ	ug/kg	CC
VOA	SW8260B	METHYLENE CHLORIDE	CNC126	701SB00202	S244767*4	SO	6.8	U	6.8	UJ	ug/kg	CC
VOA	SW8260B	METHYLENE CHLORIDE	CNC126	701SB00301	S244767*5	SO	6	U	6	UJ	ug/kg	CC
VOA	SW8260B	METHYLENE CHLORIDE	CNC126	701SB00302	S244767*6	SO	6.5	U	6.5	UJ	ug/kg	CC
VOA	SW8260B	METHYLENE CHLORIDE	CNC126	701SB00401	S244767*7	SO	6.4	U	6.4	UJ	ug/kg	CC
VOA	SW8260B	METHYLENE CHLORIDE	CNC126	701SB00402	S244767*8	SO	6.6	U	6.6	UJ	ug/kg	CC
VOA	SW8260B	METHYLENE CHLORIDE	CNC126	701SB00501	S244767*9	SO	6.6	U	6.6	UJ	ug/kg	CC
VOA	SW8260B	METHYLENE CHLORIDE	CNC126	701SB00502	S244767*10	SO	6.4	U	6.4	UJ	ug/kg	CC
VOA	SW8260B	METHYLENE CHLORIDE	CNC126	701SB00601	S244767*11	SO	6.5	U	6.5	UJ	ug/kg	CC
VOA	SW8260B	METHYLENE CHLORIDE	CNC126	701SB00602	S244767*12	SO	6.4	U	6.4	UJ	ug/kg	CC
VOA	SW8260B	METHYLENE CHLORIDE	CNC134	701GW001M1	S245441*1	WG	0.96	J	5	U	ug/l	BL
VOA	SW8260B	METHYLENE CHLORIDE	CNC134	701GW002M1	S245441*2	WG	1.2	JB	5	U	ug/l	BL
VOA	SW8260B	METHYLENE CHLORIDE	CNC134	701GW003M1	S245441*3	WG	0.98	JB	5	U	ug/l	BL
VOA	SW8260B	METHYLENE CHLORIDE	CNC134	701GW004M1	S245441*5	WG	0.73	J	5	U	ug/l	BL
VOA	SW8260B	METHYLENE CHLORIDE	CNC134	701GW005M1	S245441*6	WG	1.1	JB	5	U	ug/l	BL
VOA	SW8260B	METHYLENE CHLORIDE	CNC134	701GW006M1	S245441*7	WG	1.5	J	5	U	ug/l	BL

Parameter Class	Analytical Method	Parameter	SDG	Sample ID	Lab Sample ID	Matrix	Lab Result	Lab Qual	Final Result	Final Qual	Units	Reasons
VOA	SW8260B	METHYLENE CHLORIDE	CNC134	701GW01DM1	S245441*8	WG	0.95	J	5	U	ug/l	BL
VOA	SW8260B	METHYLENE CHLORIDE	CNC134	701GW02DM1	S245441*9	WG	0.86	J	5	U	ug/l	BL
VOA	SW8260B	METHYLENE CHLORIDE	CNC134	701GW03DM1	S245441*10	WG	1	J	5	U	ug/l	BL
VOA	SW8260B	METHYLENE CHLORIDE	CNC134	701GW04DM1	S245441*11	WG	0.94	J	5	U	ug/l	BL
VOA	SW8260B	METHYLENE CHLORIDE	CNC134	701GW05DM1	S245441*12	WG	1.4	J	5	U	ug/l	BL
VOA	SW8260B	METHYLENE CHLORIDE	CNC134	701GW06DM1	S245441*13	WG	1.1	J	5	U	ug/l	BL
VOA	SW8260B	METHYLENE CHLORIDE	CNC134	701HW003M1	S245441*4	WG	0.84	JB	5	U	ug/l	BL
VOA	SW8260B	TOLUENE	CNC126	701SB00301	S244767*5	SO	4.1	JB	6	U	ug/kg	BL
VOA	SW8260B	Vinyl acetate	CNC126	701SB00101	S244767*1	SO	11	U	11	UJ	ug/kg	CC
VOA	SW8260B	Vinyl acetate	CNC126	701SB00102	S244767*2	SO	11	U	11	UJ	ug/kg	CC
VOA	SW8260B	Vinyl acetate	CNC126	701SB00201	S244767*3	SO	13	U	13	UJ	ug/kg	CC
VOA	SW8260B	Vinyl acetate	CNC126	701SB00202	S244767*4	SO	14	U	14	UJ	ug/kg	CC
VOA	SW8260B	Vinyl acetate	CNC126	701SB00301	S244767*5	SO	12	U	12	UJ	ug/kg	CC
VOA	SW8260B	Vinyl acetate	CNC126	701SB00302	S244767*6	SO	13	U	13	UJ	ug/kg	CC
VOA	SW8260B	Vinyl acetate	CNC126	701SB00401	S244767*7	SO	13	U	13	UJ	ug/kg	CC
VOA	SW8260B	Vinyl acetate	CNC126	701SB00402	S244767*8	SO	13	U	13	UJ	ug/kg	CC
VOA	SW8260B	Vinyl acetate	CNC126	701SB00501	S244767*9	SO	13	U	13	UJ	ug/kg	CC
VOA	SW8260B	Vinyl acetate	CNC126	701SB00502	S244767*10	SO	13	U	13	UJ	ug/kg	CC
VOA	SW8260B	Vinyl acetate	CNC126	701SB00601	S244767*11	SO	13	U	13	UJ	ug/kg	CC
VOA	SW8260B	Vinyl acetate	CNC126	701SB00602	S244767*12	SO	13	U	13	UJ	ug/kg	CC
VOA	SW8260B	Vinyl acetate	CNC126	701SB00701	S244767*13	SO	13	U	13	UJ	ug/kg	CC,BS
VOA	SW8260B	Vinyl acetate	CNC126	701SB00702	S244767*14	SO	15	U	15	UJ	ug/kg	CC, BS
VOA	SW8260B	Vinyl acetate	CNC126	701SB00801	S244767*15	SO	13	U	13	UJ	ug/kg	CC,BS
VOA	SW8260B	Vinyl acetate	CNC126	701SB00802	S244767*16	SO	13	U	13	UJ	ug/kg	CC,BS
VOA	SW8260B	Vinyl acetate	CNC126	701SB00901	S244767*17	SO	12	U	12	UJ	ug/kg	CC,BS
VOA	SW8260B	Vinyl acetate	CNC126	701SB00902	S244767*18	SO	13	U	13	UJ	ug/kg	CC,BS
VOA	SW8260B	Vinyl acetate	CNC126	701SB01001	S244767*19	SO	12	U	12	UJ	ug/kg	CC,BS
VOA	SW8260B	Vinyl acetate	CNC126	701SB01002	S244767*20	SO	11	U	11	UJ	ug/kg	CC,BS

CH2M HILL Chain of Custody/ Laboratory Analysis Form

COC Tracking #: **ZE701-062702-01** page 1 of 3

Laboratory:	STL
Project Name:	Charleston Navy Complex
Site Name:	Zone E, AOC 701
Project Number:	158814.PM.04
TAT:	1-QTAT-14
Project Manager:	Tom Beisel
QA Level:	level 3
Address:	GNV: 3011 SW Williston Rd., Gainesville, FL 32605
	ATL: 115 Perimeter Center Place NE, Suite 700, Atlanta, GA 30346-1278
Send Report To:	see last page of COC
EDD:	CNC format

Lab Batch/SDG:

Sample ID	Station ID	Sample Description	Depth Begin	Depth End	Date & Time Collected	Matrix	# of containers	VOCs (SW8260B)	SVOCs (SW8270C)	Metals (SW846 6010B/7000 series)	Pesticides/PCBs (SW8081A/8082)	VOCs (SW8260B)	SVOCs (SW8270C)	Metals (SW846 6010B/7000 series)	Pesticides/PCBs (SW8081A/8082)			Comments
								3 - 5g Encore & ~~[illegible]~~	1 - 4 ounce jar	1 - 4 ounce jar 8oz	1 - 4 ounce jar	3 - 40mL vial, HCl	2 - 1L amber	1 - 0.5L HDPE	2 - 1L amber			
701SB00101	E701SB001		0	1	1115 7-1-02	SO		X	X	X	X							Only 2 Jars
701SB00102	E701SB001		3	5	1120 7-1-02	SO		X	X	X	X							
701CB00102	E701SB001		3	5	No collected	SO		X	X	X	X	Not enough Sw2						
701SB00201	E701SB002		0	1	1125 7-1-02	SO		X	X	X	X							Combined Pest + Metal into one 8oz Jar
701SB00202	E701SB002		3	5	1130 7-1-02	SO		X	X	X	X							
701SB00301	E701SB003		0	1	1132 7-1-02	SO		X	X	X	X							
701SB00302	E701SB003		3	5	1135 7-1-02	SO		X	X	X	X							
701SB00401	E701SB004		0	1	1140 7-1-02	SO		X	X	X	X							
701SB00402	E701SB004		3	5	1145 7-1-02	SO		X	X	X	X							
701SB00501	E701SB005		0	1	1150 7-1-02	SO		X	X	X	X							
701SB00502	E701SB005		3	5	1155 7-1-02	SO		X	X	X	X							
701SB00502MS	E701SB005		3	5	--	SO		X	X	X	X	Not Enough Sw2						RCRA
701SB00502SD	E701SB005		3	5	--	SO		X	X	X	X							
701SB00601	E701SB006		0	1	1205 7-1-02	SO		X	X	X	X							Finished Sample
701SB00602	E701SB006		3	5	1210 7-1-02	SO		X	X	X	X							
701SB00701	E701SB007		0	1	1215 7-1-02	SO		X	X	X	X							
701SB00702	E701SB007		3	5	1220 7-1-02	SO		X	X	X	X							
701SB00801	E701SB008		0	1	1225 7-1-02	SO		X	X	X	X							
701CB00801	E701SB008		0	1	~~[illegible]~~	SO		X	X	X	X	Not Enough Sw2						
701SB00802	E701SB008		3	5	1230 7-1-02	SO		X	X	X	X							

Sampled By: Date/Time:

Relinquished by: Date/Time:

Additional Samplers:

Received By Lab: F Bwoffard Date/Time: 7/3/02 9:44

Relinquished by: Date/Time:

Received By: Date/Time:

Shipped Via: UPS FedEx Hand Other Tracking#:

Remarks: N

Temperature:

Rec Exceptions:

CH2... HILL Chain of Custody/ Laboratory Analysis Form

COC Tracking #: **ZE701-062702-01** page 2 of 3

Laboratory:	STL
Project Name:	Charleston Navy Complex
Site Name:	Zone E, AOC 701
Project Number:	158814.PM.04
TAT:	1-QTAT-14
Project Manager:	Tom Beisel
QA Level:	level 3
Address:	GNV: 3011 SW Williston Rd., Gainesville, FL 32605
	ATL: 115 Perimeter Center Place NE, Suite 700, Atlanta, GA 30346-1278
Send Report To:	see last page of COC
EDD:	CNC format
Lab Batch/SDG:	

Sample ID	Station ID	Sample Description	Depth Begin	Depth End	Date & Time Collected	Matrix	# of containers	VOCs (SW8260B) 3 - 5g Encore & 1 - 2oz jar	SVOCs (SW8270C) 1 - 4 ounce jar	Metals (SW846 6010B/7000 series) 1 - 4 ounce jar	Pesticides/PCBs (SW8081A/8082) 1 - 4 ounce jar	VOCs (SW8260B) 3 - 40mL vial, HCl	SVOCs (SW8270C) 2 - 1L amber	Metals (SW846 6010B/7000 series) 1 - 0.5L HDPE, HNO3	Pesticides/PCBs (SW8081A/8082) 2 - 1L amber			Comments
701SB00901	E701SB009		0	1	1235 7-1-02			X	X	X	X							
701SB00902	E701SB009		3	5	1240 7-1-02			X	X	X	X							
701SB01001	E701SB010		0	1	1245 7-1-02			X	X	X	X							
701SB01002	E701SB010		3	5	1250 7-1-02			X	X	X	X							
701EB001M1	E701EB001				1350 7-1-02							X	X	X	X			EB
701TB001M1	E701TB001											X						TB
~~701EB009M1~~	~~E701EB009~~				NOT Collected							X	X	X	X			EB
701TB009M1	E701TB009											X						TB

Sampled By BC Date/Time 7-2-02

Relinquished by: Date/Time

Additional Samplers:

Received By Lab: J Swafford Date/Time 7/3/02 9:44

Relinquished by: Date/Time

Received By: Date/Time

Shipped Via: UPS FedEx Hand Other Tracking#:

Remarks: 3

Temperature:

Receipt Exceptions:

CH2M HILL Chain of Custody/ Laboratory Analysis Form

COC Tracking #: **ZE701-062702-02** page 1 of 2

Laboratory:	STL
Project Name:	Charleston Navy Complex
Site Name:	Zone E, AOC 701
Project Number:	158814.PM.04
TAT:	1-QTAT-14
Project Manager:	Tom Beisel
QA Level:	level 3
Address:	GNV: 3011 SW Williston Rd., Gainesville, FL 32605
	ATL: 115 Perimeter Center Place NE, Suite 700, Atlanta, GA 30346-1278
Send Report To:	see last page of COC
EDD:	CNC format

Lab Batch/SDG:

Sample ID	Station ID	Sample Description	Depth Begin	Depth End	Date & Time Collected	Matrix	# of containers	VOCs (SW8260B) 3 - 40mL vial, HCl	SVOCs (SW8270C) 2 - 1L amber	Metals (SW846 6010B/7000 series) 1 - 0.5L HDPE								Comments
701GW001M1	E701GW001	new shallow well			7-29-02/1240	WG	6	X	X	X								
701GW002M1	E701GW002	new shallow well			7-29-02/1435	WG	6	X	X	X								RCRA
701GW003M1	E701GW003	new shallow well			7-30-02/0935	WG	6	X	X	X								
701HW003M1	E701GW003	new shallow well			7-30-02/0930	WG	6	X	X	X								SAMPLES
701GW004M1	E701GW004	new shallow well			7-30-02/1125	WG	6	X	X	X								complete
701GW005M1	E701GW005	new shallow well			7-30-02/1025	WG	6	X	X	X								
701GW006M1	E701GW006	new shallow well			7-30-02/1157	WG	6	X	X	X								
701GW01DM1	E701GW01D	new deep well			7-29-02/1325	WG	6	X	X	X								
701GW02DM1	E701GW02D	new deep well			7-29-02/1510	WG	6	X	X	X								
701GW03DM1	E701GW03D	new deep well			7-30-02/0920	WG	6	X	X	X								
701GW04DM1	E701GW04D	new deep well			7-30-02/1055	WG	6	X	X	X								
701GW05DM1	E701GW05D	new deep well			7-30-02/1000	WG	6	X	X	X								
701GW06DM1	E701GW06D	new deep well			7-30-02/1245	WG	6	X	X	X								
701GW06DM1MS	E701GW06D	new deep well			7-30-02/1250	WG	6	X	X	X								MS
701GW06DM1SD	E701GW06D	new deep well			7-30-02/1255	WG	6	X	X	X								MSD
701EW001M1	E701EW001				7-30-02/1300	WQ	6	X	X	X								EB
701TW001M1	E701TW001				LAB supplied	WQ	3	X										TB

Sampled By A. O'CONOR / B. CRAWFORD Date/Time 7-29/7-30-02 Relinquished by: [signature] Date/Time 7-30-02/1600

Additional Samplers:

Received By Lab: Date/Time Relinquished by: Date/Time

Received By [signature] Date/Time Shipped Via: UPS FedEx Hand Other Tracking#:

Remarks: Temperature

[illegible]