N61165.AR.003456
CNC CHARLESTON
5090.3a

PHASE 3 RESOURCE CONSERVATION AND RECOVERY ACT FACILITY INVESTIGATION ADDENDUM IM COMPLETION REPORT CORRECTIVE MEASURES WORK PLAN SOLD WASTE MANAGEMENT UNIT 196 (SWMU 196) ZONE H CNC CHARLESTON SC
6/1/2003
CH2M HILL

RFI REPORT ADDENDUM

Phase III RFI Report Addendum/IM Completion Report/ CMS Work Plan - SWMU 196, Zone H

Charleston Naval Complex
North Charleston, South Carolina

SUBMITTED TO
U.S. Navy Southern Division
Naval Facilities Engineering Command

CH2M Jones

June 2003

Revision 1
Contract N62467-99-C-0960

CH2MHILL TRANSMITTAL

To: Jerry Stamps
South Carolina Department of Health
and Environmental Control
Bureau of Land and Waste
Management
2600 Bull Street
Columbia, SC 29201

From: Paul Favara/CH2M-Jones
(352) 335-5877 ext. 2396

Date: June 17, 2003

Re: CH2M-Jones' Responses to Comments by SCDHEC regarding the *Phase III RFI Report Addendum/IM Completion Report/CMS Work Plan, SWMU 196, Zone H, Revision 0*

Quantity	Description
4	CH2M-Jones' Responses to Comments by SCDHEC regarding the *Phase III RFI Report Addendum/IM Completion Report/CMS Work Plan, SWMU 196, Zone H, Revision 0*– Originally Submitted on November 20, 2002

If material received is not as listed, please notify us at once.

Remarks:

Copy To:

Dann Spariosu/USEPA, w/att
Rob Harrell/Navy, w/att
Gary Foster/CH2M-Jones, w/att

Comments Prepared by the Division of Hydrogeology:

1. Section 2.4 Deep Groundwater Results; Section 4.7.2 Groundwater; Section 7.4 Contamination Assessment Summary

   Throughout this document, the Navy states that the scope of the RFI is complete and that no contaminants were identified in deep groundwater. Monitoring wells NBCH19602D (H196GW02D) and NBCH00923D (H196GW23D) are installed below the shallow clay layer that is assumed to be an aquitard at approximately 15 feet below land surface (bls). The total depth of NBCH19602D is recorded as 37 feet bls (28.9 feet mean sea level) while the total depth of NBCH00923D is recorded as 40 feet bls (32 feet msl). These wells are hydraulically sidegradient to each other and outside the contaminant plume. There are no deep wells in the known source area or downgradient of the source area to monitor vertical plume movement. Also note that the Ashley Formation dips to the northeast as depicted on Appendix A Figure 2.4.10. The Division of Hydrogeology does not consider the RFI to be complete. No data has been generated regarding groundwater quality in the deeper portion of the uppermost aquifer beneath the known shallow contamination.

   The Navy should revise this document with regard to the scope of the RFI and the deeper portion of the uppermost aquifer. According to available data, both the shallow and deeper portions of the uppermost aquifer may discharge to Shipyard Creek. The Navy has concluded that there is no indication that a deep well is warranted in the source area. The Navy based that conclusion on 1) the "marsh clay appears to be competent from soil borings logged at the site" and 2) the conclusion that vertical gradients indicate an upward head. The competency of the "marsh clay" as an aquitard has not been determined. Moreover, available data is inconclusive regarding vertical flow.

   The Navy must characterize the assumed aquitard and provide geologic/hydrogeologic cross sections to depict the relationship between the shallow and deep portions of the uppermost aquifer and Shipyard Creek. Cross sections depicting the contaminant plume must also be provided. See the comments below for a fuller discussion. Upon review of this additional data, an investigation beneath the assumed aquitard may be warranted.

   CH2M-Jones Response:
   The marsh clay aquitard was originally characterized in the Zone H RFI Report, Revision 1 *(EnSafe, 1998). Section 3.2.4 of that document presents the results of vertical permeability (hydraulic conductivity) tests performed on Shelby tube samples of the marsh clay interval present in Zone H. The four Shelby tube samples collected displayed an average vertical permeability (hydraulic conductivity) of 1.47x 10^{-8} centimeters per second (cm/sec), or 0.001 feet per day (ft/day). Permeabilities in this range are considered in literature to be low to very low, and are typical of marine clays characterized as aquitards.*

   In Figure 3.5 on page 3-15 of the Zone H RFI Report, Revision 1, *which is provided herein as Attachment 1, a geologic cross section of Zone H is presented which passes just to the north of SWMU 196, with the section line oriented northwest to southeast. The cross section shows that*

the marsh clay is present in all borings near SWMU 196 (NBCH00907D, NBCH00912D, and NBCH00903D), with an average thickness of 10 to 20 feet.

Additional site-specific lithologic information in the form of boring logs from the SWMU 196 area deep monitoring wells H196GW02D and H009GW23D were presented in the Zone H RFI Report, Revision 1, *and show that the marsh clay is present at both locations with thickness ranging from 5 to 7 feet. This information was also presented as a geologic cross section in Appendix A, Figure 1. This figure is provided herein as Attachment 2 of the* Phase 1 —Source Area Delineation Interim Measure Work Plan, SWMU 196, Zone H, Revision 1 *(CH2M-Jones, November 2000). The appendix presents a "stratigraphy and site profile sketch, " with a text narrative discussing the occurrence and properties of the various geologic units encountered. It indicates that the marsh clay is present and generally occurs at depths of 12 to 15 feet at the site.*

CH2M-Jones believes that this information is representative of site conditions, and that designating the marsh clay as an aquitard is consistent with the literature definition of same, namely: a stratigraphic unit, within which permeability is not sufficient to allow completion of successful production wells. A low permeability aquitard such as the marsh clay is also capable of retarding downward migration of dense non-aqueous phase liquid (DNAPL).

With regard to the existing vertical gradients and groundwater flow between the shallow and deeper sands in the shallow aquifer, CH2M-Jones is in the process of collecting additional water level information from onsite shallow-deep well pairs, to evaluate vertical hydraulic gradients. This information will be provided at a later date.

For the purposes of the CMS, we have indicated that the document only addresses the surficial zone. When the water level data are collected, the above aquitard information and newly collected water levels, along with historical water levels, will be presented to SCDHEC. With these data, CH2M-Jones will make a recommendation as to whether or not a deep well is necessary. Section 4.7 of the Phase III RFIRA has been amended to state that, although no COCs were identified in deep groundwater at SWMU 196, additional hydrogeological data is being evaluated to determine if additional monitoring points are required in the deep groundwater. This material is provided as Revision 1 to the Phase III RFIRA for SWMU 196. If it is determined that additional monitoring wells are required in the deep groundwater zone, the results from these wells will then be screened to determine if chemicals of concern (COCs) are present. If COCs are determined to be present, remedial alternatives for deep groundwater will be evaluated.

2. <u>Table 6-1 Pre- and Post-Treatment data for Interim Measure at SWMU 196</u>

   In Appendix B the Navy has included the analytical data presented on this Table. No data was included for the following monitoring locations: 009GW020, 009GW022, and GEL15. Please provide this data for Appendix B.

   Also, please verify the Phase II-A Pre-Treatment values for chlorobenzene and 1,2-DCB at the 196GW005 locations; and the Phase II-B Post-Treatment value for 1,2-DCB at the 196GW014 location. The values found in the analytical data in Appendix B differs from those reported on the Table.

CH2M-Jones Response:
The data summary table in Appendix B has been revised to include H009GW020, H009GW022, and HGELGW015. With regard to data for H196GW004 and H196GW015, the data presented in Appendix B are correct. Tables 6-1 and 6-4 have been amended to show the correct data. This material is provided as Revision 1 to the Phase III RFIRA for SWMU 196.

3. Section 6.2 Phase I Activities: Source Area Delineation

In this Section the Navy references the analytical results from the Waterloo™ profiler sampling that is presented in the *Phase II IM Work Plan for SWMU 196, Zone H (CH2M-Jones, 2001c)*. The Navy states that those results indicated that the highest level of contamination was generally found at 13 feet below land surface (bls). Although detailed figures were included in the *Phase II IM Workplan*, those figures are aerial views of the total chlorobenzene concentrations at 5, 7, 9, 11,13, 15 feet bls. In order to gain the Department's approval, the Navy must depict this data (and more recent data) on cross sections that illustrate the relationships between the shallow and deeper portions of the aquifer, the assumed aquitard, and Shipyard Creek. See RFI Guidance, EPA-530/SW-89-031 for details. Also, see specific Section II.A.1. *Hydrogeology* and Section II.C.1. *Groundwater Contamination* of Appendix B found in the facility's Hazardous Waste Permit SC1 170 022 560.

CH2M-Jones Response:
Detailed vertical profiling data were not completed as part of the post-treatment evaluation. Therefore, we are unable to provide a vertical perspective on the current distribution of the target contaminants and the requested information. A vertical cross section of the plume as it existed prior to implementation of the IM is provided herein as Attachment 3.

4. Section 6.3.3 Phase II-C Activities – Summary of Results

Figure 6-4 Potential DNAPL (> 1% if Solubility)
In the referenced Summary of Results, the Navy states that there are five (5) wells where the concentrations of the constituents are greater than 1-percent of their respective solubility. However on referenced Figure 6-4, the Navy has reported 9 as the Overall No. Wells Potential DNAPL while the column has identified by an asterisk only 6 locations. Please clarify these values.

CH2M-Jones Response:
The referenced summary will be corrected to show that six wells contain one or more constituent concentrations greater than 1 percent of the constituent's solubility. Footnotes have been added to the table to clarify this subject. The reference to "9" has been removed as it caused confusion and did not add value to the discussion. This material is provided as Revision 1 to the Phase III RFIRA for SWMU 196.

5. Table 7-1 Remedial Goal Options – Groundwater

According to the US EPA Primary Drinking Water Standards, the maximum contaminant level (MCL) for Chlorobenzene is 100 micrograms per liter (µg/L). The Table must be revised.

In the description of superscript "a", reference is made to "the appropriate dilution factor." The Navy should clarify this statement.

CH2M-Jones Response:
The table will be amended to reflect the correct MCL value of 100 micrograms per liter (µg/L). The referenced footnote has been amended to read "These remedial goal options (RGO's) apply to surface water and groundwater when a mixing factor of groundwater with surface water is taken into account." This material is provided as Revision 1 to the Phase III RFIRA for SWMU 196.

6. Section 7.2 Remedial Goal Options and Proposed Media Cleanup Standards

The Navy has used the chronic screening values listed on Table 2 entitled Region 4 Waste Management Division Saltwater Surface Water Screening Values for Hazardous Waste Sites as remedial goal options (RGOs) at the groundwater/surface water interface.

The Navy states that these RGOs are proposed to protect ecological exposures and that "boundary wells along Shipyard Creek" will be the monitoring location. The Navy should identify the monitoring stations in a list. For clarification, the Navy should also use a site map to depict the areas subject to the proposed differing RGOs.

CH2M-Jones Response:
The specific wells identified for monitoring should be determined during the CMS phase. As presented in the CMS report, none of the wells located within the "boundary" area currently exceed the ecological media cleanup standard.

7. Table 7-2 Groundwater Elevation Data (April 23, 2002)

The Navy should expand this table to include all the wells associated with SWMU 196. Examples are appropriate SWMU 009 wells, HGELGW015, H196GW002 and 02D, and H009GW023 and 23D. In order to better understand the historical groundwater conditions, this Table should include historical groundwater elevation data. See Comment 8 below.

CH2M-Jones Response:
Available groundwater elevation data for these additional locations will be provided (see response to Comment No. 1) at a later date. Some of these wells may not have been monitored at the same time, and therefore the groundwater elevation data may not be contemporaneous with the other groundwater elevation data. As part of the Corrective Measures Implementation Plan, groundwater data will be collected and provided in the future.

8. Section 7.3. Site Hydrogeology

First, the Navy states that the groundwater flow direction of the deeper portion of the aquifer is toward the east. The Navy has based that conclusion on data from monitoring wells H009GW23D and H196GW02D. The direction of groundwater flow cannot be based

on two parallel or opposite monitoring locations. Additional deep monitoring locations must be included.

Second, the Navy states that water level measurements indicate that there is an upward head in the vicinity of SWMU 196 meaning that vertical flow is from the lower portion of the aquifer to the shallow portion. This conclusion is not substantiated by data provided in the facility's geographic information system (GIS). The following groundwater elevation data is provided as mean sea level (msl) in the GIS database:

Location	Shallow Well Elevation	Deeper Well Elevation	Vertical Flow
H009GW006/06D	12.61 feet msl	13.2 feet msl	Up
H196GW002/02D	11.50 feet msl	8.10 feet msl	Down
H196GW023/23D	8.27 feet msl	8.28 feet msl	Net Zero

The vertical flow for SWMU 196 is inconclusive in that the data indicates a potential for downward vertical flow especially in the vicinity of H196GW002/02D. Furthermore, this data represents a moment in time. Historical groundwater elevation data should be provided and the potential for vertical migration of the dissolved contaminant plume must be re-evaluated.

Third, the Navy must also include hydrogeologic/lithologic cross sections trending north to south and several trending west to east to include Shipyard Creek. In Section 2.4.17.2.2. Biotic Conditions of the *Zone H RFI SWMU 196 Report Addendum, Revision 0* dated May 5, 2000, Shipyard Creek is described as "approximately 75 feet wide and 3 feet deep" in the area adjacent to SWMU 196. The referenced document does state that width and depth of the Creek vary with the tides. The conclusion that "Shipyard Creek is a discharge point for deep groundwater flow" has not been adequately demonstrated. This RFI Report must provide in clear detail the hydraulic relationship between the Creek, a saline water body, and the shallow and deep portions of the uppermost aquifer as well as the relationship between the groundwater above and below the assumed aquitard.

CH2M-Jones Response:
Please see the figures referenced in CH2M-Jones' response to Comment No. 1 for information regarding cross sections. Please also see CH2M-Jones' response to Comment No. 1 for water level information. A potentiometric map for the deep groundwater is included in these comment responses as Attachment 4; this map shows the location of wells that were used to define the potentiometric surface for the deep groundwater. More than two wells were used for our interpretation.

9. Section 7.3.2 Hydrology

The Navy references the tidal study performed by EnSafe in February 2000. The results of that study can be found in Section 2.4.1 Physical Setting and Geology of the *Zone H RFI SWMU 196 Report Addendum, Revision: 0*, dated May 5, 2000. The results are also depicted on

Appendix A Figure 2.4.11 Shallow Groundwater Flow High Tide February 7, 2000, and on Figure 2.4.12 Shallow Groundwater Flow Low Tide February 7, 2000. The only indicator discussed is the change in groundwater elevation. The conclusion was that in some wells the groundwater elevation was higher during high tide but that groundwater elevation in other wells was lower during high tide or remained constant. The overall conclusion was that groundwater flow patterns were not tidally influenced. If additional general chemistry data (pH, salinity, total dissolved solids) was collected, the Navy should include that data.

CH2M-Jones Response:
Based upon a review of all of the available RFI data for SWMU 196, it appears that the supplementary water quality data requested that pertain to the tidal influence study performed by EnSafe were not collected, and are therefore not available.

10. Section 7.5 Focused CMS Approach

This investigation and the remedial activities have focused on the shallow portion of the uppermost aquifer. The Navy should proceed with the corrective measures study of the shallow portion of the uppermost aquifer with the understanding that investigation of the deeper portion of the aquifer may still be required.

The Navy states that "The CMS methods and the preferred corrective measure alternative will be documented in the CMS report,..." All corrective measures studied during this event must be documented in the report. Note that the cost of long term monitoring of groundwater, diffusion samplers, surface water, and sediments must be considered and detailed in the CMS Report.

CH2M-Jones Response:
Comment noted. The applicable remedial strategies and all relevant cost factors for those strategies will be considered during the CMS.

11. Section 7.7 Identification of Potential Corrective Measure Technologies; Section 7.7.1 LUCs

The Navy has stated that the reuse of this property is "industrial". Therefore, land use controls must be considered a part of the final remedy. The cost for the LUCs must be detailed in the CMS Report.

CH2M-Jones Response:
Land use controls and their related costs will be included for the selected remedy in the CMS.

12. Section 7.7.4 MNA

While monitored natural attenuation may prove to be one component of the final remedy for the shallow portion of the aquifer, the Navy should not rely heavily on this technology. Groundwater is discharging to Shipyard Creek at concentrations that exceed the allowable MCLs. For example: depicted on Figure 4-5 entitled Chlorobenzene Concentrations in Groundwater, the concentration of chlorobenzene in the sample collected from the diffusion sampler H196GDF02 location was 3500 µg/L (6/8/99). The MCL for this constituent is 100

µg/L. The most recent data recorded on this Figure is dated October 2001. Note that a MNA demonstration must be based on site specific data.

SWMU 196 is included in the facility's *Groundwater Monitoring and Well Inspection Workplan,* dated October 2002. However, only monitoring wells H196GW020, H196GW021, HGELGW015, H196GW011 and H196INJMARSH3 have been included for routine sampling. The Division encourages the Navy to determine current surface water and groundwater quality to augment the remedial options.

Also note that a MNA demonstration must adhere to guidance documents: the US EPA's Office of Research and Development's September 1998 publication Seminars Monitored Natural Attenuation for Ground Water EPA/625/K-98/001 and the Interim Final OSWER Directive 9200.4-17 *Use of Monitored Natural Attenuation at Superfund, RCRA Corrective Action, and Underground Storage Tank Sites.*

CH2M-Jones Response:
Comment Noted. Also, it should be noted the applicable media cleanup standard (MCS) for well H196GDF02 would be derived from the SSWQCVs, to protect aquatic receptors, rather than the MCL. It is not reasonable to expect that a drinking water well would ever be installed within the tidal boundaries of Shipyard Creek.

Engineering Comment Prepared by Jerry Stamps:

General

Given the elevated chlorobenzene compound concentrations detected in the sediments, the Department anticipates that the risk posed to ecological receptors will be evaluated in the future in association with Zone J. The presence of the chlorobenzenes in the sediment indicates a discharge of the contaminant plume into Shipyard Creek; therefore, the Department maintains that surface water and sediment sampling should be incorporated into the long term monitoring for SWMU 196 until such time as it is demonstrated that this release does not pose an unacceptable risk to the ecological receptors.

CH2M-Jones Response:

We agree that periodic monitoring of the Shipyard Creek surface water and sediment should be a consideration for future monitoring at the site.

Comment Prepared by Susan Byrd, Risk Assessor:

1. Subsection 2.5, Sediment Results, Page 2-6 and Figure 4-15, Sediment Sample Location Map

   Based on the information provided in the text and the figure, it is not clear if the sediment samples were collected from Shipyard Creek of a drainage feature leading to Shipyard Creek. After review of the GIS, it appears that one sample is located in the creek and two samples may or may not be in areas of tidal influence from the creek. Since Shipyard Creek is not included on Figure 4-15, please clarify and provide more detail in Figure 4-15.

   CH2M-Jones Response:

   The three sediment samples were collected by EnSafe, subsequent to submittal of the Zone H RFI Report, Revision 0. Section 2.4.2.7 of their RFI Report Addendum (EnSafe, May 2000), the three sediment samples were collected "while the sediment surface was under approximately 1-2 feet of water, " but does not discuss exact locations. A figure is attached (Attachment 5) which shows the three sediment sampling locations combined with an aerial photograph of the SWMU 196 area. Based on this information, it appears that sample H196M0003 is located in Shipyard Creek, sample H196M002 is located in the tidal flat of Shipyard Creek, and sample H196M0001 is located in a tidally influenced tributary of Shipyard Creek. An additional sediment sample, designated H009M0004, south of SWMU 196, is also located in the tidal reaches of Shipyard Creek.

ATTACHMENT 1

Figure 3-5, *Zone H RFI Report, Revision 1* (EnSafe, 1998)

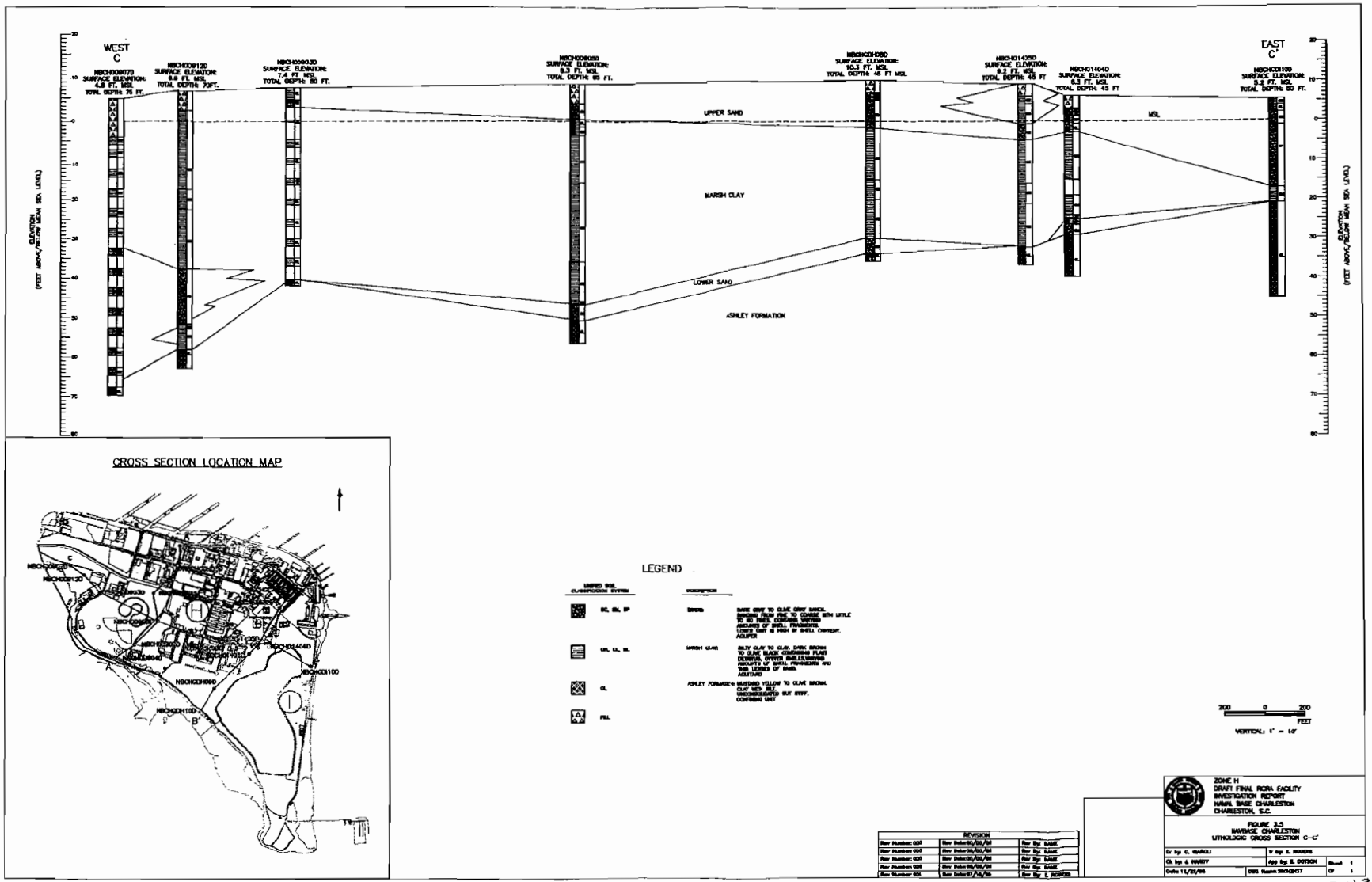
WEST
C
EAST
C'
NBCH008070
SURFACE ELEVATION:
4.8 FT. MSL
TOTAL DEPTH: 75 FT.
NBCH008120
SURFACE ELEVATION:
6.9 FT. MSL
TOTAL DEPTH: 70FT.
NBCH008030
SURFACE ELEVATION:
7.4 FT. MSL
TOTAL DEPTH: 50 FT.
NBCH008050
SURFACE ELEVATION:
8.3 FT. MSL
TOTAL DEPTH: 65 FT.
NBCH008080
SURFACE ELEVATION:
10.3 FT. MSL
TOTAL DEPTH: 45 FT MSL
NBCH014050
SURFACE ELEVATION:
9.2 FT. MSL
TOTAL DEPTH: 45 FT
NBCH014040
SURFACE ELEVATION:
8.3 FT. MSL
TOTAL DEPTH: 45 FT
NBCH001100
SURFACE ELEVATION:
5.2 FT. MSL
TOTAL DEPTH: 50 FT.
UPPER SAND
MSL
MARSH CLAY
LOWER SAND
ASHLEY FORMATION
ELEVATION
(FEET ABOVE/BELOW MEAN SEA LEVEL)
CROSS SECTION LOCATION MAP
LEGEND
UNIFIED SOIL CLASSIFICATION SYSTEM
DESCRIPTION
SC, SM, SP
SAND
DARK GRAY TO OLIVE GRAY SAND. RANGING FROM FINE TO COARSE WITH LITTLE TO NO FINES. CONTAINS VARYING AMOUNTS OF SHELL FRAGMENTS. LOWER UNIT IS HIGH IN SHELL CONTENT. AQUIFER
CH, CL, ML
MARSH CLAY
SILTY CLAY TO CLAY. DARK BROWN TO OLIVE BLACK CONTAINING PLANT DEBRIS, OYSTER SHELLS,VARYING AMOUNTS OF SHELL FRAGMENTS AND THIN LENSES OF SAND. AQUITARD
OL
ASHLEY FORMATION
MUSTARD YELLOW TO OLIVE BROWN. CLAY WITH SILT. UNCONSOLIDATED BUT STIFF. CONFINING UNIT
FILL
200 0 200
FEET
VERTICAL: 1" = 10'
REVISION
ZONE H
DRAFT FINAL RCRA FACILITY
INVESTIGATION REPORT
NAVAL BASE CHARLESTON
CHARLESTON, S.C.
FIGURE 3.5
NAVBASE CHARLESTON
LITHOLOGIC CROSS SECTION C-C'
Dr by: G. MARCLI
Dr by: E. ROGERS
Ch by: J. HARDY
App by: S. DOTSON
Sheet 1
Of 1
Date 11/21/96
DWG Name 29CH2H37

29CH2H37

ATTACHMENT 2

Stratigraphy and Site Profile Sketch (CH2M-Jones, 2000)

APPENDIX A

Stratigraphy and Site Profile Sketch

The text that follows provides a brief description of subsurface soil conditions at the site, based on a review of the RFIs previously performed by EnSafe.

Stratigraphy

Subsurface soil conditions at the site vary considerably according to available boring information (see Figure 2-1 for plan locations per RFI Addendum [May 2000]). The following monitor well boring installation logs were used to construct a site profile: 009020, 009021, 009022, 009023, 009023D, 196001, 196002, 196002D, and 196003. The profile sketch is provided in Figure A-1 of this appendix.

The "009" series borings were completed in June-July 1998, and the "196" series in December 1999-January 2000. Limited correlation of soil classification among borings complicates the development of a typical site profile. Limited correlation is somewhat attributed to various descriptions provided by different persons logging the borings, and also to the heterogeneous nature of the fill deposits. However, general conclusions were developed, as discussed in the text that follows.

Upper Site Soils

The upper site soils (from the surface to a depth of about 15 ft bls are fill materials consisting of silts, sands, and clays. Where reported, soil consistency was typically soft or loose with some stiff clay lenses (qualitative). Clays were predominant in the bottom ten feet of this zone and were typically organic (organic vapor analyzer responses and odor descriptions). The water table was reported to be 4 to 5 ft bls under vegetated areas and 7 to 8 ft bls under paved areas. In the base of the borings, at about 3 to 5 ft mean sea level (msl), a fairly consistent layer of plastic and mottled clay was encountered. Current interpretation of this layer is that it forms the first aquitard/aquiclude below the water table. Shallow wells are screened (sand-packed) throughout most of the upper layer of site soil, primarily between a top of 1 to 2 ft bls to a bottom of 14 ft bls.

Lower Site Soils

The lower site soils (from a depth of about 15 ft bls to a depth of about 40 feet bls) are calcareous marine deposits, consisting primarily of plastic silts and clays, with a sand

layer from about 25 to 34 ft bls. At the base of this sand layer lies the Ashley Formation, which consists of stiff, plastic, clayey silts. The silts and clays are interbedded with frequent descriptive changes and thin layers of sand. Deep wells are screened (sand-packed) in the bottom 12 to 13 ft of this layer, primarily between a top of 24 ft bls to bottom of 37 ft bls.

There is no apparent difference between the groundwater levels of the shallow and deep wells at this site. Shallow groundwater flow at the site is toward the northeast and east.

Correlation of soil descriptions among the shallow borings and between the shallow and deep borings for the common depth interval (top 15 ft) is not definitive, confirming a zone of highly variable deposits. The two deeper soil borings are fairly consistent and reveal an undisturbed marine clay deposit. However, site stratigraphy agrees with general descriptions from Section 3.0 of the final RI report, as follows:

- Variable upper sediments (Wando Formation) consisting of up to three layers:
  - Upper sands; this layer is not found at the site; instead, upper materials are fill soils consisting of sand, silt, and clay mixtures.
  - Marsh clay; an aquitard between upper and lower sands, found at the site at depths of about 12 to 15 ft bls.
  - Lower sands; represented at the site by silty sands in a zone from 25 to 35 ft bls. These sands are semi-confined and have groundwater elevations the same as the water table above the Marsh mud.
- The Ashley Formation starts at a depth of 35 ft bls at the site (below the lower sands) and forms an aquitard.

Direct-Push Technology Subsurface Soil Investigations

In April 1999, a source area investigation for groundwater contamination was conducted at SWMU 196. Fourteen DPT subsurface soil samples (196SP001…Figure 1-2) were collected (3-5 ft bls) and analyzed for VOCs, semi-volatile organic compounds (SVOCs), and pesticides/polychlorinated biphenyls (PCBs). Of the SVOCs, DCBs exceeding soil to groundwater Soil Screening Levels (SSLs) were found in 196SP013 (northwest, in front of building) and were detected below SSLs in 196SP001 (off the northwest corner of building).

Groundwater Investigations

The RFI Addendum summarized groundwater investigations in 1998 and 1999 (May, 2000). Significant detections of dissolved DCBs in groundwater occurred consistently in front and back of Building 1838 in the shallow groundwater. The most significant occurrences were in 009020, 009021, and GEL015 directly to the east of Building 1838 (see Figure 1-2). DCBs were also found in temporary well 196DF02 (6 micrograms per liter [µg/L] 1,3-DCB and 23 µg/L 1,4-DCB); chlorobenzene was found in temporary wells 196DF01 (2 µg/L) and 196DF02 (3,500 µg/L).

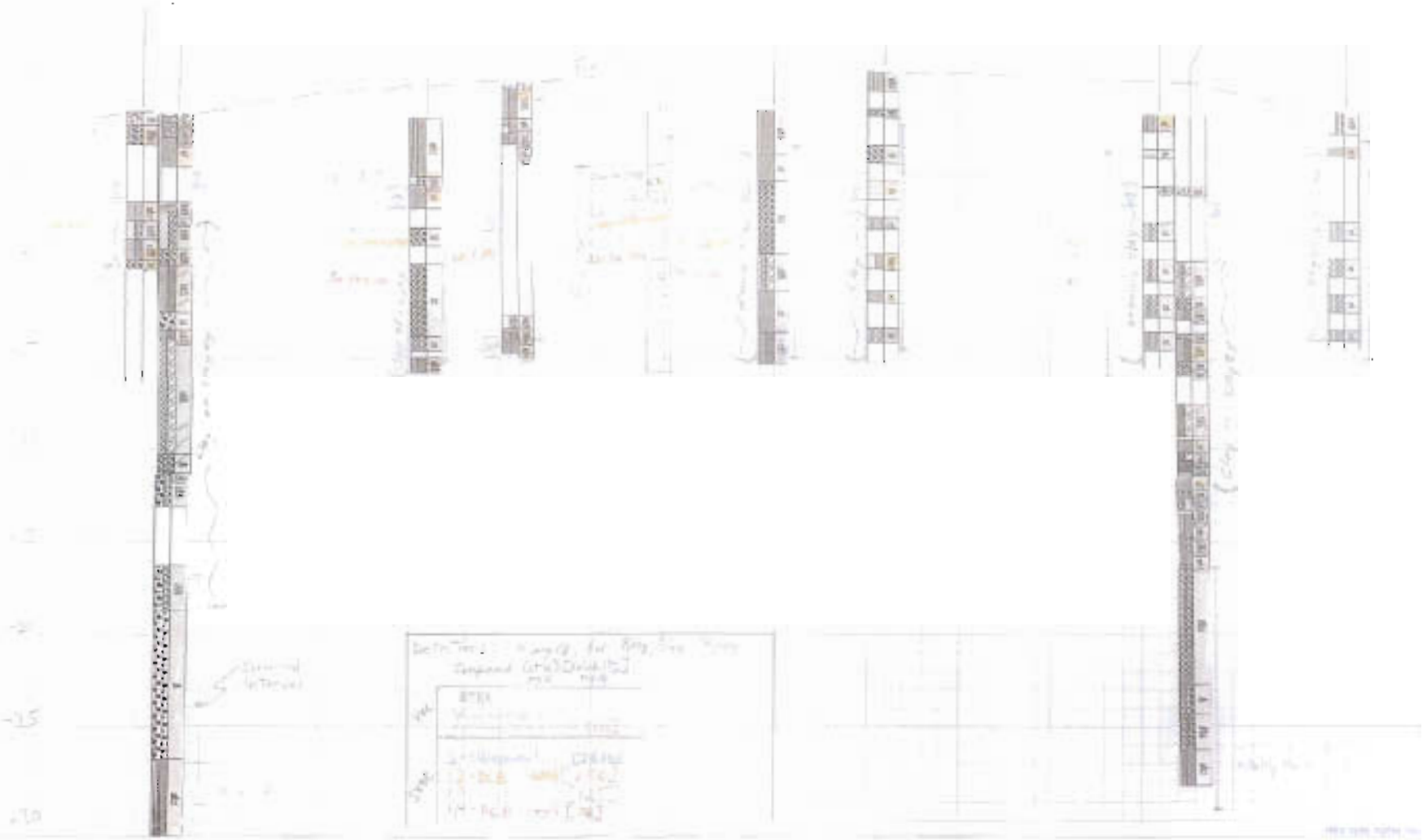

Figure 1
Site Profile Sketch
SWMU 196
Charleston Naval Complex
CH2MHILL

ATTACHMENT 3

Conceptual Cross Section (Prior to IM)

ATTACHMENT 3
Conceptual Cross-Section

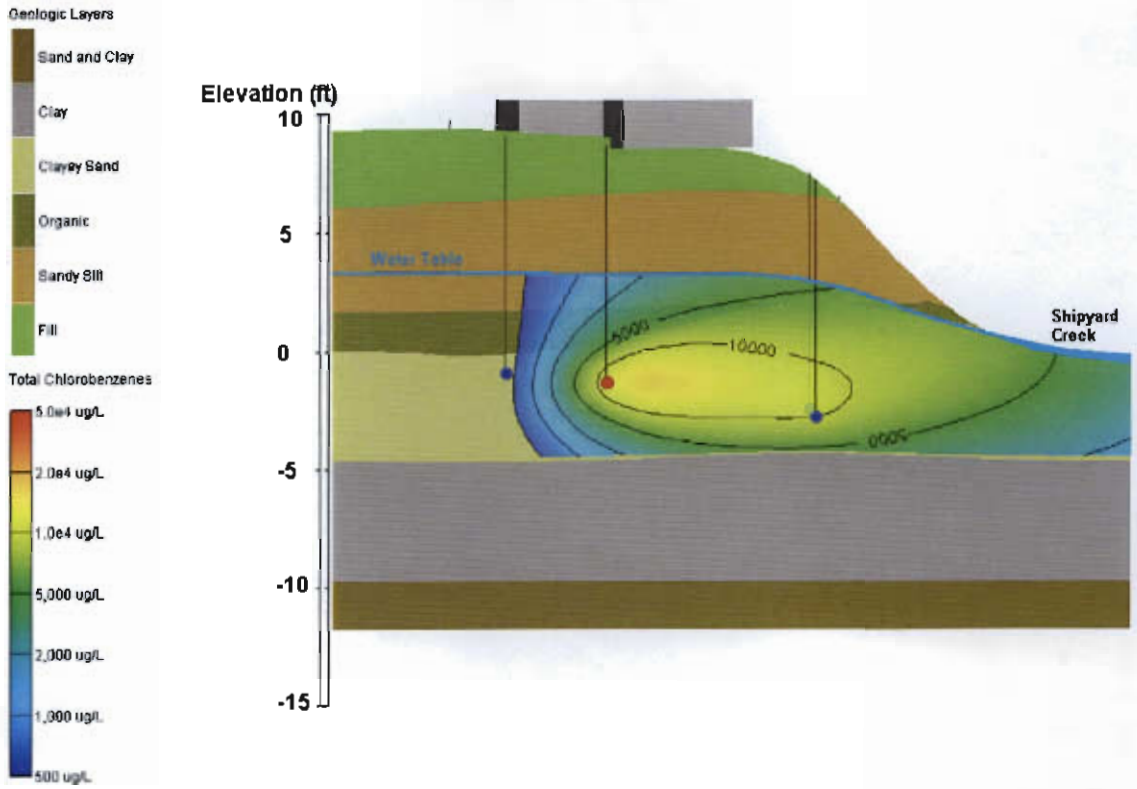

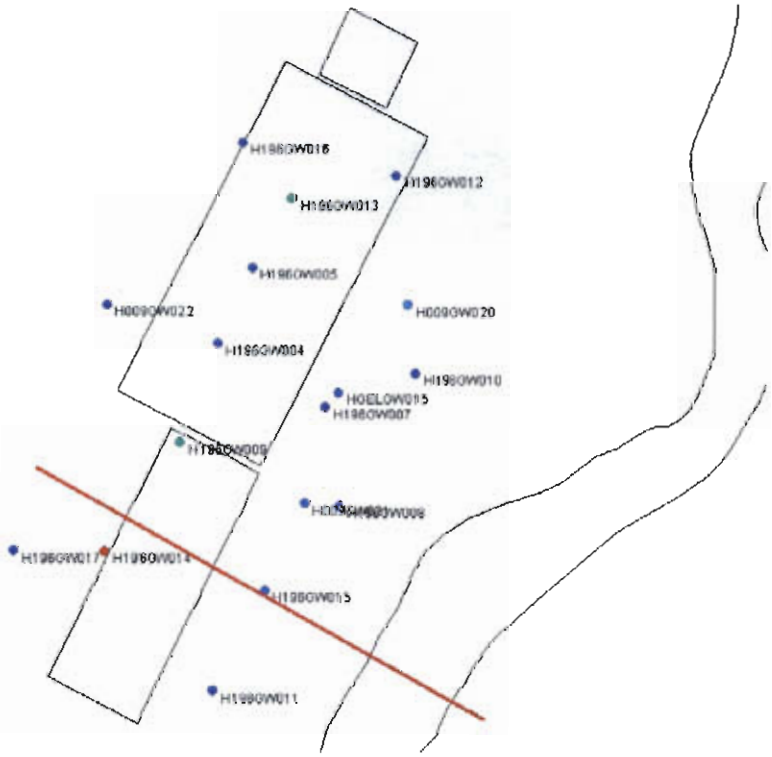

ATTACHMENT 4

Deep Groundwater Potentiometric Map (CH2M-Jones, 2003)

NOTE: Original fig. color

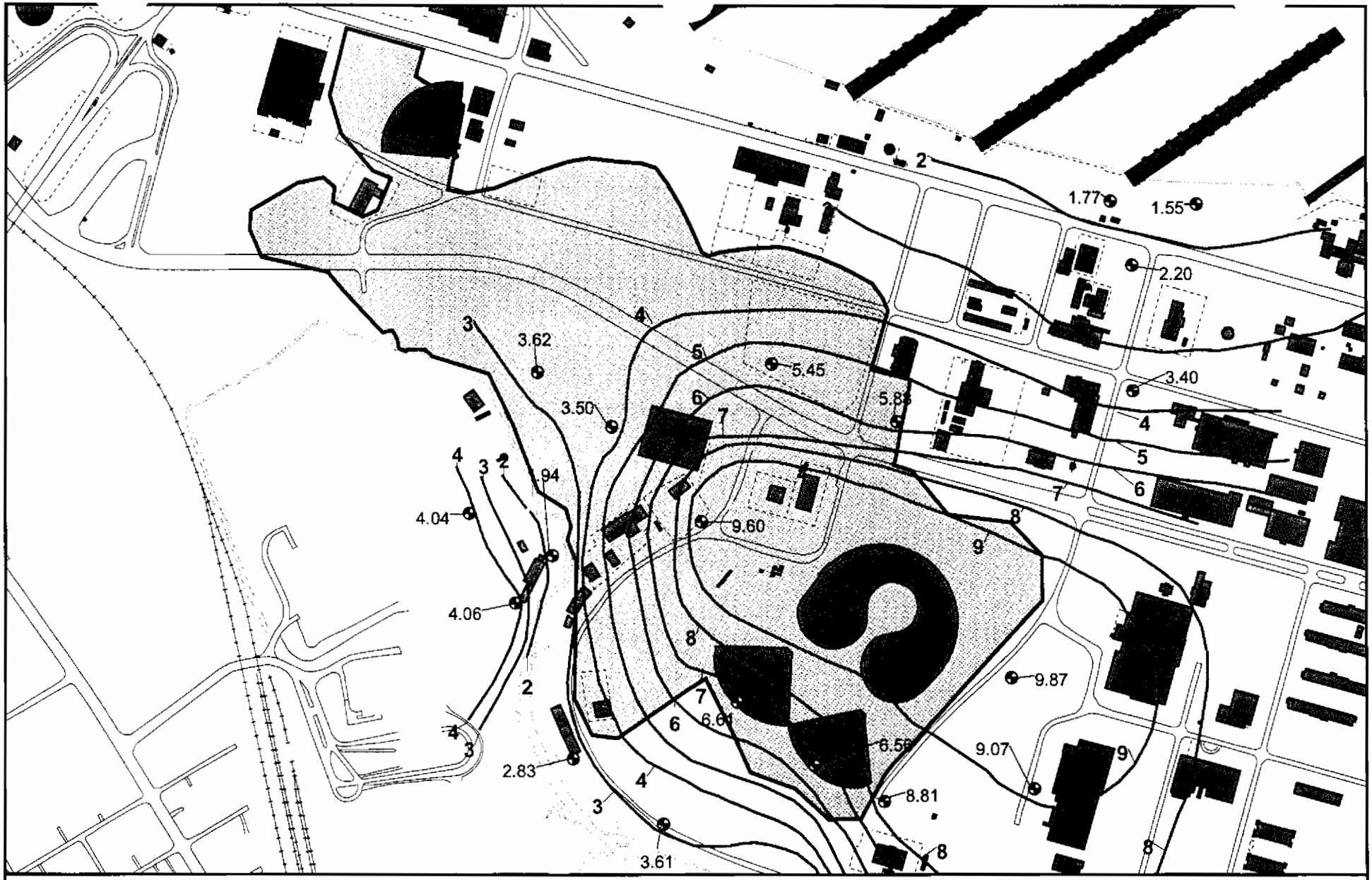

Deep Water Level Elevation Contour (feet MSL)
Monitroing Well with Water Level Elevation (feet MSL)
Shoreline
Buildings and other structures
SWMU 9 Boundary

N

0 400 800 Feet

1 inch = 550 feet

Attachment 4
Potentiometric Surface Map - Deep Groundwater
June 2, 2002
Combined SWMU 9, Zone H
Charleston Naval Complex

CH2MHILL

File Path: C:\18gis\Projects\Zone_H\Swmu_9\Aprs\swmu9_v2.apr, Date: 23 Jan 2003 20:54, User: DBEVERLY, EGIS: Charleston Naval Complex - Figure 2-9 Potentiometric Surface Map - Deep GroundwaterJune 2, 2002

ATTACHMENT 5

Sediment Sample Locations

NOTE: Original figure created in color

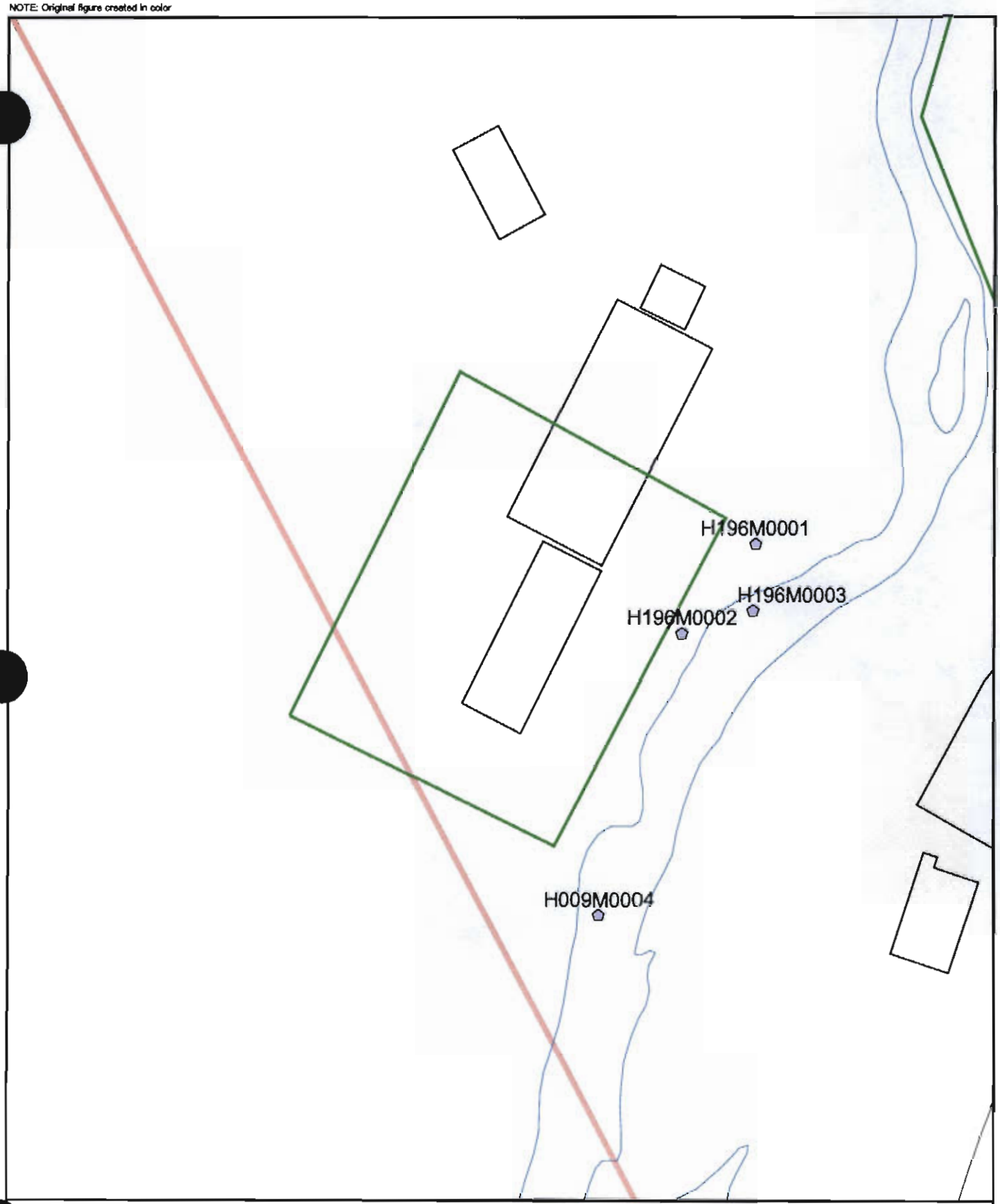

Sediment
Shoreline
AOC Boundary
SWMU Boundary
Buildings

N

0 40 80 Feet

1 inch = 55.9168 feet

Attachment 5
Sediment Sample Locations
SWMU 196
Charleston Naval Complex

CH2MHILL

File Path: c:\18gis\cnc\cnc-egis.apr, Date: 06 Jun 2003 8:25, User: PFAVARA, EGIS: Charleston Naval Complex - Attachment 5 Sediment Sample Locations

CH2M HILL
3011 SW Williston Road
Gainesville, FL 32608-3928
P.O. Box 147009
Gainesville, FL 32614-7009
Tel 352.335.7991
Fax 352.335.2959

CH2MHILL

June 17, 2003

Mr. David Scaturo
South Carolina Department of Health and
Environmental Control
Bureau of Land and Waste Management
2600 Bull Street
Columbia, SC 29201

Re: Phase III RFI Report Addendum/IM Completion Report/CMS Work Plan (Revision 1) – SWMU 196, Zone H

Dear Mr. Scaturo:

Enclosed please find four copies of the Phase III RFI Report Addendum/IM Completion Report/CMS Work Plan (Revision 1) for SWMU 196 in Zone H of the Charleston Naval Complex (CNC). This report has been prepared pursuant to agreements by the CNC BRAC Cleanup Team for completing the RCRA Corrective Action process.

The attached material should be replaced, as indicated, into the original binder submitted for the Revision 0 Phase III RFI Report Addendum/IM Completion Report/CMS Work Plan submitted in November 2002.

The principal author of this document is Paul Favara. Please contact him at 352/335-5877, extension 2396, if you have any questions or comments.

Sincerely,

CH2M HILL

Dean Williamson, P.E.

cc: Dann Spariosu/USEPA, wa/tt
Rob Harrell/Navy, w/att
Gary Foster/CH2M HILL, w/att

CH2M HILL
3011 S.W. Williston Road
Gainesville, FL
32608-3928
Mailing address:
P.O. Box 147009
Gainesville, FL
32614-7009
Tel 352.335.7991
Fax 352.335.2959

CH2MHILL

November 20, 2002

Mr. David Scaturo
South Carolina Department of Health and
Environmental Control
Bureau of Land and Waste Management
2600 Bull Street
Columbia, SC 29201

Re: Phase III RFI Report Addendum/IM Completion Report/CMS Work Plan (Revision 0), – SWMU 196, Zone H

Dear Mr. Scaturo:

Enclosed please find four copies of the Phase III RFI Report Addendum/IM Completion Report/CMS Work Plan (Revision 0) for SWMU 196 in Zone H of the Charleston Naval Complex (CNC). This report has been prepared pursuant to agreements by the CNC BRAC Cleanup Team for completing the RCRA Corrective Action process.

The principal author of this document is Paul Favara. Please contact him at 352/335-5877, extension 2396, if you have any questions or comments.

Sincerely,

CH2M HILL

Dean Williamson, P.E.

cc: Rob Harrell/Navy, w/att
Gary Foster/CH2M HILL, w/att

RFI REPORT ADDENDUM

Phase III RFI Report Addendum/IM Completion Report/ CMS Work Plan - SWMU 196, Zone H

Charleston Naval Complex
North Charleston, South Carolina

SUBMITTED TO
U.S. Navy Southern Division
Naval Facilities Engineering Command

PREPARED BY
CH2M-Jones

June 2003

Revision 1
Contract N62467-99-C-0960
158814.ZH.PR.08

Certification Page for RFI Report Addendum/IM Completion Report/CMS Work Plan (Revision 1) –SWMU 196, Zone H

I, Dean Williamson, certify that this report has been prepared under my direct supervision. The data and information are, to the best of my knowledge, accurate and correct, and the report has been prepared in accordance with current standards of practice for engineering.

South Carolina

Permit No. 21428

Dean Williamson

Dean Williamson, P.E.

6/11/2003

Date

Contents

Section **Page**

Acronyms and Abbreviations ..... **ix**

1.0 Introduction **1-1**

1.1 Background 1-1

1.2 Purpose of the Phase III RFI Report Addendum/IM Completion Report/CMS Work Plan 1-3

1.3 Report Organization 1-4

Figure 1-1 Location of SWMU 196, Zone H 1-6

Figure 1-2 Aerial Photograph of SWMU 196 1-7

2.0 Summary of RFI/RFI Addendum/Phase II RFI Addendum Conclusions for SWMU 196 ..... **2-1**

2.1 Surface Soil Results 2-2

2.2 Subsurface Soil Results 2-2

2.3 Shallow Groundwater Results 2-2

2.3.1 Aluminum 2-3

2.3.2 Antimony 2-3

2.3.3 Arsenic 2-4

2.3.4 Chromium 2-4

2.3.5 Iron 2-4

2.3.6 Thallium 2-4

2.3.7 1, 2-DCE, total 2-4

2.3.8 Benzene 2-4

2.3.9 Chlorobenzene 2-5

2.3.10 PCE 2-5

2.3.11 TCE 2-5

2.3.12 Vinyl Chloride 2-5

2.3.13 1,2-DCB 2-5

2.3.14 1,3-DCB 2-5

2.3.15 1,4-DCB 2-5

2.3.16 2,4-Dichlorophenol 2-6

2.3.17 2-Chlorophenol 2-6

2.4 Deep Groundwater Results 2-6

Contents, Continued

2.5 Sediment Results 2-6
2.5.1 Arsenic 2-6
2.5.2 BEQs 2-7
2.6 Surface Water Results 2-7
3.0 Screening Summary of Interim Measure Baseline Sampling Data 3-1
Table 3-1 Detected Compounds in Shallow Groundwater during the Phase II-A Baseline Monitoring Event 3-3
Figure 3-1 Monitoring Well Locations 3-7
4.0 COPC/COC Refinement 4-1
4.1 Surface Soil 4-1
4.2 Subsurface Soil 4-1
4.3 Shallow Groundwater 4-2
4.3.1 Aluminum 4-2
4.3.2 Antimony 4-3
4.3.3 Arsenic 4-3
4.3.4 Chromium 4-5
4.3.5 Iron 4-5
4.3.6 Thallium 4-5
4.3.7 1,2-DCE, total 4-6
4.3.8 Benzene 4-6
4.3.9 Chlorobenzene 4-6
4.3.10 Methylene Chloride 4-7
4.3.11 PCE 4-7
4.3.12 Toluene 4-7
4.3.13 TCE 4-7
4.3.14 Vinyl Chloride 4-8
4.3.15 1,2-DCB 4-8
4.3.16 1,3-DCB 4-8
4.3.17 1,4-DCB 4-8
4.3.18 2,4-Dichlorophenol 4-9
4.3.19 2-Chlorophenol 4-9
4.4 Deep Groundwater 4-9

Contents, Continued

4.5 Sediment 4-9
4.5.1 Arsenic 4-10
4.5.2 BEQs 4-10
4.6 Surface Water 4-11
4.7 COCs Retained for the Interim Measure/Corrective Measures Study 4-11
4.7.1 Surface and Subsurface Soil 4-11
4.7.2 Groundwater 4-11
4.7.3 Surface Water 4-11
4.7.4 Sediment 4-11
Table 4-1 Detected Concentrations of BEQs in Surface Soil 4-12
Table 4-2 Detected COPCs in Shallow Groundwater 4-13
Table 4-3 Detected COPCs in Sediment Samples 4-21
Figure 4-1 Surface and Subsurface Soil Sample Locations 4-22
Figure 4-2 Thallium Concentrations in Groundwater 4-23
Figure 4-3 1,2-DCE, Total Concentrations in Groundwater 4-24
Figure 4-4 Benzene Concentrations in Groundwater 4-25
Figure 4-5 Chlorobenzene Concentrations in Groundwater 4-26
Figure 4-6 PCE Concentrations in Groundwater 4-27
Figure 4-7 Toluene Concentrations in Groundwater 4-28
Figure 4-8 TCE Concentrations in Groundwater 4-29
Figure 4-9 Vinyl Chloride Concentrations in Groundwater 4-30
Figure 4-10 1,2-DCB Concentrations in Groundwater 4-31
Figure 4-11 1,3-DCB Concentrations in Groundwater 4-32
Figure 4-12 1,4-DCB Concentrations in Groundwater 4-33
Figure 4-13 2,4-Dichlorophenol Concentrations in Groundwater 4-34
Figure 4-14 2-Chlorophenol Concentrations in Groundwater 4-35
Figure 4-15 Sediment Sample Locations 4-36
5.0 Summary of Information Related to Site Closeout Issues 5-1
5.1 Presence of Inorganics in Groundwater 5-1
5.2 Potential Linkage to Sanitary Sewers (SWMU 37) 5-1
5.3 Potential Linkage to Storm Sewers (AOC 699) 5-1
5.4 Potential Linkage to Railroad Lines (AOC 504) 5-2

Contents, Continued

5.5 Potential Migration Pathways to Surface Water Bodies 5-2
5.6 Potential Contamination in Oil/Water Separators (OWSs) 5-3
5.7 Land Use Controls (LUCs) 5-3
6.0 Summary of the Interim Measure at SWMU 196 6-1
6.1 Purpose and Objectives of the Interim Measure 6-1
6.2 Phase I Activities: Source Area Delineation 6-1
6.3 Phase II Activities: Phase II-A, II-B, and II-C 6-2
6.3.1 Phase II-A Activities 6-3
6.3.2 Phase II-B Activities 6-4
6.3.3 Phase II-C Activities 6-4
6.3.4 Interim Measure Summary 6-5
6.4 Screening of Phase II-C (Post-IM) Data 6-6
6.5 Summary of COCs at SWMU 196 6-7
Table 6-1 Pre- and Post-Treatment Data for the Interim Measure at SWMU 196 6-9
Table 6-2 Detected Compounds in Shallow Groundwater during the Phase II-C Monitoring Event 6-10
Figure 6-1 Phase I Groundwater Sample/Lithology Locations 6-17
Figure 6-2 IM Treatment Site with Defined Injection Well Depths 6-18
Figure 6-3 IM Treatment Site with Defined Injector Locations 6-19
Figure 6-4 Chlorobenzene and Dichlorobenze Isomer Concentrations Pre- and Post-Treatment 6-20
Figures 6-5 A-B 1,2-DCB Concentrations Pre- and Post-Treatment 6-21
Figures 6-6 A-B Chlorobenzene Concentrations Pre- and Post-Treatment 6-22
Figures 6-7 A-B 1,4-DCB Concentrations Pre- and Post-Treatment 6-23
Figures 6-8 A-B 1,3-DCB Concentrations Pre- and Post-Treatment 6-24
Figures 6-9 A-B Total Chlorobenzenes Concentrations Pre- and Post-Treatment 6-25
7.0 CMS Work Plan for SWMU 196 7-1
7.1 Remedial Action Objectives and Media Cleanup Standards 7-1
7.2 Remedial Goal Options and Proposed Media Cleanup Standards 7-1
7.3 Site Hydrogeology 7-2
7.3.1 Geology 7-2
7.3.2 Hydrology 7-3

Contents, Continued

7.4 Contamination Assessment Summary 7-4
7.5 Focused CMS Approach 7-5
7.6 Approach to Evaluating Corrective Measure Alternatives 7-5
7.6.1 Protect Human Health and the Environment 7-5
7.6.2 Attain Media Cleanup Standards 7-6
7.6.3 Control the Source of Releases 7-6
7.6.4 Comply with Applicable Standards for Management of Wastes 7-6
7.6.5 Other Factors 7-6
7.7 Identification of Potential Corrective Measure Technologies 7-7
7.7.1 Land Use Controls 7-7
7.7.2 In Situ Plume Remediation Using Chemical Oxidation 7-8
7.7.3 In Situ Plume Remediation Using Enhanced Biological Treatment 7-8
7.7.4 Monitored Natural Attenuation 7-8
7.8 CMS Report 7-8
Table 7-1 Remedial Goal Options - Groundwater 7-9
Table 7-2 Groundwater Elevation Data (April 23, 2002) 7-11
Table 7-3 Outline of Focused CMS Report for SWMU 196 7-12
Figure 7-1 Elevation of the Top of the Ashley Elevation 7-13
Figure 7-2 Shallow Groundwater Potentiometric Contours (April 2002) 7-14
8.0 References 8-1

Appendices

A Excerpts from the *Draft Zone H RFI Report, RFI Addendum, Revision 0* (EnSafe, 2000b)
B Analytical Data Summaries, Phase II IM Groundwater Sampling Event
C Data Validation Report, Phase II IM Groundwater Sampling Event
D BEQ calculations for Rathall Creek
E Soil Boring Logs and Well Completion Diagrams

Acronyms and Abbreviations

AOC	Area of concern
BCT	BRAC Cleanup Team
BEQ	Benzo[a]pyrene equivalent
BRAC	Base Realignment and Closure Act
BRC	Background reference concentration
CA	Corrective Action
CMS	Corrective Measures Study
CNC	Charleston Naval Complex
COC	Chemical of concern
COPC	Chemical of potential concern
CPW	Commissioner of Public Works
CVOC	Chlorinated volatile organic compound
DAF	Dilution attenuation factor
DCB	Dichlorobenzene
DCE	Dichloroethene
DNAPL	Dense non-aqueous phase liquid
DQE	Data quality evaluation
EBEC	Evaluation of Baseline Environmental Conditions
EnSafe	EnSafe, Inc.
EPA	U.S. Environmental Protection Agency
ESA	Environmental site assessment
ft bls	Feet below land surface
HI	Hazard index
HHRA	Human health risk assessment
ILCR	Incremental lifetime cancer risk
IM	Interim measure
ISCO	In situ chemical oxidation
LUC	Land use control
μg/kg	Micrograms per kilogram

Acronyms and Abbreviations, Continued

µg/L	Micrograms per liter
mg/kg	Milligrams per kilogram
mg/L	Milligrams per liter
MCL	Maximum contaminant level
MCS	Media cleanup standard
MNA	Monitored natural attenuation
NAPL	Non-aqueous phase liquid
NAVBASE	Naval Base
ND	Non-detect
NFA	No further action
OSWER	Office of Solid Waste and Emergency Response
OWS	Oil/water separator
PAH	Polycyclic aromatic hydrocarbon
PCE	Tetrachloroethene
ppb	Parts per billion
RAO	Remedial action objective
RBC	Risk-based concentration
RCRA	Resource Conservation and Recovery Act
RFI	RCRA Facility Investigation
RGO	Remedial goal option
RI	Remedial investigation
SCDHEC	South Carolina Department of Health and Environmental Control
SEDSL	Sediment screening level
SSL	Soil screening level
SSV	Sediment screening value
SSWQCSV	Saltwater surface water quality chronic screening value
SVOC	Semivolatile organic compound
SWMU	Solid waste management unit
TCB	Trichlorobenzene
TCE	Trichloroethene

Acronyms and Abbreviations

UST	Underground storage tank
VOC	Volatile organic compound
ZVI	Zero-valent iron

Section 1.0

1.0 Introduction

In 1993, Naval Base (NAVBASE) Charleston was added to the list of bases scheduled for closure as part of the Defense Base Realignment and Closure Act (BRAC), which regulates closure and transition of property to the community. The Charleston Naval Complex (CNC) was formed as a result of the dis-establishment of the Charleston Naval Shipyard and NAVBASE on April 1, 1996.

Corrective Action (CA) activities are being conducted under the Resource Conservation and Recovery Act (RCRA), with the South Carolina Department of Health and Environmental Control (SCDHEC) as the lead agency for CA activities at the CNC. All RCRA CA activities are performed in accordance with the Final Permit (Permit No. SC0 170 022 560).

In April 2000, CH2M-Jones was awarded a contract to provide environmental investigation and remediation services at the CNC.

This submittal has been prepared by CH2M-Jones to present the findings of the additional characterization data collected at Solid Waste Management Unit (SWMU) 196 in Zone H of the CNC, document the Interim Measure (IM) that has been completed to date, and present a Corrective Measures Study (CMS) Work Plan for SWMU 196.

1.1 Background

SWMU 196 is located in the southern portion of the CNC, on its western border (see Figure 1-1). Within Zone H, SWMU 196 is located in the southern section of the former public works storage yard, which includes Building 1838. Figure 1-2 presents an aerial photograph of the site, which depicts these features. Building 1838 was constructed in 1979 and is currently being leased by the Commissioner of Public Works (CPW) of the City of Charleston, South Carolina, for miscellaneous equipment storage. This area was formerly tidal marsh land and has been filled to its present elevation. The fill area drops off steeply to the east of the building toward Shipyard Creek.

In 1991, an Environmental Compliance Evaluation was conducted at the site. Drums and cans containing solvents, paints, acid, and lubricant oil, a potassium chromate tank, and transformers were found stored in the storage yard area. Most were corroded and sitting directly on the ground between the building and the Shipyard Creek Marsh. They were not observed on site in 1993, when an Environmental Baseline Survey was conducted.

The former public works storage yard was originally addressed in the *Final Zone H RCRA Facility Investigation (RFI) Report, Revision 0* (EnSafe Inc. [EnSafe], 1996) as part of the combined SWMU 9, which generally includes all of the closed landfill. In October 1994, during the RFI for SWMU 9, four temporary monitoring wells were installed in the storage yard in the area that is now the SWMU 196 area. Based on the sampling results from these four wells and site conditions, three permanent monitoring wells were installed in the storage yard's northern section. One of the four temporary monitoring wells was installed in the southern section of the storage yard, but no contaminants were detected in the groundwater. The soil was not sampled in the storage yard as part of this investigation.

In June 1996, a pre-lease Evaluation of Baseline Environmental Conditions (EBEC), which included a modified Phase I Environmental Site Assessment (ESA) and a subsurface soil and groundwater investigation, was conducted by the CPW at the former storage yard. The results from the investigation identified contaminant concentrations in groundwater that required further investigation. The complete results from the EBEC are available in the *Evaluation of Baseline Environmental Conditions* (General Engineering Laboratories, Inc., 1996).

Revisions were made to the *Zone H RFI Report, Revision 0*, and a new version was issued in 1998. Regulatory review of the *Zone H RFI Report, Revision 1* (EnSafe/Allen & Hoshall, 1998) required additional investigations at several sites.

From June 1998 to June 1999, a CMS investigation was conducted for Combined SWMU 9. As part of this investigation, additional wells were installed and sampled in the former storage yard to delineate groundwater contamination. Based on the results from the CMS, it was determined that the former storage area required further investigation. Consequently, in September 1999, the area around Building 1838 in the southern portion of the public works storage yard was designated SWMU 196.

An RFI Addendum was prepared for SWMU 196, including a human health and ecological risk assessment, and is documented in the *Draft Zone H RFI Report, RFI Addendum, Revision 0* (EnSafe, 2000b). This document is also referred to as the Navy/EnSafe RFI Addendum. Additional soil and groundwater data were collected as part of this RFI Addendum. A summary of the results from this investigation are presented in Section 2.0 of this report. It was concluded in the *Draft Zone H RFI Report, RFI Addendum, Revision 0* that chemicals of concern (COCs) identified in surface soils, groundwater, and sediment at SWMU 196 should be further evaluated in a CMS.

Another RFI Report Addendum was prepared by CH2M-Jones in 2001. This RFI Report Addendum was designated as Phase II to distinguish it from the prior publication *Draft Zone H RFI Report, RFI Addendum* (EnSafe, 2000b). The subject report was entitled the *Phase II RFI Report Addendum Solid Waste Management Unit (SWMU) 136/Area of Concern (AOC) 663, AOC 666, SWMU 138/AOC 667, SWMU 17, and SWMU 196* (CH2M-Jones, 2001b). The Phase II RFI Report Addendum supported the conclusions of the *Draft Zone H RFI Report, RFI Addendum* (EnSafe, 2000b).

The BRAC Cleanup Team (BCT) agreed to implement an IM to remediate groundwater that appeared to be a source area for chlorobenzene and the dichlorobenzenes. A Phase I IM Work Plan (entitled *Phase I – Source Area Delineation, IM Work Plan for SWMU 196, Zone H* [CH2M-Jones, 2000]) was executed in December 2000 to delineate the extent of chlorobenzene and dichlorobenzenes in groundwater. After delineation was completed, CH2M–Jones executed the Phase II IM Work Plan (entitled *Phase II IM Work Plan for SWMU 196, Zone H* [CH2M-Jones, 2001c]), which involved aggressively treating the source of groundwater contamination using in situ chemical oxidation (ISCO) with Fenton's Reagent. The Phase II IM consisted of a remediation phase which was conducted between November 2001 and July 2002. The pretreatment data for the Phase II IM were used to assess the nature and extent of groundwater contamination at SWMU 196; the evaluation of these data, along with other components of the RFI constitutes this Phase III RFI Report Addendum for SWMU 196. The IM Completion Report for SWMU 196 is presented as Section 6.0 of this report.

1.2 Purpose of the Phase III RFI Report Addendum/IM Completion Report/CMS Work Plan

This document contains three RCRA submittals – the Phase III RFI Report Addendum, the IM Completion Report, and the CMS Work Plan for SWMU 196. Sections 2.0 through 4.0 address topics associated with the Phase III RFI Report Addendum, which provides information about SWMU 196 and documents the conclusions presented for the site in the *Draft Zone H RFI Report, RFI Addendum, Revision 0* (EnSafe, 2000b), *Phase II RFI Report Addendum Solid Waste Management Unit (SWMU) 136/Area of Concern (AOC) 663, AOC 666, SWMU 138/AOC 667, SWMU 17, and SWMU 196* (CH2M-Jones, 2001b), and the data collected as part of the Phase II IM pre-treatment evaluation of the groundwater. The IM pre-treatment data served to provide additional information on the nature and extent of contamination at the site.

Prior to changing the status of any site to No Further Action (NFA) in the CNC RCRA CA permit, the BRAC Cleanup Team (BCT) agreed that the following issues should be considered:

- Status of the RFI
- Presence of metals (inorganics) in groundwater
- Potential linkage to SWMU 37, Investigated Sanitary Sewers at the CNC
- Potential linkage to AOC 699, Investigated Storm Sewers at the CNC
- Potential linkage of AOC 504, Investigated Railroad Lines at the CNC
- Potential linkage to surface water bodies (Zone J)
- Potential contamination associated with oil/water separators (OWSs)
- Relevance or need for land use controls (LUCs) at the site

Information regarding these issues is provided in Section 5.0. At this time, SWMU 196 is not recommended for NFA. However, the above information is presented in this report to expedite decisions made for the site.

The IM Completion Report is presented in Section 6.0 and describes the IM activities conducted as well as the results for the IM completed using ISCO at SWMU 196. The CMS Work Plan, which is contained within Sections 7.0 through 9.0, evaluates and refines the findings for SWMU 196, as presented in the RFI Report Addendum and subsequent investigations, particularly as they relate to the COCs identified at SWMU 196.

1.3 Report Organization

This Phase III RFI Report Addendum/IM Completion Report/CMS Work Plan consists of the following sections, including this introductory section:

1.0 Introduction — Presents the purpose of the report and background information regarding the SWMU 196 area.

2.0 Summary of RFI/RFI Addendum/Phase II RFI Addendum Conclusions for SWMU 196— Summarizes the conclusions from the RFI, RFI Addendum, and Phase II RFI Addendum investigations/evaluations for the area comprising SWMU 196.

3.0 Screening Summary of Interim Measure Baseline Sampling Data — Summarizes information collected as part of the IM baseline groundwater sampling event.

4.0 COPC/COC Refinement —Provides further evaluation of COPCs based on the RFI Addendum investigations and additional (i.e., IM pre-treatment data) data collected after the previously submitted RFI documents.

5.0 Summary of Information Related to Site Closeout Issues—Discusses the various site closeout issues that the BCT agreed to evaluate prior to site closeout.

6.0 Summary of the Interim Measure at SWMU 196– Describes the IM that was conducted at SWMU 196.

7.0 CMS Work Plan for SWMU 196 – This section presents the CMS Work Plan for SWMU 196, defines the remedial action objectives (RAOs) and associated media cleanup standards (MCSs) for the COCs that are identified in Section 4.0. This section also presents the nature and extent of COCs for the SWMU 196 area, along with the CMS procedures that will be used to evaluate and compare relevant remedial approaches to achieving RAOs and MCSs for the COCs.

8.0 References — Lists the references used in this document.

Appendix A contains excerpts from the *Draft Zone H RFI Report, RFI Addendum, Revision 0.*

Appendix B contains the analytical data collected for the IM groundwater sampling event at SWMU 196 (Phase II IM).

Appendix C contains the data validation summaries for the analytical data collected from the Phase II IM baseline and performance monitoring samples.

Appendix D contains benzo[a]pyrene equivalent (BEQ) calculations for Rathall Creek.

Appendix E contains the soil boring logs and well completion diagrams for injectors and monitoring wells installed as part of the IM.

All tables and figures appear at the end of their respective sections.

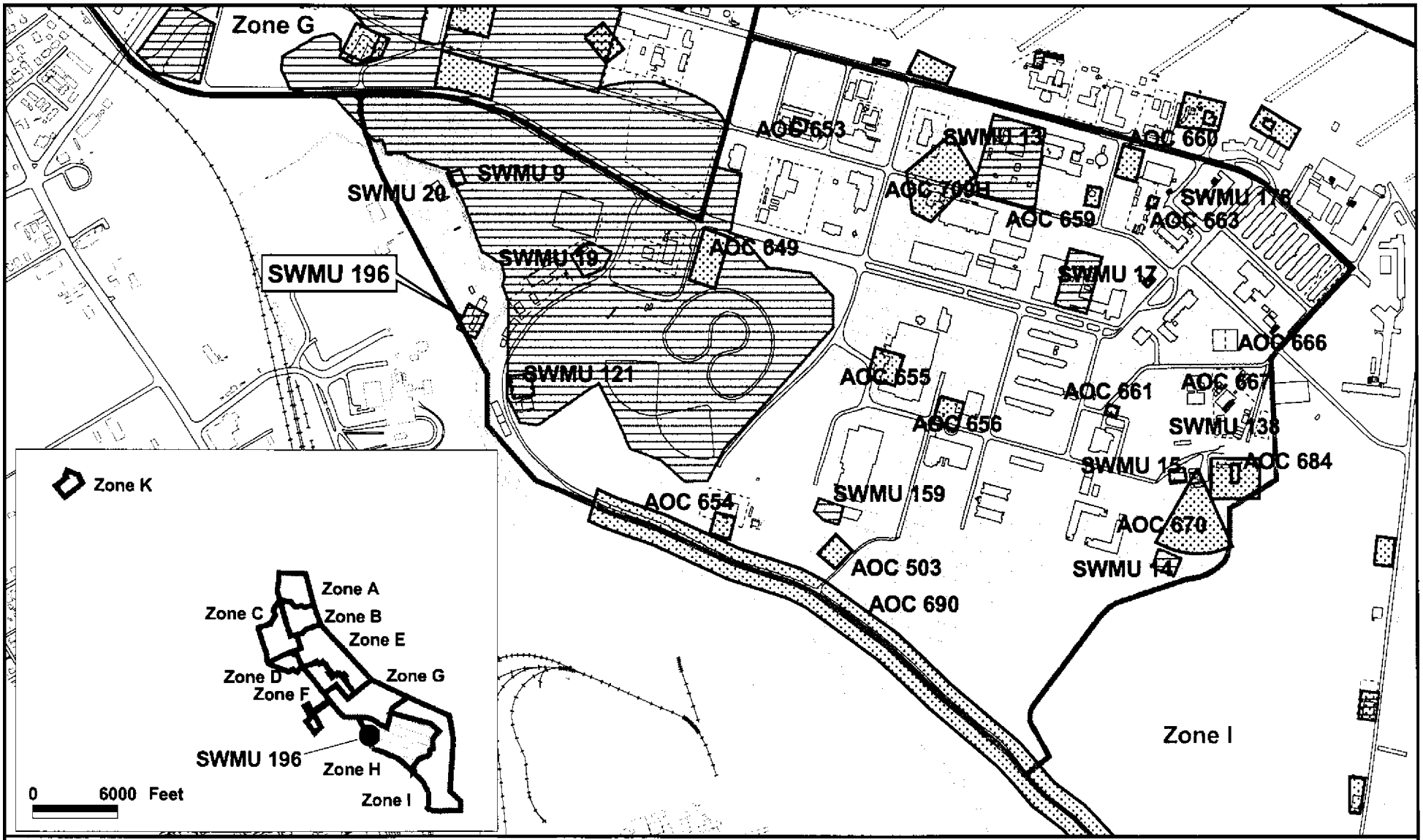

AOC Boundary
SWMU Boundary
Buildings
Zone Boundary
Zone H
Shoreline
Surrounding Area
Railroads
Fence
Roads

N

0 500 1000 Feet

Figure 1-1
Location of SWMU 196
Zone H
Charleston Naval Complex

CH2MHILL

File Path: C:\18gis\Projects\Zone_H\Swmu_196\Aprs\swmu_196.apr, Date: 06 May 2002 10:40, User: AHOLECEK, Figure 1-1 - Figure 1-1 Location of SWMU 196

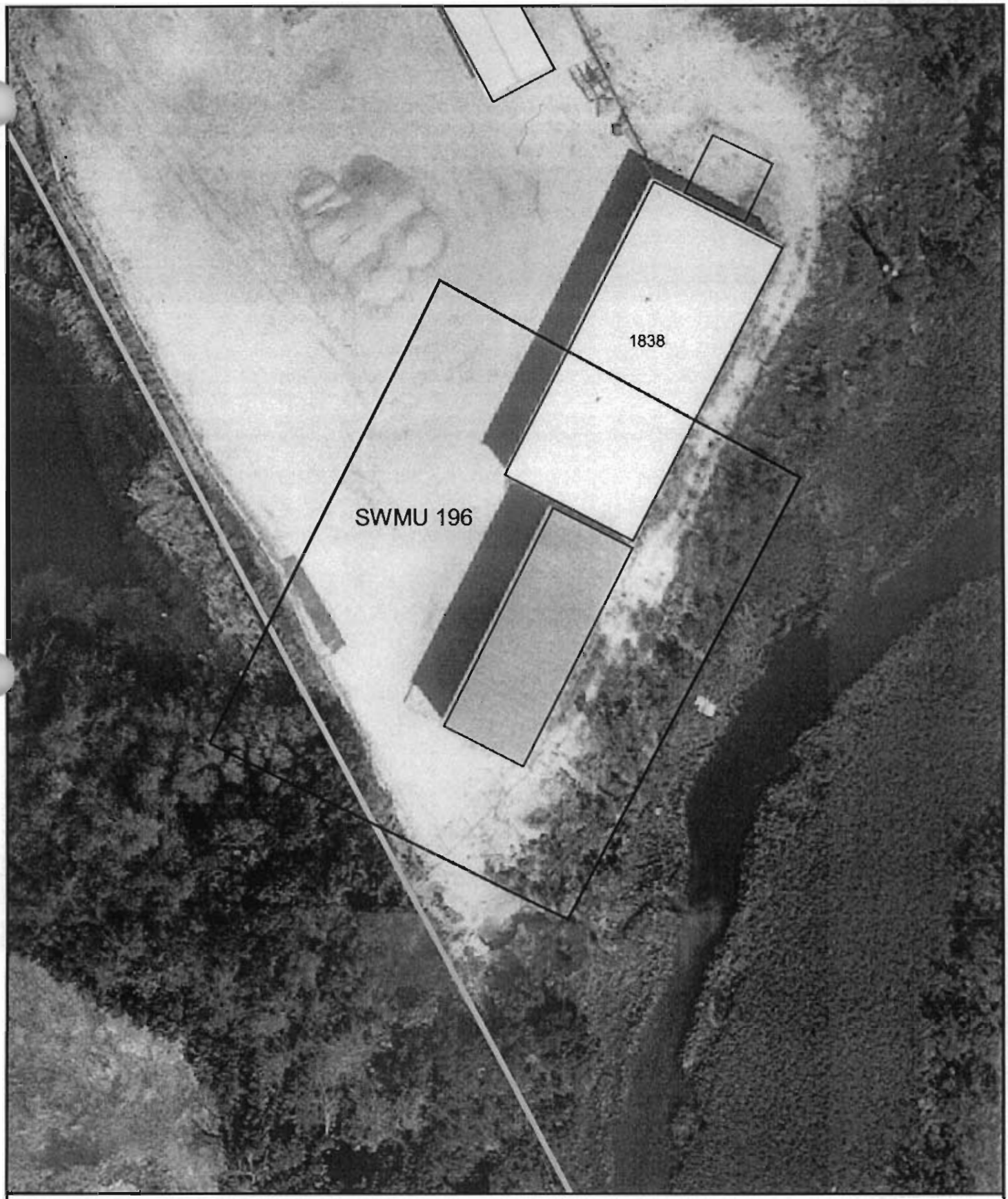

SWMU Boundary
Buildings
Zone Boundary

N

0 30 60 Feet

1 inch = 41.6667 feet

Figure 1-2
Aerial Photograph
SWMU 196, Zone H

CH2MHILL

File Path: C:\18gis\Projects\Zone_H\Swmu_196\Aprs\swmu196_sec5.apr, Date: 16 Oct 2002 8:26, User: NMOUDRY, Figure 1-2 Aerial Photograph

Section 2.0

2.0 Summary of RFI/RFI Addendum/Phase II RFI Addendum Conclusions for SWMU 196

The results for the Navy/EnSafe RFI Addendum conducted at SWMU 196 are discussed in detail in Section 2.4 of the *Draft Zone H RFI Report, RFI Addendum, Revision 0* (EnSafe, 2000b). The EnSafe RFI Addendum Report includes data from the investigations performed as part of the original RFI for Zone H and the CMS for SWMU 9. These reports are the basis for further discussion in these sections. This Phase III RFI Report Addendum is inclusive of the original RFI data. The *Phase II RFI Report Addendum, Revision 0* (CH2M-Jones, 2001b) incorporated, by reference, the results and conclusions from the original *Draft Zone H RFI Report, RFI Addendum* (EnSafe, 2000b). The Phase II RFI Report Addendum did not present any new data for SWMU 196, and is therefore not summarized in this report.

The *Draft Zone H RFI Report, RFI Addendum* (EnSafe, 2000b) identified BEQs as a COC (under the residential exposure scenario) in surface soil at SWMU 196. Arsenic and BEQs were identified as COCs in sediment. Aluminum, antimony, arsenic, chromium, iron, thallium, 1,2-dichloroethene (DCE), benzene, chlorobenzene, tetrachloroethene (PCE), trichloroethene (TCE), vinyl chloride, 1,2-dichlorobenzene (DCB), 1,3-DCB, 1,4-DCB, 2,4-dichlorophenol, and 2-chlorophenol compounds were identified as COCs in shallow groundwater. These chemicals were identified as COCs because they exceeded at least one RFI screening criterion, including regulatory, risk-based, or background values.

No COCs were identified in subsurface soil. Iron was identified as a chemical of potential concern (COPC) based on its potential for leaching in subsurface soil; however, it was not identified as a COC based on the human health risk assessment (HHRA). Furthermore, iron is a naturally occurring mineral that is commonly detected in CNC background samples. No COCs were identified in surface water or deep groundwater. The COCs that were identified in the *Draft Zone H RFI Report, RFI Addendum* are further discussed in the following subsections. Excerpts from the *Draft RFI Report, RFI Addendum, Revision 0* are presented in Appendix A, and include the following figures:

- **Figure 2.4.9** *Site Sample Locations*
- **Figure 2.4.10** *Top of the Ashley Formation*
- **Figure 2.4.11** *Shallow Groundwater Flow - High Tide*
- **Figure 2.4.12** *Shallow Groundwater Flow - Low Tide*
- **Figure 2.4.13** *Deep Groundwater Flow*

2.1 Surface Soil Results

The results for surface soil samples were compared to the applicable screening criteria (U.S. Environmental Protection Agency [EPA] Region III residential risk-based concentrations [RBCs], EPA Office of Solid Waste and Emergency Response [OSWER] soil screening levels [SSLs], or background values) in the *Draft Zone H RFI Report, RFI Addendum, Revision 0*. SSL values based on a dilution attenuation factor (DAF) of 1 were used in the evaluation. Analytes that exceeded the screening criteria were further evaluated in the risk assessment to determine which of these parameters was considered a COC at SWMU 196.

The screening of surface soil resulted in the identification BEQs as a COPC. BEQs were detected in 14 of the 17 surface soil samples collected, at concentrations ranging from 215 to 1,257 micrograms per kilogram (μg/kg). Three samples exceeded the background reference concentration (BRC) of 423 μg/kg, and all 14 samples exceeded the EPA Region III residential RBC of 87 μg/kg. BEQs were identified as COCs due to their contribution to an Incremental Lifetime Cancer Risk (ILCR) of greater than 1E-06. Appendix A includes the analytical data for BEQs from the *Draft Zone H RFI Report, RFI Addendum, Revision 0* (EnSafe, 2000b).

2.2 Subsurface Soil Results

The results for the subsurface soil samples collected at SWMU 196 were compared to the applicable screening criteria (EPA OSWER SSLs or background values) in the *Draft Zone H RFI Report, RFI Addendum, Revision 0*. Parameters that exceeded the applicable SSL and that were detected in groundwater above the RBC (and background concentration for inorganics) were identified as COPCs in groundwater. SSL values based on a DAF of 1 were used in the evaluation.

No constituents were identified as COCs in subsurface soils at SWMU 196 in the *Draft Zone H RFI Report, RFI Addendum, Revision 0*.

2.3 Shallow Groundwater Results

The results for shallow groundwater samples were compared to the applicable screening criteria (EPA maximum contaminant levels [MCLs], EPA Region III tap water RBCs, and Zone H background concentrations) in the *Draft Zone H RFI Report, RFI Addendum, Revision 0*. Appendix A includes analytical data for groundwater samples from this report. Analytes

that exceeded the screening criteria were further evaluated in the risk assessment to determine which of these parameters was considered a COC at SWMU 196.

The screening of shallow groundwater resulted in the identification of six inorganic compounds and 11 organic compounds as COCs. These compounds are listed as follows, and are discussed briefly in the following subsections:

- Aluminum
- Antimony
- Arsenic
- Chromium
- Iron
- Thallium
- 1,2-DCE, total
- Benzene
- Chlorobenzene
- PCE
- TCE
- Vinyl Chloride
- 1,2-DCB
- 1,3-DCB
- 1,4-DCB
- 2,4-Dichlorophenol
- 2-Chlorophenol

2.3.1 Aluminum

Aluminum was detected in eight of 13 shallow groundwater samples collected at SWMU 196. Nine samples exceeded the Zone H groundwater BRC of non-detect (ND). One sample exceeded the RBC (HI=0.1) of 3,700 micrograms per liter (μg/L). Aluminum was considered a COC in groundwater due to its contribution to an overall hazard index (HI) of greater than 1.0.

2.3.2 Antimony

Antimony was detected in one of 13 shallow groundwater samples collected at SWMU 196; this sample exceeded the Zone H BRC of ND and the RBC of 1.5 μg/L. Antimony was considered a COC in shallow groundwater due to its contribution to an overall HI of greater than 1.0.

2.3.3 Arsenic

Arsenic was detected in 12 of 13 shallow groundwater samples collected at SWMU 196. Five samples exceeded the Zone H BRC of 21.5 $\mu g/L$; all 12 samples exceeded the RBC of 0.045 $\mu g/L$. Two samples exceeded the MCL of 50 $\mu g/L$. Arsenic was considered a COC due to its contribution to an overall HI of greater than 1.0 as well as an ILCR of greater than 1E-06.

2.3.4 Chromium

Chromium was detected in four of 13 shallow groundwater samples collected at SWMU 196. All four samples exceeded the Zone H BRC of ND and one sample exceeded the hexavalent chromium RBC (HI=0.1) of 11 $\mu g/L$. Chromium was considered a COC due to its contribution to an overall HI of greater than 1.0.

2.3.5 Iron

Iron was detected in all 12 shallow groundwater samples collected at SWMU 196. All 12 samples exceeded the RBC of 1,100 $\mu g/L$. Iron was considered a COC due to its contribution to an overall HI of greater than 1.0.

2.3.6 Thallium

Thallium was detected in three of 13 shallow groundwater samples collected at SWMU 196. One sample exceeded the Zone H BRC of 5.3 $\mu g/L$. All three samples exceeded the RBC of 0.26 $\mu g/L$ and the MCL of 2 $\mu g/L$. Thallium was considered a COC due to its contribution to an overall HI of greater than 1.0.

2.3.7 1, 2-DCE, total

1, 2-DCE (total) was detected in six of 24 groundwater samples collected at SWMU 196. One sample exceeded the MCL for cis-1,2-DCE of 70 $\mu g/L$ and four samples exceeded the RBC of 5.5 $\mu g/L$. 1,2-DCE (total) was considered a COC due to its contribution to an overall HI of greater than 1.0.

2.3.8 Benzene

Benzene was detected in 11 of 24 shallow groundwater samples collected at SWMU 196. All 11 samples exceeded the RBC of 0.32 $\mu g/L$ and the MCL of 5 $\mu g/L$. Benzene was considered a COC due to its exceedance of the MCL and due to its contribution to an overall HI of greater than 1.0 as well as an ILCR of greater than 1E-06.

2.3.9 Chlorobenzene

Chlorobenzene was detected in 15 of 24 shallow groundwater samples collected at SWMU 196. Eleven samples exceeded the MCL of 100 μg/L and 13 samples exceeded the RBC of 11 μg/L. Chlorobenzene was considered a COC due to its contribution to an overall HI of greater than 1.0.

2.3.10 PCE

PCE was detected in two of 24 shallow groundwater samples collected at SWMU 196. Both samples exceeded the RBC of 1.1 μg/L. Neither sample exceeded the MCL of 5 μg/L. PCE was considered a COC because of its contribution to an overall ILCR of greater than 1E-06.

2.3.11 TCE

TCE was detected in four of 24 shallow groundwater samples collected at SWMU 196. One sample exceeded the MCL of 5 μg/L and two samples exceeded the RBC of 1.6 μg/L. TCE was considered a COC because of its contribution to an overall ILCR of greater than 1E-06.

2.3.12 Vinyl Chloride

Vinyl chloride was detected in five of 24 shallow groundwater samples collected at SWMU 196. Four samples exceeded the MCL of 2 μg/L and all five samples exceeded the RBC of 0.015 μg/L. Vinyl chloride was considered a COC due to its contribution to an overall ILCR of greater than 1E-06.

2.3.13 1,2-DCB

1,2-DCB was detected in 11 of 22 shallow groundwater samples collected at SWMU 196. Seven samples exceeded the MCL of 600 μg/L and 10 samples exceeded the RBC of 6.4 μg/L. 1, 2- DCB was considered a COC due to its contribution to an overall HI of greater than 1.0.

2.3.14 1,3-DCB

1,3-DCB was detected in 11 of 22 shallow groundwater samples collected at SWMU 196. All 11 samples exceeded the previously applicable RBC of 0.55 μg/L. There is no MCL available for 1,3-DCB. 1,3-DCB was considered a COC due to its contribution to an overall HI of greater than 1.0.

2.3.15 1,4-DCB

1,4-DCB was detected in 12 of 22 shallow groundwater samples collected at SWMU 196. Nine samples exceeded the MCL of 75 μg/L and all 2 samples exceeded the RBC of 0.47

μg/L. 1,4-DCB was considered a COC due to its contribution to an overall HI of greater than 1.0 as well as an ILCR of greater than 1E-06.

2.3.16 2,4-Dichlorophenol

2, 4-dichlorophenol was detected in six of 22 shallow groundwater samples collected at SWMU 196. One sample exceeded the RBC of 11 μg/L. 2,4-dichlorophenol was considered a COC due to its contribution to an overall HI of greater than 1.0.

2.3.17 2-Chlorophenol

2-chlorophenol was detected in eight of 22 shallow groundwater samples collected at SWMU 196. Six samples exceeded the RBC of 3 μg/L. 2-chlorophenol was considered a COC due to its contribution to an overall HI of greater than 1.0.

2.4 Deep Groundwater Results

The results for deep groundwater samples were compared to the applicable screening criteria (EPA MCLs, EPA Region III tap water RBCs, and Zone H background concentrations) in the *Draft Zone H RFI Report, RFI Addendum, Revision 0*. No parameters were identified during the screening process as having exceeded criteria.

No constituents were identified as COCs in deep groundwater at SWMU 196 in the *Draft Zone H RFI Report, RFI Addendum, Revision 0*.

2.5 Sediment Results

The results for sediment samples were compared to the applicable screening criteria (EPA Region IV ecological sediment screening values [SSVs] and calculated "sediment to surface water" sediment screening levels [SEDSL]) in the *Draft Zone H RFI Report, RFI Addendum, Revision 0*. In addition, because sediment locations are exposed during low tide, sediment samples were screened against the EPA Region III residential RBCs. No background concentrations were available for sediments. Analytes that exceeded the screening criteria were further evaluated in the risk assessment to determine which of these parameters was considered a COC at SWMU 196. Appendix A includes the analytical data for sediment from the report.

2.5.1 Arsenic

Arsenic was detected in all nine sediment samples that were collected. All nine samples exceeded the RBC of 430 μg/kg and SEDSL of 130 μg/kg. Two samples exceeded the SSV of

7,240 μg/kg. Arsenic was identified as a COC due to its contribution to an overall ILCR of greater than 1E-06.

2.5.2 BEQs

BEQs were detected in all nine sediment samples that were collected. All nine samples exceeded the RBC of 87 μg/kg. BEQs were identified as COCs due to their contribution to an overall ILCR of greater than 1E-06.

2.6 Surface Water Results

The results from surface water samples were compared to the applicable screening criteria (EPA saltwater surface water quality chronic screening values [SSWQCSVs]) in the *Draft Zone H RFI Report, RFI Addendum, Revision 0*. No parameters were identified during the screening process as having exceeded criteria.

No constituents were identified as COCs in surface water at SWMU 196 in the *Draft Zone H RFI Report, RFI Addendum, Revision 0*.

Section 3.0

3.0 Screening Summary of Interim Measure Baseline Sampling Data

An IM was conducted at SWMU 196 in order to remediate a chlorobenzene and DCB source area in shallow groundwater. The IM was completed in two phases. Phase I was executed to delineate the extent of chlorobenzene and DCBs in groundwater. Phase II-A, Phase II-B, and Phase II-C utilized chemical oxidation, via Fenton's Reagent, to reduce chlorobenzene and DCB concentrations in the source area of the site. The IM is discussed in detail in Section 6.0 of this report.

Prior to Phase II-A of the IM (completed prior to treatment), groundwater samples were collected to determine baseline conditions at the site. Samples were analyzed for volatile organic compounds (VOCs) by SW-846 Method 8260. Groundwater samples collected during this event were not analyzed for metals since the IM was focused on chlorobenzene and DCB delineation and remediation. In addition, Method 8260 only includes selected semivolatile organic compounds (SVOCs); therefore, 2,4-dichlorophenol and 2-chlorophenol, which were identified as COCs in the *Draft Zone H RFI Report, RFI Addendum, Revision 0*, were not included in the analysis. The IM Phase II-A baseline sampling event was conducted in October 2001; analytical data reports are presented in Appendix B of this report. A data quality evaluation (DQE) report is contained in Appendix C. The screening of these data constitutes the Phase III RFI Addendum.

Figure 3-1 identifies wells that were installed for the IM, as well as those that were installed prior to the IM. Additional monitoring wells were installed as part of the IM at SWMU 196, with a majority of the wells installed in the area of the highest level of chlorobenzene and DCB contamination.

The analytical results from the Phase II-A baseline sampling event were screened against applicable COPC screening criteria (MCLs or RBCs) and are summarized in Table 3-1. Samples that exceeded applicable screening parameters are in bold text and outlined within the table. In order for a chemical to be considered a COPC, the chemical must exceed the MCL, or for those parameters that have no MCL, the EPA Region III tap water RBC. There are no background values established for VOCs and SVOCs. As stated above, metals and SVOCs (not included in SW-846 Method 8260) identified as COCs in the *Draft Zone H RFI*

Report, RFI Addendum were not screened since they were not included in the IM sampling and analysis plan.

The following 11 COPCs were identified in groundwater based on the screening conducted on Phase II-A IM pre-treatment data:

- 1,2-DCB
- 1,3-DCB
- 1,4-DCB
- cis-1,2-DCE
- Benzene
- Chlorobenzene
- Methylene Chloride
- Toluene
- PCE
- TCE
- Vinyl Chloride

Nine of the identified COPCs were reported as COCs in the Draft Zone H RFI Report Addendum. Two of the identified COPCs (methylene chloride and toluene) were not included on the RFI Addendum COC list. These two compounds were reported at low concentrations or ND in prior sampling events. The occurrence of methylene chloride and toluene as COPCs is attributed to the location of the new monitoring wells installed as part of the IM. The above constituents are discussed in further detail in Section 4.0.

TABLE 3-1
Detected Compounds in Shallow Groundwater during Phase II-A Baseline Monitoring Event
Phase III RFI Report Addendum/ IM Completion Report/CMS Work Plan, SWMU 196, Zone H, Charleston Naval Complex

Parameter	Location	Sample ID	Concentration (µg/L)	Qualifier	MCL	EPA Region III Tap Water RBC[a]
Volatile Organic Compounds						
Benzene	H009GW021	009GW021L1	4.8	=	**5[b]**	*0.32[c]*
	H009GW022	009GW022L1	1.9	=		
	H196GW004	196GW004L1	**670**	=		
	H196GW005	196GW005L1	**11.2**	=		
	H196GW006	196GW006L1	**85**	J		
	H196GW007	196GW007L1	**22.9**	J		
	H196GW008	196GW008L1	**21.3**	J		
	H196GW009	196GW009L1	**144**	=		
	HGELGW015	GELGW015L1LR	**141**	J		
Chlorobenzene	H009GW020	009GW020L1	**11,500**	=	**100**	*11*
	H009GW021	009GW021L1LR	**1,870**	=		
	H009GW022	009GW022L1LR	**221**	=		
	H196GW004	196GW004L1	**9,470**	=		
	H196GW005	196GW005L1LR	**1,600**	=		
	H196GW006	196GW006L1	**20,600**	=		
	H196GW007	196GW007L1	**5,780**	=		
	H196GW008	196GW008L1	**4,500**	=		
	H196GW009	196GW009L1	**2,240**	=		
	H196GW010	196GW010L1	**3,920**	=		
	HGELGW015	GELGW015L1LR	**9,020**	=		
cis-1,2-DCE	H009GW021	009GW021L1	11.3	=	**70**	*5.5*
	H009GW022	009GW022L1	10.9	=		
	H196GW004	196GW004L1	**112**	=		
	H196GW008	196GW008L1	32.6	J		
	H196GW009	196GW009L1	37.6	J		
	HGELGW015	GELGW015L1	0.89	J		
Ethyl benzene	H009GW021	009GW021L1	0.33	J	**700**	*130*
	HGELGW015	GELGW015L1	0.2	J		
Methyl Isobutyl Ketone	H009GW021	009GW021L1	0.79	J	*NA*	**14**

TABLE 3-1
Detected Compounds in Shallow Groundwater during Phase II-A Baseline Monitoring Event
Phase III RFI Report Addendum/ IM Completion Report/CMS Work Plan, SWMU 196, Zone H, Charleston Naval Complex

Parameter	Location	Sample ID	Concentration (µg/L)	Qualifier	MCL	EPA Region III Tap Water RBC[a]
Methylene Chloride	H196GW006	196GW006L1	**158**	J	**5**	*4.1*
	H196GW008	196GW008L1	**66.9**	J		
PCE	H009GW021	009GW021L1	1.4	=	**5**	*1.1*
	H009GW022	009GW022L1	**5.8**	=		
	H196GW004	196GW004L1	**213**	=		
	H196GW009	196GW009L1	**472**	=		
	HGELGW015	GELGW015L1	0.22	J		
Toluene	H009GW021	009GW021L1	0.37	J	**1,000**	*750*
	H009GW022	009GW022L1	2.5	=		
	H196GW004	196GW004L1	**1,520**	=		
	H196GW005	196GW005L1	2.6	J		
	H196GW009	196GW009L1	440	=		
	HGELGW015	GELGW015L1	1.5	=		
trans-1,2-DCE	H009GW021	009GW021L1	1.4	=	**100**	*12*
TCE	H009GW021	009GW021L1	1.3	=	**5**	*1.6*
	H009GW022	009GW022L1	**9.1**	=		
	H196GW004	196GW004L1	**21.3**	J		
	HGELGW015	GELGW015L1	0.43	J		
Vinyl Chloride	H009GW021	009GW021L1	**3**	=	**2**	*0.04*
Xylenes, total	H009GW021	009GW021L1	0.39	J	**10,000**	*1,200*
	HGELGW015	GELGW015L1	0.3	J		
Semivolatile Organic Compounds						
1,2-DCB	H009GW020	009GW020L1	**1,410**	=	**600**	*27*
	H009GW021	009GW021L1LR	**3,620**	J		
	H009GW022	009GW022L1LR	**1,520**	J		
	H196GW004	196GW004L1	**20,900**	J		
	H196GW005	196GW005L1LR	**13,800**	J		
	H196GW006	196GW006L1	**24,200**	=		
	H196GW007	196GW007L1	**12,300**	J		

TABLE 3-1
Detected Compounds in Shallow Groundwater during Phase II-A Baseline Monitoring Event
Phase III RFI Report Addendum/ IM Completion Report/CMS Work Plan, SWMU 196, Zone H, Charleston Naval Complex

Parameter	Location	Sample ID	Concentration (µg/L)	Qualifier	MCL	EPA Region III Tap Water RBC[a]
1,2-DCB	H196GW008	196GW008L1	**9,790**	=	**600**	*27*
	H196GW009	196GW009L1	**32,800**	J		
	H196GW010	196GW010L1	**8,990**	=		
	HGELGW015	GELGW015L1LR	**19,500**	=		
1,3-DCB	H009GW020	009GW020L1	**88**	=	*NA*	**18**
	H009GW021	009GW021L1LR	**301**	=		
	H009GW022	009GW022L1	**78**	=		
	H196GW004	196GW004L1	**1,150**	=		
	H196GW005	196GW005L1	**231**	=		
	H196GW006	196GW006L1	**367**	=		
	H196GW007	196GW007L1	**213**	=		
	H196GW008	196GW008L1	**604**	=		
	H196GW009	196GW009L1	**2,720**	=		
	H196GW010	196GW010L1	**175**	=		
	HGELGW015	GELGW015L1LR	**248**	=		
1,4-DCB	H009GW020	009GW020L1	**289**	=	**75**	*0.47*
	H009GW021	009GW021L1LR	**587**	=		
	H009GW022	009GW022L1LR	**157**	=		
	H196GW004	196GW004L1	**2,300**	=		
	H196GW005	196GW005L1	**554**	=		
	H196GW006	196GW006L1	**1,040**	=		
	H196GW007	196GW007L1	**603**	=		
	H196GW008	196GW008L1	**1,220**	=		
	H196GW009	196GW009L1	**4,950**	=		
	H196GW010	196GW010L1	**437**	=		
	HGELGW015	GELGW015L1LR	**636**	=		

All values are presented in units of micrograms per liter (µg/L).

Values that exceeded the screening criterion(a) are in bold and outlined within the table.

Note that there are no background values for volatile organic compounds or semivolatile organic compounds in groundwater.

[a] Hazard Index (HI) reduced by one order of magnitude for non-carcinogenic compounds.

[b] Bold MCL value indicates regulatory criteria used for screening.

[c] Value listed in italics indicates regulatory criteria secondary to that used for screening.

TABLE 3-1
Detected Compounds in Shallow Groundwater during Phase II-A Baseline Monitoring Event
Phase III RFI Report Addendum/ IM Completion Report/CMS Work Plan, SWMU 196, Zone H, Charleston Naval Complex

Parameter	Location	Sample ID	Concentration (µg/L)	Qualifier	MCL	EPA Region III Tap Water RBC[a]

=	Indicates that the compound was detected, the reported value is equal to the sample concentration.
J	Indicates that the compound was detected, the reported concentration is estimated.
NA	Not applicable
DCB	Dichlorobenzene
DCE	Dichloroethene
MCL	Maximum contaminant level
PCE	Tetrachloroethene
TCE	Trichloroethene

NOTE: Original figure created in color

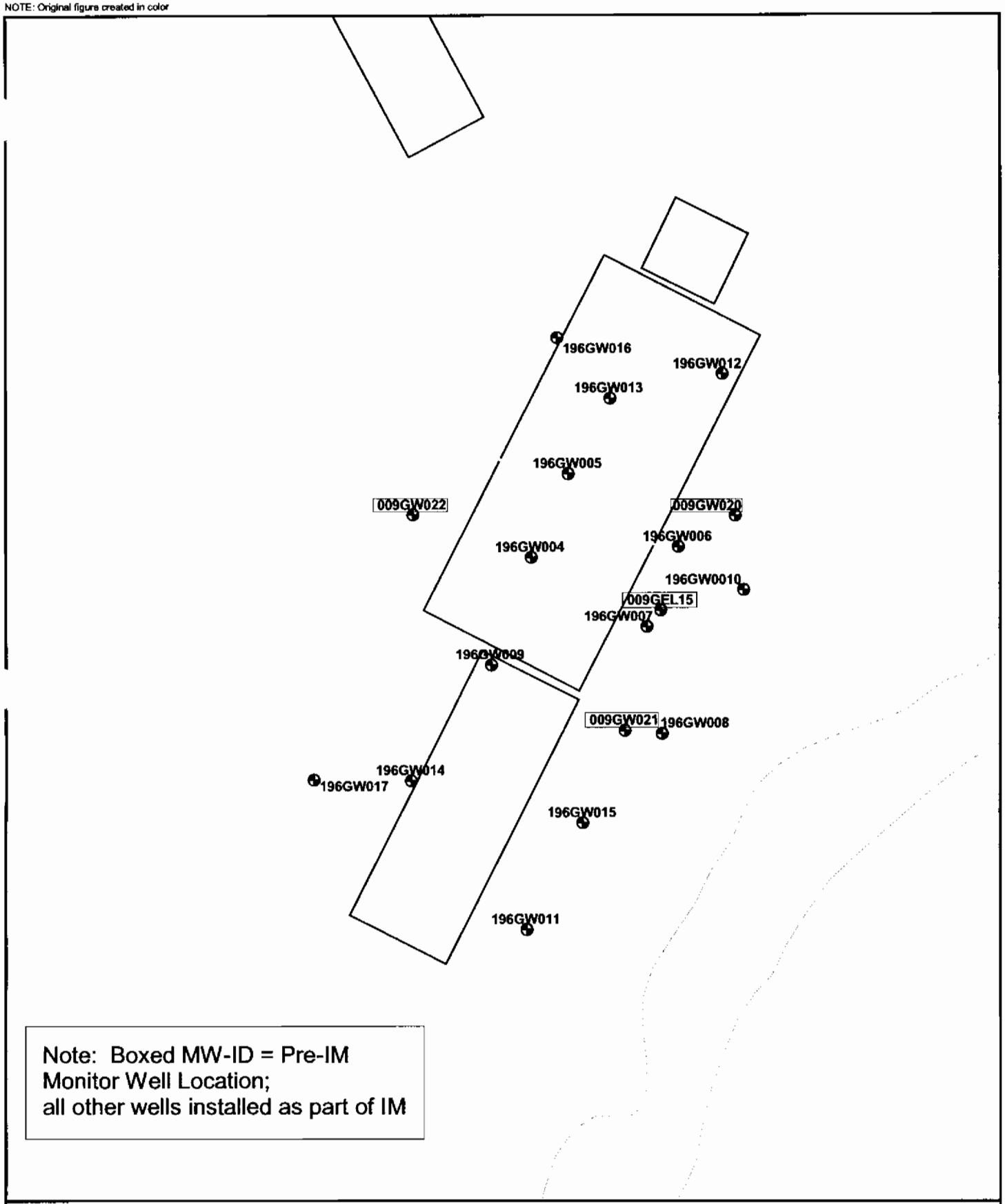

Monitoring Wells
AOC Boundary
SWMU Boundary
Shoreline

N

0 30 60 Feet

1 inch = 34.1927 feet

Figure 3-1
Monitor Well Locations
SWMU 196
Charleston Naval Complex

CH2MHILL

File Path: c:\18gis\projects\zone_h\swmu_196\aprs\battelle.apr, Date: 28 Oct 2002 9:30, User: PFAVARA, RFIRA_CMSWP: Figure 3-1 Monitor Well Locaitions

Section 4.0

4.0 COPC/COC Refinement

This section discusses the chemicals that were identified in the *Draft Zone H RFI Report, RFI Addendum, Revision 0* (EnSafe, 2000b) as COCs (see Section 2.0 of this report) and in the IM data screening as COPCs. The factors that determine whether a COPC meets the criteria for being a COC are discussed for each parameter. Chemicals detected above Zone H background levels and screening criteria, such as an RBC (HI=0.1), are discussed in further detail to determine if the site soils, sediment, and groundwater present unacceptable human health risk under the unrestricted (i.e., residential) land use scenario.

The selection of COCs is based on data presented in the *Draft Zone H RFI Report, RFI Addendum, Revision 0* and on the IM Phase II-A baseline groundwater monitoring event (prior to completing the IM). RFI screening data were collected in May 1998, August 1998, April 1999, December 1999, June 1999, and December 1999. The Phase II-A baseline event was performed in October 2001.

4.1 Surface Soil

Only BEQs were identified as COCs for unrestricted land use in surface soil (0 to 1 feet below land surface [ft bls]) in the *Draft Zone H RFI Report, RFI Addendum*; all soil sample locations are presented in Figure 4-1. Table 4-1 lists the results for BEQs detected in surface soil samples at SWMU 196.

All BEQ surface soil samples were reported below the sitewide surface soil reference concentration of 1,304 μg/kg. The basis for this value was established for surface soils in the *Background PAHs Study Report – Technical Information for Development of Background BEQ Values* (CH2M-Jones, 2001a). Based on this information, BEQs are not COCs in surface soil at SWMU 196 and will not be considered further for the CMS.

4.2 Subsurface Soil

There were no COPCs or COCs previously identified in the *Draft Zone H RFI Report, RFI Addendum* for subsurface soil at SWMU 196.

4.3 Shallow Groundwater

The following COCs/COPCs were identified in shallow groundwater at SWMU 196 in the *Draft Zone H RFI Report, RFI Addendum* and during the post-RFI (IM pre-treatment) sampling effort:

- Aluminum
- Antimony
- Arsenic
- Chromium
- Iron
- Thallium
- 1,2-DCE, total
- Benzene
- Chlorobenzene
- Methylene Chloride
- Toluene
- PCE
- TCE
- Vinyl Chloride
- 1,2-DCB
- 1,3-DCB
- 1,4-DCB
- 2,4-Dichlorophenol
- 2-Chlorophenol

Appendix A includes a summary of relevant data reported in the *Draft Zone H RFI Report, RFI Addendum*. Appendix B includes all data from the IM Phase II-A sampling event.

The full data set was screened to refine COPCs/COCs and to finalize COCs in groundwater. The results of the screening are presented in Table 4-2. Figures 4-2 through 4-14 present the reported concentrations of selected compounds in shallow groundwater. These COPCs/COCs are further evaluated to determine whether they should be considered as COCs for the CMS, as discussed below. A groundwater potentiometric map is presented later in this report as Figure 7-2.

4.3.1 Aluminum

Table 4-2 presents a summary of detected aluminum concentrations in shallow groundwater. Aluminum was reported in excess of the Zone H aluminum background range (57 μg/L to 1,140 μg/L) and the RBC (3,700 μg/L at HI=0.1) in one sample. This

sample was collected in August 1998 from monitoring well 009GW023 and reported at 5,970 μg/L, as summarized below. This is the only sample collected at this well that had an exceedance of the RBC. Furthermore, it was the only exceedance detected during that sampling event. A subsequent groundwater sample collected from this well in December 1999 was reported at 1,000 μg/L, which is within the Zone H background range and below the RBC. In addition, aluminum is a naturally occurring earth mineral that is commonly detected in CNC background samples.

Parameter	Station ID	Sample ID	Result (μg/L)	Qualifier	Date Collected
Aluminum	H009GW023	009GW02301	5,970	=	08/11/1998
	H009GW023	009GW02304	1,000	=	12/08/1999

There are no known releases of aluminum at this site, and the data do not indicate that aluminum wastes were handled at the site. Based on this information, aluminum is not considered a COC in groundwater at SWMU 196.

4.3.2 Antimony

Table 4-2 presents a summary of detected antimony concentrations in shallow groundwater. Antimony was reported below the MCL (6 μg/L) in all groundwater samples collected at SWMU 196. Therefore, antimony is not a COC in groundwater at SWMU 196.

4.3.3 Arsenic

Arsenic was reported in excess of the Zone H arsenic background range (0.8 μg/L to 50 μg/L) and its MCL (50 μg/L) in two samples from the same well (HGELGW015). The arsenic concentration at HGELGW015 was reported at 327 μg/L in August 1998 and at 118 μg/L in December 1999. Table 4-2 includes all detected arsenic concentrations from the wells around SWMU 196.

There is no discernable anthropogenic source of arsenic at SWMU 196, nor are there any elevated arsenic detections in soil at the site. The elevated arsenic levels are also observed at other locations within the CNC. This is observed to be a common phenomenon occurring in subsurface hydrogeology, where under appropriate conditions, arsenic is dissolved at higher levels due to natural geochemical processes. A memorandum describing the geochemical processes was previously prepared and submitted to SCDHEC (CH2M-Jones, 2001d). As presented in the technical memorandum, an indirect indicator for reducing conditions to be present, that seem to promote higher dissolution of some of the metals, is the presence of elevated iron co-occurring with arsenic. Naturally occurring arsenic is often

found adsorbed to and co-precipitated with metal oxides, especially iron oxides. Iron oxides are widespread in the environment as coatings on other solids, such as sand grains. They may be reduced by microbial activity, in which ferric iron is used as the electron acceptor, releasing ferrous iron and arsenic which are more soluble, into the groundwater. Iron oxides frequently dissolve under reducing conditions, releasing arsenic that may be sorbed. Iron-reducing bacteria may also enhance the leaching of arsenic in groundwater.

At SWMU 196, the high concentrations of arsenic detected in well HGELGW015 also correlate with elevated concentrations of ferrous iron in the same well, as presented in the table below. EPA's guidance document, *Technical Protocol for Evaluating Natural Attenuation of Chlorinated Solvents in Groundwater* (EPA/600/R-98/128, September 1998), indicates that an iron concentration of 1,000 μg/L or more is an indication of iron-reducing conditions. The high ferrous iron concentrations indicate a strong iron-reducing environment in that area. Therefore, arsenic in this well is most likely being released into groundwater through a reductive dissolution of iron oxides. This dissolution of arsenic into the groundwater appears to be spatially isolated. The two wells adjacent to HGELGW015 (H009GW020 and H009GW021), which are also screened at the same vertical depths, both had levels of arsenic and iron well below screening criteria.

Parameter	Station ID	Sample ID	Result (μg/L)	Qualifier	Date Collected
Arsenic	HGELGW015	GELGW01502	327	=	08/11/1998
	HGELGW015	GELGW01504	118	=	12/08/1999
Iron	HGELGW015	GELGW01502	39,800	=	08/11/1998
	HGELGW015	GELGW01504	37,400	=	12/07/1999

Based on a review of geochemical data and other sitewide hydrogeological conditions at the CNC, this elevated occurrence of arsenic is most likely the result of natural processes (i.e., iron reductive dissolution), and thus arsenic should not be considered a COC. Furthermore, since this elevated occurrence of arsenic is spatially isolated and is close to the background range of arsenic reported in other zones, this occurrence does not represent site-related activities at SWMU 196. Based on this information, arsenic is not considered a site-related COC in groundwater at SWMU 196.

4.3.4 Chromium

Table 4-2 presents the detected concentrations for chromium (total). Chromium (total) was reported below its MCL (100 μg/L) in all groundwater samples collected at SWMU 196. Therefore, chromium is not a COC in groundwater at SWMU 196.

4.3.5 Iron

Iron was reported in excess of the Zone H iron background range (317 μg/L to 28,700 μg/L) and the RBC (1,100 μg/L) in two samples; both samples were from the same monitoring well (HGELGW015). The iron concentration at HGELGW015 was reported at 39,800 milligrams per liter (mg/L) in August 1998 and at 37,400 mg/L in December 1999.

There is no discernable source of iron at SWMU 196. As discussed above for arsenic, iron is a naturally occurring metal in the environment that is often bound to soil in the form of iron oxides. Under reducing groundwater conditions, the iron oxides are dissolved in the groundwater and ferric iron is transformed into a more soluble, ferrous iron. This reaction also releases arsenic, which is sorbed to the iron oxides, into the groundwater.

The high concentrations of ferrous iron reported in HGELGW015 are indicative of a highly reducing environment. The elevated concentrations of arsenic in this same well support the theory that iron reduction dissolution is occurring in this area (the analytical values are presented in Table 4-2). However, this area of dissolution appears to be limited in area to where HGELGW015 is located. Additionally, the iron concentrations in HGELGW015 are well within the background range reported in other zones; background iron concentrations have been reported as high as 76,600 μg/L (Zone E). When considering the overall data at SWMU 196, this occurrence does not represent a threat. Based on this information, iron is not considered a COC in groundwater at SWMU 196.

4.3.6 Thallium

Table 4-2 presents the detected concentrations for thallium. Thallium was reported at concentrations ranging from 2.5 μg/L to 3.9 μg/L in groundwater collected at SWMU 196, specifically from wells H196GW001, H196GW002, and H196GW003 (see Figure 4-2). This concentration range is less than the average Zone H background concentration of 16 μg/L, as reported in the *CNC Project Team Notebook and Instructions, Revision 1A* (CH2M-Jones, 2001e). Also, thallium was not identified as a COC in soil at SWMU 196. In fact, of 31 surface and subsurface soil samples collected and analyzed for thallium at SWMU 196, it was only detected once, at a concentration of 0.43 mg/kg, which is less than the EPA Region III residential RBC (HI=0.1). Based on this information, thallium is not considered a COC in groundwater at SWMU 196.

4.3.7 1,2-DCE, total

1,2-DCE (total) was reported in several wells, and in excess of the cis-1,2-DCE MCL (70 μg/L) in two samples (see Table 4-2); exceedances were reported in two different

monitoring wells. One exceedance was reported in monitoring well H196GW004, which is located in the source area, beneath Building 1838 (see Figure 4-3). Elevated concentrations of TCE and PCE were also reported in this well. The increased presence of 1,2-DCE is most likely the result of the degradation of parent compounds.

The other exceedance was reported at monitoring well 009GW021. Only one sample was reported to exceed the MCL at this location. Two groundwater samples collected subsequently from this well were reported at a level below the MCL of 70 μg/L, as presented in Table 4-2, and summarized below:

Parameter	Station ID	Sample ID	Result (μg/L)	Qualifier	Date Collected
1,2-DCE (total)	H009GW021	009GW02101	49	J	8/11/98
	H009GW021	009GW02103	240	J	4/27/99
	H009GW021	009GW02104	68	=	12/7/99
	H009GW021	009GW021L1	12.7	=	10/26/01

The exceedance in this well is considered an intermittent occurrence. However, due to the presence of 1,2-DCE and its parent compounds in groundwater above the MCL, 1,2-DCE is considered a COC in shallow groundwater at SWMU 196 and will be further addressed as part of the CMS.

4.3.8 Benzene

Benzene was reported in excess of its MCL (5 μg/L) in 18 groundwater samples; exceedances were reported in 11 different monitoring wells. Wells are located in the source area of SWMU 196 (see Figure 4-4). The detected concentrations are summarized in Table 4-2. Benzene is considered a COC in shallow groundwater at SWMU 196 and will be addressed as part of the CMS.

4.3.9 Chlorobenzene

Chlorobenzene was reported in excess of its MCL (100 μg/L) in 22 samples; exceedances were reported in 15 different monitoring wells. The wells are located in the source area of SWMU 196 and to the east of Building 1838. Figure 4-5 presents chlorobenzene concentrations in shallow groundwater and monitoring well locations. The detected concentrations are summarized in Table 4-2. Chlorobenzene is considered a COC in shallow groundwater at SWMU 196 and will be addressed as part of the CMS.

4.3.10 Methylene Chloride

Methylene chloride was reported in excess of its MCL (5 μg/L) in two samples; exceedances were reported in two different monitoring wells, where several other solvents were detected at concentrations above their respective screening criteria. Both monitoring wells, H196GW006 and H196GW008, are located in the source area. Methylene chloride was previously not detected in all groundwater samples analyzed during the RFI. However, it was reportedly detected in surface and subsurface soil samples, as presented in the *Draft Zone H RFI Report, RFI Addendum*. Since methylene chloride was detected in groundwater above its RBC (carcinogenic), it is identified as a COC in shallow groundwater at SWMU 196 and will be addressed as part of the CMS. However, it is possible that its presence is due to laboratory contamination. This possibility will also be further considered during future evaluations.

4.3.11 PCE

PCE was reported in excess of its MCL (5 μg/L) in three samples; exceedances were reported in three different monitoring wells. The wells are located in the center of SWMU 196 (see Figure 4-6). Detected concentrations are summarized in Table 4-2. Because PCE is detected above the MCL in several wells at the site, it is identified as a COC in shallow groundwater at SWMU 196 and will be addressed as part of the CMS.

4.3.12 Toluene

Toluene was reported in excess of the MCL (1,000 μg/L) in one sample collected at SWMU 196. This sample was collected in October 2001 from monitoring well H196GW004 and reported at 1,520 μg/L. The well locations and toluene concentrations are presented on Figure 4-7. Because toluene was detected above the MCL in one well, it is identified as a COC in shallow groundwater and will be addressed in the CMS. However, it is possible that its presence is due to laboratory contamination. This possibility will also be further considered during future evaluations.

4.3.13 TCE

TCE was reported in excess of its MCL (5 μg/L) in three samples; exceedances were reported in three different monitoring wells. The wells are located in the center and in the southern portion of the site (see Figure 4-8). The detected concentrations are summarized in Table 4-2. Since several of the TCE detections were above the MCL, it is selected as a COC for shallow groundwater at SMWU 196 and will be addressed as part of the CMS.

4.3.14 Vinyl Chloride

Vinyl chloride was reported in excess of its MCL (2 $\mu g/L$) in five samples; exceedances were reported in three different monitoring wells. Three exceedances were reported in one monitoring well, H009GW021. Exceedances of vinyl chloride in all other wells with detections appear to be intermittent. The presence of vinyl chloride in these wells is most likely the degradation product of parent chlorinated volatile organic compounds (CVOCs). Figure 4-9 presents vinyl chloride concentrations in shallow groundwater and monitoring well locations. The detected concentrations are summarized in Table 4-2.

Due to its presence in groundwater above the MCL and the presence of its parent compounds at high concentrations at the site, vinyl chloride is considered a COC in shallow groundwater at SWMU 196 and will be addressed as part of the CMS.

4.3.15 1,2-DCB

1,2-DCB was reported in excess of its MCL (600 $\mu g/L$) in 18 samples; exceedances were reported in 12 different monitoring wells. Figure 4-10 presents 1,2-DCB concentrations in shallow groundwater and monitoring well locations. The detected concentrations are summarized in Table 4-2. Since 1,2-DCB is one of the most extensively detected chemicals in shallow groundwater and is reported above its MCL, it is selected as a COC in shallow groundwater at SWMU 196 and will be addressed as part of the CMS.

4.3.16 1,3-DCB

1,3-DCB was reported in excess of its RBC (18 $\mu g/L$) in 20 samples; exceedances were reported in 11 different monitoring wells, co-located along with the other DCBs identified at the site. Figure 4-11 presents 1,3-DCB concentrations in shallow groundwater and monitoring well locations. The detected concentrations are summarized in Table 4-2. Since 1,3-DCB is reported above its RBC in several wells, it is selected as a COC in shallow groundwater at SWMU 196 and will be addressed as part of the CMS

4.3.17 1,4-DCB

1,4-DCB was reported in excess of its MCL (75 $\mu g/L$) in 20 samples; exceedances were reported in 11 different monitoring wells. Figure 4-12 presents 1,4-DCB concentrations in shallow groundwater and monitoring well locations. The detected concentrations are summarized in Table 4-2. Since 1,4-DCB is reported above its MCL in several wells, it is selected as a COC in shallow groundwater at SWMU 196 and will be addressed as part of the CMS.

4.3.18 2,4-Dichlorophenol

2, 4-dichlorophenol was reported in excess of the RBC (11 μg/L) in one sample collected at SWMU 196. This sample was collected in December 1999 from monitoring well HGELGW015 and reported at 12 μg/L. This is the only sample collected at this well that had an exceedance of the RBC. Two other samples collected from this well previous to this event were reported either below the RBC or ND. The detected concentrations are summarized in Table 4-2.

2,4-dichlorophenol has been intermittently detected in well HGELGW015. It only exceeded the RBC in one sampling event at 12 μg/L, and just barely exceeded the RBC of 11 μg/L. No other wells on site reported any exceedances of the RBC (see Figure 4-13). Based on this information, 2,4-dichlorophenol is not considered a COC in shallow groundwater at SWMU 196.

4.3.19 2-Chlorophenol

2-chlorophenol was reported in excess of the RBC (3 μg/L) in six samples; exceedances were reported in four different monitoring wells. These wells are located in the source area to the east of Building 1838 (see Figure 4-14). The detected concentrations are summarized in Table 4-2. This parameter was not analyzed as part of the IM performance monitoring plan.

2-Chlorophenol is considered a COC in shallow groundwater at SWMU 196 and will be addressed as part of the CMS.

4.4 Deep Groundwater

Deep groundwater at SWMU 196 did not have any COPCs or COCs previously identified in the *Draft Zone H Report RFI Addendum, Revision 0*. No samples were collected from the deep groundwater zone during the IM at SWMU 196.

4.5 Sediment

The COCs identified in the *Draft Zone H Report RFI Addendum* for sediment were arsenic and BEQs. Sediment samples were collected at three sample depths (0 to 8 inch bls, 12 to 20 inch bls, and 24 to 32 inch bls) at three locations as presented in Figure 4-15. Table 4-3 lists the results for all arsenic and BEQs that were detected in sediment at SWMU 196.

Sediment values were screened against the EPA Region IV ecological SSVs and sediment background data. These background data were obtained from the EPA by the Navy in April

2000, as documented in the *Draft Zone J RFI Report, Part 1* (EnSafe, 2000a). These data are based on a background study conducted by the EPA for a Superfund investigation of a facility near Shipyard Creek. In this study, four sediment samples (two subtidal and two marsh samples) were collected in Rathall Creek, a small tributary to the Wando River. These samples are used to assist in making risk management decisions.

4.5.1 Arsenic

Arsenic was detected in sediment at SWMU 196 at concentrations ranging between 3,600 μg/kg and 14,900 μg/kg, from all depths. Arsenic was not detected at elevated concentrations in soils within SMWU 196, thus a runoff contribution from SWMU 196 is not considered a complete pathway. Surface sediments results ranged from 3,600 to 6,100 μg/kg, which is below the SSV at 7,240 μg/kg; however, arsenic was detected in one subsurface sediment sample above the SSV at 14,900 μg/kg. No other arsenic concentrations in sediments were above the SSV. The detected sediment concentrations are below Zone H surface soil background levels in this area (640 μg/kg to 18,000 μg/kg).

Arsenic reported in sediments from Shipyard Creek adjacent to SMWU 196 are within or below the background sediment concentrations reported in Zone J investigations from Rathall Creek. The sediment concentrations from shallow and deep sediments from Shipyard Creek (3,600 μg/kg to 14,900 μg/kg) were well within the sediment background concentration range (13,000 μg/kg to 21,000 μg/kg). Therefore, further consideration of arsenic as a COC in sediment is not warranted.

4.5.2 BEQs

BEQs were reported in excess of the SSV (330 μg/kg) and the Rathall Creek background concentration (660 μg/kg) in four samples. Calculations of BEQ values for the Rathall Creek samples are presented in Appendix D.

There is no identifiable source for BEQs at SWMU 196. Elevated concentrations of BEQs in sediment are likely due to non-site related sources, such as biosynthesis, fallout or rainout from air, or runoff from land. Since there is usually natural organic matter in sediment, polycyclic aromatic hydrocarbons (PAHs) that enter surface water through non-point sources may bind to the sediment. The absence of a PAH source at SWMU 196 is supported by the fact that the average surface soil BEQ concentration was much lower than the average sediment BEQ concentration (384 μg/kg versus 798 μg/kg). Additionally, BEQs were ND in all groundwater and surface water samples.

For these reasons, BEQs are not considered a COC in sediment at SWMU 196.

4.6 Surface Water

There were no surface water COPCs or COCs previously identified in the *Draft Zone H RFI Addendum Report, Revision 0* at SWMU 196.

4.7 COCs Retained for the Interim Measure/Corrective Measures Study

4.7.1 Surface and Subsurface Soil

Based on the rationale presented above in Section 4.1, no COCs were identified for soils within SMWU 196.

4.7.2 Groundwater

Twenty compounds in shallow groundwater were evaluated through a COPC/COC screening refinement step in Section 4.3. Based on the rationale presented above, the 12 chemicals retained as COCs for shallow groundwater at SWMU 196 include: 1,2-DCE (total), benzene, chlorobenzene, methylene chloride, PCE, toluene, TCE, vinyl chloride, 1,2-DCB, 1,3-DCB, 1,4-DCB, and 2-chlorophenol.

Table 4-2 presents the detected concentrations for thallium. Thallium was reported at concentrations ranging from 2.5 to 3.9 μg/L in groundwater collected at SWMU 196, specifically from wells 196GW001, 196GW002, and 196GW003. This concentration range is less than the average Zone H background concentration of 16 μg/L, as reported in the *CNC Project Team Notebook and Instructions, Revision 1A* (CH2M-Jones, 2001). Also, thallium was not identified as a COC in soil at SWMU 196. In fact, of 31 surface and subsurface soil samples collected and analyzed for thallium at SWMU 196, it was only detected once, at a concentration of 0.43 mg/kg, which is less than the residential RBC (HI = 0.1). Based on this information, thallium is not a COC in groundwater at SWMU 196.

There were no COCs identified in deep groundwater at SWMU 196. Although no COCs were identified in the deep groundwater at SWMU 196, additional hydrogeological data are being evaluated to determine if additional monitoring points are required in the deep groundwater.

4.7.3 Surface Water

There were no COCs identified in surface water at SWMU 196.

4.7.4 Sediment

Based on the rationale presented in Section 4.5, no COCs were identified for sediments in Shipyard Creek from releases at SWMU 196.

TABLE 4-1
Detected Concentrations of BEQs in Surface Soil at SWMU 196
Phase III RFI Report Addendum/ IM Completion Report/CMS Work Plan, SWMU 196, Zone H, Charleston Naval Complex

Parameter	Sample Location	Sample ID	Date Collected	Concentration (µg/kg)	Qualifier	CNC Reference Concentration	EPA Region III RBC (HI=0.1)[a]	SSL (DAF=10)[b]
BEQs	H196SB004	196SB00401	9/1/99	332	J	1,304[c]	87	4,000
	H196SB005	196SB00501	9/1/99	524	J			
	H196SB006	196SB00601	9/1/99	1,257	J			
	H196SB007	196SB00701	9/2/99	340	J			
	H196SB008	196SB00801	9/2/99	373	J			
	H196SB009	196SB00901	9/2/99	389	J			
	H196SB010	196SB01001	9/2/99	276	J			
	H196SB011	196SB01101	9/2/99	434	J			
	H196SB012	196SB01201	9/2/99	215	J			
	H196SB013	196SB01301	9/2/99	238	J			
	H196SB014	196SB01401	9/2/99	233	J			
	H196SB015	196SB01501	9/2/99	251	J			
	H196SB016	196SB01601	9/3/99	260	J			
	H196SB017	196SB01701	9/3/99	261	J			

All values are presented in units of micrograms per kilogram (µg/kg).

[a] Hazard Index (HI) reduced by one order of magnitude for non-carcinogenic compounds.

[b] Soil Screening Level (SSL) based on a Dilution Attenuation Factor (DAF) of 10.

[c] Background value for BEQs is taken from the *Background PAHs Study Report – Technical Information for the Development of Background BEQ Values* (CH2M-Jones, 2001).

BEQ Benzo[a]pyrene equivalent

J Indicates that the compound was detected, the reported concentration is estimated.

TABLE 4-2
Detected COPCs in Shallow Groundwater at SWMU 196
Phase III RFI Report Addendum/ IM Completion Report/CMS Work Plan, SWMU 196, Zone H, Charleston Naval Complex

Parameter	Sample Location	Sample ID	Date Collected	Concentration (µg/L)	Qualifier	Zone H Background Range Min	Zone H Background Range Max	MCL	EPA Region III RBC (HI=0.1)[a]
Inorganics									
Aluminum	H009GW020	009GW02001	8/11/98	2,590	=	57	1,140	NA	3,700
	H009GW020	009GW02004	12/7/99	300	=				
	H009GW021	009GW02101	8/11/98	331	=				
	H009GW022	009GW02201	8/11/98	2,500	=				
	H009GW022	009GW02204	12/9/99	1,470	=				
	H009GW023	009GW02301	8/11/98	**5,970**	=				
	H009GW023	009GW02304	12/8/99	1,000	=				
	H196GW001	196GW00101	12/8/99	110	J				
Antimony	H009GW021	009GW02104	12/7/99	5.5	J	NA	NA	6	1.5
Arsenic	H009GW020	009GW02001	8/11/98	17.8	=	0.8	50	50	0.045
	H009GW020	009GW02004	12/7/99	24.8	=				
	H009GW021	009GW02101	8/11/98	17.8	=				
	H009GW021	009GW02104	12/7/99	17.8	=				
	H009GW022	009GW02201	8/11/98	20.5	=				
	H009GW022	009GW02204	12/9/99	35.1	=				
	H009GW023	009GW02301	8/11/98	21.6	=				
	H196GW001	196GW00101	12/8/99	5.3	J				
	H196GW002	196GW00201	12/7/99	7.7	J				
	H196GW003	196GW00301	12/7/99	11	=				
	HGELGW015	GELGW01502	8/11/98	**327**	=				
	HGELGW015	GELGW01504	12/7/99	**118**	=				
Chromium, Total	H009GW022	009GW02204	12/9/99	2.8	J	2	6	100	11 (CR+6) 5,500 (Cr+3)
	H009GW023	009GW02301	8/11/98	13.5	=				
	H196GW002	196GW00201	12/7/99	0.55	J				
	H196GW003	196GW00301	12/7/99	1.4	J				
Iron	H009GW020	009GW02001	8/11/98	13,000	=	317	28,700	NA	1,100
	H009GW020	009GW02004	12/7/99	9,510	=				

TABLE 4-2
Detected COPCs in Shallow Groundwater at SWMU 196
Phase III RFI Report Addendum/ IM Completion Report/CMS Work Plan, SWMU 196, Zone H, Charleston Naval Complex

Parameter	Sample Location	Sample ID	Date Collected	Concentration (µg/L)	Qualifier	Zone H Background Range Min	Zone H Background Range Max	MCL	EPA Region III RBC (HI=0.1)[a]
Iron	H009GW021	009GW02101	8/11/98	1,520	=	317	28,700	NA	1,100
	H009GW021	009GW02104	12/7/99	6,660	=				
	H009GW022	009GW02201	8/11/98	4,980	=				
	H009GW022	009GW02204	12/9/99	5,340	=				
	H009GW023	009GW02301	8/11/98	11,900	=				
	H009GW023	009GW02304	12/8/99	2,430	=				
	H196GW002	196GW00201	12/7/99	2,030	=				
	H196GW003	196GW00301	12/7/99	1,630	=				
	HGELGW015	GELGW01502	8/11/98	**39,800**	=				
	HGELGW015	GELGW01504	12/7/99	**37,400**	=				
Thallium	H196GW001	196GW00101	12/8/99	2.6	J	2	105	2	0.26
	H196GW002	196GW00201	12/7/99	2.5	J				
	H196GW003	196GW00301	12/7/99	3.9	J				
Volatile Organic Compounds									
1,2-DCE, total	H009GW021	009GW02101	8/11/98	49	J	NA	NA	70	5.5
	H009GW021	009GW02103	4/27/99	**240**	J				
	H009GW021	009GW02104	12/7/99	68	=				
	H009GW021	009GW021L1	10/26/01	12.7	=				
	H009GW022	009GW022L1	10/26/01	10.9	=				
	H009GW023	009GW02301	8/11/98	45	J				
	H009GW023	009GW02304	12/8/99	2	J				
	H196GW004	196GW004L1	10/26/01	**112**	J				
	H196GW008	196GW008L1	10/26/01	32.6	J				
	H196GW009	196GW009L1	10/26/01	37.6	J				
	HGELGW015	GELGW01501	5/6/98	3	=				
	HGELGW015	GELGW015L1	10/26/01	0.89	J				
Benzene	H009GW020	009GW02001	8/11/98	**61**	=	NA	NA	5	0.32
	H009GW020	009GW02003	4/27/99	**19**	=				
	H009GW020	009GW02004	12/7/99	**17**	=				
	H009GW021	009GW02101	8/11/98	**36**	=				

TABLE 4-2
Detected COPCs in Shallow Groundwater at SWMU 196
Phase III RFI Report Addendum/ IM Completion Report/CMS Work Plan, SWMU 196, Zone H, Charleston Naval Complex

Parameter	Sample Location	Sample ID	Date Collected	Concentration (µg/L)	Qualifier	Zone H Background Range Min	Zone H Background Range Max	MCL	EPA Region III RBC (HI=0.1)[a]
Benzene	H009GW021	009GW02103	4/27/99	**110**	J	NA	NA	5	0.32
	H009GW021	009GW02104	12/7/99	**39**	=				
	H009GW021	009GW021L1	10/26/01	4.8	=				
	H009GW022	009GW022L1	10/26/01	1.9	=				
	H196GDF02	196GDF0201	6/8/99	**7**	=				
	H196GW004	196GW004L1	10/26/01	**670**	=				
	H196GW005	196GW005L1	10/26/01	**11**	=				
	H196GW006	196GW006L1	10/26/01	**85**	J				
	H196GW007	196GW007L1	10/26/01	**23**	J				
	H196GW008	196GW008L1	10/26/01	**21**	J				
	H196GW009	196GW009L1	10/26/01	**144**	=				
	HGELGW015	GELGW01501	5/6/98	**130**	J				
	HGELGW015	GELGW01502	8/11/98	**200**	=				
	HGELGW015	GELGW01503	4/27/99	**140**	J				
	HGELGW015	GELGW01504	12/7/99	**140**	=				
	HGELGW015	GELGW015L1LR	10/26/01	**141**	J				
Chlorobenzene	H009GW020	009GW02001	8/11/98	**5,100**	=	NA	NA	100	11
	H009GW020	009GW02003	4/27/99	**16,000**	=				
	H009GW020	009GW02004	12/7/99	**12,000**	=				
	H009GW020	009GW020L1	10/26/01	**11,500**	=				
	H009GW021	009GW02101	8/11/98	**4,300**	=				
	H009GW021	009GW02103	4/27/99	**19,000**	=				
	H009GW021	009GW02104	12/7/99	**8,800**	=				
	H009GW021	009GW021L1LR	10/26/01	**1,870**	=				
	H009GW022	009GW02203	4/28/99	42	=				
	H009GW022	009GW022L1LR	10/26/01	**221**	=				
	H196GDF01	196GDF0101	6/8/99	2	J				
	H196GDF02	196GDF0201	6/8/99	**3,500**	=				
	H196GW002	196GW00201	12/7/99	23	=				
	H196GW003	196GW00301	12/7/99	3	J				

TABLE 4-2
Detected COPCs in Shallow Groundwater at SWMU 196
Phase III RFI Report Addendum/ IM Completion Report/CMS Work Plan, SWMU 196, Zone H, Charleston Naval Complex

Parameter	Sample Location	Sample ID	Date Collected	Concentration (µg/L)	Qualifier	Zone H Background Range Min	Zone H Background Range Max	MCL	EPA Region III RBC (HI=0.1)[a]
Chlorobenzene	H196GW004	196GW004L1	10/26/01	**9,470**	=	NA	NA	100	11
	H196GW005	196GW005L1LR	10/26/01	**1,600**	=				
	H196GW006	196GW006L1	10/26/01	**20,600**	=				
	H196GW007	196GW007L1	10/26/01	**5,780**	=				
	H196GW008	196GW008L1	10/26/01	**4,500**	=				
	H196GW009	196GW009L1	10/26/01	**2,240**	=				
	H196GW010	196GW010L1	10/26/01	**3,920**	=				
	HGELGW015	GELGW01501	5/6/98	**14,000**	=				
	HGELGW015	GELGW01502	8/11/98	**5,200**	=				
	HGELGW015	GELGW01503	4/27/99	**7,200**	=				
	HGELGW015	GELGW01504	12/7/99	**15,000**	=				
	HGELGW015	GELGW015L1LR	10/26/01	**9,020**	=				
Methylene Chloride	H196GW006	196GW006L1	10/26/01	**158**	J	NA	NA	5	4.1
	H196GW008	196GW008L1	10/26/01	**67**	J				
PCE	H009GW021	009GW02103	4/27/99	5	J	NA	NA	5	1.1
	H009GW021	009GW021L1	10/26/01	1.4	=				
	H009GW022	009GW022L1	10/26/01	**5.8**	=				
	H196GW004	196GW004L1	10/26/01	**213**	=				
	H196GW009	196GW009L1	10/26/01	**472**	=				
	HGELGW015	GELGW01501	5/6/98	2.3	J				
	HGELGW015	GELGW015L1	10/26/01	0.22	J				
Toluene	H009GW021	009GW02102	10/5/98	23	=	NA	NA	1,000	750
	H009GW021	009GW02103	4/27/99	6	J				
	H009GW021	009GW021L1	10/26/01	0.37	J				
	H009GW022	009GW02202	10/7/98	1	J				
	H009GW022	009GW022L1	10/26/01	2.5	=				
	H196GW004	196GW004L1	10/26/01	**1,520**	=				
	H196GW005	196GW005L1	10/26/01	3	J				
	H196GW009	196GW009L1	10/26/01	440	=				

TABLE 4-2
Detected COPCs in Shallow Groundwater at SWMU 196
Phase III RFI Report Addendum/ IM Completion Report/CMS Work Plan, SWMU 196, Zone H, Charleston Naval Complex

Parameter	Sample Location	Sample ID	Date Collected	Concentration (µg/L)	Qualifier	Zone H Background Range Min	Zone H Background Range Max	MCL	EPA Region III RBC (HI=0.1)[a]
Toluene	HGELGW015	GELGW01501	5/6/98	3	J	NA	NA	1,000	750
	HGELGW015	GELGW01503	4/27/99	2	J				
	HGELGW015	GELGW015L1	10/26/01	1.5	=				
TCE	H009GW021	009GW02103	4/27/99	4	J	NA	NA	5	1.6
	H009GW021	009GW021L1	10/26/01	1.3	=				
	H009GW022	009GW022L1	10/26/01	**9.1**	=				
	H009GW023	009GW02301	8/11/98	**24**	=				
	H009GW023	009GW02304	12/8/99	1	J				
	H196GW004	196GW004L1	10/26/01	**21.3**	J				
	HGELGW015	GELGW01501	5/6/98	0.81	J				
	HGELGW015	GELGW015L1	10/26/01	0.43	J				
Vinyl Chloride	H009GW021	009GW02103	4/27/99	**44**	J	NA	NA	2	0.04
	H009GW021	009GW02104	12/7/99	**14**	=				
	H009GW021	009GW021L1	10/26/01	**3**	=				
	H009GW023	009GW02301	8/11/98	**50**	=				
	HGELGW015	GELGW01501	5/6/98	**4**	=				
	HGELGW015	GELGW01504	12/7/99	2	J				
Semivolatile Organic Compounds									
1,2-DCB	H009GW020	009GW02001	8/11/98	**1,500**	=	NA	NA	600	55
	H009GW020	009GW02003	4/27/99	140	=				
	H009GW020	009GW02004	12/7/99	64	=				
	H009GW020	009GW020L1	10/26/01	**1,410**	=				
	H009GW021	009GW02101	8/11/98	**3,300**	=				
	H009GW021	009GW02103	4/27/99	**13,000**	=				
	H009GW021	009GW02104	12/7/99	**8,200**	=				
	H009GW021	009GW021L1LR	10/26/01	**3,620**	J				
	H009GW022	009GW022L1LR	10/26/01	**1,520**	J				
	H196GW002	196GW00201	12/7/99	65	=				
	H196GW004	196GW004L1	10/26/01	**20,900**	J				

TABLE 4-2
Detected COPCs in Shallow Groundwater at SWMU 196
Phase III RFI Report Addendum/ IM Completion Report/CMS Work Plan, SWMU 196, Zone H, Charleston Naval Complex

Parameter	Sample Location	Sample ID	Date Collected	Concentration (µg/L)	Qualifier	Zone H Background Range Min	Zone H Background Range Max	MCL	EPA Region III RBC (HI=0.1)[a]
1,2-DCB	H196GW005	196GW005L1LR	10/26/01	**13,800**	J	NA	NA	600	55
	H196GW006	196GW006L1	10/26/01	**24,200**	=				
	H196GW007	196GW007L1	10/26/01	**12,300**	J				
	H196GW008	196GW008L1	10/26/01	**9,790**	=				
	H196GW009	196GW009L1	10/26/01	**32,800**	J				
	H196GW010	196GW010L1	10/26/01	**8,990**	=				
	HGELGW015	GELGW01502	8/11/98	**6,000**	=				
	HGELGW015	GELGW01503	4/27/99	**12,000**	=				
	HGELGW015	GELGW01504	12/7/99	**12,000**	=				
	HGELGW015	GELGW015L1LR	10/26/01	**19,500**	=				
1,3-DCB	H009GW020	009GW02001	8/11/98	**58**	=	NA	NA	NA	18
	H009GW020	009GW02003	4/27/99	**24**	J				
	H009GW020	009GW02004	12/7/99	**23**	=				
	H009GW020	009GW020L1	10/26/01	**87.9**	=				
	H009GW021	009GW02101	8/11/98	**270**	=				
	H009GW021	009GW02103	4/27/99	**1,100**	=				
	H009GW021	009GW02104	12/7/99	**690**	J				
	H009GW021	009GW021M1	2/8/02	**413**	=				
	H009GW022	009GW022L1	10/26/01	**78**	=				
	H196GDF02	196GDF0201	6/8/99	6	=				
	H196GW002	196GW00201	12/7/99	5	J				
	H196GW004	196GW004L1	10/26/01	**1,150**	=				
	H196GW005	196GW005L1	10/26/01	**231**	=				
	H196GW006	196GW006L1	10/26/01	**367**	=				
	H196GW007	196GW007L1	10/26/01	**213**	=				
	H196GW008	196GW008L1	10/26/01	**604**	=				
	H196GW009	196GW009L1	10/26/01	**2,720**	=				
	H196GW010	196GW010L1	10/26/01	**175**	=				
	HGELGW015	GELGW01502	8/11/98	**140**	J				
	HGELGW015	GELGW01503	4/27/99	**120**	J				

TABLE 4-2
Detected COPCs in Shallow Groundwater at SWMU 196
Phase III RFI Report Addendum/ IM Completion Report/CMS Work Plan, SWMU 196, Zone H, Charleston Naval Complex

Parameter	Sample Location	Sample ID	Date Collected	Concentration (µg/L)	Qualifier	Zone H Background Range Min	Zone H Background Range Max	MCL	EPA Region III RBC (HI=0.1)[a]
1,3-DCB	HGELGW015	GELGW01504	12/7/99	**160**	J	NA	NA	NA	18
	HGELGW015	GELGW015L1LR	10/26/01	**248**	=				
1,4-DCB	H009GW020	009GW02001	8/11/98	**130**	=	NA	NA	75	0.47
	H009GW020	009GW02003	4/27/99	**92**	=				
	H009GW020	009GW02004	12/7/99	**83**	=				
	H009GW020	009GW020L1	10/26/01	**289**	=				
	H009GW021	009GW02101	8/11/98	**510**	=				
	H009GW021	009GW02103	4/27/99	**1,900**	=				
	H009GW021	009GW02104	12/7/99	**1,300**	J				
	H009GW021	009GW021L1LR	10/26/01	**587**	=				
	H009GW022	009GW02203	4/28/99	15	=				
	H009GW022	009GW022L1LR	10/26/01	**157**	=				
	H196GDF02	196GDF0201	6/8/99	23	=				
	H196GW002	196GW00201	12/7/99	10	=				
	H196GW004	196GW004L1	10/26/01	**2,300**	=				
	H196GW005	196GW005L1	10/26/01	**554**	=				
	H196GW006	196GW006L1	10/26/01	**1,040**	=				
	H196GW007	196GW007L1	10/26/01	**603**	=				
	H196GW008	196GW008L1	10/26/01	**1,220**	=				
	H196GW009	196GW009L1	10/26/01	**4,950**	=				
	H196GW010	196GW010L1	10/26/01	**437**	=				
	HGELGW015	GELGW01502	8/11/98	**220**	=				
	HGELGW015	GELGW01503	4/27/99	**310**	=				
	HGELGW015	GELGW01504	12/7/99	**380**	J				
	HGELGW015	GELGW015L1LR	10/26/01	**636**	=				
2, 4-Dichlorophenol	H009GW020	009GW02001	8/11/98	5	J	NA	NA	NA	11
	H009GW020	009GW02004	12/7/99	1	J				
	H009GW021	009GW02104	12/7/99	1	J				
	H196GDF02	196GDF0201	6/8/99	1	J				

TABLE 4-2
Detected COPCs in Shallow Groundwater at SWMU 196
Phase III RFI Report Addendum/ IM Completion Report/CMS Work Plan, SWMU 196, Zone H, Charleston Naval Complex

Parameter	Sample Location	Sample ID	Date Collected	Concentration (µg/L)	Qualifier	Zone H Background Range Min	Zone H Background Range Max	MCL	EPA Region III RBC (HI=0.1)[a]
2, 4-Dichlorophenol	HGELGW015	GELGW01503	4/27/99	4	J	NA	NA	NA	11
	HGELGW015	GELGW01504	12/7/99	**12**	=				
2-Chlorophenol	H009GW020	009GW02001	8/11/98	**67**	=	NA	NA	NA	3
	H009GW020	009GW02003	4/27/99	**52**	=				
	H009GW020	009GW02004	12/7/99	**40**	=				
	H009GW021	009GW02101	8/11/1998	3	J				
	H009GW021	009GW02104	12/7/1999	3	J				
	H196GDF02	196GDF0201	6/8/99	**7**	=				
	HGELGW015	GELGW01502	8/11/98	**28**	=				
	HGELGW015	GELGW01504	12/7/99	**30**	=				

All values are presented in units of micrograms per liter (µg/L).

Values that exceeded the screening criterion(a) are in bold and outlined within the table.

Note that there are no background values for volatile organic compounds or semivolatile organic compounds in groundwater.

[a] Hazard Index (HI) reduced by one order of magnitude for non-carcinogenic compounds.

= Indicates that the compound was detected, the reported value is equal to the sample concentration.

J Indicates that the compound was detected, the reported concentration is estimated.

DCB Dichlorobenzene

DCE Dichloroethene

MCL Maximum contaminant level

NA Not available/not applicable

PCE Tetrachloroethene

TCE Trichloroethene

TABLE 4-3
Detected COPCs in Sediment Samples
Phase III RFI Report Addendum/ IM Completion Report/CMS Work Plan, SWMU 196, Zone H, Charleston Naval Complex

Parameter	Sample Location	Sample ID	Concentration (µg/kg)	Qualifier	Zone H Background Range[a]		SSV[b]
					Min	Max	
Arsenic	H196M0001	196M000101	6,100	=	13,000	21,000	7,240
	H196M0001	196M000102	6,500	=			
	H196M0001	196M000103	5,600	=			
	H196M0002	196M000201	6,700	=			
	H196M0002	196M000202	14,900	=			
	H196M0002	196M000203	8,700	=			
	H196M0003	196M000301	3,600	=			
	H196M0003	196M000302	5,000	=			
	H196M0003	196M000303	5,400	=			
BEQs	196M0001	196M000101	**2,196**	J	ND	660	330
	196M0001	196M000102	**780**	J			
	196M0001	196M000103	333	J			
	196M0002	196M000201	**1,019**	J			
	196M0002	196M000202	612	J			
	196M0002	196M000203	486	J			
	196M0003	196M000301	221	J			
	196M0003	196M000302	547	J			
	196M0003	196M000303	**988**	J			

All values are presented in units of micrograms per kilogram (µg/kg).

Values that exceeded the screening criterion(a) are in bold and outlined within the table.

[a] Background values based on Rathall Creek Samples; obtained from background study performed by EPA on site near Shipyard Creek (EnSafe, 2000). BEQ calculations presented in Appendix D.

[b] Sediment screening values (SSVs) obtained from the EPA Region IV Ecological Risk Assessment Bulletins – Supplement to RAGS (EPA, 2001).

= Indicates that the compound was detected, the reported value is equal to the sample concentration.

J Indicates that the compound was detected, the reported concentration is estimated.

ND Not detected

NOTE: Original figure created in color

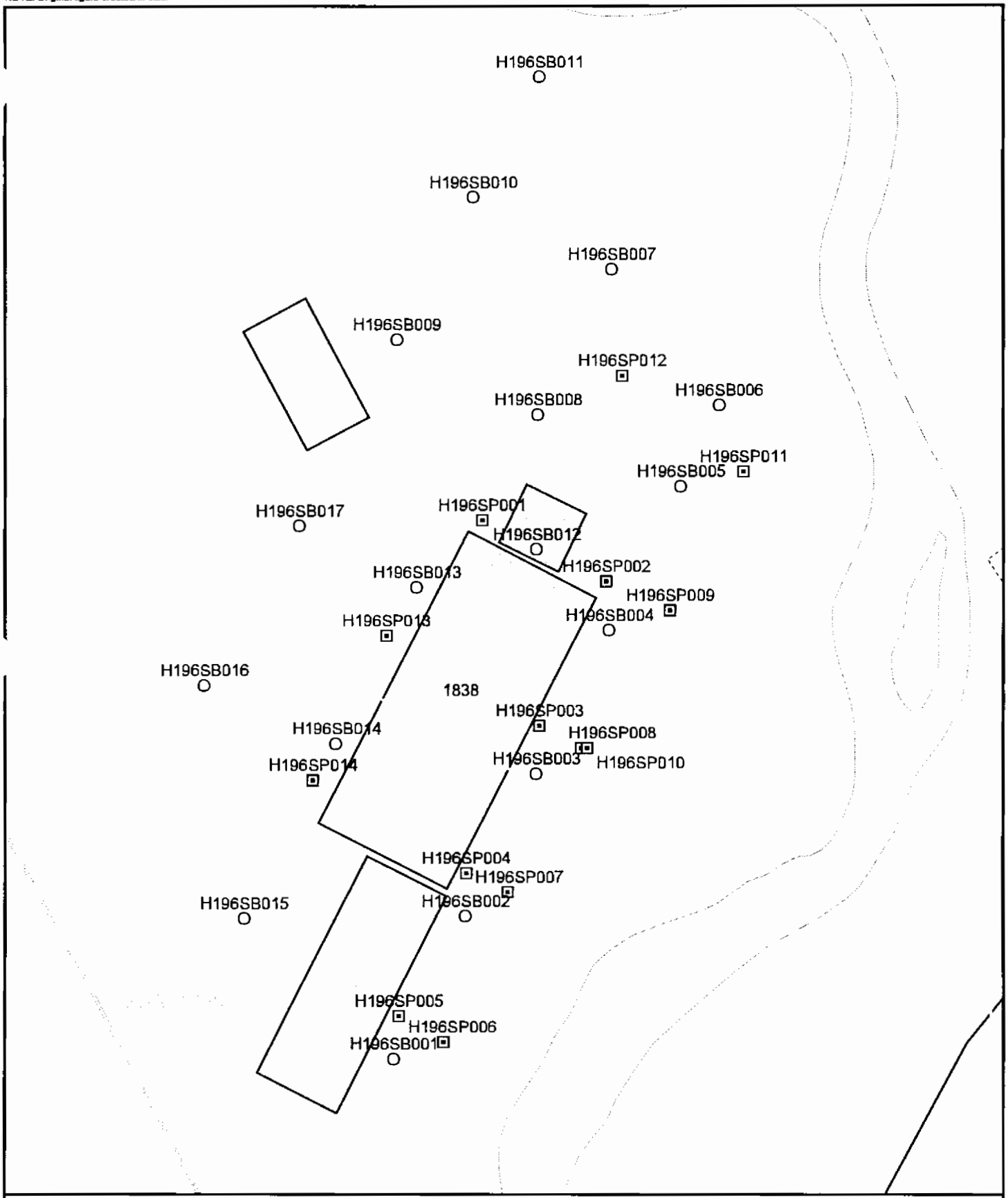

Soil Probe
Soil Boring
Shoreline
Zone Boundary
SWMU Boundary
Buildings

N

0 30 60 Feet

1 inch = 41.6667 feet

Figure 4-1
Surface and Subsurface Soil Sample Locations
SWMU 196, Zone H
Charleston Naval Complex

CH2MHILL

File Path: C:\18gis\Projects\Zone_H\Swmu_196\Aprs\swmu196_sec5.apr, Date: 23 Oct 2002 6:39, User: NMOUDRY, Figure 4-1 Surface and Subsurface Soil Sample Locations

NOTE: Original figure created in color

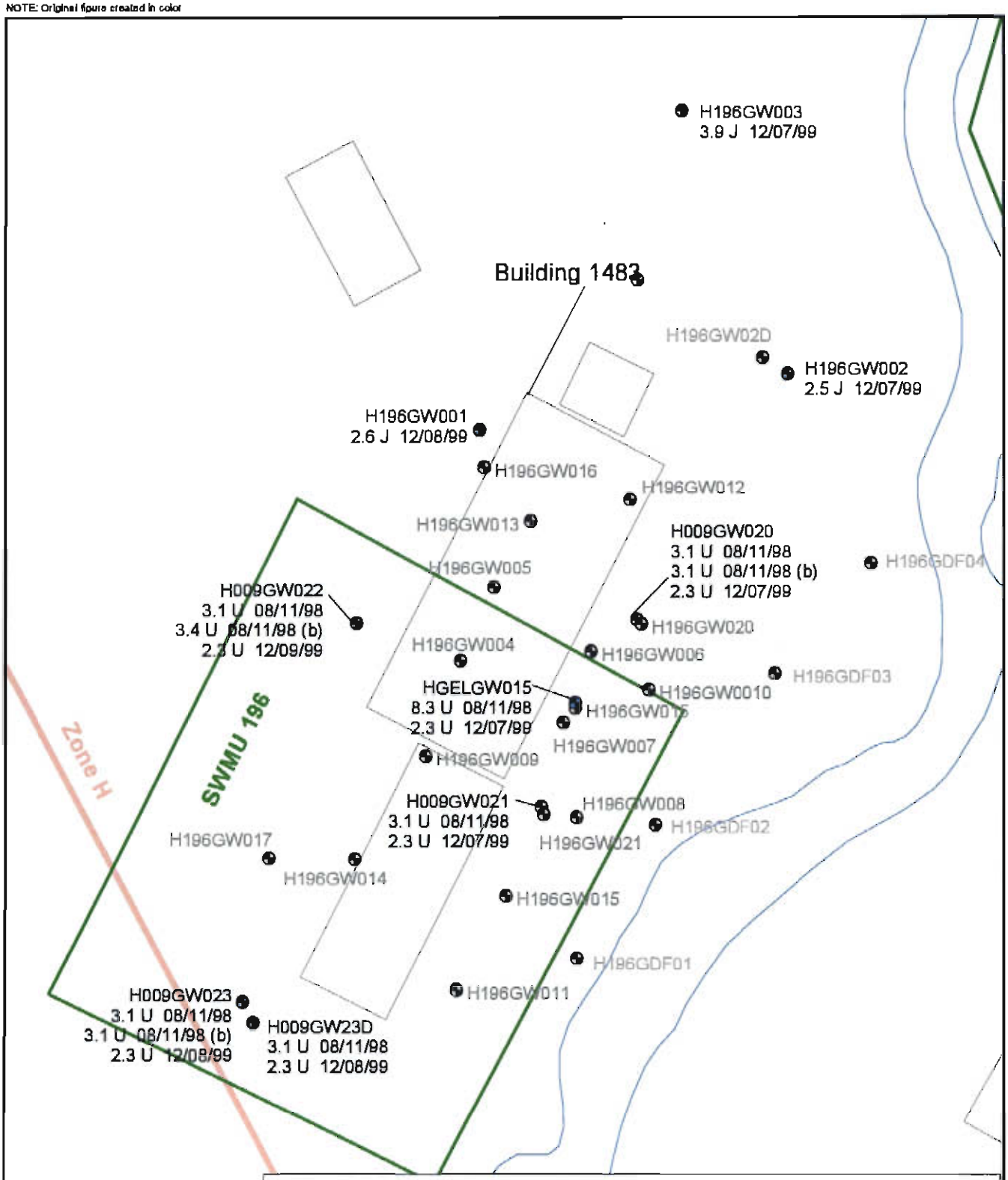

TL Results in ug/L
Results qualified with an "=" unless otherwise noted.
J Indicates that the analyte was detected, the reported value is an estimated concentration.
U indicates the analyte was undetected, the reported value is the detection limit.
Wells identified in grey text indicate analyte was not detected.

- Groundwater Wells
- Groundwater Wells where analyte was not detected
- Shoreline
- SWMU Boundary
- Buildings
- Zone Boundary

N

0 30 60 Feet

Figure 4-2
Thallium Concentrations in Groundwater
SWMU 196, Zone H
Charleston Naval Complex

CH2MHILL

File Path: C:\18gis\Projects\Zone_H\Swmu_196\Aprs\swmu_196.apr, Date: 15 May 2002 14:12, User: AHOLECEK, Thallium Results - Figure 4-7 Thallium Concentrations in Groundwater

NOTE: Original figure created in color

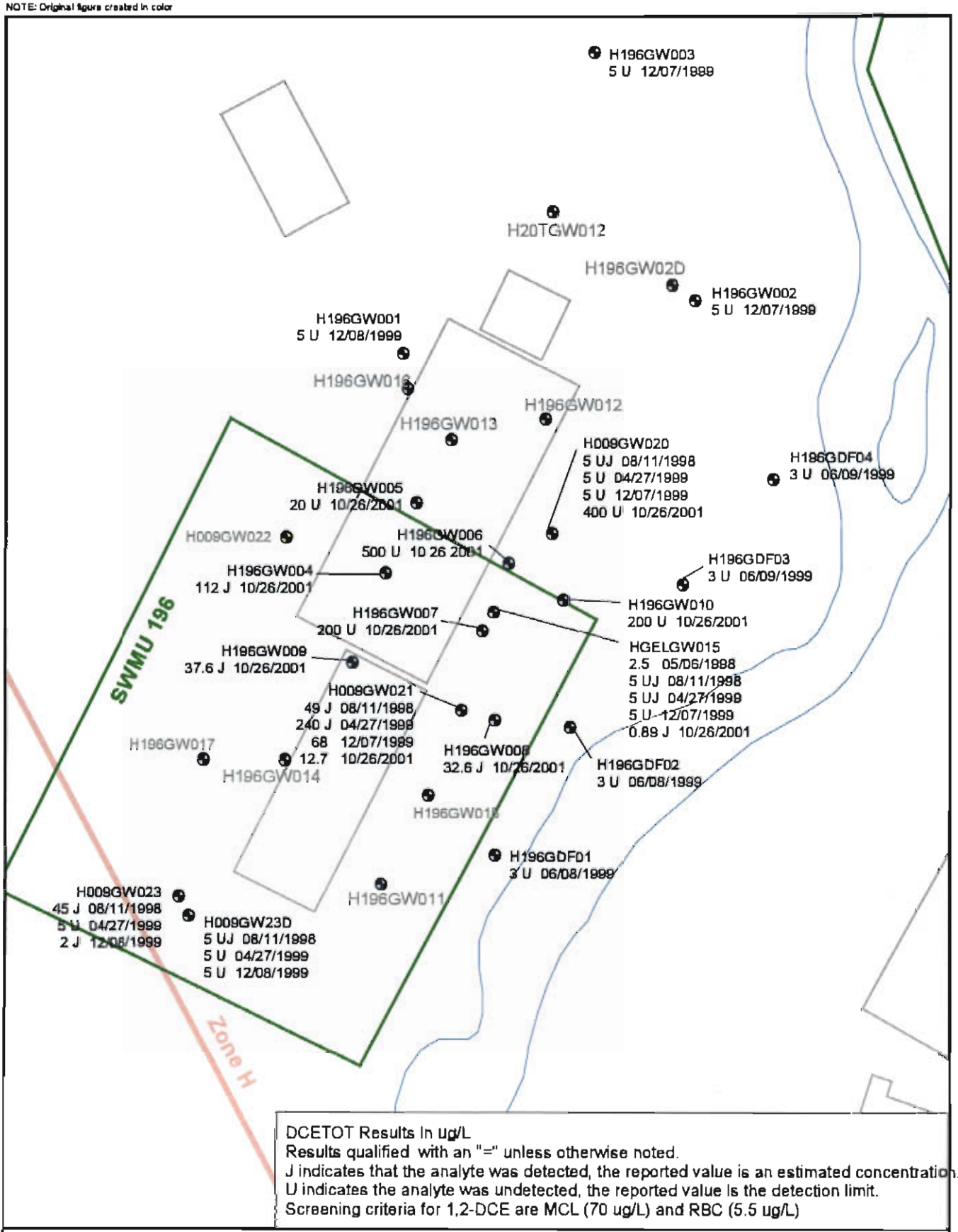

DCETOT Results in ug/L
Results qualified with an "=" unless otherwise noted.
J indicates that the analyte was detected, the reported value is an estimated concentration.
U indicates the analyte was undetected, the reported value is the detection limit.
Screening criteria for 1,2-DCE are MCL (70 ug/L) and RBC (5.5 ug/L)

- Groundwater Wells Installed After IM Treatment or Constituent Not Targeted
- Groundwater Wells
- Shoreline
- SWMU Boundary
- Buildings
- Zone Boundary

N

0 30 60 Feet

Figure 4-3
1,2-Dichloroethene (total)
Concentrations in Groundwater
SWMU 196, Zone H
Charleston Naval Complex

CH2MHILL

File Path: C:\18gis\Projects\Zone_H\Swmu_196\Aprs\swmu_196.apr, Date: 23 Oct 2002 7:07, User: NMOUDRY, DCE12TOT Results - Figure 4-4 1,2-Dichloroethene (total) Concentrations in Groundwater

NOTE: Original figure created in color

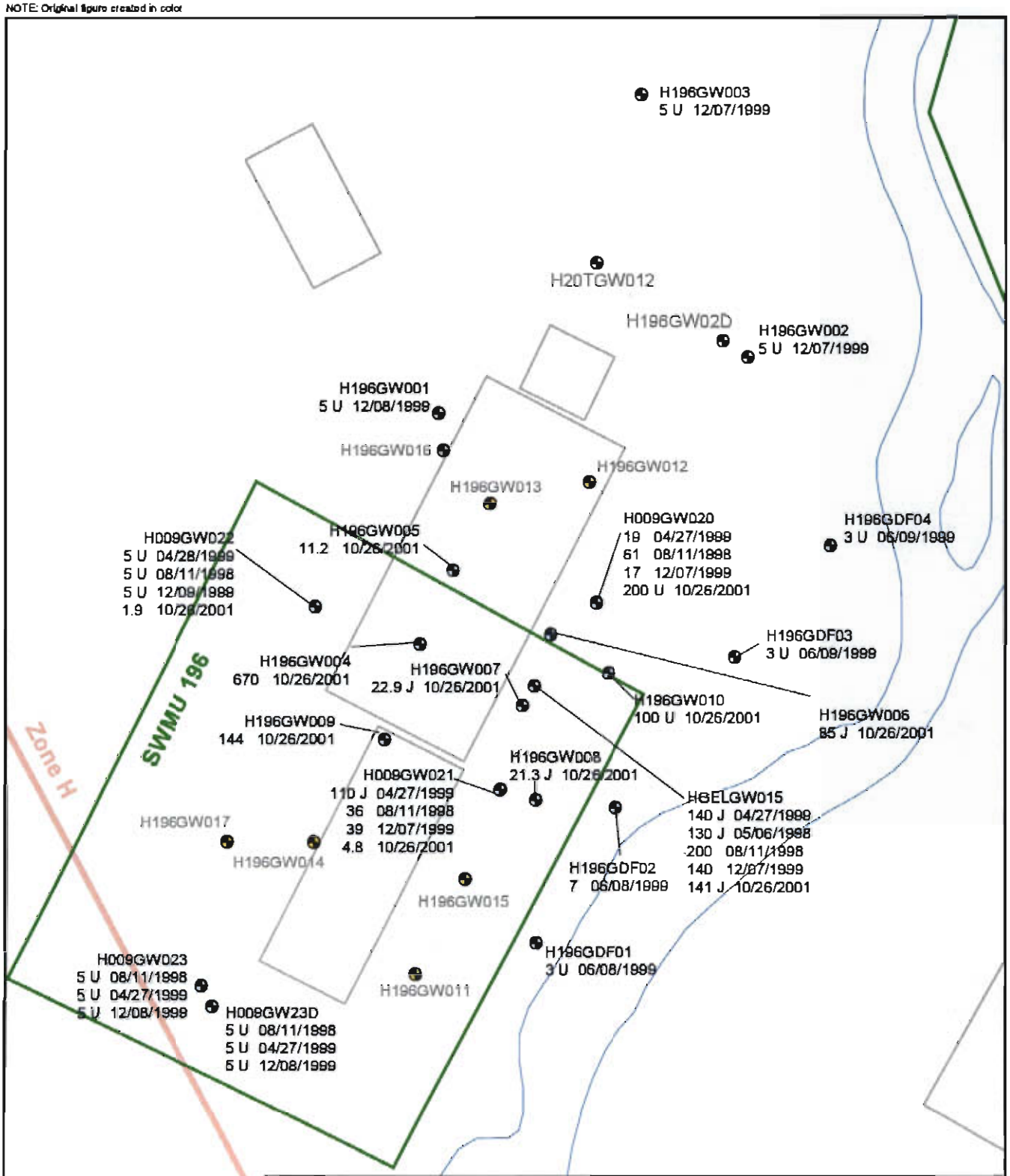

BZ Results in ug/L
Results qualified with an "=" unless otherwise noted.
J indicates that the analyte was detected, the reported value is an estimated concentration.
U Indicates the analyte was undetected, the reported value is the detection limit.
Screening criteria for BZ are MCL (5 ug/L) and RBC (0.32 ug/L)

- Groundwater Wells Installed After IM Treatment or Constituent Not Targeted
- Groundwater Wells
- Shoreline
- SWMU Boundary
- Buildings
- Zone Boundary

N

0 30 60 Feet

Figure 4-4

Benzene Concentrations in Groundwater

SWMU 196, Zone H

Charleston Naval Complex

CH2MHILL

File Path: C:\18gis\Projects\Zone_H\Swmu_196\Apns\swmu_196.apr. Date: 23 Oct 2002 7:08, User: NMOUDRY, BZ Results - Figure 4-5 Benzene Concentrations in Groundwater

NOTE: Original figure created in color

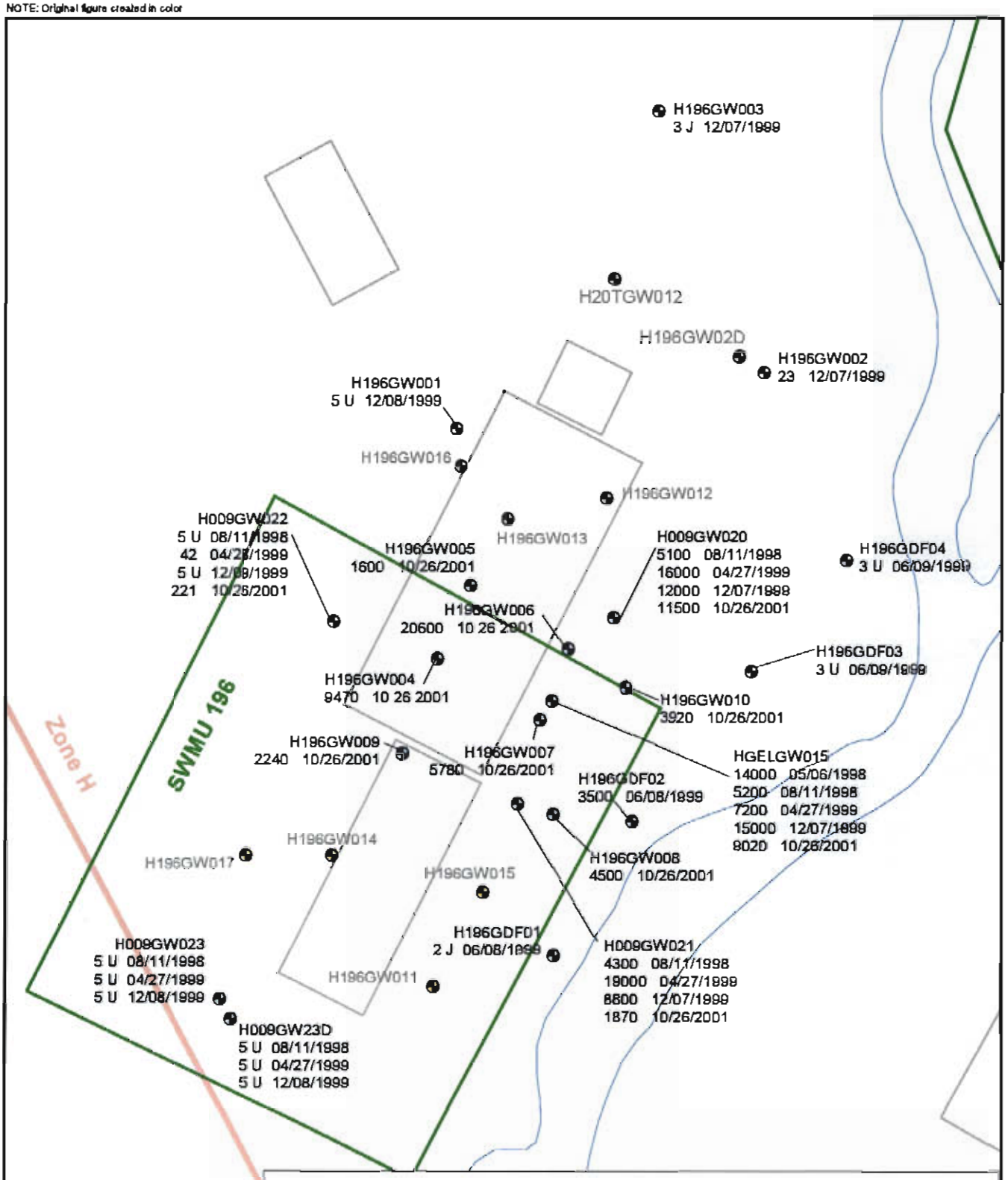

CLBZ Results in ug/L
Results qualified with an "=" unless otherwise noted.
J Indicates that the analyte was detected, the reported value is an estimated concentration.
U indicates the analyte was undetected, the reported value is the detection limit.
Screening criteria for CLBZ are MCL (100 ug/L) and RBC (11 ug/L)

- Groundwater Wells Installed After IM Treatment or Constituent Not Targeted
- Groundwater Wells
- Shoreline
- SWMU Boundary
- Buildings
- Zone Boundary

N

0 30 60 Feet

Figure 4-5
Chlorobenzene Concentrations in Groundwater
SWMU 196, Zone G
Charleston Naval Complex

CH2MHILL

File Path: C:\18gis\Projects\Zone_H\Swmu_196\Aprs\swmu_196.apr, Date: 23 Oct 2002 7:10, User: NMOUDRY, CLBZ Results - Figure 4-6 Chlorobenzene Concentrations in Groundwater

NOTE: Original figure created in color

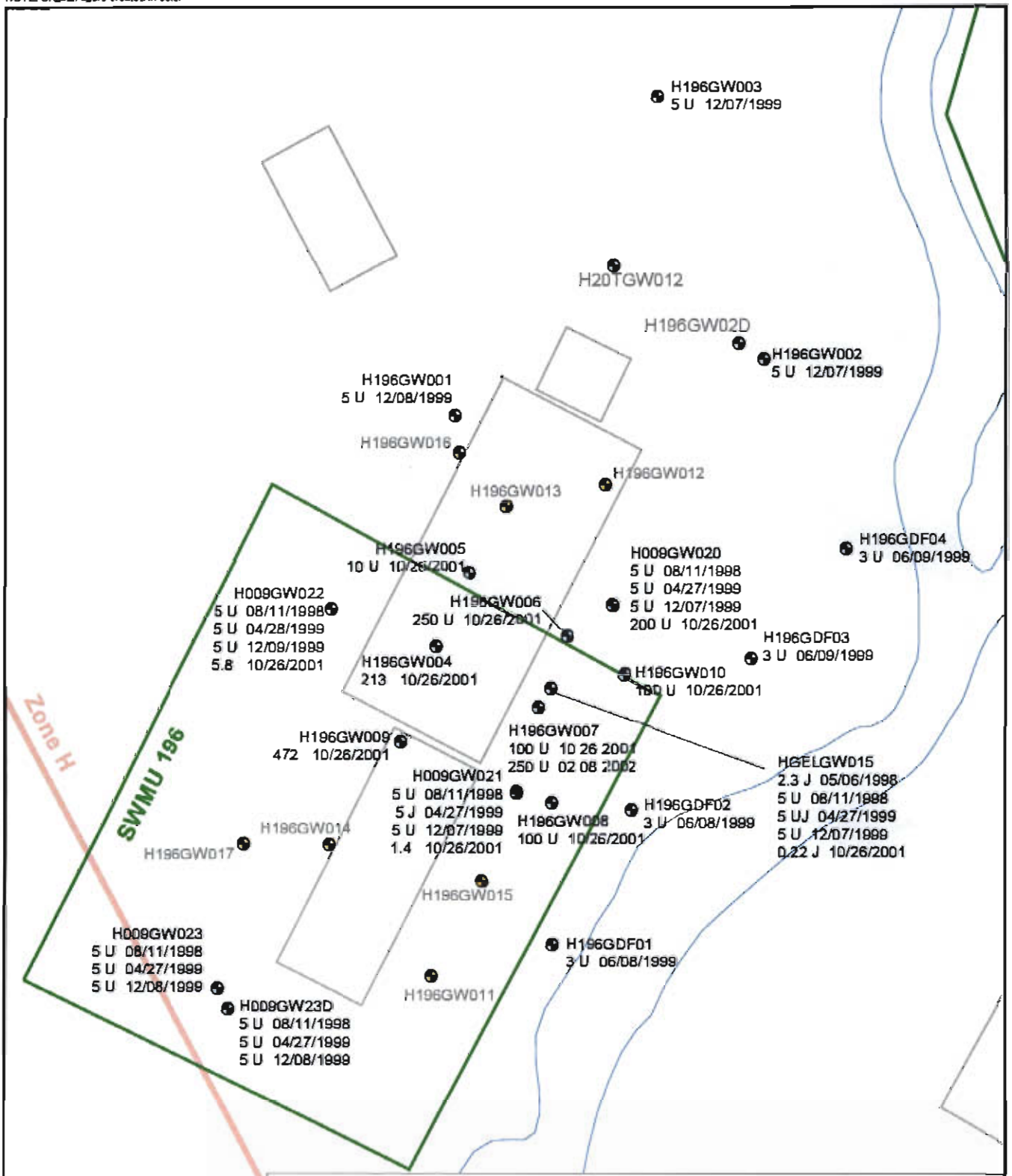

PCE Results in ug/L
Results qualified with an "=" unless otherwise noted.
J indicates that the analyte was detected, the reported value is an estimated concentration.
U indicates the analyte was undetected, the reported value is the detection limit.
Screening criteria for PCE are MCL (5 ug/L) and RBC (1.1 ug/L)

- Groundwater Wells Installed After IM Treatment or Constituent Not Targeted
- Groundwater Wells
- Shoreline
- SWMU Boundary
- Buildings
- Zone Boundary

N

0 30 60 Feet

Figure 4-6
Tetrachloroethylene Concentrations in Groundwater
SWMU 196, Zone H
Charleston Naval Complex

CH2MHILL

File Path: C:\18gis\Projects\Zone_H\Swmu_196\Aprs\swmu_196.apr, Date: 23 Oct 2002 7:16, User: NMOUDRY, PCE Results - Figure 4-8 Tetrachloroethylene Concentrations in Groundwater

NOTE: Original figure created in color

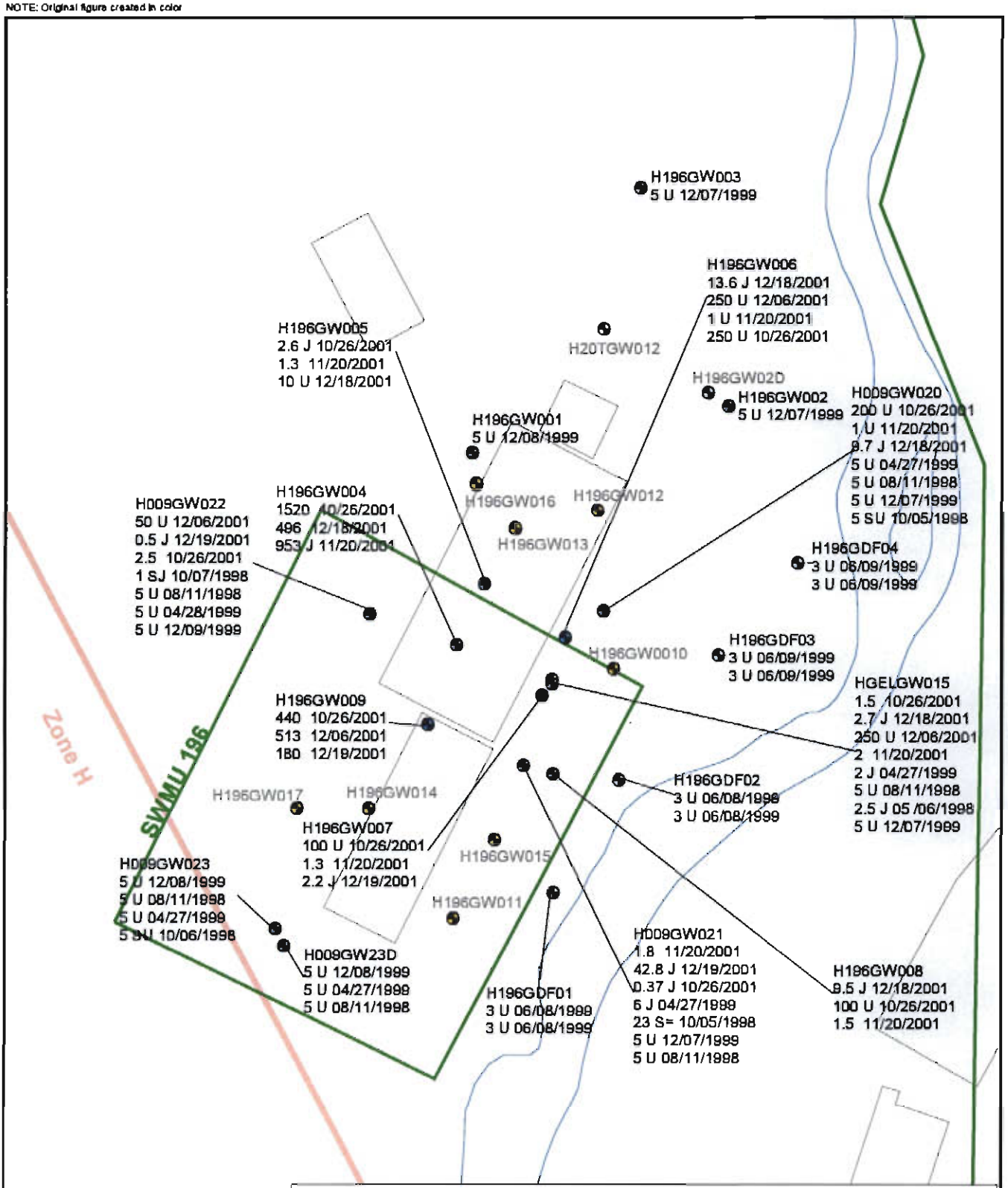

Toluene Results in ug/L
Results qualified with an "=" unless otherwise noted.
J indicates that the analyte was detected, the reported value is an estimated concentration.
U indicates the analyte was undetected, the reported value is the detection limit.
Screening criteria for toluene is MCL (1000 ug/L) and RBC (750 ug/L)

- Groundwater Wells Installed After IM Treatment or Constituent Not Targeted
- Groundwater Wells
- Shoreline
- SWMU Boundary
- Buildings
- Zone Boundary

N

0 30 60 Feet

Figure 4-7
Toluene Concentrations in Groundwater
SWMU 196, Zone H
Charleston Naval Complex

CH2MHILL

File Path: C:\18gis\Projects\Zone_H\Swmu_196\Aprs\swmu_196.apr, Date: 23 Oct 2002 7:24, User: NMOUDRY, Toluene Results - Figure 4-9 Toluene Concentrations in Groundwater

NOTE: Original figure created in color

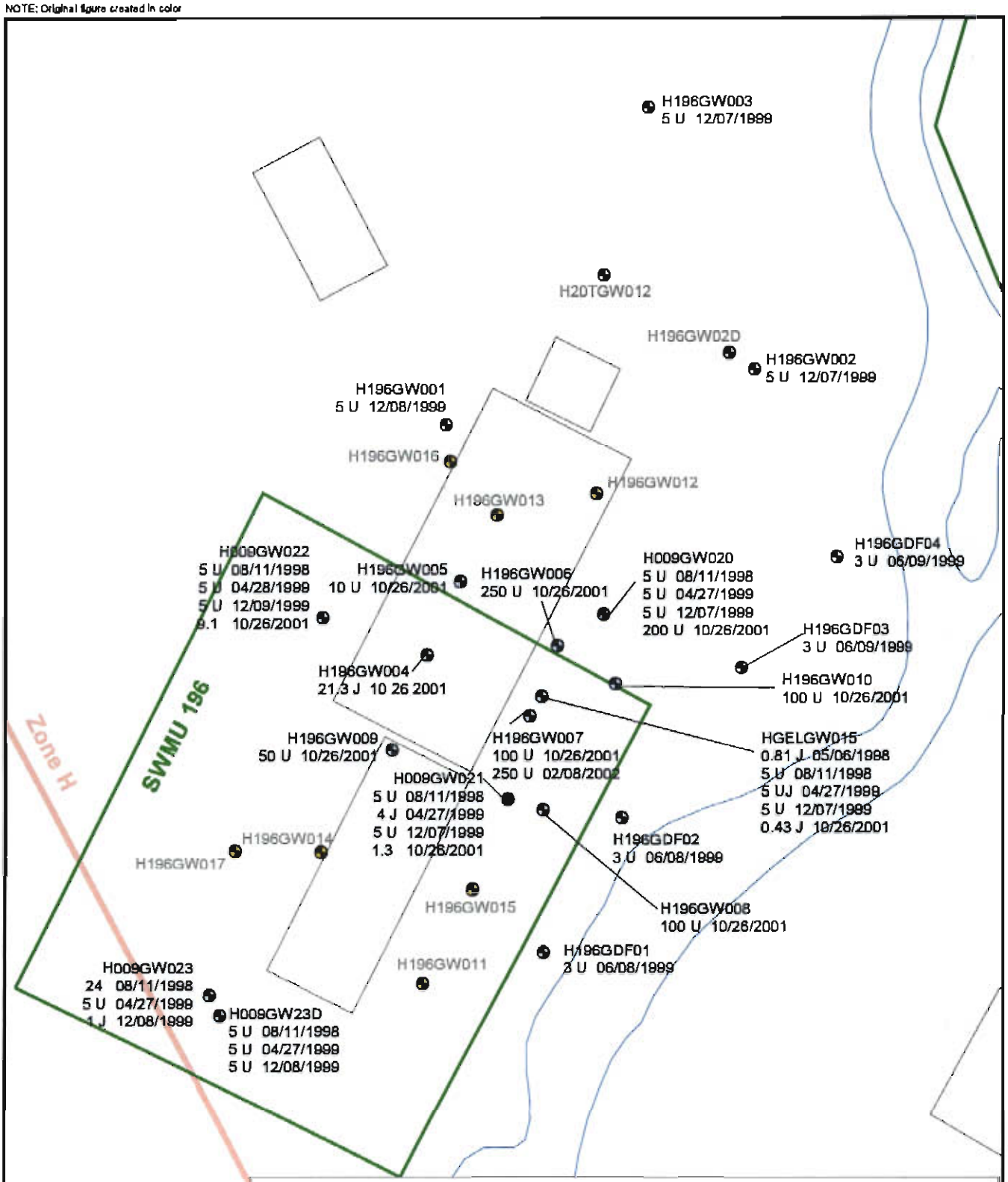

TCE Results in ug/L
Results qualified with an "=" unless otherwise noted.
J indicates that the analyte was detected, the reported value is an estimated concentration.
U indicates the analyte was undetected, the reported value is the detection limit.
Screening Criteria for TCE are MCL (5 ug/L) and RBC (1.6 ug/L)

- Groundwater Wells Installed After IM Treatment or Constituent Not Targeted
- Groundwater Wells
- Shoreline
- SWMU Boundary
- Buildings
- Zone Boundary

N

0 30 60 Feet

Figure 4-8
Trichloroethene Concentrations in Groundwater
SWMU 196, Zone H
Charleston Naval Complex

CH2MHILL

File Path: C:\18gis\Projects\Zone_H\Swmu_196\Aprs\swmu_196.apr, Date: 23 Oct 2002 7:27, User: NMOUDRY, TCE Results Final - Figure 4-10 Trichloroethene Concentrations in Groundwater

NOTE: Original figure created in color

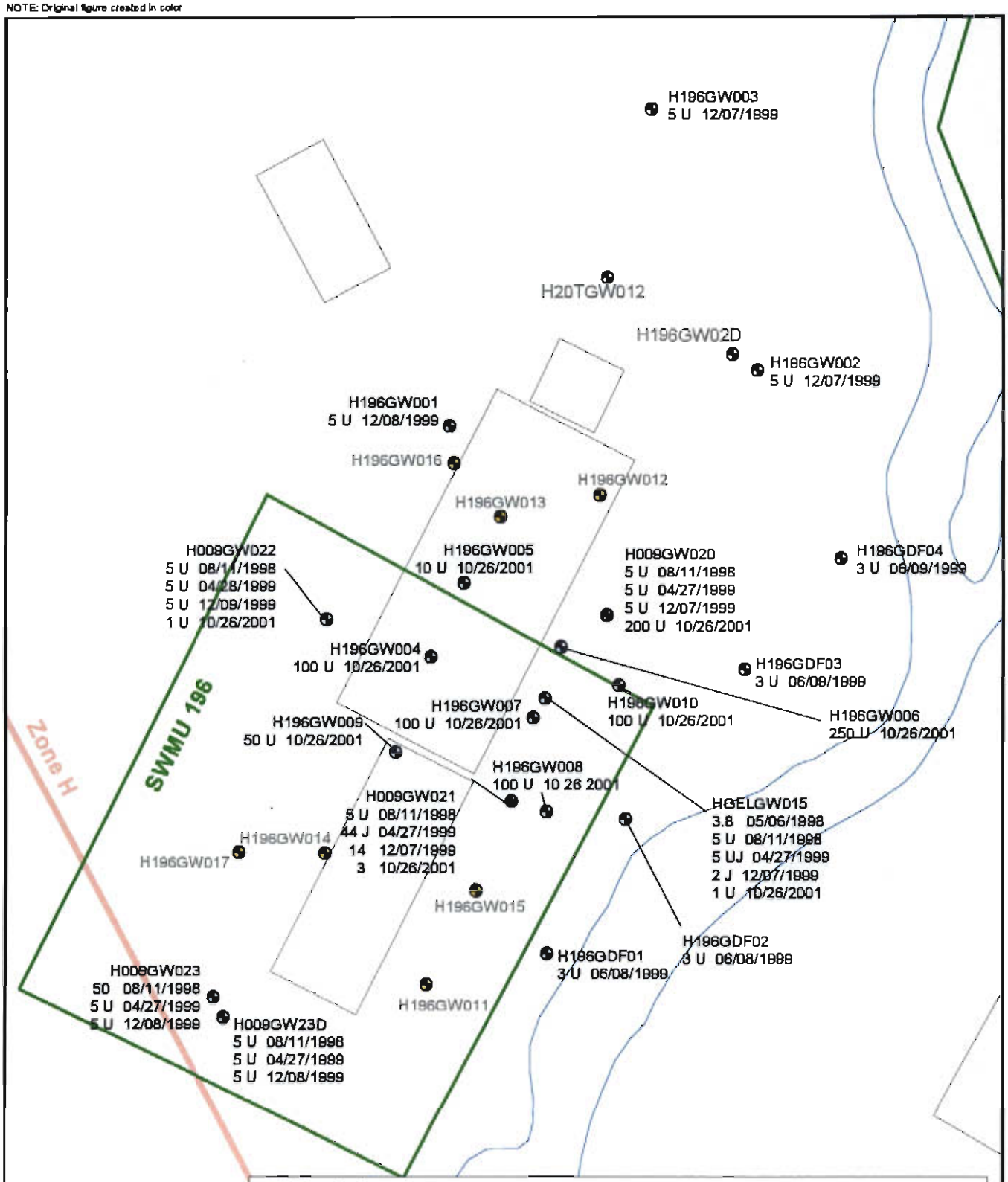

VC Results in ug/L
Results qualified with an "=" unless otherwise noted.
J indicates that the analyte was detected, the reported value is an estimated concentration.
U indicates the analyte was undetected, the reported value is the detection limit.
Screening criteria for VC are MCL (2 ug/L) and RBC (0.04 ug/L)

- Groundwater Wells Installed After IM Treatment or Constituent Not Targeted
- Groundwater Wells
- Shoreline
- SWMU Boundary
- Buildings
- Zone Boundary

N

0 30 60 Feet

Figure 4-9

Vinyl Chloride Concentrations in Groundwater

SWMU 196, Zone H

Charleston Naval Complex

CH2MHILL

File Path: C:\18gis\Projects\Zone_H\Swmu_196\Apra\swmu_196.apr, Date: 23 Oct 2002 7:30, User: NMOUDRY, VC Results Figure 4-11

NOTE: Original figure created in color

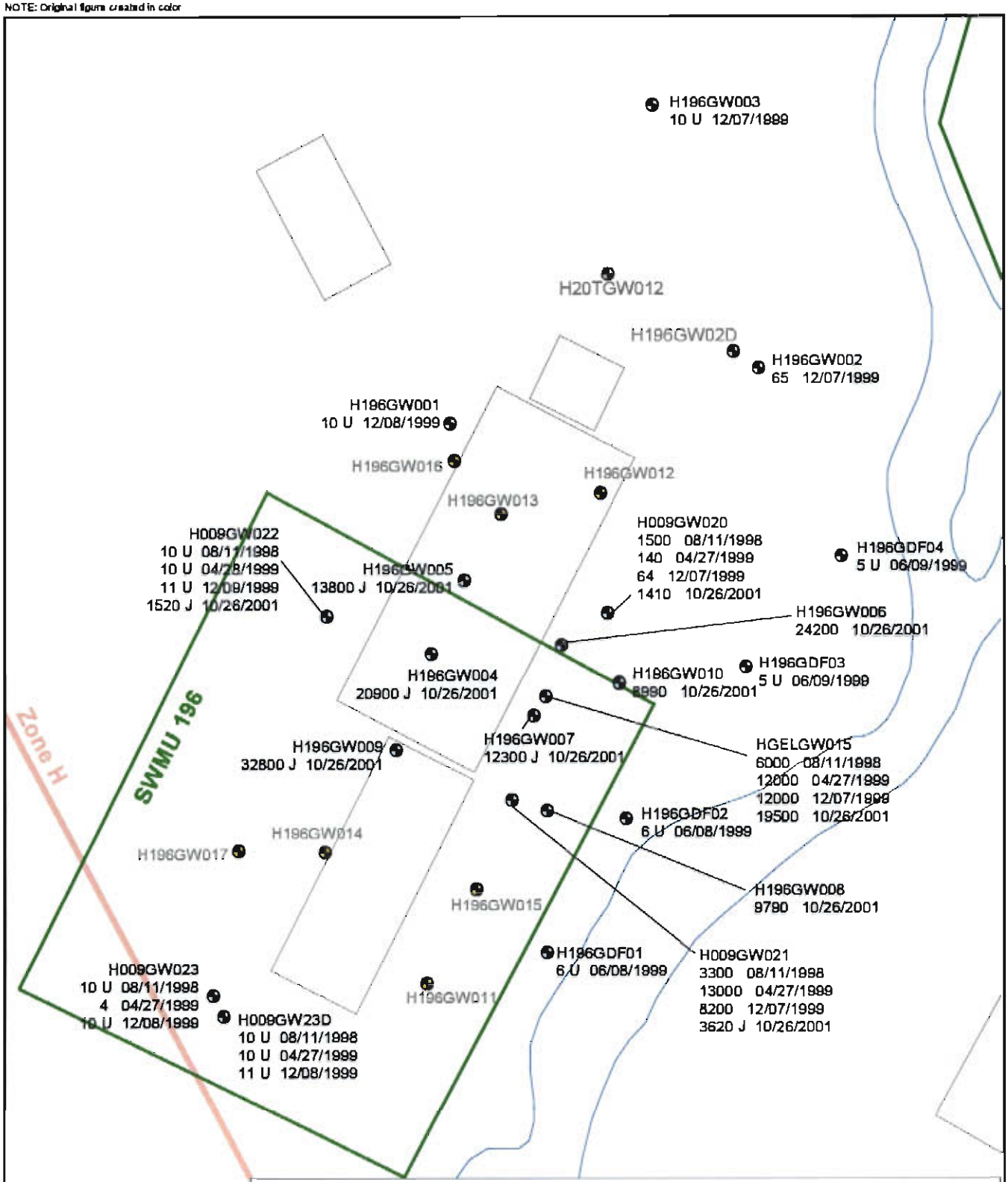

1,2-Dichlorobenzene Results in ug/L
Results qualified with an "=" unless otherwise noted.
J Indicates that the analyte was detected, the reported value is an estimated concentration.
U indicates the analyte was undetected, the reported value is the detection limit.
Screening criteria for 1,2-DCB are MCL (600 ug/L) and RBC (55 ug/L)

- Groundwater Wells Installed After IM Treatment of Constituent Not Targeted
- Groundwater Wells
- Shoreline
- SWMU Boundary
- Buildings
- Zone Boundary

N

0 30 60 Feet

Figure 4-10
1,2-Dichlorobenzene Concentrations in Groundwater
SWMU 196, Zone H
Charleston Naval Complex

CH2MHILL

File Path: C:\18gis\Projects\Zone_H\Swmu_196\Aprs\swmu_196.apr, Date: 23 Oct 2002 7:31, User: NMOUDRY, 1,2 DCB Results - Figure 4-12 1,2-Dichlorobenzene Concentrations in Groundwater

NOTE: Original figure created in color

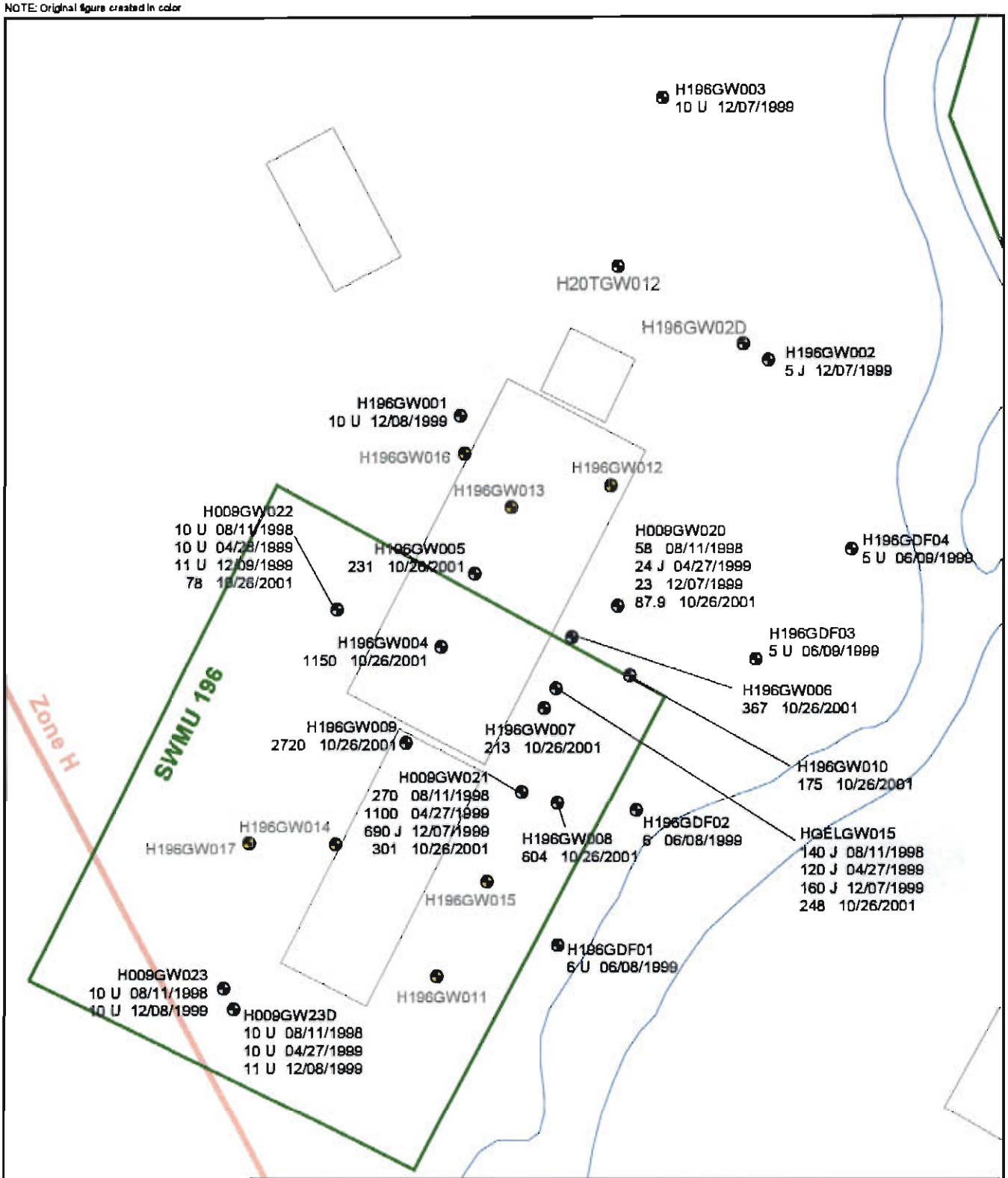

1, 3-Dichlorobenzene Results in ug/L
Results qualified with an "=" unless otherwise noted.
J indicates that the analyte was detected, the reported value is an estimated concentration.
U indicates the analyte was undetected, the reported value is the detection limit.
Screening criteria for 1,3-DCB is RBC (18 ug/L)

- Groundwater Wells Installed After IM Treatment or Constituent Not Targeted
- Groundwater Wells
- Shoreline
- SWMU Boundary
- Buildings
- Zone Boundary

N

0 30 60 Feet

Figure 4-11
1,3-Dichlorobenzene Concentrations in Groundwater
SWMU 196, Zone H
Charleston Naval Complex

CH2MHILL

File Path: C:\18gis\Projects\Zone_H\swmu_196\Aprs\swmu_196.apr, Date: 23 Oct 2002 7:32, User: NMOUDRY, 1,3 DCB Results - Figure 4-13 1,3-Dichlorobenzene Concentrations in Groundwater

NOTE: Original figure created in color

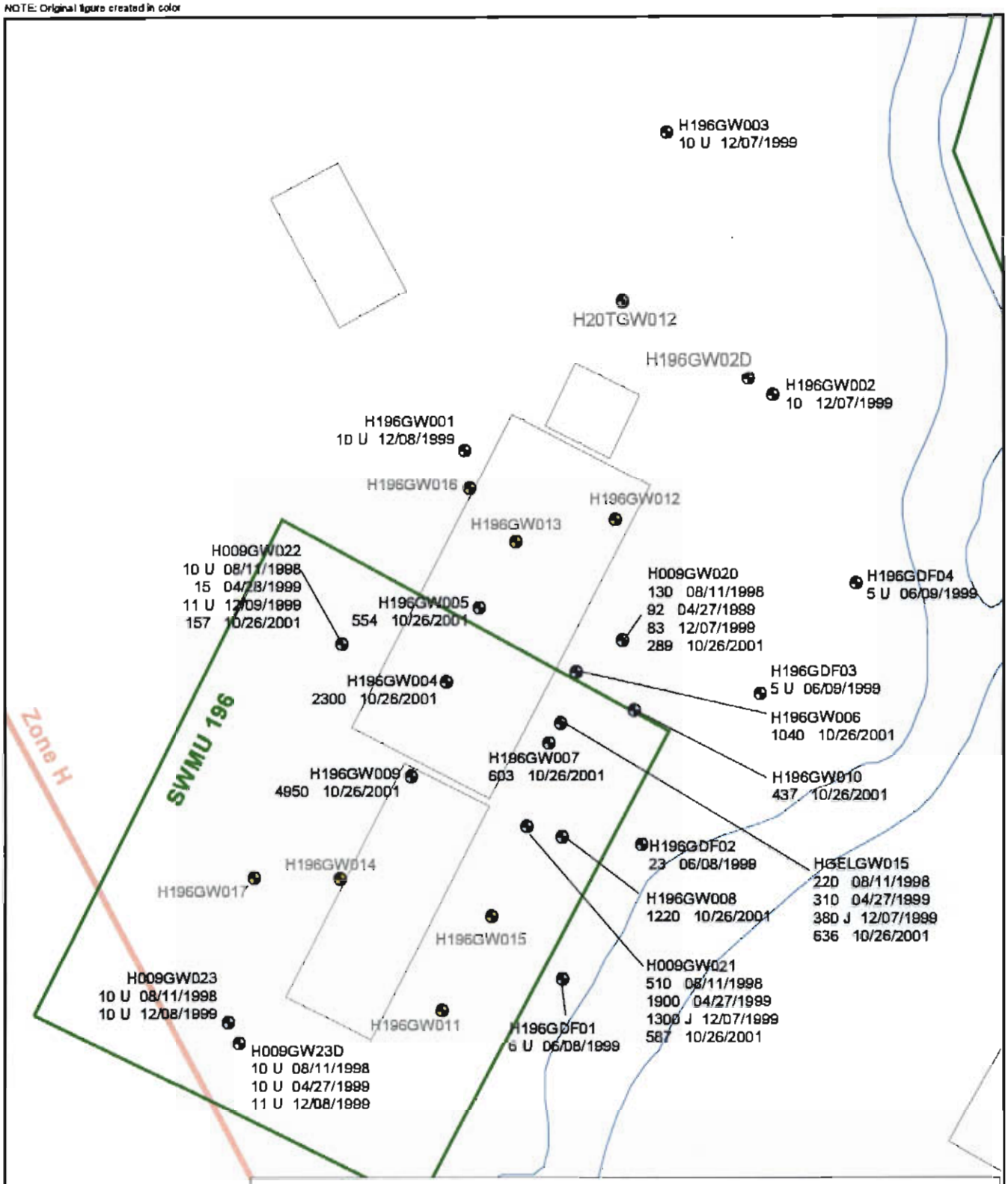

1, 4-Dichlorobenzene Results in ug/L
Results qualified with an "=" unless otherwise noted.
J indicates that the analyte was detected, the reported value is an estimated concentration.
U indicates the analyte was undetected, the reported value is the detection limit.
Screening criteria for 1,4-DCB are MCL (75 ug/L) and RBC (0.47 ug/L)

- Groundwater Wells Installed After IM Treatment or Constituent Not Targeted
- Groundwater Wells
- Shoreline
- SWMU Boundary
- Buildings
- Zone Boundary

N

0 30 60 Feet

Figure 4-12
1,4-Dichlorobenzene Concentrations in Groundwater
SWMU 196, Zone H
Charleston Naval Complex

CH2MHILL

File Path: C:\18gis\Projects\Zone_H\Swmu_196\Aprs\swmu_196.apr, Date: 23 Oct 2002 7:34, User: NMOUDRY, 1,4 DCB Results - Figure 4-14 1,4-Dichlorobenzene Concentrations in Groundwater

NOTE: Original figure created in color

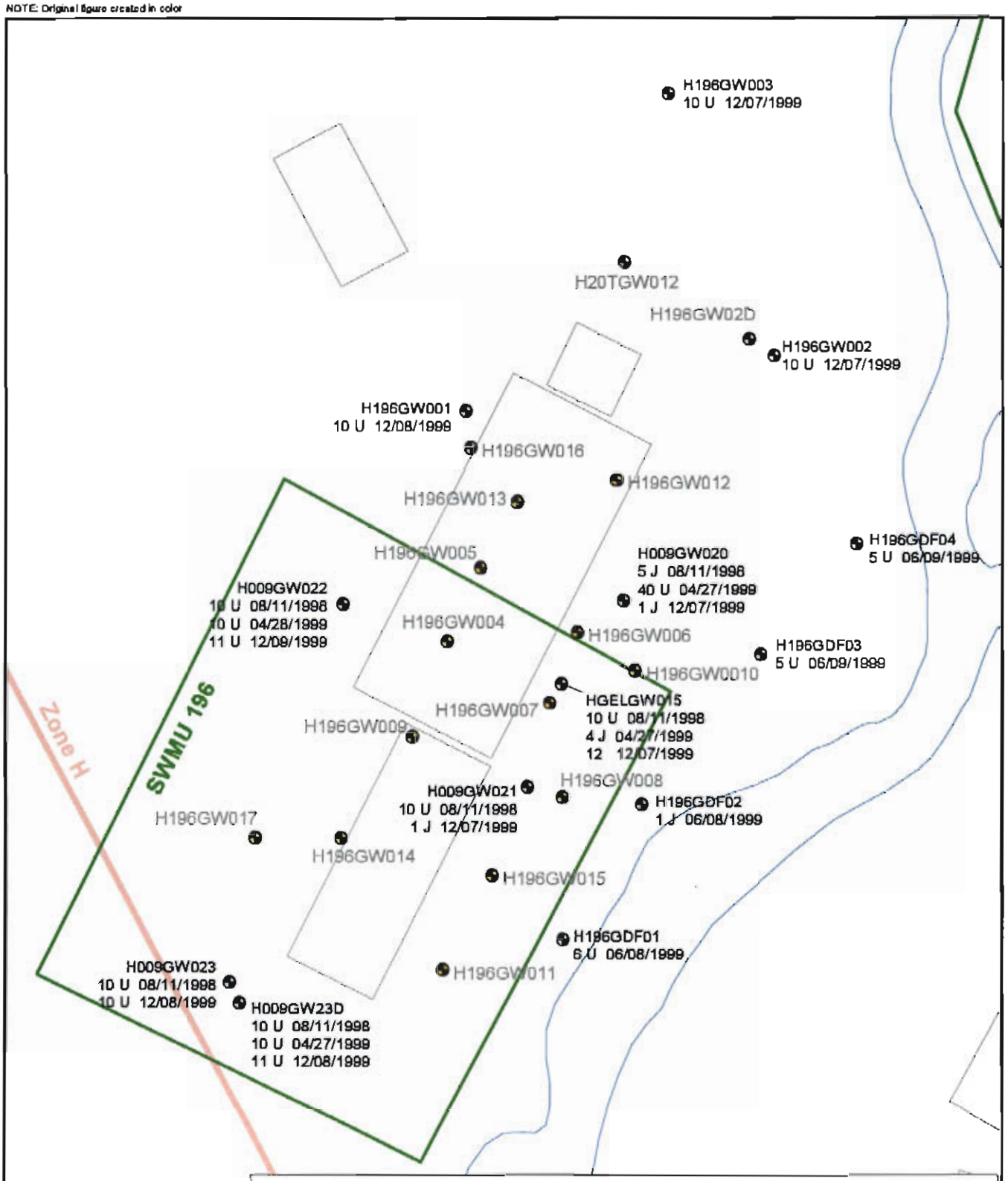

2, 4-Dichlorophenol Results in ug/L
Results qualified with an "=" unless otherwise noted.
J indicates that the analyte was detected, the reported value is an estimated concentration.
U indicates the analyte was undetected, the reported value is the detection limit.
Screening criteria for 2,4-DCP is RBC (11 ug/L)

- Groundwater Wells Installed After IM Treatment or Constituent Not Targeted
- Groundwater Wells
- Shoreline
- SWMU Boundary
- Buildings
- Zone Boundary

N

0 30 60 Feet

Figure 4-13
2,4-Dichlorophenol Concentrations in Groundwater
SWMU 196, Zone H
Charleston Naval Complex

CH2MHILL

File Path: C:\18gis\Projects\Zone_H\SWMU_196\Aprs\swmu_196.apr, Date: 23 Oct 2002 7:35, User: NMOUDRY, 2,4 DCP Results - Figure 4-15 2,4-Dichlorophenol Concentrations in Groundwater

NOTE: Original figure created in color

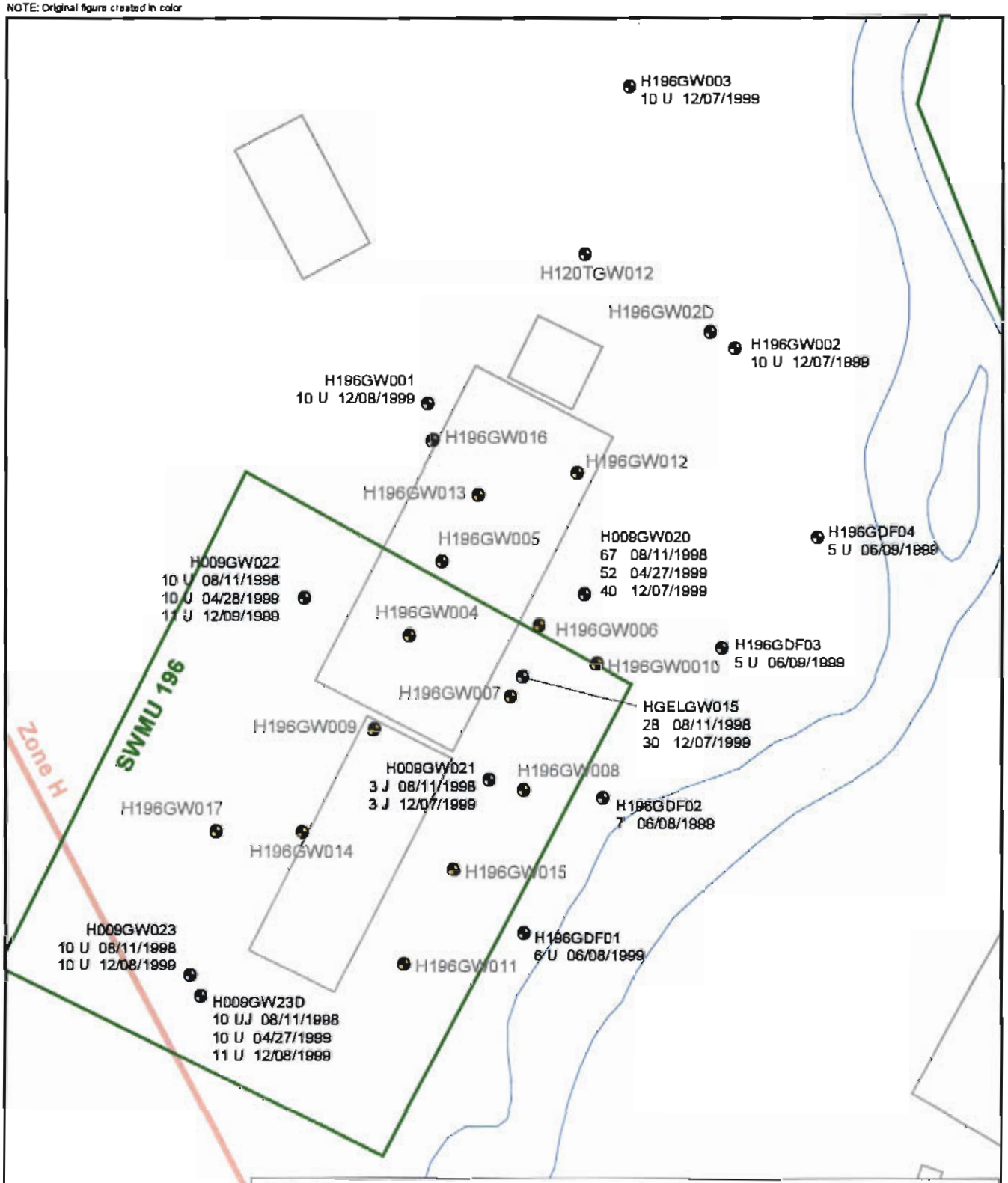

CLPH2 Results in ug/L
Results qualified with an "=" unless otherwise noted.
J indicates that the analyte was detected, the reported value is an estimated concentration.
U indicates the analyte was undetected, the reported value is the detection limit.
Screening criteria for 2-CLPH is RBC (3 ug/L)

- Groundwater Wells Installed After IM Treatment or Constituent Not Targeted
- Groundwater Wells
- Shoreline
- SWMU Boundary
- Buildings
- Zone Boundary

N

0 30 60 Feet

Figure 4-14
2-Chlorophenol Concentrations in Groundwater
SWMU 196, Zone H
Charleston Naval Complex

CH2MHILL

File Path: C:\16gis\Projects\Zone_H\Swmu_196\Aprs\swmu_196.apr, Date: 23 Oct 2002 7:37, User: NMOUDRY, CLPH2 Results - Figure 4-16 2-Chlorophenol Concentrations in Groundwater

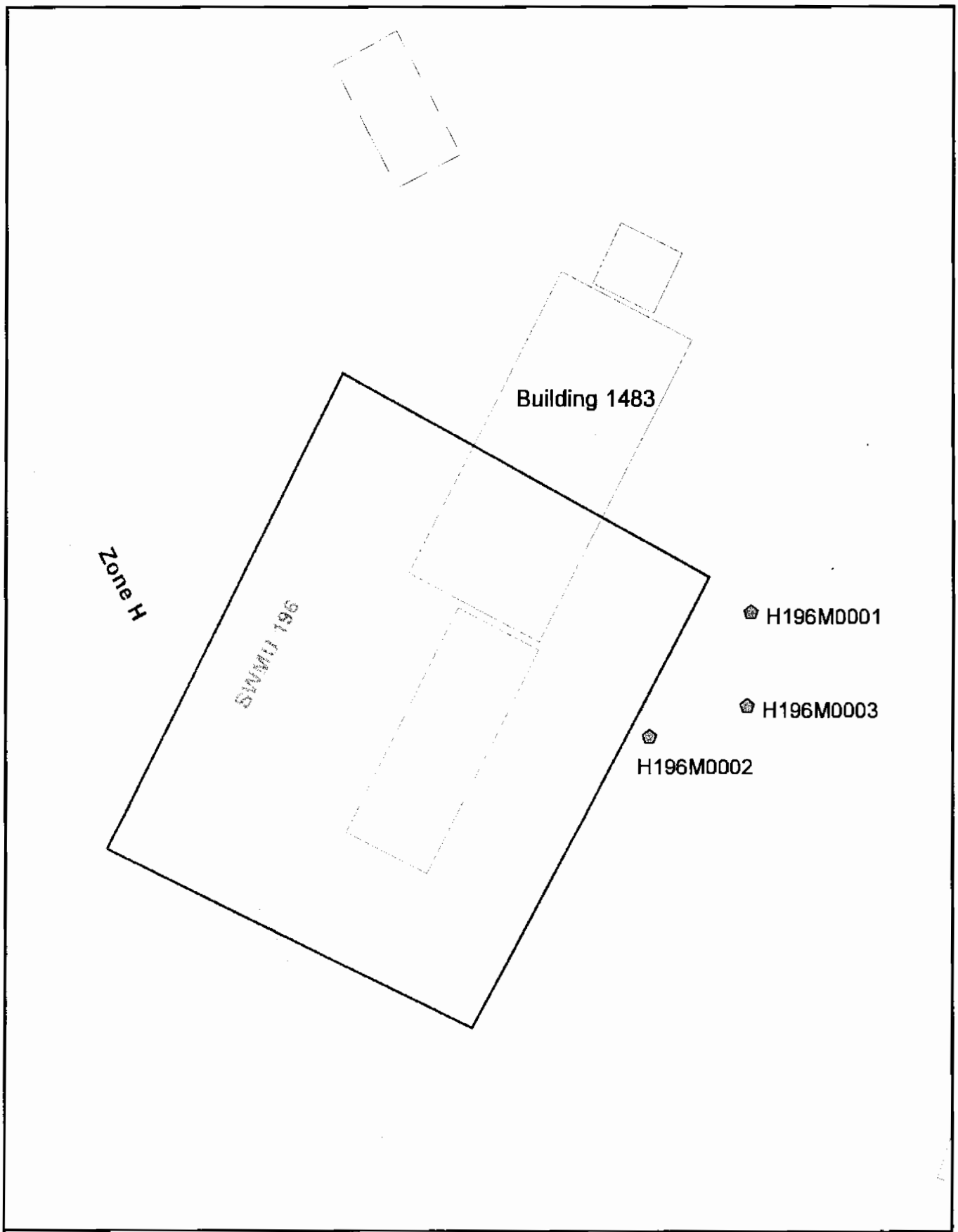

Sediment Samples
SWMU Boundary
Buildings
Zone Boundary

N

0 30 60 Feet

Figure 4-15
Sediment Sample Locations
SWMU 196, Zone H
Charleston Naval Complex

CH2MHILL

File Path: C:\18gis\Projects\Zone_H\Swmu_196\Aprs\swmu_196.apr, Date: 23 Oct 2002 7:39, User: NMOUDRY, Sediment Samples Locations - Figure 4-17 Sediment Sample Locations

Section 5.0

5.0 Summary of Information Related to Site Closeout Issues

5.1 Presence of Inorganics in Groundwater

For the purpose of site closeout documentation, the inorganics in groundwater issue refers to the occasional or intermittent detection of several metals (primarily arsenic, thallium, and antimony) in groundwater at concentrations above the applicable MCL, preceded or followed by detections of these same metals below the MCL, or below the practical quantitation limit.

Antimony, arsenic, and thallium are not considered COCs at SWMU 196. Antimony was reported below the MCL in all samples collected. Arsenic was reported at elevated concentrations in one well (HGELGW015) on site; however, it is considered to be a natural occurrence rather than related to site activities, as discussed in Section 4.3.3. Thallium was reported within the Zone H background range in all samples collected.

5.2 Potential Linkage to Sanitary Sewers (SWMU 37)

SWMU 196 was used as a public works storage yard. There are no sanitary sewers in the vicinity of SWMU 196 and no data have been found to indicate that this unit was connected to the sanitary sewer. Therefore, there is no known linkage between SWMU 196 and the investigated sanitary sewers, and no data indicate that this site has likely impacted the sanitary sewer system. Further evaluation of this issue for SWMU 196 is not warranted.

5.3 Potential Linkage to Storm Sewers (AOC 699)

Potential linkage of a SWMU or AOC to the storm sewer refers to the possibility of a groundwater plume at the SWMU or AOC migrating into a storm water sewer from within which it would subsequently migrate to the water bodies around the CNC, or to the presence of a cross connection between the sanitary sewer and storm sewer, which could transport pollutants directly to surface waters.

There is no indication of a storm sewer in the vicinity of SWMU 196. Therefore, further evaluation of this issue for SWMU 196 is not warranted.

5.4 Potential Linkage to Railroad Lines (AOC 504)

There are no railroad lines in the vicinity of SWMU 196. The closest railroad lies to the east, approximately 1,000 feet away, and there are no known linkages between SWMU 196 and the railroad lines. Therefore, further evaluation of this issue is not warranted.

5.5 Potential Migration Pathways to Surface Water Bodies

SWMU 196 is adjacent to the west bank of Shipyard Creek. Based on historical water level data at the site, groundwater flows in the direction of the creek, which serves as a groundwater discharge point. Additionally, the topography at SWMU 196 drops steeply east of Building 1838, creating a pathway for surface water runoff in the direct of Shipyard Creek.

The site investigations completed during the RFI addendum evaluated potential release of site sediment and groundwater contamination to Shipyard Creek. It was concluded that both the groundwater-to-surface water migration pathway and sediment-to-surface water migration pathway were valid.

However, no COCs were identified in surface water at SWMU 196. There were no organic compounds reported as exceeding the SSWQCSV in surface water, as reported in the *Draft RFI Report, RFI Addendum, Revision 0*. Although surface water samples collected at SMWU 196 did not target inorganic compounds, no inorganic COCs were identified in soil, sediment, or groundwater media. Shipyard Creek is a dynamic system, which is tidally influenced. In addition, the total organic carbon of the marsh sediments is high (estimated at 2.5 percent). Therefore, organic contamination in groundwater is most likely being retarded by soil or sediment or is being attenuated in the creek.

The potential for the migration of groundwater contaminants to surface water is still valid. The IM was completed to minimize the potential flux of contaminated groundwater discharge from SWMU 196 to Shipyard Creek. In addition, since site activities began in 1979 and there were no reported exceedances in surface water during the RFI in 1999, the dilutional capacity of the creek and the adsorption capacity of site sediments appear to be controlling organic concentrations in surface water. Once groundwater contamination at the site is remediated to applicable MCSs, the evaluation of migration pathways to surface water will no longer be warranted.

5.6 Potential Contamination in Oil/Water Separators (OWSs)

The potential contamination of OWSs issue refers to the possible presence of an OWS that has not yet been investigated at a SWMU or AOC as part of the RCRA or underground storage tank (UST) process.

The *Draft Zone H RFI Report, RFI Addendum, Revision 0* does not refer to the presence or possible presence of an OWS at SWMU 196. Additionally, there is no reference to an OWS at this facility in the basewide OWS report prepared by the Navy for Y2000 (SOUTHDIV, 2000). Therefore, further evaluation of this issue at SWMU 196 is not warranted.

5.7 Land Use Controls (LUCs)

SWMU 196 lies within Zone H. Future use of this site is designated for industrial purposes. A CMS has been recommended and will be completed at this site. The relevance or need for LUCs at SWMU 196 will be determined upon completion of the CA measures undertaken at the site. It is expected that restrictions on the use of groundwater at this site will be part of the selected remedy.

Section 6.0

6.0 Summary of the Interim Measure at SWMU 196

6.1 Purpose and Objectives of the Interim Measure

The RFI soil and groundwater investigations at SWMU 196 revealed the presence of high concentrations of chlorobenzene and DCBs in shallow groundwater, as was mentioned in the previous sections. Concentrations were reported at up to 15 mg/L for chlorobenzene and 13 mg/L of 1,2-DCB during the RFI investigation. These values are approximately 0.3 and 8 percent, respectively, of the maximum solubility of chlorobenzene and 1,2-DCB in water. In general, a contaminant concentration in groundwater greater than 1 percent of its solubility is considered an indicator for the potential presence of non-aqueous phase liquid (NAPL), which suggests the possibility that 1,2-DCB might have been present in the shallow aquifer as a dense non-aqueous phase liquid (DNAPL). The BCT was consulted, and it was decided by the team to implement an IM with the objective of significantly reducing the levels of these constituents in the groundwater in SWMU 196.

To achieve this objective, several technologies were evaluated. They included chemical oxidation with Fenton's Reagent (via two different delivery mechanisms), chemical oxidation with potassium permanganate, and chemical reduction with zero-valent iron (ZVI). Chemical oxidation with Fenton's Reagent was determined to be the most appropriate technology to achieve the desired objective.

The IM was implemented at SWMU 196 to reduce this possible DNAPL to the extent practical, and was performed in two phases. The objective of Phase I was to delineate the vertical and horizontal extent of chlorobenzene and DCB source areas in groundwater at SWMU 196. The objective of Phase II was to remediate the source areas at SWMU 196, as defined by Phase I, using in situ chemical oxidation. The results of the IM are documented in the following sections.

6.2 Phase I Activities: Source Area Delineation

The field work for Phase I of the IM was completed in December 2000. A summary of the activities completed under Phase I is presented herein.

Two soil borings, as presented in Figure 6-1, were advanced to a depth of approximately 15 ft bls to confirm the presence of the shallowest aquitard/aquiclude below the water table. Both borings indicated the presence of the aquitard at approximately 15 ft bls. The logs for these borings were presented in the *Phase II IM Work Plan for SWMU 196, Zone H* (CH2M-Jones, 2001c).

After the depth of the aquitard was determined, groundwater samples were collected at 29 sample locations using the Waterloo™ profiler (see Figure 6-1). Up to six different groundwater samples were collected from each location, ranging in depth from 5 to 15 ft bls, in approximately two-foot intervals. A discussion of the analytical results from the Waterloo™ profiler sampling was presented in the *Phase II IM Work Plan for SWMU 196, Zone H*.

In general, the results of the delineation sampling concluded that high concentrations of chlorobenzene and DCB were present at all sample intervals (5 to 15 ft bls). The highest level of contamination was reported at 13 ft bls at sample point 196GP023 (see Figure 6-1). At this location, chlorobenzene was reported at a concentration of 282,000 μg/L, which is not indicative of the presence of DNAPL. Detailed figures of the delineation effort were presented in the *Phase II IM Work Plan for SWMU 196, Zone H* (CH2M-Jones, 2001c).

6.3 Phase II Activities: Phases II-A, II-B, and II-C

During Phase II, remediation of contaminated groundwater was addressed by in situ chemical oxidation, using the Geo-Cleanse® process. This process is a patented technology that simultaneously injects hydrogen peroxide and trace quantities of metallic salts under pressure to the subsurface in order to destroy organic contaminants in soil and groundwater. This process is described in the *Phase II IM Work Plan for SWMU 196, Zone H* (CH2M-Jones, 2001c). The primary objective of the IM was to achieve a 90-percent reduction in chlorobenzene and 1,2-DCB concentrations in groundwater, within the treatment area.

Phase II activities were completed in three sub-phases: Phase II-A , Phase II-B, and Phase II-C. Phase II-A consisted of a focused application in the area of the highest concentration, while Phase II-B addressed the remainder of the target treatment area. Phase II-C was a polishing phase.

Pre- and post-groundwater sampling events were conducted for all sub-phases of Phase II. The analytical laboratory reports for these Phase II groundwater sampling events are

presented in Appendix B. Data validation reports for selected sampling events are presented in Appendix C.

6.3.1 Phase II-A Activities

Field work for Phase II-A of the IM was started in October 2001 and completed in December 2001. The extent of the Phase II-A treatment area was approximately 75 ft by 40 ft and is presented in Figure 6-2. The objective of this focused application was to obtain operational data to help design and construct Phase II-B of the IM.

In October 2001, 11 injectors were installed at two vertical levels in the Phase II-A treatment area at SWMU 196, and are represented in Figures 6-2 and 6-3 (as I-1 through I-11). Six injectors were screened in the shallow horizon and five were screened in the deeper horizon. Each injector has a screen length of 3 ft. Additionally, four barrier wells (BI-1 through BI-4) were installed along the eastern edge of the treatment area to monitor potential plume movement during treatment and to monitor gases. Seven new wells (H196GW004 through H196GW010) were installed to help monitor the performance of chemical oxidation on contaminants in groundwater. Fifteen vent wells (wells screened in the vadose zone) were installed through the floor slab of the building to allow pressure relief during treatment. The soil boring logs and well completion diagrams are included in Appendix E.

Following injector installation, a baseline sampling event for Phase II-A was conducted on October 26, 2001. Four existing shallow monitor wells (H009GW020 through H009GW022, HGELGW015) and seven new monitor wells (H196GW004 through H196GW010) were sampled for VOCs by SW-846 Method 8260. The well locations are presented on Figures 6-2 and 6-3.

The Phase II-A injection was conducted in November 2001. Approximately 32,620 pounds of 50-percent concentration hydrogen peroxide were injected into the subsurface. Performance monitoring was conducted on November 20, 2001 with nine monitoring wells (H009GW020, H009GW021, H196GW004 through H196GW008, H196GW010, and HGELGW015), on December 6, 2001 with four monitoring wells (H009GW021, H196GW006, H196GW009, and HGELGW015), and on December 18 and 19, 2001 with 11 monitoring wells (H009GW020 through H009GW022, H196GW004 through H196GW010, and HGELGW015). Samples were analyzed for VOCs by SW-846 Method 8260. Analytical laboratory reports for these Phase II sampling events are presented in Appendix B. The post-treatment monitoring for this phase of treatment was intended to evaluate how contaminant levels changed over time.

Consolidated results for Phase II-A, II-B, and II-C are presented in Table 6-1. The results from Phase II-A indicated only a minimal amount of the target contaminant was removed (approximately 5 percent). This low removal is likely result of a combination of factors, including peroxide consumed in oxidizing natural organic carbon and higher than anticipated contaminant mass in the subsurface. It should be noted that groundwater samples generally only represent dissolved-phase contamination.

6.3.2 Phase II-B Activities

In February 2002, 28 additional injectors (I-12 through I-39) were installed at the site. The extent of the Phase II-B treatment area is approximately 90 ft by 180 ft, and is presented in Figures 6-2 and 6-3. Seven additional monitoring wells (H196GW011 through H196GW017) were installed along the outer edges of dissolved chlorobenzene plume for inclusion in the performance monitoring network. The soil boring logs and well completion diagrams for the additional injectors and monitoring wells are included in Appendix E. The Phase II-B baseline sampling event was conducted in February 2002. Sixteen monitoring wells (H196GW004 through H196GW015, H009GW020 through H009GW022, and HGELGW015) were sampled for VOCs by SW-846 Method 8260. The well locations are presented on Figure 6-3.

The Phase II-B injection was conducted in March 2002. Approximately 49,960 pounds of 50-percent concentration hydrogen peroxide were injected into the subsurface. Eighteen wells were sampled (H009GW020 through H009GW022, H196GW004 through H196GW017, and HGELGW015) during the pre- and post-treatment sampling event. Samples were analyzed for VOCs by SW-846 Method 8260. Analytical laboratory reports for these Phase II sampling events are presented in Appendix B.

Consolidated results for Phase II-A, II-B, and II-C are presented in Table 6-1. The results from Phase II-B indicated that 56 percent of the target contaminants was removed. The greatest amount of removal was noted in the area where Phase II-A was conducted, and indicates more than one treatment event was required to achieve substantive levels of removal. Still, after Phase II-B was completed, less than the 90-percent objective removal was noted.

6.3.3 Phase II-C Activities

The less-than-expected removal in Phase II-B was attributed to a poor hydrogeologic connection between several injection wells and monitoring wells. Six new injection wells were installed at the site in June 2002 in an effort to treat areas with poor removal. The

Phase II-C (polishing) round was completed in July 2002 with the injection of 30,990 pounds of hydrogen peroxide. The complete monitoring network (18 wells) was sampled 45 days after the injection.

The consolidated results for Phase II-A, II-B, and II-C are presented in Table 6-1. The results from Phase II-C indicate that the concentrations of total chlorobenzene and DCB were reduced by 82 percent.

6.3.4 IM Summary

Figure 6-4 presents an overall summary of pre- and post-treatment data for chlorobenzene and the three DCBs targeted in this IM. The top half of the figure shows pre- and post-treatment data, by constituent. A value represented on the left side of a cell indicates the concentration exceeds one-percent of the constituent's solubility in water. Conversely, a value on the right side of the cell indicates the concentration is less than one-percent of the constituent's solubility. The bottom half of Figure 6-4 represents an evaluation of the potential for DNAPL to be present at individual wells.

The IM results for individual constituents is presented below.

1,2-DCB

1,2-DCB was present at SWMU 196 in the highest concentrations, with an average well pre-treatment concentration of 10,674 parts per billion (ppb). Concentrations of 1,2-DCB were reduced by 84 percent as a result of the IM. A total of 11 wells exceeded 1 percent of the solubility of 1,2-DCB prior to treatment, whereas six wells exceeded the 1-percent solubility of 1,2-DCB following treatment. Pre- and post-treatment 1,2-DCB data are graphically represented in Figures 6-5a and 6-5b.

Chlorobenzene

Chlorobenzene was the next highest concentration constituent reported at SWMU 196, with an average pre-treatment well concentration of 5,608 ppb. Concentrations of 1,2-DCB were reduced by 80 percent as a result of the IM. A total of nine wells exceeded 1 percent of the solubility of chlorobenzene prior to treatment, whereas two wells exceeded the 1-percent solubility of chlorobenzene following treatment. Pre- and post-treatment chlorobenzene data are graphically represented in Figures 6-6a and 6-6b.

1,4-DCB

1,4-DCB was the next highest concentration constituent reported at SWMU 196, with an average pre-treatment well concentration of 511 ppb. Concentrations of 1,4-DCB were

reduced by 64 percent as a result of the IM. A total of four wells exceeded 1 percent of the solubility of 1,4-DCB prior to treatment, whereas one well exceeded the 1-percent solubility of 1,4-DCB following treatment. Pre- and post-treatment 1,4-DCB data are graphically represented in Figures 6-7a and 6-7b.

1,3-DCB

1,3-DCB was the next highest concentration constituent reported at SWMU 196, with an average pretreatment well concentration of 436 ppb. Concentrations of 1,3-DCB were reduced by 80 percent as a result of the IM. A total of two wells exceeded 1 percent of the solubility of 1,3-DCB prior to treatment, whereas none exceeded the 1-percent solubility of 1,3-DCB following treatment. Pre- and post-treatment 1,3-DCB data are graphically represented in Figures 6-8a and 6-8b.

The target objective of this IM was to reduce total chlorobenzene and DCB concentrations by 90 percent. The results presented in this section indicate a total chlorobenzenes concentration reduction of 82 percent. Pre- and post-treatment total chlorobenzenes data are graphically represented in Figures 6-9a and 6-9b.

Summary of Results

As presented in Figure 6-4, a total of six wells have constituent concentrations greater than 1-percent of their respective solubility; contaminant concentration reductions at these wells ranged from 41 to 90 percent. It should be noted that, where possible, the injection wells were placed as far from monitoring points as possible. It is likely that a higher degree of removal may have been achieved closer to the injection wells.

6.4 Screening of Phase II-C (Post-IM) Data

Phase II-C groundwater samples were collected at SWMU 196 in June, August, and September 2002 from 18 monitoring wells as part of post-IM performance monitoring, as described in Section 6.3 above. All samples were analyzed for VOCs by SW-846 Method 8260. Groundwater samples collected from monitoring well H009GW021 were additionally sampled for SVOCs by SW-846 Method 8270, metals by method SW-846 Methods 6010 and 7470, and hydrazine by ASTM Method D1385.88 in the June 19, 2002 and September 9, 2002 sampling events. This well was sampled for additional constituents to support work primarily related to SWMU 9.

Analytical results from the Phase II-C sampling event were screened against applicable COPC screening criteria (MCLs or RBCs) and are summarized in Table 6-2. The purpose of

this screening was to determine whether other constituents, that previously could not be detected due to high concentrations of chlorobenzene and DCBs, could be identified as COCs. Samples that exceeded applicable screening parameters are in bold text and outlined within the table. In order for a chemical to be considered a COPC, the chemical must exceed the MCL, or for those parameters that have no MCL, the EPA Region III tap water RBC. There are no background values established for VOCs and SVOCs. The screening criteria used to evaluate analytical results are those currently approved by the CNC BCT (see *Project Team Notebook and Instructions, Revision 1A* [CH2M-Jones, 2001e]).

Sixteen organic compounds and one inorganic compound were identified in groundwater as exceeding criteria based on the screening conducted on Phase II-C IM post-treatment data, as follows:

- 1,2,4-Trichlorobenzene (TCB)
- 1,2-DCB
- 1,3-DCB
- 1,4-DCB
- 2-Chlorophenol
- Acetone
- Benzene
- Cadmium
- Carbon Disulfide
- Chlorobenzene
- Chloroform
- cis-1,2-DCE
- Dibromochloromethane
- Naphthalene
- PCE
- TCE
- Vinyl Chloride

Ten of the identified COPCs were reported as COCs in Section 4.0. Seven of parameters (1,2,4-TCB, acetone, cadmium, carbon disulfide, chloroform, dibromochloromethane, and naphthalene) were not previously identified as exceeding criteria and will be evaluated in the CMS.

6.5 Summary of COCs at SWMU 196

Based on the COC/COPC screening results of RFI and IM baseline sampling data (presented in Section 4.0) and the IM post-treatment screening presented above in Section

6.4, 19 COCs have been identified at SWMU 196 for shallow groundwater. The COCs are listed below:

- 1,2,4-TCB
- 1,2-DCB
- 1,3-DCB
- 1,4-DCB
- 2-Chlorophenol
- Acetone
- Benzene
- Cadmium
- Carbon Disulfide
- Chlorobenzene
- Chloroform
- cis-1,2-DCE
- Dibromochloromethane
- Methylene Chloride
- Naphthalene
- PCE
- Toluene
- TCE
- Vinyl Chloride

As discussed in Section 4.0, there are no COCs identified in surface or subsurface soils, sediment, surface water, or deep groundwater.

TABLE 6-1

Pre- and Post-Treatment Data for Interim Measure at SWMU 196

Phase III RFI Report Addendum/IM Completion Report/CMS Work Plan, SWMU 196, Zone H, Charleston Naval Complex

	Phase II-A Pre-Treatment (µg/L)					Phase II-A Post-Treatment (µg/L)					Phase II-B Baseline				
Well ID	Chlorobenzene	1,2-DCB	1,3-DCB	1,4-DCB	Total CBs	Chlorobenzene	1,2-DCB	1,3-DCB	1,4-DCB	Total CBs	Chlorobenzene	1,2-DCB	1,3-DCB	1,4-DCB	Total CBs
196GW006	2,0600	24,200	367	1,040	46,207	826	4,770	50.8	183	5,839.8	1,930	6,770	93.9	224	9,017.9
009GW020	11,500	1,410	87.9	289	13,286.9	13,900	1,330	84.7	264	15,578.7	9,200	1,140	58.7	206	10,604.7
009GW021	1,870	3,620	301	587	6,378	4,770	31,200	1,700	2,970	40,640	3,310	6,610	413	741	11,074
009GW022	221	1,520	78	157	1,976	322	3,520	126	201	4,169	270	2,890	87	164	3,411
GEL15	9,020	19,500	248	636	29,404	7,450	28,300	345	779	36,874	6,100	17,500	168	448	24,216
196GW004	9,470	20,900	1,150	2,300	33,820	6,870	12,800	449	988	21,107	5,000	17,600	752	1,350	24,702
196GW005	1,370	9,840	231	554	16,185	175	42,20	68.8	183	4,646.8	347	15,800	224	512	16,883
196GW007	5,780	12,300	213	603	18,896	8,720	4,200	93	268	13,281	10,200	6,760	106	306	17,372
196GW008	4,500	9,790	604	1,220	16,114	5,980	15,600	790	1,700	24,070	7,750	4,360	255	558	12,923
196GW009	2,240	32,800	2,720	4,950	42,710	3,650	42,000	1,820	3,490	50,960	3,870	16,600	723	1,320	22,513
196GW010	3,920	8.990	175	437	13,522	4,560	3,880	26.1	51.2	8,517.3	1,990	1,780	42.1	93.9	3,906
196GW011											28.7	18.8	0.88	1.9	50.28
196GW012											13.1	15.3	5	0.54	33.94
196GW013											8,630	10,200	110	306	19246
196GW014											6,440	32,500	1,460	2,670	43070
196GW015											15,000	197	78.2	266	1,5541.2
196GW016											65.2	258	7 2	25	355.4
196GW017											39.6	113	4	10	166.6

	Phase II-B Post-Treatment					Phase II-C Post-Treatment										
Well ID	Chlorobenzene	1,2-DCB	1,3-DCB	1,4-DCB	Total CBs	Chlorobenzene	1,2-DCB	1,3-DCB	1,4-DCB	Total CBs	Total CB Reduction 2A Base	Total CB Reduction 2B Base	Total CB Reduction 2C Base	%CB Reduction 2A Base	%CB Reduction 2B Base	%CB Reduction 2C Base
196GW006	198	1,380	21	45	1,644	198	1,380	21	45	1,644	40,367	44,563	44,563	87	494	96
009GW020	16,600	1,140	104	487	1,8331	196	83.6	4.1	9.3	293	(2,292)	(5,044)	12,994	(17)	(48)	98
009GW021	8,610	14,900	1,810	3,160	2,8480	542	1,800	137	209	2,688	(34,262)	(22,102)	3,690	(537)	(200)	58
009GW022	200	3,300	114	207	3,821	0.69	5.5	3.3	1.8	11	(2,193)	(1,845)	1,965	(111)	(54)	99
GEL15	730	2,590	29.7	90.9	3,440.6	397	4,600	48	75	5120	(7,470)	25,963	24,284	(25)	107	83
196GW004	516	1,380	82.7	156	2,134.7	57.5	96.7	12.7	15	182	12,713	31,685	33,638	38	128	99
196GW005	500	9,020	104	306	9,930	6.9	38	6.2	17.2	68	11,538	6,255	16,117	71	37	100
196GW007	1,840	736	31	79.3	2,686.3	6,320	2,530	68.6	173	11,092	5,615	16,210	7,804	30	93	41
196GW008	4,410	7,410	791	1,400	14,011	573	932	60.3	96.4	1,662	(7,956)	2,103	14,452	(49)	16	90
196GW009	7,550	12,100	945	1,830	22,425	163	3,520	233	334	4,250	(8,250)	20,285	38,460	(19)	90	90
196GW010	559	1420	19.1	46.4	2,044.5	47.5	58.1	1.6	2.7	110	5,005	11,478	13,412	37	294	99
196GW011	102	17.5	5.8	3	128.3	431	16.7	19.6	5.6	473	NA	(78)	(423)	NA	(155)	(841)
196GW012	0.98	2.1	5	0.76	8.84	2.5	28.6	2.3	1.5	35	NA	25	(1)	NA	74	(3)
196GW013	39.8	549	20.4	26.8	636	1,640	2,940	121	330	5031	NA	18,610	14,215	NA	97	74
196GW014	4,400	19,800	1,080	2240	27,520	5,980	13,000	819	1,910	21,709	NA	15,550	21,361	NA	36	50
196GW015	648	49.3	125	23.8	846.1	2,020	126	14.5	53.3	2,214	NA	14,695	13,327	NA	95	86
196GW016	1.3	27.4	0.55	0.91	30.16	1.2	13.5	5	0.46	20	NA	325	335	NA	92	94
196GW017	5	5	5	5	20	0.47	5	5	5	15	NA	147	151	NA	88	91
Percent Reduction											**5.37%**	**56.42%**	**82.14%**	**5.37%**	**56.42%**	**82.14%**

TABLE 6-2
Detected Compounds in Shallow Groundwater during Phase II-C Monitoring Event
Phase III RFI Report Addendum/IM Completion Report/CMS Work Plan, SWMU 196, Zone H, Charleston Naval Complex

Parameter	Sample Location	Sample ID	Date Collected	Concentration (µg/L)	Qualifier	Zone H Background Range Min	Zone H Background Range Max	MCL	EPA Region III RBC[a]
Inorganics									
Arsenic	H009GW021	009GW021M6	6/19/02	36	J	0.8	50	50	0.045
	H009GW021	009GW021M8	9/09/02	4.2	J				
Barium	H009GW021	009GW021M6	6/19/02	210	=	3	115	2,000	260
	H009GW021	009GW021M8	9/9/02	100	J				
Cadmium	H009GW021	009GW021M6	6/19/02	**6.7**	=	5	5	5	1.8
	H009GW021	009GW021M8	9/9/02	4.5	J				
Chromium, Total	H009GW021	009GW021M8	9/9/02	4	J	2	6	100	11 (CR+6) 5,500 (Cr+3)
Volatile Organic Compounds									
1,1-DCA	H196GW015	196GW015M7	9/5/02	32.6	J	NA	NA	*NA*[a]	**80**[b]
Acetone	H196GW005	196GW005M7	9/4/02	6.3	J	NA	NA	*NA*	**61**
	H196GW014	196GW014M7	9/4/02	**358**	J				
	H196GW017	196GW017M7	9/4/02	2.6	J				
Benzene	H009GW020	009GW020M7	9/4/02	1.8	J	NA	NA	**5**	*0.32*
	H009GW021	009GW021M6	6/19/02	**42**	J				
	H196GW004	196GW004M7	9/4/02	3.6	J				
	H196GW007	196GW007M7	9/5/02	**180**	J				
	H196GW008	196GW008M7	9/5/02	**8.8**	J				
	H196GW009	196GW009M7	9/4/02	**18**	J				
	H196GW011	196GW011M7	9/5/02	1.1	J				
	H196GW013	196GW013M7	9/4/02	**279**	=				
	H196GW014	196GW014M7	9/4/02	**1,140**	=				
	H196GW015	196GW015M7	9/5/02	**364**	=				
	H196MARSH1	196MARSH1M8	8/15/02	**85.7**	J				
	H196MARSH1	196MARSH1M7	9/4/02	**150**	J				
	H196MARSH2	196MARSH2M8	8/15/02	**79.1**	J				
	H196MARSH2	196MARSH2M7	9/4/02	**83.8**	J				

TABLE 6-2
Detected Compounds in Shallow Groundwater during Phase II-C Monitoring Event
Phase III RFI Report Addendum/IM Completion Report/CMS Work Plan, SWMU 196, Zone H, Charleston Naval Complex

Parameter	Sample Location	Sample ID	Date Collected	Concentration (µg/L)	Qualifier	Zone H Background Range Min	Zone H Background Range Max	MCL	EPA Region III RBC[a]
Benzene	H196MARSH3	196MARSH3M8	8/15/02	**34.8**	J	NA	NA	**5**	*0.32*
	H196MARSH3	196MARSH3M7	9/4/02	**34.5**	J				
Carbon Disulfide	H196GW005	196GW005M7	9/4/02	2.5	J	NA	NA	*NA*	**100**
	H196MARSH1	196MARSH1M7	9/4/02	**124**	J				
	H196MARSH3	196MARSH3M7	9/4/02	**272**	J				
Chlorobenzene	H009GW020	009GW020M7DL	9/4/02	**196**	=	NA	NA	**100**	*11*
	H009GW021	009GW021M6	6/19/02	**2,500**	=				
	H009GW021	009GW021M7	9/5/2002	**542**	=				
	H009GW021	009GW021M8	9/9/2002	**290**	=				
	H009GW022	009GW022M7	9/4/02	0.69	J				
	H196GDF02	196GDF02M6	8/6/02	**3,530**	=				
	H196GDF03	196GDF03M6	8/6/02	37.6	=				
	H196GW004	196GW004M7	9/4/02	57.5	=				
	H196GW005	196GW005M7	9/4/02	6.9	=				
	H196GW007	196GW007M7DL	9/5/02	**8,320**	=				
	H196GW008	196GW008M7DL	9/5/02	**573**	=				
	H196GW009	196GW009M7	9/4/02	**163**	J				
	H196GW010	196GW010M7	9/5/02	47.5	=				
	H196GW011	196GW011M7DL	9/5/02	**431**	=				
	H196GW012	196GW012M7	9/4/02	2.5	J				
	H196GW013	196GW013M7	9/4/02	**1,640**	=				
	H196GW014	196GW014M7DL	9/4/02	**5,980**	=				
	H196GW015	196GW015M7	9/5/02	**2,020**	=				
	H196GW016	196GW016M7	9/4/02	1.2	J				
	H196GW017	196GW017M7	9/4/02	0.47	J				
	H196MARSH1	196MARSH1M8D	8/15/02	**9,560**	=				
	H196MARSH1	196MARSH1M7D	9/4/02	**13,300**	=				
	H196MARSH2	196MARSH2M8D	8/15/02	**18,800**	=				
	H196MARSH2	196HMARSH2M8D	8/15/02	**17,600**	=				

TABLE 6-2
Detected Compounds in Shallow Groundwater during Phase II-C Monitoring Event
Phase III RFI Report Addendum/IM Completion Report/CMS Work Plan, SWMU 196, Zone H, Charleston Naval Complex

Parameter	Sample Location	Sample ID	Date Collected	Concentration (µg/L)	Qualifier	Zone H Background Range Min	Zone H Background Range Max	MCL	EPA Region III RBC[a]
Chlorobenzene	H196MARSH2	196MARSH2M7D	9/4/02	**11,800**	=	NA	NA	**100**	*11*
	H196MARSH3	196MARSH3M8D	8/15/02	**10,500**	=				
	H196MARSH3	196MARSH3M7D	9/4/02	**8,600**	=				
	H196MARSH4	196MARSH4M8	8/15/02	**8,350**	=				
	H196MARSH4	196MARSH4M7D	9/4/02	**9,990**	=				
	HGELGW015	GELGW015M7	9/5/02	**397**	=				
Chloroform	H196GW005	196GW005M7	9/4/02	**0.39**	J	NA	NA	*NA*	**0.15**
cis-1, 2-DCE	H009GW021	009GW021M6	6/19/02	17	J	NA	NA	**70**	*5.5*
	H009GW021	009GW021M7	9/5/02	11.8	J				
	H009GW022	009GW022M7	9/4/02	2.7	J				
	H196GW004	196GW004M7	9/4/02	2	J				
	H196GW008	196GW008M7	9/5/02	29.4	=				
	H196GW011	196GW011M7	9/5/02	2.9	J				
	H196GW015	196GW015M7	9/5/02	**932**	=				
Dibromochloro-methane	H196GW004	196GW004M7	9/4/02	**0.54**	J	NA	NA	*NA*	**0.13**
	H196GW005	196GW005M7	9/4/02	**0.48**	J				
PCE	H009GW021	009GW021M7	9/5/02	**11.4**	J	NA	NA	**5**	*1.1*
	H009GW022	009GW022M7	9/4/02	1	J				
	H196GW004	196GW004M7	9/4/02	**7.5**	=				
	H196GW008	196GW008M7	9/5/02	4.5	J				
	H196GW009	196GW009M7	9/4/02	**121**	J				
	H196GW011	196GW011M7	9/5/02	**17.4**	=				
	H196GW014	196GW014M7	9/4/02	**65.2**	J				
TCE	H009GW021	009GW021M6	6/19/02	7.7	J	NA	NA	**5**	*1.6*
	H009GW022	009GW022M7	9/4/02	1.1	J				
	H196GW004	196GW004M7	9/4/02	1.4	J				
	H196GW008	196GW008M7	9/5/02	3.7	J				
	H196GW011	196GW011M7	9/5/02	2.4	J				

TABLE 6-2
Detected Compounds in Shallow Groundwater during Phase II-C Monitoring Event
Phase III RFI Report Addendum/IM Completion Report/CMS Work Plan, SWMU 196, Zone H, Charleston Naval Complex

Parameter	Sample Location	Sample ID	Date Collected	Concentration (µg/L)	Qualifier	Zone H Background Range Min	Zone H Background Range Max	MCL	EPA Region III RBC[a]
TCE	H196GW015	196GW015M7	9/5/02	**104**	J	NA	NA	**5**	*1.6*
Vinyl Chloride	H196GW008	196GW008M7	9/5/02	**49.1**	J	NA	NA	**2**	*0.04*
	H196GW015	196GW015M7	9/5/02	**1,860**	=				
Semivolatile Organic Compounds									
1,2,4-TCB	H009GW021	009GW021M6	6/19/02	27	J	NA	NA	**70**	*19*
	H196GW004	196GW004M7	9/4/02	1.7	J				
	H196GW005	196GW005M7	9/4/02	4.2	J				
	H196GW008	196GW008M7	9/5/02	4	J				
	H196GW009	196GW009M7	9/4/02	27.9	J				
	H196GW014	196GW014M7	9/4/02	**131**	J				
1,2-DCB	H009GW020	009GW020M7	9/4/02	83.6	=	NA	NA	**600**	*27*
	H009GW021	009GW021M6DL	6/19/02	**13,000**	=				
	H009GW021	009GW021M7	9/5/02	**1,800**	=				
	H009GW021	009GW021M8	9/9/2002	**880**	=				
	H009GW022	009GW022M7	9/4/02	5.5	=				
	H196GW004	196GW004M7	9/4/02	96.7	=				
	H196GW005	196GW005M7	9/4/02	38	=				
	H196GW007	196GW007M7	9/5/02	**2,530**	=				
	H196GW008	196GW008M7DL	9/5/02	**932**	=				
	H196GW009	196GW009M7	9/4/02	**3,520**	=				
	H196GW010	196GW010M7	9/5/02	58.1	=				
	H196GW011	196GW011M7	9/5/02	16.7	=				
	H196GW012	196GW012M7	9/4/02	28.6	=				
	H196GW013	196GW013M7	9/4/02	**2,940**	=				
	H196GW014	196GW014M7DL	9/4/02	**13,000**	=				
	H196GW015	196GW015M7	9/5/02	126	=				
	H196GW016	196GW016M7	9/4/02	13.5	=				
	H196MARSH2	196MARSH2M8	8/15/02	**2,790**	=				
	H196MARSH2	196MARSH2M7	9/4/02	211	J				

TABLE 6-2
Detected Compounds in Shallow Groundwater during Phase II-C Monitoring Event
Phase III RFI Report Addendum/IM Completion Report/CMS Work Plan, SWMU 196, Zone H, Charleston Naval Complex

Parameter	Sample Location	Sample ID	Date Collected	Concentration (µg/L)	Qualifier	Zone H Background Range Min	Zone H Background Range Max	MCL	EPA Region III RBC[a]
1,2-DCB	H196MARSH3	196MARSH3M8D	8/15/02	**14,600**	=	NA	NA	**600**	*27*
	H196MARSH3	196MARSH3M7D	9/4/02	**11,200**	=				
	H196MARSH4	196MARSH4M7	9/4/02	24.7	J				
	HGELGW015	GELGW015M7	9/5/02	**4,600**	=				
1,3-DCB	H009GW020	009GW020M7	9/4/02	4.1	J	NA	NA	*NA*	**18**
	H009GW021	009GW021M6	6/19/2002	**660**	=				
	H009GW021	009GW021M7	9/5/2002	**137**	=				
	H009GW021	009GW021M8	9/9/2002	**62**	=				
	H009GW022	009GW022M7	9/4/02	3.3	J				
	H196GDF02	196GDF02M6	8/6/02	**20.4**	J				
	H196GW004	196GW004M7	9/4/02	12.7	=				
	H196GW005	196GW005M7	9/4/02	6.2	=				
	H196GW007	196GW007M7	9/5/02	**68.6**	J				
	H196GW008	196GW008M7	9/5/02	**60.3**	=				
	H196GW009	196GW009M7	9/4/02	**233**	J				
	H196GW010	196GW010M7	9/5/02	1.6	J				
	H196GW011	196GW011M7	9/5/02	**19.6**	=				
	H196GW012	196GW012M7	9/4/02	2.3	J				
	H196GW013	196GW013M7	9/4/02	**121**	J				
	H196GW014	196GW014M7	9/4/02	**819**	=				
	H196GW015	196GW015M7	9/5/02	14.5	J				
	H196MARSH1	196MARSH1M8	8/15/02	**128**	J				
	H196MARSH1	196MARSH1M7	9/4/02	**160**	J				
	H196MARSH2	196MARSH2M8	8/15/02	**789**	=				
	H196MARSH2	196MARSH2M7	9/4/02	**207**	J				
	H196MARSH3	196MARSH3M8	8/15/02	**254**	=				
	H196MARSH3	196MARSH3M7	9/4/02	**155**	J				
	H196MARSH4	196MARSH4M8	8/15/02	**38.5**	J				
	H196MARSH4	196MARSH4M7	9/4/02	**32.1**	J				

TABLE 6-2
Detected Compounds in Shallow Groundwater during Phase II-C Monitoring Event
Phase III RFI Report Addendum/IM Completion Report/CMS Work Plan, SWMU 196, Zone H, Charleston Naval Complex

Parameter	Sample Location	Sample ID	Date Collected	Concentration (µg/L)	Qualifier	Zone H Background Range Min	Zone H Background Range Max	MCL	EPA Region III RBC[a]
1,3-DCB	HGELGW015	GELGW015M7	9/5/02	**48**	J	NA	NA	*NA*	**18**
1,4-DCB	H009GW020	009GW020M7	9/4/02	9.3	=	NA	NA	**75**	*0.47*
	H009GW021	009GW021M6	6/19/2002	**1,300**	=				
	H009GW021	009GW021M7	9/5/2002	**209**	=				
	H009GW021	009GW021M8	9/9/2002	**100**	=				
	H009GW022	009GW022M7	9/4/02	1.8	J				
	H196GDF01	196GDF01M6	8/6/02	0.37	J				
	H196GDF02	196GDF02M6	8/6/02	**121**	J				
	H196GDF03	196GDF03M6	8/6/02	1.3	J				
	H196GW004	196GW004M7	9/4/02	15	=				
	H196GW005	196GW005M7	9/4/02	17.2	=				
	H196GW007	196GW007M7	9/5/02	**173**	J				
	H196GW008	196GW008M7	9/5/02	**96.4**	=				
	H196GW009	196GW009M7	9/4/02	**334**	=				
	H196GW010	196GW010M7	9/5/02	2.7	J				
	H196GW011	196GW011M7	9/5/02	5.6	J				
	H196GW012	196GW012M7	9/4/02	1.5	J				
	H196GW013	196GW013M7	9/4/02	**330**	=				
	H196GW014	196GW014M7	9/4/02	**1,910**	=				
	H196GW015	196GW015M7	9/5/02	53.3	J				
	H196GW016	196GW016M7	9/4/02	0.46	J				
	H196MARSH1	196MARSH1M8	8/15/02	**296**	=				
	H196MARSH1	196MARSH1M7	9/4/02	**345**	=				
	H196MARSH2	196MARSH2M8	8/15/02	**1,660**	=				
	H196MARSH2	196MARSH2M7	9/4/02	**535**	=				
	H196MARSH3	196MARSH3M8	8/15/02	**648**	=				
	H196MARSH3	196MARSH3M7	9/4/02	**386**	=				
	H196MARSH4	196MARSH4M8	8/15/02	**124**	J				
	H196MARSH4	196MARSH4M7	9/4/02	36.8	J				
	HGELGW015	GELGW015M7	9/5/02	75	J				

TABLE 6-2
Detected Compounds in Shallow Groundwater during Phase II-C Monitoring Event
Phase III RFI Report Addendum/IM Completion Report/CMS Work Plan, SWMU 196, Zone H, Charleston Naval Complex

Parameter	Sample Location	Sample ID	Date Collected	Concentration (µg/L)	Qualifier	Zone H Background Range Min	Zone H Background Range Max	MCL	EPA Region III RBC[a]
2-Chlorophenol	H009GW021	009GW021M6	6/19/02	**32**	J	NA	NA	*NA*	**3**
Naphthalene	H009GW021	009GW021M6	6/19/02	**29**	J	NA	NA	**0.2**	*0.65*

All values are presented in units of micrograms per liter (µg/L).

Values that exceeded the screening criterion(a) are in bold and outlined within the table.

Note that there are no background values for VOCs or SVOCs in groundwater.

[a] Hazard Index (HI) reduced by one order of magnitude for non-carcinogenic compounds.

[b] Value listed in italics indicates regulatory criteria secondary to that used for screening.

[c] Bold MCL value indicates regulatory criteria used for screening.

= Indicates that the compound was detected, the reported value is equal to the sample concentration.

J Indicates that the compound was detected, the reported concentration is estimated.

DCA Dichloroethane
DCB Dichlorobenzene
DCE Dichloroethene
MCL Maximum contaminant level
NA Not applicable
PCE Tetrachloroethene
TCB Trichlorobenzene
TCE Trichloroethene

NOTE: Original figure created in color

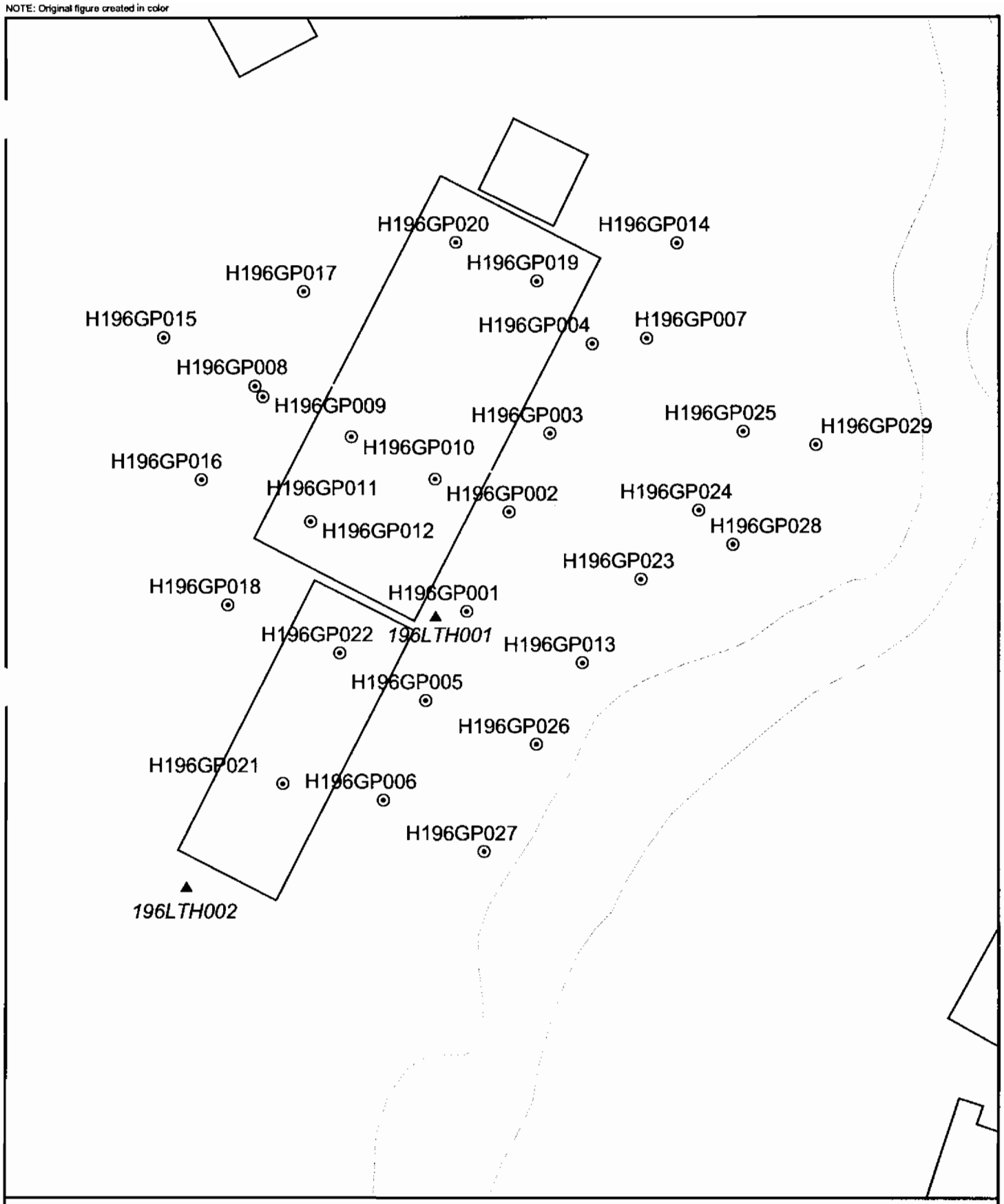

Groundwater Probe
AOC Boundary
SWMU Boundary
Shoreline
Buildings
Lithology Collection Boring

N

0 30 60 Feet

1 inch = 46.4086 feet

Figure 6-1
Phase I Groundwater Sample/Lithology Locations
SWMU 196, Zone H
Charleston Naval Complex

CH2MHILL

File Path: C:\18gis\Projects\Zone_H\Swmu_196\Aprs\battelle.apr, Date: 06 Nov 2002 14:34, User: PFAVARA, RFIRA_CMSWP: Figure 6-1 Phase I Groundwater Sample/Lithology Locations

NOTE: Original figure created in color

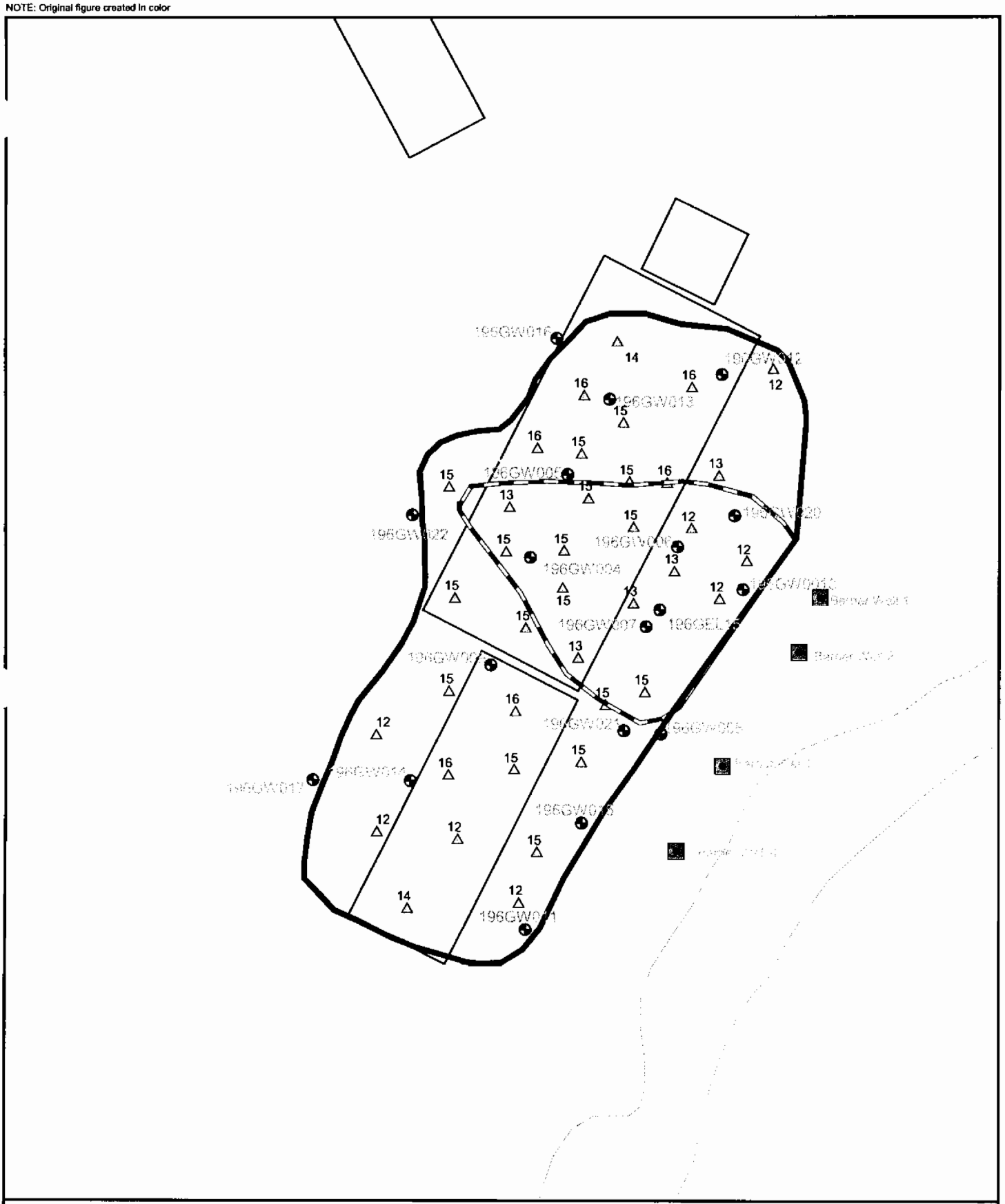

Phase 2B and 2C Limits
Phase 2A Limits
Barrier Wells
Injection Wells (Total Depth, 3ft Screen)
Monitoring Wells
AOC Boundary

SWMU Boundary

N

0 30 60 Feet

1 inch = 34.1927 feet

Figure 6-2
IM Treatment Site
with Defined Injection Well Depths
Charleston Naval Complex

CH2MHILL

File Path: c:\18gis\projects\zone_h\swmu_196\aprs\battelle.apr, Date: 21 Oct 2002 12:23, User: PFAVARA, RFIRA_CMSWP- Figure 6-2 IM Treatment Site

NOTE: Original figure created in color

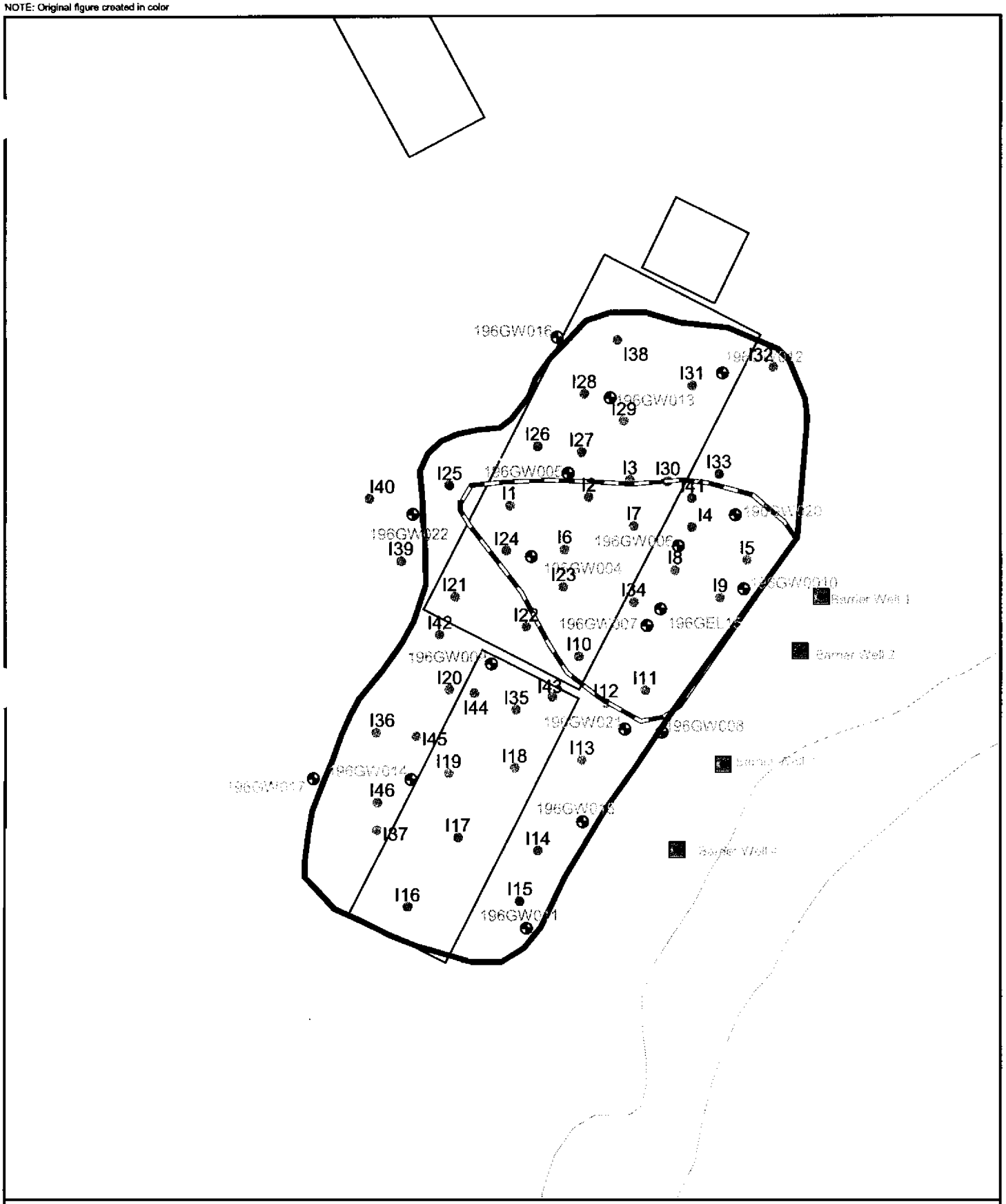

Phase 2B and 2C Limits
Phase 2A Limits
Injection Well Locations
Barrier Wells
Monitoring Wells
AOC Boundary

SWMU Boundary

N

0 30 60 Feet

1 inch = 34.1927 feet

Figure 6-3
IM Treatment Site
with Defined Injector Locations
Charleston Naval Complex

CH2MHILL

File Path: c:\18gis\projects\zone_h\swmu_196\aprs\battelle.apr, Date: 21 Oct 2002 12:21, User: PFAVARA, RFIRA_CMSWP- Figure 6-3 IM Treatment Site

Figure 6-4

Chlorobenzene and Dichlorobenze Isomer Concentrations Before and After Treatment

Phase III RFI Report Addendum/IM Completion Report/CMS Work Plan, SWMU 196, Zone H, Charleston Naval Complex

	Chlorobenzene			1,2-Dichlorobenzene			1,3-Dichlorobenzene			1,4-Dichlorobenzene			Total Chlorobenzenes		
Station Identification	Pre-Treatment (ug/L)	Post-Treatment (ug/L)	Percent Removal (ug/L)	Pre-Treatment (ug/L)	Post-Treatment (ug/L)	Percent Removal (ug/L)	Pre-Treatment (ug/L)	Post-Treatment (ug/L)	Percent Removal (ug/L)	Pre-Treatment (ug/L)	Post-Treatment (ug/L)	Percent Removal (ug/L)	Pre-Treatment (ug/L)	Post-Treatment (ug/L)	Percent Removal (ug/L)
196GW006	20600	198	99%	24200	1380	94%	367	21	94%	224	45	96%	46207	1644	96%
009GW020	11500	196	98%	1410	83.5	94%	87.9	4.1	95%	206	9	97%	13287	293	98%
009GW021	1870	542	71%	3620	1800	50%	301	137	54%	741	209	64%	6378	2688	58%
009GW022	221	1	100%	1520	5.5	100%	76	3.3	96%	164	2	99%	1976	11	99%
GEL15	9020	397	96%	19500	4600	76%	248	48	81%	448	75	88%	29404	5120	83%
196GW004	9470	58	99%	20900	96.7	100%	1150	12.7	99%	1350	15	99%	33820	182	99%
196GW005	1370	7	100%	13800	38	100%	231	6.2	97%	512	17	97%	16185	68	100%
196GW007	5780	8320	-44%	12300	2530	79%	213	68.6	68%	306	173	71%	18896	11092	41%
196GW008	4500	573	87%	9790	932	90%	604	60.3	90%	558	96	92%	16114	1662	90%
196GW009	2240	163	93%	32800	3520	89%	2720	233	91%	1320	334	93%	42710	4250	90%
196GW010	3920	48	99%	8990	58.1	99%	175	1.6	99%	94	3	99%	13522	110	99%
196GW011	29	431	-1402%	18.8	16.7	11%	0.88	19.6	-2127%	2	6	-195%	50	473	-841%
196GW012	13	3	81%	15.3	28.6	-87%	5	2.3	54%	1	2	-178%	34	35	-3%
196GW013	8630	1640	81%	10200	2940	71%	110	121	-10%	306	330	-8%	19246	5031	74%
196GW014	6440	5980	7%	32500	13000	60%	1460	819	44%	2670	1910	28%	43070	21709	50%
196GW015	15000	2020	87%	197	126	36%	78.2	14.5	81%	266	53	80%	15541	2214	86%
196GW016	65	1	98%	258	13.5	95%	7.2	5	31%	25	0	98%	355	20	94%
196GW017	40	0	99%	113	5	96%	4	5	-25%	10	5	50%	167	15	91%
Average Well Conc. (ug/L)	5595	1143	80%	10574	1732	84%	436	88	80%	511	182	64%	17609	3145	82%
Sum Well Conc. (ug/L)	100708	20577	80%	192132	31174	84%	7840	1582	80%	9202	3284	64%	316962	56617	82%
Literature Solubility (ug/L)	472000 (1)			156000 (1)			119000 (2)			73800 (1)					
1% of Solubility (ug/L)	4720			1560			1190			738					
MCL (ug/L)	100			600			N/A			75					

Indicates Potential for DNAPL (1% of Solubility)

(1) Soil Screening Guidance: Technical Background Document, EPA, 1996. Table 36

(2) Dense Chlorinated Solvents and other DNAPLs in Groundwater, Pankow and Cherry 1996. Table A1

Potential DNAPL (> 1% if Solubility)

Station Identification	Future Treatment	Well % Removal	Pre Chlorobenzene	Post Chlorobenzene	Pre 1,2-DCB	Post 1,2-DCB	Pre 1,3-DCB	Post 1,3-DCB	Pre 1,4-DCB	Post 1,4-DCB	Pre Total CBs[a]	Post Total CBs[b]
196GW006		96%	x		x						x	
009GW020		98%	x								x	
009GW021		58%			x	x			x		x	x
009GW022		99%										
GEL15		83%	x		x	x					x	x
196GW004		99%	x		x				x		x	
196GW005		100%			x						x	
196GW007		41%	x	x	x	x					x	x
196GW008		90%	x		x						x	
196GW009		90%			x	x	x		x		x	x
196GW010		99%			x						x	
196GW011		-841%										
196GW012		-3%										
196GW013		74%	x		x	x					x	x
196GW014		50%	x	x	x	x	x		x	x	x	x
196GW015		86%	x								x	
196GW016		94%										
196GW017		91%										
Overal No. Wells Potential DNAPL			9	2	11	6	2	0	4	1	13	6

[a] A total of 13 wells contain one or more constituents at concentrations greater than 1% solubility

[b] A total of six wells contain one or more constituents at concentrations greater than 1% solubility.

FIGURE 6-5A
1,2-Dichlorobenzene Concentrations (Pre-Treatment)
SWMU 196, Charleston Naval Complex

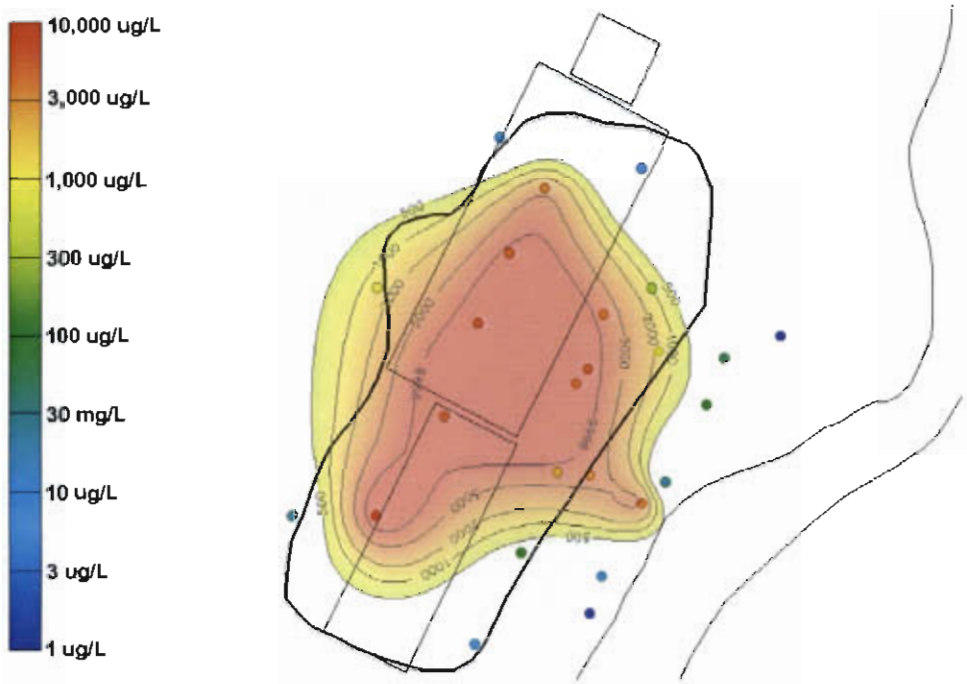

FIGURE 6-5B
1,2-Dichlorobenzene Concentrations (Post-Treatment)
SWMU 196, Charleston Naval Complex

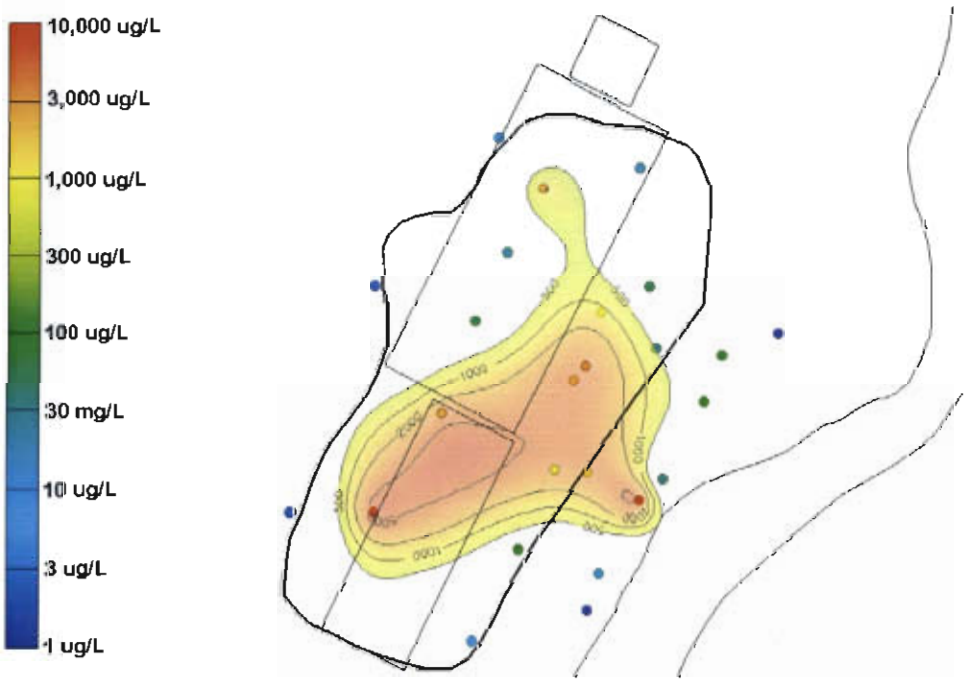

FIGURE 6-6A
Chlorobenzene Concentrations (Pre-Treatment)
SWMU 196, Charleston Naval Complex

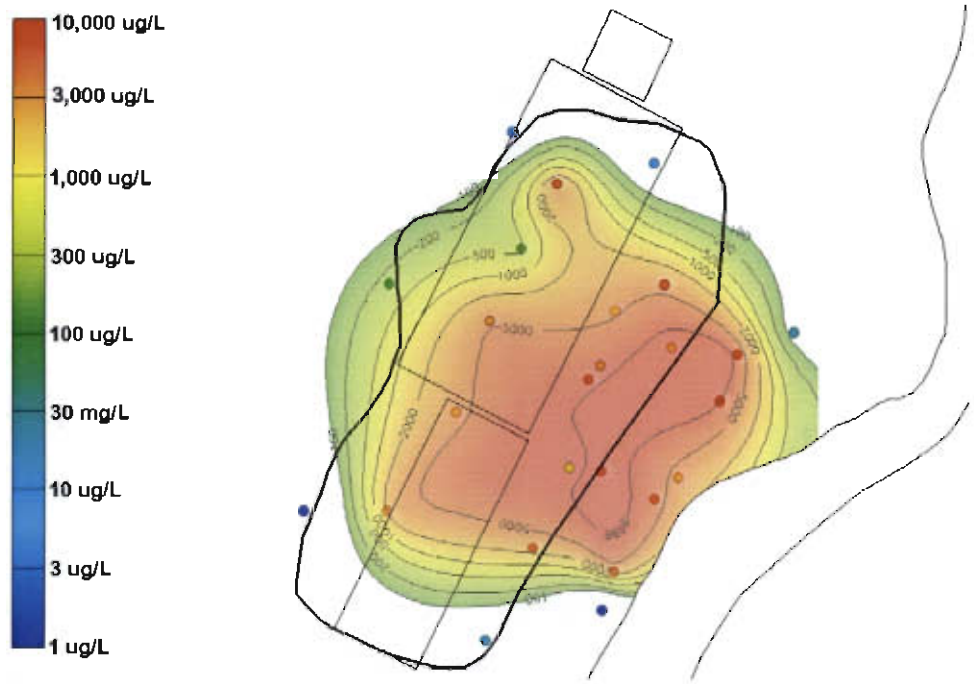

FIGURE 6-6B
Chlorobenzene Concentrations (Post-Treatment)
SWMU 196, Charleston Naval Complex

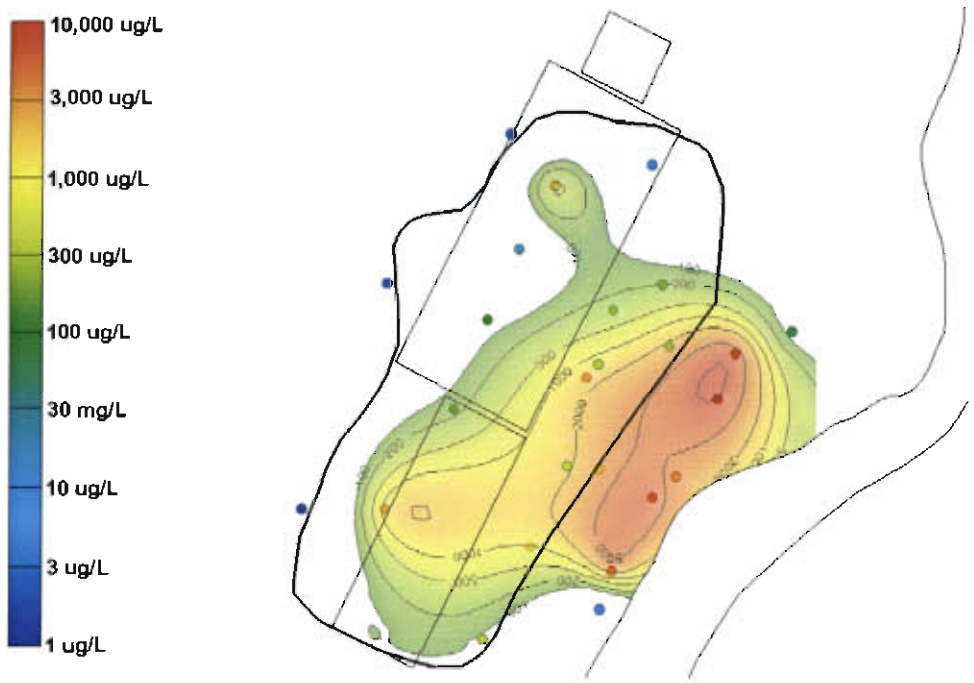

FIGURE 6-7A
1,4-Dichlorobenzene Concentrations (Pre-Treatment)
SWMU 196, Charleston Naval Complex

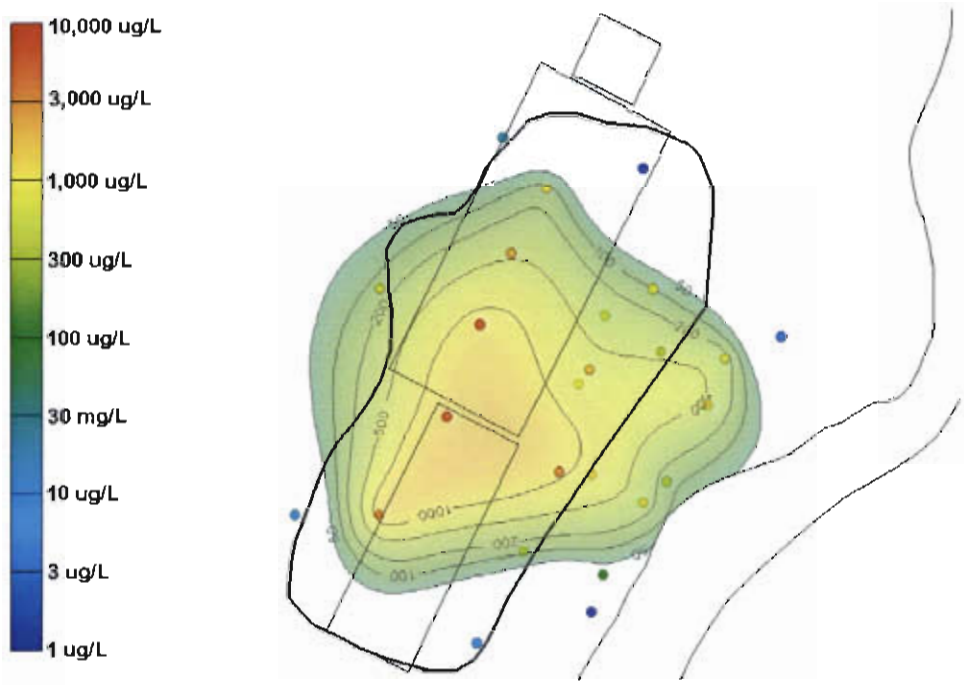

FIGURE 6-7B
1,4-Dichlorobenzene Concentrations (Post-Treatment)
SWMU 196, Charleston Naval Complex

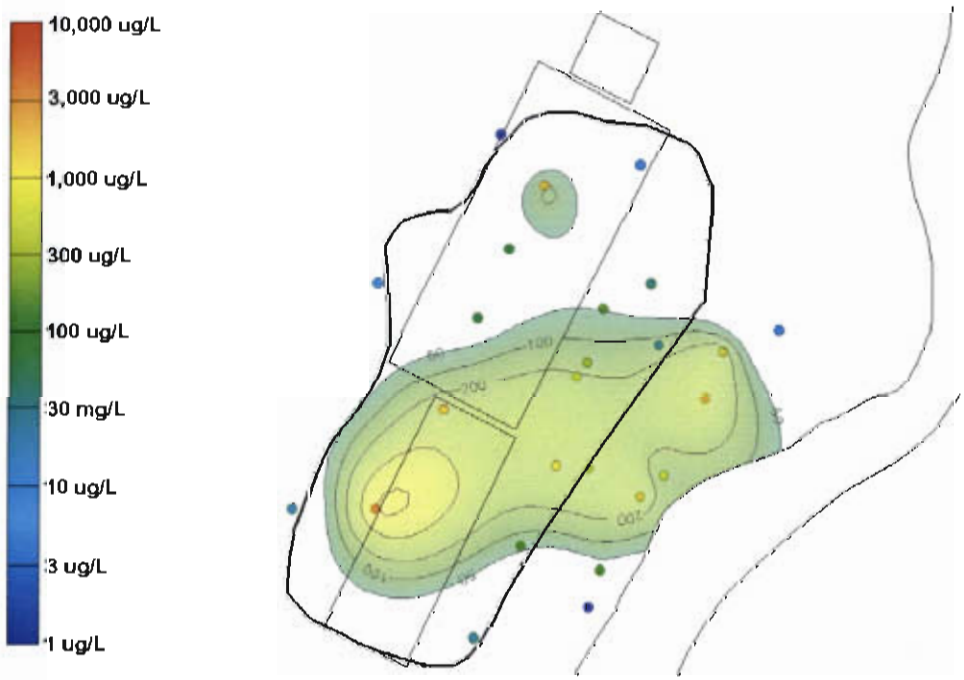

FIGURE 6-8A
1,3-Dichlorobenzene Concentrations (Pre-Treatment)
SWMU 196, Charleston Naval Complex

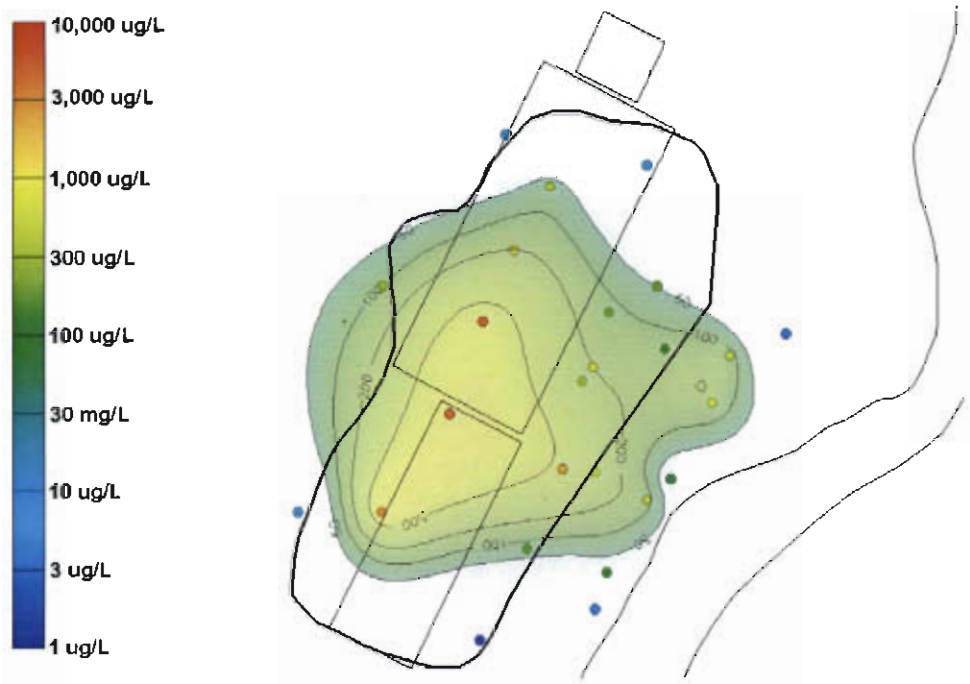

FIGURE 6-8B
1,3-Dichlorobenzene Concentrations (Post-Treatment)
SWMU 196, Charleston Naval Complex

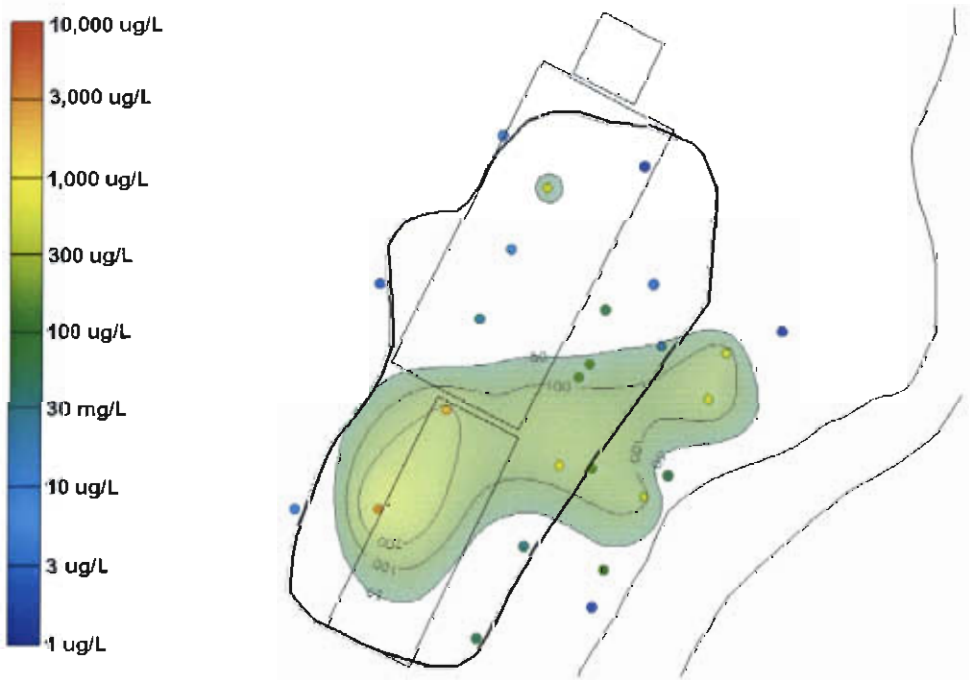

FIGURE 6-9A
Total Chlorobenzenes Concentrations (Pre-Treatment)
SWMU 196, Charleston Naval Complex

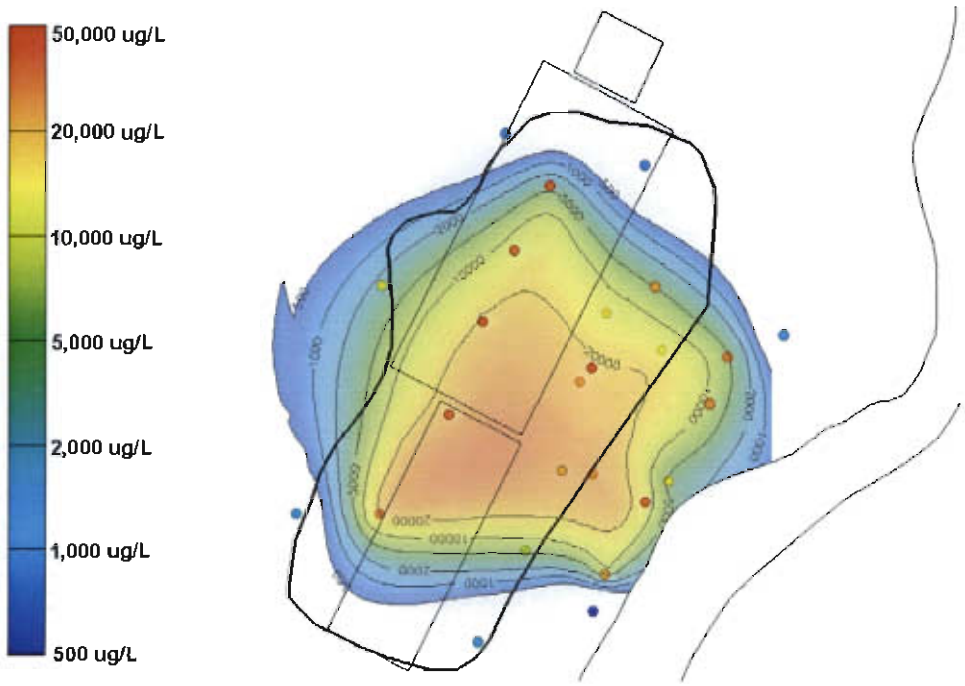

FIGURE 6-9B
Total Chlorobenzenes Concentrations (Post-Treatment)
SWMU 196, Charleston Naval Complex

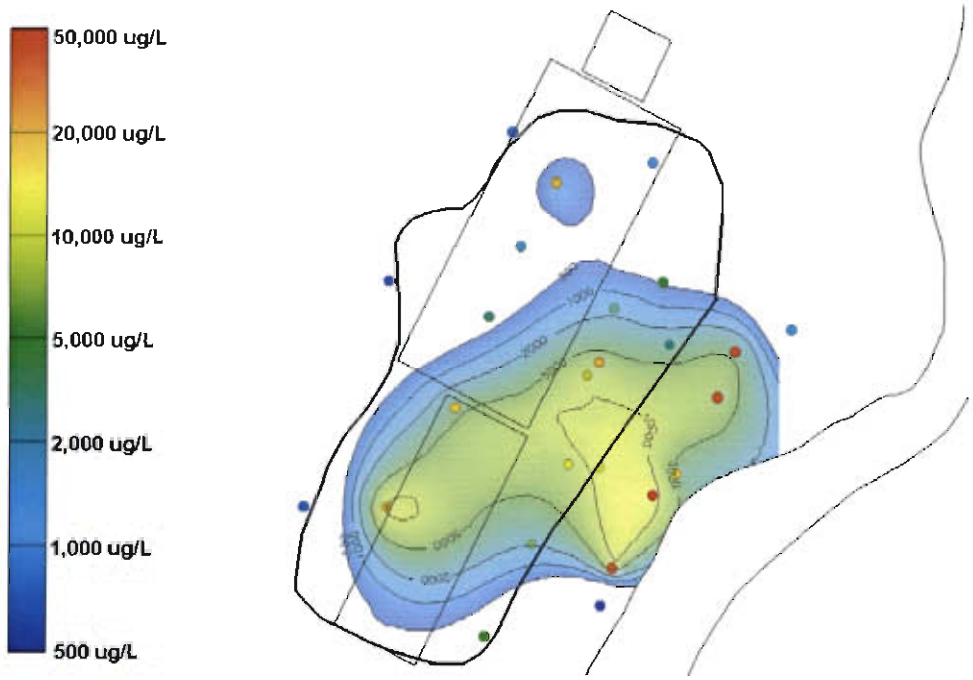

Section 7.0

7.0 CMS Work Plan for SWMU 196

This section presents a focused CMS Work Plan for SWMU 196. MCSs are identified for COCs, and potential remedies are presented for evaluation. The following subsections present the remedial action objectives (RAOs) of the CMS that are proposed for SWMU 196, as well as the proposed remedial goal options (RGOs) for organics in shallow groundwater. As part of the CMS evaluation, MCSs will be selected from RGOs. Once this has been completed, the candidate remedial technologies and alternatives can be developed to meet these objectives.

7.1 Remedial Action Objective

The RAO for this site will be to reduce levels of COCs in groundwater to levels that do not threaten human health and the environment. Additionally, another component of the RAO will be to reduce the concentrations of COCs in groundwater to a level where they do not adversely impact Shipyard Creek.

7.2 Remedial Goal Options and Proposed Media Cleanup Standards

Throughout the process of remediating a hazardous waste site, a risk manager uses a progression of increasingly acceptable site-specific media levels in considering remedial alternatives. RGOs and MCSs under RCRA are developed at the end of the risk assessment in the RFI/Remedial Investigation (RI)/State programs.

RGOs can be based on a variety of criteria, such as specific ILCRs (e.g., 1E-04, 1E-05, or 1E-06), HI levels (e.g., 0.1, 1.0, 3.0), or site background concentrations. For a particular RGO, specific MCSs can be determined as target concentration values. Achieving these MCSs is accepted as demonstrating that RGOs and RAOs have been achieved. Achieving these goals result in the protection of human health and the environment, while achieving compliance with applicable state and federal standards.

Preliminary MCSs were selected from EPA Region III RBC tables (EPA, 2000) and established drinking water MCLs for COCs. The media of concern to be addressed in the IM/CMS for SWMU 196 is groundwater. Because SWMU 196 is located adjacent to Shipyard Creek, ecological exposures are considered a concern from contamination detected

at this site. As the groundwater-to-surface water pathway has been validated at SWMU 196 (see Section 7.3.2 below), additional RGOs have been developed for boundary wells along Shipyard Creek to protect for ecological exposures. These ecological RGOs are based on the SSWQCSVs and are presented in Table 7-1.

As previously indicated, a variety of MCSs can be based on target carcinogenic risks levels ranging between of 10E-06, 10E-05, and 10E-04; target HIs ranging between 0.1, 1, and 3; or background concentrations. These target MCSs are estimated for industrial or residential (unrestricted) land use. It is also important to specify the assumed land use and exposure conditions in the RGOs. For SWMU 196, the future land use will be industrial.

Nineteen compounds (1,2-DCB; 1,2-DCE [total]; 1,3-DCB; 1,4-DCB; 1,2,4-TCB; 2-chlorophenol; acetone; benzene; carbon disulfide; cadmium; chlorobenzene; chloroform; dibromochloromethane; methylene chloride; naphthalene; PCE; toluene; TCE; and vinyl chloride) were identified as COCs in groundwater at SWMU 196. MCLs are the primary MCSs for groundwater RGOs. In the absence of a MCL, EPA Region III tap water RBCs and CNC background levels were selected as MCSs, with a target cancer risk ranges between 10^{-6} to 10^{-4}, and HI ranges between 0.1 to 3.0, for residential (potable) use. MCLs are applied to public water supply wells, which are typically completed in deeper aquifers. Table 7-1 provides a preliminary list of the groundwater RGO values.

The areas of groundwater with contaminant concentrations greater than the MCS will be addressed in the CMS. The MCS for each COC will be selected from the RGOs in Table 7-1 as part of the CMS evaluation.

7.3 Site Hydrogeology

The hydrogeology at SWMU 196 was discussed in the *Zone H RFI Report, Revision 0* (Ensafe, 1996) in Section 3.1 and the *Zone H RFI Report, RFI Addendum, Revision 0* in Section 2.4.1. Those discussions are summarized herein.

7.3.1 Geology

There are two stratigraphic units located beneath SWMU 196: the Wando formation and the and the Ashley formation. The Wando formation is comprised of an upper sand unit, a marsh clay, and a lower sand unit. The upper sand is located in the first 15 ft bls depth interval. It is a heterogeneous soil with a mix of clay some sand, and silt lenses. The marsh clay, which underlies it, is a sandy, fat, organic-rich unit. The lower sand is medium to well sorted, and clayey. The Ashley formation lies beneath the Wando formation and is relatively flat beneath SWMU 196. The Ashley formation consists of a tight, calcareous, sandy, and

clayey silt. Deeper wells located onsite, such as H009GW23D, were installed to the top of this formation. Figure 7-1 shows the top of the Ashley elevation contours for the SWMU 196 vicinity.

In addition to these stratigraphic units, there are fill deposits located at the surface of SWMU 196. Combined SWMU 9, the landfill, which is on the opposite side of Shipyard Creek across from SWMU 196, has been filled to its present elevation with fill and various waste materials. Some soil borings at SWMU 196 have identified broken glass in the top three feet at the site, which may be attributed to fill activities.

7.3.2 Hydrology

SWMU 196 is adjacent to the west bank of Shipyard Creek's upper reaches. Shipyard Creek flows to the southeast to the Cooper River, approximately 1.3 miles downstream. Based on water level measurements at the site, the creek appears to be a groundwater discharge point.

The shallow aquifer is located in the upper 15 feet at SWMU 196 and corresponds to the upper sand unit of the Wando formation. This aquifer is under water table, or unconfined, conditions. However, local perching may occur due to low permeability deposits at the surface. A tidal investigation was performed in February 2000 to determine the impact of tidal influence on shallow groundwater flow showed; the evaluation showed groundwater discharges into Shipyard Creek to the east-southeast in the southern portion of the site and to the northeast in the northern portion of the site. Although tidal influences were seen in groundwater levels, the overall groundwater flow pattern remained unchanged (EnSafe, 2000b).

The marsh clay, which lies below the upper sand unit, acts as an aquitard, limiting the vertical migration of groundwater into the lower sand unit of the Wando formation. This organic clay lies between 12 and 15 ft bls and has an approximate thickness of five feet in the southwest portion of the site and seven feet in the northeast portion of the site based on soil boring logs (EnSafe, 2000b). The lower sand is considered a semi-confined to confined aquifer. The Ashley formation serves as an aquitard beneath this lower sand due to its low permeability.

Based on water levels measured in monitoring wells H009GW23D and 196GW02D, deep groundwater appears to flow to the east. Vertical gradients observed between wells H009GW23D and H009GW023 indicate groundwater flows upward, implying that Shipyard Creek is a discharge point for deep groundwater flow, as well as shallow groundwater flow at SWMU 196 (EnSafe, 2000b).

Shallow groundwater levels were measured on April 23, 2002 at site monitoring wells (see Table 7-2). A potentiometric map of the April water levels is presented in Figure 7-2. The average hydraulic gradient was approximately 0.005 ft/ft. Groundwater flows to the southeast towards Shipyard Creek, which generally corresponds with previous water levels. However, there appears to be no northeast flow component, as was presented in the Draft Zone H RFI Report Addendum, and the hydraulic gradient is much flatter. This may be due to drought conditions over the past few years and tidal influence.

7.4 Contamination Assessment Summary

The information presented in this section discusses the extent of COCs in shallow groundwater. Groundwater at SWMU 196 flows eastward towards Shipyard Creek. Downward shallow groundwater migration is impeded by the marsh clay, approximately 15 ft bls. Phase I of the IM (discussed in Section 6.0) for source area delineation identified the vertical and horizontal profile of the groundwater contaminant plume leading to Shipyard Creek. There are four wells installed in the sediments to monitoring concentrations in groundwater as they approach the creek. Phase II of the IM at SWMU 196 was implemented to reduce contaminant concentrations in groundwater upgradient of Shipyard Creek.

There are no COCs identified in deep groundwater at SWMU 196. The two deep wells at the site are located at the northeast and southwest portions of the site (see Figure 3-1). Although there is not a deep well installed in the source area of SWMU 196, there is no indication that one is required. The marsh clay appears to be competent from soil borings logged at the site, with an approximate thickness of five to seven feet, impeding transport of contaminants from the shallow to deep groundwater zone. Vertical gradients indicate that groundwater is flowing vertically upward and discharging at Shipyard Creek, indicating the preferential flow for dissolved contaminants would not be in a downward direction. In addition, if a deep groundwater zone well were to be installed in the source area of SWMU 196, there is a risk of transporting contaminants from the shallow to deep zone during installation activities or compromising the competence of the marsh clay and creating a pathway for contaminants to migrate downward over time. The risk of potential contamination to the deep groundwater zone is considered greater than the benefit of information that could be obtained at this time.

For the scope of an RFI, the nature and extent of groundwater contamination at SWMU 196 has been defined relative to the appropriate screening criteria (MCLs or RBCs) in Section 4.0. The CMS will be initiated based on the results of the IM.

7.5 Focused CMS Approach

The extent of COC contamination has been adequately defined to the extent that remedial decisions can be made for SWMU 196.

The CMS will consist of the following tasks that will be performed in the order presented below:

1. Review existing and new site data and technical literature to identify and screen the various corrective measure alternatives for applicability. In addition to those listed above, other corrective measure alternatives may also be evaluated in the CMS.
2. Evaluate the most feasible potential corrective measures. Identify the preferred corrective measure alternative.

The CMS methods and the preferred corrective measure alternative will be documented in the CMS report, an example of which is presented in Table 7-3.

7.6 Approach to Evaluating Corrective Measure Alternatives

According to the RCRA permit issued by SCDHEC (SCDHEC, 1998), the alternatives will be evaluated with the following five criteria:

1. Protect human health and the environment.
2. Attain MCSs, which will generally be the RGOs.
3. Control the source of releases to minimize future releases that may pose a threat to human health and the environment.
4. Comply with applicable standards for the management of wastes generated by remedial activities.
5. Other factors include (a) long-term reliability and effectiveness; (b) reduction in toxicity, mobility, or volume of wastes; (c) short-term effectiveness; (d) implementability; and (e) cost.

Each of the five criteria is defined in more detail below:

7.6.1 Protect Human Health and the Environment

The alternatives will be evaluated on the basis of their ability to protect human health and the environment. The ability of an alternative to achieve this criterion may or may not be independent of its ability to achieve the other standards. For example, an alternative may be

protective of human health, but may not be able to attain the MCSs if the MCSs are not directly tied to protecting human health.

7.6.2 Attain Media Cleanup Standards

The alternatives will be evaluated on the basis of their ability to achieve the RGOs defined in this CMS Work Plan. Another aspect of this criterion is the time frame to achieve the RGOs. Estimates of the time frame for the alternatives to achieve RGOs will be provided.

7.6.3 Control the Source of Releases

This criterion deals with the control of releases of contamination from the source (the area in which the contamination originated).

7.6.4 Comply with Applicable Standards for Management of Wastes

This criterion deals with the management of wastes derived from implementing the alternatives; for example, treatment or disposal of well cuttings, contaminated groundwater, or excavated material from a source area.

7.6.5 Other Factors

Five other factors are to be considered if an alternative is found to meet the four criteria described above. These other factors are as follows:

a. Long-term reliability and effectiveness

The various alternatives will be evaluated on the basis of their reliability, and the potential impact should the alternative fail. In other words, a qualitative assessment will be made as to the chance of the alternative's failing and the consequences of that failure.

b. Reduction in the toxicity, mobility, or volume of wastes

Alternatives with technologies that reduce the toxicity, mobility, or volume of the contamination will be generally favored over those that do not. Consequently, a qualitative assessment of this factor will be performed for each alternative.

c. Short-term effectiveness

Alternatives will be evaluated on the basis of the risk they create during the implementation of the remedy. Factors that may be considered include fire, explosion, and exposure of workers to hazardous substances.

d. Implementatiblity

The alternatives will be evaluated for their implementability by considering any difficulties associated with conducting the alternatives (such as the construction disturbances they may create), operation of the alternatives, and the availability of equipment and resources to implement the technologies comprising the alternatives.

e. Cost

A net present value of each alternative will be developed. These cost estimates will be used for the relative evaluation of the alternatives, not to bid or budget the work. The estimates will be based on information available at the time of the CMS and on a conceptual design of the alternative. They will be "order-of-magnitude" estimates with a generally expected accuracy of -50 percent to +100 percent for the scope of action described for each alternative. The estimates will be categorized into capital costs and operations and maintenance costs for each alternative.

7.7 Identification of Potential Corrective Measure Technologies

Corrective measure technologies that have the potential to reduce, eliminate, or control the unacceptable risk to human health and the environment to acceptable levels at SWMU 196 will be identified and screened. A key element of the remedial approach to be developed for the corrective measures will be the overall strategy for achieving the various RAOs.

The following preliminary list of technologies, presented below, was developed based upon the known site COCs and the RGOs desired for the site:

- LUCs
- In situ plume remediation using chemical oxidation
- In situ plume remediation using enhanced biological treatment
- Monitored Natural Attenuation (MNA)
- Some combination of the above

7.7.1 LUCs

LUCs may be needed during the period before the MCSs are achieved. Such restrictions are likely to relate to control of zoning and groundwater use restrictions.

7.7.2 In Situ Plume Remediation Using Chemical Oxidation

Section 6.0 of this report summarizes the results of the IM completed at SWMU 196. Implementation would involve continued application of Fenton's Reagent, or alternate oxidant, such as permanganate.

7.7.3 In Situ Plume Remediation Using Enhanced Biological Treatment

This technology involves a remedial approach where in air, or other electron acceptor (e.g., ORC), is be periodically injected into the groundwater. The technologies evaluated in this group are commonly referred to as Enhanced MNA.

7.7.4 MNA

This technology involves monitoring groundwater to evaluate naturally occurring aquifer processes such as biodegradation, dispersion, adsorption, and dilution of contaminants, which may be adequate to prevent migration of contamination away from SWMU 196. MNA could be one component of an overall plume control strategy for portions of the plume.

7.8 CMS Report

The CMS report will be prepared to present the identification, development, and evaluation of potential corrective measures for SWMU 196. A proposed outline of the report, as shown in Table 7-3, provides an example of the report format and content organization.

TABLE 7-1
Remedial Goal Options – Groundwater
Phase III RFI Report Addendum/IM Completion Report/CMS Work Plan, SWMU 196, Zone H, Charleston Naval Complex

		Human Health RBC Based on Noncarcinogenic Risks			Human Health RBC Based on Carcinogenic Risks			AquaticCriteria[a] Saltwater	
COC	MCL (µg/L)	0.1 (µg/L)	1 (µg/L)	3 (µg/L)	1E-6 (µg/L)	1E-5 (µg/L)	1E-4 (µg/L)	Chronic (µg/L)	Acute (µg/L)
Acetone	NA	61	610	1,830	--	--	--	NA	NA
Cadmium	5	1.8	18	54	--	--	--	9	43
Carbon Disulfide	NA	100	1,000	3,000	--	--	--	NA	NA
2-Chlorophenol	NA	3	30	90	--	--	--	NA	NA
1,2-Dichlorobenzene	600	27	270	810	--	--	--	19.7	197
1,3-Dichlorobenzene	600[b]	18	180	540	--	--	--	29	285
1,4-Dichlorobenzene	75	--	--	--	0.47	4.7	47	20	199
1,2,4-Trichlorobenzene	70	1	7	22	--	--	--	5	45
Benzene	5	--	--	--	0.32	3	32	109	1,090
Chlorobenzene	100	11	110	330	--	--	--	105	1,050
Chloroform	80	--	--	--	2.1	21	210	815	8,150
1,2-Dichloroethene	70[c]	6.1	61	183	--	--	--	NA	NA
Dibromochloromethane	80	--	--	--	0.13	1.3	13	NA	NA
Methylene chloride	5	--	--	--	4.1	41	410	2,560	25,600
Naphthalene	0.2[d]	0.65	6.5	20	--	--	--	24	235
PCE	5	--	--	--	0.63	6.3	63	45	450
Toluene	1,000	75.0	750	2,250	--	--	--	37	370

TABLE 7-1
Remedial Goal Options – Groundwater
Phase III RFI Report Addendum/IM Completion Report/CMS Work Plan, SWMU 196, Zone H, Charleston Naval Complex

		Human Health RBC Based on Noncarcinogenic Risks			Human Health RBC Based on Carcinogenic Risks			AquaticCriteria[a] Saltwater	
COC	MCL (µg/L)	0.1 (µg/L)	1 (µg/L)	3 (µg/L)	1E-6 (µg/L)	1E-5 (µg/L)	1E-4 (µg/L)	Chronic (µg/L)	Acute (µg/L)
TCE	5	--	--	--	0.03	0.3	3	NA	NA
Vinyl Chloride	2	--	--	--	0.015	0.15	2	NA	NA

Values are presented in units of micrograms per liter (µg/L).

[a] These remedial goal options (RGOs) apply to surface water and groundwater when a mixing factor of groundwater with surface water is taken into account.

[b] Value for 1,3-dichlorobenzene is based on 1,2-dichlorobenzene.

[c] 1,2-dichloroethene is assumed to be all cis-isomer.

[d] Value for naphthalene is based on benzo[a]pyrene (polycyclic aromatic hydrocarbons [PAHs]).

-- Indicates the compound was not identified as a COC through this pathway.

COC Chemical of concern

NA Not available

RBC Risk-based concentration

MCL Maximum contaminant level

TABLE 7-2
Groundwater Elevation Data (April 23, 2002)
Phase III RFI Report Addendum/IM Completion Report/CMS Work Plan, SWMU 196, Zone H, Charleston Naval Complex

Monitoring Well	Well Depth (ft bls)	Screened Interval (ft bls)	Top of Casing Elevation (ft NAVD)	Depth to Water (feet btoc)	Groundwater Elevation (ft NAVD)
009GW020	12.5	2.5 - 12	7.8847	4.76	3.12
H009GW021	12.5	2.5 - 12	7.6	4.67	2.93
H009GW022	12.9	3.1 - 12.9	9.78	6.55	3.23
H196GW004	15	5 - 15	9.6427	6.41	3.23
H196GW005	15	5 - 15	9.7335	6.44	3.29
H196GW006	15	5 - 15	8.4134	5.21	3.2
H196GW007	15	5 - 15	7.564	4.5	3.06
H196GW008	15	5 - 15	6.5514	3.8	2.75
H196GW010	15	5 - 15	6.3534	3.37	2.98
H196GW011	15	5 - 15	7.27	4.25	3.02
H196GW012	15	5 - 15	9.6	6.3	3.3
H196GW013	15	5 - 15	9.8	6.36	3.44
H196GW014	15	5 - 15	8.76	5.5	3.26
H196GW015	15	5 - 15	7.58	4.8	2.78
H196GW016	15	5 - 15	10.11	6.54	3.57

bls below land surface
btoc below top of casing
ft feet
NAVD North American Vertical Datum

TABLE 7-3
Outline of Focused CMS Report for SWMU 196
RFI Report Addendum and CMS Work Plan, SWMU 196, Zone H, Charleston Naval Complex

Section No.	Section Title
1.0	**Introduction**
1.1	Corrective Measures Study Purpose and Scope
1.2	Report Organization
1.3	Background Information
1.3.1	Facility Description
1.3.2	Site History and Background
1.3.2.1	Nature and Extent of Contamination
1.3.2.2	Summary of Risk Assessment
2.0	**Remedial Goal Objectives**
3.0	**Detailed Analysis of Focused Alternatives**
3.1	Approach
3.2	Evaluation Criteria
3.3	Corrective Measure Alternatives
3.4	Detailed Analysis of Alternatives
3.5	Comparative Analysis of Alternatives
4.0	**Recommended Remedial Alternative**
5.0	**References**
Appendix A	**Corrective Measure Alternative Cost Estimates**[b]
List of Tables	
List of Figures	

[a] Additional alternatives will be analyzed as found necessary.

[b] Additional appendices will be added, if necessary.

NOTE: Original figure created in color

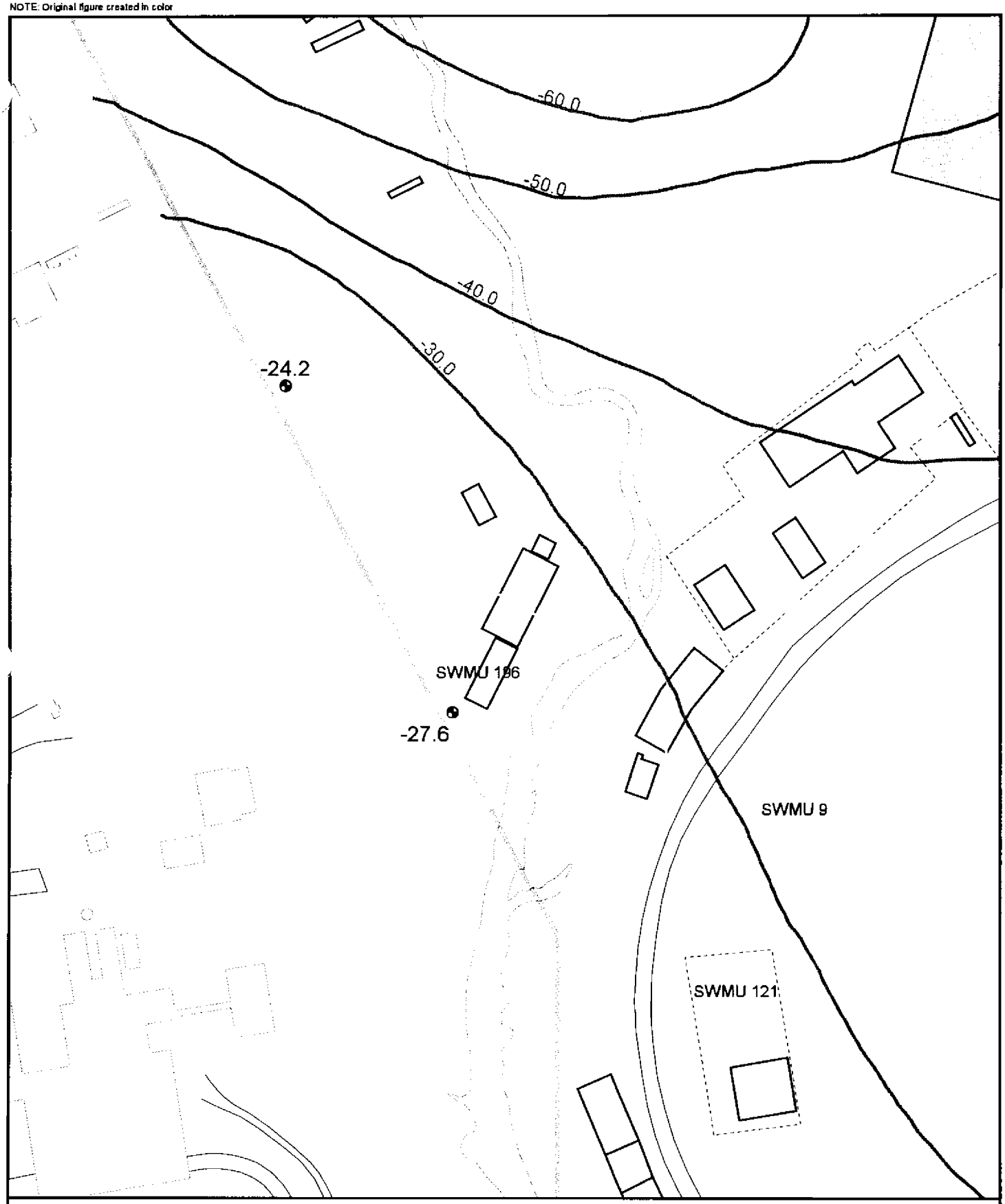

Groundwater Well
Top of Ashley Formation
Shoreline
SWMU Boundary
Buildings
Zone Boundary

N

0 40 80 Feet

1 inch = 50 feet

Figure 7-1
Elevation of Top of the Ashley Formation
SWMU 196, Zone H
Charleston Naval Complex

CH2MHILL

File Path: C:\18gis\Projects\Zone_H\Swmu_196\Aprs\swmu196_sec5.apr, Date: 23 Oct 2002 6:42, User: NMOUDRY, Figure 7-1 Top of Ashley

NOTE: Original figure created in color

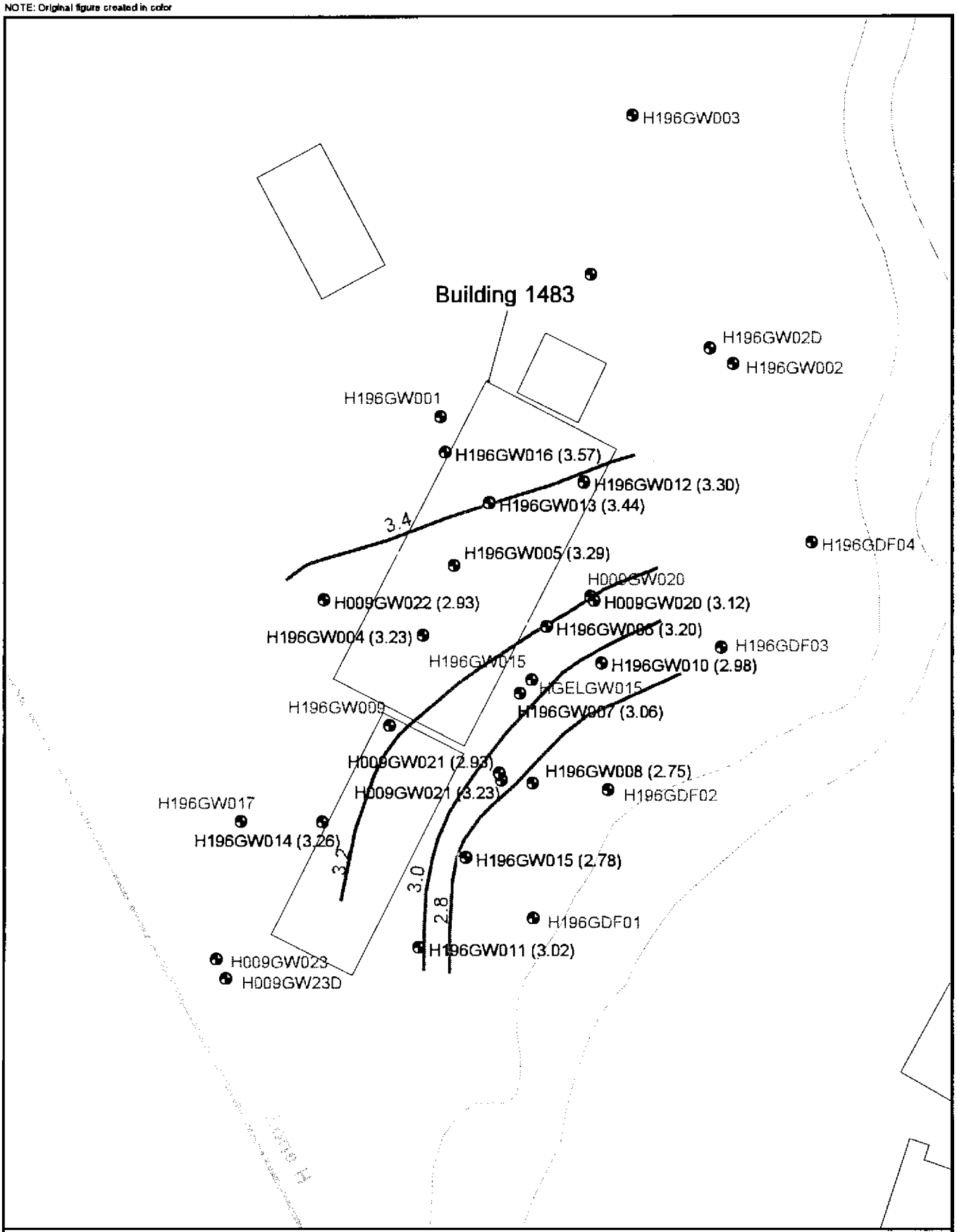

Sampled Groundwater Wells
Not Sampled Groundwater Wells
Groundwater Contours April 23, 2002.
( ) Groundwater Elevation in feet bls
Shoreline
Buildings
Zone Boundary
AOC Boundary
SWMU Boundary

0 30 60 Feet

N

Figure 7-2
April 2002 Shallow Groundwater Potentiometric Contours
SWMU 196, Zone H
Charleston Naval Complex

CH2MHILL

File Path: C:\18gis\Projects\Zone_H\Swmu_196\Aprs\swmu_196.apr, Date: 23 Oct 2002 6:50, User: NMOUDRY, Figure 7-2 Phase I Groundwater Potentiometric Contours

Section 8.0

8.0 References

CH2M-Jones. *Phase 1 - Interim Measure Work Plan: Source Area Delineation – SWMU 196, Zone H, Charleston Naval Complex*. Revision 1. November 22, 2000.

CH2M-Jones. *Background PAHs Study Report – Technical Information for Development of Background BEQ Values*. Charleston Naval Complex, North Charleston, South Carolina. February 2001a.

CH2M-Jones. *Phase II RFI Report Addendum - SWMU 136/AOC663, AOC 666, SWMU 138/AOC 667, SWMU 17, and SWMU 196, Zone H, Charleston Naval Complex*. Revision 0. August 8, 2001b.

CH2M-Jones. *Phase II Interim Measure Work Plan– SWMU 196, Zone H, Charleston Naval Complex*. Revision 0. August 9, 2001c.

CH2M-Jones. *An Overview of Arsenic Geochemistry, TEA Processes in Groundwater Systems, and Implications for the CNC Hydrogeologic Environment*. Technical Memorandum. Revision 0. August 29, 2001d.

CH2M-Jones. *CNC Project Team Notebook and Instructions, Revision 1A*. December 2001e.

EnSafe Inc. *Final Zone H RCRA Facility Investigation Report, NAVBASE Charleston, Revision 0*. July 1996, with updates of June 24, 1997 and June 18, 1998.

EnSafe Inc. *Draft Zone J RCRA Facility Investigation Report, Part 1*. April 24, 2000a.

EnSafe Inc. *Zone H RCRA Facility Investigation Report, RFI Addendum, Revision 0*. Volume I of V, Section 2.4. May 5, 2000b.

EnSafe/Allen & Hoshall, Inc. *Zone H Final RFI Report, Revision 1*. Volume I, Section 3. June 18, 1998.

General Engineering Laboratories, Inc. *Evaluation of Baseline Environmental Conditions*. 1996.

U.S. Environmental Protection Agency (EPA). *Technical Protocol for Evaluating Natural Attenuation of Chlorinated Solvents in Groundwater*. EPA/600/R-98/128. September 1998.

U.S. Environmental Protection Agency (EPA). *EPA Region IV Ecological Risk Assessment Bulletins – Supplement to RAGs*. August 1999.

U.S. Navy. Southern Division, Naval Facilities Engineering Command (SOUTHDIV). *Oil Water Separator Data, Charleston Naval Complex Charleston, South Carolina*. September 2000.

Appendix A

Table 2.4.15
SWMU 196, Zone H
Organic Compound Analytical Results for DPT Subsurface Soil

Compound	Sampling Interval	Freq. of Detection	Range of Detected Conc.	Mean of Detected Conc.	Soil to GW SSL	Leaching Potential
Pesticide/PCBs (μg/kg) (Continued)						
4,4'-DDE	Lower	7/14	2.2-96.0	21.7	2240	NO
4,4'-DDT	Lower	7/14	3.4-28.0	18.2	1320	NO
alpha-Chlordane	Lower	1/14	40.0	40.0	280	NO
Aroclor-1260	Lower	5/14	34.0-160	92.6	309	NO
Dieldrin	Lower	1/14	10.0	10.0	0.23	YES
gamma-Chlordane	Lower	1/14	37.0	37.0	560	NO
Heptachlor epoxide	Lower	1/14	1.7	1.7	33	NO

Notes:
μg/kg = Micrograms per kilograms
GW = Groundwater
NL = Not Listed
SSL = Soil Screening Level

Table 2.4.16
SWMU 196, Zone H
Organic Compounds Detected in DPT Subsurface Soil

Compound	Location	Subsurface Concentration	Soil to GW SSL (DAF=1)
Semivolatile Organic Compounds (μg/kg)			
1,2-Dichlorobenzene	196SP003 **196SP013**	65.0 **7700**	864
1,3-Dichlorobenzene	**196SP013**	**56.0**	8.9
1,4-Dichlorobenzene	196SP001 **196SP013**	39.0 **420**	108
2-Chlorophenol	196SP013	110	176
2-Methylnaphthalene	196SP001	120	1820
4-Methylphenol (p-Cresol)	196SP001	49.0	67
Anthracene	196SP001	58.0	651000

Table 2.4.16
SWMU 196, Zone H
Organic Compounds Detected in DPT Subsurface Soil

Compound	Location	Subsurface Concentration	Soil to GW SSL (DAF=1)
Semivolatile Organic Compounds (μg/kg) (Continued)			
Benzo(a)anthracene	196SP001	260	95.5
	196SP011	110	
	196SP012	230	
Benzo(a)pyrene	196SP001	240	408
	196SP011	120	
	196SP012	490	
Benzo(b)fluoranthene	196SP001	210	295
	196SP011	140	
	196SP012	350	
Benzo(k)fluoranthene	196SP001	300	2950
	196SP011	160	
	196SP012	510	
Chrysene	196SP001	700	9550
	196SP011	160	
	196SP012	240	
Dibenz(a,h)anthracene	196SP012	120	91.2
Indeno(1,2,3-cd)pyrene	196SP012	190	833
Benzo(g,h,i)perylene	196SP012	190	5694000
Benzoic acid	196SP006	260	30200
bis(2-Ethylhexyl)phthalate (BEHP)	196SP001	220	181000
	196SP006	25.0	
	196SP007	39.0	
	196SP008	34.0	
	196SP010	36.0	
	196SP011	150	
	196SP012	41.0	
	196SP013	56.0	
	196SP014	23.0	
Butylbenzylphthalate	196SP001	47.0	841000
Diethylphthalate	196SP011	57.0	22500
Fluoranthene	196SP001	560	321000
	196SP011	170	
	196SP012	150	
Fluorene	196SP001	45.0	41700
Phenanthrene	196SP001	270	66200
	196SP011	93.0	
	196SP012	39.0	

Table 2.4.16
SWMU 196, Zone H
Organic Compounds Detected in DPT Subsurface Soil

Compound	Location	Subsurface Concentration	Soil to GW SSL (DAF=1)
Semivolatile Organic Compounds (μg/kg) (Continued)			
Phenol	196SP008	62.0	5670
Pyrene	196SP001	580	231000
	196SP011	320	
	196SP012	190	
Pesticide/PCBs (μg/kg)			
4,4'-DDD	196SP001	3.50	700
	196SP012	12.0	
4,4'-DDE	196SP001	21.0	2240
	196SP007	2.20	
	196SP008	12.0	
	196SP009	4.30	
	196SP010	12.0	
	196SP011	4.10	
	196SP012	96.0	
4,4'-DDT	196SP001	26.0	1320
	196SP007	3.40	
	196SP008	18.0	
	196SP009	14.0	
	196SP010	13.0	
	196SP011	28.0	
	196SP012	25.0	
alpha-Chlordane	196SP011	40.0	280
Aroclor-1260	196SP001	160	309
	196SP008	91.0	
	196SP009	58.0	
	196SP010	34.0	
	196SP011	120	
Dieldrin	**196SP011**	**10.0**	0.23
gamma-Chlordane	196SP011	37.0	560
Heptachlor epoxide	196SP011	1.70	33

Notes:
μg/kg = Micrograms per kilograms
GW = Groundwater
NL = Not Listed
SSL = Soil Screening Level
Bold = Exceeded soil to groundwater SSL (DAF = 1)

Table 2.4.20
SWMU 196, Zone H
Organic Analytes Detected in Surface and Subsurface Soil

Compound	Location	Surface Conc.	Residential RBC (THQ=0.1)	Surface Background	Subsurface Conc.	Soil-to-GW SSL	Subsurface Background
Semivolatile Organic Compounds (μg/kg) (Continued)							
Anthracene	196SB004	21.0	2300000	NA	ND	651000	NA
	196SB005	230			ND		
	196SB006	190			NS		
	196SB008	28.0			ND		
	196SB009	ND			160		
	196SB012	ND			40.0		
	196SB016	25.0			NS		
Benzo(a)anthracene	196SB004	120	870.0	NA	ND	95.5	NA
	196SB005	380			21.0		
	196SB006	1000			NS		
	196SB007	ND			33.0		
	196SB008	100			22.0		
	196SB009	ND			1000		
	196SB010	ND			39.0		
	196SB011	28.0			NS		
	196SB012	23.0			44.0		
	196SB013	24.0			56.0		
	196SB014	19.0			ND		
	196SB015	22.0			ND		
	196SB016	68.0			NS		

Table 2.4.20
SWMU 196, Zone H
Organic Analytes Detected in Surface and Subsurface Soil

Compound	Location	Surface Conc.	Residential RBC (THQ=0.1)	Surface Background	Subsurface Conc.	Soil-to-GW SSL	Subsurface Background
Semivolatile Organic Compounds (μg/kg) (Continued)							
Benzo(a)pyrene	**196SB004**	**110**	87.0	NA	ND	408	NA
	196SB005	**300**			ND		
	196SB006	**730**			NS		
	196SB007	75.0			36.0		
	196SB008	**160**			ND		
	196SB009	ND			**1100**		
	196SB010	46.0			ND		
	196SB012	28.0			35.0		
	196SB013	37.0			49.0		
	196SB014	24.0			ND		
	196SB015	35.0			26.0		
	196SB016	57.0			NS		
	196SB017	25.0			ND		
Benzo(b)fluoranthene	196SB004	120	870.0	NA	ND	295	NA
	196SB005	**640**			47.0		
	196SB006	**1400**			NS		
	196SB007	120			40.0		
	196SB008	200			ND		
	196SB009	23.0			**1200**		
	196SB010	74.0			72.0		
	196SB012	27.0			46.0		
	196SB013	60.0			81.0		
	196SB014	37.0			ND		
	196SB015	42.0			ND		
	196SB016	72.0			NS		
	196SB017	57.0			ND		

Table 2.4.20
SWMU 196, Zone H
Organic Analytes Detected in Surface and Subsurface Soil

Compound	Location	Surface Conc.	Residential RBC (THQ=0.1)	Surface Background	Subsurface Conc.	Soil-to-GW SSL	Subsurface Background
Benzo(k)fluoranthene	196SB004	110	8700	NA	ND	2950	NA
	196SB005	390			28.0		
	196SB006	610			NS		
	196SB007	67.0			50.0		
	196SB008	180			ND		
	196SB009	ND			1000		
	196SB010	64.0			54.0		
	196SB012	30.0			45.0		
	196SB013	31.0			48.0		
	196SB014	28.0			ND		
	196SB015	33.0			ND		
	196SB016	52.0			NS		
Chrysene	196SB004	190	87000	NA	ND	9550	NA
	196SB005	910			50.0		
	196SB006	1600			NS		
	196SB007	79.0			45.0		
	196SB008	310			ND		
	196SB009	20.0			1200		
	196SB010	68.0			73.0		
	196SB011	57.0			NS		
	196SB012	40.0			67.0		
	196SB013	48.0			180		
	196SB014	34.0			ND		
	196SB015	34.0			ND		
	196SB016	77.0			NS		
	196SB017	35.0			ND		
Dibenz(a,h)anthracene	196SB005	94.0	87.0	NA	ND	91.2	NA
	196SB006	230			NS		
	196SB009	ND			220		

Table 2.4.20
SWMU 196, Zone H
Organic Analytes Detected in Surface and Subsurface Soil

Compound	Location	Surface Conc.	Residential RBC (THQ = 0.1)	Surface Background	Subsurface Conc.	Soil-to-GW SSL	Subsurface Background
Semivolatile Organic Compounds (µg/kg) (Continued)							
Indeno(1,2,3-cd)pyrene	196SB004	71.0	870.0	NA	ND	833	NA
	196SB005	230			ND		
	196SB006	490			NS		
	196SB008	61.0			ND		
	196SB009	ND			520		
	196SB016	34.0			NS		
Benzo(g,h,i)perylene	196SB003	21.0	NL	NA	ND	5694000	NA
	196SB004	78.0			ND		
	196SB005	250			ND		
	196SB006	490			NS		
	196SB008	58.0			ND		
	196SB009	ND			570		
	196SB016	37.0			NS		
	196SB017	22.0			ND		
Benzoic acid	196SB002	100	31000000	NA	ND	30200	NA
	196SB003	100			ND		
	196SB004	110			ND		
	196SB005	ND			110		
	196SB006	110			NS		
	196SB007	ND			230		
	196SB010	ND			270		
	196SB012	ND			210		
	196SB013	ND			210		
	196SB014	ND			200		
	196SB015	280			ND		

Table 2.4.20
SWMU 196, Zone H
Organic Analytes Detected in Surface and Subsurface Soil

Compound	Location	Surface Conc.	Residential RBC (THQ=0.1)	Surface Background	Subsurface Conc.	Soil-to-GW SSL	Subsurface Background
Semivolatile Organic Compounds (μg/kg) (Continued)							
bis(2-Ethylhexyl)phthalate (BEHP)	196SB007	59.0	46000	NA	49.0	181000	NA
	196SB008	31.0			89.0		
	196SB009	18.0			ND		
	196SB010	55.0			140		
	196SB011	72.0			NS		
	196SB012	26.0			210		
	196SB013	ND			1400		
	196SB015	22.0			ND		
Butylbenzylphthalate	196SB011	410	1600000	NA	NS	841000	NA
	196SB014	ND			110		
	196SB016	160			NS		
Dibenzofuran	196SB009	ND	31000	NA	24.0	677	NA
Diethylphthalate	196SB009	ND	6300000	NA	28.0	22500	NA
Di-n-butylphthalate	196SB005	20.0	780000	NA	ND	252000	NA
Di-n-octyl phthalate	196SB002	200	160000	NA	ND	121470	NA
	196SB016	200			NS		

Table 2.4.20
SWMU 196, Zone H
Organic Analytes Detected in Surface and Subsurface Soil

Compound	Location	Surface Conc.	Residential RBC (THQ=0.1)	Surface Background	Subsurface Conc.	Soil-to-GW SSL	Subsurface Background
Fluoranthene	196SB003	19.0	310000	NA	ND	321000	NA
	196SB004	200			ND		
	196SB005	2000			100		
	196SB006	1900			NS		
	196SB007	76.0			55.0		
	196SB008	570			ND		
	196SB009	ND			1600		
	196SB010	71.0			60.0		
	196SB011	39.0			NS		
	196SB012	27.0			89.0		
	196SB013	28.0			100		
	196SB014	29.0			ND		
	196SB015	43.0			ND		
	196SB016	180			NS		
	196SB017	25.0			ND		
Fluorene	196SB005	34.0	310000	NA	ND	41700	NA
	196SB006	23.0			NS		
	196SB009	ND			36.0		
Naphthalene	196SB012	210	160000	NA	ND	3070	NA

Table 2.4.20
SWMU 196, Zone H
Organic Analytes Detected in Surface and Subsurface Soil

Compound	Location	Surface Conc.	Residential RBC (THQ=0.1)	Surface Background	Subsurface Conc.	Soil-to-GW SSL	Subsurface Background
Semivolatile Organic Compounds (μg/kg) (Continued)							
Phenanthrene	196SB004	78.0	230000	NA	ND	66200	NA
	196SB005	660			37.0		
	196SB006	400			NS		
	196SB007	28.0			25.0		
	196SB008	89.0			ND		
	196SB009	ND			830		
	196SB010	19.0			39.0		
	196SB012	17.0			51.0		
	196SB013	ND			41.0		
	196SB015	29.0			ND		
	196SB016	130			NS		
Pyrene	196SB003	19.0	230000	NA	ND	231000	NA
	196SB004	170			ND		
	196SB005	1400			76.0		
	196SB006	1700			NS		
	196SB007	140			87.0		
	196SB008	530			ND		
	196SB009	ND			2700		
	196SB010	130			140		
	196SB011	97.0			NS		
	196SB012	41.0			120		
	196SB013	75.0			210		
	196SB014	41.0			ND		
	196SB015	58.0			ND		
	196SB016	140			NS		
	196SB017	30.0			ND		

Table 2.4.20
SWMU 196, Zone H
Organic Analytes Detected in Surface and Subsurface Soil

Compound	Location	Surface Conc.	Residential RBC (THQ=0.1)	Surface Background	Subsurface Conc.	Soil-to-GW SSL	Subsurface Background
Pesticide/PCBs (µg/kg)							
4,4'-DDD	196SB004	9.20	2700	NA	ND	700	NA
	196SB009	6.00			10.0		
	196SB010	ND			13.0		
	196SB012	6.80			ND		
	196SB013	20.0			ND		
	196SB016	26.0			NS		
	196SB017	36.0			ND		
4,4'-DDE	196SB003	7.50	1900	NA	ND	2240	NA
	196SB004	27.0			ND		
	196SB005	ND			9.70		
	196SB008	8.60			ND		
	196SB009	14.0			22.0		
	196SB010	4.80			8.20		
	196SB012	6.60			22.0		
	196SB013	34.0			ND		
	196SB015	10.0			ND		
	196SB016	45.0			NS		
	196SB017	83.0			ND		
4,4'-DDT	196SB003	17.0	1900	NA	ND	1320	NA
	196SB005	18.0			20.0		
	196SB008	8.00			ND		
	196SB009	6.40			26.0		
	196SB010	18.0			30.0		
	196SB012	ND			230		
	196SB015	14.0			ND		
	196SB016	14.0			NS		
alpha-Chlordane	196SB004	28.0	1800	NA	ND	280	NA

Table 2.4.20
SWMU 196, Zone H
Organic Analytes Detected in Surface and Subsurface Soil

Compound	Location	Surface Conc.	Residential RBC (THQ=0.1)	Surface Background	Subsurface Conc.	Soil-to-GW SSL	Subsurface Background
Pesticide/PCBs (µg/kg) (Continued)							
Aroclor-1254	196SB003	93.0	320	NA	ND	309	NA
	196SB004	260			ND		
	196SB005	100			ND		
	196SB006	120			NS		
	196SB007	130			ND		
	196SB008	120			ND		
	196SB009	150			ND		
	196SB011	110			NS		
	196SB013	ND			66.0		
Aroclor-1260	196SB003	53.0	320	NA	ND	309	NA
	196SB004	150			ND		
	196SB005	97.0			ND		
	196SB006	120			NS		
	196SB007	130			74.0		
	196SB008	87.0			ND		
	196SB009	89.0			ND		
	196SB010	40.0			200		
	196SB011	59.0			NS		
	196SB012	55.0			ND		
	196SB013	150			42.0		
	196SB014	68.0			ND		
	196SB015	54.0			ND		
	196SB017	120			ND		
Dieldrin	**196SB011**	3.70	40	NA	NS	0.23	NA
	196SB012	ND			**37.0**		
Endosulfan I	196SB013	19.0	47000	NA	ND	986	NA

Table 2.4.20
SWMU 196, Zone H
Organic Analytes Detected in Surface and Subsurface Soil

Compound	Location	Surface Conc.	Residential RBC (THQ=0.1)	Surface Background	Subsurface Conc.	Soil-to-GW SSL	Subsurface Background
Pesticide/PCBs (µg/kg) (Continued)							
Endosulfan sulfate	196SB010	ND	47000	NA	12.0	464	NA
Endrin	196SB012	ND	2300	NA	26.0	50	NA
gamma-Chlordane	196SB003	6.60	1800	NA	ND	560	NA
	196SB004	34.0			ND		
	196SB005	5.00			ND		
	196SB008	3.80			ND		
	196SB009	4.10			11.0		
	196SB010	6.10			3.80		
	196SB011	3.20			NS		
	196SB012	3.20			ND		
	196SB013	4.50			ND		
	196SB015	5.50			ND		
	196SB017	13.0			ND		
Heptachlor	196SB007	ND	140	NA	4.30	1130	NA
	196SB009	ND			5.90		
	196SB010	5.30			ND		
	196SB011	4.40			NS		
	196SB014	ND			1.90		
Heptachlor epoxide	196SB016	5.60	70	NA	NS	33	NA
	196SB017	7.10			ND		

Notes:
µg/kg = Micrograms per kilogram
NL = Not Listed
ND = Not Detected
NS = Not Sampled
RBC = Risk Based Concentration
SSL = Soil Screening Level
Bold = Exceeded the RBC (surface soil only) or the SSL.
NA = Not Applicable

Table 2.4.21
SWMU 196, Zone H
Inorganic Analytes Detected in Surface and Subsurface Soil (mg/kg)

Compound	Location	Surface Conc.	Residential RBC (THQ=0.1)	Surface Background	Subsurface Conc.	Soil-to-GW SSL	Subsurface Background
Aluminum (Al)	196SB001	7570	7800	29000	4230	55000	46200
	196SB002	9040			4390		
	196SB003	6520			5540		
	196SB004	7250			6850		
	196SB005	5870			6570		
	196SB006	7660			NS		
	196SB007	8710			10400		
	196SB008	2740			10700		
	196SB009	7930			12300		
	196SB010	2420			22400		
	196SB011	15200			NS		
	196SB012	6930			7710		
	196SB013	10400			9150		
	196SB014	7580			5120		
	196SB015	8220			3060		
	196SB016	9160			NS		
	196SB017	8450			7280		
Antimony (Sb)	196SB003	2.80	3.1		ND	0.27	
	196SB004	46.3			3.10		
	196SB005	8.60			5.00		
	196SB006	1.40			NS		
	196SB007	0.76			1.40		
	196SB008	8.30			ND		
	196SB009	1.60			0.86		
	196SB010	0.37			1.20		
	196SB012	2.30			2.00		
	196SB013	7.60			1.30		
	196SB014	0.48			ND		
	196SB015	0.92			ND		
	196SB016	2.00			NS		
	196SB017	1.20			ND		

Table 2.4.21
SWMU 196, Zone H
Inorganic Analytes Detected in Surface and Subsurface Soil (mg/kg)

Compound	Location	Surface Conc.	Residential RBC (THQ=0.1)	Surface Background	Subsurface Conc.		Soil-to-GW SSL	Subsurface Background
Arsenic (As)	196SB001	6.60	0.43	15.6	7.70	1	1.5	22.5
	196SB002	3.40			4.90			
	196SB003	4.20			4.20			
	196SB004	9.90			11.2			
	196SB005	11.2			13.0			
	196SB006	8.00			NS			
	196SB007	11.0			8.90			
	196SB008	8.50			3.20			
	196SB009	5.60			12.2			
	196SB010	5.40			18.4			
	196SB011	7.90			NS			
	196SB012	5.10			7.50			
	196SB013	8.10			3.30			
	196SB014	4.70			2.00			
	196SB015	5.70			0.93			
	196SB016	5.90			NS			
	196SB017	8.90			2.90			
Barium (Ba)	196SB001	20.7	550	40.3	9.10	2	82	43.8
	196SB002	48.5			11.4			
	196SB003	33.9			12.2			
	196SB004	139			17.4			
	196SB005	40.8			54.4			
	196SB006	37.3			NS			
	196SB007	34.3			72.3			
	196SB008	50.4			31.2			
	196SB009	31.1			34.7			
	196SB010	10.9			84.4			
	196SB011	44.2			NS			
	196SB012	69.3			53.9			
	196SB013	43.9			33.3			
	196SB014	28.4			25.0			
	196SB015	31.2			13.9			
	196SB016	34.3			NS			
	196SB017	27.8			28.1			

Table 2.4.21
SWMU 196, Zone H
Inorganic Analytes Detected in Surface and Subsurface Soil (mg/kg)

Compound	Location	Surface Conc.	Residential RBC (THQ=0.1)	Surface Background	Subsurface Conc.		Soil-to-GW SSL	Subsurface Background
Beryllium (Be)	196SB001	0.25	16	1.37	0.20	1	3.2	1.62
	196SB002	0.47			0.13			
	196SB003	0.35			0.11			
	196SB004	0.61			0.20			
	196SB005	0.42			0.47			
	196SB006	0.51			NS			
	196SB007	0.55			0.64			
	196SB008	0.39			0.31			
	196SB009	0.41			0.62			
	196SB010	0.32			0.99			
	196SB011	0.69			NS			
	196SB012	0.50			0.40			
	196SB013	0.46			0.33			
	196SB014	0.38			0.28			
	196SB015	0.44			0.18			
	196SB016	0.38			NS			
	196SB017	0.34			0.47			
Cadmium (Cd)	196SB003	0.34	7.8	1.05	ND	2	0.38	1.1
	196SB004	2.50			ND			
	196SB005	0.70			0.78			
	196SB006	0.54			NS			
	196SB007	0.47			0.60			
	196SB008	0.62			ND			
	196SB010	0.49			0.35			
	196SB012	0.38			0.22			
	196SB013	0.35			ND			

Table 2.4.21
SWMU 196, Zone H
Inorganic Analytes Detected in Surface and Subsurface Soil (mg/kg)

Compound	Location	Surface Conc.	Residential RBC (THQ=0.1)	Surface Background	Subsurface Conc.	Soil-to-GW SSL	Subsurface Background
Calcium (Ca)	196SB001	4520	NL	NL	1190	NL	NL
	196SB002	1250			1780		
	196SB003	25700			1340		
	196SB004	21100			5320		
	196SB005	52300			50900		
	196SB006	30500			NS		
	196SB007	89200			19000		
	196SB008	164000			1380		
	196SB009	20300			46600		
	196SB010	197000			19000		
	196SB011	23500			NS		
	196SB012	128000			16200		
	196SB013	48600			5570		
	196SB014	35300			1740		
	196SB015	66200			773		
	196SB016	28500			NS		
	196SB017	21800			1180		
Chromium (Cr)	196SB001	18.5	23	59.1	11.8	1.9	84.2
	196SB002	10.8			7.60		
	196SB003	15.1			10.0		
	196SB004	53.1			18.3		
	196SB005	31.1			28.4		
	196SB006	27.1			NS		
	196SB007	21.7			25.4		
	196SB008	19.9			16.2		
	196SB009	15.7			29.3		
	196SB010	8.80			49.6		
	196SB011	49.5			NS		
	196SB012	21.2			20.9		
	196SB013	29.6			16.7		
	196SB014	15.2			8.10		
	196SB015	19.4			3.90		
	196SB016	18.9			NS		
	196SB017	16.8			9.90		

Table 2.4.21
SWMU 196, Zone H
Inorganic Analytes Detected in Surface and Subsurface Soil (mg/kg)

Compound	Location	Surface Conc.	Residential RBC (THQ=0.1)	Surface Background	Subsurface Conc.		Soil-to-GW SSL	Subsurface Background
Cobalt (Co)	196SB001	0.87	470	5.86	0.50	1	99	14.9
	196SB002	1.70			0.29			
	196SB003	3.50			0.53			
	196SB004	10.0			2.00			
	196SB005	3.60			4.10			
	196SB006	3.50			NS			
	196SB007	3.40			2.80			
	196SB008	8.90			1.80			
	196SB009	2.10			2.50			
	196SB010	3.50			6.80			
	196SB011	3.60			NS			
	196SB012	3.30			2.60			
	196SB013	2.70			1.70			
	196SB014	2.00			1.00			
	196SB015	2.60			0.64			
	196SB016	2.00			NS			
	196SB017	2.00			1.40			
Copper (Cu)	196SB001	2.30	310	27.6	0.77	2	560	31.6
	196SB002	7.20			0.65			
	196SB003	154			1.10			
	196SB004	641			19.4			
	196SB005	270			274			
	196SB006	226			NS			
	196SB007	151			53.1			
	196SB008	127			7.40			
	196SB009	41.9			23.0			
	196SB010	26.2			103			
	196SB011	24.9			NS			
	196SB012	116			84.3			
	196SB013	99.4			39.3			
	196SB014	22.5			18.3			
	196SB015	34.0			0.66			
	196SB016	105			NS			
	196SB017	26.0			2.20			

Table 2.4.21
SWMU 196, Zone H
Inorganic Analytes Detected in Surface and Subsurface Soil (mg/kg)

Compound	Location	Surface Conc.	Residential RBC (THQ=0.1)	Surface Background	Subsurface Conc.	Soil-to-GW SSL	Subsurface Background
Cyanide (CN)	196SB005	ND	160		1.20	2	
	196SB010	1.70			ND		
Iron (Fe)	196SB001	19500	2300	30910	13300	77	66170
	196SB002	9270			11400		
	196SB003	11800			5530		
	196SB004	13900			9430		
	196SB005	8130			239000		
	196SB006	12600			NS		
	196SB007	9520			17400		
	196SB008	9580			10100		
	196SB009	10600			16900		
	196SB010	5470			36900		
	196SB011	15200			NS		
	196SB012	8930			14400		
	196SB013	15600			8820		
	196SB014	10300			5150		
	196SB015	10300			2230		
	196SB016	11700			NS		
	196SB017	14500			7630		

Table 2.4.21
SWMU 196, Zone H
Inorganic Analytes Detected in Surface and Subsurface Soil (mg/kg)

Compound	Location	Surface Conc.	Residential RBC (THQ=0.1)	Surface Background	Subsurface Conc.	Soil-to-GW SSL	Subsurface Background
Lead (Pb)	196SB001	8.30	400	118	4.00	400	68.7
	196SB002	19.5			4.60		
	196SB003	71.5			5.80		
	196SB004	734			49.2		
	196SB005	152			143		
	196SB006	76.2			NS		
	196SB007	61.8			89.9		
	196SB008	181			10.2		
	196SB009	42.8			48.7		
	196SB010	19.1			181		
	196SB011	56.3			NS		
	196SB012	49.2			113		
	196SB013	75.8			32.9		
	196SB014	56.9			13.5		
	196SB015	32.4			2.00		
	196SB016	81.6			NS		
	196SB017	31.8			6.10		
Magnesium (Mg)	196SB001	961	NL	NL	460	NL	NL
	196SB002	553			474		
	196SB003	876			511		
	196SB004	1020			929		
	196SB005	1300			1330		
	196SB006	1210			NS		
	196SB007	2300			1420		
	196SB008	2460			1020		
	196SB009	952			2380		
	196SB010	3050			3070		
	196SB011	2310			NS		
	196SB012	2360			1030		
	196SB013	1800			958		
	196SB014	1230			490		
	196SB015	1810			274		
	196SB016	1320			NS		
	196SB017	1120			540		

Table 2.4.21
SWMU 196, Zone H
Inorganic Analytes Detected in Surface and Subsurface Soil (mg/kg)

Compound	Location	Surface Conc.	Residential RBC (THQ=0.1)	Surface Background	Subsurface Conc.	Soil-to-GW SSL	Subsurface Background
Manganese (Mn)	196SB001	18.7	160	583	4.30	111	1410
	196SB002	44.8			3.60		
	196SB003	79.8			6.80		
	196SB004	111			14.2		
	196SB005	122			122		
	196SB006	107			NS		
	196SB007	133			140		
	196SB008	283			33.4		
	196SB009	79.7			118		
	196SB010	332			736		
	196SB011	194			NS		
	196SB012	188			62.4		
	196SB013	111			24.2		
	196SB014	71.4			24.2		
	196SB015	139			16.5		
	196SB016	82.6			NS		
	196SB017	87.0			20.0		
Mercury (Hg)	196SB002	0.05	2.3	0.485	ND	0.1	0.74
	196SB003	0.09			ND		
	196SB004	0.94			ND		
	196SB005	0.36			0.06		
	196SB006	0.27			NS		
	196SB007	0.31			0.07		
	196SB008	0.02			0.08		
	196SB009	0.14			0.06		
	196SB010	0.12			0.16		
	196SB011	0.10			NS		
	196SB012	0.03			0.17		
	196SB013	0.08			0.05		
	196SB014	0.04			ND		
	196SB015	0.05			ND		
	196SB016	0.29			NS		
	196SB017	0.13			ND		

Table 2.4.21
SWMU 196, Zone H
Inorganic Analytes Detected in Surface and Subsurface Soil (mg/kg)

Compound	Location	Surface Conc.	Residential RBC (THQ=0.1)	Surface Background	Subsurface Conc.	Soil-to-GW SSL	Subsurface Background
Nickel (Ni)	196SB001	1.70	160	33.4	ND	6.5	29.9
	196SB002	4.70			ND		
	196SB003	102			1.00		
	196SB004	37.6			4.00		
	196SB005	21.6			18.6		
	196SB006	42.0			NS		
	196SB007	70.3			10.0		
	196SB008	21.1			6.70		
	196SB009	8.00			11.2		
	196SB010	10.2			20.2		
	196SB011	12.1			NS		
	196SB012	11.7			11.2		
	196SB013	11.1			6.20		
	196SB014	5.70			2.80		
	196SB015	7.40			1.50		
	196SB016	6.80			NS		
	196SB017	6.20			3.20		
Potassium (K)	196SB001	507	NL	NL	229	NL	NL
	196SB002	195			300		
	196SB003	229			280		
	196SB004	363			646		
	196SB005	366			467		
	196SB006	390			NS		
	196SB007	512			389		
	196SB008	285			320		
	196SB009	261			802		
	196SB010	395			1270		
	196SB011	902			NS		
	196SB012	523			394		
	196SB013	468			324		
	196SB014	277			168		
	196SB015	423			98.4		
	196SB016	451			NS		
	196SB017	319			177		

Table 2.4.21
SWMU 196, Zone H
Inorganic Analytes Detected in Surface and Subsurface Soil (mg/kg)

Compound	Location	Surface Conc.	Residential RBC (THQ=0.1)	Surface Background	Subsurface Conc.	Soil-to-GW SSL	Subsurface Background
Selenium (Se)	196SB004	0.41	39	2.0	ND	0.26	2.7
	196SB007	ND			0.58		
	196SB009	0.67			1.00		
	196SB010	ND			0.63		
	196SB011	0.68			NS		
	196SB016	0.64			ND		
Silver (Ag)	196SB004	1.90	39		ND	1.5	NL
Sodium (Na)	196SB001	367	NL		394	NL	NL
	196SB002	278			310		
	196SB003	330			425		
	196SB004	406			381		
	196SB005	330			378		
	196SB006	344			NS		
	196SB007	516			494		
	196SB008	381			453		
	196SB009	396			566		
	196SB010	382			632		
	196SB011	430			NS		
	196SB012	412			379		
	196SB013	636			425		
	196SB014	402			266		
	196SB015	387			287		
	196SB016	759			NS		
	196SB017	451			288		
Thallium (Tl)	196SB008	ND	0.55	1.1	0.43	0.04	1.3

Table 2.4.21
SWMU 196, Zone H
Inorganic Analytes Detected in Surface and Subsurface Soil (mg/kg)

Compound	Location	Surface Conc.	Residential RBC (THQ=0.1)	Surface Background	Subsurface Conc.	Soil-to-GW SSL	Subsurface Background
Tin (Sn)	196SB003	24.7	4700	NL	ND	5504	NL
	196SB004	39.7			ND		
	196SB005	36.5			ND		
	196SB007	ND			27.9		
	196SB008	34.0			ND		
	196SB010	ND			104		
	196SB012	ND			198		
	196SB013	15.0			ND		
Vanadium (V)	196SB001	21.7	55	73.0	20.8	260	132
	196SB002	12.8			11.8		
	196SB003	17.4			11.0		
	196SB004	34.5			21.1		
	196SB005	137			96.8		
	196SB006	39.0			NS		
	196SB007	22.0			26.0		
	196SB008	11.8			17.4		
	196SB009	19.8			28.3		
	196SB010	9.9			58.0		
	196SB011	34.4			NS		
	196SB012	19.0			19.5		
	196SB013	29.9			18.1		
	196SB014	19.0			10.3		
	196SB015	21.1			4.3		
	196SB016	27.1			NS		
	196SB017	23.8			12.9		

Table 2.4.28
SWMU 196, Zone II
Organic Analytes Detected in Shallow and Deep Groundwater

Parameter	Location	Preliminary Round, May 1998	First Round, August 1998	Second Round, April-June 1999	Third Round, December 1999	Tap-Water RBC	MCL	Shallow/Deep Background
Volatile Organic Compounds (µg/L)								
Acetone	009GW022	NI	ND	4.00	ND	61.0	NL	NA
	196GW02D	NI	NI	NI	6.90*			
Benzene	009GW020	NI	61.0	19.0	17.0	0.36	5.0	NA
	009GW021	NI	36.0	110	39.0			
	196GDF02	NI	NI	7.00	NS			
	196GW001	NI	NI	NI	1.00			
	GELGW015	130	200	140	140			
2-Butanone (MEK)	196GDF01	NI	NI	7.0	NS	190	NL	
Carbon disulfide	009GW020	NI	5.00	ND	ND	100	NL	NA
	196GDF02	NI	NI	2.00	NS			
Chlorobenzene	009GW020	NI	5100	16000	12000	11.0	100	NA
	009GW021	NI	4300	19000	8800			
	009GW022	NI	ND	42.0	ND			
	196GDF01	NI	NI	2.00	NS			
	196GDF02	NI	NI	3500	NS			
	196GW002	NI	NI	NI	23.0			
	196GW003	NI	NI	NI	3.00			
	GELGW015	14000	5200	7200	15000			
Chloroethane	GELGW015	0.53	ND	ND	ND	3.6	NL	NA
1,1-Dichloroethene	009GW021	NI	ND	2.00	ND	0.04	7.0	NA
1,2-Dichloroethene (total)	009GW021	NI	49.0	240.0	68.0	5.5	70.0	NA
	009GW023	NI	45.0	ND	2.00			
	GELGW015	2.50	ND	ND	ND			

Table 2.4.28
SWMU 196, Zone H
Organic Analytes Detected in Shallow and Deep Groundwater

Parameter	Location	Preliminary Round, May 1998	First Round, August 1998	Second Round, April-June 1999	Third Round, December 1999	Tap-Water RBC	MCL	Shallow/Deep Background
Volatile Organic Compounds (μg/L) (Continued)								
Ethylbenzene	009GW021	NI	ND	2.00	ND	130	700	NA
4-Methyl-2-Pentanone (MIBK)	009GW021	NI	ND	4.00	ND	14.0	NL	NA
Tetrachloroethene	**009GW021**	NI	ND	**5.00**	ND	1.10	5.00	NA
	GELGW015	**2.30**	ND	ND	ND			
Toluene	009GW021	NI	ND	6.00	ND	75.0	1000	NA
	GELGW015	2.50	ND	2.00	ND			
Trichloroethene	**009GW021**	NI	ND	**4.00**	ND	1.60	5.00	NA
	009GW023	NI	**24.0**	ND	1.00			
	GELGW015	0.81	ND	ND	ND			
Vinyl Chloride	**009GW021**	NI	ND	**44.0**	**14.0**	0.02	2.00	NA
	009GW023	NI	**50.0**	ND	ND			
	GELGW015	**3.80**	ND	ND	**2.00**			
Xylene (Total)	009GW021	NI	ND	4.00	ND	1200	10000	NA
	GELGW015	2.20	ND	ND	ND			

Table 2.4.28
SWMU 196, Zone II
Organic Analytes Detected in Shallow and Deep Groundwater

Parameter	Location	Preliminary Round, May 1998	First Round, August 1998	Second Round, April-June 1999	Third Round, December 1999	Tap-Water RBC	MCL	Shallow/Deep Background
Semivolatile Organic Compounds (µg/L)								
Benzoic Acid	009GW020	NI	7.00	ND	ND	15000	NL	NA
	009GW021	NI	7.00	ND	ND			
	009GW022	NI	8.00	ND	ND			
	009GW023	NI	7.00	ND	ND			
	196GDF01	NI	NI	1.00	NS			
	196GDF02	NI	NI	8.00	NS			
	196GDF03	NI	NI	3.00	NS			
	196GDF04	NI	NI	2.00	NS			
	GELGW015	NS	8.00	ND	ND			
2-Chlorophenol	009GW020	NI	67.0	52.0	40.0	3.00	NL	NA
	009GW021	NI	3.00	ND	3.00			
	196GDF02	NI	NI	7.00	NS			
	GELGW015	NS	28.0	ND	30.0			
1,2-Dichlorobenzene	009GW020	NI	1500	140	64.0	6.40	600	NA
	009GW021	NI	3300	13000	8200			
	009GW023	NI	ND	4.00	ND			
	196GW002	NI	NI	NI	65.0			
	GELGW015	NS	6000	12000	12000			
1,3-Dichlorobenzene	009GW020	NI	58.0	24.0	23.0	0.55	NL	NA
	009GW021	NI	270	1100	690			
	196GDF02	NI	NI	6.00	NS			
	196GW002	NI	NI	NI	5.00			
	GELGW015	NS	140	120	160			

Table 2.4.28
SWMU 196, Zone H
Organic Analytes Detected in Shallow and Deep Groundwater

Parameter	Location	Preliminary Round, May 1998	First Round, August 1998	Second Round, April-June 1999	Third Round, December 1999	Tap-Water RBC	MCL	Shallow/Deep Background
Semivolatile Organic Compounds (μg/L) (Continued)								
1,4-Dichlorobenzene	009GW020	NI	130	92.0	83.0	0.47	75.0	NA
	009GW021	NI	510	1900	1300			
	009GW022	NI	ND	15.0	ND			
	196GDF02	NI	NI	23.0	NS			
	196GW002	NI	NI	NI	10.0			
	GELGW015	NS	220	310	380			
2,4-Dichlorophenol	009GW020	NI	5.00	ND	1.00	11.0	NL	NA
	009GW021	NI	NI	ND	1.00			
	196GDF02	NI	NI	1.00	NS			
	GELGW015	NS	ND	4.00	12.0			
Di-n-butylphthalate	009GW020	NI	ND	ND	1.00	270	NL	NA
	009GW021	NI	ND	ND	1.00			
	009GW022	NI	2.00	ND	ND			
	GELGW015	NS	2.00	ND	ND			
Isophorone	009GW020	NI	1.00	ND	ND	70.0	NL	NA
	GELGW015	NS	ND	0.80	1.00			
4-Mehtylphenol (p-Cresol)	196GDF02	NI	NI	1.00	NS	18.0	NL	NA
Naphthalene	009GW023	NI	1.00	ND	ND	0.65	NL	NA
	196GDF02	NI	NI	2.00	NS			
1,2,4-Trichlorobenzene	009GW021	NI	2.00	6.00	2.00	19.0	70.0	NA
	GELGW015	NS	3.00	5.00	4.00			

Table 2.4.28
SWMU 196, Zone H
Organic Analytes Detected in Shallow and Deep Groundwater

Parameter	Location	Preliminary Round, May 1998	First Round, August 1998	Second Round, April-June 1999	Third Round, December 1999	Tap-Water RBC	MCL	Shallow/Deep Background
Pesticide/PCBs (μg/L)								
Heptachlor	009GW020	NI	0.04	ND	ND	0.02	0.40	NA

Notes:
NA = Not Applicable
ND = Not Detected
NI = Not Installed
NS = Not Sampled
μg/L = Micrograms per liter
RBC = Risk Based Concentration
MCL = Maximum Contaminant Level
* = Sample collected in March 2000
Bold = Sample exceeds either the tap-water RBC or MCL

Table 2.4.29
SWMU 196, Zone H
Inorganic Analytes Detected in Shallow and Deep Groundwater

Parameter	Location	Preliminary Round, May 1998	First Round, August 1998	Second Round, April-June 1999	Third Round, December 1999	Tap-Water RBC	MCL	Shallow/Deep Background
Inorganic Elements (μg/L)								
Aluminum (Al)	009GW020	NI	2590	NS	300	3700	NL	NA/723
	009GW021	NI	331	NS	ND			
	009GW022	NI	2500	NS	1470			
	009GW023	NI	**5970**	NS	1000			
	196GW001	NI	NI	NI	111.5			
	GELGW015	NS	162	NS	ND			
Antimony (Sb)	009GW021	NI	ND	NS	5.50	1.50	6.00	NA/NA

Table 2.4.29
SWMU 196, Zone H
Inorganic Analytes Detected in Shallow and Deep Groundwater

Parameter	Location	Preliminary Round, May 1998	First Round, August 1998	Second Round, April-June 1999	Third Round, December 1999	Tap-Water RBC	MCL	Shallow/Deep Background
Arsenic (As)	**009GW020**	NI	**17.8**	NS	**24.8**	0.05	50.0	21.5/8.2
	009GW021	NI	**17.8**	NS	**17.8**			
	009GW022	NI	**20.5**	NS	**35.1**			
	009GW023	NI	**21.6**	NS	**ND**			
	196GW001	NI	**NI**	NI	**5.30**			
	196GW002	NI	**NI**	NI	**7.70**			
	196GW003	NI	**NI**	NI	**11.0**			
	GELGW015	NS	**327**	NS	**118**			
Barium (Ba)	009GW020	NI	97.4	NS	56.4	260	2000	323/237
	009GW021	NI	161	NS	133			
	009GW022	NI	125	NS	28.0			
	009GW023	NI	114	NS	31.2			
	009GW23D	NI	87.8	NS	71.2			
	196GW001	NI	NI	NI	110.05			
	196GW002	NI	NI	NI	57.2			
	196GW003	NI	NI	NI	51.7			
	GELGW015	NS	215	NS	158			
Beryllium (Be)	196GW002	NI	NI	NI	0.40	7.30	4.00	NA/NA
	196GW003	NI	NI	NI	0.36			
	GELGW015	NS	0.13	NS	ND			
Cadmium (Cd)	009GW021	NI	ND	NS	1.50	1.80	5.00	NA/NA
	009GW022	NI	ND	NS	0.59			
Calcium (Ca)	009GW020	NI	71200	NS	89800	NL	NL	NA/NA
	009GW021	NI	125000	NS	143000			
	009GW022	NI	34300	NS	10600			
	009GW023	NI	71700	NS	58900			
	009GW23D	NI	93000	NS	94400			
	196GW001	NI	NI	NI	193500			
	196GW002	NI	NI	NI	174000			
	196GW003	NI	NI	NI	151000			
	GELGW015	NS	130000	NS	130000			

Table 2.4.29
SWMU 196, Zone II
Inorganic Analytes Detected in Shallow and Deep Groundwater

Parameter	Location	Preliminary Round, May 1998	First Round, August 1998	Second Round, April-June 1999	Third Round, December 1999	Tap-Water RBC	MCL	Shallow/Deep Background
Chromium (Cr)	009GW022	NI	ND	NS	2.80	11.0	100	NA/NA
	009GW023	NI	13.5	NS	ND			
	196GW002	NI	NI	NI	0.55			
	196GW003	NI	NI	NI	1.40			
Cobalt (Co)	009GW020	NI	8.20	NS	2.30	220	NL	NA/3.2
	009GW021	NI	ND	NS	6.60			
	009GW023	NI	ND	NS	3.40			
	196GW001	NI	NI	NI	27.95			
	GELGW015	NS	20.1	NS	21.5			
Copper (Cu)	009GW022	NI	ND	NS	4.70	150	1300	NA/NA
Cyanide (CN)	009GW021	NI	ND	NS	1.50	73.0	200	NA/NA
	009GW023	NI	ND	NS	1.20			
	196GW002	NI	NI	NI	1.60			
	196GW003	NI	NI	NI	1.50			
Iron (Fe)	009GW020	NI	13000	NS	9510	1100	NL	NA/NA
	009GW021	NI	1520	NS	6660			
	009GW022	NI	4980	NS	5340			
	009GW023	NI	11900	NS	2430			
	009GW23D	NI	537	NS	416			
	196GW001	NI	NI	NI	771			
	196GW002	NI	NI	NI	2030			
	196GW003	NI	NI	NI	1630			
	GELGW015	NS	39800	NS	37400			
Lead (Pb)	009GW020	NI	5.00	NS	ND	NL	15.0	4.7/4.3
	009GW021	NI	2.90	NS	ND			
	009GW022	NI	14.1	NS	ND			
	009GW023	NI	4.30	NS	ND			

Table 2.4.29
SWMU 196, Zone H
Inorganic Analytes Detected in Shallow and Deep Groundwater

Parameter	Location	Preliminary Round, May 1998	First Round, August 1998	Second Round, April-June 1999	Third Round, December 1999	Tap-Water RBC	MCL	Shallow/Deep Background
Magnesium (Mg)	009GW020	NI	37800	NS	35700	NL	NL	NA/NA
	009GW021	NI	59400	NS	65700			
	009GW022	NI	8010	NS	5230			
	009GW023	NI	21600	NS	20400			
	009GW23D	NI	19200	NS	20100			
	196GW001	NI	NI	NI	61200			
	196GW002	NI	NI	NI	309000			
	196GW003	NI	NI	NI	266000			
	GELGW015	NS	26300	NS	31800			
Manganese (Mn)	**009GW020**	NI	**1680**	NS	**883**	73.0	NL	2440/998
	009GW021	NI	**1040**	NS	**1080**			
	009GW022	NI	**117**	NS	**147**			
	009GW023	NI	**657**	NS	**750**			
	009GW23D	NI	**154**	NS	**123**			
	196GW001	NI	NI	NI	**1205**			
	196GW002	NI	NI	NI	**303**			
	196GW003	NI	NI	NI	**366**			
	GELGW015	NS	**2080**	NS	**2350**			
Mercury (Hg)	009GW020	NI	0.13	NS	ND	1.10	2.00	NA/NA
	009GW021	NI	0.13	NS	ND			
	009GW022	NI	0.12	NS	ND			
	009GW023	NI	0.11	NS	ND			
	009GW23D	NI	0.11	NS	ND			
	GELGW015	NS	0.15	NS	ND			
Nickel (Ni)	009GW022	NI	6.80	NS	4.10	73.0	100	NA/NA
	196GW001	NI	NI	NI	7.40			
	GELGW015	NS	3.00	NS	ND			

Table 2.4.29
SWMU 196, Zone II
Inorganic Analytes Detected in Shallow and Deep Groundwater

Parameter	Location	Preliminary Round, May 1998	First Round, August 1998	Second Round, April-June 1999	Third Round, December 1999	Tap-Water RBC	MCL	Shallow/Deep Background
Potassium (K)	009GW020	NI	23900	NS	18000	NL	NL	NA/NA
	009GW021	NI	36600	NS	23900			
	009GW022	NI	9420	NS	12300			
	009GW023	NI	6470	NS	7320			
	009GW23D	NI	5750	NS	7410			
	196GW001	NI	NI	NI	14050			
	196GW002	NI	NI	NI	123000			
	196GW003	NI	NI	NI	110000			
	GELGW015	NS	9530	NS	8430			
Selenium (Se)	GELGW015	NS	ND	NS	3.30	18.0	50.0	3.2/2.1
Sodium (Na)	009GW020	NI	248000	NS	139000	NL	NL	NA/NA
	009GW021	NI	610000	NS	570000			
	009GW022	NI	146000	NS	85700			
	009GW023	NI	17300	NS	27700			
	009GW23D	NI	124000	NS	113000			
	196GW001	NI	NI	NI	592000			
	196GW002	NI	NI	NI	3200000			
	196GW003	NI	NI	NI	2860000			
	GELGW015	NS	187000	NS	228000			
Thallium (Tl)	196GW001	NI	NI	NI	**2.80**	0.26	2.00	5.3/NA
	196GW002	NI	NI	NI	**2.50**			
	196GW003	NI	NI	NI	**3.90**			
	GELGW015	NS	**8.30**	NS	ND			
Vanadium (V)	009GW020	NI	10.5	NS	1.20	26.00	NL	NA/9.3
	009GW021	NI	ND	NS	1.10			
	009GW022	NI	9.50	NS	6.50			
	009GW023	NI	17.8	NS	3.90			
	196GW001	NI	NI	NI	2.00			
	196GW002	NI	NI	NI	1.20			
	GELGW015	NS	2.80	NS	ND			

Table 2.4.29
SWMU 196, Zone H
Inorganic Analytes Detected in Shallow and Deep Groundwater

Parameter	Location	Preliminary Round, May 1998	First Round, August 1998	Second Round, April-June 1999	Third Round, December 1999	Tap-Water RBC	MCL	Shallow/Deep Background
Zinc (Zn)	009GW020	NI	51.3	NS	10.5	1100.00	NL	NA/NA
	009GW021	NI	54.0	NS	138			
	009GW022	NI	27.0	NS	21.5			
	009GW023	NI	20.1	NS	ND			
	009GW23D	NI	13.2	NS	ND			
	196GW003	NI	NI	NI	8.10			
	GELGW015	NS	5.50	NS	4.80			

Notes:
NA = Not Applicable
ND = Not Detected
NI = Not Installed
NS = Not Sampled
µg/L = Micrograms per liter
RBC = Risk Based Concentration
MCL = Maximum Contaminant Level
* = Sample collected in March 2000
Bold = Sample exceeds either the tap-water RBC or MCL

Table 2.4.32
SWMU 196, Zone H
Inorganic Analytical Results for Sediment (mg/kg)

Element	Freq. of Detection	Range of Detected Conc.	Mean of Detected Conc.	ESSV	Number of Samples Exceeding ESSV	Residential Soil RBC (THQ=0.1)	Number of Samples Exceeding RBC	Sediment to Surface Water SEDSL	Leaching Potential
Manganese (Mn)	9/9	49.3-139	96.5	NL	0	1100	0	11.2	YES
Mercury (Hg)	9/9	0.02-0.19	0.090	0.13	2	2.3	0	0.0001	YES
Nickel (Ni)	9/9	3.80-9.50	6.94	15.9	0	160	0	0.05	YES
Potassium (K)	9/9	322-815	648.7	NL	0	NL	0	NL	NO
Selenium (Se)	8/9	0.34-0.72	0.52	NL	0	39	0	0.11	YES
Sodium (Na)	9/9	1840-3550	2858.9	NL	0	NL	0	NL	NO
Thallium (Tl)	2/9	0.34-0.36	0.35	NL	0	0.55	0	0.15	YES
Tin (Sn)	9/9	3.60-129	18.5	NL	0	4700	0	486	NO
Vanadium (V)	9/9	7.40-19.9	15.1	NL	0	55	0	22.1	NO
Zinc (Zn)	9/9	27.8-105	60.5	124	0	2300	0	0.54	YES

Notes:
mg/kg = Milligrams per kilograms
NL = Not Listed
ESSV = Ecological Sediment Screening Value
RBC = Risk Based Concentration
SEDSL = Sediment Screening Level; Calculated using methods described in Section 2.4.15.4 and shown in Appendix C

Table 2.4.33
SWMU 196, Zone H
Organic Analytes Detected in Sediment

Parameter	Location	Upper Interval Conc.	Middle Interval Conc.	Lower Interval Conc.	ESSV	Residential Soil RBC (THQ=0.1)	Sediment to Surface Water SEDSL
Volatile Organic Compounds (μg/kg)							
Acetone	196M0001	ND	ND	10.0	NL	780000	4340
	196M0003	ND	ND	18.0			
Carbon disulfide	196M0001	ND	9.0	4.0	NL	780000	18300
	196M0002	8.0	10.0	3.0			
	196M0003	5.0	5.0	8.0			
Chlorobenzene	196M0002	300	10000	9200	NL	160000	2050
Semivolatile Organic Compounds (μg/kg)							
1,2-Dichlorobenzene	196M0002	51.0	270	400	NL	700000	1040
1,3-Dichlorobenzene	196M0002	78.0	500	830	NL	7000	1700

Table 2.4.33
SWMU 196, Zone H
Organic Analytes Detected in Sediment

Parameter	Location	Upper Interval Conc.	Middle Interval Conc.	Lower Interval Conc.	ESSV	Residential Soil RBC (THQ=0.1)	Sediment to Surface Water SEDSL
Semivolatile Organic Compounds (μg/kg) (Continued)							
1,4-Dichlorobenzene	**196M0002**	420	**2300**	**3900**	NL	27000	1050
	196M0003	75.0	170	ND			
2-Methylnaphthalene	196M0001	52.0	ND	40.0	330	160000	75600
	196M0002	52.0	ND	ND			
	196M0003	39.0	ND	ND			
4-Methylphenol (p-Cresol)	196M0001	ND	49.0	ND	NL	39000	1480
Acenaphthylene	196M0001	94.0	48.0	46.0	330	NL	191000
	196M0002	62.0	ND	46.0			
Anthracene	196M0001	ND	87.0	64.0	330	2300000	2.72E7
	196M0002	110	46.0	47.0			
	196M0003	41.0	ND	ND			
Benzo(a)anthracene	**196M0001**	**860**	**360**	220	330	870.0	4000
	196M0002	250	97.0	72.0			
	196M0003	130	100	ND			
Benzo(a)pyrene	**196M0001**	**1600**	**290**	**220**	330	87.0	1030
	196M0002	**590**	**120**	82.0			
	196M0003	**130**	**110**	ND			
Benzo(b)fluoranthene	196M0001	ND	270	190	NL	870.0	12400
	196M0002	250	130	67.0			
	196M0003	230	140	45.0			
Benzo(k)fluoranthene	196M0001	870	220	140	NL	8700	124000
	196M0002	140	92.0	82.0			
	196M0003	150	110	ND			
Chrysene	**196M0001**	**970**	180	190	330	87000	400000
	196M0002	220	91.0	62.0			
	196M0003	170	78.0	ND			
Dibenz(a,h)anthracene	196M0001	ND	ND	80.0	330	87.0	3820
	196M0003	44.0	ND	ND			
Indeno(1,2,3-cd)pyrene	196M0001	320	150	120	NL	870.0	34900
	196M0002	170	84.0	44.0			
	196M0003	93.0	65.0	ND			
Benzo(g,h,i)perylene	196M0001	780	290	260	NL	NL	2.39E8
	196M0002	330	130	75.0			
	196M0003	110	77.0	ND			

Table 2.4.33
SWMU 196, Zone H
Organic Analytes Detected in Sediment

Parameter	Location	Upper Interval Conc.	Middle Interval Conc.	Lower Interval Conc.	ESSV	Residential Soil RBC (THQ=0.1)	Sediment to Surface Water SEDSL
Semivolatile Organic Compounds (μg/kg) (Continued)							
Benzoic acid	196M0001	64.0	46.0	50.0	NL	31000000	176000
	196M0002	63.0	51.0	55.0			
	196M0003	38.0	ND	51.0			
Butylbenzylphthalate	196M0001	ND	ND	47.0	NL	1600000	142000
Di-n-butylphthalate	196M0001	ND	46.0	77.0	NL	NL	9660
	196M0002	96.0	ND	ND			
	196M0003	ND	ND	46.0			
Fluoranthene	**196M0001**	**2400**	**2000**	230	330	310000	14400
	196M0002	**450**	210	140			
	196M0003	270	360	50.0			
Naphthalene	196M0001	200	150	140	330	160000	3970
	196M0002	97.0	160	200			
	196M0003	56.0	83.0	59.0			
Phenanthrene	196M0001	ND	81.0	79.0	330	NL	2.77E6
	196M0002	70.0	85.0	130			
	196M0003	78.0	48.0	ND			
Pyrene	**196M0001**	**6300**	**2700**	**1100**	330	230000	9.68E6
	196M0002	**1600**	**380**	ND			
	196M0003	320	**370**	ND			
Pesticide/PCBs (μg/kg)							
4,4'-DDE	**196M0003**	ND	**130**	ND	3.3	1900	52500
4,4'-DDT	**196M0003**	ND	**64.0**	ND	3.3	1900	220
Aroclor-1248	196M0003	78.0	ND	ND	NL	NL[1]	777
Aroclor-1254	196M0002	96.0	ND	ND	NL	NL[1]	777
Aroclor-1260	196M0002	110	ND	ND	NL	NL[1]	777
	196M0003	140	240	ND			

Notes:
μg/kg = Micrograms per kilograms
NL = Not Listed
ND = Not Detected
ESSV = Ecological Sediment Screening Value
RBC = Risk Based Concentration
SEDSL = Sediment Screening Level
Bold = Exceeded the ESSV, RBC, or SEDSL
Underline = Value was exceeded by site sample(s)
NL[1] = ESSV for Total PCBs = 33 μg/kg

Table 2.4.34
SWMU 196, Zone H
Inorganic Analytes Detected in Sediment (mg/kg)

Parameter	Location	Upper Interval Conc.	Middle Interval Conc.	Lower Interval Conc.	ESSV	Residential Soil RBC (THQ=0.1)	Sediment to Surface Water SEDSL
Aluminum (Al)	**196M0001**	4610	**5700**	4040	NL	7800	4690
	196M0002	3610	**4950**	4240			
	196M0003	3280	**4900**	3980			
Arsenic (As)	**196M0001**	**6.1**	**6.5**	**5.6**	7.24	0.43	0.13
	196M0002	**6.7**	**14.9**	**8.7**			
	196M0003	**3.6**	**5.0**	**5.4**			
Barium (Ba)	**196M0001**	8.1	10.3	8.5	NL	550	11.9
	196M0002	7.0	8.3	8.3			
	196M0003	9.3	**14.0**	7.4			
Beryllium (Be)	196M0001	0.41	0.44	0.45	NL	16	NL
	196M0002	0.32	0.43	0.40			
	196M0003	0.26	0.45	0.43			
Cadmium (Cd)	**196M0001**	**0.19**	**0.14**	**0.1**	1.0	7.8	0.07
	196M0002	0.05	**0.07**	ND			
	196M0003	**0.21**	**0.38**	**0.23**			
Calcium (Ca)	196M0001	12800	31900	10800	NL	NL	NL
	196M0002	1470	3400	9680			
	196M0003	3500	8970	16800			
Chromium (Cr)	**196M0001**	**45.5**	**18.3**	**11.8**	52.3	23.0	0.30
	196M0002	**38.4**	**12.9**	**10.7**			
	196M0003	**45.4**	**27.8**	**14.8**			
Cobalt (Co)	196M0001	1.7	1.5	1.8	NL	470	10.8
	196M0002	2.9	2.4	1.7			
	196M0003	1.1	1.9	1.6			
Copper (Cu)	**196M0001**	**16.3**	**11.9**	**10.9**	18.7	310	0.11
	196M0002	**30.6**	**13.2**	**12.3**			
	196M0003	**31.3**	**29.1**	**6.9**			
Cyanide (CN)	**196M0003**	ND	**0.16**	ND	NL	160	0.002
Iron (Fe)	**196M0001**	**7850**	**7650**	**8020**	NL	2300	35.4
	196M0002	**22600**	**14600**	**10700**			
	196M0003	**4680**	**8000**	**7150**			
Lead (Pb)	**196M0001**	**18.4**	**20.3**	**17.3**	30.2	400	0.65
	196M0002	**28.0**	**150**	**27.2**			
	196M0003	**33.6**	**25.6**	**7.4**			
Magnesium (Mg)	196M0001	2130	2190	2130	NL	NL	NL
	196M0002	1400	2120	1640			
	196M0003	1120	2100	2210			

Table 2.4.34
SWMU 196, Zone H
Inorganic Analytes Detected in Sediment (mg/kg)

Parameter	Location	Upper Interval Conc.	Middle Interval Conc.	Lower Interval Conc.	ESSV	Residential Soil RBC (THQ=0.1)	Sediment to Surface Water SEDSL
Manganese (Mn)	**196M0001**	**91.5**	**112**	**76.9**	NL	160	11.2
	196M0002	**112**	**116**	**139**			
	196M0003	**49.3**	**87.1**	**85.1**			
Mercury (Hg)	**196M0001**	**0.04**	**0.12**	**0.06**	0.13	2.3	0.0001
	196M0002	**0.10**	**0.04**	**0.04**			
	196M0003	**0.19**	**0.19**	**0.02**			
Nickel (Ni)	**196M0001**	**8.3**	**7.5**	**4.8**	15.9	160	0.05
	196M0002	**9.5**	**6.1**	**3.8**			
	196M0003	**8.3**	**8.0**	**6.2**			
Potassium (K)	196M0001	730	595	645	NL	NL	NL
	196M0002	559	800	605			
	196M0003	322	767	815			
Selenium (Se)	**196M0001**	**0.45**	**0.72**	ND	NL	39	0.11
	196M0002	**0.49**	**0.49**	**0.47**			
	196M0003	**0.34**	**0.68**	**0.53**			
Sodium (Na)	196M0001	3360	2710	2980	NL	NL	NL
	196M0002	3240	2790	2110			
	196M0003	1840	3550	3150			
Thallium (Tl)	**196M0003**	ND	**0.36**	**0.34**	NL	0.55	0.15
Tin (Sn)	196M0001	4.2	3.8	3.8	NL	4700	486
	196M0002	12.0	4.8	4.4			
	196M0003	6.8	5.8	3.6			
Vanadium (V)	196M0001	15.0	15.1	17.7	NL	55	22.1
	196M0002	13.4	19.9	17.2			
	196M0003	7.4	14.9	15.3			
Zinc (Zn)	**196M0001**	**63.0**	**40.4**	**44.5**	124	2300	0.54
	196M0002	**69.9**	**74.1**	**42.0**			
	196M0003	**105**	**77.7**	**27.8**			

Notes:

µg/kg	=	Micrograms per kilograms
NL	=	Not Listed
ND	=	Not Detected
ESSV	=	Ecological Sediment Screening Value
RBC	=	Risk Based Concentration
SEDSL	=	Sediment Screening Level
Bold	=	Exceeded the ESSV, RBC, or SEDSL
Underline	=	Value was exceeded by site sample(s)
NL[1]	=	ESSV for Total PCBs = 33 µg/kg

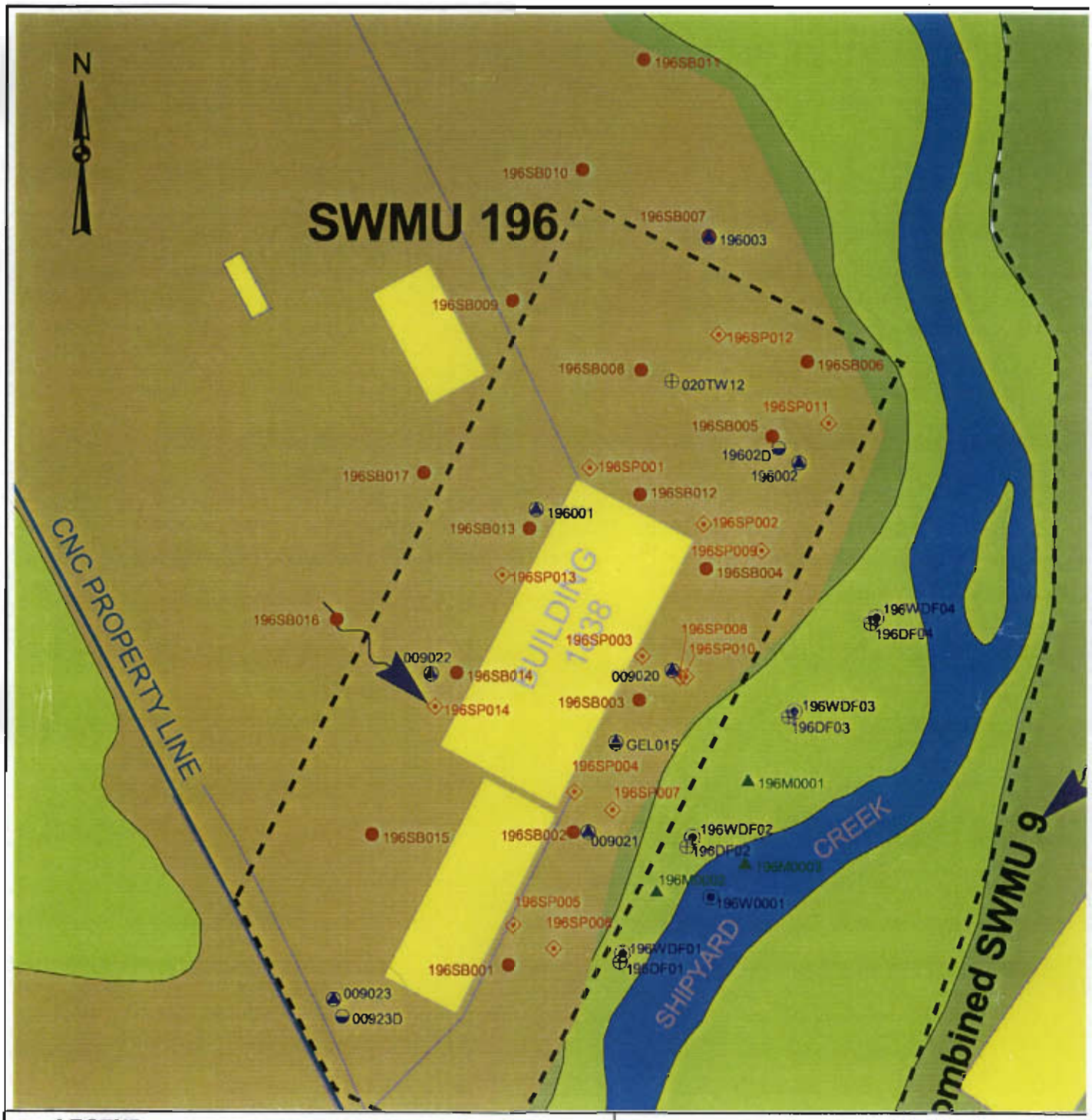

LEGEND

- Permanent Shallow Well
- Permanent Deep Well
- Temporary Shallow Well
- Soil Boring
- DPT Soil Sample
- Sediment Sample
- Surface Water Sample
- Building
- Gravel or Porous Material
- Wetland (Marsh)
- Grass and/or Soil Cover
- Fence
- Surface Water Flow
- AOC/SWMU Boundary

50 0 50 100 Feet

ZONE H
RFI ADDENDUM
CHARLESTON NAVAL COMPLEX
CHARLESTON, SC

Figure 2.4.9
SWMU 196

Site sample Locations

g:\navy\cto-029\zone-h\rfi-rpts\addendum 00\arcview\196 physical.apr | 2/11/00

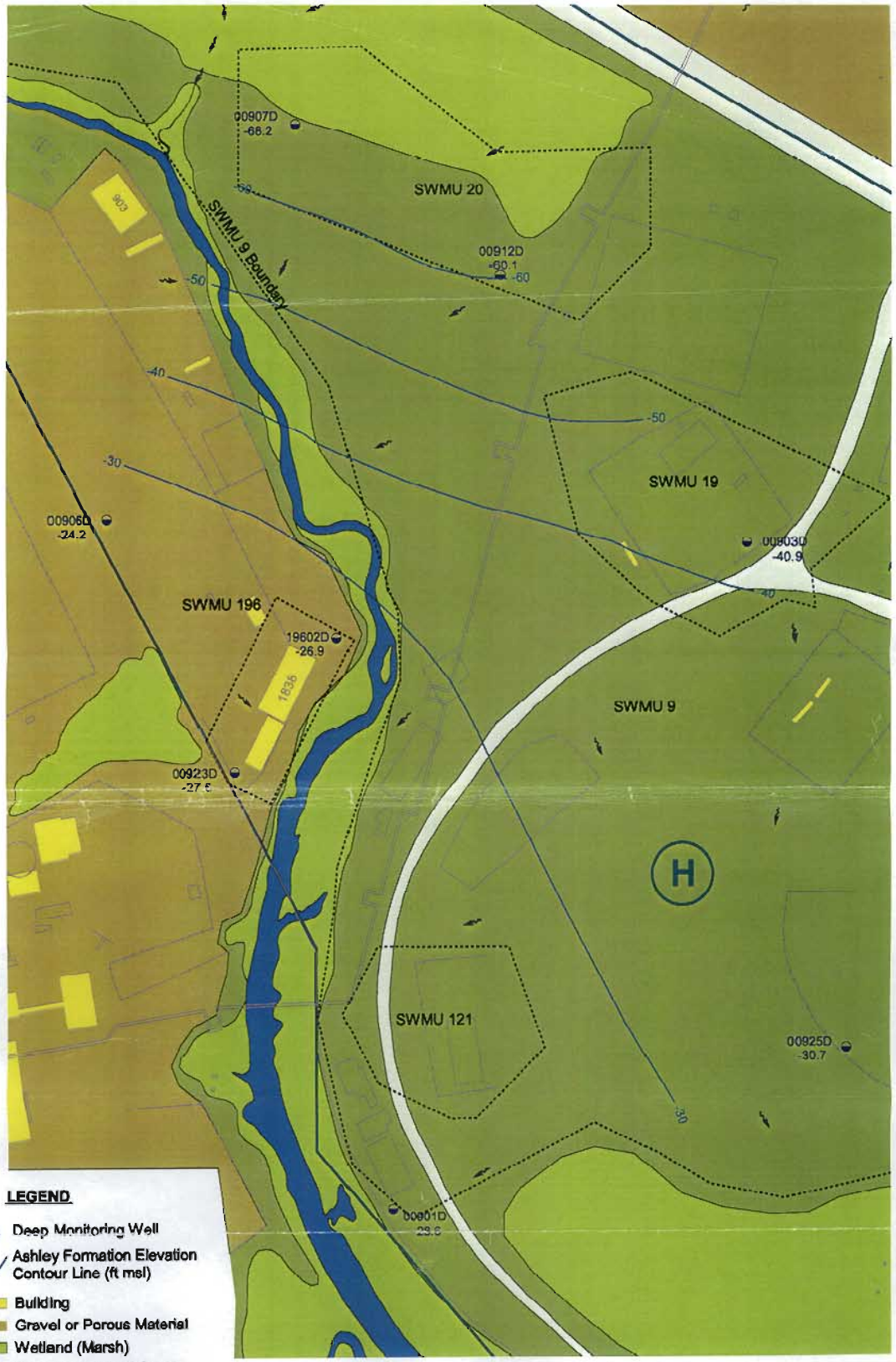

LEGEND

- Deep Monitoring Well
- Ashley Formation Elevation Contour Line (ft msl)
- Building
- Gravel or Porous Material
- Wetland (Marsh)
- Grass and/or Soil Cover
- Street / Pavement
- Surface Water
- Fence
- Surface Water Flow
- CNC / Zone Boundary
- AOC/SWMU Boundary

Note: All depths in feet msl

150 0 150 300 Feet

ZONE H
RFI ADDENDUM
CHARLESTON NAVAL COMPLEX
CHARLESTON, SC

Figure 2.4.10
SWMU 196

Top of Ashley Formation

1/26/00

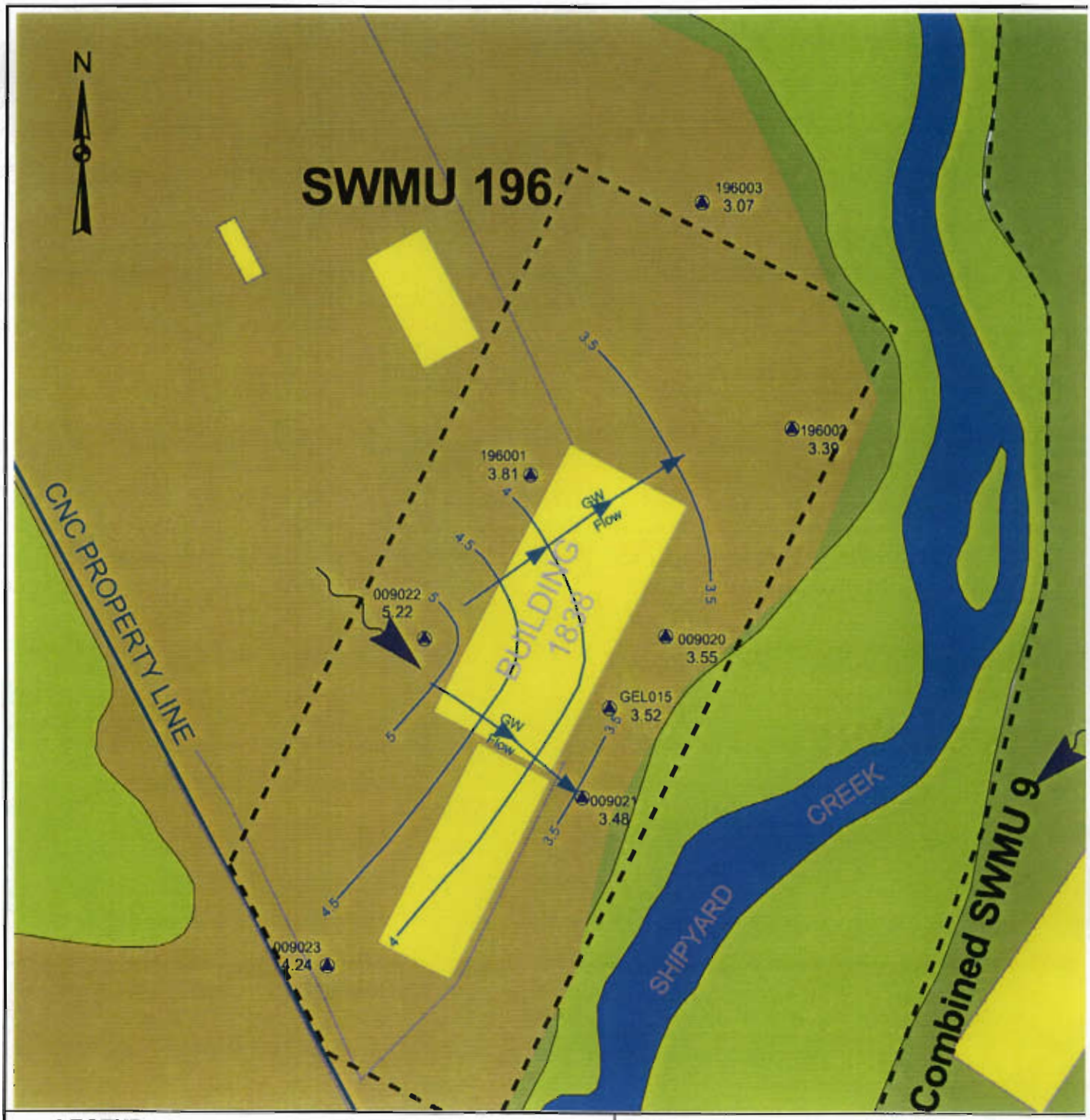

LEGEND

- Permanent Shallow Well
- Shallow GW Elevation Contour Line (ft msl)
- Shallow GW Flow Line
- Building
- Gravel or Porous Material
- Wetland (Marsh)
- Grass and/or Soil Cover
- Fence
- Surface Water Flow
- AOC/SWMU Boundary

Note: All depths in feet msl

50 0 50 100 Feet

ZONE H
RFI ADDENDUM
CHARLESTON NAVAL COMPLEX
CHARLESTON, SC

Figure 2.4.11
SWMU 196

Shallow Groundwater Flow
High Tide - February 7, 2000

g:\navy\cto-029\zone-h\rfi-rpts\addendum 00\arcview\196 geology.apr 3/9/00

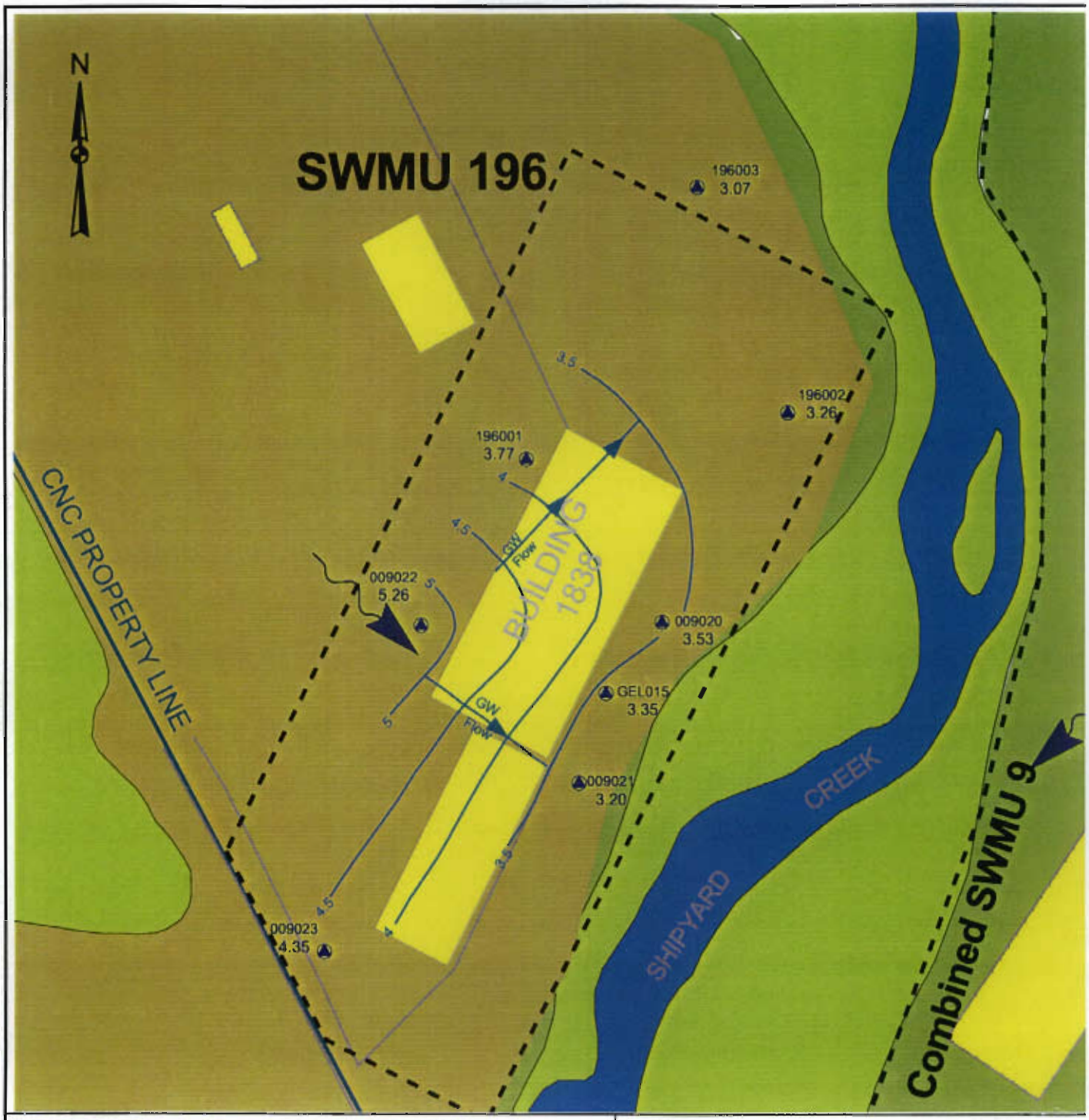

LEGEND

- Permanent Shallow Well
- Shallow GW Elevation Contour Line (ft msl)
- Shallow GW Flow Line
- Building
- Gravel or Porous Material
- Wetland (Marsh)
- Grass and/or Soil Cover
- Fence
- Surface Water Flow
- AOC/SWMU Boundary

Note: All depths in feet msl

50 0 50 100 Feet

ZONE H
RFI ADDENDUM
CHARLESTON NAVAL COMPLEX
CHARLESTON, SC

Figure 2.4.12
SWMU 196

Shallow Groundwater Flow
Low Tide - February 7, 2000

g:\navy\cto-029\zone-h\rfi-rpts\addendum 00\arcview\196 geology.apr | 3/9/00

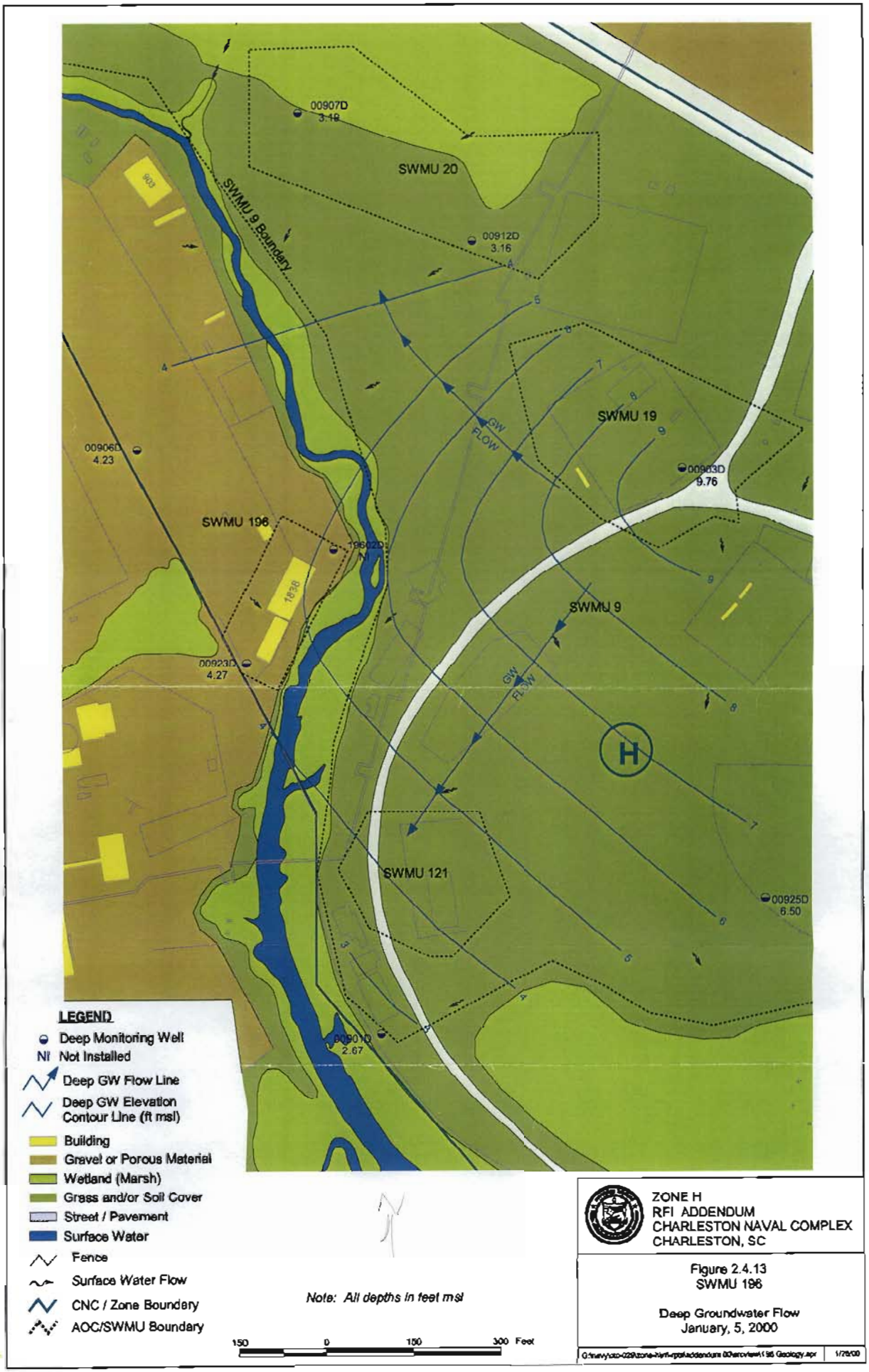

00907D
3.19
SWMU 20
SWMU 9 Boundary
00912D
3.16
SWMU 19
GW FLOW
00906D
4.23
00903D
9.76
SWMU 196
19602D
NI
1838
SWMU 9
00923D
4.27
GW FLOW
H
SWMU 121
00925D
6.50
00901D
2.67
LEGEND
Deep Monitoring Well
NI Not Installed
Deep GW Flow Line
Deep GW Elevation Contour Line (ft msl)
Building
Gravel or Porous Material
Wetland (Marsh)
Grass and/or Soil Cover
Street / Pavement
Surface Water
Fence
Surface Water Flow
CNC / Zone Boundary
AOC/SWMU Boundary
Note: All depths in feet msl
150 0 150 300 Feet
ZONE H
RFI ADDENDUM
CHARLESTON NAVAL COMPLEX
CHARLESTON, SC
Figure 2.4.13
SWMU 196
Deep Groundwater Flow
January, 5, 2000

Revised Appendix B

	StationID	H196SB018		H196SB019	
	SampleID	196SB01801 (0-1ft)		196SB01901 (0-1ft)	
	DateCollected	11/12/2001		11/12/2001	
	DateExtracted	11/13/2001		11/13/2001	
	DateAnalyzed	11/13/2001		11/13/2001	
	SDGNumber	51880		51880	
Parameter	**Units**				
Chlorobenzene	ug/kg	1.4	=	1.8	=

	StationID	H009GW020		H009GW021		H009GW021	
	SampleID	009GW020L1		009GW021L1		009GW021L1LR	
	DateCollected	10/26/2001		10/26/2001		10/26/2001	
	DateExtracted	10/31/2001		10/29/2001		10/31/2001	
	DateAnalyzed	10/31/2001		10/29/2001		10/31/2001	
	SDGNumber	51003		51003		51003	
Parameter	**Units**						
m-Xylene	ug/l						
Chloromethane	ug/L	200	UJ	1	U	20	R
Vinyl chloride	ug/l	200	U	3	=	20	R
Bromomethane	ug/L	200	U	1	U	20	R
Chloroethane	ug/L	200	U	1	U	20	R
1,1-Dichloroethene	ug/L	200	U	1	U	20	R
Acetone	ug/l	1000	U	5.7	UJ	74	R
Carbon Disulfide	ug/l	1000	U	5	U	100	R
Methylene Chloride	ug/l	1000	U	5	U	100	R
trans-1,2-Dichloroethene	ug/L	200	U	1.4	=	20	R
1,1-Dichloroethane	ug/L	200	U	1	U	20	R
Vinyl acetate	ug/L	1000	UJ	5	U	100	R
Methyl ethyl ketone (2-Butanone)	ug/L	1000	U	5	U	100	R
cis-1,2-Dichloroethylene	ug/l	200	U	11.3	=	10.1	R
1,2-Dichloroethene (total)	ug/L	400	U	12.7	=	10.1	R
Chloroform	ug/L	200	U	1	U	20	R
1,1,1-Trichloroethane	ug/l	200	U	1	U	20	R
Carbon Tetrachloride	ug/L	200	U	1	U	20	R
1,2-Dichloroethane	ug/L	200	UJ	1	U	20	R
Benzene	ug/L	200	U	4.8	=	5.3	R
Trichloroethylene (TCE)	ug/l	200	U	1.3	=	20	R
1,2-Dichloropropane	ug/l	200	U	1	U	20	R
Bromodichloromethane	ug/L	200	U	1	U	20	R
2-Chloroethyl vinyl ether	ug/L	1000	R	5	U	100	R
cis-1,3-Dichloropropene	ug/L	200	U	1	U	20	R
Methyl isobutyl ketone (4-Methyl-2-pentanone)	ug/L	1000	U	0.79	J	100	R
Toluene	ug/l	200	U	0.37	J	20	R
trans-1,3-Dichloropropene	ug/L	200	U	1	U	20	R
1,1,2-Trichloroethane	ug/l	200	U	1	U	20	R
2-Hexanone	ug/l	1000	U	5	U	100	R

	StationID	H009GW022		H196GW004		H196GW005	
	SampleID	009GW022L1		196GW004L1		196GW005L1	
	DateCollected	10/26/2001		10/26/2001		10/26/2001	
	DateExtracted	10/29/2001		10/31/2001		10/31/2001	
	DateAnalyzed	10/29/2001		10/31/2001		10/31/2001	
	SDGNumber	51003		51003		51003	
Parameter	**Units**						
m-Xylene	ug/l						
Chloromethane	ug/L	1	U	100	UJ	10	UJ
Vinyl chloride	ug/l	1	U	100	U	10	U
Bromomethane	ug/L	1	U	100	U	10	U
Chloroethane	ug/L	1	U	100	U	10	U
1,1-Dichloroethene	ug/L	1	U	100	U	10	U
Acetone	ug/l	5	UJ	500	U	50	U
Carbon Disulfide	ug/l	5	U	500	U	50	U
Methylene Chloride	ug/l	5	U	500	U	50	U
trans-1,2-Dichloroethene	ug/L	1	U	100	U	10	U
1,1-Dichloroethane	ug/L	1	U	100	U	10	U
Vinyl acetate	ug/L	5	U	500	UJ	50	UJ
Methyl ethyl ketone (2-Butanone)	ug/L	5	U	500	U	50	U
cis-1,2-Dichloroethylene	ug/l	10.9	=	112	=	10	U
1,2-Dichloroethene (total)	ug/L	10.9	=	112	J	20	U
Chloroform	ug/L	1	U	100	U	10	U
1,1,1-Trichloroethane	ug/l	1	U	100	U	10	U
Carbon Tetrachloride	ug/L	1	U	100	U	10	U
1,2-Dichloroethane	ug/L	1	U	100	UJ	10	UJ
Benzene	ug/L	1.9	=	670	=	11.2	=
Trichloroethylene (TCE)	ug/l	9.1	=	21.3	J	10	U
1,2-Dichloropropane	ug/l	1	U	100	U	10	U
Bromodichloromethane	ug/L	1	U	100	U	10	U
2-Chloroethyl vinyl ether	ug/L	5	U	500	R	50	R
cis-1,3-Dichloropropene	ug/L	1	U	100	U	10	U
Methyl isobutyl ketone (4-Methyl-2-pentanone)	ug/L	5	U	500	U	50	U
Toluene	ug/l	2.5	=	1520	=	2.6	J
trans-1,3-Dichloropropene	ug/L	1	U	100	U	10	U
1,1,2-Trichloroethane	ug/l	1	U	100	U	10	U
2-Hexanone	ug/l	5	U	500	U	50	U

	StationID	H196GW006		H196GW007		H196GW008	
	SampleID	196GW006L1		196GW007L1		196GW008L1	
	DateCollected	10/26/2001		10/26/2001		10/26/2001	
	DateExtracted	10/31/2001		10/31/2001		10/31/2001	
	DateAnalyzed	10/31/2001		10/31/2001		10/31/2001	
	SDGNumber	51003		51003		51003	
Parameter	**Units**						
m-Xylene	ug/l						
Chloromethane	ug/L	250	UJ	100	UJ	100	UJ
Vinyl chloride	ug/l	250	U	100	U	100	U
Bromomethane	ug/L	250	U	100	U	100	U
Chloroethane	ug/L	250	U	100	U	100	U
1,1-Dichloroethene	ug/L	250	U	100	U	100	U
Acetone	ug/l	1250	U	500	U	500	U
Carbon Disulfide	ug/l	1250	U	500	U	500	U
Methylene Chloride	ug/l	158	J	500	U	66.9	J
trans-1,2-Dichloroethene	ug/L	250	U	100	U	100	U
1,1-Dichloroethane	ug/L	250	U	100	U	100	U
Vinyl acetate	ug/L	1250	UJ	500	UJ	500	UJ
Methyl ethyl ketone (2-Butanone)	ug/L	1250	U	500	U	500	U
cis-1,2-Dichloroethylene	ug/l	250	U	100	U	32.6	J
1,2-Dichloroethene (total)	ug/L	500	U	200	U	32.6	J
Chloroform	ug/L	250	U	100	U	100	U
1,1,1-Trichloroethane	ug/l	250	U	100	U	100	U
Carbon Tetrachloride	ug/L	250	U	100	U	100	U
1,2-Dichloroethane	ug/L	250	UJ	100	UJ	100	UJ
Benzene	ug/L	85	J	22.9	J	21.3	J
Trichloroethylene (TCE)	ug/l	250	U	100	U	100	U
1,2-Dichloropropane	ug/l	250	U	100	U	100	U
Bromodichloromethane	ug/L	250	U	100	U	100	U
2-Chloroethyl vinyl ether	ug/L	1250	U	500	R	500	R
cis-1,3-Dichloropropene	ug/L	250	R	100	U	100	U
Methyl isobutyl ketone (4-Methyl-2-pentanone)	ug/L	1250	U	500	U	500	U
Toluene	ug/l	250	U	100	U	100	U
trans-1,3-Dichloropropene	ug/L	250	U	100	U	100	U
1,1,2-Trichloroethane	ug/l	250	U	100	U	100	U
2-Hexanone	ug/l	1250	U	500	U	500	U

	StationID	H196GW009		H196GW009		H196GW010	
	SampleID	196GW009L1		196HW009L1		196GW010L1	
	DateCollected	10/26/2001		10/26/2001		10/26/2001	
	DateExtracted	10/31/2001		10/31/2001		10/31/2001	
	DateAnalyzed	10/31/2001		10/31/2001		10/31/2001	
	SDGNumber	51003		51003		51003	
Parameter	**Units**						
m-Xylene	ug/l						
Chloromethane	ug/L	50	UJ	50	UJ	100	UJ
Vinyl chloride	ug/l	50	U	50	U	100	U
Bromomethane	ug/L	50	U	50	U	100	U
Chloroethane	ug/L	50	U	50	U	100	U
1,1-Dichloroethene	ug/L	50	U	50	U	100	U
Acetone	ug/l	250	U	250	U	500	U
Carbon Disulfide	ug/l	250	U	250	U	500	U
Methylene Chloride	ug/l	250	U	250	U	500	U
trans-1,2-Dichloroethene	ug/L	50	U	50	U	100	U
1,1-Dichloroethane	ug/L	50	U	50	U	100	U
Vinyl acetate	ug/L	250	UJ	250	UJ	500	UJ
Methyl ethyl ketone (2-Butanone)	ug/L	250	U	250	U	500	U
cis-1,2-Dichloroethylene	ug/l	37.6	J	37.2	J	100	U
1,2-Dichloroethene (total)	ug/L	37.6	J	37.2	J	200	U
Chloroform	ug/L	50	U	50	U	100	U
1,1,1-Trichloroethane	ug/l	50	U	50	U	100	U
Carbon Tetrachloride	ug/L	50	U	50	U	100	U
1,2-Dichloroethane	ug/L	50	UJ	50	UJ	100	UJ
Benzene	ug/L	144	=	158	=	100	U
Trichloroethylene (TCE)	ug/l	50	U	50	U	100	U
1,2-Dichloropropane	ug/l	50	U	50	U	100	U
Bromodichloromethane	ug/L	50	U	50	U	100	U
2-Chloroethyl vinyl ether	ug/L	250	R	250	R	500	R
cis-1,3-Dichloropropene	ug/L	50	U	50	U	100	U
Methyl isobutyl ketone (4-Methyl-2-pentanone)	ug/L	250	U	250	U	500	U
Toluene	ug/l	440	=	450	=	100	U
trans-1,3-Dichloropropene	ug/L	50	U	50	U	100	U
1,1,2-Trichloroethane	ug/l	50	U	50	U	100	U
2-Hexanone	ug/l	250	U	250	U	500	U

	StationID	HGELGW015		H009GW020		H009GW020	
	SampleID	GELGW015L1		009GW020L2		009GW020L2LR	
	DateCollected	10/26/2001		11/20/2001		11/20/2001	
	DateExtracted	10/29/2001		11/29/2001		11/30/2001	
	DateAnalyzed	10/29/2001		11/29/2001		11/30/2001	
	SDGNumber	51003		52363		52363	
Parameter	**Units**						
m-Xylene	ug/l						
Chloromethane	ug/L	1	U	1	U	1000	R
Vinyl chloride	ug/l	1	U	1	U	1000	R
Bromomethane	ug/L	1	U	1	UJ	1000	R
Chloroethane	ug/L	1	U	1	UJ	1000	R
1,1-Dichloroethene	ug/L	1	U	1	U	1000	R
Acetone	ug/l	5	U	10.5	U	5000	R
Carbon Disulfide	ug/l	5	U	5	U	5000	R
Methylene Chloride	ug/l	5	U	5	U	3880	R
trans-1,2-Dichloroethene	ug/L	1	U	1	U	1000	R
1,1-Dichloroethane	ug/L	1	U	1	U	1000	R
Vinyl acetate	ug/L	5	U	5	U	5000	R
Methyl ethyl ketone (2-Butanone)	ug/L	5	U	5	U	5000	R
cis-1,2-Dichloroethylene	ug/l	0.89	J	1	U	1000	R
1,2-Dichloroethene (total)	ug/L	0.89	J	2	U	2000	R
Chloroform	ug/L	1	U	1	U	1000	R
1,1,1-Trichloroethane	ug/l	1	U	1	U	1000	R
Carbon Tetrachloride	ug/L	1	U	1	U	1000	R
1,2-Dichloroethane	ug/L	1	U	1	UJ	1000	R
Benzene	ug/L	119	R	22.2	=	1000	R
Trichloroethylene (TCE)	ug/l	0.43	J	1	U	1000	R
1,2-Dichloropropane	ug/l	1	U	1	U	1000	R
Bromodichloromethane	ug/L	1	U	1	U	1000	R
2-Chloroethyl vinyl ether	ug/L	5	U	5	U	5000	R
cis-1,3-Dichloropropene	ug/L	1	U	1	U	1000	R
Methyl isobutyl ketone (4-Methyl-2-pentanone)	ug/L	5	U	5	U	5000	R
Toluene	ug/l	1.5	=	1	U	1000	R
trans-1,3-Dichloropropene	ug/L	1	U	1	U	1000	R
1,1,2-Trichloroethane	ug/l	1	U	1	U	1000	R
2-Hexanone	ug/l	5	U	5	U	5000	R

	StationID	H009GW021		H009GW021		H196GW004	
	SampleID	009GW021L2		009GW021L2LR		196GW004L2	
	DateCollected	11/20/2001		11/20/2001		11/20/2001	
	DateExtracted	11/29/2001		11/30/2001		11/29/2001	
	DateAnalyzed	11/29/2001		11/30/2001		11/29/2001	
	SDGNumber	52363		52363		52363	
Parameter	**Units**						
m-Xylene	ug/l						
Chloromethane	ug/L	1	U	10	R	1	U
Vinyl chloride	ug/l	4.1	=	10	R	11.3	=
Bromomethane	ug/L	1	UJ	10	R	1	UJ
Chloroethane	ug/L	1	UJ	10	R	1	UJ
1,1-Dichloroethene	ug/L	1	U	10	R	1	U
Acetone	ug/l	10.9	U	50	R	106	=
Carbon Disulfide	ug/l	5	U	50	R	9.2	=
Methylene Chloride	ug/l	5	U	41.5	R	32	U
trans-1,2-Dichloroethene	ug/L	0.65	J	10	R	1.1	=
1,1-Dichloroethane	ug/L	1	U	10	R	1	U
Vinyl acetate	ug/L	5	U	50	R	5	U
Methyl ethyl ketone (2-Butanone)	ug/L	5	U	50	R	12.6	=
cis-1,2-Dichloroethylene	ug/l	8.3	=	8.6	R	48.5	=
1,2-Dichloroethene (total)	ug/L	8.9	=	8.6	R	49.6	=
Chloroform	ug/L	1	U	10	R	1	U
1,1,1-Trichloroethane	ug/l	1	U	10	R	1	U
Carbon Tetrachloride	ug/L	1	U	10	R	1	U
1,2-Dichloroethane	ug/L	1	UJ	10	R	1	UJ
Benzene	ug/L	4.5	=	5.7	R	543	R
Trichloroethylene (TCE)	ug/l	0.52	J	10	R	22	=
1,2-Dichloropropane	ug/l	1	U	10	R	1	U
Bromodichloromethane	ug/L	1	U	10	R	1	U
2-Chloroethyl vinyl ether	ug/L	5	U	50	R	5	U
cis-1,3-Dichloropropene	ug/L	1	U	10	R	1	U
Methyl isobutyl ketone (4-Methyl-2-pentanone)	ug/L	5	U	50	R	0.93	J
Toluene	ug/l	1.8	=	2.2	R	782	R
trans-1,3-Dichloropropene	ug/L	1	U	10	R	1	U
1,1,2-Trichloroethane	ug/l	1	U	10	R	1	U
2-Hexanone	ug/l	5	U	50	R	5	U

	StationID	H196GW004		H196GW005		H196GW005	
	SampleID	196GW004L2LR		196GW005L2		196GW005L2LR	
	DateCollected	11/20/2001		11/20/2001		11/20/2001	
	DateExtracted	11/30/2001		11/29/2001		11/30/2001	
	DateAnalyzed	11/30/2001		11/29/2001		11/30/2001	
	SDGNumber	52363		52363		52363	
Parameter	**Units**						
m-Xylene	ug/l						
Chloromethane	ug/L	1000	R	1	U	10	R
Vinyl chloride	ug/l	1000	R	1	U	10	R
Bromomethane	ug/L	1000	R	1	UJ	10	R
Chloroethane	ug/L	1000	R	1	UJ	10	R
1,1-Dichloroethene	ug/L	1000	R	1	U	10	R
Acetone	ug/l	5000	R	64.5	=	50	R
Carbon Disulfide	ug/l	5000	R	6.6	=	50	R
Methylene Chloride	ug/l	4300	R	5	U	38.4	R
trans-1,2-Dichloroethene	ug/L	1000	R	1	U	10	R
1,1-Dichloroethane	ug/L	1000	R	1	U	10	R
Vinyl acetate	ug/L	5000	R	5	U	50	R
Methyl ethyl ketone (2-Butanone)	ug/L	5000	R	8.1	=	50	R
cis-1,2-Dichloroethylene	ug/l	1000	R	1	U	10	R
1,2-Dichloroethene (total)	ug/L	2000	R	2	U	20	R
Chloroform	ug/L	1000	R	0.22	J	10	R
1,1,1-Trichloroethane	ug/l	1000	R	1	U	10	R
Carbon Tetrachloride	ug/L	1000	R	1	U	10	R
1,2-Dichloroethane	ug/L	1000	R	1	UJ	10	R
Benzene	ug/L	723	J	1.2	U	10	R
Trichloroethylene (TCE)	ug/l	1000	R	0.36	J	10	R
1,2-Dichloropropane	ug/l	1000	R	1	U	10	R
Bromodichloromethane	ug/L	1000	R	1	U	10	R
2-Chloroethyl vinyl ether	ug/L	5000	R	5	U	50	R
cis-1,3-Dichloropropene	ug/L	1000	R	1	U	10	R
Methyl isobutyl ketone (4-Methyl-2-pentanone)	ug/L	5000	R	5	U	50	R
Toluene	ug/l	953	J	1.3	=	10	R
trans-1,3-Dichloropropene	ug/L	1000	R	1	U	10	R
1,1,2-Trichloroethane	ug/l	1000	R	1	U	10	R
2-Hexanone	ug/l	5000	R	5	U	50	R

	StationID	H196GW006		H196GW006		H196GW007	
	SampleID	196GW006L2		196GW006L2LR		196GW007L2	
	DateCollected	11/20/2001		11/20/2001		11/20/2001	
	DateExtracted	11/29/2001		11/30/2001		11/29/2001	
	DateAnalyzed	11/29/2001		11/30/2001		11/29/2001	
	SDGNumber	52363		52363		52363	
Parameter	**Units**						
m-Xylene	ug/l						
Chloromethane	ug/L	1	U	20	R	1	U
Vinyl chloride	ug/l	1	U	20	R	0.87	J
Bromomethane	ug/L	1	UJ	20	R	1	UJ
Chloroethane	ug/L	1	UJ	20	R	1	UJ
1,1-Dichloroethene	ug/L	1	U	20	R	1	U
Acetone	ug/l	192	J	100	R	70.3	=
Carbon Disulfide	ug/l	3	J	100	R	8.4	=
Methylene Chloride	ug/l	5	U	70	R	5	U
trans-1,2-Dichloroethene	ug/L	1	U	20	R	0.35	J
1,1-Dichloroethane	ug/L	1	U	20	R	1	U
Vinyl acetate	ug/L	5	U	100	R	5	U
Methyl ethyl ketone (2-Butanone)	ug/L	12.3	J	100	R	10.1	=
cis-1,2-Dichloroethylene	ug/l	1	U	20	R	0.42	J
1,2-Dichloroethene (total)	ug/L	2	U	40	R	0.77	J
Chloroform	ug/L	0.82	J	20	R	1	U
1,1,1-Trichloroethane	ug/l	1	U	20	R	1	U
Carbon Tetrachloride	ug/L	1	U	20	R	1	U
1,2-Dichloroethane	ug/L	1	UJ	20	R	1	UJ
Benzene	ug/L	6.2	=	7.8	R	24.7	=
Trichloroethylene (TCE)	ug/l	1	U	20	R	1	U
1,2-Dichloropropane	ug/l	1	U	20	R	1	U
Bromodichloromethane	ug/L	0.42	J	20	R	1	U
2-Chloroethyl vinyl ether	ug/L	5	UJ	100	R	5	U
cis-1,3-Dichloropropene	ug/L	1	U	20	R	1	U
Methyl isobutyl ketone (4-Methyl-2-pentanone)	ug/L	5	U	100	R	5	U
Toluene	ug/l	1	U	20	R	1.3	=
trans-1,3-Dichloropropene	ug/L	1	U	20	R	1	U
1,1,2-Trichloroethane	ug/l	1	U	20	R	1	U
2-Hexanone	ug/l	5	U	100	R	5	U

	StationID	H196GW007		H196GW008		H196GW008	
	SampleID	196GW007L2LR		196GW008L2		196GW008L2LR	
	DateCollected	11/20/2001		11/20/2001		11/20/2001	
	DateExtracted	11/30/2001		11/29/2001		11/30/2001	
	DateAnalyzed	11/30/2001		11/29/2001		11/30/2001	
	SDGNumber	52363		52363		52363	
Parameter	**Units**						
m-Xylene	ug/l						
Chloromethane	ug/L	100	R	1	U	100	R
Vinyl chloride	ug/l	100	R	77.4	=	100	R
Bromomethane	ug/L	100	R	1	UJ	100	R
Chloroethane	ug/L	100	R	1	UJ	100	R
1,1-Dichloroethene	ug/L	100	R	1	U	100	R
Acetone	ug/l	500	R	11.3	U	500	R
Carbon Disulfide	ug/l	500	R	5	U	500	R
Methylene Chloride	ug/l	85.8	R	5	U	181	R
trans-1,2-Dichloroethene	ug/L	100	R	1	=	100	R
1,1-Dichloroethane	ug/L	100	R	1	=	100	R
Vinyl acetate	ug/L	500	R	5	U	500	R
Methyl ethyl ketone (2-Butanone)	ug/L	500	R	5	U	500	R
cis-1,2-Dichloroethylene	ug/l	100	R	27.6	=	100	R
1,2-Dichloroethene (total)	ug/L	200	R	28.7	=	200	R
Chloroform	ug/L	100	R	1	U	100	R
1,1,1-Trichloroethane	ug/l	100	R	1	U	100	R
Carbon Tetrachloride	ug/L	100	R	1	U	100	R
1,2-Dichloroethane	ug/L	100	R	1	UJ	100	R
Benzene	ug/L	35.5	R	26.1	=	36.1	R
Trichloroethylene (TCE)	ug/l	100	R	3.6	=	100	R
1,2-Dichloropropane	ug/l	100	R	1	U	100	R
Bromodichloromethane	ug/L	100	R	1	U	100	R
2-Chloroethyl vinyl ether	ug/L	500	R	5	U	500	R
cis-1,3-Dichloropropene	ug/L	100	R	1	U	100	R
Methyl isobutyl ketone (4-Methyl-2-pentanone)	ug/L	500	R	5	U	500	R
Toluene	ug/l	100	R	1.5	=	100	R
trans-1,3-Dichloropropene	ug/L	100	R	1	U	100	R
1,1,2-Trichloroethane	ug/l	100	R	1	U	100	R
2-Hexanone	ug/l	500	R	5	U	500	R

	StationID	H196GW008		H196GW008		H196GW010	
	SampleID	196HW008L2		196HW008L2LR		196GW010L2	
	DateCollected	11/20/2001		11/20/2001		11/20/2001	
	DateExtracted	11/29/2001		11/30/2001		11/29/2001	
	DateAnalyzed	11/29/2001		11/30/2001		11/29/2001	
	SDGNumber	52363		52363		52363	
Parameter	**Units**						
m-Xylene	ug/l						
Chloromethane	ug/L	1	U	100	R	1	U
Vinyl chloride	ug/l	59.6	=	100	R	1	U
Bromomethane	ug/L	1	UJ	100	R	1	UJ
Chloroethane	ug/L	1	UJ	100	R	1	UJ
1,1-Dichloroethene	ug/L	1	U	100	R	1	U
Acetone	ug/l	11	U	500	R	5	U
Carbon Disulfide	ug/l	5	U	500	R	5	U
Methylene Chloride	ug/l	5	U	381	R	5	U
trans-1,2-Dichloroethene	ug/L	1.2	=	100	R	1	U
1,1-Dichloroethane	ug/L	1.1	=	100	R	1	U
Vinyl acetate	ug/L	5	U	500	R	5	U
Methyl ethyl ketone (2-Butanone)	ug/L	5	U	500	R	5	U
cis-1,2-Dichloroethylene	ug/l	34.4	=	100	R	1	U
1,2-Dichloroethene (total)	ug/L	35.6	=	200	R	2	U
Chloroform	ug/L	1	U	100	R	1	U
1,1,1-Trichloroethane	ug/l	1	U	100	R	1	U
Carbon Tetrachloride	ug/L	1	U	100	R	1	U
1,2-Dichloroethane	ug/L	1	UJ	100	R	1	UJ
Benzene	ug/L	21	=	34.1	R	3	=
Trichloroethylene (TCE)	ug/l	4.1	=	100	R	1	U
1,2-Dichloropropane	ug/l	1	U	100	R	1	U
Bromodichloromethane	ug/L	1	U	100	R	1	U
2-Chloroethyl vinyl ether	ug/L	5	U	500	R	5	U
cis-1,3-Dichloropropene	ug/L	1	U	100	R	1	U
Methyl isobutyl ketone (4-Methyl-2-pentanone)	ug/L	5	U	500	R	5	U
Toluene	ug/l	1.8	=	100	R	1	U
trans-1,3-Dichloropropene	ug/L	1	U	100	R	1	U
1,1,2-Trichloroethane	ug/l	1	U	100	R	1	U
2-Hexanone	ug/l	5	U	500	R	5	U

	StationID	H196GW010		HGELGW015		HGELGW015	
	SampleID	196GW010L2LR		GELGW015L2		GELGW015L2LR	
	DateCollected	11/20/2001		11/20/2001		11/20/2001	
	DateExtracted	11/30/2001		11/29/2001		12/03/2001	
	DateAnalyzed	11/30/2001		11/29/2001		12/03/2001	
	SDGNumber	52363		52363		52363	
Parameter	**Units**						
m-Xylene	ug/l						
Chloromethane	ug/L	100	R	1	U	100	R
Vinyl chloride	ug/l	100	R	0.69	J	100	R
Bromomethane	ug/L	100	R	1	UJ	100	R
Chloroethane	ug/L	100	R	1	UJ	100	R
1,1-Dichloroethene	ug/L	100	R	1	U	100	R
Acetone	ug/l	500	R	14.1	U	500	R
Carbon Disulfide	ug/l	500	R	5	U	500	R
Methylene Chloride	ug/l	306	R	5	U	380	R
trans-1,2-Dichloroethene	ug/L	100	R	1	U	100	R
1,1-Dichloroethane	ug/L	100	R	1	U	100	R
Vinyl acetate	ug/L	500	R	5	U	500	R
Methyl ethyl ketone (2-Butanone)	ug/L	500	R	5	U	500	R
cis-1,2-Dichloroethylene	ug/l	100	R	0.77	J	100	R
1,2-Dichloroethene (total)	ug/L	200	R	0.77	J	200	R
Chloroform	ug/L	100	R	1	U	100	R
1,1,1-Trichloroethane	ug/l	100	R	1	U	100	R
Carbon Tetrachloride	ug/L	100	R	1	U	100	R
1,2-Dichloroethane	ug/L	100	R	1	UJ	100	R
Benzene	ug/L	100	R	116	R	147	=
Trichloroethylene (TCE)	ug/l	100	R	0.43	J	100	R
1,2-Dichloropropane	ug/l	100	R	1	U	100	R
Bromodichloromethane	ug/L	100	R	1	U	100	R
2-Chloroethyl vinyl ether	ug/L	500	R	5	U	500	R
cis-1,3-Dichloropropene	ug/L	100	R	1	U	100	R
Methyl isobutyl ketone (4-Methyl-2-pentanone)	ug/L	500	R	5	U	500	R
Toluene	ug/l	100	R	2	=	100	R
trans-1,3-Dichloropropene	ug/L	100	R	1	U	100	R
1,1,2-Trichloroethane	ug/l	100	R	1	U	100	R
2-Hexanone	ug/l	500	R	5	U	500	R

	StationID	H009GW022		H196GW006		H196GW009	
	SampleID	009GW022L3		196GW006L3		196GW009L3	
	DateCollected	12/06/2001		12/06/2001		12/06/2001	
	DateExtracted	12/08/2001		12/08/2001		12/08/2001	
	DateAnalyzed	12/08/2001		12/08/2001		12/08/2001	
	SDGNumber	53063		53063		53063	
Parameter	Units						
m-Xylene	ug/l						
Chloromethane	ug/L	50	UJ	250	UJ	500	UJ
Vinyl chloride	ug/l	50	U	250	U	500	U
Bromomethane	ug/L	50	U	250	U	500	U
Chloroethane	ug/L	50	UJ	250	UJ	500	UJ
1,1-Dichloroethene	ug/L	50	U	250	U	500	U
Acetone	ug/l	159	J	1250	U	2500	U
Carbon Disulfide	ug/l	250	U	1250	U	2500	U
Methylene Chloride	ug/l	250	U	1250	U	2500	U
trans-1,2-Dichloroethene	ug/L	50	U	250	U	500	U
1,1-Dichloroethane	ug/L	50	U	250	U	500	U
Vinyl acetate	ug/L	250	U	1250	U	2500	U
Methyl ethyl ketone (2-Butanone)	ug/L	250	U	1250	U	2500	U
cis-1,2-Dichloroethylene	ug/l	20.3	J	250	U	500	U
1,2-Dichloroethene (total)	ug/L	20.3	J	500	U	1000	U
Chloroform	ug/L	50	U	250	U	500	U
1,1,1-Trichloroethane	ug/l	50	U	250	U	500	U
Carbon Tetrachloride	ug/L	50	U	250	U	500	U
1,2-Dichloroethane	ug/L	50	U	250	U	500	U
Benzene	ug/L	50	U	250	U	385	J
Trichloroethylene (TCE)	ug/l	50	U	250	U	500	U
1,2-Dichloropropane	ug/l	50	U	250	U	500	U
Bromodichloromethane	ug/L	50	U	250	U	500	U
2-Chloroethyl vinyl ether	ug/L	250	U	1250	U	2500	U
cis-1,3-Dichloropropene	ug/L	50	U	250	U	500	U
Methyl isobutyl ketone (4-Methyl-2-pentanone)	ug/L	250	U	1250	U	2500	U
Toluene	ug/l	50	U	250	U	513	=
trans-1,3-Dichloropropene	ug/L	50	U	250	U	500	U
1,1,2-Trichloroethane	ug/l	50	U	250	U	500	U
2-Hexanone	ug/l	250	U	1250	U	2500	U

	StationID	HGELGW015		H009GW020		H009GW020	
	SampleID	GELGW015L3		009GW020L4		009GW020L4LR	
	DateCollected	12/06/2001		12/18/2001		12/18/2001	
	DateExtracted	12/08/2001		12/26/2001		12/26/2001	
	DateAnalyzed	12/08/2001		12/26/2001		12/26/2001	
	SDGNumber	53063		53777		53777	
Parameter	**Units**						
m-Xylene	ug/l						
Chloromethane	ug/L	250	UJ	50	U	250	R
Vinyl chloride	ug/l	250	U	50	U	250	R
Bromomethane	ug/L	250	U	50	U	250	R
Chloroethane	ug/L	250	UJ	50	U	250	R
1,1-Dichloroethene	ug/L	250	U	50	U	250	R
Acetone	ug/l	1250	U	250	U	1250	R
Carbon Disulfide	ug/l	1250	U	250	U	1250	R
Methylene Chloride	ug/l	1250	U	250	U	1250	R
trans-1,2-Dichloroethene	ug/L	250	U	50	U	250	R
1,1-Dichloroethane	ug/L	250	U	50	U	250	R
Vinyl acetate	ug/L	1250	U	250	UJ	1250	R
Methyl ethyl ketone (2-Butanone)	ug/L	1250	U	250	U	1250	R
cis-1,2-Dichloroethylene	ug/l	250	U	50	U	250	R
1,2-Dichloroethene (total)	ug/L	500	U	100	U	500	R
Chloroform	ug/L	250	U	50	U	250	R
1,1,1-Trichloroethane	ug/l	250	U	50	U	250	R
Carbon Tetrachloride	ug/L	250	U	50	U	250	R
1,2-Dichloroethane	ug/L	250	U	50	U	250	R
Benzene	ug/L	103	J	23.2	J	250	R
Trichloroethylene (TCE)	ug/l	250	U	50	U	250	R
1,2-Dichloropropane	ug/l	250	U	50	U	250	R
Bromodichloromethane	ug/L	250	U	50	U	250	R
2-Chloroethyl vinyl ether	ug/L	1250	U	250	U	1250	R
cis-1,3-Dichloropropene	ug/L	250	U	50	U	250	R
Methyl isobutyl ketone (4-Methyl-2-pentanone)	ug/L	1250	U	250	U	1250	R
Toluene	ug/l	250	U	9.7	J	250	R
trans-1,3-Dichloropropene	ug/L	250	U	50	U	250	R
1,1,2-Trichloroethane	ug/l	250	U	50	U	250	R
2-Hexanone	ug/l	1250	U	250	U	1250	R

	StationID	H196GW004		H196GW004		H196GW004	
	SampleID	196GW004L4		196GW004L4LR		196HW004L4	
	DateCollected	12/18/2001		12/18/2001		12/18/2001	
	DateExtracted	12/26/2001		12/27/2001		12/26/2001	
	DateAnalyzed	12/26/2001		12/27/2001		12/26/2001	
	SDGNumber	53777		53777		53777	
Parameter	**Units**						
m-Xylene	ug/l						
Chloromethane	ug/L	50	U	250	R	50	U
Vinyl chloride	ug/l	50	U	250	R	50	U
Bromomethane	ug/L	50	U	250	R	50	U
Chloroethane	ug/L	50	U	250	R	50	U
1,1-Dichloroethene	ug/L	50	U	250	R	50	U
Acetone	ug/l	246	J	1250	R	248	J
Carbon Disulfide	ug/l	250	U	1250	R	250	U
Methylene Chloride	ug/l	250	U	1250	R	250	U
trans-1,2-Dichloroethene	ug/L	50	U	250	R	50	U
1,1-Dichloroethane	ug/L	50	U	250	R	50	U
Vinyl acetate	ug/L	250	UJ	1250	R	250	UJ
Methyl ethyl ketone (2-Butanone)	ug/L	250	U	1250	R	250	U
cis-1,2-Dichloroethylene	ug/l	64.6	=	250	R	53.4	=
1,2-Dichloroethene (total)	ug/L	64.6	J	500	R	53.4	J
Chloroform	ug/L	50	U	250	R	50	U
1,1,1-Trichloroethane	ug/l	50	U	250	R	50	U
Carbon Tetrachloride	ug/L	50	U	250	R	50	U
1,2-Dichloroethane	ug/L	50	U	250	R	50	U
Benzene	ug/L	612	=	616	R	310	=
Trichloroethylene (TCE)	ug/l	30.7	J	250	R	28.9	J
1,2-Dichloropropane	ug/l	50	U	250	R	50	U
Bromodichloromethane	ug/L	50	U	250	R	50	U
2-Chloroethyl vinyl ether	ug/L	250	U	1250	R	250	U
cis-1,3-Dichloropropene	ug/L	50	U	250	R	50	U
Methyl isobutyl ketone (4-Methyl-2-pentanone)	ug/L	250	U	1250	R	250	U
Toluene	ug/l	496	=	514	R	283	=
trans-1,3-Dichloropropene	ug/L	50	U	250	R	50	U
1,1,2-Trichloroethane	ug/l	50	U	250	R	50	U
2-Hexanone	ug/l	250	U	1250	R	250	U

	StationID	H196GW004		H196GW005		H196GW005	
	SampleID	196HW004L4LR		196GW005L4		196GW005L4LR	
	DateCollected	12/18/2001		12/18/2001		12/18/2001	
	DateExtracted	12/27/2001		12/26/2001		12/27/2001	
	DateAnalyzed	12/27/2001		12/26/2001		12/27/2001	
	SDGNumber	53777		53777		53777	
Parameter	**Units**						
m-Xylene	ug/l						
Chloromethane	ug/L	250	R	10	U	100	R
Vinyl chloride	ug/l	250	R	10	U	100	R
Bromomethane	ug/L	250	R	10	U	100	R
Chloroethane	ug/L	250	R	10	U	100	R
1,1-Dichloroethene	ug/L	250	R	10	U	100	R
Acetone	ug/l	1250	R	61.3	U	500	R
Carbon Disulfide	ug/l	1250	R	50	U	500	R
Methylene Chloride	ug/l	1250	R	50	U	500	R
trans-1,2-Dichloroethene	ug/L	250	R	10	U	100	R
1,1-Dichloroethane	ug/L	250	R	10	U	100	R
Vinyl acetate	ug/L	1250	R	50	UJ	500	R
Methyl ethyl ketone (2-Butanone)	ug/L	1250	R	50	U	500	R
cis-1,2-Dichloroethylene	ug/l	250	R	10	U	100	R
1,2-Dichloroethene (total)	ug/L	500	R	20	U	200	R
Chloroform	ug/L	250	R	10	U	100	R
1,1,1-Trichloroethane	ug/l	250	R	10	U	100	R
Carbon Tetrachloride	ug/L	250	R	10	U	100	R
1,2-Dichloroethane	ug/L	250	R	10	U	100	R
Benzene	ug/L	381	R	10	U	100	R
Trichloroethylene (TCE)	ug/l	250	R	10	U	100	R
1,2-Dichloropropane	ug/l	250	R	10	U	100	R
Bromodichloromethane	ug/L	250	R	10	U	100	R
2-Chloroethyl vinyl ether	ug/L	1250	R	50	U	500	R
cis-1,3-Dichloropropene	ug/L	250	R	10	U	100	R
Methyl isobutyl ketone (4-Methyl-2-pentanone)	ug/L	1250	R	50	U	500	R
Toluene	ug/l	263	R	10	U	100	R
trans-1,3-Dichloropropene	ug/L	250	R	10	U	100	R
1,1,2-Trichloroethane	ug/l	250	R	10	U	100	R
2-Hexanone	ug/l	1250	R	50	U	500	R

	StationID	H196GW006		H196GW008		H196GW008	
	SampleID	196GW006L4		196GW008L4		196GW008L4LR	
	DateCollected	12/18/2001		12/18/2001		12/18/2001	
	DateExtracted	12/26/2001		12/26/2001		01/04/2002	
	DateAnalyzed	12/26/2001		12/26/2001		01/04/2002	
	SDGNumber	53777		53777		53777	
Parameter	**Units**						
m-Xylene	ug/l						
Chloromethane	ug/L	50	U	10	U	200	R
Vinyl chloride	ug/l	50	U	24.9	=	200	R
Bromomethane	ug/L	50	U	10	U	200	R
Chloroethane	ug/L	50	U	10	U	200	R
1,1-Dichloroethene	ug/L	50	U	10	U	200	R
Acetone	ug/l	170	J	74	U	1000	R
Carbon Disulfide	ug/l	250	U	50	U	1000	R
Methylene Chloride	ug/l	250	U	50	U	1000	R
trans-1,2-Dichloroethene	ug/L	50	U	10	U	200	R
1,1-Dichloroethane	ug/L	50	U	10	U	200	R
Vinyl acetate	ug/L	250	UJ	50	UJ	1000	R
Methyl ethyl ketone (2-Butanone)	ug/L	250	U	50	U	1000	R
cis-1,2-Dichloroethylene	ug/l	50	U	20.4	=	200	R
1,2-Dichloroethene (total)	ug/L	100	U	20.4	=	400	R
Chloroform	ug/L	50	U	10	U	200	R
1,1,1-Trichloroethane	ug/l	50	U	10	U	200	R
Carbon Tetrachloride	ug/L	50	U	10	U	200	R
1,2-Dichloroethane	ug/L	50	U	10	U	200	R
Benzene	ug/L	50	U	35	=	200	R
Trichloroethylene (TCE)	ug/l	50	U	10	U	200	R
1,2-Dichloropropane	ug/l	50	U	10	U	200	R
Bromodichloromethane	ug/L	50	U	10	U	200	R
2-Chloroethyl vinyl ether	ug/L	250	U	50	U	1000	R
cis-1,3-Dichloropropene	ug/L	50	U	10	U	200	R
Methyl isobutyl ketone (4-Methyl-2-pentanone)	ug/L	250	U	50	U	1000	R
Toluene	ug/l	13.6	J	9.5	J	35	R
trans-1,3-Dichloropropene	ug/L	50	U	10	U	200	R
1,1,2-Trichloroethane	ug/l	50	U	10	U	200	R
2-Hexanone	ug/l	250	U	50	U	1000	R

	StationID	H196GW010		H196GW010		HGELGW015	
	SampleID	196GW010L4		196GW010L4LR		GELGW015L4	
	DateCollected	12/18/2001		12/18/2001		12/18/2001	
	DateExtracted	12/26/2001		01/04/2002		12/26/2001	
	DateAnalyzed	12/26/2001		01/04/2002		12/26/2001	
	SDGNumber	53777		53777		53777	
Parameter	**Units**						
m-Xylene	ug/l						
Chloromethane	ug/L	1	U	100	R	10	U
Vinyl chloride	ug/l	1	U	100	R	10	U
Bromomethane	ug/L	1	U	100	R	10	U
Chloroethane	ug/L	1	U	100	R	10	U
1,1-Dichloroethene	ug/L	1	U	100	R	10	U
Acetone	ug/l	5	U	500	R	50	U
Carbon Disulfide	ug/l	5	U	500	R	50	U
Methylene Chloride	ug/l	5	U	500	R	50	U
trans-1,2-Dichloroethene	ug/L	1	U	100	R	10	U
1,1-Dichloroethane	ug/L	1	U	100	R	10	U
Vinyl acetate	ug/L	5	UJ	500	R	50	UJ
Methyl ethyl ketone (2-Butanone)	ug/L	5	U	500	R	50	U
cis-1,2-Dichloroethylene	ug/l	1	U	100	R	10	U
1,2-Dichloroethene (total)	ug/L	2	U	200	R	20	U
Chloroform	ug/L	1	U	100	R	10	U
1,1,1-Trichloroethane	ug/l	1	U	100	R	10	U
Carbon Tetrachloride	ug/L	1	U	100	R	10	U
1,2-Dichloroethane	ug/L	1	U	100	R	10	U
Benzene	ug/L	2	=	100	R	128	=
Trichloroethylene (TCE)	ug/l	1	U	100	R	10	U
1,2-Dichloropropane	ug/l	1	U	100	R	10	U
Bromodichloromethane	ug/L	1	U	100	R	10	U
2-Chloroethyl vinyl ether	ug/L	5	U	500	R	50	U
cis-1,3-Dichloropropene	ug/L	1	U	100	R	10	U
Methyl isobutyl ketone (4-Methyl-2-pentanone)	ug/L	5	U	500	R	50	U
Toluene	ug/l	0.3	J	100	R	2.7	J
trans-1,3-Dichloropropene	ug/L	1	U	100	R	10	U
1,1,2-Trichloroethane	ug/l	1	U	100	R	10	U
2-Hexanone	ug/l	5	U	500	R	50	U

	StationID	HGELGW015		H009GW021		H009GW021	
	SampleID	GELGW015L4LR		009GW021L4		009GW021L4LR	
	DateCollected	12/18/2001		12/19/2001		12/19/2001	
	DateExtracted	12/27/2001		12/26/2001		12/27/2001	
	DateAnalyzed	12/27/2001		12/26/2001		12/27/2001	
	SDGNumber	53777		53777		53777	
Parameter	**Units**						
m-Xylene	ug/l						
Chloromethane	ug/L	500	R	50	U	500	R
Vinyl chloride	ug/l	500	R	50	U	500	R
Bromomethane	ug/L	500	R	50	U	500	R
Chloroethane	ug/L	500	R	50	U	500	R
1,1-Dichloroethene	ug/L	500	R	50	U	500	R
Acetone	ug/l	2500	R	252	=	2500	R
Carbon Disulfide	ug/l	2500	R	250	U	2500	R
Methylene Chloride	ug/l	2500	R	250	U	2500	R
trans-1,2-Dichloroethene	ug/L	500	R	50	U	500	R
1,1-Dichloroethane	ug/L	500	R	50	U	500	R
Vinyl acetate	ug/L	2500	R	250	UJ	2500	R
Methyl ethyl ketone (2-Butanone)	ug/L	2500	R	250	U	2500	R
cis-1,2-Dichloroethylene	ug/l	500	R	24.3	J	500	R
1,2-Dichloroethene (total)	ug/L	1000	R	24.3	J	1000	R
Chloroform	ug/L	500	R	50	U	500	R
1,1,1-Trichloroethane	ug/l	500	R	50	U	500	R
Carbon Tetrachloride	ug/L	500	R	50	U	500	R
1,2-Dichloroethane	ug/L	500	R	50	U	500	R
Benzene	ug/L	500	R	17.8	J	500	R
Trichloroethylene (TCE)	ug/l	500	R	50	U	500	R
1,2-Dichloropropane	ug/l	500	R	50	U	500	R
Bromodichloromethane	ug/L	500	R	50	U	500	R
2-Chloroethyl vinyl ether	ug/L	2500	R	250	U	2500	R
cis-1,3-Dichloropropene	ug/L	500	R	50	U	500	R
Methyl isobutyl ketone (4-Methyl-2-pentanone)	ug/L	2500	R	250	U	2500	R
Toluene	ug/l	500	R	42.8	J	88.2	R
trans-1,3-Dichloropropene	ug/L	500	R	50	U	500	R
1,1,2-Trichloroethane	ug/l	500	R	50	U	500	R
2-Hexanone	ug/l	2500	R	250	U	2500	R

	StationID	H009GW022		H009GW022		H196GW007	
	SampleID	009GW022L4		009GW022L4LR		196GW007L4	
	DateCollected	12/19/2001		12/19/2001		12/19/2001	
	DateExtracted	12/26/2001		12/27/2001		12/26/2001	
	DateAnalyzed	12/26/2001		12/27/2001		12/26/2001	
	SDGNumber	53777		53777		53777	
Parameter	**Units**						
m-Xylene	ug/l						
Chloromethane	ug/L	1	U	50	R	10	U
Vinyl chloride	ug/l	1	U	50	R	10	U
Bromomethane	ug/L	1	U	50	R	10	U
Chloroethane	ug/L	1	U	50	R	10	U
1,1-Dichloroethene	ug/L	1	U	50	R	10	U
Acetone	ug/l	5	U	250	R	79.4	U
Carbon Disulfide	ug/l	5	U	250	R	50	U
Methylene Chloride	ug/l	5	U	250	R	50	U
trans-1,2-Dichloroethene	ug/L	1	U	50	R	10	U
1,1-Dichloroethane	ug/L	1	U	50	R	10	U
Vinyl acetate	ug/L	5	UJ	250	R	50	UJ
Methyl ethyl ketone (2-Butanone)	ug/L	5	U	250	R	50	U
cis-1,2-Dichloroethylene	ug/l	24.9	=	23.9	R	10	U
1,2-Dichloroethene (total)	ug/L	24.9	=	23.9	R	20	U
Chloroform	ug/L	1	U	50	R	10	U
1,1,1-Trichloroethane	ug/l	1	U	50	R	10	U
Carbon Tetrachloride	ug/L	1	U	50	R	10	U
1,2-Dichloroethane	ug/L	1	U	50	R	10	U
Benzene	ug/L	0.9	J	50	R	32.5	=
Trichloroethylene (TCE)	ug/l	10.3	=	50	R	10	U
1,2-Dichloropropane	ug/l	1	U	50	R	10	U
Bromodichloromethane	ug/L	1	U	50	R	10	U
2-Chloroethyl vinyl ether	ug/L	5	U	250	R	50	U
cis-1,3-Dichloropropene	ug/L	1	U	50	R	10	U
Methyl isobutyl ketone (4-Methyl-2-pentanone)	ug/L	5	U	250	R	50	U
Toluene	ug/l	0.5	J	50	R	2.2	J
trans-1,3-Dichloropropene	ug/L	1	U	50	R	10	U
1,1,2-Trichloroethane	ug/l	1	U	50	R	10	U
2-Hexanone	ug/l	5	U	250	R	50	U

	StationID	H196GW007		H196GW009		H196GW009	
	SampleID	196GW007L4LR		196GW009L4		196GW009L4LR	
	DateCollected	12/19/2001		12/19/2001		12/19/2001	
	DateExtracted	12/27/2001		12/26/2001		01/04/2002	
	DateAnalyzed	12/27/2001		12/26/2001		01/04/2002	
	SDGNumber	53777		53777		53777	
Parameter	**Units**						
m-Xylene	ug/l						
Chloromethane	ug/L	100	R	10	U	500	R
Vinyl chloride	ug/l	100	R	10	U	500	R
Bromomethane	ug/L	100	R	10	U	500	R
Chloroethane	ug/L	100	R	10	U	500	R
1,1-Dichloroethene	ug/L	100	R	10	U	500	R
Acetone	ug/l	500	R	57	U	2500	R
Carbon Disulfide	ug/l	500	R	50	U	2500	R
Methylene Chloride	ug/l	500	R	13.4	J	2500	R
trans-1,2-Dichloroethene	ug/L	100	R	10	U	500	R
1,1-Dichloroethane	ug/L	100	R	10	U	500	R
Vinyl acetate	ug/L	500	R	50	UJ	2500	R
Methyl ethyl ketone (2-Butanone)	ug/L	500	R	50	U	2500	R
cis-1,2-Dichloroethylene	ug/l	100	R	18.8	=	500	R
1,2-Dichloroethene (total)	ug/L	200	R	18.8	J	1000	R
Chloroform	ug/L	100	R	10	U	500	R
1,1,1-Trichloroethane	ug/l	100	R	10	U	500	R
Carbon Tetrachloride	ug/L	100	R	10	U	500	R
1,2-Dichloroethane	ug/L	100	R	10	U	500	R
Benzene	ug/L	34	R	335	=	414	R
Trichloroethylene (TCE)	ug/l	100	R	6.6	J	500	R
1,2-Dichloropropane	ug/l	100	R	10	U	500	R
Bromodichloromethane	ug/L	100	R	10	U	500	R
2-Chloroethyl vinyl ether	ug/L	500	R	50	U	2500	R
cis-1,3-Dichloropropene	ug/L	100	R	10	U	500	R
Methyl isobutyl ketone (4-Methyl-2-pentanone)	ug/L	500	R	50	U	2500	R
Toluene	ug/l	100	R	180	=	443	R
trans-1,3-Dichloropropene	ug/L	100	R	10	U	500	R
1,1,2-Trichloroethane	ug/l	100	R	10	U	500	R
2-Hexanone	ug/l	500	R	50	U	2500	R

	StationID	H009GW020		H009GW020		H009GW021	
	SampleID	009GW020M1		009GW020M1LR		009GW021M1	
	DateCollected	02/08/2002		02/08/2002		02/08/2002	
	DateExtracted	02/13/2002		02/14/2002		02/13/2002	
	DateAnalyzed	02/13/2002		02/14/2002		02/13/2002	
	SDGNumber	55885		55885		55885	
Parameter	**Units**						
m-Xylene	ug/l						
Chloromethane	ug/L	10	U	5000	R	500	U
Vinyl chloride	ug/l	10	U	5000	R	500	U
Bromomethane	ug/L	10	U	5000	R	500	U
Chloroethane	ug/L	10	U	5000	R	500	U
1,1-Dichloroethene	ug/L	5	U	2500	R	250	U
Acetone	ug/l	3.8	J	5000	R	500	U
Carbon Disulfide	ug/l	5	U	2500	R	250	U
Methylene Chloride	ug/l	0.78	J	2500	R	52	J
trans-1,2-Dichloroethene	ug/L	5	U	2500	R	250	U
1,1-Dichloroethane	ug/L	5	U	2500	R	250	U
Vinyl acetate	ug/L	10	U	5000	R	500	U
Methyl ethyl ketone (2-Butanone)	ug/L	10	U	5000	R	500	U
cis-1,2-Dichloroethylene	ug/l	5	U	2500	R	26.6	J
1,2-Dichloroethene (total)	ug/L	5	U	2500	R	26.6	J
Chloroform	ug/L	5	U	2500	R	250	U
1,1,1-Trichloroethane	ug/l	5	U	2500	R	250	U
Carbon Tetrachloride	ug/L	5	U	2500	R	250	U
1,2-Dichloroethane	ug/L	5	U	2500	R	250	U
Benzene	ug/L	15.1	=	2500	R	24.3	J
Trichloroethylene (TCE)	ug/l	5	U	2500	R	250	U
1,2-Dichloropropane	ug/l	5	U	2500	R	250	U
Bromodichloromethane	ug/L	5	U	2500	R	250	U
2-Chloroethyl vinyl ether	ug/L	5	U	2500	R	250	U
cis-1,3-Dichloropropene	ug/L	5	U	2500	R	250	U
Methyl isobutyl ketone (4-Methyl-2-pentanone)	ug/L	10	U	5000	R	500	U
Toluene	ug/l	0.31	J	2500	R	25	J
trans-1,3-Dichloropropene	ug/L	5	U	2500	R	250	U
1,1,2-Trichloroethane	ug/l	5	U	2500	R	250	U
2-Hexanone	ug/l	10	U	5000	R	500	U

	StationID	H009GW021		H009GW022		H009GW022	
	SampleID	009GW021M1LR		009GW022M1		009GW022M1LR	
	DateCollected	02/08/2002		02/08/2002		02/08/2002	
	DateExtracted	02/15/2002		02/13/2002		02/15/2002	
	DateAnalyzed	02/15/2002		02/13/2002		02/15/2002	
	SDGNumber	55885		55885		55885	
Parameter	**Units**						
m-Xylene	ug/l						
Chloromethane	ug/L	1000	R	10	U	2500	R
Vinyl chloride	ug/l	1000	R	0.47	J	2500	R
Bromomethane	ug/L	1000	R	10	U	2500	R
Chloroethane	ug/L	1000	R	10	U	2500	R
1,1-Dichloroethene	ug/L	500	R	5	U	1250	R
Acetone	ug/l	1000	R	3.2	J	2500	R
Carbon Disulfide	ug/l	500	R	5	U	1250	R
Methylene Chloride	ug/l	500	R	0.83	J	1250	R
trans-1,2-Dichloroethene	ug/L	500	R	5	U	1250	R
1,1-Dichloroethane	ug/L	500	R	5	U	1250	R
Vinyl acetate	ug/L	1000	R	10	U	2500	R
Methyl ethyl ketone (2-Butanone)	ug/L	1000	R	10	U	2500	R
cis-1,2-Dichloroethylene	ug/l	500	R	23.6	=	1250	R
1,2-Dichloroethene (total)	ug/L	500	R	23.6	=	1250	R
Chloroform	ug/L	500	R	5	U	1250	R
1,1,1-Trichloroethane	ug/l	500	R	5	U	1250	R
Carbon Tetrachloride	ug/L	500	R	5	U	1250	R
1,2-Dichloroethane	ug/L	500	R	5	U	1250	R
Benzene	ug/L	500	R	0.94	J	1250	R
Trichloroethylene (TCE)	ug/l	500	R	8.7	=	1250	R
1,2-Dichloropropane	ug/l	500	R	5	U	1250	R
Bromodichloromethane	ug/L	500	R	5	U	1250	R
2-Chloroethyl vinyl ether	ug/L	500	R	5	U	1250	R
cis-1,3-Dichloropropene	ug/L	500	R	5	U	1250	R
Methyl isobutyl ketone (4-Methyl-2-pentanone)	ug/L	1000	R	10	U	2500	R
Toluene	ug/l	18.6	R	0.28	J	1250	R
trans-1,3-Dichloropropene	ug/L	500	R	5	U	1250	R
1,1,2-Trichloroethane	ug/l	500	R	5	U	1250	R
2-Hexanone	ug/l	1000	R	10	U	2500	R

	StationID	H009GW022		H009GW022		H196GW004	
	SampleID	009HW022M1		009HW022M1LR		196GW004M1	
	DateCollected	02/08/2002		02/08/2002		02/08/2002	
	DateExtracted	02/13/2002		02/15/2002		02/13/2002	
	DateAnalyzed	02/13/2002		02/15/2002		02/13/2002	
	SDGNumber	55885		55885		55885	
Parameter	**Units**						
m-Xylene	ug/l						
Chloromethane	ug/L	10	U	2500	R	500	U
Vinyl chloride	ug/l	0.46	J	2500	R	500	U
Bromomethane	ug/L	10	U	2500	R	500	U
Chloroethane	ug/L	10	U	2500	R	500	U
1,1-Dichloroethene	ug/L	5	U	1250	R	250	U
Acetone	ug/l	10	U	2500	R	210	J
Carbon Disulfide	ug/l	5	U	1250	R	250	U
Methylene Chloride	ug/l	0.74	J	1250	R	62.1	J
trans-1,2-Dichloroethene	ug/L	5	U	1250	R	250	U
1,1-Dichloroethane	ug/L	5	U	1250	R	250	U
Vinyl acetate	ug/L	10	U	2500	R	500	U
Methyl ethyl ketone (2-Butanone)	ug/L	10	U	2500	R	500	U
cis-1,2-Dichloroethylene	ug/l	23.4	=	1250	R	95	J
1,2-Dichloroethene (total)	ug/L	23.4	=	1250	R	95	J
Chloroform	ug/L	5	U	1250	R	250	U
1,1,1-Trichloroethane	ug/l	5	U	1250	R	250	U
Carbon Tetrachloride	ug/L	5	U	1250	R	250	U
1,2-Dichloroethane	ug/L	5	U	1250	R	250	U
Benzene	ug/L	0.91	J	1250	R	461	=
Trichloroethylene (TCE)	ug/l	8.7	=	1250	R	30.5	J
1,2-Dichloropropane	ug/l	5	U	1250	R	250	U
Bromodichloromethane	ug/L	5	U	1250	R	250	U
2-Chloroethyl vinyl ether	ug/L	5	U	1250	R	250	U
cis-1,3-Dichloropropene	ug/L	5	U	1250	R	250	U
Methyl isobutyl ketone (4-Methyl-2-pentanone)	ug/L	10	U	2500	R	500	U
Toluene	ug/l	0.28	J	1250	R	97.1	J
trans-1,3-Dichloropropene	ug/L	5	U	1250	R	250	U
1,1,2-Trichloroethane	ug/l	5	U	1250	R	250	U
2-Hexanone	ug/l	10	U	2500	R	500	U

	StationID	H196GW004		H196GW005		H196GW005	
	SampleID	196GW004M1LR		196GW005M1		196GW005M1LR	
	DateCollected	02/08/2002		02/08/2002		02/08/2002	
	DateExtracted	02/14/2002		02/13/2002		02/14/2002	
	DateAnalyzed	02/14/2002		02/13/2002		02/14/2002	
	SDGNumber	55885		55885		55885	
Parameter	**Units**						
m-Xylene	ug/l						
Chloromethane	ug/L	5000	R	500	U	5000	R
Vinyl chloride	ug/l	5000	R	500	U	5000	R
Bromomethane	ug/L	5000	R	500	U	5000	R
Chloroethane	ug/L	5000	R	500	U	5000	R
1,1-Dichloroethene	ug/L	2500	R	250	U	2500	R
Acetone	ug/l	5000	R	147	J	5000	R
Carbon Disulfide	ug/l	2500	R	250	U	2500	R
Methylene Chloride	ug/l	2500	R	76.8	J	2500	R
trans-1,2-Dichloroethene	ug/L	2500	R	250	U	2500	R
1,1-Dichloroethane	ug/L	2500	R	250	U	2500	R
Vinyl acetate	ug/L	5000	R	500	U	5000	R
Methyl ethyl ketone (2-Butanone)	ug/L	5000	R	500	U	5000	R
cis-1,2-Dichloroethylene	ug/l	2500	R	250	U	2500	R
1,2-Dichloroethene (total)	ug/L	2500	R	250	U	2500	R
Chloroform	ug/L	2500	R	250	U	2500	R
1,1,1-Trichloroethane	ug/l	2500	R	250	U	2500	R
Carbon Tetrachloride	ug/L	2500	R	250	U	2500	R
1,2-Dichloroethane	ug/L	2500	R	250	U	2500	R
Benzene	ug/L	355	R	250	U	2500	R
Trichloroethylene (TCE)	ug/l	2500	R	250	U	2500	R
1,2-Dichloropropane	ug/l	2500	R	250	U	2500	R
Bromodichloromethane	ug/L	2500	R	250	U	2500	R
2-Chloroethyl vinyl ether	ug/L	2500	R	250	U	2500	R
cis-1,3-Dichloropropene	ug/L	2500	R	250	U	2500	R
Methyl isobutyl ketone (4-Methyl-2-pentanone)	ug/L	5000	R	500	U	5000	R
Toluene	ug/l	2500	R	250	U	2500	R
trans-1,3-Dichloropropene	ug/L	2500	R	250	U	2500	R
1,1,2-Trichloroethane	ug/l	2500	R	250	U	2500	R
2-Hexanone	ug/l	5000	R	500	U	5000	R

	StationID	H196GW006		H196GW006		H196GW007	
	SampleID	196GW006M1		196GW006M1LR		196GW007M1	
	DateCollected	02/08/2002		02/08/2002		02/08/2002	
	DateExtracted	02/13/2002		02/15/2002		02/14/2002	
	DateAnalyzed	02/13/2002		02/15/2002		02/14/2002	
	SDGNumber	55885		55885		55885	
Parameter	**Units**						
m-Xylene	ug/l						
Chloromethane	ug/L	500	U	1000	R	500	U
Vinyl chloride	ug/l	500	U	1000	R	500	U
Bromomethane	ug/L	500	U	1000	R	500	U
Chloroethane	ug/L	500	U	1000	R	500	U
1,1-Dichloroethene	ug/L	250	U	500	R	250	U
Acetone	ug/l	153	J	1000	R	500	U
Carbon Disulfide	ug/l	250	U	500	R	250	U
Methylene Chloride	ug/l	61.7	J	500	R	97.6	J
trans-1,2-Dichloroethene	ug/L	250	U	500	R	250	U
1,1-Dichloroethane	ug/L	250	U	500	R	250	U
Vinyl acetate	ug/L	500	U	1000	R	500	U
Methyl ethyl ketone (2-Butanone)	ug/L	500	U	1000	R	500	U
cis-1,2-Dichloroethylene	ug/l	250	U	500	R	250	U
1,2-Dichloroethene (total)	ug/L	250	U	500	R	250	U
Chloroform	ug/L	250	U	500	R	250	U
1,1,1-Trichloroethane	ug/l	250	U	500	R	250	U
Carbon Tetrachloride	ug/L	250	U	500	R	250	U
1,2-Dichloroethane	ug/L	250	U	500	R	250	U
Benzene	ug/L	15.1	J	500	R	45.2	J
Trichloroethylene (TCE)	ug/l	250	U	500	R	250	U
1,2-Dichloropropane	ug/l	250	U	500	R	250	U
Bromodichloromethane	ug/L	250	U	500	R	250	U
2-Chloroethyl vinyl ether	ug/L	250	U	500	R	250	U
cis-1,3-Dichloropropene	ug/L	250	U	500	R	250	U
Methyl isobutyl ketone (4-Methyl-2-pentanone)	ug/L	500	U	1000	R	500	U
Toluene	ug/l	250	U	500	R	250	U
trans-1,3-Dichloropropene	ug/L	250	U	500	R	250	U
1,1,2-Trichloroethane	ug/l	250	U	500	R	250	U
2-Hexanone	ug/l	500	U	1000	R	500	U

	StationID	H196GW007		H196GW008		H196GW009	
	SampleID	196GW007M1LR		196GW008M1		196GW009M1	
	DateCollected	02/08/2002		02/08/2002		02/08/2002	
	DateExtracted	02/15/2002		02/15/2002		02/15/2002	
	DateAnalyzed	02/15/2002		02/15/2002		02/15/2002	
	SDGNumber	55885		55885		55885	
Parameter	**Units**						
m-Xylene	ug/l						
Chloromethane	ug/L	2500	R	1000	U	2500	U
Vinyl chloride	ug/l	2500	R	1000	U	2500	U
Bromomethane	ug/L	2500	R	1000	U	2500	U
Chloroethane	ug/L	2500	R	1000	U	2500	U
1,1-Dichloroethene	ug/L	1250	R	500	U	1250	U
Acetone	ug/l	2500	R	1000	U	2500	U
Carbon Disulfide	ug/l	1250	R	500	UJ	1250	UJ
Methylene Chloride	ug/l	1250	R	500	U	1250	U
trans-1,2-Dichloroethene	ug/L	1250	R	500	U	1250	U
1,1-Dichloroethane	ug/L	1250	R	500	U	1250	U
Vinyl acetate	ug/L	2500	R	1000	UJ	2500	UJ
Methyl ethyl ketone (2-Butanone)	ug/L	2500	R	1000	U	2500	U
cis-1,2-Dichloroethylene	ug/l	1250	R	500	U	1250	U
1,2-Dichloroethene (total)	ug/L	1250	R	500	U	1250	U
Chloroform	ug/L	1250	R	500	U	1250	U
1,1,1-Trichloroethane	ug/l	1250	R	500	U	1250	U
Carbon Tetrachloride	ug/L	1250	R	500	U	1250	U
1,2-Dichloroethane	ug/L	1250	R	500	U	1250	U
Benzene	ug/L	1250	R	73.1	J	721	J
Trichloroethylene (TCE)	ug/l	1250	R	500	U	1250	U
1,2-Dichloropropane	ug/l	1250	R	500	U	1250	U
Bromodichloromethane	ug/L	1250	R	500	U	1250	U
2-Chloroethyl vinyl ether	ug/L	1250	R	500	U	1250	U
cis-1,3-Dichloropropene	ug/L	1250	R	500	U	1250	U
Methyl isobutyl ketone (4-Methyl-2-pentanone)	ug/L	2500	R	1000	U	2500	U
Toluene	ug/l	1250	R	500	U	66.6	J
trans-1,3-Dichloropropene	ug/L	1250	R	500	U	1250	U
1,1,2-Trichloroethane	ug/l	1250	R	500	U	1250	U
2-Hexanone	ug/l	2500	R	1000	U	2500	U

	StationID	H196GW010		H196GW010		HGELGW015	
	SampleID	196GW010M1		196GW010M1LR		GELGW015M1	
	DateCollected	02/08/2002		02/08/2002		02/08/2002	
	DateExtracted	02/14/2002		02/15/2002		02/13/2002	
	DateAnalyzed	02/14/2002		02/15/2002		02/13/2002	
	SDGNumber	55885		55885		55885	
Parameter	**Units**						
m-Xylene	ug/l						
Chloromethane	ug/L	10	U	2500	R	10	U
Vinyl chloride	ug/l	10	U	2500	R	0.48	J
Bromomethane	ug/L	10	U	2500	R	10	U
Chloroethane	ug/L	10	U	2500	R	10	U
1,1-Dichloroethene	ug/L	5	U	1250	R	5	U
Acetone	ug/l	3.5	J	2500	R	3.8	J
Carbon Disulfide	ug/l	5	U	1250	R	5	U
Methylene Chloride	ug/l	0.78	J	1250	R	0.97	J
trans-1,2-Dichloroethene	ug/L	5	U	1250	R	5	U
1,1-Dichloroethane	ug/L	5	U	1250	R	5	U
Vinyl acetate	ug/L	10	U	2500	R	10	U
Methyl ethyl ketone (2-Butanone)	ug/L	10	U	2500	R	10	U
cis-1,2-Dichloroethylene	ug/l	5	U	1250	R	0.72	J
1,2-Dichloroethene (total)	ug/L	5	U	1250	R	0.72	J
Chloroform	ug/L	5	U	1250	R	5	U
1,1,1-Trichloroethane	ug/l	5	U	1250	R	5	U
Carbon Tetrachloride	ug/L	5	U	1250	R	5	U
1,2-Dichloroethane	ug/L	5	U	1250	R	5	U
Benzene	ug/L	2.3	J	1250	R	95.6	=
Trichloroethylene (TCE)	ug/l	5	U	1250	R	0.48	J
1,2-Dichloropropane	ug/l	5	U	1250	R	5	U
Bromodichloromethane	ug/L	5	U	1250	R	5	U
2-Chloroethyl vinyl ether	ug/L	5	U	1250	R	5	U
cis-1,3-Dichloropropene	ug/L	5	U	1250	R	5	U
Methyl isobutyl ketone (4-Methyl-2-pentanone)	ug/L	10	U	2500	R	10	U
Toluene	ug/l	0.19	J	1250	R	1.2	J
trans-1,3-Dichloropropene	ug/L	5	U	1250	R	5	U
1,1,2-Trichloroethane	ug/l	5	U	1250	R	5	U
2-Hexanone	ug/l	10	U	2500	R	10	U

	StationID	HGELGW015		H196GW011		H196GW012	
	SampleID	GELGW015M1LR		196GW011M1		196GW012M1	
	DateCollected	02/08/2002		02/11/2002		02/11/2002	
	DateExtracted	02/14/2002		02/14/2002		02/14/2002	
	DateAnalyzed	02/14/2002		02/14/2002		02/14/2002	
	SDGNumber	55885		55953		55953	
Parameter	Units						
m-Xylene	ug/l						
Chloromethane	ug/L	5000	R	10	U	10	U
Vinyl chloride	ug/l	5000	R	11.6	=	10	U
Bromomethane	ug/L	5000	R	10	U	10	U
Chloroethane	ug/L	5000	R	10	U	10	U
1,1-Dichloroethene	ug/L	2500	R	5	U	5	U
Acetone	ug/l	5000	R	10	U	3.2	J
Carbon Disulfide	ug/l	2500	R	5	UJ	5	UJ
Methylene Chloride	ug/l	2500	R	0.55	J	5	U
trans-1,2-Dichloroethene	ug/L	2500	R	5	U	5	U
1,1-Dichloroethane	ug/L	2500	R	5	U	5	U
Vinyl acetate	ug/L	5000	R	10	UJ	10	UJ
Methyl ethyl ketone (2-Butanone)	ug/L	5000	R	10	U	10	U
cis-1,2-Dichloroethylene	ug/l	2500	R	14.4	=	5	U
1,2-Dichloroethene (total)	ug/L	2500	R	14.4	=	5	U
Chloroform	ug/L	2500	R	5	U	5	U
1,1,1-Trichloroethane	ug/l	2500	R	5	U	5	U
Carbon Tetrachloride	ug/L	2500	R	5	U	5	U
1,2-Dichloroethane	ug/L	2500	R	5	U	5	U
Benzene	ug/L	2500	R	0.8	J	0.73	J
Trichloroethylene (TCE)	ug/l	2500	R	10.6	=	5	U
1,2-Dichloropropane	ug/l	2500	R	5	U	5	U
Bromodichloromethane	ug/L	2500	R	5	U	5	U
2-Chloroethyl vinyl ether	ug/L	2500	R	5	U	5	U
cis-1,3-Dichloropropene	ug/L	2500	R	5	U	5	U
Methyl isobutyl ketone (4-Methyl-2-pentanone)	ug/L	5000	R	10	U	10	U
Toluene	ug/l	2500	R	0.18	J	5	U
trans-1,3-Dichloropropene	ug/L	2500	R	5	U	5	U
1,1,2-Trichloroethane	ug/l	2500	R	5	U	5	U
2-Hexanone	ug/l	5000	R	10	U	10	U

	StationID	H196GW013		H196GW013		H196GW014	
	SampleID	196GW013M1		196GW013M1LR		196GW014M1	
	DateCollected	02/11/2002		02/11/2002		02/11/2002	
	DateExtracted	02/14/2002		02/15/2002		02/14/2002	
	DateAnalyzed	02/14/2002		02/15/2002		02/14/2002	
	SDGNumber	55953		55953		55953	
Parameter	**Units**						
m-Xylene	ug/l						
Chloromethane	ug/L	500	U	2500	R	5000	U
Vinyl chloride	ug/l	500	U	2500	R	5000	U
Bromomethane	ug/L	500	U	2500	R	5000	U
Chloroethane	ug/L	500	U	2500	R	5000	U
1,1-Dichloroethene	ug/L	250	U	1250	R	2500	U
Acetone	ug/l	500	U	2500	R	5000	U
Carbon Disulfide	ug/l	250	U	1250	R	2500	UJ
Methylene Chloride	ug/l	114	J	1250	R	2500	U
trans-1,2-Dichloroethene	ug/L	250	U	1250	R	2500	U
1,1-Dichloroethane	ug/L	250	U	1250	R	2500	U
Vinyl acetate	ug/L	500	U	2500	R	5000	UJ
Methyl ethyl ketone (2-Butanone)	ug/L	500	U	2500	R	5000	U
cis-1,2-Dichloroethylene	ug/l	250	U	1250	R	2500	U
1,2-Dichloroethene (total)	ug/L	250	U	1250	R	2500	U
Chloroform	ug/L	250	U	1250	R	2500	U
1,1,1-Trichloroethane	ug/l	250	U	1250	R	2500	U
Carbon Tetrachloride	ug/L	250	U	1250	R	2500	U
1,2-Dichloroethane	ug/L	250	U	1250	R	2500	U
Benzene	ug/L	2840	=	2780	R	796	J
Trichloroethylene (TCE)	ug/l	250	U	1250	R	2500	U
1,2-Dichloropropane	ug/l	250	U	1250	R	2500	U
Bromodichloromethane	ug/L	250	U	1250	R	2500	U
2-Chloroethyl vinyl ether	ug/L	250	U	1250	R	2500	U
cis-1,3-Dichloropropene	ug/L	250	U	1250	R	2500	U
Methyl isobutyl ketone (4-Methyl-2-pentanone)	ug/L	500	U	2500	R	5000	U
Toluene	ug/l	250	U	1250	R	296	J
trans-1,3-Dichloropropene	ug/L	250	U	1250	R	2500	U
1,1,2-Trichloroethane	ug/l	250	U	1250	R	2500	U
2-Hexanone	ug/l	500	U	2500	R	5000	U

	StationID	H196GW015		H196GW016		H196GW017	
	SampleID	196GW015M1		196GW016M3		196GW017M3	
	DateCollected	02/11/2002		03/11/2002		03/11/2002	
	DateExtracted	02/15/2002		03/14/2002		03/14/2002	
	DateAnalyzed	02/15/2002		03/14/2002		03/14/2002	
	SDGNumber	55953		57356		57356	
Parameter	**Units**						
m-Xylene	ug/l						
Chloromethane	ug/L	2500	U	50	U	20	U
Vinyl chloride	ug/l	2500	U	3.2	J	67.3	=
Bromomethane	ug/L	2500	U	50	UJ	20	UJ
Chloroethane	ug/L	2500	U	50	U	20	U
1,1-Dichloroethene	ug/L	1250	U	25	U	10	U
Acetone	ug/l	2500	U	50	U	20	U
Carbon Disulfide	ug/l	1250	U	25	UJ	10	UJ
Methylene Chloride	ug/l	1250	UJ	25	U	10	U
trans-1,2-Dichloroethene	ug/L	1250	U	25	U	10	U
1,1-Dichloroethane	ug/L	1250	U	25	U	0.94	J
Vinyl acetate	ug/L	2500	UJ	50	U	20	U
Methyl ethyl ketone (2-Butanone)	ug/L	2500	U	50	U	20	U
cis-1,2-Dichloroethylene	ug/l	1250	U	2.4	J	23.8	=
1,2-Dichloroethene (total)	ug/L	1250	U	2.4	J	23.8	=
Chloroform	ug/L	1250	U	25	U	10	U
1,1,1-Trichloroethane	ug/l	1250	U	25	U	10	U
Carbon Tetrachloride	ug/L	1250	U	25	U	10	U
1,2-Dichloroethane	ug/L	1250	U	25	U	10	U
Benzene	ug/L	1500	=	1.5	J	0.68	J
Trichloroethylene (TCE)	ug/l	1250	U	2.4	J	3.3	J
1,2-Dichloropropane	ug/l	1250	U	25	U	10	U
Bromodichloromethane	ug/L	1250	U	25	U	10	U
2-Chloroethyl vinyl ether	ug/L	1250	U	25	UJ	10	UJ
cis-1,3-Dichloropropene	ug/L	1250	U	25	U	10	U
Methyl isobutyl ketone (4-Methyl-2-pentanone)	ug/L	2500	U	50	U	20	U
Toluene	ug/l	1250	U	25	U	10	U
trans-1,3-Dichloropropene	ug/L	1250	U	25	U	10	U
1,1,2-Trichloroethane	ug/l	1250	U	25	U	10	U
2-Hexanone	ug/l	2500	U	50	U	20	U

	StationID	H009GW020		H009GW020		H196GW006	
	SampleID	009GW020M4		009GW020M4DL		196GW006M4	
	DateCollected	03/20/2002		03/20/2002		03/20/2002	
	DateExtracted	03/27/2002		03/28/2002		03/28/2002	
	DateAnalyzed	03/27/2002		03/28/2002		03/28/2002	
	SDGNumber	CNC77		CNC77		CNC77	
Parameter	**Units**						
m-Xylene	ug/l						
Chloromethane	ug/L	100	U	500	R	50	U
Vinyl chloride	ug/l	100	U	500	R	50	U
Bromomethane	ug/L	100	U	500	R	50	U
Chloroethane	ug/L	100	U	500	R	50	U
1,1-Dichloroethene	ug/L	50	U	250	R	25	U
Acetone	ug/l	100	UJ	500	R	50	UJ
Carbon Disulfide	ug/l	50	U	250	R	25	U
Methylene Chloride	ug/l	50	U	250	R	25	U
trans-1,2-Dichloroethene	ug/L	50	U	250	R	25	U
1,1-Dichloroethane	ug/L	50	U	250	R	25	U
Vinyl acetate	ug/L	100	U	500	R	50	U
Methyl ethyl ketone (2-Butanone)	ug/L	100	U	500	R	50	U
cis-1,2-Dichloroethylene	ug/l	50	U	250	R	25	U
1,2-Dichloroethene (total)	ug/L	50	U	250	R	25	U
Chloroform	ug/L	50	U	250	R	25	U
1,1,1-Trichloroethane	ug/l	50	U	250	R	25	U
Carbon Tetrachloride	ug/L	50	U	250	R	25	U
1,2-Dichloroethane	ug/L	50	U	250	R	25	U
Benzene	ug/L	5.2	J	250	R	13	J
Trichloroethylene (TCE)	ug/l	50	U	250	R	25	U
1,2-Dichloropropane	ug/l	50	U	250	R	25	U
Bromodichloromethane	ug/L	50	U	250	R	25	U
2-Chloroethyl vinyl ether	ug/L	100	UJ	500	R	50	U
cis-1,3-Dichloropropene	ug/L	50	U	250	R	25	U
Methyl isobutyl ketone (4-Methyl-2-pentanone)	ug/L	100	UJ	500	R	50	U
Toluene	ug/l	50	U	250	R	25	U
trans-1,3-Dichloropropene	ug/L	50	U	250	R	25	U
1,1,2-Trichloroethane	ug/l	50	U	250	R	25	U
2-Hexanone	ug/l	100	UJ	500	R	50	U

	StationID	H196GW010		HGELGW015		HGELGW015	
	SampleID	196GW010M4		GELGW015M4		GELGW015M4DL	
	DateCollected	03/20/2002		03/20/2002		03/20/2002	
	DateExtracted	03/28/2002		03/28/2002		03/28/2002	
	DateAnalyzed	03/28/2002		03/28/2002		03/28/2002	
	SDGNumber	CNC77		CNC77		CNC77	
Parameter	**Units**						
m-Xylene	ug/l						
Chloromethane	ug/L	50	U	20	U	200	R
Vinyl chloride	ug/l	50	U	20	U	200	R
Bromomethane	ug/L	50	U	20	U	200	R
Chloroethane	ug/L	50	U	20	U	200	R
1,1-Dichloroethene	ug/L	25	U	10	U	100	R
Acetone	ug/l	50	UJ	20	UJ	200	R
Carbon Disulfide	ug/l	25	U	10	U	100	R
Methylene Chloride	ug/l	25	U	10	U	100	R
trans-1,2-Dichloroethene	ug/L	25	U	10	U	100	R
1,1-Dichloroethane	ug/L	25	U	10	U	100	R
Vinyl acetate	ug/L	50	U	20	U	200	R
Methyl ethyl ketone (2-Butanone)	ug/L	50	U	20	U	200	R
cis-1,2-Dichloroethylene	ug/l	25	U	2.1	J	100	R
1,2-Dichloroethene (total)	ug/L	25	U	2.1	J	100	R
Chloroform	ug/L	25	U	10	U	100	R
1,1,1-Trichloroethane	ug/l	25	U	10	U	100	R
Carbon Tetrachloride	ug/L	25	U	10	U	100	R
1,2-Dichloroethane	ug/L	25	U	10	U	100	R
Benzene	ug/L	25	U	7.1	J	8	R
Trichloroethylene (TCE)	ug/l	25	U	10	U	100	R
1,2-Dichloropropane	ug/l	25	U	10	U	100	R
Bromodichloromethane	ug/L	25	U	10	U	100	R
2-Chloroethyl vinyl ether	ug/L	50	U	20	U	200	R
cis-1,3-Dichloropropene	ug/L	25	U	10	U	100	R
Methyl isobutyl ketone (4-Methyl-2-pentanone)	ug/L	50	U	20	U	200	R
Toluene	ug/l	25	U	10	U	100	R
trans-1,3-Dichloropropene	ug/L	25	U	10	U	100	R
1,1,2-Trichloroethane	ug/l	25	U	10	U	100	R
2-Hexanone	ug/l	50	U	20	U	200	R

	StationID	H009GW021		H009GW022	
	SampleID	009GW021M4		009GW022M4	
	DateCollected	03/21/2002		03/21/2002	
	DateExtracted	03/28/2002		03/27/2002	
	DateAnalyzed	03/28/2002		03/27/2002	
	SDGNumber	CNC77		CNC77	
Parameter	**Units**				
m-Xylene	ug/l				
Chloromethane	ug/L	200	U	50	U
Vinyl chloride	ug/l	200	U	3.1	J
Bromomethane	ug/L	200	U	50	U
Chloroethane	ug/L	200	U	50	U
1,1-Dichloroethene	ug/L	100	U	25	U
Acetone	ug/l	200	UJ	50	UJ
Carbon Disulfide	ug/l	100	U	25	U
Methylene Chloride	ug/l	100	U	25	U
trans-1,2-Dichloroethene	ug/L	100	U	2.8	J
1,1-Dichloroethane	ug/L	100	U	25	U
Vinyl acetate	ug/L	200	U	50	U
Methyl ethyl ketone (2-Butanone)	ug/L	200	U	50	U
cis-1,2-Dichloroethylene	ug/l	100	U	32	=
1,2-Dichloroethene (total)	ug/L	100	U	35	=
Chloroform	ug/L	100	U	25	U
1,1,1-Trichloroethane	ug/l	100	U	25	U
Carbon Tetrachloride	ug/L	100	U	25	U
1,2-Dichloroethane	ug/L	100	U	25	U
Benzene	ug/L	100	U	8.9	J
Trichloroethylene (TCE)	ug/l	100	U	12	J
1,2-Dichloropropane	ug/l	100	U	25	U
Bromodichloromethane	ug/L	100	U	25	U
2-Chloroethyl vinyl ether	ug/L	200	U	50	UJ
cis-1,3-Dichloropropene	ug/L	100	U	25	U
Methyl isobutyl ketone (4-Methyl-2-pentanone)	ug/L	200	U	50	UJ
Toluene	ug/l	100	U	25	U
trans-1,3-Dichloropropene	ug/L	100	U	25	U
1,1,2-Trichloroethane	ug/l	100	U	25	U
2-Hexanone	ug/l	200	U	50	UJ

	StationID	H009GW020		H009GW021		H009GW021	
	SampleID	009GW020L1		009GW021L1		009GW021L1LR	
	DateCollected	10/26/2001		10/26/2001		10/26/2001	
	DateExtracted	10/31/2001		10/29/2001		10/31/2001	
	DateAnalyzed	10/31/2001		10/29/2001		10/31/2001	
	SDGNumber	51003		51003		51003	
Parameter	**Units**						
Tetrachloroethylene (PCE)	ug/l	200	U	1.4	=	20	R
Dibromochloromethane	ug/l	200	U	1	U	20	R
Chlorobenzene	ug/L	11500	=	1030	R	1870	=
Ethylbenzene	ug/L	200	U	0.33	J	20	R
m+p Xylene	ug/l	400	U	0.39	J	40	R
o-Xylene	ug/l	200	U	1	U	20	R
Xylenes, Total	ug/L	600	U	0.39	J	60	R
Styrene	ug/L	200	U	1	U	20	R
Bromoform	ug/L	200	U	1	U	20	R
1,1,2,2-Tetrachloroethane	ug/L	200	U	1	U	20	R
1,3-Dichlorobenzene	ug/L	87.9	=	225	R	301	=
1,4-Dichlorobenzene	ug/L	289	=	380	R	587	=
1,2-Dichlorobenzene	ug/L	1410	=	1580	R	3620	J
1,2,4-Trichlorobenzene	ug/L						
1,2,3-Trichlorobenzene	ug/l						

	StationID	H009GW022		H196GW004		H196GW005	
	SampleID	009GW022L1		196GW004L1		196GW005L1	
	DateCollected	10/26/2001		10/26/2001		10/26/2001	
	DateExtracted	10/29/2001		10/31/2001		10/31/2001	
	DateAnalyzed	10/29/2001		10/31/2001		10/31/2001	
	SDGNumber	51003		51003		51003	
Parameter	**Units**						
Tetrachloroethylene (PCE)	ug/l	5.8	=	213	=	10	U
Dibromochloromethane	ug/l	1	U	100	U	10	U
Chlorobenzene	ug/L	181	R	9470	=	1370	R
Ethylbenzene	ug/L	1	U	100	U	10	U
m+p Xylene	ug/l	2	U	200	U	20	U
o-Xylene	ug/l	1	U	100	U	10	U
Xylenes, Total	ug/L	3	U	300	U	30	U
Styrene	ug/L	1	U	100	U	10	U
Bromoform	ug/L	1	U	100	U	10	U
1,1,2,2-Tetrachloroethane	ug/L	1	U	100	U	10	U
1,3-Dichlorobenzene	ug/L	78	=	1150	=	231	=
1,4-Dichlorobenzene	ug/L	129	R	2300	=	554	=
1,2-Dichlorobenzene	ug/L	1040	R	20900	J	9840	R
1,2,4-Trichlorobenzene	ug/L						
1,2,3-Trichlorobenzene	ug/l						

	StationID	H196GW006		H196GW007		H196GW008	
	SampleID	196GW006L1		196GW007L1		196GW008L1	
	DateCollected	10/26/2001		10/26/2001		10/26/2001	
	DateExtracted	10/31/2001		10/31/2001		10/31/2001	
	DateAnalyzed	10/31/2001		10/31/2001		10/31/2001	
	SDGNumber	51003		51003		51003	
Parameter	**Units**						
Tetrachloroethylene (PCE)	ug/l	250	U	100	U	100	U
Dibromochloromethane	ug/l	250	U	100	U	100	U
Chlorobenzene	ug/L	20600	=	5780	=	4500	=
Ethylbenzene	ug/L	250	U	100	U	100	U
m+p Xylene	ug/l	500	U	200	U	200	U
o-Xylene	ug/l	250	U	100	U	100	U
Xylenes, Total	ug/L	750	U	300	U	300	U
Styrene	ug/L	250	U	100	U	100	U
Bromoform	ug/L	250	U	100	U	100	U
1,1,2,2-Tetrachloroethane	ug/L	250	U	100	U	100	U
1,3-Dichlorobenzene	ug/L	367	=	213	=	604	=
1,4-Dichlorobenzene	ug/L	1040	=	603	=	1220	=
1,2-Dichlorobenzene	ug/L	24200	=	12300	J	9790	=
1,2,4-Trichlorobenzene	ug/L						
1,2,3-Trichlorobenzene	ug/l						

	StationID	H196GW009		H196GW009		H196GW010	
	SampleID	196GW009L1		196HW009L1		196GW010L1	
	DateCollected	10/26/2001		10/26/2001		10/26/2001	
	DateExtracted	10/31/2001		10/31/2001		10/31/2001	
	DateAnalyzed	10/31/2001		10/31/2001		10/31/2001	
	SDGNumber	51003		51003		51003	
Parameter	**Units**						
Tetrachloroethylene (PCE)	ug/l	472	=	480	=	100	U
Dibromochloromethane	ug/l	50	U	50	U	100	U
Chlorobenzene	ug/L	2240	=	2270	=	3920	=
Ethylbenzene	ug/L	50	U	50	U	100	U
m+p Xylene	ug/l	100	U	100	U	200	U
o-Xylene	ug/l	50	U	50	U	100	U
Xylenes, Total	ug/L	150	U	150	U	300	U
Styrene	ug/L	50	U	50	U	100	U
Bromoform	ug/L	50	U	50	U	100	U
1,1,2,2-Tetrachloroethane	ug/L	50	U	50	U	100	U
1,3-Dichlorobenzene	ug/L	2720	=	2720	=	175	=
1,4-Dichlorobenzene	ug/L	4950	=	4950	=	437	=
1,2-Dichlorobenzene	ug/L	32800	J	33200	J	8990	=
1,2,4-Trichlorobenzene	ug/L						
1,2,3-Trichlorobenzene	ug/l						

	StationID	HGELGW015		H009GW020		H009GW020	
	SampleID	GELGW015L1		009GW020L2		009GW020L2LR	
	DateCollected	10/26/2001		11/20/2001		11/20/2001	
	DateExtracted	10/29/2001		11/29/2001		11/30/2001	
	DateAnalyzed	10/29/2001		11/29/2001		11/30/2001	
	SDGNumber	51003		52363		52363	
Parameter	**Units**						
Tetrachloroethylene (PCE)	ug/l	0.22	J	1	U	1000	R
Dibromochloromethane	ug/l	1	U	1	U	1000	R
Chlorobenzene	ug/L	2160	R	2900	R	19400	=
Ethylbenzene	ug/L	0.2	J	1	U	1000	R
m+p Xylene	ug/l	0.3	J	2	U	2000	R
o-Xylene	ug/l	1	U	1	U	1000	R
Xylenes, Total	ug/L	0.3	J	3	U	3000	R
Styrene	ug/L	1	U	1	U	1000	R
Bromoform	ug/L	1	U	1	U	1000	R
1,1,2,2-Tetrachloroethane	ug/L	1	U	1	U	1000	R
1,3-Dichlorobenzene	ug/L	182	R	108	J	1000	R
1,4-Dichlorobenzene	ug/L	392	R	295	R	680	J
1,2-Dichlorobenzene	ug/L	2500	R	926	R	3610	=
1,2,4-Trichlorobenzene	ug/L						
1,2,3-Trichlorobenzene	ug/l						

	StationID	H009GW021		H009GW021		H196GW004	
	SampleID	009GW021L2		009GW021L2LR		196GW004L2	
	DateCollected	11/20/2001		11/20/2001		11/20/2001	
	DateExtracted	11/29/2001		11/30/2001		11/29/2001	
	DateAnalyzed	11/29/2001		11/30/2001		11/29/2001	
	SDGNumber	52363		52363		52363	
Parameter	**Units**						
Tetrachloroethylene (PCE)	ug/l	6.7	=	6.9	R	172	R
Dibromochloromethane	ug/l	1	U	10	R	1	U
Chlorobenzene	ug/L	501	R	591	=	1980	R
Ethylbenzene	ug/L	1	U	10	R	1.9	=
m+p Xylene	ug/l	2	U	20	R	4	=
o-Xylene	ug/l	1	U	10	R	0.75	J
Xylenes, Total	ug/L	3	U	30	R	4.8	=
Styrene	ug/L	1	U	10	R	1	U
Bromoform	ug/L	1	U	10	R	1	U
1,1,2,2-Tetrachloroethane	ug/L	1	U	10	R	1	U
1,3-Dichlorobenzene	ug/L	156	R	151	=	391	R
1,4-Dichlorobenzene	ug/L	246	R	255	=	670	R
1,2-Dichlorobenzene	ug/L	816	R	1260	=	2190	R
1,2,4-Trichlorobenzene	ug/L						
1,2,3-Trichlorobenzene	ug/l						

	StationID	H196GW004		H196GW005		H196GW005	
	SampleID	196GW004L2LR		196GW005L2		196GW005L2LR	
	DateCollected	11/20/2001		11/20/2001		11/20/2001	
	DateExtracted	11/30/2001		11/29/2001		11/30/2001	
	DateAnalyzed	11/30/2001		11/29/2001		11/30/2001	
	SDGNumber	52363		52363		52363	
Parameter	**Units**						
Tetrachloroethylene (PCE)	ug/l	1000	R	1.6	=	10	R
Dibromochloromethane	ug/l	1000	R	1	U	10	R
Chlorobenzene	ug/L	9850	=	74.5	=	65.4	R
Ethylbenzene	ug/L	1000	R	1	U	10	R
m+p Xylene	ug/l	2000	R	2	U	20	R
o-Xylene	ug/l	1000	R	1	U	10	R
Xylenes, Total	ug/L	3000	R	3	U	30	R
Styrene	ug/L	1000	R	1	U	10	R
Bromoform	ug/L	1000	R	1	U	10	R
1,1,2,2-Tetrachloroethane	ug/L	1000	R	1	U	10	R
1,3-Dichlorobenzene	ug/L	618	J	65.2	=	63.8	R
1,4-Dichlorobenzene	ug/L	1460	=	154	R	168	=
1,2-Dichlorobenzene	ug/L	18300	=	1670	R	4780	=
1,2,4-Trichlorobenzene	ug/L						
1,2,3-Trichlorobenzene	ug/l						

	StationID	H196GW006		H196GW006		H196GW007	
	SampleID	196GW006L2		196GW006L2LR		196GW007L2	
	DateCollected	11/20/2001		11/20/2001		11/20/2001	
	DateExtracted	11/29/2001		11/30/2001		11/29/2001	
	DateAnalyzed	11/29/2001		11/30/2001		11/29/2001	
	SDGNumber	52363		52363		52363	
Parameter	**Units**						
Tetrachloroethylene (PCE)	ug/l	1	U	20	R	1.3	=
Dibromochloromethane	ug/l	0.56	J	20	R	1	U
Chlorobenzene	ug/L	597	R	705	=	1620	R
Ethylbenzene	ug/L	1	U	20	R	0.5	J
m+p Xylene	ug/l	2	U	40	R	2	U
o-Xylene	ug/l	1	U	20	R	1	U
Xylenes, Total	ug/L	3	U	60	R	3	U
Styrene	ug/L	1	U	20	R	1	U
Bromoform	ug/L	1	U	20	R	1	U
1,1,2,2-Tetrachloroethane	ug/L	1	U	20	R	1	U
1,3-Dichlorobenzene	ug/L	58.3	=	66	R	141	R
1,4-Dichlorobenzene	ug/L	132	R	155	=	297	R
1,2-Dichlorobenzene	ug/L	1580	R	5410	=	1920	R
1,2,4-Trichlorobenzene	ug/L						
1,2,3-Trichlorobenzene	ug/l						

	StationID	H196GW007		H196GW008		H196GW008	
	SampleID	196GW007L2LR		196GW008L2		196GW008L2LR	
	DateCollected	11/20/2001		11/20/2001		11/20/2001	
	DateExtracted	11/30/2001		11/29/2001		11/30/2001	
	DateAnalyzed	11/30/2001		11/29/2001		11/30/2001	
	SDGNumber	52363		52363		52363	
Parameter	**Units**						
Tetrachloroethylene (PCE)	ug/l	100	R	2.3	=	100	R
Dibromochloromethane	ug/l	100	R	1	U	100	R
Chlorobenzene	ug/L	5530	=	1740	R	3520	=
Ethylbenzene	ug/L	100	R	0.56	J	100	R
m+p Xylene	ug/l	200	R	2	U	200	R
o-Xylene	ug/l	100	R	1	U	100	R
Xylenes, Total	ug/L	300	R	3	U	300	R
Styrene	ug/L	100	R	1	U	100	R
Bromoform	ug/L	100	R	1	U	100	R
1,1,2,2-Tetrachloroethane	ug/L	100	R	1	U	100	R
1,3-Dichlorobenzene	ug/L	148	=	130	R	136	=
1,4-Dichlorobenzene	ug/L	393	=	187	R	238	=
1,2-Dichlorobenzene	ug/L	10300	=	937	R	1910	=
1,2,4-Trichlorobenzene	ug/L						
1,2,3-Trichlorobenzene	ug/l						

	StationID	H196GW008		H196GW008		H196GW010	
	SampleID	196HW008L2		196HW008L2LR		196GW010L2	
	DateCollected	11/20/2001		11/20/2001		11/20/2001	
	DateExtracted	11/29/2001		11/30/2001		11/29/2001	
	DateAnalyzed	11/29/2001		11/30/2001		11/29/2001	
	SDGNumber	52363		52363		52363	
Parameter	**Units**						
Tetrachloroethylene (PCE)	ug/l	3	=	100	R	1	U
Dibromochloromethane	ug/l	1	U	100	R	1	U
Chlorobenzene	ug/L	1210	R	2860	=	1250	R
Ethylbenzene	ug/L	0.39	J	100	R	1	U
m+p Xylene	ug/l	2	U	200	R	2	U
o-Xylene	ug/l	1	U	100	R	1	U
Xylenes, Total	ug/L	3	U	300	R	3	U
Styrene	ug/L	1	U	100	R	1	U
Bromoform	ug/L	1	U	100	R	1	U
1,1,2,2-Tetrachloroethane	ug/L	1	U	100	R	1	U
1,3-Dichlorobenzene	ug/L	146	R	136	=	52.6	=
1,4-Dichlorobenzene	ug/L	191	R	231	=	99.5	=
1,2-Dichlorobenzene	ug/L	1030	R	1960	=	1230	R
1,2,4-Trichlorobenzene	ug/L						
1,2,3-Trichlorobenzene	ug/l						

	StationID	H196GW010		HGELGW015		HGELGW015	
	SampleID	196GW010L2LR		GELGW015L2		GELGW015L2LR	
	DateCollected	11/20/2001		11/20/2001		11/20/2001	
	DateExtracted	11/30/2001		11/29/2001		12/03/2001	
	DateAnalyzed	11/30/2001		11/29/2001		12/03/2001	
	SDGNumber	52363		52363		52363	
Parameter	**Units**						
Tetrachloroethylene (PCE)	ug/l	100	R	8.8	=	100	R
Dibromochloromethane	ug/l	100	R	1	U	100	R
Chlorobenzene	ug/L	2700	=	1660	R	6060	=
Ethylbenzene	ug/L	100	R	0.2	J	100	R
m+p Xylene	ug/l	200	R	2	U	200	R
o-Xylene	ug/l	100	R	1	U	100	R
Xylenes, Total	ug/L	300	R	3	U	300	R
Styrene	ug/L	100	R	1	U	100	R
Bromoform	ug/L	100	R	1	U	100	R
1,1,2,2-Tetrachloroethane	ug/L	100	R	1	U	100	R
1,3-Dichlorobenzene	ug/L	60.1	R	252	R	296	=
1,4-Dichlorobenzene	ug/L	128	R	460	R	704	=
1,2-Dichlorobenzene	ug/L	2820	=	2590	R	21300	=
1,2,4-Trichlorobenzene	ug/L						
1,2,3-Trichlorobenzene	ug/l						

	StationID	H009GW022		H196GW006		H196GW009	
	SampleID	009GW022L3		196GW006L3		196GW009L3	
	DateCollected	12/06/2001		12/06/2001		12/06/2001	
	DateExtracted	12/08/2001		12/08/2001		12/08/2001	
	DateAnalyzed	12/08/2001		12/08/2001		12/08/2001	
	SDGNumber	53063		53063		53063	
Parameter	**Units**						
Tetrachloroethylene (PCE)	ug/l	50	U	250	U	244	J
Dibromochloromethane	ug/l	50	U	250	U	500	U
Chlorobenzene	ug/L	170	=	1870	=	2950	=
Ethylbenzene	ug/L	50	U	250	U	500	U
m+p Xylene	ug/l	100	U	500	U	1000	U
o-Xylene	ug/l	50	U	250	U	500	U
Xylenes, Total	ug/L	150	U	750	U	1500	U
Styrene	ug/L	50	U	250	U	500	U
Bromoform	ug/L	50	U	250	U	500	U
1,1,2,2-Tetrachloroethane	ug/L	50	U	250	U	500	U
1,3-Dichlorobenzene	ug/L	112	=	85	J	1280	=
1,4-Dichlorobenzene	ug/L	110	=	256	=	2760	=
1,2-Dichlorobenzene	ug/L	3050	=	8200	=	35100	=
1,2,4-Trichlorobenzene	ug/L	50	UJ	250	UJ	500	UJ
1,2,3-Trichlorobenzene	ug/l	50	U	250	U	500	U

	StationID	HGELGW015		H009GW020		H009GW020	
	SampleID	GELGW015L3		009GW020L4		009GW020L4LR	
	DateCollected	12/06/2001		12/18/2001		12/18/2001	
	DateExtracted	12/08/2001		12/26/2001		12/26/2001	
	DateAnalyzed	12/08/2001		12/26/2001		12/26/2001	
	SDGNumber	53063		53777		53777	
Parameter	**Units**						
Tetrachloroethylene (PCE)	ug/l	250	U	50	U	250	R
Dibromochloromethane	ug/l	250	U	50	U	250	R
Chlorobenzene	ug/L	5610	=	12100	R	13900	=
Ethylbenzene	ug/L	250	U	50	U	250	R
m+p Xylene	ug/l	500	U	100	U	500	R
o-Xylene	ug/l	250	U	50	U	250	R
Xylenes, Total	ug/L	750	U	150	U	750	R
Styrene	ug/L	250	U	50	U	250	R
Bromoform	ug/L	250	U	50	U	250	R
1,1,2,2-Tetrachloroethane	ug/L	250	U	50	U	250	R
1,3-Dichlorobenzene	ug/L	163	J	84.7	=	125	R
1,4-Dichlorobenzene	ug/L	471	=	264	=	364	R
1,2-Dichlorobenzene	ug/L	18000	=	1330	=	2690	R
1,2,4-Trichlorobenzene	ug/L	250	UJ	50	U	250	R
1,2,3-Trichlorobenzene	ug/l	250	U	50	U	250	R

	StationID	H196GW004		H196GW004		H196GW004	
	SampleID	196GW004L4		196GW004L4LR		196HW004L4	
	DateCollected	12/18/2001		12/18/2001		12/18/2001	
	DateExtracted	12/26/2001		12/27/2001		12/26/2001	
	DateAnalyzed	12/26/2001		12/27/2001		12/26/2001	
	SDGNumber	53777		53777		53777	
Parameter	**Units**						
Tetrachloroethylene (PCE)	ug/l	216	=	198	R	215	=
Dibromochloromethane	ug/l	50	U	250	R	50	U
Chlorobenzene	ug/L	6040	R	6870	=	3620	=
Ethylbenzene	ug/L	50	U	250	R	50	U
m+p Xylene	ug/l	100	U	500	R	100	U
o-Xylene	ug/l	50	U	250	R	50	U
Xylenes, Total	ug/L	150	U	750	R	150	U
Styrene	ug/L	50	U	250	R	50	U
Bromoform	ug/L	50	U	250	R	50	U
1,1,2,2-Tetrachloroethane	ug/L	50	U	250	R	50	U
1,3-Dichlorobenzene	ug/L	449	=	447	R	528	=
1,4-Dichlorobenzene	ug/L	988	=	922	R	979	=
1,2-Dichlorobenzene	ug/L	10900	R	12800	=	13200	R
1,2,4-Trichlorobenzene	ug/L	26.5	J	250	R	46.7	J
1,2,3-Trichlorobenzene	ug/l	50	U	250	R	50	U

	StationID	H196GW004		H196GW005		H196GW005	
	SampleID	196HW004L4LR		196GW005L4		196GW005L4LR	
	DateCollected	12/18/2001		12/18/2001		12/18/2001	
	DateExtracted	12/27/2001		12/26/2001		12/27/2001	
	DateAnalyzed	12/27/2001		12/26/2001		12/27/2001	
	SDGNumber	53777		53777		53777	
Parameter	**Units**						
Tetrachloroethylene (PCE)	ug/l	196	R	10	U	100	R
Dibromochloromethane	ug/l	250	R	10	U	100	R
Chlorobenzene	ug/L	4180	R	175	=	163	R
Ethylbenzene	ug/L	250	R	10	U	100	R
m+p Xylene	ug/l	500	R	20	U	200	R
o-Xylene	ug/l	250	R	10	U	100	R
Xylenes, Total	ug/L	750	R	30	U	300	R
Styrene	ug/L	250	R	10	U	100	R
Bromoform	ug/L	250	R	10	U	100	R
1,1,2,2-Tetrachloroethane	ug/L	250	R	10	U	100	R
1,3-Dichlorobenzene	ug/L	487	R	68.8	=	67	R
1,4-Dichlorobenzene	ug/L	919	R	183	=	185	R
1,2-Dichlorobenzene	ug/L	14800	=	3540	R	4220	=
1,2,4-Trichlorobenzene	ug/L	250	R	6.1	J	100	R
1,2,3-Trichlorobenzene	ug/l	250	R	10	U	100	R

	StationID	H196GW006		H196GW008		H196GW008	
	SampleID	196GW006L4		196GW008L4		196GW008L4LR	
	DateCollected	12/18/2001		12/18/2001		12/18/2001	
	DateExtracted	12/26/2001		12/26/2001		01/04/2002	
	DateAnalyzed	12/26/2001		12/26/2001		01/04/2002	
	SDGNumber	53777		53777		53777	
Parameter	**Units**						
Tetrachloroethylene (PCE)	ug/l	50	U	13.4	=	200	R
Dibromochloromethane	ug/l	50	U	10	U	200	R
Chlorobenzene	ug/L	826	=	3630	R	5980	=
Ethylbenzene	ug/L	50	U	10	U	200	R
m+p Xylene	ug/l	100	U	20	U	400	R
o-Xylene	ug/l	50	U	10	U	200	R
Xylenes, Total	ug/L	150	U	30	U	600	R
Styrene	ug/L	50	U	10	U	200	R
Bromoform	ug/L	50	U	10	U	200	R
1,1,2,2-Tetrachloroethane	ug/L	50	U	10	U	200	R
1,3-Dichlorobenzene	ug/L	60.8	=	790	=	845	R
1,4-Dichlorobenzene	ug/L	183	=	1340	R	1700	=
1,2-Dichlorobenzene	ug/L	4770	=	5500	R	15600	=
1,2,4-Trichlorobenzene	ug/L	50	U	53.8	=	200	R
1,2,3-Trichlorobenzene	ug/l	50	U	8.9	J	200	R

	StationID	H196GW010		H196GW010		HGELGW015	
	SampleID	196GW010L4		196GW010L4LR		GELGW015L4	
	DateCollected	12/18/2001		12/18/2001		12/18/2001	
	DateExtracted	12/26/2001		01/04/2002		12/26/2001	
	DateAnalyzed	12/26/2001		01/04/2002		12/26/2001	
	SDGNumber	53777		53777		53777	
Parameter	**Units**						
Tetrachloroethylene (PCE)	ug/l	1	U	100	R	10	U
Dibromochloromethane	ug/l	1	U	100	R	10	U
Chlorobenzene	ug/L	624	R	4560	=	4640	R
Ethylbenzene	ug/L	1	U	100	R	10	U
m+p Xylene	ug/l	2	U	200	R	20	U
o-Xylene	ug/l	1	U	100	R	10	U
Xylenes, Total	ug/L	3	U	300	R	30	U
Styrene	ug/L	1	U	100	R	10	U
Bromoform	ug/L	1	U	100	R	10	U
1,1,2,2-Tetrachloroethane	ug/L	1	U	100	R	10	U
1,3-Dichlorobenzene	ug/L	26.1	=	78.4	R	345	=
1,4-Dichlorobenzene	ug/L	51.2	=	209	R	779	=
1,2-Dichlorobenzene	ug/L	462	R	3880	=	6750	R
1,2,4-Trichlorobenzene	ug/L	1	U	100	R	13.9	=
1,2,3-Trichlorobenzene	ug/l	1	U	100	R	10	U

	StationID	HGELGW015		H009GW021		H009GW021	
	SampleID	GELGW015L4LR		009GW021L4		009GW021L4LR	
	DateCollected	12/18/2001		12/19/2001		12/19/2001	
	DateExtracted	12/27/2001		12/26/2001		12/27/2001	
	DateAnalyzed	12/27/2001		12/26/2001		12/27/2001	
	SDGNumber	53777		53777		53777	
Parameter	**Units**						
Tetrachloroethylene (PCE)	ug/l	500	R	41.9	J	500	R
Dibromochloromethane	ug/l	500	R	50	U	500	R
Chlorobenzene	ug/L	7450	=	4770	=	5220	R
Ethylbenzene	ug/L	500	R	50	U	500	R
m+p Xylene	ug/l	1000	R	100	U	1000	R
o-Xylene	ug/l	500	R	50	U	500	R
Xylenes, Total	ug/L	1500	R	150	U	1500	R
Styrene	ug/L	500	R	50	U	500	R
Bromoform	ug/L	500	R	50	U	500	R
1,1,2,2-Tetrachloroethane	ug/L	500	R	50	U	500	R
1,3-Dichlorobenzene	ug/L	322	R	1700	=	1560	R
1,4-Dichlorobenzene	ug/L	799	R	2960	=	2970	R
1,2-Dichlorobenzene	ug/L	28300	=	20400	R	31200	=
1,2,4-Trichlorobenzene	ug/L	500	R	180	=	500	R
1,2,3-Trichlorobenzene	ug/l	500	R	25.8	J	500	R

	StationID	H009GW022		H009GW022		H196GW007	
	SampleID	009GW022L4		009GW022L4LR		196GW007L4	
	DateCollected	12/19/2001		12/19/2001		12/19/2001	
	DateExtracted	12/26/2001		12/27/2001		12/26/2001	
	DateAnalyzed	12/26/2001		12/27/2001		12/26/2001	
	SDGNumber	53777		53777		53777	
Parameter	**Units**						
Tetrachloroethylene (PCE)	ug/l	4	=	50	R	10	U
Dibromochloromethane	ug/l	1	U	50	R	10	U
Chlorobenzene	ug/L	232	R	322	=	4780	R
Ethylbenzene	ug/L	0.23	J	50	R	10	U
m+p Xylene	ug/l	2	U	100	R	20	U
o-Xylene	ug/l	1	U	50	R	10	U
Xylenes, Total	ug/L	3	U	150	R	30	U
Styrene	ug/L	1	U	50	R	10	U
Bromoform	ug/L	1	U	50	R	10	U
1,1,2,2-Tetrachloroethane	ug/L	1	U	50	R	10	U
1,3-Dichlorobenzene	ug/L	119	R	126	=	93	=
1,4-Dichlorobenzene	ug/L	165	R	201	=	268	=
1,2-Dichlorobenzene	ug/L	671	R	3520	=	3540	R
1,2,4-Trichlorobenzene	ug/L	5.8	=	50	R	10	U
1,2,3-Trichlorobenzene	ug/l	1.2	U	50	R	10	U

	StationID	H196GW007		H196GW009		H196GW009	
	SampleID	196GW007L4LR		196GW009L4		196GW009L4LR	
	DateCollected	12/19/2001		12/19/2001		12/19/2001	
	DateExtracted	12/27/2001		12/26/2001		01/04/2002	
	DateAnalyzed	12/27/2001		12/26/2001		01/04/2002	
	SDGNumber	53777		53777		53777	
Parameter	**Units**						
Tetrachloroethylene (PCE)	ug/l	100	R	195	=	305	R
Dibromochloromethane	ug/l	100	R	10	U	500	R
Chlorobenzene	ug/L	8720	=	2390	R	3650	=
Ethylbenzene	ug/L	100	R	10	U	500	R
m+p Xylene	ug/l	200	R	20	U	1000	R
o-Xylene	ug/l	100	R	10	U	500	R
Xylenes, Total	ug/L	300	R	30	U	1500	R
Styrene	ug/L	100	R	10	U	500	R
Bromoform	ug/L	100	R	10	U	500	R
1,1,2,2-Tetrachloroethane	ug/L	100	R	10	U	500	R
1,3-Dichlorobenzene	ug/L	77	R	1130	R	1820	=
1,4-Dichlorobenzene	ug/L	256	R	1710	R	3490	=
1,2-Dichlorobenzene	ug/L	4200	=	6230	R	42000	=
1,2,4-Trichlorobenzene	ug/L	100	R	200	=	500	R
1,2,3-Trichlorobenzene	ug/l	100	R	31.7	=	500	R

	StationID	H009GW020		H009GW020		H009GW021	
	SampleID	009GW020M1		009GW020M1LR		009GW021M1	
	DateCollected	02/08/2002		02/08/2002		02/08/2002	
	DateExtracted	02/13/2002		02/14/2002		02/13/2002	
	DateAnalyzed	02/13/2002		02/14/2002		02/13/2002	
	SDGNumber	55885		55885		55885	
Parameter	**Units**						
Tetrachloroethylene (PCE)	ug/l	5	U	2500	R	13.6	J
Dibromochloromethane	ug/l	5	U	2500	R	250	U
Chlorobenzene	ug/L	1460	R	9200	=	3310	=
Ethylbenzene	ug/L	5	U	2500	R	250	U
m+p Xylene	ug/l	5	U	2500	R	250	U
o-Xylene	ug/l	5	U	2500	R	250	U
Xylenes, Total	ug/L	5	U	2500	R	250	U
Styrene	ug/L	5	U	2500	R	250	U
Bromoform	ug/L	5	U	2500	R	250	U
1,1,2,2-Tetrachloroethane	ug/L	5	U	2500	R	250	U
1,3-Dichlorobenzene	ug/L	58.7	=	2500	R	413	=
1,4-Dichlorobenzene	ug/L	164	R	206	J	741	=
1,2-Dichlorobenzene	ug/L	897	R	1140	J	7070	R
1,2,4-Trichlorobenzene	ug/L	5	U	2500	R	250	U
1,2,3-Trichlorobenzene	ug/l	5	U	2500	R	250	U

	StationID	H009GW021		H009GW022		H009GW022	
	SampleID	009GW021M1LR		009GW022M1		009GW022M1LR	
	DateCollected	02/08/2002		02/08/2002		02/08/2002	
	DateExtracted	02/15/2002		02/13/2002		02/15/2002	
	DateAnalyzed	02/15/2002		02/13/2002		02/15/2002	
	SDGNumber	55885		55885		55885	
Parameter	**Units**						
Tetrachloroethylene (PCE)	ug/l	500	R	4.2	J	1250	R
Dibromochloromethane	ug/l	500	R	5	U	1250	R
Chlorobenzene	ug/L	3170	R	288	R	363	J
Ethylbenzene	ug/L	500	R	0.24	J	1250	R
m+p Xylene	ug/l	500	R	5	U	1250	R
o-Xylene	ug/l	500	R	5	U	1250	R
Xylenes, Total	ug/L	500	R	5	U	1250	R
Styrene	ug/L	500	R	5	U	1250	R
Bromoform	ug/L	500	R	5	U	1250	R
1,1,2,2-Tetrachloroethane	ug/L	500	R	5	U	1250	R
1,3-Dichlorobenzene	ug/L	356	R	118	R	132	J
1,4-Dichlorobenzene	ug/L	660	R	183	R	235	J
1,2-Dichlorobenzene	ug/L	6610	=	1140	R	3960	=
1,2,4-Trichlorobenzene	ug/L	500	R	5.4	=	1250	R
1,2,3-Trichlorobenzene	ug/l	500	R	1.2	J	1250	R

	StationID	H009GW022		H009GW022		H196GW004	
	SampleID	009HW022M1		009HW022M1LR		196GW004M1	
	DateCollected	02/08/2002		02/08/2002		02/08/2002	
	DateExtracted	02/13/2002		02/15/2002		02/13/2002	
	DateAnalyzed	02/13/2002		02/15/2002		02/13/2002	
	SDGNumber	55885		55885		55885	
Parameter	**Units**						
Tetrachloroethylene (PCE)	ug/l	4.3	J	1250	R	192	J
Dibromochloromethane	ug/l	5	U	1250	R	250	U
Chlorobenzene	ug/L	274	R	270	J	6570	R
Ethylbenzene	ug/L	0.23	J	1250	R	250	U
m+p Xylene	ug/l	5	U	1250	R	250	U
o-Xylene	ug/l	5	U	1250	R	250	U
Xylenes, Total	ug/L	5	U	1250	R	250	U
Styrene	ug/L	5	U	1250	R	250	U
Bromoform	ug/L	5	U	1250	R	250	U
1,1,2,2-Tetrachloroethane	ug/L	5	U	1250	R	250	U
1,3-Dichlorobenzene	ug/L	118	R	87	J	752	=
1,4-Dichlorobenzene	ug/L	183	R	164	J	1350	=
1,2-Dichlorobenzene	ug/L	1140	R	2890	=	20200	R
1,2,4-Trichlorobenzene	ug/L	5.6	=	1250	R	55	J
1,2,3-Trichlorobenzene	ug/l	1.2	J	1250	R	250	U

	StationID	H196GW004		H196GW005		H196GW005	
	SampleID	196GW004M1LR		196GW005M1		196GW005M1LR	
	DateCollected	02/08/2002		02/08/2002		02/08/2002	
	DateExtracted	02/14/2002		02/13/2002		02/14/2002	
	DateAnalyzed	02/14/2002		02/13/2002		02/14/2002	
	SDGNumber	55885		55885		55885	
Parameter	**Units**						
Tetrachloroethylene (PCE)	ug/l	2500	R	250	U	2500	R
Dibromochloromethane	ug/l	2500	R	250	U	2500	R
Chlorobenzene	ug/L	5000	=	347	=	295	R
Ethylbenzene	ug/L	2500	R	250	U	2500	R
m+p Xylene	ug/l	2500	R	250	U	2500	R
o-Xylene	ug/l	2500	R	250	U	2500	R
Xylenes, Total	ug/L	2500	R	250	U	2500	R
Styrene	ug/L	2500	R	250	U	2500	R
Bromoform	ug/L	2500	R	250	U	2500	R
1,1,2,2-Tetrachloroethane	ug/L	2500	R	250	U	2500	R
1,3-Dichlorobenzene	ug/L	576	R	224	J	164	R
1,4-Dichlorobenzene	ug/L	1070	R	512	=	388	R
1,2-Dichlorobenzene	ug/L	17600	=	20400	R	15800	=
1,2,4-Trichlorobenzene	ug/L	2500	R	250	U	2500	R
1,2,3-Trichlorobenzene	ug/l	2500	R	250	U	2500	R

	StationID	H196GW006		H196GW006		H196GW007	
	SampleID	196GW006M1		196GW006M1LR		196GW007M1	
	DateCollected	02/08/2002		02/08/2002		02/08/2002	
	DateExtracted	02/13/2002		02/15/2002		02/14/2002	
	DateAnalyzed	02/13/2002		02/15/2002		02/14/2002	
	SDGNumber	55885		55885		55885	
Parameter	**Units**						
Tetrachloroethylene (PCE)	ug/l	250	U	500	R	250	U
Dibromochloromethane	ug/l	250	U	500	R	250	U
Chlorobenzene	ug/L	1930	=	2030	R	10900	R
Ethylbenzene	ug/L	250	U	500	R	250	U
m+p Xylene	ug/l	250	U	500	R	250	U
o-Xylene	ug/l	250	U	500	R	250	U
Xylenes, Total	ug/L	250	U	500	R	250	U
Styrene	ug/L	250	U	500	R	250	U
Bromoform	ug/L	250	U	500	R	250	U
1,1,2,2-Tetrachloroethane	ug/L	250	U	500	R	250	U
1,3-Dichlorobenzene	ug/L	93.9	J	76.4	R	106	J
1,4-Dichlorobenzene	ug/L	224	J	200	R	306	=
1,2-Dichlorobenzene	ug/L	7570	R	6770	=	7220	R
1,2,4-Trichlorobenzene	ug/L	250	U	500	R	250	U
1,2,3-Trichlorobenzene	ug/l	250	U	500	R	250	U

	StationID	H196GW007		H196GW008		H196GW009	
	SampleID	196GW007M1LR		196GW008M1		196GW009M1	
	DateCollected	02/08/2002		02/08/2002		02/08/2002	
	DateExtracted	02/15/2002		02/15/2002		02/15/2002	
	DateAnalyzed	02/15/2002		02/15/2002		02/15/2002	
	SDGNumber	55885		55885		55885	
Parameter	**Units**						
Tetrachloroethylene (PCE)	ug/l	1250	R	500	U	1250	U
Dibromochloromethane	ug/l	1250	R	500	U	1250	U
Chlorobenzene	ug/L	10200	=	7750	=	3870	=
Ethylbenzene	ug/L	1250	R	500	U	1250	U
m+p Xylene	ug/l	1250	R	500	U	1250	U
o-Xylene	ug/l	1250	R	500	U	1250	U
Xylenes, Total	ug/L	1250	R	500	U	1250	U
Styrene	ug/L	1250	R	500	U	1250	U
Bromoform	ug/L	1250	R	500	U	1250	U
1,1,2,2-Tetrachloroethane	ug/L	1250	R	500	U	1250	U
1,3-Dichlorobenzene	ug/L	93.5	R	255	J	723	J
1,4-Dichlorobenzene	ug/L	293	R	558	=	1320	=
1,2-Dichlorobenzene	ug/L	6760	=	4360	=	16600	=
1,2,4-Trichlorobenzene	ug/L	1250	R	500	U	1250	U
1,2,3-Trichlorobenzene	ug/l	1250	R	500	U	1250	U

	StationID	H196GW010		H196GW010		HGELGW015	
	SampleID	196GW010M1		196GW010M1LR		GELGW015M1	
	DateCollected	02/08/2002		02/08/2002		02/08/2002	
	DateExtracted	02/14/2002		02/15/2002		02/13/2002	
	DateAnalyzed	02/14/2002		02/15/2002		02/13/2002	
	SDGNumber	55885		55885		55885	
Parameter	**Units**						
Tetrachloroethylene (PCE)	ug/l	5	U	1250	R	0.64	J
Dibromochloromethane	ug/l	5	U	1250	R	5	U
Chlorobenzene	ug/L	910	R	1990	=	1300	R
Ethylbenzene	ug/L	5	U	1250	R	0.21	J
m+p Xylene	ug/l	5	U	1250	R	5	U
o-Xylene	ug/l	5	U	1250	R	5	U
Xylenes, Total	ug/L	5	U	1250	R	5	U
Styrene	ug/L	5	U	1250	R	5	U
Bromoform	ug/L	5	U	1250	R	5	U
1,1,2,2-Tetrachloroethane	ug/L	5	U	1250	R	5	U
1,3-Dichlorobenzene	ug/L	42.1	=	1250	R	248	R
1,4-Dichlorobenzene	ug/L	93.9	=	103	R	548	R
1,2-Dichlorobenzene	ug/L	1000	R	1780	=	2240	R
1,2,4-Trichlorobenzene	ug/L	0.65	J	1250	R	6.6	=
1,2,3-Trichlorobenzene	ug/l	5	U	1250	R	1	J

	StationID	HGELGW015		H196GW011		H196GW012	
	SampleID	GELGW015M1LR		196GW011M1		196GW012M1	
	DateCollected	02/08/2002		02/11/2002		02/11/2002	
	DateExtracted	02/14/2002		02/14/2002		02/14/2002	
	DateAnalyzed	02/14/2002		02/14/2002		02/14/2002	
	SDGNumber	55885		55953		55953	
Parameter	Units						
Tetrachloroethylene (PCE)	ug/l	2500	R	1.3	J	5	U
Dibromochloromethane	ug/l	2500	R	5	U	5	U
Chlorobenzene	ug/L	6100	=	28.7	=	13.1	=
Ethylbenzene	ug/L	2500	R	5	U	5	U
m+p Xylene	ug/l	2500	R	5	U	5	U
o-Xylene	ug/l	2500	R	5	U	5	U
Xylenes, Total	ug/L	2500	R	5	U	5	U
Styrene	ug/L	2500	R	5	U	5	U
Bromoform	ug/L	2500	R	5	U	5	U
1,1,2,2-Tetrachloroethane	ug/L	2500	R	5	U	5	U
1,3-Dichlorobenzene	ug/L	168	J	0.88	J	5	U
1,4-Dichlorobenzene	ug/L	448	J	1.9	J	0.54	J
1,2-Dichlorobenzene	ug/L	17500	=	18.8	=	15.3	=
1,2,4-Trichlorobenzene	ug/L	2500	R	5	U	5	U
1,2,3-Trichlorobenzene	ug/l	2500	R	5	U	5	U

	StationID	H196GW013		H196GW013		H196GW014	
	SampleID	196GW013M1		196GW013M1LR		196GW014M1	
	DateCollected	02/11/2002		02/11/2002		02/11/2002	
	DateExtracted	02/14/2002		02/15/2002		02/14/2002	
	DateAnalyzed	02/14/2002		02/15/2002		02/14/2002	
	SDGNumber	55953		55953		55953	
Parameter	**Units**						
Tetrachloroethylene (PCE)	ug/l	250	U	1250	R	2500	U
Dibromochloromethane	ug/l	250	U	1250	R	2500	U
Chlorobenzene	ug/L	9140	R	8630	=	6440	=
Ethylbenzene	ug/L	250	U	1250	R	2500	U
m+p Xylene	ug/l	250	U	1250	R	2500	U
o-Xylene	ug/l	250	U	1250	R	2500	U
Xylenes, Total	ug/L	250	U	1250	R	2500	U
Styrene	ug/L	250	U	1250	R	2500	U
Bromoform	ug/L	250	U	1250	R	2500	U
1,1,2,2-Tetrachloroethane	ug/L	250	U	1250	R	2500	U
1,3-Dichlorobenzene	ug/L	110	J	87.4	R	1460	J
1,4-Dichlorobenzene	ug/L	306	=	270	R	2670	=
1,2-Dichlorobenzene	ug/L	11600	R	10200	=	32500	=
1,2,4-Trichlorobenzene	ug/L	250	U	1250	R	2500	U
1,2,3-Trichlorobenzene	ug/l	250	U	1250	R	2500	U

	StationID	H196GW015		H196GW016		H196GW017	
	SampleID	196GW015M1		196GW016M3		196GW017M3	
	DateCollected	02/11/2002		03/11/2002		03/11/2002	
	DateExtracted	02/15/2002		03/14/2002		03/14/2002	
	DateAnalyzed	02/15/2002		03/14/2002		03/14/2002	
	SDGNumber	55953		57356		57356	
Parameter	**Units**						
Tetrachloroethylene (PCE)	ug/l	1250	U	25	U	10	U
Dibromochloromethane	ug/l	1250	U	25	U	10	U
Chlorobenzene	ug/L	15000	=	65.2	=	36.9	=
Ethylbenzene	ug/L	1250	U	0.92	J	0.56	J
m+p Xylene	ug/l	1250	U	25	U	10	U
o-Xylene	ug/l	1250	U	25	U	10	U
Xylenes, Total	ug/L	1250	U	25	U	10	U
Styrene	ug/L	1250	U	25	U	10	U
Bromoform	ug/L	1250	U	25	U	10	U
1,1,2,2-Tetrachloroethane	ug/L	1250	U	25	U	10	U
1,3-Dichlorobenzene	ug/L	78.2	J	7.2	J	4	J
1,4-Dichlorobenzene	ug/L	266	J	25	U	10	U
1,2-Dichlorobenzene	ug/L	197	J	258	=	113	=
1,2,4-Trichlorobenzene	ug/L	1250	U	25	U	10	U
1,2,3-Trichlorobenzene	ug/l	1250	U	25	U	10	U

	StationID	H009GW020		H009GW020		H196GW006	
	SampleID	009GW020M4		009GW020M4DL		196GW006M4	
	DateCollected	03/20/2002		03/20/2002		03/20/2002	
	DateExtracted	03/27/2002		03/28/2002		03/28/2002	
	DateAnalyzed	03/27/2002		03/28/2002		03/28/2002	
	SDGNumber	CNC77		CNC77		CNC77	
Parameter	**Units**						
Tetrachloroethylene (PCE)	ug/l	50	U	250	R	25	U
Dibromochloromethane	ug/l	50	U	250	R	25	U
Chlorobenzene	ug/L	4500	R	5600	=	47	=
Ethylbenzene	ug/L	50	U	250	R	25	U
m+p Xylene	ug/l	50	U	250	R	25	U
o-Xylene	ug/l	50	U	250	R	25	U
Xylenes, Total	ug/L	50	U	250	R	25	U
Styrene	ug/L	50	U	250	R	25	U
Bromoform	ug/L	50	U	250	R	25	U
1,1,2,2-Tetrachloroethane	ug/L	50	U	250	R	25	U
1,3-Dichlorobenzene	ug/L	26	J	33	R	8.3	J
1,4-Dichlorobenzene	ug/L	70	=	100	R	22	J
1,2-Dichlorobenzene	ug/L	180	=	340	R	670	=
1,2,4-Trichlorobenzene	ug/L	50	U	250	R	25	U
1,2,3-Trichlorobenzene	ug/l	50	U	250	R	25	U

	StationID	H009GW022		H009GW022		H196GW004	
	SampleID	009GW022M4DL		009HW022M4		196GW004M4	
	DateCollected	03/21/2002		03/21/2002		03/21/2002	
	DateExtracted	03/28/2002		03/28/2002		03/28/2002	
	DateAnalyzed	03/28/2002		03/28/2002		03/28/2002	
	SDGNumber	CNC77		CNC77		CNC77	
Parameter	Units						
m-Xylene	ug/l						
Chloromethane	ug/L	100	R	100	U	50	U
Vinyl chloride	ug/l	100	R	100	U	50	U
Bromomethane	ug/L	100	R	100	U	50	U
Chloroethane	ug/L	100	R	100	U	50	U
1,1-Dichloroethene	ug/L	50	R	50	U	25	U
Acetone	ug/l	100	R	100	UJ	50	UJ
Carbon Disulfide	ug/l	50	R	50	U	25	U
Methylene Chloride	ug/l	50	R	50	U	25	U
trans-1,2-Dichloroethene	ug/L	50	R	50	U	25	U
1,1-Dichloroethane	ug/L	50	R	50	U	25	U
Vinyl acetate	ug/L	100	R	100	U	50	U
Methyl ethyl ketone (2-Butanone)	ug/L	100	R	100	U	50	U
cis-1,2-Dichloroethylene	ug/l	20	R	24	J	23	J
1,2-Dichloroethene (total)	ug/L	20	R	24	J	23	J
Chloroform	ug/L	50	R	50	U	25	U
1,1,1-Trichloroethane	ug/l	50	R	50	U	25	U
Carbon Tetrachloride	ug/L	50	R	50	U	25	U
1,2-Dichloroethane	ug/L	50	R	50	U	25	U
Benzene	ug/L	5	R	7.4	J	34	=
Trichloroethylene (TCE)	ug/l	6.9	R	8.8	J	6.7	J
1,2-Dichloropropane	ug/l	50	R	50	U	25	U
Bromodichloromethane	ug/L	50	R	50	U	25	U
2-Chloroethyl vinyl ether	ug/L	100	R	100	U	50	U
cis-1,3-Dichloropropene	ug/L	50	R	50	U	25	U
Methyl isobutyl ketone (4-Methyl-2-pentanone)	ug/L	100	R	100	U	50	U
Toluene	ug/l	50	R	50	U	25	U
trans-1,3-Dichloropropene	ug/L	50	R	50	U	25	U
1,1,2-Trichloroethane	ug/l	50	R	50	U	25	U
2-Hexanone	ug/l	100	R	100	U	50	U

	StationID	H196GW004		H196GW005		H196GW005	
	SampleID	196GW004M4DL		196GW005M4		196GW005M4DL	
	DateCollected	03/21/2002		03/21/2002		03/21/2002	
	DateExtracted	03/28/2002		03/27/2002		03/28/2002	
	DateAnalyzed	03/28/2002		03/27/2002		03/28/2002	
	SDGNumber	CNC77		CNC77		CNC77	
Parameter	**Units**						
m-Xylene	ug/l						
Chloromethane	ug/L	100	R	50	U	200	R
Vinyl chloride	ug/l	100	R	50	U	200	R
Bromomethane	ug/L	100	R	50	U	200	R
Chloroethane	ug/L	100	R	50	U	200	R
1,1-Dichloroethene	ug/L	50	R	25	U	100	R
Acetone	ug/l	100	R	66	J	200	R
Carbon Disulfide	ug/l	50	R	10	J	100	R
Methylene Chloride	ug/l	50	R	25	U	100	R
trans-1,2-Dichloroethene	ug/L	50	R	25	U	100	R
1,1-Dichloroethane	ug/L	50	R	25	U	100	R
Vinyl acetate	ug/L	100	R	50	U	200	R
Methyl ethyl ketone (2-Butanone)	ug/L	100	R	50	U	200	R
cis-1,2-Dichloroethylene	ug/l	21	R	25	U	100	R
1,2-Dichloroethene (total)	ug/L	21	R	25	U	100	R
Chloroform	ug/L	50	R	25	U	100	R
1,1,1-Trichloroethane	ug/l	50	R	25	U	100	R
Carbon Tetrachloride	ug/L	50	R	25	U	100	R
1,2-Dichloroethane	ug/L	50	R	25	U	100	R
Benzene	ug/L	31	R	25	U	100	R
Trichloroethylene (TCE)	ug/l	6.6	R	25	U	100	R
1,2-Dichloropropane	ug/l	50	R	25	U	100	R
Bromodichloromethane	ug/L	50	R	25	U	100	R
2-Chloroethyl vinyl ether	ug/L	100	R	50	UJ	200	R
cis-1,3-Dichloropropene	ug/L	50	R	25	U	100	R
Methyl isobutyl ketone (4-Methyl-2-pentanone)	ug/L	100	R	50	UJ	200	R
Toluene	ug/l	14	R	25	U	100	R
trans-1,3-Dichloropropene	ug/L	50	R	25	U	100	R
1,1,2-Trichloroethane	ug/l	50	R	25	U	100	R
2-Hexanone	ug/l	100	R	50	UJ	200	R

	StationID	H196GW007		H196GW007		H196GW008	
	SampleID	196GW007M4		196GW007M4DL		196GW008M4	
	DateCollected	03/21/2002		03/21/2002		03/21/2002	
	DateExtracted	03/28/2002		03/28/2002		03/27/2002	
	DateAnalyzed	03/28/2002		03/28/2002		03/27/2002	
	SDGNumber	CNC77		CNC77		CNC77	
Parameter	**Units**						
m-Xylene	ug/l						
Chloromethane	ug/L	20	U	50	R	100	U
Vinyl chloride	ug/l	20	U	50	R	10	J
Bromomethane	ug/L	20	U	50	R	100	U
Chloroethane	ug/L	20	U	50	R	100	U
1,1-Dichloroethene	ug/L	10	U	25	R	50	U
Acetone	ug/l	39	J	50	R	100	UJ
Carbon Disulfide	ug/l	6.6	J	25	R	50	U
Methylene Chloride	ug/l	10	U	2.6	R	50	U
trans-1,2-Dichloroethene	ug/L	10	U	25	R	50	U
1,1-Dichloroethane	ug/L	10	U	25	R	50	U
Vinyl acetate	ug/L	20	U	50	R	100	U
Methyl ethyl ketone (2-Butanone)	ug/L	20	U	50	R	100	U
cis-1,2-Dichloroethylene	ug/l	2.7	J	25	R	19	J
1,2-Dichloroethene (total)	ug/L	2.7	J	25	R	19	J
Chloroform	ug/L	10	U	25	R	50	U
1,1,1-Trichloroethane	ug/l	10	U	25	R	50	U
Carbon Tetrachloride	ug/L	10	U	25	R	50	U
1,2-Dichloroethane	ug/L	10	U	25	R	50	U
Benzene	ug/L	13	=	12	R	22	J
Trichloroethylene (TCE)	ug/l	0.59	J	25	R	50	U
1,2-Dichloropropane	ug/l	10	U	25	R	50	U
Bromodichloromethane	ug/L	10	U	25	R	50	U
2-Chloroethyl vinyl ether	ug/L	20	U	50	R	100	UJ
cis-1,3-Dichloropropene	ug/L	10	U	25	R	50	U
Methyl isobutyl ketone (4-Methyl-2-pentanone)	ug/L	20	U	50	R	100	UJ
Toluene	ug/l	10	U	25	R	50	U
trans-1,3-Dichloropropene	ug/L	10	U	25	R	50	U
1,1,2-Trichloroethane	ug/l	10	U	25	R	50	U
2-Hexanone	ug/l	20	U	50	R	100	UJ

	StationID	H196GW009		H196GW011		H196GW012	
	SampleID	196GW009M4		196GW011M4		196GW012M4	
	DateCollected	03/21/2002		03/21/2002		03/21/2002	
	DateExtracted	03/28/2002		03/27/2002		03/27/2002	
	DateAnalyzed	03/28/2002		03/27/2002		03/27/2002	
	SDGNumber	CNC77		CNC77		CNC77	
Parameter	**Units**						
m-Xylene	ug/l						
Chloromethane	ug/L	500	U	10	U	10	U
Vinyl chloride	ug/l	500	U	1.8	J	10	U
Bromomethane	ug/L	500	U	10	U	10	U
Chloroethane	ug/L	500	U	10	U	10	U
1,1-Dichloroethene	ug/L	250	U	5	U	5	U
Acetone	ug/l	500	UJ	10	UJ	10	UJ
Carbon Disulfide	ug/l	250	U	5	U	5	U
Methylene Chloride	ug/l	250	U	5	U	5	U
trans-1,2-Dichloroethene	ug/L	250	U	0.62	J	5	U
1,1-Dichloroethane	ug/L	250	U	5	U	5	U
Vinyl acetate	ug/L	500	U	10	U	10	U
Methyl ethyl ketone (2-Butanone)	ug/L	500	U	10	U	10	U
cis-1,2-Dichloroethylene	ug/l	33	J	5.8	=	5	U
1,2-Dichloroethene (total)	ug/L	33	J	6.4	=	5	U
Chloroform	ug/L	250	U	5	U	5	U
1,1,1-Trichloroethane	ug/l	250	U	5	U	5	U
Carbon Tetrachloride	ug/L	250	U	5	U	5	U
1,2-Dichloroethane	ug/L	250	U	5	U	5	U
Benzene	ug/L	2100	=	6.1	=	5	U
Trichloroethylene (TCE)	ug/l	17	J	2.7	J	5	U
1,2-Dichloropropane	ug/l	250	U	5	U	5	U
Bromodichloromethane	ug/L	250	U	5	U	5	U
2-Chloroethyl vinyl ether	ug/L	500	U	10	UJ	10	UJ
cis-1,3-Dichloropropene	ug/L	250	U	5	U	5	U
Methyl isobutyl ketone (4-Methyl-2-pentanone)	ug/L	500	U	10	UJ	10	UJ
Toluene	ug/l	330	=	5	U	5	U
trans-1,3-Dichloropropene	ug/L	250	U	5	U	5	U
1,1,2-Trichloroethane	ug/l	250	U	5	U	5	U
2-Hexanone	ug/l	500	U	10	UJ	10	UJ

	StationID	H196GW013		H196GW013		H196GW014	
	SampleID	196GW013M4		196GW013M4DL		196GW014M4	
	DateCollected	03/21/2002		03/21/2002		03/21/2002	
	DateExtracted	03/28/2002		03/28/2002		03/28/2002	
	DateAnalyzed	03/28/2002		03/28/2002		03/28/2002	
	SDGNumber	CNC77		CNC77		CNC77	
Parameter	**Units**						
m-Xylene	ug/l						
Chloromethane	ug/L	200	U	1000	R	200	U
Vinyl chloride	ug/l	200	U	1000	R	200	U
Bromomethane	ug/L	200	U	1000	R	200	U
Chloroethane	ug/L	200	U	1000	R	200	U
1,1-Dichloroethene	ug/L	100	U	500	R	100	U
Acetone	ug/l	200	UJ	1000	R	5800	J
Carbon Disulfide	ug/l	100	U	500	R	100	U
Methylene Chloride	ug/l	100	U	500	R	100	U
trans-1,2-Dichloroethene	ug/L	100	U	500	R	100	U
1,1-Dichloroethane	ug/L	100	U	500	R	100	U
Vinyl acetate	ug/L	200	U	1000	R	200	U
Methyl ethyl ketone (2-Butanone)	ug/L	200	U	1000	R	200	U
cis-1,2-Dichloroethylene	ug/l	100	U	500	R	100	U
1,2-Dichloroethene (total)	ug/L	100	U	500	R	100	U
Chloroform	ug/L	100	U	500	R	100	U
1,1,1-Trichloroethane	ug/l	100	U	500	R	100	U
Carbon Tetrachloride	ug/L	100	U	500	R	100	U
1,2-Dichloroethane	ug/L	100	U	500	R	100	U
Benzene	ug/L	30	J	38	R	700	=
Trichloroethylene (TCE)	ug/l	100	U	500	R	100	U
1,2-Dichloropropane	ug/l	100	U	500	R	100	U
Bromodichloromethane	ug/L	100	U	500	R	100	U
2-Chloroethyl vinyl ether	ug/L	200	U	1000	R	200	U
cis-1,3-Dichloropropene	ug/L	100	U	500	R	100	U
Methyl isobutyl ketone (4-Methyl-2-pentanone)	ug/L	200	U	1000	R	200	U
Toluene	ug/l	100	U	500	R	340	=
trans-1,3-Dichloropropene	ug/L	100	U	500	R	100	U
1,1,2-Trichloroethane	ug/l	100	U	500	R	100	U
2-Hexanone	ug/l	200	U	1000	R	200	U

	StationID	H196GW014		H196GW015		H196GW015	
	SampleID	196GW014M4DL		196GW015M4		196GW015M4DL	
	DateCollected	03/21/2002		03/21/2002		03/21/2002	
	DateExtracted	03/28/2002		03/28/2002		03/28/2002	
	DateAnalyzed	03/28/2002		03/28/2002		03/28/2002	
	SDGNumber	CNC77		CNC77		CNC77	
Parameter	**Units**						
m-Xylene	ug/l						
Chloromethane	ug/L	2000	R	100	U	200	R
Vinyl chloride	ug/l	2000	R	880	=	1600	R
Bromomethane	ug/L	2000	R	100	U	200	R
Chloroethane	ug/L	2000	R	100	U	200	R
1,1-Dichloroethene	ug/L	1000	R	50	U	100	R
Acetone	ug/l	4000	R	100	UJ	200	R
Carbon Disulfide	ug/l	1000	R	50	U	100	R
Methylene Chloride	ug/l	1000	R	50	U	100	R
trans-1,2-Dichloroethene	ug/L	1000	R	50	U	100	R
1,1-Dichloroethane	ug/L	1000	R	29	J	64	R
Vinyl acetate	ug/L	2000	R	100	U	200	R
Methyl ethyl ketone (2-Butanone)	ug/L	2000	R	100	U	200	R
cis-1,2-Dichloroethylene	ug/l	1000	R	720	=	930	R
1,2-Dichloroethene (total)	ug/L	1000	R	720	=	930	R
Chloroform	ug/L	1000	R	50	U	100	R
1,1,1-Trichloroethane	ug/l	1000	R	50	U	100	R
Carbon Tetrachloride	ug/L	1000	R	50	U	100	R
1,2-Dichloroethane	ug/L	1000	R	50	U	100	R
Benzene	ug/L	740	R	170	=	220	R
Trichloroethylene (TCE)	ug/l	1000	R	73	=	100	R
1,2-Dichloropropane	ug/l	1000	R	50	U	100	R
Bromodichloromethane	ug/L	1000	R	50	U	100	R
2-Chloroethyl vinyl ether	ug/L	2000	R	100	U	200	R
cis-1,3-Dichloropropene	ug/L	1000	R	50	U	100	R
Methyl isobutyl ketone (4-Methyl-2-pentanone)	ug/L	2000	R	100	U	200	R
Toluene	ug/l	380	R	50	U	100	R
trans-1,3-Dichloropropene	ug/L	1000	R	50	U	100	R
1,1,2-Trichloroethane	ug/l	1000	R	50	U	100	R
2-Hexanone	ug/l	2000	R	100	U	200	R

	StationID	H196GW016		H196GW017		H196GW017	
	SampleID	196GW016M4		196GW017M4		196HW005M4	
	DateCollected	03/21/2002		03/21/2002		03/21/2002	
	DateExtracted	03/27/2002		03/27/2002		03/27/2002	
	DateAnalyzed	03/27/2002		03/27/2002		03/27/2002	
	SDGNumber	CNC77		CNC77		CNC77	
Parameter	**Units**						
m-Xylene	ug/l						
Chloromethane	ug/L	10	U	10	U	200	U
Vinyl chloride	ug/l	1.6	J	10	U	200	U
Bromomethane	ug/L	10	U	10	U	200	U
Chloroethane	ug/L	10	U	10	U	200	U
1,1-Dichloroethene	ug/L	5	U	5	U	100	U
Acetone	ug/l	10	UJ	10	UJ	200	UJ
Carbon Disulfide	ug/l	5	U	5	U	100	U
Methylene Chloride	ug/l	5	U	5	U	100	U
trans-1,2-Dichloroethene	ug/L	5	U	5	U	100	U
1,1-Dichloroethane	ug/L	5	U	5	U	100	U
Vinyl acetate	ug/L	10	U	10	U	200	U
Methyl ethyl ketone (2-Butanone)	ug/L	10	U	10	U	200	U
cis-1,2-Dichloroethylene	ug/l	5	U	5	U	100	U
1,2-Dichloroethene (total)	ug/L	5	U	5	U	100	U
Chloroform	ug/L	5	U	5	U	100	U
1,1,1-Trichloroethane	ug/l	5	U	5	U	100	U
Carbon Tetrachloride	ug/L	5	U	5	U	100	U
1,2-Dichloroethane	ug/L	5	U	5	U	100	U
Benzene	ug/L	5	U	5	U	100	U
Trichloroethylene (TCE)	ug/l	3.3	J	5	U	100	U
1,2-Dichloropropane	ug/l	5	U	5	U	100	U
Bromodichloromethane	ug/L	5	U	5	U	100	U
2-Chloroethyl vinyl ether	ug/L	10	UJ	10	UJ	200	UJ
cis-1,3-Dichloropropene	ug/L	5	U	5	U	100	U
Methyl isobutyl ketone (4-Methyl-2-pentanone)	ug/L	10	UJ	10	UJ	200	UJ
Toluene	ug/l	5	U	5	U	100	U
trans-1,3-Dichloropropene	ug/L	5	U	5	U	100	U
1,1,2-Trichloroethane	ug/l	5	U	5	U	100	U
2-Hexanone	ug/l	10	UJ	10	UJ	200	UJ

	StationID	H009GW020		H009GW020		H009GW021	
	SampleID	009GW020M5		009GW020M5DL		009GW021M5	
	DateCollected	04/23/2002		04/23/2002		04/23/2002	
	DateExtracted	04/30/2002		05/01/2002		04/30/2002	
	DateAnalyzed	04/30/2002		05/01/2002		04/30/2002	
	SDGNumber	59367		59367		59367	
Parameter	**Units**						
m-Xylene	ug/l						
Chloromethane	ug/L	1000	U	2500	R	1000	U
Vinyl chloride	ug/l	1000	U	2500	R	1000	U
Bromomethane	ug/L	1000	U	2500	R	1000	U
Chloroethane	ug/L	1000	U	2500	R	1000	U
1,1-Dichloroethene	ug/L	500	U	1250	R	500	U
Acetone	ug/l	1000	U	2500	R	1000	U
Carbon Disulfide	ug/l	500	U	1250	R	500	U
Methylene Chloride	ug/l	500	U	674	R	500	U
trans-1,2-Dichloroethene	ug/L	500	U	1250	R	500	U
1,1-Dichloroethane	ug/L	500	U	1250	R	500	U
Vinyl acetate	ug/L	1000	U	2500	R	1000	U
Methyl ethyl ketone (2-Butanone)	ug/L	1000	U	2500	R	1000	U
cis-1,2-Dichloroethylene	ug/l	500	U	1250	R	122	J
1,2-Dichloroethene (total)	ug/L	500	U	1250	R	122	J
Chloroform	ug/L	500	U	1250	R	500	U
1,1,1-Trichloroethane	ug/l	500	U	1250	R	500	U
Carbon Tetrachloride	ug/L	500	U	1250	R	500	U
1,2-Dichloroethane	ug/L	500	U	1250	R	500	U
Benzene	ug/L	500	U	1250	R	136	J
Trichloroethylene (TCE)	ug/l	500	U	1250	R	500	U
1,2-Dichloropropane	ug/l	500	U	1250	R	500	U
Bromodichloromethane	ug/L	500	U	1250	R	500	U
2-Chloroethyl vinyl ether	ug/L	500	U	1250	R	500	U
cis-1,3-Dichloropropene	ug/L	500	U	1250	R	500	U
Methyl isobutyl ketone (4-Methyl-2-pentanone)	ug/L	1000	U	2500	R	1000	U
Toluene	ug/l	500	U	1250	R	239	J
trans-1,3-Dichloropropene	ug/L	500	U	1250	R	500	U
1,1,2-Trichloroethane	ug/l	500	U	1250	R	500	U
2-Hexanone	ug/l	1000	U	2500	R	1000	U

	StationID	H009GW021		H196GW006		H196GW007	
	SampleID	009GW021M5DL		196GW006M5		196GW007M5	
	DateCollected	04/23/2002		04/23/2002		04/23/2002	
	DateExtracted	05/01/2002		04/29/2002		04/29/2002	
	DateAnalyzed	05/01/2002		04/29/2002		04/29/2002	
	SDGNumber	59367		59366		59366	
Parameter	**Units**						
m-Xylene	ug/l						
Chloromethane	ug/L	2500	R	200	U	250	U
Vinyl chloride	ug/l	2500	R	200	U	250	U
Bromomethane	ug/L	2500	R	200	U	250	U
Chloroethane	ug/L	2500	R	200	U	250	U
1,1-Dichloroethene	ug/L	1250	R	100	U	125	U
Acetone	ug/l	2500	R	200	U	250	U
Carbon Disulfide	ug/l	1250	R	100	U	125	U
Methylene Chloride	ug/l	679	R	100	U	125	UJ
trans-1,2-Dichloroethene	ug/L	1250	R	100	U	125	U
1,1-Dichloroethane	ug/L	1250	R	100	U	125	U
Vinyl acetate	ug/L	2500	R	200	U	250	U
Methyl ethyl ketone (2-Butanone)	ug/L	2500	R	200	U	250	U
cis-1,2-Dichloroethylene	ug/l	104	R	100	U	125	U
1,2-Dichloroethene (total)	ug/L	104	R	100	U	125	U
Chloroform	ug/L	1250	R	100	U	125	U
1,1,1-Trichloroethane	ug/l	1250	R	100	U	125	U
Carbon Tetrachloride	ug/L	1250	R	100	U	125	U
1,2-Dichloroethane	ug/L	1250	R	100	U	125	U
Benzene	ug/L	144	R	100	U	33	J
Trichloroethylene (TCE)	ug/l	1250	R	100	U	125	U
1,2-Dichloropropane	ug/l	1250	R	100	U	125	U
Bromodichloromethane	ug/L	1250	R	100	U	125	U
2-Chloroethyl vinyl ether	ug/L	1250	R	100	U	125	U
cis-1,3-Dichloropropene	ug/L	1250	R	100	U	125	U
Methyl isobutyl ketone (4-Methyl-2-pentanone)	ug/L	2500	R	200	U	250	U
Toluene	ug/l	229	R	100	U	125	U
trans-1,3-Dichloropropene	ug/L	1250	R	100	U	125	U
1,1,2-Trichloroethane	ug/l	1250	R	100	U	125	U
2-Hexanone	ug/l	2500	R	200	U	250	U

	StationID	H196GW008		H196GW010		H196GW011	
	SampleID	196GW008M5		196GW010M5		196GW011M5	
	DateCollected	04/23/2002		04/23/2002		04/23/2002	
	DateExtracted	04/25/2002		04/29/2002		04/29/2002	
	DateAnalyzed	04/25/2002		04/29/2002		04/29/2002	
	SDGNumber	59366		59366		59366	
Parameter	**Units**						
m-Xylene	ug/l						
Chloromethane	ug/L	1000	U	200	U	20	U
Vinyl chloride	ug/l	1000	U	200	U	8.5	J
Bromomethane	ug/L	1000	U	200	U	20	U
Chloroethane	ug/L	1000	U	200	U	20	U
1,1-Dichloroethene	ug/L	500	U	100	U	10	U
Acetone	ug/l	1000	U	200	U	20	UJ
Carbon Disulfide	ug/l	500	U	100	U	10	U
Methylene Chloride	ug/l	500	U	100	UJ	10	U
trans-1,2-Dichloroethene	ug/L	500	U	100	U	10	U
1,1-Dichloroethane	ug/L	500	U	100	U	10	U
Vinyl acetate	ug/L	1000	U	200	U	20	U
Methyl ethyl ketone (2-Butanone)	ug/L	1000	U	200	U	20	U
cis-1,2-Dichloroethylene	ug/l	63.2	J	100	U	8.2	J
1,2-Dichloroethene (total)	ug/L	63.2	J	100	U	8.2	J
Chloroform	ug/L	500	U	100	U	10	U
1,1,1-Trichloroethane	ug/l	500	U	100	U	10	U
Carbon Tetrachloride	ug/L	500	U	100	U	10	U
1,2-Dichloroethane	ug/L	500	U	100	U	10	U
Benzene	ug/L	64.3	J	100	U	2.8	J
Trichloroethylene (TCE)	ug/l	500	U	100	U	5.2	J
1,2-Dichloropropane	ug/l	500	U	100	U	10	U
Bromodichloromethane	ug/L	500	U	100	U	10	U
2-Chloroethyl vinyl ether	ug/L	500	U	100	U	10	U
cis-1,3-Dichloropropene	ug/L	500	U	100	U	10	U
Methyl isobutyl ketone (4-Methyl-2-pentanone)	ug/L	1000	U	200	U	20	U
Toluene	ug/l	78.9	J	100	U	10	U
trans-1,3-Dichloropropene	ug/L	500	U	100	U	10	U
1,1,2-Trichloroethane	ug/l	500	U	100	U	10	U
2-Hexanone	ug/l	1000	U	200	U	20	U

	StationID	H196GW015		HGELGW015		H009GW022	
	SampleID	196GW015M5		GELGW015M5		009GW022M5	
	DateCollected	04/23/2002		04/23/2002		04/24/2002	
	DateExtracted	04/30/2002		04/30/2002		04/25/2002	
	DateAnalyzed	04/30/2002		04/30/2002		04/25/2002	
	SDGNumber	59366		59366		59366	
Parameter	**Units**						
m-Xylene	ug/l						
Chloromethane	ug/L	250	U	500	U	10	U
Vinyl chloride	ug/l	2230	=	500	U	10	U
Bromomethane	ug/L	250	U	500	U	10	U
Chloroethane	ug/L	250	U	500	U	10	U
1,1-Dichloroethene	ug/L	125	U	250	U	5	U
Acetone	ug/l	250	U	500	U	10	U
Carbon Disulfide	ug/l	125	U	250	U	5	U
Methylene Chloride	ug/l	125	U	250	U	5	U
trans-1,2-Dichloroethene	ug/L	125	U	250	U	5	U
1,1-Dichloroethane	ug/L	38.7	J	250	U	5	U
Vinyl acetate	ug/L	250	U	500	U	10	U
Methyl ethyl ketone (2-Butanone)	ug/L	250	U	500	U	10	U
cis-1,2-Dichloroethylene	ug/l	1080	=	250	U	25	=
1,2-Dichloroethene (total)	ug/L	1080	=	250	U	25	=
Chloroform	ug/L	125	U	250	U	5	U
1,1,1-Trichloroethane	ug/l	125	U	250	U	5	U
Carbon Tetrachloride	ug/L	125	U	250	U	5	U
1,2-Dichloroethane	ug/L	125	U	250	U	5	U
Benzene	ug/L	18	J	250	U	0.76	J
Trichloroethylene (TCE)	ug/l	136	=	250	U	9.6	=
1,2-Dichloropropane	ug/l	125	U	250	U	5	U
Bromodichloromethane	ug/L	125	U	250	U	5	U
2-Chloroethyl vinyl ether	ug/L	125	U	250	U	5	U
cis-1,3-Dichloropropene	ug/L	125	U	250	U	5	U
Methyl isobutyl ketone (4-Methyl-2-pentanone)	ug/L	250	U	500	U	10	U
Toluene	ug/l	125	U	250	U	5	U
trans-1,3-Dichloropropene	ug/L	125	U	250	U	5	U
1,1,2-Trichloroethane	ug/l	125	U	250	U	5	U
2-Hexanone	ug/l	250	U	500	U	10	U

	StationID	H009GW022		H009GW022		H196GW004	
	SampleID	009GW022M5DL		009HW022M5		196GW004M5	
	DateCollected	04/24/2002		04/24/2002		04/24/2002	
	DateExtracted	04/25/2002		04/29/2002		04/29/2002	
	DateAnalyzed	04/25/2002		04/29/2002		04/29/2002	
	SDGNumber	59366		59366		59366	
Parameter	**Units**						
m-Xylene	ug/l						
Chloromethane	ug/L	1000	R	500	U	200	U
Vinyl chloride	ug/l	1000	R	500	U	200	U
Bromomethane	ug/L	1000	R	500	U	200	U
Chloroethane	ug/L	1000	R	500	U	200	U
1,1-Dichloroethene	ug/L	500	R	250	U	100	U
Acetone	ug/l	492	R	500	U	200	U
Carbon Disulfide	ug/l	500	R	250	U	100	U
Methylene Chloride	ug/l	230	R	250	UJ	100	UJ
trans-1,2-Dichloroethene	ug/L	500	R	250	U	100	U
1,1-Dichloroethane	ug/L	500	R	250	U	100	U
Vinyl acetate	ug/L	1000	R	500	U	200	U
Methyl ethyl ketone (2-Butanone)	ug/L	1000	R	500	U	200	U
cis-1,2-Dichloroethylene	ug/l	500	R	21.6	J	14.3	J
1,2-Dichloroethene (total)	ug/L	500	R	21.6	J	14.3	J
Chloroform	ug/L	500	R	250	U	100	U
1,1,1-Trichloroethane	ug/l	500	R	250	U	100	U
Carbon Tetrachloride	ug/L	500	R	250	U	100	U
1,2-Dichloroethane	ug/L	500	R	250	U	100	U
Benzene	ug/L	500	R	250	U	29.2	J
Trichloroethylene (TCE)	ug/l	500	R	250	U	100	U
1,2-Dichloropropane	ug/l	500	R	250	U	100	U
Bromodichloromethane	ug/L	500	R	250	U	100	U
2-Chloroethyl vinyl ether	ug/L	500	R	250	U	100	U
cis-1,3-Dichloropropene	ug/L	500	R	250	U	100	U
Methyl isobutyl ketone (4-Methyl-2-pentanone)	ug/L	1000	R	500	U	200	U
Toluene	ug/l	500	R	250	U	100	U
trans-1,3-Dichloropropene	ug/L	500	R	250	U	100	U
1,1,2-Trichloroethane	ug/l	500	R	250	U	100	U
2-Hexanone	ug/l	1000	R	500	U	200	U

	StationID	H196GW005		H196GW005		H196GW009	
	SampleID	196GW005M5		196HW005M5		196GW009M5	
	DateCollected	04/24/2002		04/24/2002		04/24/2002	
	DateExtracted	04/25/2002		04/30/2002		04/25/2002	
	DateAnalyzed	04/25/2002		04/30/2002		04/25/2002	
	SDGNumber	59366		59366		59366	
Parameter	**Units**						
m-Xylene	ug/l						
Chloromethane	ug/L	1000	U	1000	U	1000	U
Vinyl chloride	ug/l	1000	U	1000	U	1000	U
Bromomethane	ug/L	1000	U	1000	U	1000	U
Chloroethane	ug/L	1000	U	1000	U	1000	U
1,1-Dichloroethene	ug/L	500	U	500	U	500	U
Acetone	ug/l	1000	U	1000	U	1000	U
Carbon Disulfide	ug/l	500	U	500	U	500	U
Methylene Chloride	ug/l	500	U	500	U	500	U
trans-1,2-Dichloroethene	ug/L	500	U	500	U	500	U
1,1-Dichloroethane	ug/L	500	U	500	U	500	U
Vinyl acetate	ug/L	1000	U	1000	U	1000	U
Methyl ethyl ketone (2-Butanone)	ug/L	1000	U	1000	U	1000	U
cis-1,2-Dichloroethylene	ug/l	500	U	500	U	68.8	J
1,2-Dichloroethene (total)	ug/L	500	U	500	U	68.8	J
Chloroform	ug/L	500	U	500	U	500	U
1,1,1-Trichloroethane	ug/l	500	U	500	U	500	U
Carbon Tetrachloride	ug/L	500	U	500	U	500	U
1,2-Dichloroethane	ug/L	500	U	500	U	500	U
Benzene	ug/L	500	U	500	U	2340	=
Trichloroethylene (TCE)	ug/l	500	U	500	U	500	U
1,2-Dichloropropane	ug/l	500	U	500	U	500	U
Bromodichloromethane	ug/L	500	U	500	U	500	U
2-Chloroethyl vinyl ether	ug/L	500	U	500	U	500	U
cis-1,3-Dichloropropene	ug/L	500	U	500	U	500	U
Methyl isobutyl ketone (4-Methyl-2-pentanone)	ug/L	1000	U	1000	U	1000	U
Toluene	ug/l	500	U	500	U	56.6	J
trans-1,3-Dichloropropene	ug/L	500	U	500	U	500	U
1,1,2-Trichloroethane	ug/l	500	U	500	U	500	U
2-Hexanone	ug/l	1000	U	1000	U	1000	U

	StationID	H196GW009		H196GW012		H196GW013	
	SampleID	196GW009M5DL		196GW012M5		196GW013M5	
	DateCollected	04/24/2002		04/24/2002		04/24/2002	
	DateExtracted	04/29/2002		04/29/2002		04/29/2002	
	DateAnalyzed	04/29/2002		04/29/2002		04/29/2002	
	SDGNumber	59366		59366		59366	
Parameter	**Units**						
m-Xylene	ug/l						
Chloromethane	ug/L	5000	R	1.3	J	100	U
Vinyl chloride	ug/l	5000	R	10	U	100	U
Bromomethane	ug/L	5000	R	10	U	100	U
Chloroethane	ug/L	5000	R	10	U	100	U
1,1-Dichloroethene	ug/L	2500	R	5	U	50	U
Acetone	ug/l	5000	R	10	U	100	U
Carbon Disulfide	ug/l	2500	R	5	U	50	U
Methylene Chloride	ug/l	1400	R	5	UJ	50	UJ
trans-1,2-Dichloroethene	ug/L	2500	R	5	U	50	U
1,1-Dichloroethane	ug/L	2500	R	5	U	50	U
Vinyl acetate	ug/L	5000	R	10	U	100	U
Methyl ethyl ketone (2-Butanone)	ug/L	5000	R	10	U	100	U
cis-1,2-Dichloroethylene	ug/l	2500	R	5	U	50	U
1,2-Dichloroethene (total)	ug/L	2500	R	5	U	50	U
Chloroform	ug/L	2500	R	5	U	50	U
1,1,1-Trichloroethane	ug/l	2500	R	5	U	50	U
Carbon Tetrachloride	ug/L	2500	R	5	U	50	U
1,2-Dichloroethane	ug/L	2500	R	5	U	50	U
Benzene	ug/L	2200	R	5	U	8.9	J
Trichloroethylene (TCE)	ug/l	2500	R	5	U	50	U
1,2-Dichloropropane	ug/l	2500	R	5	U	50	U
Bromodichloromethane	ug/L	2500	R	5	U	50	U
2-Chloroethyl vinyl ether	ug/L	2500	R	5	U	50	U
cis-1,3-Dichloropropene	ug/L	2500	R	5	U	50	U
Methyl isobutyl ketone (4-Methyl-2-pentanone)	ug/L	5000	R	10	U	100	U
Toluene	ug/l	2500	R	5	U	50	U
trans-1,3-Dichloropropene	ug/L	2500	R	5	U	50	U
1,1,2-Trichloroethane	ug/l	2500	R	5	U	50	U
2-Hexanone	ug/l	5000	R	10	U	100	U

	StationID	H196GW014		H196GW014		H196GW016	
	SampleID	196GW014M5		196GW014M5DL		196GW016M5	
	DateCollected	04/24/2002		04/24/2002		04/24/2002	
	DateExtracted	04/25/2002		04/30/2002		04/29/2002	
	DateAnalyzed	04/25/2002		04/30/2002		04/29/2002	
	SDGNumber	59366		59366		59366	
Parameter	**Units**						
m-Xylene	ug/l						
Chloromethane	ug/L	1000	U	5000	R	10	U
Vinyl chloride	ug/l	1000	U	5000	R	10	U
Bromomethane	ug/L	1000	U	5000	R	10	U
Chloroethane	ug/L	1000	U	5000	R	10	U
1,1-Dichloroethene	ug/L	500	U	2500	R	5	U
Acetone	ug/l	1800	U	2150	R	10	U
Carbon Disulfide	ug/l	500	U	2500	R	5	U
Methylene Chloride	ug/l	500	U	1280	R	5	UJ
trans-1,2-Dichloroethene	ug/L	500	U	2500	R	5	U
1,1-Dichloroethane	ug/L	500	U	2500	R	5	U
Vinyl acetate	ug/L	1000	U	5000	R	10	U
Methyl ethyl ketone (2-Butanone)	ug/L	1000	U	5000	R	10	U
cis-1,2-Dichloroethylene	ug/l	500	U	2500	R	5	U
1,2-Dichloroethene (total)	ug/L	500	U	2500	R	5	U
Chloroform	ug/L	500	U	2500	R	5	U
1,1,1-Trichloroethane	ug/l	500	U	2500	R	5	U
Carbon Tetrachloride	ug/L	500	U	2500	R	5	U
1,2-Dichloroethane	ug/L	500	U	2500	R	5	U
Benzene	ug/L	845	=	716	R	5	U
Trichloroethylene (TCE)	ug/l	500	U	2500	R	5	U
1,2-Dichloropropane	ug/l	500	U	2500	R	5	U
Bromodichloromethane	ug/L	500	U	2500	R	5	U
2-Chloroethyl vinyl ether	ug/L	500	U	2500	R	5	U
cis-1,3-Dichloropropene	ug/L	500	U	2500	R	5	U
Methyl isobutyl ketone (4-Methyl-2-pentanone)	ug/L	1000	U	5000	R	10	U
Toluene	ug/l	354	J	343	R	5	U
trans-1,3-Dichloropropene	ug/L	500	U	2500	R	5	U
1,1,2-Trichloroethane	ug/l	500	U	2500	R	5	U
2-Hexanone	ug/l	1000	U	5000	R	10	U

	StationID	H196GW017		H009GW021		H009GW021	
	SampleID	196GW017M5		009GW021M6		009GW021M6DL	
	DateCollected	04/24/2002		06/19/2002		06/19/2002	
	DateExtracted	04/29/2002		06/27/2002		06/27/2002	
	DateAnalyzed	04/29/2002		06/27/2002		06/27/2002	
	SDGNumber	59366		CNC118		CNC118	
Parameter	**Units**						
m-Xylene	ug/l			100	U	500	R
Chloromethane	ug/L	10	U	200	U	1000	R
Vinyl chloride	ug/l	10	U	200	U	1000	R
Bromomethane	ug/L	10	U	200	UJ	1000	R
Chloroethane	ug/L	10	U	200	U	1000	R
1,1-Dichloroethene	ug/L	5	U	100	U	500	R
Acetone	ug/l	10	U	200	U	1000	R
Carbon Disulfide	ug/l	5	U	100	U	500	R
Methylene Chloride	ug/l	5	UJ	100	U	260	R
trans-1,2-Dichloroethene	ug/L	5	U	100	U	500	R
1,1-Dichloroethane	ug/L	5	U	100	U	500	R
Vinyl acetate	ug/L	10	U	200	U	1000	R
Methyl ethyl ketone (2-Butanone)	ug/L	10	U	200	U	1000	R
cis-1,2-Dichloroethylene	ug/l	5	U	17	J	500	R
1,2-Dichloroethene (total)	ug/L	5	U	17	J	500	R
Chloroform	ug/L	5	U	100	U	500	R
1,1,1-Trichloroethane	ug/l	5	U	100	U	500	R
Carbon Tetrachloride	ug/L	5	U	100	U	500	R
1,2-Dichloroethane	ug/L	5	U	100	U	500	R
Benzene	ug/L	0.56	J	42	J	51	R
Trichloroethylene (TCE)	ug/l	5	U	7.7	J	500	R
1,2-Dichloropropane	ug/l	5	U	100	U	500	R
Bromodichloromethane	ug/L	5	U	100	U	500	R
2-Chloroethyl vinyl ether	ug/L	5	U	200	U	1000	R
cis-1,3-Dichloropropene	ug/L	5	U	100	U	500	R
Methyl isobutyl ketone (4-Methyl-2-pentanone)	ug/L	10	U	200	U	1000	R
Toluene	ug/l	5	U	100	U	500	R
trans-1,3-Dichloropropene	ug/L	5	U	100	U	500	R
1,1,2-Trichloroethane	ug/l	5	U	100	U	500	R
2-Hexanone	ug/l	10	U	200	U	1000	R

	StationID	H009GW021		H009GW020		H009GW020	
	SampleID	009HW021M6		009GW020M7		009GW020M7DL	
	DateCollected	06/19/2002		09/04/2002		09/04/2002	
	DateExtracted	06/26/2002		09/17/2002		09/18/2002	
	DateAnalyzed	06/26/2002		09/17/2002		09/18/2002	
	SDGNumber	CNC118		66577		66577	
Parameter	**Units**						
m-Xylene	ug/l	50	U				
Chloromethane	ug/L	100	U	10	U	50	R
Vinyl chloride	ug/l	100	U	10	U	50	R
Bromomethane	ug/L	100	UJ	10	U	50	R
Chloroethane	ug/L	100	U	10	U	50	R
1,1-Dichloroethene	ug/L	50	U	5	U	25	R
Acetone	ug/l	100	U	10	U	50	R
Carbon Disulfide	ug/l	50	U	5	UJ	25	R
Methylene Chloride	ug/l	50	U	5	U	25	R
trans-1,2-Dichloroethene	ug/L	50	U	5	U	25	R
1,1-Dichloroethane	ug/L	50	U	5	U	25	R
Vinyl acetate	ug/L	100	U	10	UJ	50	R
Methyl ethyl ketone (2-Butanone)	ug/L	100	U	10	U	50	R
cis-1,2-Dichloroethylene	ug/l	10	J	5	U	25	R
1,2-Dichloroethene (total)	ug/L	10	J	5	U	25	R
Chloroform	ug/L	50	U	5	U	25	R
1,1,1-Trichloroethane	ug/l	50	U	5	U	25	R
Carbon Tetrachloride	ug/L	50	U	5	U	25	R
1,2-Dichloroethane	ug/L	50	U	5	U	25	R
Benzene	ug/L	11	J	1.8	J	25	R
Trichloroethylene (TCE)	ug/l	50	U	5	U	25	R
1,2-Dichloropropane	ug/l	50	U	5	U	25	R
Bromodichloromethane	ug/L	50	U	5	U	25	R
2-Chloroethyl vinyl ether	ug/L	100	UJ	10	U	50	R
cis-1,3-Dichloropropene	ug/L	50	U	5	U	25	R
Methyl isobutyl ketone (4-Methyl-2-pentanone)	ug/L	100	U	10	U	50	R
Toluene	ug/l	50	U	0.62	J	25	R
trans-1,3-Dichloropropene	ug/L	50	U	5	U	25	R
1,1,2-Trichloroethane	ug/l	50	U	5	U	25	R
2-Hexanone	ug/l	100	U	10	U	50	R

	StationID	H009GW020		H009GW020		H009GW022	
	SampleID	009HW020M7		009HW020M7DL		009GW022M7	
	DateCollected	09/04/2002		09/04/2002		09/04/2002	
	DateExtracted	09/17/2002		09/18/2002		09/18/2002	
	DateAnalyzed	09/17/2002		09/18/2002		09/18/2002	
	SDGNumber	66577		66577		66577	
Parameter	**Units**						
m-Xylene	ug/l						
Chloromethane	ug/L	10	U	50	R	10	U
Vinyl chloride	ug/l	10	U	50	R	10	U
Bromomethane	ug/L	10	U	50	R	10	U
Chloroethane	ug/L	10	U	50	R	10	U
1,1-Dichloroethene	ug/L	5	U	25	R	5	U
Acetone	ug/l	10	U	50	R	10	U
Carbon Disulfide	ug/l	5	UJ	25	R	5	UJ
Methylene Chloride	ug/l	5	U	25	R	5	U
trans-1,2-Dichloroethene	ug/L	5	U	25	R	5	U
1,1-Dichloroethane	ug/L	5	U	25	R	5	U
Vinyl acetate	ug/L	10	UJ	50	R	10	UJ
Methyl ethyl ketone (2-Butanone)	ug/L	10	U	50	R	10	U
cis-1,2-Dichloroethylene	ug/l	5	U	25	R	2.7	J
1,2-Dichloroethene (total)	ug/L	5	U	25	R	2.7	J
Chloroform	ug/L	5	U	25	R	5	U
1,1,1-Trichloroethane	ug/l	5	U	25	R	5	U
Carbon Tetrachloride	ug/L	5	U	25	R	5	U
1,2-Dichloroethane	ug/L	5	U	25	R	5	U
Benzene	ug/L	1.7	J	25	R	5	U
Trichloroethylene (TCE)	ug/l	5	U	25	R	1.1	J
1,2-Dichloropropane	ug/l	5	U	25	R	5	U
Bromodichloromethane	ug/L	5	U	25	R	5	U
2-Chloroethyl vinyl ether	ug/L	10	U	50	R	10	U
cis-1,3-Dichloropropene	ug/L	5	U	25	R	5	U
Methyl isobutyl ketone (4-Methyl-2-pentanone)	ug/L	10	U	50	R	10	U
Toluene	ug/l	0.57	J	25	R	5	U
trans-1,3-Dichloropropene	ug/L	5	U	25	R	5	U
1,1,2-Trichloroethane	ug/l	5	U	25	R	5	U
2-Hexanone	ug/l	10	U	50	R	10	U

	StationID	H196GW004		H196GW005		H196GW009	
	SampleID	196GW004M7		196GW005M7		196GW009M7	
	DateCollected	09/04/2002		09/04/2002		09/04/2002	
	DateExtracted	09/17/2002		09/17/2002		09/12/2002	
	DateAnalyzed	09/17/2002		09/17/2002		09/12/2002	
	SDGNumber	66577		66577		66577	
Parameter	**Units**						
m-Xylene	ug/l						
Chloromethane	ug/L	10	U	10	U	500	U
Vinyl chloride	ug/l	10	U	10	U	500	U
Bromomethane	ug/L	10	U	10	U	500	U
Chloroethane	ug/L	10	U	10	U	500	U
1,1-Dichloroethene	ug/L	5	U	5	U	250	U
Acetone	ug/l	10	U	6.3	J	500	U
Carbon Disulfide	ug/l	5	UJ	2.5	J	250	U
Methylene Chloride	ug/l	5	U	5	U	250	U
trans-1,2-Dichloroethene	ug/L	5	U	5	U	250	U
1,1-Dichloroethane	ug/L	5	U	5	U	250	U
Vinyl acetate	ug/L	10	UJ	10	UJ	500	U
Methyl ethyl ketone (2-Butanone)	ug/L	10	U	10	U	500	U
cis-1,2-Dichloroethylene	ug/l	2	J	5	U	250	U
1,2-Dichloroethene (total)	ug/L	2	J	5	U	250	U
Chloroform	ug/L	5	U	0.39	J	250	U
1,1,1-Trichloroethane	ug/l	5	U	5	U	250	U
Carbon Tetrachloride	ug/L	5	U	5	U	250	U
1,2-Dichloroethane	ug/L	5	U	5	U	250	U
Benzene	ug/L	3.6	J	5	U	18	J
Trichloroethylene (TCE)	ug/l	1.4	J	5	U	250	U
1,2-Dichloropropane	ug/l	5	U	5	U	250	U
Bromodichloromethane	ug/L	5	U	5	U	250	U
2-Chloroethyl vinyl ether	ug/L	10	U	10	U	500	UJ
cis-1,3-Dichloropropene	ug/L	5	U	5	U	250	U
Methyl isobutyl ketone (4-Methyl-2-pentanone)	ug/L	10	U	10	U	500	U
Toluene	ug/l	5	U	5	U	37.6	J
trans-1,3-Dichloropropene	ug/L	5	U	5	U	250	U
1,1,2-Trichloroethane	ug/l	5	U	5	U	250	U
2-Hexanone	ug/l	10	U	10	U	500	U

	StationID	H196GW012		H196GW013		H196GW014	
	SampleID	196GW012M7		196GW013M7		196GW014M7	
	DateCollected	09/04/2002		09/04/2002		09/04/2002	
	DateExtracted	09/17/2002		09/12/2002		09/12/2002	
	DateAnalyzed	09/17/2002		09/12/2002		09/12/2002	
	SDGNumber	66577		66577		66577	
Parameter	**Units**						
m-Xylene	ug/l						
Chloromethane	ug/L	10	U	500	U	500	U
Vinyl chloride	ug/l	10	U	500	U	500	U
Bromomethane	ug/L	10	U	500	U	500	U
Chloroethane	ug/L	10	U	500	U	500	U
1,1-Dichloroethene	ug/L	5	U	250	U	250	U
Acetone	ug/l	10	U	500	U	358	J
Carbon Disulfide	ug/l	5	UJ	250	U	250	U
Methylene Chloride	ug/l	5	U	250	U	250	U
trans-1,2-Dichloroethene	ug/L	5	U	250	U	250	U
1,1-Dichloroethane	ug/L	5	U	250	U	250	U
Vinyl acetate	ug/L	10	UJ	500	U	500	U
Methyl ethyl ketone (2-Butanone)	ug/L	10	U	500	U	500	U
cis-1,2-Dichloroethylene	ug/l	5	U	250	U	250	U
1,2-Dichloroethene (total)	ug/L	5	U	250	U	250	U
Chloroform	ug/L	5	U	250	U	250	U
1,1,1-Trichloroethane	ug/l	5	U	250	U	250	U
Carbon Tetrachloride	ug/L	5	U	250	U	250	U
1,2-Dichloroethane	ug/L	5	U	250	U	250	U
Benzene	ug/L	5	U	279	=	1140	=
Trichloroethylene (TCE)	ug/l	5	U	250	U	250	U
1,2-Dichloropropane	ug/l	5	U	250	U	250	U
Bromodichloromethane	ug/L	5	U	250	U	250	U
2-Chloroethyl vinyl ether	ug/L	10	U	500	UJ	500	UJ
cis-1,3-Dichloropropene	ug/L	5	U	250	U	250	U
Methyl isobutyl ketone (4-Methyl-2-pentanone)	ug/L	10	U	500	U	500	U
Toluene	ug/l	5	U	250	U	199	J
trans-1,3-Dichloropropene	ug/L	5	U	250	U	250	U
1,1,2-Trichloroethane	ug/l	5	U	250	U	250	U
2-Hexanone	ug/l	10	U	500	U	500	U

	StationID	H196GW014		H196GW016		H196GW017	
	SampleID	196GW014M7DL		196GW016M7		196GW017M7	
	DateCollected	09/04/2002		09/04/2002		09/04/2002	
	DateExtracted	09/18/2002		09/17/2002		09/17/2002	
	DateAnalyzed	09/18/2002		09/17/2002		09/17/2002	
	SDGNumber	66577		66577		66577	
Parameter	**Units**						
m-Xylene	ug/l						
Chloromethane	ug/L	2000	R	10	U	10	U
Vinyl chloride	ug/l	2000	R	10	U	10	U
Bromomethane	ug/L	2000	R	10	U	10	U
Chloroethane	ug/L	2000	R	10	U	10	U
1,1-Dichloroethene	ug/L	1000	R	5	U	5	U
Acetone	ug/l	2000	R	10	U	2.6	J
Carbon Disulfide	ug/l	1000	R	5	UJ	5	UJ
Methylene Chloride	ug/l	1000	R	5	U	5	U
trans-1,2-Dichloroethene	ug/L	1000	R	5	U	5	U
1,1-Dichloroethane	ug/L	1000	R	5	U	5	U
Vinyl acetate	ug/L	2000	R	10	UJ	10	UJ
Methyl ethyl ketone (2-Butanone)	ug/L	2000	R	10	U	10	U
cis-1,2-Dichloroethylene	ug/l	1000	R	5	U	5	U
1,2-Dichloroethene (total)	ug/L	1000	R	5	U	5	U
Chloroform	ug/L	1000	R	5	U	5	U
1,1,1-Trichloroethane	ug/l	1000	R	5	U	5	U
Carbon Tetrachloride	ug/L	1000	R	5	U	5	U
1,2-Dichloroethane	ug/L	1000	R	5	U	5	U
Benzene	ug/L	966	R	5	U	5	U
Trichloroethylene (TCE)	ug/l	1000	R	5	U	5	U
1,2-Dichloropropane	ug/l	1000	R	5	U	5	U
Bromodichloromethane	ug/L	1000	R	5	U	5	U
2-Chloroethyl vinyl ether	ug/L	2000	R	10	U	10	U
cis-1,3-Dichloropropene	ug/L	1000	R	5	U	5	U
Methyl isobutyl ketone (4-Methyl-2-pentanone)	ug/L	2000	R	10	U	10	U
Toluene	ug/l	192	R	5	U	5	U
trans-1,3-Dichloropropene	ug/L	1000	R	5	U	5	U
1,1,2-Trichloroethane	ug/l	1000	R	5	U	5	U
2-Hexanone	ug/l	2000	R	10	U	10	U

	StationID	H196GW017		H009GW021		H196GW007	
	SampleID	196HW017M7		009GW021M7		196GW007M7	
	DateCollected	09/04/2002		09/05/2002		09/05/2002	
	DateExtracted	09/17/2002		09/18/2002		09/12/2002	
	DateAnalyzed	09/17/2002		09/18/2002		09/12/2002	
	SDGNumber	66577		66577		66577	
Parameter	**Units**						
m-Xylene	ug/l						
Chloromethane	ug/L	10	U	250	U	500	U
Vinyl chloride	ug/l	10	U	250	U	500	U
Bromomethane	ug/L	10	U	250	U	500	U
Chloroethane	ug/L	10	U	250	U	500	U
1,1-Dichloroethene	ug/L	5	U	125	U	250	U
Acetone	ug/l	3.3	J	250	U	500	U
Carbon Disulfide	ug/l	5	UJ	125	UJ	250	U
Methylene Chloride	ug/l	5	U	125	U	250	U
trans-1,2-Dichloroethene	ug/L	5	U	125	U	250	U
1,1-Dichloroethane	ug/L	5	U	125	U	250	U
Vinyl acetate	ug/L	10	UJ	250	UJ	500	U
Methyl ethyl ketone (2-Butanone)	ug/L	10	U	250	U	500	U
cis-1,2-Dichloroethylene	ug/l	5	U	11.8	J	250	U
1,2-Dichloroethene (total)	ug/L	5	U	11.8	J	250	U
Chloroform	ug/L	5	U	125	U	250	U
1,1,1-Trichloroethane	ug/l	5	U	125	U	250	U
Carbon Tetrachloride	ug/L	5	U	125	U	250	U
1,2-Dichloroethane	ug/L	5	U	125	U	250	U
Benzene	ug/L	5	U	125	U	180	J
Trichloroethylene (TCE)	ug/l	5	U	125	U	250	U
1,2-Dichloropropane	ug/l	5	U	125	U	250	U
Bromodichloromethane	ug/L	5	U	125	U	250	U
2-Chloroethyl vinyl ether	ug/L	10	U	250	U	500	UJ
cis-1,3-Dichloropropene	ug/L	5	U	125	U	250	U
Methyl isobutyl ketone (4-Methyl-2-pentanone)	ug/L	10	U	250	U	500	U
Toluene	ug/l	5	U	125	U	250	U
trans-1,3-Dichloropropene	ug/L	5	U	125	U	250	U
1,1,2-Trichloroethane	ug/l	5	U	125	U	250	U
2-Hexanone	ug/l	10	U	250	U	500	U

	StationID	H196GW007		H196GW008		H196GW008	
	SampleID	196GW007M7DL		196GW008M7		196GW008M7DL	
	DateCollected	09/05/2002		09/05/2002		09/05/2002	
	DateExtracted	09/18/2002		09/18/2002		09/12/2002	
	DateAnalyzed	09/18/2002		09/18/2002		09/12/2002	
	SDGNumber	66577		66577		66577	
Parameter	**Units**						
m-Xylene	ug/l						
Chloromethane	ug/L	2000	R	50	U	500	R
Vinyl chloride	ug/l	2000	R	49.1	J	500	R
Bromomethane	ug/L	2000	R	50	U	500	R
Chloroethane	ug/L	2000	R	50	U	500	R
1,1-Dichloroethene	ug/L	1000	R	25	U	250	R
Acetone	ug/l	2000	R	50	U	500	R
Carbon Disulfide	ug/l	1000	R	25	UJ	250	R
Methylene Chloride	ug/l	1000	R	25	U	250	R
trans-1,2-Dichloroethene	ug/L	1000	R	25	U	250	R
1,1-Dichloroethane	ug/L	1000	R	25	U	250	R
Vinyl acetate	ug/L	2000	R	50	UJ	500	R
Methyl ethyl ketone (2-Butanone)	ug/L	2000	R	50	U	500	R
cis-1,2-Dichloroethylene	ug/l	1000	R	29.4	=	24.9	R
1,2-Dichloroethene (total)	ug/L	1000	R	29.4	=	24.9	R
Chloroform	ug/L	1000	R	25	U	250	R
1,1,1-Trichloroethane	ug/l	1000	R	25	U	250	R
Carbon Tetrachloride	ug/L	1000	R	25	U	250	R
1,2-Dichloroethane	ug/L	1000	R	25	U	250	R
Benzene	ug/L	1000	R	8.8	J	250	R
Trichloroethylene (TCE)	ug/l	1000	R	3.7	J	250	R
1,2-Dichloropropane	ug/l	1000	R	25	U	250	R
Bromodichloromethane	ug/L	1000	R	25	U	250	R
2-Chloroethyl vinyl ether	ug/L	2000	R	50	U	500	R
cis-1,3-Dichloropropene	ug/L	1000	R	25	U	250	R
Methyl isobutyl ketone (4-Methyl-2-pentanone)	ug/L	2000	R	50	U	500	R
Toluene	ug/l	1000	R	25	U	250	R
trans-1,3-Dichloropropene	ug/L	1000	R	25	U	250	R
1,1,2-Trichloroethane	ug/l	1000	R	25	U	250	R
2-Hexanone	ug/l	2000	R	50	U	500	R

	StationID	H196GW010		H196GW011		H196GW011	
	SampleID	196GW010M7		196GW011M7		196GW011M7DL	
	DateCollected	09/05/2002		09/05/2002		09/05/2002	
	DateExtracted	09/17/2002		09/18/2002		09/12/2002	
	DateAnalyzed	09/17/2002		09/18/2002		09/12/2002	
	SDGNumber	66577		66577		66577	
Parameter	**Units**						
m-Xylene	ug/l						
Chloromethane	ug/L	10	U	25	U	500	R
Vinyl chloride	ug/l	10	U	25	U	500	R
Bromomethane	ug/L	10	U	25	U	500	R
Chloroethane	ug/L	10	U	25	U	500	R
1,1-Dichloroethene	ug/L	5	U	12.5	U	250	R
Acetone	ug/l	10	U	25	U	500	R
Carbon Disulfide	ug/l	5	UJ	12.5	UJ	250	R
Methylene Chloride	ug/l	5	U	12.5	U	250	R
trans-1,2-Dichloroethene	ug/L	5	U	12.5	U	250	R
1,1-Dichloroethane	ug/L	5	U	12.5	U	250	R
Vinyl acetate	ug/L	10	UJ	25	UJ	500	R
Methyl ethyl ketone (2-Butanone)	ug/L	10	U	25	U	500	R
cis-1,2-Dichloroethylene	ug/l	5	U	2.9	J	250	R
1,2-Dichloroethene (total)	ug/L	5	U	2.9	J	250	R
Chloroform	ug/L	5	U	12.5	U	250	R
1,1,1-Trichloroethane	ug/l	5	U	12.5	U	250	R
Carbon Tetrachloride	ug/L	5	U	12.5	U	250	R
1,2-Dichloroethane	ug/L	5	U	12.5	U	250	R
Benzene	ug/L	5	U	1.1	J	250	R
Trichloroethylene (TCE)	ug/l	5	U	2.4	J	250	R
1,2-Dichloropropane	ug/l	5	U	12.5	U	250	R
Bromodichloromethane	ug/L	5	U	12.5	U	250	R
2-Chloroethyl vinyl ether	ug/L	10	U	25	U	500	R
cis-1,3-Dichloropropene	ug/L	5	U	12.5	U	250	R
Methyl isobutyl ketone (4-Methyl-2-pentanone)	ug/L	10	U	25	U	500	R
Toluene	ug/l	5	U	12.5	U	250	R
trans-1,3-Dichloropropene	ug/L	5	U	12.5	U	250	R
1,1,2-Trichloroethane	ug/l	5	U	12.5	U	250	R
2-Hexanone	ug/l	10	U	25	U	500	R

	StationID	H196GW015		HGELGW015		H009GW021	
	SampleID	196GW015M7		GELGW015M7		009GW021M8	
	DateCollected	09/05/2002		09/05/2002		09/09/2002	
	DateExtracted	09/18/2002		09/12/2002		09/15/2002	
	DateAnalyzed	09/18/2002		09/12/2002		09/15/2002	
	SDGNumber	66577		66577		CNC144	
Parameter	Units						
m-Xylene	ug/l						
Chloromethane	ug/L	250	U	500	U	100	U
Vinyl chloride	ug/l	1860	=	500	U	100	U
Bromomethane	ug/L	250	U	500	U	100	U
Chloroethane	ug/L	250	U	500	U	100	U
1,1-Dichloroethene	ug/L	125	U	250	U	50	U
Acetone	ug/l	250	U	500	U	100	U
Carbon Disulfide	ug/l	125	UJ	250	U	50	U
Methylene Chloride	ug/l	125	U	250	U	50	U
trans-1,2-Dichloroethene	ug/L	125	U	250	U	50	U
1,1-Dichloroethane	ug/L	32.6	J	250	U	50	U
Vinyl acetate	ug/L	250	UJ	500	U	100	U
Methyl ethyl ketone (2-Butanone)	ug/L	250	U	500	U	100	U
cis-1,2-Dichloroethylene	ug/l	932	=	250	U	50	U
1,2-Dichloroethene (total)	ug/L	932	=	250	U	50	U
Chloroform	ug/L	125	U	250	U	50	U
1,1,1-Trichloroethane	ug/l	125	U	250	U	50	U
Carbon Tetrachloride	ug/L	125	U	250	U	50	U
1,2-Dichloroethane	ug/L	125	U	250	U	50	U
Benzene	ug/L	364	=	250	U	50	U
Trichloroethylene (TCE)	ug/l	104	J	250	U	50	U
1,2-Dichloropropane	ug/l	125	U	250	U	50	U
Bromodichloromethane	ug/L	125	U	250	U	50	U
2-Chloroethyl vinyl ether	ug/L	250	U	500	UJ	100	U
cis-1,3-Dichloropropene	ug/L	125	U	250	U	50	U
Methyl isobutyl ketone (4-Methyl-2-pentanone)	ug/L	250	U	500	U	100	U
Toluene	ug/l	125	U	250	U	50	U
trans-1,3-Dichloropropene	ug/L	125	U	250	U	50	U
1,1,2-Trichloroethane	ug/l	125	U	250	U	50	U
2-Hexanone	ug/l	250	U	500	U	100	U

	StationID	H009GW021	
	SampleID	009HW021M7	
	DateCollected	09/09/2002	
	DateExtracted	09/15/2002	
	DateAnalyzed	09/15/2002	
	SDGNumber	CNC144	
Parameter	**Units**		
m-Xylene	ug/l		
Chloromethane	ug/L	100	U
Vinyl chloride	ug/l	100	U
Bromomethane	ug/L	100	U
Chloroethane	ug/L	100	U
1,1-Dichloroethene	ug/L	50	U
Acetone	ug/l	100	U
Carbon Disulfide	ug/l	50	U
Methylene Chloride	ug/l	50	U
trans-1,2-Dichloroethene	ug/L	50	U
1,1-Dichloroethane	ug/L	50	U
Vinyl acetate	ug/L	100	U
Methyl ethyl ketone (2-Butanone)	ug/L	100	U
cis-1,2-Dichloroethylene	ug/l	50	U
1,2-Dichloroethene (total)	ug/L	50	U
Chloroform	ug/L	50	U
1,1,1-Trichloroethane	ug/l	50	U
Carbon Tetrachloride	ug/L	50	U
1,2-Dichloroethane	ug/L	50	U
Benzene	ug/L	4.2	J
Trichloroethylene (TCE)	ug/l	50	U
1,2-Dichloropropane	ug/l	50	U
Bromodichloromethane	ug/L	50	U
2-Chloroethyl vinyl ether	ug/L	100	U
cis-1,3-Dichloropropene	ug/L	50	U
Methyl isobutyl ketone (4-Methyl-2-pentanone)	ug/L	100	U
Toluene	ug/l	50	U
trans-1,3-Dichloropropene	ug/L	50	U
1,1,2-Trichloroethane	ug/l	50	U
2-Hexanone	ug/l	100	U

	StationID	H009GW022		H009GW022		H196GW004	
	SampleID	009GW022M4DL		009HW022M4		196GW004M4	
	DateCollected	03/21/2002		03/21/2002		03/21/2002	
	DateExtracted	03/28/2002		03/28/2002		03/28/2002	
	DateAnalyzed	03/28/2002		03/28/2002		03/28/2002	
	SDGNumber	CNC77		CNC77		CNC77	
Parameter	**Units**						
Tetrachloroethylene (PCE)	ug/l	50	R	50	U	31	=
Dibromochloromethane	ug/l	50	R	50	U	25	U
Chlorobenzene	ug/L	85	R	99	=	250	=
Ethylbenzene	ug/L	50	R	50	U	25	U
m+p Xylene	ug/l	50	R	50	U	25	U
o-Xylene	ug/l	50	R	50	U	25	U
Xylenes, Total	ug/L	50	R	50	U	25	U
Styrene	ug/L	50	R	50	U	25	U
Bromoform	ug/L	50	R	50	U	25	U
1,1,2,2-Tetrachloroethane	ug/L	50	R	50	U	25	U
1,3-Dichlorobenzene	ug/L	54	R	60	=	62	=
1,4-Dichlorobenzene	ug/L	90	R	98	=	96	=
1,2-Dichlorobenzene	ug/L	1200	=	1400	=	1000	R
1,2,4-Trichlorobenzene	ug/L	50	R	50	U	6.9	J
1,2,3-Trichlorobenzene	ug/l	50	R	50	U	25	U

	StationID	H196GW004		H196GW005		H196GW005	
	SampleID	196GW004M4DL		196GW005M4		196GW005M4DL	
	DateCollected	03/21/2002		03/21/2002		03/21/2002	
	DateExtracted	03/28/2002		03/27/2002		03/28/2002	
	DateAnalyzed	03/28/2002		03/27/2002		03/28/2002	
	SDGNumber	CNC77		CNC77		CNC77	
Parameter	**Units**						
Tetrachloroethylene (PCE)	ug/l	28	R	25	U	100	R
Dibromochloromethane	ug/l	50	R	25	U	100	R
Chlorobenzene	ug/L	220	R	25	U	100	R
Ethylbenzene	ug/L	50	R	25	U	100	R
m+p Xylene	ug/l	50	R	25	U	100	R
o-Xylene	ug/l	50	R	25	U	100	R
Xylenes, Total	ug/L	50	R	25	U	100	R
Styrene	ug/L	50	R	25	U	100	R
Bromoform	ug/L	50	R	25	U	100	R
1,1,2,2-Tetrachloroethane	ug/L	50	R	25	U	100	R
1,3-Dichlorobenzene	ug/L	51	R	48	=	39	R
1,4-Dichlorobenzene	ug/L	82	R	250	=	190	R
1,2-Dichlorobenzene	ug/L	840	=	2600	R	1900	=
1,2,4-Trichlorobenzene	ug/L	50	R	10	J	100	R
1,2,3-Trichlorobenzene	ug/l	50	R	25	U	100	R

	StationID	H196GW007		H196GW007		H196GW008	
	SampleID	196GW007M4		196GW007M4DL		196GW008M4	
	DateCollected	03/21/2002		03/21/2002		03/21/2002	
	DateExtracted	03/28/2002		03/28/2002		03/27/2002	
	DateAnalyzed	03/28/2002		03/28/2002		03/27/2002	
	SDGNumber	CNC77		CNC77		CNC77	
Parameter	**Units**						
Tetrachloroethylene (PCE)	ug/l	10	U	25	R	50	U
Dibromochloromethane	ug/l	10	U	25	R	50	U
Chlorobenzene	ug/L	640	R	570	=	730	=
Ethylbenzene	ug/L	10	U	25	R	50	U
m+p Xylene	ug/l	10	U	25	R	50	U
o-Xylene	ug/l	10	U	25	R	50	U
Xylenes, Total	ug/L	10	U	25	R	50	U
Styrene	ug/L	10	U	25	R	50	U
Bromoform	ug/L	10	U	25	R	50	U
1,1,2,2-Tetrachloroethane	ug/L	10	U	25	R	50	U
1,3-Dichlorobenzene	ug/L	19	=	18	R	110	=
1,4-Dichlorobenzene	ug/L	69	=	67	R	160	=
1,2-Dichlorobenzene	ug/L	360	=	340	R	1100	=
1,2,4-Trichlorobenzene	ug/L	10	U	25	R	50	U
1,2,3-Trichlorobenzene	ug/l	10	U	25	R	50	U

	StationID	H196GW009		H196GW011		H196GW012	
	SampleID	196GW009M4		196GW011M4		196GW012M4	
	DateCollected	03/21/2002		03/21/2002		03/21/2002	
	DateExtracted	03/28/2002		03/27/2002		03/27/2002	
	DateAnalyzed	03/28/2002		03/27/2002		03/27/2002	
	SDGNumber	CNC77		CNC77		CNC77	
Parameter	**Units**						
Tetrachloroethylene (PCE)	ug/l	130	J	5	U	5	U
Dibromochloromethane	ug/l	250	U	5	U	5	U
Chlorobenzene	ug/L	4400	=	56	=	12	=
Ethylbenzene	ug/L	250	U	5	U	5	U
m+p Xylene	ug/l	250	U	5	U	5	U
o-Xylene	ug/l	250	U	5	U	5	U
Xylenes, Total	ug/L	250	U	5	U	5	U
Styrene	ug/L	250	U	5	U	5	U
Bromoform	ug/L	250	U	5	U	5	U
1,1,2,2-Tetrachloroethane	ug/L	250	U	5	U	5	U
1,3-Dichlorobenzene	ug/L	470	=	6.4	=	5	U
1,4-Dichlorobenzene	ug/L	1300	=	5.8	=	1.7	J
1,2-Dichlorobenzene	ug/L	6400	=	41	=	81	=
1,2,4-Trichlorobenzene	ug/L	66	J	5	U	5	U
1,2,3-Trichlorobenzene	ug/l	250	U	5	U	5	U

	StationID	H196GW013		H196GW013		H196GW014	
	SampleID	196GW013M4		196GW013M4DL		196GW014M4	
	DateCollected	03/21/2002		03/21/2002		03/21/2002	
	DateExtracted	03/28/2002		03/28/2002		03/28/2002	
	DateAnalyzed	03/28/2002		03/28/2002		03/28/2002	
	SDGNumber	CNC77		CNC77		CNC77	
Parameter	**Units**						
Tetrachloroethylene (PCE)	ug/l	100	U	500	R	91	J
Dibromochloromethane	ug/l	100	U	500	R	100	U
Chlorobenzene	ug/L	250	=	290	R	5300	R
Ethylbenzene	ug/L	100	U	500	R	100	U
m+p Xylene	ug/l	100	U	500	R	100	U
o-Xylene	ug/l	100	U	500	R	100	U
Xylenes, Total	ug/L	100	U	500	R	100	U
Styrene	ug/L	100	U	500	R	100	U
Bromoform	ug/L	100	U	500	R	100	U
1,1,2,2-Tetrachloroethane	ug/L	100	U	500	R	100	U
1,3-Dichlorobenzene	ug/L	120	=	140	R	1200	=
1,4-Dichlorobenzene	ug/L	270	=	310	R	2500	=
1,2-Dichlorobenzene	ug/L	13000	R	13000	=	30000	R
1,2,4-Trichlorobenzene	ug/L	100	U	500	R	93	J
1,2,3-Trichlorobenzene	ug/l	100	U	500	R	100	U

	StationID	H196GW014		H196GW015		H196GW015	
	SampleID	196GW014M4DL		196GW015M4		196GW015M4DL	
	DateCollected	03/21/2002		03/21/2002		03/21/2002	
	DateExtracted	03/28/2002		03/28/2002		03/28/2002	
	DateAnalyzed	03/28/2002		03/28/2002		03/28/2002	
	SDGNumber	CNC77		CNC77		CNC77	
Parameter	**Units**						
Tetrachloroethylene (PCE)	ug/l	1000	R	50	U	100	R
Dibromochloromethane	ug/l	1000	R	50	U	100	R
Chlorobenzene	ug/L	5200	=	2000	R	2500	=
Ethylbenzene	ug/L	1000	R	50	U	100	R
m+p Xylene	ug/l	1000	R	50	U	100	R
o-Xylene	ug/l	1000	R	50	U	100	R
Xylenes, Total	ug/L	1000	R	50	U	100	R
Styrene	ug/L	1000	R	50	U	100	R
Bromoform	ug/L	1000	R	50	U	100	R
1,1,2,2-Tetrachloroethane	ug/L	1000	R	50	U	100	R
1,3-Dichlorobenzene	ug/L	1200	R	17	J	16	R
1,4-Dichlorobenzene	ug/L	2500	R	52	=	51	R
1,2-Dichlorobenzene	ug/L	29000	=	230	=	100	R
1,2,4-Trichlorobenzene	ug/L	1000	R	50	U	100	R
1,2,3-Trichlorobenzene	ug/l	1000	R	50	U	100	R

	StationID	H196GW016		H196GW017		H196GW017	
	SampleID	196GW016M4		196GW017M4		196HW005M4	
	DateCollected	03/21/2002		03/21/2002		03/21/2002	
	DateExtracted	03/27/2002		03/27/2002		03/27/2002	
	DateAnalyzed	03/27/2002		03/27/2002		03/27/2002	
	SDGNumber	CNC77		CNC77		CNC77	
Parameter	**Units**						
Tetrachloroethylene (PCE)	ug/l	5	U	5	U	100	U
Dibromochloromethane	ug/l	5	U	5	U	100	U
Chlorobenzene	ug/L	10	=	3.4	J	100	U
Ethylbenzene	ug/L	5	U	5	U	100	U
m+p Xylene	ug/l	5	U	5	U	100	U
o-Xylene	ug/l	5	U	5	U	100	U
Xylenes, Total	ug/L	5	U	5	U	100	U
Styrene	ug/L	5	U	5	U	100	U
Bromoform	ug/L	5	U	5	U	100	U
1,1,2,2-Tetrachloroethane	ug/L	5	U	5	U	100	U
1,3-Dichlorobenzene	ug/L	5	U	5	U	49	J
1,4-Dichlorobenzene	ug/L	5	U	3.1	J	230	=
1,2-Dichlorobenzene	ug/L	8	=	110	=	3200	=
1,2,4-Trichlorobenzene	ug/L	5	U	1.3	J	100	U
1,2,3-Trichlorobenzene	ug/l	5	U	5	U	100	U

	StationID	H009GW020		H009GW020		H009GW021	
	SampleID	009GW020M5		009GW020M5DL		009GW021M5	
	DateCollected	04/23/2002		04/23/2002		04/23/2002	
	DateExtracted	04/30/2002		05/01/2002		04/30/2002	
	DateAnalyzed	04/30/2002		05/01/2002		04/30/2002	
	SDGNumber	59367		59367		59367	
Parameter	**Units**						
Tetrachloroethylene (PCE)	ug/l	500	U	1250	R	97	J
Dibromochloromethane	ug/l	500	U	1250	R	500	U
Chlorobenzene	ug/L	19300	R	16600	=	8610	=
Ethylbenzene	ug/L	500	U	1250	R	500	U
m+p Xylene	ug/l	500	U	1250	R	500	U
o-Xylene	ug/l	500	U	1250	R	500	U
Xylenes, Total	ug/L	500	U	1250	R	500	U
Styrene	ug/L	500	U	1250	R	500	U
Bromoform	ug/L	500	U	1250	R	500	U
1,1,2,2-Tetrachloroethane	ug/L	500	U	1250	R	500	U
1,3-Dichlorobenzene	ug/L	104	J	1250	R	1810	=
1,4-Dichlorobenzene	ug/L	487	J	385	R	3160	=
1,2-Dichlorobenzene	ug/L	1140	=	869	R	17100	R
1,2,4-Trichlorobenzene	ug/L	500	U	1250	R	75.9	J
1,2,3-Trichlorobenzene	ug/l	500	U	1250	R	500	U

	StationID	H009GW021		H196GW006		H196GW007	
	SampleID	009GW021M5DL		196GW006M5		196GW007M5	
	DateCollected	04/23/2002		04/23/2002		04/23/2002	
	DateExtracted	05/01/2002		04/29/2002		04/29/2002	
	DateAnalyzed	05/01/2002		04/29/2002		04/29/2002	
	SDGNumber	59367		59366		59366	
Parameter	**Units**						
Tetrachloroethylene (PCE)	ug/l	1250	R	100	U	125	U
Dibromochloromethane	ug/l	1250	R	100	U	125	U
Chlorobenzene	ug/L	8230	R	198	=	1840	=
Ethylbenzene	ug/L	1250	R	100	U	125	U
m+p Xylene	ug/l	1250	R	100	U	125	U
o-Xylene	ug/l	1250	R	100	U	125	U
Xylenes, Total	ug/L	1250	R	100	U	125	U
Styrene	ug/L	1250	R	100	U	125	U
Bromoform	ug/L	1250	R	100	U	125	U
1,1,2,2-Tetrachloroethane	ug/L	1250	R	100	U	125	U
1,3-Dichlorobenzene	ug/L	1510	R	21	J	31	J
1,4-Dichlorobenzene	ug/L	2770	R	45	J	79.3	J
1,2-Dichlorobenzene	ug/L	14900	=	1380	=	736	=
1,2,4-Trichlorobenzene	ug/L	1250	R	100	U	125	U
1,2,3-Trichlorobenzene	ug/l	1250	R	100	U	125	U

	StationID	H196GW008		H196GW010		H196GW011	
	SampleID	196GW008M5		196GW010M5		196GW011M5	
	DateCollected	04/23/2002		04/23/2002		04/23/2002	
	DateExtracted	04/25/2002		04/29/2002		04/29/2002	
	DateAnalyzed	04/25/2002		04/29/2002		04/29/2002	
	SDGNumber	59366		59366		59366	
Parameter	**Units**						
Tetrachloroethylene (PCE)	ug/l	500	U	100	U	15	=
Dibromochloromethane	ug/l	500	U	100	U	10	U
Chlorobenzene	ug/L	4410	=	559	=	102	=
Ethylbenzene	ug/L	500	U	100	U	10	U
m+p Xylene	ug/l	500	U	100	U	10	U
o-Xylene	ug/l	500	U	100	U	10	U
Xylenes, Total	ug/L	500	U	100	U	10	U
Styrene	ug/L	500	U	100	U	10	U
Bromoform	ug/L	500	U	100	U	10	U
1,1,2,2-Tetrachloroethane	ug/L	500	U	100	U	10	U
1,3-Dichlorobenzene	ug/L	791	=	19.1	J	5.8	J
1,4-Dichlorobenzene	ug/L	1400	=	46.4	J	3	J
1,2-Dichlorobenzene	ug/L	7410	=	1420	=	17.5	=
1,2,4-Trichlorobenzene	ug/L	500	U	100	U	10	U
1,2,3-Trichlorobenzene	ug/l	500	U	100	U	10	U

	StationID	H196GW015		HGELGW015		H009GW022	
	SampleID	196GW015M5		GELGW015M5		009GW022M5	
	DateCollected	04/23/2002		04/23/2002		04/24/2002	
	DateExtracted	04/30/2002		04/30/2002		04/25/2002	
	DateAnalyzed	04/30/2002		04/30/2002		04/25/2002	
	SDGNumber	59366		59366		59366	
Parameter	**Units**						
Tetrachloroethylene (PCE)	ug/l	125	U	250	U	6.5	=
Dibromochloromethane	ug/l	125	U	250	U	5	U
Chlorobenzene	ug/L	648	=	730	=	177	R
Ethylbenzene	ug/L	125	U	250	U	5	U
m+p Xylene	ug/l	125	U	250	U	5	U
o-Xylene	ug/l	125	U	250	U	5	U
Xylenes, Total	ug/L	125	U	250	U	5	U
Styrene	ug/L	125	U	250	U	5	U
Bromoform	ug/L	125	U	250	U	5	U
1,1,2,2-Tetrachloroethane	ug/L	125	U	250	U	5	U
1,3-Dichlorobenzene	ug/L	125	U	29.7	J	105	R
1,4-Dichlorobenzene	ug/L	125	U	90.9	J	168	R
1,2-Dichlorobenzene	ug/L	49.3	J	2590	=	1460	R
1,2,4-Trichlorobenzene	ug/L	125	U	250	U	5.2	=
1,2,3-Trichlorobenzene	ug/l	125	U	250	U	1	J

	StationID	H009GW022		H009GW022		H196GW004	
	SampleID	009GW022M5DL		009HW022M5		196GW004M5	
	DateCollected	04/24/2002		04/24/2002		04/24/2002	
	DateExtracted	04/25/2002		04/29/2002		04/29/2002	
	DateAnalyzed	04/25/2002		04/29/2002		04/29/2002	
	SDGNumber	59366		59366		59366	
Parameter	**Units**						
Tetrachloroethylene (PCE)	ug/l	500	R	250	U	35.3	J
Dibromochloromethane	ug/l	500	R	250	U	100	U
Chlorobenzene	ug/L	200	J	175	J	516	=
Ethylbenzene	ug/L	500	R	250	U	100	U
m+p Xylene	ug/l	500	R	250	U	100	U
o-Xylene	ug/l	500	R	250	U	100	U
Xylenes, Total	ug/L	500	R	250	U	100	U
Styrene	ug/L	500	R	250	U	100	U
Bromoform	ug/L	500	R	250	U	100	U
1,1,2,2-Tetrachloroethane	ug/L	500	R	250	U	100	U
1,3-Dichlorobenzene	ug/L	114	J	90.5	J	82.7	J
1,4-Dichlorobenzene	ug/L	207	J	159	J	156	=
1,2-Dichlorobenzene	ug/L	3300	=	2590	=	1380	=
1,2,4-Trichlorobenzene	ug/L	500	R	250	U	100	U
1,2,3-Trichlorobenzene	ug/l	500	R	250	U	100	U

	StationID	H196GW005		H196GW005		H196GW009	
	SampleID	196GW005M5		196HW005M5		196GW009M5	
	DateCollected	04/24/2002		04/24/2002		04/24/2002	
	DateExtracted	04/25/2002		04/30/2002		04/25/2002	
	DateAnalyzed	04/25/2002		04/30/2002		04/25/2002	
	SDGNumber	59366		59366		59366	
Parameter	**Units**						
Tetrachloroethylene (PCE)	ug/l	500	U	500	U	128	J
Dibromochloromethane	ug/l	500	U	500	U	500	U
Chlorobenzene	ug/L	500	U	32.4	J	7550	=
Ethylbenzene	ug/L	500	U	500	U	500	U
m+p Xylene	ug/l	500	U	500	U	500	U
o-Xylene	ug/l	500	U	500	U	500	U
Xylenes, Total	ug/L	500	U	500	U	500	U
Styrene	ug/L	500	U	500	U	500	U
Bromoform	ug/L	500	U	500	U	500	U
1,1,2,2-Tetrachloroethane	ug/L	500	U	500	U	500	U
1,3-Dichlorobenzene	ug/L	104	J	67.2	J	945	=
1,4-Dichlorobenzene	ug/L	306	J	221	J	1830	=
1,2-Dichlorobenzene	ug/L	9020	=	5020	=	16900	R
1,2,4-Trichlorobenzene	ug/L	500	U	500	U	83.3	J
1,2,3-Trichlorobenzene	ug/l	500	U	500	U	500	U

	StationID	H196GW009		H196GW012		H196GW013	
	SampleID	196GW009M5DL		196GW012M5		196GW013M5	
	DateCollected	04/24/2002		04/24/2002		04/24/2002	
	DateExtracted	04/29/2002		04/29/2002		04/29/2002	
	DateAnalyzed	04/29/2002		04/29/2002		04/29/2002	
	SDGNumber	59366		59366		59366	
Parameter	**Units**						
Tetrachloroethylene (PCE)	ug/l	2500	R	5	U	50	U
Dibromochloromethane	ug/l	2500	R	5	U	50	U
Chlorobenzene	ug/L	6040	R	0.98	J	39.8	J
Ethylbenzene	ug/L	2500	R	5	U	50	U
m+p Xylene	ug/l	2500	R	5	U	50	U
o-Xylene	ug/l	2500	R	5	U	50	U
Xylenes, Total	ug/L	2500	R	5	U	50	U
Styrene	ug/L	2500	R	5	U	50	U
Bromoform	ug/L	2500	R	5	U	50	U
1,1,2,2-Tetrachloroethane	ug/L	2500	R	5	U	50	U
1,3-Dichlorobenzene	ug/L	620	R	5	U	20.4	J
1,4-Dichlorobenzene	ug/L	1410	R	0.76	J	26.8	J
1,2-Dichlorobenzene	ug/L	12100	=	2.1	J	549	=
1,2,4-Trichlorobenzene	ug/L	2500	R	5	U	50	U
1,2,3-Trichlorobenzene	ug/l	2500	R	5	U	50	U

	StationID	H196GW014		H196GW014		H196GW016	
	SampleID	196GW014M5		196GW014M5DL		196GW016M5	
	DateCollected	04/24/2002		04/24/2002		04/24/2002	
	DateExtracted	04/25/2002		04/30/2002		04/29/2002	
	DateAnalyzed	04/25/2002		04/30/2002		04/29/2002	
	SDGNumber	59366		59366		59366	
Parameter	**Units**						
Tetrachloroethylene (PCE)	ug/l	95.3	J	2500	R	5	U
Dibromochloromethane	ug/l	500	U	2500	R	5	U
Chlorobenzene	ug/L	4440	=	3280	R	1.3	J
Ethylbenzene	ug/L	500	U	2500	R	5	U
m+p Xylene	ug/l	500	U	2500	R	5	U
o-Xylene	ug/l	500	U	2500	R	5	U
Xylenes, Total	ug/L	500	U	2500	R	5	U
Styrene	ug/L	500	U	2500	R	5	U
Bromoform	ug/L	500	U	2500	R	5	U
1,1,2,2-Tetrachloroethane	ug/L	500	U	2500	R	5	U
1,3-Dichlorobenzene	ug/L	1080	=	649	R	0.55	J
1,4-Dichlorobenzene	ug/L	2240	=	1470	R	0.91	J
1,2-Dichlorobenzene	ug/L	21100	R	13800	=	27.4	=
1,2,4-Trichlorobenzene	ug/L	104	J	2500	R	0.51	J
1,2,3-Trichlorobenzene	ug/l	500	U	2500	R	5	U

	StationID	H196GW017		H009GW021		H009GW021	
	SampleID	196GW017M5		009GW021M6		009GW021M6DL	
	DateCollected	04/24/2002		06/19/2002		06/19/2002	
	DateExtracted	04/29/2002		06/27/2002		06/27/2002	
	DateAnalyzed	04/29/2002		06/27/2002		06/27/2002	
	SDGNumber	59366		CNC118		CNC118	
Parameter	**Units**						
Tetrachloroethylene (PCE)	ug/l	5	U	100	U	500	R
Dibromochloromethane	ug/l	5	U	100	U	500	R
Chlorobenzene	ug/L	5	U	2500	=	2800	R
Ethylbenzene	ug/L	5	U	100	U	500	R
m+p Xylene	ug/l	5	U				
o-Xylene	ug/l	5	U	100	U	500	R
Xylenes, Total	ug/L	5	U	100	U	500	R
Styrene	ug/L	5	U	100	U	500	R
Bromoform	ug/L	5	U	100	U	500	R
1,1,2,2-Tetrachloroethane	ug/L	5	U	100	U	500	R
1,3-Dichlorobenzene	ug/L	5	U	660	=	740	R
1,4-Dichlorobenzene	ug/L	5	U	1300	=	1400	R
1,2-Dichlorobenzene	ug/L	5	U	12000	R	13000	=
1,2,4-Trichlorobenzene	ug/L	5	U	27	J	66	R
1,2,3-Trichlorobenzene	ug/l	5	U	100	U	160	R

	StationID	H009GW021		H009GW020		H009GW020	
	SampleID	009HW021M6		009GW020M7		009GW020M7DL	
	DateCollected	06/19/2002		09/04/2002		09/04/2002	
	DateExtracted	06/26/2002		09/17/2002		09/18/2002	
	DateAnalyzed	06/26/2002		09/17/2002		09/18/2002	
	SDGNumber	CNC118		66577		66577	
Parameter	**Units**						
Tetrachloroethylene (PCE)	ug/l	50	U	5	U	25	R
Dibromochloromethane	ug/l	50	U	5	U	25	R
Chlorobenzene	ug/L	1200	=	137	R	196	=
Ethylbenzene	ug/L	50	U	5	U	25	R
m+p Xylene	ug/l			5	U	25	R
o-Xylene	ug/l	50	U	5	U	25	R
Xylenes, Total	ug/L	50	U	5	U	25	R
Styrene	ug/L	50	U	5	U	25	R
Bromoform	ug/L	50	U	5	U	25	R
1,1,2,2-Tetrachloroethane	ug/L	50	U	5	U	25	R
1,3-Dichlorobenzene	ug/L	67	=	4.1	J	5	R
1,4-Dichlorobenzene	ug/L	150	=	9.3	=	13.3	R
1,2-Dichlorobenzene	ug/L	1400	=	83.6	=	108	R
1,2,4-Trichlorobenzene	ug/L	6	J	5	U	25	R
1,2,3-Trichlorobenzene	ug/l	50	U	5	U	25	R

	StationID	H009GW020		H009GW020		H009GW022	
	SampleID	009HW020M7		009HW020M7DL		009GW022M7	
	DateCollected	09/04/2002		09/04/2002		09/04/2002	
	DateExtracted	09/17/2002		09/18/2002		09/18/2002	
	DateAnalyzed	09/17/2002		09/18/2002		09/18/2002	
	SDGNumber	66577		66577		66577	
Parameter	**Units**						
Tetrachloroethylene (PCE)	ug/l	5	U	25	R	1	J
Dibromochloromethane	ug/l	5	U	25	R	5	U
Chlorobenzene	ug/L	131	R	149	=	0.69	J
Ethylbenzene	ug/L	5	U	25	R	5	U
m+p Xylene	ug/l	5	U	25	R	5	U
o-Xylene	ug/l	5	U	25	R	5	U
Xylenes, Total	ug/L	5	U	25	R	5	U
Styrene	ug/L	5	U	25	R	5	U
Bromoform	ug/L	5	U	25	R	5	U
1,1,2,2-Tetrachloroethane	ug/L	5	U	25	R	5	U
1,3-Dichlorobenzene	ug/L	3.8	J	4	R	3.3	J
1,4-Dichlorobenzene	ug/L	8.4	=	10.1	R	1.8	J
1,2-Dichlorobenzene	ug/L	78.2	=	87.2	R	5.5	=
1,2,4-Trichlorobenzene	ug/L	5	U	25	R	5	U
1,2,3-Trichlorobenzene	ug/l	5	U	25	R	5	U

	StationID	H196GW004		H196GW005		H196GW009	
	SampleID	196GW004M7		196GW005M7		196GW009M7	
	DateCollected	09/04/2002		09/04/2002		09/04/2002	
	DateExtracted	09/17/2002		09/17/2002		09/12/2002	
	DateAnalyzed	09/17/2002		09/17/2002		09/12/2002	
	SDGNumber	66577		66577		66577	
Parameter	**Units**						
Tetrachloroethylene (PCE)	ug/l	7.5	=	5	U	121	J
Dibromochloromethane	ug/l	0.54	J	0.48	J	250	U
Chlorobenzene	ug/L	57.5	=	6.9	=	163	J
Ethylbenzene	ug/L	5	U	5	U	250	U
m+p Xylene	ug/l	5	U	5	U	250	U
o-Xylene	ug/l	5	U	5	U	250	U
Xylenes, Total	ug/L	5	U	5	U	250	U
Styrene	ug/L	5	U	5	U	250	U
Bromoform	ug/L	5	U	5	U	250	U
1,1,2,2-Tetrachloroethane	ug/L	5	U	5	U	250	U
1,3-Dichlorobenzene	ug/L	12.7	=	6.2	=	233	J
1,4-Dichlorobenzene	ug/L	15	=	17.2	=	334	=
1,2-Dichlorobenzene	ug/L	96.7	=	38	=	3520	=
1,2,4-Trichlorobenzene	ug/L	1.7	J	4.2	J	27.9	J
1,2,3-Trichlorobenzene	ug/l	5	U	5	U	250	U

	StationID	H196GW012		H196GW013		H196GW014	
	SampleID	196GW012M7		196GW013M7		196GW014M7	
	DateCollected	09/04/2002		09/04/2002		09/04/2002	
	DateExtracted	09/17/2002		09/12/2002		09/12/2002	
	DateAnalyzed	09/17/2002		09/12/2002		09/12/2002	
	SDGNumber	66577		66577		66577	
Parameter	**Units**						
Tetrachloroethylene (PCE)	ug/l	5	U	250	U	65.2	J
Dibromochloromethane	ug/l	5	U	250	U	250	U
Chlorobenzene	ug/L	2.5	J	1640	=	5910	R
Ethylbenzene	ug/L	5	U	250	U	250	U
m+p Xylene	ug/l	5	U	250	U	250	U
o-Xylene	ug/l	5	U	250	U	250	U
Xylenes, Total	ug/L	5	U	250	U	250	U
Styrene	ug/L	5	U	250	U	250	U
Bromoform	ug/L	5	U	250	U	250	U
1,1,2,2-Tetrachloroethane	ug/L	5	U	250	U	250	U
1,3-Dichlorobenzene	ug/L	2.3	J	121	J	819	=
1,4-Dichlorobenzene	ug/L	1.5	J	330	=	1910	=
1,2-Dichlorobenzene	ug/L	28.6	=	2940	=	12300	R
1,2,4-Trichlorobenzene	ug/L	5	U	250	U	131	J
1,2,3-Trichlorobenzene	ug/l	5	U	250	U	250	U

	StationID	H196GW014		H196GW016		H196GW017	
	SampleID	196GW014M7DL		196GW016M7		196GW017M7	
	DateCollected	09/04/2002		09/04/2002		09/04/2002	
	DateExtracted	09/18/2002		09/17/2002		09/17/2002	
	DateAnalyzed	09/18/2002		09/17/2002		09/17/2002	
	SDGNumber	66577		66577		66577	
Parameter	**Units**						
Tetrachloroethylene (PCE)	ug/l	1000	R	5	U	5	U
Dibromochloromethane	ug/l	1000	R	5	U	5	U
Chlorobenzene	ug/L	5980	=	1.2	J	0.47	J
Ethylbenzene	ug/L	1000	R	5	U	5	U
m+p Xylene	ug/l	1000	R	5	U	5	U
o-Xylene	ug/l	1000	R	5	U	5	U
Xylenes, Total	ug/L	1000	R	5	U	5	U
Styrene	ug/L	1000	R	5	U	5	U
Bromoform	ug/L	1000	R	5	U	5	U
1,1,2,2-Tetrachloroethane	ug/L	1000	R	5	U	5	U
1,3-Dichlorobenzene	ug/L	743	R	5	U	5	U
1,4-Dichlorobenzene	ug/L	1510	R	0.46	J	5	U
1,2-Dichlorobenzene	ug/L	13000	=	13.5	=	5	U
1,2,4-Trichlorobenzene	ug/L	125	R	5	U	5	U
1,2,3-Trichlorobenzene	ug/l	1000	R	5	U	5	U

	StationID	H196GW017		H009GW021		H196GW007	
	SampleID	196HW017M7		009GW021M7		196GW007M7	
	DateCollected	09/04/2002		09/05/2002		09/05/2002	
	DateExtracted	09/17/2002		09/18/2002		09/12/2002	
	DateAnalyzed	09/17/2002		09/18/2002		09/12/2002	
	SDGNumber	66577		66577		66577	
Parameter	**Units**						
Tetrachloroethylene (PCE)	ug/l	5	U	11.4	J	250	U
Dibromochloromethane	ug/l	5	U	125	U	250	U
Chlorobenzene	ug/L	5	U	542	=	8290	R
Ethylbenzene	ug/L	5	U	125	U	250	U
m+p Xylene	ug/l	5	U	125	U	250	U
o-Xylene	ug/l	5	U	125	U	250	U
Xylenes, Total	ug/L	5	U	125	U	250	U
Styrene	ug/L	5	U	125	U	250	U
Bromoform	ug/L	5	U	125	U	250	U
1,1,2,2-Tetrachloroethane	ug/L	5	U	125	U	250	U
1,3-Dichlorobenzene	ug/L	5	U	137	=	68.6	J
1,4-Dichlorobenzene	ug/L	5	U	209	=	173	J
1,2-Dichlorobenzene	ug/L	5	U	1800	=	2530	=
1,2,4-Trichlorobenzene	ug/L	5	U	125	U	250	U
1,2,3-Trichlorobenzene	ug/l	5	U	125	U	250	U

	StationID	H196GW007		H196GW008		H196GW008	
	SampleID	196GW007M7DL		196GW008M7		196GW008M7DL	
	DateCollected	09/05/2002		09/05/2002		09/05/2002	
	DateExtracted	09/18/2002		09/18/2002		09/12/2002	
	DateAnalyzed	09/18/2002		09/18/2002		09/12/2002	
	SDGNumber	66577		66577		66577	
Parameter	**Units**						
Tetrachloroethylene (PCE)	ug/l	1000	R	4.5	J	250	R
Dibromochloromethane	ug/l	1000	R	25	U	250	R
Chlorobenzene	ug/L	8320	=	506	R	573	=
Ethylbenzene	ug/L	1000	R	25	U	250	R
m+p Xylene	ug/l	1000	R	25	U	250	R
o-Xylene	ug/l	1000	R	25	U	250	R
Xylenes, Total	ug/L	1000	R	25	U	250	R
Styrene	ug/L	1000	R	25	U	250	R
Bromoform	ug/L	1000	R	25	U	250	R
1,1,2,2-Tetrachloroethane	ug/L	1000	R	25	U	250	R
1,3-Dichlorobenzene	ug/L	1000	R	60.3	=	71.8	R
1,4-Dichlorobenzene	ug/L	190	R	96.4	=	72.3	R
1,2-Dichlorobenzene	ug/L	2440	R	758	R	932	=
1,2,4-Trichlorobenzene	ug/L	1000	R	4	J	250	R
1,2,3-Trichlorobenzene	ug/l	1000	R	25	U	250	R

	StationID	H196GW010		H196GW011		H196GW011	
	SampleID	196GW010M7		196GW011M7		196GW011M7DL	
	DateCollected	09/05/2002		09/05/2002		09/05/2002	
	DateExtracted	09/17/2002		09/18/2002		09/12/2002	
	DateAnalyzed	09/17/2002		09/18/2002		09/12/2002	
	SDGNumber	66577		66577		66577	
Parameter	**Units**						
Tetrachloroethylene (PCE)	ug/l	5	U	17.4	=	250	R
Dibromochloromethane	ug/l	5	U	12.5	U	250	R
Chlorobenzene	ug/L	47.5	=	360	R	431	=
Ethylbenzene	ug/L	5	U	12.5	U	250	R
m+p Xylene	ug/l	5	U	12.5	U	250	R
o-Xylene	ug/l	5	U	12.5	U	250	R
Xylenes, Total	ug/L	5	U	12.5	U	250	R
Styrene	ug/L	5	U	12.5	U	250	R
Bromoform	ug/L	5	U	12.5	U	250	R
1,1,2,2-Tetrachloroethane	ug/L	5	U	12.5	U	250	R
1,3-Dichlorobenzene	ug/L	1.6	J	19.6	=	20.4	R
1,4-Dichlorobenzene	ug/L	2.7	J	5.6	J	250	R
1,2-Dichlorobenzene	ug/L	58.1	=	16.7	=	29.2	R
1,2,4-Trichlorobenzene	ug/L	5	U	12.5	U	250	R
1,2,3-Trichlorobenzene	ug/l	5	U	12.5	U	250	R

	StationID	H196GW015		HGELGW015		H009GW021	
	SampleID	196GW015M7		GELGW015M7		009GW021M8	
	DateCollected	09/05/2002		09/05/2002		09/09/2002	
	DateExtracted	09/18/2002		09/12/2002		09/15/2002	
	DateAnalyzed	09/18/2002		09/12/2002		09/15/2002	
	SDGNumber	66577		66577		CNC144	
Parameter	**Units**						
Tetrachloroethylene (PCE)	ug/l	125	U	250	U	50	U
Dibromochloromethane	ug/l	125	U	250	U	50	U
Chlorobenzene	ug/L	2020	=	397	=	290	=
Ethylbenzene	ug/L	125	U	250	U	50	U
m+p Xylene	ug/l	125	U	250	U	50	U
o-Xylene	ug/l	125	U	250	U	50	U
Xylenes, Total	ug/L	125	U	250	U	50	U
Styrene	ug/L	125	U	250	U	50	U
Bromoform	ug/L	125	U	250	U	50	U
1,1,2,2-Tetrachloroethane	ug/L	125	U	250	U	50	U
1,3-Dichlorobenzene	ug/L	14.5	J	48	J	62	=
1,4-Dichlorobenzene	ug/L	53.3	J	75	J	100	=
1,2-Dichlorobenzene	ug/L	126	=	4600	=	880	=
1,2,4-Trichlorobenzene	ug/L	125	U	250	U	50	UJ
1,2,3-Trichlorobenzene	ug/l	125	U	250	U	50	UJ

	StationID	H009GW021	
	SampleID	009HW021M7	
	DateCollected	09/09/2002	
	DateExtracted	09/15/2002	
	DateAnalyzed	09/15/2002	
	SDGNumber	CNC144	
Parameter	**Units**		
Tetrachloroethylene (PCE)	ug/l	50	U
Dibromochloromethane	ug/l	50	U
Chlorobenzene	ug/L	300	=
Ethylbenzene	ug/L	50	U
m+p Xylene	ug/l	50	U
o-Xylene	ug/l	50	U
Xylenes, Total	ug/L	50	U
Styrene	ug/L	50	U
Bromoform	ug/L	50	U
1,1,2,2-Tetrachloroethane	ug/L	50	U
1,3-Dichlorobenzene	ug/L	66	=
1,4-Dichlorobenzene	ug/L	110	=
1,2-Dichlorobenzene	ug/L	940	=
1,2,4-Trichlorobenzene	ug/L	50	UJ
1,2,3-Trichlorobenzene	ug/l	50	UJ

	StationID	H009GW021		H009GW021		H009GW021	
	SampleID	009GW021M6		009GW021M6DL		009HW021M6	
	DateCollected	06/19/2002		06/19/2002		06/19/2002	
	DateExtracted	06/25/2002		06/25/2002		06/25/2002	
	DateAnalyzed	06/30/2002		07/02/2002		06/30/2002	
	SDGNumber	CNC118		CNC118		CNC118	
Parameter	**Units**						
N-Nitrosodiphenylamine	ug/l	400	U	800	R	10	U
Phenol	ug/l	400	U	800	R	10	U
bis(2-Chloroethyl) ether (2-Chloroethyl Ether)	ug/l	400	U	800	R	10	U
2-Chlorophenol	ug/l	32	J	800	R	2.2	J
1,3-Dichlorobenzene	ug/l	400	U	530	R	10	U
1,4-Dichlorobenzene	ug/l	1000	=	1000	R	44	=
Benzyl alcohol	ug/l	400	U	800	R	10	U
1,2-Dichlorobenzene	ug/l	9300	R	9500	=	410	R
Bis(2-Chloroisopropyl)Ether	ug/l	400	U	800	R	10	U
2-Methylphenol (o-Cresol)	ug/l	400	U	800	R	10	U
N-Nitrosodi-n-propylamine	ug/l	400	U	800	R	10	U
3-Methylphenol/4-Methylphenol (mp-Cresol)	ug/l	400	U	800	R	10	U
Hexachloroethane	ug/l	400	U	800	R	10	U
Nitrobenzene	ug/l	400	U	800	R	10	U
Isophorone	ug/l	400	U	800	R	10	U
2-Nitrophenol	ug/l	400	U	800	R	10	U
2,4-Dimethylphenol	ug/l	400	U	800	R	10	U
bis(2-Chloroethoxy) Methane	ug/l	400	U	800	R	10	U
2,4-Dichlorophenol	ug/l	400	U	800	R	2.6	J
Benzoic acid	ug/l	2000	U	4000	R	50	U
1,2,4-Trichlorobenzene	ug/l	33	J	800	R	1.6	J
Naphthalene	ug/l	29	J	800	R	3.3	J
4-Chloroaniline	ug/l	400	U	800	R	10	U
Hexachlorobutadiene	ug/l	400	U	800	R	10	U
4-Chloro-3-methylphenol	ug/l	400	U	800	R	10	U
2-Methylnaphthalene	ug/l	400	U	800	R	10	U
Hexachlorocyclopentadiene	ug/l	400	U	800	R	10	U
2,4,6-Trichlorophenol	ug/l	400	U	800	R	10	U
2,4,5-Trichlorophenol	ug/l	2000	U	4000	R	50	U
2-Chloronaphthalene	ug/l	400	U	800	R	10	U

	StationID	H009GW021		H009GW021		H009GW021	
	SampleID	009HW021M6DL		009GW021M8		009HW021M7	
	DateCollected	06/19/2002		09/09/2002		09/09/2002	
	DateExtracted	06/25/2002		09/12/2002		09/12/2002	
	DateAnalyzed	06/30/2002		09/22/2002		09/22/2002	
	SDGNumber	CNC118		CNC144		CNC144	
Parameter	**Units**						
N-Nitrosodiphenylamine	ug/l	50	R	10	U	10	U
Phenol	ug/l	50	R	10	R	10	R
bis(2-Chloroethyl) ether (2-Chloroethyl Ether)	ug/l	50	R	10	U	10	U
2-Chlorophenol	ug/l	50	R	10	U	10	U
1,3-Dichlorobenzene	ug/l	50	R				
1,4-Dichlorobenzene	ug/l	54	R				
Benzyl alcohol	ug/l	50	R	10	U	10	U
1,2-Dichlorobenzene	ug/l	480	=				
Bis(2-Chloroisopropyl)Ether	ug/l	50	R	10	U	10	U
2-Methylphenol (o-Cresol)	ug/l	50	R	10	U	10	U
N-Nitrosodi-n-propylamine	ug/l	50	R	10	U	10	U
3-Methylphenol/4-Methylphenol (mp-Cresol)	ug/l	50	R	10	U	10	U
Hexachloroethane	ug/l	50	R	10	U	10	U
Nitrobenzene	ug/l	50	R	10	U	10	U
Isophorone	ug/l	50	R	10	U	10	U
2-Nitrophenol	ug/l	50	R	10	U	10	U
2,4-Dimethylphenol	ug/l	50	R	10	U	10	U
bis(2-Chloroethoxy) Methane	ug/l	50	R	10	U	10	U
2,4-Dichlorophenol	ug/l	5.3	R	1.9	J	3.6	J
Benzoic acid	ug/l	250	R	50	U	50	U
1,2,4-Trichlorobenzene	ug/l	50	R				
Naphthalene	ug/l	3.6	R	10	U	10	U
4-Chloroaniline	ug/l	50	R	10	U	10	U
Hexachlorobutadiene	ug/l	50	R	10	U	10	U
4-Chloro-3-methylphenol	ug/l	50	R	10	U	10	U
2-Methylnaphthalene	ug/l	50	R	10	U	10	U
Hexachlorocyclopentadiene	ug/l	50	R	10	U	10	U
2,4,6-Trichlorophenol	ug/l	50	R	10	U	10	U
2,4,5-Trichlorophenol	ug/l	250	R	50	U	50	U
2-Chloronaphthalene	ug/l	50	R	10	U	10	U

	StationID	H009GW021		H009GW021		H009GW021	
	SampleID	009GW021M6		009GW021M6DL		009HW021M6	
	DateCollected	06/19/2002		06/19/2002		06/19/2002	
	DateExtracted	06/25/2002		06/25/2002		06/25/2002	
	DateAnalyzed	06/30/2002		07/02/2002		06/30/2002	
	SDGNumber	CNC118		CNC118		CNC118	
Parameter	**Units**						
2-Nitroaniline	ug/l	2000	U	4000	R	50	U
3-Nitroaniline	ug/l	2000	U	4000	R	50	U
Dimethyl Phthalate	ug/l	400	U	800	R	10	U
2,6-Dinitrotoluene	ug/l	400	U	800	R	10	U
Acenaphthylene	ug/l	400	U	800	R	10	U
Acenaphthene	ug/l	400	U	800	R	10	U
2,4-Dinitrophenol	ug/l	2000	U	4000	R	50	U
Dibenzofuran	ug/l	400	U	800	R	10	U
2,4-Dinitrotoluene	ug/l	400	U	800	R	10	U
Diethyl Phthalate	ug/l	400	U	800	R	10	U
4-Nitrophenol	ug/l	2000	U	4000	R	50	U
Fluorene	ug/l	400	U	800	R	10	U
4-Chlorophenyl Phenyl Ether	ug/l	400	U	800	R	10	U
4,6-Dinitro-2-methylphenol	ug/l	2000	U	4000	R	50	U
4-Nitroaniline	ug/l	2000	U	4000	R	50	U
4-Bromophenyl Phenyl Ether	ug/l	400	U	800	R	10	U
Hexachlorobenzene	ug/l	400	U	800	R	10	U
Pentachlorophenol	ug/l	2000	U	4000	R	50	U
Phenanthrene	ug/l	400	U	800	R	10	U
Anthracene	ug/l	400	U	800	R	10	U
Di-n-butyl Phthalate	ug/l	400	U	800	R	10	U
Fluoranthene	ug/l	400	U	800	R	10	U
Pyrene	ug/l	400	U	800	R	10	U
Benzyl Butyl Phthalate	ug/l	400	U	800	R	10	U
Benzo(a)Anthracene	ug/l	400	U	800	R	10	U
3,3'-Dichlorobenzidine	ug/l	800	U	1600	R	20	U
Chrysene	ug/l	400	U	800	R	10	U
bis(2-Ethylhexyl) Phthalate	ug/l	400	U	800	R	10	U
Di-n-octylphthalate	ug/l	400	U	800	R	10	U
Benzo(b)Fluoranthene	ug/l	400	U	800	R	10	U

	StationID	H009GW021		H009GW021		H009GW021	
	SampleID	009HW021M6DL		009GW021M8		009HW021M7	
	DateCollected	06/19/2002		09/09/2002		09/09/2002	
	DateExtracted	06/25/2002		09/12/2002		09/12/2002	
	DateAnalyzed	06/30/2002		09/22/2002		09/22/2002	
	SDGNumber	CNC118		CNC144		CNC144	
Parameter	**Units**						
2-Nitroaniline	ug/l	250	R	50	U	50	U
3-Nitroaniline	ug/l	250	R	50	U	50	U
Dimethyl Phthalate	ug/l	50	R	10	U	10	U
2,6-Dinitrotoluene	ug/l	50	R	10	U	10	U
Acenaphthylene	ug/l	50	R	10	U	10	U
Acenaphthene	ug/l	50	R	10	U	10	U
2,4-Dinitrophenol	ug/l	250	R	50	U	50	U
Dibenzofuran	ug/l	50	R	10	U	10	U
2,4-Dinitrotoluene	ug/l	50	R	10	U	10	U
Diethyl Phthalate	ug/l	50	R	10	U	10	U
4-Nitrophenol	ug/l	250	R	50	U	50	U
Fluorene	ug/l	50	R	10	U	10	U
4-Chlorophenyl Phenyl Ether	ug/l	50	R	10	U	10	U
4,6-Dinitro-2-methylphenol	ug/l	250	R	50	U	50	U
4-Nitroaniline	ug/l	250	R	50	U	50	U
4-Bromophenyl Phenyl Ether	ug/l	50	R	10	U	10	U
Hexachlorobenzene	ug/l	50	R	10	U	10	U
Pentachlorophenol	ug/l	250	R	50	U	50	U
Phenanthrene	ug/l	50	R	10	U	10	U
Anthracene	ug/l	50	R	10	U	10	U
Di-n-butyl Phthalate	ug/l	50	R	0.5	J	0.58	J
Fluoranthene	ug/l	50	R	10	U	10	U
Pyrene	ug/l	50	R	10	U	10	U
Benzyl Butyl Phthalate	ug/l	50	R	10	U	10	U
Benzo(a)Anthracene	ug/l	50	R	10	U	10	U
3,3'-Dichlorobenzidine	ug/l	100	R	20	U	20	U
Chrysene	ug/l	50	R	10	U	10	U
bis(2-Ethylhexyl) Phthalate	ug/l	50	R	10	U	10	U
Di-n-octylphthalate	ug/l	50	R	10	U	10	U
Benzo(b)Fluoranthene	ug/l	50	R	10	U	10	U

	StationID	H009GW021		H009GW021		H009GW021	
	SampleID	009GW021M6		009GW021M6DL		009HW021M6	
	DateCollected	06/19/2002		06/19/2002		06/19/2002	
	DateExtracted	06/25/2002		06/25/2002		06/25/2002	
	DateAnalyzed	06/30/2002		07/02/2002		06/30/2002	
	SDGNumber	CNC118		CNC118		CNC118	
Parameter	**Units**						
Benzo(k)Fluoranthene	ug/l	400	UJ	800	R	10	UJ
Benzo(a)Pyrene	ug/l	400	U	800	R	10	U
Indeno(1,2,3-c,d)pyrene	ug/l	400	UJ	800	R	10	UJ
Dibenz(a,h)anthracene	ug/l	400	U	800	R	10	U
Benzo(g,h,i)Perylene	ug/l	400	U	800	R	10	U
Carbazole	ug/l	400	U	800	R	10	U

	StationID	H009GW021		H009GW021		H009GW021	
	SampleID	009HW021M6DL		009GW021M8		009HW021M7	
	DateCollected	06/19/2002		09/09/2002		09/09/2002	
	DateExtracted	06/25/2002		09/12/2002		09/12/2002	
	DateAnalyzed	06/30/2002		09/22/2002		09/22/2002	
	SDGNumber	CNC118		CNC144		CNC144	
Parameter	**Units**						
Benzo(k)Fluoranthene	ug/l	50	R	10	U	10	U
Benzo(a)Pyrene	ug/l	50	R	10	U	10	U
Indeno(1,2,3-c,d)pyrene	ug/l	50	R	10	UJ	10	UJ
Dibenz(a,h)anthracene	ug/l	50	R	10	U	10	U
Benzo(g,h,i)Perylene	ug/l	50	R	10	U	10	U
Carbazole	ug/l	50	R	10	U	10	U

	StationID	H009GW021		H009GW021		H009GW021		H009GW021	
	SampleID	009GW021M6		009GW021M6		009HW021M6		009HW021M6	
	DateCollected	06/19/2002		06/19/2002		06/19/2002		06/19/2002	
	DateExtracted	06/25/2002		06/25/2002		06/25/2002		06/25/2002	
	DateAnalyzed	06/27/2002		07/02/2002		06/27/2002		07/02/2002	
	SDGNumber	CNC118		CNC118		CNC118		CNC118	
Parameter	**Units**								
Arsenic	mg/l	0.036	J			0.028	J		
Barium	mg/l	0.21	=			0.18	J		
Cadmium	mg/l	0.0067	=			0.006	=		
Chromium, Total	mg/l	0.0015	U			0.0014	U		
Lead	mg/l	0.0025	U			0.0019	U		
Selenium	mg/l	0.0021	UJ			0.0021	UJ		
Silver	mg/l	0.00095	U			0.00095	U		
Mercury	mg/l			0.000072	U			0.000072	U

	StationID	H009GW021		H009GW021		H009GW021		H009GW021	
	SampleID	009GW021M8		009GW021M8		009HW021M7		009HW021M7	
	DateCollected	09/09/2002		09/09/2002		09/09/2002		09/09/2002	
	DateExtracted	09/13/2002		09/18/2002		09/13/2002		09/18/2002	
	DateAnalyzed	09/13/2002		09/19/2002		09/13/2002		09/19/2002	
	SDGNumber	CNC144		CNC144		CNC144		CNC144	
Parameter	**Units**								
Arsenic	mg/l			0.0042	J			0.005	J
Barium	mg/l			0.1	J			0.11	J
Cadmium	mg/l			0.0045	J			0.0047	J
Chromium, Total	mg/l			0.004	J			0.0042	J
Lead	mg/l			0.0044	U			0.0051	U
Selenium	mg/l			0.0023	U			0.0021	U
Silver	mg/l			0.00095	U			0.00095	U
Mercury	mg/l	0.000072	U			0.000072	U		

	StationID	H009GW021		H009GW021	
	SampleID	009GW021M6		009HW021M6	
	DateCollected	06/19/2002		06/19/2002	
	DateExtracted	06/21/2002		06/21/2002	
	DateAnalyzed	06/21/2002		06/21/2002	
	SDGNumber	CNC118		CNC118	
Parameter	**Units**				
Hydrazine	mg/l	0.005	U	0.005	U

Appendix C

Data Validation Summary - Charleston Naval Complex - Zone H, SWMU 196

TO: Kim-Lee Murphy/CH2M HILL/GNA

FROM: Amy Juchem/CH2M HILL/GNA
Herb Kelly/CH2M HILL/GNA

DATE: July 2, 2002

The purpose of this memorandum is to present the results of the data validation process for the samples collected in Zone H, SWMU 196. The samples were collected through October 20, 2001 and April 24, 2002.

The specific samples and analytical fractions reviewed are summarized below in Table 1.

The Quality Control areas that were review and the resulting findings are documented within each subsection that follows. This data was validated for compliance with the analytical method requirements. This process also included a review of the data to assess the accuracy, precision, and completeness based upon procedures described in the guidance documents such as the Environmental Protection Agency (EPA) *National Functional Guidelines for Inorganic Data Review (EPA 1994) and National Functional Guidelines for Organic Data Review (EPA 1999)*. Quality assurance/quality control (QA/QC) summary forms and data reports were reviewed.

Samples were submitted to General Engineering Laboratories, Inc., in Charleston, South Carolina, for the following analyses: SW-846 8260 Volatile Organic Compounds (VOC).

Samples were submitted to Severn Trent Services, STL Savannah Laboratories, Inc., in Savannah, Georgia, for the following analyses: SW-846 8260 Volatile Organic Compounds (VOC).

Sample results that were not within the acceptance limits were appended with a qualifying flag, which consisted of a single- or double-letter code that indicated a possible problem with the data. The qualifying flags originated during the data review and validation processes. These also include the secondary, or the two-digit "sub-qualifier" flags. The secondary qualifiers provide the reasoning behind the assignment of a qualifier flag to the data. The secondary qualifiers are presented and defined below.

Attachment 1 lists the changes in data qualifiers, due to the validation process.

The following primary flags were used to qualify the data:

[=] Detected. The analyte was analyzed for and detected at the concentration shown.

[J] Estimated. The analyte was present but the reported value may not be accurate or precise.

[U] Undetected. The analyte was analyzed for but not detected above the method detection limit.

[UJ] Detection limit estimated. The analyte was analyzed for but qualified as not detected; the result is estimated.

[R] Rejected. The data is not useable.

Secondary Data Validation Qualifiers

Code	Definition
2S	Second Source
BL	Blank
BD	Blank Spike/Blank Spike Duplicate or (LCS/LCSD) Precision
BS	Blank Spike/LCS
CC	Continuing Calibration Verification
DL	Dilution
FD	Field Duplicate
HT	Holding Time
IB	In-Between (metals - B's → J's)
IC	Initial Calibration
IS	Internal Standard
LD	Lab Duplicate
LR	Concentration exceeded Linear Range
MD	MS/MSD or LCS/LCSD Precision
MS	Matrix Spike/Matrix Spike Duplicate
OT	Other (see DV worksheet)
PD	Pesticide Degradation
PS	Post Spike
RE	Re-extraction/Re-analysis
SD	Serial Dilution
SS	Spiked Surrogate
TN	Tune

Table 1 - Chemical Analytical Methods – Field and Quality Control Samples

SDG	Station ID	Sample ID	Lab Sample ID	Matrix	Sample Type	LR Type	Upper Depth	Lower Depth	Date Collected	VOC SW8260
51003	H196GW006	196GW006L1	51003001	WG	N				10/26/01	X
51003	H196GW006	196GW006L1MS	1200101628	WG	MS				10/26/01	X
51003	H196GW006	196GW006L1SD	1200101630	WG	SD				10/26/01	X
51003	H009GW020	009GW020L1	51003002	WG	N				10/26/01	X
51003	H009GW021	009GW021L1	51003003	WG	N				10/26/01	X
51003	H009GW021	009GW021L1LR	51003003	WG	LR				10/26/01	X
51003	H009GW022	009GW022L1	51003004	WG	N				10/26/01	X
51003	H009GW022	009GW022L1LR	51003004	WG	LR				10/26/01	X
51003	HGELGW015	GELGW015L1	51003005	WG	N				10/26/01	X
51003	HGELGW015	GELGW015L1LR	51003005	WG	LR				10/26/01	X
51003	H196GW004	196GW004L1	51003006	WG	N				10/26/01	X
51003	H196GW005	196GW005L1	51003007	WG	N				10/26/01	X
51003	H196GW005	196GW005L1LR	51003007	WG	LR				10/26/01	X
5	H196GW007	196GW007L1	51003008	WG	N				10/26/01	X
51003	H196GW008	196GW008L1	51003009	WG	N				10/26/01	X
51003	H196GW009	196GW009L1	51003010	WG	N				10/26/01	X
51003	H196GW009	196HW009L1	51003011	WG	FD				10/26/01	X
51003	H196GW010	196GW010L1	51003012	WG	N				10/26/01	X
51003	FIELDQC	196EW004L1	51003013	WQ	EB				10/26/01	X
51003	FIELDQC	196TW004L1	51003014	WQ	TB				10/20/01	X
51003	LABQC	1200101626	1200101626	WQ	LB					X
51003	LABQC	1200101626b	1200101626	WQ	LB					X
51003	LABQC	1200101631	1200101631	WQ	BS					X
51003	LABQC	1200102627	1200102627	WQ	LB					X
51003	LABQC	1200102627b	1200102627	WQ	LB					X
51003	LABQC	1200102628	1200102628	WQ	BS					X
51003	LABQC	1200103091	1200103091	WQ	LB					X
51003	LABQC	1200103091b	1200103091	WQ	LB					X
51003	LABQC	1200103092	1200103092	WQ	BS					X
5	H196SB018	196SB01801	51880001	SO	N		0	1	11/12/01	X

SDG	Station ID	Sample ID	Lab Sample ID	Matrix	Sample Type	LR Type	Upper Depth	Lower Depth	Date Collected	VOC SW8260
51880	H196SB019	196SB01901	51880002	SO	N		0	1	11/12/01	X
51880	LABQC	1200108505	1200108505	SQ	LB					X
51880	LABQC	1200108508	1200108508	SQ	BS					X
51881	FIELDQC	196EB018L1	51881001	WQ	EB				11/12/01	X
51881	LABQC	1200108949	1200108949	WQ	LB					X
51881	LABQC	1200108950	1200108950	WQ	BS					X
52363	H196GW006	196GW006L2	52363001	WG	N				11/20/01	X
52363	H196GW006	196GW006L2LR	52363001	WG	LR	DL			11/20/01	X
52363	H196GW006	196GW006L2MS	1200115288	WG	MS				11/20/01	X
52363	H196GW006	196GW006L2SD	1200115289	WG	SD				11/20/01	X
52363	H009GW020	009GW020L2	52363002	WG	N				11/20/01	X
52363	H009GW020	009GW020L2LR	52363002	WG	LR	DL			11/20/01	X
52363	H009GW021	009GW021L2	52363003	WG	N				11/20/01	X
52363	H009GW021	009GW021L2LR	52363003	WG	LR	DL			11/20/01	X
52363	HGELGW015	GELGW015L2	52363004	WG	N				11/20/01	X
52363	HGELGW015	GELGW015L2LR	52363004	WG	LR	DL			11/20/01	X
52363	H196GW004	196GW004L2	52363005	WG	N				11/20/01	X
52363	H196GW004	196GW004L2LR	52363005	WG	LR	DL			11/20/01	X
52363	H196GW005	196GW005L2	52363006	WG	N				11/20/01	X
52363	H196GW005	196GW005L2LR	52363006	WG	LR	DL			11/20/01	X
52363	H196GW007	196GW007L2	52363007	WG	N				11/20/01	X
52363	H196GW007	196GW007L2LR	52363007	WG	LR	DL			11/20/01	X
52363	H196GW008	196GW008L2	52363008	WG	N				11/20/01	X
52363	H196GW008	196GW008L2LR	52363008	WG	LR	DL			11/20/01	X
52363	H196GW008	196HW008L2	52363009	WG	FD				11/20/01	X
52363	H196GW008	196HW008L2LR	52363009	WG	LR	DL			11/20/01	X
52363	H196GW010	196GW010L2	52363010	WG	N				11/20/01	X
52363	H196GW010	196GW010L2LR	52363010	WG	LR	DL			11/20/01	X
52363	FIELDQC	196EW004L2	52363011	WQ	EB				11/20/01	X
52363	FIELDQC	196TW004L2	52363012	WQ	TB				10/25/01	X
52363	LABQC	1200115286	1200115286	WQ	LB					X
52363	LABQC	1200115287	1200115287	WQ	BS					X

SDG	Station ID	Sample ID	Lab Sample ID	Matrix	Sample Type	LR Type	Upper Depth	Lower Depth	Date Collected	VOC SW8260
52363	LABQC	1200116273	1200116273	WQ	LB					X
52363	LABQC	1200116274	1200116274	WQ	LB					X
52363	LABQC	1200116275	1200116275	WQ	BS					X
52363	LABQC	1200116276	1200116276	WQ	BS					X
53063	H196GW009	196GW009L3	53063001	WG	N				12/06/01	X
53063	H196GW009	196GW009L3MS	1200119467	WG	MS				12/06/01	X
53063	H196GW009	196GW009L3SD	1200119468	WG	SD				12/06/01	X
53063	H009GW022	009GW022L3	53063002	WG	N				12/06/01	X
53063	H196GW006	196GW006L3	53063003	WG	N				12/06/01	X
53063	HGELGW015	GELGW015L3	53063004	WG	N				12/06/01	X
53063	FIELDQC	196EW009L3	53063005	WQ	EB				12/06/01	X
53063	FIELDQC	196TW009L3	53063006	WQ	TB				12/06/01	X
53063	LABQC	1200121378	1200121378	WQ	LB					X
53063	LABQC	1200121379	1200121379	WQ	BS					X
53777	H009GW020	009GW020L4	53777001	WG	N				12/18/01	X
5[illegible]	H009GW020	009GW020L4LR	53777001	WG	LR	DL			12/18/01	X
53777	H009GW020	009GW020L4MS	1200127597	WG	MS				12/18/01	X
53777	H009GW020	009GW020L4SD	1200127598	WG	SD				12/18/01	X
53777	H196GW006	196GW006L4	53777002	WG	N				12/18/01	X
53777	H009GW021	009GW021L4	53777003	WG	N				12/19/01	X
53777	H009GW021	009GW021L4LR	53777003	WG	LR	DL			12/19/01	X
53777	H009GW022	009GW022L4	53777004	WG	N				12/19/01	X
53777	H009GW022	009GW022L4LR	53777004	WG	LR	DL			12/19/01	X
53777	HGELGW015	GELGW015L4	53777005	WG	N				12/18/01	X
53777	HGELGW015	GELGW015L4LR	53777005	WG	LR	DL			12/18/01	X
53777	H196GW004	196GW004L4	53777006	WG	N				12/18/01	X
53777	H196GW004	196GW004L4LR	53777006	WG	LR	DL			12/18/01	X
53777	H196GW004	196HW004L4	53777007	WG	FD				12/18/01	X
53777	H196GW004	196HW004L4LR	53777007	WG	LR	DL			12/18/01	X
53777	H196GW005	196GW005L4	53777008	WG	N				12/18/01	X
53777	H196GW005	196GW005L4LR	53777008	WG	LR	DL			12/18/01	X
5[illegible]	H196GW007	196GW007L4	53777009	WG	N				12/19/01	X

SDG	Station ID	Sample ID	Lab Sample ID	Matrix	Sample Type	LR Type	Upper Depth	Lower Depth	Date Collected	VOC SW8260
53777	H196GW007	196GW007L4LR	53777009	WG	LR	DL			12/19/01	X
53777	H196GW008	196GW008L4	53777010	WG	N				12/18/01	X
53777	H196GW008	196GW008L4LR	53777010	WG	LR	DL			12/18/01	X
53777	H196GW009	196GW009L4	53777011	WG	N				12/19/01	X
53777	H196GW009	196GW009L4LR	53777011	WG	LR	DL			12/19/01	X
53777	H196GW010	196GW010L4	53777012	WG	N				12/18/01	X
53777	H196GW010	196GW010L4LR	53777012	WG	LR	DL			12/18/01	X
53777	FIELDQC	196EW004L4	53777013	WQ	EB				12/18/01	X
53777	FIELDQC	196TW004L4	53777014	WQ	TB				12/18/01	X
53777	FIELDQC	196EW007L4	53777015	WQ	EB				12/19/01	X
53777	LABQC	1200127595	1200127595	WQ	LB					X
53777	LABQC	1200127596	1200127596	WQ	BS					X
53777	LABQC	1200129803	1200129803	WQ	LB					X
53777	LABQC	1200129804	1200129804	WQ	BS					X
53777	LABQC	1200129987	1200129987	WQ	LB					X
53777	LABQC	1200129988	1200129988	WQ	BS					X
55885	H196GW006	196GW006M1	55885001	WG	N				02/08/02	X
55885	H196GW006	196GW006M1LR	55885001	WG	LR	DL			02/08/02	X
55885	H009GW020	009GW020M1	55885002	WG	N				02/08/02	X
55885	H009GW020	009GW020M1LR	55885002	WG	LR	DL			02/08/02	X
55885	H009GW021	009GW021M1	55885003	WG	N				02/08/02	X
55885	H009GW021	009GW021M1LR	55885003	WG	LR	DL			02/08/02	X
55885	H009GW022	009GW022M1	55885004	WG	N				02/08/02	X
55885	H009GW022	009GW022M1LR	55885004	WG	LR	DL			02/08/02	X
55885	H009GW022	009HW022M1	55885005	WG	FD				02/08/02	X
55885	H009GW022	009HW022M1LR	55885005	WG	LR	DL			02/08/02	X
55885	HGELGW015	GELGW015M1	55885006	WG	N				02/08/02	X
55885	HGELGW015	GELGW015M1LR	55885006	WG	LR	DL			02/08/02	X
55885	H196GW004	196GW004M1	55885007	WG	N				02/08/02	X
55885	H196GW004	196GW004M1LR	55885007	WG	LR	DL			02/08/02	X
55885	H196GW005	196GW005M1	55885008	WG	N				02/08/02	X
55885	H196GW005	196GW005M1LR	55885008	WG	LR	DL			02/08/02	X

SDG	Station ID	Sample ID	Lab Sample ID	Matrix	Sample Type	LR Type	Upper Depth	Lower Depth	Date Collected	VOC SW8260
55885	H196GW007	196GW007M1	55885009	WG	N				02/08/02	X
55885	H196GW007	196GW007M1LR	55885009	WG	LR	DL			02/08/02	X
55885	H196GW008	196GW008M1	55885010	WG	N				02/08/02	X
55885	H196GW009	196GW009M1	55885011	WG	N				02/08/02	X
55885	H196GW010	196GW010M1	55885012	WG	N				02/08/02	X
55885	H196GW010	196GW010M1LR	55885012	WG	LR	DL			02/08/02	X
55885	FIELDQC	196EW004M1	55885013	WQ	EB				02/08/02	X
55885	FIELDQC	196TW004M1	55885014	WQ	TB				02/06/02	X
55885	LABQC	1200151818	1200151818	WQ	LB					X
55885	LABQC	1200151819	1200151819	WQ	BS					X
55885	LABQC	1200157035	1200157035	WQ	LB					X
55885	LABQC	1200157036	1200157036	WQ	LB					X
55885	LABQC	1200157037	1200157037	WQ	BS					X
55885	LABQC	1200157038	1200157038	WQ	BS					X
55953	H196GW015	196GW015M1	55953001	WG	N				02/11/02	X
55[illegible]	H196GW015	196GW015M1MS	1200151820	WG	MS				02/11/02	X
55953	H196GW015	196GW015M1SD	1200151821	WG	SD				02/11/02	X
55953	H196GW012	196GW012M1	55953002	WG	N				02/11/02	X
55953	H196GW013	196GW013M1	55953003	WG	N				02/11/02	X
55953	H196GW013	196GW013M1LR	55953003	WG	LR	DL			02/11/02	X
55953	H196GW014	196GW014M1	55953004	WG	N				02/11/02	X
55953	FIELDQC	196EW011M1	55953005	WQ	EB				02/11/02	X
55953	H196GW011	196GW011M1	55953006	WG	N				02/11/02	X
55953	LABQC	1200157035	1200157035	WQ	LB					X
55953	LABQC	1200157036	1200157036	WQ	LB					X
55953	LABQC	1200157037	1200157037	WQ	BS					X
55953	LABQC	1200157038	1200157038	WQ	BS					X
57356	H196GW016	196GW016M3	57356001	WG	N				03/11/02	X
57356	H196GW016	196GW016M3MS	1200181500	WG	MS				03/11/02	X
57356	H196GW016	196GW016M3SD	1200181501	WG	SD				03/11/02	X
57356	H196GW017	196GW017M3	57356002	WG	N				03/11/02	X
57[illegible]	FIELDQC	196EW016M3	57356003	WQ	EB				03/11/02	X

SDG	Station ID	Sample ID	Lab Sample ID	Matrix	Sample Type	LR Type	Upper Depth	Lower Depth	Date Collected	VOC SW8260
57356	FIELDQC	196TW016M3	57356004	WQ	TB				03/11/02	X
57356	LABQC	1200181499	1200181499	WQ	LB					X
57356	LABQC	1200181502	1200181502	WQ	BS					X
59366	H009GW022	009GW022M5	59366001	WG	N				04/24/02	X
59366	H009GW022	009GW022M5DL	59366001	WG	LR	DL			04/24/02	X
59366	H009GW022	009GW022M5MS	1200206019	WG	MS	DL			04/24/02	X
59366	H009GW022	009GW022M5SD	1200206020	WG	SD	DL			04/24/02	X
59366	H009GW022	009HW022M5	59366002	WG	FD				04/24/02	X
59366	H196GW004	196GW004M5	59366003	WG	N				04/24/02	X
59366	H196GW005	196GW005M5	59366004	WG	N				04/24/02	X
59366	H196GW006	196GW006M5	59366005	WG	N				04/23/02	X
59366	H196GW007	196GW007M5	59366006	WG	N				04/23/02	X
59366	H196GW008	196GW008M5	59366007	WG	N				04/23/02	X
59366	H196GW009	196GW009M5	59366008	WG	N				04/24/02	X
59366	H196GW009	196GW009M5DL	59366008	WG	LR	DL			04/24/02	X
59366	H196GW010	196GW010M5	59366009	WG	N				04/23/02	X
59366	H196GW011	196GW011M5	59366010	WG	N				04/23/02	X
59366	H196GW012	196GW012M5	59366011	WG	N				04/24/02	X
59366	H196GW013	196GW013M5	59366012	WG	N				04/24/02	X
59366	H196GW014	196GW014M5	59366013	WG	N				04/24/02	X
59366	H196GW014	196GW014M5DL	59366013	WG	LR	DL			04/24/02	X
59366	H196GW015	196GW015M5	59366014	WG	N				04/23/02	X
59366	H196GW016	196GW016M5	59366015	WG	N				04/24/02	X
59366	H196GW017	196GW017M5	59366016	WG	N				04/24/02	X
59366	H196GW005	196HW005M5	59366017	WG	FD				04/24/02	X
59366	HGELGW015	GELGW015M5	59366018	WG	N				04/23/02	X
59366	FIELDQC	196EW004M5	59366019	WQ	EB				04/24/02	X
59366	FIELDQC	196TW004M5	59366020	WQ	TB				04/24/02	X
59366	LABQC	1200206018	1200206018	WQ	LB					X
59366	LABQC	1200206021	1200206021	WQ	BS					X
59366	LABQC	1200207519	1200207519	WQ	LB					X
59366	LABQC	1200207520	1200207520	WQ	BS					X

SDG	Station ID	Sample ID	Lab Sample ID	Matrix	Sample Type	LR Type	Upper Depth	Lower Depth	Date Collected	VOC SW8260
59366	LABQC	1200208005	1200208005	WQ	LB					X
59366	LABQC	1200208006	1200208006	WQ	BS					X
59367	H009GW020	009GW020M5	59367001	WG	N				04/23/02	X
59367	H009GW020	009GW020M5DL	59367001	WG	LR	DL			04/23/02	X
59367	H009GW021	009GW021M5	59367002	WG	N				04/23/02	X
59367	H009GW021	009GW021M5DL	59367002	WG	LR	DL			04/23/02	X
59367	LABQC	1200208057	1200208057	WQ	LB					X
59367	LABQC	1200208060	1200208060	WQ	BS					X
59367	LABQC	1200208693	1200208693	WQ	LB					X
59367	LABQC	1200208694	1200208694	WQ	BS					X
CNC77	H196GW006	196GW006M4	S242010*1	WG	N				03/20/02	X
CNC77	H009GW020	009GW020M4	S242010*2	WG	N				03/20/02	X
CNC77	H009GW020	009GW020M4DL	S242010*2*DL	WG	LR	DL			03/20/02	X
CNC77	H009GW021	009GW021M4	S242010*3	WG	N				03/21/02	X
CNC77	H009GW022	009GW022M4	S242010*4	WG	N				03/21/02	X
C[illegible]7	H009GW022	009GW022M4DL	S242010*4*DL	WG	LR	DL			03/21/02	X
CNC77	H009GW022	009HW022M4	S242010*5	WG	FD				03/21/02	X
CNC77	HGELGW015	GELGW015M4	S242010*6	WG	N				03/20/02	X
CNC77	HGELGW015	GELGW015M4DL	S242010*6*DL	WG	LR	DL			03/20/02	X
CNC77	H196GW004	196GW004M4	S242010*7	WG	N				03/21/02	X
CNC77	H196GW004	196GW004M4DL	S242010*7*DL	WG	LR	DL			03/21/02	X
CNC77	H196GW005	196GW005M4	S242010*8	WG	N				03/21/02	X
CNC77	H196GW005	196GW005M4DL	S242010*8*DL	WG	LR	DL			03/21/02	X
CNC77	H196GW017	196HW005M4	S242010*9	WG	N				03/21/02	X
CNC77	H196GW007	196GW007M4	S242010*10	WG	N				03/21/02	X
CNC77	H196GW007	196GW007M4DL	S242010*10*DL	WG	LR	DL			03/21/02	X
CNC77	H196GW008	196GW008M4	S242010*11	WG	N				03/21/02	X
CNC77	H196GW009	196GW009M4	S242010*12	WG	N				03/21/02	X
CNC77	H196GW010	196GW010M4	S242010*13	WG	N				03/20/02	X
CNC77	H196GW011	196GW011M4	S242010*14	WG	N				03/21/02	X
CNC77	H196GW012	196GW012M4	S242010*15	WG	N				03/21/02	X
C[illegible]7	H196GW013	196GW013M4	S242010*16	WG	N				03/21/02	X

SDG	Station ID	Sample ID	Lab Sample ID	Matrix	Sample Type	LR Type	Upper Depth	Lower Depth	Date Collected	VOC SW8260
CNC77	H196GW013	196GW013M4DL	S242010*16*DL	WG	LR	DL			03/21/02	X
CNC77	H196GW014	196GW014M4	S242010*17	WG	N				03/21/02	X
CNC77	H196GW014	196GW014M4DL	S242010*17*DL	WG	LR	DL			03/21/02	X
CNC77	H196GW015	196GW015M4	S242010*18	WG	N				03/21/02	X
CNC77	H196GW015	196GW015M4DL	S242010*18*DL	WG	LR	DL			03/21/02	X
CNC77	H196GW016	196GW016M4	S242010*19	WG	N				03/21/02	X
CNC77	H196GW017	196GW017M4	S242010*20	WG	N				03/21/02	X
CNC77	FIELDQC	196EW004M4	S242010*21	WQ	EB				03/21/02	X
CNC77	FIELDQC	196TW004M4	S242010*22	WG	TB				03/20/02	X
CNC77	LABQC	4201023LB	S242010*23	WQ	LB					X
CNC77	LABQC	4201024BS	S242010*24	WQ	BS					X
CNC77	LABQC	4201030LB	S242010*30	WQ	LB					X
CNC77	LABQC	4201031BS	S242010*31	WQ	BS					X

MATRIX CODE

WG – Groundwater
WQ – Water QC Samples
SO – Soil
SQ - Soil QC Samples

SAMPLE TYPE CODE

BS - Blank Spike
EB - Equipment Blank
TB – Trip Blank
FD - Field Duplicate
N - Native Sample
LB - Laboratory Blank
LR – Laboratory Replicate
MS - Matrix Spike
SD - Matrix Spike duplicate

LR TYPE CODE

DL – Dilution

ANALYSIS CODE

VOC - Volatile Organic Compounds

Organic Parameters

Quality Control Review

The following list represents the QA/QC measures that were reviewed during the data quality evaluation procedure for organic data.

- **Holding Times** – The holding times are evaluated to verify that samples were extracted and analyzed within holding times.
- **Blank samples** – Method blanks, equipment blanks, and trip blanks were provided for this project. Blank samples enable the reviewer to determine if an analyte may be attributed to sampling or laboratory procedures, rather than environmental contamination from site activities.
- **Surrogate Recoveries** – Surrogate Compounds are added to each sample and the recoveries are used to monitor lab performance and possible matrix interference.
- **Lab Control Sample (LCS)** – This sample is a "controlled matrix", either laboratory reagent water or Ottawa sand, in which target compounds have been added prior to extraction/analysis. The recoveries serve as a monitor of the overall performance of each step during the analysis, including sample preparation.
- **Matrix Spike/Matrix Spike Duplicate (MS/MSD) Samples** – Spike recovery is used to evaluate potential matrix interferences, as well as accuracy. Precision information is also determined by calculating the reproducibility between the recoveries of each spiked parameter.
- **GC/MS Tuning** – The mass spectrum of the tuning compound is evaluated for method compliance. The criteria are established to verify the proper mass assignment and mass resolution.
- **Initial Calibration** – The initial calibration ensures that the instrument is capable of producing acceptable qualitative and quantitative data for the compounds of interest.
- **Continuing Calibration** – The continuing calibration checks satisfactory performance of the instrument and its predicted response to the target compounds.
- **Field Duplicate Samples** – These samples are collected to determine precision between a native and its duplicate. This information can only be determined when target compounds are detected.
- **Internal Standards** – The internal standards (retention time and response) are evaluated for method compliance. The internal standards are used in quantitation of the target parameters and monitor the instrument sensitivity and response for stability during each analysis.

Volatile Organic Compounds (VOC) Analyses

The QA/QC parameters for VOC analyses for all of the samples were within acceptable control limits, except as noted below:

Holding Times

All holding times were met except for the dilutions of samples 53777010, 53777011, and 53777012. These samples were re-run two to three days beyond holding time due to compounds exceeding the calibration range of the instrument. No flags were applied.

Blanks

The VOC target parameters detected in blank samples are listed in Table 2.

TABLE 2
Equipment Blank Contamination: VOCs
Charleston Naval Complex, Zone H, SWMU 196, Charleston, SC

SDG	Sample ID	Lab Sample ID	Sample Type	Parameter	Lab Result	Units	Flag Concentrations less than the value listed below
51003	VBLK01	1200101626	LB	Acetone	4.2	µg/L	42.0 µg/L
51003	VBLK02	1200102627	LB	Acetone	5.0	µg/L	50.0 µg/L
				2-Hexanone	0.97	µg/L	9.7 µg/L
				Chlorobenzene	0.75	µg/L	3.8 µg/L
51003	VBLK03	1200103091	LB	Acetone	4.5	µg/L	45.0 µg/L
				Chlorobenzene	0.29	µg/L	1.5 µg/L
51003	196EW004L1	51003013	EB	Acetone	4.7	µg/L	47.0 µg/L
				Chlorobenzene	0.83	µg/L	4.2 µg/L
51003	196TW004L1	51003014	TB	Acetone	4.0	µg/L	40.0 µg/L
				Methylene Chloride	0.74	µg/L	7.4 µg/L
				Chlorobenzene	0.68	µg/L	3.4 µg/L
51003	VBLK02	1200102627	LB	1,3-Dichlorobenzene	0.24	µg/L	1.2 µg/L
				1,4-Dichlorobenzene	0.26	µg/L	1.3 µg/L
				1,2-Dichlorobenzene	3.5	µg/L	17.5 µg/L
51003	VBLK03	1200103091	LB	1,4-Dichlorobenzene	1.4	µg/L	7.0 µg/L
51003	196TW004L1	51003014	TB	1,3-Dichlorobenzene	0.18	µg/L	0.9 µg/L
				1,4-Dichlorobenzene	0.38	µg/L	1.9 µg/L
				1,2-Dichlorobenzene	3.0	µg/L	15.0 µg/L

TABLE 2
Equipment Blank Contamination: VOCs
Charleston Naval Complex, Zone H, SWMU 196, Charleston, SC

SDG	Sample ID	Lab Sample ID	Sample Type	Parameter	Lab Result	Units	Flag Concentration less than the value listed below
51003	196EW004L1	51003013	EB	1,3-Dichlorobenzene	0.24	µg/L	1.2 µg/L
				1,4-Dichlorobenzene	0.50	µg/L	2.5 µg/L
				1,2-Dichlorobenzene	4.0	µg/L	20.0 µg/L
52363	VBLK01	1200115286	LB	Methylene Chloride	4.7	µg/L	47.0 µg/L
				1,4-Dichlorobenzene	0.43	µg/L	2.2 µg/L
				1,2-Dichlorobenzene	0.21	µg/L	1.1 µg/L
52363	VBLK02	1200116273	LB	Methylene Chloride	1.3	µg/L	13.0 µg/L
				1,4-Dichlorobenzene	0.22	µg/L	1.1 µg/L
				1,2-Dichlorobenzene	0.56	µg/L	2.8 µg/L
52363	VBLK03	1200116274	LB	Methylene Chloride	4.1	µg/L	41.0 µg/L
52363	VBLK03	1200116274	LB	1,4-Dichlorobenzene	0.39	µg/L	2.0 µg/L
				1,2-Dichlorobenzene	0.69	µg/L	3.5 µg/L
52363	196EW004L2	52363011	EB	Acetone	5.9	µg/L	59.0 µg/L
				Methylene Chloride	4.4	µg/L	44.0 µg/L
				Benzene	0.3	µg/L	1.5 µg/L
				Toluene	0.18	µg/L	0.9 µg/L
				Chlorobenzene	0.96	µg/L	4.8 µg/L
				1,4-Dichlorobenzene	0.43	µg/L	2.2 µg/L
				1,2-Dichlorobenzene	1.9	µg/L	9.5 µg/L
52363	196TW004L2	52363012	TB	Chlorobenzene	0.39	µg/L	2.0 µg/L
				1,4-Dichlorobenzene	0.34	µg/L	1.7 µg/L
				1,2-Dichlorobenzene	0.82	µg/L	4.1 µg/L
53063	VBLK01	1200121378	LB	Toluene	0.17	µg/L	0.9 µg/L
53063	196EW009L3	53063005	EB	Acetone	6.3	µg/L	63.0 µg/L
				Toluene	0.17	µg/L	0.9 µg/L
				1,4-Dichlorobenzene	0.29	µg/L	1.5 µg/L
53063	196TW009L3	53063006	TB	Acetone	10.4	µg/L	104.0 µg/L

TABLE 2
Equipment Blank Contamination: VOCs
Charleston Naval Complex, Zone H, SWMU 196, Charleston, SC

SDG	Sample ID	Lab Sample ID	Sample Type	Parameter	Lab Result	Units	Flag: Concentrations less than the value listed below
53063	196TW009L3	53063006	TB	Toluene	0.18	µg/L	0.9 µg/L
53777	VBLK01	1200127595	LB	Acetone	4.0	µg/L	40.0 µg/L
				1,4-Dichlorobenzene	0.16	µg/L	0.8 µg/L
				1,2,3-Trichlorobenzene	0.4	µg/L	2.0 µg/L
53777	VBLK02	1200129803	LB	Chlorobenzene	0.26	µg/L	1.3 µg/L
				1,2-Dichlorobenzene	0.61	µg/L	3.1 µg/L
53777	VBLK03	1200129987	LB	1,4-Dichlorobenzene	0.20	µg/L	1.0 µg/L
				1,2-Dichlorobenzene	0.17	µg/L	0.9 µg/L
				1,2,4-Trichlorobenzene	0.40	µg/L	2.0 µg/L
53777	196EW007L4	53777015	EB	Acetone	4.7	µg/L	47.0 µg/L
53777	196EW004L4	53777013	EB	Acetone	4.8	µg/L	48.0 µg/L
				1,4-Dichlorobenzene	0.17	µg/L	0.9 µg/L
53777	196TW004L4	53777014	TB	Acetone	9.4	µg/L	94.0 µg/L
				Chloroform	0.72	µg/L	3.6 µg/L
				Bromodichloromethane	2.0	µg/L	10.0 µg/L
				Dibromochloromethane	4.7	µg/L	23.5 µg/L
				Bromoform	3.9	µg/L	19.5 µg/L
				1,4-Dichlorobenzene	0.27	µg/L	1.4 µg/L
55885	VBLK02	1200157035	LB	1,4-Dichlorobenzene	0.28	µg/L	1.4 µg/L
				1,2-Dichlorobenzene	0.33	µg/L	1.7 µg/L
55953	VBLK01	1200157035	LB	1,4-Dichlorobenzene	0.28	µg/L	1.4 µg/L
				1,2-Dichlorobenzene	0.33	µg/L	1.7 µg/L
57356	VBLK01	1200181499	LB	Toluene	0.18	µg/L	0.9 µg/L
				1,4-Dichlorobenzene	0.16	µg/L	0.8 µg/L
57356	196EW016M3	57356003	EB	Acetone	3.4	µg/L	34.0 µg/L
				Toluene	0.25	µg/L	1.3 µg/L
				1,4-Dichlorobenzene	0.32	µg/L	1.6 µg/L

TABLE 2
Equipment Blank Contamination: VOCs
Charleston Naval Complex, Zone H, SWMU 196, Charleston, SC

SDG	Sample ID	Lab Sample ID	Sample Type	Parameter	Lab Result	Units	Flag Concentrations less than the value listed below
57356	196TW016M3	57356004	TB	Acetone	3.8	µg/L	38.0 µg/L
				Toluene	0.17	µg/L	0.9 µg/L
				1,4-Dichlorobenzene	0.24	µg/L	1.2 µg/L
59366	VBLK01	1200206018	LB	Acetone	4.0	µg/L	40.0 µg/L
59366	VBLK02	1200207519	LB	Methylene Chloride	2.0	µg/L	20.0 µg/L
59366	VBLK03	1200208005	LB	1,4-Dichlorobenzene	0.25	µg/L	1.3 µg/L
59366	196EW004M5	59366019	EB	Methylene Chloride	3.0	µg/L	30.0 µg/L
59366	196TW004M5	59366020	TB	Acetone	8.1	µg/L	81.0 µg/L
59367	VBLK01	1200208057	LB	1,4-Dichlorobenzene	0.25	µg/L	1.3 µg/L
59367	VBLK02	1200208693	LB	1,4-Dichlorobenzene	0.4	µg/L	2.0 µg/L
59367	196EW004M5	59366019	EB	Methylene Chloride	3.0	µg/L	30.0 µg/L
59367	196TW004M5	59366020	TB	Acetone	8.1	µg/L	81.0 µg/L
CNC77	196EW004M4	S242010*21	EB	Methylene Chloride	0.81	µg/L	8.1 µg/L
				Toluene	0.58	µg/L	2.9 µg/L

If a target parameter determined to be a common contaminant was reported in a field sample, and the concentration was below the level determined to be due to blank contamination, the following actions were taken:

- If the concentration was above the reporting limit, the numeric result was unchanged, but it was flagged "U", as undetected.
- If the concentration was below the reporting limit, the numeric result was changed to the value of the reporting limit, and it was flagged "U", as undetected.

The results qualified due to blank contamination are listed in Attachment 1.

Recoveries - Surrogate, MS/MSD and LCS

All Surrogate, Matrix Spike (MS), Matrix Spike Duplicate (MSD), and Laboratory Control Sample (LCS) recoveries were within acceptable quality control limits, except as noted in Table 3 below.

TABLE 3
Surrogate, MS/MSD and LCS Recoveries Out of QC Limits: VOCs
Charleston Naval Complex, Zone H, SWMU 196, Charleston, SC

SDG	Sample	Parameter	Recovery	Recovery Limits	Associated Samples	Flag
51003	009GW022L1	Toluene-d8	78*	88-110	009GW022L1	No Flags Applied
51003	GELGW015L1	Toluene-d8	118*	88-110	GELGW015L1	No Flags Applied
51003	196EW004L1	Toluene-d8	84*	88-110	196EW004L1	No Flags Applied
51003	196TW004L1	Toluene-d8	83*	88-110	196TW004L1	No Flags Applied
51003	196GW006L1	Toluene-d8	85*	88-110	196GW006L1	No Flags Applied
51003	009GW020L1	Toluene-d8	83*	88-110	009GW020L1	No Flags Applied
51003	009GW021L1DL	Toluene-d8	83*	88-110	009GW021L1DL	No Flags Applied
51003	009GW022L1DL	Toluene-d8	83*	88-110	009GW022L1DL	No Flags Applied
51003	196GW004L1	Toluene-d8	83*	88-110	196GW004L1	No Flags Applied
51003	196GW005L1	Toluene-d8	84*	88-110	196GW005L1	No Flags Applied
51003	196GW007L1	Toluene-d8	83*	88-110	196GW007L1	No Flags Applied
51003	196GW008L1	Toluene-d8	85*	88-110	196GW008L1	No Flags Applied
51003	196GW009L1	Toluene-d8	83*	88-110	196GW009L1	No Flags Applied
51003	196HW009L1	Toluene-d8	82*	88-110	196HW009L1	No Flags Applied
51003	196GW010L1	Toluene-d8	82*	88-110	196GW010L1	No Flags Applied
51003	GELGW015L1DL	Toluene-d8	85*	88-110	GELGW015L1DL	No Flags Applied
51003	196GW005L1DL	Toluene-d8	83*	88-110	196GW005L1DL	No Flags Applied
51003	009GW022L1	Bromofluoroenzene	76*	86-115	009GW022L1	No Flags Applied
51003	196EW004L1	Bromofluoroenzene	79*	86-115	196EW004L1	No Flags Applied
51003	196TW004L1	Bromofluoroenzene	78*	86-115	196TW004L1	No Flags Applied
51003	196GW006L1	Bromofluoroenzene	77*	86-115	196GW006L1	No Flags Applied
51003	009GW020L1	Bromofluoroenzene	76*	86-115	009GW020L1	No Flags Applied
51003	009GW021L1DL	Bromofluoroenzene	76*	86-115	009GW021L1DL	No Flags Applied
51003	009GW022L1DL	Bromofluoroenzene	77*	86-115	009GW022L1DL	No Flags Applied
51003	196GW004L1	Bromofluoroenzene	76*	86-115	196GW004L1	No Flags Applied
51003	196GW005L1	Bromofluoroenzene	76*	86-115	196GW005L1	No Flags Applied
51003	196GW007L1	Bromofluoroenzene	76*	86-115	196GW007L1	No Flags Applied
51003	196GW008L1	Bromofluoroenzene	77*	86-115	196GW008L1	No Flags Applied

TABLE 3
Surrogate, MS/MSD and LCS Recoveries Out of QC Limits: VOCs
Charleston Naval Complex, Zone H, SWMU 196, Charleston, SC

SDG	Sample	Parameter	Recovery	Recovery Limits	Associated Samples	Flag
51003	196GW009L1	Bromofluoroenzene	77*	86-115	196GW009L1	No Flags Applied
51003	196HW009L1	Bromofluoroenzene	76*	86-115	196HW009L1	No Flags Applied
51003	196GW010L1	Bromofluoroenzene	75*	86-115	196GW010L1	No Flags Applied
51003	GELGW015L1DL	Bromofluoroenzene	78*	86-115	GELGW015L1DL	No Flags Applied
51003	196GW005L1DL	Bromofluoroenzene	76*	86-115	196GW005L1DL	No Flags Applied
51003	196GW006L1 MS/MSD	2-Chloroethyl vinyl ether	10.2* / 10.2*	70-130	196GW006L1	Detects-J, non-detects-UJ
		Chlorobenzene	73 / 66*			
51003	VBLK01LCS	Acetone	192*	70-130	51003003, 51003004, 51003005	Detects-J, non-detects-UJ
		2-Butanone	140*			
		1,1,2,2-Tetrachloroethene	141.4*			
51003	VBLK02LCS	Chloromethane	65.6*	70-130	51003001, 51003002, 51003006-51003014, 51003003DL, 51003004DL	Detects-J, non-detects-UJ
		Acetone	176.8*			
		2-Butanone	132*			
		1,1,2,2-Tetrachloroethene	142*			
		2-Chloroethyl vinyl ether	3.5*			Detects-J, non-detects-R
51003	VBLK03LCS	Acetone	265*	70-130	51003005DL, 51003007DL	Detects-J, non-detects-UJ
		2-Butanone	175.6*			
		2-Hexanone	143.2*			
		2-Chloroethyl vinyl ether	11.9*			Detects-J, non-detects-R
51880	196SB01801	Toluene-d8	83*	84-138	196SB01801	No Flags Applied
51880	196SB01901	Toluene-d8	83*	84-138	196SB01901	No Flags Applied
52363	009GW020L2	Toluene-d8	144*	88-110	009GW020L2	No Flags Applied
52363	GELGW015L2	Toluene-d8	119*	88-110	GELGW015L2	No Flags Applied
52363	196GW004L2	Toluene-d8	124*	88-110	196GW004L2	No Flags Applied
52363	196GW007L2	Toluene-d8	117*	88-110	196GW007L2	No Flags Applied
52363	196GW008L2	Toluene-d8	112*	88-110	196GW008L2	No Flags Applied
52363	196GW010L2	Toluene-d8	111*	88-110	196GW010L2	No Flags Applied
52363	196GW007L2DL	Toluene-d8	72*	88-110	196GW007L2DL	No Flags Applied

TABLE 3
Surrogate, MS/MSD and LCS Recoveries Out of QC Limits: VOCs
Charleston Naval Complex, Zone H, SWMU 196, Charleston, SC

SDG	Sample	Parameter	Recovery	Recovery Limits	Associated Samples	Flag
52363	196GW006L2DL MS/MSD	Chloroethane	45.7* / 47.2*	70-130	196GW006L2	Detects-J, non-detects-UJ
		Acetone	5.4* / 12.7*			
		2-Butanone	43.2* / 50.8*			
		2-Chloroethyl vinyl ether	0* / 0*			
52363	VBLK01LCS	Chloroethane	66*	70-130	52363001-52363012	Detects-J, non-detects-UJ
52363	VBLK02LCS	Chloroethane	61.2*	70-130	52363001DL-52363003DL, 52363005DL-52363010DL	Detects-J, non-detects-UJ
		Acetone	17.5*			
		2-Butanone	57.6*			
		2-Chloroethyl vinyl ether	26.4*			
52363	VBLK03LCS	Chloroethane	68.4*	70-130	52363004DL	Detects-J, non-detects-UJ
		Acetone	12.4*			
		2-Butanone	59.6*			
		2-Chloroethyl vinyl ether	28.4*			
53777	196EW004L4	Toluene-d8	87*	88-110	196EW004L4	No Flags Applied
53777	196EW007L4	Toluene-d8	84*	88-110	196EW007L4	No Flags Applied
53777	196GW006L4	Toluene-d8	86*	88-110	196GW006L4	No Flags Applied
53777	009GW022L4	Toluene-d8	88*	88-110	009GW022L4	No Flags Applied
53777	196GW004L4	Toluene-d8	87*	88-110	196GW004L4	No Flags Applied
53777	196GW005L4	Toluene-d8	85*	88-110	196GW005L4	No Flags Applied
53777	196GW009L4	Toluene-d8	86*	88-110	196GW009L4	No Flags Applied
53777	009GW020L4DL	Toluene-d8	86*	88-110	009GW020L4DL	No Flags Applied
53777	009GW021L4DL	Toluene-d8	84*	88-110	009GW021L4DL	No Flags Applied
53777	009GW022L4DL	Toluene-d8	86*	88-110	009GW022L4DL	No Flags Applied
53777	196GW004L4DL	Toluene-d8	85*	88-110	196GW004L4DL	No Flags Applied
53777	GELGW015L4DL	Toluene-d8	85*	88-110	GELGW015L4DL	No Flags Applied
53777	196GW004L4DL	Toluene-d8	86*	88-110	196GW004L4DL	No Flags Applied
53777	196GW005L4DL	Toluene-d8	85*	88-110	196GW005L4DL	No Flags Applied
53777	196GW007L4DL	Toluene-d8	86*	88-110	196GW007L4DL	No Flags Applied
53777	196GW008L4DL	Toluene-d8	86*	88-110	196GW008L4DL	No Flags Applied

TABLE 3
Surrogate, MS/MSD and LCS Recoveries Out of QC Limits: VOCs
Charleston Naval Complex, Zone H, SWMU 196, Charleston, SC

SDG	Sample	Parameter	Recovery	Recovery Limits	Associated Samples	Flag
53777	196GW009L4DL	Toluene-d8	85*	88-110	196GW009L4DL	No Flags Applied
53777	196GW010L4DL	Toluene-d8	85*	88-110	196GW010L4DL	No Flags Applied
53777	196GW010L4DL	Bromofluorobenzene	85*	86-115	196GW010L4DL	No Flags Applied
53777	009GW020L4DL MS/MSD	Vinyl Acetate	43.4* / 47.2*	70-130	009GW020L4	Detects-J, non-detects-UJ
53777	VBLK01LCS	Vinyl Acetate	50.4*	70-130	53777001-53777015, 53777001DL, 53777003DL, 53777004DL, 53777006DL	Detects-J, non-detects-UJ
53777	VBLK02LCS	Vinyl Acetate	45.2*	70-130	53777005DL, 53777007DL-53777009DL	Detects-J, non-detects-UJ
53777	VBLK03LCS	Vinyl Acetate	52.8*	70-130	53777010DL-53777012DL	Detects-J, non-detects-UJ
55885	009GW020M1	Toluene-d8	130*	88-110	009GW020M1	No Flags Applied
55885	GELGW015M1	Toluene-d8	126*	88-110	GELGW015M1	No Flags Applied
55885	196GW010M1	Toluene-d8	118*	88-110	196GW010M1	No Flags Applied
55885	VBLK01LCS	Vinyl Acetate	184*	70-130	55885001, 55885003, 55885007, 55885008	Detects only - J
55885	VBLK02LCS	Vinyl Acetate	182*	70-130	55885002, 55885004-55885006, 55885009, 55885012	Detects only - J
55885	VBLK03LCS	2-Chloroethyl vinyl ether	135*	70-130	55885010, 55885011, 55885013, 55885014, 55885001DL-55885009DL, 55885012DL	Detects only - J
55953	196GW015M1 MS/MSD	2-Chloroethyl vinyl ether	135* / 135*	70-130	196GW015M1	Detects only - J
55953	VBLK01LCS	Vinyl Acetate	182*	70-130	55953003	Detects only - J

TABLE 3
Surrogate, MS/MSD and LCS Recoveries Out of QC Limits: VOCs
Charleston Naval Complex, Zone H, SWMU 196, Charleston, SC

SDG	Sample	Parameter	Recovery	Recovery Limits	Associated Samples	Flag
55953	VBLK02LCS	2-Chloroethyl vinyl ether	135*	70-130	55953001, 55953002, 55953004-55953006, 55953003DL	Detects only - J
57356	196GW016M3 MS/MSD	2-Chloroethyl vinyl ether	0* / 0*	70-130	196GW016M3	Detects-J, non-detects-UJ
57356	VBLK01LCS	Chloromethane	155.2*	70-130	57356 - All	Detects-J, non-detects-UJ
		Carbon disulfide	186.8*	70-130		
		2-Chloroethyl vinyl ether	65.6*	70-130		
CNC77	196GW012M4 MS/MSD	Vinyl Acetate	160* / 160*	70-130	196GW012M4	Detects only - J
CNC77	1M0327MB LCS	Vinyl Acetate	150*	70-130	S242010*2, 4, 8, 9, 11, 14, 15, 19, 20, 22	Detects only - J

* - out of control limits

Initial and Continuing Calibration Criteria

All initial calibration criteria and continuing calibration criteria were met, except as listed in Table 4.

TABLE 4
Exceptions to Initial Calibration Criteria and Continuing Calibration Criteria: VOC
Charleston Naval Complex, Zone H, SWMU 196, Charleston, SC

Instrument/Calibration Date	Analyte	%Relative Standard Deviation or R² (ICAL) / %Difference (CCAL)	Associated Samples
VOA1-CCAL-10/29/01, 09:26	Acetone	92.3% high	51003003-51003005
	2-Butanone	40.1% high	
	2-Hexanone	22.4% high	
	1,1,2,2-Tetrachloroethane	41.3% high	
VOA1-CCAL-10/31/01, 10:54	Chloromethane	34.3% low	51003001, 51003002, 51003006-51003014, 51003003DL, 51003004DL
	Acetone	76.9% high	

TABLE 4
Exceptions to Initial Calibration Criteria and Continuing Calibration Criteria: VOC
Charleston Naval Complex, Zone H, SWMU 196, Charleston, SC

Instrument/Calibration Date	Analyte	%Relative Standard Deviation or R^2 (ICAL) / %Difference (CCAL)	Associated Samples
VOA1-CCAL-10/31/01, 10:54	Vinyl Acetate	23.1% low	51003001, 51003002, 51003006-51003014, 51003003DL, 51003004DL
	2-Butanone	32.1% high	
	1,2-Dichloroethane	21.4% low	
	2-Chloroethyl vinyl ether	96.4% low; RRF=0.003	
	1,1,2,2-Tetrachloroethane	41.9% high	
VOA1-CCAL-11/01/01, 08:37	Chloromethane	27.1% low	51003005DL, 51003007DL
	Acetone	166% high	
	2-Butanone	75.7% high	
	2-Chloroethyl vinyl ether	88.0% low; RRF=0.01	
	2-Hexanone	43.1% high	
VOA8-CCAL-11/29/01, 13:21	Bromomethane	33.0% low	52363001-52363012
	Chloroethane	29.4% low	
	1,2-Dichloroethane	20.7% low	
VOA8-CCAL-12/03/01, 06:50	Acetone	71.6% low; RRF=0.027	52363004DL
	2-Butanone	70.0% low; RRF=0.046	
	2-Chloroethyl vinyl ether	66.7% low	
	Tetrachloroethylene	29.6% high	
	Dibromochloromethane	22.9% high	
	Styrene	22.1% high	
VOA7-CCAL-12/07/01, 23:30	Chloromethane	27.0% low	53063001-53063006
	Chloroethane	30.2% low	
	1,2,4-Trichlorobenzene	20.4% low	
VOA7-CCAL-12/26/01, 15:00	Vinyl acetate	49.3% low	53777001-53777015, 5377701DL, 53777003DL, 53777004DL, 53777006DL
VOA7-CCAL-12/27/01, 12:59	Chloromethane	26.5% low	53777005DL, 53777007DL-53777009DL
	Vinyl acetate	54.9% low	

TABLE 4
Exceptions to Initial Calibration Criteria and Continuing Calibration Criteria: VOC
Charleston Naval Complex, Zone H, SWMU 196, Charleston, SC

Instrument/Calibration Date	Analyte	%Relative Standard Deviation or R^2 (ICAL) %Difference (CCAL)	Associated Samples
VOA7-CCAL-12/27/01, 12:59	4-Methyl-2-pentanone	21.0% low	53777005DL, 53777007DL-53777009DL
VOA7-CCAL-01/04/02, 11:04	1,2,4-Trichlorobenzene	24.7% high	53777010DL-53777012DL
	1,2,3-Trichlorobenzene	22.4% high	
VOA5-CCAL-02/13/02, 08:25	Vinyl acetate	84.6% high	55885001, 55885003, 55885007, 55885008
VOA8-CCAL-02/14/02, 18:08	Carbon disulfide	20.5% low	55885010, 55885011, 55885013, 55885014, 55885001DL-55885009DL, 55885012DL; 55953001, 55953002, 55953004-55953006, 55953003DL
	Vinyl Acetate	52.4% low	
	2-Chloroethyl vinyl ether	57.7% high	
VOA1-ICAL-02/28/02, 23:10	Carbon disulfide	R^2 = 0.984	57356 – All
VOA1-CCAL-03/14/02, 08:28	Chloromethane	55.2% high	57356 – All
	Bromomethane	30.3% low	
	Carbon disulfide	86.7% high	
	2-Chloroethyl vinyl ether	34.2% low, RRF=0.04	
	4-Methyl-2-pentanone	21.9% high	
VOA8-CCAL-04/29/02, 09:09	Methylene chloride	20.7% low	59366002, 59366003, 59366005, 59366006, 59366008DL, 59366009-59366012, 59366015, 59366016, 59366019
VOA8-CCAL-05/01/02, 08:31	1,1,1-Trichloroethane	22.3% high	59367001DL, 59367002DL
	Carbon Tetrachloride	22.6% high	
	Dibromochloromethane	21.0% high	
MSM5972-CCAL-03/27/02, 10:35	Acetone	RRF=0.033	S242010*2, 4, 8, 9, 11, 14, 15, 19, 20, 22
	2-Chloroethyl vinyl ether	21.8% low	
	4-Methyl-2-pentanone	24.0% low	
	2-Hexanone	23.1% low	
MSD5972-CCAL-03/27/02, 23:27	Acetone	RRF=0.039	S242010*1,3,5-7,10,12,13, 16-18,21,2DL,4DL,6DL, 7DL,8DL,10DL,16DL, 18DL

Flags were applied to the compounds in the associated samples in the following manner:

- When the percent Relative Standard Deviation (%RSD) or correlation coefficient (R^2) was out in the initial calibration, all associated samples were qualified. Detected compounds were flagged "J" and non-detected compounds were flagged "UJ", as estimated.
- When the percent difference (%D) was low in the continuing calibration standards, detected compounds were flagged "J" and non-detected compounds were flagged "UJ", as estimated.
- When the percent difference (%D) was high in the continuing calibration standards, detected compounds were flagged "J", as estimated. Non-detected compounds were not flagged.
- When the Relative Response Factor (RRF) was low in the continuing calibration, detected compounds were flagged "J", and non-detected compounds were flagged "UJ", as estimated.

Field Duplicate Samples

All Field Duplicate Samples were within acceptable quality control limits, except as noted in Table 5 below. No flags are applied due to Field Duplicate precision.

TABLE 5
Field Duplicate RPDs Out of QC Limits: VOCs
Charleston Naval Complex, Zone H, SWMU 196, Charleston, SC

SDG	Sample	Parameter	Native Concentration	Field Duplicate Concentration	RPD	RPD Limits
53777	196GW004L4 / 196HW004L4	Benzene	616 µg /L	381 µg /L	47.1*	35
		Toluene	514 µg /L	263 µg /L	64.6*	35
		Chlorobenzene	6870 µg /L	4180 µg /L	48.7*	35
59366	196GW005M5 / 196HW005M5	1,2-Dichlorobenzene	9020 µg /L	5020 µg /L	57.1*	20
CNC77	196GW005M4 / 196HW005M4	1,2-Dichlorobenzene	1900 µg /L	3200 µg /L	50.9*	20

* - out of control limits

Rejected Data

The majority of rejected data were associated with re-runs and dilutions (you can only have a single valid result per parameter per sample). However, there were selected results qualified as "R", rejected, due to associated QC parameters out of criteria. The rejected data are summarized in Table 6 below.

TABLE 6
Data Qualification Summary: Rejected Data
Charleston Naval Complex, Zone H, SWMU 196, Charleston, SC

SDG	Sample ID	Parameter Class	Parameter	Lab Result	Lab Qual	Final Result	Final Qual	Units	Reason
51003	009GW020L1	VOA	2-Chloroethyl vinyl ether	1000	U	1000	R	ug/L	CC, BS
51003	196GW004L1	VOA	2-Chloroethyl vinyl ether	500	U	500	R	ug/L	CC, BS
51003	196GW005L1	VOA	2-Chloroethyl vinyl ether	50	U	50	R	ug/L	CC, BS
51003	196GW006L1	VOA	cis-1,3-Dichloropropene	250	U	250	R	ug/L	CC, BS
51003	196GW007L1	VOA	2-Chloroethyl vinyl ether	500	U	500	R	ug/L	CC, BS
51003	196GW008L1	VOA	2-Chloroethyl vinyl ether	500	U	500	R	ug/L	CC, BS
51003	196GW009L1	VOA	2-Chloroethyl vinyl ether	250	U	250	R	ug/L	CC, BS
51003	196GW010L1	VOA	2-Chloroethyl vinyl ether	500	U	500	R	ug/L	CC, BS
51003	196HW009L1	VOA	2-Chloroethyl vinyl ether	250	U	250	R	ug/L	CC, BS

Conclusion

A review of the analytical data submitted regarding the investigation of Zone H, SWMU 196 at the Charleston Naval Complex, Charleston, South Carolina by CH2M HILL has been completed. An overall evaluation of the data indicates that the sample handling, shipment, and analytical procedures have been adequately completed, and that the analytical results should be considered usable as qualified.

The analytical data had minor QC concerns as indicated above, however, it did not affect data usability for those specific results. The validation review demonstrated that the analytical systems were generally in control and the data results can be used in the decision making process.

Attachment 1 - Changed Qualifiers and Results
Zone H, SWMU 6 - Data Validation

SDG	Sample ID	Lab Sample ID	Matrix	Parameter Class	Analytical Method	Parameter	Lab Result	Lab Qual	Final Result	Final Qual	Units	Reasons
51003	009GW020L1	51003002	WG	VOA	SW8260	1,2-DICHLOROETHANE	200	U	200	UJ	ug/L	CC
51003	009GW020L1	51003002	WG	VOA	SW8260	2-Chloroethyl vinyl ether	1000	U	1000	R	ug/L	CC, BS
51003	009GW020L1	51003002	WG	VOA	SW8260	CHLOROMETHANE	200	U	200	UJ	ug/L	BS, CC
51003	009GW020L1	51003002	WG	VOA	SW8260	Vinyl acetate	1000	U	1000	UJ	ug/L	CC
51003	009GW021L1	51003003	WG	VOA	SW8260	1,2-DICHLOROBENZENE		E	1580	R	ug/L	LR
51003	009GW021L1	51003003	WG	VOA	SW8260	1,3-DICHLOROBENZENE		E	225	R	ug/L	LR
51003	009GW021L1	51003003	WG	VOA	SW8260	1,4-DICHLOROBENZENE		E	380	R	ug/L	LR
51003	009GW021L1	51003003	WG	VOA	SW8260	ACETONE	5.7	B	5.7	UJ	ug/L	BL
51003	009GW021L1	51003003	WG	VOA	SW8260	CHLOROBENZENE	1030	E	1030	R	ug/L	LR
51003	009GW021L1LR	51003003	WG	VOA	SW8260	1,1,1-TRICHLOROETHANE	20	U	20	R	ug/L	DL
51003	009GW021L1LR	51003003	WG	VOA	SW8260	1,1,2,2-TETRACHLOROETHANE	20	U	20	R	ug/L	DL
51003	009GW021L1LR	51003003	WG	VOA	SW8260	1,1,2-TRICHLOROETHANE	20	U	20	R	ug/L	DL
51003	009GW021L1LR	51003003	WG	VOA	SW8260	1,1-DICHLOROETHANE	20	U	20	R	ug/L	DL
51003	009GW021L1LR	51003003	WG	VOA	SW8260	1,1-DICHLOROETHENE	20	U	20	R	ug/L	DL
51003	009GW021L1LR	51003003	WG	VOA	SW8260	1,2-DICHLOROBENZENE		DE	3620	J	ug/L	LR
51003	009GW021L1LR	51003003	WG	VOA	SW8260	1,2-DICHLOROETHANE	20	U	20	R	ug/L	DL
51003	009GW021L1LR	51003003	WG	VOA	SW8260	1,2-Dichloroethene (total)	10.1	DJ	10.1	R	ug/L	DL
51003	009GW021L1LR	51003003	WG	VOA	SW8260	1,2-DICHLOROPROPANE	20	U	20	R	ug/L	DL
51003	009GW021L1LR	51003003	WG	VOA	SW8260	2-BUTANONE (MEK)	100	U	100	R	ug/L	DL
51003	009GW021L1LR	51003003	WG	VOA	SW8260	2-Chloroethyl vinyl ether	100	U	100	R	ug/L	DL
51003	009GW021L1LR	51003003	WG	VOA	SW8260	2-HEXANONE	100	U	100	R	ug/L	DL
51003	009GW021L1LR	51003003	WG	VOA	SW8260	4-METHYL-2-PENTANONE (MIBK)	100	U	100	R	ug/L	DL
51003	009GW021L1LR	51003003	WG	VOA	SW8260	ACETONE	74	DJB	74	R	ug/L	DL
51003	009GW021L1LR	51003003	WG	VOA	SW8260	BENZENE	5.3	DJ	5.3	R	ug/L	DL
51003	009GW021L1LR	51003003	WG	VOA	SW8260	BROMODICHLOROMETHANE	20	U	20	R	ug/L	DL
51003	009GW021L1LR	51003003	WG	VOA	SW8260	BROMOFORM	20	U	20	R	ug/L	DL
51003	009GW021L1LR	51003003	WG	VOA	SW8260	BROMOMETHANE	20	U	20	R	ug/L	DL
51003	009GW021L1LR	51003003	WG	VOA	SW8260	CARBON DISULFIDE	100	U	100	R	ug/L	DL
51003	009GW021L1LR	51003003	WG	VOA	SW8260	CARBON TETRACHLORIDE	20	U	20	R	ug/L	DL
51003	009GW021L1LR	51003003	WG	VOA	SW8260	CHLOROETHANE	20	U	20	R	ug/L	DL
51003	009GW021L1LR	51003003	WG	VOA	SW8260	CHLOROFORM	20	U	20	R	ug/L	DL
51003	009GW021L1LR	51003003	WG	VOA	SW8260	CHLOROMETHANE	20	U	20	R	ug/L	DL
51003	009GW021L1LR	51003003	WG	VOA	SW8260	cis-1,2-DICHLOROETHYLENE	10.1	DJ	10.1	R	ug/L	DL

Attachment 1 - Changed Qualifiers and Results
Zone H, SWMU 196 - Data Validation

SDG	Sample ID	Lab Sample ID	Matrix	Parameter Class	Analytical Method	Parameter	Lab Result	Lab Qual	Final Result	Final Qual	Units	Reasons
51003	009GW021L1LR	51003003	WG	VOA	SW8260	cis-1,3-DICHLOROPROPENE	20	U	20	R	ug/L	DL
51003	009GW021L1LR	51003003	WG	VOA	SW8260	DIBROMOCHLOROMETHANE	20	U	20	R	ug/L	DL
51003	009GW021L1LR	51003003	WG	VOA	SW8260	ETHYLBENZENE	20	U	20	R	ug/L	DL
51003	009GW021L1LR	51003003	WG	VOA	SW8260	m+p Xylene	40	U	40	R	ug/L	DL
51003	009GW021L1LR	51003003	WG	VOA	SW8260	METHYLENE CHLORIDE	100	U	100	R	ug/L	DL
51003	009GW021L1LR	51003003	WG	VOA	SW8260	o-Xylene	20	U	20	R	ug/L	DL
51003	009GW021L1LR	51003003	WG	VOA	SW8260	STYRENE	20	U	20	R	ug/L	DL
51003	009GW021L1LR	51003003	WG	VOA	SW8260	TETRACHLOROETHYLENE(PCE)	20	U	20	R	ug/L	DL
51003	009GW021L1LR	51003003	WG	VOA	SW8260	TOLUENE	20	U	20	R	ug/L	DL
51003	009GW021L1LR	51003003	WG	VOA	SW8260	trans-1,2-DICHLOROETHENE	20	U	20	R	ug/L	DL
51003	009GW021L1LR	51003003	WG	VOA	SW8260	trans-1,3-DICHLOROPROPENE	20	U	20	R	ug/L	DL
51003	009GW021L1LR	51003003	WG	VOA	SW8260	TRICHLOROETHYLENE (TCE)	20	U	20	R	ug/L	DL
51003	009GW021L1LR	51003003	WG	VOA	SW8260	Vinyl acetate	100	U	100	R	ug/L	DL
51003	009GW021L1LR	51003003	WG	VOA	SW8260	VINYL CHLORIDE	20	U	20	R	ug/L	DL
51003	009GW021L1LR	51003003	WG	VOA	SW8260	XYLENES, TOTAL	60	U	60	R	ug/L	DL
51003	009GW022L1	51003004	WG	VOA	SW8260	1,2-DICHLOROBENZENE		E	1040	R	ug/L	LR
51003	009GW022L1	51003004	WG	VOA	SW8260	1,4-DICHLOROBENZENE		E	129	R	ug/L	LR
51003	009GW022L1	51003004	WG	VOA	SW8260	ACETONE	5	B	5	UJ	ug/L	BL
51003	009GW022L1	51003004	WG	VOA	SW8260	CHLOROBENZENE	181	E	181	R	ug/L	LR
51003	009GW022L1LR	51003004	WG	VOA	SW8260	1,1,1-TRICHLOROETHANE	5	U	5	R	ug/L	DL
51003	009GW022L1LR	51003004	WG	VOA	SW8260	1,1,2,2-TETRACHLOROETHANE	5	U	5	R	ug/L	DL
51003	009GW022L1LR	51003004	WG	VOA	SW8260	1,1,2-TRICHLOROETHANE	5	U	5	R	ug/L	DL
51003	009GW022L1LR	51003004	WG	VOA	SW8260	1,1-DICHLOROETHANE	5	U	5	R	ug/L	DL
51003	009GW022L1LR	51003004	WG	VOA	SW8260	1,1-DICHLOROETHENE	5	U	5	R	ug/L	DL
51003	009GW022L1LR	51003004	WG	VOA	SW8260	1,2-DICHLOROBENZENE		DE	1520	J	ug/L	LR
51003	009GW022L1LR	51003004	WG	VOA	SW8260	1,2-DICHLOROETHANE	5	U	5	R	ug/L	DL
51003	009GW022L1LR	51003004	WG	VOA	SW8260	1,2-Dichloroethene (total)	9.8	DJ	9.8	R	ug/L	DL
51003	009GW022L1LR	51003004	WG	VOA	SW8260	1,2-DICHLOROPROPANE	5	U	5	R	ug/L	DL
51003	009GW022L1LR	51003004	WG	VOA	SW8260	1,3-DICHLOROBENZENE		D	89	R	ug/L	DL
51003	009GW022L1LR	51003004	WG	VOA	SW8260	2-BUTANONE (MEK)	25	U	25	R	ug/L	DL
51003	009GW022L1LR	51003004	WG	VOA	SW8260	2-Chloroethyl vinyl ether	25	U	25	R	ug/L	DL
51003	009GW022L1LR	51003004	WG	VOA	SW8260	2-HEXANONE	25	U	25	R	ug/L	DL
51003	009GW022L1LR	51003004	WG	VOA	SW8260	4-METHYL-2-PENTANONE (MIBK)	25	U	25	R	ug/L	DL

SDG	Sample ID	Lab Sample ID	Matrix	Parameter Class	Analytical Method	Parameter	Lab Result	Lab Qual	Final Result	Final Qual	Units	Reasons
51003	009GW022L1LR	51003004	WG	VOA	SW8260	ACETONE	16.4	DJB	16.4	R	ug/L	DL
51003	009GW022L1LR	51003004	WG	VOA	SW8260	BENZENE	1.9	DJ	1.9	R	ug/L	DL
51003	009GW022L1LR	51003004	WG	VOA	SW8260	BROMODICHLOROMETHANE	5	U	5	R	ug/L	DL
51003	009GW022L1LR	51003004	WG	VOA	SW8260	BROMOFORM	5	U	5	R	ug/L	DL
51003	009GW022L1LR	51003004	WG	VOA	SW8260	BROMOMETHANE	5	U	5	R	ug/L	DL
51003	009GW022L1LR	51003004	WG	VOA	SW8260	CARBON DISULFIDE	25	U	25	R	ug/L	DL
51003	009GW022L1LR	51003004	WG	VOA	SW8260	CARBON TETRACHLORIDE	5	U	5	R	ug/L	DL
51003	009GW022L1LR	51003004	WG	VOA	SW8260	CHLOROETHANE	5	U	5	R	ug/L	DL
51003	009GW022L1LR	51003004	WG	VOA	SW8260	CHLOROFORM	5	U	5	R	ug/L	DL
51003	009GW022L1LR	51003004	WG	VOA	SW8260	CHLOROMETHANE	5	U	5	R	ug/L	DL
51003	009GW022L1LR	51003004	WG	VOA	SW8260	cis-1,2-DICHLOROETHYLENE	9.8	D	9.8	R	ug/L	DL
51003	009GW022L1LR	51003004	WG	VOA	SW8260	cis-1,3-DICHLOROPROPENE	5	U	5	R	ug/L	DL
51003	009GW022L1LR	51003004	WG	VOA	SW8260	DIBROMOCHLOROMETHANE	5	U	5	R	ug/L	DL
51003	009GW022L1LR	51003004	WG	VOA	SW8260	ETHYLBENZENE	5	U	5	R	ug/L	DL
51003	009GW022L1LR	51003004	WG	VOA	SW8260	m+p Xylene	10	U	10	R	ug/L	DL
51003	009GW022L1LR	51003004	WG	VOA	SW8260	METHYLENE CHLORIDE	25	U	25	R	ug/L	DL
51003	009GW022L1LR	51003004	WG	VOA	SW8260	o-Xylene	5	U	5	R	ug/L	DL
51003	009GW022L1LR	51003004	WG	VOA	SW8260	STYRENE	5	U	5	R	ug/L	DL
51003	009GW022L1LR	51003004	WG	VOA	SW8260	TETRACHLOROETHYLENE(PCE)	5.2	D	5.2	R	ug/L	DL
51003	009GW022L1LR	51003004	WG	VOA	SW8260	TOLUENE	3.1	DJ	3.1	R	ug/L	DL
51003	009GW022L1LR	51003004	WG	VOA	SW8260	trans-1,2-DICHLOROETHENE	5	U	5	R	ug/L	DL
51003	009GW022L1LR	51003004	WG	VOA	SW8260	trans-1,3-DICHLOROPROPENE	5	U	5	R	ug/L	DL
51003	009GW022L1LR	51003004	WG	VOA	SW8260	TRICHLOROETHYLENE (TCE)	8.5	D	8.5	R	ug/L	DL
51003	009GW022L1LR	51003004	WG	VOA	SW8260	Vinyl acetate	25	U	25	R	ug/L	DL
51003	009GW022L1LR	51003004	WG	VOA	SW8260	VINYL CHLORIDE	5	U	5	R	ug/L	DL
51003	009GW022L1LR	51003004	WG	VOA	SW8260	XYLENES, TOTAL	15	U	15	R	ug/L	DL
51003	196GW004L1	51003006	WG	VOA	SW8260	1,2-DICHLOROBENZENE		E	20900	J	ug/L	LR
51003	196GW004L1	51003006	WG	VOA	SW8260	1,2-DICHLOROETHANE	100	U	100	UJ	ug/L	CC
51003	196GW004L1	51003006	WG	VOA	SW8260	2-Chloroethyl vinyl ether	500	U	500	R	ug/L	CC, BS
51003	196GW004L1	51003006	WG	VOA	SW8260	CHLOROMETHANE	100	U	100	UJ	ug/L	BS, CC
51003	196GW004L1	51003006	WG	VOA	SW8260	Vinyl acetate	500	U	500	UJ	ug/L	CC
51003	196GW005L1	51003007	WG	VOA	SW8260	1,2-DICHLOROBENZENE		E	9840	R	ug/L	LR
51003	196GW005L1	51003007	WG	VOA	SW8260	1,2-DICHLOROETHANE	10	U	10	UJ	ug/L	CC

Attachment 1 - Changed Qualifiers and Results
Zone H, SWMU 196 - Data Validation

SDG	Sample ID	Lab Sample ID	Matrix	Parameter Class	Analytical Method	Parameter	Lab Result	Lab Qual	Final Result	Final Qual	Units	Reasons
51003	196GW005L1	51003007	WG	VOA	SW8260	2-Chloroethyl vinyl ether	50	U	50	R	ug/L	CC, BS
51003	196GW005L1	51003007	WG	VOA	SW8260	CHLOROBENZENE	1370	EB	1370	R	ug/L	LR
51003	196GW005L1	51003007	WG	VOA	SW8260	CHLOROMETHANE	10	U	10	UJ	ug/L	BS, CC
51003	196GW005L1	51003007	WG	VOA	SW8260	Vinyl acetate	50	U	50	UJ	ug/L	CC
51003	196GW005L1LR	51003007	WG	VOA	SW8260	1,1,1-TRICHLOROETHANE	25	U	25	R	ug/L	DL
51003	196GW005L1LR	51003007	WG	VOA	SW8260	1,1,2,2-TETRACHLOROETHANE	25	U	25	R	ug/L	DL
51003	196GW005L1LR	51003007	WG	VOA	SW8260	1,1,2-TRICHLOROETHANE	25	U	25	R	ug/L	DL
51003	196GW005L1LR	51003007	WG	VOA	SW8260	1,1-DICHLOROETHANE	25	U	25	R	ug/L	DL
51003	196GW005L1LR	51003007	WG	VOA	SW8260	1,1-DICHLOROETHENE	25	U	25	R	ug/L	DL
51003	196GW005L1LR	51003007	WG	VOA	SW8260	1,2-DICHLOROBENZENE		DE	13800	J	ug/L	LR
51003	196GW005L1LR	51003007	WG	VOA	SW8260	1,2-DICHLOROETHANE	25	U	25	R	ug/L	DL
51003	196GW005L1LR	51003007	WG	VOA	SW8260	1,2-DICHLOROPROPANE	25	U	25	R	ug/L	DL
51003	196GW005L1LR	51003007	WG	VOA	SW8260	1,3-DICHLOROBENZENE		D	249	R	ug/L	DL
51003	196GW005L1LR	51003007	WG	VOA	SW8260	1,4-DICHLOROBENZENE		D	614	R	ug/L	DL
51003	196GW005L1LR	51003007	WG	VOA	SW8260	2-BUTANONE (MEK)	125	U	125	R	ug/L	DL
51003	196GW005L1LR	51003007	WG	VOA	SW8260	2-Chloroethyl vinyl ether	125	U	125	R	ug/L	DL
51003	196GW005L1LR	51003007	WG	VOA	SW8260	2-HEXANONE	125	U	125	R	ug/L	DL
51003	196GW005L1LR	51003007	WG	VOA	SW8260	4-METHYL-2-PENTANONE (MIBK)	125	U	125	R	ug/L	DL
51003	196GW005L1LR	51003007	WG	VOA	SW8260	ACETONE	125	U	125	R	ug/L	DL
51003	196GW005L1LR	51003007	WG	VOA	SW8260	BENZENE	12.2	DJ	12.2	R	ug/L	DL
51003	196GW005L1LR	51003007	WG	VOA	SW8260	BROMODICHLOROMETHANE	25	U	25	R	ug/L	DL
51003	196GW005L1LR	51003007	WG	VOA	SW8260	BROMOFORM	25	U	25	R	ug/L	DL
51003	196GW005L1LR	51003007	WG	VOA	SW8260	BROMOMETHANE	25	U	25	R	ug/L	DL
51003	196GW005L1LR	51003007	WG	VOA	SW8260	CARBON DISULFIDE	125	U	125	R	ug/L	DL
51003	196GW005L1LR	51003007	WG	VOA	SW8260	CARBON TETRACHLORIDE	25	U	25	R	ug/L	DL
51003	196GW005L1LR	51003007	WG	VOA	SW8260	CHLOROETHANE	25	U	25	R	ug/L	DL
51003	196GW005L1LR	51003007	WG	VOA	SW8260	CHLOROFORM	25	U	25	R	ug/L	DL
51003	196GW005L1LR	51003007	WG	VOA	SW8260	CHLOROMETHANE	25	U	25	R	ug/L	DL
51003	196GW005L1LR	51003007	WG	VOA	SW8260	cis-1,2-DICHLOROETHYLENE	25	U	25	R	ug/L	DL
51003	196GW005L1LR	51003007	WG	VOA	SW8260	cis-1,3-DICHLOROPROPENE	25	U	25	R	ug/L	DL
51003	196GW005L1LR	51003007	WG	VOA	SW8260	DIBROMOCHLOROMETHANE	25	U	25	R	ug/L	DL
51003	196GW005L1LR	51003007	WG	VOA	SW8260	ETHYLBENZENE	25	U	25	R	ug/L	DL
51003	196GW005L1LR	51003007	WG	VOA	SW8260	METHYLENE CHLORIDE	25	DJ	25	R	ug/L	DL

SDG	Sample ID	Lab Sample ID	Matrix	Parameter Class	Analytical Method	Parameter	Lab Result	Lab Qual	Final Result	Final Qual	Units	Reasons
51003	196GW005L1LR	51003007	WG	VOA	SW8260	STYRENE	25	U	25	R	ug/L	DL
51003	196GW005L1LR	51003007	WG	VOA	SW8260	TETRACHLOROETHYLENE(PCE)	25	U	25	R	ug/L	DL
51003	196GW005L1LR	51003007	WG	VOA	SW8260	TOLUENE	25	U	25	R	ug/L	DL
51003	196GW005L1LR	51003007	WG	VOA	SW8260	trans-1,2-DICHLOROETHENE	25	U	25	R	ug/L	DL
51003	196GW005L1LR	51003007	WG	VOA	SW8260	trans-1,3-DICHLOROPROPENE	25	U	25	R	ug/L	DL
51003	196GW005L1LR	51003007	WG	VOA	SW8260	TRICHLOROETHYLENE (TCE)	25	U	25	R	ug/L	DL
51003	196GW005L1LR	51003007	WG	VOA	SW8260	Vinyl acetate	125	U	125	R	ug/L	DL
51003	196GW005L1LR	51003007	WG	VOA	SW8260	VINYL CHLORIDE	25	U	25	R	ug/L	DL
51003	196GW006L1	51003001	WG	VOA	SW8260	1,2-DICHLOROETHANE	250	U	250	UJ	ug/L	CC
51003	196GW006L1	51003001	WG	VOA	SW8260	CHLOROMETHANE	250	U	250	UJ	ug/L	BS, CC
51003	196GW006L1	51003001	WG	VOA	SW8260	cis-1,3-DICHLOROPROPENE	250	U	250	R	ug/L	CC, BS
51003	196GW006L1	51003001	WG	VOA	SW8260	Vinyl acetate	1250	U	1250	UJ	ug/L	CC
51003	196GW007L1	51003008	WG	VOA	SW8260	1,2-DICHLOROBENZENE		E	12300	J	ug/L	LR
51003	196GW007L1	51003008	WG	VOA	SW8260	1,2-DICHLOROETHANE	100	U	100	UJ	ug/L	CC
51003	196GW007L1	51003008	WG	VOA	SW8260	2-Chloroethyl vinyl ether	500	U	500	R	ug/L	CC, BS
51003	196GW007L1	51003008	WG	VOA	SW8260	CHLOROMETHANE	100	U	100	UJ	ug/L	BS, CC
51003	196GW007L1	51003008	WG	VOA	SW8260	Vinyl acetate	500	U	500	UJ	ug/L	CC
51003	196GW008L1	51003009	WG	VOA	SW8260	1,2-DICHLOROETHANE	100	U	100	UJ	ug/L	CC
51003	196GW008L1	51003009	WG	VOA	SW8260	2-Chloroethyl vinyl ether	500	U	500	R	ug/L	CC, BS
51003	196GW008L1	51003009	WG	VOA	SW8260	CHLOROMETHANE	100	U	100	UJ	ug/L	BS, CC
51003	196GW008L1	51003009	WG	VOA	SW8260	Vinyl acetate	500	U	500	UJ	ug/L	CC
51003	196GW009L1	51003010	WG	VOA	SW8260	1,2-DICHLOROBENZENE		E	32800	J	ug/L	LR
51003	196GW009L1	51003010	WG	VOA	SW8260	1,2-DICHLOROETHANE	50	U	50	UJ	ug/L	CC
51003	196GW009L1	51003010	WG	VOA	SW8260	2-Chloroethyl vinyl ether	250	U	250	R	ug/L	CC, BS
51003	196GW009L1	51003010	WG	VOA	SW8260	CHLOROMETHANE	50	U	50	UJ	ug/L	BS, CC
51003	196GW009L1	51003010	WG	VOA	SW8260	Vinyl acetate	250	U	250	UJ	ug/L	CC
51003	196GW010L1	51003012	WG	VOA	SW8260	1,2-DICHLOROETHANE	100	U	100	UJ	ug/L	CC
51003	196GW010L1	51003012	WG	VOA	SW8260	2-Chloroethyl vinyl ether	500	U	500	R	ug/L	CC, BS
51003	196GW010L1	51003012	WG	VOA	SW8260	CHLOROMETHANE	100	U	100	UJ	ug/L	BS, CC
51003	196GW010L1	51003012	WG	VOA	SW8260	Vinyl acetate	500	U	500	UJ	ug/L	CC
51003	196HW009L1	51003011	WG	VOA	SW8260	1,2-DICHLOROBENZENE		E	33200	J	ug/L	LR
51003	196HW009L1	51003011	WG	VOA	SW8260	1,2-DICHLOROETHANE	50	U	50	UJ	ug/L	CC
51003	196HW009L1	51003011	WG	VOA	SW8260	2-Chloroethyl vinyl ether	250	U	250	R	ug/L	CC, BS

Attachment 1 - Changed Qualifiers and Results
Zone H, SWMU 196 - Data Validation

SDG	Sample ID	Lab Sample ID	Matrix	Parameter Class	Analytical Method	Parameter	Lab Result	Lab Qual	Final Result	Final Qual	Units	Reasons
51003	196HW009L1	51003011	WG	VOA	SW8260	CHLOROMETHANE	50	U	50	UJ	ug/L	BS, CC
51003	196HW009L1	51003011	WG	VOA	SW8260	Vinyl acetate	250	U	250	UJ	ug/L	CC
51003	GELGW015L1	51003005	WG	VOA	SW8260	1,2-DICHLOROBENZENE		E	2500	R	ug/L	LR
51003	GELGW015L1	51003005	WG	VOA	SW8260	1,3-DICHLOROBENZENE		E	182	R	ug/L	LR
51003	GELGW015L1	51003005	WG	VOA	SW8260	1,4-DICHLOROBENZENE		E	392	R	ug/L	LR
51003	GELGW015L1	51003005	WG	VOA	SW8260	BENZENE	119	E	119	R	ug/L	LR
51003	GELGW015L1	51003005	WG	VOA	SW8260	CHLOROBENZENE	2160	E	2160	R	ug/L	LR
51003	GELGW015L1LR	51003005	WG	VOA	SW8260	1,1,1-TRICHLOROETHANE	200	U	200	R	ug/L	DL
51003	GELGW015L1LR	51003005	WG	VOA	SW8260	1,1,2,2-TETRACHLOROETHANE	200	U	200	R	ug/L	DL
51003	GELGW015L1LR	51003005	WG	VOA	SW8260	1,1,2-TRICHLOROETHANE	200	U	200	R	ug/L	DL
51003	GELGW015L1LR	51003005	WG	VOA	SW8260	1,1-DICHLOROETHANE	200	U	200	R	ug/L	DL
51003	GELGW015L1LR	51003005	WG	VOA	SW8260	1,1-DICHLOROETHENE	200	U	200	R	ug/L	DL
51003	GELGW015L1LR	51003005	WG	VOA	SW8260	1,2-DICHLOROETHANE	200	U	200	R	ug/L	DL
51003	GELGW015L1LR	51003005	WG	VOA	SW8260	1,2-Dichloroethene (total)	400	U	400	R	ug/L	DL
51003	GELGW015L1LR	51003005	WG	VOA	SW8260	1,2-DICHLOROPROPANE	200	U	200	R	ug/L	DL
51003	GELGW015L1LR	51003005	WG	VOA	SW8260	2-BUTANONE (MEK)	1000	U	1000	R	ug/L	DL
51003	GELGW015L1LR	51003005	WG	VOA	SW8260	2-Chloroethyl vinyl ether	1000	U	1000	R	ug/L	DL
51003	GELGW015L1LR	51003005	WG	VOA	SW8260	2-HEXANONE	1000	U	1000	R	ug/L	DL
51003	GELGW015L1LR	51003005	WG	VOA	SW8260	4-METHYL-2-PENTANONE (MIBK)	1000	U	1000	R	ug/L	DL
51003	GELGW015L1LR	51003005	WG	VOA	SW8260	ACETONE	1000	U	1000	R	ug/L	DL
51003	GELGW015L1LR	51003005	WG	VOA	SW8260	BROMODICHLOROMETHANE	200	U	200	R	ug/L	DL
51003	GELGW015L1LR	51003005	WG	VOA	SW8260	BROMOFORM	200	U	200	R	ug/L	DL
51003	GELGW015L1LR	51003005	WG	VOA	SW8260	BROMOMETHANE	200	U	200	R	ug/L	DL
51003	GELGW015L1LR	51003005	WG	VOA	SW8260	CARBON DISULFIDE	1000	U	1000	R	ug/L	DL
51003	GELGW015L1LR	51003005	WG	VOA	SW8260	CARBON TETRACHLORIDE	200	U	200	R	ug/L	DL
51003	GELGW015L1LR	51003005	WG	VOA	SW8260	CHLOROETHANE	200	U	200	R	ug/L	DL
51003	GELGW015L1LR	51003005	WG	VOA	SW8260	CHLOROFORM	200	U	200	R	ug/L	DL
51003	GELGW015L1LR	51003005	WG	VOA	SW8260	CHLOROMETHANE	200	U	200	R	ug/L	DL
51003	GELGW015L1LR	51003005	WG	VOA	SW8260	cis-1,2-DICHLOROETHYLENE	200	U	200	R	ug/L	DL
51003	GELGW015L1LR	51003005	WG	VOA	SW8260	cis-1,3-DICHLOROPROPENE	200	U	200	R	ug/L	DL
51003	GELGW015L1LR	51003005	WG	VOA	SW8260	DIBROMOCHLOROMETHANE	200	U	200	R	ug/L	DL
51003	GELGW015L1LR	51003005	WG	VOA	SW8260	ETHYLBENZENE	200	U	200	R	ug/L	DL
51003	GELGW015L1LR	51003005	WG	VOA	SW8260	m+p Xylene	400	U	400	R	ug/L	DL

SDG	Sample ID	Lab Sample ID	Matrix	Parameter Class	Analytical Method	Parameter	Lab Result	Lab Qual	Final Result	Final Qual	Units	Reasons
51003	GELGW015L1LR	51003005	WG	VOA	SW8260	METHYLENE CHLORIDE	210	DJ	210	R	ug/L	DL
51003	GELGW015L1LR	51003005	WG	VOA	SW8260	o-Xylene	200	U	200	R	ug/L	DL
51003	GELGW015L1LR	51003005	WG	VOA	SW8260	STYRENE	200	U	200	R	ug/L	DL
51003	GELGW015L1LR	51003005	WG	VOA	SW8260	TETRACHLOROETHYLENE(PCE)	200	U	200	R	ug/L	DL
51003	GELGW015L1LR	51003005	WG	VOA	SW8260	TOLUENE	200	U	200	R	ug/L	DL
51003	GELGW015L1LR	51003005	WG	VOA	SW8260	trans-1,2-DICHLOROETHENE	200	U	200	R	ug/L	DL
51003	GELGW015L1LR	51003005	WG	VOA	SW8260	trans-1,3-DICHLOROPROPENE	200	U	200	R	ug/L	DL
51003	GELGW015L1LR	51003005	WG	VOA	SW8260	TRICHLOROETHYLENE (TCE)	200	U	200	R	ug/L	DL
51003	GELGW015L1LR	51003005	WG	VOA	SW8260	Vinyl acetate	1000	U	1000	R	ug/L	DL
51003	GELGW015L1LR	51003005	WG	VOA	SW8260	VINYL CHLORIDE	200	U	200	R	ug/L	DL
51003	GELGW015L1LR	51003005	WG	VOA	SW8260	XYLENES, TOTAL	600	U	600	R	ug/L	DL
52363	009GW020L2	52363002	WG	VOA	SW8260	1,2-DICHLOROBENZENE	926	EB	926	R	ug/L	LR
52363	009GW020L2	52363002	WG	VOA	SW8260	1,2-DICHLOROETHANE	1	U	1	UJ	ug/L	CC
52363	009GW020L2	52363002	WG	VOA	SW8260	1,3-DICHLOROBENZENE	108	E	108	J	ug/L	LR
52363	009GW020L2	52363002	WG	VOA	SW8260	1,4-DICHLOROBENZENE	295	EB	295	R	ug/L	LR
52363	009GW020L2	52363002	WG	VOA	SW8260	ACETONE	10.5	=	10.5	U	ug/L	BL
52363	009GW020L2	52363002	WG	VOA	SW8260	BROMOMETHANE	1	U	1	UJ	ug/L	CC
52363	009GW020L2	52363002	WG	VOA	SW8260	CHLOROBENZENE	2900	E	2900	R	ug/L	LR
52363	009GW020L2	52363002	WG	VOA	SW8260	CHLOROETHANE	1	U	1	UJ	ug/L	CC, BS
52363	009GW020L2	52363002	WG	VOA	SW8260	METHYLENE CHLORIDE	1.7	JB	5	U	ug/L	BL
52363	009GW020L2	52363002	WG	VOA	SW8260	TOLUENE	0.72	J	1	U	ug/L	BL
52363	009GW020L2LR	52363002	WG	VOA	SW8260	1,1,1-TRICHLOROETHANE	1000	U	1000	R	ug/L	DL
52363	009GW020L2LR	52363002	WG	VOA	SW8260	1,1,2,2-TETRACHLOROETHANE	1000	U	1000	R	ug/L	DL
52363	009GW020L2LR	52363002	WG	VOA	SW8260	1,1,2-TRICHLOROETHANE	1000	U	1000	R	ug/L	DL
52363	009GW020L2LR	52363002	WG	VOA	SW8260	1,1-DICHLOROETHANE	1000	U	1000	R	ug/L	DL
52363	009GW020L2LR	52363002	WG	VOA	SW8260	1,1-DICHLOROETHENE	1000	U	1000	R	ug/L	DL
52363	009GW020L2LR	52363002	WG	VOA	SW8260	1,2-DICHLOROETHANE	1000	U	1000	R	ug/L	DL
52363	009GW020L2LR	52363002	WG	VOA	SW8260	1,2-Dichloroethene (total)	2000	U	2000	R	ug/L	DL
52363	009GW020L2LR	52363002	WG	VOA	SW8260	1,2-DICHLOROPROPANE	1000	U	1000	R	ug/L	DL
52363	009GW020L2LR	52363002	WG	VOA	SW8260	1,3-DICHLOROBENZENE	1000	U	1000	R	ug/l	DL
52363	009GW020L2LR	52363002	WG	VOA	SW8260	1,4-DICHLOROBENZENE	680	JBD	680	J	ug/L	DL
52363	009GW020L2LR	52363002	WG	VOA	SW8260	2-BUTANONE (MEK)	5000	U	5000	R	ug/L	DL
52363	009GW020L2LR	52363002	WG	VOA	SW8260	2-Chloroethyl vinyl ether	5000	U	5000	R	ug/L	DL

Attachment 1 - Changed Qualifiers and Results
Zone H, SWMU 196 - Data Validation

SDG	Sample ID	Lab Sample ID	Matrix	Parameter Class	Analytical Method	Parameter	Lab Result	Lab Qual	Final Result	Final Qual	Units	Reasons
52363	009GW020L2LR	52363002	WG	VOA	SW8260	2-HEXANONE	5000	U	5000	R	ug/L	DL
52363	009GW020L2LR	52363002	WG	VOA	SW8260	4-METHYL-2-PENTANONE (MIBK)	5000	U	5000	R	ug/L	DL
52363	009GW020L2LR	52363002	WG	VOA	SW8260	ACETONE	5000	U	5000	R	ug/L	DL
52363	009GW020L2LR	52363002	WG	VOA	SW8260	BENZENE	1000	U	1000	R	ug/L	DL
52363	009GW020L2LR	52363002	WG	VOA	SW8260	BROMODICHLOROMETHANE	1000	U	1000	R	ug/L	DL
52363	009GW020L2LR	52363002	WG	VOA	SW8260	BROMOFORM	1000	U	1000	R	ug/L	DL
52363	009GW020L2LR	52363002	WG	VOA	SW8260	BROMOMETHANE	1000	U	1000	R	ug/L	DL
52363	009GW020L2LR	52363002	WG	VOA	SW8260	CARBON DISULFIDE	5000	U	5000	R	ug/L	DL
52363	009GW020L2LR	52363002	WG	VOA	SW8260	CARBON TETRACHLORIDE	1000	U	1000	R	ug/L	DL
52363	009GW020L2LR	52363002	WG	VOA	SW8260	CHLOROETHANE	1000	U	1000	R	ug/L	DL
52363	009GW020L2LR	52363002	WG	VOA	SW8260	CHLOROFORM	1000	U	1000	R	ug/L	DL
52363	009GW020L2LR	52363002	WG	VOA	SW8260	CHLOROMETHANE	1000	U	1000	R	ug/L	DL
52363	009GW020L2LR	52363002	WG	VOA	SW8260	cis-1,2-DICHLOROETHYLENE	1000	U	1000	R	ug/L	DL
52363	009GW020L2LR	52363002	WG	VOA	SW8260	cis-1,3-DICHLOROPROPENE	1000	U	1000	R	ug/L	DL
52363	009GW020L2LR	52363002	WG	VOA	SW8260	DIBROMOCHLOROMETHANE	1000	U	1000	R	ug/L	DL
52363	009GW020L2LR	52363002	WG	VOA	SW8260	ETHYLBENZENE	1000	U	1000	R	ug/L	DL
52363	009GW020L2LR	52363002	WG	VOA	SW8260	m+p Xylene	2000	U	2000	R	ug/L	DL
52363	009GW020L2LR	52363002	WG	VOA	SW8260	METHYLENE CHLORIDE	3880	JBD	3880	R	ug/L	DL
52363	009GW020L2LR	52363002	WG	VOA	SW8260	o-Xylene	1000	U	1000	R	ug/L	DL
52363	009GW020L2LR	52363002	WG	VOA	SW8260	STYRENE	1000	U	1000	R	ug/L	DL
52363	009GW020L2LR	52363002	WG	VOA	SW8260	TETRACHLOROETHYLENE(PCE)	1000	U	1000	R	ug/L	DL
52363	009GW020L2LR	52363002	WG	VOA	SW8260	TOLUENE	1000	U	1000	R	ug/L	DL
52363	009GW020L2LR	52363002	WG	VOA	SW8260	trans-1,2-DICHLOROETHENE	1000	U	1000	R	ug/L	DL
52363	009GW020L2LR	52363002	WG	VOA	SW8260	trans-1,3-DICHLOROPROPENE	1000	U	1000	R	ug/L	DL
52363	009GW020L2LR	52363002	WG	VOA	SW8260	TRICHLOROETHYLENE (TCE)	1000	U	1000	R	ug/L	DL
52363	009GW020L2LR	52363002	WG	VOA	SW8260	Vinyl acetate	5000	U	5000	R	ug/L	DL
52363	009GW020L2LR	52363002	WG	VOA	SW8260	VINYL CHLORIDE	1000	U	1000	R	ug/L	DL
52363	009GW020L2LR	52363002	WG	VOA	SW8260	XYLENES, TOTAL	3000	U	3000	R	ug/L	DL
52363	009GW021L2	52363003	WG	VOA	SW8260	1,2-DICHLOROBENZENE	816	EB	816	R	ug/L	LR
52363	009GW021L2	52363003	WG	VOA	SW8260	1,2-DICHLOROETHANE	1	U	1	UJ	ug/L	CC
52363	009GW021L2	52363003	WG	VOA	SW8260	1,3-DICHLOROBENZENE	156	E	156	R	ug/L	LR
52363	009GW021L2	52363003	WG	VOA	SW8260	1,4-DICHLOROBENZENE	246	EB	246	R	ug/L	LR
52363	009GW021L2	52363003	WG	VOA	SW8260	ACETONE	10.9	=	10.9	U	ug/L	BL

SDG	Sample ID	Lab Sample ID	Matrix	Parameter Class	Analytical Method	Parameter	Lab Result	Lab Qual	Final Result	Final Qual	Units	Reasons
52363	009GW021L2	52363003	WG	VOA	SW8260	BROMOMETHANE	1	U	1	UJ	ug/L	CC
52363	009GW021L2	52363003	WG	VOA	SW8260	CHLOROBENZENE	501	E	501	R	ug/L	LR
52363	009GW021L2	52363003	WG	VOA	SW8260	CHLOROETHANE	1	U	1	UJ	ug/L	CC, BS
52363	009GW021L2	52363003	WG	VOA	SW8260	METHYLENE CHLORIDE	4	JB	5	U	ug/L	BL
52363	009GW021L2LR	52363003	WG	VOA	SW8260	1,1,1-TRICHLOROETHANE	10	U	10	R	ug/L	DL
52363	009GW021L2LR	52363003	WG	VOA	SW8260	1,1,2,2-TETRACHLOROETHANE	10	U	10	R	ug/L	DL
52363	009GW021L2LR	52363003	WG	VOA	SW8260	1,1,2-TRICHLOROETHANE	10	U	10	R	ug/L	DL
52363	009GW021L2LR	52363003	WG	VOA	SW8260	1,1-DICHLOROETHANE	10	U	10	R	ug/L	DL
52363	009GW021L2LR	52363003	WG	VOA	SW8260	1,1-DICHLOROETHENE	10	U	10	R	ug/L	DL
52363	009GW021L2LR	52363003	WG	VOA	SW8260	1,2-DICHLOROETHANE	10	U	10	R	ug/L	DL
52363	009GW021L2LR	52363003	WG	VOA	SW8260	1,2-Dichloroethene (total)	8.6	JD	8.6	R	ug/L	DL
52363	009GW021L2LR	52363003	WG	VOA	SW8260	1,2-DICHLOROPROPANE	10	U	10	R	ug/L	DL
52363	009GW021L2LR	52363003	WG	VOA	SW8260	2-BUTANONE (MEK)	50	U	50	R	ug/L	DL
52363	009GW021L2LR	52363003	WG	VOA	SW8260	2-Chloroethyl vinyl ether	50	U	50	R	ug/L	DL
52363	009GW021L2LR	52363003	WG	VOA	SW8260	2-HEXANONE	50	U	50	R	ug/L	DL
52363	009GW021L2LR	52363003	WG	VOA	SW8260	4-METHYL-2-PENTANONE (MIBK)	50	U	50	R	ug/L	DL
52363	009GW021L2LR	52363003	WG	VOA	SW8260	ACETONE	50	U	50	R	ug/L	DL
52363	009GW021L2LR	52363003	WG	VOA	SW8260	BENZENE	5.7	JD	5.7	R	ug/L	DL
52363	009GW021L2LR	52363003	WG	VOA	SW8260	BROMODICHLOROMETHANE	10	U	10	R	ug/L	DL
52363	009GW021L2LR	52363003	WG	VOA	SW8260	BROMOFORM	10	U	10	R	ug/L	DL
52363	009GW021L2LR	52363003	WG	VOA	SW8260	BROMOMETHANE	10	U	10	R	ug/L	DL
52363	009GW021L2LR	52363003	WG	VOA	SW8260	CARBON DISULFIDE	50	U	50	R	ug/L	DL
52363	009GW021L2LR	52363003	WG	VOA	SW8260	CARBON TETRACHLORIDE	10	U	10	R	ug/L	DL
52363	009GW021L2LR	52363003	WG	VOA	SW8260	CHLOROETHANE	10	U	10	R	ug/L	DL
52363	009GW021L2LR	52363003	WG	VOA	SW8260	CHLOROFORM	10	U	10	R	ug/L	DL
52363	009GW021L2LR	52363003	WG	VOA	SW8260	CHLOROMETHANE	10	U	10	R	ug/L	DL
52363	009GW021L2LR	52363003	WG	VOA	SW8260	cis-1,2-DICHLOROETHYLENE	8.6	JD	8.6	R	ug/L	DL
52363	009GW021L2LR	52363003	WG	VOA	SW8260	cis-1,3-DICHLOROPROPENE	10	U	10	R	ug/L	DL
52363	009GW021L2LR	52363003	WG	VOA	SW8260	DIBROMOCHLOROMETHANE	10	U	10	R	ug/L	DL
52363	009GW021L2LR	52363003	WG	VOA	SW8260	ETHYLBENZENE	10	U	10	R	ug/L	DL
52363	009GW021L2LR	52363003	WG	VOA	SW8260	m+p Xylene	20	U	20	R	ug/L	DL
52363	009GW021L2LR	52363003	WG	VOA	SW8260	METHYLENE CHLORIDE	41.5	JBD	41.5	R	ug/L	DL
52363	009GW021L2LR	52363003	WG	VOA	SW8260	o-Xylene	10	U	10	R	ug/L	DL

Attachment 1 - Changed Qualifiers and Results
Zone H, SWMU 196 - Data Validation

SDG	Sample ID	Lab Sample ID	Matrix	Parameter Class	Analytical Method	Parameter	Lab Result	Lab Qual	Final Result	Final Qual	Units	Reasons
52363	009GW021L2LR	52363003	WG	VOA	SW8260	STYRENE	10	U	10	R	ug/L	DL
52363	009GW021L2LR	52363003	WG	VOA	SW8260	TETRACHLOROETHYLENE(PCE)	6.9	JD	6.9	R	ug/L	DL
52363	009GW021L2LR	52363003	WG	VOA	SW8260	TOLUENE	2.2	JD	2.2	R	ug/L	DL
52363	009GW021L2LR	52363003	WG	VOA	SW8260	trans-1,2-DICHLOROETHENE	10	U	10	R	ug/L	DL
52363	009GW021L2LR	52363003	WG	VOA	SW8260	trans-1,3-DICHLOROPROPENE	10	U	10	R	ug/L	DL
52363	009GW021L2LR	52363003	WG	VOA	SW8260	TRICHLOROETHYLENE (TCE)	10	U	10	R	ug/L	DL
52363	009GW021L2LR	52363003	WG	VOA	SW8260	Vinyl acetate	50	U	50	R	ug/L	DL
52363	009GW021L2LR	52363003	WG	VOA	SW8260	VINYL CHLORIDE	10	U	10	R	ug/L	DL
52363	009GW021L2LR	52363003	WG	VOA	SW8260	XYLENES, TOTAL	30	U	30	R	ug/L	DL
52363	196GW004L2	52363005	WG	VOA	SW8260	1,2-DICHLOROBENZENE	2190	EB	2190	R	ug/L	LR
52363	196GW004L2	52363005	WG	VOA	SW8260	1,2-DICHLOROETHANE	1	U	1	UJ	ug/L	CC
52363	196GW004L2	52363005	WG	VOA	SW8260	1,3-DICHLOROBENZENE	391	E	391	R	ug/L	LR
52363	196GW004L2	52363005	WG	VOA	SW8260	1,4-DICHLOROBENZENE	670	EB	670	R	ug/L	LR
52363	196GW004L2	52363005	WG	VOA	SW8260	BENZENE	543	E	543	R	ug/L	LR
52363	196GW004L2	52363005	WG	VOA	SW8260	BROMOMETHANE	1	U	1	UJ	ug/L	CC
52363	196GW004L2	52363005	WG	VOA	SW8260	CHLOROBENZENE	1980	E	1980	R	ug/L	LR
52363	196GW004L2	52363005	WG	VOA	SW8260	CHLOROETHANE	1	U	1	UJ	ug/L	CC, BS
52363	196GW004L2	52363005	WG	VOA	SW8260	METHYLENE CHLORIDE	32	B	32	U	ug/L	BL
52363	196GW004L2	52363005	WG	VOA	SW8260	TETRACHLOROETHYLENE(PCE)	172	E	172	R	ug/L	LR
52363	196GW004L2	52363005	WG	VOA	SW8260	TOLUENE	782	E	782	R	ug/L	LR
52363	196GW004L2LR	52363005	WG	VOA	SW8260	1,1,1-TRICHLOROETHANE	1000	U	1000	R	ug/L	DL
52363	196GW004L2LR	52363005	WG	VOA	SW8260	1,1,2,2-TETRACHLOROETHANE	1000	U	1000	R	ug/L	DL
52363	196GW004L2LR	52363005	WG	VOA	SW8260	1,1,2-TRICHLOROETHANE	1000	U	1000	R	ug/L	DL
52363	196GW004L2LR	52363005	WG	VOA	SW8260	1,1-DICHLOROETHANE	1000	U	1000	R	ug/L	DL
52363	196GW004L2LR	52363005	WG	VOA	SW8260	1,1-DICHLOROETHENE	1000	U	1000	R	ug/L	DL
52363	196GW004L2LR	52363005	WG	VOA	SW8260	1,2-DICHLOROETHANE	1000	U	1000	R	ug/L	DL
52363	196GW004L2LR	52363005	WG	VOA	SW8260	1,2-Dichloroethene (total)	2000	U	2000	R	ug/L	DL
52363	196GW004L2LR	52363005	WG	VOA	SW8260	1,2-DICHLOROPROPANE	1000	U	1000	R	ug/L	DL
52363	196GW004L2LR	52363005	WG	VOA	SW8260	1,3-DICHLOROBENZENE	618	JD	618	J	ug/L	DL
52363	196GW004L2LR	52363005	WG	VOA	SW8260	2-BUTANONE (MEK)	5000	U	5000	R	ug/L	DL
52363	196GW004L2LR	52363005	WG	VOA	SW8260	2-Chloroethyl vinyl ether	5000	U	5000	R	ug/L	DL
52363	196GW004L2LR	52363005	WG	VOA	SW8260	2-HEXANONE	5000	U	5000	R	ug/L	DL
52363	196GW004L2LR	52363005	WG	VOA	SW8260	4-METHYL-2-PENTANONE (MIBK)	5000	U	5000	R	ug/L	DL

SDG	Sample ID	Lab Sample ID	Matrix	Parameter Class	Analytical Method	Parameter	Lab Result	Lab Qual	Final Result	Final Qual	Units	Reasons
52363	196GW004L2LR	52363005	WG	VOA	SW8260	ACETONE	5000	U	5000	R	ug/L	DL
52363	196GW004L2LR	52363005	WG	VOA	SW8260	BENZENE	723	JD	723	J	ug/L	DL
52363	196GW004L2LR	52363005	WG	VOA	SW8260	BROMODICHLOROMETHANE	1000	U	1000	R	ug/L	DL
52363	196GW004L2LR	52363005	WG	VOA	SW8260	BROMOFORM	1000	U	1000	R	ug/L	DL
52363	196GW004L2LR	52363005	WG	VOA	SW8260	BROMOMETHANE	1000	U	1000	R	ug/L	DL
52363	196GW004L2LR	52363005	WG	VOA	SW8260	CARBON DISULFIDE	5000	U	5000	R	ug/L	DL
52363	196GW004L2LR	52363005	WG	VOA	SW8260	CARBON TETRACHLORIDE	1000	U	1000	R	ug/L	DL
52363	196GW004L2LR	52363005	WG	VOA	SW8260	CHLOROETHANE	1000	U	1000	R	ug/L	DL
52363	196GW004L2LR	52363005	WG	VOA	SW8260	CHLOROFORM	1000	U	1000	R	ug/L	DL
52363	196GW004L2LR	52363005	WG	VOA	SW8260	CHLOROMETHANE	1000	U	1000	R	ug/L	DL
52363	196GW004L2LR	52363005	WG	VOA	SW8260	cis-1,2-DICHLOROETHYLENE	1000	U	1000	R	ug/L	DL
52363	196GW004L2LR	52363005	WG	VOA	SW8260	cis-1,3-DICHLOROPROPENE	1000	U	1000	R	ug/L	DL
52363	196GW004L2LR	52363005	WG	VOA	SW8260	DIBROMOCHLOROMETHANE	1000	U	1000	R	ug/L	DL
52363	196GW004L2LR	52363005	WG	VOA	SW8260	ETHYLBENZENE	1000	U	1000	R	ug/L	DL
52363	196GW004L2LR	52363005	WG	VOA	SW8260	m+p Xylene	2000	U	2000	R	ug/L	DL
52363	196GW004L2LR	52363005	WG	VOA	SW8260	METHYLENE CHLORIDE	4300	JBD	4300	R	ug/L	DL
52363	196GW004L2LR	52363005	WG	VOA	SW8260	o-Xylene	1000	U	1000	R	ug/L	DL
52363	196GW004L2LR	52363005	WG	VOA	SW8260	STYRENE	1000	U	1000	R	ug/L	DL
52363	196GW004L2LR	52363005	WG	VOA	SW8260	TETRACHLOROETHYLENE(PCE)	1000	U	1000	R	ug/L	DL
52363	196GW004L2LR	52363005	WG	VOA	SW8260	TOLUENE	953	JD	953	J	ug/L	DL
52363	196GW004L2LR	52363005	WG	VOA	SW8260	trans-1,2-DICHLOROETHENE	1000	U	1000	R	ug/L	DL
52363	196GW004L2LR	52363005	WG	VOA	SW8260	trans-1,3-DICHLOROPROPENE	1000	U	1000	R	ug/L	DL
52363	196GW004L2LR	52363005	WG	VOA	SW8260	TRICHLOROETHYLENE (TCE)	1000	U	1000	R	ug/L	DL
52363	196GW004L2LR	52363005	WG	VOA	SW8260	Vinyl acetate	5000	U	5000	R	ug/L	DL
52363	196GW004L2LR	52363005	WG	VOA	SW8260	VINYL CHLORIDE	1000	U	1000	R	ug/L	DL
52363	196GW004L2LR	52363005	WG	VOA	SW8260	XYLENES, TOTAL	3000	U	3000	R	ug/L	DL
52363	196GW005L2	52363006	WG	VOA	SW8260	1,2-DICHLOROBENZENE	1670	EB	1670	R	ug/L	LR
52363	196GW005L2	52363006	WG	VOA	SW8260	1,2-DICHLOROETHANE	1	U	1	UJ	ug/L	CC
52363	196GW005L2	52363006	WG	VOA	SW8260	1,4-DICHLOROBENZENE	154	EB	154	R	ug/L	LR
52363	196GW005L2	52363006	WG	VOA	SW8260	BENZENE	1.2	=	1.2	U	ug/L	BL
52363	196GW005L2	52363006	WG	VOA	SW8260	BROMOMETHANE	1	U	1	UJ	ug/L	CC
52363	196GW005L2	52363006	WG	VOA	SW8260	CHLOROETHANE	1	U	1	UJ	ug/L	CC, BS
52363	196GW005L2	52363006	WG	VOA	SW8260	METHYLENE CHLORIDE	4.5	JB	5	U	ug/L	BL

Attachment 1 - Changed Qualifiers and Results
Zone H, SWMU 196 - Data Validation

SDG	Sample ID	Lab Sample ID	Matrix	Parameter Class	Analytical Method	Parameter	Lab Result	Lab Qual	Final Result	Final Qual	Units	Reasons
52363	196GW005L2LR	52363006	WG	VOA	SW8260	1,1,1-TRICHLOROETHANE	10	U	10	R	ug/L	DL
52363	196GW005L2LR	52363006	WG	VOA	SW8260	1,1,2,2-TETRACHLOROETHANE	10	U	10	R	ug/L	DL
52363	196GW005L2LR	52363006	WG	VOA	SW8260	1,1,2-TRICHLOROETHANE	10	U	10	R	ug/L	DL
52363	196GW005L2LR	52363006	WG	VOA	SW8260	1,1-DICHLOROETHANE	10	U	10	R	ug/L	DL
52363	196GW005L2LR	52363006	WG	VOA	SW8260	1,1-DICHLOROETHENE	10	U	10	R	ug/L	DL
52363	196GW005L2LR	52363006	WG	VOA	SW8260	1,2-DICHLOROETHANE	10	U	10	R	ug/L	DL
52363	196GW005L2LR	52363006	WG	VOA	SW8260	1,2-Dichloroethene (total)	20	U	20	R	ug/L	DL
52363	196GW005L2LR	52363006	WG	VOA	SW8260	1,2-DICHLOROPROPANE	10	U	10	R	ug/L	DL
52363	196GW005L2LR	52363006	WG	VOA	SW8260	1,3-DICHLOROBENZENE	63.8	D	63.8	R	ug/L	DL
52363	196GW005L2LR	52363006	WG	VOA	SW8260	2-BUTANONE (MEK)	50	U	50	R	ug/L	DL
52363	196GW005L2LR	52363006	WG	VOA	SW8260	2-Chloroethyl vinyl ether	50	U	50	R	ug/L	DL
52363	196GW005L2LR	52363006	WG	VOA	SW8260	2-HEXANONE	50	U	50	R	ug/L	DL
52363	196GW005L2LR	52363006	WG	VOA	SW8260	4-METHYL-2-PENTANONE (MIBK)	50	U	50	R	ug/L	DL
52363	196GW005L2LR	52363006	WG	VOA	SW8260	ACETONE	50	U	50	R	ug/L	DL
52363	196GW005L2LR	52363006	WG	VOA	SW8260	BENZENE	10	U	10	R	ug/L	DL
52363	196GW005L2LR	52363006	WG	VOA	SW8260	BROMODICHLOROMETHANE	10	U	10	R	ug/L	DL
52363	196GW005L2LR	52363006	WG	VOA	SW8260	BROMOFORM	10	U	10	R	ug/L	DL
52363	196GW005L2LR	52363006	WG	VOA	SW8260	BROMOMETHANE	10	U	10	R	ug/L	DL
52363	196GW005L2LR	52363006	WG	VOA	SW8260	CARBON DISULFIDE	50	U	50	R	ug/L	DL
52363	196GW005L2LR	52363006	WG	VOA	SW8260	CARBON TETRACHLORIDE	10	U	10	R	ug/L	DL
52363	196GW005L2LR	52363006	WG	VOA	SW8260	CHLOROBENZENE	65.4	D	65.4	R	ug/L	DL
52363	196GW005L2LR	52363006	WG	VOA	SW8260	CHLOROETHANE	10	U	10	R	ug/L	DL
52363	196GW005L2LR	52363006	WG	VOA	SW8260	CHLOROFORM	10	U	10	R	ug/L	DL
52363	196GW005L2LR	52363006	WG	VOA	SW8260	CHLOROMETHANE	10	U	10	R	ug/L	DL
52363	196GW005L2LR	52363006	WG	VOA	SW8260	cis-1,2-DICHLOROETHYLENE	10	U	10	R	ug/L	DL
52363	196GW005L2LR	52363006	WG	VOA	SW8260	cis-1,3-DICHLOROPROPENE	10	U	10	R	ug/L	DL
52363	196GW005L2LR	52363006	WG	VOA	SW8260	DIBROMOCHLOROMETHANE	10	U	10	R	ug/L	DL
52363	196GW005L2LR	52363006	WG	VOA	SW8260	ETHYLBENZENE	10	U	10	R	ug/L	DL
52363	196GW005L2LR	52363006	WG	VOA	SW8260	m+p Xylene	20	U	20	R	ug/L	DL
52363	196GW005L2LR	52363006	WG	VOA	SW8260	METHYLENE CHLORIDE	38.4	JBD	38.4	R	ug/L	DL
52363	196GW005L2LR	52363006	WG	VOA	SW8260	o-Xylene	10	U	10	R	ug/L	DL
52363	196GW005L2LR	52363006	WG	VOA	SW8260	STYRENE	10	U	10	R	ug/L	DL
52363	196GW005L2LR	52363006	WG	VOA	SW8260	TETRACHLOROETHYLENE(PCE)	10	U	10	R	ug/L	DL

SDG	Sample ID	Lab Sample ID	Matrix	Parameter Class	Analytical Method	Parameter	Lab Result	Lab Qual	Final Result	Final Qual	Units	Reasons
52363	196GW005L2LR	52363006	WG	VOA	SW8260	TOLUENE	10	U	10	R	ug/L	DL
52363	196GW005L2LR	52363006	WG	VOA	SW8260	trans-1,2-DICHLOROETHENE	10	U	10	R	ug/L	DL
52363	196GW005L2LR	52363006	WG	VOA	SW8260	trans-1,3-DICHLOROPROPENE	10	U	10	R	ug/L	DL
52363	196GW005L2LR	52363006	WG	VOA	SW8260	TRICHLOROETHYLENE (TCE)	10	U	10	R	ug/L	DL
52363	196GW005L2LR	52363006	WG	VOA	SW8260	Vinyl acetate	50	U	50	R	ug/L	DL
52363	196GW005L2LR	52363006	WG	VOA	SW8260	VINYL CHLORIDE	10	U	10	R	ug/L	DL
52363	196GW005L2LR	52363006	WG	VOA	SW8260	XYLENES, TOTAL	30	U	30	R	ug/L	DL
52363	196GW006L2	52363001	WG	VOA	SW8260	1,2-DICHLOROBENZENE	1580	EB	1580	R	ug/L	LR
52363	196GW006L2	52363001	WG	VOA	SW8260	1,2-DICHLOROETHANE	1	U	1	UJ	ug/L	CC
52363	196GW006L2	52363001	WG	VOA	SW8260	1,4-DICHLOROBENZENE	132	EB	132	R	ug/L	LR
52363	196GW006L2	52363001	WG	VOA	SW8260	2-BUTANONE (MEK)	12.3	=	12.3	J	ug/L	MS
52363	196GW006L2	52363001	WG	VOA	SW8260	2-Chloroethyl vinyl ether	5	U	5	UJ	ug/L	MS
52363	196GW006L2	52363001	WG	VOA	SW8260	ACETONE	192	=	192	J	ug/L	MS
52363	196GW006L2	52363001	WG	VOA	SW8260	BROMOMETHANE	1	U	1	UJ	ug/L	CC
52363	196GW006L2	52363001	WG	VOA	SW8260	CHLOROBENZENE	597	E	597	R	ug/L	LR
52363	196GW006L2	52363001	WG	VOA	SW8260	CHLOROETHANE	1	U	1	UJ	ug/L	BS
52363	196GW006L2	52363001	WG	VOA	SW8260	METHYLENE CHLORIDE	4.5	JB	5	U	ug/L	BL
52363	196GW006L2	52363001	WG	VOA	SW8260	TOLUENE	0.19	J	1	U	ug/L	BL
52363	196GW006L2LR	52363001	WG	VOA	SW8260	1,1,1-TRICHLOROETHANE	20	U	20	R	ug/L	DL
52363	196GW006L2LR	52363001	WG	VOA	SW8260	1,1,2,2-TETRACHLOROETHANE	20	U	20	R	ug/L	DL
52363	196GW006L2LR	52363001	WG	VOA	SW8260	1,1,2-TRICHLOROETHANE	20	U	20	R	ug/L	DL
52363	196GW006L2LR	52363001	WG	VOA	SW8260	1,1-DICHLOROETHANE	20	U	20	R	ug/L	DL
52363	196GW006L2LR	52363001	WG	VOA	SW8260	1,1-DICHLOROETHENE	20	U	20	R	ug/L	DL
52363	196GW006L2LR	52363001	WG	VOA	SW8260	1,2-DICHLOROETHANE	20	U	20	R	ug/L	DL
52363	196GW006L2LR	52363001	WG	VOA	SW8260	1,2-Dichloroethene (total)	40	U	40	R	ug/L	DL
52363	196GW006L2LR	52363001	WG	VOA	SW8260	1,2-DICHLOROPROPANE	20	U	20	R	ug/L	DL
52363	196GW006L2LR	52363001	WG	VOA	SW8260	1,3-DICHLOROBENZENE	66	D	66	R	ug/L	DL
52363	196GW006L2LR	52363001	WG	VOA	SW8260	2-BUTANONE (MEK)	100	U	100	R	ug/L	DL
52363	196GW006L2LR	52363001	WG	VOA	SW8260	2-Chloroethyl vinyl ether	100	U	100	R	ug/L	DL
52363	196GW006L2LR	52363001	WG	VOA	SW8260	2-HEXANONE	100	U	100	R	ug/L	DL
52363	196GW006L2LR	52363001	WG	VOA	SW8260	4-METHYL-2-PENTANONE (MIBK)	100	U	100	R	ug/L	DL
52363	196GW006L2LR	52363001	WG	VOA	SW8260	ACETONE	100	U	100	R	ug/L	DL
52363	196GW006L2LR	52363001	WG	VOA	SW8260	BENZENE	7.8	JD	7.8	R	ug/L	DL

Attachment 1 - Changed Qualifiers and Results
Zone H, SWMU 196 - Data Validation

SDG	Sample ID	Lab Sample ID	Matrix	Parameter Class	Analytical Method	Parameter	Lab Result	Lab Qual	Final Result	Final Qual	Units	Reasons
52363	196GW006L2LR	52363001	WG	VOA	SW8260	BROMODICHLOROMETHANE	20	U	20	R	ug/L	DL
52363	196GW006L2LR	52363001	WG	VOA	SW8260	BROMOFORM	20	U	20	R	ug/L	DL
52363	196GW006L2LR	52363001	WG	VOA	SW8260	BROMOMETHANE	20	U	20	R	ug/L	DL
52363	196GW006L2LR	52363001	WG	VOA	SW8260	CARBON DISULFIDE	100	U	100	R	ug/L	DL
52363	196GW006L2LR	52363001	WG	VOA	SW8260	CARBON TETRACHLORIDE	20	U	20	R	ug/L	DL
52363	196GW006L2LR	52363001	WG	VOA	SW8260	CHLOROETHANE	20	U	20	R	ug/L	DL
52363	196GW006L2LR	52363001	WG	VOA	SW8260	CHLOROFORM	20	U	20	R	ug/L	DL
52363	196GW006L2LR	52363001	WG	VOA	SW8260	CHLOROMETHANE	20	U	20	R	ug/L	DL
52363	196GW006L2LR	52363001	WG	VOA	SW8260	cis-1,2-DICHLOROETHYLENE	20	U	20	R	ug/L	DL
52363	196GW006L2LR	52363001	WG	VOA	SW8260	cis-1,3-DICHLOROPROPENE	20	U	20	R	ug/L	DL
52363	196GW006L2LR	52363001	WG	VOA	SW8260	DIBROMOCHLOROMETHANE	20	U	20	R	ug/L	DL
52363	196GW006L2LR	52363001	WG	VOA	SW8260	ETHYLBENZENE	20	U	20	R	ug/L	DL
52363	196GW006L2LR	52363001	WG	VOA	SW8260	m+p Xylene	40	U	40	R	ug/L	DL
52363	196GW006L2LR	52363001	WG	VOA	SW8260	METHYLENE CHLORIDE	70	JBD	70	R	ug/L	DL
52363	196GW006L2LR	52363001	WG	VOA	SW8260	o-Xylene	20	U	20	R	ug/L	DL
52363	196GW006L2LR	52363001	WG	VOA	SW8260	STYRENE	20	U	20	R	ug/L	DL
52363	196GW006L2LR	52363001	WG	VOA	SW8260	TETRACHLOROETHYLENE(PCE)	20	U	20	R	ug/L	DL
52363	196GW006L2LR	52363001	WG	VOA	SW8260	TOLUENE	20	U	20	R	ug/L	DL
52363	196GW006L2LR	52363001	WG	VOA	SW8260	trans-1,2-DICHLOROETHENE	20	U	20	R	ug/L	DL
52363	196GW006L2LR	52363001	WG	VOA	SW8260	trans-1,3-DICHLOROPROPENE	20	U	20	R	ug/L	DL
52363	196GW006L2LR	52363001	WG	VOA	SW8260	TRICHLOROETHYLENE (TCE)	20	U	20	R	ug/L	DL
52363	196GW006L2LR	52363001	WG	VOA	SW8260	Vinyl acetate	100	U	100	R	ug/L	DL
52363	196GW006L2LR	52363001	WG	VOA	SW8260	VINYL CHLORIDE	20	U	20	R	ug/L	DL
52363	196GW006L2LR	52363001	WG	VOA	SW8260	XYLENES, TOTAL	60	U	60	R	ug/L	DL
52363	196GW007L2	52363007	WG	VOA	SW8260	1,2-DICHLOROBENZENE	1920	EB	1920	R	ug/L	LR
52363	196GW007L2	52363007	WG	VOA	SW8260	1,2-DICHLOROETHANE	1	U	1	UJ	ug/L	CC
52363	196GW007L2	52363007	WG	VOA	SW8260	1,3-DICHLOROBENZENE	141	E	141	R	ug/L	LR
52363	196GW007L2	52363007	WG	VOA	SW8260	1,4-DICHLOROBENZENE	297	EB	297	R	ug/L	LR
52363	196GW007L2	52363007	WG	VOA	SW8260	BROMOMETHANE	1	U	1	UJ	ug/L	CC
52363	196GW007L2	52363007	WG	VOA	SW8260	CHLOROBENZENE	1620	E	1620	R	ug/L	LR
52363	196GW007L2	52363007	WG	VOA	SW8260	CHLOROETHANE	1	U	1	UJ	ug/L	CC, BS
52363	196GW007L2	52363007	WG	VOA	SW8260	METHYLENE CHLORIDE	4.2	JB	5	U	ug/L	BL
52363	196GW007L2LR	52363007	WG	VOA	SW8260	1,1,1-TRICHLOROETHANE	100	U	100	R	ug/L	DL

SDG	Sample ID	Lab Sample ID	Matrix	Parameter Class	Analytical Method	Parameter	Lab Result	Lab Qual	Final Result	Final Qual	Units	Reasons
52363	196GW007L2LR	52363007	WG	VOA	SW8260	1,1,2,2-TETRACHLOROETHANE	100	U	100	R	ug/L	DL
52363	196GW007L2LR	52363007	WG	VOA	SW8260	1,1,2-TRICHLOROETHANE	100	U	100	R	ug/L	DL
52363	196GW007L2LR	52363007	WG	VOA	SW8260	1,1-DICHLOROETHANE	100	U	100	R	ug/L	DL
52363	196GW007L2LR	52363007	WG	VOA	SW8260	1,1-DICHLOROETHENE	100	U	100	R	ug/L	DL
52363	196GW007L2LR	52363007	WG	VOA	SW8260	1,2-DICHLOROETHANE	100	U	100	R	ug/L	DL
52363	196GW007L2LR	52363007	WG	VOA	SW8260	1,2-Dichloroethene (total)	200	U	200	R	ug/L	DL
52363	196GW007L2LR	52363007	WG	VOA	SW8260	1,2-DICHLOROPROPANE	100	U	100	R	ug/L	DL
52363	196GW007L2LR	52363007	WG	VOA	SW8260	2-BUTANONE (MEK)	500	U	500	R	ug/L	DL
52363	196GW007L2LR	52363007	WG	VOA	SW8260	2-Chloroethyl vinyl ether	500	U	500	R	ug/L	DL
52363	196GW007L2LR	52363007	WG	VOA	SW8260	2-HEXANONE	500	U	500	R	ug/L	DL
52363	196GW007L2LR	52363007	WG	VOA	SW8260	4-METHYL-2-PENTANONE (MIBK)	500	U	500	R	ug/L	DL
52363	196GW007L2LR	52363007	WG	VOA	SW8260	ACETONE	500	U	500	R	ug/L	DL
52363	196GW007L2LR	52363007	WG	VOA	SW8260	BENZENE	35.5	JD	35.5	R	ug/L	DL
52363	196GW007L2LR	52363007	WG	VOA	SW8260	BROMODICHLOROMETHANE	100	U	100	R	ug/L	DL
52363	196GW007L2LR	52363007	WG	VOA	SW8260	BROMOFORM	100	U	100	R	ug/L	DL
52363	196GW007L2LR	52363007	WG	VOA	SW8260	BROMOMETHANE	100	U	100	R	ug/L	DL
52363	196GW007L2LR	52363007	WG	VOA	SW8260	CARBON DISULFIDE	500	U	500	R	ug/L	DL
52363	196GW007L2LR	52363007	WG	VOA	SW8260	CARBON TETRACHLORIDE	100	U	100	R	ug/L	DL
52363	196GW007L2LR	52363007	WG	VOA	SW8260	CHLOROETHANE	100	U	100	R	ug/L	DL
52363	196GW007L2LR	52363007	WG	VOA	SW8260	CHLOROFORM	100	U	100	R	ug/L	DL
52363	196GW007L2LR	52363007	WG	VOA	SW8260	CHLOROMETHANE	100	U	100	R	ug/L	DL
52363	196GW007L2LR	52363007	WG	VOA	SW8260	cis-1,2-DICHLOROETHYLENE	100	U	100	R	ug/L	DL
52363	196GW007L2LR	52363007	WG	VOA	SW8260	cis-1,3-DICHLOROPROPENE	100	U	100	R	ug/L	DL
52363	196GW007L2LR	52363007	WG	VOA	SW8260	DIBROMOCHLOROMETHANE	100	U	100	R	ug/L	DL
52363	196GW007L2LR	52363007	WG	VOA	SW8260	ETHYLBENZENE	100	U	100	R	ug/L	DL
52363	196GW007L2LR	52363007	WG	VOA	SW8260	m+p Xylene	200	U	200	R	ug/L	DL
52363	196GW007L2LR	52363007	WG	VOA	SW8260	METHYLENE CHLORIDE	85.8	JBD	85.8	R	ug/L	DL
52363	196GW007L2LR	52363007	WG	VOA	SW8260	o-Xylene	100	U	100	R	ug/L	DL
52363	196GW007L2LR	52363007	WG	VOA	SW8260	STYRENE	100	U	100	R	ug/L	DL
52363	196GW007L2LR	52363007	WG	VOA	SW8260	TETRACHLOROETHYLENE(PCE)	100	U	100	R	ug/L	DL
52363	196GW007L2LR	52363007	WG	VOA	SW8260	TOLUENE	100	U	100	R	ug/L	DL
52363	196GW007L2LR	52363007	WG	VOA	SW8260	trans-1,2-DICHLOROETHENE	100	U	100	R	ug/L	DL
52363	196GW007L2LR	52363007	WG	VOA	SW8260	trans-1,3-DICHLOROPROPENE	100	U	100	R	ug/L	DL

Attachment 1 - Changed Qualifiers and Results
Zone H, SWMU 196 - Data Validation

SDG	Sample ID	Lab Sample ID	Matrix	Parameter Class	Analytical Method	Parameter	Lab Result	Lab Qual	Final Result	Final Qual	Units	Reasons
52363	196GW007L2LR	52363007	WG	VOA	SW8260	TRICHLOROETHYLENE (TCE)	100	U	100	R	ug/L	DL
52363	196GW007L2LR	52363007	WG	VOA	SW8260	Vinyl acetate	500	U	500	R	ug/L	DL
52363	196GW007L2LR	52363007	WG	VOA	SW8260	VINYL CHLORIDE	100	U	100	R	ug/L	DL
52363	196GW007L2LR	52363007	WG	VOA	SW8260	XYLENES, TOTAL	300	U	300	R	ug/L	DL
52363	196GW008L2	52363008	WG	VOA	SW8260	1,2-DICHLOROBENZENE	937	EB	937	R	ug/L	LR
52363	196GW008L2	52363008	WG	VOA	SW8260	1,2-DICHLOROETHANE	1	U	1	UJ	ug/L	CC
52363	196GW008L2	52363008	WG	VOA	SW8260	1,3-DICHLOROBENZENE	130	E	130	R	ug/L	LR
52363	196GW008L2	52363008	WG	VOA	SW8260	1,4-DICHLOROBENZENE	187	EB	187	R	ug/L	LR
52363	196GW008L2	52363008	WG	VOA	SW8260	ACETONE	11.3	=	11.3	U	ug/L	BL
52363	196GW008L2	52363008	WG	VOA	SW8260	BROMOMETHANE	1	U	1	UJ	ug/L	CC
52363	196GW008L2	52363008	WG	VOA	SW8260	CHLOROBENZENE	1740	E	1740	R	ug/L	LR
52363	196GW008L2	52363008	WG	VOA	SW8260	CHLOROETHANE	1	U	1	UJ	ug/L	CC, BS
52363	196GW008L2	52363008	WG	VOA	SW8260	METHYLENE CHLORIDE	2.9	JB	5	U	ug/L	BL
52363	196GW008L2LR	52363008	WG	VOA	SW8260	1,1,1-TRICHLOROETHANE	100	U	100	R	ug/L	DL
52363	196GW008L2LR	52363008	WG	VOA	SW8260	1,1,2,2-TETRACHLOROETHANE	100	U	100	R	ug/L	DL
52363	196GW008L2LR	52363008	WG	VOA	SW8260	1,1,2-TRICHLOROETHANE	100	U	100	R	ug/L	DL
52363	196GW008L2LR	52363008	WG	VOA	SW8260	1,1-DICHLOROETHANE	100	U	100	R	ug/L	DL
52363	196GW008L2LR	52363008	WG	VOA	SW8260	1,1-DICHLOROETHENE	100	U	100	R	ug/L	DL
52363	196GW008L2LR	52363008	WG	VOA	SW8260	1,2-DICHLOROETHANE	100	U	100	R	ug/L	DL
52363	196GW008L2LR	52363008	WG	VOA	SW8260	1,2-Dichloroethene (total)	200	U	200	R	ug/L	DL
52363	196GW008L2LR	52363008	WG	VOA	SW8260	1,2-DICHLOROPROPANE	100	U	100	R	ug/L	DL
52363	196GW008L2LR	52363008	WG	VOA	SW8260	2-BUTANONE (MEK)	500	U	500	R	ug/L	DL
52363	196GW008L2LR	52363008	WG	VOA	SW8260	2-Chloroethyl vinyl ether	500	U	500	R	ug/L	DL
52363	196GW008L2LR	52363008	WG	VOA	SW8260	2-HEXANONE	500	U	500	R	ug/L	DL
52363	196GW008L2LR	52363008	WG	VOA	SW8260	4-METHYL-2-PENTANONE (MIBK)	500	U	500	R	ug/L	DL
52363	196GW008L2LR	52363008	WG	VOA	SW8260	ACETONE	500	U	500	R	ug/L	DL
52363	196GW008L2LR	52363008	WG	VOA	SW8260	BENZENE	36.1	JD	36.1	R	ug/L	DL
52363	196GW008L2LR	52363008	WG	VOA	SW8260	BROMODICHLOROMETHANE	100	U	100	R	ug/L	DL
52363	196GW008L2LR	52363008	WG	VOA	SW8260	BROMOFORM	100	U	100	R	ug/L	DL
52363	196GW008L2LR	52363008	WG	VOA	SW8260	BROMOMETHANE	100	U	100	R	ug/L	DL
52363	196GW008L2LR	52363008	WG	VOA	SW8260	CARBON DISULFIDE	500	U	500	R	ug/L	DL
52363	196GW008L2LR	52363008	WG	VOA	SW8260	CARBON TETRACHLORIDE	100	U	100	R	ug/L	DL
52363	196GW008L2LR	52363008	WG	VOA	SW8260	CHLOROETHANE	100	U	100	R	ug/L	DL

SDG	Sample ID	Lab Sample ID	Matrix	Parameter Class	Analytical Method	Parameter	Lab Result	Lab Qual	Final Result	Final Qual	Units	Reasons
52363	196GW008L2LR	52363008	WG	VOA	SW8260	CHLOROFORM	100	U	100	R	ug/L	DL
52363	196GW008L2LR	52363008	WG	VOA	SW8260	CHLOROMETHANE	100	U	100	R	ug/L	DL
52363	196GW008L2LR	52363008	WG	VOA	SW8260	cis-1,2-DICHLOROETHYLENE	100	U	100	R	ug/L	DL
52363	196GW008L2LR	52363008	WG	VOA	SW8260	cis-1,3-DICHLOROPROPENE	100	U	100	R	ug/L	DL
52363	196GW008L2LR	52363008	WG	VOA	SW8260	DIBROMOCHLOROMETHANE	100	U	100	R	ug/L	DL
52363	196GW008L2LR	52363008	WG	VOA	SW8260	ETHYLBENZENE	100	U	100	R	ug/L	DL
52363	196GW008L2LR	52363008	WG	VOA	SW8260	m+p Xylene	200	U	200	R	ug/L	DL
52363	196GW008L2LR	52363008	WG	VOA	SW8260	METHYLENE CHLORIDE	181	JBD	181	R	ug/L	DL
52363	196GW008L2LR	52363008	WG	VOA	SW8260	o-Xylene	100	U	100	R	ug/L	DL
52363	196GW008L2LR	52363008	WG	VOA	SW8260	STYRENE	100	U	100	R	ug/L	DL
52363	196GW008L2LR	52363008	WG	VOA	SW8260	TETRACHLOROETHYLENE(PCE)	100	U	100	R	ug/L	DL
52363	196GW008L2LR	52363008	WG	VOA	SW8260	TOLUENE	100	U	100	R	ug/L	DL
52363	196GW008L2LR	52363008	WG	VOA	SW8260	trans-1,2-DICHLOROETHENE	100	U	100	R	ug/L	DL
52363	196GW008L2LR	52363008	WG	VOA	SW8260	trans-1,3-DICHLOROPROPENE	100	U	100	R	ug/L	DL
52363	196GW008L2LR	52363008	WG	VOA	SW8260	TRICHLOROETHYLENE (TCE)	100	U	100	R	ug/L	DL
52363	196GW008L2LR	52363008	WG	VOA	SW8260	Vinyl acetate	500	U	500	R	ug/L	DL
52363	196GW008L2LR	52363008	WG	VOA	SW8260	VINYL CHLORIDE	100	U	100	R	ug/L	DL
52363	196GW008L2LR	52363008	WG	VOA	SW8260	XYLENES, TOTAL	300	U	300	R	ug/L	DL
52363	196GW010L2	52363010	WG	VOA	SW8260	1,2-DICHLOROBENZENE	1230	EB	1230	R	ug/L	LR
52363	196GW010L2	52363010	WG	VOA	SW8260	1,2-DICHLOROETHANE	1	U	1	UJ	ug/L	CC
52363	196GW010L2	52363010	WG	VOA	SW8260	ACETONE	4.9	J	5	U	ug/L	BL
52363	196GW010L2	52363010	WG	VOA	SW8260	BROMOMETHANE	1	U	1	UJ	ug/L	CC
52363	196GW010L2	52363010	WG	VOA	SW8260	CHLOROBENZENE	1250	E	1250	R	ug/L	LR
52363	196GW010L2	52363010	WG	VOA	SW8260	CHLOROETHANE	1	U	1	UJ	ug/L	CC, BS
52363	196GW010L2	52363010	WG	VOA	SW8260	METHYLENE CHLORIDE	5	B	5	U	ug/L	BL
52363	196GW010L2	52363010	WG	VOA	SW8260	TOLUENE	0.25	J	1	U	ug/L	BL
52363	196GW010L2LR	52363010	WG	VOA	SW8260	1,1,1-TRICHLOROETHANE	100	U	100	R	ug/L	DL
52363	196GW010L2LR	52363010	WG	VOA	SW8260	1,1,2,2-TETRACHLOROETHANE	100	U	100	R	ug/L	DL
52363	196GW010L2LR	52363010	WG	VOA	SW8260	1,1,2-TRICHLOROETHANE	100	U	100	R	ug/L	DL
52363	196GW010L2LR	52363010	WG	VOA	SW8260	1,1-DICHLOROETHANE	100	U	100	R	ug/L	DL
52363	196GW010L2LR	52363010	WG	VOA	SW8260	1,1-DICHLOROETHENE	100	U	100	R	ug/L	DL
52363	196GW010L2LR	52363010	WG	VOA	SW8260	1,2-DICHLOROETHANE	100	U	100	R	ug/L	DL
52363	196GW010L2LR	52363010	WG	VOA	SW8260	1,2-Dichloroethene (total)	200	U	200	R	ug/L	DL

Attachment 1 - Changed Qualifiers and Results
Zone H, SWMU 196 - Data Validation

SDG	Sample ID	Lab Sample ID	Matrix	Parameter Class	Analytical Method	Parameter	Lab Result	Lab Qual	Final Result	Final Qual	Units	Reasons
52363	196GW010L2LR	52363010	WG	VOA	SW8260	1,2-DICHLOROPROPANE	100	U	100	R	ug/L	DL
52363	196GW010L2LR	52363010	WG	VOA	SW8260	1,3-DICHLOROBENZENE	60.1	JD	60.1	R	ug/L	DL
52363	196GW010L2LR	52363010	WG	VOA	SW8260	1,4-DICHLOROBENZENE	128	BD	128	R	ug/L	DL
52363	196GW010L2LR	52363010	WG	VOA	SW8260	2-BUTANONE (MEK)	500	U	500	R	ug/L	DL
52363	196GW010L2LR	52363010	WG	VOA	SW8260	2-Chloroethyl vinyl ether	500	U	500	R	ug/L	DL
52363	196GW010L2LR	52363010	WG	VOA	SW8260	2-HEXANONE	500	U	500	R	ug/L	DL
52363	196GW010L2LR	52363010	WG	VOA	SW8260	4-METHYL-2-PENTANONE (MIBK)	500	U	500	R	ug/L	DL
52363	196GW010L2LR	52363010	WG	VOA	SW8260	ACETONE	500	U	500	R	ug/L	DL
52363	196GW010L2LR	52363010	WG	VOA	SW8260	BENZENE	100	U	100	R	ug/L	DL
52363	196GW010L2LR	52363010	WG	VOA	SW8260	BROMODICHLOROMETHANE	100	U	100	R	ug/L	DL
52363	196GW010L2LR	52363010	WG	VOA	SW8260	BROMOFORM	100	U	100	R	ug/L	DL
52363	196GW010L2LR	52363010	WG	VOA	SW8260	BROMOMETHANE	100	U	100	R	ug/L	DL
52363	196GW010L2LR	52363010	WG	VOA	SW8260	CARBON DISULFIDE	500	U	500	R	ug/L	DL
52363	196GW010L2LR	52363010	WG	VOA	SW8260	CARBON TETRACHLORIDE	100	U	100	R	ug/L	DL
52363	196GW010L2LR	52363010	WG	VOA	SW8260	CHLOROETHANE	100	U	100	R	ug/L	DL
52363	196GW010L2LR	52363010	WG	VOA	SW8260	CHLOROFORM	100	U	100	R	ug/L	DL
52363	196GW010L2LR	52363010	WG	VOA	SW8260	CHLOROMETHANE	100	U	100	R	ug/L	DL
52363	196GW010L2LR	52363010	WG	VOA	SW8260	cis-1,2-DICHLOROETHYLENE	100	U	100	R	ug/L	DL
52363	196GW010L2LR	52363010	WG	VOA	SW8260	cis-1,3-DICHLOROPROPENE	100	U	100	R	ug/L	DL
52363	196GW010L2LR	52363010	WG	VOA	SW8260	DIBROMOCHLOROMETHANE	100	U	100	R	ug/L	DL
52363	196GW010L2LR	52363010	WG	VOA	SW8260	ETHYLBENZENE	100	U	100	R	ug/L	DL
52363	196GW010L2LR	52363010	WG	VOA	SW8260	m+p Xylene	200	U	200	R	ug/L	DL
52363	196GW010L2LR	52363010	WG	VOA	SW8260	METHYLENE CHLORIDE	306	JBD	306	R	ug/L	DL
52363	196GW010L2LR	52363010	WG	VOA	SW8260	o-Xylene	100	U	100	R	ug/L	DL
52363	196GW010L2LR	52363010	WG	VOA	SW8260	STYRENE	100	U	100	R	ug/L	DL
52363	196GW010L2LR	52363010	WG	VOA	SW8260	TETRACHLOROETHYLENE(PCE)	100	U	100	R	ug/L	DL
52363	196GW010L2LR	52363010	WG	VOA	SW8260	TOLUENE	100	U	100	R	ug/L	DL
52363	196GW010L2LR	52363010	WG	VOA	SW8260	trans-1,2-DICHLOROETHENE	100	U	100	R	ug/L	DL
52363	196GW010L2LR	52363010	WG	VOA	SW8260	trans-1,3-DICHLOROPROPENE	100	U	100	R	ug/L	DL
52363	196GW010L2LR	52363010	WG	VOA	SW8260	TRICHLOROETHYLENE (TCE)	100	U	100	R	ug/L	DL
52363	196GW010L2LR	52363010	WG	VOA	SW8260	Vinyl acetate	500	U	500	R	ug/L	DL
52363	196GW010L2LR	52363010	WG	VOA	SW8260	VINYL CHLORIDE	100	U	100	R	ug/L	DL
52363	196GW010L2LR	52363010	WG	VOA	SW8260	XYLENES, TOTAL	300	U	300	R	ug/L	DL

SDG	Sample ID	Lab Sample ID	Matrix	Parameter Class	Analytical Method	Parameter	Lab Result	Lab Qual	Final Result	Final Qual	Units	Reasons
52363	196HW008L2	52363009	WG	VOA	SW8260	1,2-DICHLOROBENZENE	1030	EB	1030	R	ug/L	LR
52363	196HW008L2	52363009	WG	VOA	SW8260	1,2-DICHLOROETHANE	1	U	1	UJ	ug/L	CC
52363	196HW008L2	52363009	WG	VOA	SW8260	1,3-DICHLOROBENZENE	146	E	146	R	ug/L	LR
52363	196HW008L2	52363009	WG	VOA	SW8260	1,4-DICHLOROBENZENE	191	EB	191	R	ug/L	LR
52363	196HW008L2	52363009	WG	VOA	SW8260	ACETONE	11	=	11	U	ug/L	BL
52363	196HW008L2	52363009	WG	VOA	SW8260	BROMOMETHANE	1	U	1	UJ	ug/L	CC
52363	196HW008L2	52363009	WG	VOA	SW8260	CHLOROBENZENE	1210	E	1210	R	ug/L	LR
52363	196HW008L2	52363009	WG	VOA	SW8260	CHLOROETHANE	1	U	1	UJ	ug/L	CC, BS
52363	196HW008L2	52363009	WG	VOA	SW8260	METHYLENE CHLORIDE	3.3	JB	5	U	ug/L	BL
52363	196HW008L2LR	52363009	WG	VOA	SW8260	1,1,1-TRICHLOROETHANE	100	U	100	R	ug/L	DL
52363	196HW008L2LR	52363009	WG	VOA	SW8260	1,1,2,2-TETRACHLOROETHANE	100	U	100	R	ug/L	DL
52363	196HW008L2LR	52363009	WG	VOA	SW8260	1,1,2-TRICHLOROETHANE	100	U	100	R	ug/L	DL
52363	196HW008L2LR	52363009	WG	VOA	SW8260	1,1-DICHLOROETHANE	100	U	100	R	ug/L	DL
52363	196HW008L2LR	52363009	WG	VOA	SW8260	1,1-DICHLOROETHENE	100	U	100	R	ug/L	DL
52363	196HW008L2LR	52363009	WG	VOA	SW8260	1,2-DICHLOROETHANE	100	U	100	R	ug/L	DL
52363	196HW008L2LR	52363009	WG	VOA	SW8260	1,2-Dichloroethene (total)	200	U	200	R	ug/L	DL
52363	196HW008L2LR	52363009	WG	VOA	SW8260	1,2-DICHLOROPROPANE	100	U	100	R	ug/L	DL
52363	196HW008L2LR	52363009	WG	VOA	SW8260	2-BUTANONE (MEK)	500	U	500	R	ug/L	DL
52363	196HW008L2LR	52363009	WG	VOA	SW8260	2-Chloroethyl vinyl ether	500	U	500	R	ug/L	DL
52363	196HW008L2LR	52363009	WG	VOA	SW8260	2-HEXANONE	500	U	500	R	ug/L	DL
52363	196HW008L2LR	52363009	WG	VOA	SW8260	4-METHYL-2-PENTANONE (MIBK)	500	U	500	R	ug/L	DL
52363	196HW008L2LR	52363009	WG	VOA	SW8260	ACETONE	500	U	500	R	ug/L	DL
52363	196HW008L2LR	52363009	WG	VOA	SW8260	BENZENE	34.1	JD	34.1	R	ug/L	DL
52363	196HW008L2LR	52363009	WG	VOA	SW8260	BROMODICHLOROMETHANE	100	U	100	R	ug/L	DL
52363	196HW008L2LR	52363009	WG	VOA	SW8260	BROMOFORM	100	U	100	R	ug/L	DL
52363	196HW008L2LR	52363009	WG	VOA	SW8260	BROMOMETHANE	100	U	100	R	ug/L	DL
52363	196HW008L2LR	52363009	WG	VOA	SW8260	CARBON DISULFIDE	500	U	500	R	ug/L	DL
52363	196HW008L2LR	52363009	WG	VOA	SW8260	CARBON TETRACHLORIDE	100	U	100	R	ug/L	DL
52363	196HW008L2LR	52363009	WG	VOA	SW8260	CHLOROETHANE	100	U	100	R	ug/L	DL
52363	196HW008L2LR	52363009	WG	VOA	SW8260	CHLOROFORM	100	U	100	R	ug/L	DL
52363	196HW008L2LR	52363009	WG	VOA	SW8260	CHLOROMETHANE	100	U	100	R	ug/L	DL
52363	196HW008L2LR	52363009	WG	VOA	SW8260	cis-1,2-DICHLOROETHYLENE	100	U	100	R	ug/L	DL
52363	196HW008L2LR	52363009	WG	VOA	SW8260	cis-1,3-DICHLOROPROPENE	100	U	100	R	ug/L	DL

Attachment 1 - Changed Qualifiers and Results
Zone H, SWMU 196 - Data Validation

SDG	Sample ID	Lab Sample ID	Matrix	Parameter Class	Analytical Method	Parameter	Lab Result	Lab Qual	Final Result	Final Qual	Units	Reasons
52363	196HW008L2LR	52363009	WG	VOA	SW8260	DIBROMOCHLOROMETHANE	100	U	100	R	ug/L	DL
52363	196HW008L2LR	52363009	WG	VOA	SW8260	ETHYLBENZENE	100	U	100	R	ug/L	DL
52363	196HW008L2LR	52363009	WG	VOA	SW8260	m+p Xylene	200	U	200	R	ug/L	DL
52363	196HW008L2LR	52363009	WG	VOA	SW8260	METHYLENE CHLORIDE	381	JBD	381	R	ug/L	DL
52363	196HW008L2LR	52363009	WG	VOA	SW8260	o-Xylene	100	U	100	R	ug/L	DL
52363	196HW008L2LR	52363009	WG	VOA	SW8260	STYRENE	100	U	100	R	ug/L	DL
52363	196HW008L2LR	52363009	WG	VOA	SW8260	TETRACHLOROETHYLENE(PCE)	100	U	100	R	ug/L	DL
52363	196HW008L2LR	52363009	WG	VOA	SW8260	TOLUENE	100	U	100	R	ug/L	DL
52363	196HW008L2LR	52363009	WG	VOA	SW8260	trans-1,2-DICHLOROETHENE	100	U	100	R	ug/L	DL
52363	196HW008L2LR	52363009	WG	VOA	SW8260	trans-1,3-DICHLOROPROPENE	100	U	100	R	ug/L	DL
52363	196HW008L2LR	52363009	WG	VOA	SW8260	TRICHLOROETHYLENE (TCE)	100	U	100	R	ug/L	DL
52363	196HW008L2LR	52363009	WG	VOA	SW8260	Vinyl acetate	500	U	500	R	ug/L	DL
52363	196HW008L2LR	52363009	WG	VOA	SW8260	VINYL CHLORIDE	100	U	100	R	ug/L	DL
52363	196HW008L2LR	52363009	WG	VOA	SW8260	XYLENES, TOTAL	300	U	300	R	ug/L	DL
52363	GELGW015L2	52363004	WG	VOA	SW8260	1,2-DICHLOROBENZENE	2590	EB	2590	R	ug/L	LR
52363	GELGW015L2	52363004	WG	VOA	SW8260	1,2-DICHLOROETHANE	1	U	1	UJ	ug/L	CC
52363	GELGW015L2	52363004	WG	VOA	SW8260	1,3-DICHLOROBENZENE	252	E	252	R	ug/L	LR
52363	GELGW015L2	52363004	WG	VOA	SW8260	1,4-DICHLOROBENZENE	460	EB	460	R	ug/L	LR
52363	GELGW015L2	52363004	WG	VOA	SW8260	ACETONE	14.1	=	14.1	U	ug/L	BL
52363	GELGW015L2	52363004	WG	VOA	SW8260	BENZENE	116	E	116	R	ug/L	LR
52363	GELGW015L2	52363004	WG	VOA	SW8260	BROMOMETHANE	1	U	1	UJ	ug/L	CC
52363	GELGW015L2	52363004	WG	VOA	SW8260	CHLOROBENZENE	1660	E	1660	R	ug/L	LR
52363	GELGW015L2	52363004	WG	VOA	SW8260	CHLOROETHANE	1	U	1	UJ	ug/L	CC, BS
52363	GELGW015L2	52363004	WG	VOA	SW8260	METHYLENE CHLORIDE	4.4	JB	5	U	ug/L	BL
52363	GELGW015L2LR	52363004	WG	VOA	SW8260	1,1,1-TRICHLOROETHANE	100	U	100	R	ug/L	DL
52363	GELGW015L2LR	52363004	WG	VOA	SW8260	1,1,2,2-TETRACHLOROETHANE	100	U	100	R	ug/L	DL
52363	GELGW015L2LR	52363004	WG	VOA	SW8260	1,1,2-TRICHLOROETHANE	100	U	100	R	ug/L	DL
52363	GELGW015L2LR	52363004	WG	VOA	SW8260	1,1-DICHLOROETHANE	100	U	100	R	ug/L	DL
52363	GELGW015L2LR	52363004	WG	VOA	SW8260	1,1-DICHLOROETHENE	100	U	100	R	ug/L	DL
52363	GELGW015L2LR	52363004	WG	VOA	SW8260	1,2-DICHLOROETHANE	100	U	100	R	ug/L	DL
52363	GELGW015L2LR	52363004	WG	VOA	SW8260	1,2-Dichloroethene (total)	200	U	200	R	ug/L	DL
52363	GELGW015L2LR	52363004	WG	VOA	SW8260	1,2-DICHLOROPROPANE	100	U	100	R	ug/L	DL
52363	GELGW015L2LR	52363004	WG	VOA	SW8260	2-BUTANONE (MEK)	500	U	500	R	ug/L	DL

SDG	Sample ID	Lab Sample ID	Matrix	Parameter Class	Analytical Method	Parameter	Lab Result	Lab Qual	Final Result	Final Qual	Units	Reasons
52363	GELGW015L2LR	52363004	WG	VOA	SW8260	2-Chloroethyl vinyl ether	500	U	500	R	ug/L	DL
52363	GELGW015L2LR	52363004	WG	VOA	SW8260	2-HEXANONE	500	U	500	R	ug/L	DL
52363	GELGW015L2LR	52363004	WG	VOA	SW8260	4-METHYL-2-PENTANONE (MIBK)	500	U	500	R	ug/L	DL
52363	GELGW015L2LR	52363004	WG	VOA	SW8260	ACETONE	500	U	500	R	ug/L	DL
52363	GELGW015L2LR	52363004	WG	VOA	SW8260	BROMODICHLOROMETHANE	100	U	100	R	ug/L	DL
52363	GELGW015L2LR	52363004	WG	VOA	SW8260	BROMOFORM	100	U	100	R	ug/L	DL
52363	GELGW015L2LR	52363004	WG	VOA	SW8260	BROMOMETHANE	100	U	100	R	ug/L	DL
52363	GELGW015L2LR	52363004	WG	VOA	SW8260	CARBON DISULFIDE	500	U	500	R	ug/L	DL
52363	GELGW015L2LR	52363004	WG	VOA	SW8260	CARBON TETRACHLORIDE	100	U	100	R	ug/L	DL
52363	GELGW015L2LR	52363004	WG	VOA	SW8260	CHLOROETHANE	100	U	100	R	ug/L	DL
52363	GELGW015L2LR	52363004	WG	VOA	SW8260	CHLOROFORM	100	U	100	R	ug/L	DL
52363	GELGW015L2LR	52363004	WG	VOA	SW8260	CHLOROMETHANE	100	U	100	R	ug/L	DL
52363	GELGW015L2LR	52363004	WG	VOA	SW8260	cis-1,2-DICHLOROETHYLENE	100	U	100	R	ug/L	DL
52363	GELGW015L2LR	52363004	WG	VOA	SW8260	cis-1,3-DICHLOROPROPENE	100	U	100	R	ug/L	DL
52363	GELGW015L2LR	52363004	WG	VOA	SW8260	DIBROMOCHLOROMETHANE	100	U	100	R	ug/L	DL
52363	GELGW015L2LR	52363004	WG	VOA	SW8260	ETHYLBENZENE	100	U	100	R	ug/L	DL
52363	GELGW015L2LR	52363004	WG	VOA	SW8260	m+p Xylene	200	U	200	R	ug/L	DL
52363	GELGW015L2LR	52363004	WG	VOA	SW8260	METHYLENE CHLORIDE	380	JBD	380	R	ug/L	DL
52363	GELGW015L2LR	52363004	WG	VOA	SW8260	o-Xylene	100	U	100	R	ug/L	DL
52363	GELGW015L2LR	52363004	WG	VOA	SW8260	STYRENE	100	U	100	R	ug/L	DL
52363	GELGW015L2LR	52363004	WG	VOA	SW8260	TETRACHLOROETHYLENE(PCE)	100	U	100	R	ug/L	DL
52363	GELGW015L2LR	52363004	WG	VOA	SW8260	TOLUENE	100	U	100	R	ug/L	DL
52363	GELGW015L2LR	52363004	WG	VOA	SW8260	trans-1,2-DICHLOROETHENE	100	U	100	R	ug/L	DL
52363	GELGW015L2LR	52363004	WG	VOA	SW8260	trans-1,3-DICHLOROPROPENE	100	U	100	R	ug/L	DL
52363	GELGW015L2LR	52363004	WG	VOA	SW8260	TRICHLOROETHYLENE (TCE)	100	U	100	R	ug/L	DL
52363	GELGW015L2LR	52363004	WG	VOA	SW8260	Vinyl acetate	500	U	500	R	ug/L	DL
52363	GELGW015L2LR	52363004	WG	VOA	SW8260	VINYL CHLORIDE	100	U	100	R	ug/L	DL
52363	GELGW015L2LR	52363004	WG	VOA	SW8260	XYLENES, TOTAL	300	U	300	R	ug/L	DL
53063	009GW022L3	53063002	WG	VOA	SW8260	1,2,4-TRICHLOROBENZENE	50	U	50	UJ	ug/L	CC
53063	009GW022L3	53063002	WG	VOA	SW8260	CHLOROETHANE	50	U	50	UJ	ug/L	CC
53063	009GW022L3	53063002	WG	VOA	SW8260	CHLOROMETHANE	50	U	50	UJ	ug/L	CC
53063	196GW006L3	53063003	WG	VOA	SW8260	1,2,4-TRICHLOROBENZENE	250	U	250	UJ	ug/L	CC
53063	196GW006L3	53063003	WG	VOA	SW8260	CHLOROETHANE	250	U	250	UJ	ug/L	CC

Attachment 1 - Changed Qualifiers and Results
Zone H, SWMU 196 - Data Validation

SDG	Sample ID	Lab Sample ID	Matrix	Parameter Class	Analytical Method	Parameter	Lab Result	Lab Qual	Final Result	Final Qual	Units	Reasons
53063	196GW006L3	53063003	WG	VOA	SW8260	CHLOROMETHANE	250	U	250	UJ	ug/L	CC
53063	196GW009L3	53063001	WG	VOA	SW8260	1,2,4-TRICHLOROBENZENE	500	U	500	UJ	ug/L	CC
53063	196GW009L3	53063001	WG	VOA	SW8260	CHLOROETHANE	500	U	500	UJ	ug/L	CC
53063	196GW009L3	53063001	WG	VOA	SW8260	CHLOROMETHANE	500	U	500	UJ	ug/L	CC
53063	GELGW015L3	53063004	WG	VOA	SW8260	1,2,4-TRICHLOROBENZENE	250	U	250	UJ	ug/L	CC
53063	GELGW015L3	53063004	WG	VOA	SW8260	CHLOROETHANE	250	U	250	UJ	ug/L	CC
53063	GELGW015L3	53063004	WG	VOA	SW8260	CHLOROMETHANE	250	U	250	UJ	ug/L	CC
53777	009GW020L4	53777001	WG	VOA	SW8260	CHLOROBENZENE	12100	E	12100	R	ug/L	LR
53777	009GW020L4	53777001	WG	VOA	SW8260	Vinyl acetate	250	U	250	UJ	ug/L	CC
53777	009GW020L4LR	53777001	WG	VOA	SW8260	1,1,1-TRICHLOROETHANE	250	U	250	R	ug/L	DL
53777	009GW020L4LR	53777001	WG	VOA	SW8260	1,1,2,2-TETRACHLOROETHANE	250	U	250	R	ug/L	DL
53777	009GW020L4LR	53777001	WG	VOA	SW8260	1,1,2-TRICHLOROETHANE	250	U	250	R	ug/L	DL
53777	009GW020L4LR	53777001	WG	VOA	SW8260	1,1-DICHLOROETHANE	250	U	250	R	ug/L	DL
53777	009GW020L4LR	53777001	WG	VOA	SW8260	1,1-DICHLOROETHENE	250	U	250	R	ug/L	DL
53777	009GW020L4LR	53777001	WG	VOA	SW8260	1,2,3-Trichlorobenzene	250	U	250	R	ug/L	DL
53777	009GW020L4LR	53777001	WG	VOA	SW8260	1,2,4-TRICHLOROBENZENE	250	U	250	R	ug/L	DL
53777	009GW020L4LR	53777001	WG	VOA	SW8260	1,2-DICHLOROBENZENE	2690	D	2690	R	ug/L	DL
53777	009GW020L4LR	53777001	WG	VOA	SW8260	1,2-DICHLOROETHANE	250	U	250	R	ug/L	DL
53777	009GW020L4LR	53777001	WG	VOA	SW8260	1,2-Dichloroethene (total)	500	U	500	R	ug/L	DL
53777	009GW020L4LR	53777001	WG	VOA	SW8260	1,2-DICHLOROPROPANE	250	U	250	R	ug/L	DL
53777	009GW020L4LR	53777001	WG	VOA	SW8260	1,3-DICHLOROBENZENE	125	JD	125	R	ug/L	DL
53777	009GW020L4LR	53777001	WG	VOA	SW8260	1,4-DICHLOROBENZENE	364	BD	364	R	ug/L	DL
53777	009GW020L4LR	53777001	WG	VOA	SW8260	2-BUTANONE (MEK)	1250	U	1250	R	ug/L	DL
53777	009GW020L4LR	53777001	WG	VOA	SW8260	2-Chloroethyl vinyl ether	1250	U	1250	R	ug/L	DL
53777	009GW020L4LR	53777001	WG	VOA	SW8260	2-HEXANONE	1250	U	1250	R	ug/L	DL
53777	009GW020L4LR	53777001	WG	VOA	SW8260	4-METHYL-2-PENTANONE (MIBK)	1250	U	1250	R	ug/L	DL
53777	009GW020L4LR	53777001	WG	VOA	SW8260	ACETONE	1250	U	1250	R	ug/L	DL
53777	009GW020L4LR	53777001	WG	VOA	SW8260	BENZENE	250	U	250	R	ug/L	DL
53777	009GW020L4LR	53777001	WG	VOA	SW8260	BROMODICHLOROMETHANE	250	U	250	R	ug/L	DL
53777	009GW020L4LR	53777001	WG	VOA	SW8260	BROMOFORM	250	U	250	R	ug/L	DL
53777	009GW020L4LR	53777001	WG	VOA	SW8260	BROMOMETHANE	250	U	250	R	ug/L	DL
53777	009GW020L4LR	53777001	WG	VOA	SW8260	CARBON DISULFIDE	1250	U	1250	R	ug/L	DL
53777	009GW020L4LR	53777001	WG	VOA	SW8260	CARBON TETRACHLORIDE	250	U	250	R	ug/L	DL

SDG	Sample ID	Lab Sample ID	Matrix	Parameter Class	Analytical Method	Parameter	Lab Result	Lab Qual	Final Result	Final Qual	Units	Reasons
53777	009GW020L4LR	53777001	WG	VOA	SW8260	CHLOROETHANE	250	U	250	R	ug/L	DL
53777	009GW020L4LR	53777001	WG	VOA	SW8260	CHLOROFORM	250	U	250	R	ug/L	DL
53777	009GW020L4LR	53777001	WG	VOA	SW8260	CHLOROMETHANE	250	U	250	R	ug/L	DL
53777	009GW020L4LR	53777001	WG	VOA	SW8260	cis-1,2-DICHLOROETHYLENE	250	U	250	R	ug/L	DL
53777	009GW020L4LR	53777001	WG	VOA	SW8260	cis-1,3-DICHLOROPROPENE	250	U	250	R	ug/L	DL
53777	009GW020L4LR	53777001	WG	VOA	SW8260	DIBROMOCHLOROMETHANE	250	U	250	R	ug/L	DL
53777	009GW020L4LR	53777001	WG	VOA	SW8260	ETHYLBENZENE	250	U	250	R	ug/L	DL
53777	009GW020L4LR	53777001	WG	VOA	SW8260	m+p Xylene	500	U	500	R	ug/L	DL
53777	009GW020L4LR	53777001	WG	VOA	SW8260	METHYLENE CHLORIDE	1250	U	1250	R	ug/L	DL
53777	009GW020L4LR	53777001	WG	VOA	SW8260	o-Xylene	250	U	250	R	ug/L	DL
53777	009GW020L4LR	53777001	WG	VOA	SW8260	STYRENE	250	U	250	R	ug/L	DL
53777	009GW020L4LR	53777001	WG	VOA	SW8260	TETRACHLOROETHYLENE(PCE)	250	U	250	R	ug/L	DL
53777	009GW020L4LR	53777001	WG	VOA	SW8260	TOLUENE	250	U	250	R	ug/L	DL
53777	009GW020L4LR	53777001	WG	VOA	SW8260	trans-1,2-DICHLOROETHENE	250	U	250	R	ug/L	DL
53777	009GW020L4LR	53777001	WG	VOA	SW8260	trans-1,3-DICHLOROPROPENE	250	U	250	R	ug/L	DL
53777	009GW020L4LR	53777001	WG	VOA	SW8260	TRICHLOROETHYLENE (TCE)	250	U	250	R	ug/L	DL
53777	009GW020L4LR	53777001	WG	VOA	SW8260	Vinyl acetate	1250	U	1250	R	ug/L	DL
53777	009GW020L4LR	53777001	WG	VOA	SW8260	VINYL CHLORIDE	250	U	250	R	ug/L	DL
53777	009GW020L4LR	53777001	WG	VOA	SW8260	XYLENES, TOTAL	750	U	750	R	ug/L	DL
53777	009GW021L4	53777003	WG	VOA	SW8260	1,2-DICHLOROBENZENE	20400	E	20400	R	ug/L	LR
53777	009GW021L4	53777003	WG	VOA	SW8260	Vinyl acetate	250	U	250	UJ	ug/L	BS, CC
53777	009GW021L4LR	53777003	WG	VOA	SW8260	1,1,1-TRICHLOROETHANE	500	U	500	R	ug/L	DL
53777	009GW021L4LR	53777003	WG	VOA	SW8260	1,1,2,2-TETRACHLOROETHANE	500	U	500	R	ug/L	DL
53777	009GW021L4LR	53777003	WG	VOA	SW8260	1,1,2-TRICHLOROETHANE	500	U	500	R	ug/L	DL
53777	009GW021L4LR	53777003	WG	VOA	SW8260	1,1-DICHLOROETHANE	500	U	500	R	ug/L	DL
53777	009GW021L4LR	53777003	WG	VOA	SW8260	1,1-DICHLOROETHENE	500	U	500	R	ug/L	DL
53777	009GW021L4LR	53777003	WG	VOA	SW8260	1,2,3-Trichlorobenzene	500	U	500	R	ug/L	DL
53777	009GW021L4LR	53777003	WG	VOA	SW8260	1,2,4-TRICHLOROBENZENE	500	U	500	R	ug/L	DL
53777	009GW021L4LR	53777003	WG	VOA	SW8260	1,2-DICHLOROETHANE	500	U	500	R	ug/L	DL
53777	009GW021L4LR	53777003	WG	VOA	SW8260	1,2-Dichloroethene (total)	1000	U	1000	R	ug/L	DL
53777	009GW021L4LR	53777003	WG	VOA	SW8260	1,2-DICHLOROPROPANE	500	U	500	R	ug/L	DL
53777	009GW021L4LR	53777003	WG	VOA	SW8260	1,3-DICHLOROBENZENE	1560	D	1560	R	ug/L	DL
53777	009GW021L4LR	53777003	WG	VOA	SW8260	1,4-DICHLOROBENZENE	2970	BD	2970	R	ug/L	DL

Attachment 1 - Changed Qualifiers and Results
Zone H, SWMU 196 - Data Validation

SDG	Sample ID	Lab Sample ID	Matrix	Parameter Class	Analytical Method	Parameter	Lab Result	Lab Qual	Final Result	Final Qual	Units	Reasons
53777	009GW021L4LR	53777003	WG	VOA	SW8260	2-BUTANONE (MEK)	2500	U	2500	R	ug/L	DL
53777	009GW021L4LR	53777003	WG	VOA	SW8260	2-Chloroethyl vinyl ether	2500	U	2500	R	ug/L	DL
53777	009GW021L4LR	53777003	WG	VOA	SW8260	2-HEXANONE	2500	U	2500	R	ug/L	DL
53777	009GW021L4LR	53777003	WG	VOA	SW8260	4-METHYL-2-PENTANONE (MIBK)	2500	U	2500	R	ug/L	DL
53777	009GW021L4LR	53777003	WG	VOA	SW8260	ACETONE	2500	U	2500	R	ug/L	DL
53777	009GW021L4LR	53777003	WG	VOA	SW8260	BENZENE	500	U	500	R	ug/L	DL
53777	009GW021L4LR	53777003	WG	VOA	SW8260	BROMODICHLOROMETHANE	500	U	500	R	ug/L	DL
53777	009GW021L4LR	53777003	WG	VOA	SW8260	BROMOFORM	500	U	500	R	ug/L	DL
53777	009GW021L4LR	53777003	WG	VOA	SW8260	BROMOMETHANE	500	U	500	R	ug/L	DL
53777	009GW021L4LR	53777003	WG	VOA	SW8260	CARBON DISULFIDE	2500	U	2500	R	ug/L	DL
53777	009GW021L4LR	53777003	WG	VOA	SW8260	CARBON TETRACHLORIDE	500	U	500	R	ug/L	DL
53777	009GW021L4LR	53777003	WG	VOA	SW8260	CHLOROBENZENE	5220	D	5220	R	ug/L	DL
53777	009GW021L4LR	53777003	WG	VOA	SW8260	CHLOROETHANE	500	U	500	R	ug/L	DL
53777	009GW021L4LR	53777003	WG	VOA	SW8260	CHLOROFORM	500	U	500	R	ug/L	DL
53777	009GW021L4LR	53777003	WG	VOA	SW8260	CHLOROMETHANE	500	U	500	R	ug/L	DL
53777	009GW021L4LR	53777003	WG	VOA	SW8260	cis-1,2-DICHLOROETHYLENE	500	U	500	R	ug/L	DL
53777	009GW021L4LR	53777003	WG	VOA	SW8260	cis-1,3-DICHLOROPROPENE	500	U	500	R	ug/L	DL
53777	009GW021L4LR	53777003	WG	VOA	SW8260	DIBROMOCHLOROMETHANE	500	U	500	R	ug/L	DL
53777	009GW021L4LR	53777003	WG	VOA	SW8260	ETHYLBENZENE	500	U	500	R	ug/L	DL
53777	009GW021L4LR	53777003	WG	VOA	SW8260	m+p Xylene	1000	U	1000	R	ug/L	DL
53777	009GW021L4LR	53777003	WG	VOA	SW8260	METHYLENE CHLORIDE	2500	U	2500	R	ug/L	DL
53777	009GW021L4LR	53777003	WG	VOA	SW8260	o-Xylene	500	U	500	R	ug/L	DL
53777	009GW021L4LR	53777003	WG	VOA	SW8260	STYRENE	500	U	500	R	ug/L	DL
53777	009GW021L4LR	53777003	WG	VOA	SW8260	TETRACHLOROETHYLENE(PCE)	500	U	500	R	ug/L	DL
53777	009GW021L4LR	53777003	WG	VOA	SW8260	TOLUENE	88.2	JD	88.2	R	ug/L	DL
53777	009GW021L4LR	53777003	WG	VOA	SW8260	trans-1,2-DICHLOROETHENE	500	U	500	R	ug/L	DL
53777	009GW021L4LR	53777003	WG	VOA	SW8260	trans-1,3-DICHLOROPROPENE	500	U	500	R	ug/L	DL
53777	009GW021L4LR	53777003	WG	VOA	SW8260	TRICHLOROETHYLENE (TCE)	500	U	500	R	ug/L	DL
53777	009GW021L4LR	53777003	WG	VOA	SW8260	Vinyl acetate	2500	U	2500	R	ug/L	DL
53777	009GW021L4LR	53777003	WG	VOA	SW8260	VINYL CHLORIDE	500	U	500	R	ug/L	DL
53777	009GW021L4LR	53777003	WG	VOA	SW8260	XYLENES, TOTAL	1500	U	1500	R	ug/L	DL
53777	009GW022L4	53777004	WG	VOA	SW8260	1,2,3-Trichlorobenzene	1.2	B	1.2	U	ug/L	BL
53777	009GW022L4	53777004	WG	VOA	SW8260	1,2-DICHLOROBENZENE	671	E	671	R	ug/L	LR

SDG	Sample ID	Lab Sample ID	Matrix	Parameter Class	Analytical Method	Parameter	Lab Result	Lab Qual	Final Result	Final Qual	Units	Reasons
53777	009GW022L4	53777004	WG	VOA	SW8260	1,3-DICHLOROBENZENE	119	E	119	R	ug/L	LR
53777	009GW022L4	53777004	WG	VOA	SW8260	1,4-DICHLOROBENZENE	165	EB	165	R	ug/L	LR
53777	009GW022L4	53777004	WG	VOA	SW8260	ACETONE	4.6	JB	5	U	ug/L	BL
53777	009GW022L4	53777004	WG	VOA	SW8260	CHLOROBENZENE	232	E	232	R	ug/L	LR
53777	009GW022L4	53777004	WG	VOA	SW8260	Vinyl acetate	5	U	5	UJ	ug/L	BS, CC
53777	009GW022L4LR	53777004	WG	VOA	SW8260	1,1,1-TRICHLOROETHANE	50	U	50	R	ug/L	DL
53777	009GW022L4LR	53777004	WG	VOA	SW8260	1,1,2,2-TETRACHLOROETHANE	50	U	50	R	ug/L	DL
53777	009GW022L4LR	53777004	WG	VOA	SW8260	1,1,2-TRICHLOROETHANE	50	U	50	R	ug/L	DL
53777	009GW022L4LR	53777004	WG	VOA	SW8260	1,1-DICHLOROETHANE	50	U	50	R	ug/L	DL
53777	009GW022L4LR	53777004	WG	VOA	SW8260	1,1-DICHLOROETHENE	50	U	50	R	ug/L	DL
53777	009GW022L4LR	53777004	WG	VOA	SW8260	1,2,3-Trichlorobenzene	50	U	50	R	ug/L	DL
53777	009GW022L4LR	53777004	WG	VOA	SW8260	1,2,4-TRICHLOROBENZENE	50	U	50	R	ug/L	DL
53777	009GW022L4LR	53777004	WG	VOA	SW8260	1,2-DICHLOROETHANE	50	U	50	R	ug/L	DL
53777	009GW022L4LR	53777004	WG	VOA	SW8260	1,2-Dichloroethene (total)	23.9	JD	23.9	R	ug/L	DL
53777	009GW022L4LR	53777004	WG	VOA	SW8260	1,2-DICHLOROPROPANE	50	U	50	R	ug/L	DL
53777	009GW022L4LR	53777004	WG	VOA	SW8260	2-BUTANONE (MEK)	250	U	250	R	ug/L	DL
53777	009GW022L4LR	53777004	WG	VOA	SW8260	2-Chloroethyl vinyl ether	250	U	250	R	ug/L	DL
53777	009GW022L4LR	53777004	WG	VOA	SW8260	2-HEXANONE	250	U	250	R	ug/L	DL
53777	009GW022L4LR	53777004	WG	VOA	SW8260	4-METHYL-2-PENTANONE (MIBK)	250	U	250	R	ug/L	DL
53777	009GW022L4LR	53777004	WG	VOA	SW8260	ACETONE	250	U	250	R	ug/L	DL
53777	009GW022L4LR	53777004	WG	VOA	SW8260	BENZENE	50	U	50	R	ug/L	DL
53777	009GW022L4LR	53777004	WG	VOA	SW8260	BROMODICHLOROMETHANE	50	U	50	R	ug/L	DL
53777	009GW022L4LR	53777004	WG	VOA	SW8260	BROMOFORM	50	U	50	R	ug/L	DL
53777	009GW022L4LR	53777004	WG	VOA	SW8260	BROMOMETHANE	50	U	50	R	ug/L	DL
53777	009GW022L4LR	53777004	WG	VOA	SW8260	CARBON DISULFIDE	250	U	250	R	ug/L	DL
53777	009GW022L4LR	53777004	WG	VOA	SW8260	CARBON TETRACHLORIDE	50	U	50	R	ug/L	DL
53777	009GW022L4LR	53777004	WG	VOA	SW8260	CHLOROETHANE	50	U	50	R	ug/L	DL
53777	009GW022L4LR	53777004	WG	VOA	SW8260	CHLOROFORM	50	U	50	R	ug/L	DL
53777	009GW022L4LR	53777004	WG	VOA	SW8260	CHLOROMETHANE	50	U	50	R	ug/L	DL
53777	009GW022L4LR	53777004	WG	VOA	SW8260	cis-1,2-DICHLOROETHYLENE	23.9	JD	23.9	R	ug/L	DL
53777	009GW022L4LR	53777004	WG	VOA	SW8260	cis-1,3-DICHLOROPROPENE	50	U	50	R	ug/L	DL
53777	009GW022L4LR	53777004	WG	VOA	SW8260	DIBROMOCHLOROMETHANE	50	U	50	R	ug/L	DL
53777	009GW022L4LR	53777004	WG	VOA	SW8260	ETHYLBENZENE	50	U	50	R	ug/L	DL

Attachment 1 - Changed Qualifiers and Results
Zone H, SWMU 196 - Data Validation

SDG	Sample ID	Lab Sample ID	Matrix	Parameter Class	Analytical Method	Parameter	Lab Result	Lab Qual	Final Result	Final Qual	Units	Reasons
53777	009GW022L4LR	53777004	WG	VOA	SW8260	m+p Xylene	100	U	100	R	ug/L	DL
53777	009GW022L4LR	53777004	WG	VOA	SW8260	METHYLENE CHLORIDE	250	U	250	R	ug/L	DL
53777	009GW022L4LR	53777004	WG	VOA	SW8260	o-Xylene	50	U	50	R	ug/L	DL
53777	009GW022L4LR	53777004	WG	VOA	SW8260	STYRENE	50	U	50	R	ug/L	DL
53777	009GW022L4LR	53777004	WG	VOA	SW8260	TETRACHLOROETHYLENE(PCE)	50	U	50	R	ug/L	DL
53777	009GW022L4LR	53777004	WG	VOA	SW8260	TOLUENE	50	U	50	R	ug/L	DL
53777	009GW022L4LR	53777004	WG	VOA	SW8260	trans-1,2-DICHLOROETHENE	50	U	50	R	ug/L	DL
53777	009GW022L4LR	53777004	WG	VOA	SW8260	trans-1,3-DICHLOROPROPENE	50	U	50	R	ug/L	DL
53777	009GW022L4LR	53777004	WG	VOA	SW8260	TRICHLOROETHYLENE (TCE)	50	U	50	R	ug/L	DL
53777	009GW022L4LR	53777004	WG	VOA	SW8260	Vinyl acetate	250	U	250	R	ug/L	DL
53777	009GW022L4LR	53777004	WG	VOA	SW8260	VINYL CHLORIDE	50	U	50	R	ug/L	DL
53777	009GW022L4LR	53777004	WG	VOA	SW8260	XYLENES, TOTAL	150	U	150	R	ug/L	DL
53777	196GW004L4	53777006	WG	VOA	SW8260	1,2-DICHLOROBENZENE	10900	E	10900	R	ug/L	LR
53777	196GW004L4	53777006	WG	VOA	SW8260	CHLOROBENZENE	6040	E	6040	R	ug/L	LR
53777	196GW004L4	53777006	WG	VOA	SW8260	Vinyl acetate	250	U	250	UJ	ug/L	BS, CC
53777	196GW004L4LR	53777006	WG	VOA	SW8260	1,1,1-TRICHLOROETHANE	250	U	250	R	ug/L	DL
53777	196GW004L4LR	53777006	WG	VOA	SW8260	1,1,2,2-TETRACHLOROETHANE	250	U	250	R	ug/L	DL
53777	196GW004L4LR	53777006	WG	VOA	SW8260	1,1,2-TRICHLOROETHANE	250	U	250	R	ug/L	DL
53777	196GW004L4LR	53777006	WG	VOA	SW8260	1,1-DICHLOROETHANE	250	U	250	R	ug/L	DL
53777	196GW004L4LR	53777006	WG	VOA	SW8260	1,1-DICHLOROETHENE	250	U	250	R	ug/L	DL
53777	196GW004L4LR	53777006	WG	VOA	SW8260	1,2,3-Trichlorobenzene	250	U	250	R	ug/L	DL
53777	196GW004L4LR	53777006	WG	VOA	SW8260	1,2,4-TRICHLOROBENZENE	250	U	250	R	ug/L	DL
53777	196GW004L4LR	53777006	WG	VOA	SW8260	1,2-DICHLOROETHANE	250	U	250	R	ug/L	DL
53777	196GW004L4LR	53777006	WG	VOA	SW8260	1,2-Dichloroethene (total)	500	U	500	R	ug/L	DL
53777	196GW004L4LR	53777006	WG	VOA	SW8260	1,2-DICHLOROPROPANE	250	U	250	R	ug/L	DL
53777	196GW004L4LR	53777006	WG	VOA	SW8260	1,3-DICHLOROBENZENE	447	D	447	R	ug/L	DL
53777	196GW004L4LR	53777006	WG	VOA	SW8260	1,4-DICHLOROBENZENE	922	BD	922	R	ug/L	DL
53777	196GW004L4LR	53777006	WG	VOA	SW8260	2-BUTANONE (MEK)	1250	U	1250	R	ug/L	DL
53777	196GW004L4LR	53777006	WG	VOA	SW8260	2-Chloroethyl vinyl ether	1250	U	1250	R	ug/L	DL
53777	196GW004L4LR	53777006	WG	VOA	SW8260	2-HEXANONE	1250	U	1250	R	ug/L	DL
53777	196GW004L4LR	53777006	WG	VOA	SW8260	4-METHYL-2-PENTANONE (MIBK)	1250	U	1250	R	ug/L	DL
53777	196GW004L4LR	53777006	WG	VOA	SW8260	ACETONE	1250	U	1250	R	ug/L	DL
53777	196GW004L4LR	53777006	WG	VOA	SW8260	BENZENE	616	D	616	R	ug/L	DL

SDG	Sample ID	Lab Sample ID	Matrix	Parameter Class	Analytical Method	Parameter	Lab Result	Lab Qual	Final Result	Final Qual	Units	Reasons
53777	196GW004L4LR	53777006	WG	VOA	SW8260	BROMODICHLOROMETHANE	250	U	250	R	ug/L	DL
53777	196GW004L4LR	53777006	WG	VOA	SW8260	BROMOFORM	250	U	250	R	ug/L	DL
53777	196GW004L4LR	53777006	WG	VOA	SW8260	BROMOMETHANE	250	U	250	R	ug/L	DL
53777	196GW004L4LR	53777006	WG	VOA	SW8260	CARBON DISULFIDE	1250	U	1250	R	ug/L	DL
53777	196GW004L4LR	53777006	WG	VOA	SW8260	CARBON TETRACHLORIDE	250	U	250	R	ug/L	DL
53777	196GW004L4LR	53777006	WG	VOA	SW8260	CHLOROETHANE	250	U	250	R	ug/L	DL
53777	196GW004L4LR	53777006	WG	VOA	SW8260	CHLOROFORM	250	U	250	R	ug/L	DL
53777	196GW004L4LR	53777006	WG	VOA	SW8260	CHLOROMETHANE	250	U	250	R	ug/L	DL
53777	196GW004L4LR	53777006	WG	VOA	SW8260	cis-1,2-DICHLOROETHYLENE	250	U	250	R	ug/L	DL
53777	196GW004L4LR	53777006	WG	VOA	SW8260	cis-1,3-DICHLOROPROPENE	250	U	250	R	ug/L	DL
53777	196GW004L4LR	53777006	WG	VOA	SW8260	DIBROMOCHLOROMETHANE	250	U	250	R	ug/L	DL
53777	196GW004L4LR	53777006	WG	VOA	SW8260	ETHYLBENZENE	250	U	250	R	ug/L	DL
53777	196GW004L4LR	53777006	WG	VOA	SW8260	m+p Xylene	500	U	500	R	ug/L	DL
53777	196GW004L4LR	53777006	WG	VOA	SW8260	METHYLENE CHLORIDE	1250	U	1250	R	ug/L	DL
53777	196GW004L4LR	53777006	WG	VOA	SW8260	o-Xylene	250	U	250	R	ug/L	DL
53777	196GW004L4LR	53777006	WG	VOA	SW8260	STYRENE	250	U	250	R	ug/L	DL
53777	196GW004L4LR	53777006	WG	VOA	SW8260	TETRACHLOROETHYLENE(PCE)	198	JD	198	R	ug/L	DL
53777	196GW004L4LR	53777006	WG	VOA	SW8260	TOLUENE	514	D	514	R	ug/L	DL
53777	196GW004L4LR	53777006	WG	VOA	SW8260	trans-1,2-DICHLOROETHENE	250	U	250	R	ug/L	DL
53777	196GW004L4LR	53777006	WG	VOA	SW8260	trans-1,3-DICHLOROPROPENE	250	U	250	R	ug/L	DL
53777	196GW004L4LR	53777006	WG	VOA	SW8260	TRICHLOROETHYLENE (TCE)	250	U	250	R	ug/L	DL
53777	196GW004L4LR	53777006	WG	VOA	SW8260	Vinyl acetate	1250	U	1250	R	ug/L	DL
53777	196GW004L4LR	53777006	WG	VOA	SW8260	VINYL CHLORIDE	250	U	250	R	ug/L	DL
53777	196GW004L4LR	53777006	WG	VOA	SW8260	XYLENES, TOTAL	750	U	750	R	ug/L	DL
53777	196GW005L4	53777008	WG	VOA	SW8260	1,2-DICHLOROBENZENE	3540	E	3540	R	ug/L	LR
53777	196GW005L4	53777008	WG	VOA	SW8260	ACETONE	61.3	B	61.3	U	ug/L	BL
53777	196GW005L4	53777008	WG	VOA	SW8260	Vinyl acetate	50	U	50	UJ	ug/L	BS, CC
53777	196GW005L4LR	53777008	WG	VOA	SW8260	1,1,1-TRICHLOROETHANE	100	U	100	R	ug/L	DL
53777	196GW005L4LR	53777008	WG	VOA	SW8260	1,1,2,2-TETRACHLOROETHANE	100	U	100	R	ug/L	DL
53777	196GW005L4LR	53777008	WG	VOA	SW8260	1,1,2-TRICHLOROETHANE	100	U	100	R	ug/L	DL
53777	196GW005L4LR	53777008	WG	VOA	SW8260	1,1-DICHLOROETHANE	100	U	100	R	ug/L	DL
53777	196GW005L4LR	53777008	WG	VOA	SW8260	1,1-DICHLOROETHENE	100	U	100	R	ug/L	DL
53777	196GW005L4LR	53777008	WG	VOA	SW8260	1,2,3-Trichlorobenzene	100	U	100	R	ug/L	DL

Attachment 1 - Changed Qualifiers and Results
Zone H, SWMU 196 - Data Validation

SDG	Sample ID	Lab Sample ID	Matrix	Parameter Class	Analytical Method	Parameter	Lab Result	Lab Qual	Final Result	Final Qual	Units	Reasons
53777	196GW005L4LR	53777008	WG	VOA	SW8260	1,2,4-TRICHLOROBENZENE	100	U	100	R	ug/L	DL
53777	196GW005L4LR	53777008	WG	VOA	SW8260	1,2-DICHLOROETHANE	100	U	100	R	ug/L	DL
53777	196GW005L4LR	53777008	WG	VOA	SW8260	1,2-Dichloroethene (total)	200	U	200	R	ug/L	DL
53777	196GW005L4LR	53777008	WG	VOA	SW8260	1,2-DICHLOROPROPANE	100	U	100	R	ug/L	DL
53777	196GW005L4LR	53777008	WG	VOA	SW8260	1,3-DICHLOROBENZENE	67	J	67	R	ug/L	DL
53777	196GW005L4LR	53777008	WG	VOA	SW8260	1,4-DICHLOROBENZENE	185	=	185	R	ug/L	DL
53777	196GW005L4LR	53777008	WG	VOA	SW8260	2-BUTANONE (MEK)	500	U	500	R	ug/L	DL
53777	196GW005L4LR	53777008	WG	VOA	SW8260	2-Chloroethyl vinyl ether	500	U	500	R	ug/L	DL
53777	196GW005L4LR	53777008	WG	VOA	SW8260	2-HEXANONE	500	U	500	R	ug/L	DL
53777	196GW005L4LR	53777008	WG	VOA	SW8260	4-METHYL-2-PENTANONE (MIBK)	500	U	500	R	ug/L	DL
53777	196GW005L4LR	53777008	WG	VOA	SW8260	ACETONE	500	U	500	R	ug/L	DL
53777	196GW005L4LR	53777008	WG	VOA	SW8260	BENZENE	100	U	100	R	ug/L	DL
53777	196GW005L4LR	53777008	WG	VOA	SW8260	BROMODICHLOROMETHANE	100	U	100	R	ug/L	DL
53777	196GW005L4LR	53777008	WG	VOA	SW8260	BROMOFORM	100	U	100	R	ug/L	DL
53777	196GW005L4LR	53777008	WG	VOA	SW8260	BROMOMETHANE	100	U	100	R	ug/L	DL
53777	196GW005L4LR	53777008	WG	VOA	SW8260	CARBON DISULFIDE	500	U	500	R	ug/L	DL
53777	196GW005L4LR	53777008	WG	VOA	SW8260	CARBON TETRACHLORIDE	100	U	100	R	ug/L	DL
53777	196GW005L4LR	53777008	WG	VOA	SW8260	CHLOROBENZENE	163	B	163	R	ug/L	DL
53777	196GW005L4LR	53777008	WG	VOA	SW8260	CHLOROETHANE	100	U	100	R	ug/L	DL
53777	196GW005L4LR	53777008	WG	VOA	SW8260	CHLOROFORM	100	U	100	R	ug/L	DL
53777	196GW005L4LR	53777008	WG	VOA	SW8260	CHLOROMETHANE	100	U	100	R	ug/L	DL
53777	196GW005L4LR	53777008	WG	VOA	SW8260	cis-1,2-DICHLOROETHYLENE	100	U	100	R	ug/L	DL
53777	196GW005L4LR	53777008	WG	VOA	SW8260	cis-1,3-DICHLOROPROPENE	100	U	100	R	ug/L	DL
53777	196GW005L4LR	53777008	WG	VOA	SW8260	DIBROMOCHLOROMETHANE	100	U	100	R	ug/L	DL
53777	196GW005L4LR	53777008	WG	VOA	SW8260	ETHYLBENZENE	100	U	100	R	ug/L	DL
53777	196GW005L4LR	53777008	WG	VOA	SW8260	m+p Xylene	200	U	200	R	ug/L	DL
53777	196GW005L4LR	53777008	WG	VOA	SW8260	METHYLENE CHLORIDE	500	U	500	R	ug/L	DL
53777	196GW005L4LR	53777008	WG	VOA	SW8260	o-Xylene	100	U	100	R	ug/L	DL
53777	196GW005L4LR	53777008	WG	VOA	SW8260	STYRENE	100	U	100	R	ug/L	DL
53777	196GW005L4LR	53777008	WG	VOA	SW8260	TETRACHLOROETHYLENE(PCE)	100	U	100	R	ug/L	DL
53777	196GW005L4LR	53777008	WG	VOA	SW8260	TOLUENE	100	U	100	R	ug/L	DL
53777	196GW005L4LR	53777008	WG	VOA	SW8260	trans-1,2-DICHLOROETHENE	100	U	100	R	ug/L	DL
53777	196GW005L4LR	53777008	WG	VOA	SW8260	trans-1,3-DICHLOROPROPENE	100	U	100	R	ug/L	DL

SDG	Sample ID	Lab Sample ID	Matrix	Parameter Class	Analytical Method	Parameter	Lab Result	Lab Qual	Final Result	Final Qual	Units	Reasons
53777	196GW005L4LR	53777008	WG	VOA	SW8260	TRICHLOROETHYLENE (TCE)	100	U	100	R	ug/L	DL
53777	196GW005L4LR	53777008	WG	VOA	SW8260	Vinyl acetate	500	U	500	R	ug/L	DL
53777	196GW005L4LR	53777008	WG	VOA	SW8260	VINYL CHLORIDE	100	U	100	R	ug/L	DL
53777	196GW005L4LR	53777008	WG	VOA	SW8260	XYLENES, TOTAL	300	U	300	R	ug/L	DL
53777	196GW006L4	53777002	WG	VOA	SW8260	Vinyl acetate	250	U	250	UJ	ug/L	BS, CC
53777	196GW007L4	53777009	WG	VOA	SW8260	1,2-DICHLOROBENZENE	3540	E	3540	R	ug/L	LR
53777	196GW007L4	53777009	WG	VOA	SW8260	ACETONE	79.4	B	79.4	U	ug/L	BL
53777	196GW007L4	53777009	WG	VOA	SW8260	CHLOROBENZENE	4780	E	4780	R	ug/L	LR
53777	196GW007L4	53777009	WG	VOA	SW8260	Vinyl acetate	50	U	50	UJ	ug/L	BS, CC
53777	196GW007L4LR	53777009	WG	VOA	SW8260	1,1,1-TRICHLOROETHANE	100	U	100	R	ug/L	DL
53777	196GW007L4LR	53777009	WG	VOA	SW8260	1,1,2,2-TETRACHLOROETHANE	100	U	100	R	ug/L	DL
53777	196GW007L4LR	53777009	WG	VOA	SW8260	1,1,2-TRICHLOROETHANE	100	U	100	R	ug/L	DL
53777	196GW007L4LR	53777009	WG	VOA	SW8260	1,1-DICHLOROETHANE	100	U	100	R	ug/L	DL
53777	196GW007L4LR	53777009	WG	VOA	SW8260	1,1-DICHLOROETHENE	100	U	100	R	ug/L	DL
53777	196GW007L4LR	53777009	WG	VOA	SW8260	1,2,3-Trichlorobenzene	100	U	100	R	ug/L	DL
53777	196GW007L4LR	53777009	WG	VOA	SW8260	1,2,4-TRICHLOROBENZENE	100	U	100	R	ug/L	DL
53777	196GW007L4LR	53777009	WG	VOA	SW8260	1,2-DICHLOROETHANE	100	U	100	R	ug/L	DL
53777	196GW007L4LR	53777009	WG	VOA	SW8260	1,2-Dichloroethene (total)	200	U	200	R	ug/L	DL
53777	196GW007L4LR	53777009	WG	VOA	SW8260	1,2-DICHLOROPROPANE	100	U	100	R	ug/L	DL
53777	196GW007L4LR	53777009	WG	VOA	SW8260	1,3-DICHLOROBENZENE	77	J	77	R	ug/L	DL
53777	196GW007L4LR	53777009	WG	VOA	SW8260	1,4-DICHLOROBENZENE	256	=	256	R	ug/L	DL
53777	196GW007L4LR	53777009	WG	VOA	SW8260	2-BUTANONE (MEK)	500	U	500	R	ug/L	DL
53777	196GW007L4LR	53777009	WG	VOA	SW8260	2-Chloroethyl vinyl ether	500	U	500	R	ug/L	DL
53777	196GW007L4LR	53777009	WG	VOA	SW8260	2-HEXANONE	500	U	500	R	ug/L	DL
53777	196GW007L4LR	53777009	WG	VOA	SW8260	4-METHYL-2-PENTANONE (MIBK)	500	U	500	R	ug/L	DL
53777	196GW007L4LR	53777009	WG	VOA	SW8260	ACETONE	500	U	500	R	ug/L	DL
53777	196GW007L4LR	53777009	WG	VOA	SW8260	BENZENE	34	J	34	R	ug/L	DL
53777	196GW007L4LR	53777009	WG	VOA	SW8260	BROMODICHLOROMETHANE	100	U	100	R	ug/L	DL
53777	196GW007L4LR	53777009	WG	VOA	SW8260	BROMOFORM	100	U	100	R	ug/L	DL
53777	196GW007L4LR	53777009	WG	VOA	SW8260	BROMOMETHANE	100	U	100	R	ug/L	DL
53777	196GW007L4LR	53777009	WG	VOA	SW8260	CARBON DISULFIDE	500	U	500	R	ug/L	DL
53777	196GW007L4LR	53777009	WG	VOA	SW8260	CARBON TETRACHLORIDE	100	U	100	R	ug/L	DL
53777	196GW007L4LR	53777009	WG	VOA	SW8260	CHLOROETHANE	100	U	100	R	ug/L	DL

Attachment 1 - Changed Qualifiers and Results
Zone H, SWMU 196 - Data Validation

SDG	Sample ID	Lab Sample ID	Matrix	Parameter Class	Analytical Method	Parameter	Lab Result	Lab Qual	Final Result	Final Qual	Units	Reasons
53777	196GW007L4LR	53777009	WG	VOA	SW8260	CHLOROFORM	100	U	100	R	ug/L	DL
53777	196GW007L4LR	53777009	WG	VOA	SW8260	CHLOROMETHANE	100	U	100	R	ug/L	DL
53777	196GW007L4LR	53777009	WG	VOA	SW8260	cis-1,2-DICHLOROETHYLENE	100	U	100	R	ug/L	DL
53777	196GW007L4LR	53777009	WG	VOA	SW8260	cis-1,3-DICHLOROPROPENE	100	U	100	R	ug/L	DL
53777	196GW007L4LR	53777009	WG	VOA	SW8260	DIBROMOCHLOROMETHANE	100	U	100	R	ug/L	DL
53777	196GW007L4LR	53777009	WG	VOA	SW8260	ETHYLBENZENE	100	U	100	R	ug/L	DL
53777	196GW007L4LR	53777009	WG	VOA	SW8260	m+p Xylene	200	U	200	R	ug/L	DL
53777	196GW007L4LR	53777009	WG	VOA	SW8260	METHYLENE CHLORIDE	500	U	500	R	ug/L	DL
53777	196GW007L4LR	53777009	WG	VOA	SW8260	o-Xylene	100	U	100	R	ug/L	DL
53777	196GW007L4LR	53777009	WG	VOA	SW8260	STYRENE	100	U	100	R	ug/L	DL
53777	196GW007L4LR	53777009	WG	VOA	SW8260	TETRACHLOROETHYLENE(PCE)	100	U	100	R	ug/L	DL
53777	196GW007L4LR	53777009	WG	VOA	SW8260	TOLUENE	100	U	100	R	ug/L	DL
53777	196GW007L4LR	53777009	WG	VOA	SW8260	trans-1,2-DICHLOROETHENE	100	U	100	R	ug/L	DL
53777	196GW007L4LR	53777009	WG	VOA	SW8260	trans-1,3-DICHLOROPROPENE	100	U	100	R	ug/L	DL
53777	196GW007L4LR	53777009	WG	VOA	SW8260	TRICHLOROETHYLENE (TCE)	100	U	100	R	ug/L	DL
53777	196GW007L4LR	53777009	WG	VOA	SW8260	Vinyl acetate	500	U	500	R	ug/L	DL
53777	196GW007L4LR	53777009	WG	VOA	SW8260	VINYL CHLORIDE	100	U	100	R	ug/L	DL
53777	196GW007L4LR	53777009	WG	VOA	SW8260	XYLENES, TOTAL	300	U	300	R	ug/L	DL
53777	196GW008L4	53777010	WG	VOA	SW8260	1,2-DICHLOROBENZENE	5500	E	5500	R	ug/L	LR
53777	196GW008L4	53777010	WG	VOA	SW8260	1,4-DICHLOROBENZENE	1340	EB	1340	R	ug/L	LR
53777	196GW008L4	53777010	WG	VOA	SW8260	ACETONE	74	B	74	U	ug/L	BL
53777	196GW008L4	53777010	WG	VOA	SW8260	CHLOROBENZENE	3630	E	3630	R	ug/L	LR
53777	196GW008L4	53777010	WG	VOA	SW8260	Vinyl acetate	50	U	50	UJ	ug/L	BS, CC
53777	196GW008L4LR	53777010	WG	VOA	SW8260	1,1,1-TRICHLOROETHANE	200	U	200	R	ug/L	DL
53777	196GW008L4LR	53777010	WG	VOA	SW8260	1,1,2,2-TETRACHLOROETHANE	200	U	200	R	ug/L	DL
53777	196GW008L4LR	53777010	WG	VOA	SW8260	1,1,2-TRICHLOROETHANE	200	U	200	R	ug/L	DL
53777	196GW008L4LR	53777010	WG	VOA	SW8260	1,1-DICHLOROETHANE	200	U	200	R	ug/L	DL
53777	196GW008L4LR	53777010	WG	VOA	SW8260	1,1-DICHLOROETHENE	200	U	200	R	ug/L	DL
53777	196GW008L4LR	53777010	WG	VOA	SW8260	1,2,3-Trichlorobenzene	200	U	200	R	ug/L	DL
53777	196GW008L4LR	53777010	WG	VOA	SW8260	1,2,4-TRICHLOROBENZENE	200	U	200	R	ug/L	DL
53777	196GW008L4LR	53777010	WG	VOA	SW8260	1,2-DICHLOROETHANE	200	U	200	R	ug/L	DL
53777	196GW008L4LR	53777010	WG	VOA	SW8260	1,2-Dichloroethene (total)	400	U	400	R	ug/L	DL
53777	196GW008L4LR	53777010	WG	VOA	SW8260	1,2-DICHLOROPROPANE	200	U	200	R	ug/L	DL

SDG	Sample ID	Lab Sample ID	Matrix	Parameter Class	Analytical Method	Parameter	Lab Result	Lab Qual	Final Result	Final Qual	Units	Reasons
53777	196GW008L4LR	53777010	WG	VOA	SW8260	1,3-DICHLOROBENZENE	845	=	845	R	ug/L	DL
53777	196GW008L4LR	53777010	WG	VOA	SW8260	2-BUTANONE (MEK)	1000	U	1000	R	ug/L	DL
53777	196GW008L4LR	53777010	WG	VOA	SW8260	2-Chloroethyl vinyl ether	1000	U	1000	R	ug/L	DL
53777	196GW008L4LR	53777010	WG	VOA	SW8260	2-HEXANONE	1000	U	1000	R	ug/L	DL
53777	196GW008L4LR	53777010	WG	VOA	SW8260	4-METHYL-2-PENTANONE (MIBK)	1000	U	1000	R	ug/L	DL
53777	196GW008L4LR	53777010	WG	VOA	SW8260	ACETONE	1000	U	1000	R	ug/L	DL
53777	196GW008L4LR	53777010	WG	VOA	SW8260	BENZENE	200	U	200	R	ug/L	DL
53777	196GW008L4LR	53777010	WG	VOA	SW8260	BROMODICHLOROMETHANE	200	U	200	R	ug/L	DL
53777	196GW008L4LR	53777010	WG	VOA	SW8260	BROMOFORM	200	U	200	R	ug/L	DL
53777	196GW008L4LR	53777010	WG	VOA	SW8260	BROMOMETHANE	200	U	200	R	ug/L	DL
53777	196GW008L4LR	53777010	WG	VOA	SW8260	CARBON DISULFIDE	1000	U	1000	R	ug/L	DL
53777	196GW008L4LR	53777010	WG	VOA	SW8260	CARBON TETRACHLORIDE	200	U	200	R	ug/L	DL
53777	196GW008L4LR	53777010	WG	VOA	SW8260	CHLOROETHANE	200	U	200	R	ug/L	DL
53777	196GW008L4LR	53777010	WG	VOA	SW8260	CHLOROFORM	200	U	200	R	ug/L	DL
53777	196GW008L4LR	53777010	WG	VOA	SW8260	CHLOROMETHANE	200	U	200	R	ug/L	DL
53777	196GW008L4LR	53777010	WG	VOA	SW8260	cis-1,2-DICHLOROETHYLENE	200	U	200	R	ug/L	DL
53777	196GW008L4LR	53777010	WG	VOA	SW8260	cis-1,3-DICHLOROPROPENE	200	U	200	R	ug/L	DL
53777	196GW008L4LR	53777010	WG	VOA	SW8260	DIBROMOCHLOROMETHANE	200	U	200	R	ug/L	DL
53777	196GW008L4LR	53777010	WG	VOA	SW8260	ETHYLBENZENE	200	U	200	R	ug/L	DL
53777	196GW008L4LR	53777010	WG	VOA	SW8260	m+p Xylene	400	U	400	R	ug/L	DL
53777	196GW008L4LR	53777010	WG	VOA	SW8260	METHYLENE CHLORIDE	1000	U	1000	R	ug/L	DL
53777	196GW008L4LR	53777010	WG	VOA	SW8260	o-Xylene	200	U	200	R	ug/L	DL
53777	196GW008L4LR	53777010	WG	VOA	SW8260	STYRENE	200	U	200	R	ug/L	DL
53777	196GW008L4LR	53777010	WG	VOA	SW8260	TETRACHLOROETHYLENE(PCE)	200	U	200	R	ug/L	DL
53777	196GW008L4LR	53777010	WG	VOA	SW8260	TOLUENE	35	J	35	R	ug/L	DL
53777	196GW008L4LR	53777010	WG	VOA	SW8260	trans-1,2-DICHLOROETHENE	200	U	200	R	ug/L	DL
53777	196GW008L4LR	53777010	WG	VOA	SW8260	trans-1,3-DICHLOROPROPENE	200	U	200	R	ug/L	DL
53777	196GW008L4LR	53777010	WG	VOA	SW8260	TRICHLOROETHYLENE (TCE)	200	U	200	R	ug/L	DL
53777	196GW008L4LR	53777010	WG	VOA	SW8260	Vinyl acetate	1000	U	1000	R	ug/L	DL
53777	196GW008L4LR	53777010	WG	VOA	SW8260	VINYL CHLORIDE	200	U	200	R	ug/L	DL
53777	196GW008L4LR	53777010	WG	VOA	SW8260	XYLENES, TOTAL	600	U	600	R	ug/L	DL
53777	196GW009L4	53777011	WG	VOA	SW8260	1,2-DICHLOROBENZENE	6230	E	6230	R	ug/L	LR
53777	196GW009L4	53777011	WG	VOA	SW8260	1,3-DICHLOROBENZENE	1130	E	1130	R	ug/L	LR

Attachment 1 - Changed Qualifiers and Results
Zone H, SWMU 196 - Data Validation

SDG	Sample ID	Lab Sample ID	Matrix	Parameter Class	Analytical Method	Parameter	Lab Result	Lab Qual	Final Result	Final Qual	Units	Reasons
53777	196GW009L4	53777011	WG	VOA	SW8260	1,4-DICHLOROBENZENE	1710	EB	1710	R	ug/L	LR
53777	196GW009L4	53777011	WG	VOA	SW8260	ACETONE	57	B	57	U	ug/L	BL
53777	196GW009L4	53777011	WG	VOA	SW8260	CHLOROBENZENE	2390	E	2390	R	ug/L	LR
53777	196GW009L4	53777011	WG	VOA	SW8260	Vinyl acetate	50	U	50	UJ	ug/L	BS, CC
53777	196GW009L4LR	53777011	WG	VOA	SW8260	1,1,1-TRICHLOROETHANE	500	U	500	R	ug/L	DL
53777	196GW009L4LR	53777011	WG	VOA	SW8260	1,1,2,2-TETRACHLOROETHANE	500	U	500	R	ug/L	DL
53777	196GW009L4LR	53777011	WG	VOA	SW8260	1,1,2-TRICHLOROETHANE	500	U	500	R	ug/L	DL
53777	196GW009L4LR	53777011	WG	VOA	SW8260	1,1-DICHLOROETHANE	500	U	500	R	ug/L	DL
53777	196GW009L4LR	53777011	WG	VOA	SW8260	1,1-DICHLOROETHENE	500	U	500	R	ug/L	DL
53777	196GW009L4LR	53777011	WG	VOA	SW8260	1,2,3-Trichlorobenzene	500	U	500	R	ug/L	DL
53777	196GW009L4LR	53777011	WG	VOA	SW8260	1,2,4-TRICHLOROBENZENE	500	U	500	R	ug/L	DL
53777	196GW009L4LR	53777011	WG	VOA	SW8260	1,2-DICHLOROETHANE	500	U	500	R	ug/L	DL
53777	196GW009L4LR	53777011	WG	VOA	SW8260	1,2-Dichloroethene (total)	1000	U	1000	R	ug/L	DL
53777	196GW009L4LR	53777011	WG	VOA	SW8260	1,2-DICHLOROPROPANE	500	U	500	R	ug/L	DL
53777	196GW009L4LR	53777011	WG	VOA	SW8260	2-BUTANONE (MEK)	2500	U	2500	R	ug/L	DL
53777	196GW009L4LR	53777011	WG	VOA	SW8260	2-Chloroethyl vinyl ether	2500	U	2500	R	ug/L	DL
53777	196GW009L4LR	53777011	WG	VOA	SW8260	2-HEXANONE	2500	U	2500	R	ug/L	DL
53777	196GW009L4LR	53777011	WG	VOA	SW8260	4-METHYL-2-PENTANONE (MIBK)	2500	U	2500	R	ug/L	DL
53777	196GW009L4LR	53777011	WG	VOA	SW8260	ACETONE	2500	U	2500	R	ug/L	DL
53777	196GW009L4LR	53777011	WG	VOA	SW8260	BENZENE	414	J	414	R	ug/L	DL
53777	196GW009L4LR	53777011	WG	VOA	SW8260	BROMODICHLOROMETHANE	500	U	500	R	ug/L	DL
53777	196GW009L4LR	53777011	WG	VOA	SW8260	BROMOFORM	500	U	500	R	ug/L	DL
53777	196GW009L4LR	53777011	WG	VOA	SW8260	BROMOMETHANE	500	U	500	R	ug/L	DL
53777	196GW009L4LR	53777011	WG	VOA	SW8260	CARBON DISULFIDE	2500	U	2500	R	ug/L	DL
53777	196GW009L4LR	53777011	WG	VOA	SW8260	CARBON TETRACHLORIDE	500	U	500	R	ug/L	DL
53777	196GW009L4LR	53777011	WG	VOA	SW8260	CHLOROETHANE	500	U	500	R	ug/L	DL
53777	196GW009L4LR	53777011	WG	VOA	SW8260	CHLOROFORM	500	U	500	R	ug/L	DL
53777	196GW009L4LR	53777011	WG	VOA	SW8260	CHLOROMETHANE	500	U	500	R	ug/L	DL
53777	196GW009L4LR	53777011	WG	VOA	SW8260	cis-1,2-DICHLOROETHYLENE	500	U	500	R	ug/L	DL
53777	196GW009L4LR	53777011	WG	VOA	SW8260	cis-1,3-DICHLOROPROPENE	500	U	500	R	ug/L	DL
53777	196GW009L4LR	53777011	WG	VOA	SW8260	DIBROMOCHLOROMETHANE	500	U	500	R	ug/L	DL
53777	196GW009L4LR	53777011	WG	VOA	SW8260	ETHYLBENZENE	500	U	500	R	ug/L	DL
53777	196GW009L4LR	53777011	WG	VOA	SW8260	m+p Xylene	1000	U	1000	R	ug/L	DL

SDG	Sample ID	Lab Sample ID	Matrix	Parameter Class	Analytical Method	Parameter	Lab Result	Lab Qual	Final Result	Final Qual	Units	Reasons
53777	196GW009L4LR	53777011	WG	VOA	SW8260	METHYLENE CHLORIDE	2500	U	2500	R	ug/L	DL
53777	196GW009L4LR	53777011	WG	VOA	SW8260	o-Xylene	500	U	500	R	ug/L	DL
53777	196GW009L4LR	53777011	WG	VOA	SW8260	STYRENE	500	U	500	R	ug/L	DL
53777	196GW009L4LR	53777011	WG	VOA	SW8260	TETRACHLOROETHYLENE(PCE)	305	J	305	R	ug/L	DL
53777	196GW009L4LR	53777011	WG	VOA	SW8260	TOLUENE	443	J	443	R	ug/L	DL
53777	196GW009L4LR	53777011	WG	VOA	SW8260	trans-1,2-DICHLOROETHENE	500	U	500	R	ug/L	DL
53777	196GW009L4LR	53777011	WG	VOA	SW8260	trans-1,3-DICHLOROPROPENE	500	U	500	R	ug/L	DL
53777	196GW009L4LR	53777011	WG	VOA	SW8260	TRICHLOROETHYLENE (TCE)	500	U	500	R	ug/L	DL
53777	196GW009L4LR	53777011	WG	VOA	SW8260	Vinyl acetate	2500	U	2500	R	ug/L	DL
53777	196GW009L4LR	53777011	WG	VOA	SW8260	VINYL CHLORIDE	500	U	500	R	ug/L	DL
53777	196GW009L4LR	53777011	WG	VOA	SW8260	XYLENES, TOTAL	1500	U	1500	R	ug/L	DL
53777	196GW010L4	53777012	WG	VOA	SW8260	1,2,4-TRICHLOROBENZENE	0.97	J	1	U	ug/L	BL
53777	196GW010L4	53777012	WG	VOA	SW8260	1,2-DICHLOROBENZENE	462	E	462	R	ug/L	LR
53777	196GW010L4	53777012	WG	VOA	SW8260	ACETONE	3.8	JB	5	U	ug/L	BL
53777	196GW010L4	53777012	WG	VOA	SW8260	CHLOROBENZENE	624	E	624	R	ug/L	LR
53777	196GW010L4	53777012	WG	VOA	SW8260	Vinyl acetate	5	U	5	UJ	ug/L	BS, CC
53777	196GW010L4LR	53777012	WG	VOA	SW8260	1,1,1-TRICHLOROETHANE	100	U	100	R	ug/L	DL
53777	196GW010L4LR	53777012	WG	VOA	SW8260	1,1,2,2-TETRACHLOROETHANE	100	U	100	R	ug/L	DL
53777	196GW010L4LR	53777012	WG	VOA	SW8260	1,1,2-TRICHLOROETHANE	100	U	100	R	ug/L	DL
53777	196GW010L4LR	53777012	WG	VOA	SW8260	1,1-DICHLOROETHANE	100	U	100	R	ug/L	DL
53777	196GW010L4LR	53777012	WG	VOA	SW8260	1,1-DICHLOROETHENE	100	U	100	R	ug/L	DL
53777	196GW010L4LR	53777012	WG	VOA	SW8260	1,2,3-Trichlorobenzene	100	U	100	R	ug/L	DL
53777	196GW010L4LR	53777012	WG	VOA	SW8260	1,2,4-TRICHLOROBENZENE	100	U	100	R	ug/L	DL
53777	196GW010L4LR	53777012	WG	VOA	SW8260	1,2-DICHLOROETHANE	100	U	100	R	ug/L	DL
53777	196GW010L4LR	53777012	WG	VOA	SW8260	1,2-Dichloroethene (total)	200	U	200	R	ug/L	DL
53777	196GW010L4LR	53777012	WG	VOA	SW8260	1,2-DICHLOROPROPANE	100	U	100	R	ug/L	DL
53777	196GW010L4LR	53777012	WG	VOA	SW8260	1,3-DICHLOROBENZENE	78.4	J	78.4	R	ug/L	DL
53777	196GW010L4LR	53777012	WG	VOA	SW8260	1,4-DICHLOROBENZENE	209	B	209	R	ug/L	DL
53777	196GW010L4LR	53777012	WG	VOA	SW8260	2-BUTANONE (MEK)	500	U	500	R	ug/L	DL
53777	196GW010L4LR	53777012	WG	VOA	SW8260	2-Chloroethyl vinyl ether	500	U	500	R	ug/L	DL
53777	196GW010L4LR	53777012	WG	VOA	SW8260	2-HEXANONE	500	U	500	R	ug/L	DL
53777	196GW010L4LR	53777012	WG	VOA	SW8260	4-METHYL-2-PENTANONE (MIBK)	500	U	500	R	ug/L	DL
53777	196GW010L4LR	53777012	WG	VOA	SW8260	ACETONE	500	U	500	R	ug/L	DL

Attachment 1 - Changed Qualifiers and Results
Zone H, SWMU 196 - Data Validation

SDG	Sample ID	Lab Sample ID	Matrix	Parameter Class	Analytical Method	Parameter	Lab Result	Lab Qual	Final Result	Final Qual	Units	Reasons
53777	196GW010L4LR	53777012	WG	VOA	SW8260	BENZENE	100	U	100	R	ug/L	DL
53777	196GW010L4LR	53777012	WG	VOA	SW8260	BROMODICHLOROMETHANE	100	U	100	R	ug/L	DL
53777	196GW010L4LR	53777012	WG	VOA	SW8260	BROMOFORM	100	U	100	R	ug/L	DL
53777	196GW010L4LR	53777012	WG	VOA	SW8260	BROMOMETHANE	100	U	100	R	ug/L	DL
53777	196GW010L4LR	53777012	WG	VOA	SW8260	CARBON DISULFIDE	500	U	500	R	ug/L	DL
53777	196GW010L4LR	53777012	WG	VOA	SW8260	CARBON TETRACHLORIDE	100	U	100	R	ug/L	DL
53777	196GW010L4LR	53777012	WG	VOA	SW8260	CHLOROETHANE	100	U	100	R	ug/L	DL
53777	196GW010L4LR	53777012	WG	VOA	SW8260	CHLOROFORM	100	U	100	R	ug/L	DL
53777	196GW010L4LR	53777012	WG	VOA	SW8260	CHLOROMETHANE	100	U	100	R	ug/L	DL
53777	196GW010L4LR	53777012	WG	VOA	SW8260	cis-1,2-DICHLOROETHYLENE	100	U	100	R	ug/L	DL
53777	196GW010L4LR	53777012	WG	VOA	SW8260	cis-1,3-DICHLOROPROPENE	100	U	100	R	ug/L	DL
53777	196GW010L4LR	53777012	WG	VOA	SW8260	DIBROMOCHLOROMETHANE	100	U	100	R	ug/L	DL
53777	196GW010L4LR	53777012	WG	VOA	SW8260	ETHYLBENZENE	100	U	100	R	ug/L	DL
53777	196GW010L4LR	53777012	WG	VOA	SW8260	m+p Xylene	200	U	200	R	ug/L	DL
53777	196GW010L4LR	53777012	WG	VOA	SW8260	METHYLENE CHLORIDE	500	U	500	R	ug/L	DL
53777	196GW010L4LR	53777012	WG	VOA	SW8260	o-Xylene	100	U	100	R	ug/L	DL
53777	196GW010L4LR	53777012	WG	VOA	SW8260	STYRENE	100	U	100	R	ug/L	DL
53777	196GW010L4LR	53777012	WG	VOA	SW8260	TETRACHLOROETHYLENE(PCE)	100	U	100	R	ug/L	DL
53777	196GW010L4LR	53777012	WG	VOA	SW8260	TOLUENE	100	U	100	R	ug/L	DL
53777	196GW010L4LR	53777012	WG	VOA	SW8260	trans-1,2-DICHLOROETHENE	100	U	100	R	ug/L	DL
53777	196GW010L4LR	53777012	WG	VOA	SW8260	trans-1,3-DICHLOROPROPENE	100	U	100	R	ug/L	DL
53777	196GW010L4LR	53777012	WG	VOA	SW8260	TRICHLOROETHYLENE (TCE)	100	U	100	R	ug/L	DL
53777	196GW010L4LR	53777012	WG	VOA	SW8260	Vinyl acetate	500	U	500	R	ug/L	DL
53777	196GW010L4LR	53777012	WG	VOA	SW8260	VINYL CHLORIDE	100	U	100	R	ug/L	DL
53777	196GW010L4LR	53777012	WG	VOA	SW8260	XYLENES, TOTAL	300	U	300	R	ug/L	DL
53777	196HW004L4	53777007	WG	VOA	SW8260	1,2-DICHLOROBENZENE	13200	E	13200	R	ug/L	LR
53777	196HW004L4	53777007	WG	VOA	SW8260	Vinyl acetate	250	U	250	UJ	ug/L	BS, CC
53777	196HW004L4LR	53777007	WG	VOA	SW8260	1,1,1-TRICHLOROETHANE	250	U	250	R	ug/L	DL
53777	196HW004L4LR	53777007	WG	VOA	SW8260	1,1,2,2-TETRACHLOROETHANE	250	U	250	R	ug/L	DL
53777	196HW004L4LR	53777007	WG	VOA	SW8260	1,1,2-TRICHLOROETHANE	250	U	250	R	ug/L	DL
53777	196HW004L4LR	53777007	WG	VOA	SW8260	1,1-DICHLOROETHANE	250	U	250	R	ug/L	DL
53777	196HW004L4LR	53777007	WG	VOA	SW8260	1,1-DICHLOROETHENE	250	U	250	R	ug/L	DL
53777	196HW004L4LR	53777007	WG	VOA	SW8260	1,2,3-Trichlorobenzene	250	U	250	R	ug/L	DL

SDG	Sample ID	Lab Sample ID	Matrix	Parameter Class	Analytical Method	Parameter	Lab Result	Lab Qual	Final Result	Final Qual	Units	Reasons
53777	196HW004L4LR	53777007	WG	VOA	SW8260	1,2,4-TRICHLOROBENZENE	250	U	250	R	ug/L	DL
53777	196HW004L4LR	53777007	WG	VOA	SW8260	1,2-DICHLOROETHANE	250	U	250	R	ug/L	DL
53777	196HW004L4LR	53777007	WG	VOA	SW8260	1,2-Dichloroethene (total)	500	U	500	R	ug/L	DL
53777	196HW004L4LR	53777007	WG	VOA	SW8260	1,2-DICHLOROPROPANE	250	U	250	R	ug/L	DL
53777	196HW004L4LR	53777007	WG	VOA	SW8260	1,3-DICHLOROBENZENE	487	=	487	R	ug/L	DL
53777	196HW004L4LR	53777007	WG	VOA	SW8260	1,4-DICHLOROBENZENE	919	=	919	R	ug/L	DL
53777	196HW004L4LR	53777007	WG	VOA	SW8260	2-BUTANONE (MEK)	1250	U	1250	R	ug/L	DL
53777	196HW004L4LR	53777007	WG	VOA	SW8260	2-Chloroethyl vinyl ether	1250	U	1250	R	ug/L	DL
53777	196HW004L4LR	53777007	WG	VOA	SW8260	2-HEXANONE	1250	U	1250	R	ug/L	DL
53777	196HW004L4LR	53777007	WG	VOA	SW8260	4-METHYL-2-PENTANONE (MIBK)	1250	U	1250	R	ug/L	DL
53777	196HW004L4LR	53777007	WG	VOA	SW8260	ACETONE	1250	U	1250	R	ug/L	DL
53777	196HW004L4LR	53777007	WG	VOA	SW8260	BENZENE	381	=	381	R	ug/L	DL
53777	196HW004L4LR	53777007	WG	VOA	SW8260	BROMODICHLOROMETHANE	250	U	250	R	ug/L	DL
53777	196HW004L4LR	53777007	WG	VOA	SW8260	BROMOFORM	250	U	250	R	ug/L	DL
53777	196HW004L4LR	53777007	WG	VOA	SW8260	BROMOMETHANE	250	U	250	R	ug/L	DL
53777	196HW004L4LR	53777007	WG	VOA	SW8260	CARBON DISULFIDE	1250	U	1250	R	ug/L	DL
53777	196HW004L4LR	53777007	WG	VOA	SW8260	CARBON TETRACHLORIDE	250	U	250	R	ug/L	DL
53777	196HW004L4LR	53777007	WG	VOA	SW8260	CHLOROBENZENE	4180	B	4180	R	ug/L	DL
53777	196HW004L4LR	53777007	WG	VOA	SW8260	CHLOROETHANE	250	U	250	R	ug/L	DL
53777	196HW004L4LR	53777007	WG	VOA	SW8260	CHLOROFORM	250	U	250	R	ug/L	DL
53777	196HW004L4LR	53777007	WG	VOA	SW8260	CHLOROMETHANE	250	U	250	R	ug/L	DL
53777	196HW004L4LR	53777007	WG	VOA	SW8260	cis-1,2-DICHLOROETHYLENE	250	U	250	R	ug/L	DL
53777	196HW004L4LR	53777007	WG	VOA	SW8260	cis-1,3-DICHLOROPROPENE	250	U	250	R	ug/L	DL
53777	196HW004L4LR	53777007	WG	VOA	SW8260	DIBROMOCHLOROMETHANE	250	U	250	R	ug/L	DL
53777	196HW004L4LR	53777007	WG	VOA	SW8260	ETHYLBENZENE	250	U	250	R	ug/L	DL
53777	196HW004L4LR	53777007	WG	VOA	SW8260	m+p Xylene	500	U	500	R	ug/L	DL
53777	196HW004L4LR	53777007	WG	VOA	SW8260	METHYLENE CHLORIDE	1250	U	1250	R	ug/L	DL
53777	196HW004L4LR	53777007	WG	VOA	SW8260	o-Xylene	250	U	250	R	ug/L	DL
53777	196HW004L4LR	53777007	WG	VOA	SW8260	STYRENE	250	U	250	R	ug/L	DL
53777	196HW004L4LR	53777007	WG	VOA	SW8260	TETRACHLOROETHYLENE(PCE)	196	J	196	R	ug/L	DL
53777	196HW004L4LR	53777007	WG	VOA	SW8260	TOLUENE	263	=	263	R	ug/L	DL
53777	196HW004L4LR	53777007	WG	VOA	SW8260	trans-1,2-DICHLOROETHENE	250	U	250	R	ug/L	DL
53777	196HW004L4LR	53777007	WG	VOA	SW8260	trans-1,3-DICHLOROPROPENE	250	U	250	R	ug/L	DL

Attachment 1 - Changed Qualifiers and Results
Zone H, SWMU 196 - Data Validation

SDG	Sample ID	Lab Sample ID	Matrix	Parameter Class	Analytical Method	Parameter	Lab Result	Lab Qual	Final Result	Final Qual	Units	Reasons
53777	196HW004L4LR	53777007	WG	VOA	SW8260	TRICHLOROETHYLENE (TCE)	250	U	250	R	ug/L	DL
53777	196HW004L4LR	53777007	WG	VOA	SW8260	Vinyl acetate	1250	U	1250	R	ug/L	DL
53777	196HW004L4LR	53777007	WG	VOA	SW8260	VINYL CHLORIDE	250	U	250	R	ug/L	DL
53777	196HW004L4LR	53777007	WG	VOA	SW8260	XYLENES, TOTAL	750	U	750	R	ug/L	DL
53777	GELGW015L4	53777005	WG	VOA	SW8260	1,2-DICHLOROBENZENE	6750	E	6750	R	ug/L	LR
53777	GELGW015L4	53777005	WG	VOA	SW8260	CHLOROBENZENE	4640	E	4640	R	ug/L	LR
53777	GELGW015L4	53777005	WG	VOA	SW8260	Vinyl acetate	50	U	50	UJ	ug/L	BS, CC
53777	GELGW015L4LR	53777005	WG	VOA	SW8260	1,1,1-TRICHLOROETHANE	500	U	500	R	ug/L	DL
53777	GELGW015L4LR	53777005	WG	VOA	SW8260	1,1,2,2-TETRACHLOROETHANE	500	U	500	R	ug/L	DL
53777	GELGW015L4LR	53777005	WG	VOA	SW8260	1,1,2-TRICHLOROETHANE	500	U	500	R	ug/L	DL
53777	GELGW015L4LR	53777005	WG	VOA	SW8260	1,1-DICHLOROETHANE	500	U	500	R	ug/L	DL
53777	GELGW015L4LR	53777005	WG	VOA	SW8260	1,1-DICHLOROETHENE	500	U	500	R	ug/L	DL
53777	GELGW015L4LR	53777005	WG	VOA	SW8260	1,2,3-Trichlorobenzene	500	U	500	R	ug/L	DL
53777	GELGW015L4LR	53777005	WG	VOA	SW8260	1,2,4-TRICHLOROBENZENE	500	U	500	R	ug/L	DL
53777	GELGW015L4LR	53777005	WG	VOA	SW8260	1,2-DICHLOROETHANE	500	U	500	R	ug/L	DL
53777	GELGW015L4LR	53777005	WG	VOA	SW8260	1,2-Dichloroethene (total)	1000	U	1000	R	ug/L	DL
53777	GELGW015L4LR	53777005	WG	VOA	SW8260	1,2-DICHLOROPROPANE	500	U	500	R	ug/L	DL
53777	GELGW015L4LR	53777005	WG	VOA	SW8260	1,3-DICHLOROBENZENE	322	J	322	R	ug/L	DL
53777	GELGW015L4LR	53777005	WG	VOA	SW8260	1,4-DICHLOROBENZENE	799	=	799	R	ug/L	DL
53777	GELGW015L4LR	53777005	WG	VOA	SW8260	2-BUTANONE (MEK)	2500	U	2500	R	ug/L	DL
53777	GELGW015L4LR	53777005	WG	VOA	SW8260	2-Chloroethyl vinyl ether	2500	U	2500	R	ug/L	DL
53777	GELGW015L4LR	53777005	WG	VOA	SW8260	2-HEXANONE	2500	U	2500	R	ug/L	DL
53777	GELGW015L4LR	53777005	WG	VOA	SW8260	4-METHYL-2-PENTANONE (MIBK)	2500	U	2500	R	ug/L	DL
53777	GELGW015L4LR	53777005	WG	VOA	SW8260	ACETONE	2500	U	2500	R	ug/L	DL
53777	GELGW015L4LR	53777005	WG	VOA	SW8260	BENZENE	500	U	500	R	ug/L	DL
53777	GELGW015L4LR	53777005	WG	VOA	SW8260	BROMODICHLOROMETHANE	500	U	500	R	ug/L	DL
53777	GELGW015L4LR	53777005	WG	VOA	SW8260	BROMOFORM	500	U	500	R	ug/L	DL
53777	GELGW015L4LR	53777005	WG	VOA	SW8260	BROMOMETHANE	500	U	500	R	ug/L	DL
53777	GELGW015L4LR	53777005	WG	VOA	SW8260	CARBON DISULFIDE	2500	U	2500	R	ug/L	DL
53777	GELGW015L4LR	53777005	WG	VOA	SW8260	CARBON TETRACHLORIDE	500	U	500	R	ug/L	DL
53777	GELGW015L4LR	53777005	WG	VOA	SW8260	CHLOROETHANE	500	U	500	R	ug/L	DL
53777	GELGW015L4LR	53777005	WG	VOA	SW8260	CHLOROFORM	500	U	500	R	ug/L	DL
53777	GELGW015L4LR	53777005	WG	VOA	SW8260	CHLOROMETHANE	500	U	500	R	ug/L	DL

SDG	Sample ID	Lab Sample ID	Matrix	Parameter Class	Analytical Method	Parameter	Lab Result	Lab Qual	Final Result	Final Qual	Units	Reasons
53777	GELGW015L4LR	53777005	WG	VOA	SW8260	cis-1,2-DICHLOROETHYLENE	500	U	500	R	ug/L	DL
53777	GELGW015L4LR	53777005	WG	VOA	SW8260	cis-1,3-DICHLOROPROPENE	500	U	500	R	ug/L	DL
53777	GELGW015L4LR	53777005	WG	VOA	SW8260	DIBROMOCHLOROMETHANE	500	U	500	R	ug/L	DL
53777	GELGW015L4LR	53777005	WG	VOA	SW8260	ETHYLBENZENE	500	U	500	R	ug/L	DL
53777	GELGW015L4LR	53777005	WG	VOA	SW8260	m+p Xylene	1000	U	1000	R	ug/L	DL
53777	GELGW015L4LR	53777005	WG	VOA	SW8260	METHYLENE CHLORIDE	2500	U	2500	R	ug/L	DL
53777	GELGW015L4LR	53777005	WG	VOA	SW8260	o-Xylene	500	U	500	R	ug/L	DL
53777	GELGW015L4LR	53777005	WG	VOA	SW8260	STYRENE	500	U	500	R	ug/L	DL
53777	GELGW015L4LR	53777005	WG	VOA	SW8260	TETRACHLOROETHYLENE(PCE)	500	U	500	R	ug/L	DL
53777	GELGW015L4LR	53777005	WG	VOA	SW8260	TOLUENE	500	U	500	R	ug/L	DL
53777	GELGW015L4LR	53777005	WG	VOA	SW8260	trans-1,2-DICHLOROETHENE	500	U	500	R	ug/L	DL
53777	GELGW015L4LR	53777005	WG	VOA	SW8260	trans-1,3-DICHLOROPROPENE	500	U	500	R	ug/L	DL
53777	GELGW015L4LR	53777005	WG	VOA	SW8260	TRICHLOROETHYLENE (TCE)	500	U	500	R	ug/L	DL
53777	GELGW015L4LR	53777005	WG	VOA	SW8260	Vinyl acetate	2500	U	2500	R	ug/L	DL
53777	GELGW015L4LR	53777005	WG	VOA	SW8260	VINYL CHLORIDE	500	U	500	R	ug/L	DL
53777	GELGW015L4LR	53777005	WG	VOA	SW8260	XYLENES, TOTAL	1500	U	1500	R	ug/L	DL
55885	009GW020M1	55885002	WG	VOA	SW8260B	1,2-DICHLOROBENZENE	897	EB	897	R	ug/L	LR
55885	009GW020M1	55885002	WG	VOA	SW8260B	1,4-DICHLOROBENZENE	164	EB	164	R	ug/L	LR
55885	009GW020M1	55885002	WG	VOA	SW8260B	CHLOROBENZENE	1460	E	1460	R	ug/L	LR
55885	009GW020M1LR	55885002	WG	VOA	SW8260B	1,1,1-TRICHLOROETHANE	2500	U	2500	R	ug/L	DL
55885	009GW020M1LR	55885002	WG	VOA	SW8260B	1,1,2,2-TETRACHLOROETHANE	2500	U	2500	R	ug/L	DL
55885	009GW020M1LR	55885002	WG	VOA	SW8260B	1,1,2-TRICHLOROETHANE	2500	U	2500	R	ug/L	DL
55885	009GW020M1LR	55885002	WG	VOA	SW8260B	1,1-DICHLOROETHANE	2500	U	2500	R	ug/L	DL
55885	009GW020M1LR	55885002	WG	VOA	SW8260B	1,1-DICHLOROETHENE	2500	U	2500	R	ug/L	DL
55885	009GW020M1LR	55885002	WG	VOA	SW8260B	1,2,3-Trichlorobenzene	2500	U	2500	R	ug/L	DL
55885	009GW020M1LR	55885002	WG	VOA	SW8260B	1,2,4-TRICHLOROBENZENE	2500	U	2500	R	ug/L	DL
55885	009GW020M1LR	55885002	WG	VOA	SW8260B	1,2-DICHLOROETHANE	2500	U	2500	R	ug/L	DL
55885	009GW020M1LR	55885002	WG	VOA	SW8260B	1,2-Dichloroethene (total)	2500	U	2500	R	ug/L	DL
55885	009GW020M1LR	55885002	WG	VOA	SW8260B	1,2-DICHLOROPROPANE	2500	U	2500	R	ug/L	DL
55885	009GW020M1LR	55885002	WG	VOA	SW8260B	1,3-DICHLOROBENZENE	2500	U	2500	R	ug/L	DL
55885	009GW020M1LR	55885002	WG	VOA	SW8260B	2-BUTANONE (MEK)	5000	U	5000	R	ug/L	DL
55885	009GW020M1LR	55885002	WG	VOA	SW8260B	2-Chloroethyl vinyl ether	2500	U	2500	R	ug/L	DL
55885	009GW020M1LR	55885002	WG	VOA	SW8260B	2-HEXANONE	5000	U	5000	R	ug/L	DL

SDG	Sample ID	Lab Sample ID	Matrix	Parameter Class	Analytical Method	Parameter	Lab Result	Lab Qual	Final Result	Final Qual	Units	Reasons
55885	009GW020M1LR	55885002	WG	VOA	SW8260B	4-METHYL-2-PENTANONE (MIBK)	5000	U	5000	R	ug/L	DL
55885	009GW020M1LR	55885002	WG	VOA	SW8260B	ACETONE	5000	U	5000	R	ug/L	DL
55885	009GW020M1LR	55885002	WG	VOA	SW8260B	BENZENE	2500	U	2500	R	ug/L	DL
55885	009GW020M1LR	55885002	WG	VOA	SW8260B	BROMODICHLOROMETHANE	2500	U	2500	R	ug/L	DL
55885	009GW020M1LR	55885002	WG	VOA	SW8260B	BROMOFORM	2500	U	2500	R	ug/L	DL
55885	009GW020M1LR	55885002	WG	VOA	SW8260B	BROMOMETHANE	5000	U	5000	R	ug/L	DL
55885	009GW020M1LR	55885002	WG	VOA	SW8260B	CARBON DISULFIDE	2500	U	2500	R	ug/L	DL
55885	009GW020M1LR	55885002	WG	VOA	SW8260B	CARBON TETRACHLORIDE	2500	U	2500	R	ug/L	DL
55885	009GW020M1LR	55885002	WG	VOA	SW8260B	CHLOROETHANE	5000	U	5000	R	ug/L	DL
55885	009GW020M1LR	55885002	WG	VOA	SW8260B	CHLOROFORM	2500	U	2500	R	ug/L	DL
55885	009GW020M1LR	55885002	WG	VOA	SW8260B	CHLOROMETHANE	5000	U	5000	R	ug/L	DL
55885	009GW020M1LR	55885002	WG	VOA	SW8260B	cis-1,2-DICHLOROETHYLENE	2500	U	2500	R	ug/L	DL
55885	009GW020M1LR	55885002	WG	VOA	SW8260B	cis-1,3-DICHLOROPROPENE	2500	U	2500	R	ug/L	DL
55885	009GW020M1LR	55885002	WG	VOA	SW8260B	DIBROMOCHLOROMETHANE	2500	U	2500	R	ug/L	DL
55885	009GW020M1LR	55885002	WG	VOA	SW8260B	ETHYLBENZENE	2500	U	2500	R	ug/L	DL
55885	009GW020M1LR	55885002	WG	VOA	SW8260B	m+p Xylene	2500	U	2500	R	ug/L	DL
55885	009GW020M1LR	55885002	WG	VOA	SW8260B	METHYLENE CHLORIDE	2500	U	2500	R	ug/L	DL
55885	009GW020M1LR	55885002	WG	VOA	SW8260B	o-Xylene	2500	U	2500	R	ug/L	DL
55885	009GW020M1LR	55885002	WG	VOA	SW8260B	STYRENE	2500	U	2500	R	ug/L	DL
55885	009GW020M1LR	55885002	WG	VOA	SW8260B	TETRACHLOROETHYLENE(PCE)	2500	U	2500	R	ug/L	DL
55885	009GW020M1LR	55885002	WG	VOA	SW8260B	TOLUENE	2500	U	2500	R	ug/L	DL
55885	009GW020M1LR	55885002	WG	VOA	SW8260B	trans-1,2-DICHLOROETHENE	2500	U	2500	R	ug/L	DL
55885	009GW020M1LR	55885002	WG	VOA	SW8260B	trans-1,3-DICHLOROPROPENE	2500	U	2500	R	ug/L	DL
55885	009GW020M1LR	55885002	WG	VOA	SW8260B	TRICHLOROETHYLENE (TCE)	2500	U	2500	R	ug/L	DL
55885	009GW020M1LR	55885002	WG	VOA	SW8260B	Vinyl acetate	5000	U	5000	R	ug/L	DL
55885	009GW020M1LR	55885002	WG	VOA	SW8260B	VINYL CHLORIDE	5000	U	5000	R	ug/L	DL
55885	009GW020M1LR	55885002	WG	VOA	SW8260B	XYLENES, TOTAL	2500	U	2500	R	ug/L	DL
55885	009GW021M1	55885003	WG	VOA	SW8260B	1,2-DICHLOROBENZENE	7070	E	7070	R	ug/L	LR
55885	009GW021M1LR	55885003	WG	VOA	SW8260B	1,1,1-TRICHLOROETHANE	500	U	500	R	ug/L	DL
55885	009GW021M1LR	55885003	WG	VOA	SW8260B	1,1,2,2-TETRACHLOROETHANE	500	U	500	R	ug/L	DL
55885	009GW021M1LR	55885003	WG	VOA	SW8260B	1,1,2-TRICHLOROETHANE	500	U	500	R	ug/L	DL
55885	009GW021M1LR	55885003	WG	VOA	SW8260B	1,1-DICHLOROETHANE	500	U	500	R	ug/L	DL
55885	009GW021M1LR	55885003	WG	VOA	SW8260B	1,1-DICHLOROETHENE	500	U	500	R	ug/L	DL

SDG	Sample ID	Lab Sample ID	Matrix	Parameter Class	Analytical Method	Parameter	Lab Result	Lab Qual	Final Result	Final Qual	Units	Reasons
55885	009GW021M1LR	55885003	WG	VOA	SW8260B	1,2,3-Trichlorobenzene	500	U	500	R	ug/L	DL
55885	009GW021M1LR	55885003	WG	VOA	SW8260B	1,2,4-TRICHLOROBENZENE	500	U	500	R	ug/L	DL
55885	009GW021M1LR	55885003	WG	VOA	SW8260B	1,2-DICHLOROETHANE	500	U	500	R	ug/L	DL
55885	009GW021M1LR	55885003	WG	VOA	SW8260B	1,2-Dichloroethene (total)	500	U	500	R	ug/L	DL
55885	009GW021M1LR	55885003	WG	VOA	SW8260B	1,2-DICHLOROPROPANE	500	U	500	R	ug/L	DL
55885	009GW021M1LR	55885003	WG	VOA	SW8260B	1,3-DICHLOROBENZENE	356	JD	356	R	ug/L	DL
55885	009GW021M1LR	55885003	WG	VOA	SW8260B	1,4-DICHLOROBENZENE	660	D	660	R	ug/L	DL
55885	009GW021M1LR	55885003	WG	VOA	SW8260B	2-BUTANONE (MEK)	1000	U	1000	R	ug/L	DL
55885	009GW021M1LR	55885003	WG	VOA	SW8260B	2-Chloroethyl vinyl ether	500	U	500	R	ug/L	DL
55885	009GW021M1LR	55885003	WG	VOA	SW8260B	2-HEXANONE	1000	U	1000	R	ug/L	DL
55885	009GW021M1LR	55885003	WG	VOA	SW8260B	4-METHYL-2-PENTANONE (MIBK)	1000	U	1000	R	ug/L	DL
55885	009GW021M1LR	55885003	WG	VOA	SW8260B	ACETONE	1000	U	1000	R	ug/L	DL
55885	009GW021M1LR	55885003	WG	VOA	SW8260B	BENZENE	500	U	500	R	ug/L	DL
55885	009GW021M1LR	55885003	WG	VOA	SW8260B	BROMODICHLOROMETHANE	500	U	500	R	ug/L	DL
55885	009GW021M1LR	55885003	WG	VOA	SW8260B	BROMOFORM	500	U	500	R	ug/L	DL
55885	009GW021M1LR	55885003	WG	VOA	SW8260B	BROMOMETHANE	1000	U	1000	R	ug/L	DL
55885	009GW021M1LR	55885003	WG	VOA	SW8260B	CARBON DISULFIDE	500	U	500	R	ug/L	DL
55885	009GW021M1LR	55885003	WG	VOA	SW8260B	CARBON TETRACHLORIDE	500	U	500	R	ug/L	DL
55885	009GW021M1LR	55885003	WG	VOA	SW8260B	CHLOROBENZENE	3170	D	3170	R	ug/L	DL
55885	009GW021M1LR	55885003	WG	VOA	SW8260B	CHLOROETHANE	1000	U	1000	R	ug/L	DL
55885	009GW021M1LR	55885003	WG	VOA	SW8260B	CHLOROFORM	500	U	500	R	ug/L	DL
55885	009GW021M1LR	55885003	WG	VOA	SW8260B	CHLOROMETHANE	1000	U	1000	R	ug/L	DL
55885	009GW021M1LR	55885003	WG	VOA	SW8260B	cis-1,2-DICHLOROETHYLENE	500	U	500	R	ug/L	DL
55885	009GW021M1LR	55885003	WG	VOA	SW8260B	cis-1,3-DICHLOROPROPENE	500	U	500	R	ug/L	DL
55885	009GW021M1LR	55885003	WG	VOA	SW8260B	DIBROMOCHLOROMETHANE	500	U	500	R	ug/L	DL
55885	009GW021M1LR	55885003	WG	VOA	SW8260B	ETHYLBENZENE	500	U	500	R	ug/L	DL
55885	009GW021M1LR	55885003	WG	VOA	SW8260B	m+p Xylene	500	U	500	R	ug/L	DL
55885	009GW021M1LR	55885003	WG	VOA	SW8260B	METHYLENE CHLORIDE	500	U	500	R	ug/L	DL
55885	009GW021M1LR	55885003	WG	VOA	SW8260B	o-Xylene	500	U	500	R	ug/L	DL
55885	009GW021M1LR	55885003	WG	VOA	SW8260B	STYRENE	500	U	500	R	ug/L	DL
55885	009GW021M1LR	55885003	WG	VOA	SW8260B	TETRACHLOROETHYLENE(PCE)	500	U	500	R	ug/L	DL
55885	009GW021M1LR	55885003	WG	VOA	SW8260B	TOLUENE	18.6	JD	18.6	R	ug/L	DL
55885	009GW021M1LR	55885003	WG	VOA	SW8260B	trans-1,2-DICHLOROETHENE	500	U	500	R	ug/L	DL

Attachment 1 - Changed Qualifiers and Results
Zone H, SWMU 196 - Data Validation

SDG	Sample ID	Lab Sample ID	Matrix	Parameter Class	Analytical Method	Parameter	Lab Result	Lab Qual	Final Result	Final Qual	Units	Reasons
55885	009GW021M1LR	55885003	WG	VOA	SW8260B	trans-1,3-DICHLOROPROPENE	500	U	500	R	ug/L	DL
55885	009GW021M1LR	55885003	WG	VOA	SW8260B	TRICHLOROETHYLENE (TCE)	500	U	500	R	ug/L	DL
55885	009GW021M1LR	55885003	WG	VOA	SW8260B	Vinyl acetate	1000	U	1000	R	ug/L	DL
55885	009GW021M1LR	55885003	WG	VOA	SW8260B	VINYL CHLORIDE	1000	U	1000	R	ug/L	DL
55885	009GW021M1LR	55885003	WG	VOA	SW8260B	XYLENES, TOTAL	500	U	500	R	ug/L	DL
55885	009GW022M1	55885004	WG	VOA	SW8260B	1,2-DICHLOROBENZENE	1140	E	1140	R	ug/L	LR
55885	009GW022M1	55885004	WG	VOA	SW8260B	1,3-DICHLOROBENZENE	118	E	118	R	ug/L	LR
55885	009GW022M1	55885004	WG	VOA	SW8260B	1,4-DICHLOROBENZENE	183	E	183	R	ug/L	LR
55885	009GW022M1	55885004	WG	VOA	SW8260B	CHLOROBENZENE	288	E	288	R	ug/L	LR
55885	009GW022M1LR	55885004	WG	VOA	SW8260B	1,1,1-TRICHLOROETHANE	1250	U	1250	R	ug/L	DL
55885	009GW022M1LR	55885004	WG	VOA	SW8260B	1,1,2,2-TETRACHLOROETHANE	1250	U	1250	R	ug/L	DL
55885	009GW022M1LR	55885004	WG	VOA	SW8260B	1,1,2-TRICHLOROETHANE	1250	U	1250	R	ug/L	DL
55885	009GW022M1LR	55885004	WG	VOA	SW8260B	1,1-DICHLOROETHANE	1250	U	1250	R	ug/L	DL
55885	009GW022M1LR	55885004	WG	VOA	SW8260B	1,1-DICHLOROETHENE	1250	U	1250	R	ug/L	DL
55885	009GW022M1LR	55885004	WG	VOA	SW8260B	1,2,3-Trichlorobenzene	1250	U	1250	R	ug/L	DL
55885	009GW022M1LR	55885004	WG	VOA	SW8260B	1,2,4-TRICHLOROBENZENE	1250	U	1250	R	ug/L	DL
55885	009GW022M1LR	55885004	WG	VOA	SW8260B	1,2-DICHLOROETHANE	1250	U	1250	R	ug/L	DL
55885	009GW022M1LR	55885004	WG	VOA	SW8260B	1,2-Dichloroethene (total)	1250	U	1250	R	ug/L	DL
55885	009GW022M1LR	55885004	WG	VOA	SW8260B	1,2-DICHLOROPROPANE	1250	U	1250	R	ug/L	DL
55885	009GW022M1LR	55885004	WG	VOA	SW8260B	2-BUTANONE (MEK)	2500	U	2500	R	ug/L	DL
55885	009GW022M1LR	55885004	WG	VOA	SW8260B	2-Chloroethyl vinyl ether	1250	U	1250	R	ug/L	DL
55885	009GW022M1LR	55885004	WG	VOA	SW8260B	2-HEXANONE	2500	U	2500	R	ug/L	DL
55885	009GW022M1LR	55885004	WG	VOA	SW8260B	4-METHYL-2-PENTANONE (MIBK)	2500	U	2500	R	ug/L	DL
55885	009GW022M1LR	55885004	WG	VOA	SW8260B	ACETONE	2500	U	2500	R	ug/L	DL
55885	009GW022M1LR	55885004	WG	VOA	SW8260B	BENZENE	1250	U	1250	R	ug/L	DL
55885	009GW022M1LR	55885004	WG	VOA	SW8260B	BROMODICHLOROMETHANE	1250	U	1250	R	ug/L	DL
55885	009GW022M1LR	55885004	WG	VOA	SW8260B	BROMOFORM	1250	U	1250	R	ug/L	DL
55885	009GW022M1LR	55885004	WG	VOA	SW8260B	BROMOMETHANE	2500	U	2500	R	ug/L	DL
55885	009GW022M1LR	55885004	WG	VOA	SW8260B	CARBON DISULFIDE	1250	U	1250	R	ug/L	DL
55885	009GW022M1LR	55885004	WG	VOA	SW8260B	CARBON TETRACHLORIDE	1250	U	1250	R	ug/L	DL
55885	009GW022M1LR	55885004	WG	VOA	SW8260B	CHLOROETHANE	2500	U	2500	R	ug/L	DL
55885	009GW022M1LR	55885004	WG	VOA	SW8260B	CHLOROFORM	1250	U	1250	R	ug/L	DL
55885	009GW022M1LR	55885004	WG	VOA	SW8260B	CHLOROMETHANE	2500	U	2500	R	ug/L	DL

SDG	Sample ID	Lab Sample ID	Matrix	Parameter Class	Analytical Method	Parameter	Lab Result	Lab Qual	Final Result	Final Qual	Units	Reasons
55885	009GW022M1LR	55885004	WG	VOA	SW8260B	cis-1,2-DICHLOROETHYLENE	1250	U	1250	R	ug/L	DL
55885	009GW022M1LR	55885004	WG	VOA	SW8260B	cis-1,3-DICHLOROPROPENE	1250	U	1250	R	ug/L	DL
55885	009GW022M1LR	55885004	WG	VOA	SW8260B	DIBROMOCHLOROMETHANE	1250	U	1250	R	ug/L	DL
55885	009GW022M1LR	55885004	WG	VOA	SW8260B	ETHYLBENZENE	1250	U	1250	R	ug/L	DL
55885	009GW022M1LR	55885004	WG	VOA	SW8260B	m+p Xylene	1250	U	1250	R	ug/L	DL
55885	009GW022M1LR	55885004	WG	VOA	SW8260B	METHYLENE CHLORIDE	1250	U	1250	R	ug/L	DL
55885	009GW022M1LR	55885004	WG	VOA	SW8260B	o-Xylene	1250	U	1250	R	ug/L	DL
55885	009GW022M1LR	55885004	WG	VOA	SW8260B	STYRENE	1250	U	1250	R	ug/L	DL
55885	009GW022M1LR	55885004	WG	VOA	SW8260B	TETRACHLOROETHYLENE(PCE)	1250	U	1250	R	ug/L	DL
55885	009GW022M1LR	55885004	WG	VOA	SW8260B	TOLUENE	1250	U	1250	R	ug/L	DL
55885	009GW022M1LR	55885004	WG	VOA	SW8260B	trans-1,2-DICHLOROETHENE	1250	U	1250	R	ug/L	DL
55885	009GW022M1LR	55885004	WG	VOA	SW8260B	trans-1,3-DICHLOROPROPENE	1250	U	1250	R	ug/L	DL
55885	009GW022M1LR	55885004	WG	VOA	SW8260B	TRICHLOROETHYLENE (TCE)	1250	U	1250	R	ug/L	DL
55885	009GW022M1LR	55885004	WG	VOA	SW8260B	Vinyl acetate	2500	U	2500	R	ug/L	DL
55885	009GW022M1LR	55885004	WG	VOA	SW8260B	VINYL CHLORIDE	2500	U	2500	R	ug/L	DL
55885	009GW022M1LR	55885004	WG	VOA	SW8260B	XYLENES, TOTAL	1250	U	1250	R	ug/L	DL
55885	009HW022M1	55885005	WG	VOA	SW8260B	1,2-DICHLOROBENZENE	1140	EB	1140	R	ug/L	LR
55885	009HW022M1	55885005	WG	VOA	SW8260B	1,3-DICHLOROBENZENE	118	E	118	R	ug/L	LR
55885	009HW022M1	55885005	WG	VOA	SW8260B	1,4-DICHLOROBENZENE	183	EB	183	R	ug/L	LR
55885	009HW022M1	55885005	WG	VOA	SW8260B	CHLOROBENZENE	274	E	274	R	ug/L	LR
55885	009HW022M1LR	55885005	WG	VOA	SW8260B	1,1,1-TRICHLOROETHANE	1250	U	1250	R	ug/L	DL
55885	009HW022M1LR	55885005	WG	VOA	SW8260B	1,1,2,2-TETRACHLOROETHANE	1250	U	1250	R	ug/L	DL
55885	009HW022M1LR	55885005	WG	VOA	SW8260B	1,1,2-TRICHLOROETHANE	1250	U	1250	R	ug/L	DL
55885	009HW022M1LR	55885005	WG	VOA	SW8260B	1,1-DICHLOROETHANE	1250	U	1250	R	ug/L	DL
55885	009HW022M1LR	55885005	WG	VOA	SW8260B	1,1-DICHLOROETHENE	1250	U	1250	R	ug/L	DL
55885	009HW022M1LR	55885005	WG	VOA	SW8260B	1,2,3-Trichlorobenzene	1250	U	1250	R	ug/L	DL
55885	009HW022M1LR	55885005	WG	VOA	SW8260B	1,2,4-TRICHLOROBENZENE	1250	U	1250	R	ug/L	DL
55885	009HW022M1LR	55885005	WG	VOA	SW8260B	1,2-DICHLOROETHANE	1250	U	1250	R	ug/L	DL
55885	009HW022M1LR	55885005	WG	VOA	SW8260B	1,2-Dichloroethene (total)	1250	U	1250	R	ug/L	DL
55885	009HW022M1LR	55885005	WG	VOA	SW8260B	1,2-DICHLOROPROPANE	1250	U	1250	R	ug/L	DL
55885	009HW022M1LR	55885005	WG	VOA	SW8260B	2-BUTANONE (MEK)	2500	U	2500	R	ug/L	DL
55885	009HW022M1LR	55885005	WG	VOA	SW8260B	2-Chloroethyl vinyl ether	1250	U	1250	R	ug/L	DL
55885	009HW022M1LR	55885005	WG	VOA	SW8260B	2-HEXANONE	2500	U	2500	R	ug/L	DL

Attachment 1 - Changed Qualifiers and Results
Zone H, SWMU 196 - Data Validation

SDG	Sample ID	Lab Sample ID	Matrix	Parameter Class	Analytical Method	Parameter	Lab Result	Lab Qual	Final Result	Final Qual	Units	Reasons
55885	009HW022M1LR	55885005	WG	VOA	SW8260B	4-METHYL-2-PENTANONE (MIBK)	2500	U	2500	R	ug/L	DL
55885	009HW022M1LR	55885005	WG	VOA	SW8260B	ACETONE	2500	U	2500	R	ug/L	DL
55885	009HW022M1LR	55885005	WG	VOA	SW8260B	BENZENE	1250	U	1250	R	ug/L	DL
55885	009HW022M1LR	55885005	WG	VOA	SW8260B	BROMODICHLOROMETHANE	1250	U	1250	R	ug/L	DL
55885	009HW022M1LR	55885005	WG	VOA	SW8260B	BROMOFORM	1250	U	1250	R	ug/L	DL
55885	009HW022M1LR	55885005	WG	VOA	SW8260B	BROMOMETHANE	2500	U	2500	R	ug/L	DL
55885	009HW022M1LR	55885005	WG	VOA	SW8260B	CARBON DISULFIDE	1250	U	1250	R	ug/L	DL
55885	009HW022M1LR	55885005	WG	VOA	SW8260B	CARBON TETRACHLORIDE	1250	U	1250	R	ug/L	DL
55885	009HW022M1LR	55885005	WG	VOA	SW8260B	CHLOROETHANE	2500	U	2500	R	ug/L	DL
55885	009HW022M1LR	55885005	WG	VOA	SW8260B	CHLOROFORM	1250	U	1250	R	ug/L	DL
55885	009HW022M1LR	55885005	WG	VOA	SW8260B	CHLOROMETHANE	2500	U	2500	R	ug/L	DL
55885	009HW022M1LR	55885005	WG	VOA	SW8260B	cis-1,2-DICHLOROETHYLENE	1250	U	1250	R	ug/L	DL
55885	009HW022M1LR	55885005	WG	VOA	SW8260B	cis-1,3-DICHLOROPROPENE	1250	U	1250	R	ug/L	DL
55885	009HW022M1LR	55885005	WG	VOA	SW8260B	DIBROMOCHLOROMETHANE	1250	U	1250	R	ug/L	DL
55885	009HW022M1LR	55885005	WG	VOA	SW8260B	ETHYLBENZENE	1250	U	1250	R	ug/L	DL
55885	009HW022M1LR	55885005	WG	VOA	SW8260B	m+p Xylene	1250	U	1250	R	ug/L	DL
55885	009HW022M1LR	55885005	WG	VOA	SW8260B	METHYLENE CHLORIDE	1250	U	1250	R	ug/L	DL
55885	009HW022M1LR	55885005	WG	VOA	SW8260B	o-Xylene	1250	U	1250	R	ug/L	DL
55885	009HW022M1LR	55885005	WG	VOA	SW8260B	STYRENE	1250	U	1250	R	ug/L	DL
55885	009HW022M1LR	55885005	WG	VOA	SW8260B	TETRACHLOROETHYLENE(PCE)	1250	U	1250	R	ug/L	DL
55885	009HW022M1LR	55885005	WG	VOA	SW8260B	TOLUENE	1250	U	1250	R	ug/L	DL
55885	009HW022M1LR	55885005	WG	VOA	SW8260B	trans-1,2-DICHLOROETHENE	1250	U	1250	R	ug/L	DL
55885	009HW022M1LR	55885005	WG	VOA	SW8260B	trans-1,3-DICHLOROPROPENE	1250	U	1250	R	ug/L	DL
55885	009HW022M1LR	55885005	WG	VOA	SW8260B	TRICHLOROETHYLENE (TCE)	1250	U	1250	R	ug/L	DL
55885	009HW022M1LR	55885005	WG	VOA	SW8260B	Vinyl acetate	2500	U	2500	R	ug/L	DL
55885	009HW022M1LR	55885005	WG	VOA	SW8260B	VINYL CHLORIDE	2500	U	2500	R	ug/L	DL
55885	009HW022M1LR	55885005	WG	VOA	SW8260B	XYLENES, TOTAL	1250	U	1250	R	ug/L	DL
55885	196GW004M1	55885007	WG	VOA	SW8260B	1,2-DICHLOROBENZENE	20200	E	20200	R	ug/L	LR
55885	196GW004M1	55885007	WG	VOA	SW8260B	CHLOROBENZENE	6570	E	6570	R	ug/L	LR
55885	196GW004M1LR	55885007	WG	VOA	SW8260B	1,1,1-TRICHLOROETHANE	2500	U	2500	R	ug/L	DL
55885	196GW004M1LR	55885007	WG	VOA	SW8260B	1,1,2,2-TETRACHLOROETHANE	2500	U	2500	R	ug/L	DL
55885	196GW004M1LR	55885007	WG	VOA	SW8260B	1,1,2-TRICHLOROETHANE	2500	U	2500	R	ug/L	DL
55885	196GW004M1LR	55885007	WG	VOA	SW8260B	1,1-DICHLOROETHANE	2500	U	2500	R	ug/L	DL

SDG	Sample ID	Lab Sample ID	Matrix	Parameter Class	Analytical Method	Parameter	Lab Result	Lab Qual	Final Result	Final Qual	Units	Reasons
55885	196GW004M1LR	55885007	WG	VOA	SW8260B	1,1-DICHLOROETHENE	2500	U	2500	R	ug/L	DL
55885	196GW004M1LR	55885007	WG	VOA	SW8260B	1,2,3-Trichlorobenzene	2500	U	2500	R	ug/L	DL
55885	196GW004M1LR	55885007	WG	VOA	SW8260B	1,2,4-TRICHLOROBENZENE	2500	U	2500	R	ug/L	DL
55885	196GW004M1LR	55885007	WG	VOA	SW8260B	1,2-DICHLOROETHANE	2500	U	2500	R	ug/L	DL
55885	196GW004M1LR	55885007	WG	VOA	SW8260B	1,2-Dichloroethene (total)	2500	U	2500	R	ug/L	DL
55885	196GW004M1LR	55885007	WG	VOA	SW8260B	1,2-DICHLOROPROPANE	2500	U	2500	R	ug/L	DL
55885	196GW004M1LR	55885007	WG	VOA	SW8260B	1,3-DICHLOROBENZENE	576	JD	576	R	ug/L	DL
55885	196GW004M1LR	55885007	WG	VOA	SW8260B	1,4-DICHLOROBENZENE	1070	JD	1070	R	ug/L	DL
55885	196GW004M1LR	55885007	WG	VOA	SW8260B	2-BUTANONE (MEK)	5000	U	5000	R	ug/L	DL
55885	196GW004M1LR	55885007	WG	VOA	SW8260B	2-Chloroethyl vinyl ether	2500	U	2500	R	ug/L	DL
55885	196GW004M1LR	55885007	WG	VOA	SW8260B	2-HEXANONE	5000	U	5000	R	ug/L	DL
55885	196GW004M1LR	55885007	WG	VOA	SW8260B	4-METHYL-2-PENTANONE (MIBK)	5000	U	5000	R	ug/L	DL
55885	196GW004M1LR	55885007	WG	VOA	SW8260B	ACETONE	5000	U	5000	R	ug/L	DL
55885	196GW004M1LR	55885007	WG	VOA	SW8260B	BENZENE	355	JD	355	R	ug/L	DL
55885	196GW004M1LR	55885007	WG	VOA	SW8260B	BROMODICHLOROMETHANE	2500	U	2500	R	ug/L	DL
55885	196GW004M1LR	55885007	WG	VOA	SW8260B	BROMOFORM	2500	U	2500	R	ug/L	DL
55885	196GW004M1LR	55885007	WG	VOA	SW8260B	BROMOMETHANE	5000	U	5000	R	ug/L	DL
55885	196GW004M1LR	55885007	WG	VOA	SW8260B	CARBON DISULFIDE	2500	U	2500	R	ug/L	DL
55885	196GW004M1LR	55885007	WG	VOA	SW8260B	CARBON TETRACHLORIDE	2500	U	2500	R	ug/L	DL
55885	196GW004M1LR	55885007	WG	VOA	SW8260B	CHLOROETHANE	5000	U	5000	R	ug/L	DL
55885	196GW004M1LR	55885007	WG	VOA	SW8260B	CHLOROFORM	2500	U	2500	R	ug/L	DL
55885	196GW004M1LR	55885007	WG	VOA	SW8260B	CHLOROMETHANE	5000	U	5000	R	ug/L	DL
55885	196GW004M1LR	55885007	WG	VOA	SW8260B	cis-1,2-DICHLOROETHYLENE	2500	U	2500	R	ug/L	DL
55885	196GW004M1LR	55885007	WG	VOA	SW8260B	cis-1,3-DICHLOROPROPENE	2500	U	2500	R	ug/L	DL
55885	196GW004M1LR	55885007	WG	VOA	SW8260B	DIBROMOCHLOROMETHANE	2500	U	2500	R	ug/L	DL
55885	196GW004M1LR	55885007	WG	VOA	SW8260B	ETHYLBENZENE	2500	U	2500	R	ug/L	DL
55885	196GW004M1LR	55885007	WG	VOA	SW8260B	m+p Xylene	2500	U	2500	R	ug/L	DL
55885	196GW004M1LR	55885007	WG	VOA	SW8260B	METHYLENE CHLORIDE	2500	U	2500	R	ug/L	DL
55885	196GW004M1LR	55885007	WG	VOA	SW8260B	o-Xylene	2500	U	2500	R	ug/L	DL
55885	196GW004M1LR	55885007	WG	VOA	SW8260B	STYRENE	2500	U	2500	R	ug/L	DL
55885	196GW004M1LR	55885007	WG	VOA	SW8260B	TETRACHLOROETHYLENE(PCE)	2500	U	2500	R	ug/L	DL
55885	196GW004M1LR	55885007	WG	VOA	SW8260B	TOLUENE	2500	U	2500	R	ug/L	DL
55885	196GW004M1LR	55885007	WG	VOA	SW8260B	trans-1,2-DICHLOROETHENE	2500	U	2500	R	ug/L	DL

Attachment 1 - Changed Qualifiers and Results
Zone H, SWMU 196 - Data Validation

SDG	Sample ID	Lab Sample ID	Matrix	Parameter Class	Analytical Method	Parameter	Lab Result	Lab Qual	Final Result	Final Qual	Units	Reasons
55885	196GW004M1LR	55885007	WG	VOA	SW8260B	trans-1,3-DICHLOROPROPENE	2500	U	2500	R	ug/L	DL
55885	196GW004M1LR	55885007	WG	VOA	SW8260B	TRICHLOROETHYLENE (TCE)	2500	U	2500	R	ug/L	DL
55885	196GW004M1LR	55885007	WG	VOA	SW8260B	Vinyl acetate	5000	U	5000	R	ug/L	DL
55885	196GW004M1LR	55885007	WG	VOA	SW8260B	VINYL CHLORIDE	5000	U	5000	R	ug/L	DL
55885	196GW004M1LR	55885007	WG	VOA	SW8260B	XYLENES, TOTAL	2500	U	2500	R	ug/L	DL
55885	196GW005M1	55885008	WG	VOA	SW8260B	1,2-DICHLOROBENZENE	20400	E	20400	R	ug/L	LR
55885	196GW005M1LR	55885008	WG	VOA	SW8260B	1,1,1-TRICHLOROETHANE	2500	U	2500	R	ug/L	DL
55885	196GW005M1LR	55885008	WG	VOA	SW8260B	1,1,2,2-TETRACHLOROETHANE	2500	U	2500	R	ug/L	DL
55885	196GW005M1LR	55885008	WG	VOA	SW8260B	1,1,2-TRICHLOROETHANE	2500	U	2500	R	ug/L	DL
55885	196GW005M1LR	55885008	WG	VOA	SW8260B	1,1-DICHLOROETHANE	2500	U	2500	R	ug/L	DL
55885	196GW005M1LR	55885008	WG	VOA	SW8260B	1,1-DICHLOROETHENE	2500	U	2500	R	ug/L	DL
55885	196GW005M1LR	55885008	WG	VOA	SW8260B	1,2,3-Trichlorobenzene	2500	U	2500	R	ug/L	DL
55885	196GW005M1LR	55885008	WG	VOA	SW8260B	1,2,4-TRICHLOROBENZENE	2500	U	2500	R	ug/L	DL
55885	196GW005M1LR	55885008	WG	VOA	SW8260B	1,2-DICHLOROETHANE	2500	U	2500	R	ug/L	DL
55885	196GW005M1LR	55885008	WG	VOA	SW8260B	1,2-Dichloroethene (total)	2500	U	2500	R	ug/L	DL
55885	196GW005M1LR	55885008	WG	VOA	SW8260B	1,2-DICHLOROPROPANE	2500	U	2500	R	ug/L	DL
55885	196GW005M1LR	55885008	WG	VOA	SW8260B	1,3-DICHLOROBENZENE	164	JD	164	R	ug/L	DL
55885	196GW005M1LR	55885008	WG	VOA	SW8260B	1,4-DICHLOROBENZENE	388	JD	388	R	ug/L	DL
55885	196GW005M1LR	55885008	WG	VOA	SW8260B	2-BUTANONE (MEK)	5000	U	5000	R	ug/L	DL
55885	196GW005M1LR	55885008	WG	VOA	SW8260B	2-Chloroethyl vinyl ether	2500	U	2500	R	ug/L	DL
55885	196GW005M1LR	55885008	WG	VOA	SW8260B	2-HEXANONE	5000	U	5000	R	ug/L	DL
55885	196GW005M1LR	55885008	WG	VOA	SW8260B	4-METHYL-2-PENTANONE (MIBK)	5000	U	5000	R	ug/L	DL
55885	196GW005M1LR	55885008	WG	VOA	SW8260B	ACETONE	5000	U	5000	R	ug/L	DL
55885	196GW005M1LR	55885008	WG	VOA	SW8260B	BENZENE	2500	U	2500	R	ug/L	DL
55885	196GW005M1LR	55885008	WG	VOA	SW8260B	BROMODICHLOROMETHANE	2500	U	2500	R	ug/L	DL
55885	196GW005M1LR	55885008	WG	VOA	SW8260B	BROMOFORM	2500	U	2500	R	ug/L	DL
55885	196GW005M1LR	55885008	WG	VOA	SW8260B	BROMOMETHANE	5000	U	5000	R	ug/L	DL
55885	196GW005M1LR	55885008	WG	VOA	SW8260B	CARBON DISULFIDE	2500	U	2500	R	ug/L	DL
55885	196GW005M1LR	55885008	WG	VOA	SW8260B	CARBON TETRACHLORIDE	2500	U	2500	R	ug/L	DL
55885	196GW005M1LR	55885008	WG	VOA	SW8260B	CHLOROBENZENE	295	JD	295	R	ug/L	DL
55885	196GW005M1LR	55885008	WG	VOA	SW8260B	CHLOROETHANE	5000	U	5000	R	ug/L	DL
55885	196GW005M1LR	55885008	WG	VOA	SW8260B	CHLOROFORM	2500	U	2500	R	ug/L	DL
55885	196GW005M1LR	55885008	WG	VOA	SW8260B	CHLOROMETHANE	5000	U	5000	R	ug/L	DL

SDG	Sample ID	Lab Sample ID	Matrix	Parameter Class	Analytical Method	Parameter	Lab Result	Lab Qual	Final Result	Final Qual	Units	Reasons
55885	196GW005M1LR	55885008	WG	VOA	SW8260B	cis-1,2-DICHLOROETHYLENE	2500	U	2500	R	ug/L	DL
55885	196GW005M1LR	55885008	WG	VOA	SW8260B	cis-1,3-DICHLOROPROPENE	2500	U	2500	R	ug/L	DL
55885	196GW005M1LR	55885008	WG	VOA	SW8260B	DIBROMOCHLOROMETHANE	2500	U	2500	R	ug/L	DL
55885	196GW005M1LR	55885008	WG	VOA	SW8260B	ETHYLBENZENE	2500	U	2500	R	ug/L	DL
55885	196GW005M1LR	55885008	WG	VOA	SW8260B	m+p Xylene	2500	U	2500	R	ug/L	DL
55885	196GW005M1LR	55885008	WG	VOA	SW8260B	METHYLENE CHLORIDE	2500	U	2500	R	ug/L	DL
55885	196GW005M1LR	55885008	WG	VOA	SW8260B	o-Xylene	2500	U	2500	R	ug/L	DL
55885	196GW005M1LR	55885008	WG	VOA	SW8260B	STYRENE	2500	U	2500	R	ug/L	DL
55885	196GW005M1LR	55885008	WG	VOA	SW8260B	TETRACHLOROETHYLENE(PCE)	2500	U	2500	R	ug/L	DL
55885	196GW005M1LR	55885008	WG	VOA	SW8260B	TOLUENE	2500	U	2500	R	ug/L	DL
55885	196GW005M1LR	55885008	WG	VOA	SW8260B	trans-1,2-DICHLOROETHENE	2500	U	2500	R	ug/L	DL
55885	196GW005M1LR	55885008	WG	VOA	SW8260B	trans-1,3-DICHLOROPROPENE	2500	U	2500	R	ug/L	DL
55885	196GW005M1LR	55885008	WG	VOA	SW8260B	TRICHLOROETHYLENE (TCE)	2500	U	2500	R	ug/L	DL
55885	196GW005M1LR	55885008	WG	VOA	SW8260B	Vinyl acetate	5000	U	5000	R	ug/L	DL
55885	196GW005M1LR	55885008	WG	VOA	SW8260B	VINYL CHLORIDE	5000	U	5000	R	ug/L	DL
55885	196GW005M1LR	55885008	WG	VOA	SW8260B	XYLENES, TOTAL	2500	U	2500	R	ug/L	DL
55885	196GW006M1	55885001	WG	VOA	SW8260B	1,2-DICHLOROBENZENE	7570	E	7570	R	ug/L	LR
55885	196GW006M1LR	55885001	WG	VOA	SW8260B	1,1,1-TRICHLOROETHANE	500	U	500	R	ug/L	DL
55885	196GW006M1LR	55885001	WG	VOA	SW8260B	1,1,2,2-TETRACHLOROETHANE	500	U	500	R	ug/L	DL
55885	196GW006M1LR	55885001	WG	VOA	SW8260B	1,1,2-TRICHLOROETHANE	500	U	500	R	ug/L	DL
55885	196GW006M1LR	55885001	WG	VOA	SW8260B	1,1-DICHLOROETHANE	500	U	500	R	ug/L	DL
55885	196GW006M1LR	55885001	WG	VOA	SW8260B	1,1-DICHLOROETHENE	500	U	500	R	ug/L	DL
55885	196GW006M1LR	55885001	WG	VOA	SW8260B	1,2,3-Trichlorobenzene	500	U	500	R	ug/L	DL
55885	196GW006M1LR	55885001	WG	VOA	SW8260B	1,2,4-TRICHLOROBENZENE	500	U	500	R	ug/L	DL
55885	196GW006M1LR	55885001	WG	VOA	SW8260B	1,2-DICHLOROETHANE	500	U	500	R	ug/L	DL
55885	196GW006M1LR	55885001	WG	VOA	SW8260B	1,2-Dichloroethene (total)	500	U	500	R	ug/L	DL
55885	196GW006M1LR	55885001	WG	VOA	SW8260B	1,2-DICHLOROPROPANE	500	U	500	R	ug/L	DL
55885	196GW006M1LR	55885001	WG	VOA	SW8260B	1,3-DICHLOROBENZENE	76.4	JD	76.4	R	ug/L	DL
55885	196GW006M1LR	55885001	WG	VOA	SW8260B	1,4-DICHLOROBENZENE	200	JD	200	R	ug/L	DL
55885	196GW006M1LR	55885001	WG	VOA	SW8260B	2-BUTANONE (MEK)	1000	U	1000	R	ug/L	DL
55885	196GW006M1LR	55885001	WG	VOA	SW8260B	2-Chloroethyl vinyl ether	500	U	500	R	ug/L	DL
55885	196GW006M1LR	55885001	WG	VOA	SW8260B	2-HEXANONE	1000	U	1000	R	ug/L	DL
55885	196GW006M1LR	55885001	WG	VOA	SW8260B	4-METHYL-2-PENTANONE (MIBK)	1000	U	1000	R	ug/L	DL

Attachment 1 - Changed Qualifiers and Results
Zone H, SWMU 196 - Data Validation

SDG	Sample ID	Lab Sample ID	Matrix	Parameter Class	Analytical Method	Parameter	Lab Result	Lab Qual	Final Result	Final Qual	Units	Reasons
55885	196GW006M1LR	55885001	WG	VOA	SW8260B	ACETONE	1000	U	1000	R	ug/L	DL
55885	196GW006M1LR	55885001	WG	VOA	SW8260B	BENZENE	500	U	500	R	ug/L	DL
55885	196GW006M1LR	55885001	WG	VOA	SW8260B	BROMODICHLOROMETHANE	500	U	500	R	ug/L	DL
55885	196GW006M1LR	55885001	WG	VOA	SW8260B	BROMOFORM	500	U	500	R	ug/L	DL
55885	196GW006M1LR	55885001	WG	VOA	SW8260B	BROMOMETHANE	1000	U	1000	R	ug/L	DL
55885	196GW006M1LR	55885001	WG	VOA	SW8260B	CARBON DISULFIDE	500	U	500	R	ug/L	DL
55885	196GW006M1LR	55885001	WG	VOA	SW8260B	CARBON TETRACHLORIDE	500	U	500	R	ug/L	DL
55885	196GW006M1LR	55885001	WG	VOA	SW8260B	CHLOROBENZENE	2030	D	2030	R	ug/L	DL
55885	196GW006M1LR	55885001	WG	VOA	SW8260B	CHLOROETHANE	1000	U	1000	R	ug/L	DL
55885	196GW006M1LR	55885001	WG	VOA	SW8260B	CHLOROFORM	500	U	500	R	ug/L	DL
55885	196GW006M1LR	55885001	WG	VOA	SW8260B	CHLOROMETHANE	1000	U	1000	R	ug/L	DL
55885	196GW006M1LR	55885001	WG	VOA	SW8260B	cis-1,2-DICHLOROETHYLENE	500	U	500	R	ug/L	DL
55885	196GW006M1LR	55885001	WG	VOA	SW8260B	cis-1,3-DICHLOROPROPENE	500	U	500	R	ug/L	DL
55885	196GW006M1LR	55885001	WG	VOA	SW8260B	DIBROMOCHLOROMETHANE	500	U	500	R	ug/L	DL
55885	196GW006M1LR	55885001	WG	VOA	SW8260B	ETHYLBENZENE	500	U	500	R	ug/L	DL
55885	196GW006M1LR	55885001	WG	VOA	SW8260B	m+p Xylene	500	U	500	R	ug/L	DL
55885	196GW006M1LR	55885001	WG	VOA	SW8260B	METHYLENE CHLORIDE	500	U	500	R	ug/L	DL
55885	196GW006M1LR	55885001	WG	VOA	SW8260B	o-Xylene	500	U	500	R	ug/L	DL
55885	196GW006M1LR	55885001	WG	VOA	SW8260B	STYRENE	500	U	500	R	ug/L	DL
55885	196GW006M1LR	55885001	WG	VOA	SW8260B	TETRACHLOROETHYLENE(PCE)	500	U	500	R	ug/L	DL
55885	196GW006M1LR	55885001	WG	VOA	SW8260B	TOLUENE	500	U	500	R	ug/L	DL
55885	196GW006M1LR	55885001	WG	VOA	SW8260B	trans-1,2-DICHLOROETHENE	500	U	500	R	ug/L	DL
55885	196GW006M1LR	55885001	WG	VOA	SW8260B	trans-1,3-DICHLOROPROPENE	500	U	500	R	ug/L	DL
55885	196GW006M1LR	55885001	WG	VOA	SW8260B	TRICHLOROETHYLENE (TCE)	500	U	500	R	ug/L	DL
55885	196GW006M1LR	55885001	WG	VOA	SW8260B	Vinyl acetate	1000	U	1000	R	ug/L	DL
55885	196GW006M1LR	55885001	WG	VOA	SW8260B	VINYL CHLORIDE	1000	U	1000	R	ug/L	DL
55885	196GW006M1LR	55885001	WG	VOA	SW8260B	XYLENES, TOTAL	500	U	500	R	ug/L	DL
55885	196GW007M1	55885009	WG	VOA	SW8260B	1,2-DICHLOROBENZENE	7220	EB	7220	R	ug/L	LR
55885	196GW007M1	55885009	WG	VOA	SW8260B	CHLOROBENZENE	10900	E	10900	R	ug/L	LR
55885	196GW007M1LR	55885009	WG	VOA	SW8260B	1,1,1-TRICHLOROETHANE	1250	U	1250	R	ug/L	DL
55885	196GW007M1LR	55885009	WG	VOA	SW8260B	1,1,2,2-TETRACHLOROETHANE	1250	U	1250	R	ug/L	DL
55885	196GW007M1LR	55885009	WG	VOA	SW8260B	1,1,2-TRICHLOROETHANE	1250	U	1250	R	ug/L	DL
55885	196GW007M1LR	55885009	WG	VOA	SW8260B	1,1-DICHLOROETHANE	1250	U	1250	R	ug/L	DL

SDG	Sample ID	Lab Sample ID	Matrix	Parameter Class	Analytical Method	Parameter	Lab Result	Lab Qual	Final Result	Final Qual	Units	Reasons
55885	196GW007M1LR	55885009	WG	VOA	SW8260B	1,1-DICHLOROETHENE	1250	U	1250	R	ug/L	DL
55885	196GW007M1LR	55885009	WG	VOA	SW8260B	1,2,3-Trichlorobenzene	1250	U	1250	R	ug/L	DL
55885	196GW007M1LR	55885009	WG	VOA	SW8260B	1,2,4-TRICHLOROBENZENE	1250	U	1250	R	ug/L	DL
55885	196GW007M1LR	55885009	WG	VOA	SW8260B	1,2-DICHLOROETHANE	1250	U	1250	R	ug/L	DL
55885	196GW007M1LR	55885009	WG	VOA	SW8260B	1,2-Dichloroethene (total)	1250	U	1250	R	ug/L	DL
55885	196GW007M1LR	55885009	WG	VOA	SW8260B	1,2-DICHLOROPROPANE	1250	U	1250	R	ug/L	DL
55885	196GW007M1LR	55885009	WG	VOA	SW8260B	1,3-DICHLOROBENZENE	93.5	JD	93.5	R	ug/L	DL
55885	196GW007M1LR	55885009	WG	VOA	SW8260B	1,4-DICHLOROBENZENE	293	JD	293	R	ug/L	DL
55885	196GW007M1LR	55885009	WG	VOA	SW8260B	2-BUTANONE (MEK)	2500	U	2500	R	ug/L	DL
55885	196GW007M1LR	55885009	WG	VOA	SW8260B	2-Chloroethyl vinyl ether	1250	U	1250	R	ug/L	DL
55885	196GW007M1LR	55885009	WG	VOA	SW8260B	2-HEXANONE	2500	U	2500	R	ug/L	DL
55885	196GW007M1LR	55885009	WG	VOA	SW8260B	4-METHYL-2-PENTANONE (MIBK)	2500	U	2500	R	ug/L	DL
55885	196GW007M1LR	55885009	WG	VOA	SW8260B	ACETONE	2500	U	2500	R	ug/L	DL
55885	196GW007M1LR	55885009	WG	VOA	SW8260B	BENZENE	1250	U	1250	R	ug/L	DL
55885	196GW007M1LR	55885009	WG	VOA	SW8260B	BROMODICHLOROMETHANE	1250	U	1250	R	ug/L	DL
55885	196GW007M1LR	55885009	WG	VOA	SW8260B	BROMOFORM	1250	U	1250	R	ug/L	DL
55885	196GW007M1LR	55885009	WG	VOA	SW8260B	BROMOMETHANE	2500	U	2500	R	ug/L	DL
55885	196GW007M1LR	55885009	WG	VOA	SW8260B	CARBON DISULFIDE	1250	U	1250	R	ug/L	DL
55885	196GW007M1LR	55885009	WG	VOA	SW8260B	CARBON TETRACHLORIDE	1250	U	1250	R	ug/L	DL
55885	196GW007M1LR	55885009	WG	VOA	SW8260B	CHLOROETHANE	2500	U	2500	R	ug/L	DL
55885	196GW007M1LR	55885009	WG	VOA	SW8260B	CHLOROFORM	1250	U	1250	R	ug/L	DL
55885	196GW007M1LR	55885009	WG	VOA	SW8260B	CHLOROMETHANE	2500	U	2500	R	ug/L	DL
55885	196GW007M1LR	55885009	WG	VOA	SW8260B	cis-1,2-DICHLOROETHYLENE	1250	U	1250	R	ug/L	DL
55885	196GW007M1LR	55885009	WG	VOA	SW8260B	cis-1,3-DICHLOROPROPENE	1250	U	1250	R	ug/L	DL
55885	196GW007M1LR	55885009	WG	VOA	SW8260B	DIBROMOCHLOROMETHANE	1250	U	1250	R	ug/L	DL
55885	196GW007M1LR	55885009	WG	VOA	SW8260B	ETHYLBENZENE	1250	U	1250	R	ug/L	DL
55885	196GW007M1LR	55885009	WG	VOA	SW8260B	m+p Xylene	1250	U	1250	R	ug/L	DL
55885	196GW007M1LR	55885009	WG	VOA	SW8260B	METHYLENE CHLORIDE	1250	U	1250	R	ug/L	DL
55885	196GW007M1LR	55885009	WG	VOA	SW8260B	o-Xylene	1250	U	1250	R	ug/L	DL
55885	196GW007M1LR	55885009	WG	VOA	SW8260B	STYRENE	1250	U	1250	R	ug/L	DL
55885	196GW007M1LR	55885009	WG	VOA	SW8260B	TETRACHLOROETHYLENE(PCE)	1250	U	1250	R	ug/L	DL
55885	196GW007M1LR	55885009	WG	VOA	SW8260B	TOLUENE	1250	U	1250	R	ug/L	DL
55885	196GW007M1LR	55885009	WG	VOA	SW8260B	trans-1,2-DICHLOROETHENE	1250	U	1250	R	ug/L	DL

Attachment 1 - Changed Qualifiers and Results
Zone H, SWMU 196 - Data Validation

SDG	Sample ID	Lab Sample ID	Matrix	Parameter Class	Analytical Method	Parameter	Lab Result	Lab Qual	Final Result	Final Qual	Units	Reasons
55885	196GW007M1LR	55885009	WG	VOA	SW8260B	trans-1,3-DICHLOROPROPENE	1250	U	1250	R	ug/L	DL
55885	196GW007M1LR	55885009	WG	VOA	SW8260B	TRICHLOROETHYLENE (TCE)	1250	U	1250	R	ug/L	DL
55885	196GW007M1LR	55885009	WG	VOA	SW8260B	Vinyl acetate	2500	U	2500	R	ug/L	DL
55885	196GW007M1LR	55885009	WG	VOA	SW8260B	VINYL CHLORIDE	2500	U	2500	R	ug/L	DL
55885	196GW007M1LR	55885009	WG	VOA	SW8260B	XYLENES, TOTAL	1250	U	1250	R	ug/L	DL
55885	196GW008M1	55885010	WG	VOA	SW8260B	CARBON DISULFIDE	500	U	500	UJ	ug/L	CC
55885	196GW008M1	55885010	WG	VOA	SW8260B	Vinyl acetate	1000	U	1000	UJ	ug/L	CC
55885	196GW009M1	55885011	WG	VOA	SW8260B	CARBON DISULFIDE	1250	U	1250	UJ	ug/L	CC
55885	196GW009M1	55885011	WG	VOA	SW8260B	Vinyl acetate	2500	U	2500	UJ	ug/L	CC
55885	196GW010M1	55885012	WG	VOA	SW8260B	1,2-DICHLOROBENZENE	1000	EB	1000	R	ug/L	LR
55885	196GW010M1	55885012	WG	VOA	SW8260B	CHLOROBENZENE	910	E	910	R	ug/L	LR
55885	196GW010M1LR	55885012	WG	VOA	SW8260B	1,1,1-TRICHLOROETHANE	1250	U	1250	R	ug/L	DL
55885	196GW010M1LR	55885012	WG	VOA	SW8260B	1,1,2,2-TETRACHLOROETHANE	1250	U	1250	R	ug/L	DL
55885	196GW010M1LR	55885012	WG	VOA	SW8260B	1,1,2-TRICHLOROETHANE	1250	U	1250	R	ug/L	DL
55885	196GW010M1LR	55885012	WG	VOA	SW8260B	1,1-DICHLOROETHANE	1250	U	1250	R	ug/L	DL
55885	196GW010M1LR	55885012	WG	VOA	SW8260B	1,1-DICHLOROETHENE	1250	U	1250	R	ug/L	DL
55885	196GW010M1LR	55885012	WG	VOA	SW8260B	1,2,3-Trichlorobenzene	1250	U	1250	R	ug/L	DL
55885	196GW010M1LR	55885012	WG	VOA	SW8260B	1,2,4-TRICHLOROBENZENE	1250	U	1250	R	ug/L	DL
55885	196GW010M1LR	55885012	WG	VOA	SW8260B	1,2-DICHLOROETHANE	1250	U	1250	R	ug/L	DL
55885	196GW010M1LR	55885012	WG	VOA	SW8260B	1,2-Dichloroethene (total)	1250	U	1250	R	ug/L	DL
55885	196GW010M1LR	55885012	WG	VOA	SW8260B	1,2-DICHLOROPROPANE	1250	U	1250	R	ug/L	DL
55885	196GW010M1LR	55885012	WG	VOA	SW8260B	1,3-DICHLOROBENZENE	1250	U	1250	R	ug/L	DL
55885	196GW010M1LR	55885012	WG	VOA	SW8260B	1,4-DICHLOROBENZENE	103	JD	103	R	ug/L	DL
55885	196GW010M1LR	55885012	WG	VOA	SW8260B	2-BUTANONE (MEK)	2500	U	2500	R	ug/L	DL
55885	196GW010M1LR	55885012	WG	VOA	SW8260B	2-Chloroethyl vinyl ether	1250	U	1250	R	ug/L	DL
55885	196GW010M1LR	55885012	WG	VOA	SW8260B	2-HEXANONE	2500	U	2500	R	ug/L	DL
55885	196GW010M1LR	55885012	WG	VOA	SW8260B	4-METHYL-2-PENTANONE (MIBK)	2500	U	2500	R	ug/L	DL
55885	196GW010M1LR	55885012	WG	VOA	SW8260B	ACETONE	2500	U	2500	R	ug/L	DL
55885	196GW010M1LR	55885012	WG	VOA	SW8260B	BENZENE	1250	U	1250	R	ug/L	DL
55885	196GW010M1LR	55885012	WG	VOA	SW8260B	BROMODICHLOROMETHANE	1250	U	1250	R	ug/L	DL
55885	196GW010M1LR	55885012	WG	VOA	SW8260B	BROMOFORM	1250	U	1250	R	ug/L	DL
55885	196GW010M1LR	55885012	WG	VOA	SW8260B	BROMOMETHANE	2500	U	2500	R	ug/L	DL
55885	196GW010M1LR	55885012	WG	VOA	SW8260B	CARBON DISULFIDE	1250	U	1250	R	ug/L	DL

SDG	Sample ID	Lab Sample ID	Matrix	Parameter Class	Analytical Method	Parameter	Lab Result	Lab Qual	Final Result	Final Qual	Units	Reasons
55885	196GW010M1LR	55885012	WG	VOA	SW8260B	CARBON TETRACHLORIDE	1250	U	1250	R	ug/L	DL
55885	196GW010M1LR	55885012	WG	VOA	SW8260B	CHLOROETHANE	2500	U	2500	R	ug/L	DL
55885	196GW010M1LR	55885012	WG	VOA	SW8260B	CHLOROFORM	1250	U	1250	R	ug/L	DL
55885	196GW010M1LR	55885012	WG	VOA	SW8260B	CHLOROMETHANE	2500	U	2500	R	ug/L	DL
55885	196GW010M1LR	55885012	WG	VOA	SW8260B	cis-1,2-DICHLOROETHYLENE	1250	U	1250	R	ug/L	DL
55885	196GW010M1LR	55885012	WG	VOA	SW8260B	cis-1,3-DICHLOROPROPENE	1250	U	1250	R	ug/L	DL
55885	196GW010M1LR	55885012	WG	VOA	SW8260B	DIBROMOCHLOROMETHANE	1250	U	1250	R	ug/L	DL
55885	196GW010M1LR	55885012	WG	VOA	SW8260B	ETHYLBENZENE	1250	U	1250	R	ug/L	DL
55885	196GW010M1LR	55885012	WG	VOA	SW8260B	m+p Xylene	1250	U	1250	R	ug/L	DL
55885	196GW010M1LR	55885012	WG	VOA	SW8260B	METHYLENE CHLORIDE	1250	U	1250	R	ug/L	DL
55885	196GW010M1LR	55885012	WG	VOA	SW8260B	o-Xylene	1250	U	1250	R	ug/L	DL
55885	196GW010M1LR	55885012	WG	VOA	SW8260B	STYRENE	1250	U	1250	R	ug/L	DL
55885	196GW010M1LR	55885012	WG	VOA	SW8260B	TETRACHLOROETHYLENE(PCE)	1250	U	1250	R	ug/L	DL
55885	196GW010M1LR	55885012	WG	VOA	SW8260B	TOLUENE	1250	U	1250	R	ug/L	DL
55885	196GW010M1LR	55885012	WG	VOA	SW8260B	trans-1,2-DICHLOROETHENE	1250	U	1250	R	ug/L	DL
55885	196GW010M1LR	55885012	WG	VOA	SW8260B	trans-1,3-DICHLOROPROPENE	1250	U	1250	R	ug/L	DL
55885	196GW010M1LR	55885012	WG	VOA	SW8260B	TRICHLOROETHYLENE (TCE)	1250	U	1250	R	ug/L	DL
55885	196GW010M1LR	55885012	WG	VOA	SW8260B	Vinyl acetate	2500	U	2500	R	ug/L	DL
55885	196GW010M1LR	55885012	WG	VOA	SW8260B	VINYL CHLORIDE	2500	U	2500	R	ug/L	DL
55885	196GW010M1LR	55885012	WG	VOA	SW8260B	XYLENES, TOTAL	1250	U	1250	R	ug/L	DL
55885	GELGW015M1	55885006	WG	VOA	SW8260B	1,2-DICHLOROBENZENE	2240	EB	2240	R	ug/L	LR
55885	GELGW015M1	55885006	WG	VOA	SW8260B	1,3-DICHLOROBENZENE	248	E	248	R	ug/L	LR
55885	GELGW015M1	55885006	WG	VOA	SW8260B	1,4-DICHLOROBENZENE	548	EB	548	R	ug/L	LR
55885	GELGW015M1	55885006	WG	VOA	SW8260B	CHLOROBENZENE	1300	E	1300	R	ug/L	LR
55885	GELGW015M1LR	55885006	WG	VOA	SW8260B	1,1,1-TRICHLOROETHANE	2500	U	2500	R	ug/L	DL
55885	GELGW015M1LR	55885006	WG	VOA	SW8260B	1,1,2,2-TETRACHLOROETHANE	2500	U	2500	R	ug/L	DL
55885	GELGW015M1LR	55885006	WG	VOA	SW8260B	1,1,2-TRICHLOROETHANE	2500	U	2500	R	ug/L	DL
55885	GELGW015M1LR	55885006	WG	VOA	SW8260B	1,1-DICHLOROETHANE	2500	U	2500	R	ug/L	DL
55885	GELGW015M1LR	55885006	WG	VOA	SW8260B	1,1-DICHLOROETHENE	2500	U	2500	R	ug/L	DL
55885	GELGW015M1LR	55885006	WG	VOA	SW8260B	1,2,3-Trichlorobenzene	2500	U	2500	R	ug/L	DL
55885	GELGW015M1LR	55885006	WG	VOA	SW8260B	1,2,4-TRICHLOROBENZENE	2500	U	2500	R	ug/L	DL
55885	GELGW015M1LR	55885006	WG	VOA	SW8260B	1,2-DICHLOROETHANE	2500	U	2500	R	ug/L	DL
55885	GELGW015M1LR	55885006	WG	VOA	SW8260B	1,2-Dichloroethene (total)	2500	U	2500	R	ug/L	DL

Attachment 1 - Changed Qualifiers and Results
Zone H, SWMU 196 - Data Validation

SDG	Sample ID	Lab Sample ID	Matrix	Parameter Class	Analytical Method	Parameter	Lab Result	Lab Qual	Final Result	Final Qual	Units	Reasons
55885	GELGW015M1LR	55885006	WG	VOA	SW8260B	1,2-DICHLOROPROPANE	2500	U	2500	R	ug/L	DL
55885	GELGW015M1LR	55885006	WG	VOA	SW8260B	2-BUTANONE (MEK)	5000	U	5000	R	ug/L	DL
55885	GELGW015M1LR	55885006	WG	VOA	SW8260B	2-Chloroethyl vinyl ether	2500	U	2500	R	ug/L	DL
55885	GELGW015M1LR	55885006	WG	VOA	SW8260B	2-HEXANONE	5000	U	5000	R	ug/L	DL
55885	GELGW015M1LR	55885006	WG	VOA	SW8260B	4-METHYL-2-PENTANONE (MIBK)	5000	U	5000	R	ug/L	DL
55885	GELGW015M1LR	55885006	WG	VOA	SW8260B	ACETONE	5000	U	5000	R	ug/L	DL
55885	GELGW015M1LR	55885006	WG	VOA	SW8260B	BENZENE	2500	U	2500	R	ug/L	DL
55885	GELGW015M1LR	55885006	WG	VOA	SW8260B	BROMODICHLOROMETHANE	2500	U	2500	R	ug/L	DL
55885	GELGW015M1LR	55885006	WG	VOA	SW8260B	BROMOFORM	2500	U	2500	R	ug/L	DL
55885	GELGW015M1LR	55885006	WG	VOA	SW8260B	BROMOMETHANE	5000	U	5000	R	ug/L	DL
55885	GELGW015M1LR	55885006	WG	VOA	SW8260B	CARBON DISULFIDE	2500	U	2500	R	ug/L	DL
55885	GELGW015M1LR	55885006	WG	VOA	SW8260B	CARBON TETRACHLORIDE	2500	U	2500	R	ug/L	DL
55885	GELGW015M1LR	55885006	WG	VOA	SW8260B	CHLOROETHANE	5000	U	5000	R	ug/L	DL
55885	GELGW015M1LR	55885006	WG	VOA	SW8260B	CHLOROFORM	2500	U	2500	R	ug/L	DL
55885	GELGW015M1LR	55885006	WG	VOA	SW8260B	CHLOROMETHANE	5000	U	5000	R	ug/L	DL
55885	GELGW015M1LR	55885006	WG	VOA	SW8260B	cis-1,2-DICHLOROETHYLENE	2500	U	2500	R	ug/L	DL
55885	GELGW015M1LR	55885006	WG	VOA	SW8260B	cis-1,3-DICHLOROPROPENE	2500	U	2500	R	ug/L	DL
55885	GELGW015M1LR	55885006	WG	VOA	SW8260B	DIBROMOCHLOROMETHANE	2500	U	2500	R	ug/L	DL
55885	GELGW015M1LR	55885006	WG	VOA	SW8260B	ETHYLBENZENE	2500	U	2500	R	ug/L	DL
55885	GELGW015M1LR	55885006	WG	VOA	SW8260B	m+p Xylene	2500	U	2500	R	ug/L	DL
55885	GELGW015M1LR	55885006	WG	VOA	SW8260B	METHYLENE CHLORIDE	2500	U	2500	R	ug/L	DL
55885	GELGW015M1LR	55885006	WG	VOA	SW8260B	o-Xylene	2500	U	2500	R	ug/L	DL
55885	GELGW015M1LR	55885006	WG	VOA	SW8260B	STYRENE	2500	U	2500	R	ug/L	DL
55885	GELGW015M1LR	55885006	WG	VOA	SW8260B	TETRACHLOROETHYLENE(PCE)	2500	U	2500	R	ug/L	DL
55885	GELGW015M1LR	55885006	WG	VOA	SW8260B	TOLUENE	2500	U	2500	R	ug/L	DL
55885	GELGW015M1LR	55885006	WG	VOA	SW8260B	trans-1,2-DICHLOROETHENE	2500	U	2500	R	ug/L	DL
55885	GELGW015M1LR	55885006	WG	VOA	SW8260B	trans-1,3-DICHLOROPROPENE	2500	U	2500	R	ug/L	DL
55885	GELGW015M1LR	55885006	WG	VOA	SW8260B	TRICHLOROETHYLENE (TCE)	2500	U	2500	R	ug/L	DL
55885	GELGW015M1LR	55885006	WG	VOA	SW8260B	Vinyl acetate	5000	U	5000	R	ug/L	DL
55885	GELGW015M1LR	55885006	WG	VOA	SW8260B	VINYL CHLORIDE	5000	U	5000	R	ug/L	DL
55885	GELGW015M1LR	55885006	WG	VOA	SW8260B	XYLENES, TOTAL	2500	U	2500	R	ug/L	DL
55953	196GW011M1	55953006	WG	VOA	SW8260B	CARBON DISULFIDE	5	U	5	UJ	ug/L	CC
55953	196GW011M1	55953006	WG	VOA	SW8260B	Vinyl acetate	10	U	10	UJ	ug/L	CC

SDG	Sample ID	Lab Sample ID	Matrix	Parameter Class	Analytical Method	Parameter	Lab Result	Lab Qual	Final Result	Final Qual	Units	Reasons
55953	196GW012M1	55953002	WG	VOA	SW8260B	CARBON DISULFIDE	5	U	5	UJ	ug/L	CC
55953	196GW012M1	55953002	WG	VOA	SW8260B	Vinyl acetate	10	U	10	UJ	ug/L	CC
55953	196GW013M1	55953003	WG	VOA	SW8260B	1,2-DICHLOROBENZENE	11600	EB	11600	R	ug/L	LR
55953	196GW013M1	55953003	WG	VOA	SW8260B	CHLOROBENZENE	9140	E	9140	R	ug/L	LR
55953	196GW013M1LR	55953003	WG	VOA	SW8260B	1,1,1-TRICHLOROETHANE	1250	U	1250	R	ug/L	DL
55953	196GW013M1LR	55953003	WG	VOA	SW8260B	1,1,2,2-TETRACHLOROETHANE	1250	U	1250	R	ug/L	DL
55953	196GW013M1LR	55953003	WG	VOA	SW8260B	1,1,2-TRICHLOROETHANE	1250	U	1250	R	ug/L	DL
55953	196GW013M1LR	55953003	WG	VOA	SW8260B	1,1-DICHLOROETHANE	1250	U	1250	R	ug/L	DL
55953	196GW013M1LR	55953003	WG	VOA	SW8260B	1,1-DICHLOROETHENE	1250	U	1250	R	ug/L	DL
55953	196GW013M1LR	55953003	WG	VOA	SW8260B	1,2,3-Trichlorobenzene	1250	U	1250	R	ug/L	DL
55953	196GW013M1LR	55953003	WG	VOA	SW8260B	1,2,4-TRICHLOROBENZENE	1250	U	1250	R	ug/L	DL
55953	196GW013M1LR	55953003	WG	VOA	SW8260B	1,2-DICHLOROETHANE	1250	U	1250	R	ug/L	DL
55953	196GW013M1LR	55953003	WG	VOA	SW8260B	1,2-Dichloroethene (total)	1250	U	1250	R	ug/L	DL
55953	196GW013M1LR	55953003	WG	VOA	SW8260B	1,2-DICHLOROPROPANE	1250	U	1250	R	ug/L	DL
55953	196GW013M1LR	55953003	WG	VOA	SW8260B	1,3-DICHLOROBENZENE	87.4	JD	87.4	R	ug/L	DL
55953	196GW013M1LR	55953003	WG	VOA	SW8260B	1,4-DICHLOROBENZENE	270	JD	270	R	ug/L	DL
55953	196GW013M1LR	55953003	WG	VOA	SW8260B	2-BUTANONE (MEK)	2500	U	2500	R	ug/L	DL
55953	196GW013M1LR	55953003	WG	VOA	SW8260B	2-Chloroethyl vinyl ether	1250	U	1250	R	ug/L	DL
55953	196GW013M1LR	55953003	WG	VOA	SW8260B	2-HEXANONE	2500	U	2500	R	ug/L	DL
55953	196GW013M1LR	55953003	WG	VOA	SW8260B	4-METHYL-2-PENTANONE (MIBK)	2500	U	2500	R	ug/L	DL
55953	196GW013M1LR	55953003	WG	VOA	SW8260B	ACETONE	2500	U	2500	R	ug/L	DL
55953	196GW013M1LR	55953003	WG	VOA	SW8260B	BENZENE	2780	D	2780	R	ug/L	DL
55953	196GW013M1LR	55953003	WG	VOA	SW8260B	BROMODICHLOROMETHANE	1250	U	1250	R	ug/L	DL
55953	196GW013M1LR	55953003	WG	VOA	SW8260B	BROMOFORM	1250	U	1250	R	ug/L	DL
55953	196GW013M1LR	55953003	WG	VOA	SW8260B	BROMOMETHANE	2500	U	2500	R	ug/L	DL
55953	196GW013M1LR	55953003	WG	VOA	SW8260B	CARBON DISULFIDE	1250	U	1250	R	ug/L	DL
55953	196GW013M1LR	55953003	WG	VOA	SW8260B	CARBON TETRACHLORIDE	1250	U	1250	R	ug/L	DL
55953	196GW013M1LR	55953003	WG	VOA	SW8260B	CHLOROETHANE	2500	U	2500	R	ug/L	DL
55953	196GW013M1LR	55953003	WG	VOA	SW8260B	CHLOROFORM	1250	U	1250	R	ug/L	DL
55953	196GW013M1LR	55953003	WG	VOA	SW8260B	CHLOROMETHANE	2500	U	2500	R	ug/L	DL
55953	196GW013M1LR	55953003	WG	VOA	SW8260B	cis-1,2-DICHLOROETHYLENE	1250	U	1250	R	ug/L	DL
55953	196GW013M1LR	55953003	WG	VOA	SW8260B	cis-1,3-DICHLOROPROPENE	1250	U	1250	R	ug/L	DL
55953	196GW013M1LR	55953003	WG	VOA	SW8260B	DIBROMOCHLOROMETHANE	1250	U	1250	R	ug/L	DL

Attachment 1 - Changed Qualifiers and Results
Zone H, SWMU 196 - Data Validation

SDG	Sample ID	Lab Sample ID	Matrix	Parameter Class	Analytical Method	Parameter	Lab Result	Lab Qual	Final Result	Final Qual	Units	Reasons
55953	196GW013M1LR	55953003	WG	VOA	SW8260B	ETHYLBENZENE	1250	U	1250	R	ug/L	DL
55953	196GW013M1LR	55953003	WG	VOA	SW8260B	m+p Xylene	1250	U	1250	R	ug/L	DL
55953	196GW013M1LR	55953003	WG	VOA	SW8260B	METHYLENE CHLORIDE	1250	U	1250	R	ug/L	DL
55953	196GW013M1LR	55953003	WG	VOA	SW8260B	o-Xylene	1250	U	1250	R	ug/L	DL
55953	196GW013M1LR	55953003	WG	VOA	SW8260B	STYRENE	1250	U	1250	R	ug/L	DL
55953	196GW013M1LR	55953003	WG	VOA	SW8260B	TETRACHLOROETHYLENE(PCE)	1250	U	1250	R	ug/L	DL
55953	196GW013M1LR	55953003	WG	VOA	SW8260B	TOLUENE	1250	U	1250	R	ug/L	DL
55953	196GW013M1LR	55953003	WG	VOA	SW8260B	trans-1,2-DICHLOROETHENE	1250	U	1250	R	ug/L	DL
55953	196GW013M1LR	55953003	WG	VOA	SW8260B	trans-1,3-DICHLOROPROPENE	1250	U	1250	R	ug/L	DL
55953	196GW013M1LR	55953003	WG	VOA	SW8260B	TRICHLOROETHYLENE (TCE)	1250	U	1250	R	ug/L	DL
55953	196GW013M1LR	55953003	WG	VOA	SW8260B	Vinyl acetate	2500	U	2500	R	ug/L	DL
55953	196GW013M1LR	55953003	WG	VOA	SW8260B	VINYL CHLORIDE	2500	U	2500	R	ug/L	DL
55953	196GW013M1LR	55953003	WG	VOA	SW8260B	XYLENES, TOTAL	1250	U	1250	R	ug/L	DL
55953	196GW014M1	55953004	WG	VOA	SW8260B	CARBON DISULFIDE	2500	U	2500	UJ	ug/L	CC
55953	196GW014M1	55953004	WG	VOA	SW8260B	Vinyl acetate	5000	U	5000	UJ	ug/L	CC
55953	196GW015M1	55953001	WG	VOA	SW8260B	METHYLENE CHLORIDE	1250	U	1250	UJ	ug/L	CC
55953	196GW015M1	55953001	WG	VOA	SW8260B	Vinyl acetate	2500	U	2500	UJ	ug/L	CC
57356	196GW016M3	57356001	WG	VOA	SW8260B	1,4-DICHLOROBENZENE	15.1	JB	25	U	ug/L	BL
57356	196GW016M3	57356001	WG	VOA	SW8260B	2-Chloroethyl vinyl ether	25	U	25	UJ	ug/L	CC,BS,MS
57356	196GW016M3	57356001	WG	VOA	SW8260B	ACETONE	28.4	J	50	U	ug/L	BL
57356	196GW016M3	57356001	WG	VOA	SW8260B	BROMOMETHANE	50	U	50	UJ	ug/L	CC
57356	196GW016M3	57356001	WG	VOA	SW8260B	CARBON DISULFIDE	25	U	25	UJ	ug/L	IC
57356	196GW016M3	57356001	WG	VOA	SW8260B	TOLUENE	1.2	JB	25	U	ug/L	BL
57356	196GW017M3	57356002	WG	VOA	SW8260B	1,4-DICHLOROBENZENE	8.3	JB	10	U	ug/L	BL
57356	196GW017M3	57356002	WG	VOA	SW8260B	2-Chloroethyl vinyl ether	10	U	10	UJ	ug/L	CC,BS
57356	196GW017M3	57356002	WG	VOA	SW8260B	ACETONE	7.4	J	20	U	ug/L	BL
57356	196GW017M3	57356002	WG	VOA	SW8260B	BROMOMETHANE	20	U	20	UJ	ug/L	CC
57356	196GW017M3	57356002	WG	VOA	SW8260B	CARBON DISULFIDE	10	U	10	UJ	ug/L	IC
57356	196GW017M3	57356002	WG	VOA	SW8260B	TOLUENE	0.53	JB	10	U	ug/L	BL
59366	009GW022M5	59366001	WG	VOA	SW8260B	1,2-DICHLOROBENZENE	1460	E	1460	R	ug/L	LR
59366	009GW022M5	59366001	WG	VOA	SW8260B	1,3-DICHLOROBENZENE	105	E	105	R	ug/L	LR
59366	009GW022M5	59366001	WG	VOA	SW8260B	1,4-DICHLOROBENZENE	168	E	168	R	ug/L	LR
59366	009GW022M5	59366001	WG	VOA	SW8260B	ACETONE	6.4	JB	10	U	ug/L	BL

SDG	Sample ID	Lab Sample ID	Matrix	Parameter Class	Analytical Method	Parameter	Lab Result	Lab Qual	Final Result	Final Qual	Units	Reasons
59366	009GW022M5	59366001	WG	VOA	SW8260B	CHLOROBENZENE	177	E	177	R	ug/L	LR
59366	009GW022M5	59366001	WG	VOA	SW8260B	METHYLENE CHLORIDE	2.2	J	5	U	ug/L	BL
59366	009GW022M5DL	59366001	WG	VOA	SW8260B	1,1,1-TRICHLOROETHANE	500	U	500	R	ug/L	DL
59366	009GW022M5DL	59366001	WG	VOA	SW8260B	1,1,2,2-TETRACHLOROETHANE	500	U	500	R	ug/L	DL
59366	009GW022M5DL	59366001	WG	VOA	SW8260B	1,1,2-TRICHLOROETHANE	500	U	500	R	ug/L	DL
59366	009GW022M5DL	59366001	WG	VOA	SW8260B	1,1-DICHLOROETHANE	500	U	500	R	ug/L	DL
59366	009GW022M5DL	59366001	WG	VOA	SW8260B	1,1-DICHLOROETHENE	500	U	500	R	ug/L	DL
59366	009GW022M5DL	59366001	WG	VOA	SW8260B	1,2,3-Trichlorobenzene	500	U	500	R	ug/L	DL
59366	009GW022M5DL	59366001	WG	VOA	SW8260B	1,2,4-TRICHLOROBENZENE	500	U	500	R	ug/L	DL
59366	009GW022M5DL	59366001	WG	VOA	SW8260B	1,2-DICHLOROETHANE	500	U	500	R	ug/L	DL
59366	009GW022M5DL	59366001	WG	VOA	SW8260B	1,2-Dichloroethene (total)	500	U	500	R	ug/L	DL
59366	009GW022M5DL	59366001	WG	VOA	SW8260B	1,2-DICHLOROPROPANE	500	U	500	R	ug/L	DL
59366	009GW022M5DL	59366001	WG	VOA	SW8260B	1,3-DICHLOROBENZENE	114	JD	114	J	ug/L	DL
59366	009GW022M5DL	59366001	WG	VOA	SW8260B	1,4-DICHLOROBENZENE	207	JD	207	J	ug/L	DL
59366	009GW022M5DL	59366001	WG	VOA	SW8260B	2-BUTANONE (MEK)	1000	U	1000	R	ug/L	DL
59366	009GW022M5DL	59366001	WG	VOA	SW8260B	2-Chloroethyl vinyl ether	500	U	500	R	ug/L	DL
59366	009GW022M5DL	59366001	WG	VOA	SW8260B	2-HEXANONE	1000	U	1000	R	ug/L	DL
59366	009GW022M5DL	59366001	WG	VOA	SW8260B	4-METHYL-2-PENTANONE (MIBK)	1000	U	1000	R	ug/L	DL
59366	009GW022M5DL	59366001	WG	VOA	SW8260B	ACETONE	492	JBD	492	R	ug/L	DL
59366	009GW022M5DL	59366001	WG	VOA	SW8260B	BENZENE	500	U	500	R	ug/L	DL
59366	009GW022M5DL	59366001	WG	VOA	SW8260B	BROMODICHLOROMETHANE	500	U	500	R	ug/L	DL
59366	009GW022M5DL	59366001	WG	VOA	SW8260B	BROMOFORM	500	U	500	R	ug/L	DL
59366	009GW022M5DL	59366001	WG	VOA	SW8260B	BROMOMETHANE	1000	U	1000	R	ug/L	DL
59366	009GW022M5DL	59366001	WG	VOA	SW8260B	CARBON DISULFIDE	500	U	500	R	ug/L	DL
59366	009GW022M5DL	59366001	WG	VOA	SW8260B	CARBON TETRACHLORIDE	500	U	500	R	ug/L	DL
59366	009GW022M5DL	59366001	WG	VOA	SW8260B	CHLOROBENZENE	200	JD	200	J	ug/L	DL
59366	009GW022M5DL	59366001	WG	VOA	SW8260B	CHLOROETHANE	1000	U	1000	R	ug/L	DL
59366	009GW022M5DL	59366001	WG	VOA	SW8260B	CHLOROFORM	500	U	500	R	ug/L	DL
59366	009GW022M5DL	59366001	WG	VOA	SW8260B	CHLOROMETHANE	1000	U	1000	R	ug/L	DL
59366	009GW022M5DL	59366001	WG	VOA	SW8260B	cis-1,2-DICHLOROETHYLENE	500	U	500	R	ug/L	DL
59366	009GW022M5DL	59366001	WG	VOA	SW8260B	cis-1,3-DICHLOROPROPENE	500	U	500	R	ug/L	DL
59366	009GW022M5DL	59366001	WG	VOA	SW8260B	DIBROMOCHLOROMETHANE	500	U	500	R	ug/L	DL
59366	009GW022M5DL	59366001	WG	VOA	SW8260B	ETHYLBENZENE	500	U	500	R	ug/L	DL

Attachment 1 - Changed Qualifiers and Results
Zone H, SWMU 196 - Data Validation

SDG	Sample ID	Lab Sample ID	Matrix	Parameter Class	Analytical Method	Parameter	Lab Result	Lab Qual	Final Result	Final Qual	Units	Reasons
59366	009GW022M5DL	59366001	WG	VOA	SW8260B	m+p Xylene	500	U	500	R	ug/L	DL
59366	009GW022M5DL	59366001	WG	VOA	SW8260B	METHYLENE CHLORIDE	230	JD	230	R	ug/L	DL
59366	009GW022M5DL	59366001	WG	VOA	SW8260B	o-Xylene	500	U	500	R	ug/L	DL
59366	009GW022M5DL	59366001	WG	VOA	SW8260B	STYRENE	500	U	500	R	ug/L	DL
59366	009GW022M5DL	59366001	WG	VOA	SW8260B	TETRACHLOROETHYLENE(PCE)	500	U	500	R	ug/L	DL
59366	009GW022M5DL	59366001	WG	VOA	SW8260B	TOLUENE	500	U	500	R	ug/L	DL
59366	009GW022M5DL	59366001	WG	VOA	SW8260B	trans-1,2-DICHLOROETHENE	500	U	500	R	ug/L	DL
59366	009GW022M5DL	59366001	WG	VOA	SW8260B	trans-1,3-DICHLOROPROPENE	500	U	500	R	ug/L	DL
59366	009GW022M5DL	59366001	WG	VOA	SW8260B	TRICHLOROETHYLENE (TCE)	500	U	500	R	ug/L	DL
59366	009GW022M5DL	59366001	WG	VOA	SW8260B	Vinyl acetate	1000	U	1000	R	ug/L	DL
59366	009GW022M5DL	59366001	WG	VOA	SW8260B	VINYL CHLORIDE	1000	U	1000	R	ug/L	DL
59366	009GW022M5DL	59366001	WG	VOA	SW8260B	XYLENES, TOTAL	500	U	500	R	ug/L	DL
59366	009HW022M5	59366002	WG	VOA	SW8260B	METHYLENE CHLORIDE	137	JB	250	UJ	ug/L	BL, CC
59366	196GW004M5	59366003	WG	VOA	SW8260B	METHYLENE CHLORIDE	100	U	100	UJ	ug/L	CC
59366	196GW005M5	59366004	WG	VOA	SW8260B	ACETONE	580	JB	1000	U	ug/L	BL
59366	196GW005M5	59366004	WG	VOA	SW8260B	METHYLENE CHLORIDE	384	J	500	U	ug/L	BL
59366	196GW006M5	59366005	WG	VOA	SW8260B	METHYLENE CHLORIDE	56.6	JB	100	U	ug/L	BL
59366	196GW007M5	59366006	WG	VOA	SW8260B	METHYLENE CHLORIDE	125	U	125	UJ	ug/L	CC
59366	196GW008M5	59366007	WG	VOA	SW8260B	ACETONE	549	JB	1000	U	ug/L	BL
59366	196GW008M5	59366007	WG	VOA	SW8260B	METHYLENE CHLORIDE	339	J	500	U	ug/L	BL
59366	196GW009M5	59366008	WG	VOA	SW8260B	1,2-DICHLOROBENZENE	16900	E	16900	R	ug/L	LR
59366	196GW009M5	59366008	WG	VOA	SW8260B	ACETONE	582	JB	1000	U	ug/L	BL
59366	196GW009M5	59366008	WG	VOA	SW8260B	METHYLENE CHLORIDE	287	J	500	U	ug/L	BL
59366	196GW009M5DL	59366008	WG	VOA	SW8260B	1,1,1-TRICHLOROETHANE	2500	U	2500	R	ug/L	DL
59366	196GW009M5DL	59366008	WG	VOA	SW8260B	1,1,2,2-TETRACHLOROETHANE	2500	U	2500	R	ug/L	DL
59366	196GW009M5DL	59366008	WG	VOA	SW8260B	1,1,2-TRICHLOROETHANE	2500	U	2500	R	ug/L	DL
59366	196GW009M5DL	59366008	WG	VOA	SW8260B	1,1-DICHLOROETHANE	2500	U	2500	R	ug/L	DL
59366	196GW009M5DL	59366008	WG	VOA	SW8260B	1,1-DICHLOROETHENE	2500	U	2500	R	ug/L	DL
59366	196GW009M5DL	59366008	WG	VOA	SW8260B	1,2,3-Trichlorobenzene	2500	U	2500	R	ug/L	DL
59366	196GW009M5DL	59366008	WG	VOA	SW8260B	1,2,4-TRICHLOROBENZENE	2500	U	2500	R	ug/L	DL
59366	196GW009M5DL	59366008	WG	VOA	SW8260B	1,2-DICHLOROETHANE	2500	U	2500	R	ug/L	DL
59366	196GW009M5DL	59366008	WG	VOA	SW8260B	1,2-Dichloroethene (total)	2500	U	2500	R	ug/L	DL
59366	196GW009M5DL	59366008	WG	VOA	SW8260B	1,2-DICHLOROPROPANE	2500	U	2500	R	ug/L	DL

SDG	Sample ID	Lab Sample ID	Matrix	Parameter Class	Analytical Method	Parameter	Lab Result	Lab Qual	Final Result	Final Qual	Units	Reasons
59366	196GW009M5DL	59366008	WG	VOA	SW8260B	1,3-DICHLOROBENZENE	620	JD	620	R	ug/L	DL
59366	196GW009M5DL	59366008	WG	VOA	SW8260B	1,4-DICHLOROBENZENE	1410	JD	1410	R	ug/L	DL
59366	196GW009M5DL	59366008	WG	VOA	SW8260B	2-BUTANONE (MEK)	5000	U	5000	R	ug/L	DL
59366	196GW009M5DL	59366008	WG	VOA	SW8260B	2-Chloroethyl vinyl ether	2500	U	2500	R	ug/L	DL
59366	196GW009M5DL	59366008	WG	VOA	SW8260B	2-HEXANONE	5000	U	5000	R	ug/L	DL
59366	196GW009M5DL	59366008	WG	VOA	SW8260B	4-METHYL-2-PENTANONE (MIBK)	5000	U	5000	R	ug/L	DL
59366	196GW009M5DL	59366008	WG	VOA	SW8260B	ACETONE	5000	U	5000	R	ug/L	DL
59366	196GW009M5DL	59366008	WG	VOA	SW8260B	BENZENE	2200	JD	2200	R	ug/L	DL
59366	196GW009M5DL	59366008	WG	VOA	SW8260B	BROMODICHLOROMETHANE	2500	U	2500	R	ug/L	DL
59366	196GW009M5DL	59366008	WG	VOA	SW8260B	BROMOFORM	2500	U	2500	R	ug/L	DL
59366	196GW009M5DL	59366008	WG	VOA	SW8260B	BROMOMETHANE	5000	U	5000	R	ug/L	DL
59366	196GW009M5DL	59366008	WG	VOA	SW8260B	CARBON DISULFIDE	2500	U	2500	R	ug/L	DL
59366	196GW009M5DL	59366008	WG	VOA	SW8260B	CARBON TETRACHLORIDE	2500	U	2500	R	ug/L	DL
59366	196GW009M5DL	59366008	WG	VOA	SW8260B	CHLOROBENZENE	6040	D	6040	R	ug/L	DL
59366	196GW009M5DL	59366008	WG	VOA	SW8260B	CHLOROETHANE	5000	U	5000	R	ug/L	DL
59366	196GW009M5DL	59366008	WG	VOA	SW8260B	CHLOROFORM	2500	U	2500	R	ug/L	DL
59366	196GW009M5DL	59366008	WG	VOA	SW8260B	CHLOROMETHANE	5000	U	5000	R	ug/L	DL
59366	196GW009M5DL	59366008	WG	VOA	SW8260B	cis-1,2-DICHLOROETHYLENE	2500	U	2500	R	ug/L	DL
59366	196GW009M5DL	59366008	WG	VOA	SW8260B	cis-1,3-DICHLOROPROPENE	2500	U	2500	R	ug/L	DL
59366	196GW009M5DL	59366008	WG	VOA	SW8260B	DIBROMOCHLOROMETHANE	2500	U	2500	R	ug/L	DL
59366	196GW009M5DL	59366008	WG	VOA	SW8260B	ETHYLBENZENE	2500	U	2500	R	ug/L	DL
59366	196GW009M5DL	59366008	WG	VOA	SW8260B	m+p Xylene	2500	U	2500	R	ug/L	DL
59366	196GW009M5DL	59366008	WG	VOA	SW8260B	METHYLENE CHLORIDE	1400	JBD	1400	R	ug/L	DL
59366	196GW009M5DL	59366008	WG	VOA	SW8260B	o-Xylene	2500	U	2500	R	ug/L	DL
59366	196GW009M5DL	59366008	WG	VOA	SW8260B	STYRENE	2500	U	2500	R	ug/L	DL
59366	196GW009M5DL	59366008	WG	VOA	SW8260B	TETRACHLOROETHYLENE(PCE)	2500	U	2500	R	ug/L	DL
59366	196GW009M5DL	59366008	WG	VOA	SW8260B	TOLUENE	2500	U	2500	R	ug/L	DL
59366	196GW009M5DL	59366008	WG	VOA	SW8260B	trans-1,2-DICHLOROETHENE	2500	U	2500	R	ug/L	DL
59366	196GW009M5DL	59366008	WG	VOA	SW8260B	trans-1,3-DICHLOROPROPENE	2500	U	2500	R	ug/L	DL
59366	196GW009M5DL	59366008	WG	VOA	SW8260B	TRICHLOROETHYLENE (TCE)	2500	U	2500	R	ug/L	DL
59366	196GW009M5DL	59366008	WG	VOA	SW8260B	Vinyl acetate	5000	U	5000	R	ug/L	DL
59366	196GW009M5DL	59366008	WG	VOA	SW8260B	VINYL CHLORIDE	5000	U	5000	R	ug/L	DL
59366	196GW009M5DL	59366008	WG	VOA	SW8260B	XYLENES, TOTAL	2500	U	2500	R	ug/L	DL

Attachment 1 - Changed Qualifiers and Results
Zone H, SWMU 196 - Data Validation

SDG	Sample ID	Lab Sample ID	Matrix	Parameter Class	Analytical Method	Parameter	Lab Result	Lab Qual	Final Result	Final Qual	Units	Reasons
59366	196GW010M5	59366009	WG	VOA	SW8260B	METHYLENE CHLORIDE	46.7	JB	100	UJ	ug/L	BL, CC
59366	196GW011M5	59366010	WG	VOA	SW8260B	ACETONE	4.6	J	20	UJ	ug/L	BL, CC
59366	196GW012M5	59366011	WG	VOA	SW8260B	ACETONE	5.2	J	10	U	ug/L	BL
59366	196GW012M5	59366011	WG	VOA	SW8260B	METHYLENE CHLORIDE	2.1	JB	5	UJ	ug/L	BL, CC
59366	196GW013M5	59366012	WG	VOA	SW8260B	METHYLENE CHLORIDE	22.4	JB	50	UJ	ug/L	BL, CC
59366	196GW014M5	59366013	WG	VOA	SW8260B	1,2-DICHLOROBENZENE	21100	E	21100	R	ug/L	LR
59366	196GW014M5	59366013	WG	VOA	SW8260B	ACETONE	1800	B	1800	U	ug/L	BL
59366	196GW014M5DL	59366013	WG	VOA	SW8260B	1,1,1-TRICHLOROETHANE	2500	U	2500	R	ug/L	DL
59366	196GW014M5DL	59366013	WG	VOA	SW8260B	1,1,2,2-TETRACHLOROETHANE	2500	U	2500	R	ug/L	DL
59366	196GW014M5DL	59366013	WG	VOA	SW8260B	1,1,2-TRICHLOROETHANE	2500	U	2500	R	ug/L	DL
59366	196GW014M5DL	59366013	WG	VOA	SW8260B	1,1-DICHLOROETHANE	2500	U	2500	R	ug/L	DL
59366	196GW014M5DL	59366013	WG	VOA	SW8260B	1,1-DICHLOROETHENE	2500	U	2500	R	ug/L	DL
59366	196GW014M5DL	59366013	WG	VOA	SW8260B	1,2,3-Trichlorobenzene	2500	U	2500	R	ug/L	DL
59366	196GW014M5DL	59366013	WG	VOA	SW8260B	1,2,4-TRICHLOROBENZENE	2500	U	2500	R	ug/L	DL
59366	196GW014M5DL	59366013	WG	VOA	SW8260B	1,2-DICHLOROETHANE	2500	U	2500	R	ug/L	DL
59366	196GW014M5DL	59366013	WG	VOA	SW8260B	1,2-Dichloroethene (total)	2500	U	2500	R	ug/L	DL
59366	196GW014M5DL	59366013	WG	VOA	SW8260B	1,2-DICHLOROPROPANE	2500	U	2500	R	ug/L	DL
59366	196GW014M5DL	59366013	WG	VOA	SW8260B	1,3-DICHLOROBENZENE	649	JD	649	R	ug/L	DL
59366	196GW014M5DL	59366013	WG	VOA	SW8260B	1,4-DICHLOROBENZENE	1470	JBD	1470	R	ug/L	DL
59366	196GW014M5DL	59366013	WG	VOA	SW8260B	2-BUTANONE (MEK)	5000	U	5000	R	ug/L	DL
59366	196GW014M5DL	59366013	WG	VOA	SW8260B	2-Chloroethyl vinyl ether	2500	U	2500	R	ug/L	DL
59366	196GW014M5DL	59366013	WG	VOA	SW8260B	2-HEXANONE	5000	U	5000	R	ug/L	DL
59366	196GW014M5DL	59366013	WG	VOA	SW8260B	4-METHYL-2-PENTANONE (MIBK)	5000	U	5000	R	ug/L	DL
59366	196GW014M5DL	59366013	WG	VOA	SW8260B	ACETONE	2150	JD	2150	R	ug/L	DL
59366	196GW014M5DL	59366013	WG	VOA	SW8260B	BENZENE	716	JD	716	R	ug/L	DL
59366	196GW014M5DL	59366013	WG	VOA	SW8260B	BROMODICHLOROMETHANE	2500	U	2500	R	ug/L	DL
59366	196GW014M5DL	59366013	WG	VOA	SW8260B	BROMOFORM	2500	U	2500	R	ug/L	DL
59366	196GW014M5DL	59366013	WG	VOA	SW8260B	BROMOMETHANE	5000	U	5000	R	ug/L	DL
59366	196GW014M5DL	59366013	WG	VOA	SW8260B	CARBON DISULFIDE	2500	U	2500	R	ug/L	DL
59366	196GW014M5DL	59366013	WG	VOA	SW8260B	CARBON TETRACHLORIDE	2500	U	2500	R	ug/L	DL
59366	196GW014M5DL	59366013	WG	VOA	SW8260B	CHLOROBENZENE	3280	D	3280	R	ug/L	DL
59366	196GW014M5DL	59366013	WG	VOA	SW8260B	CHLOROETHANE	5000	U	5000	R	ug/L	DL
59366	196GW014M5DL	59366013	WG	VOA	SW8260B	CHLOROFORM	2500	U	2500	R	ug/L	DL

SDG	Sample ID	Lab Sample ID	Matrix	Parameter Class	Analytical Method	Parameter	Lab Result	Lab Qual	Final Result	Final Qual	Units	Reasons
59366	196GW014M5DL	59366013	WG	VOA	SW8260B	CHLOROMETHANE	5000	U	5000	R	ug/L	DL
59366	196GW014M5DL	59366013	WG	VOA	SW8260B	cis-1,2-DICHLOROETHYLENE	2500	U	2500	R	ug/L	DL
59366	196GW014M5DL	59366013	WG	VOA	SW8260B	cis-1,3-DICHLOROPROPENE	2500	U	2500	R	ug/L	DL
59366	196GW014M5DL	59366013	WG	VOA	SW8260B	DIBROMOCHLOROMETHANE	2500	U	2500	R	ug/L	DL
59366	196GW014M5DL	59366013	WG	VOA	SW8260B	ETHYLBENZENE	2500	U	2500	R	ug/L	DL
59366	196GW014M5DL	59366013	WG	VOA	SW8260B	m+p Xylene	2500	U	2500	R	ug/L	DL
59366	196GW014M5DL	59366013	WG	VOA	SW8260B	METHYLENE CHLORIDE	1280	JD	1280	R	ug/L	DL
59366	196GW014M5DL	59366013	WG	VOA	SW8260B	o-Xylene	2500	U	2500	R	ug/L	DL
59366	196GW014M5DL	59366013	WG	VOA	SW8260B	STYRENE	2500	U	2500	R	ug/L	DL
59366	196GW014M5DL	59366013	WG	VOA	SW8260B	TETRACHLOROETHYLENE(PCE)	2500	U	2500	R	ug/L	DL
59366	196GW014M5DL	59366013	WG	VOA	SW8260B	TOLUENE	343	JD	343	R	ug/L	DL
59366	196GW014M5DL	59366013	WG	VOA	SW8260B	trans-1,2-DICHLOROETHENE	2500	U	2500	R	ug/L	DL
59366	196GW014M5DL	59366013	WG	VOA	SW8260B	trans-1,3-DICHLOROPROPENE	2500	U	2500	R	ug/L	DL
59366	196GW014M5DL	59366013	WG	VOA	SW8260B	TRICHLOROETHYLENE (TCE)	2500	U	2500	R	ug/L	DL
59366	196GW014M5DL	59366013	WG	VOA	SW8260B	Vinyl acetate	5000	U	5000	R	ug/L	DL
59366	196GW014M5DL	59366013	WG	VOA	SW8260B	VINYL CHLORIDE	5000	U	5000	R	ug/L	DL
59366	196GW014M5DL	59366013	WG	VOA	SW8260B	XYLENES, TOTAL	2500	U	2500	R	ug/L	DL
59366	196GW015M5	59366014	WG	VOA	SW8260B	1,4-DICHLOROBENZENE	23.8	JB	125	U	ug/L	BL
59366	196GW015M5	59366014	WG	VOA	SW8260B	METHYLENE CHLORIDE	74.2	J	125	U	ug/L	BL
59366	196GW016M5	59366015	WG	VOA	SW8260B	ACETONE	4	J	10	U	ug/L	BL
59366	196GW016M5	59366015	WG	VOA	SW8260B	METHYLENE CHLORIDE	3.1	JB	5	UJ	ug/L	BL, CC
59366	196GW017M5	59366016	WG	VOA	SW8260B	ACETONE	5.2	J	10	U	ug/L	BL
59366	196GW017M5	59366016	WG	VOA	SW8260B	METHYLENE CHLORIDE	2.4	JB	5	UJ	ug/L	BL, CC
59366	GELGW015M5	59366018	WG	VOA	SW8260B	METHYLENE CHLORIDE	113	J	250	U	ug/L	BL
59367	009GW020M5	59367001	WG	VOA	SW8260B	CHLOROBENZENE	19300	E	19300	R	ug/L	LR
59367	009GW020M5	59367001	WG	VOA	SW8260B	METHYLENE CHLORIDE	300	J	500	U	ug/L	BL
59367	009GW020M5DL	59367001	WG	VOA	SW8260B	1,1,1-TRICHLOROETHANE	1250	U	1250	R	ug/L	DL
59367	009GW020M5DL	59367001	WG	VOA	SW8260B	1,1,2,2-TETRACHLOROETHANE	1250	U	1250	R	ug/L	DL
59367	009GW020M5DL	59367001	WG	VOA	SW8260B	1,1,2-TRICHLOROETHANE	1250	U	1250	R	ug/L	DL
59367	009GW020M5DL	59367001	WG	VOA	SW8260B	1,1-DICHLOROETHANE	1250	U	1250	R	ug/L	DL
59367	009GW020M5DL	59367001	WG	VOA	SW8260B	1,1-DICHLOROETHENE	1250	U	1250	R	ug/L	DL
59367	009GW020M5DL	59367001	WG	VOA	SW8260B	1,2,3-Trichlorobenzene	1250	U	1250	R	ug/L	DL
59367	009GW020M5DL	59367001	WG	VOA	SW8260B	1,2,4-TRICHLOROBENZENE	1250	U	1250	R	ug/L	DL

Attachment 1 - Changed Qualifiers and Results
Zone H, SWMU 196 - Data Validation

SDG	Sample ID	Lab Sample ID	Matrix	Parameter Class	Analytical Method	Parameter	Lab Result	Lab Qual	Final Result	Final Qual	Units	Reasons
59367	009GW020M5DL	59367001	WG	VOA	SW8260B	1,2-DICHLOROBENZENE	869	JD	869	R	ug/L	DL
59367	009GW020M5DL	59367001	WG	VOA	SW8260B	1,2-DICHLOROETHANE	1250	U	1250	R	ug/L	DL
59367	009GW020M5DL	59367001	WG	VOA	SW8260B	1,2-Dichloroethene (total)	1250	U	1250	R	ug/L	DL
59367	009GW020M5DL	59367001	WG	VOA	SW8260B	1,2-DICHLOROPROPANE	1250	U	1250	R	ug/L	DL
59367	009GW020M5DL	59367001	WG	VOA	SW8260B	1,3-DICHLOROBENZENE	1250	U	1250	R	ug/L	DL
59367	009GW020M5DL	59367001	WG	VOA	SW8260B	1,4-DICHLOROBENZENE	385	JBD	385	R	ug/L	DL
59367	009GW020M5DL	59367001	WG	VOA	SW8260B	2-BUTANONE (MEK)	2500	U	2500	R	ug/L	DL
59367	009GW020M5DL	59367001	WG	VOA	SW8260B	2-Chloroethyl vinyl ether	1250	U	1250	R	ug/L	DL
59367	009GW020M5DL	59367001	WG	VOA	SW8260B	2-HEXANONE	2500	U	2500	R	ug/L	DL
59367	009GW020M5DL	59367001	WG	VOA	SW8260B	4-METHYL-2-PENTANONE (MIBK)	2500	U	2500	R	ug/L	DL
59367	009GW020M5DL	59367001	WG	VOA	SW8260B	ACETONE	2500	U	2500	R	ug/L	DL
59367	009GW020M5DL	59367001	WG	VOA	SW8260B	BENZENE	1250	U	1250	R	ug/L	DL
59367	009GW020M5DL	59367001	WG	VOA	SW8260B	BROMODICHLOROMETHANE	1250	U	1250	R	ug/L	DL
59367	009GW020M5DL	59367001	WG	VOA	SW8260B	BROMOFORM	1250	U	1250	R	ug/L	DL
59367	009GW020M5DL	59367001	WG	VOA	SW8260B	BROMOMETHANE	2500	U	2500	R	ug/L	DL
59367	009GW020M5DL	59367001	WG	VOA	SW8260B	CARBON DISULFIDE	1250	U	1250	R	ug/L	DL
59367	009GW020M5DL	59367001	WG	VOA	SW8260B	CARBON TETRACHLORIDE	1250	U	1250	R	ug/L	DL
59367	009GW020M5DL	59367001	WG	VOA	SW8260B	CHLOROETHANE	2500	U	2500	R	ug/L	DL
59367	009GW020M5DL	59367001	WG	VOA	SW8260B	CHLOROFORM	1250	U	1250	R	ug/L	DL
59367	009GW020M5DL	59367001	WG	VOA	SW8260B	CHLOROMETHANE	2500	U	2500	R	ug/L	DL
59367	009GW020M5DL	59367001	WG	VOA	SW8260B	cis-1,2-DICHLOROETHYLENE	1250	U	1250	R	ug/L	DL
59367	009GW020M5DL	59367001	WG	VOA	SW8260B	cis-1,3-DICHLOROPROPENE	1250	U	1250	R	ug/L	DL
59367	009GW020M5DL	59367001	WG	VOA	SW8260B	DIBROMOCHLOROMETHANE	1250	U	1250	R	ug/L	DL
59367	009GW020M5DL	59367001	WG	VOA	SW8260B	ETHYLBENZENE	1250	U	1250	R	ug/L	DL
59367	009GW020M5DL	59367001	WG	VOA	SW8260B	m+p Xylene	1250	U	1250	R	ug/L	DL
59367	009GW020M5DL	59367001	WG	VOA	SW8260B	METHYLENE CHLORIDE	674	JD	674	R	ug/L	DL
59367	009GW020M5DL	59367001	WG	VOA	SW8260B	o-Xylene	1250	U	1250	R	ug/L	DL
59367	009GW020M5DL	59367001	WG	VOA	SW8260B	STYRENE	1250	U	1250	R	ug/L	DL
59367	009GW020M5DL	59367001	WG	VOA	SW8260B	TETRACHLOROETHYLENE(PCE)	1250	U	1250	R	ug/L	DL
59367	009GW020M5DL	59367001	WG	VOA	SW8260B	TOLUENE	1250	U	1250	R	ug/L	DL
59367	009GW020M5DL	59367001	WG	VOA	SW8260B	trans-1,2-DICHLOROETHENE	1250	U	1250	R	ug/L	DL
59367	009GW020M5DL	59367001	WG	VOA	SW8260B	trans-1,3-DICHLOROPROPENE	1250	U	1250	R	ug/L	DL
59367	009GW020M5DL	59367001	WG	VOA	SW8260B	TRICHLOROETHYLENE (TCE)	1250	U	1250	R	ug/L	DL

SDG	Sample ID	Lab Sample ID	Matrix	Parameter Class	Analytical Method	Parameter	Lab Result	Lab Qual	Final Result	Final Qual	Units	Reasons
59367	009GW020M5DL	59367001	WG	VOA	SW8260B	Vinyl acetate	2500	U	2500	R	ug/L	DL
59367	009GW020M5DL	59367001	WG	VOA	SW8260B	VINYL CHLORIDE	2500	U	2500	R	ug/L	DL
59367	009GW020M5DL	59367001	WG	VOA	SW8260B	XYLENES, TOTAL	1250	U	1250	R	ug/L	DL
59367	009GW021M5	59367002	WG	VOA	SW8260B	1,2-DICHLOROBENZENE	17100	E	17100	R	ug/L	LR
59367	009GW021M5	59367002	WG	VOA	SW8260B	METHYLENE CHLORIDE	329	J	500	U	ug/L	BL
59367	009GW021M5DL	59367002	WG	VOA	SW8260B	1,1,1-TRICHLOROETHANE	1250	U	1250	R	ug/L	DL
59367	009GW021M5DL	59367002	WG	VOA	SW8260B	1,1,2,2-TETRACHLOROETHANE	1250	U	1250	R	ug/L	DL
59367	009GW021M5DL	59367002	WG	VOA	SW8260B	1,1,2-TRICHLOROETHANE	1250	U	1250	R	ug/L	DL
59367	009GW021M5DL	59367002	WG	VOA	SW8260B	1,1-DICHLOROETHANE	1250	U	1250	R	ug/L	DL
59367	009GW021M5DL	59367002	WG	VOA	SW8260B	1,1-DICHLOROETHENE	1250	U	1250	R	ug/L	DL
59367	009GW021M5DL	59367002	WG	VOA	SW8260B	1,2,3-Trichlorobenzene	1250	U	1250	R	ug/L	DL
59367	009GW021M5DL	59367002	WG	VOA	SW8260B	1,2,4-TRICHLOROBENZENE	1250	U	1250	R	ug/L	DL
59367	009GW021M5DL	59367002	WG	VOA	SW8260B	1,2-DICHLOROETHANE	1250	U	1250	R	ug/L	DL
59367	009GW021M5DL	59367002	WG	VOA	SW8260B	1,2-Dichloroethene (total)	104	JD	104	R	ug/L	DL
59367	009GW021M5DL	59367002	WG	VOA	SW8260B	1,2-DICHLOROPROPANE	1250	U	1250	R	ug/L	DL
59367	009GW021M5DL	59367002	WG	VOA	SW8260B	1,3-DICHLOROBENZENE	1510	D	1510	R	ug/L	DL
59367	009GW021M5DL	59367002	WG	VOA	SW8260B	1,4-DICHLOROBENZENE	2770	BD	2770	R	ug/L	DL
59367	009GW021M5DL	59367002	WG	VOA	SW8260B	2-BUTANONE (MEK)	2500	U	2500	R	ug/L	DL
59367	009GW021M5DL	59367002	WG	VOA	SW8260B	2-Chloroethyl vinyl ether	1250	U	1250	R	ug/L	DL
59367	009GW021M5DL	59367002	WG	VOA	SW8260B	2-HEXANONE	2500	U	2500	R	ug/L	DL
59367	009GW021M5DL	59367002	WG	VOA	SW8260B	4-METHYL-2-PENTANONE (MIBK)	2500	U	2500	R	ug/L	DL
59367	009GW021M5DL	59367002	WG	VOA	SW8260B	ACETONE	2500	U	2500	R	ug/L	DL
59367	009GW021M5DL	59367002	WG	VOA	SW8260B	BENZENE	144	JD	144	R	ug/L	DL
59367	009GW021M5DL	59367002	WG	VOA	SW8260B	BROMODICHLOROMETHANE	1250	U	1250	R	ug/L	DL
59367	009GW021M5DL	59367002	WG	VOA	SW8260B	BROMOFORM	1250	U	1250	R	ug/L	DL
59367	009GW021M5DL	59367002	WG	VOA	SW8260B	BROMOMETHANE	2500	U	2500	R	ug/L	DL
59367	009GW021M5DL	59367002	WG	VOA	SW8260B	CARBON DISULFIDE	1250	U	1250	R	ug/L	DL
59367	009GW021M5DL	59367002	WG	VOA	SW8260B	CARBON TETRACHLORIDE	1250	U	1250	R	ug/L	DL
59367	009GW021M5DL	59367002	WG	VOA	SW8260B	CHLOROBENZENE	8230	D	8230	R	ug/L	DL
59367	009GW021M5DL	59367002	WG	VOA	SW8260B	CHLOROETHANE	2500	U	2500	R	ug/L	DL
59367	009GW021M5DL	59367002	WG	VOA	SW8260B	CHLOROFORM	1250	U	1250	R	ug/L	DL
59367	009GW021M5DL	59367002	WG	VOA	SW8260B	CHLOROMETHANE	2500	U	2500	R	ug/L	DL
59367	009GW021M5DL	59367002	WG	VOA	SW8260B	cis-1,2-DICHLOROETHYLENE	104	JD	104	R	ug/L	DL

Attachment 1 - Changed Qualifiers and Results
Zone H, SWMU 196 - Data Validation

SDG	Sample ID	Lab Sample ID	Matrix	Parameter Class	Analytical Method	Parameter	Lab Result	Lab Qual	Final Result	Final Qual	Units	Reasons
59367	009GW021M5DL	59367002	WG	VOA	SW8260B	cis-1,3-DICHLOROPROPENE	1250	U	1250	R	ug/L	DL
59367	009GW021M5DL	59367002	WG	VOA	SW8260B	DIBROMOCHLOROMETHANE	1250	U	1250	R	ug/L	DL
59367	009GW021M5DL	59367002	WG	VOA	SW8260B	ETHYLBENZENE	1250	U	1250	R	ug/L	DL
59367	009GW021M5DL	59367002	WG	VOA	SW8260B	m+p Xylene	1250	U	1250	R	ug/L	DL
59367	009GW021M5DL	59367002	WG	VOA	SW8260B	METHYLENE CHLORIDE	679	JD	679	R	ug/L	DL
59367	009GW021M5DL	59367002	WG	VOA	SW8260B	o-Xylene	1250	U	1250	R	ug/L	DL
59367	009GW021M5DL	59367002	WG	VOA	SW8260B	STYRENE	1250	U	1250	R	ug/L	DL
59367	009GW021M5DL	59367002	WG	VOA	SW8260B	TETRACHLOROETHYLENE(PCE)	1250	U	1250	R	ug/L	DL
59367	009GW021M5DL	59367002	WG	VOA	SW8260B	TOLUENE	229	JD	229	R	ug/L	DL
59367	009GW021M5DL	59367002	WG	VOA	SW8260B	trans-1,2-DICHLOROETHENE	1250	U	1250	R	ug/L	DL
59367	009GW021M5DL	59367002	WG	VOA	SW8260B	trans-1,3-DICHLOROPROPENE	1250	U	1250	R	ug/L	DL
59367	009GW021M5DL	59367002	WG	VOA	SW8260B	TRICHLOROETHYLENE (TCE)	1250	U	1250	R	ug/L	DL
59367	009GW021M5DL	59367002	WG	VOA	SW8260B	Vinyl acetate	2500	U	2500	R	ug/L	DL
59367	009GW021M5DL	59367002	WG	VOA	SW8260B	VINYL CHLORIDE	2500	U	2500	R	ug/L	DL
59367	009GW021M5DL	59367002	WG	VOA	SW8260B	XYLENES, TOTAL	1250	U	1250	R	ug/L	DL
CNC77	009GW020M4	S242010*2	WG	VOA	SW8260B	2-Chloroethyl vinyl ether	100	U	100	UJ	ug/l	CC
CNC77	009GW020M4	S242010*2	WG	VOA	SW8260B	2-HEXANONE	100	U	100	UJ	ug/l	CC
CNC77	009GW020M4	S242010*2	WG	VOA	SW8260B	4-METHYL-2-PENTANONE (MIBK)	100	U	100	UJ	ug/l	CC
CNC77	009GW020M4	S242010*2	WG	VOA	SW8260B	ACETONE	100	U	100	UJ	ug/l	CC
CNC77	009GW020M4	S242010*2	WG	VOA	SW8260B	CHLOROBENZENE	4500	E	4500	R	ug/l	LR
CNC77	009GW020M4DL	S242010*2*DL	WG	VOA	SW8260B	1,1,1-TRICHLOROETHANE	250	U	250	R	ug/l	DL
CNC77	009GW020M4DL	S242010*2*DL	WG	VOA	SW8260B	1,1,2,2-TETRACHLOROETHANE	250	U	250	R	ug/l	DL
CNC77	009GW020M4DL	S242010*2*DL	WG	VOA	SW8260B	1,1,2-TRICHLOROETHANE	250	U	250	R	ug/l	DL
CNC77	009GW020M4DL	S242010*2*DL	WG	VOA	SW8260B	1,1-DICHLOROETHANE	250	U	250	R	ug/l	DL
CNC77	009GW020M4DL	S242010*2*DL	WG	VOA	SW8260B	1,1-DICHLOROETHENE	250	U	250	R	ug/l	DL
CNC77	009GW020M4DL	S242010*2*DL	WG	VOA	SW8260B	1,2,3-Trichlorobenzene	250	U	250	R	ug/l	DL
CNC77	009GW020M4DL	S242010*2*DL	WG	VOA	SW8260B	1,2,4-TRICHLOROBENZENE	250	U	250	R	ug/l	DL
CNC77	009GW020M4DL	S242010*2*DL	WG	VOA	SW8260B	1,2-DICHLOROBENZENE	340	D	340	R	ug/l	DL
CNC77	009GW020M4DL	S242010*2*DL	WG	VOA	SW8260B	1,2-DICHLOROETHANE	250	U	250	R	ug/l	DL
CNC77	009GW020M4DL	S242010*2*DL	WG	VOA	SW8260B	1,2-Dichloroethene (total)	250	U	250	R	ug/l	DL
CNC77	009GW020M4DL	S242010*2*DL	WG	VOA	SW8260B	1,2-DICHLOROPROPANE	250	U	250	R	ug/l	DL
CNC77	009GW020M4DL	S242010*2*DL	WG	VOA	SW8260B	1,3-DICHLOROBENZENE	33	DJ	33	R	ug/l	DL
CNC77	009GW020M4DL	S242010*2*DL	WG	VOA	SW8260B	1,4-DICHLOROBENZENE	100	DJ	100	R	ug/l	DL

SDG	Sample ID	Lab Sample ID	Matrix	Parameter Class	Analytical Method	Parameter	Lab Result	Lab Qual	Final Result	Final Qual	Units	Reasons
CNC77	009GW020M4DL	S242010*2*DL	WG	VOA	SW8260B	2-BUTANONE (MEK)	500	U	500	R	ug/l	DL
CNC77	009GW020M4DL	S242010*2*DL	WG	VOA	SW8260B	2-Chloroethyl vinyl ether	500	U	500	R	ug/l	DL
CNC77	009GW020M4DL	S242010*2*DL	WG	VOA	SW8260B	2-HEXANONE	500	U	500	R	ug/l	DL
CNC77	009GW020M4DL	S242010*2*DL	WG	VOA	SW8260B	4-METHYL-2-PENTANONE (MIBK)	500	U	500	R	ug/l	DL
CNC77	009GW020M4DL	S242010*2*DL	WG	VOA	SW8260B	ACETONE	500	U	500	R	ug/l	DL
CNC77	009GW020M4DL	S242010*2*DL	WG	VOA	SW8260B	BENZENE	250	U	250	R	ug/l	DL
CNC77	009GW020M4DL	S242010*2*DL	WG	VOA	SW8260B	BROMODICHLOROMETHANE	250	U	250	R	ug/l	DL
CNC77	009GW020M4DL	S242010*2*DL	WG	VOA	SW8260B	BROMOFORM	250	U	250	R	ug/l	DL
CNC77	009GW020M4DL	S242010*2*DL	WG	VOA	SW8260B	BROMOMETHANE	500	U	500	R	ug/l	DL
CNC77	009GW020M4DL	S242010*2*DL	WG	VOA	SW8260B	CARBON DISULFIDE	250	U	250	R	ug/l	DL
CNC77	009GW020M4DL	S242010*2*DL	WG	VOA	SW8260B	CARBON TETRACHLORIDE	250	U	250	R	ug/l	DL
CNC77	009GW020M4DL	S242010*2*DL	WG	VOA	SW8260B	CHLOROETHANE	500	U	500	R	ug/l	DL
CNC77	009GW020M4DL	S242010*2*DL	WG	VOA	SW8260B	CHLOROFORM	250	U	250	R	ug/l	DL
CNC77	009GW020M4DL	S242010*2*DL	WG	VOA	SW8260B	CHLOROMETHANE	500	U	500	R	ug/l	DL
CNC77	009GW020M4DL	S242010*2*DL	WG	VOA	SW8260B	cis-1,2-DICHLOROETHYLENE	250	U	250	R	ug/l	DL
CNC77	009GW020M4DL	S242010*2*DL	WG	VOA	SW8260B	cis-1,3-DICHLOROPROPENE	250	U	250	R	ug/l	DL
CNC77	009GW020M4DL	S242010*2*DL	WG	VOA	SW8260B	DIBROMOCHLOROMETHANE	250	U	250	R	ug/l	DL
CNC77	009GW020M4DL	S242010*2*DL	WG	VOA	SW8260B	ETHYLBENZENE	250	U	250	R	ug/l	DL
CNC77	009GW020M4DL	S242010*2*DL	WG	VOA	SW8260B	m+p Xylene	250	U	250	R	ug/l	DL
CNC77	009GW020M4DL	S242010*2*DL	WG	VOA	SW8260B	METHYLENE CHLORIDE	250	U	250	R	ug/l	DL
CNC77	009GW020M4DL	S242010*2*DL	WG	VOA	SW8260B	o-Xylene	250	U	250	R	ug/l	DL
CNC77	009GW020M4DL	S242010*2*DL	WG	VOA	SW8260B	STYRENE	250	U	250	R	ug/l	DL
CNC77	009GW020M4DL	S242010*2*DL	WG	VOA	SW8260B	TETRACHLOROETHYLENE(PCE)	250	U	250	R	ug/l	DL
CNC77	009GW020M4DL	S242010*2*DL	WG	VOA	SW8260B	TOLUENE	250	U	250	R	ug/l	DL
CNC77	009GW020M4DL	S242010*2*DL	WG	VOA	SW8260B	trans-1,2-DICHLOROETHENE	250	U	250	R	ug/l	DL
CNC77	009GW020M4DL	S242010*2*DL	WG	VOA	SW8260B	trans-1,3-DICHLOROPROPENE	250	U	250	R	ug/l	DL
CNC77	009GW020M4DL	S242010*2*DL	WG	VOA	SW8260B	TRICHLOROETHYLENE (TCE)	250	U	250	R	ug/l	DL
CNC77	009GW020M4DL	S242010*2*DL	WG	VOA	SW8260B	Vinyl acetate	500	U	500	R	ug/l	DL
CNC77	009GW020M4DL	S242010*2*DL	WG	VOA	SW8260B	VINYL CHLORIDE	500	U	500	R	ug/l	DL
CNC77	009GW020M4DL	S242010*2*DL	WG	VOA	SW8260B	XYLENES, TOTAL	250	U	250	R	ug/l	DL
CNC77	009GW021M4	S242010*3	WG	VOA	SW8260B	ACETONE	200	U	200	UJ	ug/l	CC
CNC77	009GW022M4	S242010*4	WG	VOA	SW8260B	1,2-DICHLOROBENZENE	1800	E	1800	R	ug/l	DL
CNC77	009GW022M4	S242010*4	WG	VOA	SW8260B	2-Chloroethyl vinyl ether	50	U	50	UJ	ug/l	CC

Attachment 1 - Changed Qualifiers and Results
Zone H, SWMU 196 - Data Validation

SDG	Sample ID	Lab Sample ID	Matrix	Parameter Class	Analytical Method	Parameter	Lab Result	Lab Qual	Final Result	Final Qual	Units	Reasons
CNC77	009GW022M4	S242010*4	WG	VOA	SW8260B	2-HEXANONE	50	U	50	UJ	ug/l	CC
CNC77	009GW022M4	S242010*4	WG	VOA	SW8260B	4-METHYL-2-PENTANONE (MIBK)	50	U	50	UJ	ug/l	CC
CNC77	009GW022M4	S242010*4	WG	VOA	SW8260B	ACETONE	50	U	50	UJ	ug/l	CC
CNC77	009GW022M4	S242010*4	WG	VOA	SW8260B	METHYLENE CHLORIDE	2.2	J	25	U	ug/l	BL
CNC77	009GW022M4	S242010*4	WG	VOA	SW8260B	TOLUENE	3.4	J	25	U	ug/l	BL
CNC77	009GW022M4DL	S242010*4*DL	WG	VOA	SW8260B	1,1,1-TRICHLOROETHANE	50	U	50	R	ug/l	DL
CNC77	009GW022M4DL	S242010*4*DL	WG	VOA	SW8260B	1,1,2,2-TETRACHLOROETHANE	50	U	50	R	ug/l	DL
CNC77	009GW022M4DL	S242010*4*DL	WG	VOA	SW8260B	1,1,2-TRICHLOROETHANE	50	U	50	R	ug/l	DL
CNC77	009GW022M4DL	S242010*4*DL	WG	VOA	SW8260B	1,1-DICHLOROETHANE	50	U	50	R	ug/l	DL
CNC77	009GW022M4DL	S242010*4*DL	WG	VOA	SW8260B	1,1-DICHLOROETHENE	50	U	50	R	ug/l	DL
CNC77	009GW022M4DL	S242010*4*DL	WG	VOA	SW8260B	1,2,3-Trichlorobenzene	50	U	50	R	ug/l	DL
CNC77	009GW022M4DL	S242010*4*DL	WG	VOA	SW8260B	1,2,4-TRICHLOROBENZENE	50	U	50	R	ug/l	DL
CNC77	009GW022M4DL	S242010*4*DL	WG	VOA	SW8260B	1,2-DICHLOROETHANE	50	U	50	R	ug/l	DL
CNC77	009GW022M4DL	S242010*4*DL	WG	VOA	SW8260B	1,2-Dichloroethene (total)	20	DJ	20	R	ug/l	DL
CNC77	009GW022M4DL	S242010*4*DL	WG	VOA	SW8260B	1,2-DICHLOROPROPANE	50	U	50	R	ug/l	DL
CNC77	009GW022M4DL	S242010*4*DL	WG	VOA	SW8260B	1,3-DICHLOROBENZENE	54	D	54	R	ug/l	DL
CNC77	009GW022M4DL	S242010*4*DL	WG	VOA	SW8260B	1,4-DICHLOROBENZENE	90	D	90	R	ug/l	DL
CNC77	009GW022M4DL	S242010*4*DL	WG	VOA	SW8260B	2-BUTANONE (MEK)	100	U	100	R	ug/l	DL
CNC77	009GW022M4DL	S242010*4*DL	WG	VOA	SW8260B	2-Chloroethyl vinyl ether	100	U	100	R	ug/l	DL
CNC77	009GW022M4DL	S242010*4*DL	WG	VOA	SW8260B	2-HEXANONE	100	U	100	R	ug/l	DL
CNC77	009GW022M4DL	S242010*4*DL	WG	VOA	SW8260B	4-METHYL-2-PENTANONE (MIBK)	100	U	100	R	ug/l	DL
CNC77	009GW022M4DL	S242010*4*DL	WG	VOA	SW8260B	ACETONE	100	U	100	R	ug/l	DL
CNC77	009GW022M4DL	S242010*4*DL	WG	VOA	SW8260B	BENZENE	5	DJ	5	R	ug/l	DL
CNC77	009GW022M4DL	S242010*4*DL	WG	VOA	SW8260B	BROMODICHLOROMETHANE	50	U	50	R	ug/l	DL
CNC77	009GW022M4DL	S242010*4*DL	WG	VOA	SW8260B	BROMOFORM	50	U	50	R	ug/l	DL
CNC77	009GW022M4DL	S242010*4*DL	WG	VOA	SW8260B	BROMOMETHANE	100	U	100	R	ug/l	DL
CNC77	009GW022M4DL	S242010*4*DL	WG	VOA	SW8260B	CARBON DISULFIDE	50	U	50	R	ug/l	DL
CNC77	009GW022M4DL	S242010*4*DL	WG	VOA	SW8260B	CARBON TETRACHLORIDE	50	U	50	R	ug/l	DL
CNC77	009GW022M4DL	S242010*4*DL	WG	VOA	SW8260B	CHLOROBENZENE	85	D	85	R	ug/l	DL
CNC77	009GW022M4DL	S242010*4*DL	WG	VOA	SW8260B	CHLOROETHANE	100	U	100	R	ug/l	DL
CNC77	009GW022M4DL	S242010*4*DL	WG	VOA	SW8260B	CHLOROFORM	50	U	50	R	ug/l	DL
CNC77	009GW022M4DL	S242010*4*DL	WG	VOA	SW8260B	CHLOROMETHANE	100	U	100	R	ug/l	DL
CNC77	009GW022M4DL	S242010*4*DL	WG	VOA	SW8260B	cis-1,2-DICHLOROETHYLENE	20	DJ	20	R	ug/l	DL

SDG	Sample ID	Lab Sample ID	Matrix	Parameter Class	Analytical Method	Parameter	Lab Result	Lab Qual	Final Result	Final Qual	Units	Reasons
CNC77	009GW022M4DL	S242010*4*DL	WG	VOA	SW8260B	cis-1,3-DICHLOROPROPENE	50	U	50	R	ug/l	DL
CNC77	009GW022M4DL	S242010*4*DL	WG	VOA	SW8260B	DIBROMOCHLOROMETHANE	50	U	50	R	ug/l	DL
CNC77	009GW022M4DL	S242010*4*DL	WG	VOA	SW8260B	ETHYLBENZENE	50	U	50	R	ug/l	DL
CNC77	009GW022M4DL	S242010*4*DL	WG	VOA	SW8260B	m+p Xylene	50	U	50	R	ug/l	DL
CNC77	009GW022M4DL	S242010*4*DL	WG	VOA	SW8260B	METHYLENE CHLORIDE	50	U	50	R	ug/l	DL
CNC77	009GW022M4DL	S242010*4*DL	WG	VOA	SW8260B	o-Xylene	50	U	50	R	ug/l	DL
CNC77	009GW022M4DL	S242010*4*DL	WG	VOA	SW8260B	STYRENE	50	U	50	R	ug/l	DL
CNC77	009GW022M4DL	S242010*4*DL	WG	VOA	SW8260B	TETRACHLOROETHYLENE(PCE)	50	U	50	R	ug/l	DL
CNC77	009GW022M4DL	S242010*4*DL	WG	VOA	SW8260B	TOLUENE	50	U	50	R	ug/l	DL
CNC77	009GW022M4DL	S242010*4*DL	WG	VOA	SW8260B	trans-1,2-DICHLOROETHENE	50	U	50	R	ug/l	DL
CNC77	009GW022M4DL	S242010*4*DL	WG	VOA	SW8260B	trans-1,3-DICHLOROPROPENE	50	U	50	R	ug/l	DL
CNC77	009GW022M4DL	S242010*4*DL	WG	VOA	SW8260B	TRICHLOROETHYLENE (TCE)	6.9	DJ	6.9	R	ug/l	DL
CNC77	009GW022M4DL	S242010*4*DL	WG	VOA	SW8260B	Vinyl acetate	100	U	100	R	ug/l	DL
CNC77	009GW022M4DL	S242010*4*DL	WG	VOA	SW8260B	VINYL CHLORIDE	100	U	100	R	ug/l	DL
CNC77	009GW022M4DL	S242010*4*DL	WG	VOA	SW8260B	XYLENES, TOTAL	50	U	50	R	ug/l	DL
CNC77	009HW022M4	S242010*5	WG	VOA	SW8260B	ACETONE	100	U	100	UJ	ug/l	CC
CNC77	196GW004M4	S242010*7	WG	VOA	SW8260B	1,2-DICHLOROBENZENE	1000	E	1000	R	ug/l	LR
CNC77	196GW004M4	S242010*7	WG	VOA	SW8260B	ACETONE	50	U	50	UJ	ug/l	CC
CNC77	196GW004M4	S242010*7	WG	VOA	SW8260B	METHYLENE CHLORIDE	2.6	J	25	U	ug/l	BL
CNC77	196GW004M4	S242010*7	WG	VOA	SW8260B	TOLUENE	16	J	25	U	ug/l	BL
CNC77	196GW004M4DL	S242010*7*DL	WG	VOA	SW8260B	1,1,1-TRICHLOROETHANE	50	U	50	R	ug/l	DL
CNC77	196GW004M4DL	S242010*7*DL	WG	VOA	SW8260B	1,1,2,2-TETRACHLOROETHANE	50	U	50	R	ug/l	DL
CNC77	196GW004M4DL	S242010*7*DL	WG	VOA	SW8260B	1,1,2-TRICHLOROETHANE	50	U	50	R	ug/l	DL
CNC77	196GW004M4DL	S242010*7*DL	WG	VOA	SW8260B	1,1-DICHLOROETHANE	50	U	50	R	ug/l	DL
CNC77	196GW004M4DL	S242010*7*DL	WG	VOA	SW8260B	1,1-DICHLOROETHENE	50	U	50	R	ug/l	DL
CNC77	196GW004M4DL	S242010*7*DL	WG	VOA	SW8260B	1,2,3-Trichlorobenzene	50	U	50	R	ug/l	DL
CNC77	196GW004M4DL	S242010*7*DL	WG	VOA	SW8260B	1,2,4-TRICHLOROBENZENE	50	U	50	R	ug/l	DL
CNC77	196GW004M4DL	S242010*7*DL	WG	VOA	SW8260B	1,2-DICHLOROETHANE	50	U	50	R	ug/l	DL
CNC77	196GW004M4DL	S242010*7*DL	WG	VOA	SW8260B	1,2-Dichloroethene (total)	21	DJ	21	R	ug/l	DL
CNC77	196GW004M4DL	S242010*7*DL	WG	VOA	SW8260B	1,2-DICHLOROPROPANE	50	U	50	R	ug/l	DL
CNC77	196GW004M4DL	S242010*7*DL	WG	VOA	SW8260B	1,3-DICHLOROBENZENE	51	D	51	R	ug/l	DL
CNC77	196GW004M4DL	S242010*7*DL	WG	VOA	SW8260B	1,4-DICHLOROBENZENE	82	D	82	R	ug/l	DL
CNC77	196GW004M4DL	S242010*7*DL	WG	VOA	SW8260B	2-BUTANONE (MEK)	100	U	100	R	ug/l	DL

Attachment 1 - Changed Qualifiers and Results
Zone H, SWMU 196 - Data Validation

SDG	Sample ID	Lab Sample ID	Matrix	Parameter Class	Analytical Method	Parameter	Lab Result	Lab Qual	Final Result	Final Qual	Units	Reasons
CNC77	196GW004M4DL	S242010*7*DL	WG	VOA	SW8260B	2-Chloroethyl vinyl ether	100	U	100	R	ug/l	DL
CNC77	196GW004M4DL	S242010*7*DL	WG	VOA	SW8260B	2-HEXANONE	100	U	100	R	ug/l	DL
CNC77	196GW004M4DL	S242010*7*DL	WG	VOA	SW8260B	4-METHYL-2-PENTANONE (MIBK)	100	U	100	R	ug/l	DL
CNC77	196GW004M4DL	S242010*7*DL	WG	VOA	SW8260B	ACETONE	100	U	100	R	ug/l	DL
CNC77	196GW004M4DL	S242010*7*DL	WG	VOA	SW8260B	BENZENE	31	DJ	31	R	ug/l	DL
CNC77	196GW004M4DL	S242010*7*DL	WG	VOA	SW8260B	BROMODICHLOROMETHANE	50	U	50	R	ug/l	DL
CNC77	196GW004M4DL	S242010*7*DL	WG	VOA	SW8260B	BROMOFORM	50	U	50	R	ug/l	DL
CNC77	196GW004M4DL	S242010*7*DL	WG	VOA	SW8260B	BROMOMETHANE	100	U	100	R	ug/l	DL
CNC77	196GW004M4DL	S242010*7*DL	WG	VOA	SW8260B	CARBON DISULFIDE	50	U	50	R	ug/l	DL
CNC77	196GW004M4DL	S242010*7*DL	WG	VOA	SW8260B	CARBON TETRACHLORIDE	50	U	50	R	ug/l	DL
CNC77	196GW004M4DL	S242010*7*DL	WG	VOA	SW8260B	CHLOROBENZENE	220	D	220	R	ug/l	DL
CNC77	196GW004M4DL	S242010*7*DL	WG	VOA	SW8260B	CHLOROETHANE	100	U	100	R	ug/l	DL
CNC77	196GW004M4DL	S242010*7*DL	WG	VOA	SW8260B	CHLOROFORM	50	U	50	R	ug/l	DL
CNC77	196GW004M4DL	S242010*7*DL	WG	VOA	SW8260B	CHLOROMETHANE	100	U	100	R	ug/l	DL
CNC77	196GW004M4DL	S242010*7*DL	WG	VOA	SW8260B	cis-1,2-DICHLOROETHYLENE	21	DJ	21	R	ug/l	DL
CNC77	196GW004M4DL	S242010*7*DL	WG	VOA	SW8260B	cis-1,3-DICHLOROPROPENE	50	U	50	R	ug/l	DL
CNC77	196GW004M4DL	S242010*7*DL	WG	VOA	SW8260B	DIBROMOCHLOROMETHANE	50	U	50	R	ug/l	DL
CNC77	196GW004M4DL	S242010*7*DL	WG	VOA	SW8260B	ETHYLBENZENE	50	U	50	R	ug/l	DL
CNC77	196GW004M4DL	S242010*7*DL	WG	VOA	SW8260B	m+p Xylene	50	U	50	R	ug/l	DL
CNC77	196GW004M4DL	S242010*7*DL	WG	VOA	SW8260B	METHYLENE CHLORIDE	50	U	50	R	ug/l	DL
CNC77	196GW004M4DL	S242010*7*DL	WG	VOA	SW8260B	o-Xylene	50	U	50	R	ug/l	DL
CNC77	196GW004M4DL	S242010*7*DL	WG	VOA	SW8260B	STYRENE	50	U	50	R	ug/l	DL
CNC77	196GW004M4DL	S242010*7*DL	WG	VOA	SW8260B	TETRACHLOROETHYLENE(PCE)	28	DJ	28	R	ug/l	DL
CNC77	196GW004M4DL	S242010*7*DL	WG	VOA	SW8260B	TOLUENE	14	DJ	14	R	ug/l	DL
CNC77	196GW004M4DL	S242010*7*DL	WG	VOA	SW8260B	trans-1,2-DICHLOROETHENE	50	U	50	R	ug/l	DL
CNC77	196GW004M4DL	S242010*7*DL	WG	VOA	SW8260B	trans-1,3-DICHLOROPROPENE	50	U	50	R	ug/l	DL
CNC77	196GW004M4DL	S242010*7*DL	WG	VOA	SW8260B	TRICHLOROETHYLENE (TCE)	6.6	DJ	6.6	R	ug/l	DL
CNC77	196GW004M4DL	S242010*7*DL	WG	VOA	SW8260B	Vinyl acetate	100	U	100	R	ug/l	DL
CNC77	196GW004M4DL	S242010*7*DL	WG	VOA	SW8260B	VINYL CHLORIDE	100	U	100	R	ug/l	DL
CNC77	196GW004M4DL	S242010*7*DL	WG	VOA	SW8260B	XYLENES, TOTAL	50	U	50	R	ug/l	DL
CNC77	196GW005M4	S242010*8	WG	VOA	SW8260B	1,2-DICHLOROBENZENE	2600	E	2600	R	ug/l	LR
CNC77	196GW005M4	S242010*8	WG	VOA	SW8260B	2-Chloroethyl vinyl ether	50	U	50	UJ	ug/l	CC
CNC77	196GW005M4	S242010*8	WG	VOA	SW8260B	2-HEXANONE	50	U	50	UJ	ug/l	CC

SDG	Sample ID	Lab Sample ID	Matrix	Parameter Class	Analytical Method	Parameter	Lab Result	Lab Qual	Final Result	Final Qual	Units	Reasons
CNC77	196GW005M4	S242010*8	WG	VOA	SW8260B	4-METHYL-2-PENTANONE (MIBK)	50	U	50	UJ	ug/l	CC
CNC77	196GW005M4	S242010*8	WG	VOA	SW8260B	ACETONE	66	=	66	J	ug/l	CC
CNC77	196GW005M4DL	S242010*8*DL	WG	VOA	SW8260B	1,1,1-TRICHLOROETHANE	100	U	100	R	ug/l	DL
CNC77	196GW005M4DL	S242010*8*DL	WG	VOA	SW8260B	1,1,2,2-TETRACHLOROETHANE	100	U	100	R	ug/l	DL
CNC77	196GW005M4DL	S242010*8*DL	WG	VOA	SW8260B	1,1,2-TRICHLOROETHANE	100	U	100	R	ug/l	DL
CNC77	196GW005M4DL	S242010*8*DL	WG	VOA	SW8260B	1,1-DICHLOROETHANE	100	U	100	R	ug/l	DL
CNC77	196GW005M4DL	S242010*8*DL	WG	VOA	SW8260B	1,1-DICHLOROETHENE	100	U	100	R	ug/l	DL
CNC77	196GW005M4DL	S242010*8*DL	WG	VOA	SW8260B	1,2,3-Trichlorobenzene	100	U	100	R	ug/l	DL
CNC77	196GW005M4DL	S242010*8*DL	WG	VOA	SW8260B	1,2,4-TRICHLOROBENZENE	100	U	100	R	ug/l	DL
CNC77	196GW005M4DL	S242010*8*DL	WG	VOA	SW8260B	1,2-DICHLOROETHANE	100	U	100	R	ug/l	DL
CNC77	196GW005M4DL	S242010*8*DL	WG	VOA	SW8260B	1,2-Dichloroethene (total)	100	U	100	R	ug/l	DL
CNC77	196GW005M4DL	S242010*8*DL	WG	VOA	SW8260B	1,2-DICHLOROPROPANE	100	U	100	R	ug/l	DL
CNC77	196GW005M4DL	S242010*8*DL	WG	VOA	SW8260B	1,3-DICHLOROBENZENE	39	DJ	39	R	ug/l	DL
CNC77	196GW005M4DL	S242010*8*DL	WG	VOA	SW8260B	1,4-DICHLOROBENZENE	190	D	190	R	ug/l	DL
CNC77	196GW005M4DL	S242010*8*DL	WG	VOA	SW8260B	2-BUTANONE (MEK)	200	U	200	R	ug/l	DL
CNC77	196GW005M4DL	S242010*8*DL	WG	VOA	SW8260B	2-Chloroethyl vinyl ether	200	U	200	R	ug/l	DL
CNC77	196GW005M4DL	S242010*8*DL	WG	VOA	SW8260B	2-HEXANONE	200	U	200	R	ug/l	DL
CNC77	196GW005M4DL	S242010*8*DL	WG	VOA	SW8260B	4-METHYL-2-PENTANONE (MIBK)	200	U	200	R	ug/l	DL
CNC77	196GW005M4DL	S242010*8*DL	WG	VOA	SW8260B	ACETONE	200	U	200	R	ug/l	DL
CNC77	196GW005M4DL	S242010*8*DL	WG	VOA	SW8260B	BENZENE	100	U	100	R	ug/l	DL
CNC77	196GW005M4DL	S242010*8*DL	WG	VOA	SW8260B	BROMODICHLOROMETHANE	100	U	100	R	ug/l	DL
CNC77	196GW005M4DL	S242010*8*DL	WG	VOA	SW8260B	BROMOFORM	100	U	100	R	ug/l	DL
CNC77	196GW005M4DL	S242010*8*DL	WG	VOA	SW8260B	BROMOMETHANE	200	U	200	R	ug/l	DL
CNC77	196GW005M4DL	S242010*8*DL	WG	VOA	SW8260B	CARBON DISULFIDE	100	U	100	R	ug/l	DL
CNC77	196GW005M4DL	S242010*8*DL	WG	VOA	SW8260B	CARBON TETRACHLORIDE	100	U	100	R	ug/l	DL
CNC77	196GW005M4DL	S242010*8*DL	WG	VOA	SW8260B	CHLOROBENZENE	100	U	100	R	ug/l	DL
CNC77	196GW005M4DL	S242010*8*DL	WG	VOA	SW8260B	CHLOROETHANE	200	U	200	R	ug/l	DL
CNC77	196GW005M4DL	S242010*8*DL	WG	VOA	SW8260B	CHLOROFORM	100	U	100	R	ug/l	DL
CNC77	196GW005M4DL	S242010*8*DL	WG	VOA	SW8260B	CHLOROMETHANE	200	U	200	R	ug/l	DL
CNC77	196GW005M4DL	S242010*8*DL	WG	VOA	SW8260B	cis-1,2-DICHLOROETHYLENE	100	U	100	R	ug/l	DL
CNC77	196GW005M4DL	S242010*8*DL	WG	VOA	SW8260B	cis-1,3-DICHLOROPROPENE	100	U	100	R	ug/l	DL
CNC77	196GW005M4DL	S242010*8*DL	WG	VOA	SW8260B	DIBROMOCHLOROMETHANE	100	U	100	R	ug/l	DL
CNC77	196GW005M4DL	S242010*8*DL	WG	VOA	SW8260B	ETHYLBENZENE	100	U	100	R	ug/l	DL

Attachment 1 - Changed Qualifiers and Results
Zone H, SWMU 196 - Data Validation

SDG	Sample ID	Lab Sample ID	Matrix	Parameter Class	Analytical Method	Parameter	Lab Result	Lab Qual	Final Result	Final Qual	Units	Reasons
CNC77	196GW005M4DL	S242010*8*DL	WG	VOA	SW8260B	m+p Xylene	100	U	100	R	ug/l	DL
CNC77	196GW005M4DL	S242010*8*DL	WG	VOA	SW8260B	METHYLENE CHLORIDE	100	U	100	R	ug/l	DL
CNC77	196GW005M4DL	S242010*8*DL	WG	VOA	SW8260B	o-Xylene	100	U	100	R	ug/l	DL
CNC77	196GW005M4DL	S242010*8*DL	WG	VOA	SW8260B	STYRENE	100	U	100	R	ug/l	DL
CNC77	196GW005M4DL	S242010*8*DL	WG	VOA	SW8260B	TETRACHLOROETHYLENE(PCE)	100	U	100	R	ug/l	DL
CNC77	196GW005M4DL	S242010*8*DL	WG	VOA	SW8260B	TOLUENE	100	U	100	R	ug/l	DL
CNC77	196GW005M4DL	S242010*8*DL	WG	VOA	SW8260B	trans-1,2-DICHLOROETHENE	100	U	100	R	ug/l	DL
CNC77	196GW005M4DL	S242010*8*DL	WG	VOA	SW8260B	trans-1,3-DICHLOROPROPENE	100	U	100	R	ug/l	DL
CNC77	196GW005M4DL	S242010*8*DL	WG	VOA	SW8260B	TRICHLOROETHYLENE (TCE)	100	U	100	R	ug/l	DL
CNC77	196GW005M4DL	S242010*8*DL	WG	VOA	SW8260B	Vinyl acetate	200	U	200	R	ug/l	DL
CNC77	196GW005M4DL	S242010*8*DL	WG	VOA	SW8260B	VINYL CHLORIDE	200	U	200	R	ug/l	DL
CNC77	196GW005M4DL	S242010*8*DL	WG	VOA	SW8260B	XYLENES, TOTAL	100	U	100	R	ug/l	DL
CNC77	196GW006M4	S242010*1	WG	VOA	SW8260B	ACETONE	50	U	50	UJ	ug/l	CC
CNC77	196GW007M4	S242010*10	WG	VOA	SW8260B	ACETONE	39	=	39	J	ug/l	CC
CNC77	196GW007M4	S242010*10	WG	VOA	SW8260B	CHLOROBENZENE	640	E	640	R	ug/l	LR
CNC77	196GW007M4	S242010*10	WG	VOA	SW8260B	METHYLENE CHLORIDE	1.8	J	10	U	ug/l	BL
CNC77	196GW007M4DL	S242010*10*DL	WG	VOA	SW8260B	1,1,1-TRICHLOROETHANE	25	U	25	R	ug/l	DL
CNC77	196GW007M4DL	S242010*10*DL	WG	VOA	SW8260B	1,1,2,2-TETRACHLOROETHANE	25	U	25	R	ug/l	DL
CNC77	196GW007M4DL	S242010*10*DL	WG	VOA	SW8260B	1,1,2-TRICHLOROETHANE	25	U	25	R	ug/l	DL
CNC77	196GW007M4DL	S242010*10*DL	WG	VOA	SW8260B	1,1-DICHLOROETHANE	25	U	25	R	ug/l	DL
CNC77	196GW007M4DL	S242010*10*DL	WG	VOA	SW8260B	1,1-DICHLOROETHENE	25	U	25	R	ug/l	DL
CNC77	196GW007M4DL	S242010*10*DL	WG	VOA	SW8260B	1,2,3-Trichlorobenzene	25	U	25	R	ug/l	DL
CNC77	196GW007M4DL	S242010*10*DL	WG	VOA	SW8260B	1,2,4-TRICHLOROBENZENE	25	U	25	R	ug/l	DL
CNC77	196GW007M4DL	S242010*10*DL	WG	VOA	SW8260B	1,2-DICHLOROBENZENE	340	D	340	R	ug/l	DL
CNC77	196GW007M4DL	S242010*10*DL	WG	VOA	SW8260B	1,2-DICHLOROETHANE	25	U	25	R	ug/l	DL
CNC77	196GW007M4DL	S242010*10*DL	WG	VOA	SW8260B	1,2-Dichloroethene (total)	25	U	25	R	ug/l	DL
CNC77	196GW007M4DL	S242010*10*DL	WG	VOA	SW8260B	1,2-DICHLOROPROPANE	25	U	25	R	ug/l	DL
CNC77	196GW007M4DL	S242010*10*DL	WG	VOA	SW8260B	1,3-DICHLOROBENZENE	18	DJ	18	R	ug/l	DL
CNC77	196GW007M4DL	S242010*10*DL	WG	VOA	SW8260B	1,4-DICHLOROBENZENE	67	D	67	R	ug/l	DL
CNC77	196GW007M4DL	S242010*10*DL	WG	VOA	SW8260B	2-BUTANONE (MEK)	50	U	50	R	ug/l	DL
CNC77	196GW007M4DL	S242010*10*DL	WG	VOA	SW8260B	2-Chloroethyl vinyl ether	50	U	50	R	ug/l	DL
CNC77	196GW007M4DL	S242010*10*DL	WG	VOA	SW8260B	2-HEXANONE	50	U	50	R	ug/l	DL
CNC77	196GW007M4DL	S242010*10*DL	WG	VOA	SW8260B	4-METHYL-2-PENTANONE (MIBK)	50	U	50	R	ug/l	DL

SDG	Sample ID	Lab Sample ID	Matrix	Parameter Class	Analytical Method	Parameter	Lab Result	Lab Qual	Final Result	Final Qual	Units	Reasons
CNC77	196GW007M4DL	S242010*10*DL	WG	VOA	SW8260B	ACETONE	50	U	50	R	ug/l	DL
CNC77	196GW007M4DL	S242010*10*DL	WG	VOA	SW8260B	BENZENE	12	DJ	12	R	ug/l	DL
CNC77	196GW007M4DL	S242010*10*DL	WG	VOA	SW8260B	BROMODICHLOROMETHANE	25	U	25	R	ug/l	DL
CNC77	196GW007M4DL	S242010*10*DL	WG	VOA	SW8260B	BROMOFORM	25	U	25	R	ug/l	DL
CNC77	196GW007M4DL	S242010*10*DL	WG	VOA	SW8260B	BROMOMETHANE	50	U	50	R	ug/l	DL
CNC77	196GW007M4DL	S242010*10*DL	WG	VOA	SW8260B	CARBON DISULFIDE	25	U	25	R	ug/l	DL
CNC77	196GW007M4DL	S242010*10*DL	WG	VOA	SW8260B	CARBON TETRACHLORIDE	25	U	25	R	ug/l	DL
CNC77	196GW007M4DL	S242010*10*DL	WG	VOA	SW8260B	CHLOROETHANE	50	U	50	R	ug/l	DL
CNC77	196GW007M4DL	S242010*10*DL	WG	VOA	SW8260B	CHLOROFORM	25	U	25	R	ug/l	DL
CNC77	196GW007M4DL	S242010*10*DL	WG	VOA	SW8260B	CHLOROMETHANE	50	U	50	R	ug/l	DL
CNC77	196GW007M4DL	S242010*10*DL	WG	VOA	SW8260B	cis-1,2-DICHLOROETHYLENE	25	U	25	R	ug/l	DL
CNC77	196GW007M4DL	S242010*10*DL	WG	VOA	SW8260B	cis-1,3-DICHLOROPROPENE	25	U	25	R	ug/l	DL
CNC77	196GW007M4DL	S242010*10*DL	WG	VOA	SW8260B	DIBROMOCHLOROMETHANE	25	U	25	R	ug/l	DL
CNC77	196GW007M4DL	S242010*10*DL	WG	VOA	SW8260B	ETHYLBENZENE	25	U	25	R	ug/l	DL
CNC77	196GW007M4DL	S242010*10*DL	WG	VOA	SW8260B	m+p Xylene	25	U	25	R	ug/l	DL
CNC77	196GW007M4DL	S242010*10*DL	WG	VOA	SW8260B	METHYLENE CHLORIDE	2.6	DJ	2.6	R	ug/l	DL
CNC77	196GW007M4DL	S242010*10*DL	WG	VOA	SW8260B	o-Xylene	25	U	25	R	ug/l	DL
CNC77	196GW007M4DL	S242010*10*DL	WG	VOA	SW8260B	STYRENE	25	U	25	R	ug/l	DL
CNC77	196GW007M4DL	S242010*10*DL	WG	VOA	SW8260B	TETRACHLOROETHYLENE(PCE)	25	U	25	R	ug/l	DL
CNC77	196GW007M4DL	S242010*10*DL	WG	VOA	SW8260B	TOLUENE	25	U	25	R	ug/l	DL
CNC77	196GW007M4DL	S242010*10*DL	WG	VOA	SW8260B	trans-1,2-DICHLOROETHENE	25	U	25	R	ug/l	DL
CNC77	196GW007M4DL	S242010*10*DL	WG	VOA	SW8260B	trans-1,3-DICHLOROPROPENE	25	U	25	R	ug/l	DL
CNC77	196GW007M4DL	S242010*10*DL	WG	VOA	SW8260B	TRICHLOROETHYLENE (TCE)	25	U	25	R	ug/l	DL
CNC77	196GW007M4DL	S242010*10*DL	WG	VOA	SW8260B	Vinyl acetate	50	U	50	R	ug/l	DL
CNC77	196GW007M4DL	S242010*10*DL	WG	VOA	SW8260B	VINYL CHLORIDE	50	U	50	R	ug/l	DL
CNC77	196GW007M4DL	S242010*10*DL	WG	VOA	SW8260B	XYLENES, TOTAL	25	U	25	R	ug/l	DL
CNC77	196GW008M4	S242010*11	WG	VOA	SW8260B	2-Chloroethyl vinyl ether	100	U	100	UJ	ug/l	CC
CNC77	196GW008M4	S242010*11	WG	VOA	SW8260B	2-HEXANONE	100	U	100	UJ	ug/l	CC
CNC77	196GW008M4	S242010*11	WG	VOA	SW8260B	4-METHYL-2-PENTANONE (MIBK)	100	U	100	UJ	ug/l	CC
CNC77	196GW008M4	S242010*11	WG	VOA	SW8260B	ACETONE	100	U	100	UJ	ug/l	CC
CNC77	196GW009M4	S242010*12	WG	VOA	SW8260B	ACETONE	500	U	500	UJ	ug/l	CC
CNC77	196GW010M4	S242010*13	WG	VOA	SW8260B	ACETONE	50	U	50	UJ	ug/l	CC
CNC77	196GW011M4	S242010*14	WG	VOA	SW8260B	2-Chloroethyl vinyl ether	10	U	10	UJ	ug/l	CC

Attachment 1 - Changed Qualifiers and Results
Zone H, SWMU 196 - Data Validation

SDG	Sample ID	Lab Sample ID	Matrix	Parameter Class	Analytical Method	Parameter	Lab Result	Lab Qual	Final Result	Final Qual	Units	Reasons
CNC77	196GW011M4	S242010*14	WG	VOA	SW8260B	2-HEXANONE	10	U	10	UJ	ug/l	CC
CNC77	196GW011M4	S242010*14	WG	VOA	SW8260B	4-METHYL-2-PENTANONE (MIBK)	10	U	10	UJ	ug/l	CC
CNC77	196GW011M4	S242010*14	WG	VOA	SW8260B	ACETONE	10	U	10	UJ	ug/l	CC
CNC77	196GW011M4	S242010*14	WG	VOA	SW8260B	TOLUENE	1.3	J	5	U	ug/l	BL
CNC77	196GW012M4	S242010*15	WG	VOA	SW8260B	2-Chloroethyl vinyl ether	10	U	10	UJ	ug/l	CC
CNC77	196GW012M4	S242010*15	WG	VOA	SW8260B	2-HEXANONE	10	U	10	UJ	ug/l	CC
CNC77	196GW012M4	S242010*15	WG	VOA	SW8260B	4-METHYL-2-PENTANONE (MIBK)	10	U	10	UJ	ug/l	CC
CNC77	196GW012M4	S242010*15	WG	VOA	SW8260B	ACETONE	10	U	10	UJ	ug/l	CC
CNC77	196GW013M4	S242010*16	WG	VOA	SW8260B	1,2-DICHLOROBENZENE	13000	E	13000	R	ug/l	LR
CNC77	196GW013M4	S242010*16	WG	VOA	SW8260B	ACETONE	200	U	200	UJ	ug/l	CC
CNC77	196GW013M4DL	S242010*16*DL	WG	VOA	SW8260B	1,1,1-TRICHLOROETHANE	500	U	500	R	ug/l	DL
CNC77	196GW013M4DL	S242010*16*DL	WG	VOA	SW8260B	1,1,2,2-TETRACHLOROETHANE	500	U	500	R	ug/l	DL
CNC77	196GW013M4DL	S242010*16*DL	WG	VOA	SW8260B	1,1,2-TRICHLOROETHANE	500	U	500	R	ug/l	DL
CNC77	196GW013M4DL	S242010*16*DL	WG	VOA	SW8260B	1,1-DICHLOROETHANE	500	U	500	R	ug/l	DL
CNC77	196GW013M4DL	S242010*16*DL	WG	VOA	SW8260B	1,1-DICHLOROETHENE	500	U	500	R	ug/l	DL
CNC77	196GW013M4DL	S242010*16*DL	WG	VOA	SW8260B	1,2,3-Trichlorobenzene	500	U	500	R	ug/l	DL
CNC77	196GW013M4DL	S242010*16*DL	WG	VOA	SW8260B	1,2,4-TRICHLOROBENZENE	500	U	500	R	ug/l	DL
CNC77	196GW013M4DL	S242010*16*DL	WG	VOA	SW8260B	1,2-DICHLOROETHANE	500	U	500	R	ug/l	DL
CNC77	196GW013M4DL	S242010*16*DL	WG	VOA	SW8260B	1,2-Dichloroethene (total)	500	U	500	R	ug/l	DL
CNC77	196GW013M4DL	S242010*16*DL	WG	VOA	SW8260B	1,2-DICHLOROPROPANE	500	U	500	R	ug/l	DL
CNC77	196GW013M4DL	S242010*16*DL	WG	VOA	SW8260B	1,3-DICHLOROBENZENE	140	DJ	140	R	ug/l	DL
CNC77	196GW013M4DL	S242010*16*DL	WG	VOA	SW8260B	1,4-DICHLOROBENZENE	310	DJ	310	R	ug/l	DL
CNC77	196GW013M4DL	S242010*16*DL	WG	VOA	SW8260B	2-BUTANONE (MEK)	1000	U	1000	R	ug/l	DL
CNC77	196GW013M4DL	S242010*16*DL	WG	VOA	SW8260B	2-Chloroethyl vinyl ether	1000	U	1000	R	ug/l	DL
CNC77	196GW013M4DL	S242010*16*DL	WG	VOA	SW8260B	2-HEXANONE	1000	U	1000	R	ug/l	DL
CNC77	196GW013M4DL	S242010*16*DL	WG	VOA	SW8260B	4-METHYL-2-PENTANONE (MIBK)	1000	U	1000	R	ug/l	DL
CNC77	196GW013M4DL	S242010*16*DL	WG	VOA	SW8260B	ACETONE	1000	U	1000	R	ug/l	DL
CNC77	196GW013M4DL	S242010*16*DL	WG	VOA	SW8260B	BENZENE	38	DJ	38	R	ug/l	DL
CNC77	196GW013M4DL	S242010*16*DL	WG	VOA	SW8260B	BROMODICHLOROMETHANE	500	U	500	R	ug/l	DL
CNC77	196GW013M4DL	S242010*16*DL	WG	VOA	SW8260B	BROMOFORM	500	U	500	R	ug/l	DL
CNC77	196GW013M4DL	S242010*16*DL	WG	VOA	SW8260B	BROMOMETHANE	1000	U	1000	R	ug/l	DL
CNC77	196GW013M4DL	S242010*16*DL	WG	VOA	SW8260B	CARBON DISULFIDE	500	U	500	R	ug/l	DL
CNC77	196GW013M4DL	S242010*16*DL	WG	VOA	SW8260B	CARBON TETRACHLORIDE	500	U	500	R	ug/l	DL

SDG	Sample ID	Lab Sample ID	Matrix	Parameter Class	Analytical Method	Parameter	Lab Result	Lab Qual	Final Result	Final Qual	Units	Reasons
CNC77	196GW013M4DL	S242010*16*DL	WG	VOA	SW8260B	CHLOROBENZENE	290	DJ	290	R	ug/l	DL
CNC77	196GW013M4DL	S242010*16*DL	WG	VOA	SW8260B	CHLOROETHANE	1000	U	1000	R	ug/l	DL
CNC77	196GW013M4DL	S242010*16*DL	WG	VOA	SW8260B	CHLOROFORM	500	U	500	R	ug/l	DL
CNC77	196GW013M4DL	S242010*16*DL	WG	VOA	SW8260B	CHLOROMETHANE	1000	U	1000	R	ug/l	DL
CNC77	196GW013M4DL	S242010*16*DL	WG	VOA	SW8260B	cis-1,2-DICHLOROETHYLENE	500	U	500	R	ug/l	DL
CNC77	196GW013M4DL	S242010*16*DL	WG	VOA	SW8260B	cis-1,3-DICHLOROPROPENE	500	U	500	R	ug/l	DL
CNC77	196GW013M4DL	S242010*16*DL	WG	VOA	SW8260B	DIBROMOCHLOROMETHANE	500	U	500	R	ug/l	DL
CNC77	196GW013M4DL	S242010*16*DL	WG	VOA	SW8260B	ETHYLBENZENE	500	U	500	R	ug/l	DL
CNC77	196GW013M4DL	S242010*16*DL	WG	VOA	SW8260B	m+p Xylene	500	U	500	R	ug/l	DL
CNC77	196GW013M4DL	S242010*16*DL	WG	VOA	SW8260B	METHYLENE CHLORIDE	500	U	500	R	ug/l	DL
CNC77	196GW013M4DL	S242010*16*DL	WG	VOA	SW8260B	o-Xylene	500	U	500	R	ug/l	DL
CNC77	196GW013M4DL	S242010*16*DL	WG	VOA	SW8260B	STYRENE	500	U	500	R	ug/l	DL
CNC77	196GW013M4DL	S242010*16*DL	WG	VOA	SW8260B	TETRACHLOROETHYLENE(PCE)	500	U	500	R	ug/l	DL
CNC77	196GW013M4DL	S242010*16*DL	WG	VOA	SW8260B	TOLUENE	500	U	500	R	ug/l	DL
CNC77	196GW013M4DL	S242010*16*DL	WG	VOA	SW8260B	trans-1,2-DICHLOROETHENE	500	U	500	R	ug/l	DL
CNC77	196GW013M4DL	S242010*16*DL	WG	VOA	SW8260B	trans-1,3-DICHLOROPROPENE	500	U	500	R	ug/l	DL
CNC77	196GW013M4DL	S242010*16*DL	WG	VOA	SW8260B	TRICHLOROETHYLENE (TCE)	500	U	500	R	ug/l	DL
CNC77	196GW013M4DL	S242010*16*DL	WG	VOA	SW8260B	Vinyl acetate	1000	U	1000	R	ug/l	DL
CNC77	196GW013M4DL	S242010*16*DL	WG	VOA	SW8260B	VINYL CHLORIDE	1000	U	1000	R	ug/l	DL
CNC77	196GW013M4DL	S242010*16*DL	WG	VOA	SW8260B	XYLENES, TOTAL	500	U	500	R	ug/l	DL
CNC77	196GW014M4	S242010*17	WG	VOA	SW8260B	1,2-DICHLOROBENZENE	30000	E	30000	R	ug/l	LR
CNC77	196GW014M4	S242010*17	WG	VOA	SW8260B	ACETONE	5800	=	5800	J	ug/l	CC
CNC77	196GW014M4	S242010*17	WG	VOA	SW8260B	CHLOROBENZENE	5300	E	5300	R	ug/l	LR
CNC77	196GW014M4DL	S242010*17*DL	WG	VOA	SW8260B	1,1,1-TRICHLOROETHANE	1000	U	1000	R	ug/l	DL
CNC77	196GW014M4DL	S242010*17*DL	WG	VOA	SW8260B	1,1,2,2-TETRACHLOROETHANE	1000	U	1000	R	ug/l	DL
CNC77	196GW014M4DL	S242010*17*DL	WG	VOA	SW8260B	1,1,2-TRICHLOROETHANE	1000	U	1000	R	ug/l	DL
CNC77	196GW014M4DL	S242010*17*DL	WG	VOA	SW8260B	1,1-DICHLOROETHANE	1000	U	1000	R	ug/l	DL
CNC77	196GW014M4DL	S242010*17*DL	WG	VOA	SW8260B	1,1-DICHLOROETHENE	1000	U	1000	R	ug/l	DL
CNC77	196GW014M4DL	S242010*17*DL	WG	VOA	SW8260B	1,2,3-Trichlorobenzene	1000	U	1000	R	ug/l	DL
CNC77	196GW014M4DL	S242010*17*DL	WG	VOA	SW8260B	1,2,4-TRICHLOROBENZENE	1000	U	1000	R	ug/l	DL
CNC77	196GW014M4DL	S242010*17*DL	WG	VOA	SW8260B	1,2-DICHLOROETHANE	1000	U	1000	R	ug/l	DL
CNC77	196GW014M4DL	S242010*17*DL	WG	VOA	SW8260B	1,2-Dichloroethene (total)	1000	U	1000	R	ug/l	DL
CNC77	196GW014M4DL	S242010*17*DL	WG	VOA	SW8260B	1,2-DICHLOROPROPANE	1000	U	1000	R	ug/l	DL

Attachment 1 - Changed Qualifiers and Results
Zone H, SWMU 196 - Data Validation

SDG	Sample ID	Lab Sample ID	Matrix	Parameter Class	Analytical Method	Parameter	Lab Result	Lab Qual	Final Result	Final Qual	Units	Reasons
CNC77	196GW014M4DL	S242010*17*DL	WG	VOA	SW8260B	1,3-DICHLOROBENZENE	1200	D	1200	R	ug/l	DL
CNC77	196GW014M4DL	S242010*17*DL	WG	VOA	SW8260B	1,4-DICHLOROBENZENE	2500	D	2500	R	ug/l	DL
CNC77	196GW014M4DL	S242010*17*DL	WG	VOA	SW8260B	2-BUTANONE (MEK)	2000	U	2000	R	ug/l	DL
CNC77	196GW014M4DL	S242010*17*DL	WG	VOA	SW8260B	2-Chloroethyl vinyl ether	2000	U	2000	R	ug/l	DL
CNC77	196GW014M4DL	S242010*17*DL	WG	VOA	SW8260B	2-HEXANONE	2000	U	2000	R	ug/l	DL
CNC77	196GW014M4DL	S242010*17*DL	WG	VOA	SW8260B	4-METHYL-2-PENTANONE (MIBK)	2000	U	2000	R	ug/l	DL
CNC77	196GW014M4DL	S242010*17*DL	WG	VOA	SW8260B	ACETONE	4000	D	4000	R	ug/l	DL
CNC77	196GW014M4DL	S242010*17*DL	WG	VOA	SW8260B	BENZENE	740	DJ	740	R	ug/l	DL
CNC77	196GW014M4DL	S242010*17*DL	WG	VOA	SW8260B	BROMODICHLOROMETHANE	1000	U	1000	R	ug/l	DL
CNC77	196GW014M4DL	S242010*17*DL	WG	VOA	SW8260B	BROMOFORM	1000	U	1000	R	ug/l	DL
CNC77	196GW014M4DL	S242010*17*DL	WG	VOA	SW8260B	BROMOMETHANE	2000	U	2000	R	ug/l	DL
CNC77	196GW014M4DL	S242010*17*DL	WG	VOA	SW8260B	CARBON DISULFIDE	1000	U	1000	R	ug/l	DL
CNC77	196GW014M4DL	S242010*17*DL	WG	VOA	SW8260B	CARBON TETRACHLORIDE	1000	U	1000	R	ug/l	DL
CNC77	196GW014M4DL	S242010*17*DL	WG	VOA	SW8260B	CHLOROETHANE	2000	U	2000	R	ug/l	DL
CNC77	196GW014M4DL	S242010*17*DL	WG	VOA	SW8260B	CHLOROFORM	1000	U	1000	R	ug/l	DL
CNC77	196GW014M4DL	S242010*17*DL	WG	VOA	SW8260B	CHLOROMETHANE	2000	U	2000	R	ug/l	DL
CNC77	196GW014M4DL	S242010*17*DL	WG	VOA	SW8260B	cis-1,2-DICHLOROETHYLENE	1000	U	1000	R	ug/l	DL
CNC77	196GW014M4DL	S242010*17*DL	WG	VOA	SW8260B	cis-1,3-DICHLOROPROPENE	1000	U	1000	R	ug/l	DL
CNC77	196GW014M4DL	S242010*17*DL	WG	VOA	SW8260B	DIBROMOCHLOROMETHANE	1000	U	1000	R	ug/l	DL
CNC77	196GW014M4DL	S242010*17*DL	WG	VOA	SW8260B	ETHYLBENZENE	1000	U	1000	R	ug/l	DL
CNC77	196GW014M4DL	S242010*17*DL	WG	VOA	SW8260B	m+p Xylene	1000	U	1000	R	ug/l	DL
CNC77	196GW014M4DL	S242010*17*DL	WG	VOA	SW8260B	METHYLENE CHLORIDE	1000	U	1000	R	ug/l	DL
CNC77	196GW014M4DL	S242010*17*DL	WG	VOA	SW8260B	o-Xylene	1000	U	1000	R	ug/l	DL
CNC77	196GW014M4DL	S242010*17*DL	WG	VOA	SW8260B	STYRENE	1000	U	1000	R	ug/l	DL
CNC77	196GW014M4DL	S242010*17*DL	WG	VOA	SW8260B	TETRACHLOROETHYLENE(PCE)	1000	U	1000	R	ug/l	DL
CNC77	196GW014M4DL	S242010*17*DL	WG	VOA	SW8260B	TOLUENE	380	DJ	380	R	ug/l	DL
CNC77	196GW014M4DL	S242010*17*DL	WG	VOA	SW8260B	trans-1,2-DICHLOROETHENE	1000	U	1000	R	ug/l	DL
CNC77	196GW014M4DL	S242010*17*DL	WG	VOA	SW8260B	trans-1,3-DICHLOROPROPENE	1000	U	1000	R	ug/l	DL
CNC77	196GW014M4DL	S242010*17*DL	WG	VOA	SW8260B	TRICHLOROETHYLENE (TCE)	1000	U	1000	R	ug/l	DL
CNC77	196GW014M4DL	S242010*17*DL	WG	VOA	SW8260B	Vinyl acetate	2000	U	2000	R	ug/l	DL
CNC77	196GW014M4DL	S242010*17*DL	WG	VOA	SW8260B	VINYL CHLORIDE	2000	U	2000	R	ug/l	DL
CNC77	196GW014M4DL	S242010*17*DL	WG	VOA	SW8260B	XYLENES, TOTAL	1000	U	1000	R	ug/l	DL
CNC77	196GW015M4	S242010*18	WG	VOA	SW8260B	ACETONE	100	U	100	UJ	ug/l	CC

SDG	Sample ID	Lab Sample ID	Matrix	Parameter Class	Analytical Method	Parameter	Lab Result	Lab Qual	Final Result	Final Qual	Units	Reasons
CNC77	196GW015M4	S242010*18	WG	VOA	SW8260B	CHLOROBENZENE	2000	E	2000	R	ug/l	LR
CNC77	196GW015M4DL	S242010*18*DL	WG	VOA	SW8260B	1,1,1-TRICHLOROETHANE	100	U	100	R	ug/l	DL
CNC77	196GW015M4DL	S242010*18*DL	WG	VOA	SW8260B	1,1,2,2-TETRACHLOROETHANE	100	U	100	R	ug/l	DL
CNC77	196GW015M4DL	S242010*18*DL	WG	VOA	SW8260B	1,1,2-TRICHLOROETHANE	100	U	100	R	ug/l	DL
CNC77	196GW015M4DL	S242010*18*DL	WG	VOA	SW8260B	1,1-DICHLOROETHANE	64	DJ	64	R	ug/l	DL
CNC77	196GW015M4DL	S242010*18*DL	WG	VOA	SW8260B	1,1-DICHLOROETHENE	100	U	100	R	ug/l	DL
CNC77	196GW015M4DL	S242010*18*DL	WG	VOA	SW8260B	1,2,3-Trichlorobenzene	100	U	100	R	ug/l	DL
CNC77	196GW015M4DL	S242010*18*DL	WG	VOA	SW8260B	1,2,4-TRICHLOROBENZENE	100	U	100	R	ug/l	DL
CNC77	196GW015M4DL	S242010*18*DL	WG	VOA	SW8260B	1,2-DICHLOROBENZENE	100	D	100	R	ug/l	DL
CNC77	196GW015M4DL	S242010*18*DL	WG	VOA	SW8260B	1,2-DICHLOROETHANE	100	U	100	R	ug/l	DL
CNC77	196GW015M4DL	S242010*18*DL	WG	VOA	SW8260B	1,2-Dichloroethene (total)	930	D	930	R	ug/l	DL
CNC77	196GW015M4DL	S242010*18*DL	WG	VOA	SW8260B	1,2-DICHLOROPROPANE	100	U	100	R	ug/l	DL
CNC77	196GW015M4DL	S242010*18*DL	WG	VOA	SW8260B	1,3-DICHLOROBENZENE	16	DJ	16	R	ug/l	DL
CNC77	196GW015M4DL	S242010*18*DL	WG	VOA	SW8260B	1,4-DICHLOROBENZENE	51	DJ	51	R	ug/l	DL
CNC77	196GW015M4DL	S242010*18*DL	WG	VOA	SW8260B	2-BUTANONE (MEK)	200	U	200	R	ug/l	DL
CNC77	196GW015M4DL	S242010*18*DL	WG	VOA	SW8260B	2-Chloroethyl vinyl ether	200	U	200	R	ug/l	DL
CNC77	196GW015M4DL	S242010*18*DL	WG	VOA	SW8260B	2-HEXANONE	200	U	200	R	ug/l	DL
CNC77	196GW015M4DL	S242010*18*DL	WG	VOA	SW8260B	4-METHYL-2-PENTANONE (MIBK)	200	U	200	R	ug/l	DL
CNC77	196GW015M4DL	S242010*18*DL	WG	VOA	SW8260B	ACETONE	200	U	200	R	ug/l	DL
CNC77	196GW015M4DL	S242010*18*DL	WG	VOA	SW8260B	BENZENE	220	D	220	R	ug/l	DL
CNC77	196GW015M4DL	S242010*18*DL	WG	VOA	SW8260B	BROMODICHLOROMETHANE	100	U	100	R	ug/l	DL
CNC77	196GW015M4DL	S242010*18*DL	WG	VOA	SW8260B	BROMOFORM	100	U	100	R	ug/l	DL
CNC77	196GW015M4DL	S242010*18*DL	WG	VOA	SW8260B	BROMOMETHANE	200	U	200	R	ug/l	DL
CNC77	196GW015M4DL	S242010*18*DL	WG	VOA	SW8260B	CARBON DISULFIDE	100	U	100	R	ug/l	DL
CNC77	196GW015M4DL	S242010*18*DL	WG	VOA	SW8260B	CARBON TETRACHLORIDE	100	U	100	R	ug/l	DL
CNC77	196GW015M4DL	S242010*18*DL	WG	VOA	SW8260B	CHLOROETHANE	200	U	200	R	ug/l	DL
CNC77	196GW015M4DL	S242010*18*DL	WG	VOA	SW8260B	CHLOROFORM	100	U	100	R	ug/l	DL
CNC77	196GW015M4DL	S242010*18*DL	WG	VOA	SW8260B	CHLOROMETHANE	200	U	200	R	ug/l	DL
CNC77	196GW015M4DL	S242010*18*DL	WG	VOA	SW8260B	cis-1,2-DICHLOROETHYLENE	930	D	930	R	ug/l	DL
CNC77	196GW015M4DL	S242010*18*DL	WG	VOA	SW8260B	cis-1,3-DICHLOROPROPENE	100	U	100	R	ug/l	DL
CNC77	196GW015M4DL	S242010*18*DL	WG	VOA	SW8260B	DIBROMOCHLOROMETHANE	100	U	100	R	ug/l	DL
CNC77	196GW015M4DL	S242010*18*DL	WG	VOA	SW8260B	ETHYLBENZENE	100	U	100	R	ug/l	DL
CNC77	196GW015M4DL	S242010*18*DL	WG	VOA	SW8260B	m+p Xylene	100	U	100	R	ug/l	DL

Attachment 1 - Changed Qualifiers and Results
Zone H, SWMU 196 - Data Validation

SDG	Sample ID	Lab Sample ID	Matrix	Parameter Class	Analytical Method	Parameter	Lab Result	Lab Qual	Final Result	Final Qual	Units	Reasons
CNC77	196GW015M4DL	S242010*18*DL	WG	VOA	SW8260B	METHYLENE CHLORIDE	100	U	100	R	ug/l	DL
CNC77	196GW015M4DL	S242010*18*DL	WG	VOA	SW8260B	o-Xylene	100	U	100	R	ug/l	DL
CNC77	196GW015M4DL	S242010*18*DL	WG	VOA	SW8260B	STYRENE	100	U	100	R	ug/l	DL
CNC77	196GW015M4DL	S242010*18*DL	WG	VOA	SW8260B	TETRACHLOROETHYLENE(PCE)	100	U	100	R	ug/l	DL
CNC77	196GW015M4DL	S242010*18*DL	WG	VOA	SW8260B	TOLUENE	100	U	100	R	ug/l	DL
CNC77	196GW015M4DL	S242010*18*DL	WG	VOA	SW8260B	trans-1,2-DICHLOROETHENE	100	U	100	R	ug/l	DL
CNC77	196GW015M4DL	S242010*18*DL	WG	VOA	SW8260B	trans-1,3-DICHLOROPROPENE	100	U	100	R	ug/l	DL
CNC77	196GW015M4DL	S242010*18*DL	WG	VOA	SW8260B	TRICHLOROETHYLENE (TCE)	100	D	100	R	ug/l	DL
CNC77	196GW015M4DL	S242010*18*DL	WG	VOA	SW8260B	Vinyl acetate	200	U	200	R	ug/l	DL
CNC77	196GW015M4DL	S242010*18*DL	WG	VOA	SW8260B	VINYL CHLORIDE	1600	D	1600	R	ug/l	DL
CNC77	196GW015M4DL	S242010*18*DL	WG	VOA	SW8260B	XYLENES, TOTAL	100	U	100	R	ug/l	DL
CNC77	196GW016M4	S242010*19	WG	VOA	SW8260B	2-Chloroethyl vinyl ether	10	U	10	UJ	ug/l	CC
CNC77	196GW016M4	S242010*19	WG	VOA	SW8260B	2-HEXANONE	10	U	10	UJ	ug/l	CC
CNC77	196GW016M4	S242010*19	WG	VOA	SW8260B	4-METHYL-2-PENTANONE (MIBK)	10	U	10	UJ	ug/l	CC
CNC77	196GW016M4	S242010*19	WG	VOA	SW8260B	ACETONE	10	U	10	UJ	ug/l	CC
CNC77	196GW017M4	S242010*20	WG	VOA	SW8260B	2-Chloroethyl vinyl ether	10	U	10	UJ	ug/l	CC
CNC77	196GW017M4	S242010*20	WG	VOA	SW8260B	2-HEXANONE	10	U	10	UJ	ug/l	CC
CNC77	196GW017M4	S242010*20	WG	VOA	SW8260B	4-METHYL-2-PENTANONE (MIBK)	10	U	10	UJ	ug/l	CC
CNC77	196GW017M4	S242010*20	WG	VOA	SW8260B	ACETONE	10	U	10	UJ	ug/l	CC
CNC77	196HW005M4	S242010*9	WG	VOA	SW8260B	2-Chloroethyl vinyl ether	200	U	200	UJ	ug/l	CC
CNC77	196HW005M4	S242010*9	WG	VOA	SW8260B	2-HEXANONE	200	U	200	UJ	ug/l	CC
CNC77	196HW005M4	S242010*9	WG	VOA	SW8260B	4-METHYL-2-PENTANONE (MIBK)	200	U	200	UJ	ug/l	CC
CNC77	196HW005M4	S242010*9	WG	VOA	SW8260B	ACETONE	200	U	200	UJ	ug/l	CC
CNC77	196HW005M4	S242010*9	WG	VOA	SW8260B	TOLUENE	14	J	100	U	ug/l	BL
CNC77	GELGW015M4	S242010*6	WG	VOA	SW8260B	1,2-DICHLOROBENZENE	2100	E	2100	R	ug/l	LR
CNC77	GELGW015M4	S242010*6	WG	VOA	SW8260B	ACETONE	20	U	20	UJ	ug/l	CC
CNC77	GELGW015M4	S242010*6	WG	VOA	SW8260B	CHLOROBENZENE	590	E	590	R	ug/l	LR
CNC77	GELGW015M4DL	S242010*6*DL	WG	VOA	SW8260B	1,1,1-TRICHLOROETHANE	100	U	100	R	ug/l	DL
CNC77	GELGW015M4DL	S242010*6*DL	WG	VOA	SW8260B	1,1,2,2-TETRACHLOROETHANE	100	U	100	R	ug/l	DL
CNC77	GELGW015M4DL	S242010*6*DL	WG	VOA	SW8260B	1,1,2-TRICHLOROETHANE	100	U	100	R	ug/l	DL
CNC77	GELGW015M4DL	S242010*6*DL	WG	VOA	SW8260B	1,1-DICHLOROETHANE	100	U	100	R	ug/l	DL
CNC77	GELGW015M4DL	S242010*6*DL	WG	VOA	SW8260B	1,1-DICHLOROETHENE	100	U	100	R	ug/l	DL
CNC77	GELGW015M4DL	S242010*6*DL	WG	VOA	SW8260B	1,2,3-Trichlorobenzene	100	U	100	R	ug/l	DL

SDG	Sample ID	Lab Sample ID	Matrix	Parameter Class	Analytical Method	Parameter	Lab Result	Lab Qual	Final Result	Final Qual	Units	Reasons
CNC77	GELGW015M4DL	S242010*6*DL	WG	VOA	SW8260B	1,2,4-TRICHLOROBENZENE	100	U	100	R	ug/l	DL
CNC77	GELGW015M4DL	S242010*6*DL	WG	VOA	SW8260B	1,2-DICHLOROETHANE	100	U	100	R	ug/l	DL
CNC77	GELGW015M4DL	S242010*6*DL	WG	VOA	SW8260B	1,2-Dichloroethene (total)	100	U	100	R	ug/l	DL
CNC77	GELGW015M4DL	S242010*6*DL	WG	VOA	SW8260B	1,2-DICHLOROPROPANE	100	U	100	R	ug/l	DL
CNC77	GELGW015M4DL	S242010*6*DL	WG	VOA	SW8260B	1,3-DICHLOROBENZENE	34	DJ	34	R	ug/l	DL
CNC77	GELGW015M4DL	S242010*6*DL	WG	VOA	SW8260B	1,4-DICHLOROBENZENE	83	DJ	83	R	ug/l	DL
CNC77	GELGW015M4DL	S242010*6*DL	WG	VOA	SW8260B	2-BUTANONE (MEK)	200	U	200	R	ug/l	DL
CNC77	GELGW015M4DL	S242010*6*DL	WG	VOA	SW8260B	2-Chloroethyl vinyl ether	200	U	200	R	ug/l	DL
CNC77	GELGW015M4DL	S242010*6*DL	WG	VOA	SW8260B	2-HEXANONE	200	U	200	R	ug/l	DL
CNC77	GELGW015M4DL	S242010*6*DL	WG	VOA	SW8260B	4-METHYL-2-PENTANONE (MIBK)	200	U	200	R	ug/l	DL
CNC77	GELGW015M4DL	S242010*6*DL	WG	VOA	SW8260B	ACETONE	200	U	200	R	ug/l	DL
CNC77	GELGW015M4DL	S242010*6*DL	WG	VOA	SW8260B	BENZENE	8	DJ	8	R	ug/l	DL
CNC77	GELGW015M4DL	S242010*6*DL	WG	VOA	SW8260B	BROMODICHLOROMETHANE	100	U	100	R	ug/l	DL
CNC77	GELGW015M4DL	S242010*6*DL	WG	VOA	SW8260B	BROMOFORM	100	U	100	R	ug/l	DL
CNC77	GELGW015M4DL	S242010*6*DL	WG	VOA	SW8260B	BROMOMETHANE	200	U	200	R	ug/l	DL
CNC77	GELGW015M4DL	S242010*6*DL	WG	VOA	SW8260B	CARBON DISULFIDE	100	U	100	R	ug/l	DL
CNC77	GELGW015M4DL	S242010*6*DL	WG	VOA	SW8260B	CARBON TETRACHLORIDE	100	U	100	R	ug/l	DL
CNC77	GELGW015M4DL	S242010*6*DL	WG	VOA	SW8260B	CHLOROETHANE	200	U	200	R	ug/l	DL
CNC77	GELGW015M4DL	S242010*6*DL	WG	VOA	SW8260B	CHLOROFORM	100	U	100	R	ug/l	DL
CNC77	GELGW015M4DL	S242010*6*DL	WG	VOA	SW8260B	CHLOROMETHANE	200	U	200	R	ug/l	DL
CNC77	GELGW015M4DL	S242010*6*DL	WG	VOA	SW8260B	cis-1,2-DICHLOROETHYLENE	100	U	100	R	ug/l	DL
CNC77	GELGW015M4DL	S242010*6*DL	WG	VOA	SW8260B	cis-1,3-DICHLOROPROPENE	100	U	100	R	ug/l	DL
CNC77	GELGW015M4DL	S242010*6*DL	WG	VOA	SW8260B	DIBROMOCHLOROMETHANE	100	U	100	R	ug/l	DL
CNC77	GELGW015M4DL	S242010*6*DL	WG	VOA	SW8260B	ETHYLBENZENE	100	U	100	R	ug/l	DL
CNC77	GELGW015M4DL	S242010*6*DL	WG	VOA	SW8260B	m+p Xylene	100	U	100	R	ug/l	DL
CNC77	GELGW015M4DL	S242010*6*DL	WG	VOA	SW8260B	METHYLENE CHLORIDE	100	U	100	R	ug/l	DL
CNC77	GELGW015M4DL	S242010*6*DL	WG	VOA	SW8260B	o-Xylene	100	U	100	R	ug/l	DL
CNC77	GELGW015M4DL	S242010*6*DL	WG	VOA	SW8260B	STYRENE	100	U	100	R	ug/l	DL
CNC77	GELGW015M4DL	S242010*6*DL	WG	VOA	SW8260B	TETRACHLOROETHYLENE(PCE)	100	U	100	R	ug/l	DL
CNC77	GELGW015M4DL	S242010*6*DL	WG	VOA	SW8260B	TOLUENE	100	U	100	R	ug/l	DL
CNC77	GELGW015M4DL	S242010*6*DL	WG	VOA	SW8260B	trans-1,2-DICHLOROETHENE	100	U	100	R	ug/l	DL
CNC77	GELGW015M4DL	S242010*6*DL	WG	VOA	SW8260B	trans-1,3-DICHLOROPROPENE	100	U	100	R	ug/l	DL
CNC77	GELGW015M4DL	S242010*6*DL	WG	VOA	SW8260B	TRICHLOROETHYLENE (TCE)	100	U	100	R	ug/l	DL

Attachment 1 - Changed Qualifiers and Results
Zone H, SWMU 196 - Data Validation

SDG	Sample ID	Lab Sample ID	Matrix	Parameter Class	Analytical Method	Parameter	Lab Result	Lab Qual	Final Result	Final Qual	Units	Reasons
CNC77	GELGW015M4DL	S242010*6*DL	WG	VOA	SW8260B	Vinyl acetate	200	U	200	R	ug/l	DL
CNC77	GELGW015M4DL	S242010*6*DL	WG	VOA	SW8260B	VINYL CHLORIDE	200	U	200	R	ug/l	DL
CNC77	GELGW015M4DL	S242010*6*DL	WG	VOA	SW8260B	XYLENES, TOTAL	100	U	100	R	ug/l	DL

Laboratory:	GEL		
Project Name:	Charleston Navy Complex	Site Name:	Zone H, SWMU 196
Project Number:	158814.PM.04	TAT:	1-QTAT-14
Project Manager:	Tom Beisel/ATL	Level:	Level 3
Address:	GNV: 3011 SW Williston Rd., Gainesville, FL 32605		
	ATL: 115 Perimeter Center Place NE, Suite 700, Atlanta, GA 30346-1278		
Send Report To:	see last page of COC	EDD:	CNC format

Lab Batch/SDG:

	Sample ID	Sample Description	Depth Begin	Depth End	Date & Time Collected	Matrix	# of containers	VOCs (SW8260B) 3 - 40mL vial, HCl							510039	Comments
02	009GW020L1	H009GW020			10-26-01 1130	WG	3	X								
3	009GW021L1	H009GW021			10-26-01 1020	WG	3	X								
4	009GW022L1	H009GW022			10/26 1305	WG	3	X								
5	GELGW015L1	HGELGW015			10-26-01 1100	WG	3	X								
6	196GW004L1	H196GW004			10-26-01 1415	WG	3	X								
7	196GW005L1	H196GW005			10/26 1345	WG	3	X								
001	196GW006L1	H196GW006			10-26-01 0835	WG	3	X								
	196GW006L1MS	H196GW006			10-26-01 0837	WG	3	X								MS
	196GW006L1SD	H196GW006			10-26-01 0840	WG	3	X								MSD
8	196GW007L1	H196GW007			10-26 0935	WG	3	X								
9	196GW008L1	H196GW008			10-26-01 1000	WG	3	X								
10	196GW009L1	H196GW009			10-26-01 1240	WG	3	X								
11	196HW009L1	H196GW009			10/26/01 1243	WG	3	X								
12	196GW010L1	H196GW010			10-26-01 0910	WG	3	X								
13	196EW004L1	H196EW004			10-26-01 0845	WQ[2]	3	X								EB
14	196TW004L1	H196TW004			10-26-01	WQ[1]	3	X								TB

Sampled By: BRIAN CRAWFORD Date/Time: 10/26/01 1600

Relinquished by: Date/Time

Additional Samplers:

Received By Lab: [signature] Date/Time: 10/26/01 1500

Relinquished by: Date/Time

Received By: Date/Time

Shipped Via: UPS FedEx Hand Other Tracking#:

Remarks: FAX results to Tom Beisel 770-604-9183 & Herb Kelly 352-271-4881

Temperature:

VOC (SW8260b)

Reports

Receipt Exceptions:

CH2M HILL Chain of Custody/ Laboratory Analysis Form

COC Tracking #: **ZF607-111901-01** page 1 of 2

Laboratory: GEL

Project Name: Charleston Navy Complex

Site Name: Zone H, SWMU 196

Project Number: 158814.PM.04

TAT: 1-QTAT-7

Project Manager: Tom Beisel/ATL

evel: Level 3

Address: GNV: 3011 SW Williston Rd., Gainesville, FL 32605

ATL: 115 Perimeter Center Place NE, Suite 700, Atlanta, GA 30346-1278

Send Report To: see last page of COC

EDD: CNC format

Lab Batch/SDG: 52363

523639

	Sample ID	Sample Description	Depth Begin	Depth End	Date & Time Collected	Matrix	# of containers	VOCs (SW8260B) (3 - 40mL vial, HCl)	Comments
2	009GW020L2	H009GW020			11-20-01/1410	WG	3	X	
3	009GW021L2	H009GW021			11-20-01/1400	WG	3	X	
4	GELGW015L2	HGELGW015			11-20-01/1320	WG	3	X	
5	196GW004L2	H196GW004			11-20-01/1215	WG	3	X	
6	196GW005L2	H196GW005			11-20-01/1150	WG	3	X	
001	196GW006L2	H196GW006			11-20/1245	WG	3	X	
	196GW006L2MS	H196GW006			11-20/1250	WG	3	X (2)	
	196GW006L2SD	H196GW006			11-20/1255	WG	3	X	MS
7	196GW007L2	H196GW007			11-20-01/1335	WG	3	X	MSD
8	196GW008L2	H196GW008			11-20-01/1345	WG	3	X	Turn around
9	196HW008L2	H196GW008			11-20-01/1350	WG	3	X	NOV 30
10	196GW010L2	H196GW010			11-20-01/1310	WG	3	X	
11	196EW004L2	H196EW004			11-20-01/1255	WQ	3	X	EB
12	196TW004L2	H196TW004			Lab	WQ		X	TB

RCRA
End of Job

Sampled By: Brian Crawford Date/Time: 11-20-01

Relinquished by: Date/Time

Additional Samplers: Chris Bundy

Received By Lab: Pauletta J Wendell Date/Time: 11/20/01 1630

Relinquished by: Date/Time

Rec'd Exceptions:

CH2M HILL Chain of Custody/ Laboratory Analysis Form

Laboratory: GEL

Project Name: Charleston Navy Complex

Site Name: Zone H, SWMU 196

Project Number: 158814.PM.04

TAT: 1-QTAT-3

Project Manager: Tom Beisel/ATL

Level: Level 3

Address: GNV: 3011 SW Williston Rd., Gainesville, FL 32605
ATL: 115 Perimeter Center Place NE, Suite 700, Atlanta, GA 30346-1278

Send Report To: see last page of COC

EDD: CNC format

Lab Batch/SDG: 51880, 518860 (51881)

Sample ID	Sample Description	Depth Begin	Depth End	Date & Time Collected	Matrix	# of containers	VOCs (SW8260B) 3 - 5g Encores & 1 jar	VOCs (SW8260B) 3 - 40mL vials, HCl							Comments
196SB01801	H196SB018	0	1	11-12-01 - 1200	SO	4	X								
196SB01901	H196SB019	0	1	11-12-01 - 1306	SO	4	X								
196EB018L1	H196EB018			11-12-01 - 1250	SQ	3		X							% moisture
196TB018L1	H196TB018			11-12-01	SQ			X							and VOC's
															chlorobenzene
															3 day Verbal
															RCRA 5 40
															finished Sampling

Sampled By: B. Crawford Date/Time: 11/12/01

Relinquished by: [signature] Date/Time: 11-12-01/1555

Additional Samplers: Sean Smith

Received By Lab: [signature] Date/Time: 11/12/01 1700

Relinquished by: Date/Time

Received By: Date/Time

Shipped Via: UPS FedEx Hand Other Tracking#:

Remarks: FAX results to Tom Beisel 770-604-9183 & Herb Kelly 352-271-4881

Temperature:

VOC (SW8260B)

Reports

Receipt Exceptions:

CH2M HILL Chain of Custody/ Laboratory Analysis Form

COC Tracking #: **ZF607-120401-01** page 1 of 2

Laboratory:	GEL
Project Name:	Charleston Navy Complex
Site Name:	Zone H, SWMU 196
Project Number:	158814.PM.04
TAT:	7 day results
Project Manager:	Tom Beisel/ATL
Level:	Level 3
Address:	GNV: 3011 SW Williston Rd., Gainesville, FL 32605
	ATL: 115 Perimeter Center Place NE, Suite 700, Atlanta, GA 30346-1278
Send Report To:	see last page of COC
EDD:	CNC format

Lab Batch/SDG: 53063

Sample ID	Sample Description	Depth Begin	Depth End	Date & Time Collected	Matrix	# of containers	VOCs (SW8260B) 3 - 40mL vial, HCl								Comments
196GW009L3	H196GW009			12-06-2001 / 1405	WG	3	X								
009GW022L3	H009GW022			12-06-2001 / 1015	WG	3	X								
196GW006L3	H196GW006			12-06-2001 / 1135	WG	3	X								
GELGW015L3	HGELGW015			12-06-2001 / 1050	WG	3	X								
196EW009L3	H196EW009			12-06-2001 / 1150	WQ	3	X								EB
196TW009L3	H196TW009			12/06/2001 / 0900	WQ	3	X								TB

Sampled By: Darryl Gates Date/Time: 12-06-2001 / As noted

Relinquished by: [signature] Date/Time 12-6-01 / 1625

Additional Samplers:

Received By Lab: [signature] Date/Time 12-6-01 1625

Relinquished by: Date/Time

Received By: Date/Time

Shipped Via: UPS FedEx Hand Other Tracking#:

Remarks: FAX results to Tom Beisel 770-604-9183 & Herb Kelly 352-271-4881

Temperature:

VOC (SW 8260B)

Reports

Receipt Exceptions:

CH2M HILL Chain of Custody/ Laboratory Analysis Form

Laboratory: GEL

Project Name: Charleston Navy Complex

Site Name: Zone H, SWMU 196

Project Number: 158814.PM.04

TAT: ASAP

Project Manager: Tom Beisel/ATL

Level: Level 3

Address: GNV: 3011 SW Williston Rd., Gainesville, FL 32605

ATL: 115 Perimeter Center Place NE, Suite 700, Atlanta, GA 30346-1278

Send Report To: see last page of COC

EDD: CNC format

Lab Batch/SDG:

537779

	Sample ID	Sample Description	Depth Begin	Depth End	Date & Time Collected	Matrix	# of containers	VOCs (SW8260B) 3 - 40mL vial, HCl								Comments
002	196GW006L4 ✓	H196GW006			12-18-01/1455	WG	3	X								
001	009GW020L4 ✓	H009GW020			12-18-01/1425	WG	3	X								MS/MSD
3	009GW021L4 ✓	H009GW021	12-19-01		~~12-18-01~~/1205	WG	3	X								
4	009GW022L4 ✓	H009GW022			12-19-01/1340	WG	3	X								
5	GELGW015L4 ✓	HGELGW015			12-18-01/1545	WG	3	X								
6	196GW004L4 ✓	H196GW004			12-18-01/1346	WG	3	X								
7	196HW004L4 ✓	H196GW004			12-18-01/1345	WG	3	X								
8	196GW005L4 ✓	H196GW005			12-18-01/1255	WG	3	X								
9	196GW007L4 ✓	H196GW007			12-19-01/1410	WG	3	X								
10	196GW008L4 ✓	H196GW008			12-18-01/1540	WG	3	X								
11	196GW009L4 ✓	H196GW009			12-19-01/1345	WG	3	X								
12	196GW010L4 ✓	H196GW010			12-18-01/1516	WG	3	X								
13	196EW004L4 ✓	H196EW004			12-18-01/1457	WQ	3	X								EQ
14	196TW004L4 ✓	H196TW004		12/18	Lab Supplied	WQ	3	X								TB
	009GW020MSL4	H009GW020			12-18-01/1427	WG	3	X								MS
	009GW020SDL4	H009GW020			12-18-01/1430	WG	3	X								MSD
15	196EW007L4 ✓	~~H00~~ H196EW007			12-19-01/1350	WQ	3	X								EQ

Sampled By: Chris Blundy Date/Time: 12-18-01/12-19-01 Relinquished by: [signature] Date/Time: 12-19-01/1540

Additional Samplers: Andrew O'Conor

Received By Lab: [signature] Date/Time: 12/19/01 1540 Relinquished by: Date/Time

Receipt Exceptions:

CH2M HILL Chain of Custody/ Laboratory Analysis Form

COC Tracking #: **ZH196-121701-01** page 1 of 2

Laboratory:	GEL		
Project Name:	Charleston Navy Complex	**Site Name:**	Zone H, SWMU 196
Project Number:	158814.PM.04	**TAT:**	1-QTAT-7
Project Manager:	Tom Beisel/ATL	**Level:**	Level 3
Address:	GNV: 3011 SW Williston Rd., Gainesville, FL 32605		
	ATL: 115 Perimeter Center Place NE, Suite 700, Atlanta, GA 30346-1278		
Send Report To:	see last page of COC	**EDD:**	CNC format

Lab Batch/SDG:

558857

	Sample ID	Sample Description	Depth Begin	Depth End	Date & Time Collected	Matrix	# of containers	VOCs (SW8260B) 3 - 40mL vial, HCl								Comments
01	196GW006M1	H196GW006			2-8-02/ 1015	WG	3	X								
002	009GW020M1	H009GW020			2-8-02/ 0935	WG	3	X								RCRA
003	009GW021M1	H009GW021			2-8-02/ 1000	WG	3	X								Site
004	009GW022M1	H009GW022			2-8-02/ 1120	WG	3	X								
005	009HW022M1	H009GW022			2-8-02/ 1125	WG	3	X								
006	GELGW015M1	HGELGW015			2-8-02/ 1014	WG	3	X								
007	196GW004M1	H196GW004			2-8-02/ 1025	WG	3	X								
008	196GW005M1	H196GW005			2-8-02/ 0935	WG	3	X								
009	196GW007M1	H196GW007			2-8-02/ 1027	WG	3	X								
010	196GW008M1	H196GW008			2-8-02/ 0926	WG	3	X								
011	196GW009M1	H196GW009			2-8-02/ 1052	WG	3	X								
012	196GW010M1	H196GW010			2-8-02/ 1038	WG	3	X								
	196GW011M1	H196GW011				WG		X								Sampling
	196GW012M1	H196GW012				WG		X								Incomplete
	196GW013M1	H196GW013				WG		X								GW11-GW15
	196GW014M1	H196GW014				WG		X								to be done
	196GW015M1	H196GW015				WG		X								next week
	196GW015M1MS	H196GW015				WG		X								MS
	196GW015M1SD	H196GW015				WG		X								MSD
013	196EW004M1	H196EW004			2-8-02/ 1005	WQ	3	X								EB
014	196TW004M1	H196TW004			Lab Supplied	WQ	3	X								TB

Sampled By: Chris Blundy Date/Time: 2-8-02

Relinquished by: [signature] Date/Time: 2-8-02 / 1340

Additional Samplers: Andrew O'Connor, Brian Crawford

Received By Lab: [signature] Date/Time: 2-8-02 1340

Relinquished by: Date/Time

Received By: Date/Time

Shipped Via: UPS FedEx Hand Other Tracking#:

Remarks: results to Tom Beisel 770-604-9183 & Herb Kelly 352-271-4881

Temperature:

Receipt Exceptions:

CH2M HILL Chain of Custody/ Laboratory Analysis Form 55953

COC Tracking #: **ZH196-020602-01**

Laboratory:	GEL		
Project Name:	Charleston Navy Complex	Site Name:	Zone H, SWMU 196
Project Number:	158814.PM.04	TAT:	1-QTAT-7
Project Manager:	Tom Beisel/ATL	Level:	Level 3
Address:	GNV: 3011 SW Williston Rd., Gainesville, FL 32605		
	ATL: 115 Perimeter Center Place NE, Suite 700, Atlanta, GA 30346-1278		
Send Report To:	see last page of COC	EDD:	CNC format

Lab Batch/SDG:

	Sample ID	Sample Description	Depth Begin	Depth End	Date & Time Collected	Matrix	# of containers	VOCs (SW8260B) 3 - 40mL vial, HCl								Comments
	~~196GW006M1~~	~~H196GW006~~				WG		X								ALREADY
	~~009GW020M1~~	~~H009GW020~~				WG		X								SAMPLED
	~~009GW021M1~~	~~H009GW021~~				WG		X								ON FRIDAY
	~~009GW022M1~~	~~H009GW022~~				WG		X								2-8-02
	~~009HW022M1~~	~~H009GW022~~				WG		X								
	~~GELGW015M1~~	~~HGELGW015~~				WG		X								
	~~196GW004M1~~	~~H196GW004~~				WG		X								
	~~196GW005M1~~	~~H196GW005~~				WG		X								
	~~196GW007M1~~	~~H196GW007~~				WG		X								
	~~196GW008M1~~	~~H196GW008~~				WG		X								
	~~196GW009M1~~	~~H196GW009~~				WG		X								
	~~196GW010M1~~	~~H196GW010~~				WG		X								
006	196GW011M1	H196GW011			2-11-02/1020	WG	3	X								Sampled on
002	196GW012M1	H196GW012			2-11-02/0930	WG	3	X								2-11-02 because
003	196GW013M1	H196GW013			2-11-02/0920	WG	3	X								had to wait to
004	196GW014M1	H196GW014			2-11-02/1055	WG	3	X								be developed
001	196GW015M1	H196GW015			2-11-02/1045	WG	3	X								(BRC)
	196GW015M1MS	H196GW015			2-11-02/1048	WG	3	X								MS
	196GW015M1SD	H196GW015			2-11-02/1052	WG	3	X								MSD
005	196EW011M1	H196EW011			2-11-02/1105	WQ	3	X								~~EB~~
	~~196TW004M1~~	~~H196TW004~~				~~WQ~~		~~X~~								~~TB~~

NEW LABELS

Sampled By: Chris Blundy Date/Time: 2-11-02 Relinquished by: [signature] Date/Time: 2-11-02/1645

Additional Samplers: Andrew O'Connor

Received By Lab: [signature] Date/Time: 11 Feb 02 1635 Relinquished by: Date/Time:

Receipt Exceptions:

CH2M HILL Chain of Custody/ Laboratory Analysis Form

Laboratory: GEL

Project Name: Charleston Navy Complex

Site Name: Zone H, SWMU 196

Project Number: 158814.PM.04

TAT: 1-QTAT-7

Project Manager: Tom Beisel/ATL

Level: Level 3

Address: GNV: 3011 SW Williston Rd., Gainesville, FL 32605

ATL: 115 Perimeter Center Place NE, Suite 700, Atlanta, GA 30346-1278

Send Report To: see last page of COC

EDD: CNC format

Lab Batch/SDG: 57356

Sample ID	Sample Description	Depth Begin	Depth End	Date & Time Collected	Matrix	# of containers	VOCs (SW8260B) 3 - 40mL vial, HCl								Comments
196GW016M3	H196GW016			3-11-02 / 1545	WG	3	X								
196GW017M3	H196GW017			3/11/02 / 1510	WG	3	X								
196EW016M3	H196EW016			3-11-02 / 1555	WQ	3	X								EB
196TW016M3	H196TW016			3/11/02 LAB SUMMARY	WQ	3	X								TB
															RCRA
															Samples complete

Sampled By: Andrew O'Conor

Date/Time: 3-11-02 1615

Relinquished by: [signature]

Date/Time: 3-12-02 1600

Additional Samplers:

Received By Lab: [signature]

Date/Time: 12 Mar 02 1615

Relinquished by:

Date/Time

Received By:

Date/Time

Shipped Via: UPS FedEx Hand Other Tracking#:

Remarks:

Temperature:

Receipt Exceptions:

CH2M HILL Chain of Custody/ Laboratory Analysis Form

COC Tracking #: **ZH196-031902-01** page 1 of 3

Laboratory:	GEL		
Project Name:	Charleston Navy Complex	Site Name:	Zone H, SWMU 196
Project Number:	158814.PM.04	TAT:	1-QTAT-7
Project Manager:	Tom Beisel/ATL	evel:	Level 3
Address:	GNV: 3011 SW Williston Rd., Gainesville, FL 32605		
	ATL: 115 Perimeter Center Place NE, Suite 700, Atlanta, GA 30346-1278		
Send Report To:	see last page of COC	EDD:	CNC format

Lab Batch/SDG:

Sample ID	Sample Description	Depth Begin	Depth End	Date & Time Collected	Matrix	# of containers	VOCs (SW8260B) 3 - 40mL vial, HCl								Comments
196GW006M4	H196GW006			3/20/02 1455	WG	3	X								
009GW020M4	H009GW020			3/20/02 1400	WG	3	X								Samples
009GW021M4	H009GW021			3/21/02 1030	WG	3	X								complete
009GW022M4	H009GW022			3/21/02 0910	WG	3	X								
009HW022M4	H009GW022			3/21/02 0910	WG	3	X								
GELGW015M4	HGELGW015			03/20/02 1545	WG	3	X								
196GW004M4	H196GW004			03/21/02 0845	WG	3	X								
196GW005M4	H196GW005			3/21/02 0920	WG	3	X								
196HGW005M4	H196GW005			3/21/02 0925	WG	3	X								
196GW007M4	H196GW007			3/21/02 1030	WG	3	X								
196GW008M4	H196GW008			3/21/02 1010	WG	3	X								
196GW009M4	H196GW009			3/21/02 0815	WG	3	X								
196GW010M4	H196GW010			3/20/02 1520	WG	3	X								
196GW011M4	H196GW011			3/21/02 0950	WG	3	X								
196GW012M4	H196GW012			3/21/02 0850	WG	3	X								RCRA
196GW013M4	H196GW013			3/21/02 1100	WG	3	X								
196GW014M4	H196GW014			3/21/02 0815	WG	3	X								
196GW015M4	H196GW015			3/21/02 1005	WG	3	X								
196GW016M4	H196GW016			3/21/02 0750	WG	3	X								
196GW017M4	H196GW017			3/21/02 0925	WG	3	X								
196EW004M4	H196EW004			3/21/02 1030	WQ	3	X								EB

RUSH

Sampled By Andrew O'Connor Date/Time 3-20-02/3-21-02 Relinquished by: [signature] Date/Time 3-21-02/1400

Additional Samplers: B. Crawford & C. Diaz

Received By Lab: [signature] Date/Time 3/22/02 9AM Relinquished by: Date/Time

Receipt Exceptions:

S242010

CH2M HILL Chain of Custody/ Laboratory Analysis Form

COC Tracking #: **ZH196-031902-01** page 2 of 3

Received By: Date/Time

Remarks:

Shipped Via: UPS FedEx Hand Other Tracking#:

Temperature:

Laboratory:	GEL		
Project Name:	Charleston Navy Complex	Site Name:	Zone H, SWMU 196
Project Number:	158814.PM.04	TAT:	1-QTAT-7
Project Manager:	Tom Beisel/ATL	evel:	Level 3
Address:	GNV: 3011 SW Williston Rd., Gainesville, FL 32605		
	ATL: 115 Perimeter Center Place NE, Suite 700, Atlanta, GA 30346-1278		
Send Report To:	see last page of COC	EDD:	CNC format

Lab Batch/SDG:

Sample ID	Sample Description	Depth Begin	Depth End	Date & Time Collected	Matrix	# of containers	VOCs (SW8260B) 3 - 40mL vial, HCl								Comments
196TW004M4	H196TW004	—	—	—	WQ	3	X								TB

RUSH

Sampled By ω Date/Time

Relinquished by: Date/Time

Receipt Exceptions:

Rec: [illegible] (STL STV) 7/22/02 [illegible]

5242010

CH2M HILL Chain of Custody/ Laboratory Analysis Form

COC Tracking #: **ZH196-041502-01** page 1 of 3

Laboratory: GEL

Project Name: Charleston Navy Complex

Site Name: Zone H, SWMU 196

Project Number: 158814.PM.04

TAT: 14 day

Project Manager: Tom Beisel/ATL

Level: Level 3

Address: GNV: 3011 SW Williston Rd., Gainesville, FL 32605
ATL: 115 Perimeter Center Place NE, Suite 700, Atlanta, GA 30346-1278

Send Report To: see last page of COC

EDD: CNC format

Lab Batch/SDG:

59367 %

	Sample ID	Sample Description	Depth Begin	Depth End	Date & Time Collected	Matrix	# of containers	VOCs (SW8260B)	3 - 40mL vial, HCl							Comments
01	009GW020M5	H009GW020			4-23-02 / 0940	WG	3	X							-	samples
02	009GW021M5	H009GW021			4-23-02 / 1200	WG	3	X								complete.
001	009GW022M5 59366%	H009GW022			4-24-02 / 1125	WG	3	X								
002	009HW022M5	H009GW022			4-24-02 / 1130	WG	3	X							-	RCRA
003	196GW004M5	H196GW004			4-24-02 / 1100	WG	3	X								
004	196GW005M5	H196GW005			4-24-02 / 1005	WG	3	X								
005	196GW006M5	H196GW006			4-23-02 / 1020	WG	3	X								
006	196GW007M5	H196GW007			4-23-02 / 1100	WG	3	X								
007	196GW008M5	H196GW008			4-23-02 / 1210	WG	3	X								
008	196GW009M5	H196GW009			4-24-02 / 1230	WG	3	X								
009	196GW010M5	H196GW010			4-23-02 / 1005	WG	3	X								
010	196GW011M5	H196GW011			4-23-02 / 1315	WG	3	X								
011	196GW012M5	H196GW012			4-24-02 / 0940	WG	3	X								
012	196GW013M5	H196GW013			4-24-02 / 1040	WG	3	X								
013	196GW014M5	H196GW014			4-24-02 / 1215	WG	3	X								
014	196GW015M5	H196GW015			4-23-02 / 1230	WG	3	X								
015	196GW016M5	H196GW016			4-24-02 / 0910	WG	3	X								
016	196GW017M5	H196GW017			4-24-02 / 1135	WG	3	X								
017	196HGW005M5	H196GW005			4-24-02 / 1010	WG	3	X								
018	GELGW015M5	HGELGW015			4-23-02 / 1115	WG	3	X								
019	196EW004M5	H196EW004			4-24-02 / 1245	WQ	3	X								EB

5/16/02 GWB
PER TAMMY CAREY,
CHANGE SAMPLE FROM
196HGW005M5
TO
196HW005M5

Sampled By: Andrew O'Conor & Aaron Stokes Date/Time: 4-23 & 4-24-02

Relinquished by: [signature] Date/Time: 4-24-02 / 1400

Additional Samplers:

Received By Lab: [signature] Date/Time: 4/24/02 1400

Relinquished by: Date/Time

Received By: Date/Time

Shipped Via: UPS FedEx Hand Other Tracking#:

Remarks:

Temperature:

Receipt Exceptions:

CH2M HILL Chain of Custody/ Laboratory Analysis Form

COC Tracking #: **ZH196-041502-01** page 2 of 3

Laboratory: GEL

Project Name: Charleston Navy Complex

Site Name: Zone H, SWMU 196

Project Number: 158814.PM.04

TAT: 14 day

Project Manager: Tom Beisel/ATL

Level: Level 3

Address: GNV: 3011 SW Williston Rd., Gainesville, FL 32605
ATL: 115 Perimeter Center Place NE, Suite 700, Atlanta, GA 30346-1278

Send Report To: see last page of COC

EDD: CNC format

Lab Batch/SDG:

Sample ID	Sample Description	Depth Begin	Depth End	Date & Time Collected	Matrix	# of containers	VOCs (SW8260B) 3 - 40mL vial, HCl								Comments
196TW004M5	H196TW004			LAB supplied	WQ	3	X								TB

Sampled By A.O ; A.S

Date/Time 4-23/4-24-02

Relinquished by: [signature]

Date/Time 4-24-02/1400

Additional Samplers:

Received By Lab: [signature]

Date/Time 4/24/02 1400

Relinquished by:

Date/Time

Received By:

Date/Time

Shipped Via: UPS FedEx Hand Other Tracking#:

Remarks:

Temperature:

Receipt Exceptions:

Appendix D

Appendix D
Benzo(a)pyrene Equivalent Calculations for Rathall Creek Sediment Samples

Sample ID[a]	Reported Concentration (µg/kg)	Qualifier	Actual or Estimated Concentration[b] (µg/kg)	TEF[c]	Parameter	BEQ[d] (µg/kg)
RAT-01	920	UJ	460	0.1	Benzo(A)anthracene	46
	92	J	92	1	Benzo(a)pyrene	92
	150	J	150	0.1	benzo(b)fluoranthene	15
	120	J	120	0.01	benzo(k)fluoranthene	1.2
	120	=	120	0.001	Chrysene	0.12
	920	UJ	460	0.1	Indeno(1,2,3-cd)pyrene	46
	920	UJ	460	1	Dibenz(a,h)anthracene	460
					Total For Sample	**660.32**
RAT-02	910	UJ	455	0.1	Benzo(A)anthracene	45.5
	910	UJ	455	1	Benzo(a)pyrene	455
	910	UJ	455	0.1	benzo(b)fluoranthene	45.5
	910	UJ	455	0.01	benzo(k)fluoranthene	4.55
	910	UJ	455	0.001	Chrysene	0.455
	910	UJ	455	0.1	Indeno(1,2,3-cd)pyrene	45.5
	910	UJ	455	1	Dibenz(a,h)anthracene	455
					Total For Sample	**1051.505**
RAT-03	920	U	460	0.1	Benzo(A)anthracene	46
	920	U	460	1	Benzo(a)pyrene	460
	920	U	460	0.1	benzo(b)fluoranthene	46
	920	U	460	0.01	benzo(k)fluoranthene	4.6
	920	U	460	0.001	Chrysene	0.46
	920	U	460	0.1	Indeno(1,2,3-cd)pyrene	46
	920	U	460	1	Dibenz(a,h)anthracene	460
					Total For Sample	**1063.06**
RAT-04	800	U	400	0.1	Benzo(A)anthracene	40
	800	U	400	1	Benzo(a)pyrene	400
	800	U	400	0.1	benzo(b)fluoranthene	40
	800	U	400	0.01	benzo(k)fluoranthene	4
	800	U	400	0.001	Chrysene	0.4
	800	U	400	0.1	Indeno(1,2,3-cd)pyrene	40
	800	U	400	1	Dibenz(a,h)anthracene	400
					Total For Sample	**924.4**

[a] Data obtained from EPA Background Study for Superfund facility adjacent to Shipyard Creek. Analytical values presented in *Darft Zone J RFI Report, Part 1* (Ensafe 2000a). RAT-01 and RAT-03 were reportedly collected in subtidal portions of Rathall creek. RAT-02 and RAT-04 were reportedly collected in the intertidal/marsh areas.

[b] Actual or estimated concentration represents parameter detections and one-half the sample detection limits for non-detects.

[c] TEFs were obtained from the draft *Zone H RFI Addendum Report, Revision 0* (Ensafe 2000b).

[d] BEQ is the product of the actual or estimated concentration and the TEF.

= indicates that the compound was detected, the reported value is equal to the sample concentration

J indicates that the compound was detected, the reported concentration is estimated.

TEF Toxicity Equivalent Factor

Appendix E

Soil Boring Logs

CH2MHILL

PROJECT NUMBER	DPT NUMBER	
158814.ZH	H196GW011	page 1 of 1

DPT SOIL SAMPLE LOG

PROJECT : Charleston Naval Complex (SWMU 196) **LOCATION :** Charleston, SC **NORTHING:** 370027.6

ELEVATION : not measured **DRILLING CONTRACTOR :** Prosonic License # 1435 **EASTING:** 2321425.3

DRILLING METHOD AND EQUIPMENT USED : Direct-Push Sampling, 10 - ft screen

START : 2/4/2002 **END:** 2/4/2002 **LOGGER :** T. Wiley/ATL

DEPTH BELOW SURFACE (FT)	SAMPLE INTERVAL	SOIL DESCRIPTION SOIL NAME, USCS GROUP SYMBOL, COLOR, MOISTURE CONTENT, RELATIVE DENSITY, OR CONSISTENCY, SOIL STRUCTURE, MINERALOGY.	COMMENTS TESTS, INSTRUMENTATION ABANDONMENT METHOD
5			
	5-9'	5-6'-**SILTY SAND**: Brown organic soil, grades into 1' tan-orange silty sand 6-9'-**SILTY SAND**: bluish gray, stringers of clayey sand but no color change, wet	PID = 0 ppm
10	9-13'	9-11' - Same as 6-9' Then 6" shell hash, more bluish gray, silty sand to browner clayey silt	PID = 0 ppm
15	13-17'	Poor recovery, too wet to hold sample	Boring ended at 17'; Set well at 12'
20			
25			
30			

CH2MHILL

PROJECT NUMBER	DPT NUMBER	
158814.ZH	H196GW012	page 1 of 1

DPT SOIL SAMPLE LOG

PROJECT : Charleston Naval Complex (SWMU 196) **LOCATION :** Charleston, SC **NORTHING:** 370169.9

ELEVATION : not measured **DRILLING CONTRACTOR :** Prosonic License # 1435 **EASTING:** 2321475.9

DRILLING METHOD AND EQUIPMENT USED : Direct-Push Sampling, 10 - ft screen

START : 2/5/2002 **END:** 2/5/2002 **LOGGER :** T. Wiley/ATL

DEPTH BELOW SURFACE (FT)	SAMPLE INTERVAL	SOIL DESCRIPTION SOIL NAME, USCS GROUP SYMBOL, COLOR, MOISTURE CONTENT, RELATIVE DENSITY, OR CONSISTENCY, SOIL STRUCTURE, MINERALOGY.	COMMENTS TESTS, INSTRUMENTATION ABANDONMENT METHOD
5			
	5-9'	5-6' - **SILT and SAND:** dark brown silt and tan sand, 6-7' - **CLAYEY SAND:** grayer 7-9' - **SILTY SAND:** tan, wet, medium grained	PID = 0 ppm
10	9-13'	Gray **SILTY SAND** 6" to gray **SANDY CLAY** mixed with tan wet sand, 3" of saturated wet tan sand in middle of core	PID = 0 ppm
15	13-17'	**SAND:** saturated, tan from 13-15', saturated tan sand with some clay (more orange color) from 15-16', drier tan and gray clayey sand with shell fragments the last 4" (16-17')	PID = 0 ppm Boring ended at 17'; Set well at 16'
20			
25			
30			

CH2MHILL

PROJECT NUMBER	DPT NUMBER	
158814.ZH	H196GW013	page 1 of 1

DPT SOIL SAMPLE LOG

PROJECT : Charleston Naval Complex (SWMU 196) **LOCATION :** Charleston, SC **NORTHING:** 370163.7

ELEVATION : not measured **DRILLING CONTRACTOR :** Prosonic License # 1435 **EASTING:** 2321446.9

DRILLING METHOD AND EQUIPMENT USED : Direct-Push Sampling, 10 - ft screen

START : 2/5/2002 **END:** 2/5/2002 **LOGGER :** T. Wiley/ATL

DEPTH BELOW SURFACE (FT)	SAMPLE INTERVAL	SOIL DESCRIPTION SOIL NAME, USCS GROUP SYMBOL, COLOR, MOISTURE CONTENT, RELATIVE DENSITY, OR CONSISTENCY, SOIL STRUCTURE, MINERALOGY.	COMMENTS TESTS, INSTRUMENTATION ABANDONMENT METHOD
5			
	5-9'	5-6' - **CLAYEY SILT:** orange brown 6-8' - **CLAYEY SAND:** greenish gray 8-9' - **SILTY SAND:** darker gray	PID = 0 ppm
10	9-13'	9-10' - **CLAYEY SILT:** gray and orange/brown 10-12' - **SILTY SAND:** dark blackish, saturated 12-13' - **SILTY SAND:** orange and gray mottled	PID = 0 ppm
15	13-17'	13-15' - **SILTY SAND:** dark gray grades into orange silty sand with some clay content (saturated), shell fragments at tip (trace)	PID = 0 ppm Boring ended at 17'; Set well at 16'
20			
25			
30			

CH2MHILL

PROJECT NUMBER	DPT NUMBER	
158814.ZH	H196GW014	page 1 of 1

DPT SOIL SAMPLE LOG

PROJECT : Charleston Naval Complex (SWMU 196) **LOCATION :** Charleston, SC **NORTHING:** 370065.9

ELEVATION : not measured **DRILLING CONTRACTOR :** Prosonic License # 1435 **EASTING:** 2321395.6

DRILLING METHOD AND EQUIPMENT USED : Direct-Push Sampling, 10 - ft screen

START : 2/5/2002 **END:** 2/5/2002 **LOGGER :** T. Wiley/ATL

DEPTH BELOW SURFACE (FT)	SAMPLE INTERVAL	SOIL DESCRIPTION SOIL NAME, USCS GROUP SYMBOL, COLOR, MOISTURE CONTENT, RELATIVE DENSITY, OR CONSISTENCY, SOIL STRUCTURE, MINERALOGY.	COMMENTS TESTS, INSTRUMENTATION ABANDONMENT METHOD
			PID above borehole = 3.8 ppm
5			
	5-9'	5-6' - no recovery 6-8' - **SANDY CLAY**: gray, grades into black sandy silt (7-8') 8-9' - **SANDY SILT:** tan and gray	PID = 0.4 ppm Strong odor
10			
	9-13'	9-12' - **SILTY SAND**: brown and gray Shells at 12' grading back into brown silty sand with some clay content at last 6"	PID = 1.4 ppm Strong odor PID = 3.8 ppm over drum of soil cuttings Boring ended at 13', well set at 12'
15			
20			
25			
30			

CH2MHILL

PROJECT NUMBER	DPT NUMBER	
158814.ZH	H196GW015	page 1 of 1

DPT SOIL SAMPLE LOG

PROJECT : Charleston Naval Complex (SWMU 196) **LOCATION :** Charleston, SC **NORTHING:** 370055.1

ELEVATION : not measured **DRILLING CONTRACTOR :** Prosonic License # 1435 **EASTING:** 2321439.8

DRILLING METHOD AND EQUIPMENT USED : Direct-Push Sampling, 10 - ft screen

START : 2/6/2002 **END:** 2/6/2002 **LOGGER :** T. Wiley/ATL

DEPTH BELOW SURFACE (FT)	SAMPLE INTERVAL	SOIL DESCRIPTION SOIL NAME, USCS GROUP SYMBOL, COLOR, MOISTURE CONTENT, RELATIVE DENSITY, OR CONSISTENCY, SOIL STRUCTURE, MINERALOGY.	COMMENTS TESTS, INSTRUMENTATION ABANDONMENT METHOD
5		4-5' - No recovery	
	5-9'	5-6' - **SILTY SAND**: orangish brown 6-7' - **CLAYEY SAND**: gray 7-9' - **SILTY SAND**: light blue gray with some clay pockets	PID = 0 ppm
10	9-13'	9-11' - **SILTY SAND**: gray 11-12' - **SILTY SAND**: lighter gray, saturated, shell hash at 12' 12-13' - **SILTY SAND**: darker gray,	PID = 0.0 ppm
	13-15'	shell fragments above, last 4" is silty sandy clay, olive colored	PID = 0.0 ppm
15			Boring ended at 15'
20			
25			
30			

CH2MHILL

PROJECT NUMBER	WELL NUMBER	
158814.ZH	H196GW011	SHEET 1 OF 1

WELL COMPLETION DIAGRAM

PROJECT : SWMU 196, Zone H, Charleston Naval Complex — LOCATION : Charleston, South Carolina

DRILLING CONTRACTOR : Prosonic Corporation — License # 1435 — NORTHING 370027.6

DRILLING METHOD AND EQUIPMENT USED : Hollow Stem Augering (8-inch diameter) — EASTING: 2321425.3

WATER LEVELS : not measured — START : 2/4/2002 — END: 2/4/2002 — LOGGER : T. Wiley/ATL

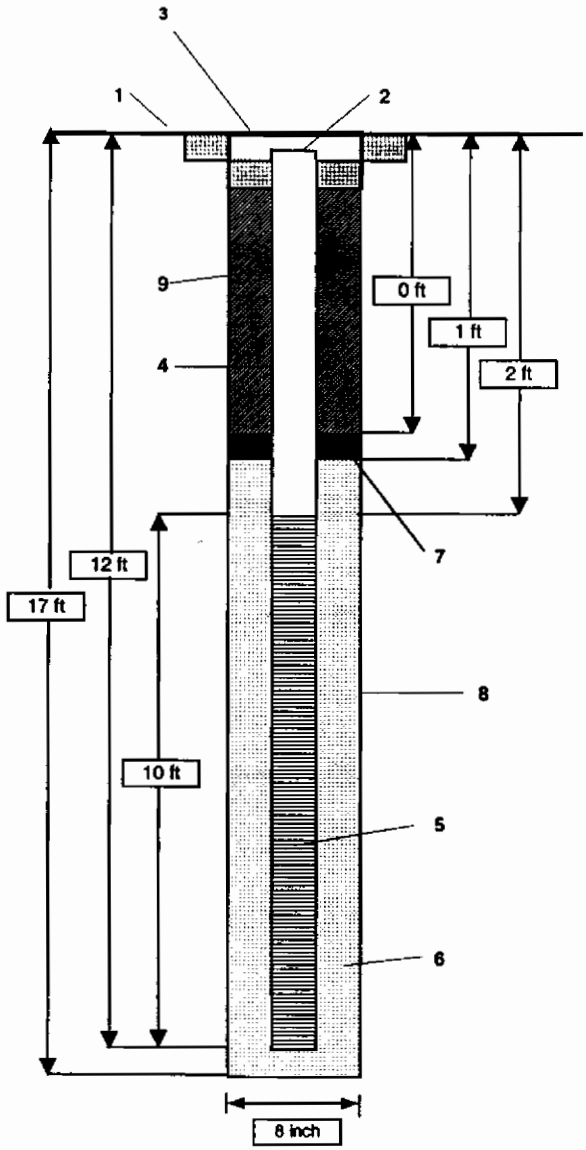

1- Ground elevation at well	not measured
2- Top of casing elevation	7.27
3- Protective cover type	concrete pad
a) concrete pad dimensions	2'x2'x4"
4- Dia./type of well casing	2-inch inside diameter schedule 40 PVC
5- Type/slot size of screen	0.010-inch dia. machine slotted PVC
6- Type filter pack	20/30 Sieve Size Silica Sand (5 bags)
7- Type of seal	3/8-inch bentonite holeplug
8- Borehole diameter	8"
9- Grout	Type I Portland Cement

Note: Diagram not to scale.

PROJECT NUMBER	WELL NUMBER	
158814.ZH	H196GW012	SHEET 1 OF 1

CH2MHILL

WELL COMPLETION DIAGRAM

PROJECT : SWMU 196, Zone H, Charleston Naval Complex — LOCATION : Charleston, South Carolina

DRILLING CONTRACTOR : Prosonic Corporation — License # 1435 — NORTHING 370169.9

DRILLING METHOD AND EQUIPMENT USED : Hollow Stem Augering (8-inch diameter) — EASTING: 2321475.9

WATER LEVELS : not measured — START : 2/5/2002 — END: 2/5/2002 — LOGGER : T. Wiley/ATL

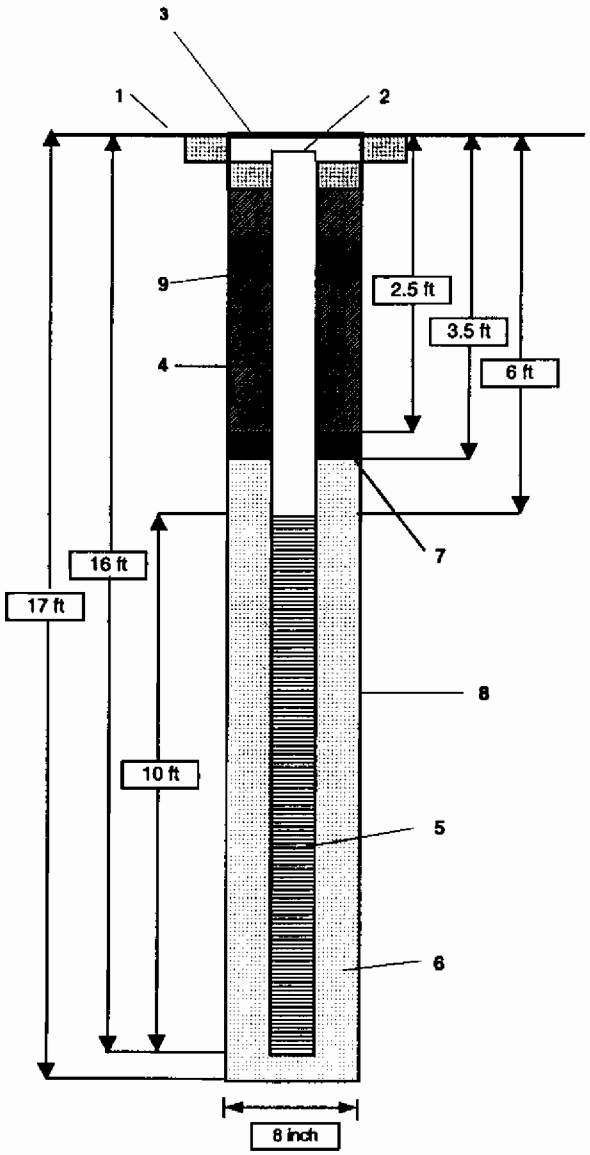

1- Ground elevation at well	not measured
2- Top of casing elevation	9.6
3- Protective cover type	concrete pad
a) concrete pad dimensions	2'x2'x4"
4- Dia./type of well casing	2-inch inside diameter schedule 40 PVC
5- Type/slot size of screen	0.010-inch dia. machine slotted PVC
6- Type filter pack	20/30 Sieve Size Silica Sand (6 bags)
7- Type of seal	3/8-inch bentonite holeplug
8- Borehole diameter	8"
9- Grout	Type I Portland Cement

Note: Diagram not to scale.

PROJECT NUMBER	WELL NUMBER	
158814.ZH	H196MARSHINJ01	SHEET 1 OF 1

CH2MHILL

INJECTOR COMPLETION DIAGRAM

PROJECT : SWMU 21, Zone E, Charleston Naval Complex — LOCATION : Charleston, South Carolina

DRILLING CONTRACTOR : Prosonic Corporation — License # 1435 — NORTHING 37036.69

DRILLING METHOD AND EQUIPMENT USED : Jetted — EASTING: 2321460.49

WATER LEVELS : not measured — START : 1/21/2002 — END: 1/21/2002 — LOGGER : T. Wiley/ATL

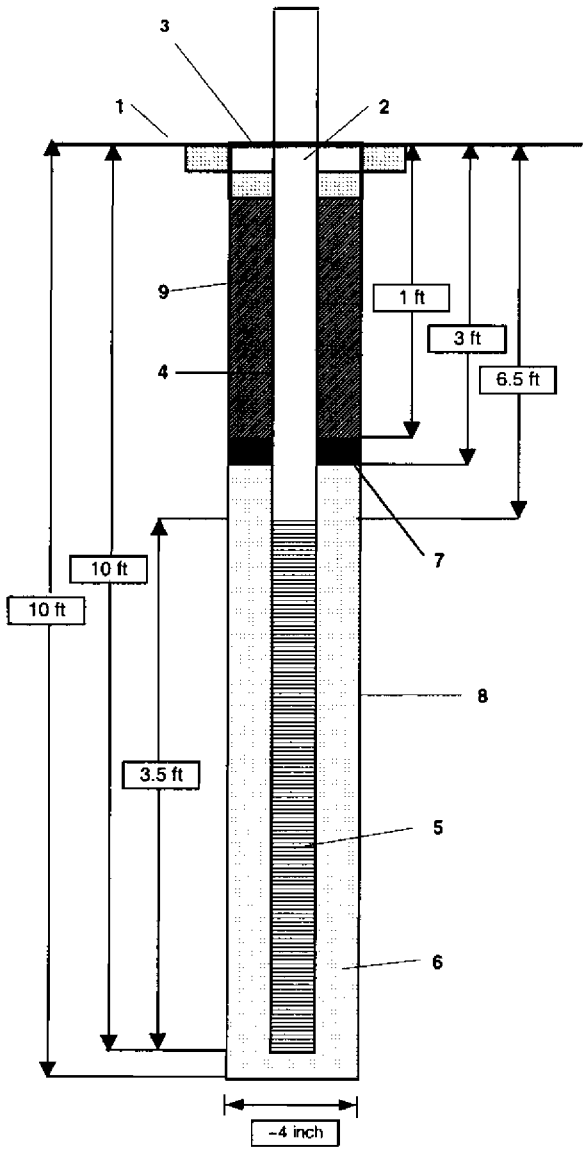

1- Ground elevation at well	not measured
2- Top of casing elevation	2.96
3- Protective cover type	Above Grade
a) concrete pad dimensions	2'x2'
4- Dia./type of well casing	2-inch inside diameter stainless steel
5- Type/slot size of screen	0.010-inch dia. stainless steel
6- Type filter pack	NA Jetted
7- Type of seal	3/8-inch bentonite chips, Baroid
8- Borehole diameter	Approx 4-Inch Jetted Hole
9- Grout	Type I Portland Cement

Note: Diagram not to scale.

PROJECT NUMBER	WELL NUMBER	
158814.ZH	H196MARSHINJ02	SHEET 1 OF 1

CH2MHILL

INJECTOR COMPLETION DIAGRAM

PROJECT : SWMU 21, Zone E, Charleston Naval Complex — LOCATION : Charleston, South Carolina

DRILLING CONTRACTOR : Prosonic Corporation — License # 1435 — NORTHING 370075.76

DRILLING METHOD AND EQUIPMENT USED : Jetted — EASTING: 2321483.45

WATER LEVELS : not measured — START : 1/21/2002 — END: 1/21/2002 — LOGGER : T. Wiley/ATL

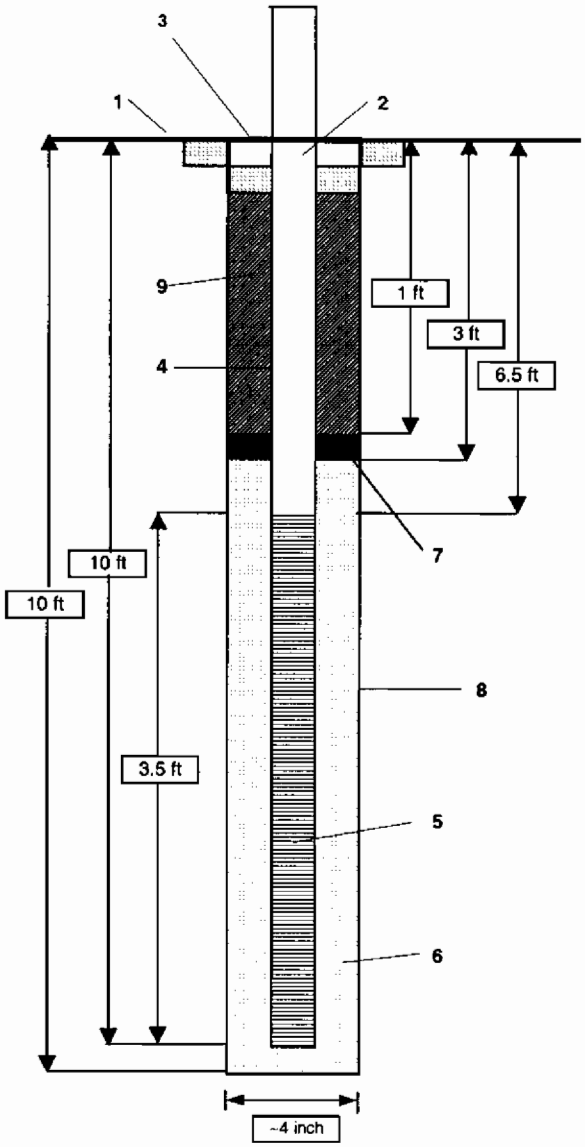

1- Ground elevation at well	not measured
2- Top of casing elevation	2.92
3- Protective cover type	Above Grade
a) concrete pad dimensions	2'x2'
4- Dia./type of well casing	2-inch inside diameter stainless steel
5- Type/slot size of screen	0.010-inch dia. stainless steel
6- Type filter pack	NA Jetted
7- Type of seal	3/8-inch bentonite chips, Baroid
8- Borehole diameter	Approx 4-Inch Jetted Hole
9- Grout	Type I Portland Cement

Note: Diagram not to scale.

PROJECT NUMBER	WELL NUMBER	
158814.ZH	H196MARSHINJ03	SHEET 1 OF 1

CH2MHILL

INJECTOR COMPLETION DIAGRAM

PROJECT : SWMU 21, Zone E, Charleston Naval Complex		LOCATION : Charleston, South Carolina
DRILLING CONTRACTOR : Prosonic Corporation	License # 1435	NORTHING 370119.43
DRILLING METHOD AND EQUIPMENT USED : Jetted		EASTING: 2321518.25
WATER LEVELS : not measured	START : 1/21/2002 END: 1/21/2002	LOGGER : T. Wiley/ATL

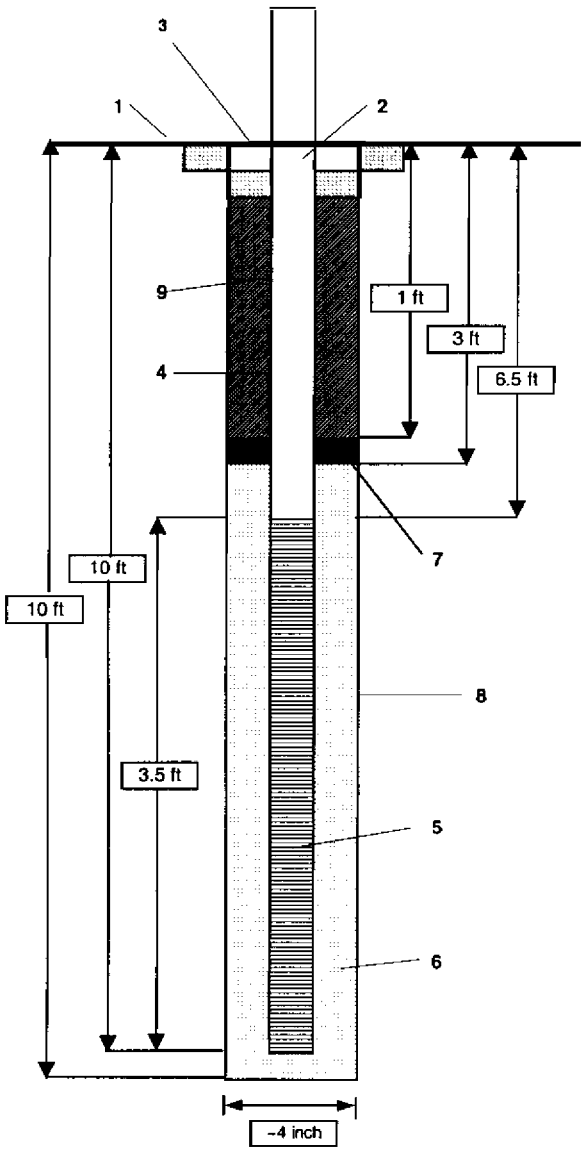

1- Ground elevation at well	not measured
2- Top of casing elevation	2.49
3- Protective cover type	Above Grade
a) concrete pad dimensions	2'x2'
4- Dia./type of well casing	2-inch inside diameter stainless steel
5- Type/slot size of screen	0.010-inch dia. stainless steel
6- Type filter pack	NA Jetted
7- Type of seal	3/8-inch bentonite chips, Baroid
8- Borehole diameter	Approx 4-Inch Jetted Hole
9- Grout	Type I Portland Cement

Note: Diagram not to scale.

PROJECT NUMBER	WELL NUMBER	
158814.ZH	H196MARSHINJ04	SHEET 1 OF 1

CH2MHILL

INJECTOR COMPLETION DIAGRAM

PROJECT : SWMU 21, Zone E, Charleston Naval Complex — LOCATION : Charleston, South Carolina

DRILLING CONTRACTOR : Prosonic Corporation License # 1435 — NORTHING 370151.47

DRILLING METHOD AND EQUIPMENT USED : Jetted — EASTING: 2321546.29

WATER LEVELS : not measured — START : 1/21/2002 — END: 1/21/2002 — LOGGER : T. Wiley/ATL

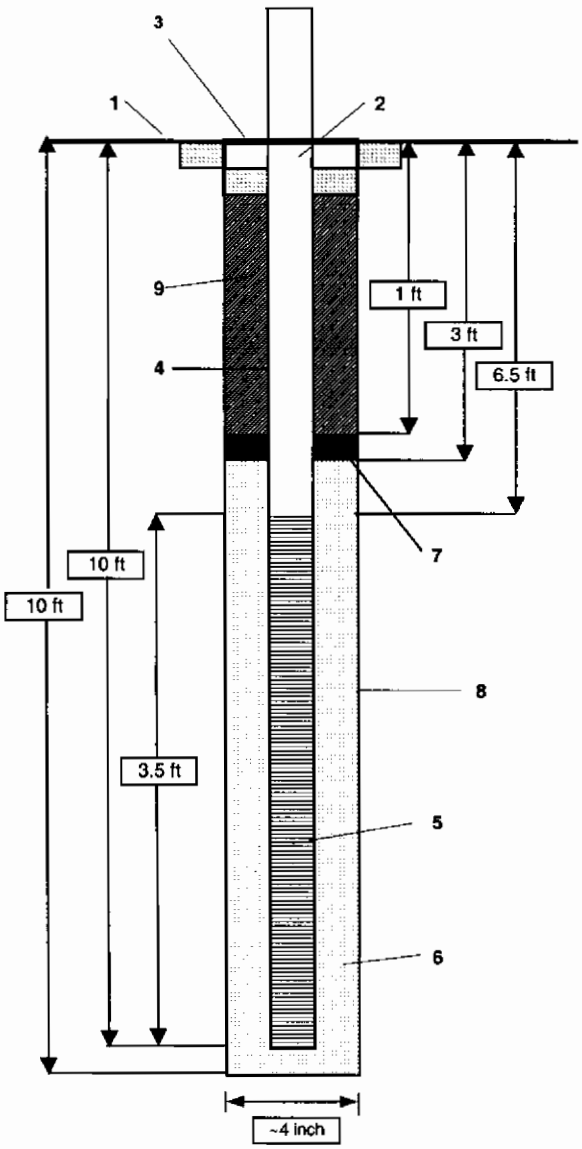

1- Ground elevation at well	not measured
2- Top of casing elevation	2.55
3- Protective cover type	Above Grade
a) concrete pad dimensions	2'x2'
4- Dia./type of well casing	2-inch inside diameter stainless steel
5- Type/slot size of screen	0.010-inch dia. stainless steel
6- Type filter pack	NA Jetted
7- Type of seal	3/8-inch bentonite chips, Baroid
8- Borehole diameter	Approx 4-Inch Jetted Hole
9- Grout	Type I Portland Cement

Note: Diagram not to scale.

PROJECT NUMBER	WELL NUMBER	
158814.ZH	H196INJ001	SHEET 1 OF 1

CH2MHILL

INJECTOR COMPLETION DIAGRAM

PROJECT : SWMU 21, Zone E, Charleston Naval Complex	LOCATION : Charleston, South Carolina
DRILLING CONTRACTOR : Prosonic Corporation License # 1435	NORTHING 370136.27
DRILLING METHOD AND EQUIPMENT USED : Geoprobe (8-inch diameter)	EASTING: 2321421.04
WATER LEVELS : not measured START : 1/21/2002 END: 1/21/2002	LOGGER : T. Wiley/ATL

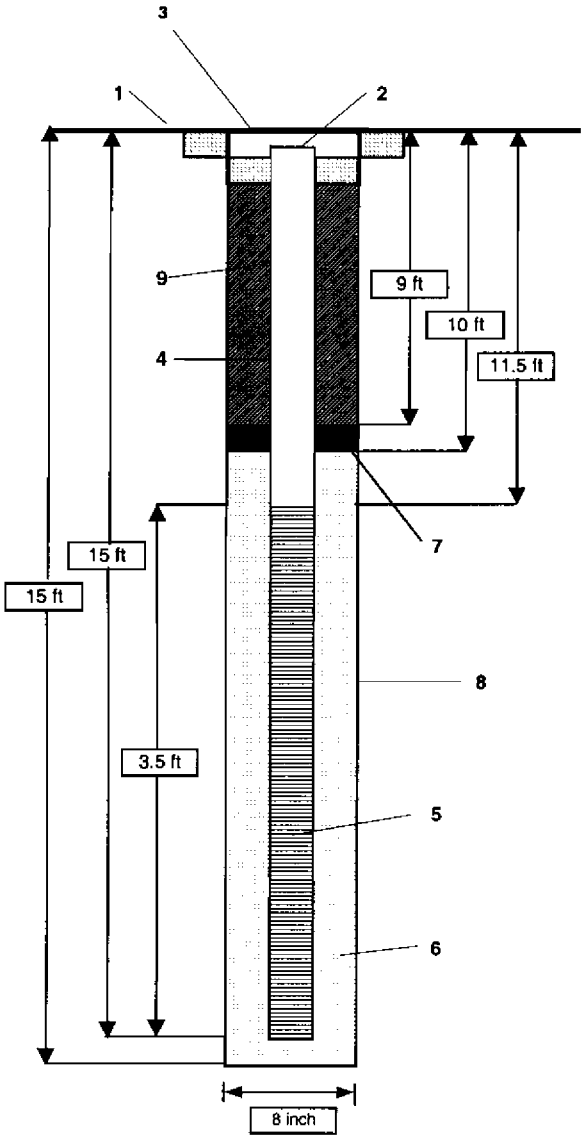

1- Ground elevation at well	not measured
2- Top of casing elevation	9.98
3- Protective cover type	Flushmount
a) concrete pad dimensions	2'x2'
4- Dia./type of well casing	2-inch inside diameter stainless steel
5- Type/slot size of screen	0.010-inch dia. stainless steel
6- Type filter pack	20/30 Sieve Size Silica Sand
7- Type of seal	3/8-inch bentonite chips, Baroid
8- Borehole diameter	8"
9- Grout	Type I Portland Cement

Note: Diagram not to scale.

PROJECT NUMBER	WELL NUMBER	
158814.ZH	H196INJ002	SHEET 1 OF 1

CH2MHILL

INJECTOR COMPLETION DIAGRAM

PROJECT : SWMU 21, Zone E, Charleston Naval Complex — LOCATION : Charleston, South Carolina

DRILLING CONTRACTOR : Prosonic Corporation License # 1435 — NORTHING 370138.39

DRILLING METHOD AND EQUIPMENT USED : Geoprobe (8-inch diameter) — EASTING: 2321441.49

WATER LEVELS : not measured — START : 1/21/2002 — END: 1/21/2002 — LOGGER : T. Wiley/ATL

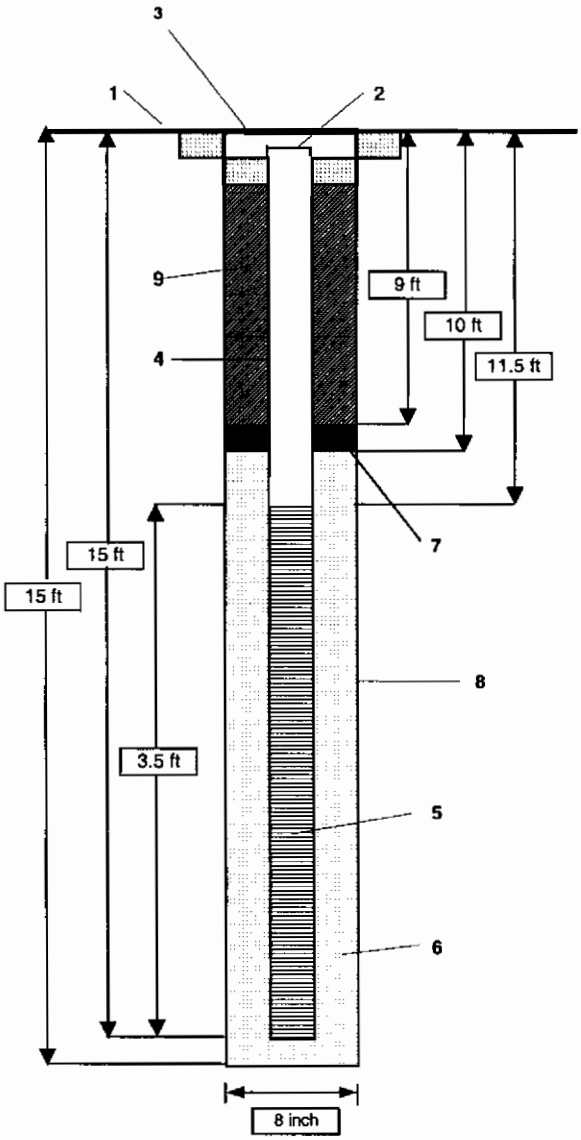

1- Ground elevation at well	not measured
2- Top of casing elevation	9.86
3- Protective cover type	Flushmount
a) concrete pad dimensions	2'x2'
4- Dia./type of well casing	2-inch inside diameter stainless steel
5- Type/slot size of screen	0.010-inch dia. stainless steel
6- Type filter pack	20/30 Sieve Size Silica Sand
7- Type of seal	3/8-inch bentonite chips, Baroid
8- Borehole diameter	8"
9- Grout	Type I Portland Cement

Note: Diagram not to scale.

PROJECT NUMBER	WELL NUMBER	
158814.ZH	H196INJ003	SHEET 1 OF 1

CH2MHILL

INJECTOR COMPLETION DIAGRAM

PROJECT : SWMU 21, Zone E, Charleston Naval Complex — LOCATION : Charleston, South Carolina

DRILLING CONTRACTOR : Prosonic Corporation License # 1435 — NORTHING 370142.65

DRILLING METHOD AND EQUIPMENT USED : Geoprobe (8-inch diameter) — EASTING: 2321452.07

WATER LEVELS : not measured START : 1/21/2002 END: 1/21/2002 LOGGER : T. Wiley/ATL

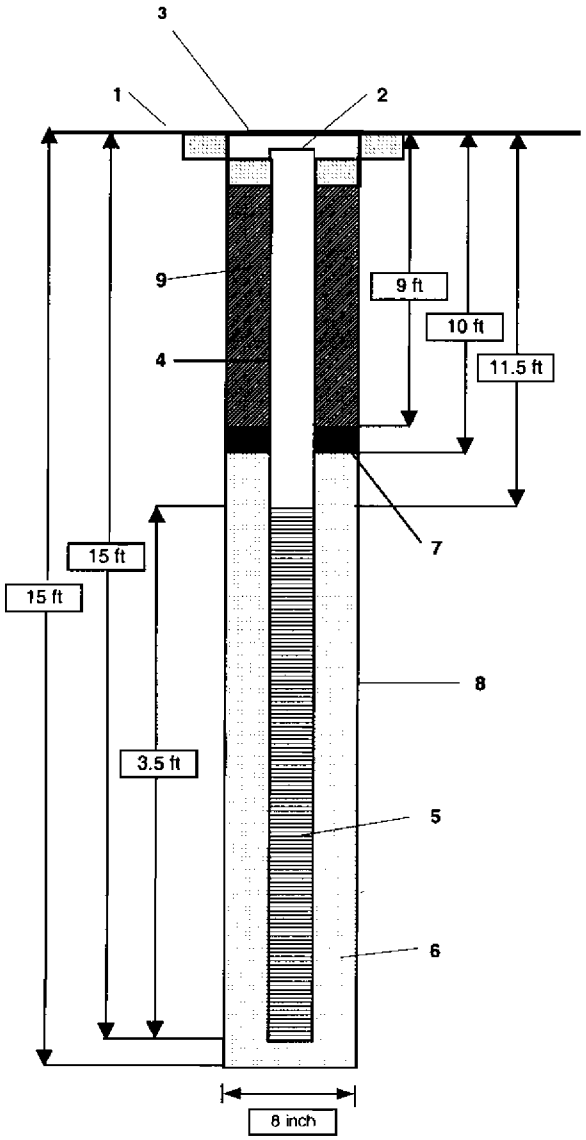

1- Ground elevation at well	not measured
2- Top of casing elevation	9.83
3- Protective cover type	Flushmount
a) concrete pad dimensions	2'x2'
4- Dia./type of well casing	2-inch inside diameter stainless steel
5- Type/slot size of screen	0.010-inch dia. stainless steel
6- Type filter pack	20/30 Sieve Size Silica Sand
7- Type of seal	3/8-inch bentonite chips, Baroid
8- Borehole diameter	8"
9- Grout	Type I Portland Cement

Note: Diagram not to scale.

PROJECT NUMBER	WELL NUMBER	
158814.ZH	H196INJ004	SHEET 1 OF 1

CH2MHILL

INJECTOR COMPLETION DIAGRAM

PROJECT : SWMU 21, Zone E, Charleston Naval Complex		LOCATION : Charleston, South Carolina
DRILLING CONTRACTOR : Prosonic Corporation	License # 1435	NORTHING 370130.63
DRILLING METHOD AND EQUIPMENT USED : Geoprobe (8-inch diameter)		EASTING: 2321468.01
WATER LEVELS : not measured	START : 1/21/2002 END: 1/21/2002	LOGGER : T. Wiley/ATL

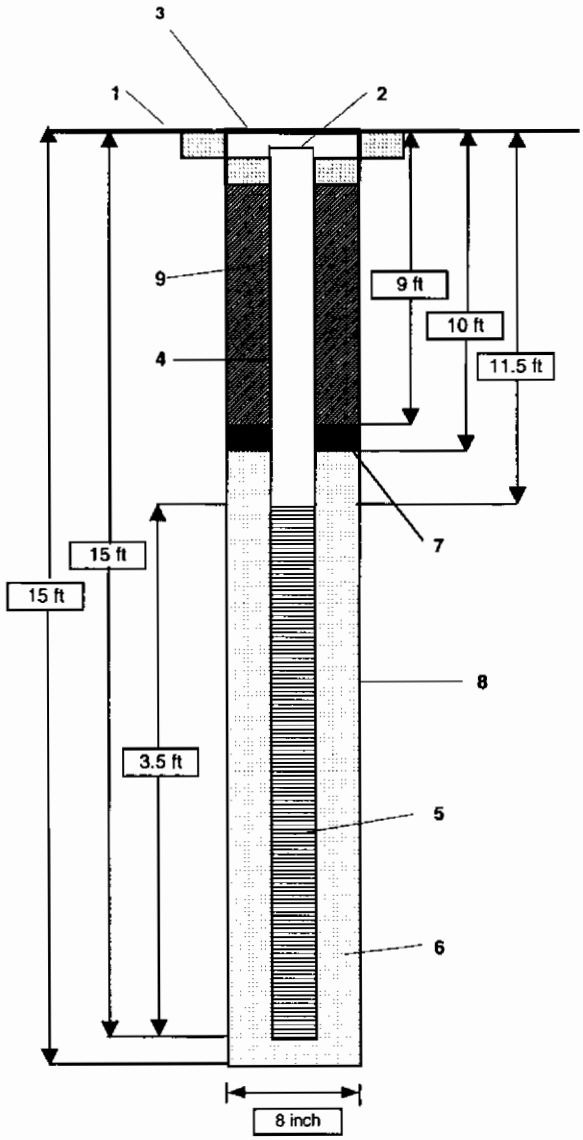

1- Ground elevation at well	not measured
2- Top of casing elevation	8.15
3- Protective cover type	Flushmount
a) concrete pad dimensions	2'x2'
4- Dia./type of well casing	2-inch inside diameter stainless steel
5- Type/slot size of screen	0.010-inch dia. stainless steel
6- Type filter pack	20/30 Sieve Size Silica Sand
7- Type of seal	3/8-inch bentonite chips, Baroid
8- Borehole diameter	8"
9- Grout	Type I Portland Cement

Note: Diagram not to scale.

PROJECT NUMBER	WELL NUMBER	
158814.ZH	H196INJ005	SHEET 1 OF 1

CH2MHILL

INJECTOR COMPLETION DIAGRAM

PROJECT : SWMU 21, Zone E, Charleston Naval Complex — LOCATION : Charleston, South Carolina
DRILLING CONTRACTOR : Prosonic Corporation — License # 1435 — NORTHING 370122.15
DRILLING METHOD AND EQUIPMENT USED : Geoprobe (8-inch diameter) — EASTING: 2321482.29
WATER LEVELS : not measured — START : 1/21/2002 — END: 1/21/2002 — LOGGER : T. Wiley/ATL

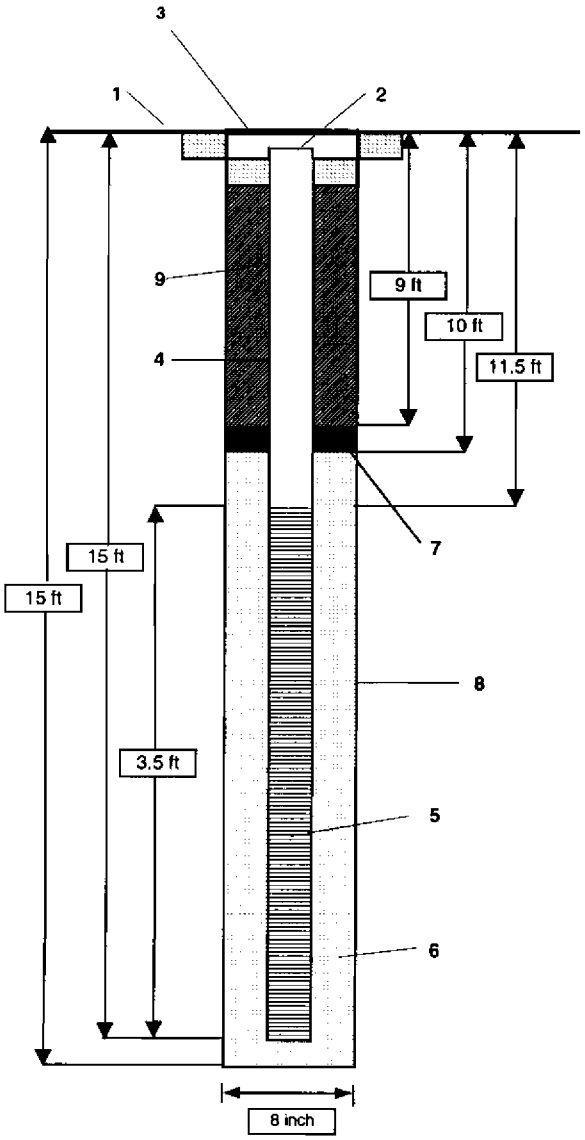

1- Ground elevation at well	not measured
2- Top of casing elevation	6.98
3- Protective cover type	Flushmount
a) concrete pad dimensions	2'x2'
4- Dia./type of well casing	2-inch inside diameter stainless steel
5- Type/slot size of screen	0.010-inch dia. stainless steel
6- Type filter pack	20/30 Sieve Size Silica Sand
7- Type of seal	3/8-inch bentonite chips, Baroid
8- Borehole diameter	8"
9- Grout	Type I Portland Cement

Note: Diagram not to scale.

PROJECT NUMBER	WELL NUMBER	
158814.ZH	H196INJ006	SHEET 1 OF 1

CH2MHILL

INJECTOR COMPLETION DIAGRAM

PROJECT : SWMU 21, Zone E, Charleston Naval Complex — LOCATION : Charleston, South Carolina
DRILLING CONTRACTOR : Prosonic Corporation — License # 1435 — NORTHING 370124.95
DRILLING METHOD AND EQUIPMENT USED : Geoprobe (8-inch diameter) — EASTING: 2321435.23
WATER LEVELS : not measured — START : 1/21/2002 — END: 1/21/2002 — LOGGER : T. Wiley/ATL

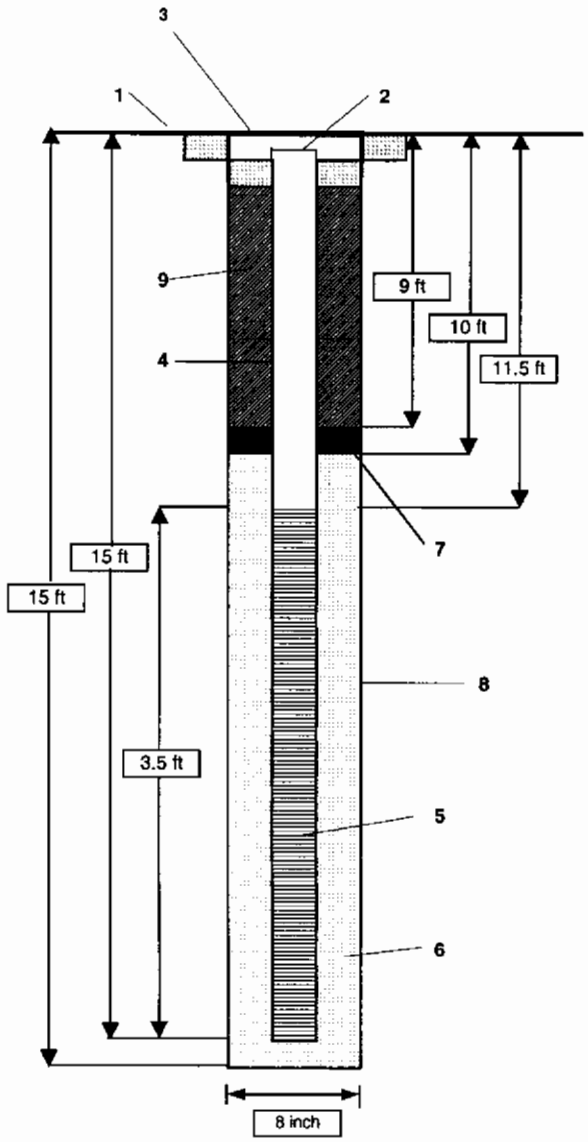

1- Ground elevation at well	not measured
2- Top of casing elevation	9.77
3- Protective cover type	Flushmount
a) concrete pad dimensions	2'x2'
4- Dia./type of well casing	2-inch inside diameter stainless steel
5- Type/slot size of screen	0.010-inch dia. stainless steel
6- Type filter pack	20/30 Sieve Size Silica Sand
7- Type of seal	3/8-inch bentonite chips, Baroid
8- Borehole diameter	8"
9- Grout	Type I Portland Cement

Note: Diagram not to scale.

PROJECT NUMBER	WELL NUMBER	
158814.ZH	H196INJ007	SHEET 1 OF 1

CH2MHILL

INJECTOR COMPLETION DIAGRAM

PROJECT : SWMU 21, Zone E, Charleston Naval Complex — LOCATION : Charleston, South Carolina

DRILLING CONTRACTOR : Prosonic Corporation — License # 1435 — NORTHING 370131.01

DRILLING METHOD AND EQUIPMENT USED : Geoprobe (8-inch diameter) — EASTING: 2321453.10

WATER LEVELS : not measured — START : 1/21/2002 — END: 1/21/2002 — LOGGER : T. Wiley/ATL

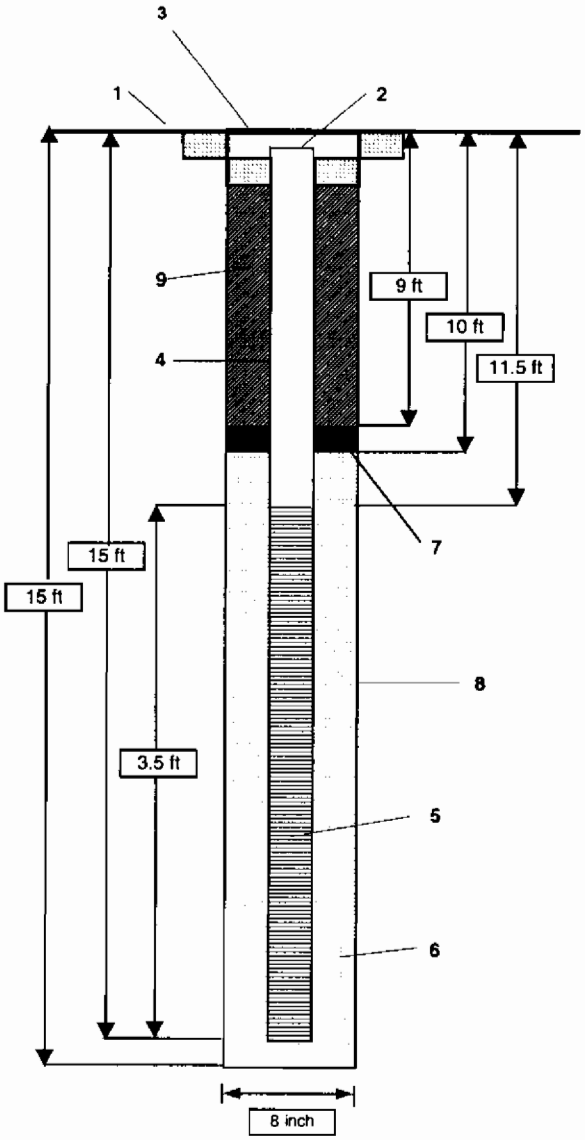

1- Ground elevation at well	not measured
2- Top of casing elevation	9.36
3- Protective cover type	Flushmount
a) concrete pad dimensions	2'x2'
4- Dia./type of well casing	2-inch inside diameter stainless steel
5- Type/slot size of screen	0.010-inch dia. stainless steel
6- Type filter pack	20/30 Sieve Size Silica Sand
7- Type of seal	3/8-inch bentonite chips, Baroid
8- Borehole diameter	8"
9- Grout	Type I Portland Cement

Note: Diagram not to scale.

PROJECT NUMBER	WELL NUMBER	
158814.ZH	H196INJ008	SHEET 1 OF 1

CH2MHILL

INJECTOR COMPLETION DIAGRAM

PROJECT : SWMU 21, Zone E, Charleston Naval Complex		LOCATION : Charleston, South Carolina
DRILLING CONTRACTOR : Prosonic Corporation	License # 1435	NORTHING 370119.6
DRILLING METHOD AND EQUIPMENT USED : Geoprobe (8-inch diameter)		EASTING: 2321463.7
WATER LEVELS : not measured	START : 1/21/2002 END: 1/21/2002	LOGGER : T. Wiley/ATL

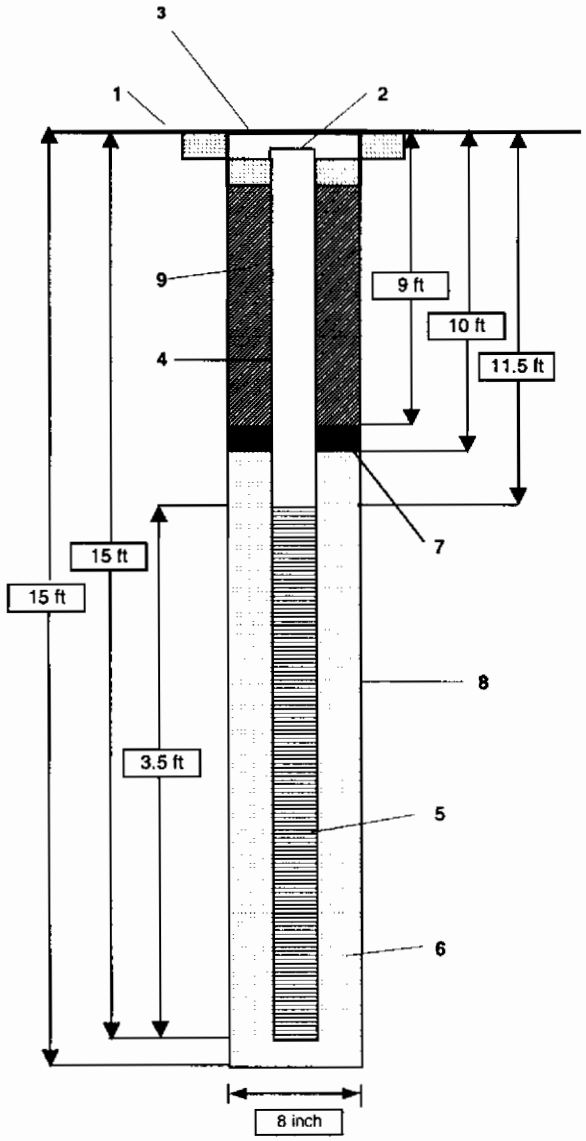

1- Ground elevation at well	not measured
2- Top of casing elevation	8.35
3- Protective cover type	Flushmount
a) concrete pad dimensions	2'x2'
4- Dia./type of well casing	2-inch inside diameter stainless steel
5- Type/slot size of screen	0.010-inch dia. stainless steel
6- Type filter pack	20/30 Sieve Size Silica Sand
7- Type of seal	3/8-inch bentonite chips, Baroid
8- Borehole diameter	8"
9- Grout	Type I Portland Cement

Note: Diagram not to scale.

PROJECT NUMBER	WELL NUMBER	
158814.ZH	H196INJ009	SHEET 1 OF 1

CH2MHILL

INJECTOR COMPLETION DIAGRAM

PROJECT : SWMU 21, Zone E, Charleston Naval Complex — LOCATION : Charleston, South Carolina

DRILLING CONTRACTOR : Prosonic Corporation — License # 1435 — NORTHING 370112.46

DRILLING METHOD AND EQUIPMENT USED : Geoprobe (8-inch diameter) — EASTING: 2321475.33

WATER LEVELS : not measured — START : 1/21/2002 — END: 1/21/2002 — LOGGER : T. Wiley/ATL

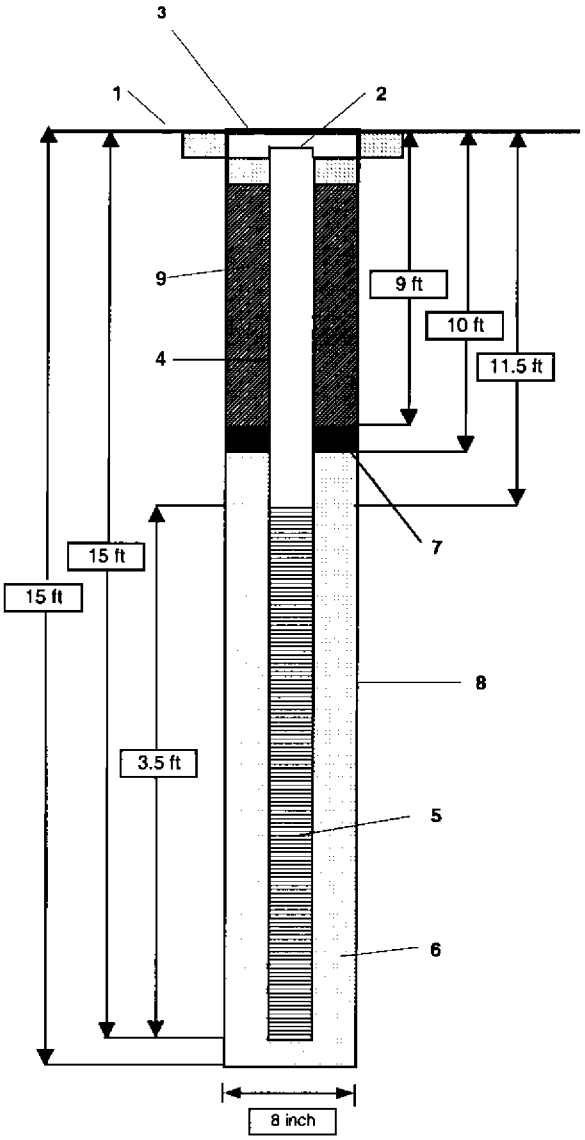

1- Ground elevation at well	not measured
2- Top of casing elevation	7.17
3- Protective cover type	Flushmount
a) concrete pad dimensions	2'x2'
4- Dia./type of well casing	2-inch inside diameter stainless steel
5- Type/slot size of screen	0.010-inch dia. stainless steel
6- Type filter pack	20/30 Sieve Size Silica Sand
7- Type of seal	3/8-inch bentonite chips, Baroid
8- Borehole diameter	8"
9- Grout	Type I Portland Cement

Note: Diagram not to scale.

CH2MHILL

PROJECT NUMBER	WELL NUMBER	
158814.ZH	H196INJ010	SHEET 1 OF 1

INJECTOR COMPLETION DIAGRAM

PROJECT : SWMU 21, Zone E, Charleston Naval Complex — LOCATION : Charleston, South Carolina

DRILLING CONTRACTOR : Prosonic Corporation — License # 1435 — NORTHING 370097.37

DRILLING METHOD AND EQUIPMENT USED : Geoprobe (8-inch diameter) — EASTING: 2321438.91

WATER LEVELS : not measured — START : 1/21/2002 — END: 1/21/2002 — LOGGER : T. Wiley/ATL

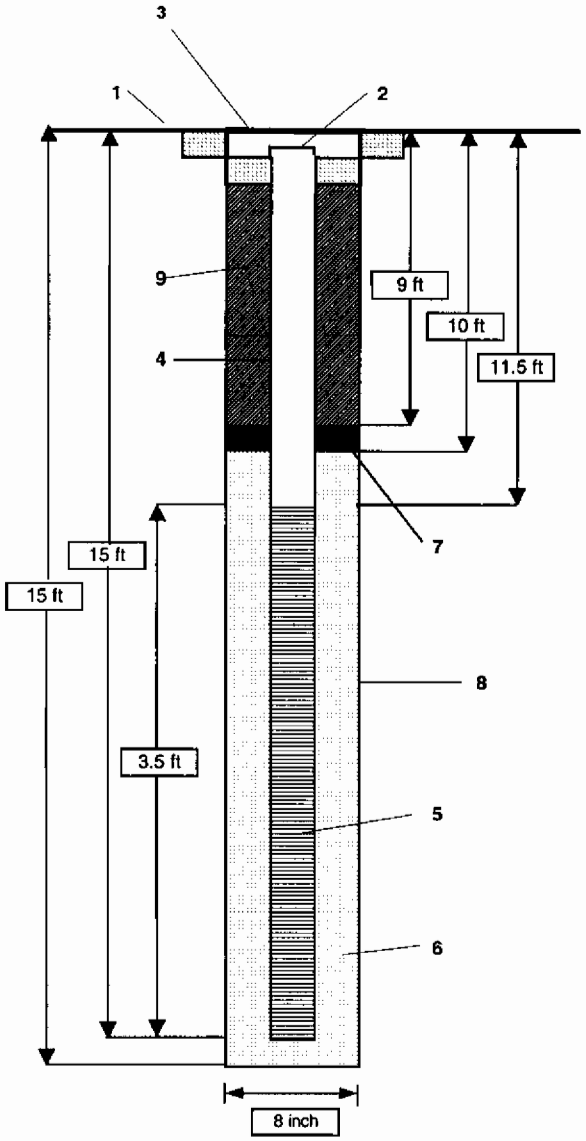

1- Ground elevation at well	not measured
2- Top of casing elevation	9.39
3- Protective cover type	Flushmount
a) concrete pad dimensions	2'x2'
4- Dia./type of well casing	2-inch inside diameter stainless steel
5- Type/slot size of screen	0.010-inch dia. stainless steel
6- Type filter pack	20/30 Sieve Size Silica Sand
7- Type of seal	3/8-inch bentonite chips, Baroid
8- Borehole diameter	8"
9- Grout	Type I Portland Cement

Note: Diagram not to scale.

PROJECT NUMBER	WELL NUMBER	
158814.ZH	H196INJ011	SHEET 1 OF 1

CH2MHILL

INJECTOR COMPLETION DIAGRAM

PROJECT : SWMU 21, Zone E, Charleston Naval Complex — LOCATION : Charleston, South Carolina

DRILLING CONTRACTOR : Prosonic Corporation — License # 1435 — NORTHING 370088.70

DRILLING METHOD AND EQUIPMENT USED : Geoprobe (8-inch diameter) — EASTING: 2321456.02

WATER LEVELS : not measured — START : 1/21/2002 — END: 1/21/2002 — LOGGER : T. Wiley/ATL

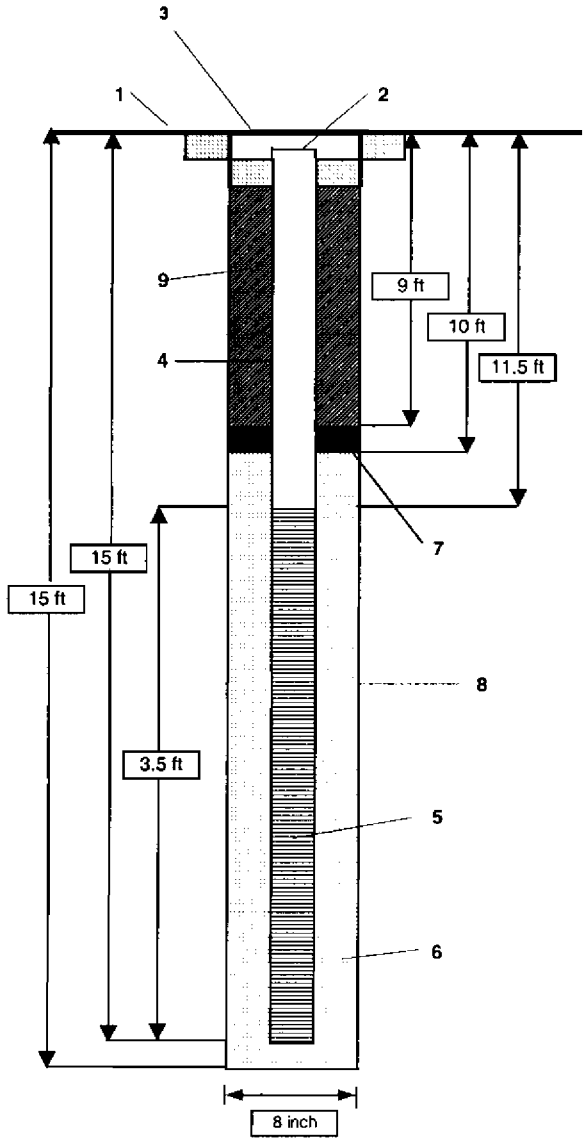

1- Ground elevation at well	not measured
2- Top of casing elevation	7.28
3- Protective cover type	Flushmount
a) concrete pad dimensions	2'x2'
4- Dia./type of well casing	2-inch inside diameter stainless steel
5- Type/slot size of screen	0.010-inch dia. stainless steel
6- Type filter pack	20/30 Sieve Size Silica Sand
7- Type of seal	3/8-inch bentonite chips, Baroid
8- Borehole diameter	8"
9- Grout	Type I Portland Cement

Note: Diagram not to scale.

PROJECT NUMBER	WELL NUMBER	
158814.ZH	H196INJ012	SHEET 1 OF 1

CH2MHILL

INJECTOR COMPLETION DIAGRAM

PROJECT : SWMU 21, Zone E, Charleston Naval Complex — LOCATION : Charleston, South Carolina

DRILLING CONTRACTOR : Prosonic Corporation — License # 1435 — NORTHING 370085.4

DRILLING METHOD AND EQUIPMENT USED : Geoprobe (8-inch diameter) — EASTING: 2321445.9

WATER LEVELS : not measured — START : 1/21/2002 — END: 1/21/2002 — LOGGER : T. Wiley/ATL

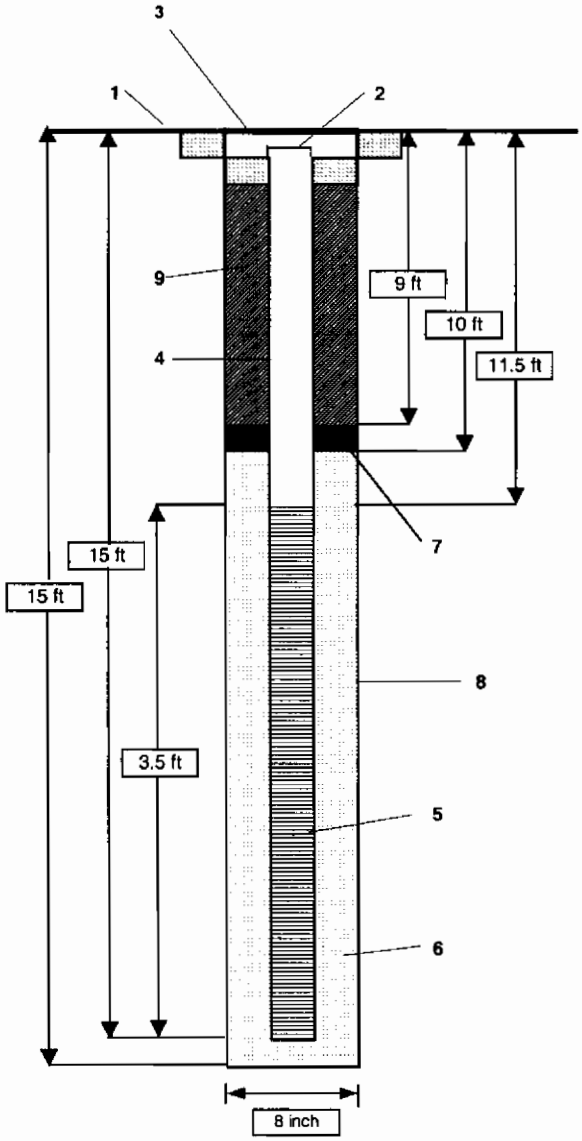

1- Ground elevation at well	not measured
2- Top of casing elevation	not measured
3- Protective cover type	Flushmount
a) concrete pad dimensions	2'x2'
4- Dia./type of well casing	2-inch inside diameter stainless steel
5- Type/slot size of screen	0.010-inch dia. stainless steel
6- Type filter pack	20/30 Sieve Size Silica Sand
7- Type of seal	3/8-inch bentonite chips, Baroid
8- Borehole diameter	8"
9- Grout	Type I Portland Cement

Note: Diagram not to scale.

PROJECT NUMBER	WELL NUMBER	
158814.ZH	H196INJ013	SHEET 1 OF 1

CH2MHILL

INJECTOR COMPLETION DIAGRAM

PROJECT : SWMU 21, Zone E, Charleston Naval Complex		LOCATION : Charleston, South Carolina
DRILLING CONTRACTOR : Prosonic Corporation	License # 1435	NORTHING 370070.8
DRILLING METHOD AND EQUIPMENT USED : Geoprobe (8-inch diameter)		EASTING: 2321439.7
WATER LEVELS : not measured	START : 1/24/2002 END: 1/24/2002	LOGGER : T. Wiley/ATL

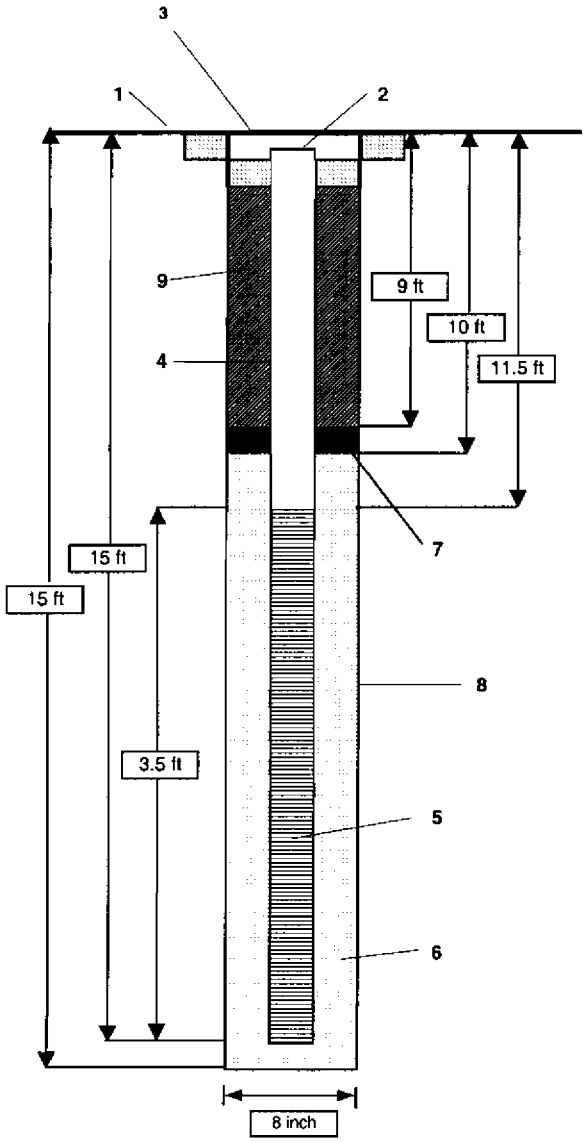

1- Ground elevation at well	not measured
2- Top of casing elevation	not measured
3- Protective cover type	Flushmount
a) concrete pad dimensions	2'x2'
4- Dia./type of well casing	2-inch inside diameter stainless steel
5- Type/slot size of screen	0.010-inch dia.stainless steel
6- Type filter pack	20/30 Sieve Size Silica Sand
7- Type of seal	3/8-inch bentonite chips, Baroid
8- Borehole diameter	8"
9- Grout	Type I Portland Cement

Note: Diagram not to scale.

PROJECT NUMBER	WELL NUMBER	
158814.ZH	H196INJ014	SHEET 1 OF 1

CH2MHILL

INJECTOR COMPLETION DIAGRAM

PROJECT : SWMU 21, Zone E, Charleston Naval Complex			LOCATION : Charleston, South Carolina
DRILLING CONTRACTOR : Prosonic Corporation	License # 1435		NORTHING 370047.6
DRILLING METHOD AND EQUIPMENT USED : Geoprobe (8-inch diameter)			EASTING: 2321428.3
WATER LEVELS : not measured	START : 1/24/2002	END: 1/24/2002	LOGGER : T. Wiley/ATL

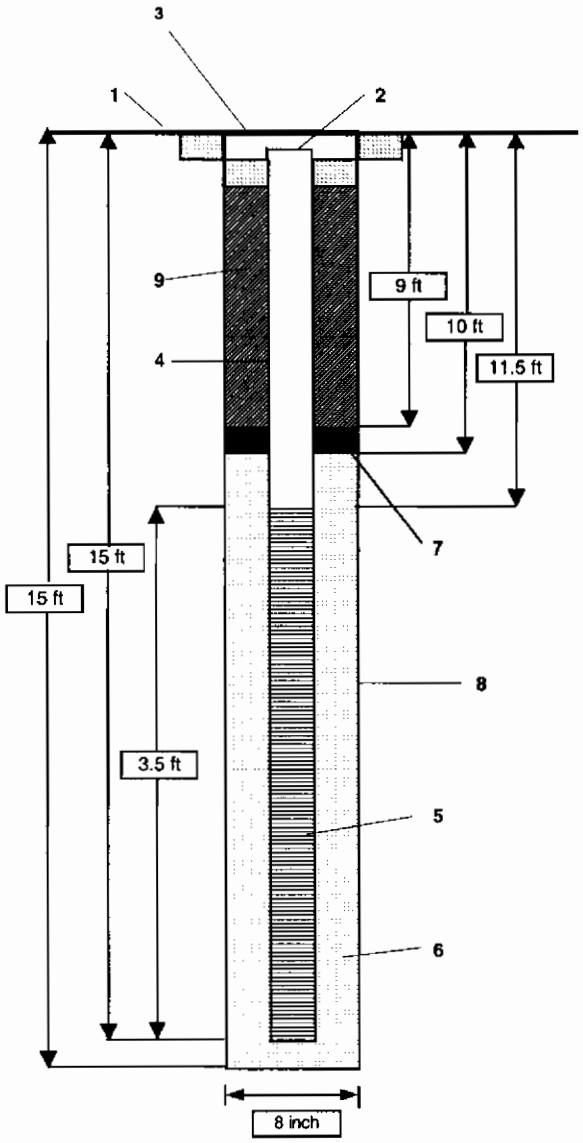

1- Ground elevation at well	not measured
2- Top of casing elevation	not measured
3- Protective cover type	Flushmount
a) concrete pad dimensions	2'x2'
4- Dia./type of well casing	2-inch inside diameter stainless steel
5- Type/slot size of screen	0.010-inch dia.stainless steel
6- Type filter pack	20/30 Sieve Size Silica Sand
7- Type of seal	3/8-inch bentonite chips, Baroid
8- Borehole diameter	8"
9- Grout	Type I Portland Cement

Note: Diagram not to scale.

PROJECT NUMBER	WELL NUMBER	
158814.ZH	H196INJ015	SHEET 1 OF 1

CH2MHILL

INJECTOR COMPLETION DIAGRAM

PROJECT : SWMU 21, Zone E, Charleston Naval Complex		LOCATION : Charleston, South Carolina
DRILLING CONTRACTOR : Prosonic Corporation	License # 1435	NORTHING 370034.6
DRILLING METHOD AND EQUIPMENT USED : Geoprobe (8-inch diameter)		EASTING: 2321423.6
WATER LEVELS : not measured	START : 1/24/2002 END: 1/24/2002	LOGGER : T. Wiley/ATL

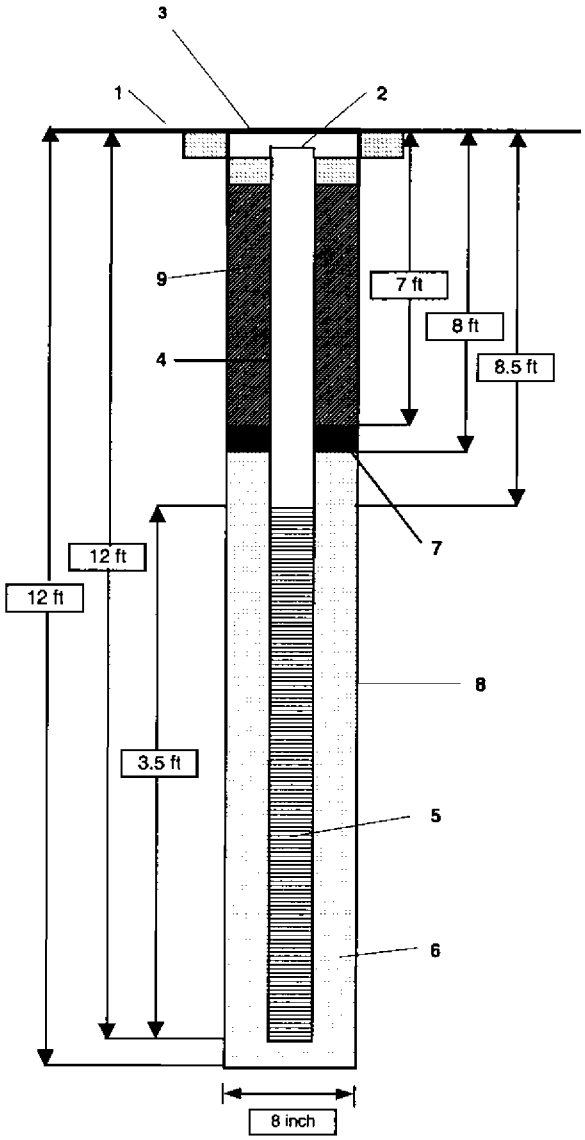

1- Ground elevation at well	not measured
2- Top of casing elevation	not measured
3- Protective cover type	Flushmount
a) concrete pad dimensions	2'x2'
4- Dia./type of well casing	2-inch inside diameter stainless steel
5- Type/slot size of screen	0.010-inch dia.stainless steel
6- Type filter pack	20/30 Sieve Size Silica Sand
7- Type of seal	3/8-inch bentonite chips, Baroid
8- Borehole diameter	8"
9- Grout	Type I Portland Cement

Note: Diagram not to scale.

PROJECT NUMBER	WELL NUMBER	
158814.ZH	H196INJ016	SHEET 1 OF 1

CH2MHILL

INJECTOR COMPLETION DIAGRAM

PROJECT : SWMU 21, Zone E, Charleston Naval Complex		LOCATION : Charleston, South Carolina
DRILLING CONTRACTOR : Prosonic Corporation	License # 1435	NORTHING 370033.2
DRILLING METHOD AND EQUIPMENT USED : Geoprobe (8-inch diameter)		EASTING: 2321394.7
WATER LEVELS : not measured	START : 1/28/2002 END: 1/28/2002	LOGGER : T. Wiley/ATL

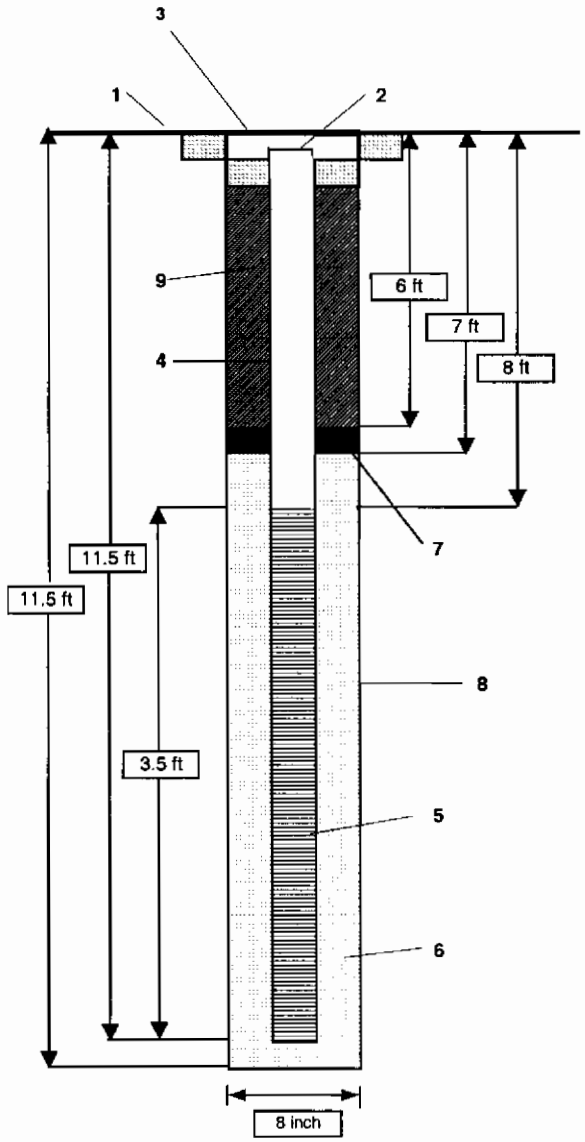

1- Ground elevation at well	not measured
2- Top of casing elevation	not measured
3- Protective cover type	Flushmount
a) concrete pad dimensions	2'x2'
4- Dia./type of well casing	2-inch inside diameter stainless steel
5- Type/slot size of screen	0.010-inch dia. stainless steel
6- Type filter pack	20/30 Sieve Size Silica Sand
7- Type of seal	3/8-inch bentonite chips, Baroid
8- Borehole diameter	8"
9- Grout	Type I Portland Cement

Note: Diagram not to scale.

PROJECT NUMBER	WELL NUMBER	
158814.ZH	H196INJ017	SHEET 1 OF 1

CH2MHILL

INJECTOR COMPLETION DIAGRAM

PROJECT : SWMU 21, Zone E, Charleston Naval Complex — LOCATION : Charleston, South Carolina

DRILLING CONTRACTOR : Prosonic Corporation — License # 1435 — NORTHING 370051

DRILLING METHOD AND EQUIPMENT USED : Geoprobe (8-inch diameter) — EASTING: 2321407.7

WATER LEVELS : not measured — START : 1/30/2002 — END: 1/30/2002 — LOGGER : T. Wiley/ATL

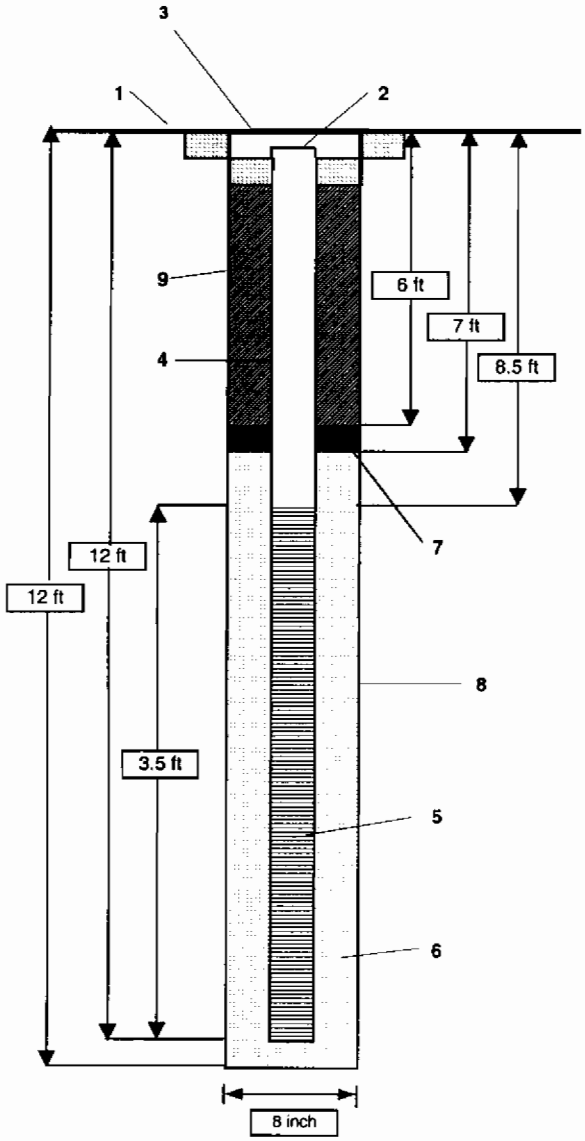

1- Ground elevation at well	not measured
2- Top of casing elevation	not measured
3- Protective cover type	Flushmount
a) concrete pad dimensions	2'x2'
4- Dia./type of well casing	2-inch inside diameter stainless steel
5- Type/slot size of screen	0.010-inch dia. stainless steel
6- Type filter pack	20/30 Sieve Size Silica Sand
7- Type of seal	3/8-inch bentonite chips, Baroid
8- Borehole diameter	8"
9- Grout	Type I Portland Cement

Note: Diagram not to scale.

PROJECT NUMBER	WELL NUMBER	
158814.ZH	H196INJ018	SHEET 1 OF 1

CH2MHILL

INJECTOR COMPLETION DIAGRAM

PROJECT : SWMU 21, Zone E, Charleston Naval Complex		LOCATION : Charleston, South Carolina
DRILLING CONTRACTOR : Prosonic Corporation	License # 1435	NORTHING 370068.8
DRILLING METHOD AND EQUIPMENT USED : Geoprobe (8-inch diameter)		EASTING: 2321422.3
WATER LEVELS : not measured	START : 1/25/2002 END: 1/25/2002	LOGGER : T. Wiley/ATL

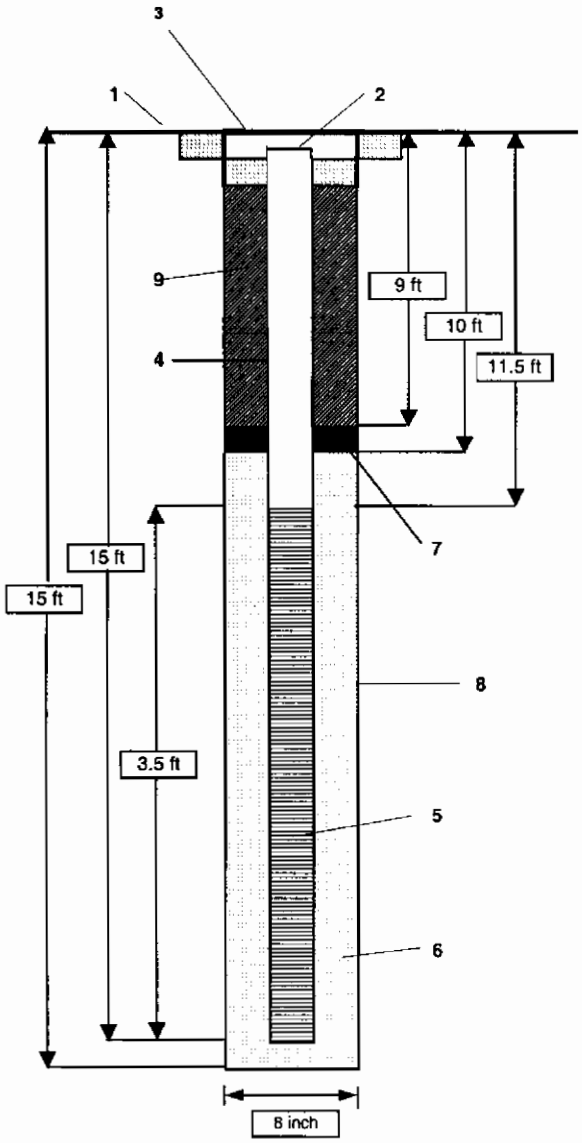

1- Ground elevation at well	not measured
2- Top of casing elevation	not measured
3- Protective cover type	Flushmount
a) concrete pad dimensions	2'x2'
4- Dia./type of well casing	2-inch inside diameter stainless steel
5- Type/slot size of screen	0.010-inch dia. stainless steel
6- Type filter pack	20/30 Sieve Size Silica Sand
7- Type of seal	3/8-inch bentonite chips, Baroid
8- Borehole diameter	8"
9- Grout	Type I Portland Cement

Note: Diagram not to scale.

PROJECT NUMBER	WELL NUMBER	
158814.ZH	H196INJ019	SHEET 1 OF 1

CH2MHILL

INJECTOR COMPLETION DIAGRAM

PROJECT : SWMU 21, Zone E, Charleston Naval Complex		LOCATION : Charleston, South Carolina
DRILLING CONTRACTOR : Prosonic Corporation	License # 1435	NORTHING 370067.5
DRILLING METHOD AND EQUIPMENT USED : Geoprobe (8-inch diameter)		EASTING: 2321405.3
WATER LEVELS : not measured	START : 1/25/2002 END: 1/25/2002	LOGGER : T. Wiley/ATL

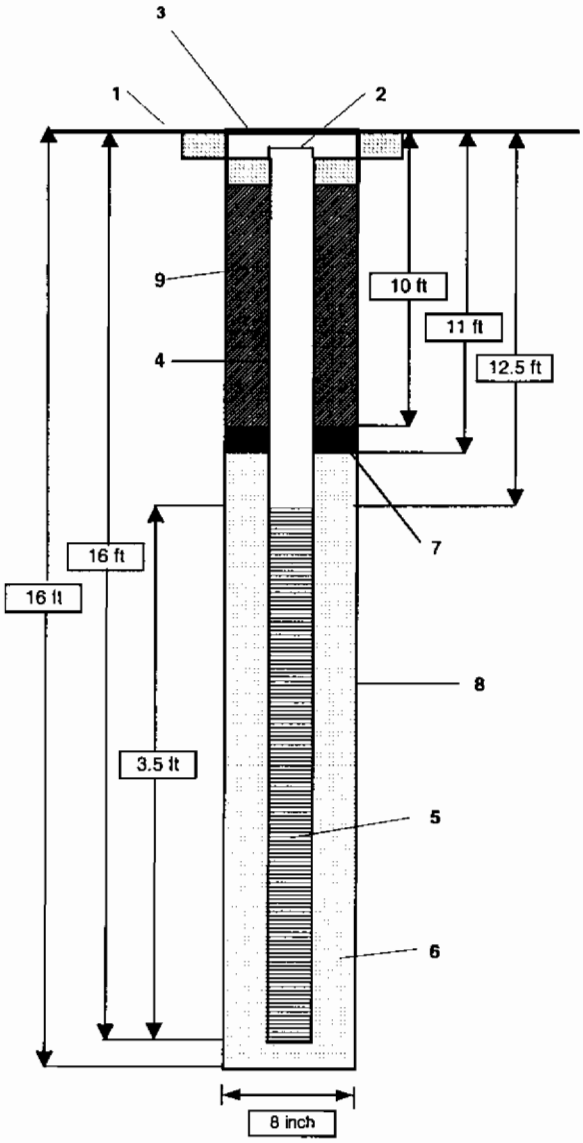

1- Ground elevation at well	not measured
2- Top of casing elevation	not measured
3- Protective cover type	Flushmount
a) concrete pad dimensions	2'x2'
4- Dia./type of well casing	2-inch inside diameter stainless steel
5- Type/slot size of screen	0.010-inch dia. stainless steel
6- Type filter pack	20/30 Sieve Size Silica Sand
7- Type of seal	3/8-inch bentonite chips, Baroid
8- Borehole diameter	8"
9- Grout	Type I Portland Cement

Note: Diagram not to scale.

PROJECT NUMBER	WELL NUMBER	
158814.ZH	H196INJ020	SHEET 1 OF 1

CH2MHILL

INJECTOR COMPLETION DIAGRAM

PROJECT : SWMU 21, Zone E, Charleston Naval Complex — LOCATION : Charleston, South Carolina

DRILLING CONTRACTOR : Prosonic Corporation — License # 1435 — NORTHING 370088.9

DRILLING METHOD AND EQUIPMENT USED : Geoprobe (8-inch diameter) — EASTING: 2321405.5

WATER LEVELS : not measured — START : 1/25/2002 — END: 1/25/2002 — LOGGER : T. Wiley/ATL

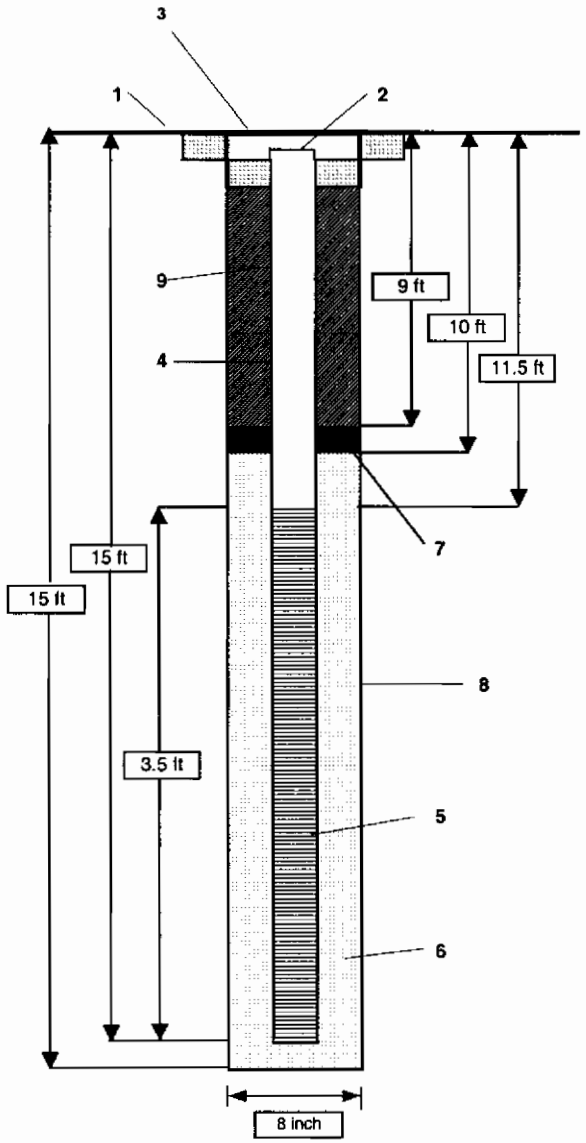

1- Ground elevation at well	not measured
2- Top of casing elevation	not measured
3- Protective cover type	Flushmount
a) concrete pad dimensions	2'x2'
4- Dia./type of well casing	2-inch inside diameter stainless steel
5- Type/slot size of screen	0.010-inch dia.stainless steel
6- Type filter pack	20/30 Sieve Size Silica Sand
7- Type of seal	3/8-inch bentonite chips, Baroid
8- Borehole diameter	8"
9- Grout	Type I Portland Cement

Note: Diagram not to scale.

PROJECT NUMBER	WELL NUMBER	
158814.ZH	H196INJ021	SHEET 1 OF 1

CH2MHILL

INJECTOR COMPLETION DIAGRAM

PROJECT : SWMU 21, Zone E, Charleston Naval Complex — LOCATION : Charleston, South Carolina

DRILLING CONTRACTOR : Prosonic Corporation — License # 1435 — NORTHING 370112.9

DRILLING METHOD AND EQUIPMENT USED : Geoprobe (8-inch diameter) — EASTING: 2321406.9

WATER LEVELS : not measured — START : 1/23/2002 — END: 1/23/2002 — LOGGER : T. Wiley/ATL

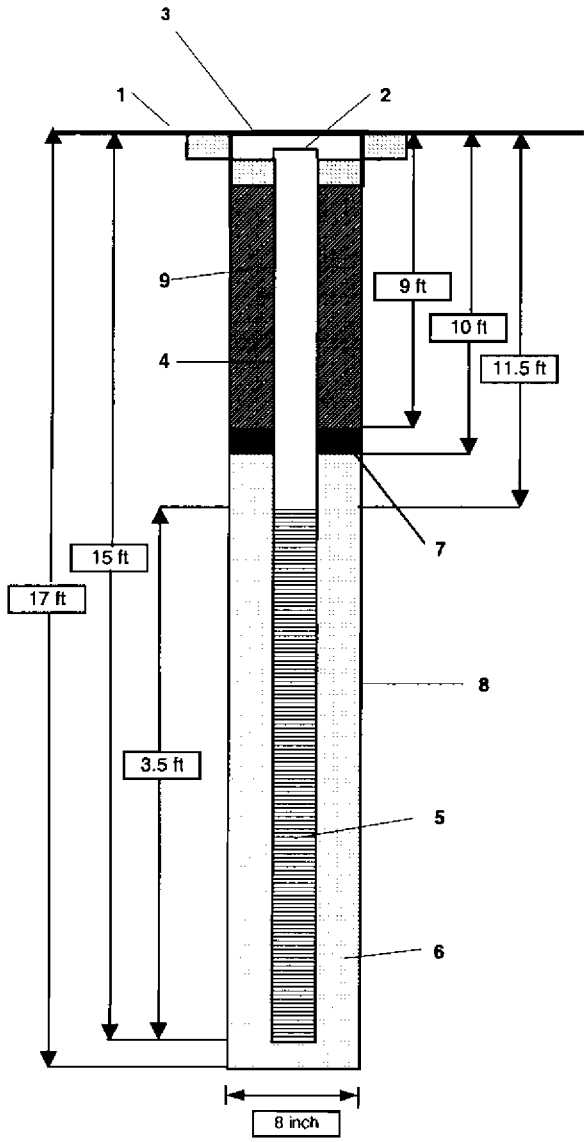

1- Ground elevation at well	not measured
2- Top of casing elevation	not measured
3- Protective cover type	Flushmount
a) concrete pad dimensions	2'x2'
4- Dia./type of well casing	2-inch inside diameter stainless steel
5- Type/slot size of screen	0.010-inch dia. stainless steel
6- Type filter pack	20/30 Sieve Size Silica Sand
7- Type of seal	3/8-inch bentonite chips, Baroid
8- Borehole diameter	8"
9- Grout	Type I Portland Cement

Note: Diagram not to scale.

PROJECT NUMBER	WELL NUMBER	
158814.ZH	H196INJ022	SHEET 1 OF 1

CH2MHILL

INJECTOR COMPLETION DIAGRAM

PROJECT : SWMU 21, Zone E, Charleston Naval Complex — LOCATION : Charleston, South Carolina

DRILLING CONTRACTOR : Prosonic Corporation — License # 1435 — NORTHING 370105.1

DRILLING METHOD AND EQUIPMENT USED : Geoprobe (8-inch diameter) — EASTING: 2321425.3

WATER LEVELS : not measured — START : 1/23/2002 — END: 1/23/2002 — LOGGER : T. Wiley/ATL

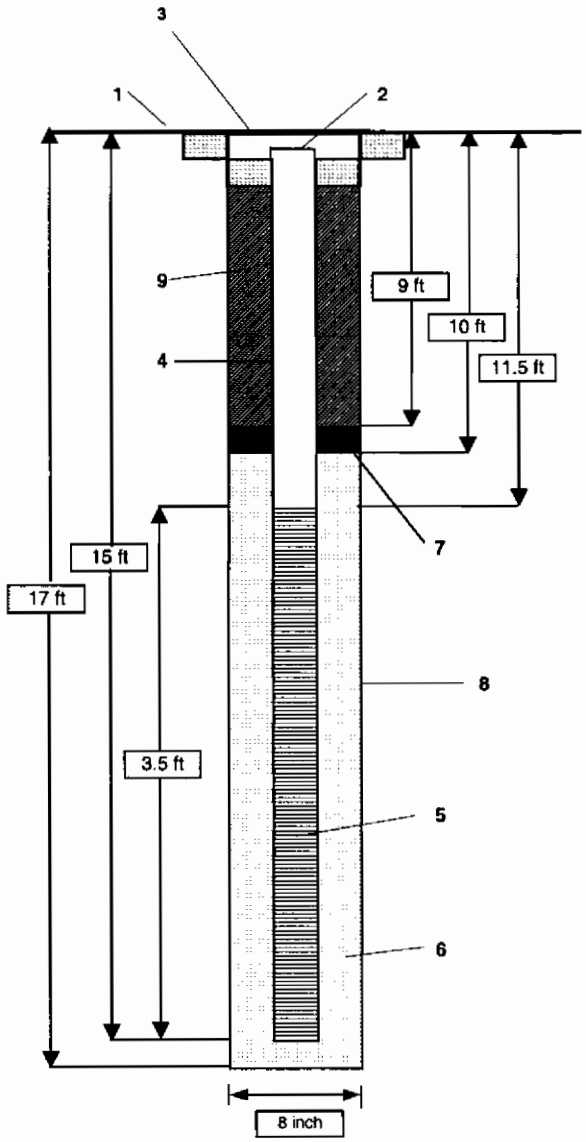

1- Ground elevation at well	not measured
2- Top of casing elevation	not measured
3- Protective cover type	Flushmount
a) concrete pad dimensions	2'x2'
4- Dia./type of well casing	2-inch inside diameter stainless steel
5- Type/slot size of screen	0.010-inch dia. stainless steel
6- Type filter pack	20/30 Sieve Size Silica Sand
7- Type of seal	3/8-inch bentonite chips, Baroid
8- Borehole diameter	8"
9- Grout	Type I Portland Cement

Note: Diagram not to scale.

PROJECT NUMBER	WELL NUMBER	
158814.ZH	H196INJ023	SHEET 1 OF 1

CH2MHILL

INJECTOR COMPLETION DIAGRAM

PROJECT : SWMU 21, Zone E, Charleston Naval Complex — LOCATION : Charleston, South Carolina

DRILLING CONTRACTOR : Prosonic Corporation — License # 1435 — NORTHING 370115.3

DRILLING METHOD AND EQUIPMENT USED : Geoprobe (8-inch diameter) — EASTING: 2321434.9

WATER LEVELS : not measured — START : 1/23/2002 — END: 1/23/2002 — LOGGER : T. Wiley/ATL

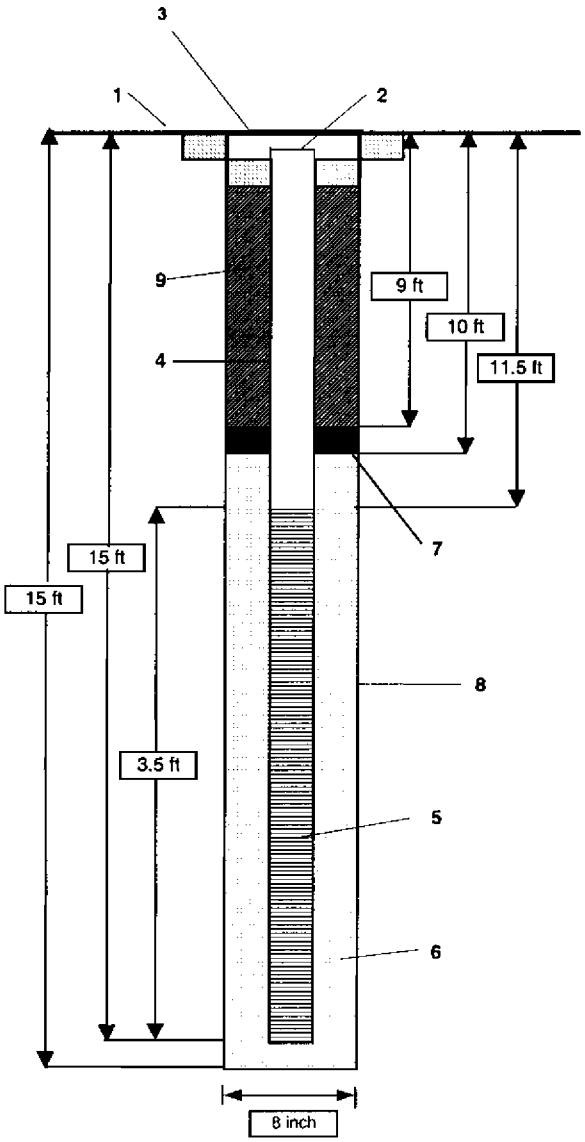

1- Ground elevation at well	not measured
2- Top of casing elevation	not measured
3- Protective cover type	Flushmount
a) concrete pad dimensions	2'x2'
4- Dia./type of well casing	2-inch inside diameter stainless steel
5- Type/slot size of screen	0.010-inch dia. stainless steel
6- Type filter pack	20/30 Sieve Size Silica Sand
7- Type of seal	3/8-inch bentonite chips, Baroid
8- Borehole diameter	8"
9- Grout	Type I Portland Cement

Note: Diagram not to scale.

PROJECT NUMBER	WELL NUMBER	
158814.ZH	H196INJ024	SHEET 1 OF 1

CH2MHILL

INJECTOR COMPLETION DIAGRAM

PROJECT : SWMU 21, Zone E, Charleston Naval Complex		LOCATION : Charleston, South Carolina
DRILLING CONTRACTOR : Prosonic Corporation	License # 1435	NORTHING 370124.7
DRILLING METHOD AND EQUIPMENT USED : Geoprobe (8-inch diameter)		EASTING: 2321420.2
WATER LEVELS : not measured	START : 1/22/2002 END: 1/22/2002	LOGGER : T. Wiley/ATL

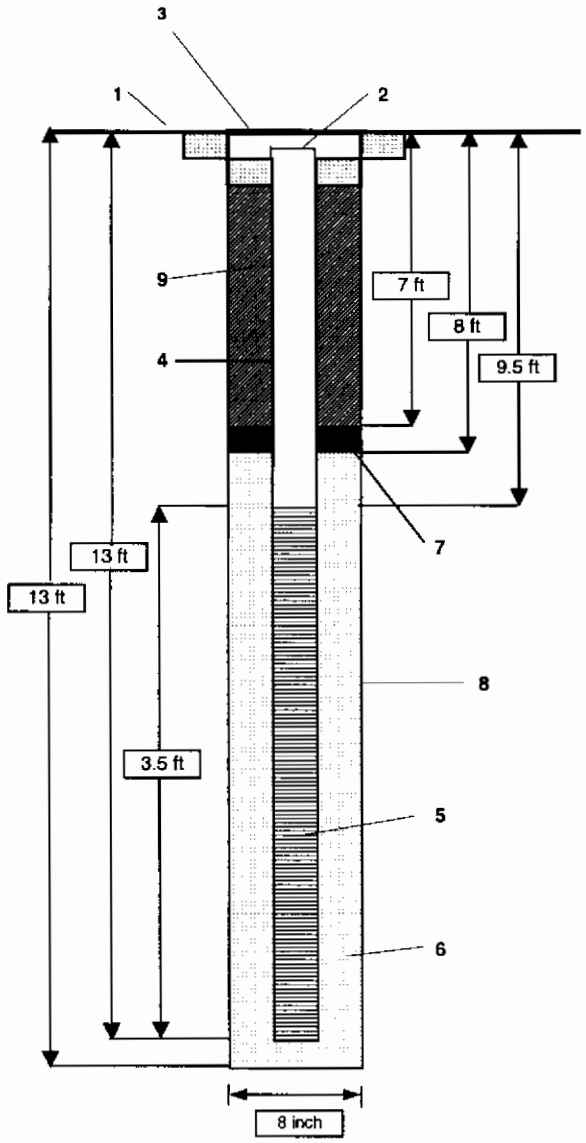

1- Ground elevation at well	not measured
2- Top of casing elevation	not measured
3- Protective cover type	Flushmount
a) concrete pad dimensions	2'x2'
4- Dia./type of well casing	2-inch inside diameter stainless steel
5- Type/slot size of screen	0.010-inch dia. stainless steel
6- Type filter pack	20/30 Sieve Size Silica Sand
7- Type of seal	3/8-inch bentonite chips, Baroid
8- Borehole diameter	8"
9- Grout	Type I Portland Cement

Note: Diagram not to scale.

PROJECT NUMBER	WELL NUMBER	
158814.ZH	H196INJ025	SHEET 1 OF 1

CH2MHILL

INJECTOR COMPLETION DIAGRAM

PROJECT : SWMU 21, Zone E, Charleston Naval Complex — LOCATION : Charleston, South Carolina
DRILLING CONTRACTOR : Prosonic Corporation — License # 1435 — NORTHING 370141.4
DRILLING METHOD AND EQUIPMENT USED : Geoprobe (8-inch diameter) — EASTING: 2321405.5
WATER LEVELS : not measured — START : 1/22/2002 — END: 1/22/2002 — LOGGER : T. Wiley/ATL

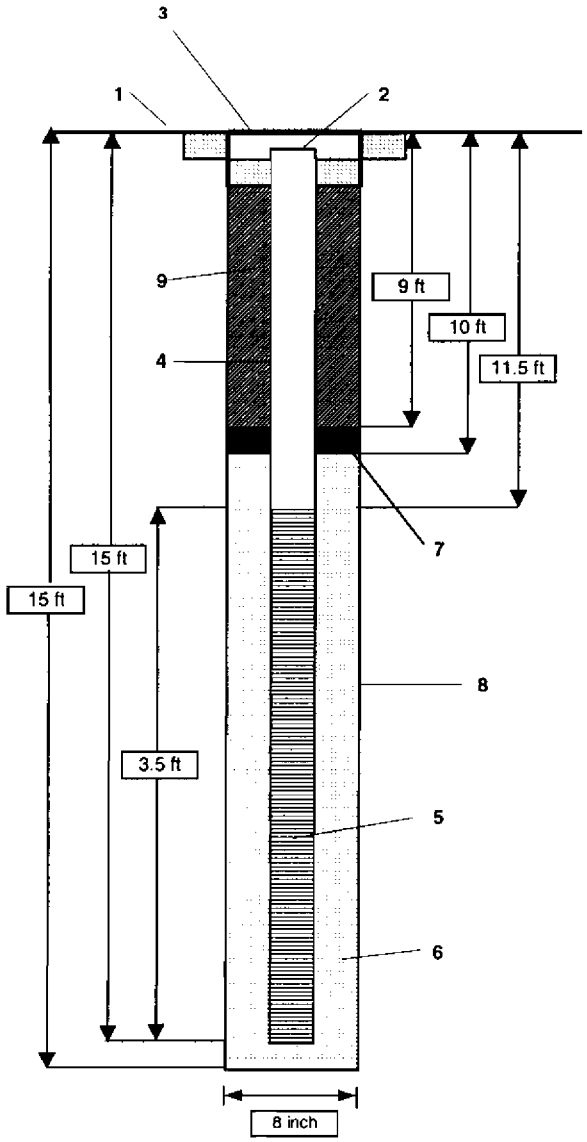

1- Ground elevation at well	not measured
2- Top of casing elevation	not measured
3- Protective cover type	Flushmount
a) concrete pad dimensions	2'x2'
4- Dia./type of well casing	2-inch inside diameter stainless steel
5- Type/slot size of screen	0.010-inch dia. stainless steel
6- Type filter pack	20/30 Sieve Size Silica Sand
7- Type of seal	3/8-inch bentonite chips, Baroid
8- Borehole diameter	8"
9- Grout	Type I Portland Cement

Note: Diagram not to scale.

PROJECT NUMBER	WELL NUMBER	
158814.ZH	H196INJ026	SHEET 1 OF 1

CH2MHILL

INJECTOR COMPLETION DIAGRAM

PROJECT : SWMU 21, Zone E, Charleston Naval Complex			LOCATION : Charleston, South Carolina
DRILLING CONTRACTOR : Prosonic Corporation	License # 1435		NORTHING 370151.3
DRILLING METHOD AND EQUIPMENT USED : Geoprobe (8-inch diameter)			EASTING: 2321428.2
WATER LEVELS : not measured	START : 1/30/2002	END: 1/30/2002	LOGGER : T. Wiley/ATL

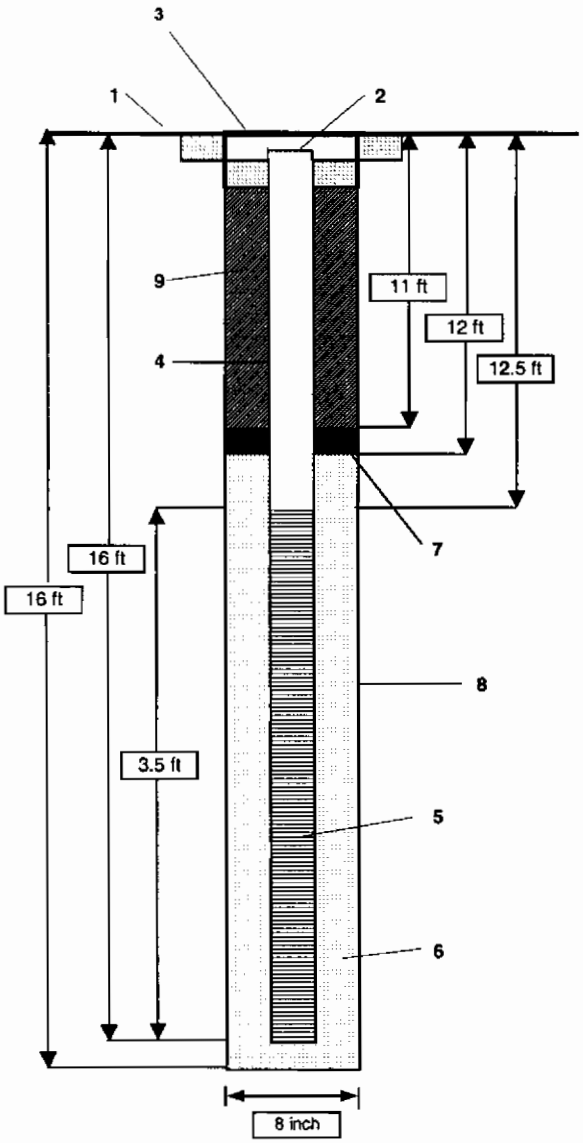

1- Ground elevation at well	not measured
2- Top of casing elevation	not measured
3- Protective cover type	Flushmount
a) concrete pad dimensions	2'x2'
4- Dia./type of well casing	2-inch inside diameter stainless steel
5- Type/slot size of screen	0.010-inch dia.stainless steel
6- Type filter pack	20/30 Sieve Size Silica Sand
7- Type of seal	3/8-inch bentonite chips, Baroid
8- Borehole diameter	8"
9- Grout	Type I Portland Cement

Note: Diagram not to scale.

PROJECT NUMBER	WELL NUMBER	
158814.ZH	H196INJ027	SHEET 1 OF 1

CH2MHILL

INJECTOR COMPLETION DIAGRAM

PROJECT : SWMU 21, Zone E, Charleston Naval Complex		LOCATION : Charleston, South Carolina
DRILLING CONTRACTOR : Prosonic Corporation	License # 1435	NORTHING 370149.8
DRILLING METHOD AND EQUIPMENT USED : Geoprobe (8-inch diameter)		EASTING: 2321439.6
WATER LEVELS : not measured	START : 1/30/2002 END: 1/30/2002	LOGGER : T. Wiley/ATL

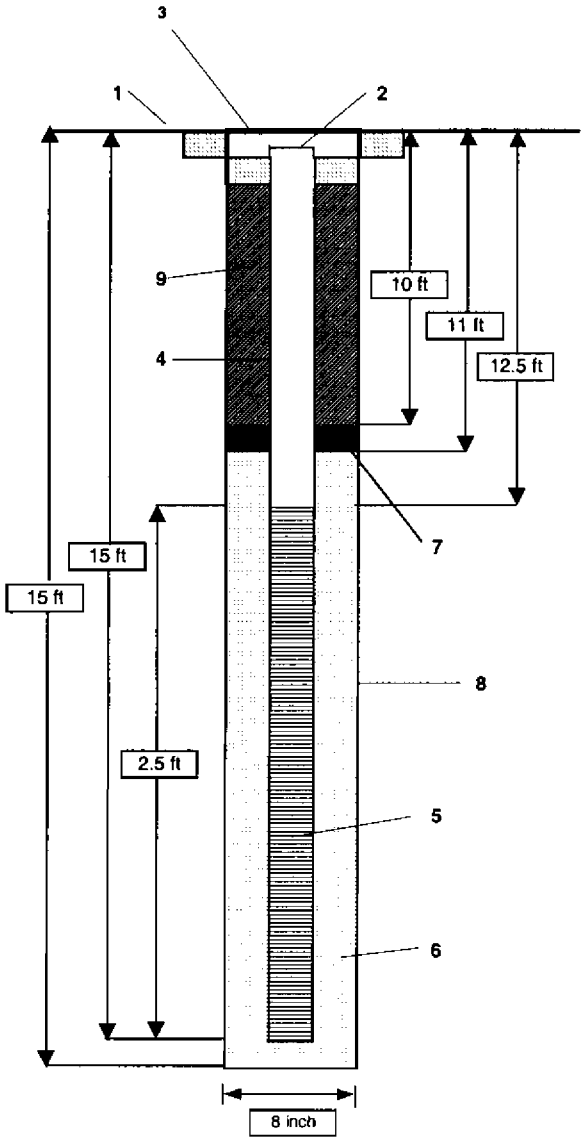

1- Ground elevation at well	not measured
2- Top of casing elevation	not measured
3- Protective cover type	Flushmount
a) concrete pad dimensions	2'x2'
4- Dia./type of well casing	2-inch inside diameter stainless steel
5- Type/slot size of screen	0.010-inch dia.stainless steel
6- Type filter pack	20/30 Sieve Size Silica Sand
7- Type of seal	3/8-inch bentonite chips, Baroid
8- Borehole diameter	8"
9- Grout	Type I Portland Cement

Note: Diagram not to scale.

PROJECT NUMBER	WELL NUMBER	
158814.ZH	H196INJ028	SHEET 1 OF 1

CH2MHILL

INJECTOR COMPLETION DIAGRAM

PROJECT : SWMU 21, Zone E, Charleston Naval Complex — LOCATION : Charleston, South Carolina

DRILLING CONTRACTOR : Prosonic Corporation — License # 1435 — NORTHING 370164.7

DRILLING METHOD AND EQUIPMENT USED : Geoprobe (8-inch diameter) — EASTING: 2321440.3

WATER LEVELS : not measured — START : 1/29/2002 — END: 1/29/2002 — LOGGER : T. Wiley/ATL

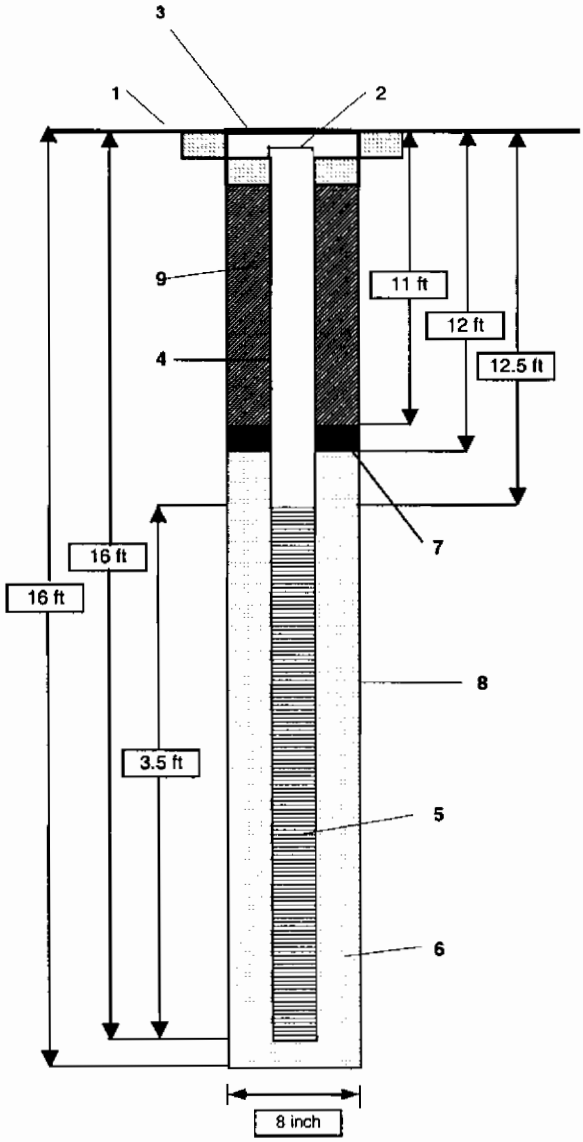

1- Ground elevation at well	not measured
2- Top of casing elevation	not measured
3- Protective cover type	Flushmount
a) concrete pad dimensions	2'x2'
4- Dia./type of well casing	2-inch inside diameter stainless steel
5- Type/slot size of screen	0.010-inch dia.stainless steel
6- Type filter pack	20/30 Sieve Size Silica Sand
7- Type of seal	3/8-inch bentonite chips, Baroid
8- Borehole diameter	8"
9- Grout	Type I Portland Cement

Note: Diagram not to scale.

PROJECT NUMBER	WELL NUMBER	
158814.ZH	H196INJ029	SHEET 1 OF 1

CH2MHILL

INJECTOR COMPLETION DIAGRAM

PROJECT : SWMU 21, Zone E, Charleston Naval Complex — LOCATION : Charleston, South Carolina

DRILLING CONTRACTOR : Prosonic Corporation — License # 1435 — NORTHING 370157.7

DRILLING METHOD AND EQUIPMENT USED : Geoprobe (8-inch diameter) — EASTING: 2321450.5

WATER LEVELS : not measured — START : 1/29/2002 — END: 1/29/2002 — LOGGER : T. Wiley/ATL

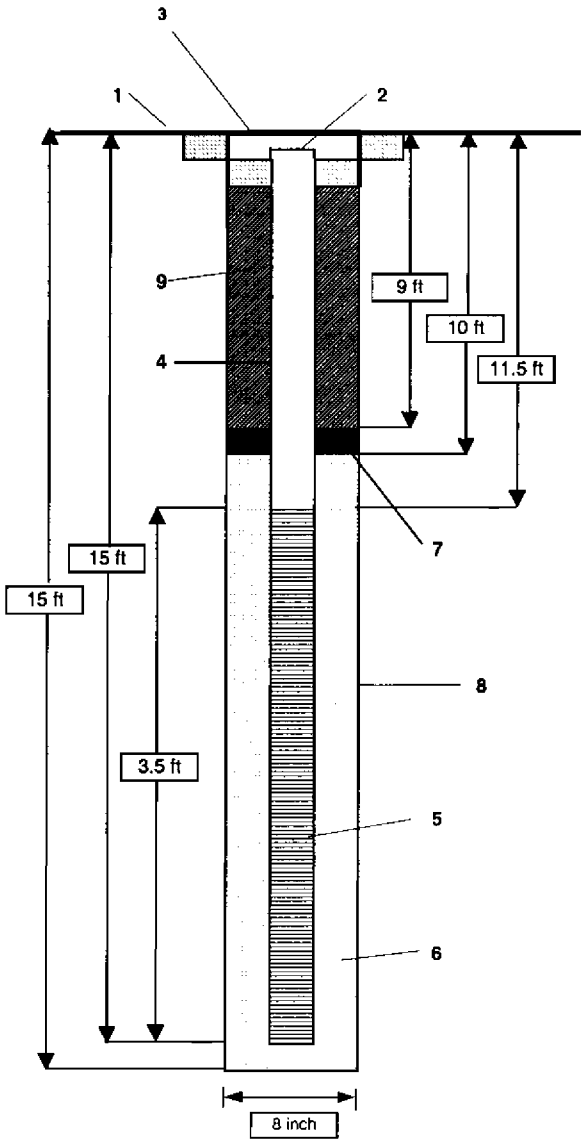

1- Ground elevation at well	not measured
2- Top of casing elevation	not measured
3- Protective cover type	Flushmount
a) concrete pad dimensions	2'x2'
4- Dia./type of well casing	2-inch inside diameter stainless steel
5- Type/slot size of screen	0.010-inch dia.stainless steel
6- Type filter pack	20/30 Sieve Size Silica Sand
7- Type of seal	3/8-inch bentonite chips, Baroid
8- Borehole diameter	8"
9- Grout	Type I Portland Cement

Note: Diagram not to scale.

PROJECT NUMBER	WELL NUMBER	
158814.ZH	H196INJ030	SHEET 1 OF 1

CH2MHILL

INJECTOR COMPLETION DIAGRAM

PROJECT : SWMU 21, Zone E, Charleston Naval Complex		LOCATION : Charleston, South Carolina
DRILLING CONTRACTOR : Prosonic Corporation	License # 1435	NORTHING 370142.4
DRILLING METHOD AND EQUIPMENT USED : Geoprobe (8-inch diameter)		EASTING: 2321461.8
WATER LEVELS : not measured	START : 1/25/2002 END: 1/25/2002	LOGGER : T. Wiley/ATL

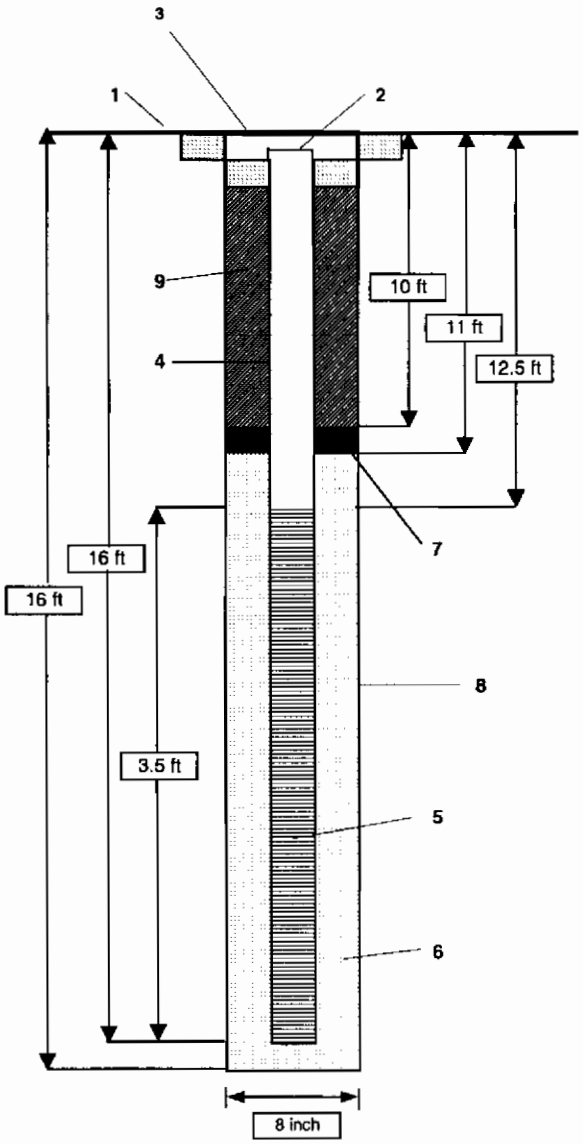

1- Ground elevation at well	not measured
2- Top of casing elevation	not measured
3- Protective cover type	Flushmount
a) concrete pad dimensions	2'x2'
4- Dia./type of well casing	2-inch inside diameter stainless steel
5- Type/slot size of screen	0.010-inch dia. stainless steel
6- Type filter pack	20/30 Sieve Size Silica Sand
7- Type of seal	3/8-inch bentonite chips, Baroid
8- Borehole diameter	8"
9- Grout	Type I Portland Cement

Note: Diagram not to scale.

PROJECT NUMBER	WELL NUMBER	
158814.ZH	H196INJ031	SHEET 1 OF 1

CH2MHILL

INJECTOR COMPLETION DIAGRAM

PROJECT : SWMU 21, Zone E, Charleston Naval Complex — LOCATION : Charleston, South Carolina

DRILLING CONTRACTOR : Prosonic Corporation — License # 1435 — NORTHING 370166.8

DRILLING METHOD AND EQUIPMENT USED : Geoprobe (8-inch diameter) — EASTING: 2321468.1

WATER LEVELS : not measured — START : 1/29/2002 — END: 1/29/2002 — LOGGER : T. Wiley/ATL

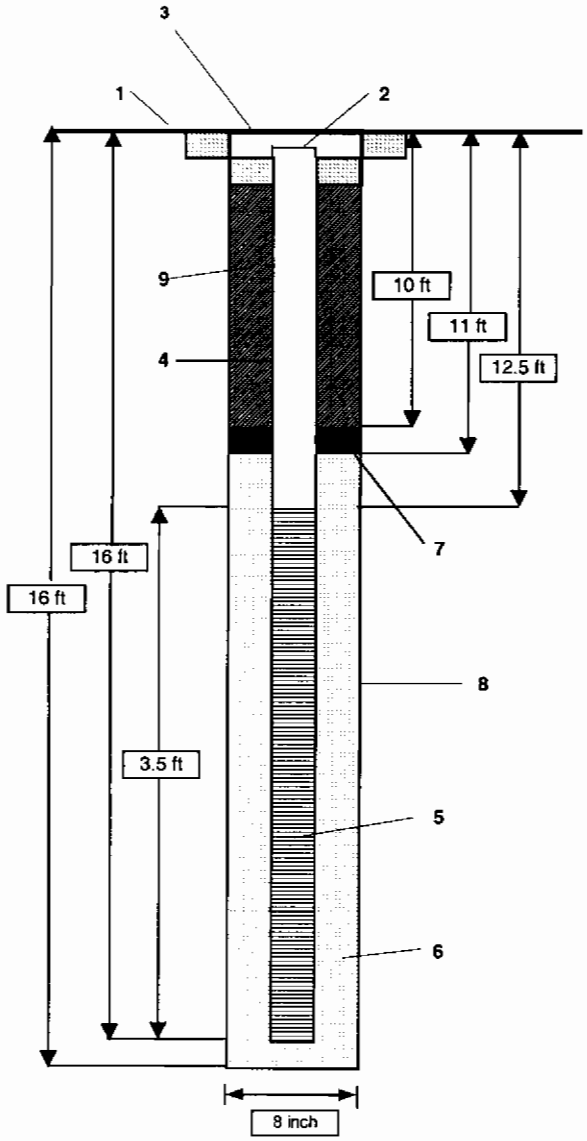

1- Ground elevation at well	not measured
2- Top of casing elevation	not measured
3- Protective cover type	Flushmount
a) concrete pad dimensions	2'x2'
4- Dia./type of well casing	2-inch inside diameter stainless steel
5- Type/slot size of screen	0.010-inch dia. stainless steel
6- Type filter pack	20/30 Sieve Size Silica Sand
7- Type of seal	3/8-inch bentonite chips, Baroid
8- Borehole diameter	8"
9- Grout	Type I Portland Cement

Note: Diagram not to scale.

PROJECT NUMBER	WELL NUMBER	
158814.ZH	H196INJ032	SHEET 1 OF 1

CH2MHILL

INJECTOR COMPLETION DIAGRAM

PROJECT : SWMU 21, Zone E, Charleston Naval Complex — LOCATION : Charleston, South Carolina

DRILLING CONTRACTOR : Prosonic Corporation — License # 1435 — NORTHING 370171.4

DRILLING METHOD AND EQUIPMENT USED : Geoprobe (8-inch diameter) — EASTING: 2321489.1

WATER LEVELS : not measured — START : 1/23/2002 — END: 1/23/2002 — LOGGER : T. Wiley/ATL

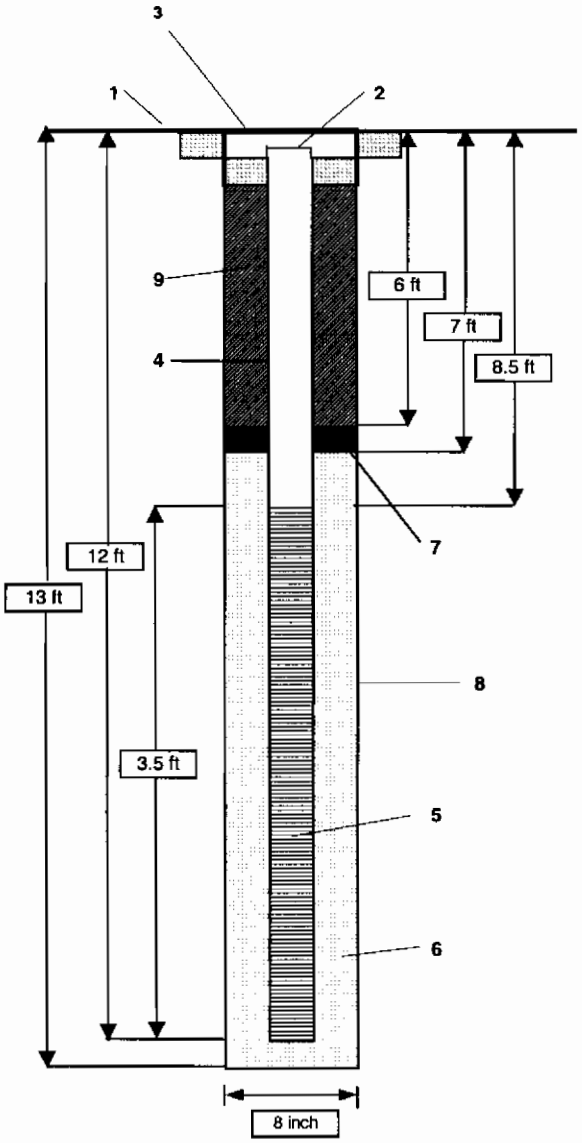

1- Ground elevation at well	not measured
2- Top of casing elevation	not measured
3- Protective cover type	Flushmount
a) concrete pad dimensions	2'x2'
4- Dia./type of well casing	2-inch inside diameter stainless steel
5- Type/slot size of screen	0.010-inch dia. stainless steel
6- Type filter pack	20/30 Sieve Size Silica Sand
7- Type of seal	3/8-inch bentonite chips, Baroid
8- Borehole diameter	8"
9- Grout	Type I Portland Cement

Note: Diagram not to scale.

PROJECT NUMBER	WELL NUMBER	
158814.ZH	H196INJ033	SHEET 1 OF 1

CH2MHILL

INJECTOR COMPLETION DIAGRAM

PROJECT : SWMU 21, Zone E, Charleston Naval Complex		LOCATION : Charleston, South Carolina
DRILLING CONTRACTOR : Prosonic Corporation	License # 1435	NORTHING 370144.2
DRILLING METHOD AND EQUIPMENT USED : Geoprobe (8-inch diameter)		EASTING: 2321475.1
WATER LEVELS : not measured	START : 1/24/2002 END: 1/24/2002	LOGGER : T. Wiley/ATL

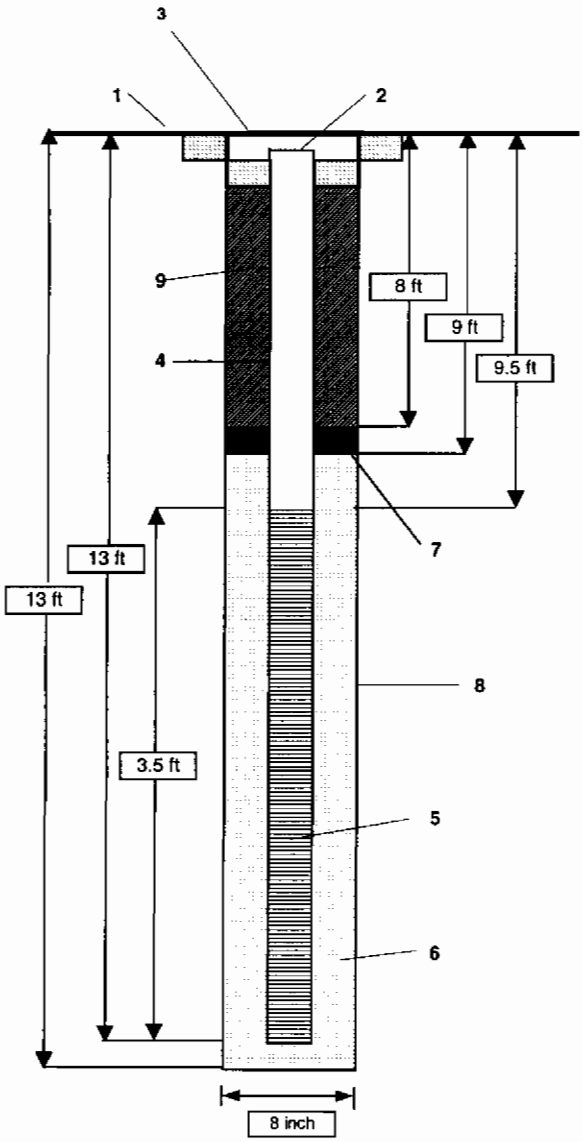

1- Ground elevation at well	not measured
2- Top of casing elevation	not measured
3- Protective cover type	Flushmount
a) concrete pad dimensions	2'x2'
4- Dia./type of well casing	2-inch inside diameter stainless steel
5- Type/slot size of screen	0.010-inch dia.stainless steel
6- Type filter pack	20/30 Sieve Size Silica Sand
7- Type of seal	3/8-inch bentonite chips, Baroid
8- Borehole diameter	8"
9- Grout	Type I Portland Cement

Note: Diagram not to scale.

PROJECT NUMBER	WELL NUMBER	
158814.ZH	H196INJ034	SHEET 1 OF 1

CH2MHILL

INJECTOR COMPLETION DIAGRAM

PROJECT : SWMU 21, Zone E, Charleston Naval Complex		LOCATION : Charleston, South Carolina
DRILLING CONTRACTOR : Prosonic Corporation	License # 1435	NORTHING 370111.4
DRILLING METHOD AND EQUIPMENT USED : Geoprobe (8-inch diameter)		EASTING: 2321453.1
WATER LEVELS : not measured	START : 1/24/2002 END: 1/24/2002	LOGGER : T. Wiley/ATL

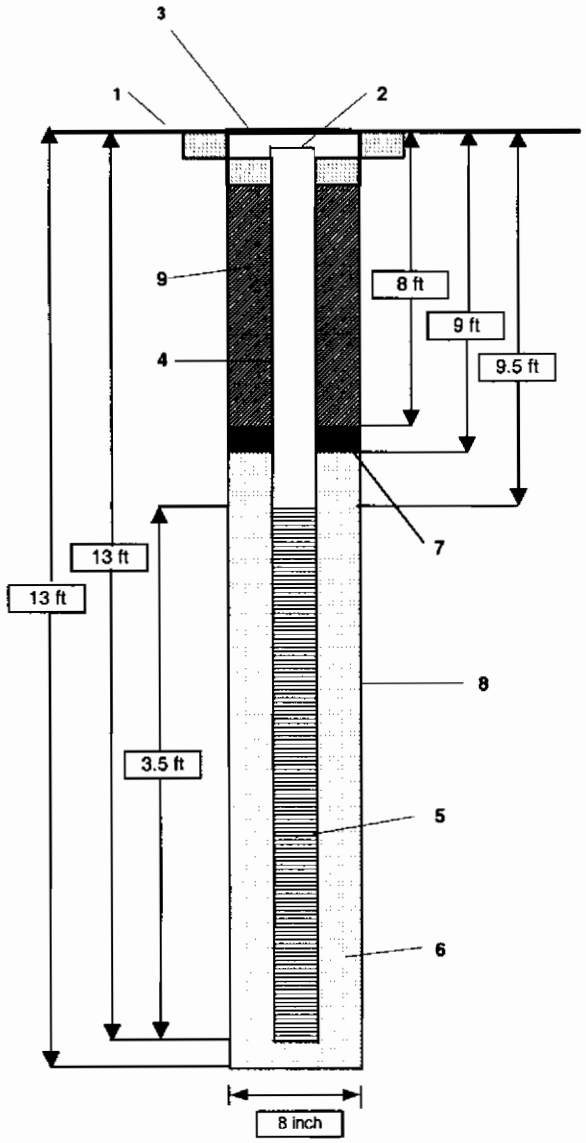

1- Ground elevation at well	not measured
2- Top of casing elevation	not measured
3- Protective cover type	Flushmount
a) concrete pad dimensions	2'x2'
4- Dia./type of well casing	2-inch inside diameter stainless steel
5- Type/slot size of screen	0.010-inch dia.stainless steel
6- Type filter pack	20/30 Sieve Size Silica Sand
7- Type of seal	3/8-inch bentonite chips, Baroid
8- Borehole diameter	8"
9- Grout	Type I Portland Cement

Note: Diagram not to scale.

PROJECT NUMBER	WELL NUMBER	
158814.ZH	H196INJ035	SHEET 1 OF 1

CH2MHILL

INJECTOR COMPLETION DIAGRAM

PROJECT : SWMU 21, Zone E, Charleston Naval Complex		LOCATION : Charleston, South Carolina
DRILLING CONTRACTOR : Prosonic Corporation	License # 1435	NORTHING 370083.8
DRILLING METHOD AND EQUIPMENT USED : Geoprobe (8-inch diameter)		EASTING: 2321422.7
WATER LEVELS : not measured	START : 1/29/2002 END: 1/29/2002	LOGGER : T. Wiley/ATL

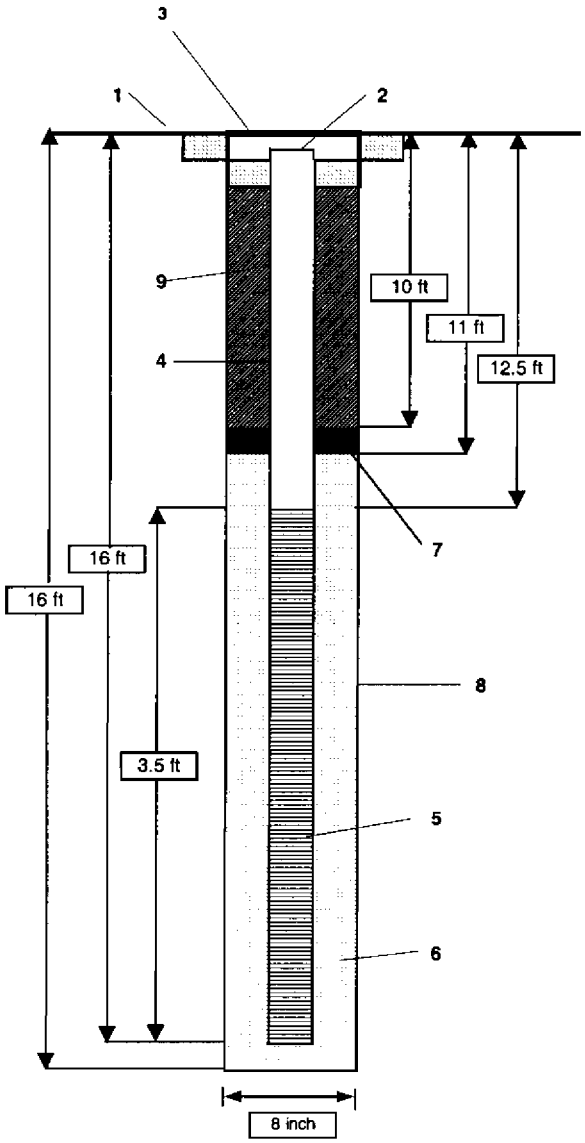

1- Ground elevation at well	not measured
2- Top of casing elevation	not measured
3- Protective cover type	Flushmount
a) concrete pad dimensions	2'x2'
4- Dia./type of well casing	2-inch inside diameter stainless steel
5- Type/slot size of screen	0.010-inch dia. stainless steel
6- Type filter pack	20/30 Sieve Size Silica Sand
7- Type of seal	3/8-inch bentonite chips, Baroid
8- Borehole diameter	8"
9- Grout	Type I Portland Cement

Note: Diagram not to scale.

PROJECT NUMBER	WELL NUMBER	
158814.ZH	H196INJ036	SHEET 1 OF 1

CH2MHILL

INJECTOR COMPLETION DIAGRAM

PROJECT : SWMU 21, Zone E, Charleston Naval Complex			LOCATION : Charleston, South Carolina
DRILLING CONTRACTOR : Prosonic Corporation	License # 1435		NORTHING 370077.9
DRILLING METHOD AND EQUIPMENT USED : Geoprobe (8-inch diameter)			EASTING: 2321386.6
WATER LEVELS : not measured	START : 3/8/2002	END: 3/8/2002	LOGGER : D. Gates/NVR

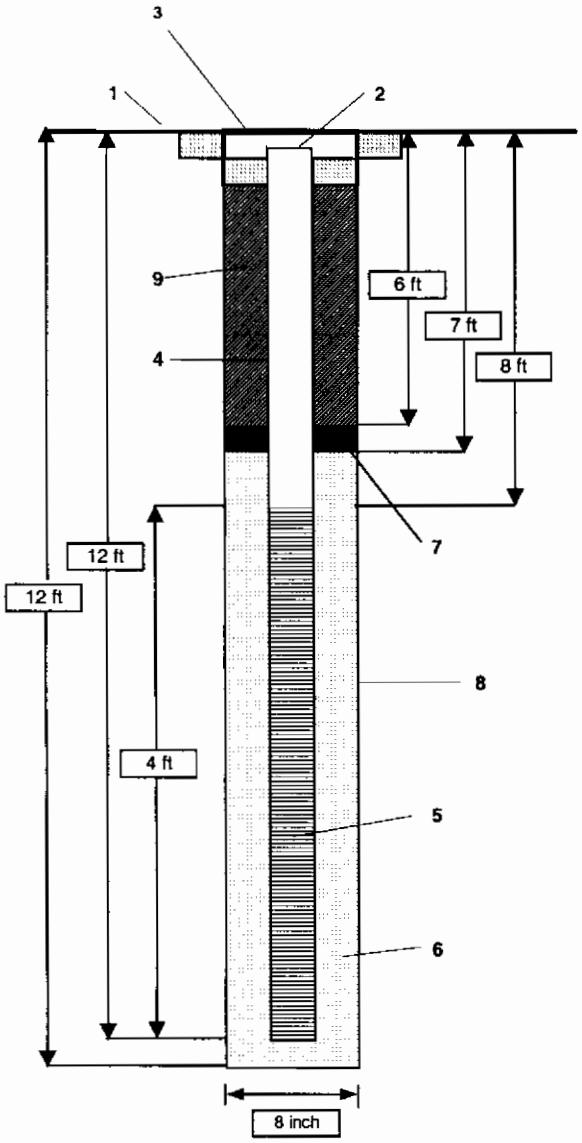

1- Ground elevation at well	not measured
2- Top of casing elevation	not measured
3- Protective cover type	flushmount
a) concrete pad dimensions	2'x2'
4- Dia./type of well casing	2-inch inside diameter stainless steel
5- Type/slot size of screen	0.010-inch dia. stainless steel
6- Type filter pack	20/30 Sieve Size Silica Sand
7- Type of seal	3/8-inch bentonite chips, Baroid
8- Borehole diameter	8"
9- Grout	Type I Portland Cement

Note: Diagram not to scale.

PROJECT NUMBER	WELL NUMBER	
158814.ZH	H196INJ037	SHEET 1 OF 1

CH2MHILL

INJECTOR COMPLETION DIAGRAM

PROJECT : SWMU 21, Zone E, Charleston Naval Complex			LOCATION : Charleston, South Carolina
DRILLING CONTRACTOR : Prosonic Corporation	License # 1435		NORTHING 370052.9
DRILLING METHOD AND EQUIPMENT USED : Geoprobe (8-inch diameter)			EASTING: 2321386.9
WATER LEVELS : not measured	START : 3/8/2002	END: 3/8/2002	LOGGER : D. Gates/NVR

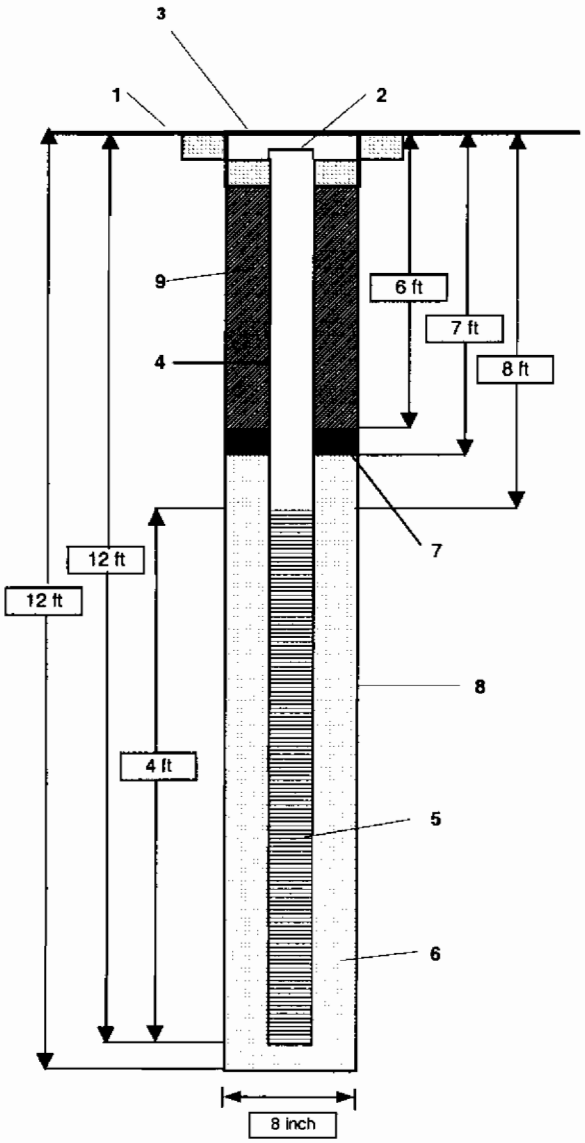

1- Ground elevation at well	not measured
2- Top of casing elevation	not measured
3- Protective cover type	flushmount
a) concrete pad dimensions	2'x2'
4- Dia./type of well casing	2-inch inside diameter stainless steel
5- Type/slot size of screen	0.010-inch dia. stainless steel
6- Type filter pack	20/30 Sieve Size Silica Sand
7- Type of seal	3/8-inch bentonite chips, Baroid
8- Borehole diameter	8"
9- Grout	Type I Portland Cement

Note: Diagram not to scale.

PROJECT NUMBER	WELL NUMBER	
158814.ZH	H196INJ038	SHEET 1 OF 1

CH2MHILL

INJECTOR COMPLETION DIAGRAM

PROJECT : SWMU 21, Zone E, Charleston Naval Complex — LOCATION : Charleston, South Carolina

DRILLING CONTRACTOR : Prosonic Corporation — License # 1435 — NORTHING 370178.4

DRILLING METHOD AND EQUIPMENT USED : Geoprobe (8-inch diameter) — EASTING: 2321448.9

WATER LEVELS : not measured — START : 3/8/2002 — END: 3/8/2002 — LOGGER : D. Gates/NVR

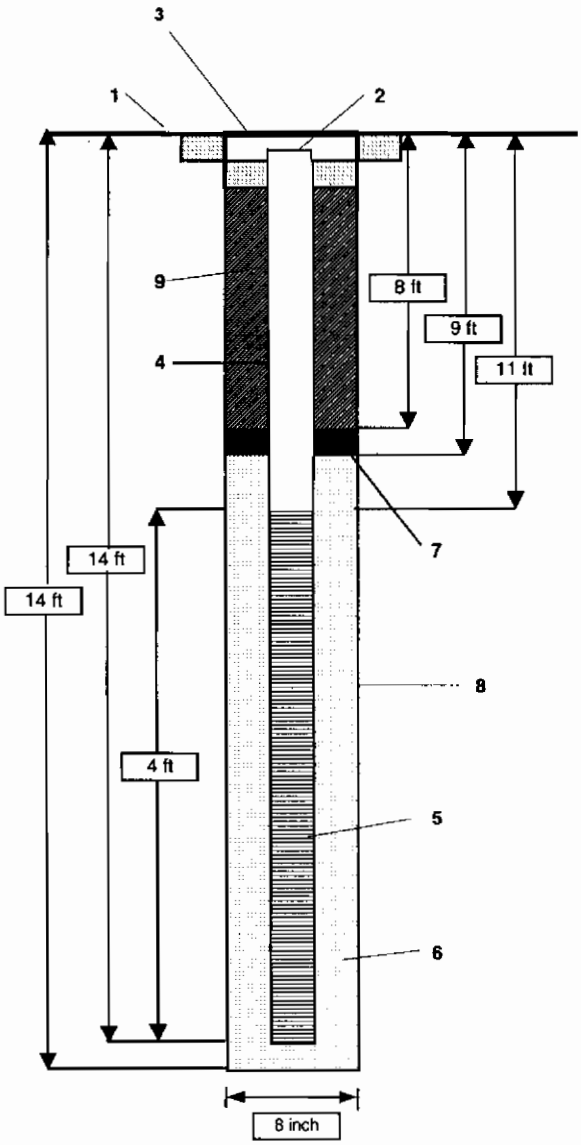

1- Ground elevation at well	not measured
2- Top of casing elevation	not measured
3- Protective cover type	flushmount
a) concrete pad dimensions	2'x2'
4- Dia./type of well casing	2-inch inside diameter stainless steel
5- Type/slot size of screen	0.010-inch dia. stainless steel
6- Type filter pack	20/30 Sieve Size Silica Sand
7- Type of seal	3/8-inch bentonite chips, Baroid
8- Borehole diameter	8"
9- Grout	Type I Portland Cement

Note: Diagram not to scale.