N61165.AR.005628
CNC CHARLESTON
5090.3a

UNDERGROUND STORAGE TANK ASSESSMENT (UST) REPORT FOR BUILDING 643 CNC CHARLESTON SC

03/06/1998

SOUTH CAROLINA DEPARTMENT OF HEALTH AND ENVIRONMENTAL CONTROL

L 4.8.98
L 5.26.98

NFA

RECEIVED
APR 6 1998
Water Monitoring, Assessment & Protection Division

South Carolina Department of Health and Environmental Control (S.C.D.H.E.C.)
Underground Storage Tank (UST) Assessment Report

Submit Completed Form to:

UST Regulatory Section
SCDHEC
2600 Bull Street
Columbia, South Carolina 29201
Telephone (803) 734-5331

Date Received

State Use Only

I OWNERSHIP OF UST(S)

Agency/Owner: Southern Division, Naval Facilities Engineering Command, Caretaker Site Office

Mailing Address: P.O. Box 190010

City: N. Charleston State: SC Zip Code: 29419-9010

Area Code: 803 Telephone Number: 743-9985 Contact Person: LCDR Paul Rose

II SITE IDENTIFICATION AND LOCATION

Site I.D. #: Unregulated

Facility Name: Charleston Naval Base Complex, Bldg 643

Street Address: Bainbridge Avenue & Holland Street

City: North Charleston, 29405-2413 County: Charleston

III CLOSURE INFORMATION

Closure Started: 6 Oct 1997 Closure Completed: 6 Mar 1998

Number of USTs Closed: 1

N/A
Consultant

SPORTENVDETCHASN
UST Removal Contractor

IV. CERTIFICATION (Read and Sign after completing entire submittal)

I certify that I have personally examined and am familiar with the information submitted in this and all attached documents, and that based on my inquiry of those individuals responsible for obtaining this information, I believe that the submitted information is true, accurate and complete.

LCDR Paul Rose
Name (Type or Print)

W. A. Drawdy for LCDR Rose
Signature

V. UST INFORMATION

		UST 643A	Tank 2	Tank 3	Tank 4	Tank 5
A.	Product.....	Fuel oil				
B.	Capacity.....	6,000 gal				
C.	Age.....	1969				
D.	Construction Material.....	Steel				
E.	Month/Year of Last Use.....	Unk.				
F.	Depth (ft.) To Base of Tank.....	~8'				
G.	Spill Prevention Equipment Y/N.....	N				
H..	Overfill Prevention Equipment Y/N.....	N				
I.	Method of Closure Removed/Filled.....	R				
J.	Visible Corrosion or Pitting Y/N.....	N				
K.	Visible Holes Y/N.....	N				

L. Method of disposal for any USTs removed from the ground (attach disposal manifests)

UST 643A was removed, drained, cut open at both ends, and cleaned with a steam cleaner. It was then cut up for recycling as scrap metal. (See Attachment III.)

M. Method of disposal for any liquid petroleum, sludges, or waste waters removed from the USTs (attach disposal manifests)

All fuel oil, waste water, and sludge from UST 643A was recycled.

N. If any corrosion, pitting, or holes were observed, describe the location and extent for each UST

No corrosion, pitting, or holes were found. UST 643A was covered with a protective coating of black pitch.

VI. PIPING INFORMATION

	Tank 1	Tank 2	Tank 3	Tank 4	Tank 5
A. Construction Material.....	Copper				
B. Distance from UST to Dispenser.....	20'				
C. Number of Dispensers.....	1 See note 1				
D. Type of System P/S.....	S				
E. Was Piping Removed from the Ground? Y/N....	Y				
F. Visible Corrosion or Pitting Y/N.....	N				
G. Visible Holes Y/N.....	N				
H. Age.....	1969				

Note 1: UST 643A provided heating fuel oil to Building 643.

I. If any corrosion, pitting, or holes were observed, describe the location and extent for each line.

No corrosion, pitting, or holes were found in UST 643A's piping.

VII. BRIEF SITE DESCRIPTION AND HISTORY

Building 643 is the former Fleet and Mine Warfare Training Center on Naval Base Charleston. The facility was constructed in 1969. It was used to train students with mines in mock-up shipboard settings. UST 643A provided heating fuel oil for the building.

VIII. SITE CONDITIONS

		Yes	No	Unk
A.	Were any petroleum-stained or contaminated soils found in the UST excavation, soil borings, trenches, or monitoring wells? If yes, indicate depth and location on the site map.		X	
B.	Were any petroleum odors detected in the excavation, soil borings, trenches, or monitoring wells? If yes, indicate location on site map and describe the odor (strong, mild, etc.)		X	
C.	Was water present in the UST excavation, soil borings, or trenches? If yes, how far below land surface (indicate location and depth)? UST excavation, ~4" deep, ~ 7' 8"	X		
D.	Did contaminated soils remain stockpiled on site after closure? If yes, indicate the stockpile location on the site map. Name of DHEC representative authorizing soil removal: _____		X*	
E.	Was a petroleum sheen or free product detected on any excavation or boring waters? If yes, indicate location and thickness.		X	

* All soils were returned to the tank pit.

IX. SAMPLE INFORMATION

S.C.D.H.E.C. Lab Certification Number 10120

Sample #	Location	Sample Type (Soil/Water)	Depth*	Date/Time of Collection	Collected By	OVA#
SPORT 0545-1	West end of tank	Soil	~7'	14 Oct 97 0935	W. Nesbit	Not Taken
SPORT 0545-2	East end of tank	Soil	~7'	14 Oct 97 1000	W. Nesbit	Not Taken
SPORT 0545-3	Center UST excavation	Water	~7' 8"	14 Oct 97 0900	W. Nesbit	Not Taken

* = Depth Below the Surrounding Land Surface

X. SAMPLING METHODOLOGY

Provide a detailed description of the methods used to collect and store (preserve) the samples.

After the removal of UST 643A soil and groundwater samples were taken. Sampling was performed in accordance with SC DHEC R.61-92 Part 280 and SC DHEC UST Assessment Guidelines.

Sample jars were prepared by the testing laboratory. The grab method was utilized to fill the sample containers leaving as little head space as possible and immediately capped. Soil samples were extracted at the tank ends just above the groundwater level. The groundwater sample was taken from the bottom of the excavation.

The samples were marked, logged, and immediately placed in sample coolers packed with ice to maintain an approximate temperature of 4° C. Tools were thoroughly cleaned and decontaminated with organic-free soap and water after each sample.

The samples remained in the custody of SPORTENVDETCHASN until they were transferred to General Engineering Laboratories for analysis as documented in the attached Chain-of-Custody Record.

XI. RECEPTORS

		Yes	No
A.	Are there any lakes, ponds, streams, or wetlands located within 1000 feet of the UST system? If yes, indicate type of receptor, distance, and direction on site map.		X
B.	Are there any public, private, or irrigation water supply wells within 1000 feet of the UST system? If yes, indicate type of well, distance, and direction on site map.		X
C.	Are there any underground structures (e.g., basements) located within 100 feet of the UST system? If yes, indicate the type of structure, distance, and direction on site map.		X
D.	Are there any underground utilities (e.g., telephone, electricity, gas, water, sewer, storm drain) located within 100 feet of the UST system that could potentially come in contact with the contamination? If yes, indicate the type of utility, distance, and direction on the site map. **[Storm drain, electricity]**	X	
E.	Has contaminated soil been identified at a depth of less than 3 feet below land surface in an area that is not capped by asphalt or concrete? If yes, indicate the area of contaminated soil on the site map.		X

Attachment I

SITE MAP

You must supply a scaled site map. It should include all buildings, road names, utilities, tank and pump island locations, sample locations, extent of excavation, and any other pertinent information.

Site Maps 1, 2, 3, and 4
Photographs 1, 2, 3, and 4

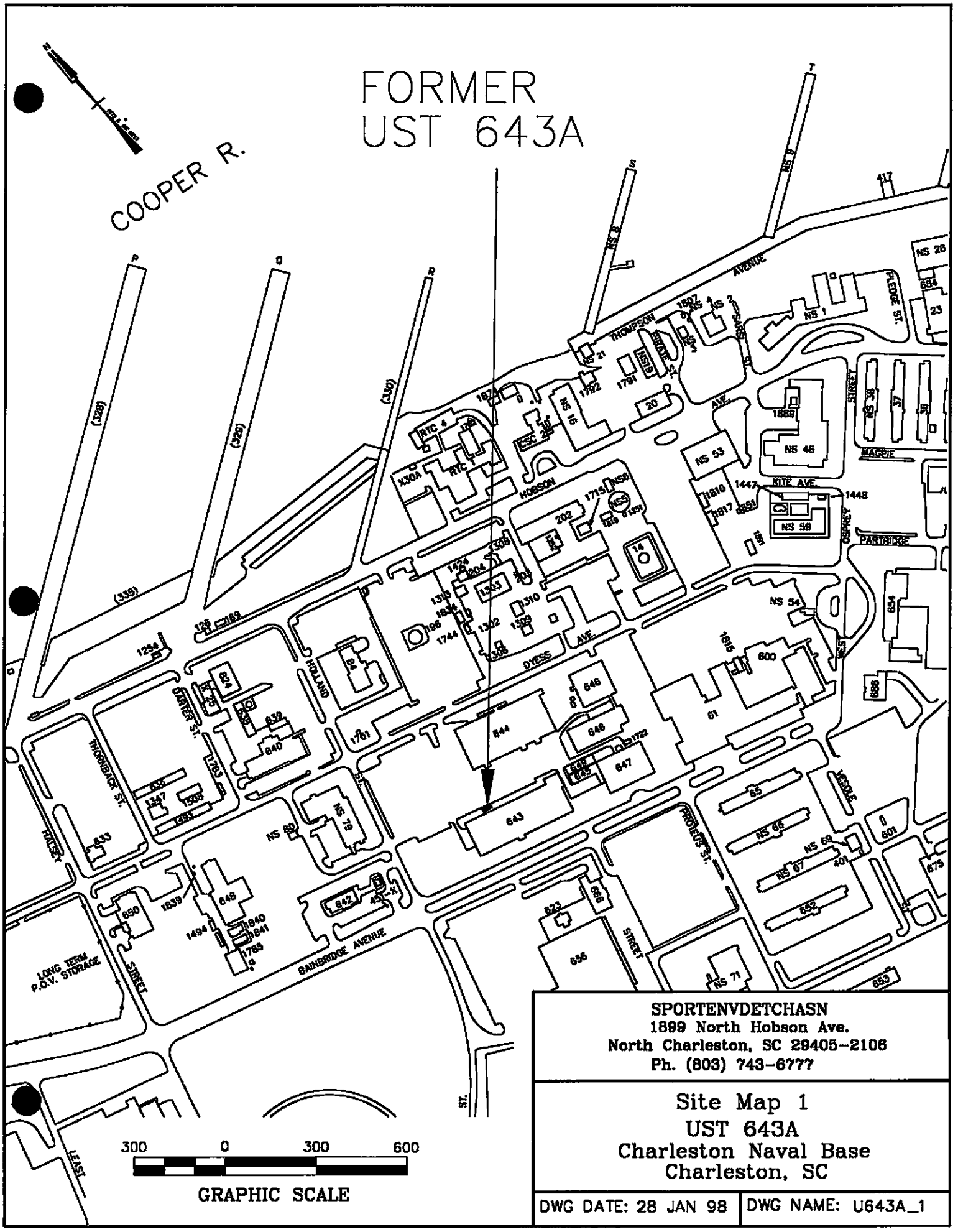

SPORTENVDETCHASN
1899 North Hobson Ave.
North Charleston, SC 29405-2106
Ph. (803) 743-6777

Site Map 1
UST 643A
Charleston Naval Base
Charleston, SC

DWG DATE: 28 JAN 98 | DWG NAME: U643A_1

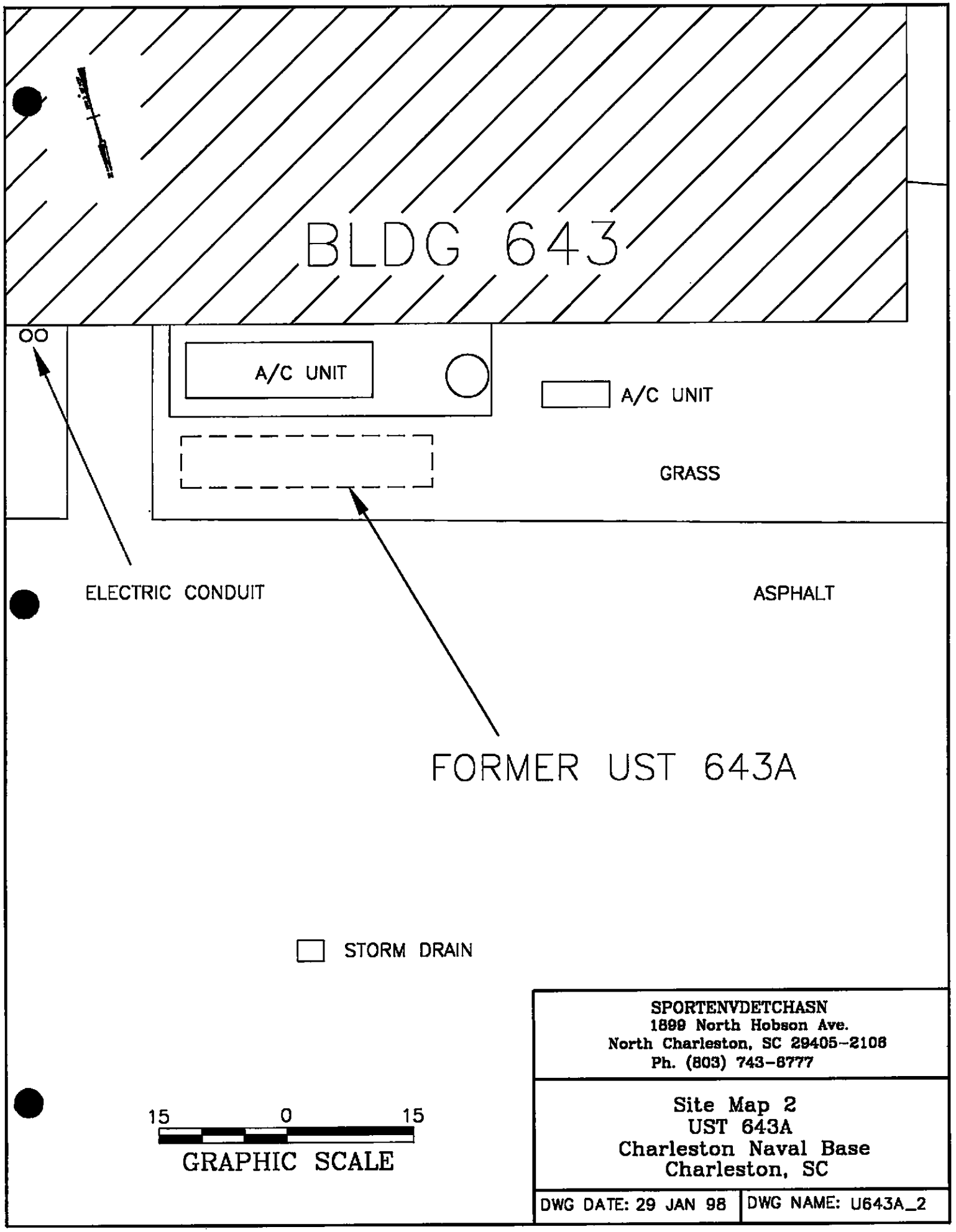
BLDG 643
A/C UNIT
A/C UNIT
GRASS
ELECTRIC CONDUIT
ASPHALT
FORMER UST 643A
STORM DRAIN
15 0 15
GRAPHIC SCALE
SPORTENVDETCHASN
1899 North Hobson Ave.
North Charleston, SC 29405-2106
Ph. (803) 743-6777
Site Map 2
UST 643A
Charleston Naval Base
Charleston, SC
DWG DATE: 29 JAN 98
DWG NAME: U643A_2

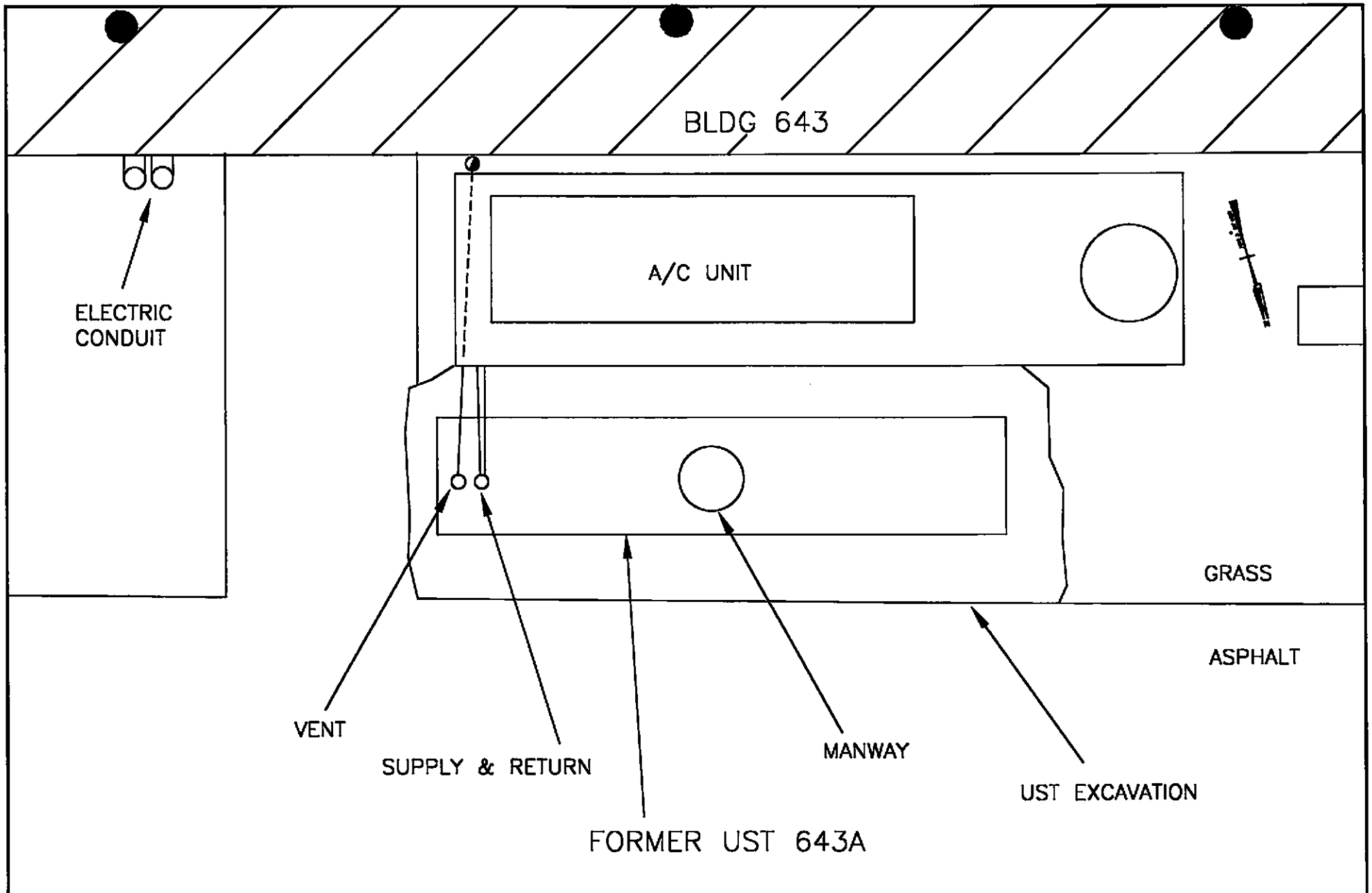

9' 0 9'

GRAPHIC SCALE

SPORTENVDETCHASN
1899 North Hobson Ave.
North Charleston, SC
29405-2106
Ph. (803) 743-6777

Site Map 3
UST 643A
Charleston Naval Base
Charleston, SC

DWG DATE: 2 FEB 98

DWG NAME: U643A_3

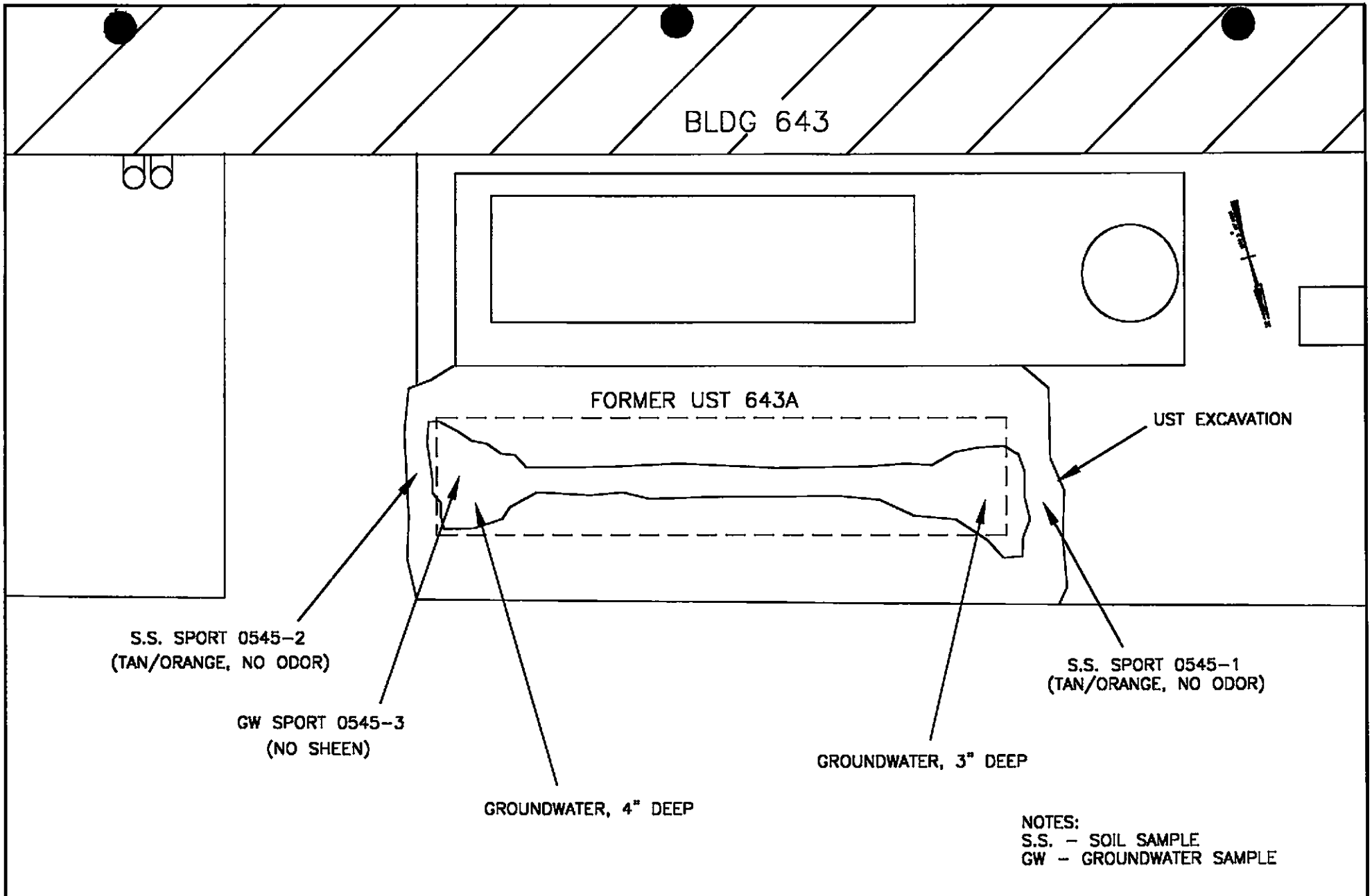

9' 0 9'

GRAPHIC SCALE

SPORTENVDETCHASN
1899 North Hobson Ave.
North Charleston, SC
29405-2106
Ph. (803) 743-6777

Site Map 4
UST 643A
Charleston Naval Base
Charleston, SC

DWG DATE: 2 FEB 98

DWG NAME: U643A_4

Photo 1: UST 643A site prior to tank removal.

Photo 2: UST 643A exposed.

Photo 3: UST 643 being prepared for transport to the cutting pad.

Attachment II

ANALYTICAL RESULTS

You must submit the laboratory report and chain-of-custody form for the samples. These samples must be analyzed by a South Carolina certified laboratory.

Certified Analytical Results
Chain-of-Custody

GENERAL ENGINEERING LABORATORIES

Meeting today's needs with a vision for tomorrow.

Laboratory Certifications

STATE	GEL	EPI
FL	E87156/87294	E87472/87
NC	233	
SC	10120	10582
TN	02934	02934

Client: Supervisor of Ship Building & Conversion
SUPSHIP-Portsmouth Detachment-Env.
1899 North Hobson Ave.
North Charleston, South Carolina 29405-2106
Contact: Mr. Bill Hiers
Project Description: SUPSHIP-Portsmouth Detachment

cc: NPWC00197 Report Date: October 23, 1997

Sample ID	: SPORT0545-1
Lab ID	: 9710325-01
Matrix	: Soil
Date Collected	: 10/14/97
Date Received	: 10/14/97
Priority	: Routine
Collector	: Client

Parameter	Qualifier	Result	DL	RL	Units	DF	Analyst	Date	Time	Batch	M
Volatile Organics											
BTEX - 4 items											
Benzene	U	0.00	1.00	2.00	ug/kg	1.0	JEB	10/20/97	1251	109688	
Ethylbenzene	U	0.00	1.00	2.00	ug/kg	1.0					
Toluene	U	0.00	1.00	2.00	ug/kg	1.0					
Xylenes (TOTAL)	U	0.00	1.00	4.00	ug/kg	1.0					
Naphthalene		2.39	1.00	2.00	ug/kg	1.0					
Extractable Organics											
Polynuclear Aromatic Hydrocarbons - 16 items											
Acenaphthene	U	0.00	164	330	ug/kg	1.0	JCB	10/21/97	1851	109742	2
Acenaphthylene	U	0.00	164	330	ug/kg	1.0					
Anthracene	U	0.00	164	330	ug/kg	1.0					
Benzo(a)anthracene	U	0.00	164	330	ug/kg	1.0					
Benzo(a)pyrene	U	0.00	164	330	ug/kg	1.0					
Benzo(b)fluoranthene	U	0.00	164	330	ug/kg	1.0					
Benzo(ghi)perylene	U	0.00	164	330	ug/kg	1.0					
Benzo(k)fluoranthene	U	0.00	164	330	ug/kg	1.0					
Chrysene	U	0.00	164	330	ug/kg	1.0					
Dibenzo(a,h)anthracene	U	0.00	164	330	ug/kg	1.0					
Fluoranthene	U	0.00	164	330	ug/kg	1.0					
Fluorene	U	0.00	164	330	ug/kg	1.0					
Indeno(1,2,3-c,d)pyrene	U	0.00	164	330	ug/kg	1.0					
Naphthalene	U	0.00	164	330	ug/kg	1.0					
Phenanthrene	U	0.00	164	330	ug/kg	1.0					
Pyrene	U	0.00	164	330	ug/kg	1.0					

The following prep procedures were performed:
GC/MS Base/Neutral Compounds GWL 10/20/97 2330 109742 2

P O Box 30712 • Charleston, SC 29417 • 2040 Savage Road • 29414
(803) 556-8171 • Fax (803) 766-1178

9710325-01

Printed on recycled paper.

GENERAL ENGINEERING LABORATORIES

Meeting today's needs with a vision for tomorrow.

Laboratory Certifications

STATE	GEL	EPI
FL	E87156/87294	E87472/8
NC	233	
SC	10120	10582
TN	02934	02934

Client: Supervisor of Ship Building & Conversion
SUPSHIP-Portsmouth Detachment-Env.
1899 North Hobson Ave.
North Charleston, South Carolina 29405-2106
Contact: Mr. Bill Hiers
Project Description: SUPSHIP-Portsmouth Detachment

cc: NPWC00197 Report Date: October 23, 1997

Sample ID : SPORT0545-1

Surrogate Recovery	Test	Percent%	Acceptable Limits
2-Fluorobiphenyl	M610	67.6	(30.0 - 115.)
Nitrobenzene-d5	M610	69.2	(23.0 - 120.)
p-Terphenyl-d14	M610	98.4	(37.3 - 128.)
Bromofluorobenzene	BTEX-8260	92.6	(53.5 - 154.)
Dibromofluoromethane	BTEX-8260	85.4	(63.4 - 136.)
Toluene-d8	BTEX-8260	93.0	(72.1 - 137.)
Bromofluorobenzene	NAP-8260	92.6	(53.5 - 154.)
Dibromofluoromethane	NAP-8260	85.4	(63.4 - 136.)
Toluene-d8	NAP-8260	93.0	(72.1 - 137.)

M = Method	Method-Description
M 1	EPA 8260
M 2	EPA 8270
M 3	EPA 3550

Notes:
The qualifiers in this report are defined as follows:
ND indicates that the analyte was not detected at a concentration greater than the detection limit.
J indicates presence of analyte at a concentration less than the reporting limit (RL) and greater than the detection limit (DL).
U indicates that the analyte was not detected at a concentration greater than the detection limit.
* indicates that a quality control analyte recovery is outside of specified acceptance criteria.

This data report has been prepared and reviewed
in accordance with General Engineering Laboratories
standard operating procedures. Please direct
any questions to your Project Manager, Karen Blakeney at (803) 769-7386.

Karen Blakeney
Reviewed By

P O Box 30712 • Charleston, SC 29417 • 2040 Savage Road • 29414
(803) 556-8171 • Fax (803) 766-1178

9710325-01

Printed on recycled paper.

GENERAL ENGINEERING LABORATORIES

Meeting today's needs with a vision for tomorrow.

Laboratory Certifications

STATE	GEL	EPI
FL	E87156/87294	E87472/874
NC	233	
SC	10120	10582
TN	02934	02934

Client: Supervisor of Ship Building & Conversion
SUPSHIP-Portsmouth Detachment-Env.
1899 North Hobson Ave.
North Charleston, South Carolina 29405-2106

Contact: Mr. Bill Hiers

Project Description: SUPSHIP-Portsmouth Detachment

cc: NPWC00197 Report Date: October 23, 1997

Sample ID	: SPORT0545-2
Lab ID	: 9710325-02
Matrix	: Soil
Date Collected	: 10/14/97
Date Received	: 10/14/97
Priority	: Routine
Collector	: Client

Parameter	Qualifier	Result	DL	RL	Units	DF	Analyst	Date	Time	Batch	M
Volatile Organics											
BTEX - 4 items											
Benzene	U	0.00	1.00	2.00	ug/kg	1.0	JEB	10/20/97	1320	109688	1
Ethylbenzene	U	0.00	1.00	2.00	ug/kg	1.0					
Toluene	U	0.00	1.00	2.00	ug/kg	1.0					
Xylenes (TOTAL)	U	0.00	1.00	4.00	ug/kg	1.0					
Naphthalene	U	0.00	1.00	2.00	ug/kg	1.0					
Extractable Organics											
Polynuclear Aromatic Hydrocarbons - 16 items											
Acenaphthene	U	0.00	166	331	ug/kg	1.0	JCB	10/21/97	1924	109742	2
Acenaphthylene	U	0.00	166	331	ug/kg	1.0					
Anthracene	U	0.00	166	331	ug/kg	1.0					
Benzo(a)anthracene	U	0.00	166	331	ug/kg	1.0					
Benzo(a)pyrene	U	0.00	166	331	ug/kg	1.0					
Benzo(b)fluoranthene	U	0.00	166	331	ug/kg	1.0					
Benzo(ghi)perylene	U	0.00	166	331	ug/kg	1.0					
Benzo(k)fluoranthene	U	0.00	166	331	ug/kg	1.0					
Chrysene	U	0.00	166	331	ug/kg	1.0					
Dibenzo(a,h)anthracene	U	0.00	166	331	ug/kg	1.0					
Fluoranthene	U	0.00	166	331	ug/kg	1.0					
Fluorene	U	0.00	166	331	ug/kg	1.0					
Indeno(1,2,3-c,d)pyrene	U	0.00	166	331	ug/kg	1.0					
Naphthalene	U	0.00	166	331	ug/kg	1.0					
Phenanthrene	U	0.00	166	331	ug/kg	1.0					
Pyrene	U	0.00	166	331	ug/kg	1.0					

The following prep procedures were performed:
GC/MS Base/Neutral Compounds GWL 10/20/97 2330 109742 3

P O Box 30712 • Charleston, SC 29417 • 2040 Savage Road • 29414
(803) 556-8171 • Fax (803) 766-1178

9710325-02

Printed on recycled paper.

GENERAL ENGINEERING LABORATORIES

Meeting today's needs with a vision for tomorrow.

Laboratory Certifications

STATE	GEL	EPI
FL	E87156/87294	E87472/87
NC	233	
SC	10120	10582
TN	02934	02934

Client: Supervisor of Ship Building & Conversion
SUPSHIP-Portsmouth Detachment-Env.
1899 North Hobson Ave.
North Charleston, South Carolina 29405-2106
Contact: Mr. Bill Hiers
Project Description: SUPSHIP-Portsmouth Detachment

cc: NPWC00197 Report Date: October 23, 1997

Sample ID : SPORT0545-2

Surrogate Recovery	Test	Percent%	Acceptable Limits
2-Fluorobiphenyl	M610	69.7	(30.0 - 115.)
Nitrobenzene-d5	M610	72.6	(23.0 - 120.)
p-Terphenyl-d14	M610	93.6	(37.3 - 128.)
Bromofluorobenzene	BTEX-8260	96.1	(53.5 - 154.)
Dibromofluoromethane	BTEX-8260	89.2	(63.4 - 136.)
Toluene-d8	BTEX-8260	94.0	(72.1 - 137.)
Bromofluorobenzene	NAP-8260	96.1	(53.5 - 154.)
Dibromofluoromethane	NAP-8260	89.2	(63.4 - 136.)
Toluene-d8	NAP-8260	94.0	(72.1 - 137.)

M = Method	Method-Description
M 1	EPA 8260
M 2	EPA 8270
M 3	EPA 3550

Notes:
The qualifiers in this report are defined as follows:
ND indicates that the analyte was not detected at a concentration greater than the detection limit.
J indicates presence of analyte at a concentration less than the reporting limit (RL) and greater than the detection limit (DL).
U indicates that the analyte was not detected at a concentration greater than the detection limit.
* indicates that a quality control analyte recovery is outside of specified acceptance criteria.

This data report has been prepared and reviewed in accordance with General Engineering Laboratories standard operating procedures. Please direct any questions to your Project Manager, Karen Blakeney at (803) 769-7386.

Karen Blakeney
Reviewed By

P O Box 30712 • Charleston, SC 29417 • 2040 Savage Road • 29414
(803) 556-8171 • Fax (803) 766-1178

9710325-02

Printed on recycled paper

GENERAL ENGINEERING LABORATORIES

Meeting today's needs with a vision for tomorrow.

Laboratory Certifications

STATE	GEL	EPI
FL	E87156/87294	E87472/8
NC	233	
SC	10120	10582
TN	02934	02934

Client: Supervisor of Ship Building & Conversion
SUPSHIP-Portsmouth Detachment-Env.
1899 North Hobson Ave.
North Charleston, South Carolina 29405-2106
Contact: Mr. Bill Hiers
Project Description: SUPSHIP-Portsmouth Detachment

cc: NPWC00197 Report Date: October 23, 1997

Sample ID	: SPORT0545-3
Lab ID	: 9710325-03
Matrix	: GroundH2O
Date Collected	: 10/14/97
Date Received	: 10/14/97
Priority	: Routine
Collector	: Client

Parameter	Qualifier	Result	DL	RL	Units	DF	Analyst	Date	Time	Batch	M
Volatile Organics											
BTEX - 4 items											
Benzene	U	0.00	1.00	2.00	ug/l	1.0	JAS	10/17/97	1512	109071	
Ethylbenzene	U	0.00	1.00	2.00	ug/l	1.0					
Toluene	U	0.186	1.00	2.00	ug/l	1.0					
Xylenes (TOTAL)	U	0.00	1.00	4.00	ug/l	1.0					
Naphthalene	U	0.00	1.00	2.00	ug/l	1.0					
Extractable Organics											
Polynuclear Aromatic Hydrocarbons - 16 items											
Acenaphthene	U	0.00	5.20	10.4	ug/l	1.0	JCB	10/17/97	1653	109498	2
Acenaphthylene	U	0.00	5.20	10.4	ug/l	1.0					
Anthracene	U	0.00	5.20	10.4	ug/l	1.0					
Benzo(a)anthracene	U	0.00	5.20	10.4	ug/l	1.0					
Benzo(a)pyrene	U	0.00	5.20	10.4	ug/l	1.0					
Benzo(b)fluoranthene	U	0.00	5.20	10.4	ug/l	1.0					
Benzo(ghi)perylene	U	0.00	5.20	10.4	ug/l	1.0					
Benzo(k)fluoranthene	U	0.00	5.20	10.4	ug/l	1.0					
Chrysene	U	0.00	5.20	10.4	ug/l	1.0					
Dibenzo(a,h)anthracene	U	0.00	5.20	10.4	ug/l	1.0					
Fluoranthene	J	6.78	5.20	10.4	ug/l	1.0					
Fluorene	U	0.00	5.20	10.4	ug/l	1.0					
Indeno(1,2,3-c,d)pyrene	U	0.00	5.20	10.4	ug/l	1.0					
Naphthalene	U	0.00	5.20	10.4	ug/l	1.0					
Phenanthrene	U	0.00	5.20	10.4	ug/l	1.0					
Pyrene	U	0.00	5.20	10.4	ug/l	1.0					

The following prep procedures were performed:
GC/MS Base/Neutral Compounds TSD 10/15/97 1600 109498

P O Box 30712 • Charleston, SC 29417 • 2040 Savage Road • 29414
(803) 556-8171 • Fax (803) 766-1178

9710325-03

Printed on recycled paper.

GENERAL ENGINEERING LABORATORIES

Meeting today's needs with a vision for tomorrow.

Laboratory Certifications

STATE	GEL	EPI
FL	E87156/87294	E87472/874
NC	233	
SC	10120	10582
TN	02934	02934

Client: Supervisor of Ship Building & Conversion
SUPSHIP-Portsmouth Detachment-Env.
1899 North Hobson Ave.
North Charleston, South Carolina 29405-2106
Contact: Mr. Bill Hiers
Project Description: SUPSHIP-Portsmouth Detachment

cc: NPWC00197 Report Date: October 23, 1997

Sample ID : SPORT0545-3

Surrogate Recovery	Test	Percent%	Acceptable Limits
2-Fluorobiphenyl	M610	70.0	(43.0 - 108.)
Nitrobenzene-d5	M610	71.0	(35.0 - 111.)
p-Terphenyl-d14	M610	115.	(33.0 - 125.)
Bromofluorobenzene	BTEX-8260	93.1	(73.8 - 128.)
Dibromofluoromethane	BTEX-8260	88.5	(63.9 - 139.)
Toluene-d8	BTEX-8260	97.9	(77.1 - 121.)
Bromofluorobenzene	NAP-8260	93.1	(73.8 - 128.)
Dibromofluoromethane	NAP-8260	88.5	(63.9 - 139.)
Toluene-d8	NAP-8260	97.9	(77.1 - 121.)

M = Method	Method-Description
M 1	EPA 8260
M 2	EPA 8270
M 3	EPA 3510

Notes:
The qualifiers in this report are defined as follows:
ND indicates that the analyte was not detected at a concentration greater than the detection limit.
J indicates presence of analyte at a concentration less than the reporting limit (RL) and greater than the detection limit (DL).
U indicates that the analyte was not detected at a concentration greater than the detection limit.
* indicates that a quality control analyte recovery is outside of specified acceptance criteria.

This data report has been prepared and reviewed
in accordance with General Engineering Laboratories
standard operating procedures. Please direct
any questions to your Project Manager, Karen Blakeney at (803) 769-7386.

Karen Blakeney
Reviewed By

P O Box 30712 • Charleston, SC 29417 • 2040 Savage Road • 29414
(803) 556-8171 • Fax (803) 766-1178

9710325-03

Printed on recycled paper.

GENERAL ENGINEERING LABORATORIES

Meeting today's needs with a vision for tomorrow.

Laboratory Certifications

STATE	GEL	EPI
FL	E87156/87294	E87472/8
NC	233	
SC	10120	10582
TN	02934	02934

Client: Supervisor of Ship Building & Conversion
SUPSHIP-Portsmouth Detachment-Env.
1899 North Hobson Ave.
North Charleston, South Carolina 29405-2106
Contact: Mr. Bill Hiers
Project Description: SUPSHIP-Portsmouth Detachment

cc: NPWC00197 Report Date: October 23, 1997

Sample ID	: SPORT0545-4
Lab ID	: 9710325-04
Matrix	: Soil
Date Collected	: 10/14/97
Date Received	: 10/14/97
Priority	: Routine
Collector	: Client

Parameter	Qualifier	Result	DL	RL	Units	DF	Analyst	Date	Time	Batch	M
Volatile Organics											
BTEX - 4 items											
Benzene	U	0.00	1.00	2.00	ug/kg	1.0	JEB	10/20/97	1412	109688	
Ethylbenzene	U	0.00	1.00	2.00	ug/kg	1.0					
Toluene	U	0.00	1.00	2.00	ug/kg	1.0					
Xylenes (TOTAL)	U	0.00	1.00	4.00	ug/kg	1.0					
Naphthalene	U	0.00	1.00	2.00	ug/kg	1.0					

Surrogate Recovery	Test	Percent%	Acceptable Limits
Bromofluorobenzene	BTEX-8260	87.6	(53.5 - 154.)
Dibromofluoromethane	BTEX-8260	80.6	(63.4 - 136.)
Toluene-d8	BTEX-8260	89.7	(72.1 - 137.)
Bromofluorobenzene	NAP-8260	87.6	(53.5 - 154.)
Dibromofluoromethane	NAP-8260	80.6	(63.4 - 136.)
Toluene-d8	NAP-8260	89.7	(72.1 - 137.)

M = Method	Method-Description
M 1	EPA 8260

P O Box 30712 • Charleston, SC 29417 • 2040 Savage Road • 29414
(803) 556-8171 • Fax (803) 766-1178

9710325-04

Printed on recycled paper.

GENERAL ENGINEERING LABORATORIES

Meeting today's needs with a vision for tomorrow.

Laboratory Certifications

STATE	GEL	EPI
FL	E87156/87294	E87472/
NC	233	
SC	10120	10582
TN	02934	02934

Client:	Supervisor of Ship Building & Conversion SUPSHIP-Portsmouth Detachment-Env. 1899 North Hobson Ave. North Charleston, South Carolina 29405-2106
Contact:	Mr. Bill Hiers
Project Description:	SUPSHIP-Portsmouth Detachment

cc: NPWC00197 Report Date: October 23, 1997

Sample ID : SPORT0545-4

M = Method	Method-Description

Notes:
The qualifiers in this report are defined as follows:
ND indicates that the analyte was not detected at a concentration greater than the detection limit.
J indicates presence of analyte at a concentration less than the reporting limit (RL) and greater than the detection limit (DL).
U indicates that the analyte was not detected at a concentration greater than the detection limit.
* indicates that a quality control analyte recovery is outside of specified acceptance criteria.

This data report has been prepared and reviewed in accordance with General Engineering Laboratories standard operating procedures. Please direct any questions to your Project Manager, Karen Blakeney at (803) 769-7386.

Karen Blakeney
Reviewed By

P O Box 30712 • Charleston, SC 29417 • 2040 Savage Road • 29414
(803) 556-8171 • Fax (803) 766-1178

9710325-04

Printed on recycled paper.

GENERAL ENGINEERING LABORATORIES

Meeting today's needs with a vision for tomorrow.

Laboratory Certifications

STATE	GEL	EPI
FL	E87156/87294	E87472/8
NC	233	
SC	10120	10582
TN	02934	02934

Client: Supervisor of Ship Building & Conversion
SUPSHIP-Portsmouth Detachment-Env.
1899 North Hobson Ave.
North Charleston, South Carolina 29405-2106

Contact: Mr. Bill Hiers

Project Description: SUPSHIP-Portsmouth Detachment

cc: NPWC00197 Report Date: October 23, 1997

Sample ID	: SPORT0545-5
Lab ID	: 9710325-05
Matrix	: GroundH2O
Date Collected	: 10/14/97
Date Received	: 10/14/97
Priority	: Routine
Collector	: Client

Parameter	Qualifier	Result	DL	RL	Units	DF	Analyst	Date	Time	Batch	M
Volatile Organics											
BTEX - 4 items											
Benzene	U	0.00	1.00	2.00	ug/l	1.0	JAS	10/17/97	1539	109071	
Ethylbenzene	U	0.00	1.00	2.00	ug/l	1.0					
Toluene	U	0.435	1.00	2.00	ug/l	1.0					
Xylenes (TOTAL)	U	0.00	1.00	4.00	ug/l	1.0					
Naphthalene	U	0.00	1.00	2.00	ug/l	1.0					

Surrogate Recovery	Test	Percent%	Acceptable Limits
Bromofluorobenzene	BTEX-8260	92.3	(73.8 - 128.)
Dibromofluoromethane	BTEX-8260	86.1	(63.9 - 139.)
Toluene-d8	BTEX-8260	96.7	(77.1 - 121.)
Bromofluorobenzene	NAP-8260	92.3	(73.8 - 128.)
Dibromofluoromethane	NAP-8260	86.1	(63.9 - 139.)
Toluene-d8	NAP-8260	96.7	(77.1 - 121.)

M = Method	Method-Description
M 1	EPA 8260

P O Box 30712 • Charleston, SC 29417 • 2040 Savage Road • 29414

(803) 556-8171 • Fax (803) 766-1178

9710325-05

Printed on recycled paper.

GENERAL ENGINEERING LABORATORIES

Meeting today's needs with a vision for tomorrow.

Laboratory Certifications

STATE	GEL	EPI
FL	E87156/87294	E87472/8
NC	233	
SC	10120	10582
TN	02934	02934

Client:	Supervisor of Ship Building & Conversion SUPSHIP-Portsmouth Detachment-Env. 1899 North Hobson Ave. North Charleston, South Carolina 29405-2106
Contact:	Mr. Bill Hiers
Project Description:	SUPSHIP-Portsmouth Detachment

cc: NPWC00197 Report Date: October 23, 1997

Sample ID : SPORT0545-5

M = Method	Method-Description

Notes:
The qualifiers in this report are defined as follows:
ND indicates that the analyte was not detected at a concentration greater than the detection limit.
J indicates presence of analyte at a concentration less than the reporting limit (RL) and greater than the detection limit (DL).
U indicates that the analyte was not detected at a concentration greater than the detection limit.
* indicates that a quality control analyte recovery is outside of specified acceptance criteria.

This data report has been prepared and reviewed in accordance with General Engineering Laboratories standard operating procedures. Please direct any questions to your Project Manager, Karen Blakeney at (803) 769-7386.

Karen Blakeney
Reviewed By

P O Box 30712 • Charleston, SC 29417 • 2040 Savage Road • 29414
(803) 556-8171 • Fax (803) 766-1178

9710325-05

Printed on recycled paper

M2WOC 00197

General Engineering Laboratories, Inc.
2040 Savage Road
Charleston, South Carolina 29407
P.O. Box 30712
Charleston, South Carolina 29417
(803) 556-8171

CHAIN OF CUSTODY RECORD

9710325

Page 1 of 1

Client Name/Facility Name: SPORTENV DET CHASN

Collected by/Company: SPORTENV DET CHASN

Use F or P in the boxes to indicate whether sample was filtered and/or preserved

CCL 29418

SAMPLE ANALYSIS REQUIRED (x) - use remarks area to specify specific compounds or methods

	SAMPLE ID	DATE	TIME	WELL	SOIL	COMP	GRAB	# OF CONTAINERS	pH, conductivity	TOC/DOC	TOX	Chloride, Fluoride, Sulfide	Nitrite/Nitrate	VOC - Specify Method required	METALS - specify	Pesticide	Herbicide	Total Phenol	Acid Extractables	B/N Extractables	PCB's	Cyanide	Coliform - specify type	Btex/NAP	PAH	Remarks	
01	SPORTØ545-1	10-14-97	0935		X		X	2																X	X	UST 643A-1 Soil	.1
02	SPORTØ545-2	10-14-97	1000		X		X	2																X	X	UST 643A-2 Soil	.1
03	SPORTØ545-3	10-14-97	0900				X	5																X	X	UST 643A-3 Water Soil	.2
04	SPORTØ545-4	10-14-97	0840		X		X	1																X		UST 643A-4 TRIP Water	.3
05	SPORTØ545-5	10-14-97	0840				X	3																X		UST 643A-5 TRIP	.4

Relinquished by:	Date:	Time:	Received by:	Relinquished by:	Date:	Time:	Received by:
W. R. Hiers, Jr.	10-14-97	1304	W. R. Hiers, Jr.	W. R. Hiers, Jr.	10/14/97	1541	Catherine Hall
Catherine Hall	10/14/97	1520	Karen Blakney				

Remarks:

White = sample collector Yellow = file Pink = with report

Attachment III

Certificate of Disposal (tank)

UST Certificate of Disposal

CONTRACTOR

Supervisor of Shipbuilding, Conversion and Repair, USN
Portsmouth, VA
Environmental Detachment Charleston
1899 North Hobson Avenue
North Charleston 29405-2106

Telephone (803) 743-6482

TANK ID & LOCATION

UST 643A; Charleston Naval Base, Bldg 643, Bainbridge Ave., N. Charleston, SC

DISPOSAL LOCATION

Bldg. 1601 Tank Cleaning
& Disposal Area
Charleston Naval Complex

TYPE OF TANK	SIZE (GAL)
Fuel oil	6,000 gal.

CLEANING/DISPOSAL METHOD

The tank was cut open on both ends, cleaned with a steam cleaner, cut into sections, and disposed of as recyclable scrap metal.

DISPOSAL CERTIFICATION

I certify that the above tank has been properly cleaned and disposed of as recyclable scrap metal.

Sidney C. Ladson — 3-6-98 (Date)