N62604.AR.001577
NCBC GULFPORT
5090.3a

FREE PHASE PRODUCT ASSESSMENT INTERIM ACTION DESIGN WORK PLAN FOR SITE 6 NCBC GULFPORT MS

10/1/1993

ABB ENVIRONMENTAL

NAVAL CONSTRUCTION BATTALION CENTER
GULFPORT, MISSISSIPPI

SITE 6 - FIRE FIGHTING TRAINING AREA

FREE-PHASE PRODUCT ASSESSMENT/
INTERIM ACTION DESIGN WORK PLAN

CTO NO. 096

Contract No. N62467-89-D-03417

Prepared by:

ABB Environmental Services, Inc.
1400 Centerpoint Blvd, Suite 158
Knoxville, TN 37932-1968

Prepared for:

Department of the Navy, Southern Division
Naval Facilities Engineering Command
2155 Eagle Drive
North Charleston, South Carolina 29418

Kenneth Barnes, Engineer-in-Charge

October 1993

FOREWORD

In accordance with the Comprehensive Environmental Response, Compensation, and Liability Act (CERCLA) of 1980, as amended by the 1986 Superfund Amendments and Reauthorization Act (SARA), the 1976 Resource Conservation and Recovery Act (RCRA), as augmented by the 1984 Hazardous and Solid Waste Amendments (HSWA), and as directed in Executive Order 12580 of January 1987, the Department of Defense (DOD) conducts an Installation Restoration (IR) Program for evaluating and remediating problems related to releases and disposal of toxic and hazardous materials at DOD facilities.

The Naval Assessment and Control of Installation Pollutants (NACIP) program was developed by the Navy to implement the Installation Restoration (IR) Program for all Naval and Marine Corps facilities. The NACIP program was originally conducted in three phases: (1) Phase I, Initial Assessment Study, (2) Phase II, Confirmation Study (including a Verification Step and a Characterization Step), and (3) Phase III, Planning and Implementation of Remedial Measures. This three-phase IR Program was modified and updated in 1992 to be congruent with CERCLA/SARA and RCRA/HSWA driven DOD IR program.

The updated nomenclature for the RCRA/SARA process is as follows:

- Preliminary Assessment and Site Inspection
- Remedial Investigation
- Feasibility Study
- Planning and Implementation of Remedial Design

Southern Division Naval Facilities Engineering Command (SOUTHNAVFACENGCOM) has the responsibility for implementation of the Navy and Marine Corps IRP Program in the southeastern and midwestern United States. Questions regarding this report should be addressed to the NCBC Gulfport Environmental Coordinator, Mr. Gordon Crane (601) 871-2485.

EXECUTIVE SUMMARY

ABB Environmental Services, Inc. (ABB-ES), under contract to Southern Division Naval Facilities Engineering Command (SOUTHNAVFACENGCOM), has prepared this Free-Phase Product Assessment (F-PPA)/Interim Action Design (IAD) Work Plan for Site 6, Fire-Fighting Training Area, located at the Naval Construction Battalion Center (NCBC) Gulfport, Mississippi. This F-PPA/IAD Work Plan was prepared under the Comprehensive Long-Term Environmental Action Navy (CLEAN) Contract No. N62467-89-D-0317.

The F-PPA/IAD Work Plan has been developed to implement the collection of groundwater and soil samples at Site 6 in order to characterize the presence of free product found to exist during a previous site visit. This Work Plan will address the following: determining the potential amount of the free product, establishing the horizontal and vertical boundaries of the free product plume, and developing plans for interim abatement while full-scale remedial design efforts are made.

The Work Plan provides a record of the site history and background for Site 6, summarizes regional environmental factors and describes the planned field sampling activities including the specific technical approach and investigative methodology, the project organization, and project management plan for work to be performed. A site-specific Health and Safety Plan (HASP) is also included.

The objectives of the investigation are to characterize the nature and extent of the free-product contamination detected at Site 6, and provide interim remedial actions. The project will proceed in two phases. Phase I will address the F-PPA. Phase II will address Free-phase Product and IAD. The F-PPA includes characterization and extent of the free-phase product and the rate of migration. The F-PP Removal/IAD includes interim action selection, design for removal of free-phase product, and community relations activities.

To achieve the objectives of the F-PPA/IAD Work Plan, the following investigative techniques are planned: a Hydropunch® II investigation; recovery and monitoring well drilling, installation and development; soil, groundwater and free-product sampling and analysis; well performance testing; and bail-down and product recovery pilot-scale testing. Sample analyses will include both field screening techniques and off-site laboratory analysis.

Chemical and physical data collected during the investigation will be used to characterize the contamination at Site 6. These data will be evaluated to determine the distribution of contaminants, transport mechanisms, and potential fate of contaminant migration. Final data interpretation will be used to support recommendations for long-term remedial actions, if required.

ACKNOWLEDGEMENTS

In preparing this report, the personnel at ABB-ES commend the support, assistance, and cooperation provided by the personnel at NCBC and SOUTHNAVFACENGCOM. In particular, we acknowledge the outstanding effort, dedication, and professionalism provided by the following people in the preparation of this report.

Name	Title	Position	Location
Kenneth Barnes	Environmental Engineer	Engineer-in-Charge	SOUTHNAVFACENGCOM
Gordon Crane	Environmental Coordinator	Environmental Coordinator	NCBC

TABLE OF CONTENTS

Section	Description	Page No.
DISTRIBUTION		i
TITLE PAGE		ii
FOREWORD		iii
EXECUTIVE SUMMARY		iv
ACKNOWLEDGEMENTS		v
LIST OF FIGURES		ix
LIST OF TABLES		x
LIST OF ACRONYMS		xi
1.0	INTRODUCTION	1-1
1.1	FACILITY INFORMATION	1-1
1.1.1	Location	1-1
1.1.2	Background	1-1
1.2	SITE DESCRIPTION	1-3
1.3	PROJECT PURPOSE AND OBJECTIVE	1-3
1.4	OVERVIEW OF WORK PLAN	1-3
2.0	TECHNICAL APPROACH	2-1
2.1	FREE-PHASE PRODUCT RECOVERY	2-1
2.2	TREATMENT	2-1
2.3	CONCEPTUAL MODEL	2-1
2.4	PERFORMANCE STANDARDS	2-3
2.5	CRITERIA/SPECIFIC GOALS	2-4
3.0	FREE-PHASE PRODUCT ASSESSMENT	3-1
3.1	FIELD INVESTIGATION	3-1
3.1.1	Scope of Sampling Activities	3-1
3.1.2	Preliminary Activities	3-1
3.1.3	Hydropunch® II Investigation	3-1
3.1.4	Drilling and Soil Sampling	3-4
3.1.5	Well Installation	3-4
3.1.5.1	Monitoring Wells	3-4
3.1.5.2	Recovery Well	3-4
3.1.6	Sampling of Wells	3-9
3.1.6.1	Free-Phase Product Samples	3-9
3.1.6.2	Groundwater Samples	3-10
3.1.7	Aquifer Characterization	3-10
3.1.8	Water Elevation Survey	3-10
3.1.9	Containment and Disposal of Wastes	3-11
3.1.10	Field Decontamination Procedures	3-11
3.2	FREE-PHASE PRODUCT REPORT	3-12
4.0	ANALYTICAL PROGRAM	4-1
4.1	LABORATORY ANALYSIS	4-1
4.2	DATA QUALITY OBJECTIVES	4-1
4.2.1	General Description	4-5
4.3	DATA ASSESSMENT	4-7
4.3.1	Laboratory Data Validation	4-7

TABLE OF CONTENTS (Continued)

Section	Description	Page No.
	4.3.1.1 Precision, Accuracy, Reproducability, Completeness, and Comparability (PARCC) Parameters for Level I and II DQOs	4-8
	4.3.2 Data Management	4-8
	4.3.3 Data Evaluation And Interpretation	4-9
	4.3.3.1 Sort Data By Medium	4-9
	4.3.3.2 Evaluation of Data Quality	4-9
7.0	PROJECT MANAGEMENT PLAN	7-1
7.1	PROJECT TEAM - NAVY	7-1
	7.1.1 NCBC Gulfport Environmental Coordinator	7-1
	7.1.2 Southern Division Naval Facilities Engineering Command	7-1
	7.1.3 SOUTHNAVFACENGCOM Engineer-In-Charge (EIC)	7-1
	7.1.4 U.S. Geological Survey	7-1
7.2	PROJECT TEAM - ABB-ES	7-1
	7.2.1 Program Manager	7-1
	7.2.2 Task Order Manager (TOM)	7-1
	7.2.3 Technical Lead	7-1
	7.2.4 Lead Engineer	7-3
	7.2.5 Field Operations Leader	7-3
	7.2.6 Quality Assurance Manager	7-3
	7.2.7 Community Relations	7-3
7.3	COMMUNICATIONS	7-3
7.4	REPORTING	7-3
	7.4.1 Monthly Progress Reports	7-3
	7.4.2 Additional Reporting Requirements	7-3
	7.4.3 Technical Bulletins	7-4
8.0	SITE HEALTH AND SAFETY PLAN	8-1
8.1	DESCRIPTION	8-1
	8.1.1 Project Personnel	8-1
	8.1.1.1 Project Manager	8-1
	8.1.1.2 General Site Supervisor	8-1
	8.1.1.3 Health and Safety Officer (HSO)	8-1
	8.1.2 Training	8-1
	8.1.3 Medical Surveillance	8-1
	8.1.4 Facility Characterization	8-2
	8.1.4.1 Facility Information	8-2
	8.1.4.2 Site History and Layout	8-2
	8.1.5 Scope of Work	8-2
	8.1.5.1 Hazardous Substances	8-2
	8.1.6 Site Risks	8-2
	8.1.6.1 Health Hazards	8-6
	8.1.6.2 Safety Hazards	8-6
	8.1.7 Conclusions	8-7
	8.1.8 Protective Measures	8-7
	8.1.8.1 Engineering Controls	8-7
	8.1.8.2 Levels of Protection	8-7
	8.1.9 Monitoring	8-7

TABLE OF CONTENTS (Continued)

Section	Description	Page No.
	8.1.9.1 Air Sampling	8-7
	8.1.9.2 Action Levels for Air Monitoring	8-8
	8.1.9.3 Personal Monitoring	8-8
	8.1.10 Zonation	8-8
	8.1.11 Communications	8-8
	8.1.12 Work Practices	8-8
	8.1.13 Decontamination and Disposal	8-9
	8.1.13.1 Personnel Decontamination	8-9
	8.1.13.2 Small Equipment Decontamination	8-9
	8.1.13.3 Heavy Equipment Decontamination	8-9
	8.1.13.4 Collection and Disposal of Decontamination Products	8-9
8.2	EMERGENCY CONTINGENCY PLAN	8-9
	8.2.1 Personnel Roles, Lines of Authority, and Communication	8-9
	8.2.2 Evacuation	8-10
	8.2.3 Emergency Medical Treatment and First Aid	8-10
	8.2.4 Administration	8-10
	8.2.4.1 Personnel Authorized Downrange	8-10
	8.2.5 HASP Approvals	8-11
	8.2.6 Field Team Review	8-11
	8.2.7 Medical Data Sheet	8-12
	8.2.8 Emergency Telephone Numbers	8-13
	8.2.9 Routes to Emergency Medical Facilities	8-13
OSHA Poster		8-16
REFERENCES		REF-1

LIST OF FIGURES

Figure	Description	Page No.
Figure 1-1	Naval Construction Battalion Center Location Map	1-2
Figure 1-2	Site Location Map	1-4
Figure 2-1	Hydrogeologic Conceptual Model	2-2
Figure 3-1	Hydropunch® II Sampling Grid	3-2
Figure 3-2	Hydropunch® II Detail	3-3
Figure 3-3	Proposed Recovery Well Location	3-6
Figure 3-4	Typical Monitoring Well	3-7
Figure 3-5	6-inch Stainless-Steel Recovery Well	3-8
Figure 7-1	Project Organization	7-2
Figure 8-1	Site 6, Fire Fighting Training Area	8-3
Figure 8-2	Directions to Gulfport Memorial Hospital	8-15

LIST OF TABLES

Table	Description	Page No.
Table 3-1	Free Phase Product Analysis and Analytical Requirements Site 6 - Former Fire Fighting Training Area, NCBC Gulfport	3-5
Table 4-1	Sample Analyses for Collected Soil and Groundwater Samples from Site 6, NCBC, Gulfport, Mississippi	4-2
Table 4-2	Free Phase Product Analysis and Analytical Requirements Site 6 - Former Fire Fighting Training Area, NCBC Gulfport	4-3
Table 8-1	Contaminants of Concern	8-4

LIST OF ACRONYMS

ABB-ES	ABB Environmental Services, Inc.
ARARs	Applicable or Relevant and Appropriate Regulations
ASCII	American Standard Code for Information Interchange
BEC	Base Environmental Coordinator
C	Celsius
CAS	Chemical Abstract Service
CERCLA	Comprehensive Environmental Response, Compensation, and Liability
CFR	Code of Federal Regulations
CLEAN	Comprehensive Long-Term Environmental Action Navy
CLP	Contract Laboratory Program
CLP-RAS	Contract Laboratory Program-Routine Analytical Services
CR	Community Relations
CTO	Contract Task Order
DL	detection limit
DOD	Department of Defense
DOT	Department of Transportation
DQO	Data Quality Objectives
EC	Environmental Coordinator
EIC	Engineer In Charge
FICCDC	Federal Interagency Coordinating Committee for Digital Cartography
FID	Flame Ionization Detector
FFI	focused field investigation
FOL	Field Operations Leader
F-PP	Free-Phase Product
F-PPA	Free-Phase Product Assessment
GC	Gas Chromatograph
GS/MS	gas chromatograph/mass spectroscopy
HASP	Health and Safety Plan
HSO	Health and Safety Officer
HSM	Health and Safety Manager
HSS	Health and Safety Supervisor
HSWA	Hazardous and Solid Waste Amendments
IAD	Interim Action Design
ID	inner diameter
IDW	Investigation-Derived Waste
IR	infrared spectroscopy
LEL	lower explosive limit
MCLs	Maximum Contaminant Levels
MPC	maximum possible concentration
msl	mean sea level

LIST OF ACRONYMS (Continued)

MS	mass spectrometry
MTR	Monthly Technical Report
NACIP	Naval Assessment and Control of Installation Pollutants
NBS	National Bureau of Standards
NCBC	Naval Construction Battalion Center
NCF	Naval Construction Force
NCR	naval construction regiment
NEESA	Naval Energy and Environmental Support Activity
NMCB	Naval Mobile Construction Battalions
OD	outer diameter
O&M	Operations and Management
OSHA	Occupational Safety and Health Administration
OVA	Organic Vapor Analyzer
PARCC	Precision, Accuracy, Representativeness, Completeness, and Comparability
PCB	Polychlorinated Biphenyls
POTW	Public Owned Treatment Works
PPE	Personal Protective Equipment
ppm	parts per million
PVC	Polyvinyl Chloride
QA/QC	Quality Assurance/Quality Control
QAP	Quality Assurance Plan
RCRA	Resource Conservation and Recovery Act
RI/FS	Remedial Investigation/Feasibility Study
SARA	Superfund Amendments and Reauthorization Act
SOPs	Standard Operating Procedures
SOUTHNAVFACENGCOM	Southern Division Naval Facilities Engineering Command
SOW	statement of work
SVOC	Semivolatile Organic Compound
TAL	target analyte list
TCL	target compound list
TCLP	Toxicity Characteristic Leading Procedure
TFMR	Technical and Financial Monthly Reports
TIC	tentatively identified compounds
TOC	total organic carbon
TOM	Task Order Manager
TPH	total petroleum hydrocarbons
USEPA	U.S. Environmental Protection Agency
USGS	U.S. Geological Survey
VOC	Volatile Organic Compound

1.0 INTRODUCTION

ABB Environmental Services, Inc (ABB-ES) was contracted by Southern Division Naval Facilities Engineering Command (SOUTHNAVFACENGCOM) to conduct a Free-Phase Product Assessment (F-PPA)/Interim Action Design (IAD) for Site 6, Fire-Fighting Training Area, located at the Naval Construction Battalion Center (NCBC), Gulfport, Mississippi. This Work Plan was prepared under the Comprehensive Long-term Environmental Action Navy (CLEAN) Contract No. N62467-89-D-0317.

The F-PPA/IAD Work Plan has been designed for the collection of groundwater and soil samples at Site 6 in order to characterize the presence of free product found to exist during a previous ABB-ES site visit. This Work Plan will address determining the potential amount of the product, establishing the horizontal and vertical boundaries of the contamination, and developing plans for interim abatement while full-scale remedial investigation design efforts are scheduled for implementation.

1.1 FACILITY INFORMATION.

1.1.1 Location NCBC Gulfport is located in the City of Gulfport, in Harrison County, in the southeastern corner of the State of Mississippi (Figure 1-1). The base occupies 1,100 acres in the western part of Gulfport, immediately south of 28th Street. Biloxi, the county's largest city, is located seven miles to the east of Gulfport, and Pass Christian is located seven miles to the west. The primary purpose of NCBC Gulfport is the support of four battalions of the Naval Construction Force (NCF) and the storage and maintenance of pre-positioned War Reserve Material Stock. NCF support consists of both homeport services and deployed support. Additional missions entail tenant support and services to other activities in the region (Envirodyne, 1985). Approximately 4,000 military and 1,600 civilian personnel are assigned to or employed by the base.

1.1.2 Background NCBC Gulfport, originally named Camp Hollyday, was established on June 2, 1942, as an Advanced Base Depot. Between 1942 and 1944, an Armed Guard School and Cooks and Bakers School were added and millions of tons of supplies and equipment were stored at the camp and shipped to all areas for military operations. In 1944, NCBC became a U.S. Naval Training Center, which eventually resulted in a single command of the Naval Training Center and the Advanced Base Depot (Envirodyne, 1985).

Between 1945 and 1952, the Base was operated as the U.S. Naval Storehouse. The training center was decommissioned in 1946. On February 26, 1952, the Naval Storehouse was replaced by the Advanced Base Supply Depot, Naval Construction Equipment Depot, and an NCBC. In July 1953, NCBC Gulfport was established by incorporating the two depots (Envirodyne, 1985).

In 1966, the activity expanded to include homebase battalion support functions and, after 20 inactive years, NCBC Gulfport was forming, staging, training, and homeporting two Naval Mobile Construction Battalions (NMCB). Presently, four construction battalions (NMCBs 1, 7, 74, and 133), under command of the 20th Naval Construction Regiment (NCR), are based at Gulfport. These four "Seabee" battalions average approximately 650 personnel each and are deployed on a rotational schedule (Envirodyne, 1985).

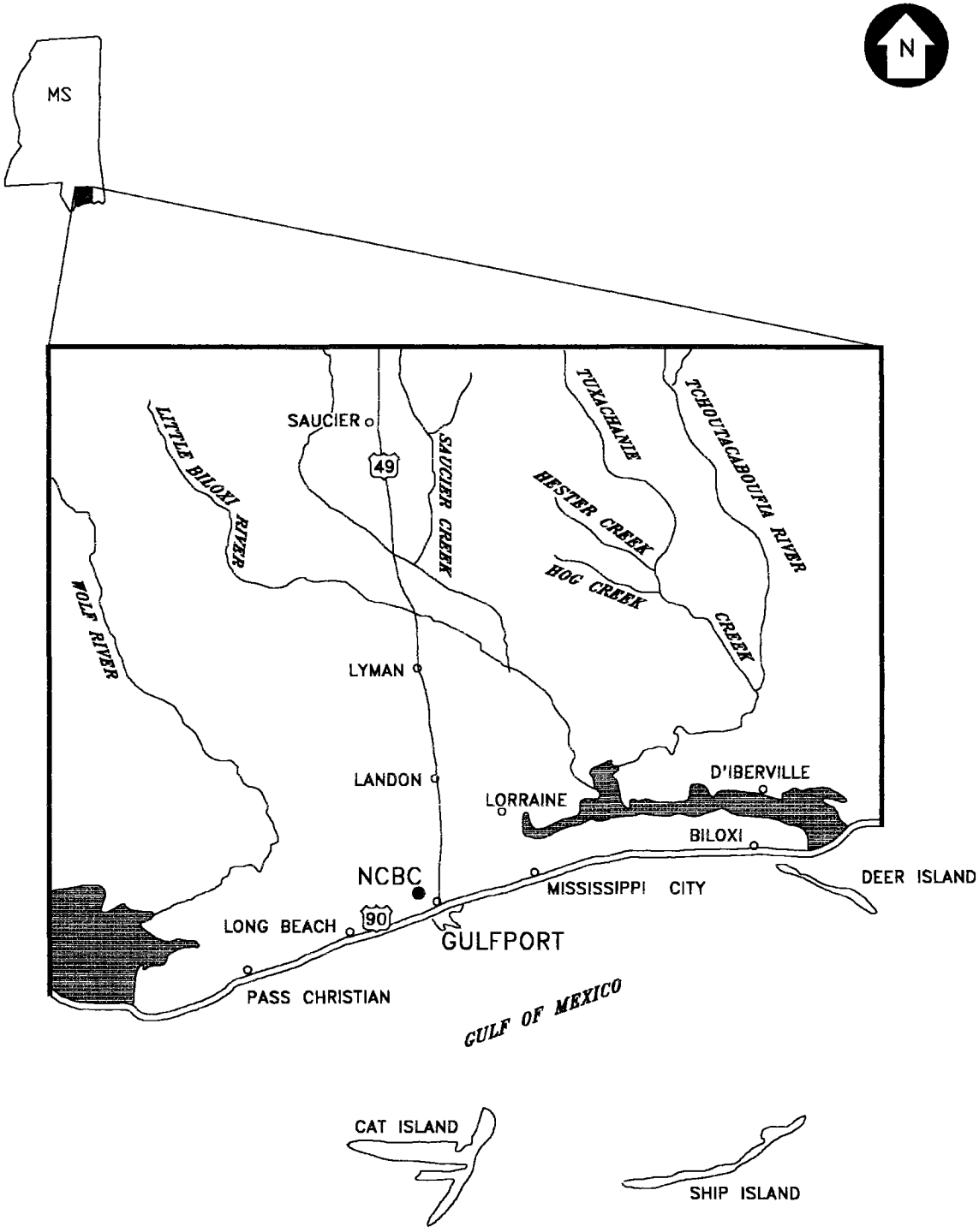

NOT TO SCALE

FIGURE 1-1

NCBC LOCATION MAP

F-PPA/IAD WORK PLAN

NCBC GULFPORT
GULFPORT, MISSISSIPPI

C:\GULFPORT\FPPA\FIG1-1/9-14-93

1.2 SITE DESCRIPTION. The Fire-Fighting Training Area consisted of two unlined pits located southeast of the Fifth Street and Colby Avenue intersection (Figure 1-2). The north pit was 50 feet long, 35 feet wide and 4 feet deep. The south pit was 40 feet long, 25 feet wide, and 6 feet deep. The pits have been filled in and the outline and locations of the site are not recognizable. Presently, Building No. 383 partially covers the north pit. Site 6 is currently used to train electricians how to construct and dismantle powerlines and transformers on electric utility poles.

Fire-fighting training activities began at Site 6 in 1966 and ceased in 1975. Waste liquids from the Base as well as liquids from Keesler Air Force Base, the Air National Guard, and Pascagoula Shipyard, were drained into the pits and ignited. Estimates suggest that as much as 500,000 gallons of liquids such as waste fuels, oils, solvents, paint thinners, and cleaning compounds were burned at the site over a nine-year period.

Three monitoring wells were installed and sampled as part of the Verification Study performed by Harding Lawson Associates in 1987 (HLA, 1987). No free-phase product contaminants were found to exist. During a site visit to NCBC Gulfport on October 31, 1991, ABB-ES personnel discovered free-phase floating product during sampling of monitoring well GPT-6-1 (Figure 1-2). The product is a brown, oily, viscous liquid. The surface of the water table was determined to be depressed 2 to 3 feet due to the presence of the free product.

1.3 PROJECT PURPOSE AND OBJECTIVE. The project will proceed in two phases. Phase I will address the F-PPA. Phase II will address IAD. The F-PPA includes characterization and extent of the free-phase product and the rate of migration. The IAD includes design for removal of free-phase product as well as community relations activities.

1.4 OVERVIEW OF WORK PLAN. This F-PPA/IAD Work Plan for NCBC Gulfport is separated into eight sections. Section 1.0, Introduction, outlines the purpose and scope of the F-PPA/IAD and includes a facility history and site description. Section 2.0, Technical Approach, summarizes the free-phase product recovery, describes performance standards for the recovery system, and outlines criteria and specific goals of free-phase product recovery. Section 3.0, Free-Phase Product Assessment, summarizes the objectives and scope of field activities, including sample collection and decontamination. Section 4.0, Analytical Program, outlines the laboratory analysis (including quality assurance/quality control [QA/QC]) and data assessment. Section 5.0, Free Phase Product Removal Engineering Evaluation Technology, presents capture zone analysis and modeling and a technology evaluation section. Section 6.0, Interim Action Design, summarizes performance standards, design specifications, operations and maintenance plan, and a monitoring plan. Section 7.0, Project Management Plan, outlines the project team, communications, and reporting. Section 8.0, Site Health and Safety Plan, addresses health and safety issues that may be encountered by the sampling crew, health monitoring, and an emergency and contingency plan.

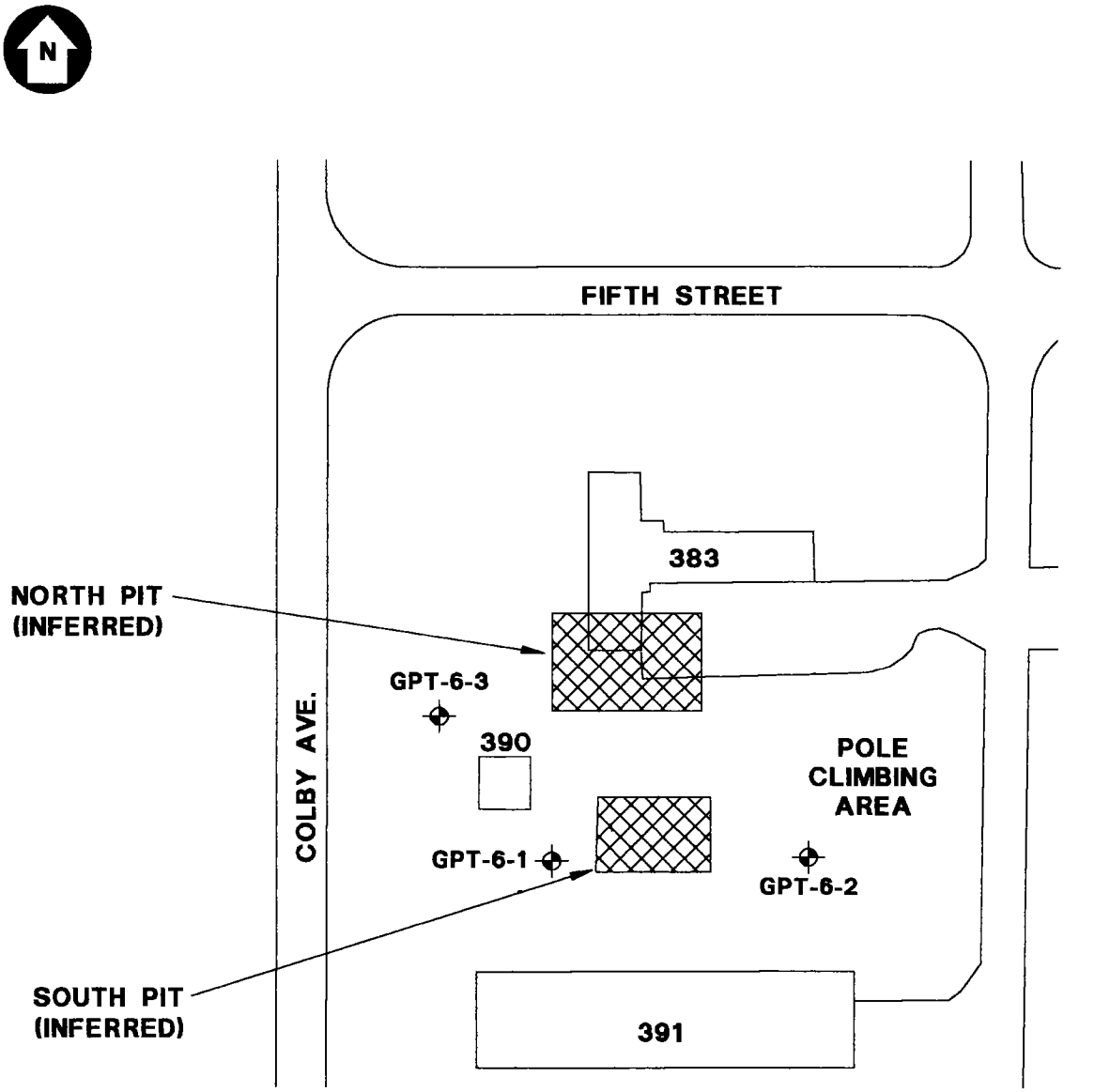

LEGEND

⌖ MONITORING WELL

0 75 150

SCALE FEET

FIGURE 1-2
SITE 6 - FIRE FIGHTING
TRAINING AREA

F-PPA/IAD WORK PLAN

NCBC GULFPORT
GULFPORT, MISSISSIPPI

C:\GULFPORT\FPPA\FIG1-2/10-11-93

2.0 TECHNICAL APPROACH

2.1 FREE-PHASE PRODUCT RECOVERY. Previous field investigations describe the free-phase product as a brown, oily product with a diesel odor floating on top the water table. It is likely the contaminant is a free-phase mixture of petroleum and paint products present from past activities occurring at Site 6. The proposed system for free-phase product recovery will be a combination product-recovery pump in conjunction with a submersible groundwater depression pump. The specific recovery system for free-phase recovery will depend upon the aquifer parameters (i.e., transmissivity and hydraulic conductivity), groundwater conditions, and the volume and properties of the free-product. A pilot-scale test will be conducted using a recovery well to model and define the capture zone. The results of the pilot-test will be used to develop an efficient and effective recovery system.

2.2 TREATMENT. The two basic components of the treatment selection and process are:

- Free-Phase Product Removal Engineering Evaluation, and
- IAD.

Treatment alternatives for contaminated groundwater include liquid phase separation, fluid transfer, air stripping, vapor phase carbon adsorption, biological treatment, chemical addition/filtration, liquid phase carbon adsorption, and sludge handling. Preliminary investigations and site background information indicate that the contaminant is free-phase product consisting of volatile organic compounds (VOCs). Four specific treatment technologies will be evaluated. These technologies are:

- Product Recovery,
- Bioremediation Technology,
- Soil Vapor Extraction, and
- Air Sparging.

The Conceptual Design Package will incorporate the most effective and efficient technologies.

2.3 CONCEPTUAL MODEL. A conceptual model of the hydrogeologic setting for Site 6 is discussed below and provided as Figure 2-1. This model describes the suspected contamination sources and the generalized physical conditions that affect contaminant migration.

At NCBC, topographic elevations range from 20 to 35 feet above the mean sea level (msl) with an average elevation of approximately 23 feet msl. There is little topographic relief at the Base except near the bauxite storage piles, which are approximately 70 feet above msl (SOUTHNAVFACENGCOM, 1984; Envirodyne, 1985).

In the Gulfport area, geologic units containing fresh water are of Miocene to Recent age. Aquifers are composed predominately of sand beds. The beds are irregular in thickness and extent. There are no thick, consistently traceable confining units between aquifers.

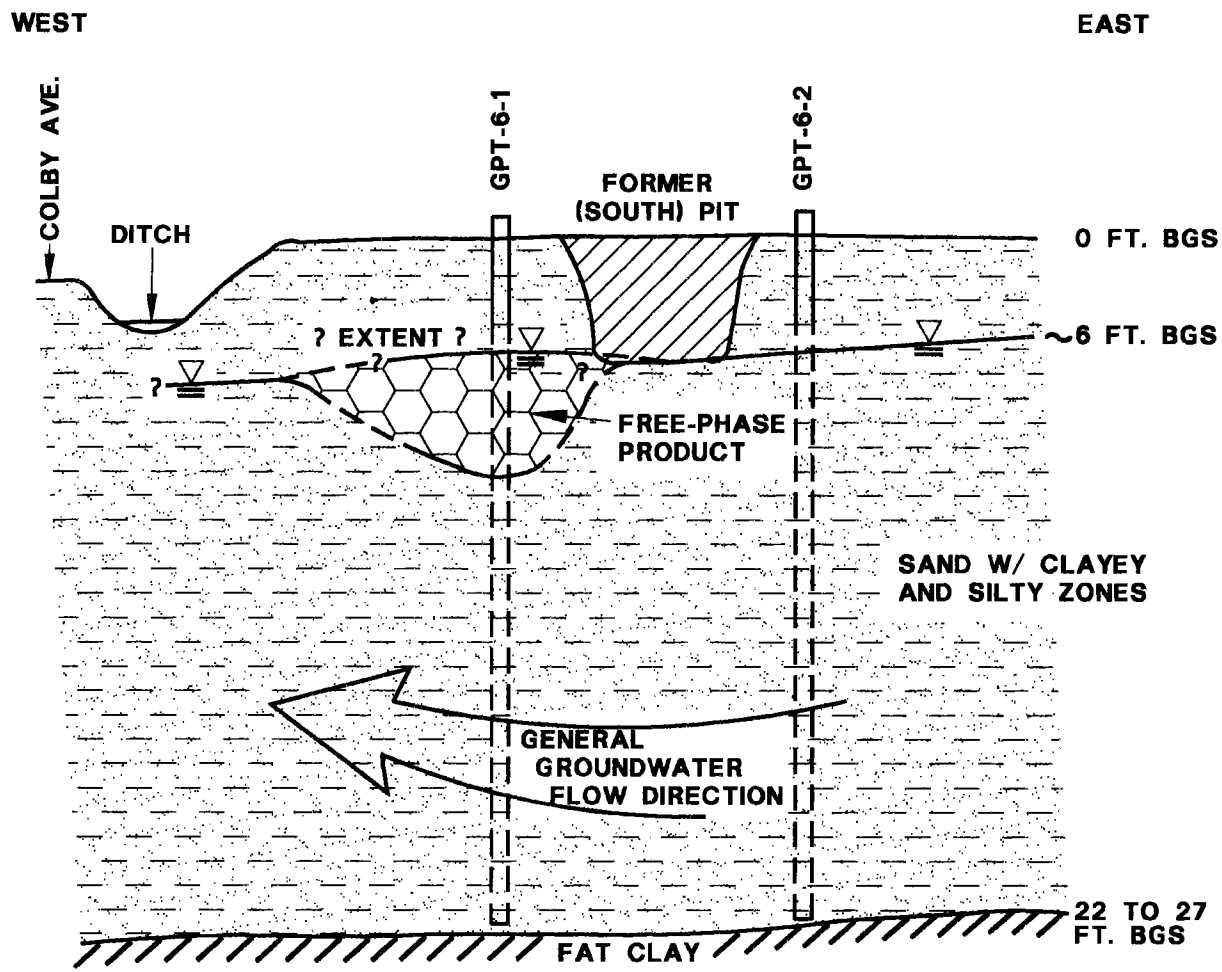

NOT TO SCALE

FIGURE 2-1
SITE 6, FIRE FIGHTING
TRAINING AREA
CONCEPTUAL HYDROGEOLOGICAL
MODEL

F-PPA/IAD WORK PLAN

NCBC GULFPORT
GULFPORT, MISSISSIPPI

C:\GULFPORT\FPPA\FIG2-1/9-14-93

The uppermost aquifer is the surficial aquifer. The surficial aquifer sediments are comprised of alluvium and the Pamlico sand terrace deposits (recent to Pleistocene). Generally, this aquifer is not used for potable water. It is this aquifer that will be investigated at Site 6.

Beneath the surficial aquifer is what is collectively called the Miocene aquifers. The Miocene aquifers are comprised of the Citronelle Formation (Pliocene), the Graham Ferry Formation (Pliocene), and the Pascagoula, Hattiesburg, and Catahoula Formations (Miocene). These aquifers are comprised of sands and discontinuous clays. The Miocene aquifers are a major source of potable water in the Gulfport area (Brown, 1944; Newcome, 1968; Colson, 1985).

Boundaries between aquifers are vaguely defined, if at all. At the site the first artesian aquifer underlying the younger deposits of the surficial aquifer is considered to be part of the Miocene aquifers.

Regional groundwater flow in the Miocene aquifer system at NCBC has been interpreted to be to the south, while the hydraulic gradient at Site 6 generally slopes across the site to the west. The surficial aquifer consists of the Pamlico (Pleistocene to recent) sand and recent deposits with thicknesses of up to 100 feet, and is comprised of sands and gravel ranging from 13 to 45 feet in thickness underlain by a clay layer ranging from 28 to 197 feet in thickness. Unconfined conditions exist in the surficial aquifer at Site 6 with groundwater elevations ranging from 26.37 to 28.23 feet as measured in March 1987. Measurements taken in October 1991 ranged in elevation from 23.97 to 24.54 feet. The difference in water levels in 1991 is due to seasonal variations. Well GPT-6-1 had approximately 4 feet of free-phase floating product, which depressed the groundwater level approximately 4 feet.

The suspected source of contamination detected at Site 6 is residual chemicals in the fire-fighting training pits, where waste liquids were ignited during fire-fighting training exercises. Contamination detected during an ABB-ES previous site visit in October 1991 was described as a brown, oily product with a diesel odor floating on top of the water table. The waste sources that were reportedly ignited in the fire-fighting training pit during previous exercises consisted of:

- waste fuels,
- oils,
- solvents (Stoddard, xylene, toluene, and MEK),
- paint compounds (containing cadmium, chromium, and lead),
- paint thinners, and
- cleaning compounds.

The possible contaminants present in the free-phase product will be characterized from information collected during the field program and from analytical results of soil and groundwater sampling.

2.4 PERFORMANCE STANDARDS. Performance standards for the F-PP recovery will be based upon the following criteria:

- extraction rates,
- volume removed,
- efficiency of the recovery wells,

- changes in the thickness of the free product,
- treatability of water discharge, and
- collection of light non-aqueous product while not disturbing the potential dense non-aqueous product.

2.5 CRITERIA/SPECIFIC GOALS. The specific goals of the Free-Phase Product (F-PP) recovery and remediation system are to effectively remove the free product and contaminated groundwater, separate the groundwater and free product, and properly dispose of the recovered product. The efficiency, effectiveness, and design decisions of the remediation system will be based upon the following criteria:

- amount of media to be reclaimed over set time period,
- amount of product to be recovered (separation),
- disposition of the free product and contaminated groundwater,
- meeting federal and state Maximum Contaminant Levels (MCLs) for recovered groundwater, and
- monitoring of plume boundaries.

3.0 FREE-PHASE PRODUCT ASSESSMENT

3.1 FIELD INVESTIGATION. Phase I of the F-PPA consists of free-phase product assessment. ABB-ES will conduct field activities that characterize the free product, determine the horizontal and vertical extent of the free product, and assess the rate of migration. The US Geological Survey (USGS), in a partnership agreement with Southern Division, will lend technical support and guidance of the field investigation and reporting.

3.1.1 Scope of Sampling Activities The scope of sampling activities will include a Hydropunch® II investigation; recovery and monitoring well drilling, installation and development; soil, groundwater and free product sampling and analysis; well performance testing; and bail-down and product recovery pilot-scale testing.

3.1.2 Preliminary Activities Prior to initiation of field activities, various mobilization tasks must be completed to ensure an efficient field sampling event. The F-PPA/IAD project team will develop specifications and begin procurement of subcontractors for drilling services and pilot-scale test setup. Permitting for short-term water discharges will be coordinated. Special effort will be expended to ensure that coordination exists between ABB-ES, the Base Environmental Coordinator, and a representative from Public Works for activities that may occur on-site. In addition, communication will be necessary to inform the Base Coordinator of the field schedule so interference with base activities does not occur.

Certain preliminary activities are necessary for successful completion of the field program. ABB-ES personnel will mobilize necessary equipment for use by the ABB-ES field crew during the field operations. Standard items for mobilization will be handled through the Tallahassee Program Management Office with items being coordinated through the Task Order Manager (TOM) and Field Operations Leader (FOL). Such activities may include, but are not limited to, subcontractor coordination, personnel orientation, and coordination with the base for utility clearance.

3.1.3 Hydropunch® II Investigation The purpose of the Hydropunch® II Investigation is to evaluate the horizontal and vertical extent of free-phase product by measuring the thickness of the free-phase product at screening locations. Screening locations will be based on a grid that will be laid out on the site. The grid will be centered on well GPT-6-1 and have a spacing of 15 feet between the rows and columns. Screening will begin at the center of the grid and extend outward. Delineation of the plume will be performed by using the Hydropunch® II to screen approximately 30 selected locations on the grid or until the limits of the plume are delineated (Figure 3-1).

When investigating for floating product, as is the case at Site 6, the Hydropunch® II tool will be operated in the hydrocarbon mode (Figure 3-2). In this configuration, the check valves are removed from the body of the tool to allow in-line sampling. A sacrificial screen (approximately five feet long) is attached to a disposable cone and advanced to the desired sample depth. The outer casing of the Hydropunch® II is pulled back, with soil friction holding the cone in position while the screen telescopes out of the body of the tool. A 1-inch OD Teflon™ bailer can be lowered through the body of the Hydropunch® II and into the screened zone for sample collection. Since no extraneous material has been introduced into the sample zone, the screen does not need to be purged prior to sample collection.

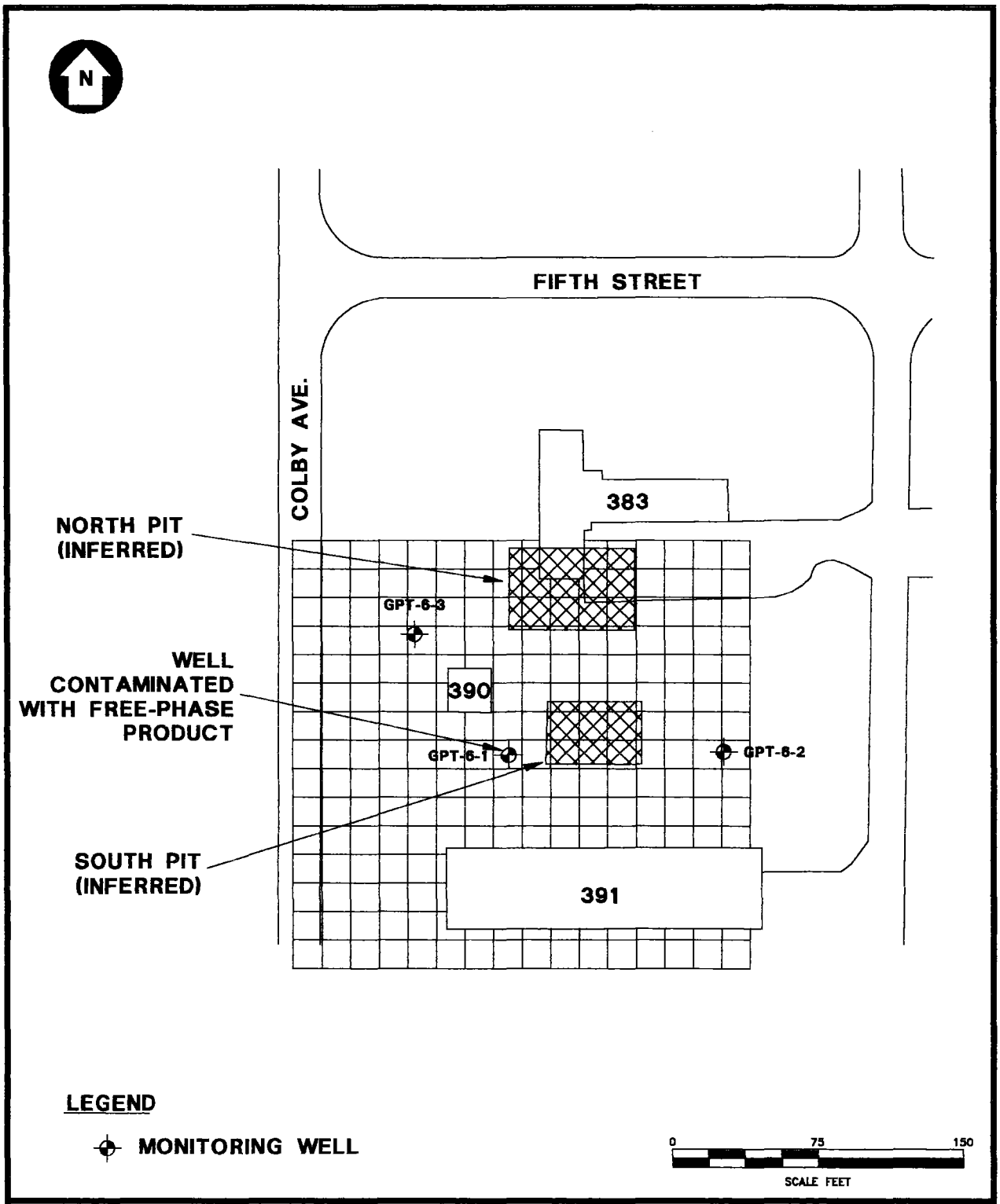

FIGURE 3-1
GROUNDWATER SCREENING GRID

F-PPA/IAD WORK PLAN

NCBC GULFPORT
GULFPORT, MISSISSIPPI

C:\GULFPORT\FPPA\FIG3-1/10-13-93

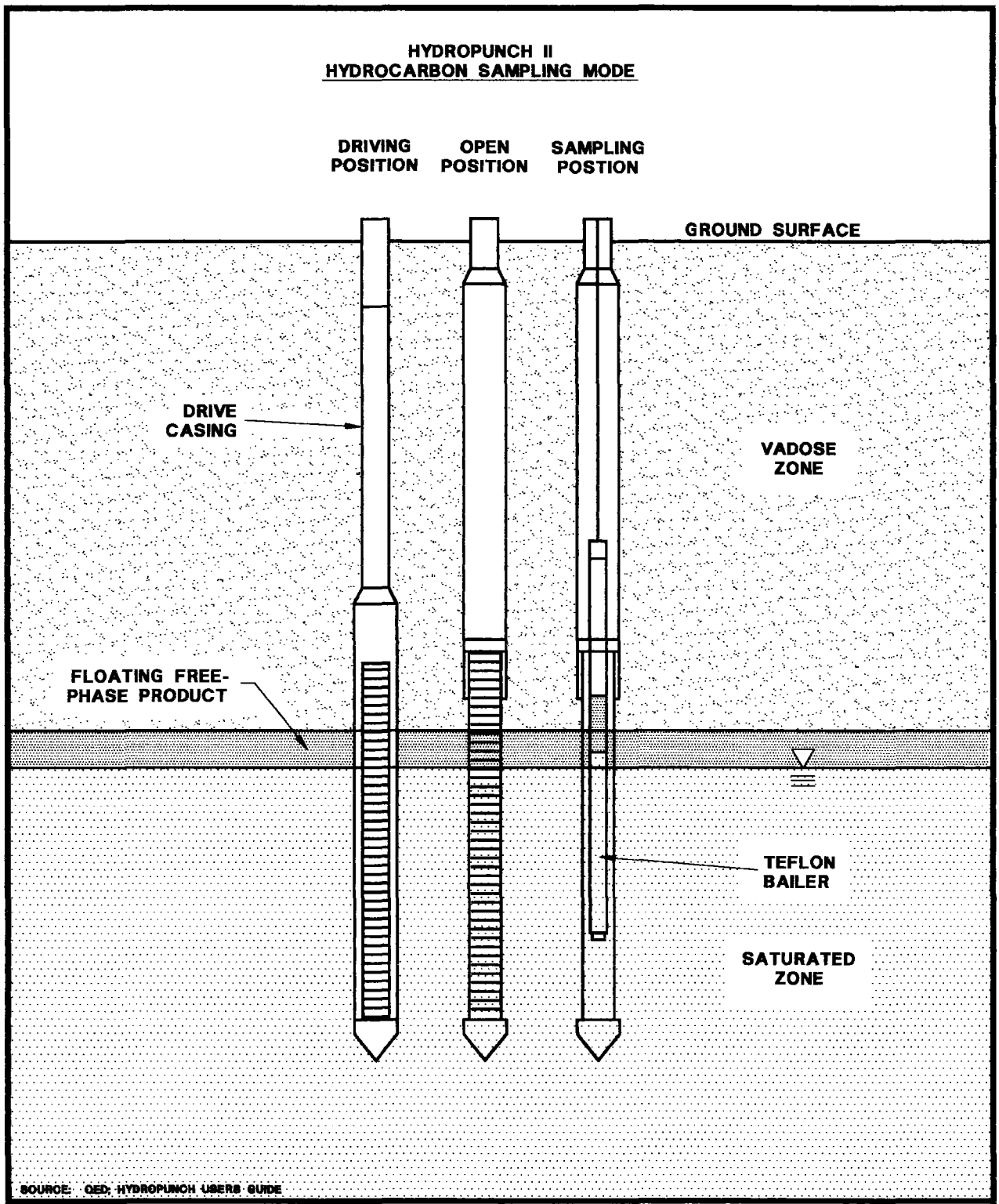

FIGURE 3-2

HYDROPUNCH II DETAIL HYDROCARBON MODE

F-PPA/IAD WORK PLAN

NCBC GULFPORT
GULFPORT, MISSISSIPPI

C:\GULFPORT\FPPA\FIG3-2/9-14-93

3.1.4 Drilling and Soil Sampling A minimum of one soil sample will be collected from each of the borings that will be drilled for installation of the monitoring wells and from the boring installed for the recovery well. Three to five monitoring wells will be installed at the discretion of the field geologist. The monitoring wells will be used to delineate and characterize the free-phase product.

Continuous split-spoon sampling will occur during boring installation. The soils collected in each split spoon will be screened using a Flame Ionization Detector (FID). One sample will be collected directly above the water table. Additional samples may be collected if any contamination is detected during screening of the soils, or if areas exhibiting any visual or obvious contamination are noted.

Soils will be collected with 2-inch ID stainless-steel split-spoons, which have been properly decontaminated. Soil samples will be retrieved from the split spoon with a stainless-steel spoon or spatula and placed into the appropriately labeled sample jar. The samples will be placed into coolers, cooled to a temperature of 4° Celsius (C), and shipped to the laboratory for analysis.

Off-site analysis of the soil samples will be performed for engineering treatability parameters and chemical parameters. The proper number and types of QA/QC samples will also be collected (Table 3-1). Samples will be analyzed under Naval Energy and Environmental Support Activity (NEESA) Level C and E requirements as appropriate.

3.1.5 Well Installation One recovery well and a minimum of three monitoring wells will be installed at locations and depths determined from the Hydropunch® II investigation. The monitoring wells will be located in areas which will provide information regarding the migration potential of the free-product plume, while the recovery well will be installed at a location adjacent to the source area. Figure 3-3 is a map outlining the proposed area in which the recovery well and monitoring wells will be located. The exact locations of the wells will be decided after the Hydropunch® II Investigation is complete.

3.1.5.1 Monitoring Wells Monitoring Wells will be constructed of 2-inch ID schedule 40, flush-threaded, polyvinyl chloride (PVC) riser pipe and well screen. Ten-foot well screens with slotting appropriate for the representative formation grain size will be used to construct the shallow wells. The shallow wells will be constructed to span the free-product zone. The two deep wells will be paired with shallow monitoring wells and have 5-foot screens and will extend to the clay layer. Two well points will also be installed in the ditch adjacent to the site to perform confirmation sampling of the surficial aquifer during free product removal. The USGS will add a staff gauge in this same ditch for long-term monitoring of water levels. Figure 3-4 illustrates a typical monitoring well.

3.1.5.2 Recovery Well The recovery well will be used to remove the free product and any contaminated groundwater during the pilot-scale test. The well will be constructed of 6-inch ID stainless-steel casing and wire wrapped, continuous slotted well screen. The well will be approximately 27 feet in depth with a 15-foot screened interval. The filter sandpack will be designed to optimize well performance. A 6-inch diameter, 5-foot long stainless-steel sump will be placed at the base of the well screen to collect fine-grained sediments. Figure 3-5 illustrates a standard recovery well design.

Table 3-1 Free Phase Product Analysis and Analytical Requirements
Site 6 - Former Fire Fighting Training Area
NCBC Gulfport

Sample Type	TCL-CLP VOAs	TCL-CLP SVOAs	TCL-CLP Pest/PCBs	TAL-CLP Inorganics	TPH	TOC	Herbicides	Dioxins /Furans	Finger Print Qualitative
Free Phase Product									
Source	1	1	1	1	1	1	1	1	3
Subsurface Soil									
Source	6	6	3	3	6	3	3	3	0
Groundwater									
Source	6	6	6	2	6	2	2	2	0

Sample Type	Hardness	Alkalinity	Total Solids	Total Chloride	Total Sulfates	Color	TDS	TSS
Groundwater								
Source	2	2	2	2	2	2	2	2

Sample Type	Grain Size	Hydrometer Particle Size	Atterburg Limits	Bulk Density	Cation Exchange Capacity	TOC
Subsurface Soil						
Source	2	2	2	2	2	2

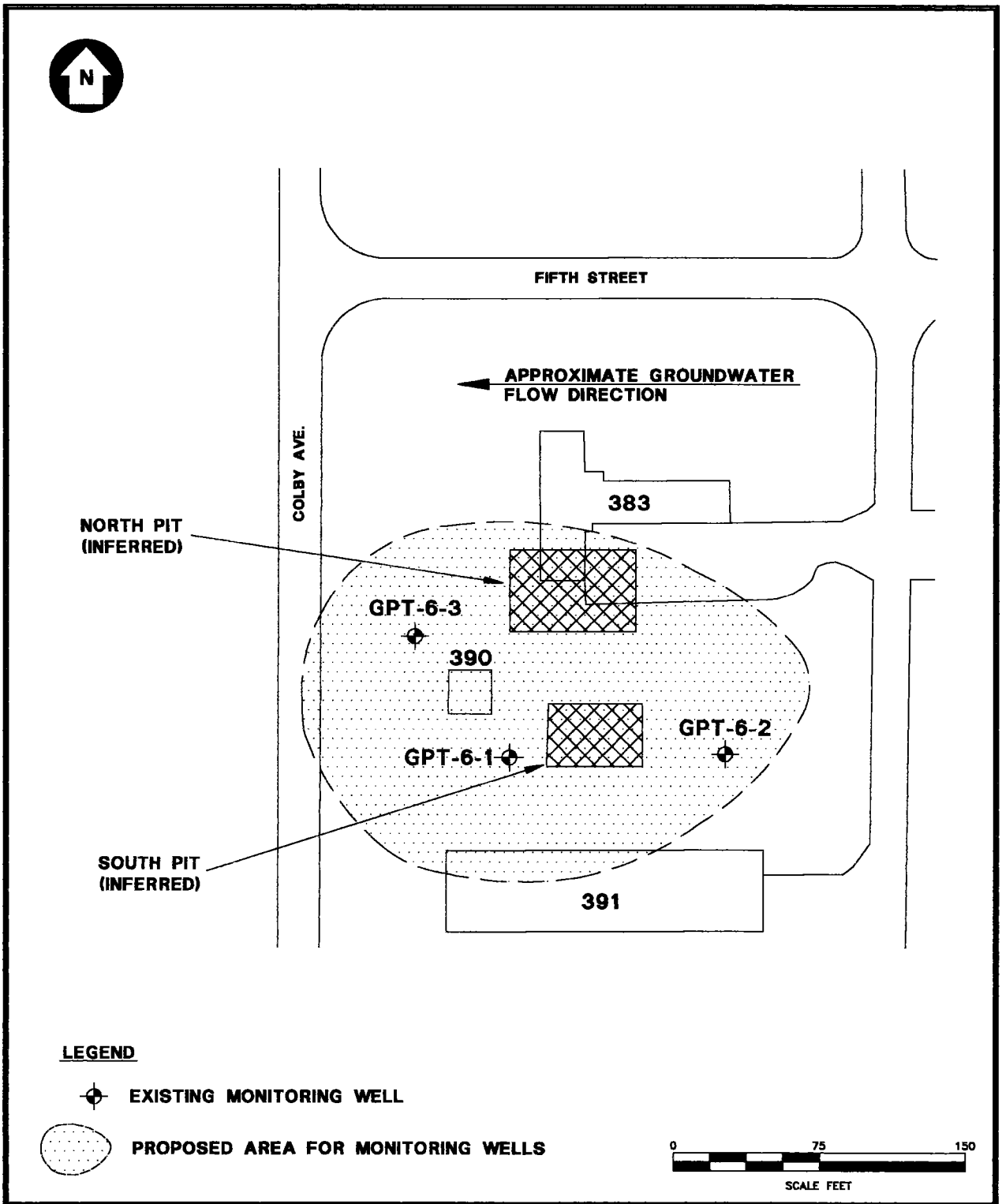

FIGURE 3-3
PROPOSED EXTRACTION WELL AND MONITORING WELL AREA

F-PPA/IAD WORK PLAN

NCBC GULFPORT
GULFPORT, MISSISSIPPI

C:\GULFPORT\FFPA\FIG3-3/10-13-93

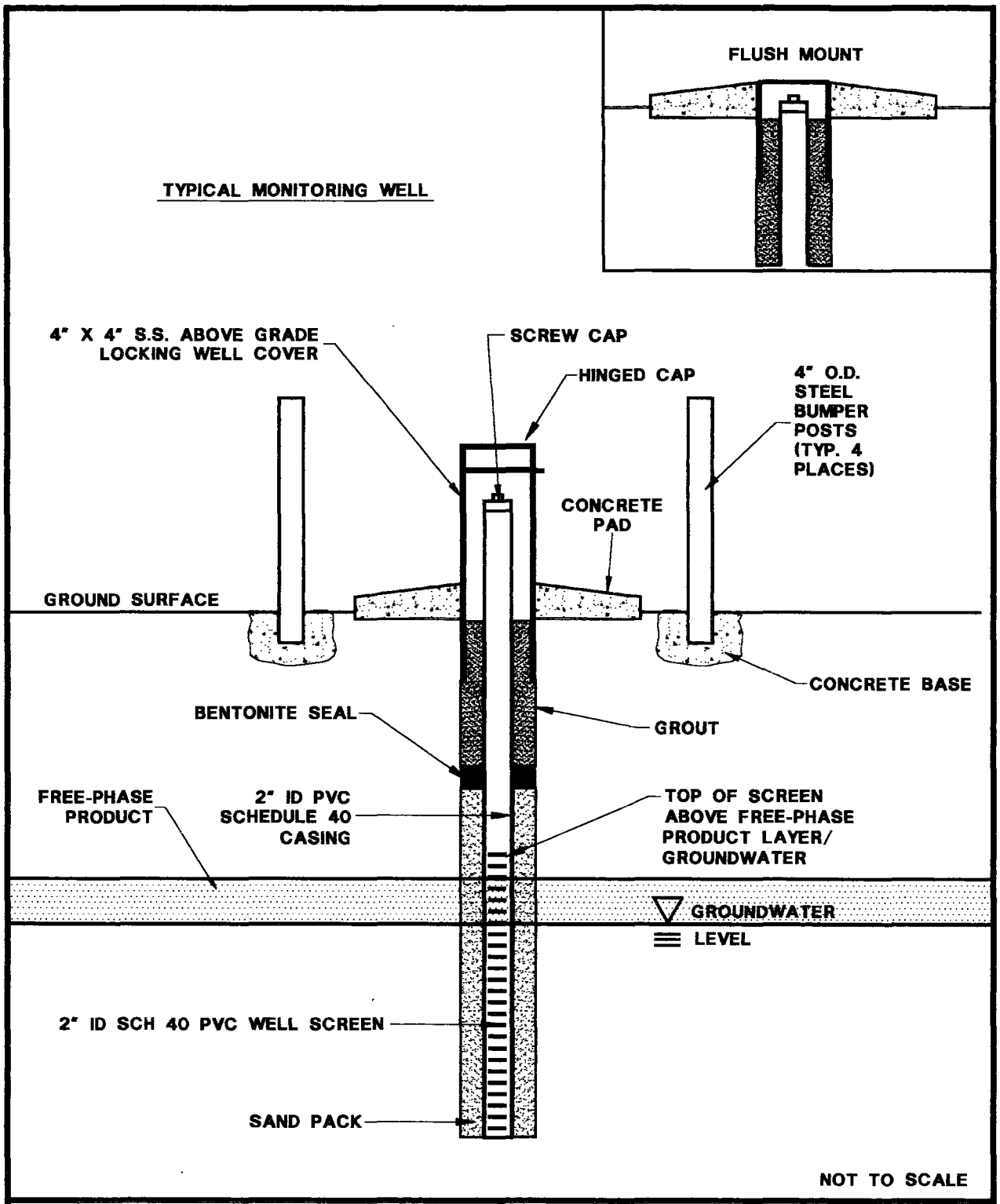

FIGURE 3-4

TYPICAL MONITORING WELL ILLUSTRATION

F-PPA/IAD WORK PLAN

NCBC GULFPORT
GULFPORT, MISSISSIPPI

C:\GULFPORT\FPPA\FIG3-4/10-13-93

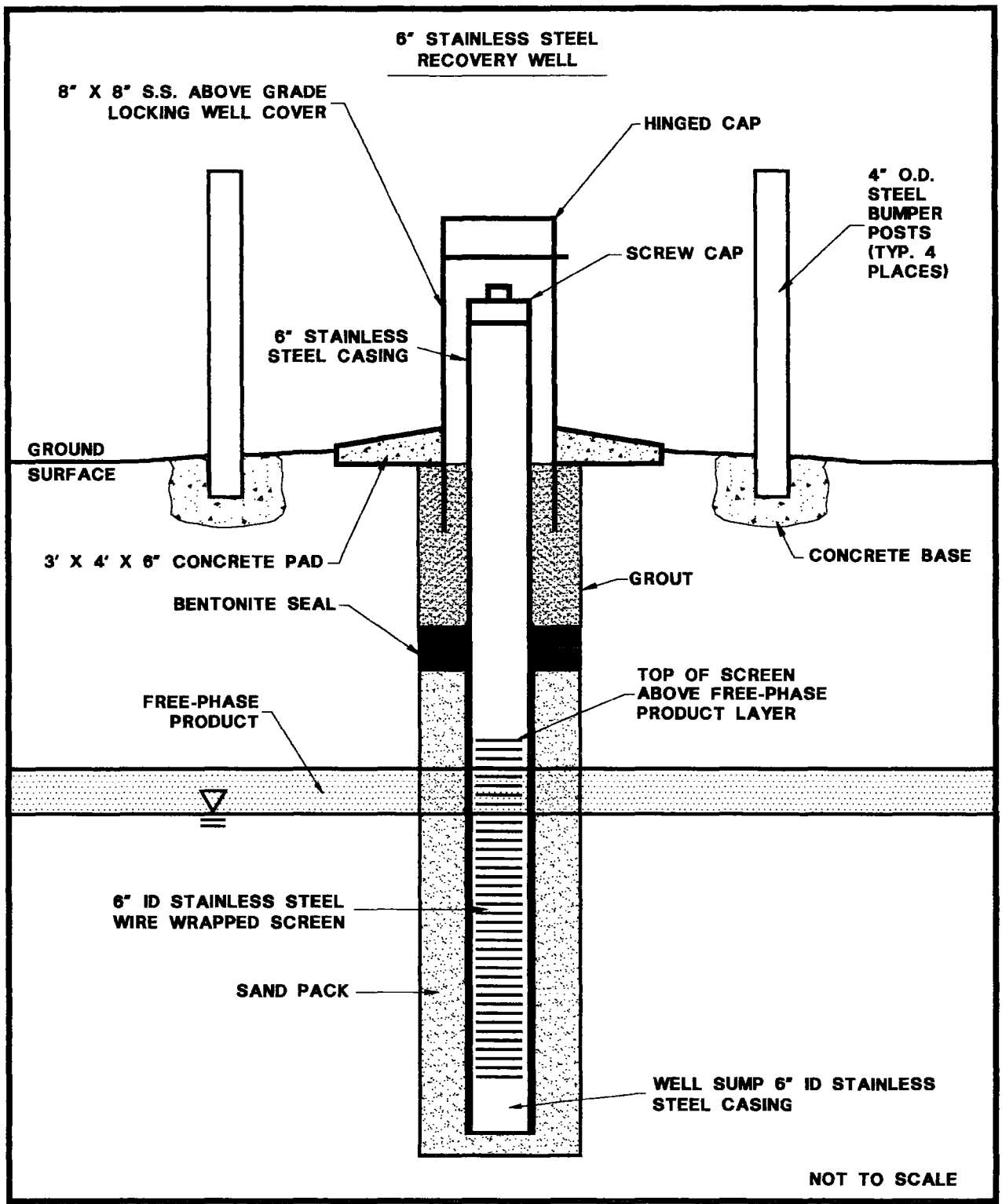

FIGURE 3-5

6" STAINLESS STEEL RECOVERY WELL

F-PPA/IAD WORK PLAN

NCBC GULFPORT
GULFPORT, MISSISSIPPI

C:\GULFPORT\FPPA\FIG3-5/10-13-93

The annular space around the well screens will be backfilled with a clean silica sand, compatible with the screen slot size, from a minimum of 2 feet below the bottom of the well screen to a minimum of 2 feet above the top of the screen. A minimum 2-foot (if possible; thickness depending on depth below ground surface) bentonite pellet seal will be installed above the sandpack. A cement-bentonite grout will be installed by the tremie method from the bentonite seal to within 2 feet of the ground surface. The recovery well and monitoring wells will be constructed in accordance with USEPA Region IV and SOUTHNAVFACENGCOM Guidelines For Groundwater Monitoring Well Installation (SOUTHNAVFACENGCOM, 1989).

The recovery well and monitoring wells will be developed prior to sampling (after a minimum of 24 hours to let the grout set) to remove fine-grained sediments, improve the hydraulic connection with natural soils, and to obtain a representative groundwater sample. The three existing wells will be redeveloped to insure that the wells are giving true representative groundwater samples. Wells will be developed using an pneumatic surge pump, gasoline-powered diaphragm pump, or both. No air or water will be injected into the wells during development.

Wells will be purged of at least three well volumes and until the water is free of fine-grained sediments and/or until field measurements of pH, temperature, and conductivity have stabilized to within 10 percent before sampling as per USEPA Region IV SOPs (USEPA, 1991a).

Wells will either be flush-mounted at ground surface with a protective steel casing or will have above-ground protective casings around the well riser. All wells completed above the ground surface will be surrounded by four protective steel posts. Protective steel casings will be equipped with locking covers. A cement seal and sloping concrete pad will be placed from the top of the grout to the ground surface around each protective casing to secure the casing, prevent surface runoff from entering the borehole, and to direct runoff away from the casing. The above-ground parts of both the well riser and protective casing will be vented. The protective casing will have two weep holes near ground level to allow water to drain from inside the casing. Wells will be permanently and properly identified as specified in SOUTHNAVFACENGCOM guidance.

3.1.6 Sampling of Wells Sampling of the wells will follow a 3-volume purge with a pneumatic surge pump or gasoline-powered diaphragm pump. One free-phase product sample, one groundwater sample from each of the monitoring well and one groundwater from each of the three existing wells will be collected for off-site laboratory analysis after development of the newly-installed wells is complete (see Table 3-1).

3.1.6.1 Free-Phase Product Samples A qualitative fingerprint analysis will be performed on a sample of the free-phase product prior to the initiation of the field program. This information will aid in determining the analytical parameters to be performed during the laboratory program. A second free-phase product sample will be collected from the recovery well during field activities.

An oil/water interface probe will be used to determine the amount of free product present in the recovery well. The sample will be collected using a stainless-steel or Teflon™ bailer and clean, new polyethylene line. A 3- to 4-foot Teflon™ coated stainless-steel wire or other inert material will be attached to closed-top Teflon™ or stainless-steel bailer to prevent the polyethylene line from coming into contact with the well water.

3.1.6.2 Groundwater Samples One groundwater sample will be collected from each monitoring well and the recovery well after development is complete. A stainless-steel or Teflon™ bailer and polyethylene line will be used to collect groundwater samples.

Off-site analysis of the groundwater samples will be performed for engineering treatability parameters and chemical parameters. The proper number and types of QA/QC samples will also be collected. Samples will be analyzed under NEESA Level C and E requirements for VOCs, semivolatile organic compounds (SVOCs), pesticides and polychlorinated biphenyls (PCBs), inorganic compounds and cyanide, total petroleum hydrocarbon (TPH), herbicides, dioxins and furans as appropriate (See Table 3-1).

3.1.7 Aquifer Characterization The properties of the aquifer will be determined by performing slug tests and bail-down tests on selected wells and by performing a three-phase pump test on the recovery well.

Hydraulic conductivity testing (slug testing) will be performed on selected wells and/or monitoring wells that are representative of each sampling interval. Hydraulic conductivity measurements can be useful for calculating estimated groundwater flow parameters, for evaluating the heterogeneity of the aquifer, for identifying high permeability zones, and for determining the viability of various remedial options.

Slug tests will be performed in accordance with USEPA Method 9100. In general, a slug test consists of the introduction and withdrawal of either a slug of water or other volume (such as a tube filled with sand), and the measurement of the change in water level, or fluid pressure, in the well over time. The data will be analyzed using a method developed by Bouwer and Rice (1976) for calculating the hydraulic conductivity of an aquifer from partially penetrating wells in an unconfined aquifer.

Slug tests can be categorized as either falling-head or rising-head tests. Falling-head tests are typically performed by introducing a solid slug below the water level and measuring the rate of water level decrease per time until equilibrium conditions are reached (i.e., the rate of recovery). Rising-head tests are performed by withdrawing a solid slug and measuring the rate of recovery. The change in water level with time is measured with an electronic transducer and data logger over specified time intervals. Rising- and falling-head tests will be performed on wells that are screened below the water table. Rising-head tests will be performed on wells that are screened across the water table.

In the recovery well, a pumping test will be conducted using a dual pump system. The product-recovery pump will be installed in the free-phase layer. The pump will be operated in conjunction with a submersible groundwater depression pump. The submersible pump will be used to depress the water table and the product pump will extract free-phase product. The test will be broken down into three phases. Phase I will consist of pumping free-phase product only. Phase II will entail pumping free-phase product while maintaining the groundwater level. Phase III will consist of pumping free-phase product and groundwater creating a cone of depression.

3.1.8 Water Elevation Survey An elevation and location survey will be performed by a Mississippi-licensed land surveyor under contract to ABB-ES to locate all

sampling locations including recovery wells and monitoring wells, soil borings, and any other necessary control points. The top of the riser pipe of each well will be surveyed for both horizontal and vertical control to a minimum degree of accuracy of 0.1 and 0.01 foot, respectively. Other exploration locations will be marked in the field and will be surveyed for horizontal and vertical control to a minimum degree of accuracy of 0.1 foot.

Sampling locations and other control points will be plotted onsite-specific base maps and will be available in both digitized and hard copy formats. These documents require the identification of sampling locations in terms of latitude/longitude coordinates in accordance with the Federal Interagency Coordinating Committee for Digital Cartography (FICCDC) recommendations and USEPA Region IV guidelines (USEPA, 1991a).

3.1.9 Containment and Disposal of Wastes Investigation-derived wastes (IDW) such as soil cuttings, development and purge water, wastewater and waste solvents from decontamination activities, personal protective clothing, and other disposable items will be disposed in accordance with USEPA Region-IV Standard Operating Procedures (SOPs).

Soil cuttings, development and purge water resulting from the installation of the monitoring wells, and decontamination water resulting from washing of drilling equipment will be placed in U.S. Department of Transportation (DOT) approved, 55-gallon steel containers and staged in an area designated by the Base Environmental Coordinator. The containers will be dated and labeled to indicate the site and borings from which they are derived and the contents. Following receipt of laboratory analytical data for environmental samples, the contents of each container will be evaluated to determine whether the associated environmental samples suggest that a container may contain a Resource Conservation and Recovery Act (RCRA) listed or characteristic hazardous waste. If environmental data do suggest a container may contain a hazardous waste, a sample will be collected from the container contents and submitted for Toxicity Characteristic Leaching Procedure (TCLP) analysis. The TCLP analysis will be limited to constituents suspected of being present at levels that may cause the waste to be regulated as a RCRA hazardous waste. If the environmental data do not suggest that RCRA listed wastes are present at levels that would cause it to be regulated as a RCRA hazardous waste, permission to discharge the container contents to the local Public Owned Treatment Works (POTW) will be sought.

Other IDW include decontamination water produced from washing Hydropunch®, soil and groundwater sampling equipment, monitoring well purge water, and soil cuttings from drilling operations. These materials will be placed in 55-gallon containers, labeled and dated, and stored at the central decontamination area.

Personal protective equipment (PPE) and other disposable items will be screened with an OVA or FID.

3.1.10 Field Decontamination Procedures In order to assure that analytical results reflect the actual concentration present at sampling locations, chemical sampling and field analysis equipment must be properly decontaminated prior to the field effort, during the sampling program (i.e., between sample points), and at the conclusion of the sampling program. This will minimize the potential for cross-contamination between sample points and the transfer of contamination off-site. Field decontamination procedures during a field event will be conducted in accordance with USEPA Region IV SOPs (USEPA, 1991a).

3.2 FREE-PHASE PRODUCT REPORT. ABB-ES will prepare an evaluation report of the F-PPA activities. The F-PPA report will be a comprehensive report of observations, engineering and performance evaluation, and conclusions. Recommendations for additional wells, system adjustments, and operational changes will be discussed.

ABB-ES will initially prepare the F-PPA Report in draft form. The draft report will be submitted to SOUTHNAVFACENGCOM and NCBC Gulfport for review. Upon receipt of comments, the document will be corrected and submitted as a final draft. The final draft document will be submitted to regulatory agencies for review and approval. ABB-ES will prepare a written response to comments prior to development of the final F-PPA Report. The response to comments will be submitted to the client for review and release to the regulatory agencies.

Prior to submittal of the draft and draft final F-PPA report to SOUTHNAVFACENGCOM and NCBC, the document will be submitted to an internal review committee consisting of senior technical staff from the ABB team. The internal review focuses on technical aspects of the project so that services reflect the accumulated experience of the firm, are produced according to corporate policy and client requirements, and meet the intended needs of the project.

4.0 ANALYTICAL PROGRAM

4.1 LABORATORY ANALYSIS. Analyses planned for samples collected during the field investigation range from screening techniques and field analysis to Contract Laboratory Program (CLP) laboratory analyses. This section discusses the laboratory analytical methods, and associated Data Quality Objectives (DQO) levels, for the matrices to be sampled during the investigation of Site 6.

Screening methods will be employed to define high concentration areas and to gain information concerning the horizontal and vertical extent of contamination. Hydropunch® II samples and groundwater samples will be analyzed in the field for presence of VOCs using a FID. These analytical results will be evaluated to determine optimal locations for soil borings and monitoring wells, as well as the need for additional monitoring wells. Because screening analyses are intended only to identify locations for confirmation sampling, the Level II DQO screening samples will not be split for Level III analysis. Actual confirmation samples will be collected as described in the following paragraph.

Soil and groundwater samples will be collected for laboratory analysis. Laboratory analyses will be conducted in conformance with the USEPA CLP, with the exception of TPH analyses, which will be performed according to other USEPA-approved methods. These analyses are intended to provide confirmatory information concerning the nature and distribution of contamination at the site.

A sample of free-phase product will be collected and analyzed prior to the inception of field activities. The results of this analysis will aid in determining the analytical parameters for the remainder of the samples collected during the field program. Table 4-1 presents information regarding laboratory analyses. All samples for CLP analyses will be analyzed according to Level III DQOs. Level III DQOs will be used for laboratory analyses that are not included in the CLP. The choice of constituents to be analyzed is based on several factors including:

- previous analytical results (contaminants detected or contaminants not adequately tested),
- previous sampling locations (sufficient and representative downgradient locations), and
- site history (types of wastes disposed).

Standard field methods and equipment decontamination procedures for Level IV DQOs will be followed in accordance with USEPA Region IV SOPs (USEPA, 1991a). Deviations will be documented in the field logbook or in the approved Work Plan.

4.2 DATA QUALITY OBJECTIVES (DQOs). The intended use of data and the required DQOs are best defined during the planning stages to ensure that collection, decontamination, containerization, shipping, and analytical methods are consistent with the degree of confidence required of the resultant data. The following sections provide a brief description of USEPA DQO levels and identifies the levels that are associated with each field task.

Table 4-1 Sample Analyses for Collected Soil and Groundwater Samples from Site 6, NCBC, Gulfport, Mississippi

Method Name	Source	Description	Deviations
CLP TCL Volatiles	US EPA CLP CLP SOW OLM01.8	GC/MS Volatiles	w/o TICs
CLP TCL Semivolatiles	US EPA CLP CLP SOW OLM01.8	GC/MS Semivolatiles	w/o TICs
CLP TCL Pesticide/PCB	US EPA CLP CLP SOW OLM01.8	GC Pesticides and PCBs	None
CLP TAL Metals	US EPA CLP CLP SOW ILM02.8	Metals	None
CLP Cyanide	US EPA CLP CLP SOW ILM02.8	Cyanide	None
TPH 418.1 (9071/3550 extraction for soils)	SW-846	Total Petroleum Hydrocarbons	None
Herbicides 8150	SW-846	GC Herbicides	None
Dioxins/Furans 8290	SW-846	High Resolution MS Dioxins/Furans	a)17 labeled compounds used similar to EPA 1613 b)MPC results based on sum of native ions rather than ratio to smallest ion c)DL Values include factor for actual measured signal to noise ratio.

Notes:

CLP	Contract laboratory procedure
TAL	Target analyte list
TCL	Target compound list
TIC	Tentatively identified compounds
TPH	Total petroleum hydrocarbons
USEPA	United States Environmental Protection Agency
SOW	Statement of work
GS/MS	Gas chromatograph/Mass spectroscopy
PCB	Polychlorinated biphenyls
TOC	Total organic carbon
DL	Detection limit
MPC	Maximum possible concentration

References:

SW846 - "Test Methods for Evaluating Solid Waste, Physical/Chemical Methods", Third Edition, September, 1986.

USEPA - 600/4-79-02, "Methods for Chemical Analysis of Water and Wastes:, March, 1983.

Table 4-2 Free Phase Product Analysis and Analytical Requirements
Site 6 - Former Fire Fighting Training Area
NCBC Gulfport

Sample Type	TCL-CLP VOAs	TCL-CLP SVOAs	TCL-CLP Pest/PCBs	TAL-CLP Inorganics	TPH	TOC	Herbicides	Dioxins /Furans	Finger Print Qualitative
Free Phase Product	1	1	1	1	1	1	1	1	3
Subsurface Soil	6	6	3	3	6	3	3	3	0
QC samples									
Trip Blank	3	0	0	0	0	0	0	0	0
Potable Water Field Blank	1	1	1	1	1	1	1	1	0
Distilled Water Field Blank	1	1	1	1	1	1	1	1	0
Equipment Rinsate Field Blank	3	3	3	3	3	3	3	3	0
Duplicate	1	1	1	1	1	1	1	1	0
Matrix spike	1	1	1	1	1	1	1	1	0
Matrix spike duplicate	1	1	1	1	1	1	1	1	0
Groundwater	6	6	6	2	6	2	2	2	0
QC samples									
Trip blank	2	0	0	0	0	0	0	0	0
Potable Water Field Blank	1	1	1	1	1	1	1	1	0
Distilled Water Field Blank	1	1	1	1	1	1	1	1	0
Equipment Rinsate Field Blank	2	2	2	2	2	2	2	2	0
Duplicate	1	1	1	1	1	1	1	1	0
Matrix Spike	1	1	1	1	1	1	1	1	0
Matrix Spike Duplicate	1	1	1	1	1	1	1	1	0

Table 4-2 cont. Treatability Parameters
Site 6 - Former Fire Fighting Training Area
NCBC Gulfport

Sample Type	Hardness	Alkalinity	Total Solids	Total Chloride	Total Sulfates	Color	TDS	TSS
Groundwater								
Source	2	2	2	2	2	2	2	2

Sample Type	Grain Size	Hydrometer Particle Size	Atterburg Limits	Bulk Density	Cation Exchange Capacity	TOC
Subsurface Soil						
Source	2	2	2	2	2	2

4.2.1 General Description DQOs refer to standards for analytical precision, accuracy, representativeness, completeness, and comparability (PARCC). Five DQO levels have been defined by the USEPA: Level I, Field Screening; Level II, Field Analysis; Level III, Laboratory Analysis; Level IV, Contract Laboratory Program-Routine Analytical Services (CLP-RAS); and Level V, Nonconventional Parameter Analysis (USEPA, 1987).

The NEESA has adopted three of these levels as QA requirements; Levels C, D, and E, that correspond with USEPA Levels III, IV, and V (NEESA, 1988). For the purposes of this document, the USEPA nomenclature (Levels I through V) will be used. The following gives a brief description of each.

Level I, Field Screening Field screening provides rapid real-time results that can be used to determine optimal placement of sampling locations and for health and safety support. Data that are generated will provide information concerning the presence or absence of certain constituents or groups of constituents. The data are generally qualitative rather than quantitative.

Level I sampling requirements include the use of equipment and sampling containers that are clean (soap and tap water), visibly free of contamination, and free of analytes detectable by the screening method employed (USEPA, 1987).

Level II, Field Analysis Field analysis includes the use of more sophisticated analytical instruments in the field, including onsite gas chromatographs (GCs) and mobile laboratories. The data that are generated may be both qualitative and quantitative, but the degree of QA/QC achievable may be more variable than with laboratory analysis.

Level II sampling and equipment requirements include the use of sampling equipment that is constructed of material that is compatible with the parameters being analyzed and field-cleaning procedures that include a potable water and soap scrub followed by a potable water rinse (or steam cleaning or high pressure washing). A minimum of 5 percent of samples collected for DQO Level II analysis should be split for DQO Level IV analysis. Level IV DQOs may not be attainable for analyses other than those performed using USEPA CLP methods. These samples must be representative of all samples that are analyzed in the field (USEPA, 1991a).

Level III, Laboratory Analysis Laboratory analytical data are generated using USEPA-approved methods to achieve a level of confidence set by specified QA/QC protocols. Level III DQOs are appropriate for data collected for most activities including site characterization (i.e., qualitative and quantitative identification of contaminants and contaminant source[s] and extent of migration) and treatability studies. This level corresponds to NEESA Level C.

Level III field methods, decontamination procedures, and sampling equipment construction materials are as specified in the *USEPA Standard Operating Procedures and Quality Assurance Manual* (USEPA Standard Operating Procedures [USEPA, 1991a]). Cleaning of down-hole drilling or excavation equipment must be performed as with Level IV requirements with the exclusion of the deionized water rinse, the double rinse with pesticide-grade isopropanol, and the rinse with organic-free water. All other cleaning and decontamination guidance must be followed.

When wells are constructed using materials that are not inert with respect to the contaminants being analyzed, data that are collected from those wells are DQO Level III or lower for those incompatible analytes, even if DQO Level IV analytical procedures are used.

A minimum of 5 percent of samples that are collected for DQO Level III analysis using CLP methods should be split for DQO Level IV analysis. These samples must be representative of all samples submitted for Level III analysis (USEPA, 1991a). Level IV DQOs may not be achievable for analyses that are other than CLP.

Level IV, Contract Laboratory Program (CLP) Level IV DQOs are the most stringent and are defined as data that are collected in accordance with USEPA SOPs (USEPA, 1991a) and analyzed in accordance with the USEPA CLP (USEPA, 1991b; 1991c). Data that are collected for characterization and confirmation during an Remedial Investigation/Feasibility Study (RI/FS), during remedial action, for compliance monitoring, or for enforcement often require Level IV for DQOs. This level corresponds to NEESA Level D.

Level V, Nonconventional Parameter Analysis Individual site or remedial design characteristics may require the analysis of contaminants or conditions for which USEPA-approved methods do not exist; these fall into the category of nonconventional parameter analyses. The Level V DQOs that are associated with these types of analyses must, by definition, be defined on an individual basis. The DQOs that are identified will be dependent on the specific collection method, decontamination procedures, and analyses to be used. This level corresponds with NEESA Level E.

4.2.2 Task Specific DQOs Tasks for free-phase product removal at NCBC Gulfport will involve data collection with DQOs ranging from Level I through Level IV. The following narrative discusses the primary tasks for NCBC Gulfport and the associated DQO level.

- Soil Sample Screening, Level I: Split-spoon samples from discrete depths in soil borings will be screened in the field with an organic vapor analyzer (OVA), providing Level I data concerning the presence or absence of VOC.

- Soil and Groundwater Sample Screening, Level II: Hydropunch® II soil sampling will be conducted at Site 6 and field GC and infrared spectroscopy (IR) analyses will be performed. Field GC analyses will also be performed on groundwater samples collected from new and existing monitoring wells. The Level II data for soil samples will be used to assist in placement of additional soil borings. The Level II groundwater data will be used to screen samples for volatile organic contamination to allow field decisions regarding the need for additional monitoring wells at any of the seven sites.

- Air-Quality Monitoring, Level I: For health and safety purposes, air quality will be monitored in the breathing zone by OVA and/or by FID, providing Level I data concerning the presence or absence of volatile compounds.

- Field Parameter Analysis, Levels I and II: Field measurements of surface water and groundwater temperature, pH, and specific conductance will be performed to screen samples for laboratory

analysis and to determine aquifer stabilization during well purging. These measurements are both quantitative and qualitative, and the data that are generated can conform with both Level I and II DQOs.

- Characterization and Confirmation Sampling, Level III: Groundwater and soil samples that are collected from wells and split-spoon soil sampling, respectively, that are collected during the RI field program will be collected and analyzed in conformance with Level III DQOs and CLP methods.

- Engineering Treatability Parameters and Grain Sieve Analysis, Level III: Samples that are collected to evaluate the effectiveness and feasibility of selected remedial alternatives will be analyzed in conformance with Level V DQOs.

These data will be used, as applicable, for health and safety monitoring, site characterization, evaluating remedial alternatives, treatability studies, remedial action, and monitoring.

4.3 DATA ASSESSMENT. Data that are collected from investigation activities include survey data, field screening data, and laboratory analytical data. The ultimate data uses include source and site characterization and the development of effective remedial measures, where necessary.

Field screening of the data will provide real-time qualitative data and Level II quantitative data. This information is useful for site characterization and for determining strategic sampling locations. Laboratory analytical data provide qualitative and quantitative confirmation data concerning the type, quantity, and distribution of contaminants.

The hydraulic information from the pilot-scale test and slug tests will be used to determine the hydraulic conductivity and other characteristics of the aquifer. The free-phase product data will be obtained from the Hydropunch® II Investigation, analytical results, and monitoring and recovery wells. The geotechnical and geological data will consist of split-spoon samples, sieve analysis hydrometer, and field descriptions. The soil and groundwater analyses will be comprised of samples taken and sent to the analytical lab.

4.3.1 Laboratory Data Validation Laboratory data must be validated and assessed to determine the validity of the data and to ensure that DQOs are met. Sample results are validated through comparison to QA/QC data to assure that analytical results fall within acceptable accuracy and precision confidence limits, and to eliminate, correct, or flag matrix and other interference effects. Validated data are summarized and organized into formats that facilitate evaluation. Data evaluation includes site characterization and analysis of contaminants, contaminant distribution, and transport, fate, and risk assessment.

Upon receipt, analytical data are systematically validated in conformance with USEPA *Functional Guidelines for Evaluating Organic Analyses* (USEPA, 1991d) and *Functional Guidelines for Evaluating Inorganic Analyses* (USEPA, 1991e). These guidelines provide a systematic procedure for evaluating laboratory QA/QC measures such as holding times, blank analyses, surrogate recoveries, matrix spike results, GC/mass spectrometry (MS) tuning, instrument calibration, compound identification, and method performance.

Validated data will be prepared in three initial formats: raw laboratory data, data marked with validation qualifiers or annotations, and corrected or validated data. The validated data can then be used for site contaminant characterization and assessment.

4.3.1.1 Precision, Accuracy, Reproducability, Completeness, and Comparability (PARCC) Parameters for Level I and II DQOs For Level I and II field measurement data, the objective for precision is to achieve and maintain factory equipment specifications. For the pH meter, precision will be tested by multiple readings in the medium of concern. Consecutive readings should agree within 0.1 standard pH units after the instrument has been field calibrated with standard buffers before each use. The thermometer will be visually inspected prior to each use. The OVA and FID will be calibrated prior to field use according to the manufacturing instructions. Water-level indicator readings will be precise within 0.02 foot for duplicate measurements.

As with precision, accuracy of field measurements is achieved through maintenance of equipment in accordance with factory specifications and calibration instructions. For many instruments, accuracy can be assessed through comparison of instrument response to an independent known standard. The pH meter and conductivity meters are calibrated with solutions traceable to the National Bureau of Standards (NBS). A calibration check will be made on all interface probe water-level indicators before the initiation of field work. The calibration check will be made using a surveyor's tape or other standard measuring device. If the calibration check is not within 0.01 foot, the instrument will be serviced. The OVA and FID will be calibrated prior to shipment to the field.

Field activities performed at DQO Levels I and II are onsite measurement techniques that provide information in real-time or after minimal delay. The completeness achieved for these methods may be more variable than those for standard analytical methods. A higher degree of completeness may be achieved because measurements can be readily repeated. However, site conditions may constrain the use of some techniques, resulting in fewer valid analyses than anticipated.

Comparability of Levels I and II data will be maintained through consistent sample collection, handling, analysis, data evaluation, record keeping, and reporting.

4.3.2 Data Management Sampling locations and laboratory analytical data will be organized and reported in accordance with USEPA Locational Data Policy and Region IV Environmental Monitoring and Data Reporting Requirements. These requirements were developed to provide a standardized reporting system for locating and tracking environmental data.

These policy documents require: (1) the identification of sampling locations in terms of latitude/longitude coordinates in accordance with the FICCDC recommendations, and (2) the development of four databases or data files with electronic copies in American Standard Code for Information Interchange (ASCII) file format.

The four data files include the following:

- **STATION.DAT** This file contains basic information about the type and location of the sampling or monitoring station. Data fields include information concerning the type, location, and elevation of sampling locations.

- **WELL.DAT** This file contains detailed information about the construction and characteristics of groundwater monitoring stations. Data fields include information concerning well location, construction methods, construction materials, development methods, availability of lithologic logs, and the use of the well (i.e., monitoring, drinking water, irrigation, etc.).

- **SAMPLE.DAT** This file contains basic information about the collection and characteristics of samples. Data fields include information concerning station status, field parameter measurements, water level, wind speed and direction, sample collection methods, and name of sampling agency.

- **PARM.DAT** This file contains measured values and reporting units for specific parameters. Data fields include information concerning sampling station type and unique identifier characters, Chemical Abstract Service (CAS) number of the constituent(s) to be analyzed, the reported analytical result, reporting units, name or code of analytical method, date of analysis, detection limit, and the name of the analytical laboratory.

For USEPA computing purposes, the first line of EACH of the four files MUST contain the following text starting in position one: 19901001.

Each data file must be updated as new stations or sampling locations are created and/or as new samples are collected. Data will be submitted in ASCII format using 3 1/2-inch flexible disk or nine-track magnetic tape and as a printed hard copy.

4.3.3 Data Evaluation And Interpretation Sampling data from the site will be evaluated independently to determine (1) which detected chemicals are believed to be site-related, and (2) which data are of sufficient quality for use. The individual steps involved in this process are briefly discussed below.

4.3.3.1 Sort Data By Medium Data from the current and previous investigations will be compiled and sorted by environmental medium (i.e., soil and groundwater). All chemicals detected in at least one sample in each medium will be identified.

4.3.3.2 Evaluation of Data Quality Based on the results of the data validation the overall quality of the data will be reviewed to determine which data are of sufficient quality for use in quantitative risk assessment. This review will be conducted in accordance with the USEPA *Guidance for Data Useability in Risk Assessment (Interim Final)* (USEPA, 1990).

Data Uncertainty A discussion of the uncertainties, both inherent and site-specific, that are associated with the data collection or analyses will be included.

5.0 FREE-PHASE PRODUCT REMOVAL TECHNOLOGY EVALUATION

5.1 OBJECTIVES. ABB-ES will evaluate various product recovery technologies to determine the most effective and efficient method for recovering free product and reducing the potential for further migration. Remedial technologies for controlling product recovery and groundwater contamination problems are generally placed in one of four categories: 1) product and groundwater pumping, involving product or groundwater extraction, or injecting water into wells to capture a plume or alter the direction of groundwater movement; 2) subsurface drains, consisting of gravity collection systems designed to intercept product or groundwater; 3) low permeability barriers, consisting of a vertical wall of low permeability materials constructed underground to divert groundwater flow or minimize leachate generation and plume movement; or 4) *in situ* treatment methods to biologically or chemically remove or attenuate contaminants in the subsurface. These technologies can be used singularly or in combination to control existing groundwater contamination.

Recovery of the existing free-phase product layer present at Site 6 is the objective of this interim action. The technologies that will be evaluated to achieve this in the shortest possible time frame are 1) recovery wells, or 2) trenches and subsurface drains. Both of these methods are effective in the recovery of free-phase product. Product recovery may also require *ex situ* groundwater treatment of groundwater that is extracted with the product. Long-term remediation of the site may include further groundwater extraction and *ex situ* treatment, or *in situ* treatment of the affected groundwater.

5.2 PILOT TEST. A pilot test will be conducted at Site 6 to give additional information and assist in developing the most efficient and economical recovery and remediation program for the site.

5.2.1 Product Recovery For the pilot test, a recovery well is being used with a dual pump system to recover the contaminant. The dual pump system consists of a product recovery pump in conjunction with a submersible groundwater depression pump. The product recovery pump removes the floating liquid hydrocarbons from the groundwater to onsite storage tanks. The submersible groundwater depression pump creates a cone of depression by removing water thus lowering the groundwater level and creating a cone of depression. This cone of depression increases the gradient which increases the rate of hydrocarbon movement to the recovery well where the product recovery pump removes free-phase products.

5.2.2 Three Phased Test The pilot test will be conducted over a 24-hour period and will consist of three phases:

1) Product Only - Pumping phase,
2) Product Pumping/Groundwater Level Maintenance - Pumping phase, and
3) Product Pumping/Groundwater Depression - Pumping phase.

The first phase consists of running the product recovery pump and skimming the free-phase product off the top without controlling the groundwater level or the cone of depression. The second phase consists of skimming the product off the top with the recovery pump while maintaining the groundwater level. The third and final phase consists of skimming the free product off the top with the product recovery well while creating a cone of depression of between 2 to 5 feet of drawdown.

5.2.3 Groundwater Effluent Sampling The dual pump system is designed to recover the free product and the groundwater separately. Groundwater samples will be collected and analyzed from the groundwater effluent to determine if the dual pump system adequately separates the free product and the groundwater under the site-specific geologic conditions. If it does not adequately separate the effluent, further or alternative remediation must be used.

5.3 CAPTURE ZONE ANALYSIS/MODELING. ABB-ES will evaluate the hydraulic performance of the recovery well for the recovery of free product based upon the results of the pilot-scale test. The capture zone, well specific capacity, flow rates, and quantity of product removal will be evaluated. An analytical model will be generated to evaluate final recovery wells or interceptor trench locations and depths. The main factors in modeling the capture zone are 1) transmissivity, 2) hydraulic head, and 3) the intended drawdown.

The capture zone model will assist with estimating the number and placement of the additional recovery wells and/or trenches. Each method has advantages and disadvantages under certain conditions. Recovery wells are more effective than trenches when the contamination extends to 25 to 50 feet deep within the aquifer. Trenches are more effective than recovery wells when confronted with strata with low permeability. Therefore, depending upon the site specific characteristics, a series of recovery wells, or a series of trenches, or a combination or recovery wells and trenches will yield optimal recovery of free product.

The selected system will generate an effective cone of influence, which contains the width of the free-phase plume. The discharge rates of the system will be sufficient to hydraulically control the plume movement, thus minimizing additional migration.

5.4 TECHNOLOGY EVALUATION.

5.4.1 Objectives The objective of the F-PP removal system design is to remove as much of the free-phase product as possible, while providing an efficient and effective system and minimizing Operations and Maintenance (O&M) labor.

5.4.2 Scope The technology evaluation will include:

- evaluation of soil, groundwater and free-phase product characteristics,
- evaluation of pilot-scale test results,
- interpretation of aquifer parameters,
- generation of capture zone model and analysis,
- comparison of interceptor trench and recovery well F-PP extraction systems,
- conceptual design of effective F-PP removal system, and
- evaluation of treatment requirements of groundwater effluent.

5.4.3 Data Review The data review consists of compiling information from the F-PPA and pilot-scale test and applying it to current technologies to determine

the best plan of action. Qualities of interest in designing an effective and efficient remediation system are: 1) the amount of free product to be pumped; 2) the amount of groundwater to be pumped; 3) the depth to groundwater; 4) hydraulic conductivity of the aquifer; 5) anticipated yield of groundwater; 6) thickness of aquifer; 7) distribution of grain size in the aquifer; 8) transmissivity; 9) surface water - groundwater relationships; and 10) storage capacity of the aquifer. Specific information received from the pilot-scale test for each recovery well includes: specific capacity, the radius of influence, the drawdown/cone of depression, and the potentiometric surface of the water table during pumping.

5.4.4 Design Criteria The design for removing the free-phase product will adhere to the following criteria:

- protection of human health and the environment,
- attainment of applicable and relevant and appropriate regulations (ARARs),
- cost-effectiveness,
- use of alternative technologies and permanent solutions to the maximum extent practicable, and
- reduction of mobility, toxicity, and/or volume of the free product.

5.4.5 Recovery System Selection

5.4.5.1 Free-Phase Recovery Using empirically derived data from the pilot-scale test, ABB-ES will evaluate the specific capacity of the recovery well, performance of the well (i.e., is free-phase product retrieved easily) and optimum flow rate (pumping tests), based on design drawdowns.

5.4.5.2 Migration Control Hydraulic control of the contaminant plume will be used to contain the plume and minimize further migration. The capture zone model and pilot-scale test will be evaluated for specific information pertaining to migration, drawdown effects, and the hydraulic gradient. The capabilities of trench systems and recovery well systems will be compared and analyzed so as to provide adequate migration control and plume capture.

5.4.6 Residuals Disposal The free-phase product effluent collected during the pilot test will be containerized. The disposal of the effluent will be the responsibility of the base. It is estimated that 1,000 gallons of free product and 1,200 gallons of groundwater effluent will be pumped into containers during this activity. Disposal issues for the actual F-PP removal of the site will be addressed in the Conceptual Design package.

5.4.7 Regulatory Permitting Requirements A long-term discharge permit will be evaluated. All permits required for the recovery of the free-phase product will be obtained. Additional permitting requirements will be addressed in the Conceptual Design package.

5.4.8 F-PPA Report ABB-ES will prepare an evaluation report of the F-PPA activities. The report will be a comprehensive report of observations, engineering and performance evaluation, and conclusions. Recommendations for additional wells, system adjustments, and operational changes will be presented.

6.0 INTERIM ACTION DESIGN

A detailed design of the preferred technology for free-phase product removal will be developed. This design package will include an engineering evaluation addressing the design criteria, permitting and disposal issues, design and drawing specification, an operations and maintenance plan, and a construction cost estimate and schedule.

6.1 ENGINEERING EVALUATION - PERFORMANCE STANDARDS. The effectiveness of the product recovery will be evaluated based upon the pilot-scale test and the capture zone modeling discussed in Section 5.0. If the groundwater effluent sampled during the pilot-scale test shows that the product recovery was not successful in *in situ* separation of groundwater and free product, then other remediation technologies will need to be implemented for long-term remediation. Alternative remediation technologies include biological remediation, soil vapor extraction, and air sparging. An important consideration in selecting a treatment technology is the type of media that is affected and its physical and chemical characteristics. In order to select the best technology, the results of the free-phase product assessment must be known. Of specific interest are:

- volatility,
- solubility,
- adsorption potential, and
- degradation potential.

The four methods of removal will be evaluated. The most beneficial method, both economically and environmentally, will be chosen.

6.1.1 Product Removal Method The product removal method consists of a dual pump system as implemented in the pilot-scale test (Figure 6-1). This method creates a cone of depression and recovers the groundwater and free product separately. The free product is skimmed off the top of the water table by the product recovery pump while the groundwater is removed by the submersible groundwater depression pump. Ideally, this system effectively separates the groundwater and free product without any additional treatment. The pilot-scale test should give a good indication as to whether or not product removal will effectively separate the free product and groundwater at this site.

6.1.2 Biological Remediation *In situ* bioremediation is a useful technique for treatment of soils contaminated with hydrocarbons and other biodegradable contaminants where excavation of the contaminants are impractical or are below buildings. This remedial process works best for hydrocarbon products with a moderate to low volatile nature and low viscosity so that nutrients, air, and moisture can be exchanged within the contamination area. This technique may be selected if the facility operations are expected to continue with minimal disruption.

Parameters that need to be controlled throughout the bioremediation process include availability of organic and inorganic nutrients, oxygen concentration, redox potential, pH, degree of water saturation, hydraulic conductivity of the soil, osmotic potential, temperature, presence of toxins or growth inhibitors, and type and concentrations of contaminants. Vapor extraction wells can be placed near the center of the plume to draw fresh air from the perimeter. Liquid

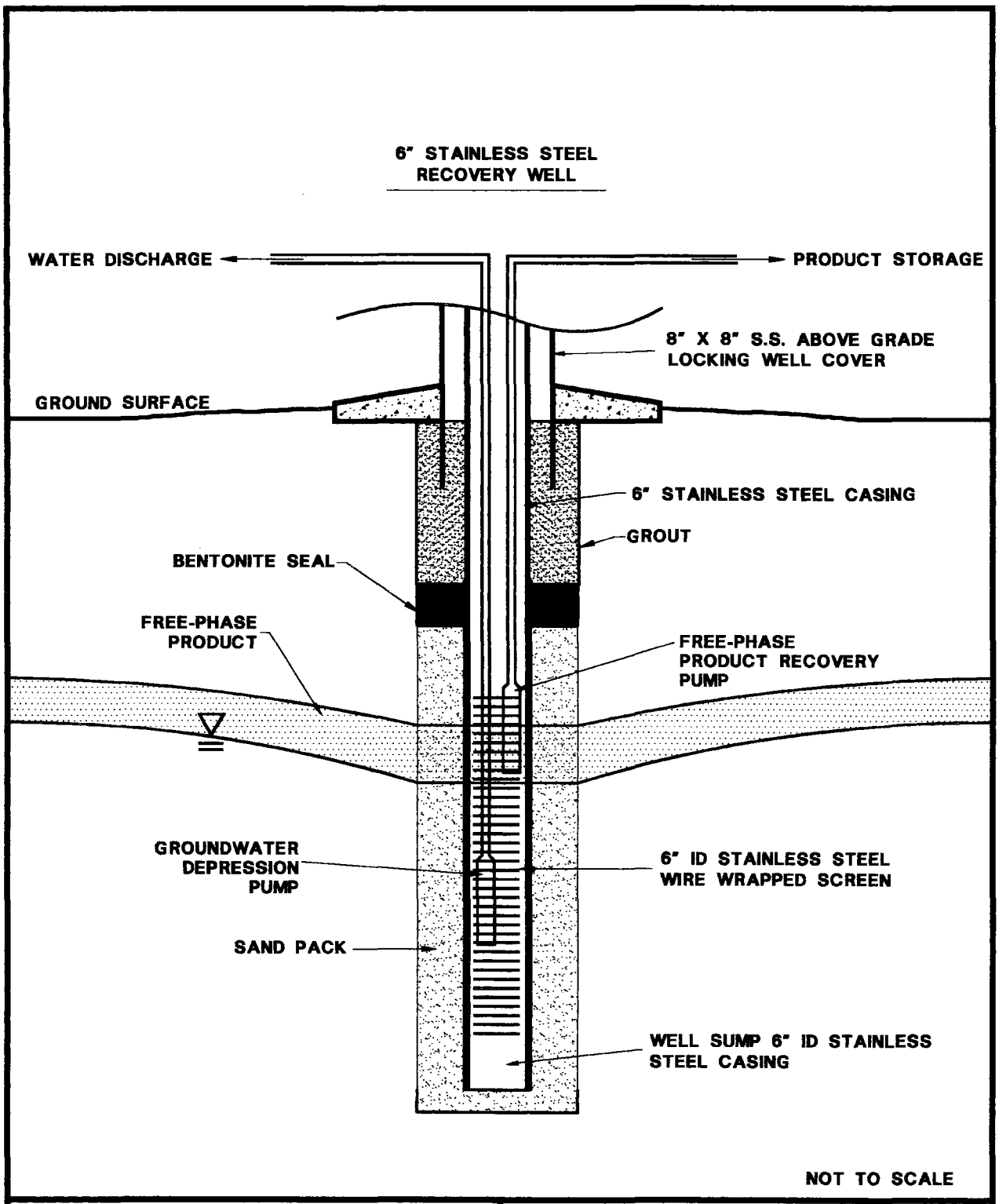

FIGURE 6-1
FREE-PHASE PRODUCT RECOVERY/GROUNDWATER DEPRESSION PUMPS SCHEMATIC

F-PPA/IAD WORK PLAN
NCBC GULFPORT
GULFPORT, MISSISSIPPI

C:\GULFPORT\FPPA\FIG6-1/10-13-93

injection wells or trenches installed within the plume area provide a means for addition of water containing nutrients and oxygen for the degradation of the contaminants.

6.1.3 Soil Vapor Extraction *In situ* soil vapor extraction is a cost-effective method to remediate soils contaminated with hydrocarbons and other relatively volatile organic compounds. The process consists of applying a vacuum on the unsaturated zone and removing vapors from recovery wells or trenches. This induces vapor flow through the unsaturated zone. Contaminants volatilize from the soil matrix and are swept by the carrier gas flow to the recovery wells.

6.1.4 Air Sparging Since the contamination at Site 6 is expected to be volatile, air sparging is a valid treatment option. Air sparging consists of forcing air under pressure through the aquifer matrix. Air bubbles, which cause the VOCs to volatilize, are carried with the VOCs into the unsaturated zone and ultimately into the vapor extraction system. The air sparging process promotes biodegradation by maintaining a high degree of dissolved oxygen within the groundwater. If the product recovery is not effective enough in separating the groundwater from the free product, this is an excellent option for further treatment.

6.2 DESIGN SPECIFICATIONS. Following assessment of pilot-scale test results, a Conceptual Design Package will be submitted. The design package will consist of a 10 percent design remediation system. The conceptual design will incorporate current technologies with the site specific characteristics and quantities. The package will introduce the selected free product extraction system and address design criteria, permitting, and disposal issues.

After acceptance of the Conceptual Design Package, a Prefinal Design Package (90 percent complete) will be prepared. The prefinal design package will include a design analysis, detailed drawings and specifications, quantitative and qualitative flow sheets. The flow sheets will include process flow diagram, piping and instrumentation diagrams (PID), facility layout, and utility layouts and will be submitted to Navy regulators and USGS for review. The prefinal design package will also contain tabulated material equipment, and construction specifications.

The Final Design (100 percent complete) will incorporate any comments to the Prefinal Design Package, and will include the final plans and specifications, design, documents, Quality Assurance Plan (QAP), and O&M plan.

6.3 OPERATIONS AND MAINTENANCE (O&M) PLAN. An O&M plan will be produced and will describe:

- normal O&M tasks,
- routine monitoring tasks,
- sampling and analysis,
- remedies for possible operational problems,
- schedule, and
- reporting mechanisms and related schedule.

6.4 MONITORING PLAN. A Monitoring Plan will be developed for monitoring the Interim Action activities. The plan will include a tabulated schedule outlining objectives of remediation, free-phase product removal design, installation and operation of a pilot-scale test, and engineering evaluation of the pilot-scale test.

7.0 PROJECT MANAGEMENT PLAN

ABB-ES will provide management consistent with the needs of the project's objectives and ABB-ES total quality management program. The management team for this project will be composed of the following personnel:

7.1 PROJECT TEAM - NAVY. Key individuals in the project structure are highlighted below and the project organization is outlined in Figure 7-1.

7.1.1 NCBC Gulfport Environmental Coordinator The Environmental Coordinator (EC), Mr. Gordon Crane will coordinate and monitor the activities at NCBC. Mr. Crane maintains a working relationship with local, state, and federal regulatory agencies.

7.1.2 Southern Division Naval Facilities Engineering Command SOUTHNAVFACENGCOM is responsible for establishing policy and guidance for the CLEAN program. SOUTHNAVFACENGCOM awards contracts, approves funding, and has primary control of report release and interagency communication.

7.1.3 SOUTHNAVFACENGCOM Engineer-In-Charge (EIC) The SOUTHNAVFACENGCOM Engineer-in-Charge (EIC), Mr. Kenneth Barnes, is responsible for the technical and financial management of the F-PPA/IAD activities at NCBC. Mr. Barnes is the primary project contact. He prepares the project statement of work, manages project scope, schedule, and budget, and provides technical review and approval of all deliverables. Mr. Barnes will be responsible for approving changes in the scope of work determined during Project Managers' Meetings.

7.1.4 U.S. Geological Survey The USGS will provide technical support and guidance to the Free Phase Product Assessment. Specific tasks to be executed include obtaining water levels for the Base and the study of the relationship between surface water and groundwater at Site 6. The USGS will serve as reviewers of technical data and lend expertise in the hydrogeologic study. Mr. John Harsh and Mr. Bill Oakley of the Jackson, Mississippi, office will coordinate the USGS participation.

7.2 PROJECT TEAM - ABB-ES.

7.2.1 Program Manager The Program Manager, Mr. Tony Allen, is responsible for oversight and management for the overall multi-installation Navy CLEAN contract for District 1. In this position, Mr. Allen is able to identify overall program needs, promote technology and other information transfer between various Navy CLEAN projects, and direct resources, as appropriate, for effective and timely completion of program activities.

7.2.2 Task Order Manager (TOM) The Task Order Manger for CTO 96 is Ms. Penny Baxter, P.G. Ms. Baxter is responsible for evaluating the appropriateness and adequacy of the scope, and maintaining the schedule and budget. Ms. Baxter is also responsible for the day-to-day conduct of the work, including the integration of the input of supporting disciplines and subcontractors. She will review ongoing quality control during the performance of work, the technical integrity of conclusions and recommendations, and the clarity and usefulness of project work products.

7.2.3 Technical Lead Mr. Kurt Sichelstiel is the Technical Lead for this project and will be responsible for ensuring that field activities are performed

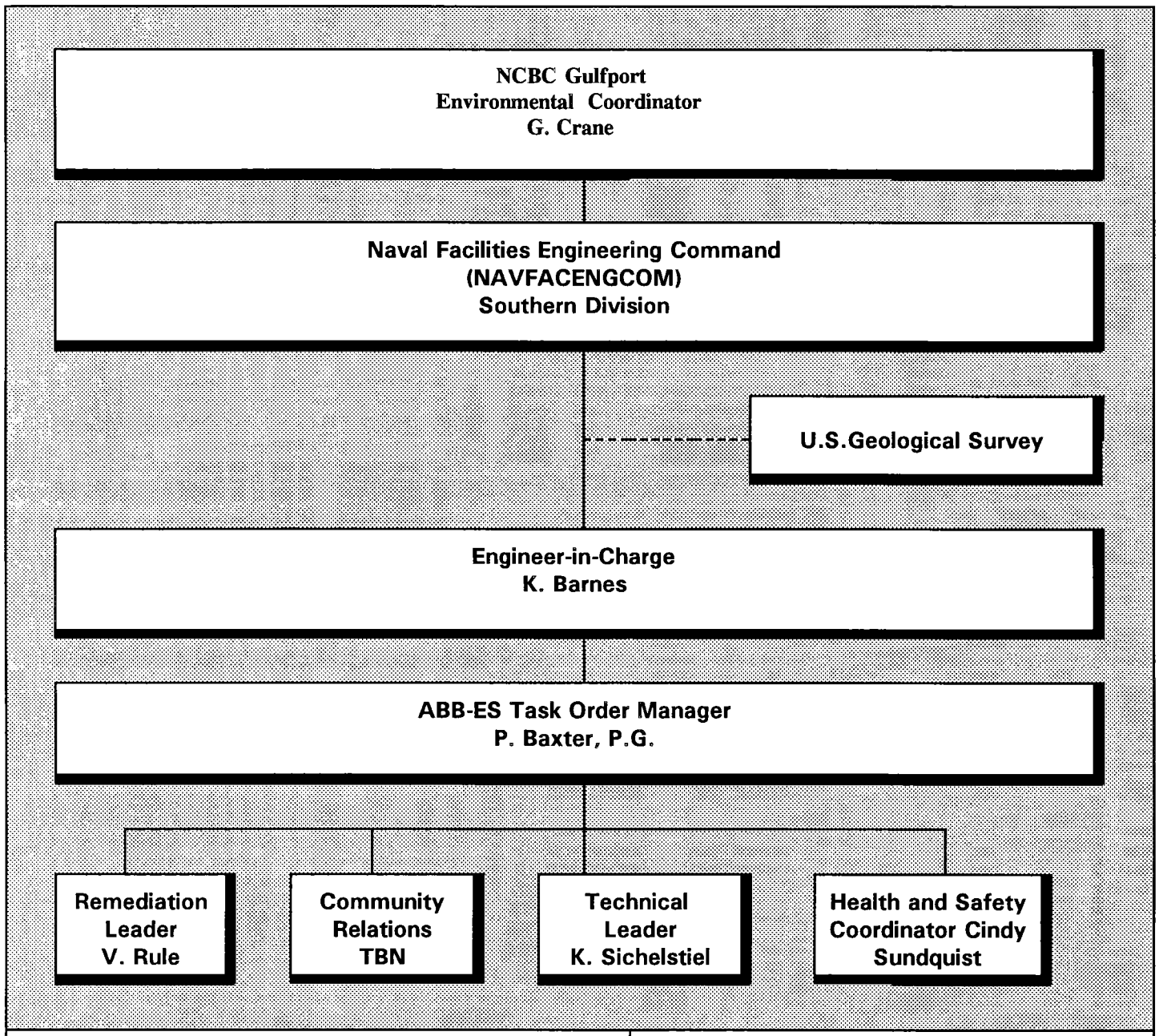

FIGURE 7-1
PROJECT ORGANIZATION

F-PPA/IAD WORK PLAN

NAVAL CONSTRUCTION BATTALION CENTER
GULFPORT, MISSISSIPPI

consistent with the project Work Plan and supporting documents. Mr. Sichelstiel's other responsibilities include oversight of focused field investigation and will coordinate evaluation of the F-PPA data that supports the IAD.

7.2.4 Lead Engineer Ms. Valerie Rule will serve as the lead engineer for the IAD phase of the project. Ms. Rule's responsibilities will include overseeing the design and development of the IA, and providing necessary treatment technologies associated with input with regarding the F-PP removal processes.

7.2.5 Field Operations Leader The FOL will be responsible for implementation and progression of field activities. This will include appropriate logging and documentation of standard and approved drilling and well installation methods to ensure that pertinent drilling and testing information is obtained during the F-PPA. Other responsibilities include oversight of F-PPA and pilot-scale testing activities.

7.2.6 Quality Assurance Manager The Quality Assurance Manager will be responsible for ensuring that field and laboratory activities support DQOs and conform with the project Work Plan. He/she will perform periodic field and laboratory audits to monitor conformance with requirements.

7.2.7 Community Relations The Community Relations (CR) specialist will be responsible for providing community relations support activities as required. Support may include activities such as the development of fact sheets and press releases, or community interviews.

7.3 COMMUNICATIONS. The TOM will communicate to keep the EIC informed of progress during the field program. Should any problems occur during the field program ultimately concerning human health and the environment, the TOM will inform the EIC, the Base Environmental Coordinator (BEC), USGS Technical Representatives, and the State of Mississippi. The TOM will receive daily telephone reports from the Field Operations Leader during the free-phase product assessment activities. The TOM will communicate any additional cost impacts to the EIC.

7.4 REPORTING.

7.4.1 Monthly Progress Reports ABB-ES will prepare Technical and Financial Monthly Reports (TFMR) in accordance with the provisions of Part V, Section 3 of NAVY CLEAN Contract No. N62467-89-D-0317. Each report will be in the format required in the contract (Part IX, Attachment A) and will summarize activities performed, problems encountered, and proposed problem resolutions. It will also include an updated schedule in Gantt format. ABB-ES will notify SOUTHNAV-FACENGCOM upon discovery of significant new site conditions, including imminent hazard or substantial endangerment, or deviation from the project schedule, plan, or budget.

7.4.2 Additional Reporting Requirements Contract Task Order (CTO) No. 096 requests monthly reports in addition to the TFMR. An in-depth Monthly Technical Report (MTR) will be written to include the following: 1) minutes of technical meetings, 2) detailed description of field activities, 3) advance notice on technical issues to familiarize the EIC with the content of reports prior to delivery, 4) copies of QA/QC audits and reviews, 5) identification of anticipated problems for a period of two months forward, 6) identification of

deliverables within a two-month period, and 8) documentation of all phone conversations made to regulatory, natural resource trustee, community, consulting firm, EIC, and activity personnel.

7.4.3 Technical Bulletins Technical Bulletins are one- to two-page reports that are intended for the client and TOM to use in tracking the technical performance and managing the project schedule and budget.

8.0 SITE HEALTH AND SAFETY PLAN

8.1 DESCRIPTION. This site Health and Safety Plan (HASP) has been prepared in conformance with the CLEAN Program District I HASP and is intended to meet the requirements of 29 Code of Federal Regulations (CFR) 1910.120. As such, this HASP addresses activities associated with field operations for the F-PPA/IAD investigation for NCBC, Gulfport, Mississippi. Compliance with this HASP is required for all ABB-ES personnel, contractor personnel, or third parties entering the site.

8.1.1 Project Personnel

8.1.1.1 Project Manager The TOM, Penny Baxter, is responsible for overall project performance. Responsibilities that relate to health and safety include provision for the development of this site-specific HASP, the necessary resources to meet requirements of this HASP, the coordination of staff assignments to ensure that personnel assigned to the project meet medical and training requirements, and the means and materials necessary to resolve any health and safety issues that are identified or that develop on the project.

8.1.1.2 General Site Supervisor The General Site Supervisor is the TOM's designee who is onsite and vested with the authority by the TM to carry out day-to-day operations, including interfacing with the site Health and Safety Officer (HSO).

8.1.1.3 Health and Safety Officer (HSO) The HSO for this project is designated by the PM with concurrence of the ABB-ES Health and Safety Supervisor (HSS) or Health and Safety Manager (HSM). The HSO will have at least an indirect line of reporting to the HSM through the HSS for the duration of his/her assignment as project HSO. The HSO is responsible for developing and implementing this site-specific HASP in accordance with the CLEAN HASP. The HSO will investigate all accidents, illnesses, and incidents occurring onsite. The HSO will also conduct safety briefings and site-specific training for onsite personnel. The HSO will accompany all USEPA, Occupational Safety and Health Administration (OSHA), or other governmental agency personnel visiting this ABB-ES site in response to health and safety issues. The HSO, in consultation with the HSS or HSM, is responsible for updating and modifying this HASP as site or environmental conditions change.

8.1.2 Training Training is defined under the CLEAN HASP, and all personnel entering potentially contaminated areas of this site must meet the requirements of 29 CFR 1910.120. Health and safety training records for ABB-ES personnel are maintained on file at the ABB-ES' Knoxville, Tennessee, office. The HSO will verify proof of training of ABB-ES personnel assigned to work downrange at the site. Personnel without the required training **will not be permitted** in any area with potential for exposure to toxic substances or harmful physical agents (i.e., downrange). Refer to Chapter 3.0 of the CLEAN Generic HASP for further information.

8.1.3 Medical Surveillance All personnel entering potentially contaminated areas of this site will be medically qualified for site assignment through a medical surveillance program outlined in the CLEAN HASP. Personnel who have not received medical clearance will not be permitted downrange. Refer to Chapter 4.0 of the CLEAN HASP for further information.

8.1.4 Facility Characterization

8.1.4.1 Facility Information The NCBC is located in Gulfport, Harrison County, in the southeastern corner of the State of Mississippi (Figure 1-1). The Base occupies 1,100 acres in the western part of Gulfport, immediately south of 28th Street. Biloxi, the county's largest city, is located approximately 7 miles to the east of Gulfport and Pass Christian is located 7 miles to the west. The City of Long Beach borders the western NCBC property line.

The NCBC property land use and land cover classifications include residential; commercial and services; industrial; transportation, communications, and utilities; industrial complexes; mixed forest land; and wetlands (forested and nonforested).

8.1.4.2 Site History and Layout Site 6 is the former Fire-Fighting Training area at NCBC Gulfport (Figure 8-1). The site consisted of two unlined burning pits in a grassy area. One pit was 50 feet by 35 feet by 4 feet, while the other was 40 feet by 25 feet by 6 feet. The burning pits were used from 1966 to 1975 for fire fighting exercises. Waste liquids from the shops were taken to the pits in bowsers or in containers. Waste liquids consisted of fuels, oils, solvents (xylene, Stoddard, toluene, methyl ethyl ketone) paints, and paint thinners. The paints disposed at the site are suspected to contain cadmium, chromium, and lead. Waste fuels could also contain lead. Approximately 500,000 gallons of liquid waste was disposed of and ignited in the two pits for fire fighting exercises. Fires were extinguished with a biodegradable and non-toxic protein foaming agent (NEESA, 1985). The pits have been filled and their locations and dimensions are not readily recognizable.

Most of the liquids burned during drills were consumed by fire. However, some residual flammable liquids remained following burns. There were reports that following heavy rains, waste liquids sometimes overflowed the pits and entered a drainage ditch to the immediate west. Three monitoring wells were installed at the site during a Verification Study (HLA, 1987). Although no product was discovered when these wells were sampled, a site visit by ABB-ES in 1991 discovered approximately four feet of free product floating in monitoring well GPT-6-1. The product was described as an oily, brown, viscous substance with a petroleum odor. A sample of the product will be collected and analyzed prior to the inception of the field program.

8.1.5 Scope of Work ABB-ES will conduct a free-phase product assessment and develop an interim action design at Site 6. The field investigation will include Hydropunch® II investigation, drilling and well installation, aquifer characterization, and groundwater sampling, pilot-scale test of a F-PP recovery well. The objectives of the investigation will be to characterize the free product, delineate the extent of the free product, and to determine the rate of movement of the free product.

8.1.5.1 Hazardous Substances The contaminants of concern known or suspected to be present on-site, along with any established exposure limits for those substances, are listed in Table 8-1.

8.1.6 Site Risks The following are the health hazards and safety hazards that are expected to be encountered at the site.

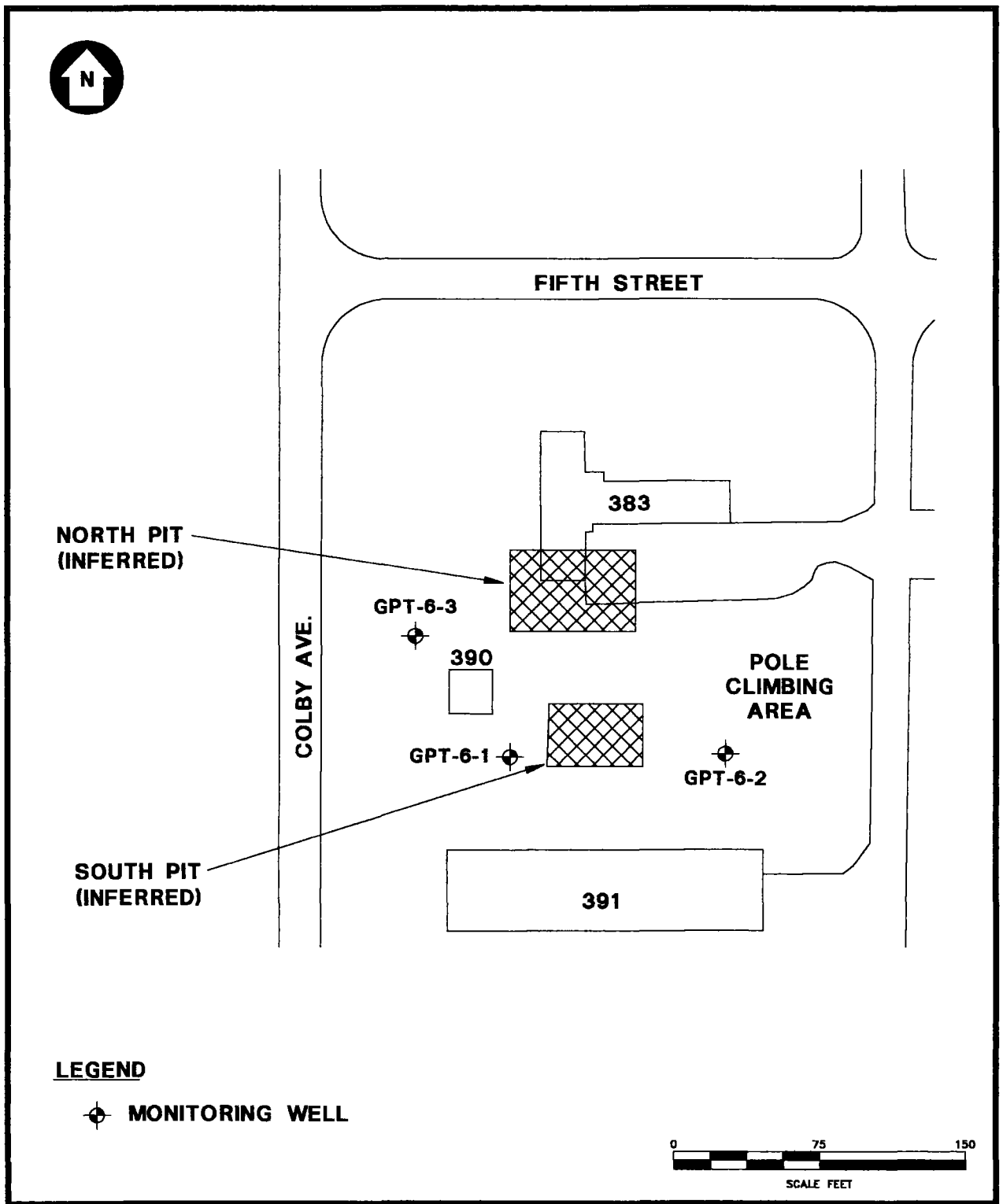

FIGURE 8-1
SITE 6 - FIRE FIGHTING TRAINING AREA

F-PPA/IAD HEALTH AND SAFETY PLAN

NCBC GULFPORT
GULFPORT, MISSISSIPPI

C:\GULFPORT\FPPA\FIG8-1/10-11-93

Table 8-1 Contaminants of Concern

Chemical	Approximate Odor Threshold (ppm)	Permissible Exposure Limits (ppm)	Threshold Limit Value (ppm)	Physical Characteristics	Dermal Toxicity	Remarks
Benzene	4.68	1	10	Colorless liquid, pleasant aromatic odor.	Moderate skin irritant.	Inhalation of large amounts attacks central nervous system (CNS); chronic poisoning may cause leukemia.
Ethylbenzene	140	100	100	Colorless liquid, aromatic odor.	Moderate skin irritant.	Liquid blisters skin; inhalation results in dizziness and depression.
Toluene	0.17	100	100	Colorless liquid, pleasant aromatic odor.	Mild skin irritant.	Ingestion or aspiration can cause pulmonary edema and depressed respiration.
Xylene	0.05	100	200	Colorless liquid, aromatic odor.	Moderate skin irritant.	Inhalation causes headache and dizziness; vapors irritate eyes; can be fatal if ingested.
Naphthalene	--	10	10	Colorless to brown solid with an odor of mothballs	Moderate skin irritant.	Inhalation causes headache and confusion; vapors irritate eyes.
Tetraethyl Lead	--	0.006	0.007	Colorless liquid with a pleasant, sweet odor.	Contact with the skin may cause itching, burning, and skin redness. The chemical can be absorbed through the skin into the body.	Symptoms include headache, anxiety, nausea, loss of appetite, and tremors.
Lead	--	0.05	0.15	Soft, ductile, gray metal, soluble in water containing a weak acid.	None.	Lead poisoning may cause fatigue, anemia, abdominal pains, and neurological damage.
Trichlororethylene	5	50	50	Colorless liquid, sweet odor.	Can cause dermatitis.	Inhalation may cause eye and nose irritation, blurred vision, nausea, or CNS damage.

See notes at end of table.

Table 8-1 (continued) Contaminants of Concern

Chemical	Approximate Odor Threshold (ppm)	Permissible Exposure Limits (ppm)	Threshold Limit Value (ppm)	Physical Characteristics	Dermal Toxicity	Remarks
Cadmium	--	0.2	--	Metal: Silver-white, blue tinged, lustrous, odorless solid.	None.	Carcinogen; causes pulmonary edema, nausea, headache, vomiting, and kidney damage.
Chromium	--	0.5	0.5	Steel gray metal or silver powder.	Can cause dermatitis.	Inhalation may cause irritation of nose, throat, respiratory passages, and lungs.
1,2-Dichloroethane	--	200	200	Colorless liquid, sweet odor.	Moderate skin irritant.	Inhalation causes nausea, vomiting, CNS damage; eye irritant.
2-butanone (MEK)	10	200	200	Colorless liquid, sweet odor.	Moderate skin irritant.	Liquid causes eye burn. Vapor irritates eyes, nose and throat. Can cause headache, dizziness, and loss of consciousness.
Stoddard solvent	--	200	200	Colorless liquid, gasoline-like odor.	Skin and eye irritant.	High concentrations of vapors may cause intoxication, harmful if swallowed.
1,1'-Dichloroethane	--	100	200	Colorless oily liquid, chloroform odor.	Skin and eye irritant.	Ingestion of large amounts could cause nausea, vomiting and cyanosis.
1,2'-Dichloroethane	--	100	200	Colorless liquid, chloroform-like odor.	Skin and eye irritant.	Ingestion causes slight depression to deep narcosis.

Notes:

ppm = parts per million.

Source:

National Institute for Occupational Safety and Health, NO. 90-117

8.1.6.1 Health Hazards Contaminants to which site personnel may be exposed and that may represent potential health hazards are described below and summarized in Table 8-1.

Benzene is a colorless liquid with a pleasant aromatic odor. It is a moderate irritant in small amounts both as a gas and as a liquid. If inhaled in large amounts it attacks the central nervous system, possibly resulting in coma and/or respiratory arrest. Chronic poisoning may cause leukemia or aplastic anemia.

Ethyl benzene is a colorless aromatic liquid. It is a moderate skin irritant in gaseous form. Inhalation of high concentrations of the gas may cause temporary irritation of the nose, dizziness, and depression. The liquid form can blister the skin if not washed off immediately.

Toluene is a colorless liquid with a pleasant aromatic odor. It is a mild skin irritant. Inhalation of high concentrations of the gas can cause temporary smarting of the eyes or irritation of the respiratory system. If the liquid form is allowed to remain on the skin for a long time, smarting and reddening of the skin may occur. Ingestion or aspiration of the liquid causes depressed respiration and pulmonary edema, and can result in kidney or liver damage.

Xylene is a colorless liquid with a sweet odor. It is a moderate skin irritant. When present as a gas in high concentrations, it can cause temporary slight smarting of the eyes or irritation of the respiratory system, headache, and dizziness. The liquid form may cause smarting or reddening of the skin if not washed off immediately. If the liquid is aspirated into the lungs it can result in severe coughing, distress, and rapidly developing pulmonary edema. If ingested, nausea, vomiting, cramps, headache, and coma can occur and may be fatal. Ingestion may also result in kidney and liver damage.

Naphthalene is a volatile, white substance in its solid state with a "moth balls" or coal tar odor. Ingestion or inhalation of naphthalene causes eye irritation, headache, nausea, vomiting, sweating, and abdominal pain. Skin contact may cause redness and dermatitis. Both the vapor and the solid are irritating to the eye.

Tetraethyl lead is a colorless liquid with a sweet, pleasant odor. It is commonly used as an antiknock agent for aviation gasolines. The liquid can be absorbed into the body through contact with the skin, and as a moderate skin irritant, may cause itching, burning, and reddening of the skin. Ingestion or aspiration of the liquid causes headache, anxiety, nausea, loss of appetite, and tremors.

All activities at this site will be conducted in unconfined areas. This will help minimize the chances of exposure of onsite personnel to high vapor concentrations of any of the substances described above.

8.1.6.2 Safety Hazards Safety hazards include those hazards that personnel may be exposed to that are unrelated to hazardous wastes; for example, heat stress, operation and presence around heavy equipment, lifting of objects, vehicle traffic, and snake bites. Extreme caution should be taken by all personnel while conducting work around drill rigs, backhoes, and other heavy equipment. During hot weather, personnel should take time to drink fluids and cool off to avoid overheating and symptoms related to heat stress.

Lifting of heavy objects should be done with caution. Personnel should assist one another with moving heavy objects or use the appropriate equipment to accomplish these tasks.

During all site activities, personnel should be aware of the possibility of an encounter with poisonous snakes, particularly rattlesnakes.

Power substations, power lines, underground utilities, and underground pipelines are to be avoided during drilling operations. Necessary work permits for activities at the NCBC will be obtained from the Public Works Department or the appropriate department (e.g., fire department, etc.).

8.1.7 Conclusions Based on all of the available information (nature of the work, potential on-site chemicals and their properties, exposure limits, etc.), hazards associated with conducting the described field work are considered to be low, assuming appropriate health and safety practices are maintained.

8.1.8 Protective Measures The following are the protective measures that will be used at the site.

8.1.8.1 Engineering Controls When appropriate, engineering controls (i.e., fans to blow volatilized chemicals away form the work area) will be used.

8.1.8.2 Levels of Protection Initial entry for intrusive activities at the sites is modified Level D. Guidelines for the levels of personal protection to be followed are listed below:

- Level D (modified)
  - FID reading < 25 parts per million (ppm) and
  - Benzene 0.5/a Dräger tube < 0.5 ppm

- Level C protection
  - FID reading between 25 and 170 ppm and/or
  - Benzene 0.5/a Dräger tube reading between 0.5 and 50 ppm

- Level B protection
  - FID reading $\geq$ 170 ppm
  - Benzene 5/b Dräger tube $\geq$ 50 ppm

8.1.9 Monitoring It is intended that real time monitoring instrumentation will be used to monitor the work environment in order to ensure the appropriate level of protection for the site team.

8.1.9.1 Air Sampling To the extent feasible, the presence of airborne contaminants will be evaluated through the use of direct reading instrumentation. Information gathered will be used to ensure the adequacy of the levels of protection being used at the site, and may be used as the basis for upgrading or downgrading the levels of protection in conformance with action levels provided in this HASP and at the direction of the site HSO.

The following sampling equipment will be used at the site. Refer to Chapter 7.0 of the CLEAN HASP for information on the calibration and maintenance of the equipment:

- Photovac Organic Vapor Analyzer 10S50 (OVA),

- Dräger tubes: (Benzene 0.5/a and Benzene 0.5/b),
- Lower explosive limit (LEL)/oxygen deficiency meter, and
- FID.

8.1.9.2 Action Levels for Air Monitoring During the initial site entry and while working on the site, the breathing zone and surrounding area will be monitored with an Lower Explosive Limit (LEL)/oxygen deficiency meter. Operations may proceed normally as long as the LEL readings are below 10 percent. If levels between 10 and 20 percent LEL are detected, operations will be temporarily suspended until the situation can be assessed. If LEL levels cannot be reduced by engineering controls, work can continue with precautions (non-sparking tools, bonding, spark arrestors). If LEL levels exceed 20 percent, work will be suspended immediately.

During operations, air monitoring in the breathing zone will be conducted with an FID and Dräger tubes. If continuous readings of above background are obtained, personnel protective equipment will be used as outlined in Subsection 8.1.8.2.

8.1.9.3 Personal Monitoring Personal monitoring will be undertaken to characterize the personal exposure of high risk employees to the hazardous substances they may encounter on-site. Personal monitoring will be conducted on a representative basis. Personnel who are represented by the sampling will be noted in field logs.

The following personal monitoring equipment will be used at the site. Refer to Chapter 7.0 of the CLEAN HASP for information on the maintenance and calibration of the equipment:

- Thermoluminescent Dosimetry Body Badge.

8.1.10 Zonation Due to the nature of the work (multiple soil borings and monitoring well sampling throughout the study area) and the properties of the potential chemicals found onsite, typical exclusion, contamination reduction, and support zones are not necessary or practical at all locations. Therefore, where appropriate, a "floating" exclusion zone in the perimeter of the sampling site will be established to eliminate access to the area by individuals not working on the project or involved in the assessment work. The perimeter will be at least 20 feet in radius and moved accordingly as the assessment points are moved.

8.1.11 Communications When radio communication is not used, the following air horn signals will be employed:

HELP	Three Short Blasts	(. . .)
EVACUATION	Three Long Blasts	(_ _ _)
ALL CLEAR	Alternating Short and Long Blasts	(._._._)

8.1.12 Work Practices General work practices to be used during ABB-ES projects are described in Chapter 8.0 of the CLEAN HASP. Work at the site will be conducted according to these established protocols and guidelines for the safety and health of all personnel involved. Specific work practices necessary for this project or those that are of significant concern are described as follows:

- work and sampling will be conducted in Level D clothing and equipment,

- the buddy system will be used,

- smoking, eating, or drinking in the work area and before decontamination will not be allowed, and

- heat and other work stresses related to wearing protective gear will be avoided. Work breaks will be planned to prevent stress-related accidents or fatigue.

8.1.13 Decontamination and Disposal All personnel and/or equipment leaving contaminated areas of the site will be subject to decontamination, which will take place in the contamination reduction zone. General decontamination practices used during ABB-ES projects are described in Chapter 13.0 of the CLEAN HASP.

8.1.13.1 Personnel Decontamination All personnel leaving the investigation area are subject to decontamination (as necessary). The decontamination procedure required will be determined by the nature and level of contamination found at the sites. At a minimum, site personnel will remove loose soils from boots and clothing before leaving the site. More thorough decontamination procedures will be observed as dictated by site conditions. These procedures are described in Chapter 13.0 of the CLEAN HASP.

8.1.13.2 Small Equipment Decontamination Small equipment will be protected from contamination as much as possible by keeping the equipment covered when at the site and placing the equipment on plastic sheeting, not the ground. Sampling equipment used at the site will be used only once or will be field cleaned between samples with soapy water (Alconox), rinsed with clean water, rinsed with an approved QA/QC solvent, and final rinsed with organic free water.

8.1.13.3 Heavy Equipment Decontamination Heavy equipment will be decontaminated using a high-pressure steam cleaner. Decontamination activities will take place on a designated decontamination pad constructed by the subcontractor. Fluids from heavy equipment decontamination will be contained in approved containers.

8.1.13.4 Collection and Disposal of Decontamination Products All disposable protective gear, decontamination fluids (for both personnel and equipment), and other disposable materials will be double-bagged and disposed of properly at the Base. Decontamination fluids will be disposed in accordance with applicable regulations and facility guidelines. Disposable materials (e.g., gloves and Tyveks™) will be bagged and disposed of properly.

8.2 EMERGENCY CONTINGENCY PLAN. This section identifies emergency and contingency planning that has been undertaken for operations at this site. Most sections of the HASP provide information that would be used under emergency conditions. General emergency planning information is addressed in Chapter 14.0 of the CLEAN HASP. The following subsections present site-specific emergency and contingency planning information.

8.2.1 Personnel Roles, Lines of Authority, and Communication The site HSO or the Health and Safety designee is the primary authority for directing operations at the site under emergency conditions. All communications both onsite and off-

site will be directed through the HSO or designee. Emergency telephone numbers are listed in Subsection 8.5. The HSO will have available on-site a portable communication system to allow contact with the appropriate NWS services in emergency situations.

8.2.2 Evacuation Evacuation procedures at the site will follow those procedures discussed in Chapter 14.5 of the CLEAN HASP for upwind withdrawal, site evacuation, and evacuation of the surrounding area.

8.2.3 Emergency Medical Treatment and First Aid Any personnel injured on-site will be rendered first aid as appropriate and transported to competent medical facilities for further examination and/or treatment. (Designated emergency medical facilities and routes from the site are listed in Subsection 8.2.9) The preferred method of transport would be through professional emergency transportation means; however, when this is not readily available or would result in excessive delay, other transport will be authorized. Under no circumstances will injured persons transport themselves to a medical facility for emergency treatment.

8.2.4 Administration

8.2.4.1 Personnel Authorized Downrange Personnel authorized to participate in downrange activities at this site have been reviewed and certified for site operations by the TOM and the HSS. Certification involves the completion of appropriate training, a medical examination, and a review of this site-specific HASP. All persons entering the site must use the buddy system, and check in with the Site Manager and/or HSO before going downrange.

CERTIFIED ABB ENVIRONMENTAL TEAM PERSONNEL:

Andrew E. Rucinski	_____
John Kirkland	_____
Kate Kelly	_____
Penny Baxter	_____
Harlan Faircloth	_____
Robert Fisher	_____
Allen Young	_____
Kurt Sichelstiel	_____

OTHER CERTIFIED PERSONNEL:

_____	_____
_____	_____
_____	_____

8.2.5 HASP Approvals By their signatures, the undersigned certify that this HASP will be used for the protection of the health and safety of all persons entering this site.

Health and Safety Officer	Date
Project Manager	Date
Health and Safety Manager/Supervisor	Date

8.2.6 Field Team Review I have read and reviewed the health and safety information in the HASP. I understand the information and will comply with the requirements of the HASP.

NAME:

DATE:

SITE/PROJECT:

8.2.7 Medical Data Sheet This Medical Data Sheet will be completed by all *onsite* personnel and kept in the Support Zone during site operations. It is not a substitute for the Medical Surveillance Program requirements consistent with the CLEAN HASP. This data sheet will accompany any personnel when medical assistance or transport to hospital facilities is required. If more space is required, use the back of this sheet.

Project: _____

Name: _____

Address: _____

Home Telephone: Area Code (____) _____

Age: _____ Height: _____ Weight: _____

In case of emergency, contact: _____

Address: _____

Telephone: Area Code (____) _____

Do you wear contact lenses? Yes ( ) No ( )

Allergies: _____

List medication(s) taken regularly: _____

Particular sensitivities: _____

Previous/current medical conditions or exposures to hazardous chemicals:

_____

Name of Personal Physician: _____

Telephone: Area Code (____) _____

8.2.8 Emergency Telephone Numbers

Police Department (off-base)	911
Base Police Department	865-2222
Ambulance	911
Primary Hospital Gulfport Memorial Hospital	(601) 865-3120
Alternate Hospital Garden Park Community Hospital	(601) 865-1188
Fire Department (off-base)	911
Base Fire Department	865-2333
Poison Control Center	(800) 962-1253
National Response Center	(800) 424-8802
Regional USEPA Emergency Response	(800) 414-8802
Site HSO: _____	(615) 531-1922
General Site Supervisor: _____	(615) 531-1922
Project Manager: Penny Baxter	(615) 531-1922
Navy CLEAN HSS: David R. Daniel	(904) 656-1293 x318
ABB Environmental HSM: C.E. Sundquist	(207) 775-5401 x101

8.2.9 Routes to Emergency Medical Facilities The primary source of medical assistance for the site is:

Facility Name: Gulfport Memorial Hospital
Address: 4500 13th Street, Gulfport, Mississippi 39501
Telephone Number: (601) 865-3120

Directions to primary source of medical assistance are shown on Figure 8-2 and as follows:

Exit NCBC Gulfport via the main gate at Broad Ave. and travel south approximately 3/8 mile to traffic signal at 15th St. Cross intersection and take first left into Hospital parking area. Patient admissions is directly ahead. (see Figure 8-2).

Alternative source of medical assistance:

Facility Name: Garden Park Community Hospital

Address: 1520 Broad Avenue, Gulfport, Mississippi 39501

Telephone Number: (601) 865-1188

Directions to alternate source of medical assistance:

Exit NCBC Gulfport via main gate and travel south (right) on Broad avenue approximately 1/4 mile. Hospital is on the left (see Fig. 8-2)

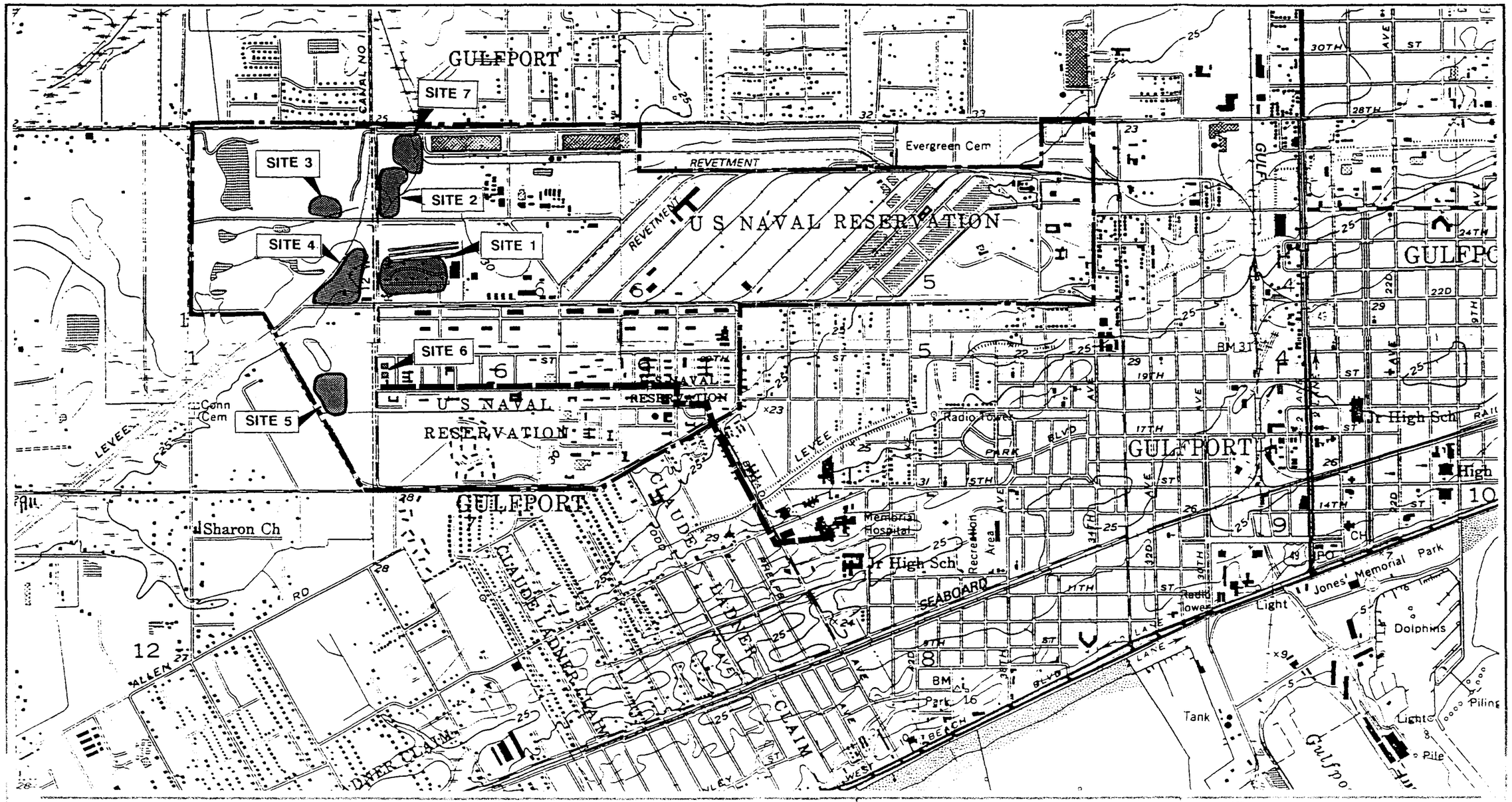

LEGEND

- - - - BASE BOUNDARY

N

0 1500 3000
SCALE FEET

SOURCE: USGS QUADRANGLE, GULFPORT NW, MISS 1985

FIGURE 8-2
DIRECTIONS TO GULFPORT MEMORIAL HOSPITAL

F-PPA/IAD HEALTH AND SAFETY PLAN

NCBC GULFPORT
GULFPORT, MISSISSIPPI

JOB SAFETY & HEALTH PROTECTION

The Occupational Safety and Health Act of 1970 provides job safety and health protection for workers by promoting safe and healthful working conditions throughout the Nation. Requirements of the Act include the following:

EMPLOYERS

All employers must furnish to employees employment and a place of employment free from recognized hazards that are causing or are likely to cause death or serious harm or employees. Employers must comply with occupational safety and health standards issued under the Act.

EMPLOYEES

Employees must comply with all occupational safety and health standards, rules, regulations and orders issued under the Act that apply to their own actions and conduct on the job.

The Occupational Safety and Health Administration (OSHA) of the U.S. Department of Labor has the primary responsibility for administering the Act. OSHA issues occupational safety and health standards, and its Compliance Safety and Health Officers conduct jobsite inspections to help ensure compliance with the Act.

INSPECTION

The Act requires that a representative of the employer and a representative authorized by the employees be given an opportunity to accompany the OSHA inspector for the purpose of aiding the inspection.

Where there is no authorized employee representative, the OSHA Compliance Officer must consult with a reasonable number of employees concerning safety and health conditions in the workplace.

COMPLAINT

Employees or their representatives have the right to file a complaint with the nearest OSHA office requesting an inspection if they believe unsafe or unhealthful conditions exist in their workplace. OSHA will withhold, on request, names of employees complaining.

The Act provides the employees may not be discharged or discriminated against in any way for filing safety and health complaints or for otherwise exercising their rights under the Act.

Employees who believe they have been discriminated against may file a complaint with their nearest OSHA office within 30 days of the alleged discriminatory action.

CITATION

If upon inspection OSHA believes an employer has violated the Act, a citation alleging such violations will be issued to the employer. Each citation will specify a time period within which the alleged violation must be corrected.

The OSHA citation must be prominently displayed at or near the place of alleged violation for three days, or until it is corrected, whichever is later, to warn employees of dangers that may exist there.

PROPOSED PENALTY

The Act provides for mandatory civil penalties against employers of up to $7,000for each serious violation and for optional penalties of up to $7,000 for each nonserious violation. Penalties of up to $7,000per day may be proposed for failure to correct violations within the proposed time period and for each day the violation continues beyond the prescribed abatement date. Also, any employer who willfully or repeatedly violates the Act may be assessed penalties of up to $70,000 for each such violation. A violation of posting requirements can bring a penalty of up to $7,000.

There are also provisions for criminal penalties. Any willful violation resulting in the death of any employee, upon conviction, is punishable by a fine of up to $250,000 (or $500,000 if the employer is a corporation), or by imprisonment for up to six months, or both. A second conviction of an employer doubles the possible term of imprisonment. Falsifying records, reports, or applications is punishable by a fine of $10,000or up to six months in jail or both.

VOLUNTARY ACTIVITY

While providing penalties for violations, the Act also encourages efforts by labor and management, before an OSHA inspection, to reduce workplace hazards voluntarily and to develop and improve safety and health programs in all workplaces and industries. OSHA's Voluntary Protection Programs recognize outstanding efforts of this nature.

OSHA has published Safety and Health Program Management Guidelines to assist employers in establishing or perfecting programs to prevent or control employee exposure to workplace hazards. There are many public and private organizations that can provide information and assistance in this effort, if requested. Also, your local OSHA office can provide considerable help and advice on solving safety and health problems or can refer you to other sources for health such as training.

VOLUNTARY ACTIVITY

Free assistance in identifying and correcting hazards and in improving safety and health management is available to employers, without citation or penalty, through OSHA-supported programs in each State. These programs are usually administered by the State labor or Health department or a State university.

POSTING INSTRUCTIONS

Employees in States operating OSHA approved State Plans should obtain and post the State's equivalent poster.

Under provisions of Title 29, Code of Federal Regulations, Part 1903.2(a)(1) employers must post this notice (or facsimile) in a conspicuous place where notices to employees are customarily posted.

More Information

Additional information and copies of the Act, specific OSHA safety and health standards, and other applicable regulations may be obtained from your employer or from the nearest OSHA Regional Office in the following locations:

Atlanta, Georgia	(404) 347-3573
Boston, Massachusetts	(617) 565-7164
Chicago, Illinois	(312) 353-2220
Dallas, Texas	(214) 767-4731
Denver, Colorado	(303) 844-3061
Kansas City, Missouri	(816) 426-5861
New York, New York	(212) 337-2378
Philadelphia, Pennsylvania	(215) 596-1201
San Francisco, California	(415) 744-6670
Seattle, Washington	(206) 442-5930

Washington, D.C.
1991 (Reprinted)
OSHA 2203

Lynn Martin, Secretary of Labor
U.S. Department of Labor
Occupational Safety and Health Administration

To report suspected fire hazards, imminent danger safety and health hazards in the workplace, or other job safety and health emergencies, such as toxic waste in the workplace, call OSHA's 24-hour hotline: 1-800-321-OSHA.

REFERENCES

Bouwer, H. and R. C. Rice, 1976. A slug test method for determining hydraullic conductivity of unconfined aquifers with completely or partially penetrating wells; Water Resources Research; Vol. 12, No. 3; pp. 423-428.

Brown, G.F., Foster, V.M., Adams, R.W., Reed, E.W., and Padgett, H.D., Jr., 1944, Geology and Ground-Water Resources of the Coastal Area in Mississippi: Mississippi State Geological Survey Bulletin 60, 232 p.

Colson, B.E., and Boswell, E.H., 1985, Water-Resources Overview of the Mississippi Gulf Coast Area: U.S. Geological Survey Open-File Report 85-94, 106 p.

Envirodyne Engineers, Inc., 1985, Initial Assessment Study of Naval Construction Battalion Center, Gulfport, Mississippi, UIC: N62605, prepared for Navy Assessment and Control of Installation Pollutants Department, Naval Energy and Environmental Support Activity; Prot Hueneme, California. July 1985.

Harding Lawson Associates (HLA), 1987, Draft Final Verification Report, Naval Construction Battalion Center, Gulfport Mississippi, prepared for Department of the Navy, Southern Division Naval Facilities Engineering Command, Houston, Texas. November, 1987.

Naval Energy and Environmental Support Activity (NEESA), 1988, Sampling and Chemical Analysis Quality Assurance Requirements for the Navy Installation Restoration Program, Naval Energy and Environment Support Activity: NEESA 20.2-047B, Port Hueneme, California.

Newcome, Roy, Jr., 1975, The Miocene Aquifer System in Mississippi: U.S. Geological Survey Water-Resources Investigations Report 46-75, 3 sheets.

Shows, Thad N., 1970, Water Resources of Mississippi, Mississippi Geological, Economic, and Topographical Survey, Bulletin 113. 1970. (No publishing month available.)

Southern Division Naval Facilities Engineering Command (SOUTHNAVFACENGCOM), 1984, "Master Plan for the Naval Construction Battalion Center, Gulfport, Mississippi." 1984. (No publishing month available).

Southern Division Naval Facilities Engineering Command (SOUTHNAVFACENGCOM), 1989, "Guidelines for Groundwater Monitoring Well Installation." March, 1989.

U.S. Environmental Protection Agency (USEPA), 1983, 600/4-79-02, "Methods for Chemical Analysis of Water and Wastes." March, 1983.

U.S. Environmental Protection Agency (USEPA), 1986. Test Methods for Evaulating Solid Waste, Physical/Chemical Methods (SW-846). 3rd Edition. USEPA.

U.S. Environmental Protection Agency (USEPA), 1987, Data Quality Objectives for Remedial Response Activities Development Process, PB88-131370, EPA/540/G-87/003. Office of Emergency Response and Office of Waste Program Enforcement. Washington, D.C., March, 1987.

U.S. Environmental Protection Agency (USEPA) and Southern Division Naval Facilities Engineering Command (SOUTHNAVFACENGCOM), 1989, Guidelines for Groundwater Monitoring and Well Installation.

U.S. Environmental Protection Agency (USEPA), 1990, Guidance for Data Usability in Risk Assessment (Interim Final): Office of Emergency and Remedial Response EPA 540G-90008.

U.S. Environmental Protection Agency (USEPA), 1991a, Environmental Compliance Branch, Standard Operating Procedures and Quality Assurance Manual: USEPA Region IV, Environmental Services Division, Athens, Georgia. February, 1991.

U.S. Environmental Protection Agency (USEPA), 1991b, Contract Laboratory Program, Statement of Work for Organic Analysis: USEPA Document No. ILM001.8, August, 1991.

U. S. Environmental Protection Agency (USEPA), 1991c, Contract Laboratory Program, Statement of Work for Inorganic Analysis: USEPA Document No. ILM02.1, August, 1991.

U.S. Environmental Protection Agency (USEPA), 1991d, National Functional Guidelines for Organic Data Review, Office of Emergency and Remedial Response. June, 1991.

U.S. Environmental Protection Agency (USEPA), 1991e, National Functional Guidelines for Inorganic Data Review, Office of Emergency and Remedial Response. June, 1991.

U.S. Geological Survey, 1986, Sources for Water Supplies in Mississippi, A cooperative study sponsored by the U.S. Geological survey and the Mississippi Research and Development Center, Jackson, Mississippi. Revised 1986. (No publishing month available.)

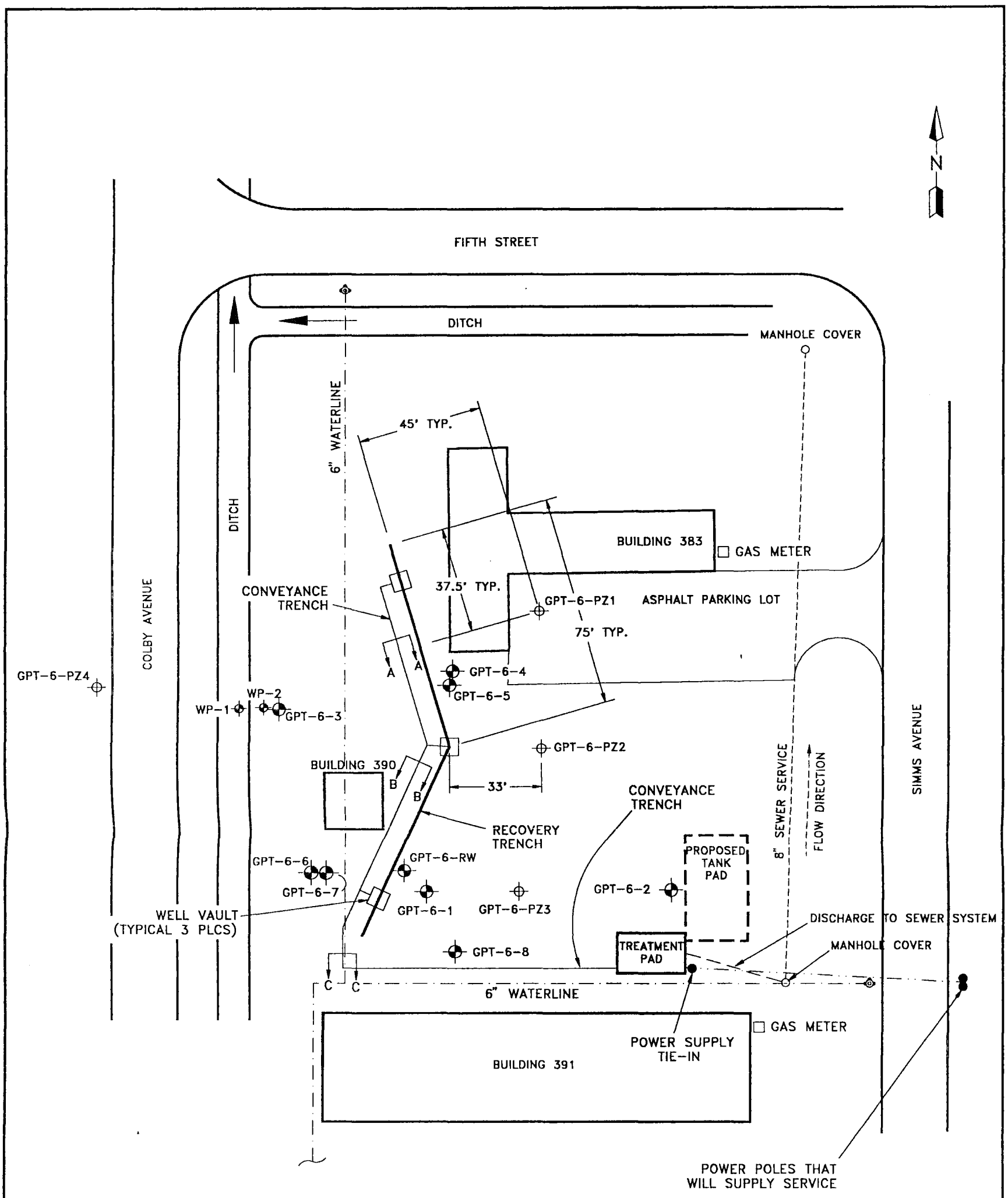

LEGEND

- FIRE HYDRANT
- PROPOSED PIEZOMETER LOCATION
- GPT-6-4 MONITORING WELL LOCATION (EXISTING)
- GPT-6-RW RECOVERY WELL LOCATION (EXISTING)
- WP-1 WELL POINT LOCATION (EXISTING)
- DRAINAGE DITCH
- SURFACE WATER FLOW DIRECTION
- SEWER SERVICE FLOW DIRECTION

NOTES:

PROPOSED TANK PAD MAY BE NEEDED IF EFFLUENT TANKS ARE REQUIRED FOR CONTROLLED FLOW STREAM TO POTW.

0 20 40
SCALE: 1" = 40'

SOURCE: E. PATRICK CASSADY & ASSOC., INC., 1994

FIGURE S-01

SITE LAYOUT

FREE-PHASE PRODUCT REMOVAL DESIGN PHASE

NCBC GULFPORT
GULFPORT, MISSISSIPPI

C:\GULFPORT\PS\SITE6\NCBC\8505.70\FIGS-01\JSL\941024

FLOW STREAM	1	2	3	3	4	5	6
	RECOVERED STREAM	GROUNDWATER	EFFLUENT	EFFLUENT	VAPOR (4) DISCHARGE	AIR (NOTE 5)	PRODUCT
Flow (gpm)	25	25	25				<0.1
Water	25	25	25				
Product	<0.1						<0.1
Air (cfm)						600	
COMPOUND (ug/L)	(ug/L)	(ug/L)	(ug/L)	(lb/hr)	(lb/hr)		
Benzene	83	83	<5		0.00104		
2-Butanone	80	80			0.00100		
Carbon Disulfide	4	4					
Chloroethane	310	310			0.0038		
Chloroform	20	20	<100		0.00025		
Chloromethane	12	12			0.00015		
1,1-Dichloroethane	4900	4900			0.06133		
1,2-Dichloroethane	1200	1200			0.01502		
1,1-Dichloroethene	3100	3100	<7		0.03880		
1,2-Dichloroethene (total)	170	170			0.00213		
cis-1,2-Dichloroethene			<70				
trans-1,2-Dichloroethene			<100				
Ethylbenzene	77	77	<700		0.00096		
Methylene Chloride	95	95	<5		0.00119		
4-Methyl-2-Pentanone	100	100			0.00125		
Tetrachloroethene	32	32	<5		0.00040		
1,1,1 Trichloroethane	5900	5900	<200		0.07385		
Trichloroethene	90	90	<5		0.00113		
Toluene	340	340	<1000		0.00426		
Vinyl Chloride	35	35	<2		0.00044		
Xylene	490	490	<10,000		0.00613		
Phenol	48	48					
2-Methylphenol	380	380					
4-Methylphenol	1100	1100					
2,4-Dimethylphenol	56	56					
Naphthalene	230	230	<400				
2-Methylnaphthalene	770	770					
Acenapthene	48	48					
Fluorene	23	23					
Phenanthrene	350	350					
alpha-Chlordane	0.14	0.14	<200				
OCDD (pg/L)	15 (Note 2)	15 (Note 2)	<30				
DISSOLVED METALS (ug/l)							
Aluminum	203	203					
Arsenic	6.0	6.0	<50				
Barium	259	259	<5000				
Beryllium	<1.0	<1.0					
Cadmium	<1.0	<1.0	<20				
Calcium	127,000	127,000					
Chromium	<3.0	<3.0	<50				
Cobalt	7.6	7.6					
Copper	<3.0	<3.0	<20				
Iron	11,200	11,200					
Lead	1.5	1.5	<100				
Manganese	718	718	<500				
Mercury	<0.20	<0.20	<2				
Nickel	<13.0	<13.0	<80				
Selenium	21.7	21.7	<20				
Vanadium	2.7	2.7					
Zinc	62.3	62.3	<50				
PARAMETERS		(mg/L)	(mg/L)				
Alkalinity	17	17					
Hardness	44	44					
TDS	78	78					
TSS	<1.0	<1.0	<300				
Chloride	9.9	9.9					
Sulfate	14	14					
BOD, 5 Day	13	13	<300				
COD	36	36					

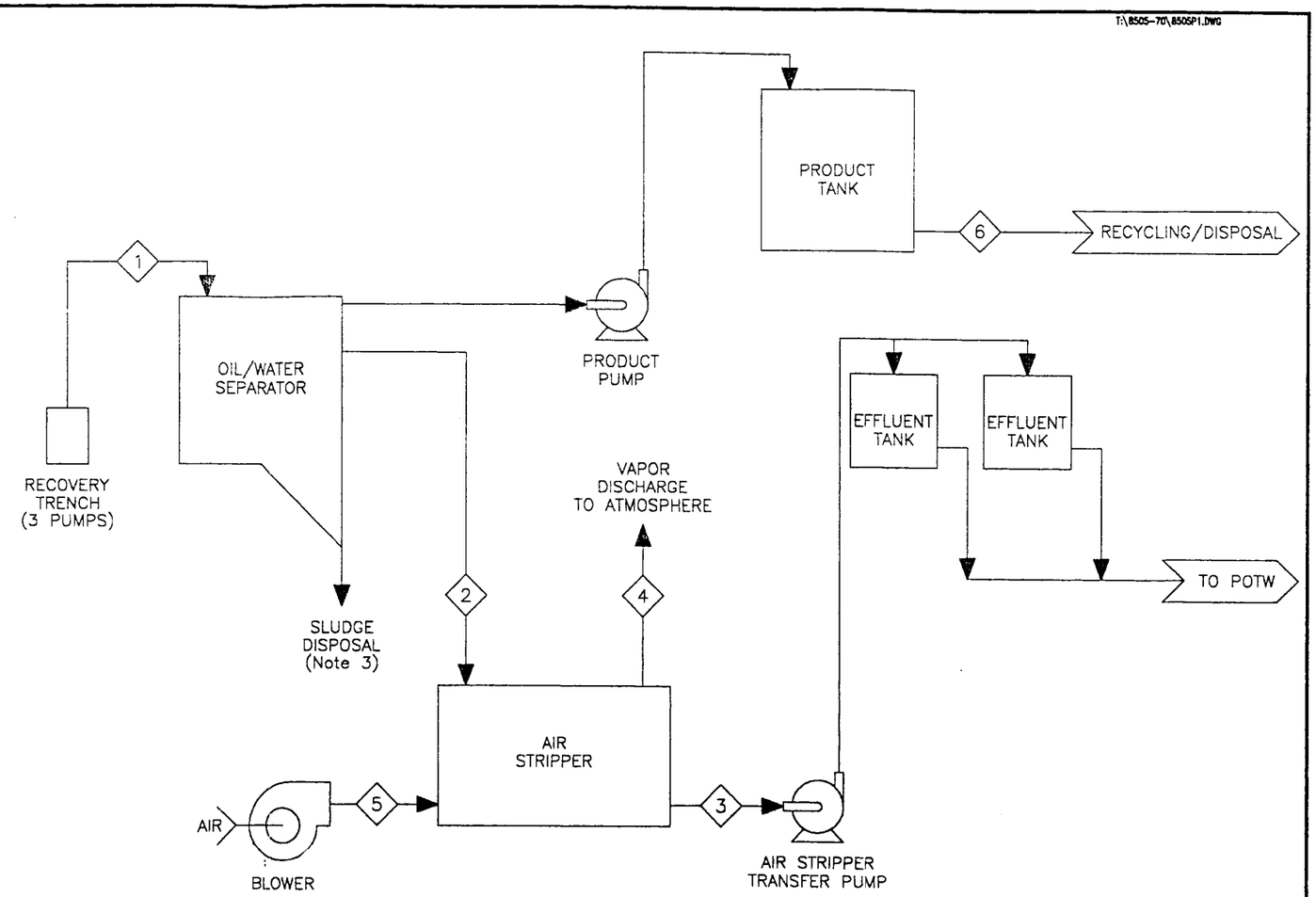

NOTES:

(1) THIS PROCESS FLOW DIAGRAM STATES EFFLUENT CRITERIA BASED ON PERFORMANCE REQUIREMENTS FOR THE SYSTEM. ORGANIC COMPOUND EFFLUENT CRITERIA ARE BASED ON FEDERAL MAXIMUM CONTAMINANT LEVELS FOR DRINKING WATER. METALS EFFLUENT CRITERIA ARE BASED ON POTW ACCEPTANCE CRITERIA.

(2) USING THE TOXICITY EQUIVALENT FACTOR FOR THE CONCENTRATION OF 15,000 FOR OCDD IS EQUIVALENT TO 15 pg/L TCDD.

(3) SLUDGES WILL BE REMOVED PERIODICALLY.

(4) ASSUME TOTAL VAPORIZATION FOR WORST CASE SCENARIO.

(5) AIR FLOW RATE IS BASED ON THEORETICAL REQUIREMENTS USING A LOW PROFILE AIR STRIPPER. ACTUAL FLOW RATE WILL DEPEND ON ACTUAL EQUIPMENT USED.

FIGURE F-01
PROCESS FLOW DIAGRAM

PRODUCT RECOVERY/ GROUNDWATER TREATMENT SYSTEM
SITE 6 - FIRE TRAINING AREA
NCBC GULFPORT
GULFPORT, MS.

C:\GULFPORT\RDP\SITE6\8505.70\TG8505P2\JSL\940804

Per_Spe.GLP
mlv.11.94

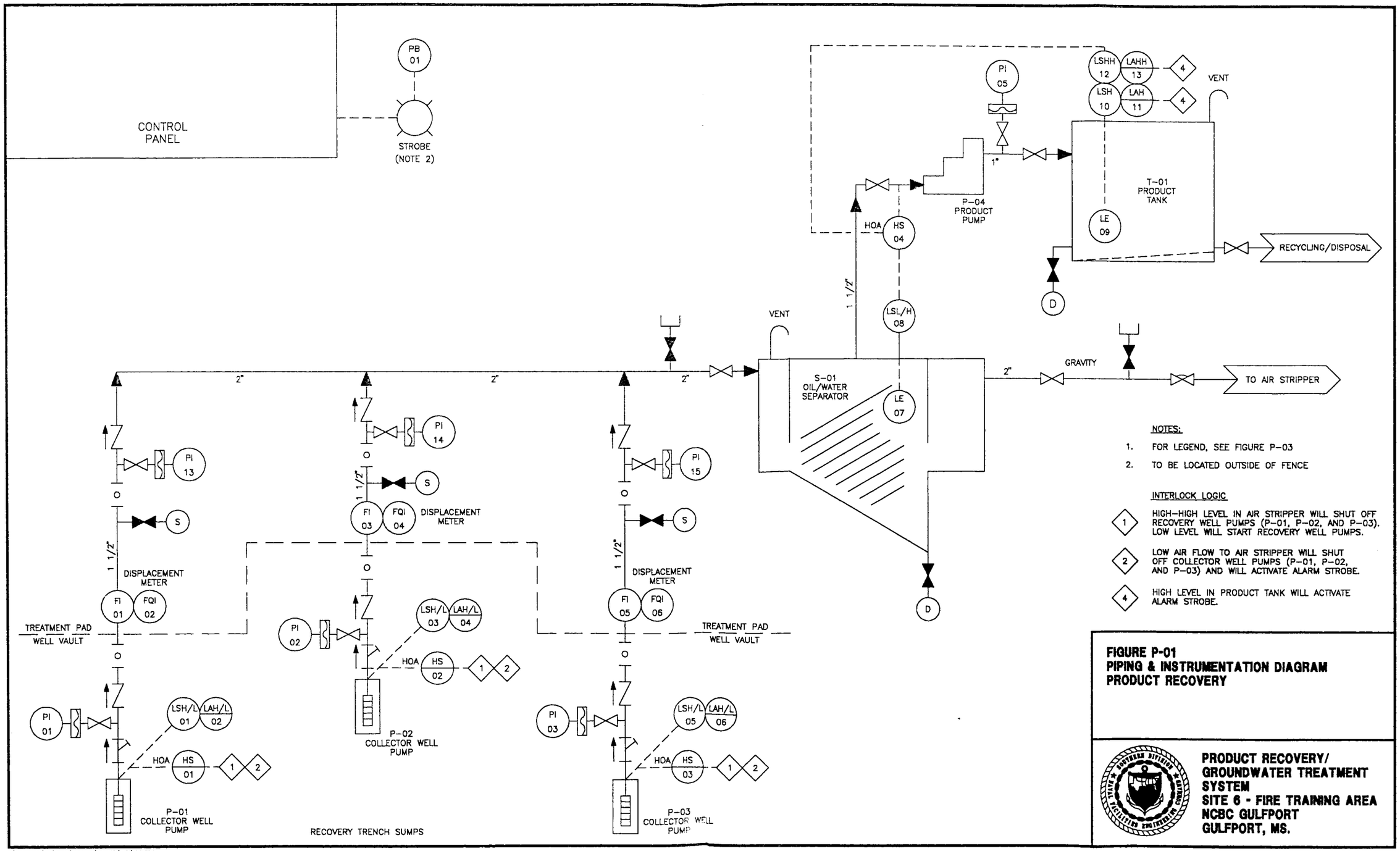

NOTES:

1. FOR LEGEND, SEE FIGURE P-03
2. TO BE LOCATED OUTSIDE OF FENCE

INTERLOCK LOGIC

1. HIGH-HIGH LEVEL IN AIR STRIPPER WILL SHUT OFF RECOVERY WELL PUMPS (P-01, P-02, AND P-03). LOW LEVEL WILL START RECOVERY WELL PUMPS.
2. LOW AIR FLOW TO AIR STRIPPER WILL SHUT OFF COLLECTOR WELL PUMPS (P-01, P-02, AND P-03) AND WILL ACTIVATE ALARM STROBE.
4. HIGH LEVEL IN PRODUCT TANK WILL ACTIVATE ALARM STROBE.

FIGURE P-01
PIPING & INSTRUMENTATION DIAGRAM
PRODUCT RECOVERY

PRODUCT RECOVERY/ GROUNDWATER TREATMENT SYSTEM
SITE 6 - FIRE TRAINING AREA
NCBC GULFPORT
GULFPORT, MS.

C:\GULFPORT\PS\SITE6\B505.70\B505P2\JSL\B41024

Per_Spe.GLP
mlv.11.94

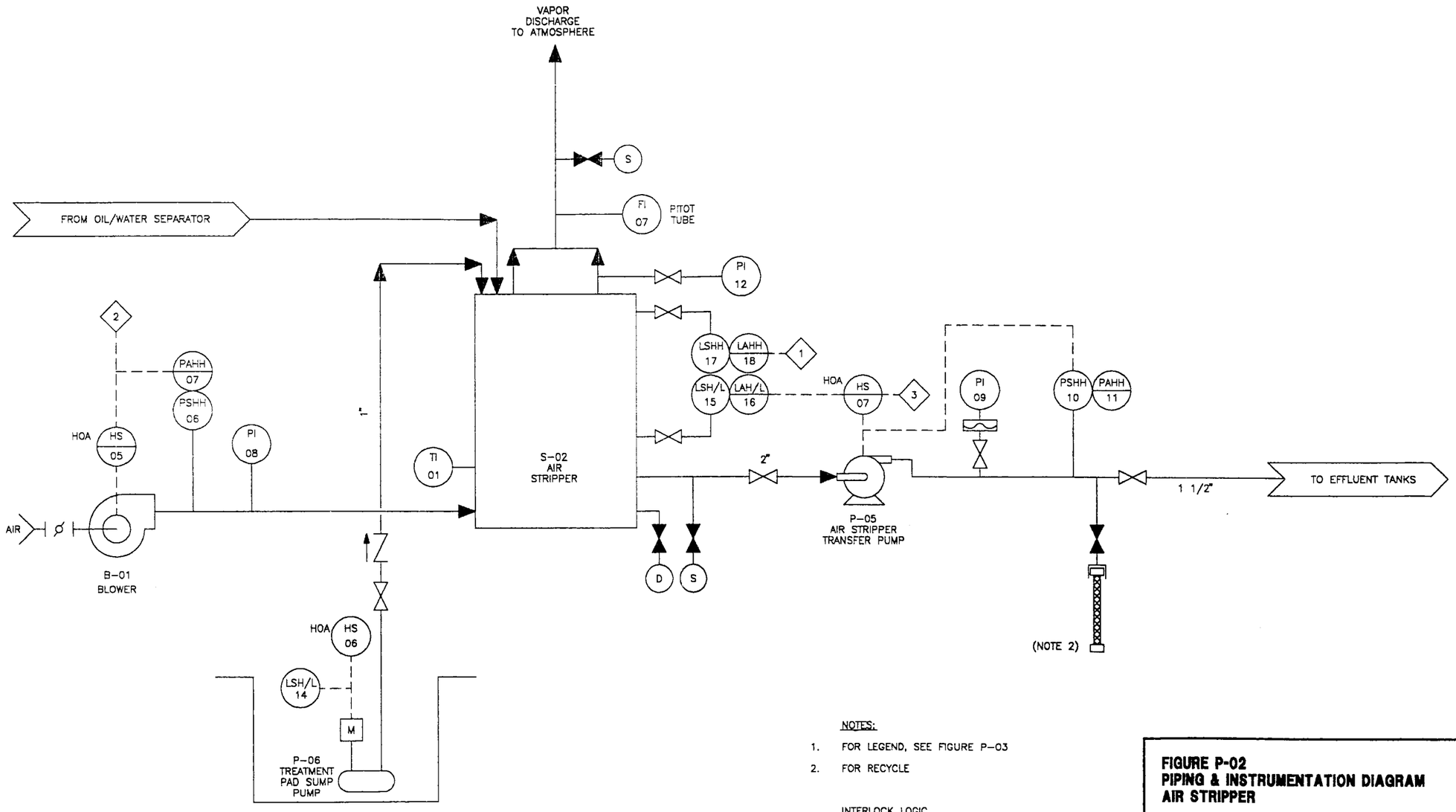

NOTES:

1. FOR LEGEND, SEE FIGURE P-03
2. FOR RECYCLE

INTERLOCK LOGIC

1. HIGH-HIGH LEVEL IN AIR STRIPPER WILL SHUT OFF COLLECTOR WELL PUMPS (P-01, P-02, AND P-03). LOW LEVEL WILL START COLLECTOR WELL PUMPS.
2. LOW AIR FLOW TO AIR STRIPPER WILL SHUT OFF COLLECTOR WELL PUMPS (P-01, P-02, AND P-03) AND WILL ACTIVATE ALARM STROBE.
3. HIGH LEVEL IN BOTH EFFLUENT TANKS WILL SHUT OFF AIR STRIPPER TRANSFER PUMP.

FIGURE P-02
PIPING & INSTRUMENTATION DIAGRAM
AIR STRIPPER

PRODUCT RECOVERY/
GROUNDWATER TREATMENT
SYSTEM
SITE 6 - FIRE TRAINING AREA
NCBC GULFPORT
GULFPORT, MS.

C:\GULFPORT\PS\SITE6\8505.70\8505PZ\JSL\941011

Per_Spe.GLP
mlv.11.94

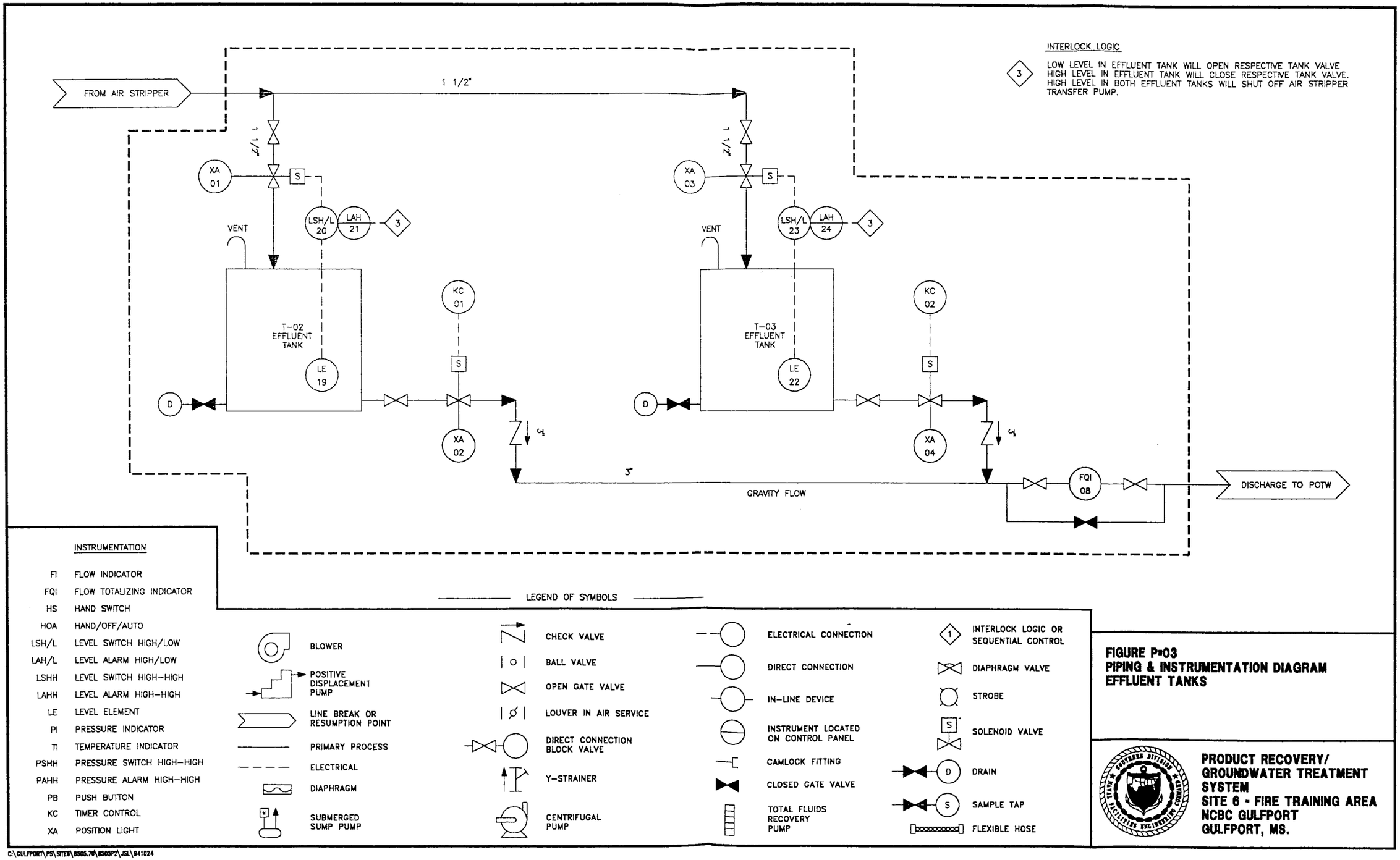

FIGURE P-03
PIPING & INSTRUMENTATION DIAGRAM
EFFLUENT TANKS

PRODUCT RECOVERY/
GROUNDWATER TREATMENT
SYSTEM
SITE 6 - FIRE TRAINING AREA
NCBC GULFPORT
GULFPORT, MS.

C:\GULFPORT\PS\SITE6\8505.70\8505P2\JSL\841024

Per_Spe.GLP
mlv.11.94