N00213.AR.000206
NAS KEY WEST
5090.3a

DRAFT OPERATIONS AND MAINTENANCE MANUAL FOR REMEDIATION SYSTEM AT SOLID WASTE MANAGEMENT UNIT 9 JET ENGINE TEST CELL NAS KEY WEST FL

5/1/1997

BECHTEL ENVIRONMENTAL INC

OPERATION AND MAINTENANCE MANUAL
SWMU-9 JET ENGINE TEST CELL

NAVAL AIR STATION
KEY WEST, FLORIDA

Prepared for
DEPARTMENT OF THE NAVY
SOUTHERN DIVISION
NAVAL FACILITIES ENGINEERING COMMAND
Under Contract No. N62467-93-D-0936

Prepared by
BECHTEL ENVIRONMENTAL, INC.
OAK RIDGE, TENNESSEE

MAY 1997

Bechtel Job No. 22567

DRAFT

CONTENTS

Page

Attachments

1. INTRODUCTION

The purpose of this manual is to provide the necessary information for Public Works at NAS Key West to assume responsibility for the Operation and Maintenance (O&M) of the remediation system at SWMU-9. This manual supplements the O&M manual prepared by the equipment supplier, GeoPure. The GeoPure manual is included as Attachment 3. This manual incorporates the experience from six months of system operation and provides:

- site specific data,
- operating instructions,
- sampling requirements,
- trouble shooting guides,
- weekly and monthly maintenance requirements,
- spare parts and supplier information, and
- drawings and other data.

1.1 SWMU-9 SITE DESCRIPTION AND HISTORY

SWMU-9 lies on the northeast perimeter of Boca Chica Field between the taxiway and the inlet. When it was in use, this facility was used to test jet engines. Since the facility has been closed, most of the testing equipment has been removed. A shed, located at the northeast edge of the facility, houses the remediation system for SWMU-9.

The installation of the treatment system was complete in August 1996.

The equipment supplier for the treatment system was GeoPure of Gainesville, Florida. The recovery wells were installed by Environmental Drilling of Pompano Beach, Florida. The site electrical work was performed by TPS, Inc. of Key West, Florida. Bechtel performed system installation and provided O&M for a one year period starting in August 1996. JJ Sosa and Associates provided these O&M services as a subcontractor to Bechtel.

1.2 CLEANUP OBJECTIVE

The contamination at SWMU-9 is floating free product (jet fuel) and petroleum and solvent contaminated groundwater. This system was installed as an Interim Remedial Action for SWMU-9.

The primary objective at SWMU-9 is hydraulic containment of the groundwater to prevent contaminants from reaching the adjacent inlet. Other objectives included:

- Treatment of groundwater contaminated with chlorinated solvents and petroleum
- Free petroleum product recovery

To contain the plume, three extraction wells were installed to pump groundwater for treatment and disposal. The groundwater is treated with the onsite treatment system to meet FDEP standards listed in Table 1. The analytical results from effluent samples collected from Sampling Port 6 (SP-6) should not exceed these values.

TABLE 1. SWMU-9 GROUNDWATER CLEANUP GOALS		
Contaminant	**Cleanup Standard**	**Reference**
Total Napthalenes	100 ppb	Petroleum Contaminated Site Cleanup Levels for G-II Groundwater 62.770.310 FAC
Bezene	1.18 ppb	Maximum Contaminant Level - Primary Drinking Water Standard 62.550.520 FAC
cis 1,2-DCE	70 ppb	Maximum Contaminant Level - Primary Drinking Water Standard 62.550.520 FAC
trans 1,2-DCE	100 ppb	Maximum Contaminant Level - Primary Drinking Water Standard 62.550.520 FAC
TCE	3 ppb	Maximum Contaminant Level - Primary Drinking Water Standard 62.550.520 FAC

1.3 SYSTEM DESCRIPTION

The treatment system consists of the following elements:

- Three groundwater recovery wells with pneumatically operated submersible recovery pumps.
- An air compressor system.
- An oil/water separator to remove any free product from the groundwater.
- An air stripper to remove the volatile contaminants from the groundwater.
- A recharge gallery to dispose of treated groundwater.
- A Programmable Controller to operate the system and its safety functions.

Pages 1 through 3 of Section 1 of the GeoPure manual (Attachment 3) contains a thorough description of the various components of the treatment system. Table 2 identifies the main control panel switches and their function. Table 3 contains an itemized list of all the equipment and components and provides a cross-reference to the Equipment IDs. The drawings for the system are included in Attachment 2.

Table 2. Control Panel Switches	
Switch ID	**Function**
Power	Turns on power to the main panel
SV-10	Activates Solenoid for Recovery Well Pumps P-1, P-2 and P-3
SV-30	Activates Solenoid for Transfer Pump P-30
UltraStrip	Powers up UltraStrip Blower
P-20	Activates Transfer Pump P-20
Air Compressor	Powers up Air Compressor

Table 2. SWMU-9 Equipment		
ID	**Part**	**Comments**
AC-10	Air Compressor	
T-31	Free Product Storage Tank	
AST-20	Air Stripper	
T-30	Surge Tank	
O/W -30	Oil/Water Separator	
P-1	Recovery Well RW-1 Pump	
P-2	Recovery Well RW-2 Pump	
P-3	Recovery Well RW-3 Pump	
P-20	Air Stripper Transfer Pump	
P-30	Pneumatic Transfer Pump	
Valve V-1	Recovery Well RW-1 Effluent Water Control Valve	Partially Open During Operation
Valve V-2	Recovery Well RW-1 Compressed Air Control Valve	Fully Open During Operation
Valve V-3	Recovery Well RW-2 Effluent Water Control Valve	Partially Open During Operation
Valve V-4	Recovery Well RW-2 Compressed Air Control Valve	Fully Open During Operation
Valve V-5	Recovery Well RW-3 Effluent Water Control Valve	Partially Open During Operation
Valve V-6	Recovery Well RW-3 Compressed Air Control Valve	Fully Open During Operation
Valve V-7	Surge Tank Sludge Drain	Caution: this valve must remain closed during system operation
Valve V-8	Surge Tank Effluent Water Control Valve	Fully Open During Operation
Valve V-9	Air Stripper Influent Water Control Valve	Partially Open During Operation
Valve V-10	Air Stripper Effluent Water Control Valve	Caution: this valve must remain open during system operation
Valve V-11	Oil/Water Separator Influent Control Valve	Fully Open During Operation
Valve V-12	Acid Cleaning Control Valve	Caution: this valve must remain open during system operation and closed during acid cleaning
Valve V-13	Acid Cleaning Control Valve	Caution: this valve must remain closed during system operation and open during acid cleaning
Valve V-14	Compressed Air Shutoff Valve	Fully Open during Operation
Valve SV-10	Solenoid Valve for Recovery Well Pumps P-1, P-2 and P-3	
Valve SV-30	Solenoid Valve for Transfer Pump P-30	

DRAFT

Table 2. SWMU-9 Equipment (cont.)		
ID	**Part**	**Comments**
PI-1	Recovery Well RW-1 Effluent Water Pressure Indicator	
PI-2	Recovery Well RW-2 Effluent Water Pressure Indicator	
PI-3	Recovery Well RW-3 Effluent Water Pressure Indicator	
PI-4	Transfer Pump Water Pressure Indicator	
PI-10	Air Compressor Tank Pressure Indicator	
PI-11	Recovery Well 1 Pump Air Pressure Indicator	
PI-12	Recovery Well 2 Pump Air Pressure Indicator	
PI-13	Recovery Well 3 Pump Air Pressure Indicator	
PI-14	Transfer Pump P-30 Air Pressure Indicator	
PI-15	Air Compressor Regulated Air Pressure Indicator	
PI-20	Air Stripper Effluent Water Pressure Indicator	
PI-21	Air Stripper Air Pressure Indicator	
FI-1	Recovery Well RW-1 Water Flow Indicator	
FI-2	Recovery Well RW-2 Water Flow Indicator	
FI-3	Recovery Well RW-3 Water Flow Indicator	
FI-4	Air Stripper Water Flow Indicator	
FI-20	Air Stripper Air Flow Indicator	
TI-1	Air Stripper Temperature Indicator	
FQC-1	Recovery Well RW-1 Flow Counter	
FQC-2	Recovery Well RW-2 Flow Counter	
FQC-3	Recovery Well RW-3 Flow Counter	
FE-1	Flow Meter	
FE-2	Flow Meter	
SP-1	Sampling Port For Groundwater From RW-1	
SP-2	Sampling Port For Groundwater From RW-2	
SP-5	Sampling Port for Air Stripper Influent Water	
SP-3	Sampling Port For Groundwater From RW-3	
SP-4	Sampling Port For Oil/Separator Influent Water	
SP-6	Sampling Port for Air Stripper Effluent Water	

DRAFT

2. START UP AND SHUTDOWN PROCEDURE

All switches, valves, and equipment items are labeled and tagged and identified on drawing 321-DD576-001 in Attachment 2 and Tables 2 and 3.

2.1 STARTUP PROCEDURE

1. Verify that ALL switches on power console are in OFF position.
2. Place main system power switch in ON position
3. Place Air Compressor switch in On Position
4. Place SV-10 switch in AUTO position. Once the system controller verifies that all system alarms have been cleared, groundwater recovery pumps will start operation.
5. Place SV-30 switch in AUTO position. This controls the pneumatic transfer pump P-30 for transferring groundwater from the surge tank to the UltraStrip and will run as needed.
6. Place the P-20 switch into AUTO position.
7. Place UltraStrip switch in auto position. The blower should start.
8. Now system startup is complete and system operation is automatically controlled.

2.2 SHUTDOWN PROCEDURE

1. Place switch SV-10 in OFF position. This will turn off flow of water from wells.
2. Place switch SV-30 in OFF position. This will stop flow from surge tank to UltraStrip.
3. Place UltraStrip switch in OFF position. This allows the water to drain from the UltraStrip.
4. Once all water has drained from UltraStrip. The switch for pump P-20, air compressor and main system can be switched to off position.

CAUTION: If the power to the system is cut off without allowing the UltraStrip to drain or this shutdown sequence is not followed, the UltraStrip can overfill and water will drain through the blower.

3. ALARMS

The treatment system is designed to prevent any uncontrolled discharge of contaminated water. Some alarm conditions will require a manual reset prior to the system restarting and some will automatically reset once the alarm condition is addressed. The following conditions are monitored:

- Surge tank (T-30) high water level
- UltraStrip Blower (B-1) low discharge pressure
- UltraStrip Sump (AST-20) high water level
- Product Recovery Drum (T-31) high product level
- Oil/Water Separator (O/W-30) high level
- Motor Amp Overload

Pages 7 and 8 of Section 1 of the GeoPure Manual contain detailed descriptions of the alarm conditions, reset instructions and safety measures included as part of the treatment system controls.

4. TROUBLESHOOTING

The GeoPure O&M manual has a trouble shooting flow diagram in Section 7. that will direct most troubleshooting efforts. This step by step checklist is supplemented by vendor's literature. Items that need special attention are included in the following sections.

4.1 PNEUMATIC TRANSFER PUMP (P-30) FAILURE

The pneumatic transfer pump uses up the air tool oil in the lubricator rapidly and needs to be refilled weekly. If this pump does stop, the lubrication rate can be increased by adjusting the flow knob on top of the lubricator. Then the pump can be restarted by tapping on the brass air valve on the pump. Once the pump starts the lubrication rate can be decreased to the minimum that will allow the pump to continue operation.

4.2 POWER SURGES

A surge protector has been included in the system to protect it against power surges from electrical storms. The surge protector needs to be checked each month to ensure that is still operational. It can be checked with the indicator lights.

4.3 ULTRASTRIP BLOWER LOW DISCHARGE PRESSURE ALARM

When the UltraStrip Blower (B-1) Low Discharge Pressure alarm light is on, both the blower and the differential pressure switch need to be checked. Check the blower to see if it is developing an pressure and check the pressure switch to verify that it is properly reading the discharge pressure. Vendor information on the pressure switch is included in Section 6 of the GeoPure Manual (Attachment 3).

4.4 AIR LINE FILTERS PROBLEMS

Check these filters carefully during the monthly visits. Most have an indicator that will confirm if the filter is clogged and needs to be replaced. Each filter housings should be removed each month and the filter assembly visually checked for deterioration or clogging. The filters must be replaced a the first sign of problems.

The floats in the automatic drains also need to be checked each month to ensure that they are working and not clogged. They can be checked by removing the housing and adding a small amount of water to the housing to see is the water will drain out of the bottom.

4.5 ULTRASTRIP CLOGGING

The UltraStrip has experienced clogging both from biological growth and from calcium and magnesium scaling. Biological growth seems to be the biggest problem area. Both of these problems can be addressed by acid cleaning. Acid cleaning should be performed every two months. See Section 5.3 for detailed instructions.

4.6 RECOVERY WELL PUMPS FAILURE

The 1/8" air control tubing that runs from the recovery well pump to the controller at the top of the well can become disconnected. If the pump does not operate, these connections need to be checked first.

4.7 PROGRAMMABLE LOGIC CONTROLLER (PLC) PROBLEMS

In the unlikely event that problems develop with the PLC, it cannot be repaired or reprogrammed in the field. Contact GeoPure for additional information.

5. WEEKLY AND MONTHLY O&M

5.1 WEEKLY O&M

Check the system on a weekly basis to ensure that it is functioning properly and that there are no leaks or noticeable problems. Check the oil level in the lubricator reservoir for the transfer pump and refill if necessary. Also, the air compressor tank should be drained of condensate.

5.2 MONTHLY O&M

The monthly checklist is included in Attachment 1. This checklist details all the activities necessary to keep the SWMU-9 treatment system properly operating.

6. ULTRASTRIP CLEANING

The UltraStrip needs to be cleaned every two months or sooner if it becomes clogged. Signs that the UltraStrip is clogged are:

- a drop in the air flow rate in FI-20 or an increase in the pressure in PI-21, these readings should be compared with the previous month's readings, or
- the site glass that contains the control floats becomes clogged with reddish-brown microbial growth.

Acid cleaning of the UltraStrip involves the recirculation of an acid solution between the UltraStrip (AST-20) and the surge tank (T-30). The proper safety procedures need to be followed when handling acids and alkali solutions used to clean the UltraStrip. The following items need to be used:

- gloves
- full face shield
- chemical resistant coveralls or an apron
- chemical hand pump to transfer acid and alkali

The eyewash station next to the treatment shed at SWMU-9 should be checked to ensure that it is operable prior to handling any acids or alkali solutions. Also a water hose should be available to dilute any spills. MSDS sheets for these chemicals are included in Attachment 4.

The following procedure should be followed:

1. Turn off recovery well pumps, switch SV-10.
2. Pump all the contaminated groundwater from surge tank (T-30) into the operating UltraStrip (AST-20) using transfer pump (P-30).

3. Shut off power to the blower on the UltraStrip and allow water in the UltraStrip to drain and be pumped to the recharge gallery. Use manual switch for pump P-20 if necessary to remove all the water from sump.
4. Once all the water has been pumped out of the UltraStrip sump, turn pump P-20 to automatic.
5. Close valve V-12 and open valve V-13.
6. Run the rubber recirculation hose from valve V-13 to surge tank T-30. Secure the end of the hose, so that it will stay in the tank when water is pumped through it.
7. Fill the surge tank T-30 approximately three quarters full of clean water. This will be approximately 75 gallons.
8. Carefully add seven gallons of muriatic acid to the surge tank.
9. Turn the UltraStrip switch to automatic. The UltraStrip blower should start.
10. Turn the switch for SV-30 to manual to start the recirculation of acid through the UltraStrip. The flow from the UltraStrip sump pump P-20 should be enough to allow the continuous recirculation of the acid solution.
11. The acid solution should be recirculated about 2 hours and the pressure reading at PI-21 should drop as the UltraStrip is cleaned.
12. Once the system is cleaned, shut off valve V-13 and move the end of the rubber recirculation hose to a 55 gallon drum outside of the treatment building.
13. Open valve V-13 and pump acid solution into the drum until the drum is three quarters full, do not overfill the drum.
14. Shut valve V-13 and slowly add the 50% sodium hydroxide to the drum, until the pH reaches 7. Once the solution is neutralized, it can be disposed of on the ground. Steps 13 and 14 will need to be repeated until all the acid solution is removed from the system.
15. Open valve V-12 and ensure that valve V-13 is closed. The system is now ready to be restarted.
16. In cases of severe clogging the UltraStrip might require disassembly and manual cleaning in addition to acid cleaning. See Section 4 of the GeoPure Manual for disassembly and cleaning instructions.

7. OIL/WATER SEPARATOR CLEANING

The Oil/Water separator O/W-30 has had a problem with microbial growth. It needs to be visually checked monthly, and cleaned if clogged. The system has not recovered any product as of May 1, 1997 and the following cleaning process assumes none has been recovered.

1. Turn off the recovery well pumps, switch SV-10.
2. Drain sludge from the separator using valve V-7.
3. Dispose of sludge in 55 drum in containment area.
4. Rout rubber hose from valve V-7 to the surge tank T-30.
5. Drain contaminated groundwater from separator to surge tank.
6. Once the separator is drained rout the hose to allow the wash water to drain on site.
7. Using a garden hose, wash the insides of the separator, including the coalescing media.
8. Once the separator is clean, shut valve V-7.
9. Remove any scum buildup from the surface of the water in the surge tank.
10. The system is now ready to be restarted.

If any product has been recovered and the separator is cleaned, any cleaning water will be petroleum contact water. This water will need to be containerized in 55 gallon drums and disposed of properly. Should any product be present, the Hazardous Waste Manager, Engineering Division, Public Works Department should be contacted prior to the cleaning of the oil/water separator.

DRAFT

8. SAMPLING AND ANALYSIS

The influent and effluent from the treatment system will be sampled monthly. During these scheduled sampling events the following information shall be collected:

- the influent and effluent samples will be analyzed for VOCs and Total Naphthalenes using EPA Method 8260
- flow rates from each extraction well (using the readings from the flow counters at each wellhead)
- product levels in the product recovery tank
- water levels in adjacent monitoring wells (using the oil/water interface probe)
- product levels in adjacent monitoring wells (using the oil/water interface probe)
- water levels in the recharge gallery (using the oil/water interface probe)

8.1 INFLUENT AND EFFLUENT SAMPLING

Water samples will be collected from both the influent and effluent sampling ports every month. The influent sampling ports are SP-1, SP-2 and SP-3 and are for wells RW-1, RW-2 and RW-3 respectively. The effluent sampling port is SP-6. This sampling should take place prior to any monthly maintenance activities. The collection and preservation of these samples must follow the Florida Department of Environmental Regulation (FDEP), "Standard Operation Procedures for Laboratory Operations and Sample Collection Activities" (SOPs). Applicable sections of these SOPs are included in Attachment 5.

Care must be taken when collecting these samples, the groundwater is contaminated and should not contact skin. Wear gloves when collecting samples.

The procedure for collecting the effluent sample is as follows:

1. Open the valve for sample port SP-6 and allow the water to flow for at least two minutes.
2. Reduce the flow to steady stream (500ml/min) and collect the sample in 40 ml vials per the FDEP SOPs. (Different laboratories require different numbers of vials collected per sample point, ensure that enough vials are available.)
3. Close the sample port.

This sample should be collected while the system is operating.

The procedure for collecting the influent samples is more complicated because of the chance of the influent water becoming mixed in the common header and causing cross contamination. The procedure for collecting the influent sample is as follows:

1. Close valves V-2, V-4 and V-6.
2. Close valve V-11.
3. Open valve V-2.
4. Open the valve for sample port SP-1 and allow the water to flow for at least two minutes.
5. Capture water in a container and dispose of in the Surge Tank (T-30).
6. Reduce the flow to steady stream (500ml/min) and collect the sample in 40 ml vials per the FDEP SOPs.
7. Close the sample port.
8. Close valve V-2.
9. Open valve V-11 to relieve pressure and close.
10. Follow the same sequence for sampling from sampling ports SP-2 and SP-3.

11. When sampling is complete, open valves V-2, V-4, V-6 and V-11. These samples should be collected while the system is running.

9. SPARE PARTS SOURCES

All of the spare and replacement parts can be purchased through GeoPure (1-800-342-1103) except for the sequestrant system parts. These can be purchased through Southeastern Filtration and Equipment Systems at 1-770-720-2800. A catalog cut for the sequestration system has been included in Section 6. of the GeoPure Manual (Attachment 3.).

The GeoPure System was purchased with a one year warranty. This will be in affect until July, 1997. Warranty information is included in Section 8. of the GeoPure Manual (Attachment 3.).

10. POINTS OF CONTACT

Points of contact for this system are:

- GeoPure (1-800-342-1103)
- Bechtel Environmental Inc., Navy RAC Project (1-423-220-2000)

DRAFT

SMWU-9 Monthly System Checklist

Monitoring well water depths must be collected prior to shutting down the system for maintenance. See Section 8. for additional instructions on water levels data collection.

Monitoring Well Water Depths			
Collected By:			Date:
Instrument:			
Well ID	**Depth to top of Product***	**Depth to top of Water***	**Comments**
MW-4			
MW-5			
MW-6			
MW-13			
MW-14			
MW-15			
MW-19D			
MW-24			
PZ-1	**NA**		
PZ-2	**NA**		
PZ-3	**NA**		
PZ-4	**NA**		

*Measured from the top of the well casing.

Ground Water Sampling must to be completed prior to shutting down the system for routine maintenance. See Section 8. for futher instructions on groundwater sampling and analysis.

DRAFT

Monthly Maintenance Checklist

Inspector's Name:	Date:

Item	Reading/Results	Comments
Air Compressor AC-10		
1. Check for air leaks		
2. Drain condensate from bottom of receiving tank		
3. Pressure reading at PI-10 (150 PSI Max)		
4. Pressure reading at PI-15 (70 PSI)		
5. Verify at the end of cycle that auto drain is working		
6. Turn off power and check belt tightness		
7. Drain and replace compressor oil. Follow manufacturer's recommendations for oil type.		
8. Check filters in regulator and oil coalescer and replace if necessary. Verify that the drains in each bowl are properly functioning.		
9. Check and clean the compressor air intake filter.		
10. Repower system		
Transfer Pump P-30		
1. Check for any air leaks.		
2. Pressure reading at P-14 (40 PSI).		
3. Shut off air pressure at V-14.		
4. Check filter in oil coalescer and replace if necessary. Verify that the drains in the bowl are properly functioning		
5. Fill lubricator with air tool oil.		
6. Check the discharge bucket to see if the oil adsorbent needs to be changed.		
7. Turn on air pressure at V-14.		

Item	Reading/Results			Comments
Recovery Well Pumps	**P-1**	**P-2**	**P-3**	
1. Check for any air or water leaks.				
2. Pressure reading on PI-11, PI-12 and PI-13 (45-50 PSI)				
3. Record counts on FQC-1, FQC-2 and FQC-3				
4. Check pressure reading on PI-1, PI-2 and PI-3 (20-30 PSI)				
5. Flow rate FI-1 (3-4 GPM), FI-2 (3-4 GPM and FI-3 (4-5 GPM)				
6. Shut off air pressure at V-2, V-4 and V-6				
7. Check filters in regulators and moisture separators and replace if necessary. Verify that the drains in the bowls are properly functioning.				
8. Pour one pint of 3% hydrogen peroxide into each recovery well and wait at least 15 minutes before resuming pumping.				
9. Turn on air pressure at V-2, V-4 and V-6.				
Sequesterant System				
1. Turn off recovery well pumps and V-11				
2. Clean Spin Filter Screen				
3. Check level of Sequesterant (Replace if less than 1" remaining.)				
4. Clean holes in Sequesterant filter head				
5. Clean FI-1, FI-2 and FI-3 if needed				
6. Turn on recovery well pumps and V-11				
Oil/water Separator (O/W-30)				
1. Open top cover and inspect for clogging				
2. Drain Sludge Chamber using valve V-7.				
3. Check Product level in Tank T-31				
4. Flow counter reading FE-1				
5. Clean inside of O/W-30 if necessary. See Section 7.				

Item	Reading/Results	Comments
Air Stripper (AST-30)		
1. Check for air or water leaks.		
2. Pressure reading at PI-21 (30-40 inches of water)		
3. Pressure reading at PI-20 (10-20 PSI)		
4. Air flow reading at FI-20 (20 to 60 SCFM)		
5. Clean the sight glass and floats.		
6. *Bimonthly, acid wash the stripper See* Section 6.		
Surge Protector		
Check indicator lights		

Additional Comments:

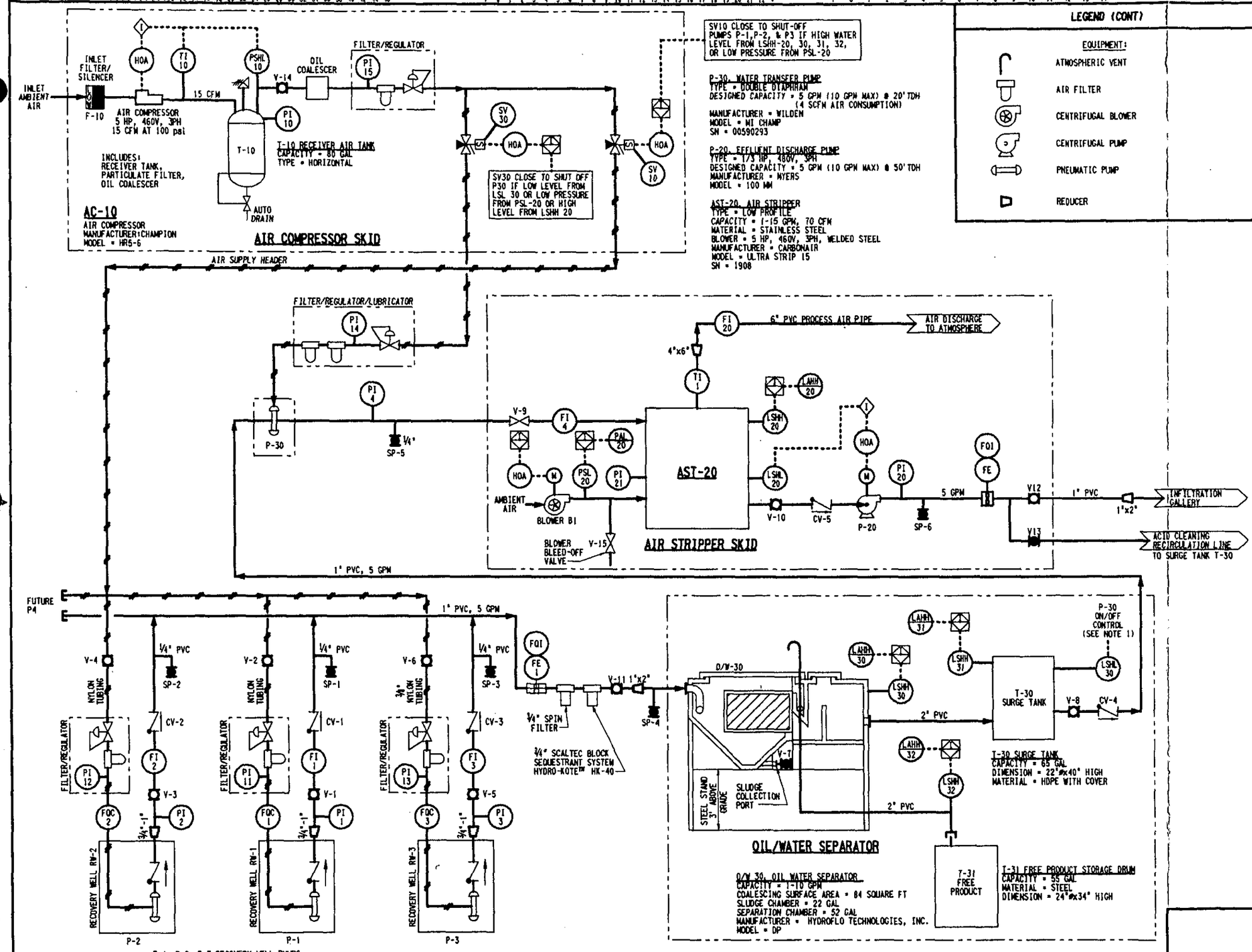

LEGEND (CONT)

EQUIPMENT:

- ATMOSPHERIC VENT
- AIR FILTER
- CENTRIFUGAL BLOWER
- CENTRIFUGAL PUMP
- PNEUMATIC PUMP
- REDUCER

LEGEND

INSTRUMENTATION:

- INSTRUMENT FOR SIGNAL MEASURED VARIABLE (LOCALLY MOUNTED)
- INSTRUMENT FOR SIGNAL MEASURED VARIABLE (PANEL MOUNTED)
- FE — FLOW ELEMENT, POSITIVE DISPLACEMENT

SIGNALS AND LINES:

- PRIMARY LIQUID PROCESS OR MECHANICAL LINK
- PNEUMATIC LINE
- ELECTRICAL SIGNAL
- VENDOR PACKAGED EQUIPMENT
- PLC ELECTRICAL INTERLOCK/INPUT
- ELECTRICAL INTERLOCK

VALVES AND ACTUATORS:

- BALL VALVE, NORMALLY OPEN
- BALL VALVE, NORMALLY CLOSED
- CHECK VALVE
- PRESSURE RELIEF VALVE
- GATE VALVE
- HAND RESET, 3-WAY SOLENOID VALVE
- PRESSURE CONTROL VALVE, DIAPHRAM ACTIVATED

CV - CHECK VALVE
FI - FLOW INDICATOR
FQC - FLOW COUNTER
FQI - TOTALIZING FLOW METER
HOA - HAND/OFF/AUTO
LA - LOCAL ALARM (HIGH/LOW)
LSL - LEVEL SWITCH LOW
PI - PRESSURE INDICATOR
PSL - PRESSURE SWITCH LOW
SP - SAMPLING PORT
TI - TEMPERATURE INDICATOR
V - VALVE
SV - SOLENOID VALVE

NOTES

1. ALL INTERLOCKS ARE FIELD WIRED EXCEPT AIR COMPRESSOR AND AIR STRIPPER BLOWER.
2. ALL FILTER/REGULATOR ASSEMBLIES HAVE AUTO DRAINS.

NO.	DATE	REVISIONS	BY	CHKR	PROJ ENGR	ENGR	PROJ ENGR	INTERD FLMG
1	3/10/97	AS-BUILT	JED	FNB	JRN	ABJ	REH	
0	4/12/96	ISSUED FOR CONSTRUCTION	JED	WRZ	TNC	ABJ	REH	

SCALE NONE — 2256T/321/DD576001.DGN

BECHTEL ENVIRONMENTAL INC.
OAK RIDGE, TENNESSEE

DEPARTMENT OF THE NAVY
SOUTHERN DIVISION NAVAL FACILITIES ENGINEERING COMMAND
CHARLESTON, SOUTH CAROLINA

SWMU-9 GROUNDWATER TREATMENT SYSTEM PIPING AND INSTRUMENTATION DIAGRAM

JOB NO.	DRAWING NO.	REV
22567	321-DD576-001	1

ROY E. HOEKSTRA
FLORIDA PE # 49690
EXPIRES FEBRUARY 28, 1999

SEAL

22 X 34

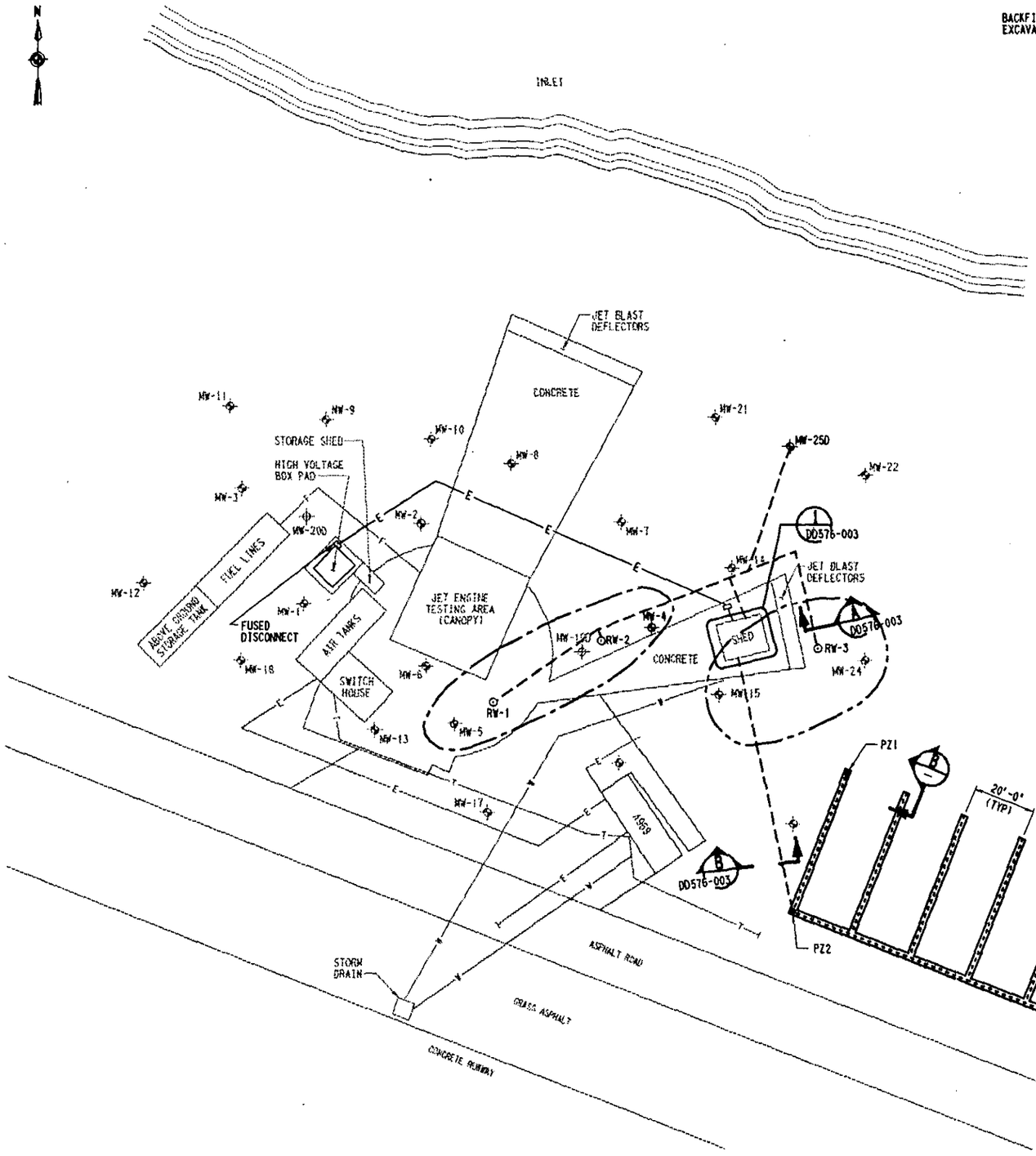

SITE PLAN
1"=20'

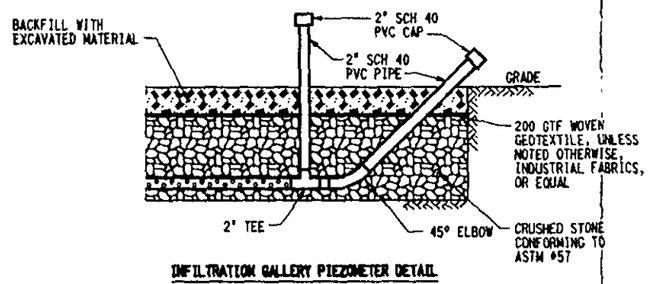

INFILTRATION GALLERY PIEZOMETER DETAIL

SECTION A
3/4"=1'-0"

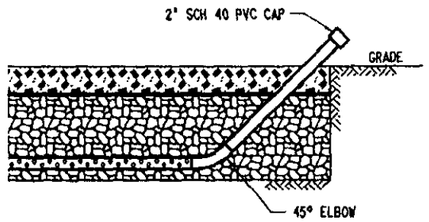

INFILTRATION GALLERY CLEANOUT PORT DETAIL TYPICAL

SECTION B
3/4"=1'-0"

R. E. HOEKSTRA
FLORIDA PE #49690
EXPIRES FEBRUARY 28, 1999

SEAL

NOTES

1. PHYSICAL VERIFICATION OF EXISTING UNDERGROUND UTILITIES SHALL BE DONE PRIOR TO ANY EXCAVATION.

REFERENCE DRAWINGS

SWMU-9 GROUNDWATER TREATMENT SYSTEM PIPING AND INSTRUMENTATION DIAGRAM	321-DD576-001
SWMU-9 GROUNDWATER TREATMENT SYSTEM SECTIONS AND DETAILS	321-DD576-003

LEGEND

- EXISTING MONITORING WELL
- EXISTING DEEP MONITORING WELL
- RECOVERY WELL
- DEEP MONITORING/RECOVERY WELL
- EXTENT OF ELEVATED CHLORINATED SOLVENTS IN GROUNDWATER
- EXTENT OF FREE PRODUCT
- EXISTING ABOVE GROUND FUEL LINE
- EXISTING UNDERGROUND WATER LINE
- EXISTING UNDERGROUND ELECTRIC LINE
- EXISTING UNDERGROUND TELEPHONE
- UNDERGROUND GROUNDWATER LINE
- UNDERGROUND ELECTRICAL LINE
- UNDERGROUND PERFORATED LINE
- PZ PIEZOMETER WELL

0 20 40 60
1"=20'

NO.	DATE	REVISIONS	BY	CHKR	MECH ENGR	ENGR	PROJ ENGR	HYDRO ENGR
3	3/10/97	AS-BUILT	JED	FNB	JRN	ABJ	REH	
0	4/12/96	ISSUED FOR CONSTRUCTION	JED	WRZ	TNC	ABJ	REH	

SCALE NOTED — 22567/321/DD576002.DGN

BECHTEL ENVIRONMENTAL INC.
OAK RIDGE, TENNESSEE

DEPARTMENT OF THE NAVY
SOUTHERN DIVISION NAVAL FACILITIES ENGINEERING COMMAND
CHARLESTON, SOUTH CAROLINA

SWMU-9 GROUNDWATER TREATMENT SYSTEM SITE LAYOUT PLAN

JOB NO.	DRAWING NO.	REV
22567	321-DD576-002	1

22 x 34

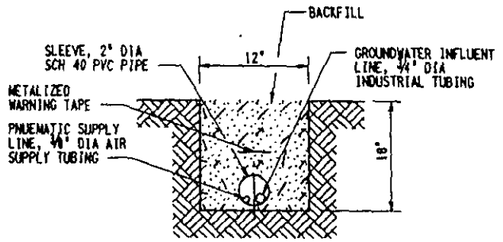

SECTION A
NTS
DD576-002

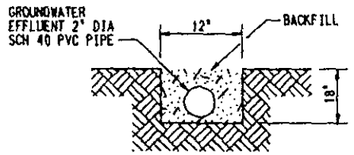

SECTION B
NTS
DD576-002

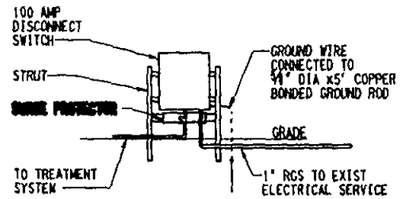

SECTION C
NTS

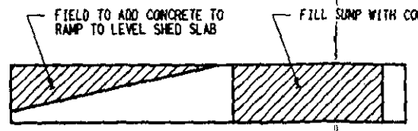

SECTION D
NTS

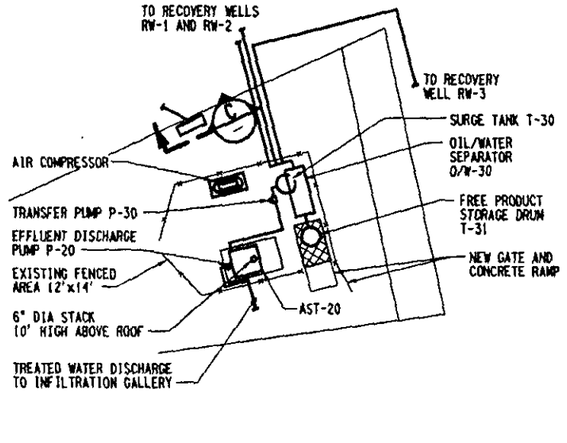

DETAIL 1
⅛"=1'-0"
DD576-002

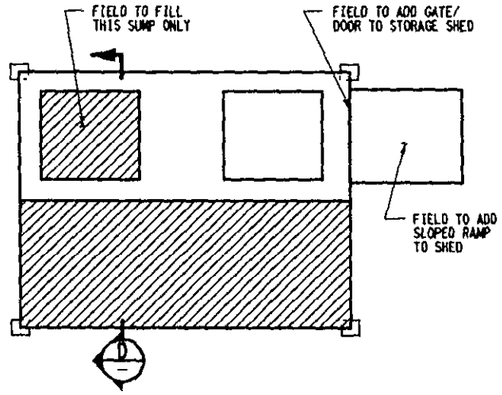

SHED SLAB MODIFICATION DETAIL
NTS

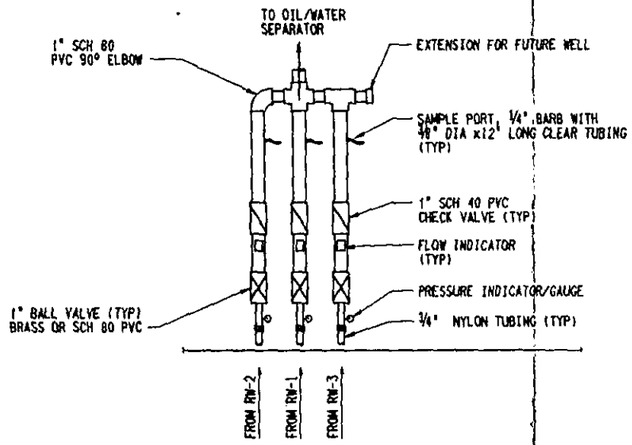

INFLUENT HEADER DETAIL
NTS

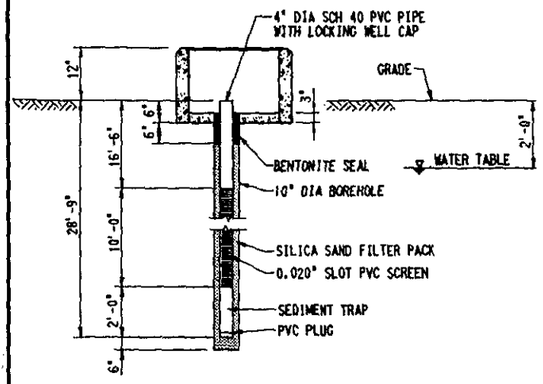

MW-25D MONITORING WELL DETAIL
NTS

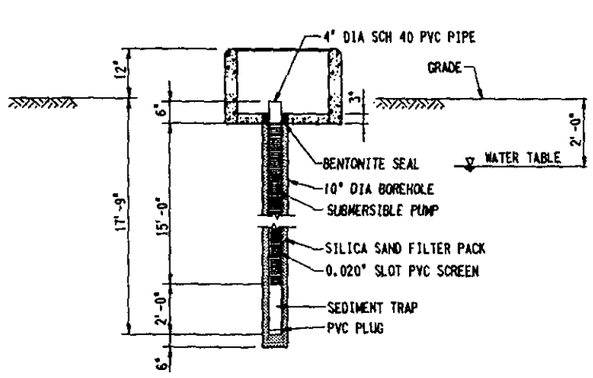

RECOVERY WELL DETAIL
NTS

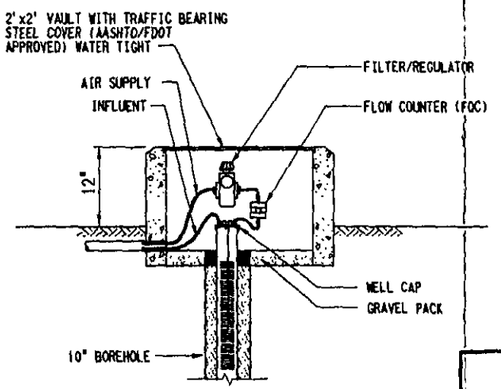

RECOVERY WELL VAULT DETAIL
NTS

R. E. HOEKSTRA
FLORIDA PE #49690
EXPIRES FEBRUARY 28, 1999

SEAL

NOTES

1. PHYSICAL VERIFICATION OF EXISTING UNDERGROUND UTILITIES SHALL BE DONE PRIOR TO ANY EXCAVATION.
2. METALIZED POLYETHYLENE PLASTIC DETECTABLE WARNING TAPE SHALL BE INSTALLED IN TRENCHING OVER PIPING.
3. TRENCHES SHALL BE BACKFILLED WITH EXCAVATED SOIL. MATERIAL ADJACENT TO PIPING SHALL NOT HAVE ANY STONES OR OBJECTS GREATER THAN ½" DIAMETER.
4. ALL ELECTRICAL WORK SHALL BE IN ACCORDANCE WITH THE LATEST REVISION OF THE NATIONAL ELECTRICAL CODE.

REFERENCE DRAWINGS

SWMU-9 GROUNDWATER TREATMENT SYSTEM PIPING AND INSTRUMENTATION DIAGRAM	321-00576-001
SWMU-9 GROUNDWATER TREATMENT SYSTEM SITE LAYOUT PLAN	321-00576-002

LEGEND

NO.	DATE	REVISIONS	BY	CHKR	PROJ ENGR	ENGR	PROJ ENGR	WTCRS FLMG
2								
1	3/10/97	AS BUILT	JED	FNB	JRN	ABJ	REH	
0	4/26/96	ISSUED FOR CONSTRUCTION	JED	WRZ	TNC	ABJ	REH	

SCALE NOTED
22567/321/DD576003.DGN

BECHTEL ENVIRONMENTAL INC.
OAK RIDGE, TENNESSEE

DEPARTMENT OF THE NAVY
SOUTHERN DIVISION NAVAL FACILITIES ENGINEERING COMMAND
CHARLESTON, SOUTH CAROLINA

SWMU-9 GROUNDWATER TREATMENT SYSTEM
SECTIONS AND DETAILS

JOB NO.	DRAWING NO.	REV
22567	321-DD576-003	1

22 X 34

Bechtel Environmental
PO Box 350
Oak Ridge, TN 37831

O & M Manual

GEOPURE
CONTINENTAL

NAS KeyWest
Boca Chica
Key West, FL

APPROVED
JUL 02 1996
BY: Billy

Table of Contents

Table Of Contents

Equipment in this manual is supplied by:
GeoPure Continental
Systems & Services
2300 NW 71st Place
Gainesville, FL
1-800-342-1103

GEOPURE CONTINENTAL
SYSTEMS & SERVICES

I. Introduction

Congratulations on your selection of GeoPure's ground water remediation system. This system was designed to meet your specifications and flow rate. The system is manufactured to the highest standard of quality using proven reliable components. Care is taken in the construction of your system to assure that it will meet the National Electric Code. However, you should be aware that some local electric codes may be more stringent than the NEC and the system may not meet all of your local electric codes. GeoPure will work with you onsite should there be any changes necessary to the system.

Please read your manual carefully and advise operating personnel of the correct operation and maintenance of the system to assure long-lasting service.

II. Where to Call for Help

If you have any questions or need technical assistance in operating or maintaining your system, please call the manufacturer listed below:

GeoPure

Systems and Services, Inc.

1-800-342-1103

(352)-376-7833

III. Overview

Controller

All system functions are monitored and controlled by the system controller. The GeoPure controller is custom designed for your system and utilizes a programmable logic controller (PLC). This PLC integrates several functions formerly controlled by timers, switching relays, and alternating relays. The program for the PLC is specific to your system and GeoPure does not recommend any alterations.

Oil/Water Separator

In a slow moving state, free product and water separate because of the natural effects of gravity. Water being heavier, will settle, and free product being lighter, will rise. The oil/water separator provides a volume through which the free product and water will flow at a very slow rate versus volume. The free

product will accumulate on top and be skimmed off to discharge to the product recovery drum. The water will be discharged to the water treatment portion of the system.

Sieve Tray Aeration

Sieve Tray Aeration Technology is one of the most advanced and efficient methods available for air stripping of contaminated ground water. By the flow of air continuously opposing the flow of water, low profile design provides a natural self polishing effect because the cleanest water exiting the system is contacted by the cleanest air entering the system. Since a single airstream passes through every tray before exiting the tower, the air and the blower power consumption are effectively utilized. As a result of minimal air flow, the organic contaminants in the off-gas are concentrated and can be effectively treated. With the proper configuration, the UltraStrip unit can achieve a removal efficiency of up to 99.99%.

The UltraStrip also reduces the potential for fouling since it contains no packing media and provides an extremely turbulent condition.

IV. Treatment System Flowpath

Ground Water Recovery System and Oil/Water Separator

(P-1, P-2, P-3, & O/W-30)

Water is pumped from the recovery well to the oil/water separator by three Retriever recovery pumps. These pumps are pneumatically operated and low maintenance.

The waste stream will separate while inside of the oil/water separator. Any free product will be directed to the Product Recovery Drum. Water will gravity drain from the oil/water separator into the surge tank. Please refer to the enclosed oil/water separator manual for a complete description of the operation of this equipment.

Surge Tank

(T-30)

The water will drain from the oil/water separator into a 100 gallon surge tank. The level in this sump is controlled automatically by a mercury switch float operated level control system. These floats are regarded as an intrinsically safe level control system due to use of Zener Barriers. The floats suspended inside of the sump will automatically turn the transfer pump (P-30) on and off, and in the event of a high level situation they will shut down the Ground Water Recovery system.

(Flowpath, Cont)

Sieve Tray Aeration System
(AST-20)

The UltraStrip air strippers are sieve tray aeration units. They do not contain packing media. In this technology the water and air are contacted in step wise fashion through multiple trays. The water enters near the top and flows horizontally across each tray and through a down comer to the tray below. A pressure blower provides air for the aerating process. The air enters the bottom of the unit and is forced through openings in the trays, bubbling through the water to form "a surface of foam" which provides extreme turbulence and excellent volatilization. The overall effect is multiple counter currents of water and air, with each tray having a cross flow of water opposing a vertical flow of air.

The VOC-laden air passes through mist-eliminating media at the top of the unit where entrained water droplets are removed from the air. The air then leaves the UltraStrip through a top flange where it is either discharged to the atmosphere or treated for removal of the VOCs (such as with carbon adsorption). The treated water collects in the sump section of the UltraStrip unit.

UltraStrip Pump-out
(P-20)

The level in the UltraStrip sump is controlled by float switches. The floats in the UltraStrip Sump automatically start and stop the pump-out pump (P-20). In the event that this pump cannot lower the level in the UltraStrip sump the controller will automatically shut down the Ground Water Recovery System.

The water and vapors from the UltraStrip will be discharged into your discharge piping.

V. System Setup

The system should be layed out with the equipment in the proper order for operation. The system will work more efficiently if the piping runs are relatively free of excessive bends and the net suction head on the pumps is maximized. Care should be taken to allow room for operation and maintenance of all of the equipment.

The equipment in this system is extremely heavy; care must be exercised when handling it to prevent equipment damage or personnel injury.

Influent Piping

The flow from the recovery wells should be directed to the inlet connection for the oil/water separator.

If any assembly is required for joints equipped with unions, double check that each union has the proper o-ring.

Controller Electrical

‖A professional electrician should be utilized for all electrical connections.‖

Please have your electrician refer to the electrical diagrams in Section 4 of this manual for proper hookup of all electrical connections in this system. All system electrical power will be run through the controller. Each major component on the controller should be supplied with its own breaker in a separate breaker box.

Knockouts should be located to minimize the amount of wire run outside of raceways.

Extreme care must be taken when working inside of this panel. Avoid risking electrocution by securing <u>all power</u> to this panel prior to opening door.

VI. System Startup

System Preparation is performed as follows:

1. The UltraStrip should be filled with fresh water prior to starting up the remediation system.

2. Prime the centrifugal pump (P-20) by completely filling the pump casing with fresh water.

Ground Water Recovery System startup is performed as follows:

1. Place the switch for the main system power in the ON position.

2. Place the Hand/Off/Auto switches for the Ground Water Recovery air solenoid valve SV-10 in the Auto position. Once all of the system alarms have been cleared and the UltraStrip blower is running the air system solenoid valve will energize and start the Ground Water Recovery System.

Oil/Water Separator Startup:

Please refer to the Oil/Water Separator Section for Separator startup instructions.

UltraStrip Unit startup is performed as follows:

1. Place the Hand/Off/Auto switch for the Transfer Pump (P-30) UltraStrip Pump-out Pump (P-20) in Auto.

2. Place the Hand/Off/Auto switch for the UltraStrip Unit (Blower B1) in Auto. The blower for the UltraStrip will start. The blower should come up to a steady RPM without oscillating.

3. Adjustment of air flow will vary, depending on the type of blower. (See the drawing in the UltraStrip section for available kits)

4. If the liquid discharge line of the unit is clogged or plugged and the influent water is feeding in faster than the UltraStrip can drain, the high level switch in the sump section will activate an alarm for high sump level.

(Startup, Cont.)

Types of Blowers

Regenerative Blower
(Bleed off air on discharge side.)

Centrifugal Blower
(Control damper on inlet or outlet)

5. Be sure the blower low pressure switch is calibrated before startup. If the blower low pressure switch does not operate as described, check motor rotation or see the manufacturers data sheet supplied to adjust the setpoint of the switch.

6. When the UltraStrip is operating within its operating parameters, a base line pressure drop should be established. This can be monitored during operation for maintenance purposes. Your UltraStrip system should be supplied with the proper blower for overcoming the total pressure drop through the system. If adding gas phase carbon adsorption to the off gas of an UltraStrip unit previously operated with atmospheric discharge, contact GeoPure to determine if the current blower/ducting configuration will be adequate.

7. Once the system has been tested with fresh water, proceed with treating contaminated water.

The initial startup of the recovery system is now complete. Please check all switches and make sure that they are in the Auto or On position. Please check all system parameters to ensure proper operation.

The remediation system is now running in automatic. All pumps will function automatically to control tank levels.

During subsequent startups, filling and venting steps may be omitted, provided the centrifugal pumps have not been allowed to run dry.

VII. System Alarms and Safeties

This system has been designed with several different switches and alarms to prevent any uncontrolled discharge of contaminated water. The alarms and safeties are as follows:

Surge Tank (T-30) High Level- If the level in the Surge Tank (T-30) rises high enough to raise the Alarm Float (the top float), the controller will shut down the Ground Water Recovery system, open the "opens on alarm" contacts, and illuminate the "T-30 High Level" light. The system will reset automatically once the level in the sump has lowered to the Stop Float (the bottom float).

UltraStrip Blower (B1) Low Discharge Pressure- This alarm will activate when there is low back pressure at the blower discharge. This alarm will shut down the Ground Water Recovery system, shut down the blower, open the "Opens on Alarm" contacts, and illuminate the "UltraStrip Low PSI" light. The system must be reset manually by pushing the "UltraStrip Low PSI" Reset Button.

UltraStrip Sump (AST-20) High Level- If the level in the UltraStrip Sump (AST-20) rises high enough to raise the Alarm float, the controller will shut down the Ground Water Recovery system, open the "Opens on Alarm" contacts, and illuminate the "U/S High Level" light. The system will reset automatically once the level in the sump has lowered to the Stop Float (the bottom float).

Product Recovery Drum (T-31) High Level- When the product recovery drum (T-31) is full, the controller will shut down the Groundwater Recovery System, open the "Opens on Alarm" contacts, and illuminate the "PRT High Level" light. The system will automatically reset when the product recovery drum is emptied.

Oil/Water Separator (O/W-30) High Level- If the level in the Oil/Water Separator (O/W-30) rises high enough to raise the alarm float, the controller will shut down the Groundwater Recovery System, open the "Opens on Alarm" contacts, and illuminate the "Oil/Water Separator High Level" light. The system must be reset manually by pushing the System Shut Down Reset Button.

(Alarms, Cont)

Motor Amp Overload- This system is also equipped with amp overload protection on the UltraStrip Blower (B1) and Air Compressor (AC-10) motor starters. If a motor experiences a high amp condition the motor starter will trip off line and prevent damage to the effected motor. The amp overload reset is a red button located on the contactor and must be reset manually by pushing it in.

The amp overload relays are adjustable and should be set at 110% of normal running amperage for the applicable equipment.

VIII. Post Shutdown Preventative Maintenance

After the system has been shut down all piping should be subjected to a thorough cleaning.
The extent of the cleaning will be dictated by the level of scaling that the system may have experienced. In the case of light scaling, where very little hard water deposits are present on the piping, the system may be cleaned by flushing it with a solution of hydrochloric acid.

Warning- Hydrochloric Acid is a strong acid. Take all precautions required by OSHA and the Material Safety Data Sheet when handling this liquid.

When the cleaning is complete, make sure that you dispose of the contaminated water in an environmentally safe manner.

Flush the system with clean water, and then return any valves that may have been opened or shut to their normal position.

Heavy scaling may require component disassembly in order to completely remove deposits from the interior walls of pumps and piping.
Signs of heavy scaling are:

- The valves being difficult to operate.
- Heavy deposits on the piping walls.
- The current blower discharge pressure is significantly higher than the start-up blower pressure.

Please refer to the component technical manuals for complete descriptions of component disassembly.

System Maintenance Checklist

This is a suggested maintenance schedule. The checks listed should be made at least once a month. Water quality will dictate the frequency of more extensive maintenance procedures.

System Checks:

	Yes	No
1.) System is operating.		
2.) All pumps are operating.		
3.) *Ground water recovery pumps* are operating.		
4) *Blowers are operating.*		
5.) Check condition of recovery and *injection well manholes.*		

	Previous Reading	*Current Reading*
6.) Total flow.		

Comments:

Pneumatic Recovery Pumps:

	Yes	No
1.) Check, clean, or replace air filters to the pumps.		
2.) Check regulator pressure.		

Comments:

Oil/Water Separator Checks:

	Yes	No
1.) Check and make sure that the separator is level.		
2.) Check separator for leaks.		
3.) Check system flow and make sure that it does not exceed rated flow of separator.		
4.) Check the adjustable weir and ensure that it is set correctly.		
5.) Check the level in the product recovery tank.		

Comments:

UltraStrip Checks:

	Yes	No
1.) Check demisting material in air discharge.		
2.) Check entire system for air and water leaks.		
3.) Check sump sight glass.*		

	Previous Flow Reading	Current Flow Reading
4.) Check system air flow.**		

*(The condition of the sight glass will be a good indicator of the internal condition of the unit. IE, if the sight glass is dirty the system is dirty.)

**(If the current air flow is significantly less than the start up air flow, the system may require cleaning.)

Comments:

Transfer Pump Checks:

	Yes	No
1.) Check pumps for leaks.		
2.) Check pump mechanical seals.(There should be no leakage)		

	Prev Disch Press	Curr Disch Press
3.) Check pump discharge pressures.		

Comments:

GEOPURE SYSTEMS & SERVICES, INC.

OWNERS MANUAL

RETRIEVER PUMPS

Groundwater Recovery Pump

OPERATION & MAINTENANCE MANUAL

All information, illustrations and specifications in this manual are based on the latest information available at the time of publication. We reserve the right to make changes at any time without notice and without incurring any obligation.

OWNER'S MANUAL

RETRIEVER

INTRODUCTION

The GeoPure RETRIEVER pneumatic pump is available in five versions and two sizes. The four inch size is available in a top-and-bottom loading version and a top-loading-only version. This size is available in either stainless steel or Centricast III construction. The two inch version is available as a stainless steel bottom loader only. These pumps are designed to fit in groundwater wells as small as two inches (50.8 mm) in diameter. The RETRIEVER uses a down well pneumatic logic system to automatically determine the optimal pumping rate needed to maintain constant groundwater depression level. The pneumatic valve, located on the pump, eliminates the need for any controls at the surface.

This concise manual provides a step-by-step guideline for successful installation and operation. Please read the information carefully before using the pump and keep the manual handy for field reference.

SYSTEM COMPONENTS

The RETRIEVER pump system consists of a RETRIEVER pump, a two or four inch diameter well clincher, and a 5-micron filter with auto drain. Each component mentioned is standard with the purchase of each RETRIEVER pump. This manual details the hoses required for the pump and the air compressor required to power the pump.

RETRIEVER

The RETRIEVER , (Figure 1) consists of a stainless steel assembly with intake ports at the top and bottom or top only and has connections for air, exhaust, and product discharge tubing. The intake port on the top of the RETRIEVER is a stainless steel, poppet check valve with a Viton® o-ring seal. The bottom water intake port consists of a Buna-N check ball in a stainless steel seat. A Buna-N float rides on a stainless steel rod providing the mechanism to cycle the pump (Figure 2).

WELL CLINCHER

The RETRIEVER pump system comes complete with a 4 inch (102 mm) or 2 inch (51 mm) diameter well clincher which is used at the well head for pump support, air and discharge connections, and to provide a watertight seal. The well clincher is made of PVC, precision machined so that its inner diameter matches the outer diameter of a either a 2 or 4 inch PVC well casing. The well clincher features an o-ring seal for vacuum applications. It comes complete with brass fitting required to connect the RETRIEVER pump system and a stainless steel eye hook to attach a pump support cable.

RETRIEVER

PRINCIPLES OF OPERATION

The RETRIEVER pumps fluids by air displacement: compressed air forces the fluids out of the annular space of the pump to the surface.

The RETRIEVER operates in two stages: the ON, or discharge stage, and the OFF, or filling stage. The stages are controlled by a float inside the annular space of the pump which rides on top of the fluid. When the pump is in the OFF stage, the bottom and top inlet valves are open and fluid is entering the annular space of the pump. As the annular space fills, the float reaches its maximum height which triggers a valve to initiate the ON stage. During the ON stage, high pressure air closes the top and bottom inlet valves, forcing the fluid to evacuate the annular space of the pump through the discharge pipe. When all of the fluid has been removed from the annular space, the float, which has now reached its lower limit, triggers the three-way valve to stop pressurizing and exhaust the annular space which closes the valve and begins the OFF stage again. This cycle is repeated as rapidly as the pump fills up with fluid; therefore, the RETRIEVER automatically determines its own pumping rate. The pumping rate can be decreased by regulating the flow at the surface using a gate valve.

The RETRIEVER is designed to maintain a maximum fluid level in the well which is even with the top of the pump. This level is 36 inches from the bottom of the pump and is located approximately at the seam that separates the pump top from the annular tube. If the RETRIEVER is being used in the optional "top-loading-only" configuration, the fluid level will be maintained 39 inches from the bottom of the pump, flush with the top of the top cap. If the 2 " RETRIEVER is being used, the fluid level will be maintained 31.5 inches from the bottom of the pump.

The standard 4 inch RETRIEVER pump system, configured for top and bottom loading, is designed to pump a maximum of 10.0 GPM (40 L/min). The optional top-loading-only RETRIEVER will pump at a maximum of 4.8 GPM (18 L/min).

The standard 2 inch RETRIEVER pump system, configured for bottom loading, is designed to pump a maximum of 4 GPM (15 L/min).

INSTALLATION AND OPERATION

The RETRIEVER may be used to remove fluids from wells that are 2 inches (51 mm) in diameter or larger. The relative location of the pump to the air supply and the recovery system on the surface may differ from site to site. Similarly, the length of discharge and air hoses required to connect the pump may vary; otherwise, the installation and operation of the RETRIEVER is essentially the same for any application.

RETRIEVER

WARNING: Any electrical components used in an explosive atmosphere must be located in compliance with Chapter 5 of the National Electrical Code and any other local codes. This would apply to electrically powered air compressors.

RETRIEVER
INSTALLATION PROCEDURE

1. Determine at what depth the pump will be installed. Measure from the top of the pump head to the top of your well casing and add 6" (152 mm) for hose length.

2. Place the bottom half of the well clincher on the top of the recovery well pipe. Make sure that the top of the recovery well is smooth and straight. The well clincher should fit snug.

3. Pump Logic - Attach the green, blue, and black 1/8" (3.2 mm) color coded air supply, air exhaust, and air pilot tubing to the matching colors on the pump head by pushing the tubes firmly in the proper color coded fitting until it bottoms.

4. Discharge - Attach the 3/4" (19 mm) discharge hose to the 3/4" barb on the pump.

5. Air Supply - Attach the natural color 1/2" (12.7 mm) air supply to the 1/2" brass push-in fitting in the pump head. Press firmly into fitting until it bottoms.

6. Notice: We recommend that a stainless steel safety cable be attached to the RETRIEVER in order to minimize the tension on the down hole hoses. A stainless steel loop can be found on the top of the pump and a stainless steel chain and connector on the bottom side of the well clincher.

7. Connect the down-hole hoses and safety cable to the under side of the well clincher top (Figure 4). Attach the 1/8" (3.2 mm) green logic supply and black air pilot line to the proper color coded push in fittings. Cut the tubes square and push into the push-in fittings firmly until it bottoms. To release, push the collar of the fitting down and pull tubing out. The 1/8" blue exhaust air line will remain loose on the underside of the well clincher. Attach the stainless steel restraint cable to the chain connector on the stainless steel chain. The weight of the pump should be on the restraint cable and not on the bundled hose.

8. Lower the RETRIEVER down the well and secure the top cap of the well clincher to the bottom half which was previously attached to the well.

9. Connect the fluid discharge line to the 3/4" barb on top of the well clincher. It is recommended that

a ball valve and swing check valve be installed in line between the well clincher and the discharge line coming into the well.

Note: Tubing bundle is nylon and polyethylene, the discharge hose is neoprene and the bundle's outer jacket is PVC. Check chemical compatibility BEFORE installation.

10. Attach the air regulator/coalescing filter assembly to the side of the well clincher. THE FILTER ASSEMBLY MUST BE MOUNTED HORIZONTALLY TO WORK PROPERLY AND SHOULD NEVER BE SUBMERGED IN WATER.

11. Connect the main air supply line to the regulator/filter assembly.

NOTICE: PURGE AIR LINE BETWEEN COMPRESSOR AND PUMP REGULATOR BEFORE CONNECTING PUMP REGULATOR.

12. Connect the outlet of the regulator/filter assembly to the air inlet on the well clincher. See Figure 4.

CAUTION: SET PRESSURE REGULATOR BETWEEN MINIMUM OF 45 PSI (310 kPa) AND MAXIMUM 80 PSI (550 kPa).

13. Adjust the air supply air at the regulator/filter assembly to the appropriate pressure.

14. Open the air supply valve to begin pump operation.

WARNING: PUMP IS NOT DESIGNED TO BE AN AIR RESERVOIR. DO NOT PRESSURIZE PUMP OUTSIDE OF WELL.

APPENDIX A

AIR CONSUMPTION

The RETRIEVER pump uses compressed air to transport fluid from a recovery well to the surface. The volume of compressed air required will be dependent on three factors:

1. Number of RETRIEVER pumps.
2. Operating pressure of pumps.
3. Pumping rates (gallons or liters per minute)

As the number of RETRIEVER pumps increases, the compressed air consumption rate will also increase.

As the operating air pressure of the RETRIEVER pump is increased, the volume of air consumption during each pump cycle increases. The following table outlines the air consumption rate per cycle of the RETRIEVER at different operating pressures.

TABLE A-1

Operating Air Pressure		Compressed Air Consumption Rate	
psi	kPa	(ft^3/cycle)	(cm^3/cycle)
60	414	0.83	14
70	483	0.94	15
80	552	1.05	17
90	620	1.15	19
100	690	1.26	21

Very few sites will require an operating pressure of 100 PSI (690 kPa), but it is recommended that the highest air consumption rate, 1.26 ft^3/cycle (21 cm^3/cycle) be used when determining the total compressed air consumption rate for the site.

The pumping rate required to achieve the desired water table depression will directly influence the compressed air consumption rate. The RETRIEVER pump draws 1.2 US gallons (4.5 liters) of fluid/cycle and can pump a maximum of 10.0 GPM (41 L/min) with the top and bottom loading version. The pumping rate of each recovery well should be determined so that the total pumping rate of each site can be calculated.

The following questions will help determine the compressed air consumption rate:

1. How many recovery wells will be used on this site?
2. What is the pumping rate for each recovery well?
3. What is the total pumping rate for this site? (Calculated by adding pumping rates from question 2)
4. Use the total pumping rate calculated in question 3 in the following formula to determine the air consumption rate.

$$\text{AIR CONSUMPTION } ft^3/min = \frac{\text{Total Pumping Rate (gal/min)}}{10.0} \times \text{Air Consumption per Cycle } (ft^3) \text{ @ operating pressure}$$

$$\text{AIR CONSUMPTION } cm^3/min = \frac{\text{Total Pumping Rate (L/min)}}{40.0} \times \text{Air Consumption per Cycle } (cm^3) \text{ @ operating pressure}$$

The operating air pressure will depend on the amount of force the RETRIEVER will need to push the water from the pump to the remediation equipment on the surface (total dynamic head). As the operating air pressure is set higher, more air will be consumed with each cycle of the pump due to the characteristics of compressed air. For example, at an operating pressure of 60 PSI (414 kPa), the RETRIEVER will consume 0.8 ft^3 (14 cm^3) of air/cycle. At an operating pressure of 100 PSI (690 kPa), the RETRIEVER will consume 1.26 ft^3 (21 cm^3) of air/cycle. The total water recovery rate will dictate how often the pump cycles.

Troubleshooting the RETRIEVER

Troubleshooting

Pump is not operating

- Is proper air pressure being applied to the pump?
- Be sure all lines are connected to the clincher and pump correctly.
- Check for crimped lines from clincher to the pump.
- Is the discharge line restricted?
- Check upper intake on top loading pump.
- Are the filters clogged in the filter/regulator unit?
- Sticking float (clean S.S. tubes inside of pump)
- Control unit faulty (See testing pump control unit)

Pump is blowing air into discharge line momentarily at the end of the pump cycle.

- Lower operating pressure of the pump.
- Obstructed air discharge from pump control.
- Control unit faulty (See testing pump control unit)

Pump blowing air into discharge line continuously.

- Sticking float (clean S.S. tubes inside of pump)
- Obstructed air discharge from pump control.
- Control unit faulty (See testing pump control unit)

Air blowing up the well continuously

- Upper intake valve not closing on the pump (low pump pressure, faulty o-ring on intake valve, foreign object in upper intake)
- Loose or broken air line above the pump.
- Pump operating pressure below 40 PSI.

Testing Pump Control:

1. Turn off air to the pump and remove the pump from the well. Disassemble the bottom and body from the pump.
2. Disconnect the tube going into the black fitting on top of the pump, and connect a pressure gauge into this fitting.
3. Slide the float to the bottom end of the S.S. tube and restore air pressure to the pump.
4. Slide the float to the float stop next to the pump head. At this point the pressure gauge should indicate line pressure equal to that at the regulator.
5. Slide the float to the center of the S.S. tube and check the pressure again. The pressure should remain unchanged.
6. Slide the float to the bottom stop. The pressure should release from the control unit with no pressure indicated on the pressure gauge.
7. Should the test results differ from previous steps, contact the manufacturer for technical assistance.

List of Figures

(FIG. 1)

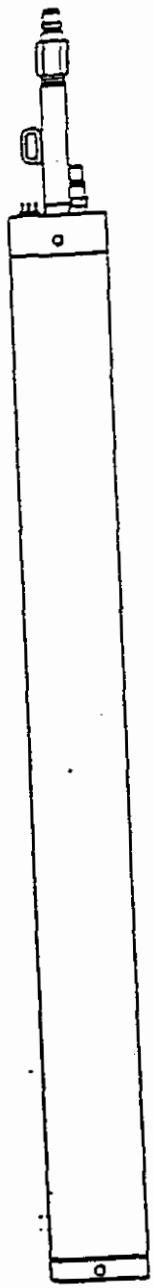

(FIG. 2)

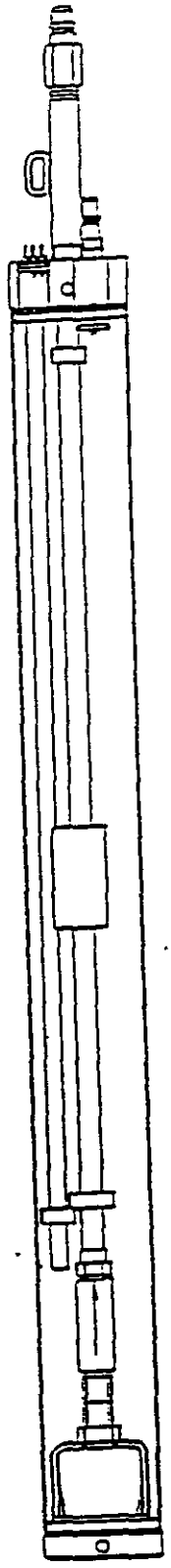

(FIG. 3)

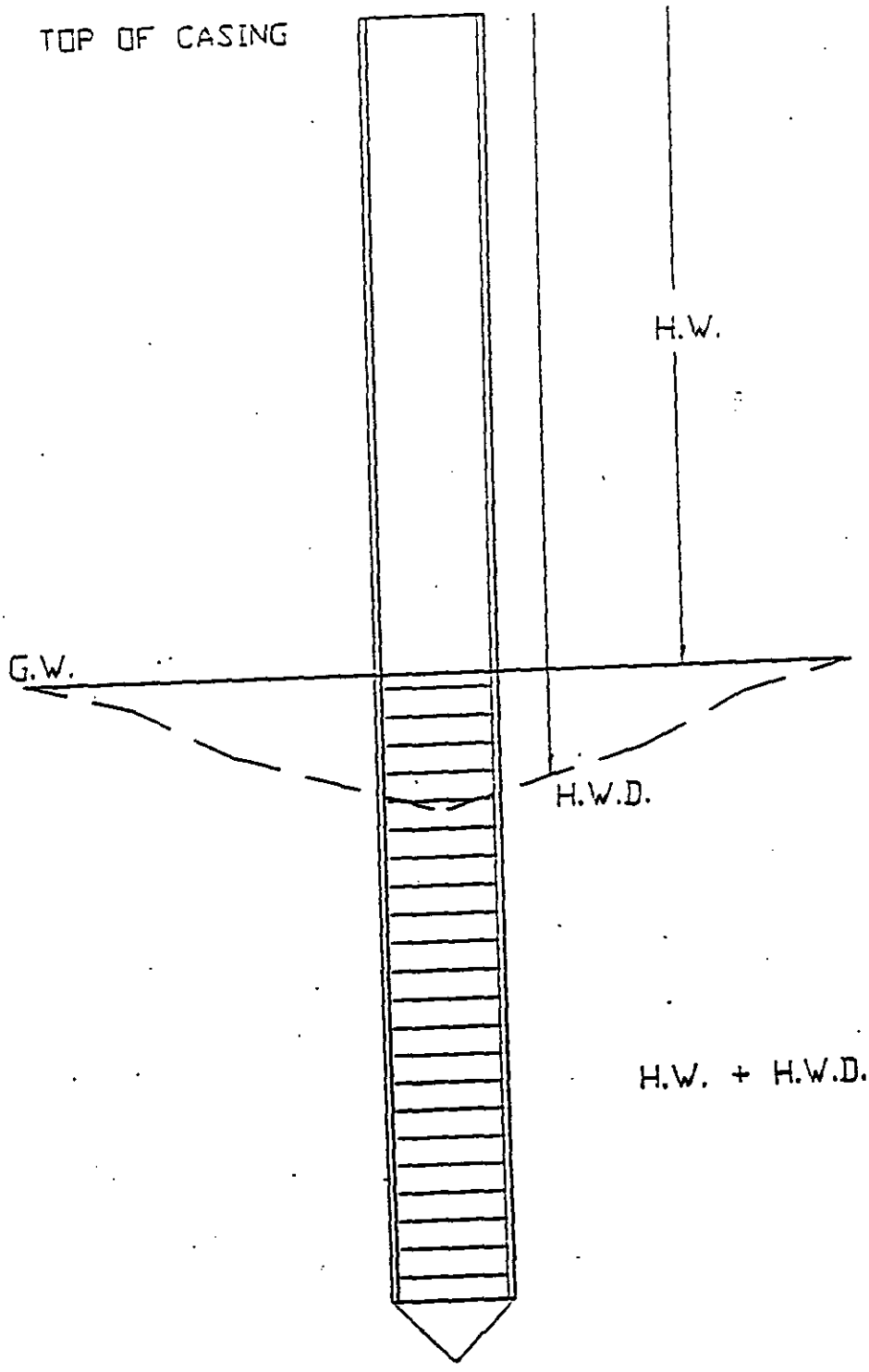

EVACUATOR II

TOP/BOTTOM LOADING

(FIG. 4)

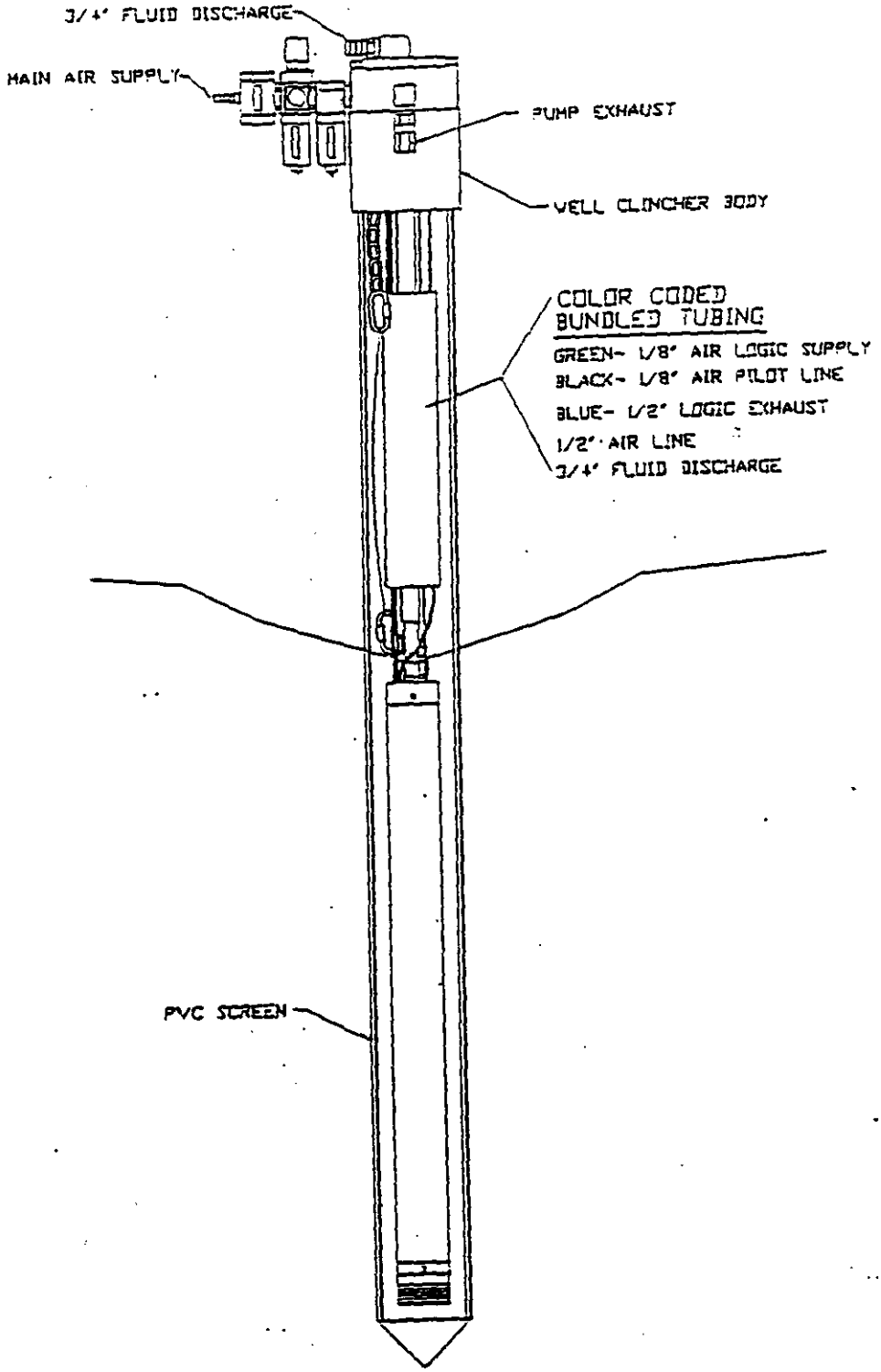

(FIG. 5)

TOP LOADING

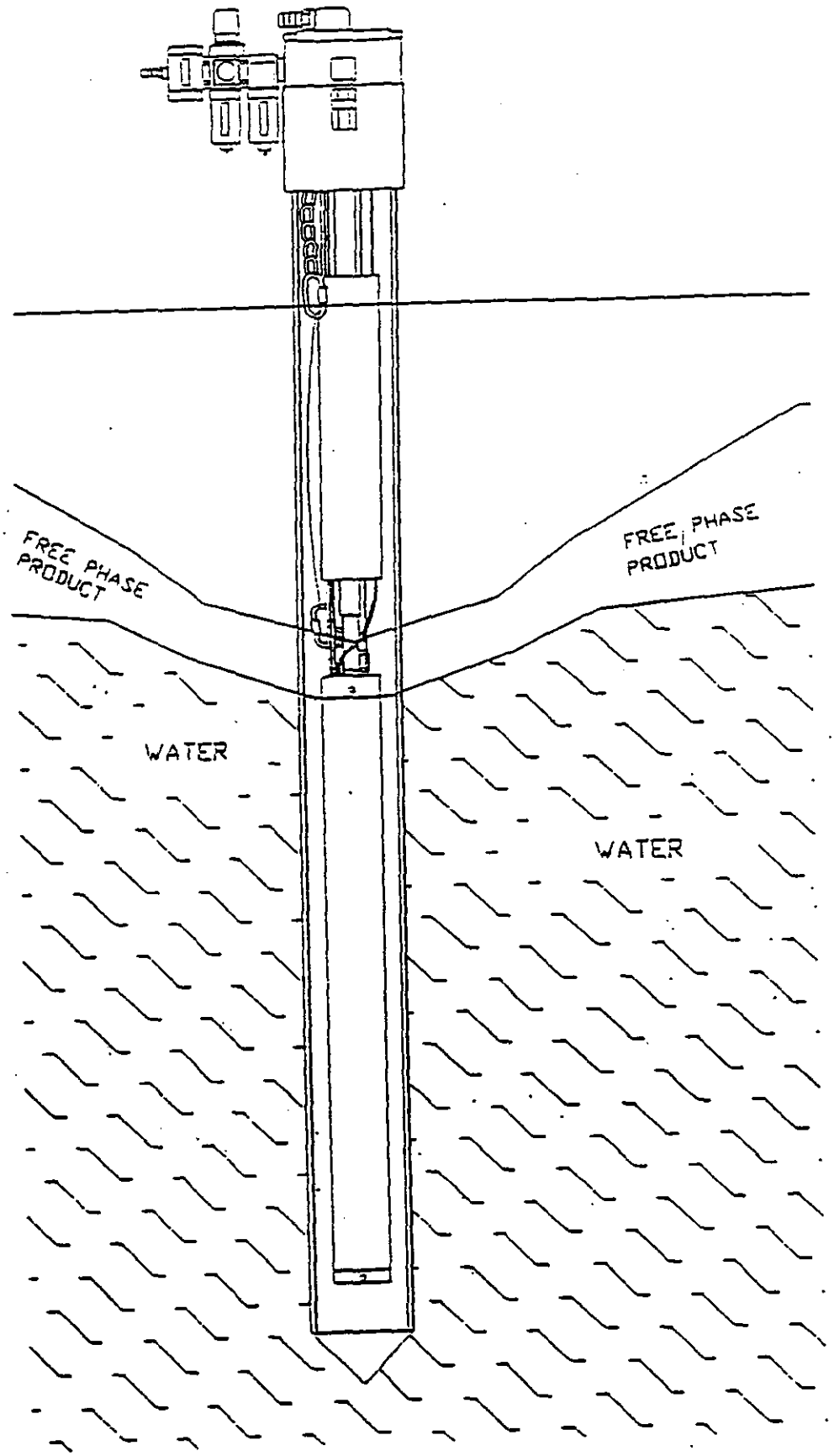

(FIG. 6)

TOP/BOTTOM LOADING

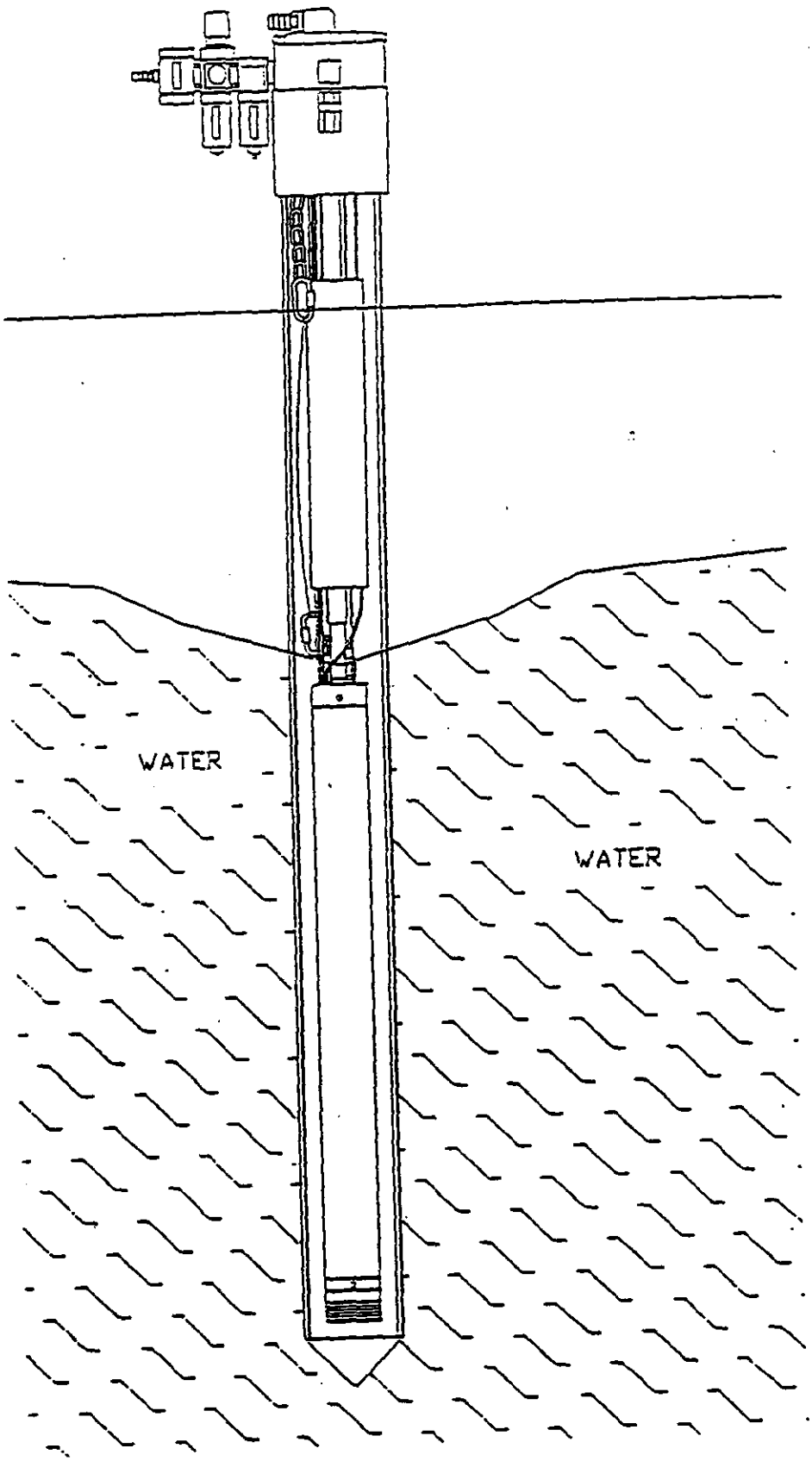

(FIG. 7)

4" INSTALLATION SET-UP

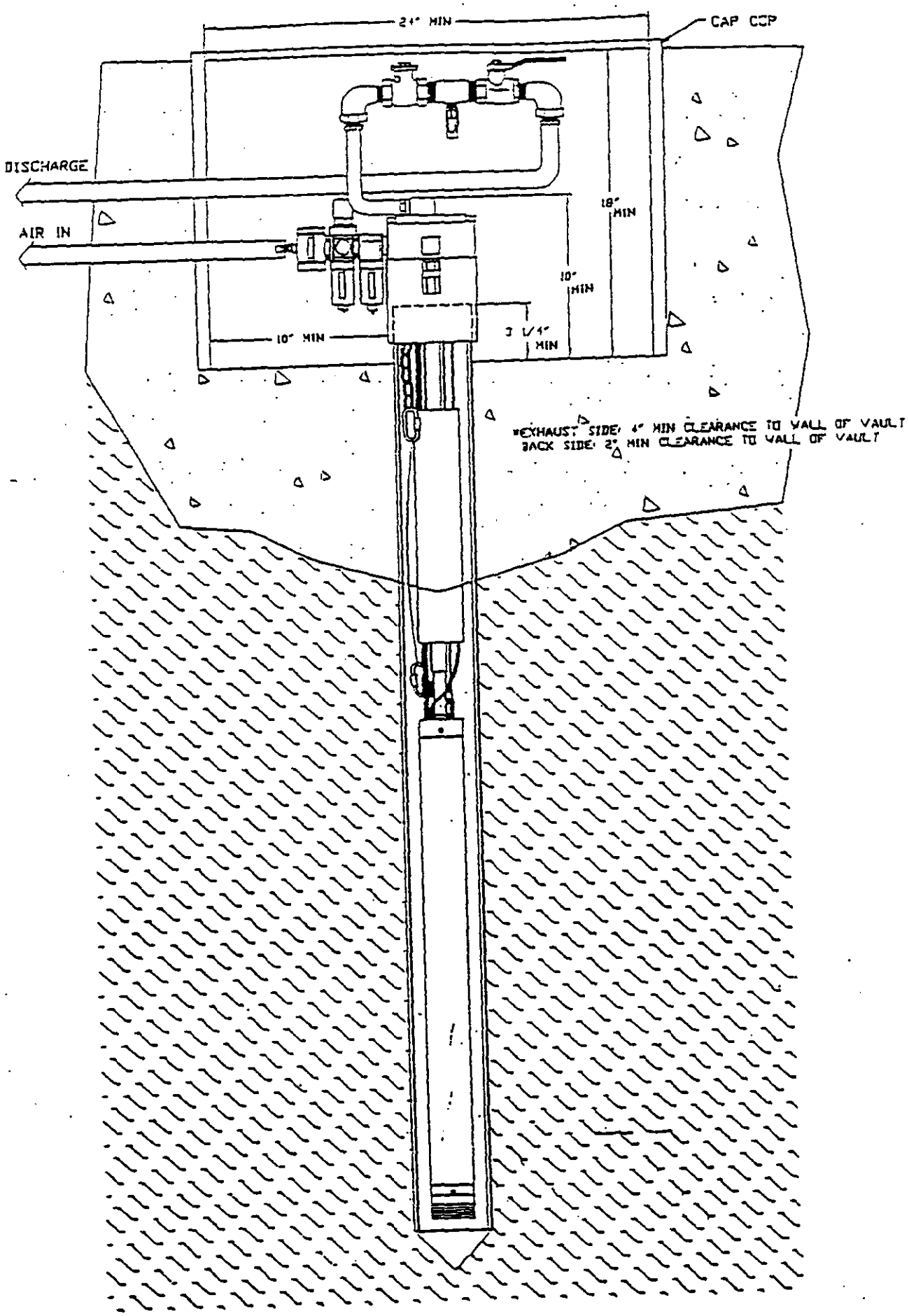

(FIG. 8)

4" w/PULSE COUNTER INSTALLATION SET-UP

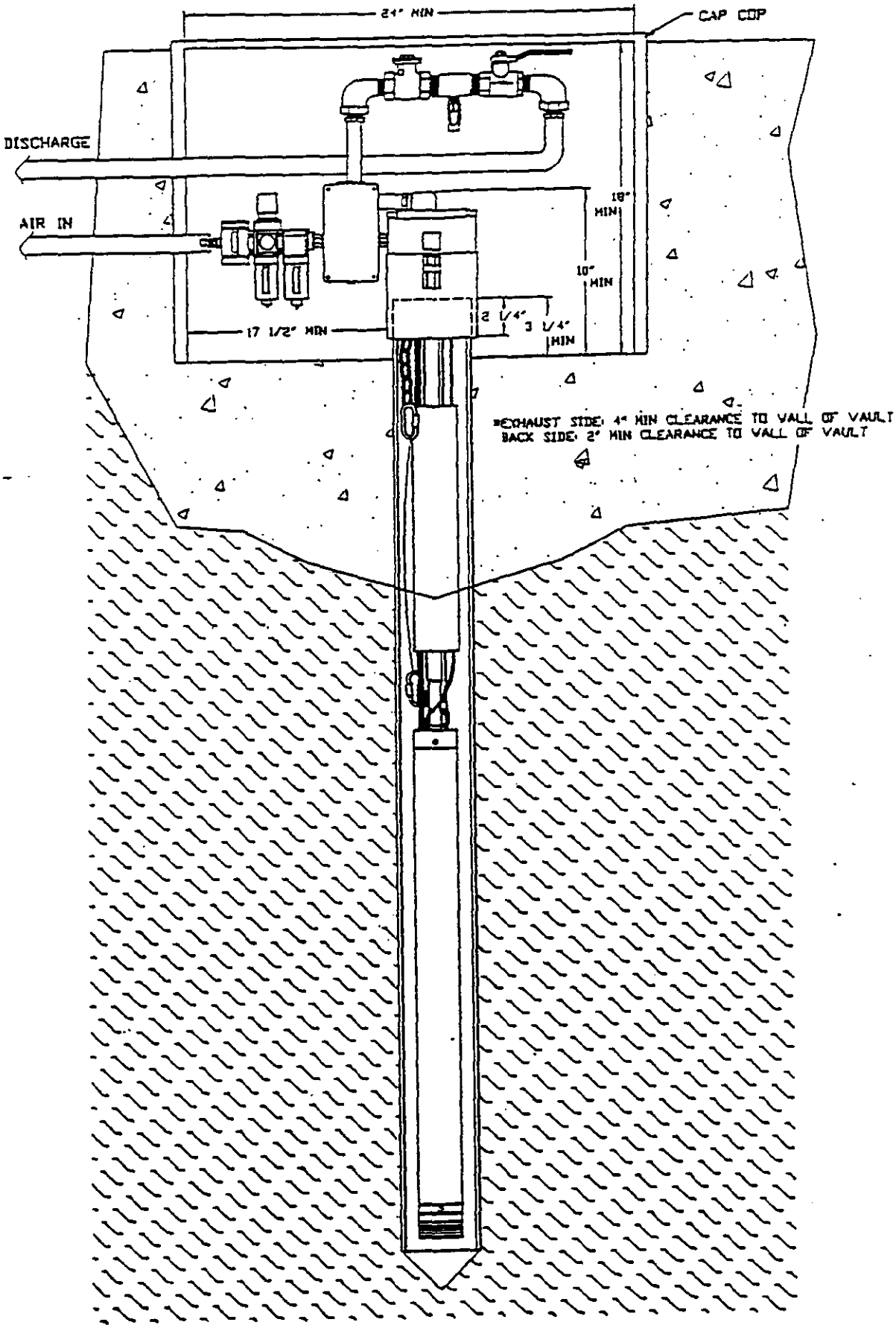

(FIG. 9)
4" INSTALLATION SET-UP
S.V.E. MANIFOLD

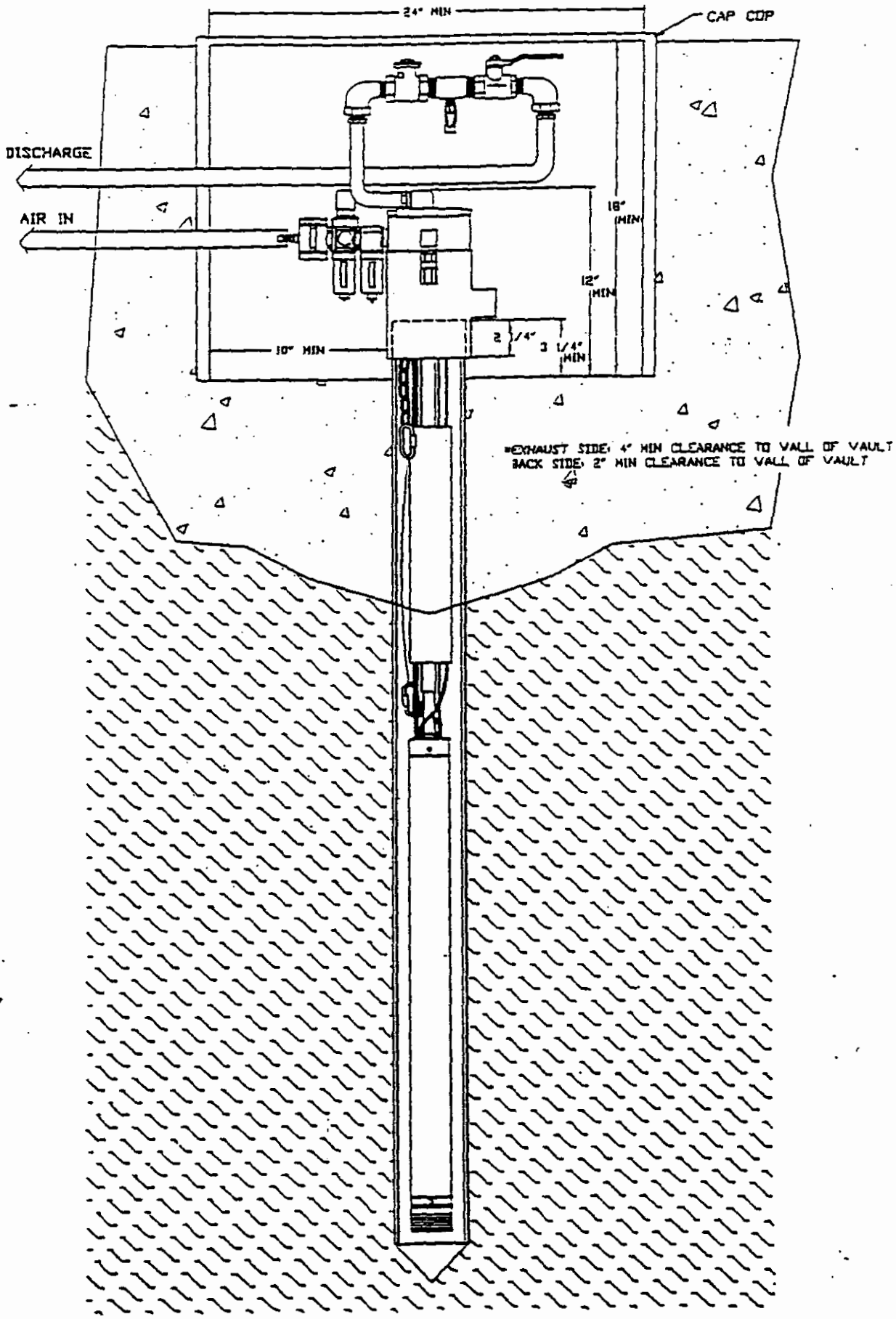

(FIG. 10)
4" w/PULSE COUNTER INSTALLATION SET-UP
S.V.E. MANIFOLD

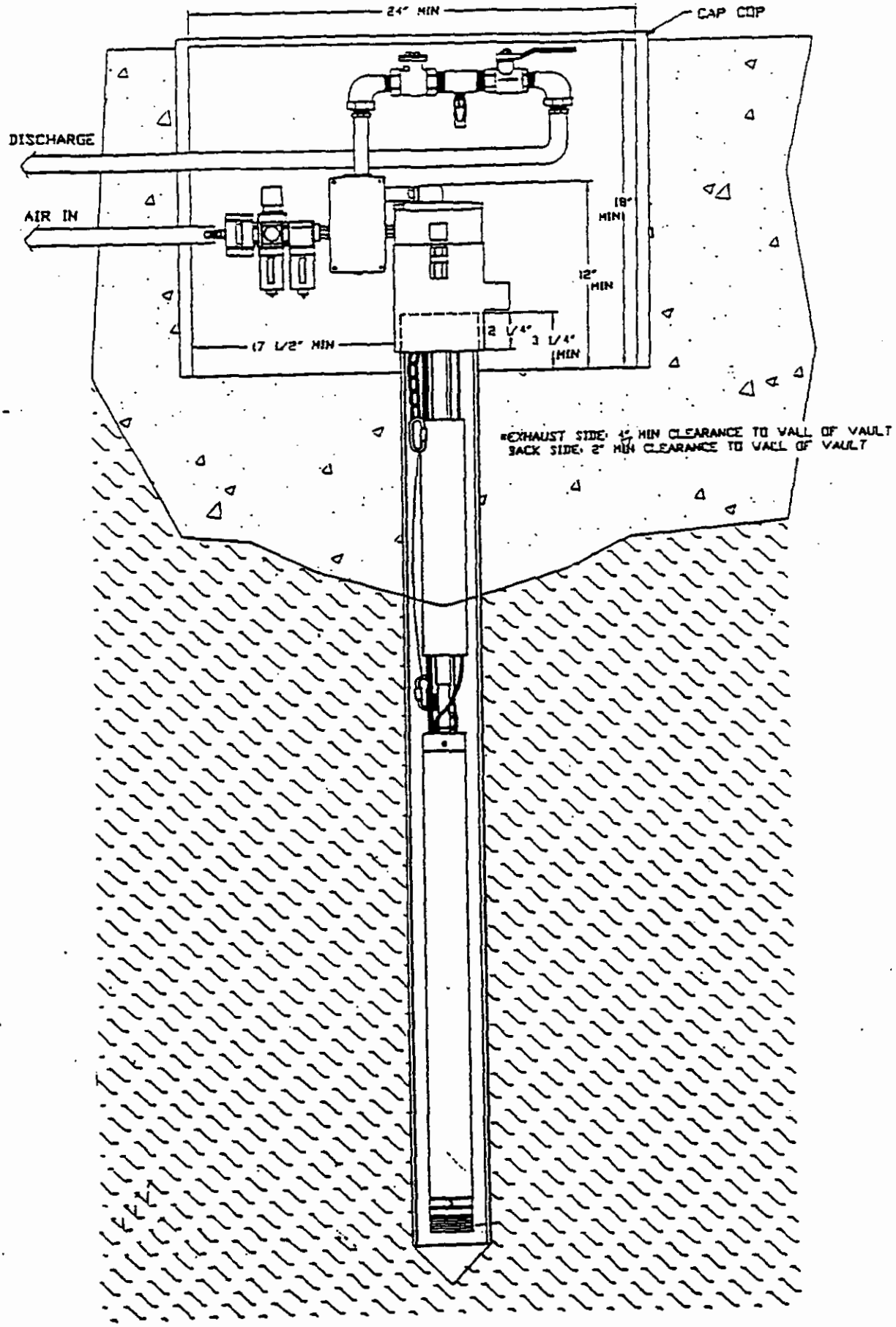

Installation Instructions for the Pulse Counter for Evacuator™ Pumps

The Pneumatic Pulse Counter was developed to *record the number of cycles of the Evacuator™I* and Evacuator™II Pumps. This can be used to determine the total discharge of fluids from the Evacuator™ series pumps. To determine the amount of fluid pumped, multiply the number of cycles by the volume of fluid per pump cycle.

The Pneumatic Pulse Counter comes standard with 1/2-inch hose barbs and two hose clamps. Other size hose barbs and tube fittings may be substituted to fit various hose and tube sizes.

Assembly instructions:

1. Thread the male end of the 1/4-inch street 90° elbow into the 1/4-inch female fitting that is on each side of the counter. Tighten the 1/4-inch street elbow so that it faces toward the bottom *or front of the counter.*

Caution! to prevent damage to the enclosure when assembling these fittings, a wrench must be used to securely hold the fittings on the counter to prevent further tightening.

2. Thread the hose barbs into the elbow and tighten. Proceed with the installation.

Installation Procedure/Evacuator™I Series:

The Pneumatic Pulse Counter should be installed between the filter/regulator and TR-805 controller. Air supply must connect on the side marked "Air In". The controller must connect on the side marked "To Pump". Illustration "A" demonstrates this installation.

The unit can be mounted by using the self tapping screws provided with the unit. Holes should be drilled according to the illustration "B" provided. Once the holes have been drilled on the mounting surface, remove the cover, and insert the screws into the screw holes using a Phillips screwdriver.

Note: the Pulse Counter should never be submerged in liquid.

Illustration A

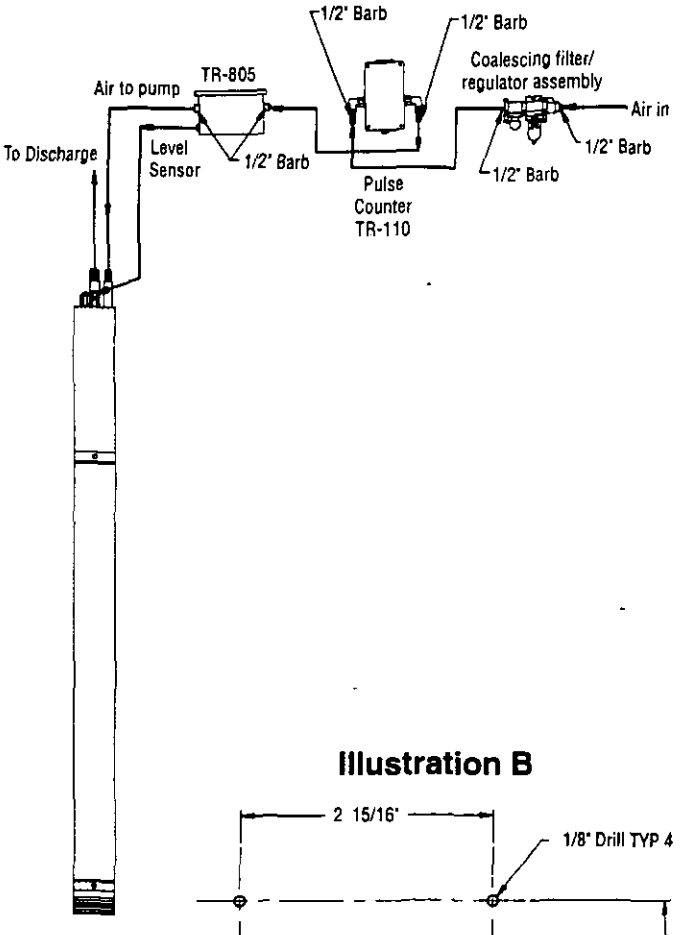

Illustration B

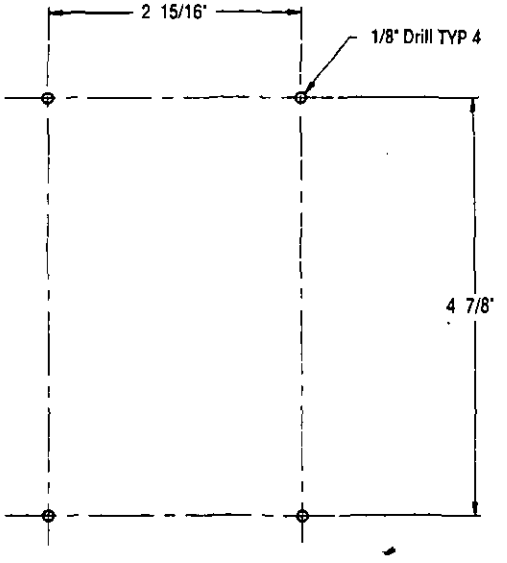

BOART LONGYEAR

Installation Procedures/Evacuator™ II Series:

Option I – Mounted to Well Clincher
The Pneumatic Pulse Counter can be installed directly to the well clincher. In this installation the filter/regulator assembly must connect on the side marked "Air In". The clincher must connect on the side marked "To Pump". Illustration "C" demonstrates this installation.

Option II - Mounted to Well Vault
The Pneumatic Pulse Counter should be installed between the filter/regulator and well clincher. Air supply must connect on the side marked "Air In". The clincher must connect on the side marked "To Pump". Illustration "D" demonstrates this installation.

The unit can be mounted by using the self tapping screws provided with the unit. Holes should be drilled according to illustration "B" provided. Once the holes have been drilled on the mounting surface, remove the cover and insert the screws into the screw holes using a Phillips screwdriver.

Note: The Pulse Counter should be mounted to avoid flooding.

When installation is complete and air pressure is supplied to the pump, the counter will begin to totalize each cycle of the pump. It is recommended that a minimum of 25 micron filtered air always be provided to the Pneumatic Pulse Counter.

Technical information

Operating temperature:	32 -120 degrees F 0 - 51.6 degrees C
Operating pressure:	40-100 PSI 275-689 kPa

Counter is non-resettable

4-inch Evacuator™ I Pump volume:
.90 Gal. (3.4 L.)
(full cycle)

2-inch Evacuator™ I Pump volume:
.14 Gal. (0.52 L.)
(full cycle)

4- inch Evacuator™ II Pump volume:

Standard length	.90 Gal (3.4 L.)
30-inch length	.70 Gal (2.65 L.)

2-inch Evacuator™ II Pump volume:

Standard length	.18 Gal (0.68 L.)

Illustration C

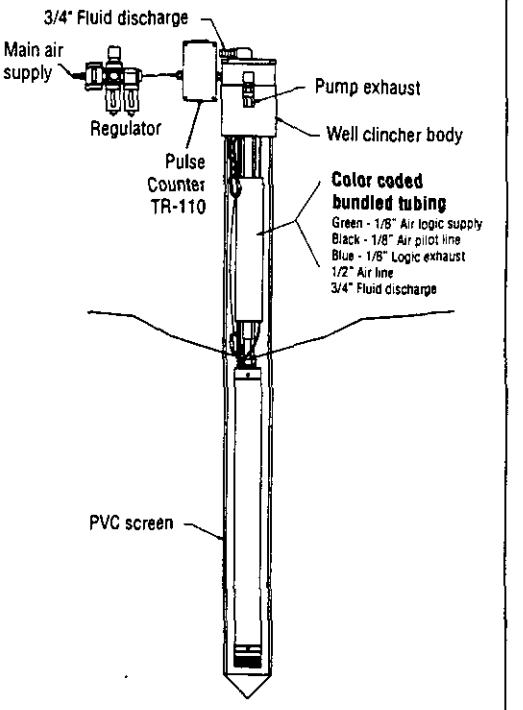

Illustration D

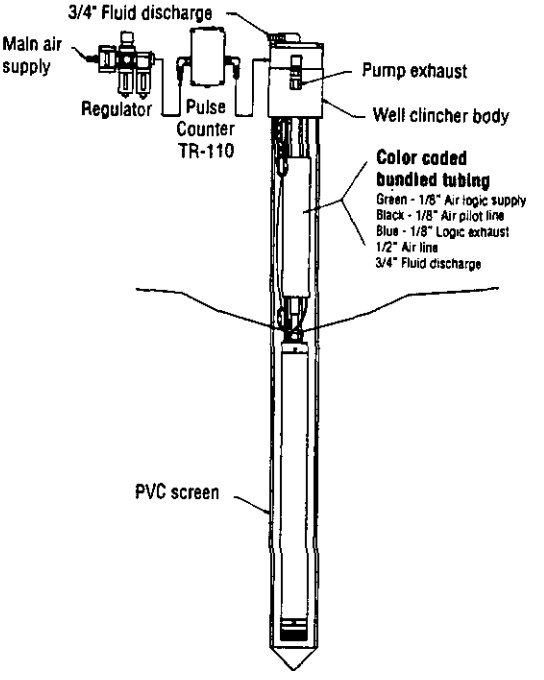

BOART LONGYEAR

Boart Longyear Company

2175 W. Park Ct., P.O. Box 1959
Stone Mountain, GA 30086-1959 USA
Ph: 770-469-2720 • 800-241-9468
Fax: 770-498-2841

WILKERSON.
CORPORATION

83-533-000

INSTALLATION AND MAINTENANCE SHEET

Filter Model M18 and M28

WARNING

Certain compressor oils, cleaning agents, solvents, paints and fumes will attack plastic bowls and may cause failure. This product should not be used in conjunction with nor in the vicinity of these materials. When cleaning the plastic bowl, wipe with a clean, dry cloth only. If bowl is cracked, crazed or damaged in any way REPLACE AT ONCE.

NOTE: THIS PRODUCT IS DESIGNED AND INTENDED FOR USE IN INDUSTRIAL COMPRESSED AIR SYSTEMS.

INSTALLATION

1. *Refer to WARNING prior to installation.*
2. Install as close to the point of use as possible.
3. Unit must be installed with the flow in the direction of the flow arrow on the body cover and with bowl down.
4. Avoid using reducing bushings, couplings, etc., whenever possible to install this product. These devices restrict air flow and can affect performance.
5. Do not install this product in any application where the pressure drop across the unit will exceed 8 psig (0,55 bar). This will cause the Differential Pressure Indicator to shift to RED indicating element replacement is required.
6. Maximum inlet pressure and temperatures are as follows:
   a. Plastic bowl/bowl guard assembly:
      150 psig (10,3 bar)
      125°F (51,7°C)
   b. Metal bowl with Sight Gauge:
      250 psig (17,2 bar)
      175°F (79,4°C)
7. To install a drain line, use the following procedure:
   a. On units with the MANUAL DRAIN, attach flexible tubing having an I.D. of 3/16" (4.8 mm) to drain stem.
   b. On units with AUTOMATIC FLOAT DRAIN, install using a 1/8 NPT fitting and flexible tubing.

NOTE: CONTAMINATES REMOVED FROM THE COMPRESSED AIR SYSTEM MUST BE DISPOSED OF IN ACCORDANCE WITH LOCAL, STATE AND FEDERAL STANDARDS.

MAINTENANCE

THIS UNIT MAY BE SERVICED WITHOUT REMOVING THE UNIT FROM *THE COMPRESSED AIR LINE.*

1. Filter element replacement:
   a. Differential Pressure Indicator is **RED** indicating that the filter element requires servicing.
   b. Depressurize unit.
   c. Remove bowl/bowl guard assembly by pushing up on bowl assembly and turning clockwise. Clean inside of bowl using a clean, dry cloth. Inspect plastic bowl for damage and replace if necessary.
   d. Remove filter element by turning element clockwise.
   e. Install a new filter element/o-ring seal and reassemble unit in reverse order. NOTE-DO NOT TOUCH THE EXTERIOR FOAM COVER OF THE ELEMENT. USE THE PLASTIC BAG THE ELEMENT IS SHIPPED IN TO HOLD THE ELEMENT AND INSTALL INTO THE BODY.
2. Liquid level in the bowl must be kept below the level indicator line as marked. It is recommended practice to drain a unit equipped with the manual drain at least once during an eight (8) hour period.
3. To clean the AUTOMATIC FLOAT DRAIN, remove the drain nut and drain. DO NOT DISASSEMBLE THIS DRAIN! Clean the unit in warm soapy water and blow dry with a compressed air blow gun.
4. Before returning unit to service, insure that all seals have been reinstalled or replaced and bowl is locked into position with drain properly secured.
5. If the Differential Pressure Indicator no longer functions, it must be replaced.

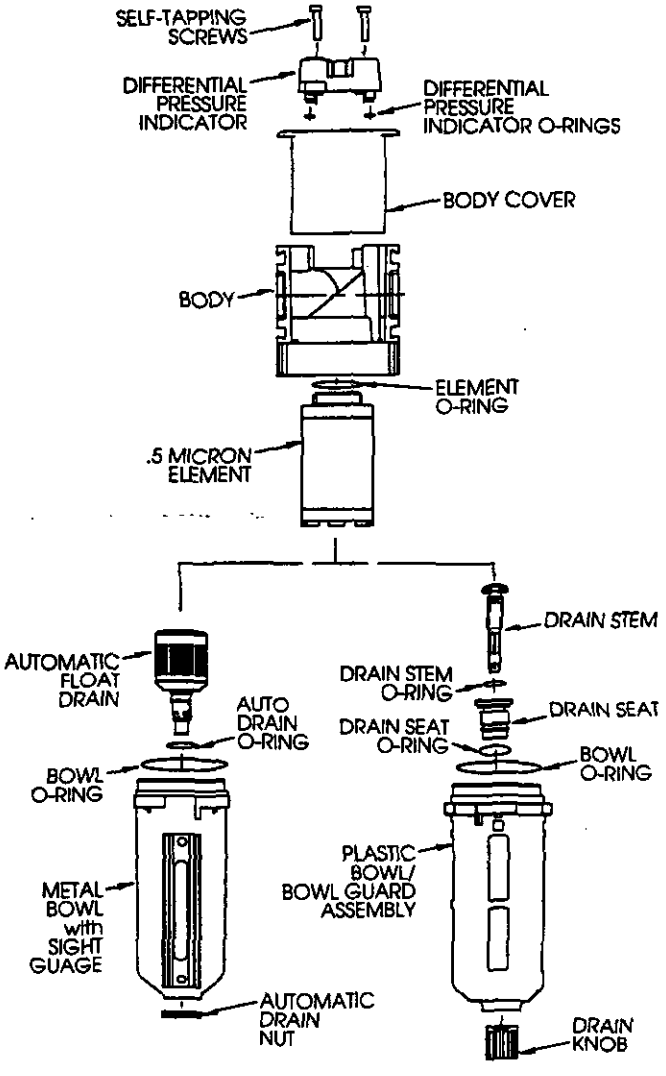

(For Repair Kits and Replacement Parts see reverse side)

1/94
Printed in U.S.A.

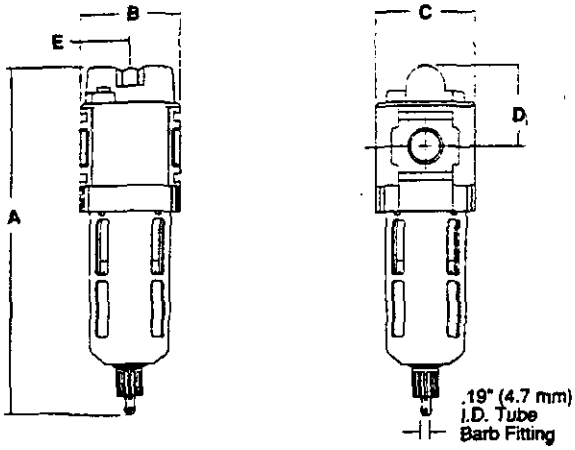

FRONT VIEW SIDE VIEW

INCHES
millimeters

Dimensions

Models	A	B	C	D	E
M18	8.2	2.36	2.26	1.9	1.2
	209	60	60	48	30
M28	9.3	2.9	2.9	1.9	1.4
	213	73	73	48	37

REPAIR KITS AND REPLACEMENT PARTS

	Element Type C .01 micron	Element Type B .5 Micron	Element Type D Activated Carbon	Bowl O-Ring Nitrile	Plastic bowl/ bowl guard with Manual Drain	Plastic bowl/ bowl guard with Automatic Drain	Plastic bowl/ bowl guard with no Drain	Metal bowl/ Sight gauge with Manual Drain	Metal bowl/ Sight gauge with Automatic Drain
M18	**MTP-96-646**	**MSP-96-647**	**MXP-69-650**	**GRP-96-640**	**GRP-96-634**	**GRP-96-635**	**GRP-96-638**	**GRP-96-636**	**GRP-96-637**
M28	**MTP-96-648**	**MSP-96-655**	**MXP-96-651**	**GRP-96-654**	**GRP-96-642**	**GRP-96-643**	**GRP-96-652**	**GRP-96-644**	**GRP-96-645**

DRAINS

Manual Drain **GRP-96-685**
Automatic Mechanical Drain (Fluorocarbon)-1/8 NPT **GRP-95-981**
Low Flow Drain (Fluorocarbon)-1/8 NPT **GRP-96-500**

Automatic Drain (Fluorocarbon)-1/8 BSP **GRP-96-300**
Low Flow Drain (Nitrile)-1/8 BSP **GRP-96-600**

ACCESSORIES

Joiner set **GPA-96-601**
T-Bracket **GPA-96-602**
T-Bracket with Joiner set **GPA-96-603**
C-Bracket (18 Series) **GPA-96-604**
C-Bracket (28 Series) **GPA-96-605**
Differential Pressure Indicator **DPS-01-000**

WILKERSON
CORPORATION • ENGLEWOOD, CO 80150

SERVICE MANUAL

Liquid Separator Model WSA
with Variations and Accessories

83-229-000
9SM-SD- WSA
JULY 1992

WARNING

DO NOT PLACE PLASTIC BOWL UNIT IN SERVICE WITHOUT METAL BOWL GUARD INSTALLED

Plastic bowl units are sold only with metal bowl guards. To minimize the danger of flying fragments in the event of plastic bowl failure, the metal bowl guards should not be removed. If the unit is in service without the metal bowl guard installed, manufacturer's warranties are void, and the manufacturer assumes no responsibility for any resulting loss.

IF UNIT HAS BEEN IN SERVICE AND DOES NOT HAVE A METAL BOWL GUARD, ORDER ONE AND *INSTALL BEFORE PLACING BACK IN SERVICE.*

For information for materials harmful to plastic bowls, contact a Mobay Chemical or General Electric office for *information regarding materials that will attack polycarbonate plastic.*

CAUTION

Certain compressor oils, chemicals, household cleaners, solvents, paints and fumes will attack plastic bowls and can cause bowl failure. Do not use near these materials. When bowl becomes dirty replace bowl or wipe *only with clean, dry cloth. Reinstall metal bowl guard or buy and install a metal bowl guard.* Immediately replace any crazed, cracked, damaged or deteriorated plastic bowl with a metal bowl or a new plastic bowl and metal bowl guard.

EXCEPT as otherwise specified by the manufacturer, this product is specifically designed for compressed air service, and use with any other fluid (liquid or gas) is a misapplication. For example, use with or *injection of certain hazardous liquids or gases in the system (such as alcohol or liquid petroleum gas)* could be harmful to the unit or result in a combustible condition or hazardous external leakage. Manufacturer's warranties are void in the event of misapplication, and manufacturer assumes no responsibility for any resulting loss. Before using with fluids other than air, or for non-industrial applications, *consult* manufacturer for written approval.

MAINTENANCE

1. *EACH TIME THE BOWL IS CLEANED:*
   a. Depressurize unit.
   b. Inspect and replace crazed, cracked, damaged or deteriorated seals and bowls with original manufacturer's approved seals only.
2. IF UNIT IS EQUIPPED WITH AUTOMATIC MECHANICAL DRAIN, clean the screen around the drain seat each time the element is cleaned or changed by removing adapter nut and removing drain assembly. Clean screen by blowing off with air blow gun.
3. BEFORE PLACING THE UNIT IN SERVICE, make sure that the bowl and bowl guard are reinstalled, *and securely locked in place.*

(See reverse side for Repair Kit, Replacement Parts and Accessories)

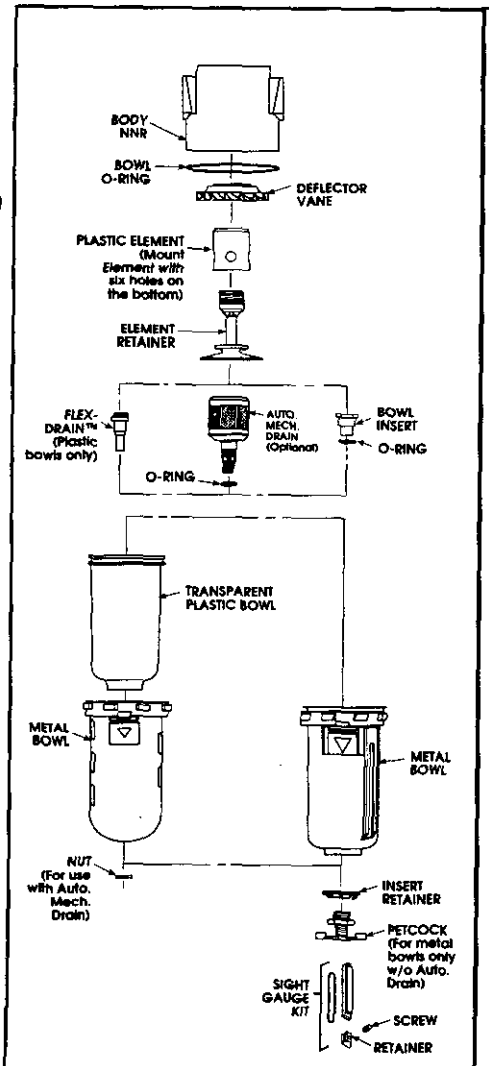

WSA-02

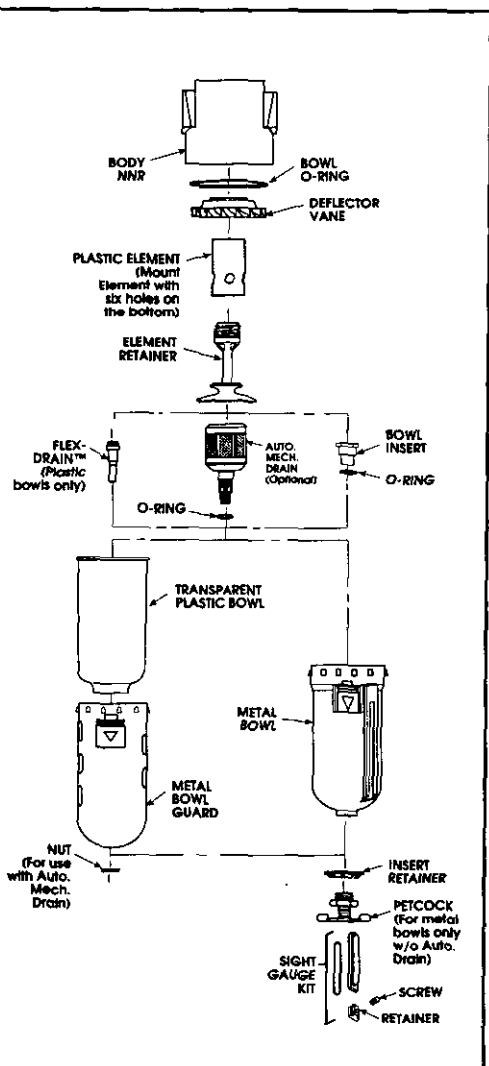

WSA-03
WSA-04

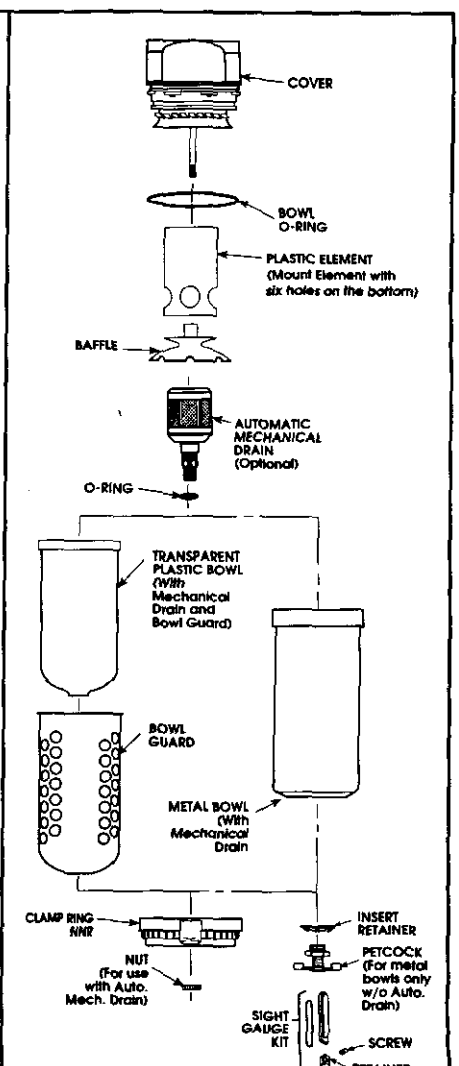

WSA-06
WSA-08

NNR=NOT NORMALLY REPLACED

REPAIR KITS, REPLACEMENT PARTS AND ACCESSORIES

	MODEL NUMBERS		
	WSA-02	**WSA-03 WSA-04**	**WSA-06 WSA-08**
Viton Bowl O-Ring Kit	GRP-95-009	GRP-95-900	GRP-95-942
Bowl O-Ring Kit	—	—	GRP-95-256
Bowl Guard Kit	GRP-95-013	—	GRP-95-808
Transparent Plastic Bowl Assemblies:			
Plastic Bowl with Flex-Drain™	FRP-95-017	GRP-95-929	—
with Flex-Drain™ and Bowl Guard	FRP-95-014	GRP-95-935	FRP-95-832
with Auto. Mech. Drain and Bowl Guard	FRP-95-015	GRP-95-948	FRP-95-775
Metal Bowl Assemblies			
with petcock	FRP-95-178	GRP-95-930	FRP-95-593
with petcock and sight gauge	GRP-95-133	GRP-95-931	GRP-95-676
with Automatic Mechanical Drain (Viton Seals)	FRP-95-950	GRP-95-960	GRP-95-970
Drains:			
Flex-Drain™	FRP-95-610	FRP-95-610	FRP-95-610
Automatic Mechanical Drain	GRP-95-973	GRP-95-973	GRP-95-973
Automatic Mechanical Drain with Viton Seals	GRP-95-981	GRP-95-981	GRP-95-981
Brass Petcock Kit	GRP-95-182	GRP-95-182	—
ACCESSORIES			
Sight Gauge Kit (for Metal Bowl)	GRP-95-079	GRP-95-079	LRP-95-771

WILKERSON
CORPORATION

INSTALLATION AND MAINTENANCE SHEET

Lubricator Model L18 and L28

WARNING

Certain compressor oils, cleaning agents, solvents, paints and fumes will attack plastic bowls and may cause failure. This product should not be used in conjunction with nor in the vicinity of these materials. When cleaning the plastic bowl, wipe with a clean, dry cloth only. If bowl is cracked, crazed or damaged in any way **REPLACE AT ONCE.**

NOTE: THIS PRODUCT IS DESIGNED AND INTENDED FOR USE IN INDUSTRIAL COMPRESSED AIR SYSTEMS.

INSTALLATION

1. Refer to WARNING prior to installation.
2. Install as close to the point of use as possible.
3. Unit must be installed with the flow in the direction of the flow arrow on the body cover and with bowl down.
4. Avoid using reducing bushings, couplings, etc., whenever possible to install this product. These devices restrict air flow and can affect performance.
5. Maximum inlet pressure and temperatures are as follows:
   a. Plastic bowl/bowl guard assembly:
      150 psig (10,3 bar)
      125°F (51,7°C)
   b. Metal bowl with Sight Gauge:
      250 psig (17,2 bar)
      175°F (79,4°C)
6. Use only clean, light machine oil, preferably SAE 10 or lighter.
7. This lubricator may be filled under pressure by opening the top fill port slowly, allowing the pressure in the bowl to slowly vent to atmosphere. After the pressure has bled off, the fill plug may be removed completely and oil poured into the fill port. When the fill plug is removed, a small amount of air will be venting from the fill port. This is to serve as an audible signal denoting that the unit is if fact under pressure. If faster filling is desired, slowly remove the fill plug to vent the bowl pressure to atmosphere. Then remove the bowl/bowl guard assembly by pushing up on the bowl and turning clockwise. Fill the bowl, reposition the bowl o-ring seal on the bowl and reinstall the bowl. To reinstall the bowl, insert the bowl into the body, push up and turn counterclockwise until you feel the locating stops engage. Pull down on the bowl and turn clockwise to insure the bowl has been properly installed and locked. Now reinstall the fill plug. The unit is ready for use.
8. To adjust and set oil delivery rate, the unit must be pressurized and air must be flowing through the unit. Turn the transparent SIGHT DOME, located on the top of the unit counterclockwise to initiate oil delivery. The rate of oil delivery depends on air flow rate. If flow increases or decreases, the oil delivery rate will increase or decrease proportionately. Turning the SIGHT DOME clockwise to limit stop will stop all oil delivery.

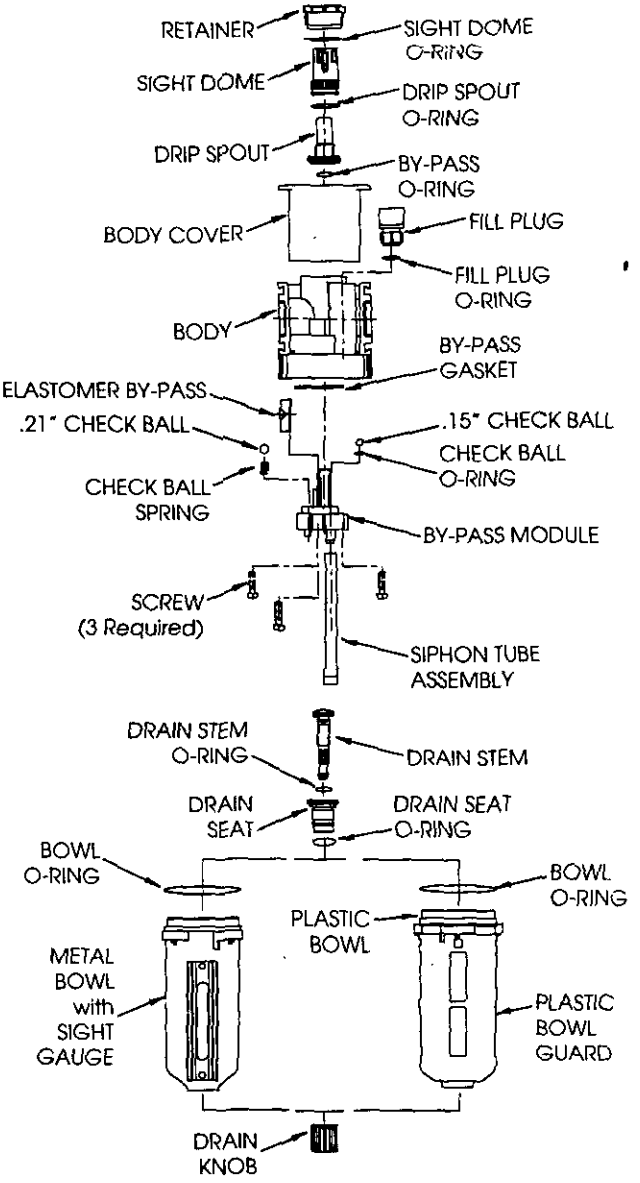

MAINTENANCE

THIS UNIT MAY BE SERVICED WITHOUT REMOVING THE UNIT FROM THE COMPRESSED AIR LINE.

1. To clean the bowl, slowly open and remove the fill plug located on the top of the lubricator to vent bowl pressure to atmosphere. Push up on bowl assembly and turn clockwise to remove. Use a clean, dry cloth to wipe inside of bowl. Inspect the filter located in the bottom of the siphon tube assembly. Clean or replace the siphon tube assembly as required. To reinstall the bowl, insure that the bowl seal o-ring is properly installed on the bowl, insert the bowl into the body and push-up and turn counterclockwise until the locating stops engage. Pull down on the bowl and turn clockwise to insure the bowl has been properly installed and locked.
2. Before returning unit to service, insure that all seals have been reinstalled or replaced and bowl is locked in position with drain properly secured.

(For Repair Kits and Replacement Parts see reverse side.)

83-544-000 9/95
Printed in U.S.A.

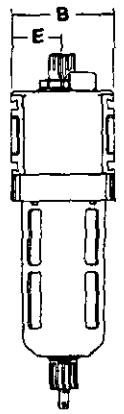

FRONT VIEW

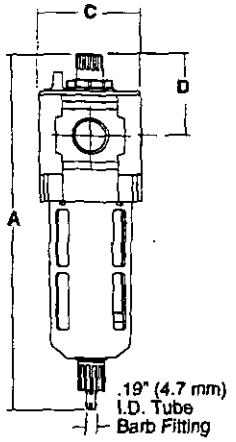

SIDE VIEW

INCHES
millimeters

Dimensions

Models	A	B	C	D	E
L18	**8.25**	**2.36**	**2.36**	**2.0**	**1.0**
	212	60	60	51	26
L28	**9.36**	**2.9**	**2.9**	**2.0**	**1.44**
	238	73	73	51	37

REPAIR KITS AND REPLACEMENT PARTS

	Siphon Tube Assembly Kit	By-Pass Assembly Kit	Fill Plug and O-Ring	Tamper Resistant Cap	Plastic bowl/ bowl guard with Manual Drain	Metal bowl/ Sight gauge with Manual Drain
L18	**LRP-96-677**	**LRP-96-678**	**LRP-96-679**	**LRP-96-680**	**LRP-96-701**	**GRP-96-636**
L28	**LRP-96-681**	**LRP-96-678**	**LRP-96-679**	**LRP-96-680**	**LRP-96-702**	**GRP-96-644**

DRAINS

Manual Drain..... **GRP-96-685**

ACCESSORIES

Joiner set **GPA-96-601**
T-Bracket **GPA-96-602**
T-Bracket with Joiner set **GPA-96-603**
C-Bracket (18 Series) **GPA-96-604**
C-Bracket (28 Series) **GPA-96-605**
Force Fill Adapter **LRP-96-704**

OPERATION/MAINTENANCE MANUAL & PARTS LIST

TWO STAGE/TWO CYLINDER AIR COMPRESSORS & UNITS FEATURING THE R10 & R15 PUMPS

⚠ WARNING

THIS MANUAL CONTAINS IMPORTANT SAFETY INFORMATION AND SHOULD ALWAYS BE AVAILABLE TO THOSE PERSONNEL OPERATING THIS UNIT.

READ, UNDERSTAND AND RETAIN ALL INSTRUCTIONS BEFORE OPERATING THIS EQUIPMENT TO PREVENT INJURY OR EQUIPMENT DAMAGE.

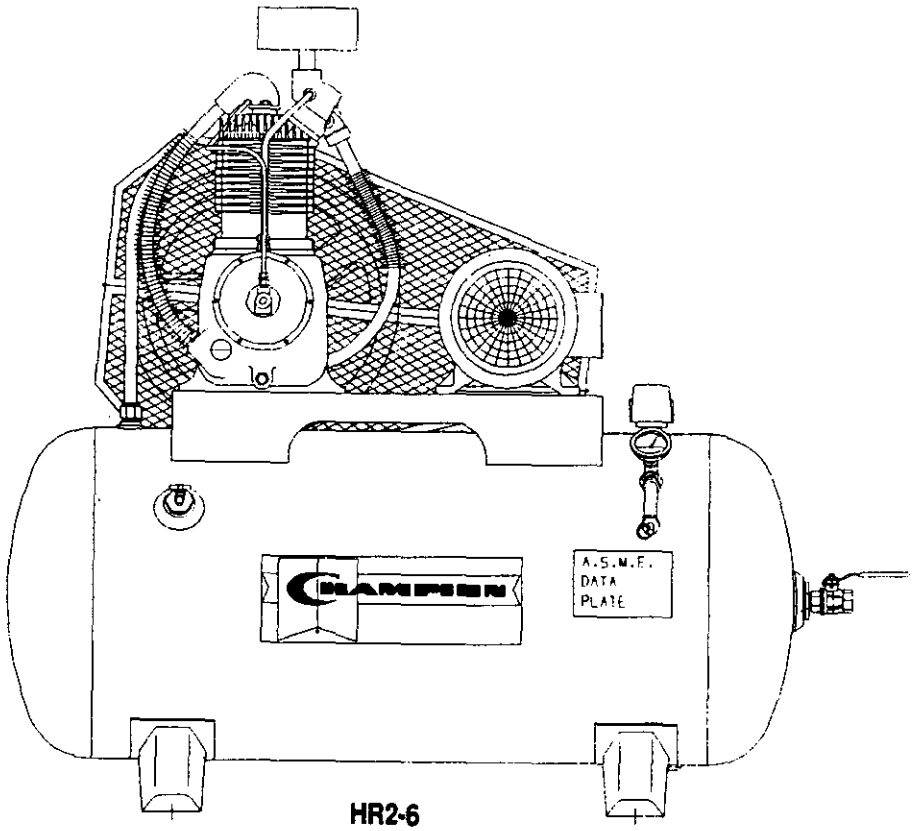

HR2-6

PNEUMATIC MACHINERY CO., INC.

1301 N. Euclid Ave. · Princeton, Illinois 61356-9990 • Phone (815) 875-3321 · FAX (815) 872-0421

Manufacturing Plants in Princeton, Illinois · Manteca, California

COMPLETE NATION-WIDE ORGANIZATION OF CHAMPION REPRESENTATIVES AT YOUR SERVICE

AN EQUAL OPPORTUNITY EMPLOYER

Form No. 3231 REV 395

SAFETY AND OPERATION PRECAUTIONS

Because an air compressor is a piece of machinery with moving and rotating parts, the same precautions should be observed as with any piece of machinery of this type where carelessness in operation or maintenance is hazardous to personnel. In addition to the many obvious safety rules that should be followed with this type of machinery, the additional safety precautions as listed below must be observed:

1. Read all instructions completely before operating air compressor or unit.
2. For installation, follow all local electrical and safety codes, as well as the National Electrical Code (NEC) and the Occupational Safety and Health Act (OSHA).
3. Electric motors must be securely and adequately grounded. This can be accomplished by wiring with a grounded, metal-clad raceway system, by using a separate ground wire connected to the bare metal of the motor frame, or other suitable means.
4. Protect the power cable from coming in contact with sharp objects. Do not kink power cable and never allow the cable to come in contact with oil, grease, hot surfaces, or chemicals.
5. Make certain that the power source conforms to the requirements of your equipment.
6. Pull main electrical disconnect switch and disconnect any separate control lines, if used, before attempting to work or perform maintenance on the air compressor or unit. "Lock out" or "Tag out" all power sources.
7. Do not attempt to remove any compressor parts without first relieving the entire system of pressure.
8. Do not attempt to service any part while machine is in an operational mode.
9. Do not operate the compressor at pressures in excess of its rating.
10. Do not operate compressor at speeds in excess of its rating.
11. Periodically check all safety devices for proper operation. Do not change pressure setting or restrict operation in any way.
12. Be sure no tools, or rags or loose parts are left on the compressor or drive parts.
13. Do not use flammable solvents for cleaning the air inlet filter or element and other parts.
14. Exercise cleanliness during maintenance and when making repairs. Keep dirt away from parts by covering parts and exposed openings with clean cloth or Kraft paper.
15. Do not operate the compressor without guards, shields and screens in place.
16. Do not install a shut-off valve in the discharge line, unless a pressure relief valve, of proper design and size, is installed in the line between the compressor unit and shut-off valve.
17. Do not operate compressor in areas where there is a possibility of ingesting flammable or toxic fumes.
18. Be careful when touching the exterior of a recently run motor - it may be hot enough to be painful or cause injury. With modern motors this condition is normal if operated at rated load - modern motors are built to operate at higher temperatures.
19. Inspect unit daily to observe and correct any unsafe operating conditions found.
20. Do not "play around" with compressed air because this can cause injuries.
21. Compressed air from this machine absolutely must not be used for food processing or breathing air without adequate downstream filters, purifiers and controls.
22. Always use an air pressure regulating device at the point of use.
23. Check hoses for weak or worn condition before each use and make certain that all connections are secure.
24. Always wear safety glasses when using compressed air gun.

The user of any air compressor package manufactured by Champion Pneumatic Machinery Company, Inc., is hereby warned that failure to follow the preceding Safety and Operation Precautions can result in injuries or equipment damage. However, Champion Pneumatic Machinery Company, Inc., does not state as fact or does not mean to imply that the preceding list of Safety and Operating Precautions is all inclusive, and further that the observance of this list will prevent all injuries or equipment damage.

EXPLANATION OF SAFETY INSTRUCTION SYMBOLS AND DECALS

DANGER — Indicates immediate hazards which will result in severe injury or death.

WARNING — Indicates hazards or unsafe practice which could result in severe injury or death.

CAUTION — Indicates hazards or unsafe practice which could result in damage to the Champion compressor or minor injury.

OBSERVE, UNDERSTAND AND RETAIN THE INFORMATION GIVEN IN THE SAFETY PRECAUTION DECALS AS SHOWN IN THE PARTS LIST SECTION.

DANGER

This reciprocating compressor must not be used for breathing air. To do so will cause serious injury whether air is supplied direct from the compressor source or to breathing tanks for later use. Any and all liabilities for damage or loss due to injuries, death and/or property damage including consequential damages stemming from the use of this compressor to supply breathing air, will be disclaimed by the manufacturer.

WARNING

The use of this compressor as a booster pump and/or to compress a medium other than atmospheric air is strictly non-approved and can result in equipment damage and/or injury. Non-approved uses will also void the warranty.

CAUTION

This unit may be equipped with special options which may not be included in this manual. User must read, understand and retain all information sent with special options.

All requests for information, service, spare parts or Maintenance Manual should include machine serial number and be directed to:

CHAMPION PNEUMATIC MACHINERY CO., INC.
Service Department
1301 N. Euclid Avenue
Princeton, Illinois 61356 USA
Phone: (815) 875-3321
FAX: (815) 872-0421

Introduction

Your new Champion Reciprocating Air Compressor is constructed to exacting standards of material and workmanship.

The instructions in this manual have been prepared to ensure that The CHAMPION will give long and satisfactory service.

A copy of this manual must be given to the personnel responsible for installing and operating The CHAMPION air compressor or unit.

Although precautions have been taken to prevent damage to your compressor or unit by freight carrier, the unit must be carefully examined and the carrier notified within 24 hours in the event of mishandling.

Champion Five Year Warranty
"R" & "PL" Series Compressors

CHAMPION warrants each new compressor pump manufactured by **CHAMPION**, mounted on a factory assembled unit, to be free from defects in material and workmanship under normal use and service for a period of sixty (60) months from date of installation or sixty-six (66) months from date of shipment by **CHAMPION** or **CHAMPION** distributor, whichever may occur first. **Applies to the compressor pump only, excluding head valves. Valves, controls and accessories are warranted for the first year only.** Compressor pumps purchased separately would carry a one year warranty.

This five year extended warranty will be prorated over the 5 years as follows:

First Year	-	100% Allowance, Parts and Labor
Second Year	-	90% Allowance, Parts and Labor
Third Year	-	80% Allowance, Parts and Labor
Fourth Year	-	70% Allowance, Parts and Labor
Fifth Year	-	60% Allowance, Parts and Labor

Applies to CHAMPION logo, tank or base mounted complete compressors only.

Express Limited Warranty

CHAMPION warrants each new air compressor unit manufactured by **CHAMPION** to be free from defects in material and workmanship under normal use and service for a period of twelve (12) months from date of installation or fifteen (15) months from date of shipment by **CHAMPION** or **CHAMPION** distributor, whichever may occur first.

CHAMPION makes no warranty in respect to components and accessories furnished to **CHAMPION** by third parties, such as **ELECTRIC MOTORS, GASOLINE ENGINES** and **CONTROLS**, which are warranted only to the extent of the original manufacturer's warranty to **CHAMPION**. To have warranty consideration, electric motors must be equipped with thermal overload protection.

The extended five year warranty will apply to ASME air receivers provided they are installed on rubber vibro isolator pads or approved equivalent.

When a compressor pump, or component is changed or replaced during the warranty period, the new/replaced item is warranted for only the remainder of the original warranty period.

Repair, replacement or refund in the manner and within the time provided shall constitute **CHAMPION'S** sole liability and your exclusive remedy resulting from any nonconformity or defect. **CHAMPION** SHALL NOT IN ANY EVENT BE LIABLE FOR ANY DAMAGES, WHETHER BASED ON CONTRACT, WARRANTY, NEGLIGENCE, STRICT LIABILITY OR OTHERWISE, INCLUDING WITHOUT LIMITATION ANY CONSEQUENTIAL, INCIDENTAL OR SPECIAL DAMAGES, ARISING WITH RESPECT TO THE EQUIPMENT OR ITS FAILURE TO OPERATE, EVEN IF **CHAMPION** HAS BEEN ADVISED OF THE POSSIBILITY THEREOF.

CHAMPION MAKES NO OTHER WARRANTY OR REPRESENTATION OF ANY KIND, EXCEPT THAT OF TITLE, AND ALL OTHER WARRANTIES, EXPRESS OR IMPLIED, INCLUDING WARRANTIES OR MERCHANTABILITY AND FITNESS FOR A PARTICULAR PURPOSE, ARE HEREBY EXPRESSLY DISCLAIMED. NO SALESMAN OR OTHER REPRESENTATIVE OF **CHAMPION** HAS AUTHORITY TO MAKE ANY WARRANTIES.

TWO STAGE AIR COMPRESSORS - MODELS R-10D & R-15B

DIMENSIONS

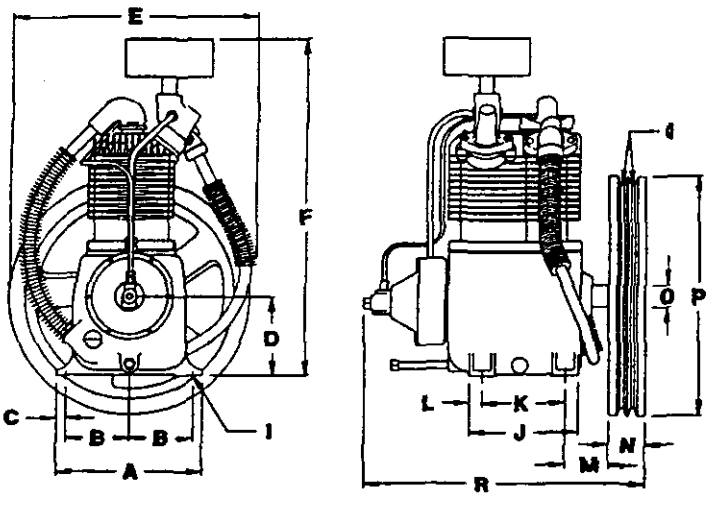

	ITEM	R-10 & R-15
A	Base-Width	10
B	Bolt Down-Width	4-3/8
C	Bolt Down to Edge	5/8
D	Base to Crank Ctr	5½
E	Overall Width	18
F	Overall Height	23-1/4
I	Bolt Down Hole Dia.	15/32
J	Base-Depth	7½
K	Bolt Down Depth	5-3/4
L	Bolt Down to Edge	7/8
M	Bolt Hole to Wheel (Max.)	3-5/8
N	Flywheel Width	2½
O	Crank Diameter	1-5/16
P	Flywheel Diameter	16½
Q	Flywheel Grooves	2VB
R	Overall Depth	20

NOTE: H.P. Exhaust Opening 3/4" Tubing.

PERFORMANCE

PUMP	OUTPUT PRESS. PSIG	MOTOR H.P.	DISPL. CFM	COOLING AIR FLOW CFM	HEAT REJECTION BTU/HR	PUMP RPM	APPROX. PULLEY O.D. INCHES
R-10D	125	1½	11.0	660	3360	570	5.55
R-10D	175	1½	10.5	625	3360	542	5.25
R-10D	125	2	14.8	875	4480	760	7.35
R-10D	175	2	14.1	835	4480	725	7.0
R-15B	125	3	14.5	565	6700	490	4.75
R-15B	175	3	12.8	505	6700	440	4.31
R-15B	125	5	21.9	868	12,000	750	7.35
R-15B	175	5	20.7	820	12,000	710	6.75
R-15B	175	7½	30.2	1195	16,800	1035	9.75

All data is based on 1725 RPM electric motors as a power source.

Flywheel Rotation; Clockwise When *Viewed From Front - Flywheel to Rear*

Min. RPM 400
Max. RPM 1050

SPECIFICATIONS

MODEL	BORE & STROKE *INCHES*	NO. CYLS.	OIL CAPY.	WT. (LBS)	MAX. PRES.	CU FT./REV.
R-10D	4-5/8 & 2½ x 2	2	2 QT.	107	175 PSIG	.01942*
R-15B	4-5/8 & 2½ x 3	2	2 QT.	109	175 PSIG	.02914

*Clearance Volume Modified to Effective .014 Cu. Ft./Rev.

SPECIFICATIONS

MODEL	BORE & STROKE INCHES	NO. CYLS.	OIL CAPY.	WT. (LBS)	MAX. PRES.	CU FT./REV.
R-10D	4-5/8 & 2½ x 2	2	2 QT.	107	175 PSIG	.01942*
R-15B	4-5/8 & 2½ x 3	2	2 QT.	109	175 PSIG	.02914

*Clearance Volume Modified to Effective .014 Cu. Ft./Rev.

ELECTRIC WIRING (BASED ON 1993 NEC)

Wire Size (Rubber Covered) AWG NO.
Copper Conductor -- 75°C Temp Rating -- 30°C Ambient

MOTOR HP	3 PHASE				1 PHASE		
	200/208V	230V	460V	575V	115V	208V	230V
1½	14	14	14	14	10	14	14
2	14	14	14	14	8	12	12
3	14	14	14	14	8	10	10
5	10 (8)	12 (8)	14 (12)	14	-	8 (6)	8 (6)
7½	8 (6)	10 (6)	14 (10)	14 (10)	-	-	6 (4)

Values in ( ) for Duplex Unit w/one incoming power line to both motors.

PIPE SIZES FOR COMPRESSED AIR LINES - R-10D & R-15B

(Based on Clean, Smooth Schedule 40 Pipe)

	LENGTH OF PIPE LINES IN FEET							
	25	50	75	100	150	200	250	300
R-10D	¾	¾	¾	¾	¾	¾	¾	¾
R-15B	¾ (1)	¾ (1)	¾ (1)	¾ (1)	1 (1¼)	1 (1¼)	1 (1¼)	1 (1¼)

Values in ( ) for Duplex Unit.

⚠WARNING

Never use plastic pipe or improperly rated metal pipe. Improper piping materials can burst and cause injury or property damage.

INSTALLATION

1. Permanently installed **compressors must be located in a clean, well ventilated dry room so compressor receives adequate supply of fresh, clean, cool and dry air.** It is recommended that a compressor, used for painting, be located in a separate room from that area wherein body sanding and painting is done. Abrasive particles or paint, found to have clogged the air intake filters and intake valves, shall automatically void warranty.

2. Compressors should never be located so close to a wall or other obstruction that flow of air through the fan bladed flywheel, which cools the compressor, is impeded. **Permanently mounted units should have flywheel at least 12" from wall.**

3. Place stationary compressors on firm level ground or flooring. **Permanent installations require bolting to floor.** Bolt holes in tank or base feet are provided. Before bolting or lagging down, **shim compressor level. Avoid putting a stress on a tank foot by pulling it down to floor.** This will only result in abnormal vibration, and possible cracking of Air Receiver. It is recommended that optional vibro-isolator pads be installed on unit. **Tanks bolted directly to a concrete floor without padding will not be warranted against cracking.** For 5 year warranty consideration on tank, see instructions on Champion Warranty Sheet.

4. If installing a bare pump, make certain the system has adequate pressure limiting controls. Controls could be a pressure switch for start/stop operation or a pilot valve for continuous operation. If a pilot valve is used, the compressor must be equipped with head unloaders.

⚠DANGER

Do not install isolating valves between compressor outlet and air receiver. This will cause excessive pressure if valve is closed, and cause injury and equipment damage.

⚠WARNING

Always use an air pressure regulating device at the point of use. Failure to do so can result in injury or equipment damage.

⚠CAUTION

- **Do not install in an area where ambient temperature is below 32 degrees F or above 100 degrees F.**
- **Do not install unit in an area where air is dirty and/or chemical laden.**
- **Unit is not to be installed outdoors.**

ELECTRICAL POWER SUPPLY

It is essential that the power supply and the supply wiring are adequately sized and that the voltage correspond to the unit specifications.

All wiring should be performed by a licensed electrician or electrical contractor. Wiring must meet applicable codes for area of installation.

Recommended electrical wiring specifications are listed in "Specifications" section.

If ordered with a mounted starter, compressor unit is pre-wired at factory. It is necessary only to bring lines from properly sized disconnect switch to magnetic starter mounted on compressor, and attach to terminals as indicated on schematic diagram located inside cover of control. **Be sure that power circuit and voltage correspond with the specifications.**

⚠CAUTION

Wiring must be such that when viewing compressor from opposite shaft end, rotation of shaft is clockwise as shown by arrow on guard. Wrong direction rotation for any length of time will result in damage to compressor.

AIR LINE PIPING

Connection to air system should be of the same size, or larger, than discharge pipe out of unit. See recommended piping sizes listed in "Specifications" section. A union connection to the unit and water drop leg is recommended.

AIR LINE PIPING (CONT'D.)

Install a flexible connector between the discharge of the unit and the plant air piping. Plant air piping should be periodically inspected for leaks using a soap and water solution for detection on all pipe joints. Air leaks waste energy and are expensive.

PREPARATION FOR INITIAL START-UP AND OPERATION

1. Pull main disconnect switch to unit and tag out to assure that no power is coming into the unit. Connect power leads to starter.

Do not attempt to operate compressor on voltage other than that specified on order or on compressor motor.

2. Check compressor oil level. Add oil as required. See section on "Oil Specifications".

3. Inspect unit for any visible signs of damage that would have occurred in shipment or during installation.

4. Activate main disconnect switch.

5. "Jog" motor and check for proper rotation by direction of arrow. If rotation is wrong, reverse input connections on the magnetic starter.

6. Close receiver outlet hand valve and start unit.

7. With receiver hand valve closed, let machine pump up to operating pressure. At this stage the automatic controls will take over. Check for proper cycling operation.

8. Check for proper operation of any options, e.g. LOSC or head unloaders with pilot valve. Refer to individual option instruction sheet.

9. When the initial run period has shown no operating problems, shut unit down and recheck oil level.

10. Open receiver hand valve. The air compressor unit is now ready for use.

GUIDE TO MAINTENANCE

To obtain reliable and satisfactory service, this unit requires a consistent preventive maintenance schedule. Maintenance schedule pages are included in the back of this manual to aid in keeping the proper records.

Before performing any maintenance function, switch main disconnect switch to "off" position to assure no power is entering unit. "Lock out" or "tag out" all sources of power. Be sure all air pressure in unit is relieved. Failure to do this may result in injury or equipment damage.

DAILY MAINTENANCE

1. **Check oil level of both compressor and engine if so equipped.** Add quality lubricating oil as required. See Section on "Oil Specifications".

2. **Drain moisture** from tank by opening tank drain cock located in bottom of tank. Do not open drain valve if tank pressure exceeds 25 PSIG.

3. **Turn off compressor at the end of each day's operation.** Turn off power supply at wall switch.

WEEKLY MAINTENANCE

1. **Clean dust and foreign matter** from cylinder head, motor, fan blade, air lines, intercooler and tank.

2. **Remove and clean intake air filters.**

Do not exceed 15 PSIG nozzle pressure when cleaning element parts with compressed air. Do not direct compressed air against human skin. Serious injury could result. Never wash elements in fuel oil, gasoline or flammable solvent.

3. **Check V-belts for tightness.** The V-belts must be tight enough to transmit the necessary power to the compressor. Adjust the V-belts as follows:

Remove bolts and guard to access compressor drive.

Loosen mounting hardware which secures motor to base. Slide motor within slots of baseplate to desired position.

Apply pressure with finger to one belt at midpoint span. Tension is correct if top of belt aligns with bottom of adjacent belt. Make further adjustments if necessary.

Check the alignment of pulleys. Adjust if necessary.

Tighten mounting hardware to secure motor on base.

Re-install guard and secure with bolts.

Never operate unit without belt guard in place. Removal will expose rotating parts which can cause injury or equipment damage.

EVERY 90 DAYS OR 500 HOURS MAINTENANCE

1. **Change crankcase oil.** Use type and grade oil as specified in the section on "Compressor Oil Specifications".

2. **Check entire system** for air leakage around fittings, connections, and gaskets, using soap solution and brush.

3. **Tighten nuts and capscrews as required.**

4. **Check and clean compressor valves,** replace springs, discs and seats when worn or damaged.

Valves must be replaced in original position. Valve gaskets should be replaced each time valves are serviced.

5. **Pull ring on all pressure relief valves** to assure proper operation.

GENERAL MAINTENANCE NOTES

PRESSURE RELIEF VALVE: The pressure relief valve is an automatic pop valve. Each valve is properly adjusted for the maximum pressure permitted by tank specifications and working pressure of the unit on which it is installed. If it should pop, it will be necessary to drain all the air out of the tank in order to reseat properly. Do not readjust.

TANK DRAIN VALVE: Drain valve is located at bottom of tank. Open drain valve daily to drain condensation. Do not open drain valve if tank pressure exceeds 25 PSIG. The automatic tank drain equipped compressor requires draining manually once a week.

PRESSURE SWITCH: The pressure switch is automatic and will start compressor at low pressure and stop when the maximum pressure is reached. It is adjusted to start and stop compressor at the proper pressure for the unit on which it is installed. Do not readjust.

BELTS: Drive belts must be kept tight enough to prevent slipping. If belts slip or squeak, see V-belt maintenance in preceding section.

If belts are too tight, overload will be put on motor and motor bearings.

COMPRESSOR VALVES: If compressor fails to pump air or seems slow in filling up tank, disconnect unit from power source and remove valves and clean thoroughly, using compressed air and a soft wire brush. After cleaning exceptional care must be taken that all parts are replaced in exactly the same position and all joints must be tight or the compressor will not function properly. When all valves are replaced and connections tight, close hand valve at tank outlet for final test. Valve gaskets should be replaced each time valves are removed from pump.

CENTRIFUGAL UNLOADER AND UNLOADER PRESSURE RELEASE VALVE: The centrifugal unloader is operated by two governor weights. It is totally enclosed and lubricated from the crankcase of the compressor. When compressor starts the governor weights automatically open compressing the main spring, allowing the unloader pressure. release valve to close. When the compressor stops, the main spring returns the governor weights to normal position opening the

unloader pressure release valve and unloading the compressor. This prevents overloading the motor when starting. If air continues to escape through the governor or unloader pressure release valve while operating, this is an indication that the unloader pressure release valve is not closing tightly and may be held open by foreign substance which has lodged on the seat. In order to correct this, remove the governor release valve cap, giving access to unloader pressure release valve spring and ball. Clean thoroughly and return parts in the same order in which they were removed. Loose drive belts can also cause unloader to leak by preventing the compressor from reaching proper speed. (See "BELTS" above.)

CHECK VALVE: *The check valve closes when the* compressor stops operating, preventing air from flowing out of the tank through the pressure release valve. After the compressor stops operating, if air continues to escape through the *release valve, it is an indication that the check* valve is leaking. This can be corrected by removing check valve and cleaning disc and seat. If check valve is worn badly, replace same.

⚠WARNING

Before removing check valve be sure all air pressure in unit is relieved and power is disconnected. Failure to do so may result in injury or equipment damage.

THE INTERSTAGE PRESSURE RELIEF VALVE is provided to protect against interstage over pressure and is factory set for maximum pressure of 75 PSIG.

DO NOT RESET

If the pressure relief valve pops, it indicates trouble. Shut down the unit immediately and determine and correct the malfunction. Inspect the head valves. Serious damage can result if not corrected and can lead to complete destruction of the unit. Tampering with the interstage pressure relief valve, or plugging the opening destroys the protection provided and voids all warranty.

LUBRICATION OF COMPRESSOR: *Fill crankcase to* proper level as indicated by oil sight gauge. Keep crankcase filled as required by usage.

COMPRESSOR OIL SPECIFICATIONS

1. **AIR COMPRESSOR**

Compressors shipped on units are factory filled with ISO 100 reciprocating compressor oil. Compressors shipped as basic (pump only) do not have any oil in the crankcase. Be sure to add oil to these pumps prior to start-up.

It is recommended that this compressor be maintained using the ISO 100 recip oil for ambient *temperatures above 32 degrees F. This is a 30* weight, non-detergent industrial oil with rust and oxidation inhibitors specially formulated for reciprocating compressors. Contact your distributor for information and purchase of this oil. *For temperatures below 32 degrees F, use an ISO* 68 compressor oil. A separate list of acceptable oils can be obtained from the distributor's Service Department.

NOTES:

1. Do not mix oil types, weights, or brands. Consult factory for the use of synthetic lubricants.
2. For the first 100 hours of compressor operation, a careful and regular check of the oil level should be made. Maintain oil level at the full line.

2. **ELECTRIC MOTORS**

Electric motors are equipped with sealed-for-life bearings and require no additional lubrication.

3. **GAS OR DIESEL ENGINES**

Fill engine crankcase, if so equipped, using the proper spec of engine oil. Contact your distributor for further information and purchase of this oil. As an alternative, consult the engine manual for the engine manufacturer's recommendations.

TROUBLE SHOOTING CHART FOR COMPRESSOR

WARNING

Always disconnect unit from power supply and relieve all pressure from air tank before performing any maintenance. "Lock Out" or "Tag Out" all power sources. Failure to do so may result in equipment damage or injury.

Never operate unit without belt guard in place.

Never use gasoline or flammable solvent on or around compressor unit. Explosion may result.

SERVICE PROBLEM

A	Motor will not Start
B	Motor is Noisy or Overheats
C	Motor Stops
D	Compressor Runs Hot
E	Compressor Pumps Too Slowly
F	Compressor Won't Shut Off
G	Noisy Check Valve
H	Excessive Belt Wear
I	Abnormal Pressure Fluctuation
J	Air Escapes From Unloader Muffler When Running
K	Air Escapes From Unloader Muffler When Stopped
L	Interstage Pressure Relief Valve Pops Off Continuously
M	Compressor Cycles (runs) too Often
N	Starter Kicks Out

	POSSIBLE CAUSE OF PROBLEM	N	M	L	K	J	I	H	G	F	E	D	C	B	A	
1	Main Switch and Fuses												▒		▒	1
2	Magnetic Starter Heater Coils												▒		▒	2
3	Magnetic Starter												▒		▒	3
4	Points in Pressure Switch									▒			▒		▒	4
5	Diaphragm in Pressure Switch		▒							▒			▒		▒	5
6	Low Voltage	▒											▒	▒		6
7	Lubricate Motor													▒		7
8	Excess Water in Air Receiver		▒													8
9	Dirty Aftercooler; Cylinder and Intercooler											▒				9
10	"V" Belts Improperly Tensioned							▒			▒	▒		▒		10
11	Improper Flywheel Rotation											▒				11
12	Compressor Pump Valves			▒							▒	▒		▒		12
13	Pipe Line Leaks		▒				▒			▒	▒					13
14	Adjustment of Pilot Valve - This is for optional parts.		▒				▒			▒						14
15	Pilot Valve Leaks - This is for optional parts.		▒				▒			▒	▒					15
16	Centrifugal Unloader Valve is Leaking		▒			▒	▒			▒	▒					16
17	Check Valve is Leaking		▒		▒											17
18	Check Valve is Worn								▒							18
19	Check Valve or Line to Tank is Plugged			▒			▒									19
20	Misaligned Belts							▒								20
21	Dirty Intake Filter										▒	▒				21
22	Low Crankcase Oil Level											▒				22
	FOR EXPLANATION SEE NEXT PAGE	N	M	L	K	J	I	H	G	F	E	D	C	B	A	

EXPLANATION OF TROUBLE SHOOTING GUIDE

1/2. Check all fuses and switches on lines to motor to be sure it is receiving power. Check for loose or faulty wires.

3. A magnetic starter embodies a reset button which may be used to place the motor back in service after some unusual power conditions.

4/5. A pressure switch uses a diaphragm to open and close a set of points. Points may become pitted or dirty through use. Clean by "touching up" with sandpaper or replace. See instructions in pressure switch cover.

⚠WARNING **Disconnect unit from power source before checking pressure switch.**

6. Low voltage is prime cause of motor trouble. Ask you power company to test for low voltage.

7. Most electric motors are of the sealed bearing type. Check motor manufacturer's recommendation.

8. Water in the form of vapor is compressed along with incoming air and condenses in tank. Tank must be drained daily so that full storage capacity of tank may be used. To drain, relieve tank pressure, open pet cock at bottom of horizontal or vertical tank. If compressor is equipped with automatic tank drain, drain manually once a week.

⚠WARNING **Do not open drain valve if tank pressure exceeds 25 PSIG.**

9. The fins on the cylinder and tubing should be free of dirt which acts as an insulation. This is easily done by periodically blowing them clean or through the use of a wire brush.

10. *"V: belts must be tight enough to transmit the necessary power to the compressor. If too tight they will* overload the motor. If, by pushing down on one belt, its top lines up with the bottom of the belt next to it, the tension is correct. Should it be necessary to change the tension, slide the engine or motor in slots provided in tank baseplate to desired position.

⚠WARNING **Disconnect unit from power source before checking or adjusting belts. Always reinstall belt guard after adjusting belts.**

11. The fan blade flywheel must rotate in the direction shown by the arrows.

12. Compressor valves may become fouled by carbon or other foreign matter. To service, remove manifold and extract valve. Remove screw in center of valve and clean all parts. Seat and disc may be lapped in on fine sandpaper if badly carboned. If a smooth finish cannot be obtained, replace with new parts. Reassemble and install, taking caution that all parts are returned to their original position with screw head up.

13. *All air lines from compressor to tank and from tank to air operated devices should be tight. A soap solution* will show bubbles when put on a leaky joint. At 175 PSIG a 1/32" hole will allow almost 3 cubic feet per minute of air to escape.

14. Pilot Valve adjustment is found on page 20.

15. Check pilot valve for loose connections.

16. The centrifugal unloader valve may become fouled by foreign matter. To clean, unscrew hex cap on end of unloader, remove spring and ball, to remove ball, you may need to "rock" flywheel. Clean or replace if necessary.

EXPLANATION OF TROUBLE SHOOTING GUIDE (CONT'D.)

17/18. Before servicing check valve, be sure pressure in tank is **ZERO**. Replace check valve.

19. Badly worn compressors which are pumping oil may deposit carbon within after-cooler tube and check valve, restricting flow of air and possibly plugging these parts completely. These parts should be cleaned or replaced.

⚠WARNING **Disconnect unit from power source and relieve tank pressure before servicing these components.**

20. Motor pulley and flywheel must be in line to prevent wear on sides of belts. If misaligned, disconnect unit from power source and move pulley in or out by loosening set screw on key and tapping pulley in appropriate direction.

⚠WARNING **Disconnect power source before adjusting pulley.**

21. Intake filter should be cleaned periodically to allow unrestricted flow of entering air. To service filter, remove wing nut, metal cover and filter element. Element may be blown clean with an air nozzle if moderately dusty. Heavily fouled elements should be replaced. **Never** clean element with fuel oil, gasoline or flammable solvent.

22. Cool running and long life can be assured by careful attention to crankcase oil. Check frequently and change as indicated on compressor data sheet.

PARTS LIST

MAJOR COMPRESSOR COMPONENTS

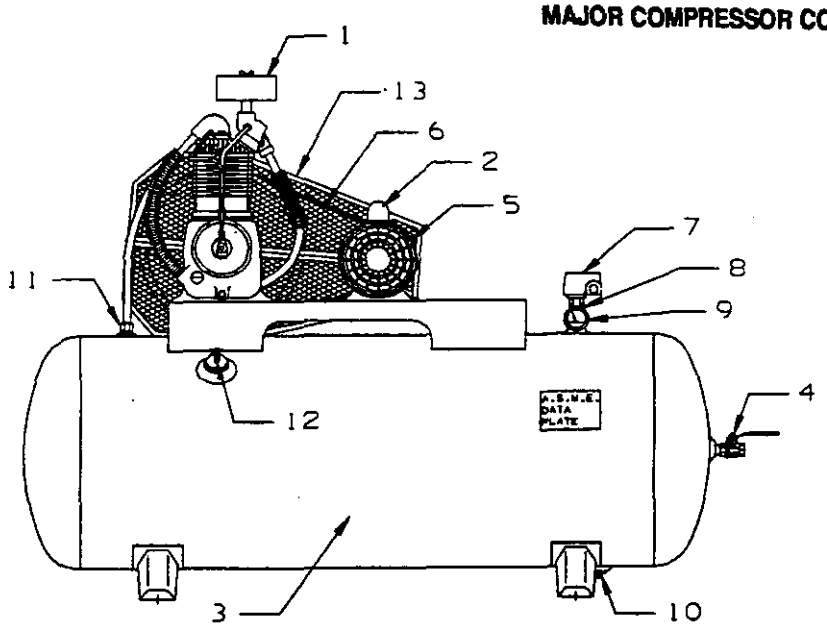

Parts common to all models except basemounted:

7) Pressure Switch - M1227
8) Presure Relief Valve - M2843
9) Pressure Gauge - M519C
10) Drain Cock - M521
11) Check Valve - P05822A
12) Tank Drain - Z-1542 - Horizontal Tank
- Z-1541 - Vertical Tank
13) Belt Guard - Z-307
(All units except those equipped with air-cooled aftercoolers)

Additional parts for Duplex Unit (Not Shown)

•• Alternator Class 47, 208V, 3 Phase; P10043A
230V, 3 Phase; P05814A
460V, 3 Phase; P05815A

• Magnetic Starter (2), Specify Voltage & Phase

PARTS LIST CONT'D

HORIZONTAL TANK MODEL ILLUSTRATED (See Preceding Page)

Model Number	1 Pump	2 Elec. Motor	3 Air Tank	4 Hand Valve	5 Motor Pulley (Not Shown)		6 V-Belts
					1 Phase	3 Phase	
HR1-3	R-10D	1½ HP	P04390D	M2685	M5207C	M5207C	4L-650
HR1-6	R-10D	1½ HP	P01136D	M2685	M5207C	M5207C	4L-650
HR1-8	R-10D	1½ HP	P01164D	M2685	M5207C	M5207C	4L-650
HR2-3	R-10D	2 HP	P04390D	M2685	M7009D	M1424	5L-680
HR2-6	R-10D	2 HP	P01136D	M2685	M7009D	M1424	5L-680
HR2-8	R-10D	2 HP	P01164D	M2685	M7009D	M1424	5L-680
HR3-6	R-15B	3 HP	P01136D	M2685	M4309D	M4309D	5L-650
HR3-8	R-15B	3 HP	P01164D	M2685	M4309D	M4309D	5L-650
HR3-12	R-15B	3 HP	P01596D	M2685	M4309D	M4309D	5L-650
HR5-6	R-15B	5 HP	P01136D	M2685	M7009D	M7009D	5L-680
HR5-8	R-15B	5 HP	P01164D	M2685	M7009D	M7009D	5L-680
HR5-12	R-15B	5 HP	P01596D	M2685	M7009D	M7009D	5L-680
HR5D-12	R-15B (2)	5 HP (2)	P02080D	M2685	M7009D	M7009D	5L-680 (4)
VR1-6	R-10D	1½ HP	P01161D	M2685	M5207C	M5207C	4L-650
VR1-8	R-10D	1½ HP	P01217D	M2685	M5207C	M5207C	4L-650
VR2-6	R-10D	2 HP	P01161D	M2685	M7009D	M1424	5L-680
VR2-8	R-10D	2 HP	P01217D	M2685	M7009D	M1424	5L-680
VR3-6	R-15B	3 HP	P01161D	M2685	M4309D	M4309D	5L-650
VR3-8	R-15B	3 HP	P01217D	M2685	M4309D	M4309D	5L-650
VR3-12	R-15B	3 HP	P02212D	M2685	M4309D	M4309D	5L-650
VR5-6	R-15B	5 HP	P01161D	M2685	M7009D	M7009D	5L-680
VR5-8	R-15B	5 HP	P01217D	M2685	M7009D	M7009D	5L-680
VR5-12	R-15B	5 HP	P02212D	M2685	M7009D	M7009D	5L-680
BR-1	R-10D	1½ HP	*	M2685	M5207C	M5207C	4L-650
BR-2	R-10D	2 HP	*	M2685	M7009D	M1424	5L-680
BR-3	R-15B	3 HP	*	M2685	M4309D	M4309D	5L-650
BR-5	R-15B	5 HP	*	M2685	M7009D	M7009D	5L-680
HR7F-8	R-15B	7½ HP	PO1164D	M2685	P07981A - Pulley P08135A - Bushing	P07981A - Pulley P08135A - Bushing	B-69
HR7F-12	R-15B	7½ HP	P01596D	M2685	P07981A - Pulley P08135A - Bushing	P07981A - Pulley P08135A - Bushing	B-69
HR7DF-25	R-15B(2)	7½ HP (2)	P05763D	M2685	P07981A - Pulley P08135A - Bushing	P07981A - Pulley P08135A - Bushing	B-69 (4)
VR7F-8	R-15B	7½ HP	P01217D	M2685	P07981A - Pulley P08135A - Bushing	P07981A - Pulley P08135A - Bushing	B-69
VR7F-12	R-15B	7½ HP	P02212D	M2685	P07981A - Pulley P08135A - Bushing	P07981A - Pulley P08135A - Bushing	B-69
BRF-7	R-15B	7½ HP	*	M2685	P07981A - Pulley P08135A - Bushing	P07981A - Pulley P08135A - Bushing	B-69

* "BR" units are not supplied with tanks. Baseplate P09195C is common to all models.

R-10D AND R-15B
FLYWHEEL, CYLINDER, CRANKCASE & UNLOADER ASSEMBLY

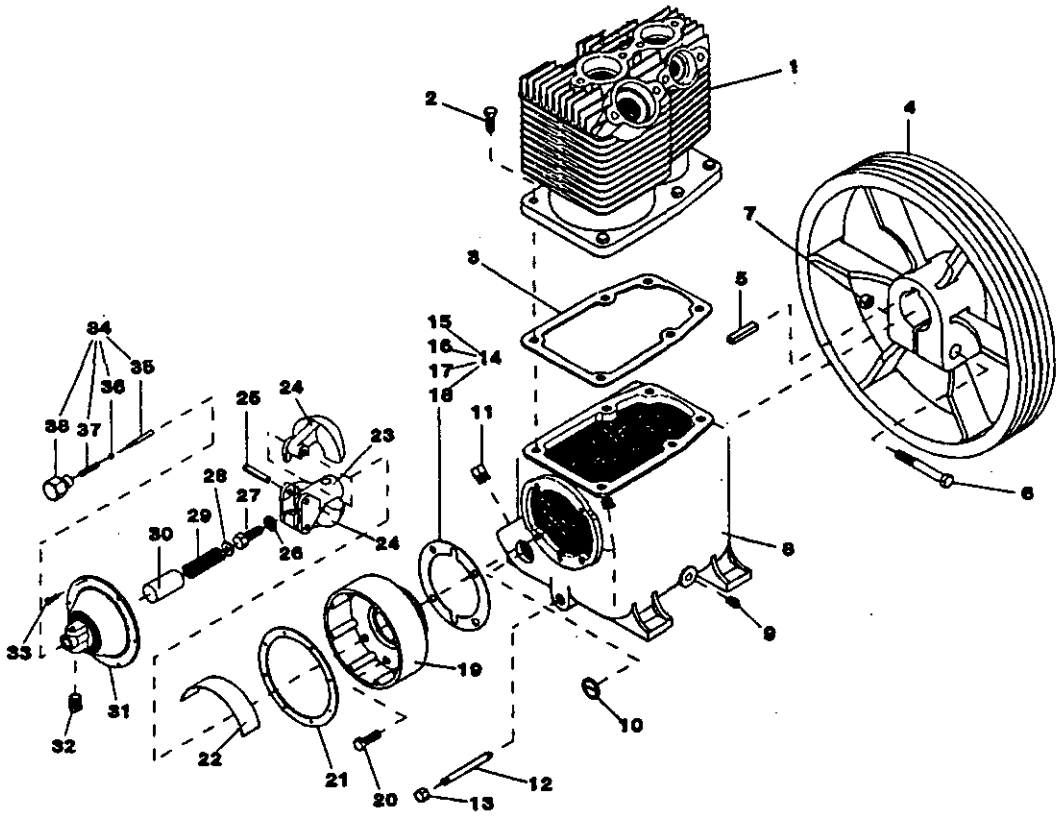

ITEM	PART NO.	NAME	REQ.	ITEM	PART NO.	NAME	REQ.
1	NR146C	Cylinder	1	19	NR80A	Gov. Housing	1
2	M2345	Screw, Hex Head Cap	6	20	M472	Screw, Hex Head Cap	4
3	NR29A	Gasket, Cylinder Flange	1	21	SE1489	Gasket, Gov Housing Cover	1
4	NR7A	Flywheel	1	22	NR104	Plate, Gov Baffle	1
5	U8	Key	1	23	SE583B	Spindle, Gov. Wt.	1
6	M1915	Screw, Hex Head Cap	1	24	SE582	Gov. Wt.	2
7	M465	Nut, Hex	1	25	SE 592A	Pin. Gov. Wt.	2
8	M1820	Crankcase	1	26	M466	Washer, Spring Lock	1
9	M2326	Pipe Plug	1	27	RE1494	Screw, Hex Head Cap	1
10	RE714	Gauge, Oil Level	1	28	M912A	Washer, Flat	1
11	M459	Pipe Plug (Oil Fill)	1	29	SE590	Spring, Gov. Main	1
12	M492	Pipe, Oil Drain	1	30	SE587	Sleeve, Spring	1
13	M461	Cap, Oil Drain	1	31	RE10100A	Cover, Gov. Housing	1
14	Z130	GASKET SET, GOV. HOUSING	1	32	Z4593	MUFFLER ASSY, UNLOADER	1
15	SE1430	Gasket, Gov. Housing (.030" Thick)	1	33	M2400	Screw, Hex Head Machine	8
				34	Z12414A	RELEASE VALVE ASSY. KIT	1
16	SE1430A	Gasket, Gov. Housing (.005" Thick)	1	35	SE586B	Plunger, Release Valve	1
				36	P07841A	Ball Release Valve	1
17	SE1430B	Gasket, Gov. Housing (.010" Thick)	1	37	SE591	Spring, Release Valve	1
				38	NR101	Body, Release Valve	1
18	SE1430C	Gasket, Gov. Housing (.015" Thick)	1		Z764	GASKET SET, COMPLETE PUMP	1

R-10D AND R-15B
CRANKSHAFT, PISTONS, CONNECTING ROD ASS'YS.

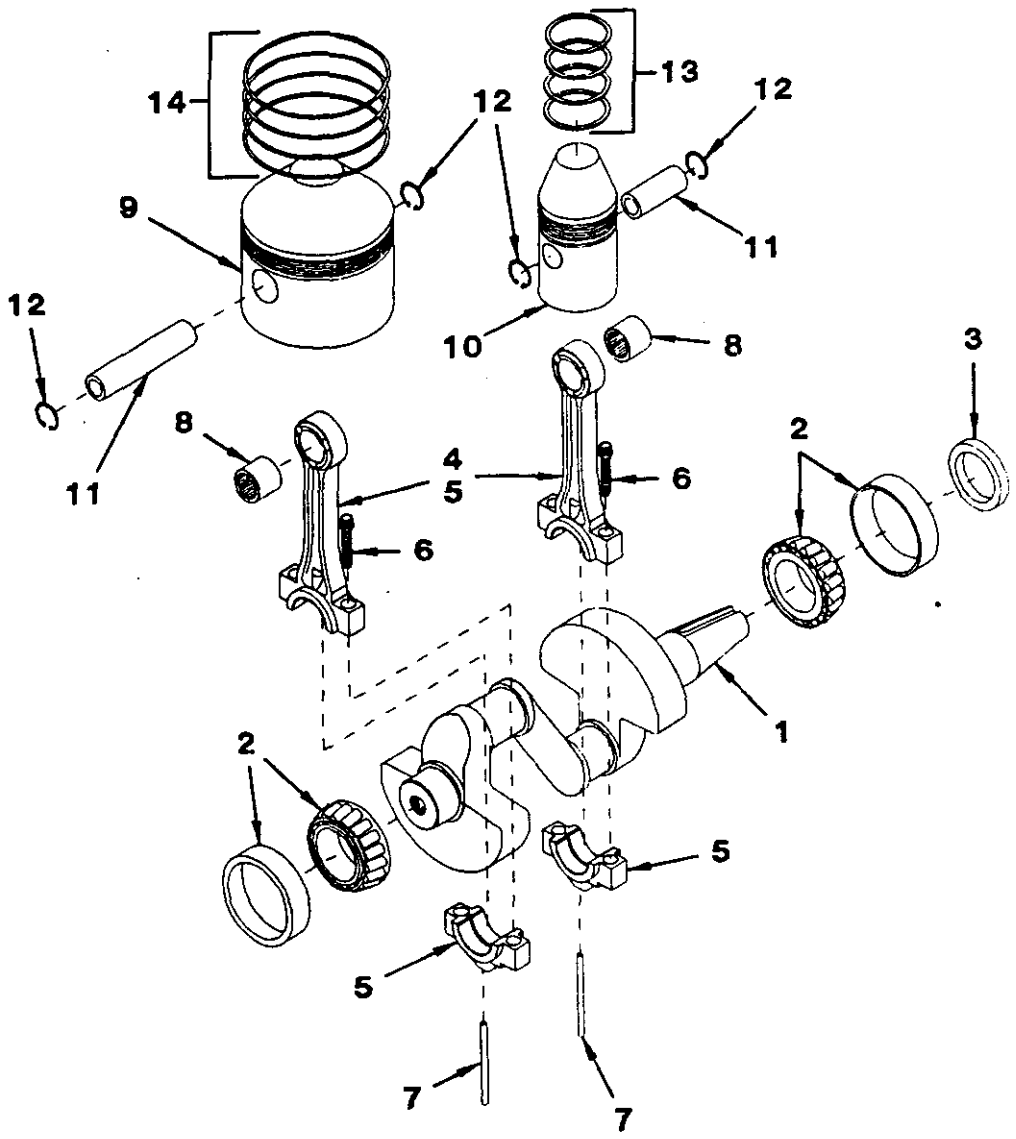

ITEM	PART NO.	NAME	REQ.	ITEM	PART NO.	NAME	REQ.
1	R105	Crankshaft (R-10D only)	1	8	R1037	Bearing, Piston Pin	2
	R155	*Crankshaft (R-15B only)*	1	9	ZR154	*Piston, Low Pressure w/Pin*	1
2	ZNR16	ASSY; Main Bearing	2	10	ZP2709C	Piston, High Pressure w/Pin	1
3	OSN4	Oil Seal	1	11	R1021	Pin, Piston	2
4	Z750	KIT, CONNECTING ROD ASSY.		12	R10102	Ring, Piston Pin Retaining	4
		(Items 5,6,7 & 8)		13	Z189B	RING SET, HIGH PRESSURE PISTON	1
		R-15B, Low Pressure & High Pressure	2	14	Z179C	RING SET, LOW PRESSURE PISTON	1
		R-10D, Low Pressure	1		Z3607	KIT, HIGH PRESSURE PISTON ASSY.	1
	Z752	*KIT, CONNECTING ROD ASSY.*				*(Items 10, 11, 12 & 13)*	
		(Items 5,6,7 & 8)			Z3608	KIT, LOW PRESSURE PISTON ASSY.	1
		R-10D, High Pressure (side only)	1			(Items 9, 11, 12 & 14)	
5	NSS	Connecting Rod			ZR15	KIT, COMPLETE RING SET	1
6	M1583	Bolt, Connecting Rod	4			(Items 13 & 14)	
7	R1024	Dipper, Oil (R-10D only)	2				
	R1524	Dipper, Oil (R-15B only)	2				

R-10D AND R15B
FILTER, VALVES & MANIFOLD ASS'YS.

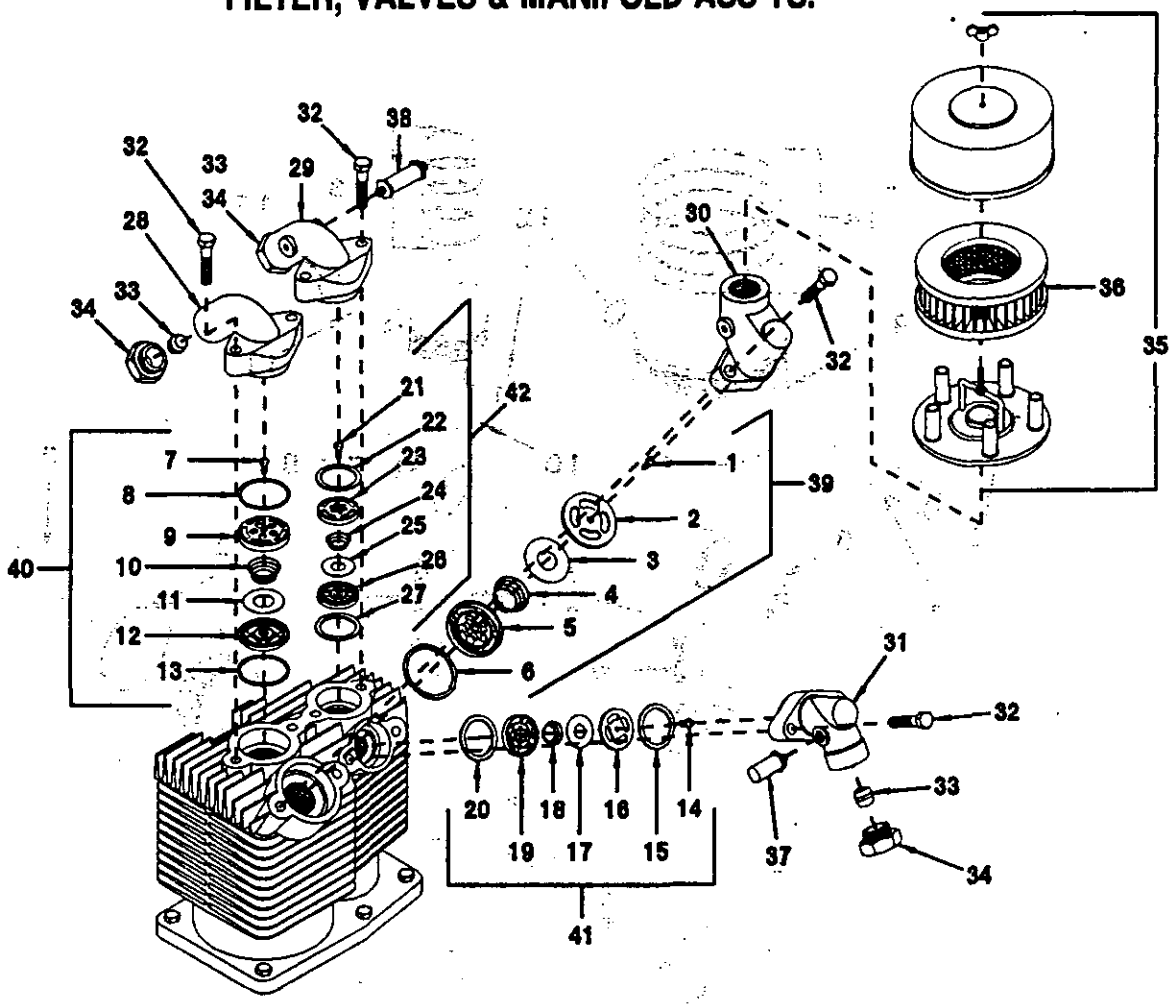

ITEM	PART NO.	NAME	REQ.	ITEM	PART NO.	NAME	REQ.
1	P04544A	Screw, Hex Head Machine	1	23	M2100	Cage, Exhaust Valve	1
2	RE1471A	Seat, Intake Valve	1	24	RE760	Spring, Valve	1
3	RE1470	Disc, Valve	1	25	RE1062	Disc, Valve	1
4	RE1458	Spring, Valve	1	26	RE757A	Seat, Exhaust Valve	1
5	M2098	Cage, Intake Valve	1	27	P04136	Gasket, Valve	1
6	P04134A	Gasket, Valve	1	28	RE102E	Manifold, LP Exhaust	1
7	M3220	Screw, Hex Head Machine	1	29	NR2B	Manifold, HP Exhaust	1
8	P04135A	Gasket, Valve	1	30	P09669C	Manifold, LP Intake	1
9	M2099	Cage, Exhaust Valve	1	31	P09173B	Manifold, HP Intake	1
10	RE1059	Spring, Exhaust Valve	1	32	P05005A	Screw, Hex Head Cap (All Manifolds)	8
11	RE1061	Disc, Valve	1	33	SE542	Ferrule	3
12	M2097	Seat, Exhaust Valve	1	34	SE541	Nut, compression	3
13	P04135A	Gasket, Valve	1	35	P04999A	Intake Filter	1
14	M3220	Screw, Hex Head Machine	1	36	P05050A	Filter Element	1
15	P09191A	Gasket, Valve	1	37	P03592A	Interstage Pressure Relief Valve	1
16	P09172B	Seat, Intake Valve	1	38	P09704A	Pressure Relief Valve	1
17	RE1062	Disc, Valve	1	39	Z812	VALVE ASSY, LP INTAKE*	1
18	RE760	Spring, Valve	1	40	Z813	VALVE ASSY, LP EXHAUST	1
19	M2101	Cage, Intake Valve	1	41	Z5117	VALVE ASSY, HP INTAKE*	1
20	P09170A	Gasket, Valve	1	42	Z115	VALVE ASSY, HP EXHAUST	1
21	M3220	Screw, Hex Head Machine	1		Z5155	COMPLETE VALVE SET w/GASKETS*	
22	P04137A	Gasket, Valve	1		Z5156	COMPLETE VALVE GASKET SET	

* See page 20, Unloader Kit, for intake valves for head unloader pumps. Use Z6795 - Complete Valve Set for Head Unloader Pumps.

R-15B
INTERCOOLER & TUBING

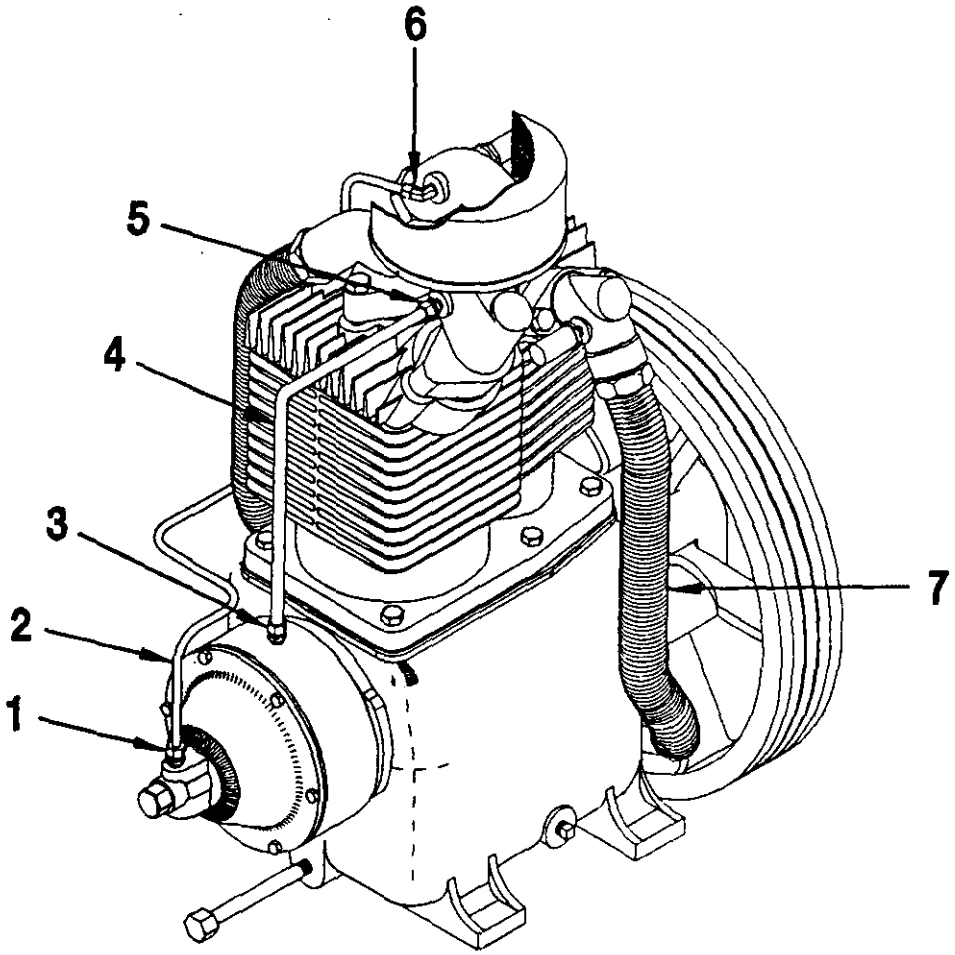

ITEM	PART NO.	NAME	REQ.
1	M2863	Compression Fitting	1
2	ZSB250A	Tube, Unloading w/Fittings	1
3	M2864	Compression Fitting	1
4	ZVB375	Breather Tube w/Fittings	1
5	M2864	Compression Fitting	1
6	M2868	Compression Fitting	1
7	ZRE412A	Intercooler w/Fittings	1

CONSTANT SPEED HEAD UNLOADER KIT Z-6314
For Air Compressor Pump Models R-10D and R-15B

NOTE: This is optional equipment and may not be included on your unit.

The purpose of constant speed unloading is to provide a means of stopping or starting the compression of air by the compressor without stopping or starting the electric motor or gasoline engine after each cycle.

To accomplish this, an air pilot valve is used to replace the pressure switch used for stop-start operation. The pilot valve senses storage tank pressure, and when the pressure is raised to a predetermined setting, this air is released to an intake valve hold-open mechanism. The compressor stops compressing air and runs free until the pilot valve senses that the pressure in the tank has dropped to the predetermined setting. At this time the air is released from the intake valve hold-open mechanism, and the compressor starts compressing air again.

The parts called out below replace or are substituted for those found in the regular parts list.

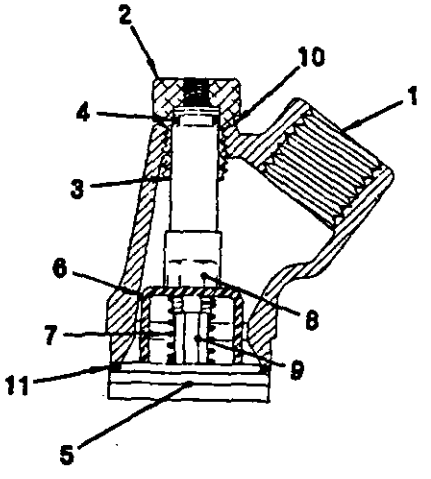

TYPICAL MANIFOLD ASSEMBLY FOR HEAD UNLOADERS

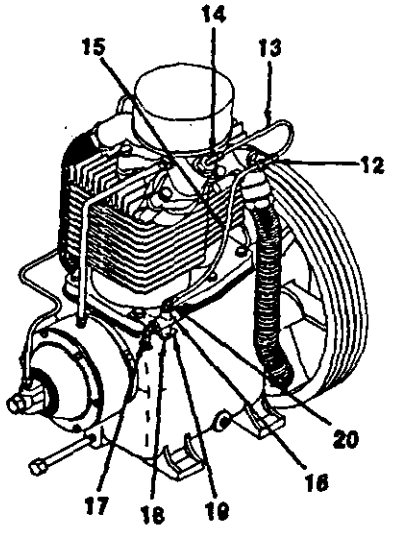

Z6314 - CAPTURED UNLOADER VALVE
R-10D, R-15B

REF. NO.	TOTAL REQ'D	PART NO.	LOW PRESSURE Z-6312 LP
1	1	P09670C	LP Intake Manifold
2	1	P02306B	Cylinder
3	1	P09923A	Unloader Piston
4	1	P02547A	O-Ring
5	1	Z4877	LP Valve Assembly (includes 6,7,8,9)
6	1	P09085A	Unloader Finger
7	1	P09084A	Unloader Spring
8	1	P09086A	Locknut
9	1	P09083A	Guide System
REF. NO.	**TOTAL REQ'D**	**PART NO.**	**HIGH PRESSURE Z-6313 HP**
1	1	P09174B	HP Intake Manifold
2	1	P02306B	Cylinder
3	1	P09923A	Unloader Piston
4	1	P02547A	O-Ring
5	1	Z6308	HP Valve Assembly (includes 6,7,8,9)
6	1	P09297A	Unloader Finger
7	1	P01882A	Unloader Spring
8	1	P09086A	Locknut
9	1	P09296A	Guide System
10	1	P00746A	Cylinder Gasket
11	1	P09171A	Valve Gasket
REF. NO.	**TOTAL REQ'D**	**PART NO.**	**HIGH & LOW PRESSURE**
12	1	M2879	Compression Fitting
13	1	M705	Manifold Tube
14	1	M206	Compression Fitting
15	1	M801	Actuating Tube
16	1	M2853	Pilot Valve
17	1	M2881	Compression Fitting
18	1	M2360	Screw, Hex Head Cap
19	1	M807	Mounting bracket
20	1	M2881	Compression Fitting
		Z6314	HEAD UNLOADER KIT

OPERATION AND ADJUSTMENT OF PILOT VALVES

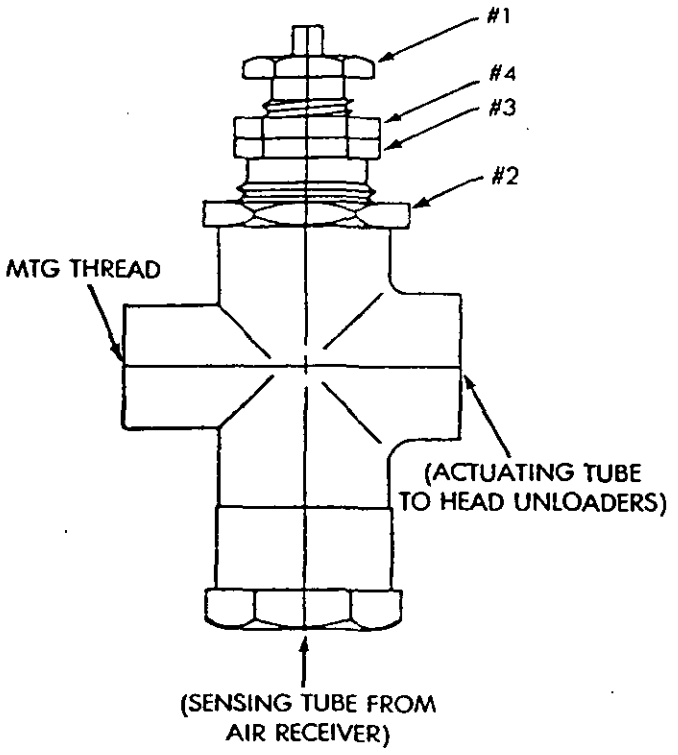

The Pilot Valve is designed to act as an automatic "on" and "off" air switch. When in the "on" position it allows air to flow from the tank through the valve to some device such as a compressor suction unloader, thus actuating it. In the "off" position this valve stops the flow of air through the valve and releases the pressure in the line to the device.

The Pilot Valve works as follows: Tank air pressure acts on the bottom of the valve. When pressure is great enough to overcome spring force holding valve down on lower seat, it lifts off seat and allows air to flow around valve and out through side opening in Pilot Valve. When valve lifts off lower seat it moves up and seats on upper seat where it is held by tank pressure. When pressure in tank and on valve drops, spring forces valve back down on lower seat. Air in line to device being actuated can then escape through upper seat and out vent hole. The pressure at which the Pilot Valve is "on" or "off" is controlled by the spring which has been installed at the factory. A small adjustment can be made in the field by changing the spring force by compressing the spring more or less with the adjusting screw provided on the Pilot Valve.

PILOT VALVES

ASSEMBLY PART NO.	PRESSURE RANGE, PSIG.
M2855	80 - 100
M2854	90 - 120
M2853	140 - 170

COMPRESSOR PILOT VALVE PRESSURE ADJUSTMENT

Proceed with the following instructions while compressor is running:

1. Loosen locknut (4) and back off several turns. Do not turn differential adjuster (3).
2. Check reading on the tank pressure gauge. Set the compressor maximum pressure at 170 psig. Turn threaded cap clockwise to increase pressure or counterclockwise to decrease pressure.
3. After pressure is set, tighten locknut (4). Be careful not to move the threaded cap (1).

COMPRESSOR PILOT VALVE DIFFERENTIAL PRESSURE ADJUSTMENT

Proceed with the following instructions while compressor is running:

1. Loosen locknut (2) and back off several turns.
2. Check reading on the tank pressure gauge. Set the pressure to 30 psig differential (unload at 170 psig, reload at 140 psig). Turn nut (3) clockwise to increase differential pressure or counterclockwise to decrease differential pressure.
3. After pressure is set, tighten locknut (2). Be careful not to move nut (3).

UNIT HAZARD DECAL LISTING

ITEM	DESCRIPTION	PART NO.
A	Retain Labels	P09879A
B	DANGER - Breathing Air	P09376B
C	DANGER - Drain Tank Daily	P09430B
D	DANGER - Valve Maintenance	P09750B
E	DANGER - High Voltage	P04934A
F	DANGER - Auto Start	P09384B
G	WARNING - Pressure/Safety Valve	P09752B
H	WARNING - Rotating Parts	P09373B
I	WARNING - Hot Surfaces	P09758A
J	WARNING - Tank Pressure	P04983A
K	CAUTION - Clean Filters	M1736
L	Unit Location	P04518A
M	Rotation Direction	M422
N	Pressure Setting: Master	P09388A
O	Pressure Setting: 140-175 psig	P04988A
P	Maintenance Instructions	P04993A
Q	*Dual Control Valve	P05381A
R	*Low Oil Safety Control	P02134A
S	*Automatic Tank Drain	M653
T	Model & Serial Number	P05179A
U	Service Information	P04995A

*For Optional Parts

UNIT HAZARD TAG LISTING

V	IMPORTANT - Electrical Specs	P05257A
W	DANGER - Valve Instructions	P09852A
X	WARNING - Read Owners Guide	P04996A

PUMP HAZARD DECAL & TAG LISTING

1	DECAL - Retain Labels	PO9879A
2	DECAL - DANGER- Adequate Filtering	PO8586A
3	DECAL - Rotation Direction	M442
4	DECAL - Service Filter	M1736
5	TAG - DANGER - Valve Instructions	PO9852A
6	TAG - WARNING - Read Owners Guide	PO4996A

UNIT HAZARD DECALS & TAGS

A

NOTICE

Read, understand, & retain all Labels and Owners Manuals before using this equipment. P09211A

B

⚠ DANGER

Air from this compressor must not be used for food processing or breathing without adequate filtering. Failure to comply will result in injury or death.

P09376B

C

⚠ DANGER

DRAIN THIS TANK DAILY! Failure to drain moisture will corrode tank material and lead to tank failure which will cause equipment damage, personal injury, or death.

P09430B

D

VALVE MAINTENANCE

Inspecting and cleaning compressor valves are a part of normal maintenance and should be accomplished at least every 90 days or 500 hours of operation, whichever occurs first. Valves should be replaced when worn or damaged. Valve gaskets should be replaced each time valves are serviced to insure proper seating. P09726B

⚠ DANGER

Valves must be replaced in original position. Failure to do this will result in equipment damage and personal injury or death. Do not disassemble valves.

E

⚠ DANGER

HIGH VOLTAGE

DISCONNECT POWER SOURCE BEFORE SERVICING.

PO4934A

F

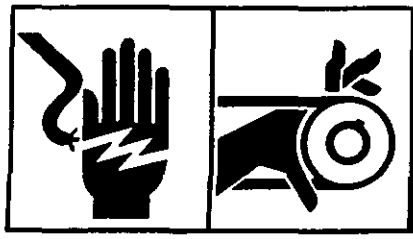

⚠ DANGER

This unit starts automatically. Disconnect from electrical source before performing repairs or maintenance. Failure to disconnect will result in personal injury and/or property damage.

P09364B

G

⚠ WARNING

- DO NOT ADJUST PRESSURE SWITCH, PILOT VALVE, OR SAFETY VALVES. Exceeding factory settings can cause equipment damage and personal injury.
- RELIEVE TANK PRESSURE BEFORE SERVICING. Failure to do so can result in personal injury.
- USE AN AIR PRESSURE REGULATOR with this unit when using a spray gun, paint tank, or other device requiring lower pressure air. Always use an air pressure measuring device at the point of use. Failure to comply can result in personal injury and equipment damage.

P09752B

H

⚠ WARNING

DO NOT REMOVE BELT GUARD

Removal will expose rotating parts which can cause severe personal injury and/or property damage.

P09373B

I

⚠ WARNING

Do not touch hot surfaces! Contact with these surfaces can cause personal injury.

P09758A

J

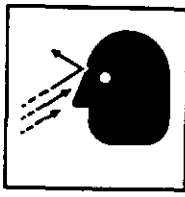

⚠ WARNING

Relieve tank pressure before servicing. Failure to do so can result in injury.

PO4983A

K

CAUTION, SERVICE FILTER ELEMENTS WEEKLY

MORE OFTEN IN DUSTY CONDITIONS M1736

L

UNIT LOCATION

When mounting or installing, do not block air flow to flywheel/fan. Maintain a min. of 12 in. from wall or other solid obstruction.

P04518A

M

ROTATION IN DIRECTION OF ARROW
M442
ROTATION IN DIRECTION OF ARROW

T

CHAMPION PNEUMATIC
MACHINERY CO., INC.
PRINCETON, ILLINOIS

MODEL
SERIAL NO.

N

P09388A

UNIT PRESSURE SETTING

O

UNIT PRESSURE FACTORY SET AT
140-175 PSIG P04988A

U

SERVICE INFORMATION

FOR SERVICE CALL "SERVICE DEPARTMENT" AT
815 /875-3321 OR WRITE TO:
CHAMPION PNEUMATIC MACH. CO.
1301 NORTH EUCLID AVE.
PRINCETON, ILLINOIS 61356 P4988A

P

MAINTENANCE INSTRUCTIONS

WARNING: TURN OFF POWER BEFORE SERVICING TO AVOID POSSIBLE PERSONAL INJURY AND/OR PROPERTY DAMAGE.

THE FOLLOWING INSTRUCTIONS ARE BASED ON NORMAL OPERATION. ALWAYS REFER TO OWNER'S MANUAL FOR DETAILED INSTRUCTIONS. IF THE UNIT IS IN AN EXCESSIVELY DUSTY AREA INCREASE FREQUENCY OF ALL CHECKS.

DAILY:
- Check for proper oil level in compressor.
- Drain any condensate from receiver.
- Check for any unusual noise or vibration.

WEEKLY:
- Clean air filter.
- Clean all external parts of compressor and driver.
- Safety valve should be tested manually to see that it does not stick.

MONTHLY:
- Inspect entire air system for leaks.
- Inspect oil for contamination and change if necessary.
- Check belt tension and wear.

EVERY 3 MONTHS:
- Change oil.
- Inspect valve assemblies and clean if required. P-4993A

V

IMPORTANT NOTICE!

THIS UNIT IS WIRED FOR AN AC CIRCUIT OF

O

☐ 115 VOLT ☐ 60 CYCLE ☐ 1 PHASE
☐ 230 VOLT ☐ OTHER ☐ 3 PHASE
☐ 460 VOLT

OTHER ELECTRICAL SPECS_____

CHAMPION PNEUMATIC MACHINERY CO., INC. P05257A

IMPORTANT

O

MOTOR BURN-OUTS ARE NOT COVERED BY WARRANTY - Unless motor is equipped with Factory Installed thermal overload protection (in either motor or starting device).

P05257A

Q

THIS UNIT IS EQUIPPED WITH A DUAL CONTROL VALVE.
OPEN VALVE COMPLETELY FOR CONTINUOUS RUN OPERATION.
CLOSE VALVE COMPLETELY FOR START-STOP OPERATION. P-4991A

W

R

INSTRUCTIONS
LOW OIL SAFETY CONTROL

1. If motor fails to start, verify oil level in crankcase of compressor.
2. If oil level is low, turn power off and add oil.
3. Depress reset button on low oil control and turn power on.
4. Consult service data chart for detailed instructions. P021344

⚠ DANGER

DO NOT INSTALL ISOLATING VALVES BETWEEN THIS COMPRESSOR OUTLET AND THE AIR RECEIVER.

INSTALL A PROPERLY SIZED PRESSURE RELIEF VALVE BETWEEN THE COMPRESSOR OUTLET AND THE FIRST IN-LINE COMPONENT, E.G. CHECK VALVE, DRIER, AFTERCOOLER.

FAILURE TO FOLLOW THESE INSTRUCTIONS WILL CAUSE EQUIPMENT DAMAGE OR PERSONAL INJURY OR DEATH.

DO NOT REMOVE THIS TAG. P09852A

S

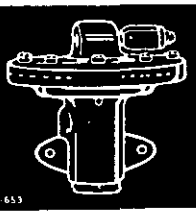

THIS UNIT HAS A
CHAMPION
AUTOMATIC TANK DRAIN
Moisture is drained from the air storage tank every time the compressor stops.

M-653

X

WARNING

DO NOT OPERATE UNIT BEFORE READING AND UNDERSTANDING OWNERS GUIDE FOR INSTALLATION, ASSEMBLY, AND OPERATION OF THIS EQUIPMENT. FAILURE TO COMPLY CAN CAUSE INJURY AND/OR PROPERTY DAMAGE.

P-4996A

PUMP HAZARD DECALS & TAGS

1

NOTICE

Read, understand, & retain all Labels and Owners Manuals before using this equipment. P0907A

2

DANGER

AIR FROM THIS COMPRESSOR MUST NOT BE USED FOR FOOD PROCESSING OR BREATHING WITHOUT ADEQUATE FILTERING.
P-8586A

3

4

CAUTION, SERVICE FILTER ELEMENTS WEEKLY
MORE OFTEN IN DUSTY CONDITIONS M1736

5

6

WARNING

DO NOT OPERATE UNIT BEFORE READING AND UNDERSTANDING OWNERS GUIDE FOR INSTALLATION, ASSEMBLY, AND OPERATION OF THIS EQUIPMENT. FAILURE TO COMPLY CAN CAUSE INJURY AND/OR PROPERTY DAMAGE.

P-4996A

RECORD OF MAINTENANCE SERVICE

DAILY CHECK OIL LEVEL *DRAIN MOISTURE FROM TANK*							
WEEKLY CLEAN FILTER CLEAN COMPRESSOR CHECK V-BELTS					**MONTHLY** INSPECT AIR SYSTEM		**EVERY 3 MONTHS** CHANGE OIL INSPECT VALVE ASSEMBLIES TIGHTEN ALL FASTENERS TEST PRESSURE RELIEF VALVE

CHAMPION PNEUMATIC MACHINERY CO., INC.

AUTHORIZED REGIONAL PARTS DEPOTS

ORDER DIRECTLY FROM THE FOLLOWING PARTS DEPOTS:

NORTHEAST

Connecticut

East Hartford, CT 06108
ARGO OF CONNECTICUT
101 Goodwin St.
Phone (203) 528-9454

Massachusetts

Leominster,MA 01453
PRESTON AIR DIV. OF AIR
COMPRESSOR REBUILDERS
488 Main St.
Phone (508) 537-6064

South Easton, MA 02375
ABLE AIR EQUIPMENT
290 Turnpike St., Box 36
Phone (508) 238-6981

Needham Heights, MA 02194
WILLIAMSON ELECTRIC CO.
43 Freemont St.
Phone (617) 444-6800

Woburn, MA 01801
CAL SUPPLY CO.
9 North Maple St.
Phone (617) 938-0888

New Jersey

East Rutherford, NJ 07073
METROPOLITAN AIR
COMPRESSOR CO., INC.
160 Paterson Ave.
Phone (201) 939-3355

Middlesex, NJ 08846
WHITEMARSH CORPORATION
80 Bakeland Ave. Box 187
Phone (908) 356-7070

New York

Albany, NY 12206
TRI-CITY JACK & LUBE SERVICE
506 Third St.
Phone (518) 465-4998

Buffalo, NY 14228
N.E. COMPRESSOR,
DIV. OF KINEQUIP, INC.
365 Old Niagara Falls Blvd.
Phone (716) 694-5000

Buffalo, NY 14227
GLAUBER EQUIPMENT
3900 Broadway
Phone (716) 681-1234

Johnstown, NY 12095
KINEQUIP, INC.
122 Water St.
Phone (518) 762-0119

Lindenhurst, NY 11757
AEROVAC SERVICES CORP.
253 Courtland St.
Phone (516) 225-5678
(315) 458-4115

N. Syracuse, NY 13212
N.E. COMPRESSOR,
DIV. OF KINEQUIP, INC.
7340 Thompson Rd. North Phone
Phone (315) 458-4115

Syracuse, NY 13211
KINEQUIP, INC.
5858 East Molloy Rd.
Phone (315) 454-4071

Rhode Island

Cranston, RI 02920
CAL SUPPLY CO.
259 Macklin St.
Phone (401) 946-1300

Vermont

Jonesville, VT 05466
JOBBERS WAREHOUSE
Rt. 2 Bolton, Box 191
Phone (802) 434-2142

MID-ATLANTIC

Maryland

Capitol Heights, MD 20743
CAPITAL COMPRESSOR
9154 Edgeworth Dr.
Phone (301) 336-3712

No. Carolina

Charlotte, NC 28214
STROUPE INDUSTRIAL
400 Valleydale Rd.
Phone (704) 393-3066

Fletcher, NC 28732
P & M TOOL CO.
230-10 Rutledge Rd.
Phone (704) 687-3527

Woodleaf, NC 27054
AIR FLOW, INC.
1850 Powell Rd.
Phone (704) 278-0411

Eastern Penn.

Bath, PA 18014
AIR POWER COMPRESSOR
7297 Park Dr., Box 289
Phone (610) 837-8050

Bethlehem, PA 18017
ACTIVEAIRE CORPORATION
22 S. Commerce Way, Suite 11
Phone (610) 866-9802

Philadelphia, PA 19130
EMCO SERVICE INC.
1508 Fairmount Ave.
Phone (215) 763-8540

So. Carolina

Goose Creek, SC 29445
BILL'S AIR COMPRESSOR
109-D St. James Ave.
Phone (803) 797-3231

Simpsonville, SC 29681
AIRITE INC.
103 Old Laurens Rd., Box 775
Phone (803) 967-8200

Sumter, SC 29151
SUMTER MACHINERY CO.
103 Brooklyn St.
Phone (803) 773-1441

Virginia

Chesapeake, VA 23320
HOFFMAN INDUSTRIES INC.
2113 Smith Ave., Box 1666
Phone (804) 424-7655

Chester, VA 23260
HIKO, INC.
11900 Old Stage Rd.
Phone (804) 748-6191

Lynchburg, VA 24506
BARKER-JENNINGS
1300 Campbell Ave.
Phone (804) 846-8471

Roanoke, VA 24014
STULTZ MACHINERY & MFG.
1546 Brownlee Ave., SE
Phone (703) 981-9359

Roanoke, VA 24017
SARVER'S HYDRAULIC
2550 Johnson Ave.
Phone (703) 344-0799

CENTRAL MID-WEST

Illinois

Broadview, IL 60153
THE COMPRESSED AIR CO.
2401 Gardner Rd.
Phone (708) 344-4110

Chicago, IL 60636
PHILLIPS AIR COMPRESSOR SERVICE
5946 S. Western Ave.
Phone (312) 778-1100

Dixon, IL 61021
EPW SUPPLY CO.
1114 East River Rd.
Phone (815) 288-5585

Dupo, Il 62239
ALL TYPE COMPRESSOR SERVICE
1712 North Main St.
Phone (618) 286-5269

Melrose Park, IL 60160
HARRIS EQUIPMENT
2010 North Ruby St.
Phone (708) 343-0866

Quincy, IL 62306
R. L. HOENER
2727 Gardner Expy.
Phone (217) 223-2190

Princeton, IL 61356
BOBBY'S OF WEST PRINCETON
Hwy. 6 West, Box 102
Phone (815) 875-4433

Indiana

Indianapolis, IN 46218
GREG SMITH EQUIPMENT SALES
3036 North Sherman Ave.
Phone (317) 542-0662

South Bend, IN 46619
ACG, INC.
56475 Peppermint Rd. Box 3158
Phone (219) 232-0630

Columbus, IN 47202
HOOSIER PARTS
2205 - 25th St.
Phone (812) 372-3761

Iowa

Laporte City, IA 50651
COMPRESSED AIR & EQUIPMENT
707 Hwy 218 North
Phone (319) 342-2440

Marion, IA 52302
J.O. COMPRESSOR SERVICE
750 - 49th St.
Phone (319) 373-1345

Kansas

Wichita, KS 67214
HAJOCA CORP.
711 North Hydraulic, Box 2017
Phone (316) 262-2471

Kentucky

Louisville, KY 40219
COMPRESSOR TECHNOLOGIES
1002 Ulrich Ave.
Phone (502) 968-5356

Michigan

Livonia, MI 48150
ARO EQUIPMENT CORPORATION
31181 Schoolcraft Rd.
Phone (313) 525-6330

Byron Center, MI 49315
COMPRESSED AIR ENGINEERING
152-84th St. SW, Box 959
Phone (616) 281-9500

Minnesota

Maple Grove, MN 55369
KRUGE - AIR INC.
10551 County Rd. 81
Phone (612) 424-0555

Missouri

Columbia, MO 65202
BODEAN'S SERVICE
1110 Cosmos Place
Phone (314) 466-6112

St. Louis, MO 63101
ALL TYPE COMPRESSOR
509 Olive, Ste. 400
Phone (314) 241-4283

Kansas City, MO 64108
MYERS BROTHERS OF KANSAS CITY
1210 West 28th St.
Phone (816) 931-5501

Nebraska

Omaha, NE 68117
OMAHA PNEUMATIC
7117 "Q" St.
Phone (402) 331-6311

Ohio

Cincinnati, OH 45241
AGGREGATE EQUIPMENT
2599 Commerce Blvd.
Phone (513) 772-6100

Cleveland, OH 44114
B & M AIR COMPRESSOR
1310 East 49th St.
Phone (216) 881-9494

Columbus, OH 43204
AGGREGATE EQUIPMENT
3208 Valleyview Dr.
Phone (614) 279-7200

Dayton, OH 45404
AGGREGATE EQUIPMENT
1500 Kuntz Rd.
Phone (513) 224-8022
or (800) 214-8022

Massillon, OH 44646
ACTION AIR
7890 Navarre Rd. S.W.
Phone (216) 833-8923

Norwalk, OH 44857
PHIL LEAK CO.
105 So. Old State Rd., Box 379
Phone (419) 688-3266

Western Penn.

Erie, PA 16511
EARL E. KNOX COMPANY
1111 Bacon St.
Phone (814) 459-2754

Pittsburgh, PA 15201
KRUMAN EQUIPMENT COMPANY
3002 Penn Ave., Box 4038
Phone (412) 261-4847

Wisconsin

Milwaukee, WI 53210
WISCONSIN COMPRESSED AIR CORP.
3056 W. Meinecke Ave.
Phone (414) 442-0280
Milwaukee, WI 53204
COMPRESSED AIR SYSTEM, INC.
420 South 5th St.
Phone (414) 273-1994
or (800) 221-6389

SOUTH

Alabama

Montgomery, AL 36101
ALABAMA MACHINERY & SUPPLY
116 Coosa St., Box 20
Phone (334) 269-4351

Arkansas

Fort Smith, AR 72906
EVANS ELECTRIC MOTORS
4300 Planters Rd.
Phone (501) 648-1500
Rogers, AR 72756
EVANS ELECTRIC MOTORS
2001 13th St.
Phone (501) 636-0721

Florida

Jacksonville, FL 32207
GULF ATLANTIC EQUIP.
4691 Dusk Court, Box 10758
Phone (904) 636-8555
Miami, FL 33138
PHILLIPS AIR COMPRESSOR, INC.
217 NE 69th St.
Phone (305) 751-6586
Miami, FL 33054
COMP-AIR SERVICES
13195 N.W. 38th Ave.
Phone (305) 687-8787
Riviera Beach, FL 33404
AIR COMPRESSOR WORKS
1956 West 9Th St.
Phone (407) 844-4559
Tampa, FL 33616
INTERBAY AIR COMPRESSORS
5110 South Westshore Blvd.
Phone (813) 831-8213
Tampa, FL 33601
TAMPA ARMATURE WORKS
440. S 78th St.
Phone (813) 621-5661

Georgia

Atlanta, GA 30318
STOVALL & COMPANY, INC.
1198 Howell Mill Rd.
Phone (404) 352-0981
Augusta, GA 30913
MECO INC. OF AUGUSTA
512 Skyview Dr., Box 696
Phone (706) 724-7603
Cornelia, GA 30531
LANIER AIR PRODUCTS
302 Front St.
Phone (706) 778-3939
Macon, GA 31203
AIR COMPRESSOR SALES, INC.
5490 Thomaston Rd.,Box 2444
Phone (912) 474-8460
Smyrna, GA 30080
RELIABLE HYDRAULICS
5550 South Cobb Dr.
Phone (404) 799-8554

Louisiana

Baton Rouge, LA 70898
AIR COMPRESSOR ENERGY SYSTEMS
10151 So. Perdue, Box 80048
Phone (504) 272-2722
Marrero, LA 70898
AIR COMPRESSOR ENERGY SYSTEMS
710 Baratoria Blvd.
Phone (504) 348-2214

Mississippi

Jackson, MS 39215
SOUTHERN SALES COMPANY, INC.
761 Harris St., Box 1052
Phone (601) 355-0384
Tupelo, MS 38803
COMPRESSOR & TOOLS, INC.
105 Old Runway Rd.
Phone (601) 844-7023

Oklahoma

Oklahoma City, OK 73125
EVANS ELECTRIC MOTOR
1536 South Western
Phone (405) 631-1344
Tulsa, OK 74101
EVANS ELECTRIC MOTORS
2002 SW Blvd.
Phone (918) 587-1566

Tennessee

Memphis, TN 38126
AIR COMPRESSOR SALES & SERVICE
234 East Butler St.
Phone (901) 522-1916

Texas

Dallas, TX 75220
VSA, INC.
10550 Shady Trail
Phone (214) 353-0765
Grand Prairie, TX 75050
ALLIED POWER COMPANY
13645 Omega
Phone (214) 960-7963
Houston, TX 77076
P-M-E EQUIP. INC.
915 Brenda St.
Phone (713) 691-3081
Houston, TX 77041
TIDE-AIR
4430 Brittmore
Phone (713) 466-5471
Huston, TX 77293
W & A INTERESTS
2426 Lauder Rd.
Phone (713) 449-0042
Longview, TX 75606
YORK POWER SYSTEMS
804 West Cotton, Box 3939
Phone (903) 757-4700
San Antonio, TX 78207
E. G. HENDRIX CO.
1523 N. Laredo
Phone (210) 736-4666
San Antonio, TX 78217
ACTION AIR
10730 Hillpoint Box 171116
Phone (210) 657-5913

Uhland, TX 78640
GORDON'S EQUIPMENT
31 North Old Spanish Trail
Phone (512) 398-6669
Wichita Falls, TX 76304
WESBROOKS INC.
2012 Shepherd Access Rd., Box 534
Phone (817) 723-4181

MOUNTAIN

Arizona

Phoenix, AZ 85040
CANYON COMPRESSOR COMPANY
4012 East Broadway Rd., Suite 301
Phone (602) 470-0669
Tucson, AZ 85713
FLUID AIR
2227 So. Mission Rd.
Phone (520) 623-9942

Colorado

Arvada, CO 80002
BLACKHAWK EQUIPMENT
5595 Sheridan Blvd., Bldg 2
Phone (303) 421-3000

Nevada

Reno, NV 89506
VALLEY COMPRESSOR SERVICE
115750 Overland, Box 60127
Phone (702) 972-5271

New Mexico

Albuquerque, NM 87109
MESA EQUIPMENT SUPPLY CO.
3820 Commons Ave. N.E.
Phone (505) 345-0284

Utah

Murray, UT 84123
VALLEY PUMP & EQUIPMENT
4260 South 500 West, Suite B
Phone (801) 265-9095

WEST COAST

California

Altadena, CA 91001
PACIFIC LIFT & EQUIPMENT
836 West Woodbury Rd.
Phone (818) 797-4100
Bakersfield, CA 93308
B. J. ISAACS
201 China Grade Loop
Phone (805) 393-8143
Belmont, CA 94002
WEST COAST COMPRESSORS
1305 Elmer St.
Phone (415) 592-2855
City of Industry, CA 91746
ROTARY AIR COMPRESSOR COMPANY
13419 Valley Blvd.
Phone (818) 961-1536
Dinuba, CA 93618
SMITH AUTO PARTS
153 South K St.
Phone (209) 591-3000
El Cajon, CA 92020
D & L EQUIPMENT WORKS
1685 No. Marshall Ave.
Phone (619) 562-3373
Fontana, CA 92335
ALLENS AIR COMPRESSOR
16762 Spring St.
Phone (909) 823-3522
Fresno, CA 93745
ASSOCIATED COMPRESSOR
4651 East Date Ave., Box 2716
Phone (209) 485-3184
Glendora, CA 91740
LANS ELECTRICAL MOTOR & TO
438 West Carter Dr.
Phone (818) 963-9457
Livermore, CA 94550
GW COMPRESSOR
3252 4th St.
Phone (510) 447-2809
Modesto, CA 95351
RAYCO INDUSTRIAL SUPPLY
512 River Rd.
Phone (209) 529-8984
Oxnard, CA 93030
INDUSTRIAL ELECTRIC MOTORS, INC.
811 Mercantile St.
Phone (805) 483-0167
Placentia, CA 92670
GENERAL AIR COMPRESSORS
151 W. Orangethorpe
Phone (714) 996-7660
Lodi, CA 95240
AIR PACIFIC
826 N. Sacramento St.
Phone (209) 334-4340
Santa Clara, CA 95054
UNIV-AIR EQUIPMENT COMPANY
862 Duane Ave.
Phone (408) 727-4055
Sunnyvale, CA 94089
K.C. COMPRESSOR
1248 Birchwood
Phone (408) 745-7454

Oregon

Eugene, OR 97402
C & K PETROLEUM EQUIPMENT
1501 West 2nd St.
Phone (503) 344-3476

Washington

Seattle, WA 98119
DICKINSON EQUIPMENT COMPANY
3220 - 17th Ave. West
Phone (206) 285-1090

CANADA

Ontario

Toronto, Ont. M8Z 5K7
CAMERON COMPRESSOR LTD.
105 Shorncliffe Rd.
Phone (416) 239-8153

HAWAII

Hawaii

Honolulu, HI 96819
A. L. KILGO CO. INC.
180 Sand Island Rd.
Phone (808) 832-2200

PNEUMATIC MACHINERY CO., INC.

1301 N. Euclid Ave. • Princeton, Illinois 61356-9990 • (815) 875-3321 • FAX 815-872-0421
Manufacturing Plants in Princeton, Illinois • Manteca, California
COMPLETE NATION-WIDE ORGANIZATION OF CHAMPION REPRESENTATIVES AT YOUR SERVICE
AN EQUAL OPPORTUNITY EMPLOYER

GENERAL INSTALLATION INSTRUCTIONS

NOTE: ALWAYS READ OWNERS MANUAL PRIOR TO STARTING THE INSTALLATION.

1. Compressor Location and Connection to Air Main

- Locate in a clean, well ventilated room. A cool location is advantageous because it increases efficiency of compressors.
- Allow a minimum of 12" between compressor flywheel and wall. Allow room around compressor for maintenance and servicing.
- Mount compressor units on a solid floor, preferably concrete. It is not necessary to lag to floor. Mount level.
- Connect compressor unit to air main or lines through a pipe union, and shut-off valve to allow removal of unit if required. For base mounted units, a properly sized pressure relief valve must be installed in the compressed air line before the shut-off valve. See sketch below.

⚠WARNING **Failure to properly size and install pressure relief valves can result in injury or death, and equipment damage.**

- Never connect multiple compressors directly together. Connect each compressor to air main individually. Piping must be installed in conformance with all applicable codes including ANSI B19 and B31.

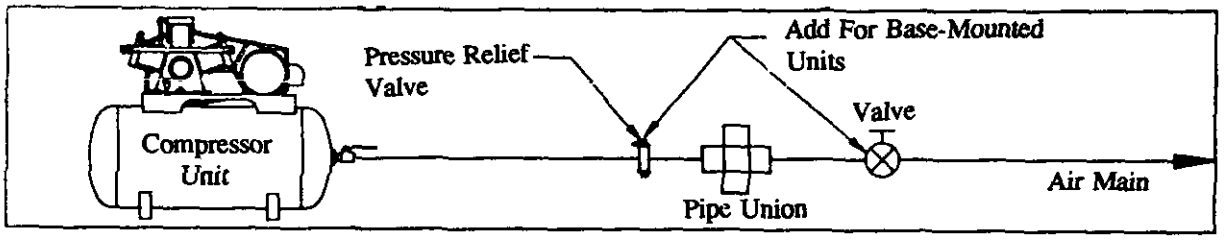

- When installing bare pumps, a PRESSURE RELIEF VALVE must be installed between the compressor pump outlet and the first major component such as HAND VALVE, CHECK VALVE, AFTERCOOLER, DRYER, etc.

2. **Pipe Sizes for Air Mains or Lines: "Table A"**

- Air mains and lines must be of adequate size and strength for the system's requirements. Either pipe or copper tubing may be used. See "Table A" below, or consult the factory for recommended sizes.
- See Drawing No. 1 for recommended installation of air piping system.
- Branch lines to various air tools and appliances should be brought off top or side of mains to prevent entry of moisture as it condenses in the mains. Never connect a branch line at bottom of main. See Drawing No. 2.

3. **Electrical Service Wiring: "Table B"**

- See "Table B" for proper wire size for motor horsepower, phase, and voltage on compressor unit installed. Improper wire size will cause excessive motor loads and possible motor burn-outs.

4. **Oil and Moisture Extractors, Oilers, Dryers & Pressure Regulators**

- Some air tools, spray guns, and air appliances require air in a special condition, i.e., extremely dry or oil laden. These accessories for maximum benefit should be installed as close to tool as possible. Consult your tool supplier or air compressor distributor for recommendations.
- Always use an air pressure regulating valve at point of use, depending on type of air device used.

"Table A" - Pipe Sizes for Compressed Air Lines

Based on Clean, Smooth Schedule 40 Pipe

Air	Length of Pipe Lines in Feet							
c.f.m.	25	50	75	100	150	200	250	300
1	½	½	½	½	½	½	½	½
2	½	½	½	½	½	½	½	½
3	½	½	½	½	½	½	½	½
5	½	½	½	½	½	½	½	½
10	½	½	½	¾	¾	¾	¾	¾
15	½	¾	¾	¾	¾	¾	¾	¾
20	¾	¾	¾	¾	¾	¾	¾	¾
25	¾	¾	¾	¾	¾	1	1	1
30	¾	¾	¾	¾	1	1	1	1
35	¾	¾	1	1	1	1	1	1
40	¾	1	1	1	1	1	1	1
50	1	1	1	1	1	1	1	1
60	1	1	1	1	1¼	1¼	1¼	1¼
70	1	1	1	1	1¼	1¼	1¼	1¼
80	1¼	1¼	1¼	1¼	1½	1½	1½	1½
100	1¼	1¼	1¼	1¼	1½	1½	1½	1½

Check all piping and fittings regularly
to avoid "leaks" in the system.

"Table B" - Electrical Wiring

All electrical connections should be made by a licensed electrician and in accordance with the electrical code for the particular area. Wiring must be such that full motor nameplate voltage plus or minus 10% is available at the motor terminals during starting. Recommended wire sizes are as follows:

WIRE SIZE (RUBBER COVERED) - AWG NUMBER
Copper Conductor - 75° C Temp Rating - 30° C Ambient

Based on 1993 National Electrical Code

Motor	Single Phase			2 or 3 Phase			
H.P.	120V	208V	230V	208V	230V	460V	575V
¼	14	14	14	14	14	14	14
⅓	14	14	14	14	14	14	14
½	14	14	14	14	14	14	14
¾	12	14	14	14	14	14	14
1	12	14	14	14	14	14	14
1½	10	14	14	14	14	14	14
2	10	12	12	14	14	14	14
3	8	10	10	14	14	14	14
5	4	8	8	10	12	14	14
7½			6	8	10	14	14
10				8	8	12	14
15				6	6	10	10
20				4	4	8	10
25				3	4	8	8
30				2	3	6	8

Wiring hook-up must be made so that flywheel will turn as indicated by arrow on flywheel.

DRAWING NO. 1

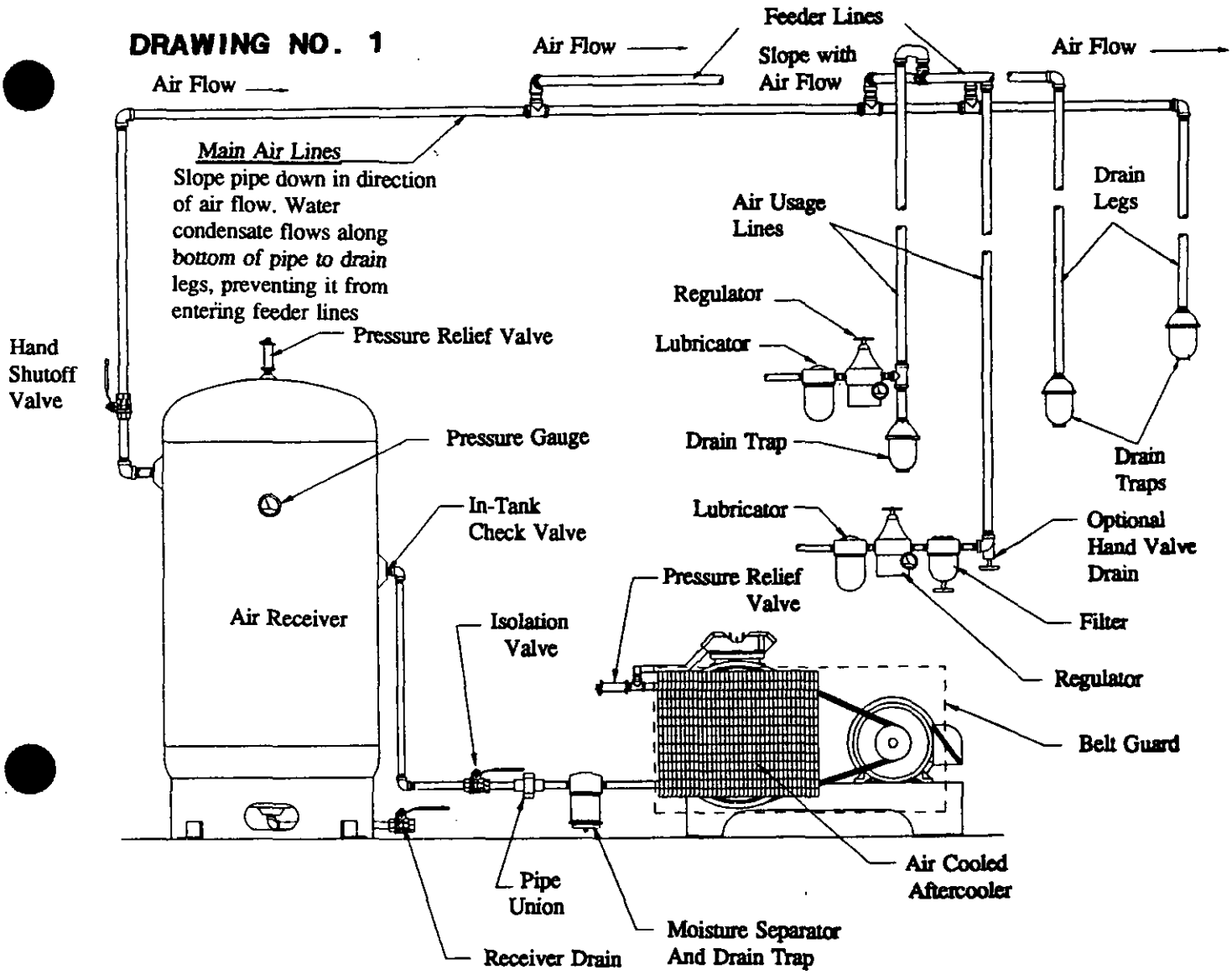

DRAWING NO. 2

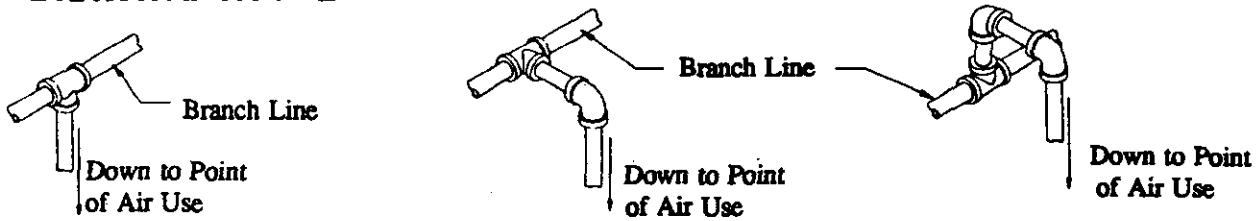

POOR INSTALLATION	BETTER INSTALLATION	BEST INSTALLATION
Water condensing in branch line flows down to air tool or appliance	Water condensing in branch line tends to flow past line to air tool or appliance	Water condensing in of branch cannot enter line down to air tool or appliance

SAFETY AND OPERATION PRECAUTIONS

Because an air compressor is a piece of machinery with moving and rotating parts, the same precautions should be observed as with any piece of machinery of this type where carelessness in operation or maintenance is hazardous to personnel. In addition to the many obvious safety rules that should be followed with this type of machinery, the additional safety precautions as listed below must be observed.

1. Read all instructions completely before operating air compressor or unit.
2. For installation, follow all local electrical and safety codes, as well as the National Electrical Code (NEC) and the Occupational Safety and Health Act (OSHA).
3. Electric motors must be securely and adequately grounded. This can be accomplished by wiring with a grounded, metal-clad raceway system, by using a separate ground wire connected to the bare metal of the motor frame, or other suitable means.
4. Protect the power cable from coming in contact with sharp objects. Do not kink power cable and never allow the cable to come in contact with oil, grease, hot surfaces, or chemicals
5. Make certain that the power source conforms to the requirements of your equipment.
6. Pull main electrical disconnect switch and disconnect any separate control lines, if used, before attempting to work or perform maintenance on the air compressor or unit. "Tag out" or "lock out" appropriate switches.
7. Do not attempt to remove any compressor parts without first relieving the entire system of pressure.
8. Do not attempt to service any part while machine is in an operational mode.
9. Do not operate the compressor at pressures in excess of its rating.
10. Do not operate compressor at speeds in excess of its rating.
11. Periodically check all safety devices for proper operation. Do not change pressure setting or restrict operation in any way.
12. Be sure no tools, or rags or loose parts are left on the compressor or drive parts.
13. Do not use flammable solvents for cleaning the air inlet filter or element and other parts.
14. Exercise cleanliness during maintenance and when making repairs. Keep dirt away from parts by covering parts and exposed openings with clean cloth or Kraft paper.
15. Do not operate the compressor without guards, shields and screens in place.
16. Do not install a shut-off valve in the discharge line, unless a pressure relief valve, of proper design and size, is installed in the line between the compressor unit and shut-off valve.
17. Do not operate compressor in areas where there is a possibility of ingesting flammable or toxic fumes.
18. Be careful when touching the exterior of a recently run motor-it may be hot enough to be painful or cause injury. With modern motors this condition is normal if operated at rated load-modern motors are built to operate at higher temperatures.
19. Inspect unit daily to observe and correct any unsafe operating conditions found.
20. Do not "play around" with compressed air because this can cause injuries.
21. Compressed air from this machine absolutely must not be used for food processing or breathing air without adequate downstream filters, purifiers and controls.
22. Always use an air pressure regulating device at the point of use.
23. Check hoses for weak or worn conditions before each use and make certain that all connections are secure.
24. Always wear safety glasses when using compressed air blow gun.

The user of any air compressor package is hereby warned that failure to follow the preceding Safety and Operation Precautions can result in injuries or equipment damage. However, this does not state as fact or does not mean to imply that the preceding list of Safety and Operating Precautions is all inclusive, and further that the observance of this list will prevent all injuries or equipment damage.

The proper compressor lubricant will protect your Champion compressor and allow it to provide years of trouble-free service. Champion offers a specially-blended lubricant for the harsh environment of compressor service.

This Premium Non-Detergent Reciprocating Oil is especially formulated for Champion. It is blended from high quality, chemically stable, high viscosity index. The inherent stability of these base stocks is further enhanced by carefully chosen additives. Oxidation inhibitors resist thermal degradation and the rust inhibitor has the ability to maintain its effectiveness over an extended period of time. The defoaments ensure any entrained air is released, and its good demulsibility permits water and other contaminants to be readily separated from the oil.

Available in 55 gallon non-returnable drums, 5 gallon pails, one gallon bottles in cases of four each, and in one quart bottles in cases of twelve.

55 Gallon Drum
Part Number P08907A

5 Gallon Pail
Part Number P08908A

1 Gallon Bottle, Case of 4
Part Number P08909A

1 Quart Bottle, Case of 12
Part Number P09479A

Shipments, F.O.B. Factory, Freight Not Allowed*

*Shipments made that exceed 400 lbs., or when shipped with compressors to the same location are freight allowed to first destination in Continental U.S.

CHAMPION **Pneumatic Machinery Co., Inc.**

1301 North Euclid Ave. • Princeton, Illinois 61356 U.S.A.
Phone (815) 875-3321 • Fax (815) 872-0421

CRL INDUSTRIES, INC.
SUBSIDIARY

CAGI

Form No. 890-2162 Rev. 1/93

CHAMPION PNEUMATIC MACHINERY CO., INC.
PRINCETON, IL

Electric Wire Size Chart with Wiring Schematics

	HP	110V & 115V AWG. WIRE SIZE	110V & 115V MAX AMPS	208V, 220V & 230V AWG WIRE SIZE	208V, 220V & 230V MAX AMPS
1 PHASE	½	14 THW	15 Amps	14 THW	15 Amps
	¾	12 THW	20 Amps	14 THW	15 Amps
	1	12 THW	20 Amps	14 THW	15 Amps
	1 ½	10 THW	30 Amps	14 THW	15 Amps
	2	10 THW	30 Amps	12 THW	20 Amps
	3			10 THW	30 Amps
	5			8 THW	50 Amps
	7 ½			6 THW	65 Amps

	HP	200V & 208V AWG WIRE SIZE	200V & 208V MAX AMPS	220V & 230V AWG WIRE SIZE	220V & 230V MAX AMPS	440V & 460V AWG WIRE SIZE	440V & 460V MAX AMPS
3 PHASE	½	14 THW	15 Amps	14 THW	15 Amps	14 THW	15 Amps
	¾	14 THW	15 Amps	14 THW	15 Amps	14 THW	15 Amps
	1	14 THW	15 Amps	14 THW	15 Amps	14 THW	15 Amps
	1 ½	14 THW	15 Amps	14 THW	15 Amps	14 THW	15 Amps
	2	14 THW	15 Amps	14 THW	15 Amps	14 THW	15 Amps
	3	14 THW	15 Amps	14 THW	15 Amps	14 THW	15 Amps
	5	10 THW	30 Amps	15 THW	15 Amps	14 THW	15 Amps
	7 ½	8 THW	50 Amps	10 THW	30 Amps	14 THW	15 Amps
	10	8 THW	50 Amps	8 THW	50 Amps	12 THW	20 Amps
	15	6 THW	65 Amps	6 THW	65 Amps	10 THW	30 Amps
	20	4 THW	85 Amps	4 THW	85 Amps	8 THW	50 Amps
	25	3 THW	100 Amps	4 THW	85 Amps	8 THW	50 Amps
	30	2 THW	115 Amps	3 THW	100 Amps	6 THW	65 Amps

Dual Voltage Motors should use the wire size listed for lowest voltage (highest amps) unless otherwise specified by Bill of Materials or order.
If the nameplate rating on motor exceeds the maximum Amp rating for the wire size listed above, the next larger wire size should be used.
For Duplex Units with one electrical supply source, double HP size and select wire size based on higher HP.
ALL WIRE DATA IS BASED ON 1993 NATIONAL ELECTRICAL CODE.

SPECIFICATIONS--RECOMMENDED COPPER WIRE SIZE (AWG)–75 DEGREE C TEMPERATURE RATING–30 DEGREE C AMBIENT

Single Phase Manual Starter

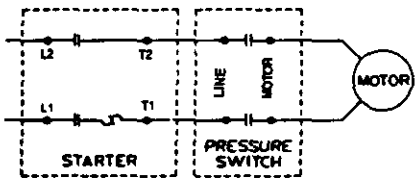

SUPPLY VOLTAGE FROM DISCONNECT

NOTES
Maximum of 2 Horsepower at 120 VAC.
Three Horsepower at 240 VAC.

Three Phase Manual Starter

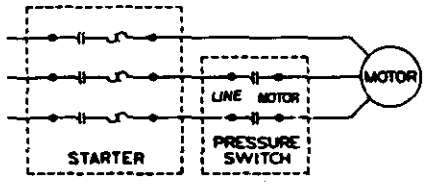

SUPPLY VOLTAGE FROM DISCONNECT

NOTES
Maximum of 7½ Horsepower at 230V
10 Horsepower 460 VAC.

To have warranty consideration, electric motors must be equipped with factory installed thermal overload protection.

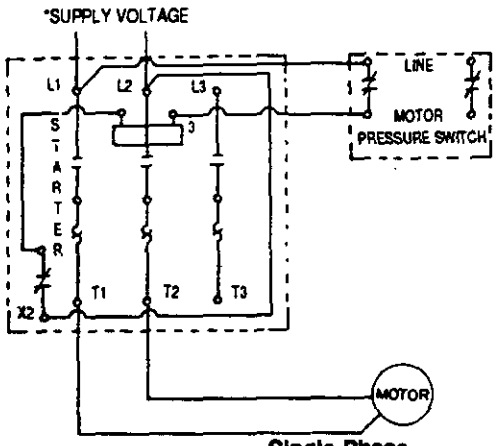

Single Phase Magnetic Starter

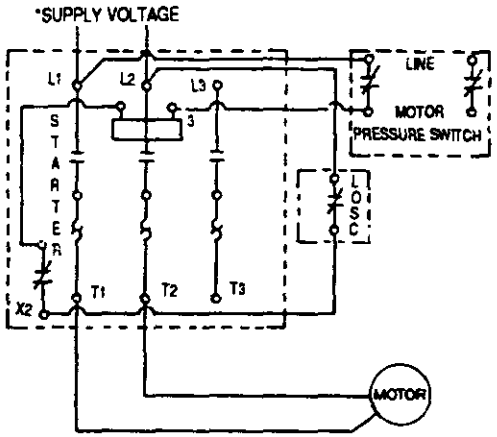

Single Phase Magnetic Starter With LOSC

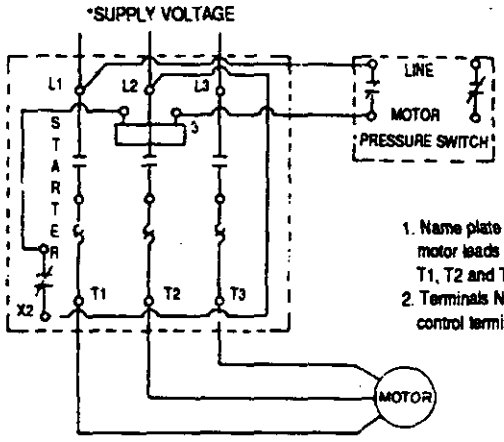

NOTES:

1. Name plate on motor indicates which motor leads should be connected with T1, T2 and T3 for proper operation.
2. Terminals No. 1, No. 2 and No. 3 are control terminals on the starter.

Three Phase Magnetic Starter

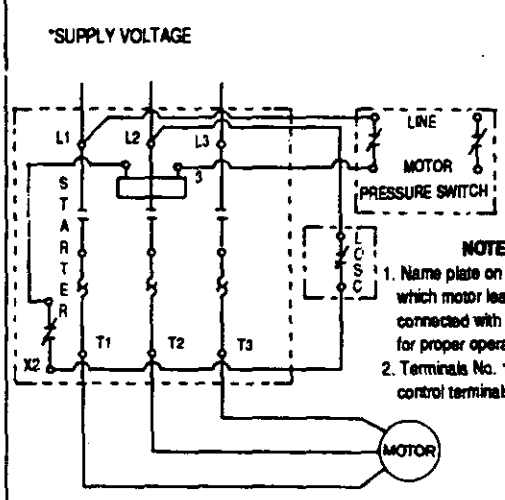

NOTES:

1. Name plate on motor indicates which motor leads should be connected with T1, T2, and T3 for proper operation.
2. Terminals No. 1, 2, and 3 are control terminals on the starter.

Three Phase Magnetic Starter with LOSC

To have warranty consideration, electric motors must be equipped with factory installed thermal overload protection.

*BRANCH CIRCUIT PROTECTION, FUSED DISCONNECT OR CIRCUIT BREAKER MUST BE IONSTALLED PER THE NATIONAL ELECTRIC CODE.

Champion Five Year Warranty
"R" & "PL" Series Compressors

CHAMPION warrants each new compressor pump manufactured by **CHAMPION**, mounted on a factory assembled unit, to be free from defects in material and workmanship under normal use and service for a period of sixty (60) months from date of installation or sixty-six (66) months from date of shipment by **CHAMPION** or **CHAMPION** distributor, whichever may occur first. **Applies to the compressor pump only, excluding head valves. Valves, controls and accessories are warranted for the first year only.** Compressor pumps purchased separately would carry a one year warranty.

This five year extended warranty will be prorated over the 5 years as follows:

First Year	-	100% Allowance, Parts and Labor
Second Year	-	90% Allowance, Parts and Labor
Third Year	-	80% Allowance, Parts and Labor
Fourth Year	-	70% Allowance, Parts and Labor
Fifth Year	-	60% Allowance, Parts and Labor

Applies to CHAMPION logo, tank or base mounted complete compressors only.

Express Limited Warranty

CHAMPION warrants each new air compressor unit manufactured by **CHAMPION** to be free from defects in material and workmanship under normal use and service for a period of twelve (12) months from date of installation or fifteen (15) months from date of shipment by **CHAMPION** or **CHAMPION** distributor, whichever may occur first.

CHAMPION makes no warranty in respect to components and accessories furnished to **CHAMPION** by third parties, such as **ELECTRIC MOTORS, GASOLINE ENGINES** and **CONTROLS**, which are warranted only to the extent of the original manufacturer's warranty to **CHAMPION**. To have warranty consideration, electric motors must be equipped with thermal overload protection.

The extended five year warranty will apply to ASME air receivers provided they are installed on rubber vibro isolator pads or approved equivalent.

When a compressor pump, or component is changed or replaced during the warranty period, the new/replaced item is warranted for only the remainder of the original warranty period.

Repair, replacement or refund in the manner and within the time provided shall constitute **CHAMPION'S** sole liability and your exclusive remedy resulting from any nonconformity or defect. **CHAMPION** SHALL NOT IN ANY EVENT BE LIABLE FOR ANY DAMAGES, WHETHER BASED ON CONTRACT, WARRANTY, NEGLIGENCE, STRICT LIABILITY OR OTHERWISE, INCLUDING WITHOUT LIMITATION ANY CONSEQUENTIAL, INCIDENTAL OR SPECIAL DAMAGES, ARISING WITH RESPECT TO THE EQUIPMENT OR ITS FAILURE TO OPERATE, EVEN IF **CHAMPION** HAS BEEN ADVISED OF THE POSSIBILITY THEREOF.

CHAMPION MAKES NO OTHER WARRANTY OR REPRESENTATION OF ANY KIND, EXCEPT THAT OF TITLE, AND ALL OTHER WARRANTIES, EXPRESS OR IMPLIED, INCLUDING WARRANTIES OR MERCHANTABILITY AND FITNESS FOR A PARTICULAR PURPOSE, ARE HEREBY EXPRESSLY DISCLAIMED. NO SALESMAN OR OTHER REPRESENTATIVE OF **CHAMPION** HAS AUTHORITY TO MAKE ANY WARRANTIES.

PNEUMATIC MACHINERY CO., INC.
1301 N. EUCLID AVE. · PRINCETON, ILLINOIS 61356-9990 · Phone: 815-875-3321
· Fax: 815-872-0421

Owner's Responsibilities

INSTALLATION:

Compressor must be located in a clean, well-ventilated, dry room to insure an adequate supply of fresh, clean, cool and dry air.

Compressor flywheel should have a minimum clearance of 12" from any obstruction to insure proper cooling of unit.

Lagging tank mounted compressor to the floor is not recommended. When lagging is necessary, it is essential to shim the legs to avoid undue stress on the tank welds. For 5 year warranty to apply tank must be mounted on vibro isolator pads.

Necessary electrical wiring and connections should be made by a qualified electrician and must be installed in accordance with all national and local electrical codes.

MAINTENANCE:

Refer to owner's manual for safety rules and detailed maintenance instructions and service schedule.

Keep oil level at the full mark.

Change oil as required.

Drain moisture from tank daily.

Keep complete unit clean.

Keep intake filters and valves clean. Inspect valves every 90 days.

Keep belts adjusted properly.

Keep nuts, bolts, capscrews and all fittings tight.

Failure of owner to comply with safety rules, installation and maintenance procedures outlined o Owner's Manual will void warranty.

FREIGHT DAMAGE:

Freight damages do not constitute warranty or service adjustment. **CHAMPION'S** terms are FOB point of shipment/factory, and **CHAMPION'S** responsibility ceases upon delivery of material to carrier and obtaining receipt for same. It is the responsibility of the receiving customer to file damage, shortage or concealed damage claim with the delivering carrier on receipt of material.

PNEUMATIC MACHINERY CO., INC.
1301 N. Euclid Ave. · Princeton, Illinois 61356-9990 USA • Phone (815) 875-3321 · FAX (815) 872-0421
Manufacturing Plants in Princeton, Illinois · Manteca, California

MOTOR HP & AMPS
ELECTRICAL WIRE, FUSE & BREAKER SIZES

The following table gives wire, breaker, and fuse sizes based on Horsepower, Voltage & Phase. Motor Full Load Amps are taken from motors currently used by **Champion**. The wire, breaker & fuse sizes are provided as reference for the installer and are based on the 1996 National Electric Code. All wiring should be performed by a licensed electrician or electrical contractor, and must meet all applicable codes for area where installed.

MOTOR HP	VOLTAGE	TYPICAL MOTOR F.L.A.	COPPER CONDUCTOR 75°C RATING - 30°C AMBIENT WIRE SIZE AWG NO.	DUAL ELEMENT, TIME DELAY UL CLASS RK5 FUSE (USED WITH PROPERLY SIZED O/L RELAY)	CIRCUIT BREAKER (INSTANTANEOUS TRIP CIRCUIT BREAKER) CONTINUOUS AMP RATING
SINGLE PHASE UNITS					
½	115V	8.4	14	15A	15A
1/2	208V / 230V	4.4 / 4.2	14	8A / 7A	7A
3/4	115V	11	12	15A	15A
3/4	208V / 230V	5.5 / 5.4	14	12A / 10A	15A
1	115V	12.4	12	20A	15A
1	208V / 230V	6.5 / 6.2	14	12A / 10A	15A
1.5	115V	18	10	20A	30A
1.5	208V / 230V	9.5 / 9	14	15A / 10A	15A
2	115V	24	10	35A	30A
2	208V / 230V	12.6 / 12	14	20A	15A
3	115V	32	8	50A	50A
3	208V / 230V	16.8 / 16	10	30A / 25A	30A
5	208V / 230V	25.5 / 24	8	40A	50A / 30A
7.5	208V / 230V	33 / 31	6	50A	50A
THREE PHASE UNITS					
1.5	200V / 230V	5 / 4.8	14	8A	7A
1.5	460V	2.4	14	4A	3A
2	200V / 230V	6.8 / 6.4	14	12A / 10A	15A
2	460V	3.2	14	5A	7A
3	200V / 230V	8.5 / 8	14	12A	15A
3	460V	4	14	7A	7A
5	200V / 230V	14.8 / 14	10 / 12	25A	30A
5	460V	7	14	12A	15A
7.5	200V / 230V	23 / 22	8 / 10	40A / 35A	30A
7.5	460V	11	14	15A	15A
10	200V / 230V	30 / 28	8	50A / 45A	50A
10	460V	14	12	20A	30A
15	200V / 230V	44.8 / 39	6	75A / 60A	100A / 50A
15	460V	19.5	10	30A	30A
20	200V / 230V	61 / 53	4	100A / 90A	100A
20	460V	26.5	8	45A	50A
25	200V / 230V	74 / 65	3 / 4	125A / 110A	100A
25	460V	32.5	8	50A	50A
30	200V / 230V	87 / 76	2 / 3	150A / 125A	150A / 100A
30	460V	38	6	60A	50A

NOTES: 1. To insure proper coordination between the heater element and short circuit protective device, consult the heater table packaged with the motor controller.

2. Where maximum branch-circuit, short-circuit protective device ratings are shown in the manufacturers overload relay table for use with a motor controller, or otherwise marked on the equipment, they shall not be exceeded.

CHAMPION

air compressors service data

AUTOMATIC TANK DRAIN VALVE

REPLACEMENT PARTS LIST

ITEM	PART NO.	REQ'D.	DESCRIPTION
1	M2399	1	NUT, Timer Lock
2	TD-6	1	SCREW, Timer
3	TD-5	1	BODY, Timer
4	TD-2	1	COVER, Diaphragm
5	TD-9	1	DIAPHRAGM
6	TD-4	1	PLATE, Diaphragm
7	TD-1	1	BODY, Valve
8	TD-16	1	RING, O
9	TD-7	1	STEM, Valve
10	TD-3	1	DISC, Valve
11	TD-18	1	WASHER, Disc Backup
12	M2932	1	NUT, Hex Brass
13	P01882A	1	SPRING, Valve
14	TD-17	1	GASKET
15	TD-10	1	PLUG, Intake
16	M2881	1	FITTING, Compression
17	M2863	2	FITTING, Compression
18	M2400	8	SCREW, Fillister Heat Machine
19	M1651	1	SCREEN
	Z-TD-1	1	TANK DRAIN ASSEMBLY, Complete
	Z-TD-1A		TANK DRAIN w/Installation Kit (Champion Units)
	Z-TD-1C		DRAIN w/Kit (Commandair Units)
	Z-5941	1	REPAIR KIT *Includes items 5 & 8 thru 14*

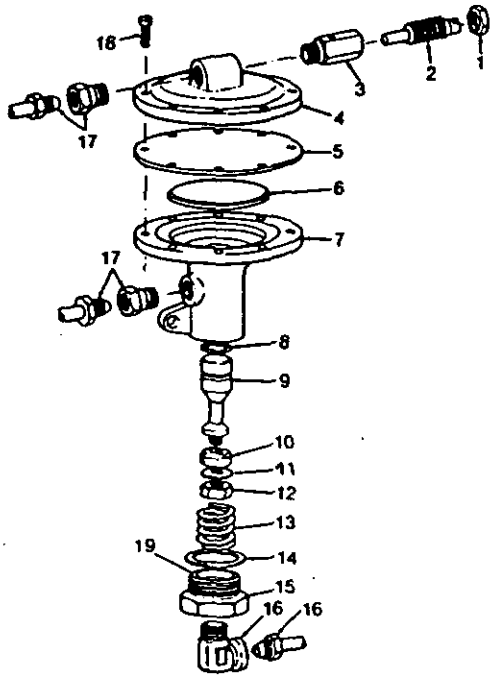

OPERATION

At the end of each pumping cycle, any compressor equipped with a centrifugal unloader* or pressure switch with a pressure release valve, exhausts air from the lines between compressor and tank. This exhausted air is used to actuate the Champion Automatic Tank Drain Valve.

The exhausted air is delivered into the diaphragm cover, (4) depressing the diaphragm (5). This forces the diaphragm plate and valve stem (6) and (9) down, unseating valve disc (1). Storage tank pressure then forces moisture accumulation at the bottom of tank through flexible tube and tank drain valve (see diagram reverse side). Time (1, 2 & 3) allows the exhaust air depressing the diaphragm to bleed off. The length of time required to bleed off air determines draining time of valve. The time screw (2) opens or closes air bleed hold providing the operating range necessary to assure complete drainage.

*Only compressors equipped with centrifugal unloaders or unloader-type pressure switches can use this valve. The auto tank drain WILL NOT WORK with gasoline driven or continuous run units using head unloader.

INSTALLATION

The Champion valve may be mounted vertically or horizontally as required. It must be mounted rigidly to compressor or tank using mounting flange. The flange has been drilled to accommodate ¼" bolts. A new tank drain fitting with flexible tube attached may be ordered and placed in any tank opening, or existing manual drain fitting and tube may be retained and used. Make sure flexible tube reaches bottom of tank. If desired, intake tube and compression fitting may be put in place of drain cock valve in manual drain opening. Connect as shown using ⅛" or ¼" compression fittings.

Where necessary to run connection into diaphragm cover on timer side, timer may be unscrewed and replaced on the opposite side. When adjusting timer, timer screw should be turned to give draining time just long enough to clear exhaust of all trace of moisture. Turning timer screw (2) CLOCKWISE LENGTHENS DISCHARGE TIME - COUNTER-CLOCKWISE SHORTENS DISCHARGE TIME. For best results, cycle. Tighten lock nut (1) when timer screw is set.

SERVICING

IF VALVE FAILS TO OPEN. Check for leaks in line form unloader or pressure release valve to automatic drain valve. Check to see that timer has not been unscrewed too far. If trouble persists, remove intake plug (15) and clean chamber. If this fails, remove diaphragm cover (4) and check diaphragm and diaphragm plate for cause of non-operation.

IF VALVE FAILS TO CLOSE. Check timer adjustment to see that air is bleeding out.

If air continuously bleeds from timer while compressor IS running, centrifugal unloader or pressure switch release valve is leaking. Check compressor or switch instructions for remedy.

If air continuously bleeds from timer when compressor IS NOT running, inspect compressor check valve. Replace check valve disc if air is leaking back from tank.

If timer works correctly and valve fails to close, remove intake plug (15), spring (13) and valve stem assembly. This assembly includes valve stem (9), "O" ring (8), disc (10) and nut (12). They are not attached to diaphragm plate (6) and will drop out through bottom of valve chamber opening. Clean intake chamber and disc (10). Replace disc if scored.

IF VALVE OPENS AND ONLY AIR IS EXHAUSTED. Check flexible tube in tank. It must reach to the bottom of the tank and be free of leaks.

Timer may be adjusted under operating conditions.

Drain tank completely of air and water before installing or servicing valve. Failure to relieve pressure may cause injury or equipment damage

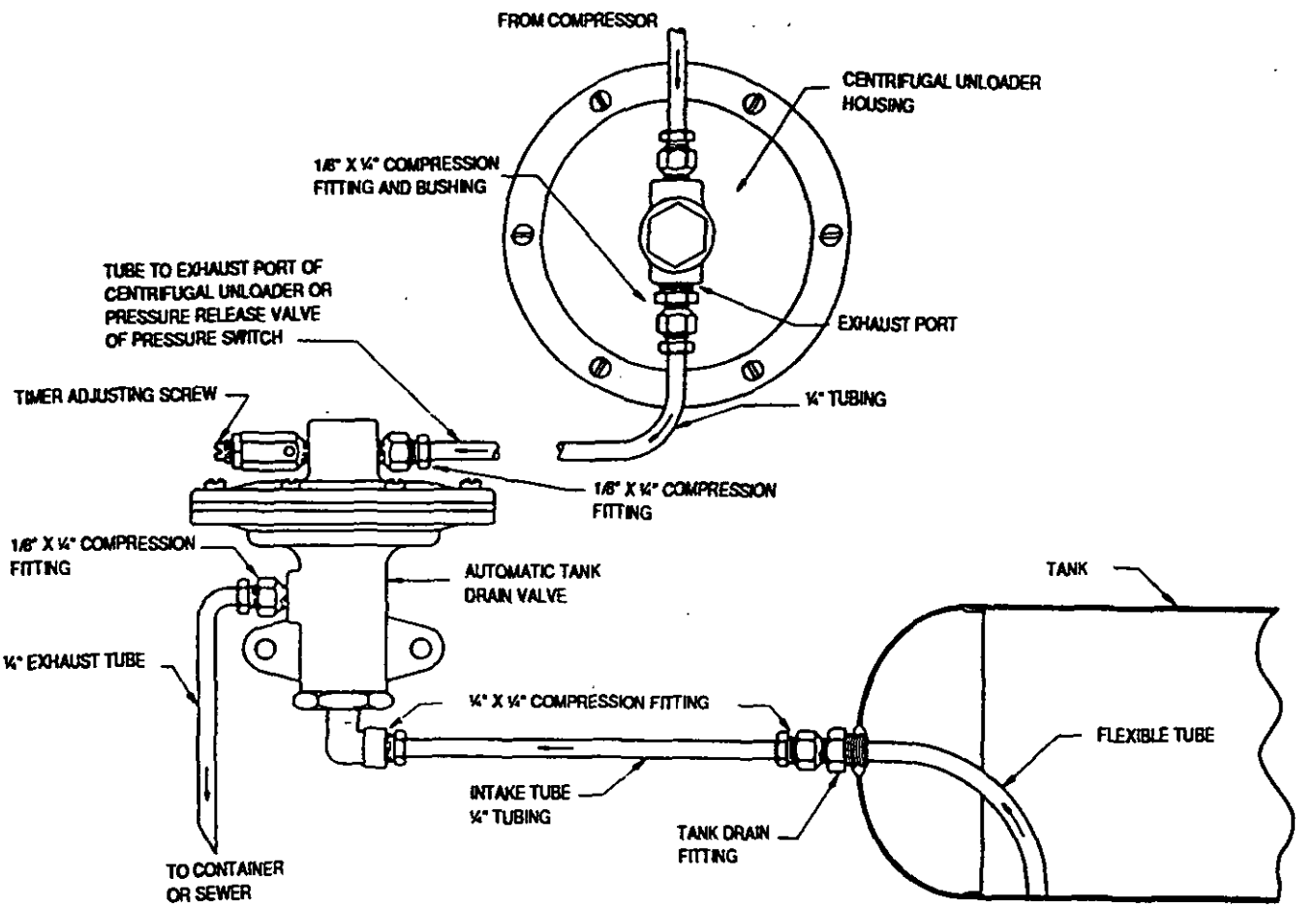

INSTALLATION OF CHAMPION AUTOMATIC TANK DRAIN FOR COMPRESSORS EQUIPPED WITH CENTRIFUGAL UNLOADER

PNEUMATIC MACHINERY CO., INC.

1301 North Euclid Avenue · Princeton, Illinois 61356-9990
Phone (815) 875-3321 · Fax (815) 872-0421

CARE AND MAINTENANCE OF YOUR AIR COMPRESSOR

USE "LOCKOUT" OR "TAG OUT" PROCEDURES.

The following instructions are based on normal operation. Refer to owner's manual for detailed instructions. If the unit is in excessively dusty area increase frequency of all checks.

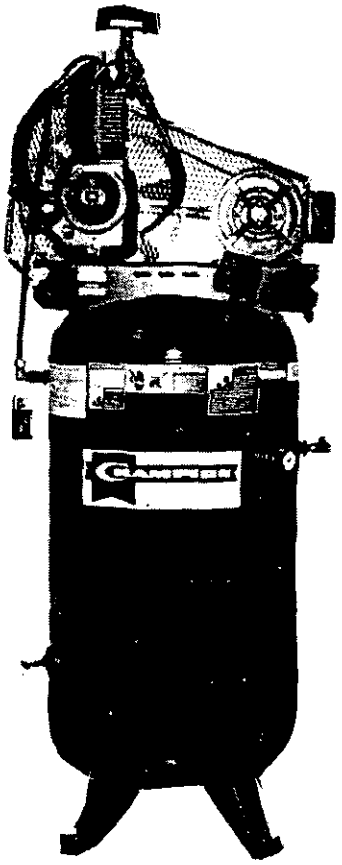

DAILY	• **Check for proper oil level.** • **Drain any condensate from receiver and traps.** • **Check for any unusual noise or vibration.**
WEEKLY	• **Clean inlet filter.** • **Clean all external parts of compressor and driver.** • **Pressure relief valve should be tested manually to see that it does not stick.**
MONTHLY	• **Inspect entire air system for leaks.** • **Inspect oil for contamination and change if necessary.** • **Check belt tension and wear.**
EVERY 3 MONTHS	• **Change oil.** • **Inspect valve assemblies.**

Loss of air pressure, when machine is idle and no air is being used, usually indicates that the check valve is not seating. This is caused by dirt or other foreign matter between seat and disc. With power off and air drained from tank, service check valve by removing, cleaning valve interior and check valve disc. Replace if internal parts are worn.

FOR MODELS WITHOUT OIL MONITOR: If motor fails to cut in or cut out at normal pressure range indicated on decal adjacent to pressure switch, malfunction is traceable to the Automatic Pressure Switch. Replace with new switch or consult your local compresssor distributor.

FOR MODELS WITH OIL MONITOR: If motor fails to cut in, check oil level in crankcase. If low, add oil and depress reset button on Oil Monitor. If oil level is satisfactory and Oil Monitor has not cut off, follow instructions in paragraph above.

AUTHORIZED SERVICE ORGANIZATION

PARTS

FOR SERVICE CALL

SERVICE

Form No. 2087A Rev. 393

RECORD OF MAINTENANCE SERVICE

DAILY DRAIN MOISTURE FROM TANK CHECK OIL LEVEL								
WEEKLY CLEAN INLET FILTER CLEAN COMPRESSOR TEST PRESSURE RELIEF VALVE						**MONTHLY** INSPECT AIR SYSTEM INSPECT OIL CHECK BELTS		**EVERY 3 MONTHS** CHANGE OIL INSPECT VALVE ASSEMBLY

Installation & Maintenance Instructions

ASCO Red-Hat II™

OPEN–FRAME, GENERAL PURPOSE, WATERTIGHT/EXPLOSIONPROOF SOLENOIDS

SERIES 8016G

Form No.V6583R5

—SERVICE NOTICE—

ASCO® solenoid valves with design change letter "G" in the catalog number (example: 8210G 1) have an epoxy encapsulated ASCO® Red Hat II® solenoid. This solenoid replaces some of the solenoids with metal enclosures and open–frame constructions. Follow these installation and maintenance instructions if your valve or operator uses this solenoid.

DESCRIPTION

Catalog numbers 8016G1 and 8016G2 are epoxy encapsulated pull–type solenoids. The green solenoid with lead wires and 1/2" conduit connection is designed to meet Enclosure *Type 1–General Purpose, Type 2–Dripproof,* Types 3 and 3S–Raintight, and Types 4 and 4X–Watertight. The black solenoid on catalog numbers prefixed "EF" is designed to meet Enclosure Types 3 and 3S–Raintight, Types 4 and 4X–Watertight, Types 6 and 6P–Submersible, Type 7 (A, B, C, & D) Explosionproof Class I, Division 1, Groups A, B, C, & D and Type 9 (E, F, & G)–Dust–Ignitionproof Class II, Division 1, Groups E, F, & G. The Class II, Groups F & G Dust Locations designation is not applicable for solenoids or solenoid valves used for steam service or when a class "H" solenoid is used. See *Temperature Limitations* section for solenoid identification and nameplate/retainer for service. When installed just as a solenoid and not attached to an ASCO valve, the core has *a 0.250–28 UNF–2B tapped hole, 0.38 minimum full thread.*

Series 8016G solenoids are available in:

- ***Open–Frame Construction***
  The green solenoid may be supplied with 1/4" spade, screw, or DIN terminals (Refer to Figure 4).
- **Panel Mounted Construction**
  These solenoids are specifically designed to be panel mounted by the customer through a panel having a .062 to .093 maximum wall thickness. (Refer to Figure 3 and section on *Installation of Panel Mounted Solenoid).*

Optional Features For Type 1 – General Purpose Construction Only

- **Junction Box**
  This junction box construction meets Enclosure Types 2,3,3S,4, and 4X. Only solenoids with 1/4" spade or screw terminals may have a junction box. The junction box provides a 1/2" conduit connection, grounding and spade or screw terminal connections within the junction box (See Figure 5).
- ***DIN Plug Connector Kit No. K236–034***
  Use this kit only for solenoids with DIN terminals. The DIN plug connector kit provides a two pole with grounding contact DIN Type 43650 construction (See Figure 6).

OPERATION

When the solenoid is energized, the core is drawn into the solenoid base sub–assembly. **IMPORTANT: When the solenoid is de–energized, the initial return force for the core, whether developed by spring, pressure, or weight, must exert a minimum force to overcome residual magnetism created by the solenoid. Minimum return force for AC construction is 11 ounces, and 4 ounces for DC construction.**

INSTALLATION

Check nameplate for correct catalog number, service, and wattage. Check front of solenoid for voltage and frequency.

⚠ WARNING: To prevent the possibility of electrical shock from the accessibility of live parts, install the *open–frame solenoid in an enclosure.*

FOR BLACK ENCLOSURE TYPES 7 AND 9 ONLY

⚠ *CAUTION: To prevent fire or explosion, do not install solenoid and/or valve where ignition temperature of hazardous atmosphere is less than 165° C. On valves used for steam service or when a class "H" solenoid is used, do not install in hazardous atmosphere where ignition temperature is less than 180°C. See nameplate/retainer for service.*

NOTE: These solenoids have an internal non–resetable thermal fuse to limit solenoid temperature in the event that extraordinary conditions occur which could cause excessive temperatures. These conditions include high input voltage, a jammed core, excessive ambient temperature or a shorted solenoid, etc. This unique feature is a standard feature only in solenoids with black explosionproof/dust–ignitionproof enclosures (Types 7 & 9).

IMPORTANT: To protect the solenoid valve or operator, install a strainer or filter, suitable for the service involved in the inlet side as close to the valve or operator as possible. Clean periodically depending on service conditions. See ASCO Series 8600, 8601, and 8602 for strainers.

Temperature Limitations

For maximum valve ambient temperatures, refer to chart. The temperature limitations listed, only indicate maximum application temperatures for field wiring rated at 90°C. *Check catalog number prefix and watt rating on* nameplate to determine maximum ambient temperature. See valve installation and maintenance instructions for maximum fluid temperature. NOTE: For steam service, refer to *Wiring* section, *Junction Box* for temperature rating of supply wires.

Temperature Limitations For Series 8016G Solenoids for use on Valves Rated at 6.1, 8.1, 9.1, 10.6, or 11.1 Watts

Watt Rating	Catalog Number Coil Prefix	Class of Insulation	Maximum † Ambient Temp. °F
6.1, 8.1, 9.1, & 11.1	None, FB, KF, KP, SF, SP, SC, & SD	F	125
6.1, 8.1, 9.1, & 11.1	HB, HT, KB, KH, SS, ST, SU, & ST	H	140
10.6	None, KF, SF, & SC	F	104
10.6	HT, KH, SU, & ST	H	104

†Minimum ambient temperature –40° F (–40° C).

Positioning

This solenoid is designed to perform properly when mounted in any position. However, for optimum life and performance, the solenoid should be mounted vertically and upright to reduce the possibility of foreign matter accumulating in the solenoid base sub–assembly area.

Wiring

Wiring must comply with local codes and the National Electrical Code. All solenoids supplied with lead wires are provided with a grounding wire which is green or green with yellow stripes and a 1/2" conduit connection. To facilitate wiring, the solenoid may be rotated 360°. For the watertight and explosionproof solenoid, electrical fittings must be approved for use in the approved hazardous locations.

Additional Wiring Instructions For Optional Features:

- **Open–Frame solenoid with 1/4" spade terminals**

For solenoids supplied with screw terminal connections use #12–18 AWG stranded copper wire rated at 90°C or greater. Torque terminal block screws to 10 ± 2 in–lbs [1,0 ± 1,2 Nm]. A tapped hole is provided in the solenoid for grounding, use a #10–32 machine screw. Torque grounding screw to 15 –20

Printed in U.S.A.

in–lbs [1,7 – 2,3 Nm]. On solenoids with screw terminals, the socket head screw holding the terminal block to the solenoid is the grounding screw. Torque the screw to 15 – 20 in–lbs [1,7 – 2,3 Nm]. with a 5/32" hex key wrench.

- **Junction Box**

The junction box is used with spade or screw terminal solenoids only and is provided with a grounding screw and a 1/2" conduit connection. Connect #12–18 AWG standard copper wire only to the screw terminals. Within the junction box use field wire that is rated 90°C or greater for connections. For steam service use 105°C rated wire up to 50 psi or use 125°C rated wire above 50 psi. After electrical hookup, replace cover gasket, cover, and screws. Tighten screws evenly in a crisscross manner.

- **DIN Plug Connector Kit No.K236–034**

1. The open–frame solenoid is provided with DIN terminals to accommodate the DIN plug connector kit.
2. Remove center screw from plug connector. Using a small screwdriver, pry terminal block from connector cover.
3. Use #12–18 AWG stranded copper wire rated at 90°C or greater for connections. Strip wire leads back approximately 1/4"for installation in socket terminals. The use of wire–end sleeves is also recommended for these socket terminals. Maximum length of wire–end sleeves to be approximately 1/4". Tinning of the ends of the lead wires is not recommended.
4. Thread wire through gland nut, gland gasket, washer, and connector cover.

NOTE: Connector cover may be rotated in 90° increments from position shown for alternate positioning of cable entry.

5. Check DIN connector terminal block for electrical markings. Then make electrical hookup to terminal block according to markings on it. Snap terminal block into connector cover and install center screw.
6. Position connector gasket on solenoid and install plug connector. Torque center screw to 5 ± 1 in–lbs [0,6 ± 1,1 Nm].

NOTE: Alternating current (AC) and direct current (DC) solenoids are built differently. To convert from one to the other, it may be necessary to change the complete solenoid including the core and solenoid base sub–assembly, not just the solenoid. Consult ASCO.

Installation of Solenoid

Solenoids may be assembled as a complete unit. Tightening is accomplished by means of a hex flange at the base of the solenoid. The 3/4" bonnet construction (Figure 1) must be disassembled for installation and installed with a special wrench adapter.

Installation of Panel Mounted Solenoid (See Figure 3)

Disassemble solenoid following instruction under *Solenoid Replacement* then proceed.

3/4" Valve Bonnet Construction

1. Install retainer (convex side to solenoid) in 1.312 diameter mounting hole in customer panel.
2. Then position spring washer over plugnut/core tube sub–assembly.
3. Install plugnut/core tube sub–assembly through retainer in customer panel. Then replace solenoid, nameplate/retainer and red cap.

15/16" Valve Bonnet Construction

1. Install solenoid base sub–assembly through 0.69 diameter mounting hole in customer panel.
2. Position spring washer on opposite side of panel over solenoid base sub–assembly then replace.

Solenoid Temperature

Standard solenoids are designed for continuous duty service. When the solenoid is energized for a long period, the solenoid becomes hot and can be touched by hand only for an instant. This is a safe operating temperature.

MAINTENANCE

⚠ WARNING: To prevent the possibility of personal injury or property damage, turn off electrical power, depressurize solenoid operator and/or valve, and vent fluid to a safe area before servicing.

Cleaning

All solenoid operators and valves should be cleaned periodically. The time between cleaning will vary depending on medium and service conditions. In general, if the voltage to the solenoid is correct, sluggish valve operation, excessive noise or leakage will indicate that cleaning is required. Clean strainer or filter when cleaning the valve.

Preventive Maintenance

- Keep the medium flowing through the solenoid operator or valve as free from dirt and foreign material as possible.
- While in service, the solenoid operator or valve should be operated at least once a month to insure proper opening and closing.
- Depending on the medium and service conditions, periodic inspection of internal valve parts for damage or excessive wear is recommended. Thoroughly clean all parts. Replace any worn or damaged parts.

Causes of Improper Operation

- **Faulty Control Circuit:** Check the electrical system by energizing the solenoid. A metallic *click* signifies that the solenoid is operating. Absence of the *click* indicates loss of power supply. Check for loose or blown fuses, open–circuited or grounded solenoid, broken lead wires or splice connections.
- **Burned–Out Solenoid:** Check for open–circuited solenoid. Replace if necessary. Check supply voltage; it must be the same as specified on nameplate/retainer and marked on the solenoid. Check ambient temperature and check that the core is not jammed.
- **Low Voltage:** Check voltage across the solenoid leads. Voltage must be at least 85% of rated voltage.

Solenoid Replacement

1. On solenoids with lead wires disconnect conduit, coil leads, and grounding wire.

NOTE: Any optional parts attached to the old solenoid must be reinstalled on the new solenoid.

2. Disassemble solenoids with optional features as follows:

- **Spade or Screw Terminals**
  Remove terminal connections, grounding screw, grounding wire, and terminal block (screw terminal type only).

NOTE: For screw terminals, the socket head screw holding the terminal block serves as a grounding screw.

- **Junction Box**
  Remove conduit and socket head screw (use 5/32" hex key wrench) from center of junction box. Disconnect junction box from solenoid.
- **DIN Plug Connector**
  Remove center screw from DIN plug connector. Disconnect DIN plug connector from adapter. Remove socket head screw (use 5/32" hex key wrench), DIN terminal adapter, and gasket from solenoid.

3. Snap off red cap from top of solenoid base sub–assembly.
4. Push down on solenoid. Then using a suitable screwdriver, insert blade in slot provided between solenoid and nameplate/retainer. Pry up slightly and push to remove. Then remove solenoid from solenoid base sub–assembly.
5. Reassemble using exploded views for parts identification and placement

Disassembly and Reassembly of Solenoids

1. Remove solenoid, see *Solenoid Replacement*.
2. Remove finger washer or spring washer from solenoid base sub–assembly.
3. Unscrew solenoid base sub–assembly.

NOTE: Some solenoid constructions have a plugnut/core tube sub–assembly, bonnet gasket and bonnet in place of the solenoid base sub–assembly. To remove bonnet use special wrench adapter supplied in ASCO Rebuild Kit. For wrench adapter only, order ASCO Wrench Kit No.K218–948.

4. The core is now accessible for cleaning or replacement.
5. If the solenoid is part of a valve, refer to basic valve installation and maintenance instructions for further disassembly.
6. Reassemble using exploded views for identification and placement of parts.

ORDERING INFORMATION FOR ASCO SOLENOIDS

When Ordering Solenoids for ASCO Solenoid Operators or Valves, order the number stamped on the solenoid. Also specify voltage and frequency.

Torque Chart

Part Name	Torque Value in Inch–Pounds	Torque Value in Newton–Meters
solenoid base sub–assembly	175 ± 25	19,8± 2,8
valve bonnet (3/4" bonnet construction)	90 ± 10	10,2 ± 1,1
bonnet screw (3/8" or 1/2" NPT pipe size)	25	2,8
bonnet screw (3/4" NPT pipe size)	40	4,5

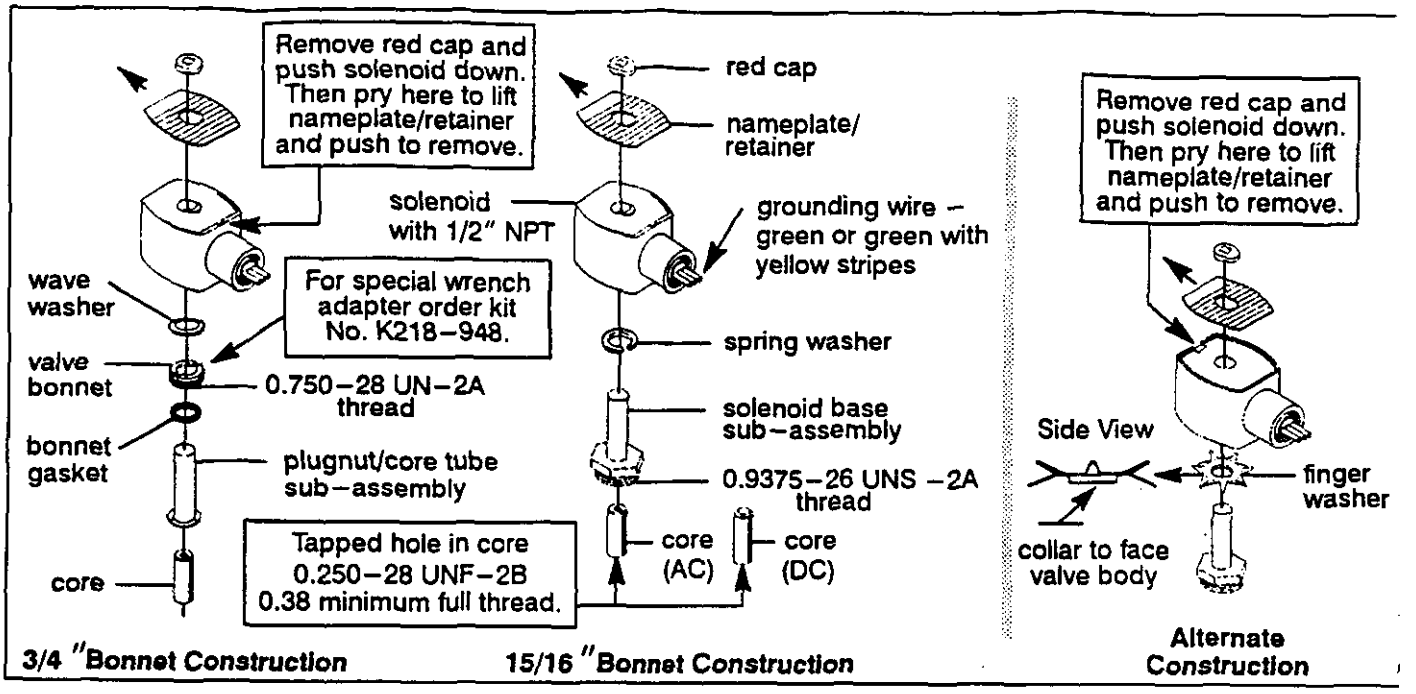

Figure 1. Series 8016G solenoids

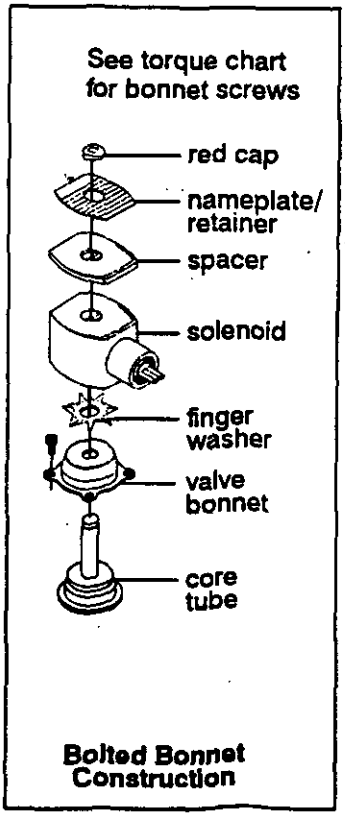

Figure 2. Series 8016G solenoid

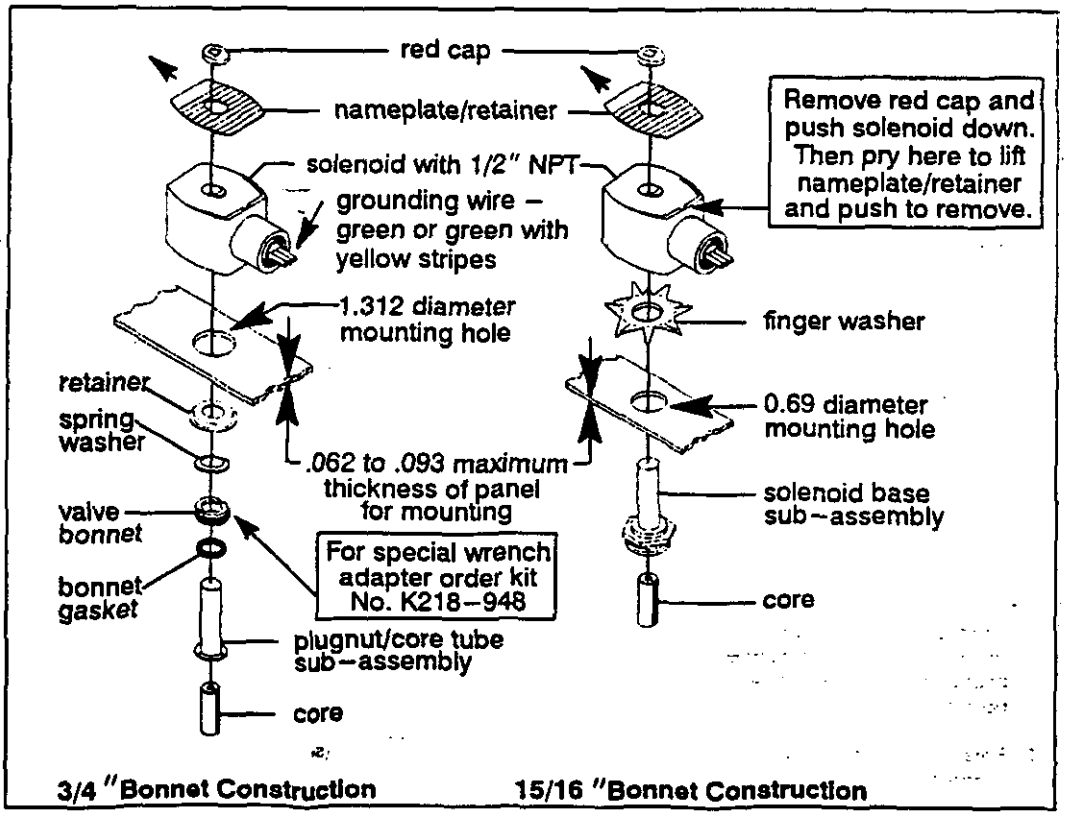

Figure 3. Series 8016G panel mounted solenoids

ASCO Valves Automatic Switch Co. 50–60 Hanover Road, Florham Park, New Jersey 07932

Torque Chart

Part Name	Torque Value in Inch–Pounds	Torque Value in Newton–Meters
terminal block screws	10 ± 2	1,1 ± 0,2
socket head screw	15 – 20	1,7 – 2,3
center screw	5 ± 1	0,6 ± 0,1

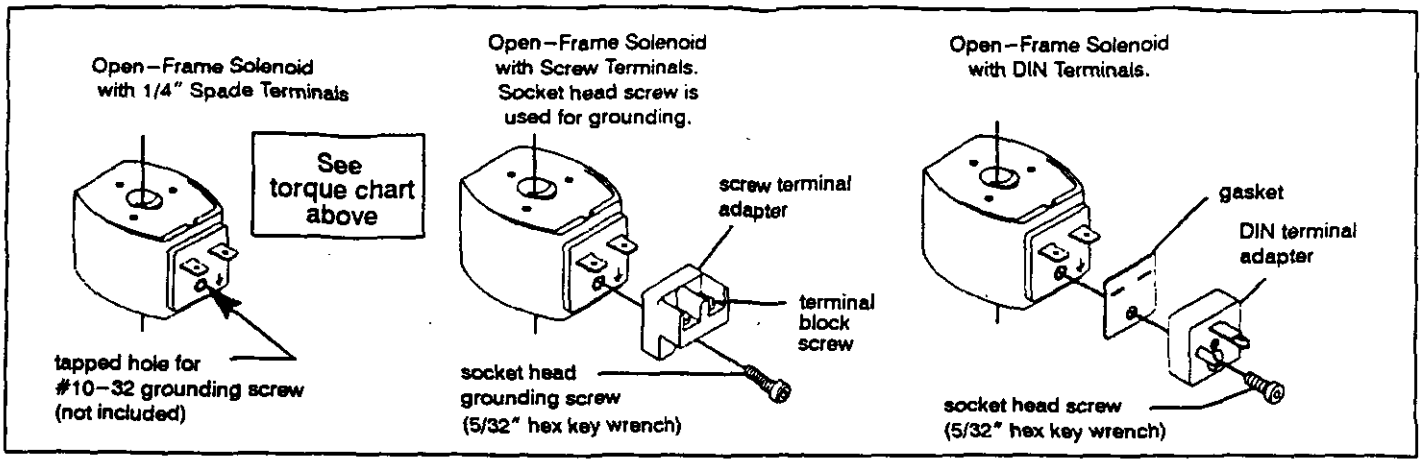

Figure 4. Open–frame solenoids

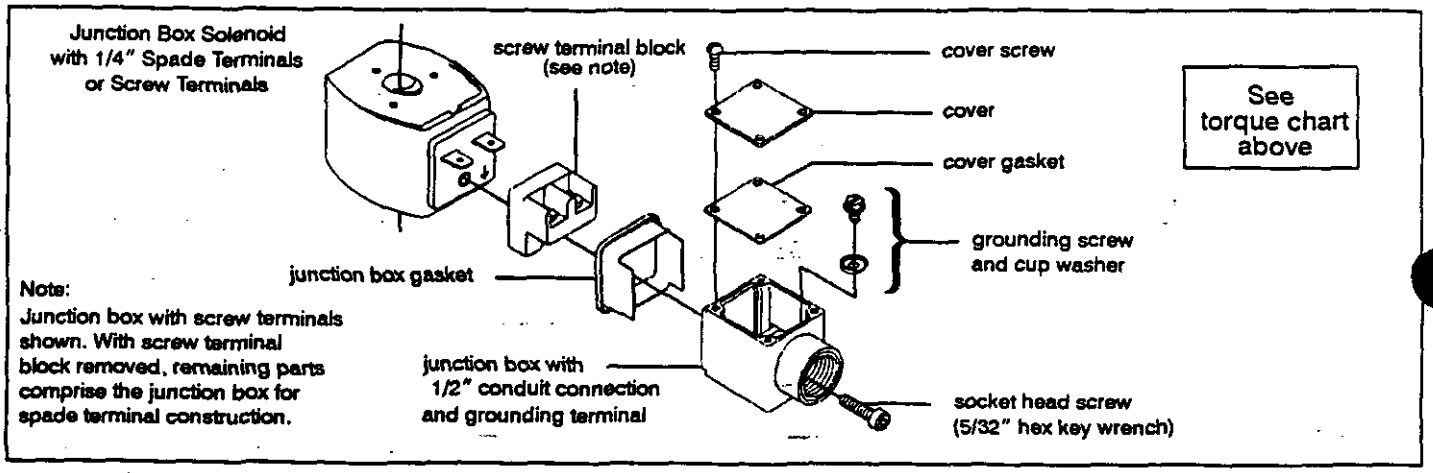

Figure 5. Junction box (optional feature)

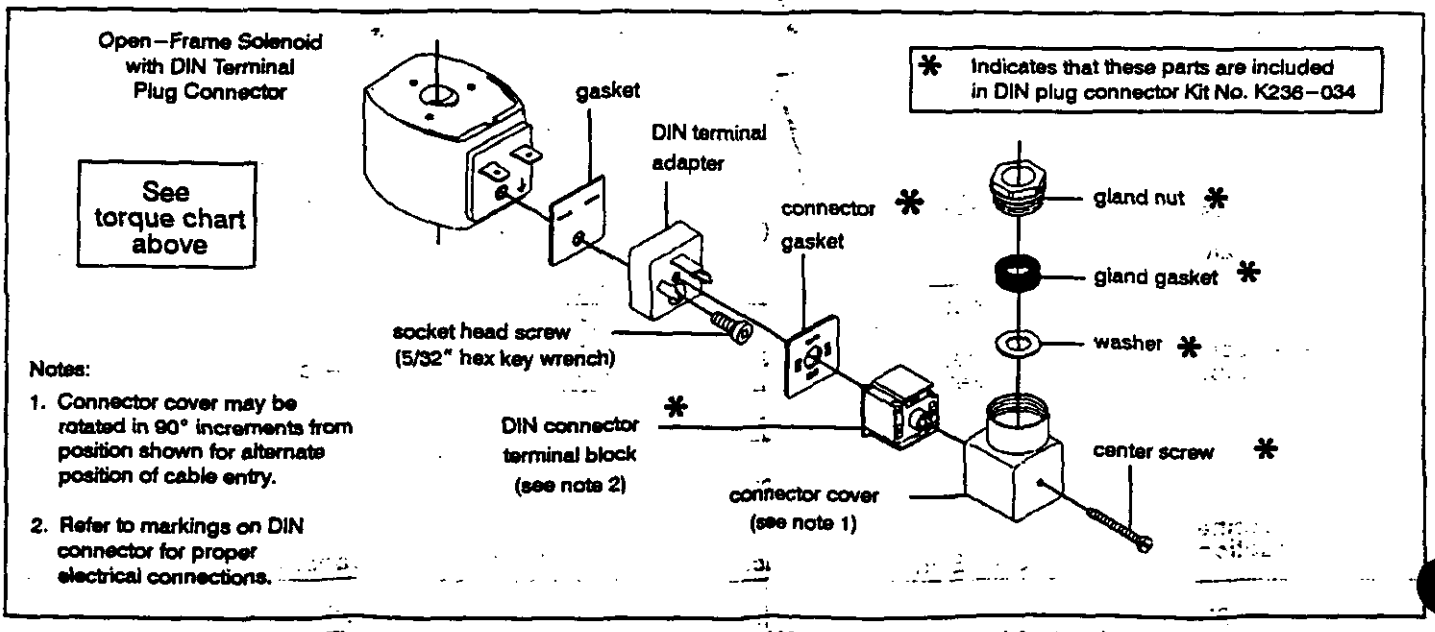

Figure 6. DIN plug connector kit No. K236–034 (optional feature)

ASCO Valves ... Automatic Switch Co. 50–60 Hanover Road, Florham Park, New Jersey 07932

INSTALLATION & MAINTENANCE INSTRUCTIONS

BULLETIN

8316

Form No.V8592

3-WAY SOLENOID VALVES
NORMALLY CLOSED AND NORMALLY OPEN OPERATION
3/8", 1/2", AND 3/4" NPT

IMPORTANT: See separate solenoid installation and maintenance instructions for information on: Wiring, Solenoid Temperature, Causes of Improper Operation, and Coil or Solenoid Replacement.

DESCRIPTION

Bulletin 8316's are 3-way, diaphragm operated, solenoid pilot controlled valves. Valves are made of brass with only four moving parts: a core assembly, two diaphragm assemblies, and a disc holder sub-assembly. Valves may be provided with a general purpose, explosionproof or watertight/explosionproof solenoid enclosures.

Bulletin 8316 valves with Suffix "P" in the catalog number are designed for dry inert gas and non-lubricated air service.

OPERATION

Normally Open

Solenoid De-energized: Flow is from Pressure "P" to Cylinder "A". Exhaust "E" connection is closed.

Solenoid Energized: Flow is from Cylinder "A" to Exhaust "E". Pressure "P" connection is closed.

Normally Closed

Solenoid De-energized: Flow is from Cylinder "A" to Exhaust "E". Pressure "P" connection is closed.

Solenoid Energized: Flow is from Pressure "P" to Cylinder "A". Exhaust "E" connection is closed.

NOTE: To change from normally closed operation to normally open operation, consult ASCO.

FLOW DIAGRAMS

NORMALLY OPEN		NORMALLY CLOSED	
DE-ENERGIZED	ENERGIZED	DE-ENERGIZED	ENERGIZED

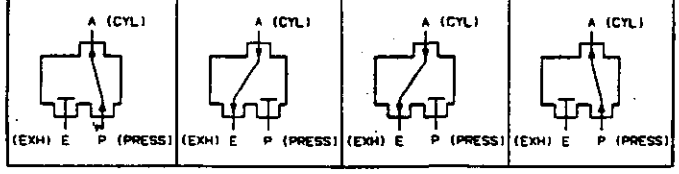

IMPORTANT: A minimum operating pressure differential of 10 psi is required. Valve vents to "0" psi.

Manual Operator

Manual operator allows manual operation when desired or during an electrical power outage. To operate valve manually, rotate manual operator stem clockwise 180°. Valve will now be in the same position as when the solenoid is energized. Rotate manual operator stem counterclockwise 180° before operating valve electrically.

INSTALLATION

Check markings on nameplate or solenoid for correct catalog number, voltage, frequency, wattage, and service.

Temperature Limitations

For maximum valve ambient and fluid temperatures, refer to chart. Check catalog number prefix, and watt rating on nameplate to determine maximum temperatures. Valves with design change letter "G" within the catalog number (example: 8316G14) have a maximum fluid temperature of 180°F. Refer to separate solenoid instructions.

Watt Rating	Catalog Number Prefix	Solenoid Class	Maximum Ambient Temp °F	Maximum Fluid Temp °F
11.8	None	A	77	140
6 & 16.8	None	A	77	180
16.7	FT	F	120	180

Positioning

This valve is designed to perform properly when mounted in any position. However, for optimum life and performance, the solenoid should be mounted vertically and upright to reduce the possibility of foreign matter accumulating in the solenoid base sub-assembly area. Valves with suffix "P" in the catalog number must be mounted with the solenoid vertical and upright.

Mounting

For mounting bracket dimensions, (optional feature) refer to Figure 1.

Piping

Connect piping to valve according to markings on valve body. Refer to flow diagrams provided. Apply pipe compound sparingly to male pipe threads only. If applied to valve threads, the compound may enter the valve and cause operational difficulty. Avoid pipe strain by properly supporting and aligning piping. When tightening the pipe, do not use valve or solenoid as a lever. Locate wrenches applied to valve body or piping as close as possible to connection point.

To insure proper operation of the valve, the pressure and exhaust lines must be full area without restriction. A minimum differential pressure as stamped on the nameplate must be maintained between pressure and exhaust during shifting. Air reservoirs must have adequate capacity to maintain this minimum pressure during shifting. To check pressure during shifting, install a pressure gauge in the pressure piping as close to the valve as possible.

IMPORTANT: To protect the solenoid valve, install a strainer or filter, suitable for the service involved in the inlet side as close to the valve as possible. Clean periodically depending on service conditions. See ASCO Bulletins 8600, 8601 and 8602 for strainers.

Flow Controls (Speed or Metering Devices)

Flow control valves may be added to control cylinder speed. If used, these flow control valves must be located in Cylinder "A" piping between the solenoid valve and the cylinder. **IMPORTANT: Do not install flow controls (Speed or Metering Devices) or any type of restrictive device in either the Pressure "P" (inlet) or the Exhaust "E" (outlet) port of the valve. Restricting either of these lines may cause valve malfunction.**

MAINTENANCE

⚠ WARNING: To prevent the possibility of personal injury or property damage, turn off electrical power, depressurize valve, and vent fluid to a safe area before servicing the valve.

NOTE: It is not necessary to remove the valve from the pipeline for repairs.

Cleaning

All solenoid valves should be cleaned periodically. The time between cleanings will vary depending on the medium and service conditions. In general, if the voltage to the coil or solenoid is correct, sluggish valve operation, excessive noise, or leakage will indicate that cleaning is required. Clean valve strainer or filter when cleaning the valve.

Preventive Maintenance

1. Keep the medium flowing through the valve as free from dirt and foreign material as possible.
2. While in service, the valve should be operated at least once a month to insure proper operation.
3. Depending on the medium and service conditions, periodic inspection of internal valve parts for damage or excessive wear is recommended. Thoroughly clean all parts. Replace worn or damaged parts. However, for best results, replace all parts as supplied with an ASCO Rebuild Kit.

Causes Of Improper Operation

1. **Incorrect Pressure:** Check valve pressure. Pressure to valve must be within range specified on nameplate.
2. **Excessive Leakage:** Disassemble valve and clean all parts. Replace worn or damaged parts. However, for best results, replace all parts as supplied with an ASCO Rebuild Kit.

Valve Disassembly (Refer to Figure 1 & 2)

⚠ WARNING: To prevent the possibility of personal injury or property damage, turn off electrical power, depressurize valve, and vent fluid to a safe area before servicing the valve.

1. Disassemble valve in an orderly fashion. Use exploded views for identification and placement of parts.
2. To remove valve solenoid, see separate solenoid instructions.
3. If the valve being serviced has a manual operator, refer to section on "Manual Operator Disassembly."
4. Unscrew solenoid base sub-assembly. Remove solenoid base gasket, core assembly, core spring, and core guide, if present. Note: Suffix "P" construction has a rider ring on the core assembly in addition to the core spring and core guide.
5. A 4-40 machine screw provided in ASCO Rebuild Kit serves as a self-tapping screw to remove insert from body. Turn screw a few turns into through hole located in flat surface of the insert. CAUTION: Do not damage center hole (pilot orifice) in raised surface of insert. Remove insert by using a pair of pliers to grip the head of the screw.
6. Remove three gaskets from insert. Tag each as they are removed so that they can be reassembled in the same location. Middle and lower gaskets have the same physical dimensions, however, the lower gasket is a softer material. Remove disc holder sub-assembly, spring cup, and disc spring. NOTE: Spring cup not present on all valve constructions.
7. The solenoid pilot is now completely disassembled.
8. Remove bonnet screws and lockwashers (4) from each end of valve body. Remove valve bonnets, body passage gaskets, retaining rings, diaphragm assemblies, and body gaskets from each end of the valve body. These parts are identical.
9. All parts are now accessible for cleaning or replacement. Clean all parts and passageways thoroughly before valve reassembly. Replace worn or damaged parts with a complete ASCO Rebuild Kit for best results.

Valve Reassembly

1. Reassemble parts in reverse order of disassembly. Use exploded views for identification and placement of parts.
2. Lubricate all gaskets with DOW CORNING® 111 Compound lubricant or an equivalent high-grade silicone grease.
3. At each end of valve body, install body gasket, diaphragm assembly, retaining ring, body passage gasket, valve bonnet, and bonnet screws.
4. Torque bonnet screws in a crisscross manner to 95 ± 10 in-lbs (10,7 ± 1,1 Nm).
5. Position lower insert gasket and disc holder spring with spring cup (if present) in body insert cavity. Note: Use spring cup only when it has been previously used.
6. Snap upper and middle insert gaskets into grooves of insert. Lower insert gasket fits into the recess between the lower corner of the insert and the lower corner of the body insert cavity. Middle and lower insert gaskets are the same size. However, the lower gasket is made of a softer material.
7. Place disc holder assembly into insert. Install insert (with gaskets and disc holder assembly) into body cavity, making certain that the disc holder spring is centered.
8. If the valve being rebuilt has a manual operator, refer to section on "Manual Operator Reassembly."
9. Replace solenoid base gasket, core assembly, core spring, and core guide, if present. If the core spring is the internal type as shown in Figure 1, be sure that the wide end of the core spring goes into the core first. Closed end of core spring protrudes from core top. If the core spring is the same diameter throughout, the end with the closed turns will protrude from the top of the core.
10. Replace solenoid base sub-assembly and torque to 175 ± 25 in-lbs (19,8 ± 2,8 Nm).
11. Install solenoid, see separate instructions, and make electrical hookup.
12. Restore line pressure and electrical power supply to valve.
13. After maintenance is completed, operate the valve a few times to be sure of proper operation.

Manual Operator Disassembly (Refer to Figure 2)

⚠ WARNING: To prevent the possibility of persona injury or property damage, turn off electrical power depressurize valve, and vent fluid to a safe area befor servicing the valve.

1. To remove valve solenoid, see separate solenoid instructions. NO[redacted] *determine correct manual operator construction, check valve na*[redacted] for watt rating. Then see Figure 2 for corresponding watt rating.
2. Unscrew solenoid base sub-assembly. For valves with internal type core springs, remove core spring, core assembly and solenoid base gasket.
3. Unscrew manual operator body from main valve body and remove body gasket.
4. Before removing the stem retainer from the manual operator body, note the location of the captive spacer on the stem/lever sub-assembly. The captive spacer will either be on the inside or outside of the fork on the stem retainer. Location of this spacer is important for reassembly.
5. Remove stem retainer and slip the stem/lever sub-assembly from the manual operator body. Then remove stem gasket from stem/lever sub-assembly.
6. *For valve with external type core springs, remove core assembly, core* spring, core guide and rider ring (if present). For valve with a watt rating of 16.8 or 6, 6.1, etc., remove disc holder sub-assembly.
7. Refer to "Valve Disassembly" step 5, for further disassembly.

Manual Operator Reassembly

1. Reassemble in reverse order of disassembly. Use exploded views for identification and placement of parts. See instructions provided in Figure 2. Check watt rating on nameplate to determine construction.
2. Replace body gasket and disc holder sub-assembly, if used.
3. Replace stem gasket on stem/lever sub-assembly.
4. Preassemble manual operator parts, consisting of stem/lever sub-assembly with stem gasket and stem retainer. On constructions with an external type core springs, it is necessary to position (preassemble) the core assembly in the manual operator body as part of the manual operator body sub-assembly.
5. There is a captive spacing washer on the stem/lever sub-assembly. Referring to the full size template in Figure 2, locate the spacing washer as follows:
   A. For all core assemblies with an outside diameter up to 13/32" (.406 diameter) or valves having a watt rating of 6, 6.1, etc., the spacer must be located inside the fork of the stem retainer.
   B. For all core assemblies with an outside diameter greater than [redacted] (.406) diameter) or valves having a watt rating of 16.8 or 10.1, 11.2, etc., the spacer must be located outside the fork of the stem retainer.
6. Install stem/lever sub-assembly in manual operator body. Determine the proper location of the spacer and slip the stem retainer in place.
7. For valves, with external type core springs, install core assembly with core spring, core guide and rider ring (if present) into base of manual operator body. For valves with internal type core spring, install disc holder sub-assembly into base of manual operator body.
8. Screw manual operator body sub-assembly into main valve body. Torque manual operator body to 175 ± 25 in-lbs (19,8 ± 2,8 Nm).
9. Turn the manual operator lever to the 9 o'clock position. This is the position that the operator would be in if the valve was to be operated electrically.
10. Install core assembly, core spring, solenoid base gasket, and solenoid base sub-assembly. Torque solenoid base sub-assembly to 175 ± 25 in-lbs (19,8 ± 2,8 Nm).
11. Replace solenoid and make electrical hookup.
12. Restore line pressure and electrical power supply.
13. After maintenance is completed, operate the valve electrically and manually a few times to be sure of proper operation.

ORDERING INFORMATION FOR ASCO REBUILD KITS

Parts marked with an asterisk (*) in the exploded view are supplied in Rebuild Kits.

- **When Ordering Rebuild Kits for ASCO valves, order the Rebuild Kit number stamped on the valve nameplate.+**

+ If the number of the Rebuild Kit is not visible, order them and specify your valve's Catalog Number and Serial Number.

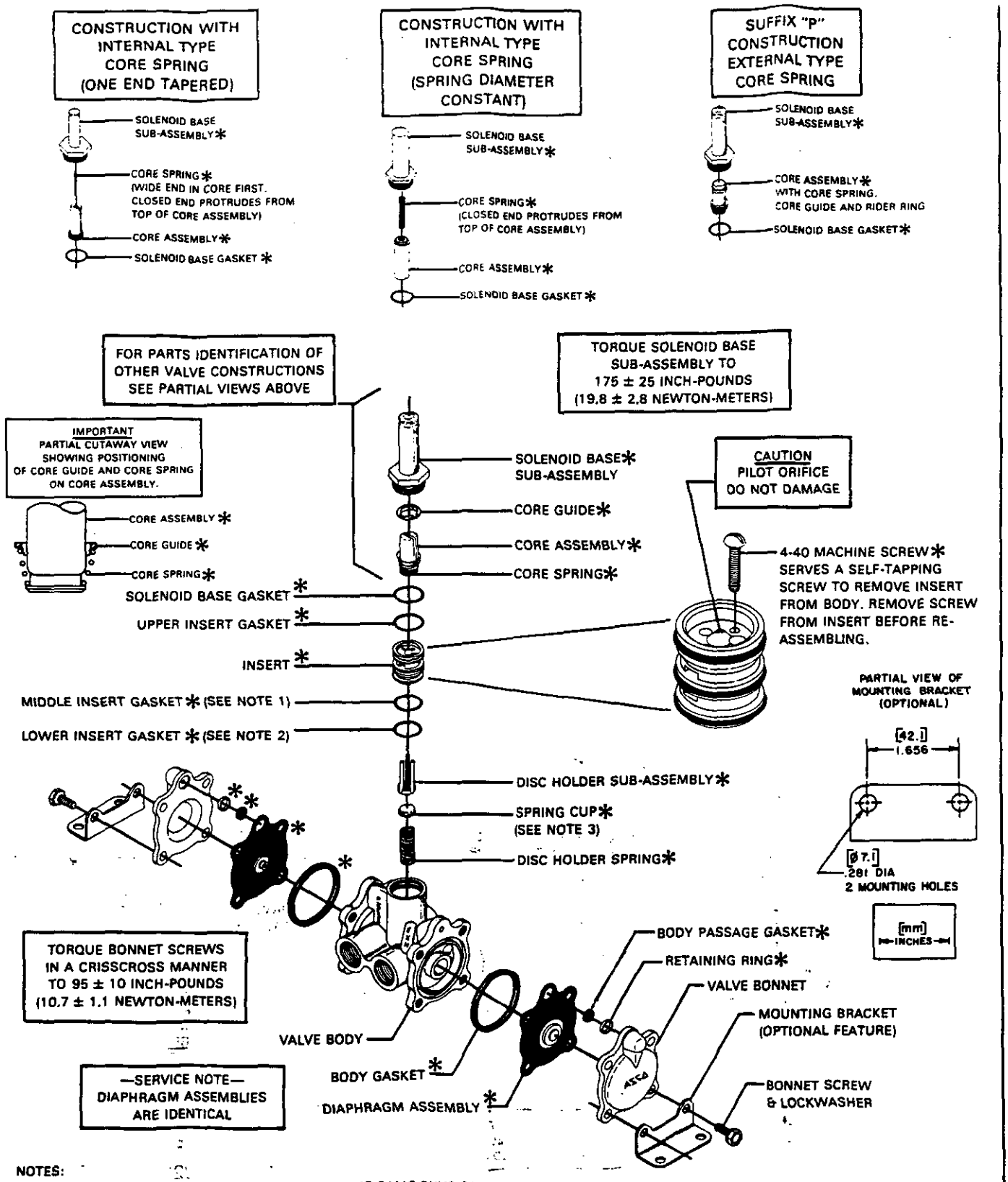

NOTES:

1. MIDDLE AND LOWER INSERT GASKETS HAVE THE SAME PHYSICAL DIMENSIONS. HOWEVER, THE LOWER INSERT GASKET IS MADE OF A SOFTER MATERIAL.
2. UPPER AND MIDDLE INSERT GASKETS SNAP INTO GROOVES OF INSERT. LOWER INSERT GASKET FITS BETWEEN RECESS IN LOWER CORNER OF INSERT AND LOWER CORNER OF BODY PILOT INSERT BORE.
3. THE SPRING CUP IS NOT PRESENT ON ALL VALVE CONSTRUCTIONS. USE SPRING CUP ONLY WHEN IT HAS BEEN PREVIOUSLY USED AS PART OF THE VALVE CONSTRUCTION.

* INDICATES THAT THESE PARTS ARE INCLUDED IN ASCO REBUILD KITS

Figure 1. Bulletin 8316, 3/8" and 1/2" NPT Construction Less Solenoid Enclosure

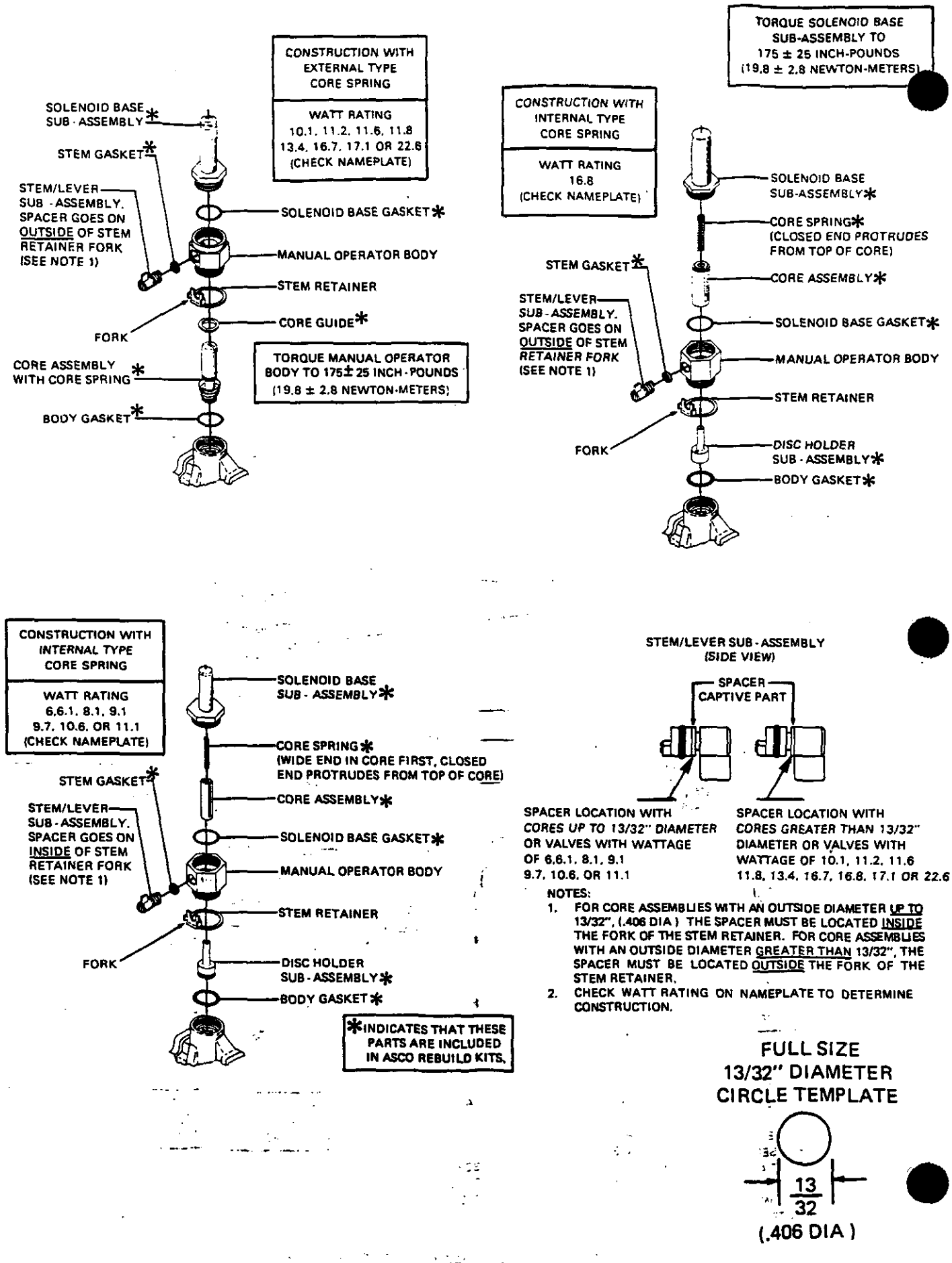

Figure 2. Partial Views of Manual Operators

ASCO JOUCOMATIC

Form No. V6950

GB CE

GENERAL INSTALLATION AND MAINTENANCE INSTRUCTIONS

Note: These General Installation and Maintenance Instructions must be read in conjunction with the Instruction Sheet for the specific product.

INSTALLATION

ASCO/JOUCOMATIC components are intended to be used only within the technical characteristics as specified on the nameplate. Changes to the equipment are only allowed after consulting the manufacturer or its representative. Before installation depressurize the piping system and clean internally.
The equipment may be mounted in any position if not otherwise indicated on the product by means of an arrow.
The flow direction and pipe connection of valves are indicated on the body.

The pipe connections have to be in accordance with the size indicated on the nameplate and fitted accordingly.
Caution:

- Reducing the connections may cause improper operation or malfunctioning.
- For the protection of the equipment install a strainer or filter suitable for the service involved in the inlet side as close to the product as possible.
- If tape, paste, spray or a similar lubricant is used when tightening, avoid particles entering the system.
- Use proper tools and locate wrenches as close as possible to the connection point.
- To avoid damage to the equipment, DO NOT OVERTIGHTEN pipe connections.
- Do not use valve or solenoid as a lever.
- The pipe connections should not apply any force, torque or *strain to the product.*

ELECTRICAL CONNECTION

In case of electrical connections, they are only to be made by trained personnel and have to be in accordance with the local regulations and standards.
Caution:

- Turn off electrical power supply and de-energize the electrical circuit and voltage carrying parts before starting work.
- All electrical screw terminals must be properly tightened according to the standards before putting into service.
- Dependent upon the voltage electrical components must be provided with an earth connection and satisfy local regulations and standards

The equipment can have one of the following electrical terminals:

- Spade plug connections according to ISO-4400 or 3 x DIN-46244 (when correctly installed this connection provides IP-65 protection).
- Embedded screw terminals in metal enclosure with "Pg" cable gland.
- Spade terminals (AMP type).
- Flying leads or cables.

PUTTING INTO SERVICE

Before pressurizing the system, first carry-out an electrical test. In case of solenoid valves, energize the coil a few times and notice a metal click signifying the solenoid operation.

SERVICE

Most of the solenoid valves are equipped with coils for continuous duty service. To prevent the possibility of personal or property damage do not touch *the solenoid which can become hot under* normal operation conditions.

SOUND EMISSION

The emission of sound depends on the application, medium and nature of the equipment used. The exact determination of the *sound level can only be carried out by* the user having the valve installed in his system.

MAINTENANCE

Maintenance of ASCO/JOUCOMATIC products is dependent on service conditions. Periodic cleaning is recommended, the timing of which will depend on the media and service conditions. During servicing, components should be examined for excessive wear. A complete set of internal parts is available as a spare parts or rebuild kit. If a problem occurs during installation/maintenance or in case of doubt please contact ASCO/JOUCOMATIC or authorised representatives.

A separate Declaration of Incorporation relating to EEC- **Directive 89/392/EEC Annex II B is available on request. Please provide product identification number and serial numbers of products concerned.**
This product complies with the essential requirements of the EMC-Directive 89/336/EEC and amendments. A separate Declaration of Conformity is available on request. Please provide product identification number and serial numbers of the products concerned.

FR CE

INSTRUCTIONS GÉNÉRALES D'INSTALLATION ET D'ENTRETIEN

Nota : Ces instructions générales d'installation et d'entretien complètent la notice spécifique du produit.

MONTAGE

Les composants ASCO/JOUCOMATIC sont conçus pour les domaines de fonctionnement indiqués sur la plaque signalétique ou la documentation. *Aucune modification ne peut être réalisée* sur le matériel sans l'accord préalable du fabricant ou de son représentant. Avant de procéder au montage, dépressuriser les canalisations et effectuer un nettoyage interne.
A moins qu'une flèche ou la notice n'indique un sens de montage spécifique de la tête magnétique, le produit peut être monté dans *n'importe* quelle position.
Le sens de circulation du fluide est indiqué par repères sur le corps et dans la documentation.

La dimension des tuyauteries doit correspondre au raccordement indiqué sur le corps, l'étiquette ou la notice.
Attention :

- *Une restriction des tuyauteries peut entraîner des dysfonc-*tionnements.
- Afin de protéger le matériel, installer une crépine ou un filtre adéquat en amont, aussi près que possible du produit.
- En cas d'utilisation de ruban, pâte, aérosol ou autre lubrifiant lors du serrage, veiller à ce qu'aucun corps étranger ne pénètre dans le circuit.
- Utiliser un outillage approprié et placer les clés aussi près que possible du point de raccordement.
- Afin d'éviter toute détérioration, NE PAS TROP SERRER les raccords des tuyauteries.
- Ne pas se servir de la vanne ou de la tête magnétique comme d'un levier.
- *Les tubes de raccordement ne devront exercer aucun effort,* couple ou contrainte sur le produit.

RACCORDEMENT ÉLECTRIQUE

Le raccordement électrique doit être réalisé par un personnel qualifié et selon les normes et règlements locaux.
Attention :

- Avant toute intervention, couper l'alimentation électrique pour mettre hors tension les composants.
- Toutes les bornes à vis doivent être serrées correctement avant la mise en service.
- Selon la tension, les composants électriques doivent être mis à la terre conformément aux normes et règlements locaux.

Selon les cas, le raccordement électrique s'effectue par :

- Connecteur débrochable ISO4400 ou 3 x DIN46244 avec degré de protection IP65 lorsque le raccordement est correctement effectué.
- Bornes à vis solidaires du bobinage, sous boîtier métallique avec presse-étoupe "Pg - -".
- Cosses (type AMP).
- Fils ou câbles solidaires de la bobine.

MISE EN SERVICE

Avant de mettre le circuit sous pression, effectuer un essai électrique. Dans le cas d'une électrovanne, mettre la bobine sous *tension plusieurs fois et écouter* le "clic" métallique qui signale le fonctionnement de la tête magnétique.

FONCTIONNEMENT

La plupart des électrovannes comportent des bobinages prévus pour mise sous tension permanente. Pour éviter toute brûlure, ne pas toucher la tête magnétique qui, en fonctionnement normal et en permanence sous tension, *peut atteindre une température élevée.*

BRUIT DE FONCTIONNEMENT

Le bruit de fonctionnement varie selon l'utilisation, le fluide et le type de matériel employé. L'utilisateur ne pourra déterminer avec précision le niveau sonore émis qu'après avoir monté le composant sur l'installation.

ENTRETIEN

L'entretien nécessaire aux produits ASCO/JOUCOMATIC varie avec leurs conditions d'utilisation. Il est souhaitable de procéder à un nettoyage périodique dont l'intervalle varie suivant la nature du fluide, les conditions de fonctionnement et le milieu ambiant. Lors de l'intervention, les composants doivent être examinés pour détecter toute usure excessive. Un ensemble de pièces internes est proposé en pièces de rechange pour procéder à la réfection. En cas de problème lors du montage/entretien ou en cas de doute, veuillez contacter ASCO/JOUCOMATIC ou ses représentants officiels.

Conformément à la directive CEE 89/392/CEE Annexe II B, une Déclaration d'Incorporation peut être fournie sur demande. Veuillez nous indiquer le numéro d'accusé de réception (AR) et les références ou codes des produits concernés.
Ce produit est conforme aux exigences essentielles de la Directive 89/336/CEE sur la Compatibilité Electromagnétique, et amendements. Une déclaration de conformité peut être ***fournie sur simple demande. Veuillez nous indiquer le numéro*** **d'accusé de réception (AR) ainsi que les numéros de série des produits concernés.**

DE CE

ALLGEMEINE BETRIEBSANLEITUNG

ACHTUNG:Diese Allgemeine Betriebsanleitung gilt in Zusammenhang mit der jeweiligen Betriebsanleitung für die speziellen Produkte.

EINBAU

Die ASCO/JOUCOMATIC-Komponenten dürfen nur innerhalb *der auf den Typenschildern angegebenen Daten eingesetzt* werden.Veränderungen an den Produkten sind nur nach Rücksprache mit ASCO/JOUCOMATIC zulässig.
Vor dem Einbau der Ventile muß das Rohrleitungssystem drucklos geschaltet und innen gereinigt werden.
Die Einbaulage der Produkte ist generell beliebig. Ausnahme: Die mit einem Pfeil gekennzeichneten Produkte müssen entsprechend der Pfeilrichtung montiert werden.
Die Durchflußrichtung und der Eingang von Ventilen sind gekennzeichnet.

Die Rohranschlüsse sollten entsprechend den Größenangaben auf den Typenschildern mit handelsüblichen Verschraubungen durchgeführt werden. Dabei ist folgendes zu beachten:

- Eine Reduzierung der Anschlüsse kann zu Leistungs- und Funktionsminderungen führen.
- Zum Schutz der Ventile sollten Schmutzfänger oder Filter so dicht wie möglich in den Ventileingang integriert werden
- Bei Abdichtung am Gewinde ist darauf zu achten, daß kein Dichtungsmaterial in die Rohrleitung oder das Ventil gelangt
- Zur Montage darf nur geeignetes Werkzeug verwendet werden
- Konische Verschraubungen sind sorgfältig anzuziehen. Es ist darauf zu achten, daß beim Anziehen das Gehäuse nicht beschädigt wird.
- Spule und Führungsrohr von Ventilen dürfen nicht als Gegenhalter benutzt werden.
- *Die Rohrleitungsanschlüsse sollen fluchten und dürfen keine* Spannungen auf das Ventil übertragen.

ELEKTRISCHER ANSCHLUß

Der elektrische Anschluß ist von Fachpersonal entsprechend den geltenden VDE- und CEE-Richtlinien auszuführen. Es ist besonders auf folgendes zu achten:

- Vor Beginn der Arbeiten ist sicherzustellen, daß alle elektrischen Leitungen und Netzteile spannungslos geschaltet sind
- Alle Anschlußklemmen sind nach Beendigung der Arbeiten vorschriftsmäßig entsprechend den geltenden Regeln anzuziehen
- Je nach Spannungsbereich muß das Ventil nach den geltenden Regeln einen Schutzleiteranschluß erhalten.

Der Magnetantrieb kann je nach Bauart folgende Anschlüsse haben:

- Anschluß für Gerätesteckdose nach DIN 43650 Form A/SC 4400 oder 3x DIN 46244 (durch ordnungsgemäße Montage der Gerätesteckdose wird Schutzklasse IP 65 erreicht)
- Anschlüsse innerhalb eines Blechgehäuses mittels Schraubklemmen. *Kabeleinführung ins Gehäuse mit PG-Verschraubung*
- Offene Spulen mit Flachsteckern (AMP-Fahnen) oder mit eingegossenen Kabelenden.

INBETRIEBNAHME

Vor Druckbeaufschlagung des Produktes sollte eine elektrische Funktionsprüfung erfolgen:
Bei Ventilen Spannung an der Magnetspule mehrmals ein- und ausschalten. Es muß ein Klicken zu hören sein.

BETRIEB

Die meisten Ventile sind mit Spulen für Dauerbetrieb ausgerüstet. Zur Vermeidung von Personen- und Sachschäden sollte jede *Berührung mit dem Ventil vermieden werden, da die Magnetspule* bei längerem Betrieb sehr heiß werden kann.

GERÄUSCHEMISSION

Diese hängt sehr stark vom Anwendungsfall, den Betriebsdaten und dem Medium, mit denen das Produkt beaufschlagt wird, ab. Eine Aussage über die Geräuschemission des Produktes muß deshalb von demjenigen getroffen werden, *der das Produkt* innerhalb einer Maschine in Betrieb nimmt.

WARTUNG

Die Wartung hängt von den Einsatzbedingungen ab. In entsprechenden Zeitabständen muß das Produkt geöffnet und gereinigt werden. Für die Überholung der ASCO/JOUCOMATIC-Produkte können Ersatzteilsätze geliefert werden. Treten Schwierigkeiten bei Einbau, Betrieb oder Wartung auf, sowie bei Unklarheiten, ist mit ASCO/JOUCOMATIC Rücksprache zu halten.

(ASCO/JOUCOMATIC Produkte sind entsprechend der EG-Richtlinie 89/392/EWG gefertigt.

Eine separate Herstellererklärung im Sinne der Richtlinie 89/392/EWG Anhang IIB ist auf Anfrage erhältlich. Geben Sie bitte für die Produkte die Nummer der Auftragsbestätigung und die Seriennummer an.
Das Produkt erfüllt die wesentlichen Anforderungen der EMC-Richtlinie 89/336/EWG und der entsprechenden Änderungen. Eine separate *Konformitätserklärung* ist auf Anfrage erhältlich. Bitte geben Sie die Auftragsbestätigungsnummer und die Seriennummern der betreffenden Produkte an.

AUTOMATIC SWITCH CO.
50-60 Hanover Road
Florham Park, New Jersey 07932
Tel. (201) 966-2000
Fax (201) 966-2628

AUTOMATIC SWITCH CO.
1561 Columbia Highway
Aiken, South Carolina 29801
Tel. (803) 641-9200
Fax (803) 641-9290

ANGAR SCIENTIFIC
54 Horsehill Road
Cedar Knolls, New Jersey 07927
Tel. (201) 538-9700
Fax (201) 538-5937

MCMXCV Printed in U.S.A.

ES CE

INSTRUCCIONES GENERALES DE INSTALACION Y MANTENIMIENTO

Nota: Estas instrucciones Generales de instalación y Mantenimiento deben considerarse en conjunción con la Hoja de instrucciones de cada producto.

INSTALACION

Los componentes ASCO/JOUCOMATIC sólo deben utilizarse dentro de las especificaciones técnicas que se especifican en su placa de caracteristicas o catalogo. Los cambios en el equipo sólo estarán permitidos después de consultar al fabricante o a su representante. Antes de la instalación despresunce el sistema de tuberías y limpie internamente.
El equipo puede utilizarse en cualquier posición si no estuviera indicado lo contrario sobre el mismo mediante una flecha o en el catálogo.
En el cuerpo o en el catálogo se indican el sentido del fluido y la conexión de las válvulas a la tubería.

Las conexiones a la tuberia deben corresponder al tamaño indicado en la placa de caracteristicas la etiqueta o el catálogo y ajustarse adecuadamente.
Precaución:

- La reducción de las conexiones puede causar operaciones incorrectas o defectos de funcionamiento.
- Para la protección del equipo se debe instalar, en la parte de la entrada y tan cerca como sea posible del producto, un filtro adecuado.
- Si se utilizara cinta, pasta, spray u otros lubricantes en el ajuste, se debe evitar que entren particulas en el producto.
- Se debe utilizar las herramientas adecuadas y colocar llaves inglesas lo mas cerca posible del punto de conexión.
- Para evitar daños al equipo, NO FORZAR las conexiones a la tuberia.
- No utilizar la válvula o el solenoide como palanca.
- Las conexiones a la tuberia no producirán ninguna fuerza, par o tensión sobre el producto.

CONEXION ELECTRICA

Las conexiones eléctricas serán realizadas por personal cualificado y deberán adaptarse a las normas y regulaciones locales.
Precaución:

- Antes de comenzar el trabajo, desconecte el suministro de energía eléctrica y desenergice el circuito eléctrico y los elementos portadores de tensión.
- Todos los terminales eléctricos deben estar apretados adecuadamente según normas antes de su puesta en servicio.
- Según el voltaje, los componentes eléctricos deben disponer de una conexión a tierra y satisfacer las normas y regulaciones locales.

El equipo puede tener uno de los siguientes terminales eléctricos:

- Conexiones desenchufables segun ISO 4400 o 3 x DIN-46244 (cuando se instala correctamente esta conexión proporciona una protección IP-65).
- Terminales de tornillo con carcasa metálica con entrada de cable de conexión roscada "PG".
- Conector desenchufable (tipo AMP).
- Salida de cables.

PUESTA EN MARCHA

Se debe efectuar una prueba eléctrica antes de someter a presión el sistema. En el caso de las válvulas solenoides, se debe energizar varias veces la bobina y comprobar que se produce un sonido metálico que indica el funcionamiento del solenoide.

SERVICIO

La mayor parte de las válvulas solenoides se suministran con bobinas para un servicio continuo. Con el fin de evitar la posibilidad de daños personales o materiales no se debe tocar el solenoide, ya que puede haberse calentado en condiciones normales de trabajo.

EMISION DE RUIDOS

La emisión de ruidos depende de la aplicación, medio y naturaleza del equipo utilizado. Una determinación exacta del nivel de ruido sólamente se puede llevar a cabo por el usuario que disponga la válvula instalada en su sistema.

MANTENIMIENTO

El mantenimiento de los productos ASCO/JOUCOMATIC depende de las condiciones de servicio. Se recomienda una limpieza periódica, dependiendo de las condiciones del medio y del servicio. Durante el servicio, los componentes deben ser examinados por si hubieran desgastes excesivos. Se dispone de un juego completo de partes internas como recambio o kit de montaje. Si ocurriera un problema durante la instalación/mantenimiento o en caso de duda contactar con ASCO/JOUCOMATIC o representantes autorizados.

Se dispone, por separado y bajo demanda, de una Declaración de Incorporación conforme a la Directiva CEE 89/392/EEC Anexo II B. Rogamos que nos faciliten los códigos y números de acepta-ción de pedido correspondientes.
Este producto cumple con los requisitos esenciales de la Directiva EMC 89/336/CEE y sus correspondientes modificaciones. Si lo desea, podemos facilitarle una Declaración de Conformidad por separado. Rogamos faciliten el número de confirmación de pedido y los números de serie de los respectivos productos.

IT CE

ISTRUZIONI DI INSTALLAZIONE E DI MANUTENZIONE GENERALE

Nota: Queste istruzioni devono essere lette in congiunzione con il manuale specifico del prodotto.

INSTALLAZIONE

Le elettrovalvole devono essere utilizzate esclusivamente rispettando le caratteristiche tecniche specificate sulla targhetta. Variazioni sulle valvole o sui piloti sono possibili solo dopo aver consultato il costruttore o i suoi rappresentanti. Prima dell'installazione depressunzzare i tubi e pulire internamente.
Le elettrovalvole possone essere montate in tutte le posizioni. Diversamente, una freccia posta sulla valvola indica che deve essere montata in posizione verticale e diritta.
La direzione del flusso e' indicata sul corpo della valvola per mezzo di una freccia oppure con l'etichetta "IN", "1", "A", o "P".

I raccordi devono essere conformi alla misura indicata sulla targhetta apposta.
Attenzione:

- Ridurre i raccordi puo' causare operazioni sbalgliate o malfunzionamento.
- Per proteggere il componente installare,il più vicino possibile al lato ingresso, un filtro adatto al servizio.
- Se si usano nastro, pasta, spray o lubrificanti simili durante il serraggio, evitare che delle particelle entrino nel corpo della valvola.
- Usare un'attrezzatura appropriate e utilizzare le chiavi solo sul corpo della valvola.
- Per evitare danni al corpo della valvola, NON SERRARE ECCESSIVAMENTE i tubi.
- Non usare la valvola o il piota come una leva.
- I raccordi non devono esercitare pressione, torsione o sollecitazione sull'elettrovalvola.

ALLACCIAMENTO ELETTRICO

L'allacciamento elettrico deve essere effetuato esclusivamente dal personale specializzato e deve essere conforme alle Norme locali.
Attensione:

- Prima di mettere in funzione togliere l'alimentazione elettrica, diseccitare il circuito elettrico e le parti sotto tensione.
- I morsetti elettrici devono essere correttamente avvitati, secondo la Norma, prima della messa in servizio.
- La elettrovalvole devone essere provviste di morsetti di terra a seconda della tensione e delle Norme di sicurezza locali.

I piloti possono avere una delle seguenti caratteristiche elettrice:

- Connettore ISO-4400 o 3 x DIN-46244 (se installato correttamente e' IP-65).
- Morsettiera racchiusa in custodia metallica. Entrata cavi con pressacavi tipo "PG".
- Bobina con attacchi FASTON (tipo AMP).
- Bobine con fili o cavo.

MESSA IN FUNZIONE

Prima di dare pressione alla valvoa, eseguire un test elettrico. Eccitare la bobina diverse volte fino a notare uno scatto metallico che dimostra il funzionamento del pilota.

SERVIZIO

Molte elettrovalvole sono provviste di bobine per funzionamento continuo. Per prevenire la possibilita' di danneggiare cose o persone, non toccare il pilota.
La custodia della bobina o del pilota puo' scaldarsi anche in normali condizioni di funzionamento.

EMISSIONE SUONI

L'emissione di suoni dipende dall'applicazione e dal tipo di elettrovalvola. L'utente puo' stabilire esattamente il livello del suono solo dopo aver installato la valvola sul suo impianto.

MANUTENZIONE

Generalmente questi componenti non necessitano spesso di manutenzione. Comunque, in alcuni casi e' necessario fare attenzione a depositi o ad eccessiva usura. Questi componenti devono essere puliti periodicamente, il tempo che intercorre tra una pulizia e l'altra varia a seconda delle condizioni di funzionamento. Il ciclo di durata dei componenti dipende dalle condizioni di funzionamento. Incaso di usura e' disponibile un set completo di parti interne per per la revisione.
Se si incontrano problemi durante l'installazione e la manutenzione o se si hanno dei dubbi, consultare ASCO/JOUCOMATIC o i suoi rappresentanti.

L'utente puo'richiedere al costruttore una dichiarazione separate riguardante le Direttive EEC 89/392/EEC e 91/368/EEC (vedere allegato II B) fornendo il numero di serie e il riferimento dell'ordine relativo.
Il presente prodotto è conforme alle esigenze essenziali della Direttiva EMC 89/336/CEE ed agli emendamenti. Una Dichiarazione di Conformità separata può essere ottenuta su richiesta. Si prega di fornire il numero della conferma dell'ordinativo ed i numeri di serie dei relativi prodotti.

NL CE

ALGEMENE INSTALLATIE- EN ONDERHOUDSINSTRUKTIES

N.B.: Deze algemene instrukties t.a.v. installatie en onderhoud moeten in acht worden genomen tezamen met de specifieke voorschriften van het produkt.

INSTALLATIE

ASCO/JOUCOMATIC produkten mogen uitsluitend toegepast worden binnen de op de naamplaat aangegeven specificaties. Wijzigingen, zowel elektrisch als mechanisch, zijn alleen toegestaan na overleg met de fabrikant of haar vertegenwoordiger. Voor het inbouwen dient het leidingsaysteem drukloos gemaakt te worden en inwendig gereinigd.
De positie van de afsluiter is naar keuze te bepalen, behalve in die gevallen waarbij het tegendeel door pijlen wordt aangegeven.
De doorstroomrichting wordt bij afsluiters aangegeven op het afsluiterhuis.

De pijpaansluiting moet overeenkomstig de naamplaatgegevens plaatsvinden.
Hierbij moet men letten op:

- Een reductie van de aansluitingen kan tot prestatie- en funktiestoornis leiden.
- Ter bescherming van de interne delen wordt een filter in het leidingnet aanbevolen.
- Bij het gebruik van draadafdichtingspasta of tape mogen er geen deeltjes in het leidingwerk geraken.
- Men dient uitsluitend geschikt gereedschap voor de montage te gebruiken.
- Bij konische/tapse koppelingen moet met een zodanig koppel worden gewerkt dat het produkt niet wordt beschadigd
- Het produkt, de behuizing of de spoel mag niet als hefboom worden gebruikt.
- De pijpaansluitingen mogen geen krachten of momenten op het produkt overdragen.

ELEKTRISCHE AANSLUITING

In geval van elektrische aansluiting dient dit door vakkundig personeel te worden uitgevoerd volgens de door de plaatselijke overheid bepaalde richtlijnen.
Men dient in het bijzonder te letten op:

- Voordat men aan het werk begint moeten alle spanningvoerende delen spanningsloos worden gemaakt
- Alle aansluitdoemmen moeten na het beëindigen van het werk volgens de juiste normen worden aangedraad
- Al naar gelang het spanningsbereik, moet het produkt volgens de geldende normen van een aarding worden voorzien

Het produkt kan de volgende aansluitingen hebben:

- Stekeraansluiting volgens ISO-4400 of 3x DIN-46244 (bij juiste montage wordt de dichtheidsklasse IP-65 verkregen)
- Aansluiting binnen in het metalen huis d.m.v. schroefaansluiting. De kabeldoorvoer heeft een "PG" aansluiting.
- Spoelen met platte steker (AMP type).
- Losse of aangegoten kabels

IN GEBRUIK STELLEN

Voordat de druk aangesloten wordt dient een elektrische test te worden uitgevoerd. Ingeval van magneetafsluiters, tegi men meerdere malen spanning op de spoel aan waarbij een duidelijk "klikken" hoorbaar moet zijn bij juist funktioneren.

GEBRUIK

De meeste magneetafsluiters zijn uitgevoerd met spoelen voor continu gebruik. Omdat persoonlijke of zakelijke schade kan ontstaan bij aanraking dient men dit te vermijden, daar bij langdurige inschakeling de spoel of het spoelhuis heet kan worden.

GELUIDSEMISSIE

Dit hangt sterk af van de toepassing en het gebruikte medium. De bepaling van het geluidsniveau kan pas uitgevoerd worden nadat het ventiel is ingebouwd.

ONDERHOUD

Het onderhoud aan de afsluiters is afhankelijk van de bedrijfsomstandigheden.
In bepaalde gevallen moet men bedacht zijn op media welke sterke vervuiling binnen in het produkt kunnen veroorzaken.
Men dient dan regelmatig inspecties uit te voeren door de afsluiter te openen en te reinigen. Indien ongewone slijtage optreedt dan zijn reserve onderdelensets beschikbaar om een inwendige revisie uit te voeren.
Ingeval problemen of onduidelijkheden tijdens montage, gebruik of onderhoud optreden dan dient men zich tot ASCO of haar vertegenwoordiger te wenden.

Een aparte fabrikanten verklaring van inbouw, in de zin van EU-richtlijn 89/392/EEG aanhangsel IIB kan door de afnemer na opgave van orderbevestigingsnummer en serienummer verkregen worden.
Dit produkt voldoet aan de fundamentele voorschriften van EMC-richtlijn 89/336/EEG en de bijbehorende wijzigingen. Een afzonderlijke verklaring van overeenstemming is op verzoek verkrijgbaar. Vermeld a.u.b. het nummer van de opdrachtbevestiging en de serienummers van de betreffende produkten.

ASCO PNEUMATIC CONTROLS
460 Greenway Industrial Drive
Suite J
Fort Mill, South Carolina 29715
Tel. (803) 548-1300 Fax (803) 548-1440

ASCOMATICA S.A. de C.V.
Bosques de Duraznos No. 65-1003A
Fraccionamiento Bosques de las Lomas
Delegacion Miguel Hidalgo
Mexico, D.F. CP11700
Tel. (52) 5-596-77-41 Fax (52) 5-596-77-19

ASCOLECTRIC LTD.
PO. Box 160 (Airport Road)
Brantford, Ontario N3T 5M8
Tel. (519) 758-2700
Fax (519) 758-5540

GeoPure

DP-SERIES
OIL/WATER SEPARATOR

INSTALLATION, OPERATION & MAINTENANCE INSTRUCTIONS

TABLE OF CONTENTS

GeoPure Continental Systems & Services · 2300 North West 71st Place
Gainesville, FL 32653-1699

GeoPure

1.0 PREFACE

The information found in this manual is based on years of experience with the installation, operation and maintenance of this type of equipment and is intended only as a guide. The methods that are available to you may require other, more appropriate procedures. The final responsibility for the installation, operation and maintenance of this equipment is held by you, the customer, and not by GeoPure.

1.1 BACK CHARGE POLICY

GeoPure will not accept any back charges for changing, adjusting, servicing or any other work that has not received advanced written authorization. GeoPure will grant authorization for the changing, adjusting or servicing of this equipment only upon receiving proof that the equipment was not supplied as outlined by the quotation/submittal package.

1.2 INSPECTION

Thoroughly inspect all equipment upon arrival. If any items are missing or damaged, note this on the shipping papers and contact GeoPure immediately.

1.3 STORAGE

If you are not ready to install the equipment upon arrival, store it in an area away from traffic. The ground should be level and free of any sharp objects that might damage the coatings. Store the equipment with all factory packing intact until ready for installation. Store the equipment indoors. If this is not possible make sure the equipment does not fill with water and debris. We recommend you cover the equipment with a tarp. Also, store any pumps and other buy-out items according to their manufacturer's recommendations.

1.4 COATINGS

Touch up all damaged coatings immediately.

1.5 ADDITIONAL INFORMATION

For additional information on specific installation details contact your local GeoPure representative or contact GeoPure directly.

1.6 TOOLS REQUIRED FOR INSTALLATION

1. Masonry drill with masonry bit set for the installation of the equipment anchors (if applicable).
2. Standard socket set, wrench set and miscellaneous drift pins for the installation and adjustment of the effluent weir and removable lid sections (if applicable).
3. Carpenter's level for the leveling of the adjustable effluent weirs (if applicable).
4. Caulking gun for the caulking of the adjustable effluent weirs (if applicable).

2.0 ANCHORING OF EQUIPMENT

Study the drawings and make yourself familiar with all aspects of the installation, operation and maintenance *of this equipment. Steps for installation of the* equipment are as follows:

1. Make sure that the ground is free of any sharp objects that might damage the coating.
2. Set the tank in position on a level floor or pad.
3. Mark the anchor bolt locations (if applicable).
4. If applicable, move the equipment aside and drill holes for the anchors of your choice. Install the anchor bolts per the manufacturer's recommendations. NOTE: We recommend you use, as a minimum, 1/2" diameter x 4"

embedment type anchor bolts. GeoPure does not supply the anchor bolts.

5. Set the separator back in place.

3.0 PLUMBING

When making connections to the tank, do not use the equipment as a pipe support. All plumbing connections should stand on their own if disconnected from the equipment.

GeoPure will not be held responsible for damage caused to this equipment by using it to support your plumbing. Connections do not have to be made in the order listed below. Review you situation and make the plumbing connections in the most logical order for your installation.

3.1 CONNECT THE EFFLUENT PLUMBING

The effluent plumbing must be the same size or larger than the nozzle size on the equipment. Do not reduce the size of the effluent piping as this might cause hydraulic overloading of the equipment. Also, try to run the discharge piping as short a distance as possible, through as few changes of direction as possible and at a pitch of not less than 1/16" per foot.

3.2 CONNECT THE INFLUENT PLUMBING

The influent plumbing must be the same size as the nozzle size on the equipment for a minimum of 20 pipe diameters. Do not reduce the size of the influent piping as this might cause mechanical emulsification of the oil/water mixture before it enters the separator. Also, try to run the inlet piping as short a distance as possible, through as few changes of direction as possible and at a pitch of not less that 1/16" per foot.

3.3 CONNECT THE SLUDGE DRAW-OFF PLUMBING

Connect a valve to the sludge draw-off flange and run a short length of pipe to a place where the sludge can be periodically decanted. When selecting a valve make sure that it is suitable for use with the type of sludge collected in your separator.

Plumb up all sludge draw off nozzles for best evacuation of accumulated sludge. This includes the fittings on both sides of the separator.

3.4 CONNECT THE OIL OUTLET PLUMBING

Connect a valve to the oil outlet and run a short length of pipe to a place where the oil can be periodically decanted.

4.0 SET UP OF THE EFFLUENT WEIR PLATE

Before filling the tank with water, pack the unions of the adjustable rotary oil skimmer with grease using a grease gun. Steel separator models DP-24 and larger come equipped with an adjustable effluent weir plate. If your separator does, set the weir plate at the midpoint of its adjustment and adjust it so that it is level to within 1/64" total side to side. Tighten the weir plate into position.

5.0 START-UP INSTRUCTIONS

Fill the tank with clean water until it begins to flow out of the effluent pipe. Check for leaks at all piping connections. Check the effluent weir making sure it is level with the water. Readjust if it is not within "+" or "-" 1/64" to the water level if equipped with an effluent weir.

GeoPure

After completing the installation, allow the maximum rated flow to pass through the separator. Check the water level at the skimmer during maximum flow. Rotate the skimmer until the water level is 1/8" minimum to 1/4" maximum BELOW the skimmer opening.

You can periodically rotate the skimmer down into the oil layer to skim off any accumulated oil. Remember to move it back to its original position so you won't start skimming water.

The separator is now ready for operation.

6.0 SLUDGE REMOVAL

Please consult your local city and state regulatory agency regarding specific requirements on the proper disposal of the sludge generated in your process.

If you need help with the disposal or treatment of the collected sludge, please contact your local GeoPure representative.

Sludge removal is very important to the proper operation of your separator. Draw off the settled sludge regularly. Do not allow it to accumulate.

If left unmaintained, the sludge level will rise to a point where it will interfere with the operation of the Dyna-Pak. Any settled sludge should be drawn off at the beginning or end of each shift. This will prevent any major sludge related maintenance problems.

7.0 MAINTENANCE - EFFLUENT QUALITY

Regularly check the effluent quality of your separator. If you notice any loss in effluent quality, take steps to correct the situation immediately. Some areas to check if your effluent quality has deteriorated are:

1. Have you exceeded the separator's rated flow?
2. Has the operating temperature dropped below or risen above the specified limits?
3. Has the oil you are separating been changed to a different type?
4. Have any different chemicals or surfactants been added to the process that might be forming a chemically stable emulsion?
5. Has the sludge collected to the point where it has begun to blind out the DYNA-PAK coalescing media?
6. Have you introduced an oil attracting suspended solid into the waste stream?
7. Are you pumping into the separator with a pump that is whipping the oil into a mechanically stable emulsion?

Contact GeoPure for any additional information.

8.0 COATING MAINTENANCE

8.1 MOLDED FIBERGLASS INTERIOR AND EXTERIOR SURFACES

All interior surfaces are fabricated of fiberglass reinforced polyester resin consisting of 50% hand-layed fiberglass as a minimum. The entire exterior surface of the separator is covered with a continuous layer of a chemically resistant, ultraviolet stabilized, polyester gelcoat.

If maintained properly the surfaces will last the life of the separator.

8.2 CARBON STEEL INTERIOR SURFACES

All interior surfaces are sandblasted to an SSPC-SP10, near white metal blast and then coated with 2 coats of a self-priming coal tar epoxy paint (12 DMT).

If maintained properly the surfaces will last the life of the separator.

GeoPure Continental Systems & Services · 2300 North West 71st Place
Gainesville, FL 32653-1699

GeoPure

8.3 CARBON STEEL EXTERIOR SURFACES

All exterior surfaces are sandblasted to an SSPC-SP6, commercial blast and then coated with one coat of self-priming epoxy paint (6 DMT).

If maintained properly the surfaces will last the life of the separator.

9.0 ANNUAL MAINTENANCE

NOTE: Drain the separator annually and give it a thorough inspection inside and out. Repair any damaged coatings per the manufacturer's recommendations.

10.0 PERFORMANCE GUARANTEE

GeoPure guarantees that the effluent of its DYNA-PAK coalescing type oil/water separator will contain less than 10 mg/l of oil droplets larger in diameter than stated in your formal proposal (usually 20 to 30 microns) when the following conditions are met:

1. The separator is installed, operated and maintained as specified in the GeoPure installation, operation and maintenance manual.
2. The designed influent flow rate is not exceeded.
3. The operating temperature is not lower than that specified in your formal proposal.
4. The specific gravity of the "water" is not lower than that specified in your formal proposal.
5. The specific gravity of the "oil" is not greater than that specified in your formal proposal.
6. No chemically or mechanically stable emulsions, chemical solutions or surfactants are introduced into the separator.
7. No oleophilic suspended solids are present that would cling to the oil droplets and carry them through the separator (i.e., solids with a specific gravity similar to that of water with oil attracting properties).
8. The sludge is removed on a regular basis in order to prevent the accumulated sludge from migrating up into the coalescing media and blinding out the pack.
9. The separated oil is removed on a regular basis and not allowed to accumulate in the separation chamber so as to reduce the coalescing area.

Maintenance guidelines

TASK	RECOMMENDED MAINTENANCE SCHEDULE
Screen accumulated sludge (rag layer) from surface of separation chamber	DAILY
Remove accumulated sludge from the sludge collection hoppers	AS REQUIRED. Check the sludge sample ports daily for accumulated sludge.
Remove accumulated oil from surface of separator	DAILY
Check position of rotary pipe skimmer	DAILY. See section 5.0 for details

THE ULTRASTRIP
Low Profile Air Stripper from GeoPure

GeoPure's UltraStrip series is the best choice for low profile air strippers with design simplicity, flexibility and high performance.

In GeoPure's units the water and air are contacted in on multiple trays. The water enters at the top and flows across each tray. The air rises through openings in the trays, then bubbles through the water to form "a surface of foam" which provides extreme turbulence and volatilization. Since the water in the UltraStrip flows horizontally across each tray, the required removal efficiency can be achieved by increasing both the number and size of the trays.

Another advantage of UltraStrip units is that air and blower power are effectively utilized since a single air stream passes through every tray before exiting. As a result of minimal air flows, the organic contaminants are concentrated and can be effectively removed by vapor phase carbon or other off-gas treatments.

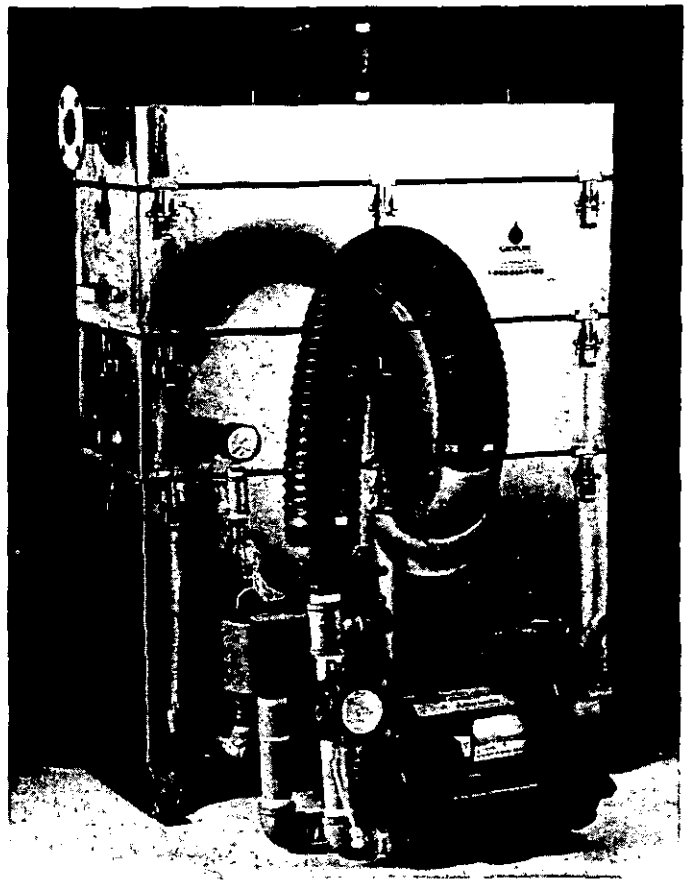

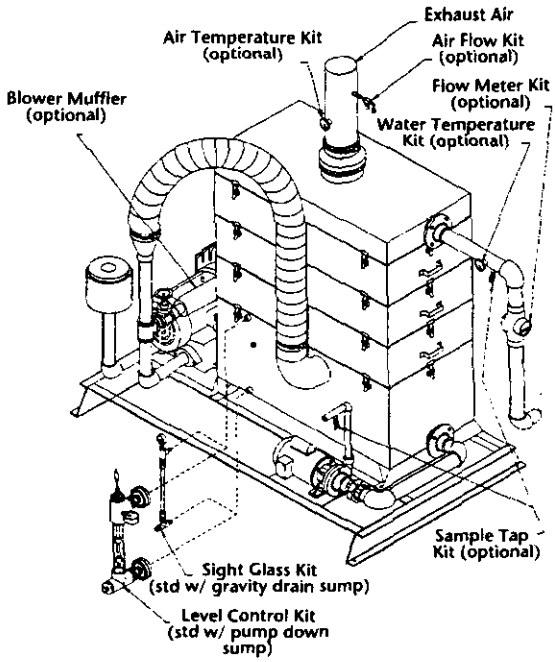

Low tower height produces numerous advantages:

Rapid installation

Easy winterization

Inconspicuous appearance

Easy shipping

Easy maintenance

The UltraStrip unit also reduces the potential for fouling since it contains no packing media and provides an extreme turbulent condition.

GeoPure's UltraStrip units are available with a number of plate configurations, blowers and controls, and can achieve removal efficiency up to 99.99%.

GEOPURE CONTINENTAL
SYSTEMS & SERVICES

Your Partner for a Clean Environment

CORPORATE HEADQUARTERS: 2300 NW 71ST PLACE GAINESVILLE, FL 32653-1699 / 1-800-342-1103 FAX (904) 373-7660

Options

- Explosion-proof controls
- Discharge pump
- Carbon polish
- Off-gas treatment
- Winterized enclosure

Features

- The low air flow and minimal tower height make the unit ideal for off-gas treatment.
- The compact unit can be installed in a few hours.
- Controls include motor starter, level switch, air pressure gauge and air pressure switch.
- The control panel comes with on-off switch for the blower, and alarm lights for high level and low air pressure.
- Computer modeling customizes the system for optimum air flow, number and size of trays.
- The UltraStrip can be easily configured with GeoPure's complimentary equipment into complete, fully-integrated remediation systems.

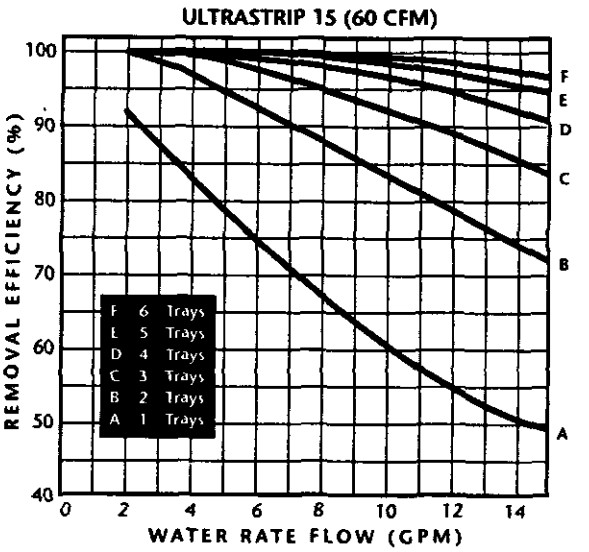

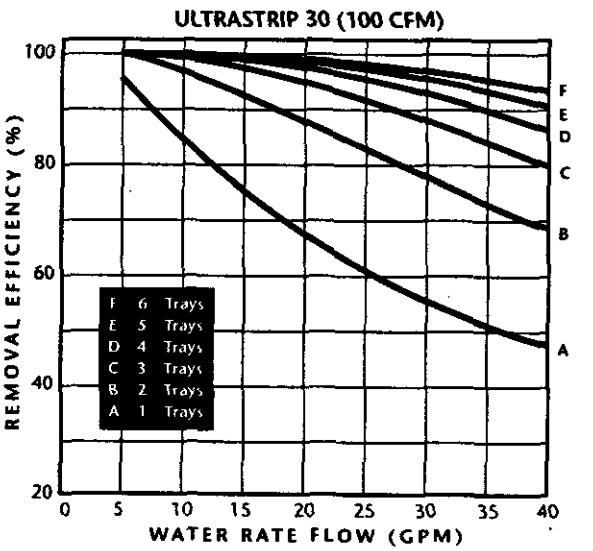

SPECIFICATIONS

UltraStrip Model	Tray Length (ft)	Tray Width (ft)	Height Per Stage (in)	Sump Height (in)	Demister Height (in)	Maximum Height (in)	Liquid Flow (gpm)	Maximum Air Flow (cfm)
15	2	0.75	10	20	18	90	0.5-15	70
30	3	1	10	20	18	90	1-50	150
80	4	2	10	20	18	90	5-100	350
180	6	3	10	20	18	90	10-200	700

SPECIFICATIONS SUBJECT TO CHANGE.

GEOPURE CONTINENTAL
SYSTEMS & SERVICES

UltraStrip Appendix

Acid-Cleaning

Equipment Set-Up

The need for cleaning an UltraStrip unit is determined by an increase in the pneumatic pressure drop and a decrease in the air flow rate. The decrease in air flow rate will result in deterioration of stripping efficiency. This can be caused by the holes in the tray becoming clogged with bacterial or/and inorganic materials. These materials, e.g. calcium, magnesium, iron, and manganese, can easily be removed from the UltraStrip unit with an acid solution.

Acid cleaning of an UltraStrip unit involves a closed loop recirculation of an acid solution between the UltraStrip unit and a holding tank. From past experience, a 3% hydrochloric solution (10 gallons of muriatic acid solution in 100 gallons of clean water) has been found to be effective in cleaning UltraStrip units. The ph of the cleaning solution should be below 1.0. A 50% sodium hydroxide (NaOH) solution is recommended for neutralizing the spent acid solution after the cleaning is accomplished. The following chart shows the recommended minimum volumes of holding tanks and the volumes of acid solutions required for cleaning UltraStrip model. Also given are the minimum required amounts of muriatic acid and sodium hydroxide solutions.

Please notice that the cleaning solution is recommended to fill only 50% of a holding tank. Its purpose is to reduce the chance of splashing the acid solution out of the holding tank.

If the discharge of total suspended solids (TSS) is regulated, a bag filter will be needed for removing the re-precipitated inorganic substances from the cleaning solution after being neutralized. A pore size of less than 1 micron is recommended for the bag filter.

	UltraStrip Model			
	15	30	80	180
Minimum holding tank, volume required (gal's)	50	100	200	400
Recommended volume, cleaning solution (gal's)	25	50	100	200
Minimum required gallons of: muriatic acid	2.5	5.0	10.0	20.0
50% caustic soda	2.5	3.0	6.0	12.0

Safety Precautions for Acid Wash

Check the acid and alkali compatibility of all the materials such as the pump, holding tank, pipes, valves, and flow meter. All the materials constructed in UltraStrip units are acid resistant.

Follow all safety procedures when handling acid and alkali solutions. Wear recommended protective materials as required which may include:

- gloves
- boots
- coveralls
- full-face respirators

Use a proper chemical hand pump when transferring the acid and alkali solutions.

An eye wash and shower must be available at the site and easily accessible.

Prepare lime stone, soda ash, lime, or sodium bicarbonate for neutralizing the acid solution in case of a spill.

Procedure

After the piping has been set up and the required materials have been prepared, the following procedure is recommended:

1. Fill 50% of holding tank with clean water.

2. Add a muriatic solution into the holding tank to make approximately a 3% acid solution (10 gallons of muriatic acid solution in 100 gallons of clean water).

3. Start to recirculate the cleaning solution. A low recirculation flow rate is recommended in order to prevent the UltraStrip unit from a flooding condition. Maximum recirculation flow rates of 5, 10, 20, and 40 GPM are recommended for UltraStrip 15, 30, 80, and 180, respectively. Past experiences have shown that recirculation of about 2 hours will be sufficient for the acid cleaning. After 2 hours of recirculation, the pneumatic pressure drop across the UltraStrip unit should significantly decrease.

4. Neutralize the spent cleaning solution by gradually adding, while recirculating, a 50% caustic soda solution into the holding tank to a ph of around 7.0. Be slow in adding the caustic soda solution since even a small excessive amount can abruptly increase the ph. If this happens you must add the acid solution to re-neutralize the cleaning solution. After neutralization, you should see the dissolved solids re-precipitate in the holding tank if the fouling have been removed form the UltraStrip unit.

5. Discharge the neutralized cleaning solution from the holding tank. The bag filter will be needed if the TSS removal is required by regulation.

6. Rinse the UltraStrip unit by adding clean water into the holding tank with approximately the same volume as the cleaning solution. Recirculate the water for about 15 minutes. Discharge the rinsing water after neutralization. The UltraStrip unit will be ready for normal operation.

7. Do not forget to rinse all equipment and clothing with clean water after using.

Disassembly

Read all installation instructions before beginning disassembly. Contact GeoPure for replacement parts.

A. Prior to disassembly of the unit, turn off the influent pump allow the blower to operate for a few minutes. This will allow contaminated water within aeration plates to be treated as the unit drains.

B. When the effluent flow has completely stopped, turn off the blower and turn the main power disconnects to the off position and lock them out. Be sure that the UltraStrip is completely drained by removing the plug at the bottom of the sump.

C. Disconnect and remove the air discharge stack or ducting from unit. This procedure may not be necessary if space permits removal of the demister section with the stack attached.

D. Disconnect the influent piping. Make sure loose influent piping is adequately supported.

E. Starting with the demister section, unfasten the lever-lock clips and lift off the demister section.

F. Before and during disassembly, it is important to not the placement of the aeration trays. Taking time to familiarize yourself with the UltraStrip unit will make reassembly faster and easier. Alignment of buttons on trays, sump and demister should be noted. Proper assembly of the UltraStrip requires alignment of buttons as shown in Fig. 1.

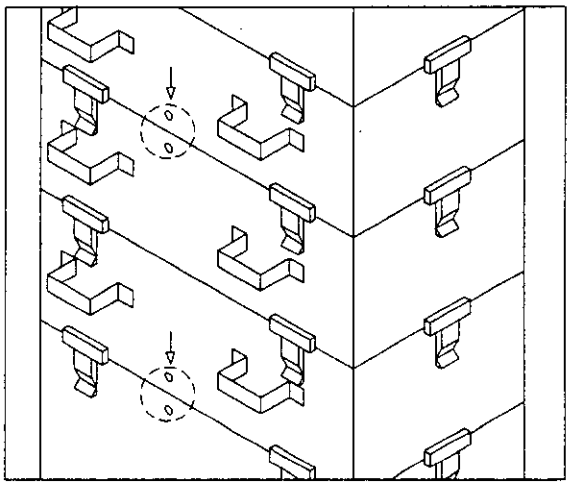

Figure 1 - Proper Alignment of UltraStrip Buttons

G. The unit must always be disassembled piece by piece from the top down. It is recommended that the removed pieces be set on wooden supports, such as a pallet, to avoid damage to the gasket sealing surfaces.

H. Each section must be raised a few inches prior to moving the piece horizontally.

I. Paying special attention to the placement of each aeration tray, remove each tray until only the sump section remains. Again, make note of proper alignment of buttons.

J. Once all aeration trays are removed, check the integrity of the gasket material.

K. When cleaning the demister section and aeration trays, careful not to damage the gaskets. The mist eliminator pad may have to be cleaned with water pressure or cleaning solvent. If this is unsuccessful, the pad must be replaced.

L. The sump section should be cleaned in the same manner. Check the float valve gravity flow system in the sump section (if supplied) for plugging and material deterioration.
Check each tray downcomer valve for scale and bacteria build-up. Clean if necessary.

M. Prior to assembly, make sure the ares that mate with the gasket material are clean and free of foreign matter.

Reassembly

A. To reassemble the unit, follow the disassembly instructions in the reverse order. A light coating of silicone grease on the gasket surface before reassembly will act as an inert gasket sealant and lubricant. DO NOT use any other material for gasket sealant, as it may effect the operation of the UltraStrip unit. If silicone grease or replacement gasket material is not available, contact GeoPure for supplies. Keep in mind that each piece must be put back in the same position and orientation as before disassembly. Improper assembly could cause malfunction or damage to the UltraStrip unit.

B. Connect all inlet and outlet piping, discharge stacks, etc., prior to restarting unit.

C. Whenever possible, use clean, fresh water for system testing after reassembly. Start the blower first. Once the blower is operating, start the influent pump(s) or water flow.

D. After starting the influent pump(s), Check for leaks throughout the system.

Gasket Replacement

A. Disassemble UltraStrip unit, placing trays, gasket sides up, on clean surface. Observe corner pattern of gasket seal (Figure 2)

B. Using a sharp putty knife, remove the old gasket and as much adhesive as possible.

C. Tip trays upside down and remove silicon grease with putty knife, then mineral spirits. Repeat process on demister.

D. Remove remaining gasket fragments, adhesive residue, and leftover silicon grease with

mineral spirits. Change cloths frequently. This should leave the surfaces clean. You must then "scuff" the flange surface as explained in step E.

E. Prepare the flange for new adhesive by "scuffing" the flange surface with a belt sander (40-50 grit belt). Run sander along lengths of flange. Use only light pressure as only a slightly roughened surface is all that is required.

F. Wash the flange area with denatured alcohol. This should remove all traces of mineral spirits or oil and leave the surface clean, dry and dust-free, as required.

G. Cut one set of gaskets (two ends, two sides and one inner piece) 1/2" longer than tray dimensions. (See Figure 2.) **Gasket ends must be square.** Position gaskets strips on a flat surface, smooth sides down, porous sides up.

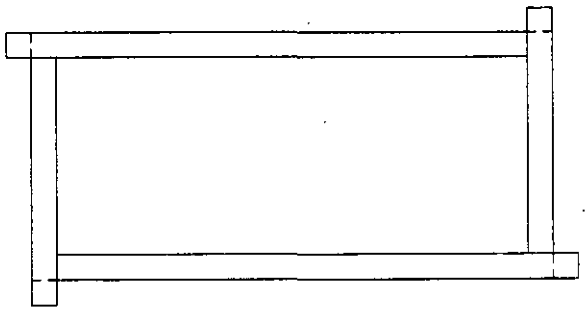

Figure 2 - Gasket Strips

H. Apply a thin, uniform coat of contact adhesive (3M #1357) to porous surface of gasket and tray's flange surface with a small brush such as an acid brush.

I. Carefully position gasket onto flange (adhesive sides together), as shown in Figure 2. **Do not pull or stretch gaskets.** Trim overlaps as shown.

J. Inner Gasket Installation

(Because contact adhesive sets instantly, a special technique is required for installing the inner gasket which must be set between the side gaskets.)

(1) Position inner gasket strip with one end abutting side gasket; the other end overlapping the opposite side gasket (Figure 3). Install abutting end by applying contact adhesive on adjoining edges as shown in Figure 3. Press in place.

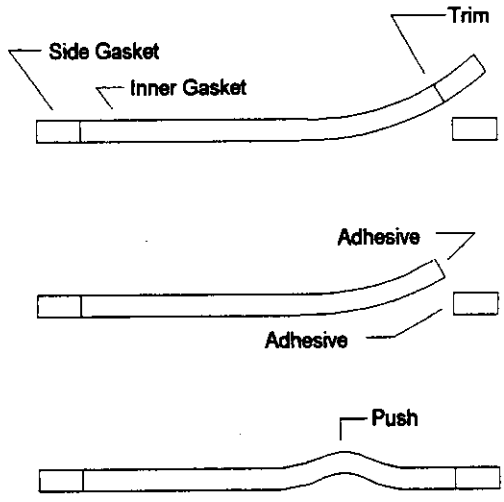

Figure 3- Installing Inner Gasket

(2) Trim overlapping end of inner gasket as shown in Figure 3, and apply adhesive to adjoining edges. Abut joining surfaces and press in place. The gasket material is extremely stretchy and may ripple somewhat, but small ripples can easily be pressed flat.

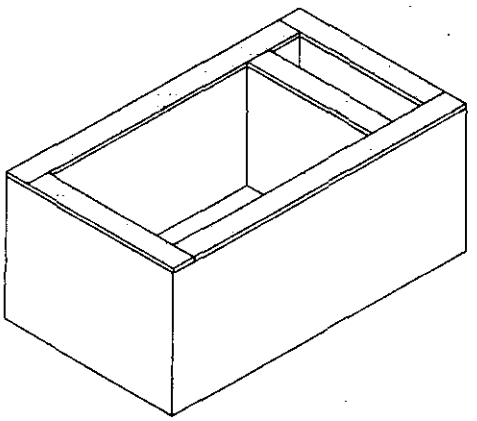

Figure 4 - Trimmed Gasket on Flange

K. Apply a very thin layer of silicone (Dow Corning #111) to smooth side of gasket to strengthen seal between gasket and tray above.

L. Reassemble UltraStrip. (See Reassembly.)

GAST

ISO 9001 CERTIFIED

STANDARD REGENAIR BLOWER
OPERATION AND MAINTENANCE TECHNICAL MANUAL

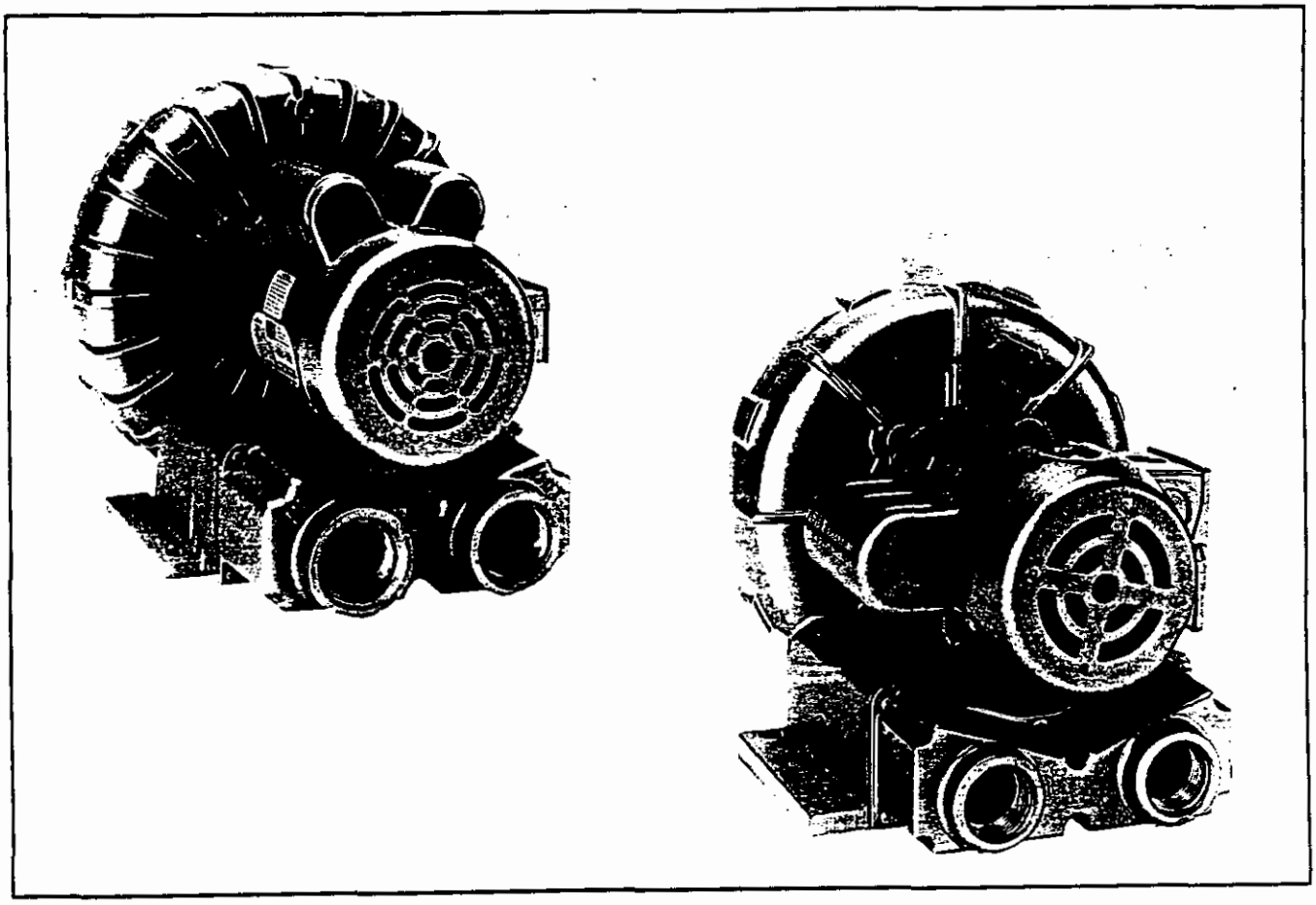

CONTENTS:

KEEP THIS DOCUMENT FOR FUTURE REFERENCE

This is the hazard alert symbol: ⚠ When you see this symbol be aware that personal injury or property damage is possible. The hazard is explained in the text following the symbol. Read the information carefully before proceeding.

The following is an explanation of the three different types of hazards:

⚠ **DANGER** Severe personal injury or death will occur if hazard is ignored.

⚠ **WARNING** Severe personal injury or death can occur if hazard is ignored.

⚠ **CAUTION** Minor injury or property damage can occur if hazard is ignored.

GENERAL INFORMATION

These instructions do not apply to:

1) Blowers without motors, the SDR Series.
2) The M & H Series, model number with M or H as third character.
3) Blowers powered with Explosion Proof Motors.

This blower is only to be used for the purpose of pumping air and under no circumstances be used with any other gases. The blower must not be used for the pumping of fluids, particles, solids, or any substance likely to cause fire or explosion.

⚠**WARNING** Do not pump flammable or toxic gasses or operate the pump in an atmosphere containing them. Severe personal injury can occur if hazard is ignored.

⚠**WARNING** Keep hands or other body parts away from the blower suction. Failure to do so could result in personal injury.

⚠**CAUTION** Required ambient temperature for normal operation should not exceed 40°C (105°F). For higher ambient operation, consult the factory. Failure to do so could result in fire or property damage.

⚠**CAUTION** Blowers may generate heat. To prevent burns, do not touch blower during operation or until unit has cooled.

Blower performance is reduced by lower atmospheric pressure found at high altitudes, consult the factory or a Gast distributor for details.

INSTALLATION

IMPORTANT: Remove any plastic caps before starting blower. Any foreign material (burrs, chips, welding drops, slag, pipe cuttings, excess sealants, sand, lime, etc.) must be removed, or filtered out. Any such material, no matter how small, that enters the blower can damage it. Clean out new plumbing before attaching to blower inlet.

WIRING

⚠**WARNING** Electrical shock or fire hazard can result from incorrect wiring. Wiring must conform to all required safety codes and be installed by a qualified person. Grounding is required.

Fuses protect the wiring against short circuits. On motors without Automatic restart, thermal protection or magnetic over-current cut-outs are absolutely necessary to prevent motor overloading. This is due to the following, one phase in a three phase electric system, high starting frequency, or jammed blower. Required power will rise as differential pressure increases. For motor wiring diagram see inside of the conduit box or motor nameplate. Large motors may have two nameplates, one for 50Hz, the other for 60Hz. Be sure that all dual-voltage motors are wired for your power source.

MOUNTING THE PUMP

The single impeller blower may be installed in any orientation as long as the flow of cool, ambient air over the pump is not blocked. The dual impeller models must be mounted with the shaft horizontal.

The flow of cooling air over the blower and motor must not be blocked. It is very important to install the blower in a well ventilated area where the temperature does not exceed 40°C. Check this temperature after the blower has been running for an hour.

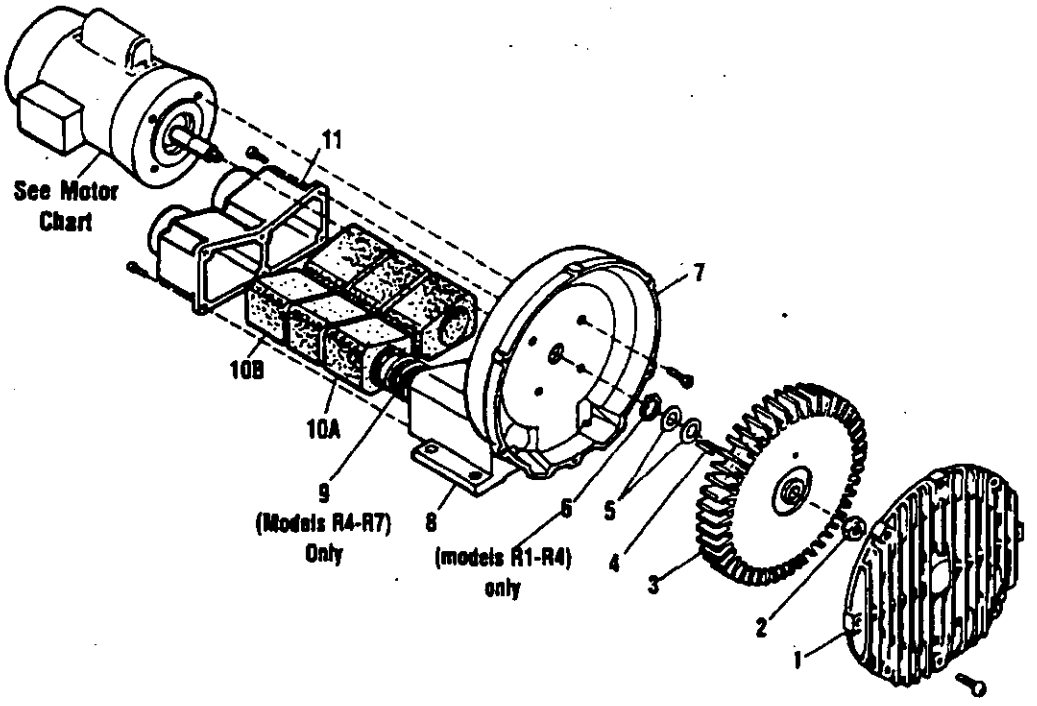

PARTS ORDERING INFORMATION

Ref. No.	Description	Part Qty	R1102	R2103 R2303A	R3105-1 R3305A-1	R3105-12	R4110-2 R4310A-2	R4P115 R4P315A
1	Cover	1	AJ101A	AJ101B	AJ101C	AJ101C	AJ101D	AJ101L
2	Stopnut	1	BC187	BC187	BC181	BC181	BC181	BC181
3	Impeller	1	AJ102A	AJ102BQ	AJ102C	AJ102CA	AJ102D	AJ102L
4	Square Key	1	AH212C	AH212	AB136A	AB136A	AB136D	AB136
5	Shim Spacer	As Req.	AJ132	AE686-3	AJ109	AJ109	AJ109	AJ109
6	Retaining Ring	1	AJ145	AJ145	AJ149	AJ149	AJ149	-
7	Housing	1	AJ103A	AJ103BQ	AJ103C	AH193C	AJ103DR	AJ103L
8	Muffler Box	1	-	-	-	-	-	AJ113DQ
9	Spring	2	-	-	-	-	AJ113DR	AJ113DQ
10A	Foam	As Req.	(4)AJ112A	(4)AJ112B	(4)AJ112C	(4)AJ112C	(4)AJ112DS	AJ113ER
10B	Foam	2	-	AJ112BQ	AJ112CQ	AJ112CQ	AJ112DR	-
11	Muffler Extension	1	AJ106A	AJ106BQ	AJ106CQ	AJ106CQ	AJ106DQ	AJ106FR

Parts listed are for stock models. For specific OEM models consult the factory.
When corresponding or ordering parts, please give complete model and serial numbers.

PARTS ORDERING INFORMATION

Ref. No.	Description	Part Qty	R5325A-2 R5125-2	R6350A-2 R6335A-2	R6P335A	R6P355A	R7100A-2	R7P3160M R7S3160M
1	Cover	1	AJ101EQ	AJ101FB	AJ101K	AJ101KA	AJ101G	AJ101G
2	Stopnut	1	BC181	BC181	BC181	BC182	BC183	BC183
3	Impeller	1	AJ102E	AJ102FR	AJ102K	AJ102KA	AJ102GA	AJ102GA
4	Square Key	1	AB136	AB136	AB136	AB136	AC628	AC628
5	Shim Spacer	As Req.	AJ109	AJ109	AJ109	AJ169	AJ110	AJ110
6	Retaining Ring	1	-	-	-	-	-	-
7	Housing	1	AJ103EQ	AJ103FQ	AJ103K	AJ103KA	AJ103GA	AJ103GA
8	Muffler Box	1	-	-	AJ104K	AJ104K	AJ104GA	-
9	Spring	2	AJ113DQ	AJ113FQ	AJ113FQ	AJ113FQ	AJ113G	-
10A	Foam	As Req.	(6)AJ112ER	(6)AJ112FC	(8)AJ112K	(8)AJ112K	(8)AJ112GA	-
10B	Foam	2	-	-	-	-	-	-
11	Muffler Extension	1	AJ106EQ	AJ106FR	-	-	-	-

Parts listed are for stock models. For specific OEM models consult the factory.
When corresponding or ordering parts, please give complete model and serial numbers.

Once the blower is in operation, check the following:

-Working pressure and vacuum values.

-Relief valve pressure or vacuum setting, adjust if needed.

-Measure motor current and compare with motor name plate data.

-Rated electrical overload cut-out.

-Check the ambient and discharge air temperatures to be sure they do not exceed allowed values one hour after starting. Exhaust Air should not exceed 230° F for all blowers except; R6PS and R7S models.

MAINTENANCE and INSPECTION

⚠**WARNING** Power must be de-energized and disconnected before servicing. Be sure all rotating parts have stopped. Electric shock or severe cuts can result if hazard is ignored.

The noise absorbing foam used in mufflers needs to be periodically replaced. The electric motor and blower also need periodic cleaning to remove accumulated dust & dirt. If they are not cleaned, this can result in excessive vibration, an increase in temperature, or can reduce the service life of the blower. Initial inspection is suggested at 8000 hours, then the user should deter-mine the frequency.

An increase in the differential pressure across an inlet filter indicates its getting clogged. Clean the inlet air filter as often as needed, blowing down against the current to clean it. Change the cartridge when cleaning no longer gets the cartridge clean. A dirty cartridge causes a high intake resistance resulting in an increase of differential pressure, absorbed power, and working temperature.

The motor bearings of small motors (Less than $5^1/_2$ HP,refer to motor nameplate), are greased for long life. Large motors ($5^1/_2$ HP or larger, refer to 60 Hz motor nameplate), are equipped with alemite grease fittings. To relubricate these bearings clean tip of grease gun and apply the grease to the fitting. Use one or two strokes of Shell Dolium R grease.

Gast will not guarantee a field rebuilt pump. If repairs are needed contact or send blower to a Gast authorized service facility .

TROUBLESHOOTING GUIDE

SYMPTOM	POSSIBLE DIAGNOSIS	POSSIBLE REMEDY
Abnormal Sound	Impeller damaged or contaminated by foreign material	Replace or clean impeller; install adequate filtration
Increase in Sound	Foreign material or heat can destroy muffler foam	Replace foam muffler elements, filter foreign material
Blown Fuse	Electrical wiring problem	Have qualified person check that impeller turns, check fuse, wiring diagram, or wiring capacity
Unit very hot	Running at too high a pressure or vacuum	Install a relief valve and pressure or vacuum guage

Motor Bearing Re-Lubrication

(5 1/2 HP or larger)

Hours of Service per year	Suggested Relubrication Interval
5,000	3 years
Continual Normal Application	1 year
Seasonal service (motor idle for 6 mos. or more)	1 year at beginning of season
Continuous-high ambients, dirty or moist applications	6 months

Strong forced ventilation is often needed for the larger blowers. In vacuum service the hot discharge air of larger blowers, must be plumbed away to avoid overheating the room or enclosure where the blower is located. Discharge excess air into atmosphere, through a relief valve.

ROTATION

The blower should only rotate clockwise as viewed from the motor side. This is marked with an arrow on most casting. Proper rotation can be confirmed by checking air flow at the IN and OUT ports. On blowers powered by a 3 phase motor, rotation can be reversed by changing any two of the power lines.

PLUMBING

Connect motor and check direction of rotation before connecting plumbing. The threaded pipe ports are designed as connection ports only and will not support the plumbing. Be sure to use the same or larger size pipe and fittings to prevent air flow restriction and overheating of the blower.

⚠**CAUTION** Attach blower to solid surface before starting, to prevent injury or damage from unit movement.

When installing plumbing, be sure to use a small amount of pipe thread lubricant. This protects the threads in the aluminum blower. When installing two blowers in parallel, use plumbing two whole pipe sizes larger in diameter than that of the blower.

ACCESSORIES

⚠**CAUTION** Blower must be installed with a proper sized inlet filter, gauge, and relief valve. Failure to do so may damage blower. Consult the factory or see a Gast distributor for recommendations.

Keep in mind filters progressively increase losses, due to clogging. Install a vacuum gauge to monitor filter restriction. Install a relief valve to avoid overloading of large blowers, caused by changes in pressure or vacuum.

Do not install check valves that close with a strong spring due to their large pressure loss. We recommend the check valves listed in the accesssory section (page 6). They have minimal pressure drop, positive sealing, and are resistant to the high discharge temperatures of large blowers.

OPERATION

⚠**CAUTION** Avoid running blowers larger than R4 size, with no air flow through them. Protect with Gast recommended pressure or vacuum relief valve. Failure to do so will damage the blower.

⚠**WARNING** Solid or liquid material exiting the blower or piping can cause eye or skin damage. Keep away from air stream.

⚠**WARNING** Some of these models may exceed 85 dB(A). When in close proximity to these models hearing protection is required. See Technical Data Sheet (if provided), for specific model(s).

Do not exceed maximum pressure or vacuum capabilities marked on data label of unit.

Fit correct sized pipes and choose accessories that reduce to a minimum air friction load loss. Do not throttle discharge or suction pipe to reduce capacity. Throttling increases differential pressure, which consequently increases power absorption and working temperature. When the blower is ran at duties above 125mbar (50" H_2O) metal pipe may be required for the hot exhaust air.

⚠**CAUTION** Air temperature increases when passing through the blower. Outlet piping can cause burns. Access to these hot temperature areas should be guarded, limited, or marked "HOT".

RECOMMENDED ACCESSORIES

Discription	R1	R2	R3	R4	R5	R6 R6P	R6PS	R7
Inlet Pressure Filter	AJ126B	AJ126B	AJ126C	AJ126D	AJ126D	AJ126F	AJ126G	AJ126G
Replacement Element (Pressure)	AJ134B	AJ134B	AJ134C	AJ134E	AJ134E	AG340	AJ135A	AJ135A
Inline Vacuum Filter	AJ151A	AJ151B	AJ151C	AJ151D	AJ151E	AJ151G	AJ151H	AJ151H
Replacement Element (Vacuum)	AJ135D	AJ135E	AJ135E	AJ135E	AJ135F	AJ135G	AJ135C	AJ135C
Muffler	AJ121B	AJ121B	AJ121C	AJ121D	AJ121D	AJ121F	AJ121F	AJ121G
Horizontal Swing Type Check Valve	AH326B	AH326B	AH326C	AH326D	AH326D	AH326F	AH326F	AH326G

Pressure/Vacuum Gauges

- Pressure Gauge, **Part# AJ496**, $2^5/_8$" Dia., $^1/_4$" NPT, 0-60in. H_20 and 0-150 mbar
- Pressure Gauge, **Part# AE133**, $2^5/_8$" Dia., $^1/_4$" NPT, 0-160in. H_20 and 0-400 mbar
- Pressure Gauge, **Part# AE133A**, $2^5/_8$ Dia., $^1/_4$" NPT, 0-200in. H_20

- Vacuum Gauge, **Part# AJ497**, $2^5/_8$" Dia., $^1/_4$"NPT, 0-60in. H_20 and 0-150mbar
- Vacuum Gauge, **Part# AE134**, $2^5/_8$" Dia., 1/4"NPT. 0-160in. H_20 and 0-400 mbar

Pressure/Vacuum Relief Valve

- Pres/Vac Relief Valve, **Part# AG258**, $1^1/_2$" NPT, Adjustable 30-170 in. H_20, 200 cfm max
- Silencer for Relief Valve, **Part# AJ121D**

YOUR WARRANTY

REGARDLESS OF CAUSE, if a product you buy from this catalog does not work right, Gast will repair or replace it once, at no charge, for up to one year from the date of shipment from the factory.
In the course of repair or replacement, Gast may send you written recommendations on how to prevent a problem from happening again. Gast reserves the right to withdraw this warranty if you do not follow these recommendations. Customer is responsible for freight charges both to and from Gast in all cases.
This warranty does not apply to electric motors, electrical controls, and gasoline engines, which Gast obtains from other manufacturers. A motor or engine carries only the warranty of the company that makes it.

THIS WARRANTY IS EXCLUSIVE AND IS IN LIEU OF ALL OTHER WARRANTIES, WHETHER WRITTEN, ORAL OR IMPLIED, INCLUDING THE WARRANTY OF MERCHANTABILITY AND OF FITNESS FOR ANY PARTICULAR PURPOSE. GAST'S LIABILITY IS IN ALL CASES LIMITED TO THE REPLACEMENT PRICE OF ITS PRODUCT. GAST SHALL NOT BE LIABLE FOR ANY OTHER DAMAGES, WHETHER CONSEQUENTIAL, INDIRECT, OR INCIDENTAL, ARISING FROM THE SALE OR USE OF ITS PRODUCTS.

Gast's sales personnel may modify this warranty, but only by signing a specific, written description of any modifications.

AUTHORIZED SERVICE FACILITIES

Gast Manufacturing Corp
2300 Highway M-139
Benton Harbor, MI 49023
TEL: 616-926-6171
FAX: 616-927-0808

Gast Manufacturing Corp
505 Washington Ave
Carlstadt, NJ 07072
TEL: 201-933-8484
FAX: 201-933-5545

Brenner Fiedler & Assoc.
13824 Bentley Place
Cerritos, CA 90701
TEL: 800-843-5558
TEL: 310-404-2721
FAX: 310-404-7975

Gast Manufacturing Co., Ltd
Beech House, Knaves Beech
Business Centre, Loudwater
High Wycombe, Bucks HP 10 9SD
England
TEL: 44 628 532600
FAX: 44 628 532470

Wainbee Limited
215 Brunswick Blvd.
Pointe Claire, Quebec
Canada H9R 4R7
TEL: 514-697-8810
FAX: 514-697-3070

Wainbee Limited
5789 Coopers Avenue
Mississauga, Ontario
Canada L4Z 3S6
TEL: 416-213-7202
FAX: 416-213-7207

Japan Machinery Co. Ltd.
Central PO Box 1451
Tokyo, 100-91 Japan
TEL: 81-3-3573-5421
FAX: 81-3-3571-7865
or: 81-3-3571-7896

NOTE: General Correspondence should be sent to–
Gast Manufacturing Corp.
P O Box 97
Benton Harbor, MI 49023-0097

Dwyer

SERIES 1800

Low Differential Pressure Switches for General Industrial Service

Compact, economically priced switches in 8 standard ranges. Set points from 0.15" to 85" W.C. Repetitive accuracy within 2%. U.L. and C.S.A. listed, F.M. approved.

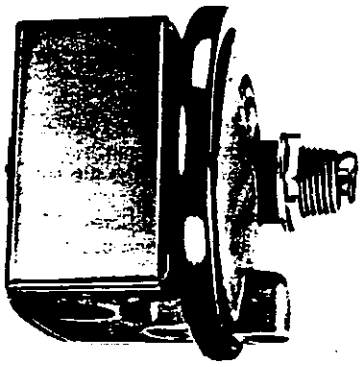

Model 1823 pressure switch. U.L. and C.S.A. listed, F.M. approved.

Series 1823 pressure switch. Conduit enclosure removed to show electric switch.

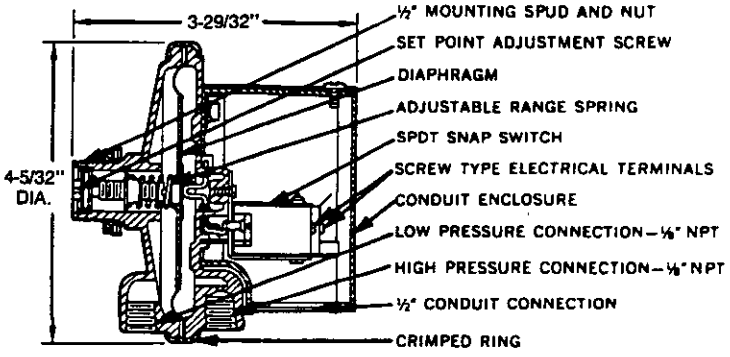

Construction and dimensions. Series 1823 pressure switches.

One of our most popular pressure switches. Combines small size and low price with 2% repeatability for enough accuracy for all but the most demanding applications. Set point adjustment inside the mounting spud permits mounting switch on one side of a wall or panel with adjustment easily accessible on the opposite side.

U.L. and C.S.A. listed, F.M. approved.

***Model 1823 shown; (1823 replaces 1820, 1821 and 1822 which are similar).**

PHYSICAL DATA

Temperature limits: −30ºF for dry air or gas to 180ºF.

Maximum surge pressure: 25 psig

Rated pressure: 10 psig.

Pressure connections: 1/8" NPT.

Electrical rating: 15 amps, 120-480 volts, 60 Hz. A.C. Resistive 1/8 H.P. @ 125 volts, 1/4 H.P. @ 250 volts, 60 Hz A.C. Derate to 10 amps for operation at high cycle rates.

Wiring connections: 3 screw type, common, normally open and normally closed.

Set point adjustment: Screw type inside mounting spud.

Housing: Aluminum die casting. Steel fittings zinc plated, dichromate dipped for 200 hour salt spray test.

Diaphragm: Molded silicone rubber with aluminum support plate

Calibration Spring: Stainless steel.

Mounting spud: 1/2" pipe thread

Weight: 1 lb., 5 oz.

Installation: Diaphragm vertical.

Environmental (MIL) Switch

Unlisted Model 1820 can be furnished with special snap switch sealed against the environment for high humidity and/or for government applications. Similar to standard Model 1823 except dead band is slightly greater. Specify Model 1820 (Range No.) "MIL" in ordering.

Weatherproof Enclosure

16 ga. steel enclosure for unusually wet or oily conditions. Withstands 200 hour salt spray test. Gasketed cover. Weight 5½ lbs. Switch must be installed at factory. Specify "WP" in addition to switch catalog number.

Explosion-Proof Housing

Cast iron base and aluminum dome cover. Approximate weight 7½ lbs. Specify "EXPL" in addition to switch catalog number.

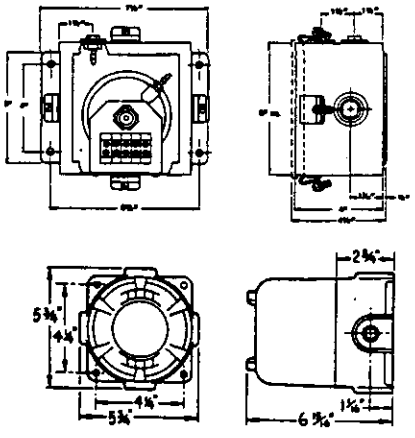

SERIES 1823 SWITCHES: OPERATING RANGES AND DEAD BANDS. U.L. and C.S.A. Listed, F.M. Approved.

Model Number	Operating Range Inches, W.C.	Approximate Dead Band	
		At Min. Set Point	At Max. Set Point
1823-0	0.15 to 0.5	0.06	0.06
1823-1	0.3 to 1.0	0.08	0.08
1823-2	0.5 to 2.0	0.10	0.12
1823-5	1.5 to 5.0	0.14	0.28
1823-10	2.0 to 10	0.18	0.45
1823-20	3 to 22	0.35	0.70
1823-40	5 to 44	0.56	1.1
1823-80	9 to 85	1.3	3.0

Suggested Specification

Differential pressure switches shall be diaphragm operated with 4" diaphragm to actuate a single pole double throw snap switch. Motion of the diaphragm shall be restrained by a calibrated spring that can be adjusted to set the exact pressure differential at which the electrical switch will be actuated. Motion of the diaphragm shall be transmitted to the switch button by means of a direct mechanical linkage. Switches shall be Dwyer Instruments, Inc. Catalog No. 1823-____ for the required operating ranges.

How to Order: See price list, Bulletin S-26.

SERIES 1823 DIFFERENTIAL PRESSURE SWITCHES

Specifications — Installation & Operating Instructions — Parts List

INSTALLATION

1. Select a location free from excessive vibration where oil or water will not drip upon the switch. See special housings for unusual conditions.
2. **While not required, positioning the pressure connections down is recommended.** Mount the switch with the diaphragm in a vertical plane. Switch must be recalibrated for each change in operating position.
3. Connect switch to source of pressure differential. Metal tubing with 1/4" O.D. is recommended but any tubing system which will not restrict the air flow is satisfactory. Note that the low pressure connection may be made to the 1/2" spud at the back of the switch if desired. If so connected, drill 1/16" diameter holes in the Spring Retainer flange (PN 1823-309) and the head of Adjustment Screw (PN 1823-289) to provide opening to the switch interior and plug the other low pressure connection.
4. Electrical connections to the standard single pole, double throw snap switch are provided by means of screw terminals marked "common", "norm open", and "norm closed". The normally open contacts close and the normally closed contacts open when pressure increases beyond the set point.
5. Switch loads should not exceed the maximum specified current rating of 15 amps resistive. Switch capabilities decrease with high load inductance or rapid cycle rates. Whenever an application involves one or more of these factors, the user may find it desirable to limit the switched current to 10 amps or less in the interest of prolonging switch life.

ADJUSTMENT

1. If the switch has been factory preset, check the set-point before placing in service to assure it has not shifted in transit.
2. If switch has not been preset or it is desired to change the set point, observe the following procedure:
   a. To adjust the set point turn the slotted Adjustment Screw (PN 1823-289) clockwise to increase the set point and counter-clockwise to decrease the set point.
   b. The following is a recommended procedure for calibrating or checking calibration: Use a "T" assembly with three rubber tubing leads, all as short as possible and the entire assembly offering minimum flow restriction. Run one lead to the pressure switch, another to a manometer of known accuracy and appropriate range, and apply pressure through the third tube. Make final approach to the set point slowly. Note that manometer and pressure switch will have different response characteristics due to different internal volumes, lengths of tubing, oil drainage, etc. Be certain switch is checked in position it will assume in use, i.e., vertical, horizontal, etc.

CROSS SECTIONAL VIEW

Part No.	Name
1823-005	*Conduit Enclosure* (1)
1823-022	Switch Body Assembly — Aluminum die casting with silicone diaphragm and aluminum support plate. (1)
1823-035	"O" Ring 1/2" x 5/8" (1)
1823-077	Mounting Nut — 1/2" Electrical Nut — Steel (1)
1823-078	Conduit Cover Assembly (1)
1823-091	Conduit Enclosure Fasteners — Tinnerman Speed Nut (4)
1823-093	Retaining Ring (1)
1823-109	Calibration Spring — Stainless Steel (1)
1823-199	Insulation Shield — 1/32" Thick Hard Fibre (1)
1823-200	Switch Button — Nylon (1)
1823-242	Snap Switch — SPDT (1)
1823-266	Mounting Washer — 1-5/32" O.D. x .844" I.D. — Steel (2)
1823-289	Calibration Adjustment Screw (1)
1823-309	Calibration Spring Retainer — Brass (1)
1823-490	Switch Bracket — Steel (1)
1823-1H	#6-32 x 1 Steel Screw #6L Brass Washer #6-32 Lock Nut
1823-2H	#6-32 x 5/16" Steel Screw

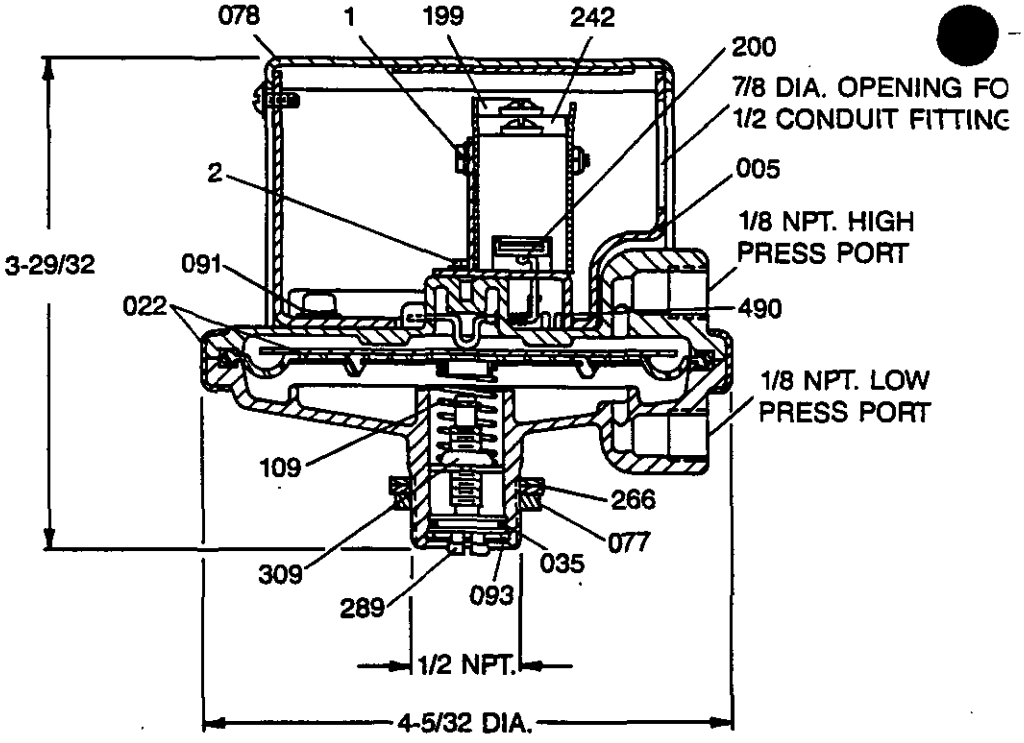

When corresponding with the factory regarding 1800 series switch problems, please refer to the call-out numbers in this view to assure proper identification. Be sure to include the operating range and any optional features. Field service is not recommended. Contact the factory for service information.

Litho in U.S.A. 1/92

F.R. No. 24-440256-00

SOLBERG™

SMALL FILTERS

F Series
1/4" to 3" MPT
Up to 300 CFM
Complete Assemblies

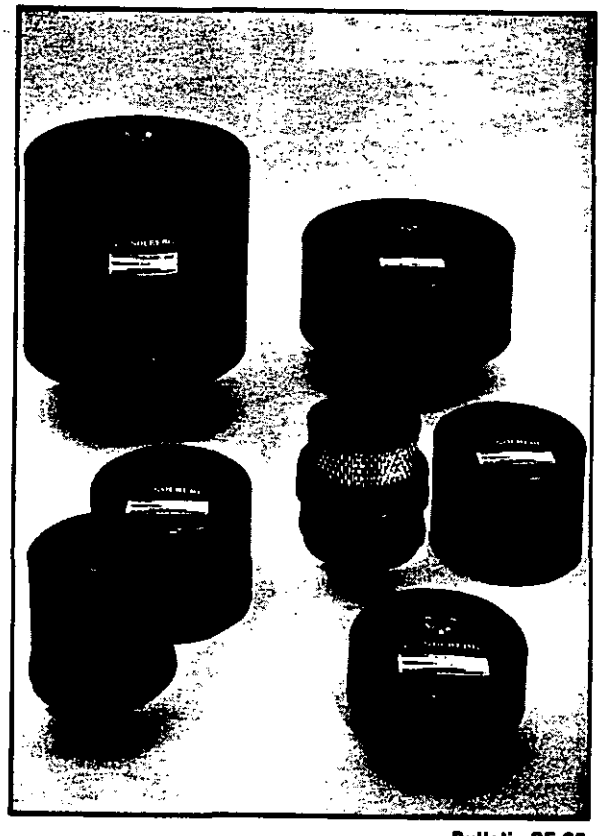

Bulletin SF-30

SMALL FILTERS

F Series
1/4" to 3" MPT
Up to 300 CFM
Complete Assemblies

Since 1968 Solberg has been manufacturing quality OEM and industrial filters for air compressor, blower and vacuum applications. By pioneering many filter manufacturing techniques and building their own production machinery, Solberg is fulfilling their commitment of continual product improvement and prompt response to customer needs.

The Solberg line includes most all sizes of inlet, inline, and exhaust system filters and elements, filter silencers, oil mist filters, high temperature filters and more. There is a choice of media to suit specific duty requirements. As the filter specialist, Solberg can also provide reliable products for individual needs and unique filter applications. Ask for an engineering evaluation of your requirements.

F-19P-125

- Connection size; 125 = 1¼"; 250 = 2½";
- Element part #; Odd #'s = Polyester, Even #'s = Paper, Even #'s + s = Wire Mesh. P = Polyurethane foam pre-filter included.
- F denotes Filter without Silencer design.

SMI MODEL NUMBERS - F

 W/Polyester Element	 W/Paper Element
F-15-050	F-14-050
F-15-075	F-14-075
F-15-100	F-14-100
F-19P-100	F-18P-100
F-19P-125	F-18P-125
F-19P-150	F-18P-150
F-31P-200	F-30P-200
F-231P-200	F-230P-200
F-31P-250	F-30P-250
F-231P-250	F-230P-250
F-231P-300	F-230P-300

SOLBERG™

APPLICATIONS

- Blowers
- Air Compressors
- Fans
- Hydraulic breathers
- Engines

FEATURES

- Fully drawn weatherhood - no welds to rust or vibrate apart
- Low entrance velocity between base and cover minimizes pressure drop
- Center yoke bracket located for minimal flow restriction

NORMAL FLOW CURVE

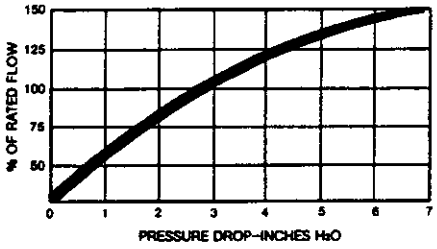

- Durable heavy gauge base with low pressure drop pipe design
- Durable carbon steel construction with baked enamel finish

OPTIONS (Inquiries Encouraged)

- Large sizes available
- Various elements available - See Element Bulletin
- 1/8" & 1/4" FPT tap holes for differential pressure guages
- Stainless steel or epoxy coated housings
- Hot dipped galvanized housings
- Special connections

W/Wire Mesh Element	EFFECTIVE SURFACE AREA OF ELEMENT IN SQUARE FEET		APPLICATION CFM PULSATING FLOW	APPLICATION CFM CONTINUOUS FLOW	MPT Connection	Approx. Shipping Wt. Lbs.	DIMENSIONS		
			Reciprocating Compressors	Fans, Blowers, Compressors (Rotary, Centrifugal, Screw)			A	B	C
	Polyester	Paper							
F-14S-050	.5	.9	10	10	1/2"	1.5	4"	1-1/2"	6"
F-14S-075	.5	.9	20	20	3/4"	1.7	4"	1-1/2"	6"
F-14S-100	.5	.9	20	30	1"	1.9	4"	1-1/2"	6"
F-18S-100	1.5	3.0	35	35	1"	2.9	6-1/2"	1-1/2"	6"
F-18S-125	1.5	3.0	60	80	1-1/4"	3	6-1/2"	1-1/2"	6"
F-18S-150	1.5	3.0	60	80	1-1/2"	3.1	6-1/2"	1-1/2"	6"
F-30S-200	2.3	5.7	60	135	2"	4.7	7-1/4"	2-1/4"	7-3/4"
F-230S-200	4.5	10.9	135	135	2"	12	12-1/4"	2-1/4"	10"
F-30S-250	2.3	5.7	80	195	2-1/2"	5.5	7-1/2"	2-1/2"	7-3/4"
F-230S-250	4.5	10.9	195	195	2-1/2"	13	12-1/2"	2-1/2"	10"
F-230S-300	4.5	10.9	300	300	3"	14	13"	3"	10"

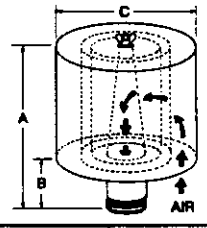

REPLACEMENT ELEMENTS

F Series
1/4" to 3" MPT
Up to 300 CFM

POLYESTER

Dust Removal efficiency of polyester media at face velocity of:

15 cfm/ft²-media ——————
30 cfm/ft²-media .....
45 cfm/ft²-media - - - - - - - - - - - - - - -

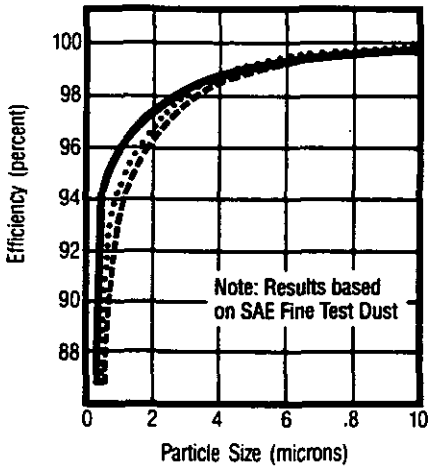

- High temperature plastisol endcaps
- Reinforced with epoxy coated steel wire on both sides of polyester
- Nominally 99+% efficient at 10 microns
- Washable - lukewarm water and mild detergent
- Dust loading capacity is increased 40-50% with *polyurethane prefilter*

ADVANTAGES

- Less maintenance, longer life
- More durable
- Moisture resistant
- Handles hot air and oil mist from unload cycle of reciprocating compressor

PAPER

Dust Removal efficiency of paper media at face velocity of:

10 cfm/ft²-media ——————
15 cfm/ft²-media .....
20 cfm/ft²-media - - - - - - - - - - - - - - -

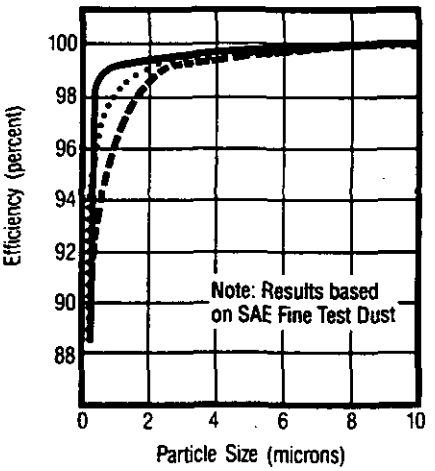

- Plastisol endcaps
- Heavy duty industrial strength paper
- Nominally 99+% efficient at 10 microns
- Reinforced with heavy gauge galvanized expanded metal
- Dust loading capacity is increased 40-50% with polyurethane prefilter

ADVANTAGES

- Less expensive
- More surface area per given size
- Higher efficiency

Influence of Face Velocity on Dust Holding Capacity

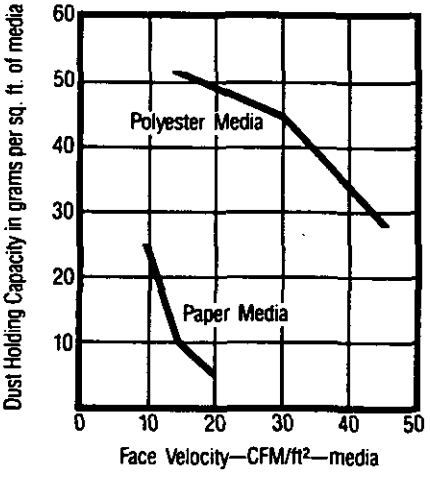

NOTE

Additional interchangeable elements listed In Element Brochure EL-10

P = Polyurethane Prefilter

SMI ELEMENT NUMBERS			Flow CFM	EFFECTIVE SURFACE AREA IN SQUARE FEET		DIMENSIONS		
Polyester	Paper	Wire Mesh		Polyester	Paper	I.D.	O.D.	HT
09	08	08S	15	.25	.45	1-1/8"	2-1/4"	2-1/4"
15	14	14S	30	.50	.90	3"	4-3/8"	2-5/16"
19P	18P	18S	100	1.5	3.0	3"	4-3/8"	4-3/4"
31P	30P	30S	195	2.3	5.7	3-5/8"	5-3/4"	4-3/4"
231P	230P	230S	300	4.5	10.9	3-5/8"	5-3/4"	9-1/2"

SOLBERG Manufacturing, Inc.
1151 West Ardmore Ave., Itasca, IL 60143-1387
1-800-451-0642 (Illinois: 708-773-1363)
Fax: 708-773-072

USERS MANUAL | EM228-1U

idec

MICRO-1

MICRO PROGRAMMABLE CONTROLLER

USERS MANAUAL

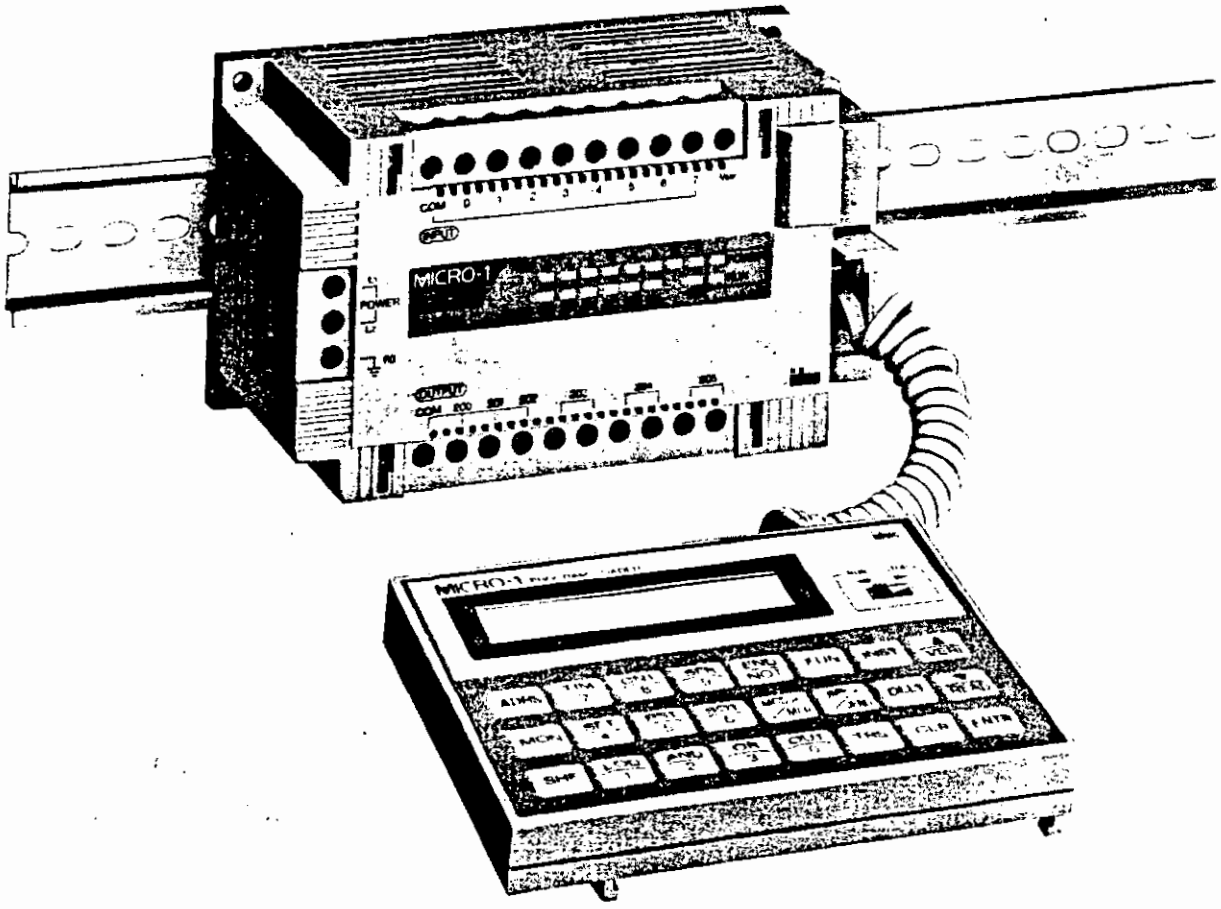

IDEC CORPORATION

WARNING

The application of this product requires expertise in the design and programming of control systems. Only persons with such expertise should be allowed to program, install, alter and apply this product. Potential bodily injury, death or equipment damage could result if the product is improperly applied to any equipment application.

MICRO PROGRAMMABLE CONTROLLER

MICRO-1

USERS MANUAL

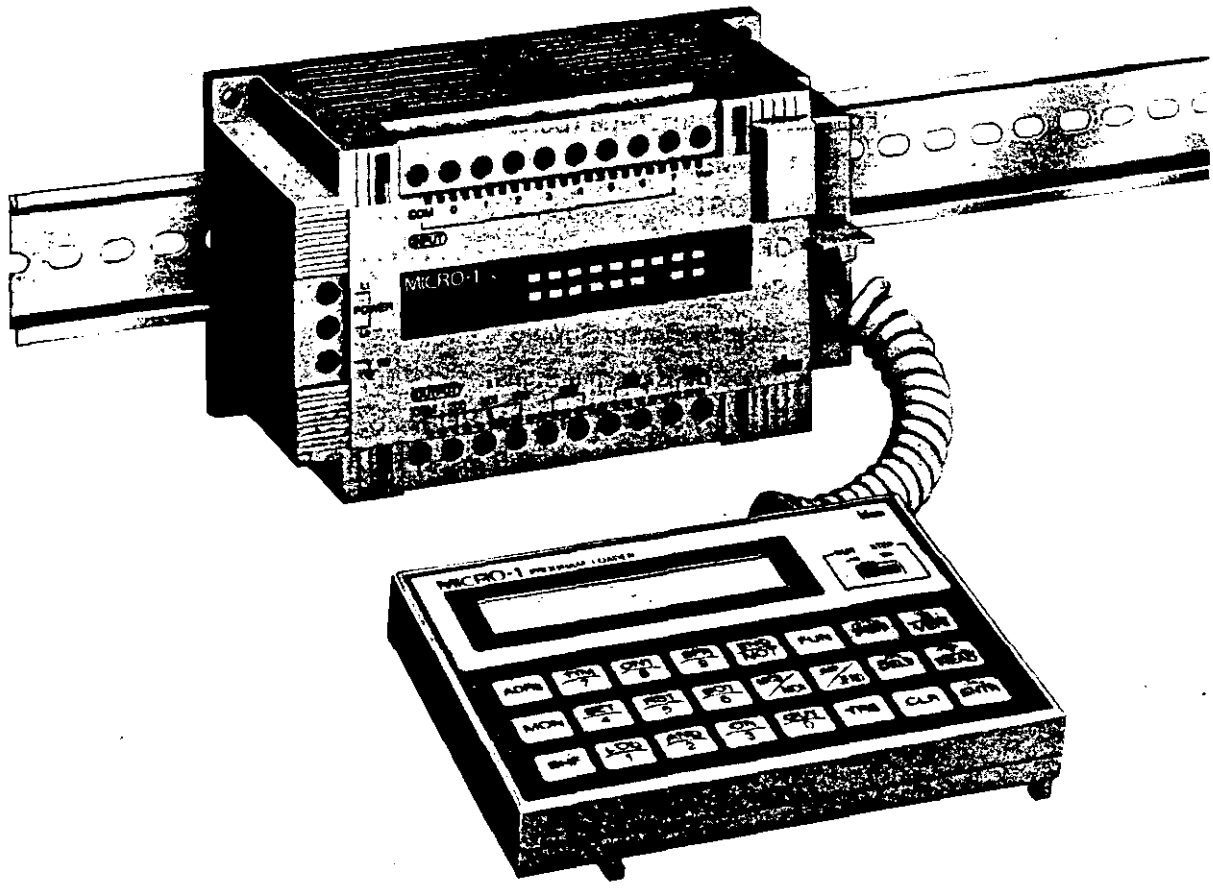

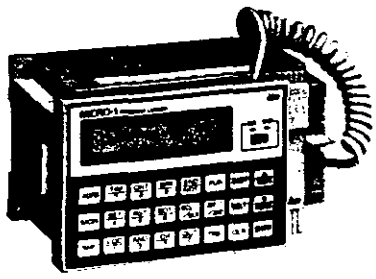

CONTENTS

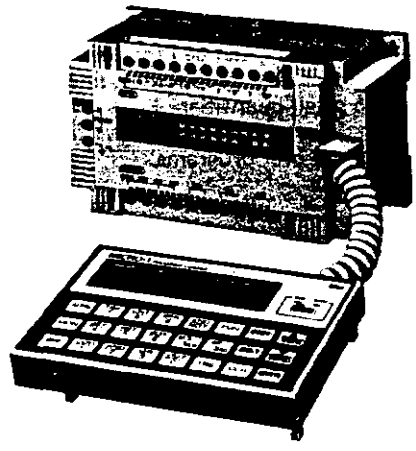

FEATURES

Micro Programmable Controller For Small Machine Control With Selected Functions and Easy Operation

8 or 16 inputs
6 or 12 outputs
Program capacity 600 steps

Micro programmable controller ideal for small machine control.

The MICRO-1 base unit measures only 140W x 80H x 74D mm, just as large as three standard timers of the DIN48mm-square size. The compact body uses the least panel space where space around a machine is highly valued.

Supersedes relay control circuits.

The MICRO-1 base unit costs no more than the total cost of 10 relays and 3 timers of IDEC's standard models. The MICRO-1 with shift register and external display functions is more cost-effective than relay control circuits.

Expansion up to 16 inputs and 12 outputs.

The base unit has 8 inputs and 6 outputs. Expansion units are available to add 8 inputs and 6 outputs; thus the MICRO-1 can control a total of 16 inputs and 12 outputs.

Easy programming.

Programming can be done on the small hand-held program loader using the familiar relay symbol format.
IDEC's FA series program loader can also be used for programming.
Application software Ladder Input Program is available for programming on an IBM or compatible personal computer.

EEPROM memory allows program modification.

The MICRO-1 base unit stores user programs in built-in EEPROM memory without the need for a backup power supply. Since user programs can be modified or replaced, the MICRO-1 is ideal for production lines of many different models in small quantities.
Using the FA series program loader allows for FA series memory packs to store user programs.

Wide range of power voltage.

The MICRO-1 base unit is available in two power voltage types: AC type operates on 100 to 240V AC and DC type operates on 24V DC.

0.5msec catch input.

The MICRO-1 is provided with a catch input to accept a 0.5msec pulse input signal. Short pulse inputs can be accepted regardless of the scan time.

DIN rail mounting.

The MICRO-1 base unit can snap-mount on a 35mm-wide DIN rail as well as on a panel surface using screws.

Computer link function.

A maximum of 32 MICRO-1 base units can be linked to an IBM or compatible personal computer for network communication. Remote control panels and machines can be controlled and monitored on the personal computer.

Built-in DC power supply.

The MICRO-1 base unit has a built-in power supply for inputs, eliminating the need for an external power supply and saving wiring time and cost.

Reduced wiring by Serial I/O Module

- Serial I/O module allows for expansion of 8 inputs and 8 outputs using one cable, saving wiring and total cost.
- Using the serial I/O module allows external control switches and indicators to be connected with only one cable.
- External display units can be connected to the serial I/O module to display timer or counter current values. (Mother boards for mounting the serial I/O module and IDEC's DD33/DD48 series display units are available optionally.)
- Using the key matrix function with 8 inputs and 8 outputs wired in matrix allows to accept a maximum of 64 input signals. This function enables the MICRO-1 to control machines with many input points. (See Serial I/O Module Users Manual EM230.)

PART DESCRIPTION

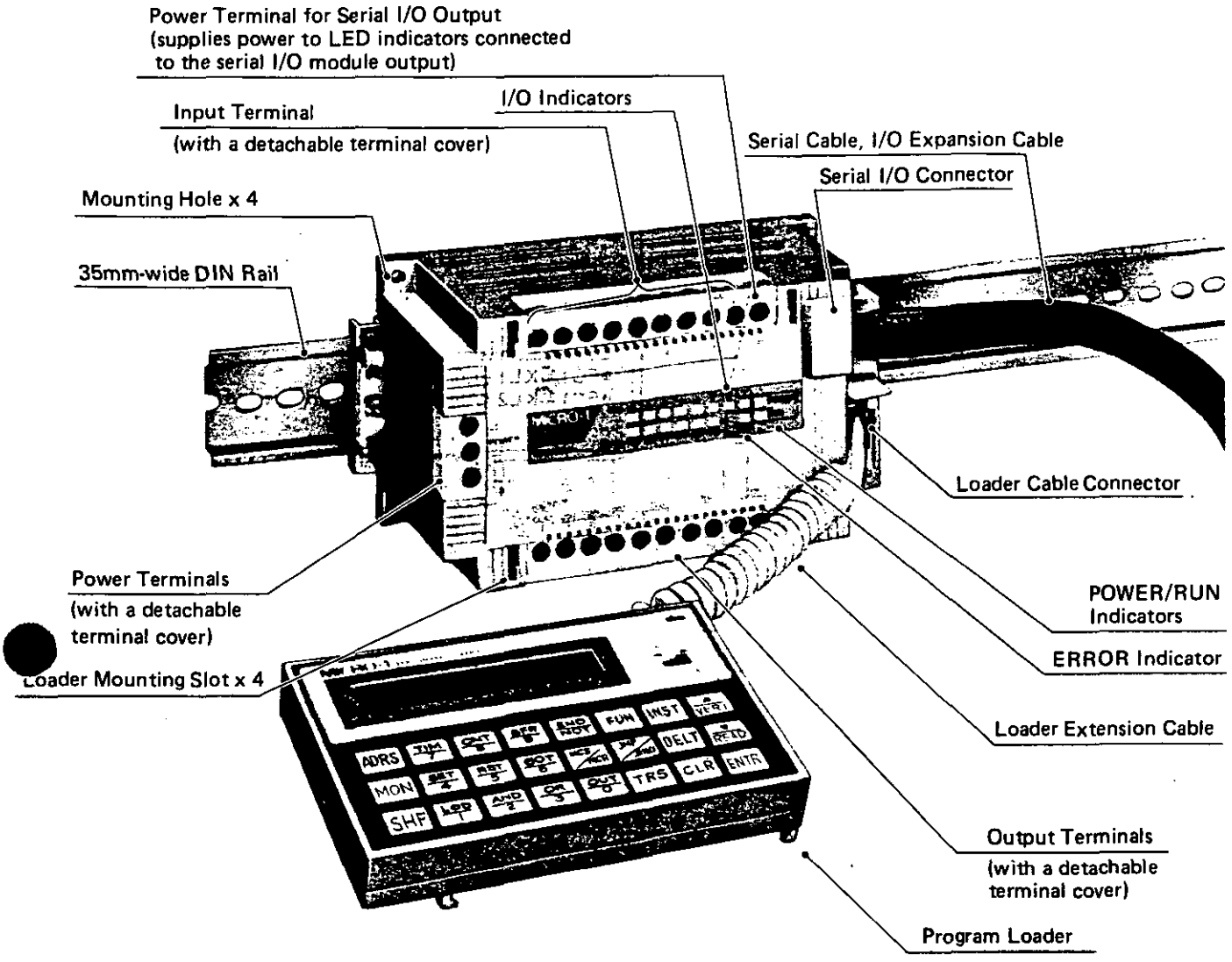

Base Unit with Program Loader mounted on it.

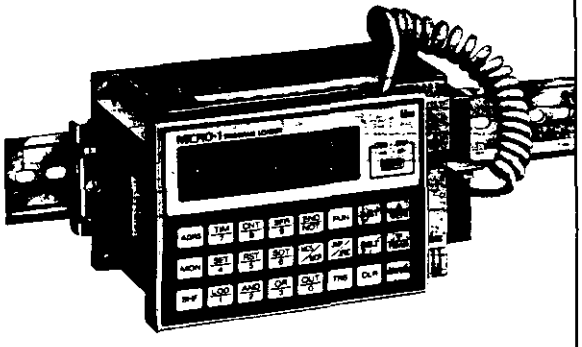

Base Unit and Expansion Unit mounted side by side.

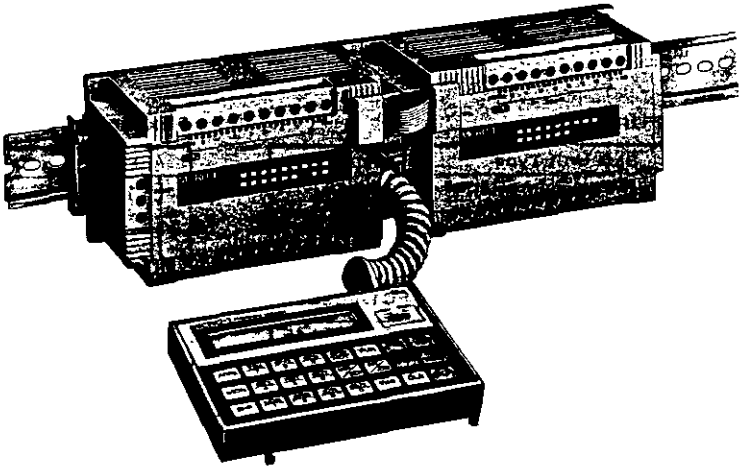

SYSTEM CONFIGURATION

1. Basic System

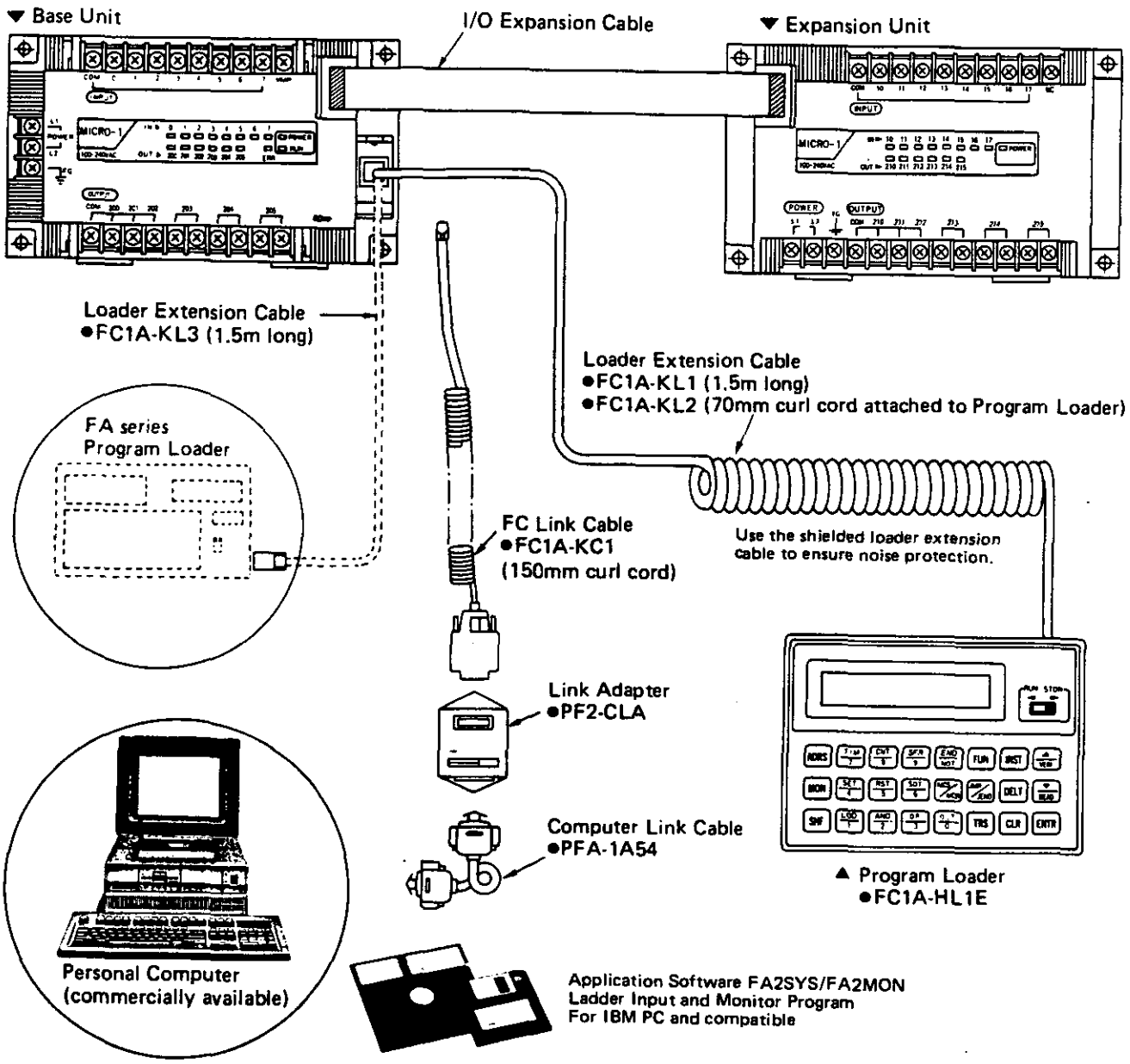

Note*: A 40mm I/O expansion cable FC1A-KE1 is attached to each Expansion Unit.

Note**: Do not connect the shield terminal of the I/O expansion cable.

●Base Unit

Base Unit Type			Type No.
AC Type	Relay Output	Source Input	FC1A-C1A1E
		Sink Input	FC1A-C2A1E
	Transistor Output	Source Input Sink Output	FC1A-C1B1E
		Sink Input Source Output	FC1A-C2C1E
DC Type	Relay Output	Source Input	FC1A-C1A4E
		Sink Input	FC1A-C2A4E
	Transistor Output	Source Input Sink Output	FC1A-C1B4E
		Sink Input Source Output	FC1A-C2C4E

●Expansion Unit

Expansion Unit Type			Type No.
AC Type	Relay Output	Source Input	FC1A-E1A1E
		Sink Input	FC1A-E2A1E
	Transistor Output	Source Input Sink Output	FC1A-E1B1E
		Sink Input Source Output	FC1A-E2C1E
DC Type	Relay Output	Source Input	FC1A-E1A4E
		Sink Input	FC1A-E2A4E
	Transistor Output	Source Input Sink Output	FC1A-E1B4E
		Sink Input Source Output	FC1A-E2C4E

●I/O Expansion Cable

Length	Type No.
40mm *	FC1A-KE1
500mm **	PFA-1A21
750mm **	PFA-1A22
1m **	PFA-1A23

2. 1:1 Communication Computer Link System

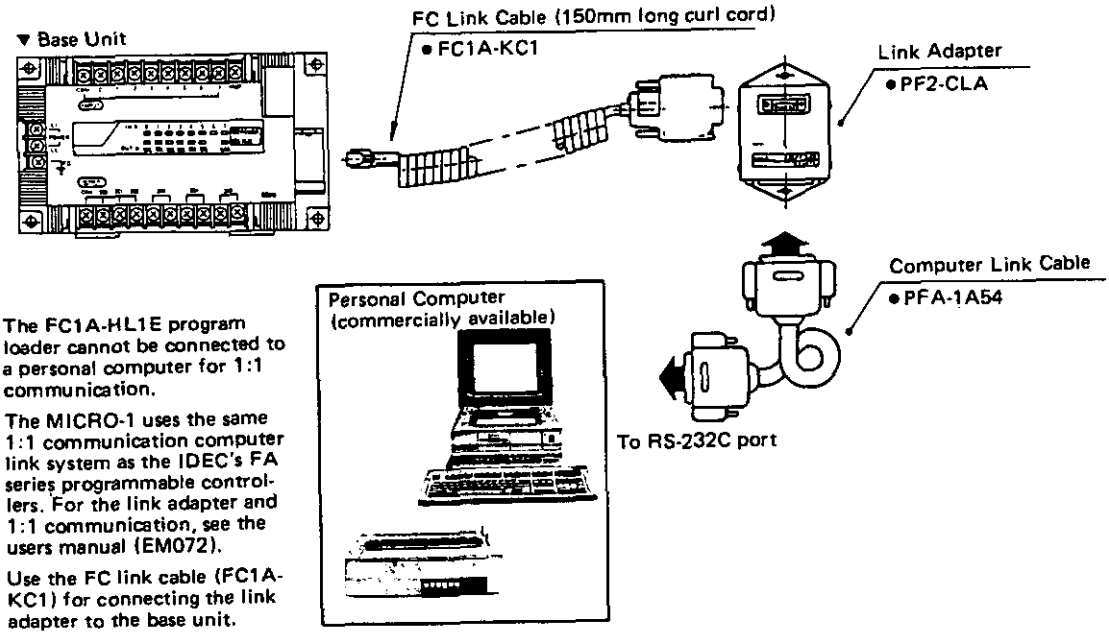

Note 1: The FC1A-HL1E program loader cannot be connected to a personal computer for 1:1 communication.

Note 2: The MICRO-1 uses the same 1:1 communication computer link system as the IDEC's FA series programmable controllers. For the link adapter and 1:1 communication, see the users manual (EM072).

Note 3: Use the FC link cable (FC1A-KC1) for connecting the link adapter to the base unit.

3. 1:N Communication Computer Link System

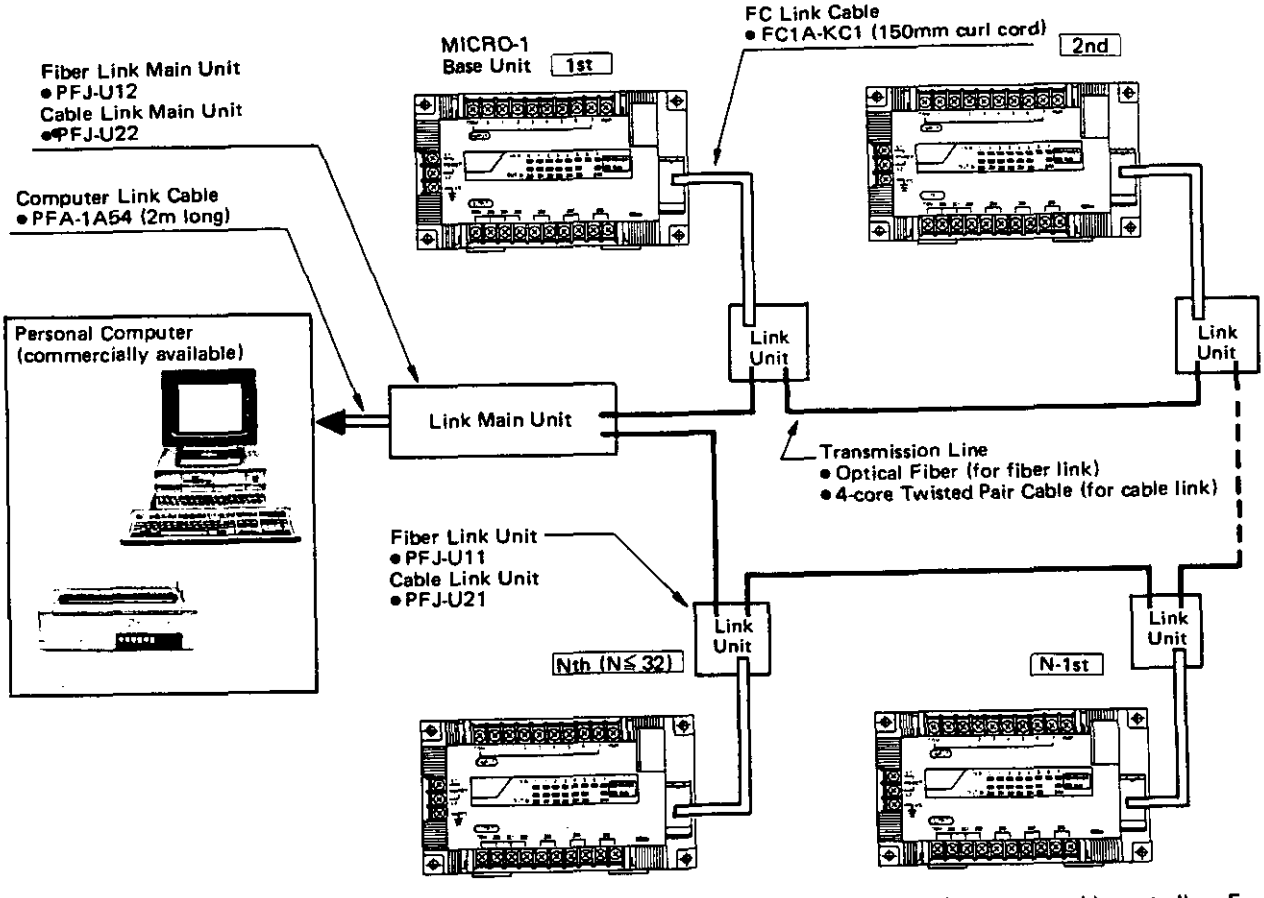

Note 1: The MICRO-1 uses the same 1:N communication computer link system as the IDEC's FA series programmable controllers. For the link units, link main units and 1:N communication, see the users manual (EM071).

Note 2: Use the FC link cable (FC1A-KC1) for connecting the link adapter to the base unit.

SPECIFICATIONS

• General Specifications

Power Voltage	100 to 240V AC, 50/60Hz *24V DC*
Power Voltage Range	85 to 264V AC 19.2 to 28.8V DC
Power Consumption (Approx.)	Base Unit (AC type) : 21VA Base Unit (DC type) : 8W Expansion Unit (AC type) : 21VA Expansion Unit (DC type) : 6W Program Loader : 1W
Allowable Momentary Power Failure	50 msec maximum (at the maximum load)
Dielectric Strength	Between power or I/O terminal and ground: 1,500V AC, 1 minute
Insulation Resistance	Between power or I/O terminal and ground: 10MΩ (500V DC megger)
Operating Temperature	0 to +55°C
Storage Temperature	−20 to +70°C
Operating Humidity	45 to 85% RH (no condensation)
Vibration Resistance	5 to 55Hz, 6G, 2 hours each in 3 axes
Shock Resistance	30G, 3 shocks each in 3 axes
Noise Resistance	Between power or I/O terminal and ground: AC type: ±1.3 kV, 1 μsec DC type: ±1.0 kV, 1 μsec
Operating Atmosphere	Free from corrosive gases
Grounding	Grounding resistance 100Ω maximum
Mounting Style	Wall and 35mm-wide DIN rail
Weight (Approx.)	Base Unit: 450g (Relay output) 410g (Transistor output) Expansion Unit: 410g (Relay output) 370g (Transistor output) Program Loader: 100g
Dimensions	Base/Expansion Unit: 140W × 80H × 74D mm Program Loader: 110W × 80H × 20D mm

•Function Specifications

Control System	*Stored program system*
Programming Method	Logic symbol
Instruction Words	15 basic instructions 2 FUN instructions
Program Capacity	600 steps
Memory	EEPROM (built in the base unit)
Scan Time	8 μsec/basic instruction (ave.)
Input	8 points (Expansion: 8 points)
Output	6 points (Expansion: 6 points)
Internal Relay	160 points (All points can be maintained.)
Special Internal Relay	96 points
Timer	80 points, subtracting (0 to 999.9 sec)
Counter	*45 points, adding (0 to 9999)* (All points can be maintained.)
Reversible Counter	2 points (maintained)
Single Output	96 points
Shift Register	128 points (All points can be maintained.)
Computer Link	Via the RS232C interface unit
Power Failure Protection	*Internal relay, shift register, counter, reversible counter* (backed up by a super capacitor for approx. 3 days at 25°C)
Self-Diagnostic Function	CPU error (WDT), CRC error, check sum error, communication error
Automatic Start Function	Operation starts when power is turned on.
Catch Input	1 point, 0.5-msec pulse (Input No. 0)
External Control	Start/stop using RUN/STOP switch on the program loader
Compatibility with FA series PLC	*Program loaders are interchangeable using* special cables.

•Program Loader Specifications

Display	LCD, 16 characters in one line
Program Key	24-key membrane switch
Control Key	RUN/STOP switch
Power Supply	Supplied from the base unit
Connection	Using the loader extension cable (A 70mm-long curl cord is attached to the program loader)
Mounting	Hooked onto the base unit
Power Failure Protection	CMOS-RAM memory is backed up by a capacitor. Backup duration: Approx. 3 minutes (at 25°C)
Programming for FA series PLC	*Possible by using a loader extension* cable (FC1A-KL4) within the functions of this program loader

•Input Specifications (Base/Expansion Units)

No. of Inputs		8 points (M3 screw terminal)
Input Signal	*Source Type*	NPN open collector transistor input No-voltage mechanical contact input
	Sink Type	PNP open collector transistor input No-voltage mechanical contact input
Rated Voltage		24V DC
Isolation Method		Photocoupler
Input Current		5mA
Input Impedance		4.3 kΩ
Turn ON Time		7 msec maximum
Turn OFF Time		11 msec maximum
Must Turn ON Current		4 mA minimum
Must Turn OFF Current		1 mA maximum

• Output Specifications (Base/Expansion Units)

(Relay Output Type)

No. of Outputs	6 points (M3 screw terminal)
Output Device	*Electromechanical relay contact*
Contact Configuration	Independent 1NO contact: 3 points Common 1NO contact: 3 points
Switching Capacity	Independent contact: 220V AC, 2A Common contact: 220V AC, 2A total (resistive load)
	220V AC, 2A (resistive, inductive*) 30V DC, 2A (resistive, inductive**)
Minimum Applicable Load	5V DC, 1mA (reference value)
Contact Resistance	30 mΩ maximum (initial value)
Mechanical Life (without load)	20,000,000 operations (at 18,000 operations/hour)
Electrical Life (rated load)	100,000 operations (at 1,800 operations/hour)

*cos ϕ = 0.4, **L/R = 7 msec

(Transistor Output Type)

No. of Outputs		*6 points (M3 screw terminal)*
Output Device	Sink Output	NPN transistor: 6 points/common
	Source Output	PNP transistor: 6 points/common
Isolation Method		Photocoupler
Rated Load Voltage		12 to 24V DC ±10%
Maximum Load Current		0.4A/circuit
Rush Current		5A maximum
Leakage Current		100μA maximum
Turn ON Time		1 msec maximum
Turn OFF Time		1 msec maximum
ON Voltage	Sink Output	1.5V maximum
	Source Output	Load voltage −1.5V minimum
External Current Draw		12 to 24V DC, 40mA

Internal Circuit and Wiring Diagram

Relay Output Type (Base/Expansion Units)

• Source Input Type

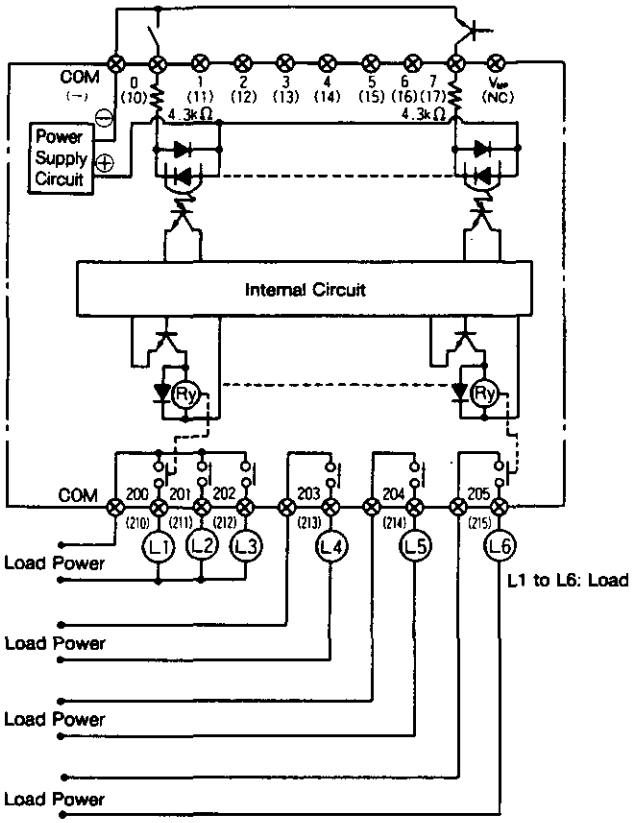

• Sink Input Type

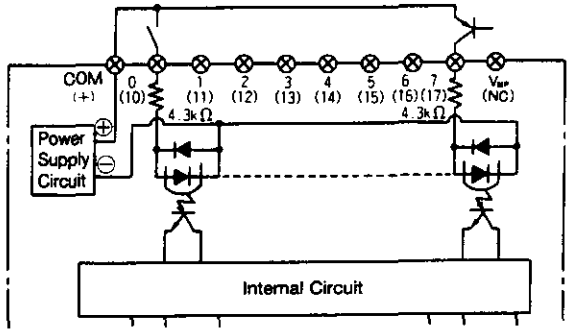

Note: Terminal numbers in ( ) represent an expansion unit. The sink input type has the same output as the source input type.

Transistor Output Type (Base/Expansion Units)

• Source-Input Sink-Output Type

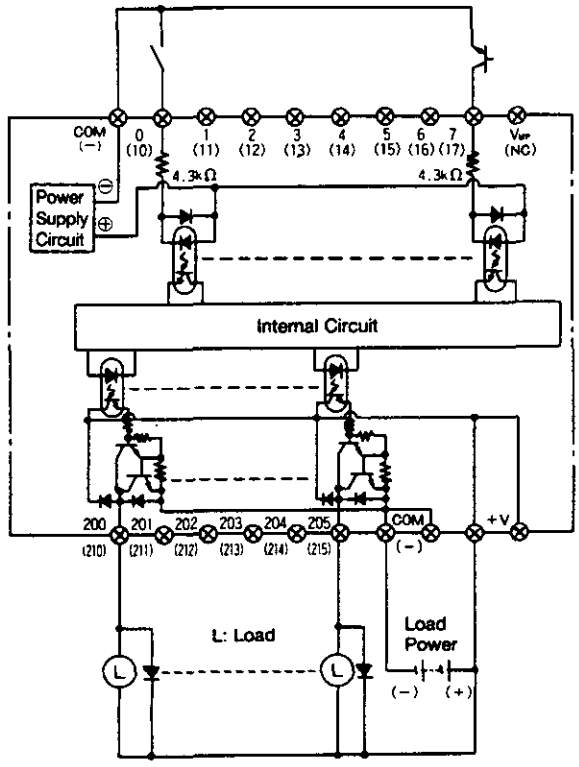

• Sink-Input Source-Output Type

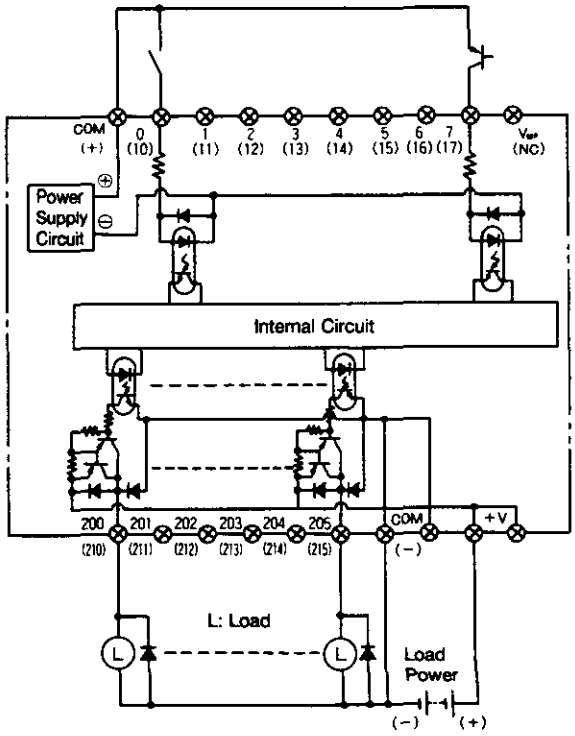

Note: Terminal numbers in ( ) represent an expansion unit.

SIMPLE OPERATION EXAMPLE

This chapter describes a simple operation example.

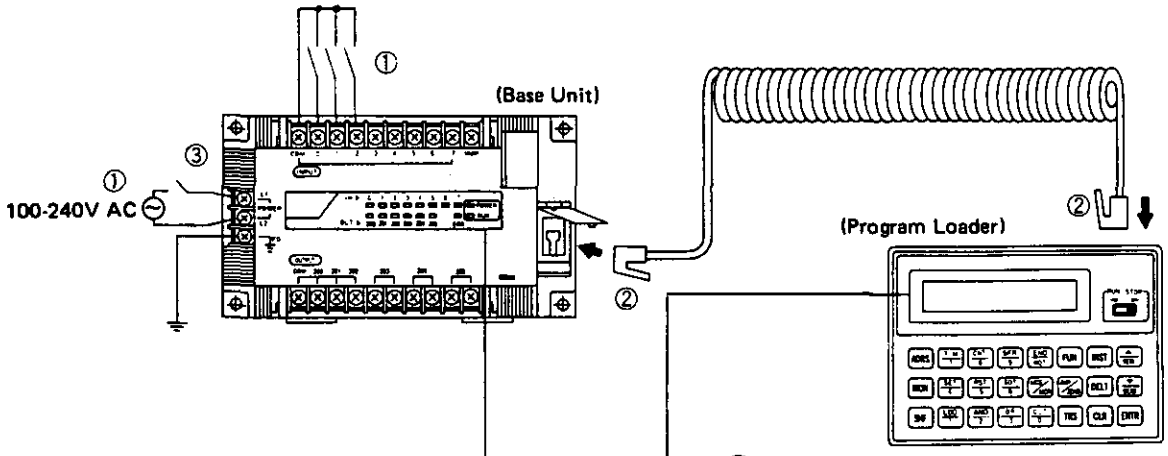

① Connect power supply and input switches to the base unit.
This example shows wiring for AC type base unit (source input type).

② Connect the program loader to the base unit using the attached program loader extension cable.

③ Supply power to the base unit.
- The POWER indicator on the base unit goes on.

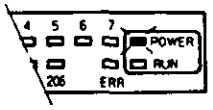

- "POWER ON" is displayed on the program loader.

(Display)

```
POWER  ON
```

↓ Approx. 5 seconds later

```
PC --- STOP
```
..... Indicates the MICRO-1 is in halt.

"PC --- RUN" is displayed when the MICRO-1 is in operation.

Approx. 7 seconds later

```
0 END
```
..... Program is displayed.

(The display massage varies with the program.)

Plugging The Connector

- Plug the loader extension cable connector into the receptacle in the program loader until the latch is locked.
- To remove the connector, squeeze the latch and pull the connector out.

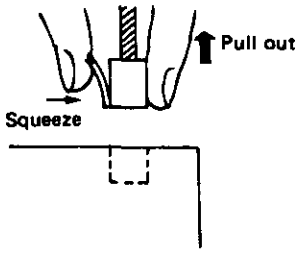

④ **Start programming.**

(1) Stop MICRO-1 operation.

Set the RUN/STOP switch on the program loader to STOP.

If the switch is at RUN, the display changes to "PC — STOP", and 7 minutes later, the program is displayed.

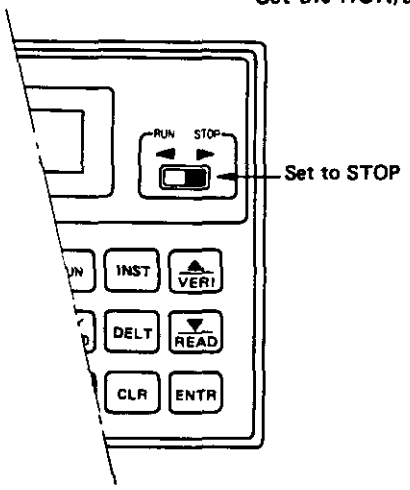

(2) Delete all programs from the program loader memory.

Key Operation [DELT] [END] [ENTR]

(Display)

0 END

This example performs the operation of Fig. 1 time chart.

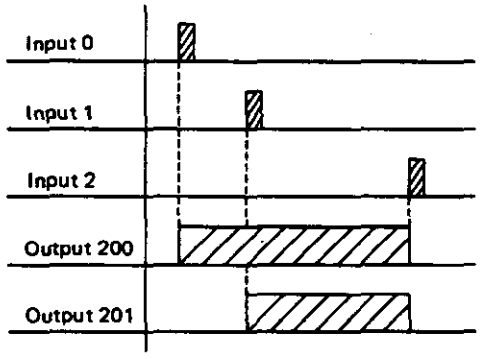

Fig. 1 Time Chart

Operation

- When Input 0 is turned ON, Output 200 is self-maintained.
- When Input 1 is turned ON, Output 201 is self-maintained.
- When Input 2 is turned ON, Outputs 200 and 201 are turned OFF.

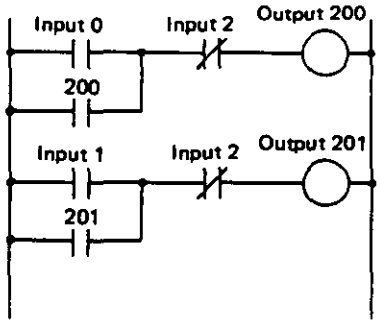

Fig. 2 Relay Diagram

Address	Instruction Word	Data
0	LOD	0
1	OR	200
2	AND·NOT	2
3	OUT	200
4	LOD	1
5	OR	201
6	AND·NOT	2
7	OUT	201
8	END	

Fig. 3 Program List

Fig. 2 relay diagram is converted to Fig. 3 program list.

Fig. 3 program list is entered using the program loader as follows.

(3) Enter the sample program using the keys on the program loader.

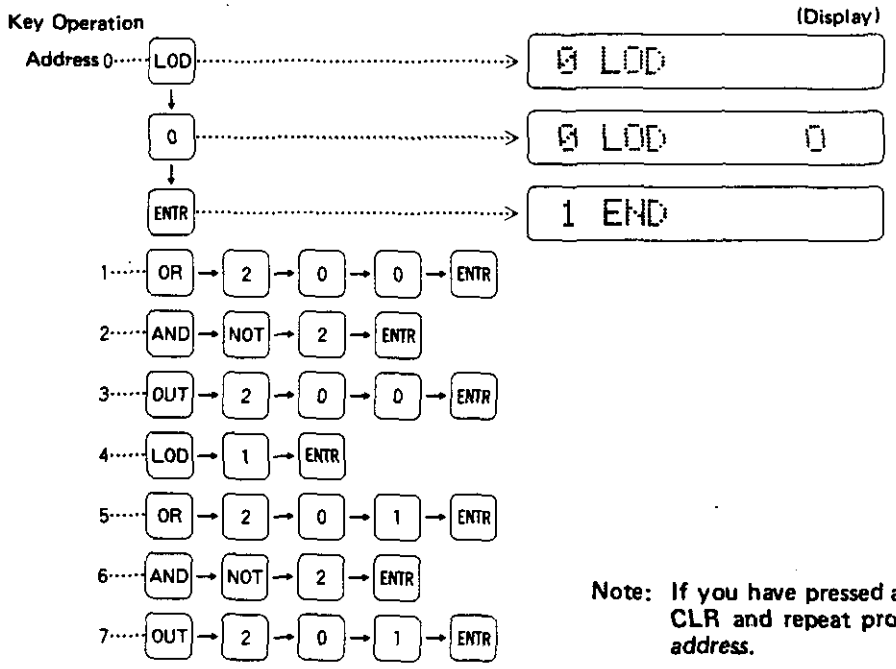

Note: If you have pressed a wrong key, press CLR and repeat programming for the *address*.

⑤ Check the program.

When you have finished programming, check the program.

Press the ▲ key until address 0 is displayed.

Press the ▼ key and verify the program at each step with Fig. 3 program list.

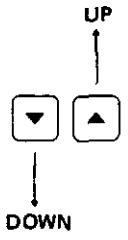

Address	*Instruction* Word	Data
0	LOD	0
1	OR	200
2	AND·NOT	2
3	OUT	200
4	LOD	1
5	OR	201
6	AND·NOT	2
7	OUT	201
8	END	

⑥ Transfer the program from the program loader to the base unit.

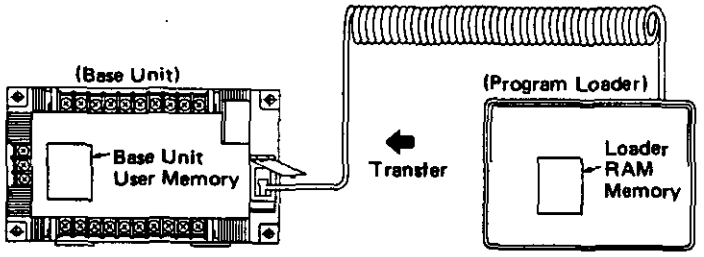

The entered program is stored in the program loader memory. The program must be transferred to the base unit memory to operate the MICRO-1.

Program Transfer Operation

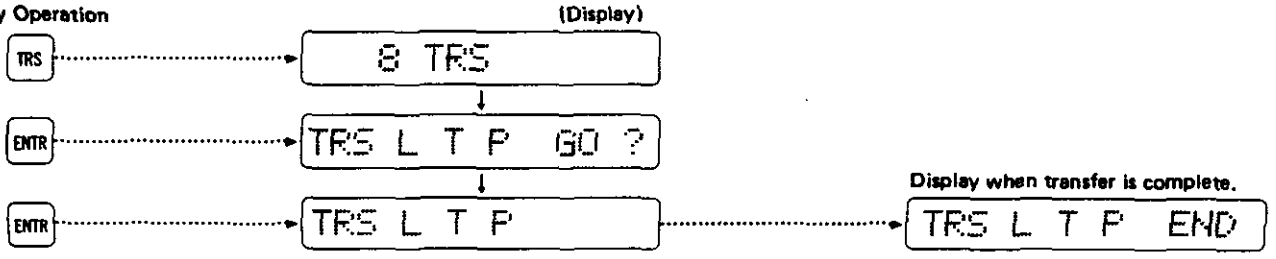

⑦ Start MICRO-1 operation.

(1) Set the RUN/STOP switch on the program loader to RUN.

(Program Loader) (Base Unit) (Display)

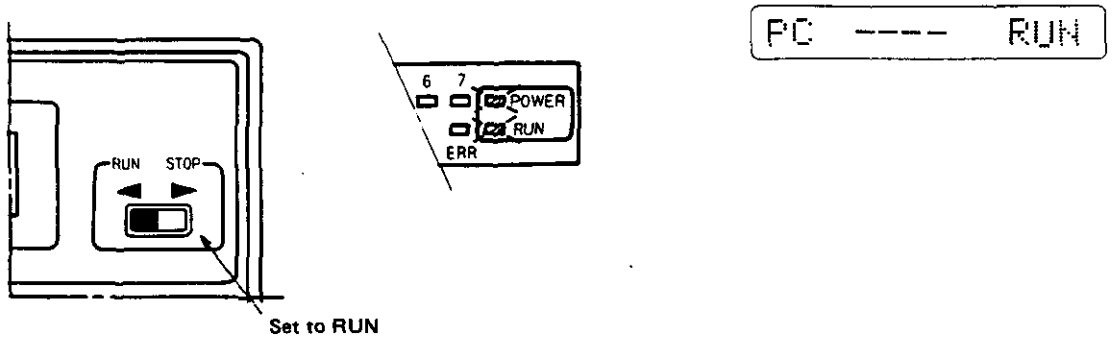

(2) Make sure that the RUN indicator is ON and turn inputs ON according to the Fig. 1 time chart to see if the MICRO-1 operates as programmed.

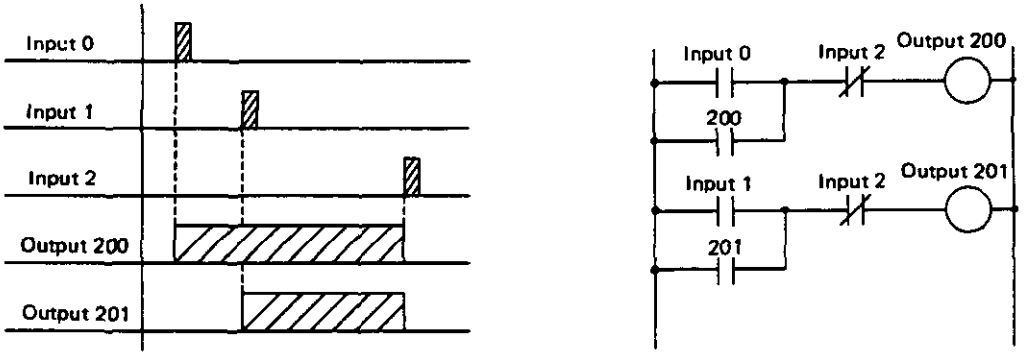

- When Input 0 is turned ON (Indicator 0 goes ON), Output 200 goes ON (Indicator 200 goes ON). After Input 0 is turned OFF, Output 200 remains ON.
- When Input 1 is turned ON (Indicator 1 goes ON), Output 201 goes ON (Indicator 201 goes ON). After Input 1 is turned OFF, Output 201 remains ON.
- When Input 2 is turned ON (Indicator 2 goes ON), Outputs 200 and 201 go OFF (Indicators 200 and 201 go OFF).

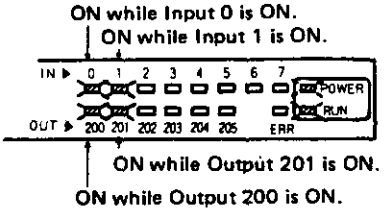

⑧ Monitor input and output statuses.

Input and output statuses can be monitored on the program loader.

(1) Monitor Inputs 0 to 7 (8 points). MON → 0 → READ

(2) Monitor Outputs 200 to 205 (6 points). MON → 2 → 0 → 0 → READ

(3) End monitoring. CLR

(Display)

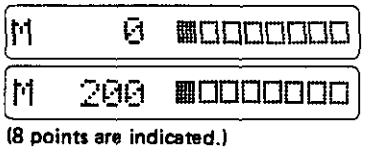

(8 points are indicated.)

■ *indicates* ON

Remarks

1. For programming procedures and notes, see page 37.
2. RUN/STOP response time and program transfer time
   (1) From RUN to STOP
   After the base unit operation is stopped by the program loader, the program loader displays "PC-STOP" in 2 seconds. After 7 seconds, the program is displayed.
   (2) From STOP to RUN
   After the base unit operation is started by the program loader, the program loader displays "PC-RUN" in 1.5 seconds. After 7 seconds, the program is displayed.
   (3) ●Program transfer from program loader to base unit: Approx. 4 sec
   ●Program transfer from base unit to program loader: Approx. 3 sec
   ●RUN after turning power ON: Approx. 5 sec

For details, see START/STOP OPERATION on page 31 and Transfer Program on page 57.

I/O WIRING

1. Relay Output Type (Base/Expansion Units)

•Source Input Type

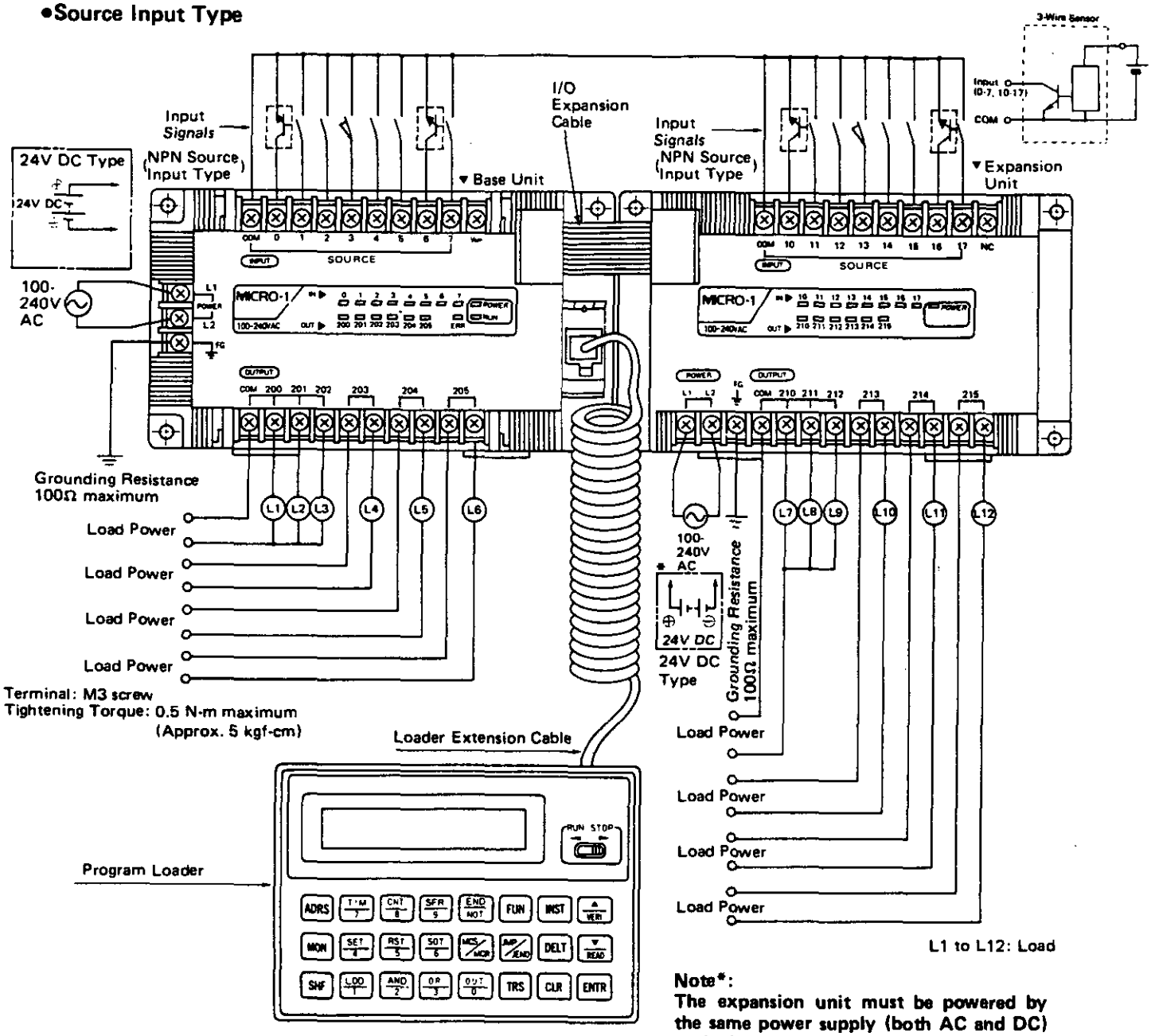

Note*:
The expansion unit must be powered by the same power supply (both AC and DC) as the base unit.

•Sink Input Type

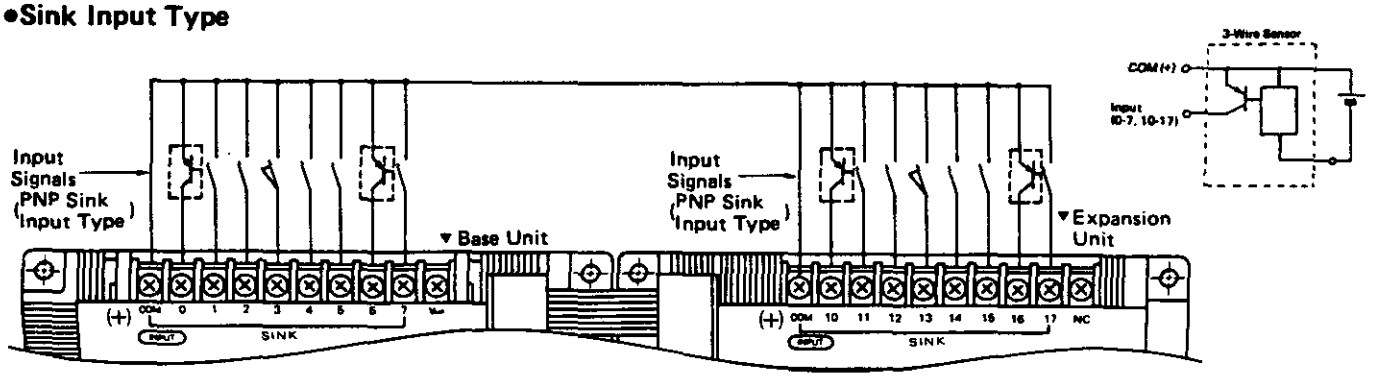

2. Transistor Output Type (Base/Expansion Units)

• Source-Input Sink-Output Type

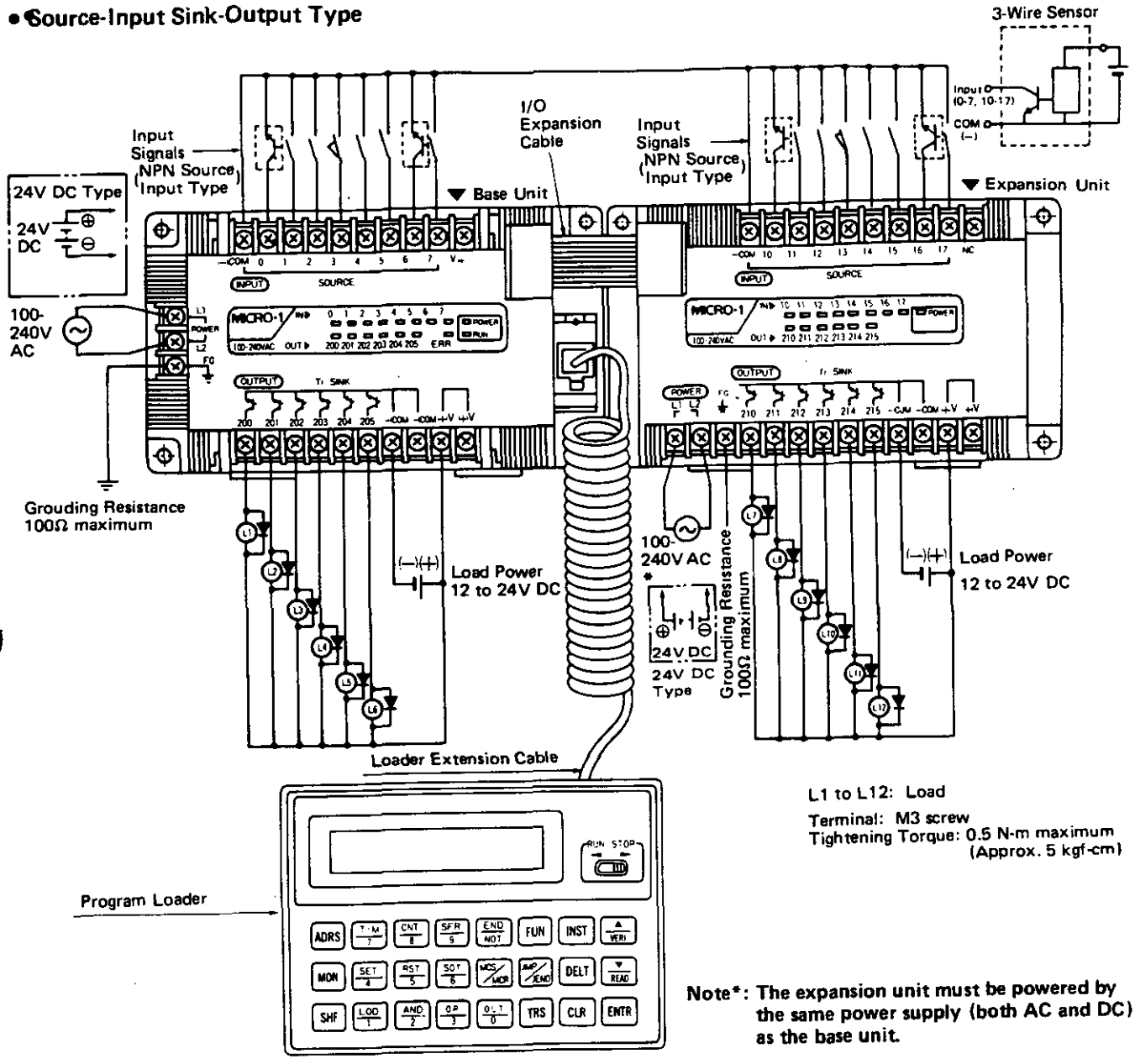

Note*: The expansion unit must be powered by the same power supply (both AC and DC) as the base unit.

Supplementary 2

600-677 Setting Key Matrix Input ON/OFF Statuses

ON/OFF statuses of M x N (M = 1 to 8, N = 1 to 8) key matrix are set to special internal relays 600 to 677 (64 points maximum).
For details, see Serial I/O Module Users Manual EM230.

680-687 Key Matrix Scan Output

When FUN34 is set, special internal relays 680 through 687 are scanned 8 times repeatedly in one cycle, generating outputs. Allocating these scan outputs to real outputs can constitute a key matrix of inputs and outputs.
For details, see Serial I/O Module Users Manual EM230.

690 Setting Catch Input ON/OFF Statuses

While Input 0 is scanned, the catch input status is set to special internal relay 690.
For details, see page 33.

701, 702 Start Control

The MICRO-1 operation can be started (RUN) or stopped (STOP) by turning special internal relays 701 and 702 ON or OFF.

701	702	MICRO-1 Status
OFF	OFF	RUN
ON	OFF	STOP
OFF	ON	RUN
ON	ON	RUN

The MICRO-1 operation is started by turning special internal relay 701 OFF with the RUN/STOP switch on the program loader set to RUN, and is stopped by turning 701 ON and 702 OFF with the RUN/STOP switch set to STOP.

703 All Outputs OFF

When IR703 is turned ON, all outputs 200-205 and 210-217 go OFF.
Self-holding circuits using outputs 200-205 and 210-217 also go OFF, and are not restored when IR703 is turned OFF. Internal relays and shift registers remain unchanged.

704 Initialize Pulse

When the MICRO-1 starts operation, IR704 goes ON for a period of one scan.

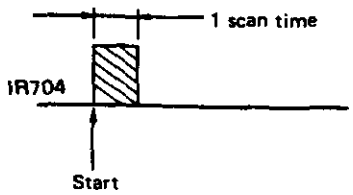

713 1-sec Clock Reset

While IR713 is ON, IR714 (1-sec clock) is placed in the reset mode.

714 1-sec Clock

While IR713 is OFF, IR714 generates clock pulses oscillating at 500msec ON and 500msec OFF (duty ratio 1:1).

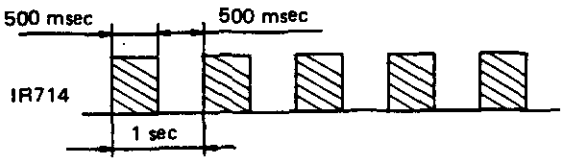

715 100-msec Clock

IR715 always generates clock pulses oscillating at 50msec ON and 50msec OFF.

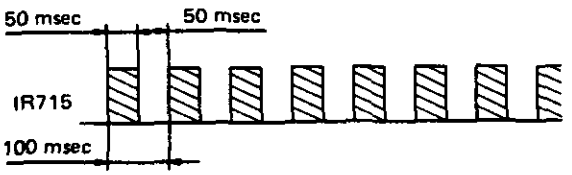

716 Timer/Counter Preset Value Changed

When timer/counter preset values in the MICRO-1 base unit are changed using the program loader, IR716 goes ON.
IR716 is reset when the program is written into the user memory by pressing TRS, ENTR and ENTR keys.

717 In-operation Output

IR717 remains ON during operation.

INSTRUCTION WORDS

1. Basic Instruction Words

Symbol	Name	Relay Circuit Symbol	Function	Page
LOD	Load	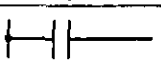	Reads the I/O status after storing an intermediate result.	20
NOT	NOT	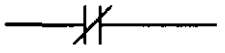	Inversion	20
OUT	Output	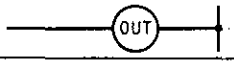	Output	20
AND	AND	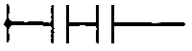	Logical AND	21
OR	OR	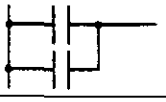	Logical OR	21
TIM	Timer		Timer	24
CNT	Counter	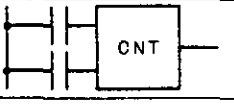	Counter	25
SFR	Shift Register	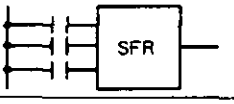	Shift register	28
SOT	Single Output	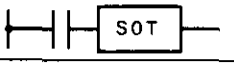	Leading-edge differentiation	30
MCS	Master Control Set		Starts a master control.	31
MCR	Master Control Reset		Ends a master control.	31
SET	Set		Sets an output, internal relay or shift register.	31
RST	Reset		Resets an output, internal relay or shift register.	31
JMP	Jump		Jumps a designated program area.	32
JEND	Jump End		Ends a jump program.	32
END	End	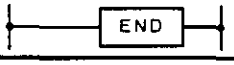	Ends a program.	32

2. FUN (Function) Instruction

FUN No.	Relay Circuit Symbol	Instruction	Page
FUN100 to FUN146		Equivalent comparison instruction for the counter's counted values	27
FUN200 to FUN246		Equal to or greater than comparison instruction for the counter's counted values	27

LOD Load , NOT Not , OUT Output

●Relay Circuit

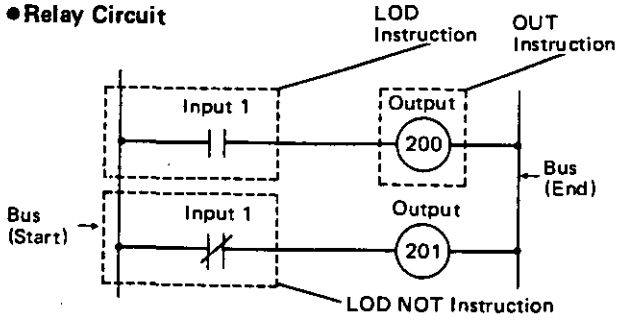

●Program List

Address	Instruction Word	Data
0	LOD	1
1	OUT	200
2	LOD·NOT	1
3	OUT	201

●Key Operation

Address
0 ····· LOD 1 ENTR
1 ····· OUT 2 0 0 ENTR
2 ····· LOD NOT 1 ENTR
3 ····· OUT 2 0 1 ENTR

●Time Chart

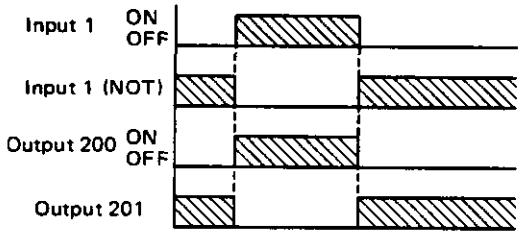

●Description

LOD The LOD instruction is used to program the beginning of a rung or section of a rung.

NOT The NOT instruction negates (inverts) the read input status.
This instruction is used as an auxiliary instruction for a LOD, AND or OR instruction.

OUT The OUT instruction is used to assign the output address and ends the rung.

Examples

●Relay Circuit ●Program List ●Key Operation

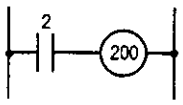

Instruction Word	Data
LOD	2
OUT	200

LOD 2 ENTR
OUT 2 0 0 ENTR

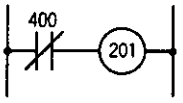

Instruction Word	Data
LOD NOT	400
OUT	201

LOD NOT 4 0 0 ENTR
OUT 2 0 1 ENTR

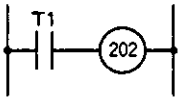

Instruction Word	Data
LOD T	1
OUT	202

LOD *SHF TIM 1 ENTR
OUT 2 0 2 ENTR

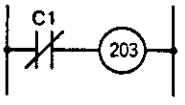

Instruction Word	Data
LOD NOT C	1
OUT	203

LOD NOT *SHF CNT 1 ENTR
OUT 2 0 3 ENTR

*The SHF key is used between two instruction keys pressed successively.
For example, LOD TIM, LOD CNT, and LOD SFR.

Note OUT OUT Instruction

1. Multiple programming of OUT instructions.
Any number of OUT instructions can be programmed in parallel.

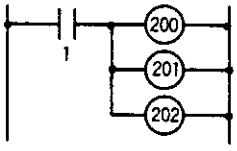

LOD	1
OUT	200
OUT	201
OUT	202

2. Notes for repeated programming of OUT instructions.
If more than one OUT instruction of the same number is programmed in one scan, the OUT instruction nearest to the END instruction is given priority and its status is outputted.

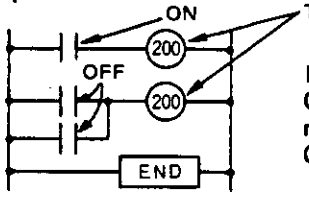

In the example at left, Output 200 is OFF. If monitored in this state, Output 200 blinks.

3. The following circuit cannot be programmed.

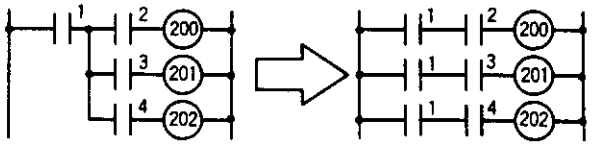

The circuit at above left cannot be programmed.
Use MCS/MCR instructions or modify the circuit as shown at above right.

AND

AND

●Relay Circuit

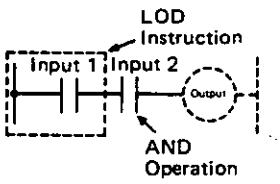

●The AND instruction is a logical product instruction used for programming a series contact circuit.

●Time Chart

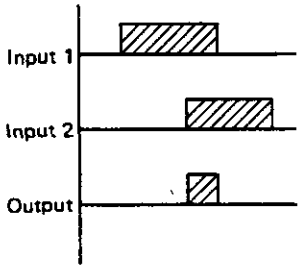

●Program List

Address	Instruction Word	Data
0	LOD	1
1	AND	2

●Key Operation

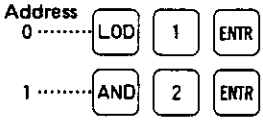

Example

AND program of a timer instruction

●Relay Circuit

●Key Operation

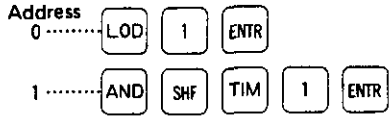

OR

OR

●Relay Circuit

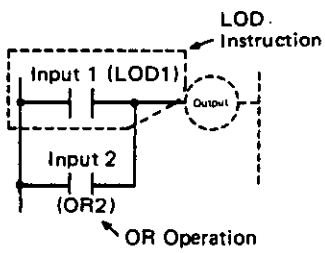

●The OR instruction is a logical sum instruction used for programming a parallel contact circuit.

●Time Chart

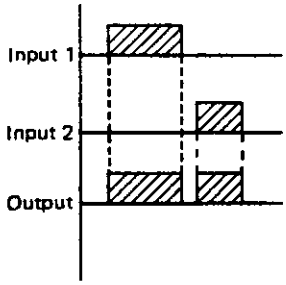

●Program List

Address	Instruction Word	Data
0	LOD	1
1	OR	2

●Key Operation

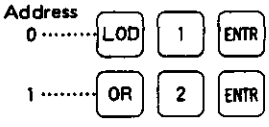

Example

OR program of a timer instruction

●Relay Circuit

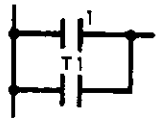

●Key Operation

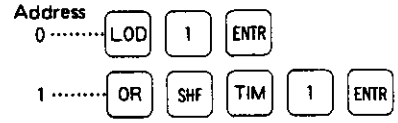

AND LOD — AND Load

(AND SHF LOD)

●Relay Circuit

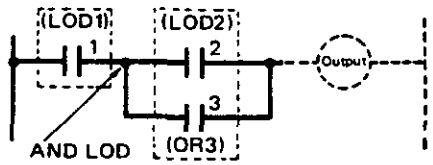

●Program List

Address	Instruction Word	Data
0	LOD	1
1	LOD	2
2	OR	3
3	AND·LOD	

●Key Operation

Address
0 ····· LOD 1 ENTR
1 ····· LOD 2 ENTR
2 ····· OR 3 ENTR
3 ····· AND SHF LOD ENTR

●Time Chart

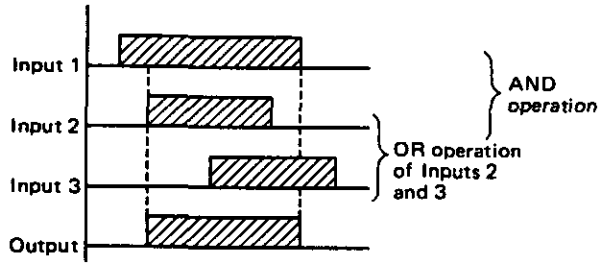

●Circuits starting with LOD are connected in series.

Supplementary

●Operation register and stack register statuses

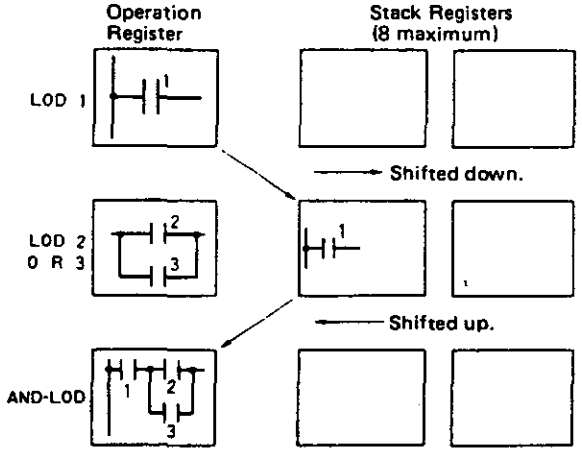

The AND LOD instruction is used to connect circuits starting with a LOD instruction in series.

Example

For the following circuit example, the AND LOD instruction can be used in two ways.

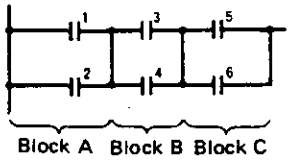

●Program 1

Instruction Word	Data
LOD	1
OR	2
LOD	3
OR	4
AND·LOD	
LOD	5
OR	6
AND·LOD	

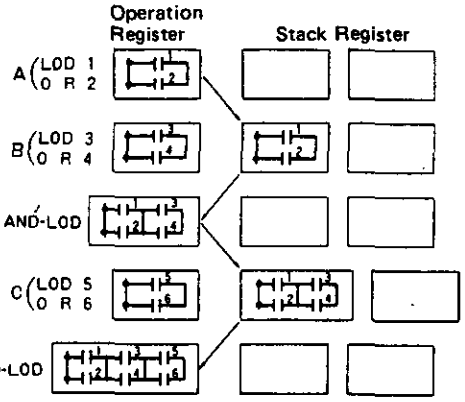

Programs (Blocks A and B) stored respectively by LOD1 and LOD3 are read by the AND LOD instruction, thus forming a circuit connected in series.
Then, Block C starting with LOD5 is programmed, and the Block A/B circuits are connected in series with the Block C circuit by the AND LOD instruction.

●Program 2

Instruction Word	Data
LOD	1
OR	2
LOD	3
OR	4
LOD	5
OR	6
AND·LOD	
AND·LOD	

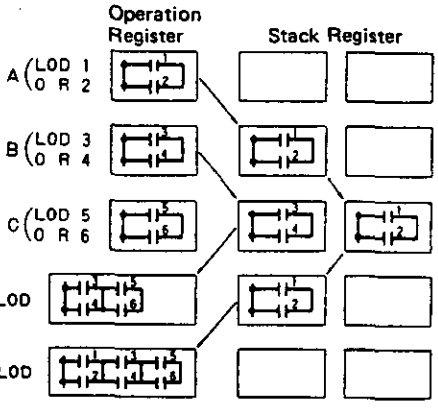

After Blocks A, B and C are stored in sequence, the AND LOD instructions are used continuously two times, and the circuits of Blocks A, B and C are connected in series sequentially.
In this case, note that the sequence of the stored circuits and the number of read operations. The relation between the LOD instructions used and the number of AND LOD instructions is as follows.

The number of AND LOD instructions
= The number of LOD instructions − 1

OR LOD — OR Load

[OR] [SHF] [LOD]

●Relay Circuit

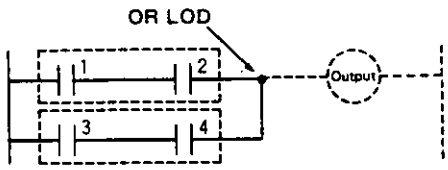

●Program List

Address	Instruction Word	Data
0	LOD	1
1	AND	2
2	LOD	3
3	AND	4
4	OR·LOD	

●Key Operation

Address			
0	LOD	1	ENTR
1	AND	2	ENTR
2	LOD	3	ENTR
3	AND	4	ENTR
4	OR	SHF	LOD ENTR

●Time Chart

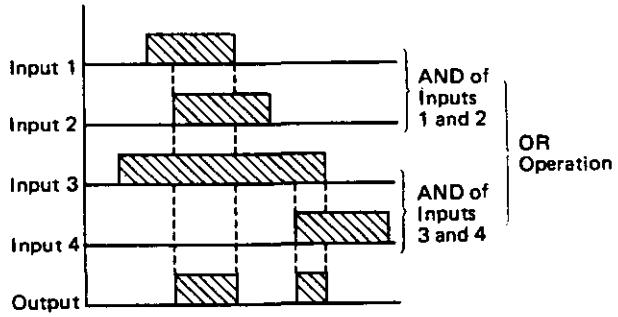

●Circuits starting with LOD are connected in parallel.

Supplementary

●Operation register and stack register statuses

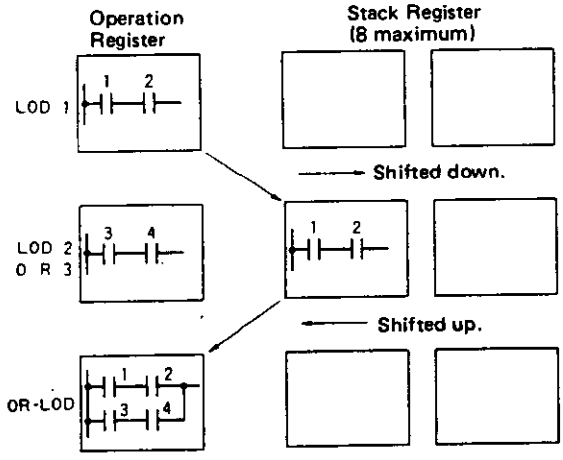

The OR LOD instruction is used to connect circuits starting with a LOD instruction in parallel.

Example

For the following circuit example, the OR LOD instruction can be used in two ways.

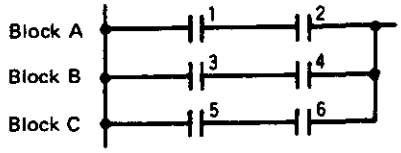

●Program 1

Instruction Word	Data
LOD	1
AND	2
LOD	3
AND	4
OR·LOD	
LOD	5
AND	6
OR·LOD	

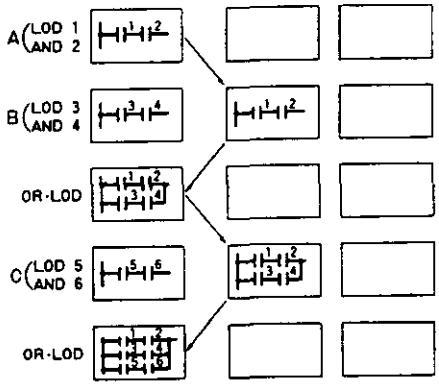

Programs (Blocks A and B) stored respectively by LOD1 and LOD3 are read by the OR LOD instruction, thus forming a circuit connected in parallel.
Then, Block C starting with LOD5 is programmed, and the Block A/B circuits are connected in parallel with the Block C circuit by the OR LOD instruction.

●Program 2

Instruction Word	Data
LOD	1
AND	2
LOD	3
AND	4
LOD	5
AND	6
OR·LOD	
OR·LOD	

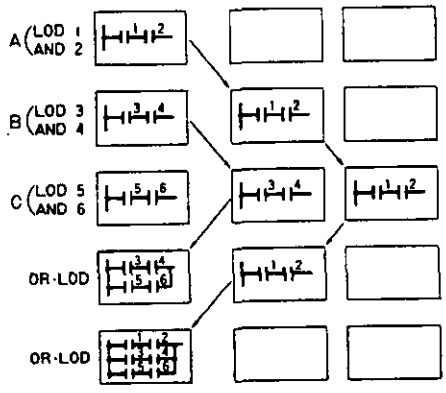

After Blocks A, B, and C are stored in sequence, the OR LOD instructions are used continuously two times, and the circuits of Blocks A, B, and C are connected in parallel sequentially.
In this case, note the sequence of the stored circuits and the number of read operations. The relation between the LOD instructions used and the number of OR LOD instructions is as follows.

The number of OR LOD instructions
= The number of LOD instructions − 1

TIM Timer

●Timer numbers 0 to 79 are 100msec countdown timers.

100msec Timer

●Relay Circuit

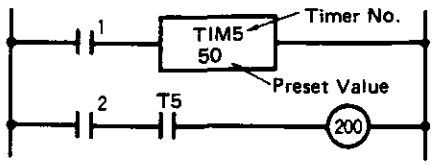

●Program List

Address	Instruction Word	Data
0	LOD	1
1	TIM	5
2		50
3	LOD	2
4	AND·TIM	5
5	OUT	200

●Key Operation

Address

0 ··· LOD 1 ENTR

1 ··· TIM 5 ENTR

2 ··· 5 0 ENTR

3 ··· LOD 2 ENTR

4 ··· AND SHF TIM 5 ENTR

5 ··· OUT 2 0 0 ENTR

●Time Chart

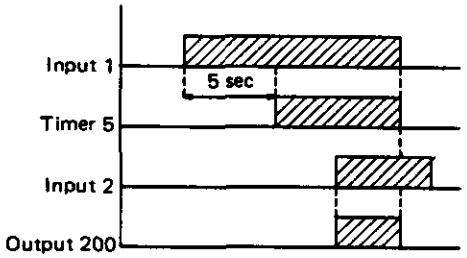

●*Timer preset values are 0 to 9999.*

●When timer instructions are programmed, two addresses are always required. A timer instruction and timer No. should be set at the first address, and the preset value should be set at the second address (always the next address).

Supplementary

1. ●When the operation result immediately before this instruction (which is a timer input) is ON, clock pulse counting is initiated.
   ●When the counted value reaches the preset time, the timer output turns ON.
   ●When the timer input is OFF, the preset value is set.
   ●After the time up, the counted value remains at 0 until the timer input turns OFF.
   ●The same timer number cannot be programmed more than once. (Error message "DOUBLE ERROR" is displayed when the program is entered.)
   ●If the preset value is changed during a timing operation, the timer remains unchanged with the previous preset time for that cycle, and is changed from the next time cycle. (However, if the preset value is changed to 0, the timer stops operation, immediately turning the output ON.)
2. An output can be programmed immediately after the TIM instruction.

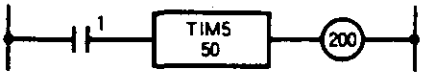

Instruction Word	Data
LOD	1
TIM	5
	50
OUT	200

3. Timer Accuracy

Error		
	Maximum	+ 3 scan time
	Minimum	−100 msec + 1 scan time
Fluctuations when a 1-sec timer is made (when one scan requires 10 msec)		+3% to −9%

4. Power Failure Memory Type Timer
   An ordinary timer does not have power failure memory protection. A power failure memory type timer can be formed using the 100-msec special internal relay (715) or the 1-sec clock (714) and a CNT instruction.

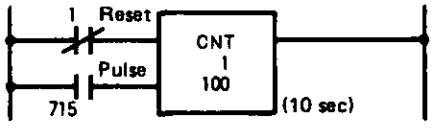

Instruction Word	Data
LOD·N	1
LOD	715
CNT	1
	100

Note: In this case, the counter must be designated to be held at the starting time using FUN7.

CNT Counter

- **Two types of counters can be selected, depending on their numbers.**
  1. **Counter Nos. 0 to 44 are adding counters.**
  2. **Counter Nos. 45 and 46 are reversible counters.**

1. Adding Counter

- ***Relay Circuit***

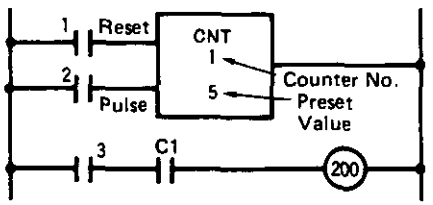

- **Program List**

Address	Instruction Word	Data
0	LOD	1
1	LOD	2
2	CNT	1
3		5
4	LOD	3
5	AND·CNT	1
6	OUT	200

- **Key Operation**

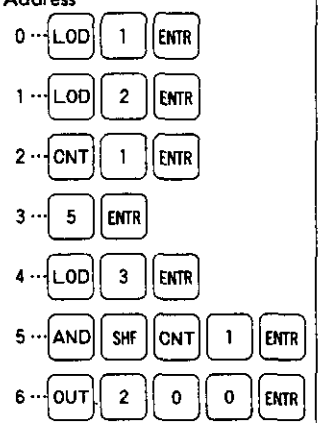

- **Time Chart**

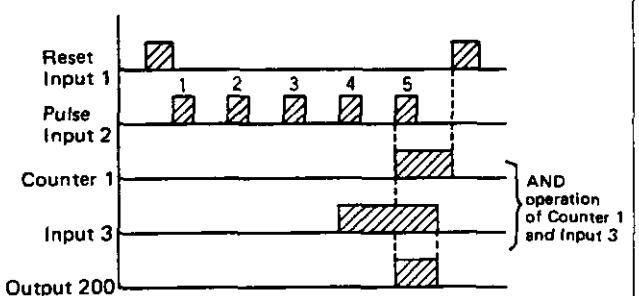

- 45 adding counters are available: Nos. 0 to 44.
- The counter should be programmed in the order of reset input, pulse input and CNT instruction.
- The counter preset values are 0 to 9999.

Supplementary

1. ●The same counter number cannot be programmed more than once.
   - ●While the reset input is OFF, the counter counts the leading edges of pulse inputs, and compares them with the preset value. When the counted value reaches the preset value, the counter turns output ON and the output remains ON until the reset input is turned ON.
   - ●When the reset input is changed from OFF to ON, the counted value is reset; while the reset input is ON, all pulse inputs are rejected.
   - ●When power is OFF, the counter's counted value can be held using the FUN (function) designation. (Refer to FUN7 on page 48.)
   - ●Since the reset input has priority, the counter counts only the pulse input which has changed from OFF to ON subsequent to one scanning after the reset input changed from ON to OFF.

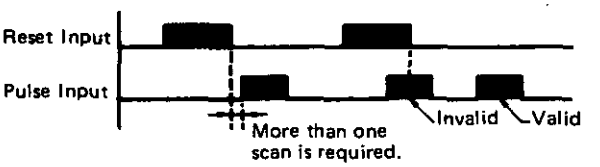

2. The output can be programmed immediately after the CNT instruction.

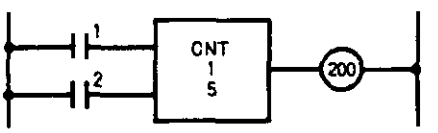

Instruction Word	Data
LOD	1
LOD	2
CNT	1
	5
OUT	200

2. Reversible Counter (Output ON at Counted Value 0)

The reversible counters are available in two types: (A) Counter No. 45 is a dual-pulse type having UP and DOWN pulse inputs. (B) Counter No. 46 is an UP/DOWN selection type which has a pulse input and an up/down selection input to switch the up/down gate.

(A) Dual-pulse Type Reversible Counter

●Relay Circuit

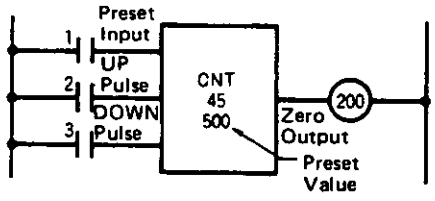

●Program List

Address	Instruction Word	Data
0	LOD	1
1	LOD	2
2	LOD	3
3	CNT	45
4		500
5	OUT	200

●Key Operation

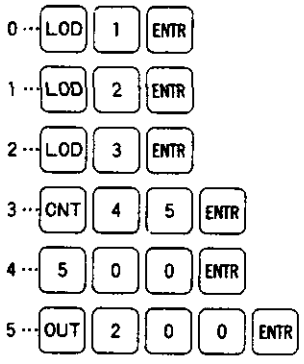

●Time Chart

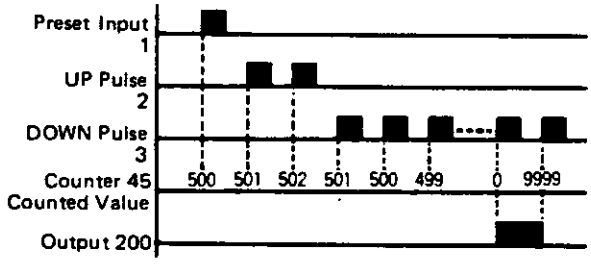

(B) UP/DOWN Selection Type Reversible Counter

●Relay Circuit

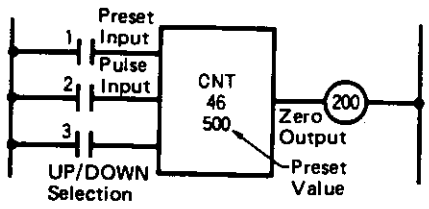

●Program List

Address	Instruction Word	Data
0	LOD	1
1	LOD	2
2	LOD	3
3	CNT	46
4		500
5	OUT	200

●Key Operation

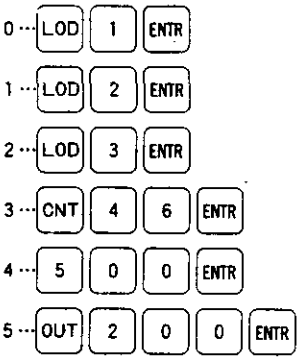

●Time Chart

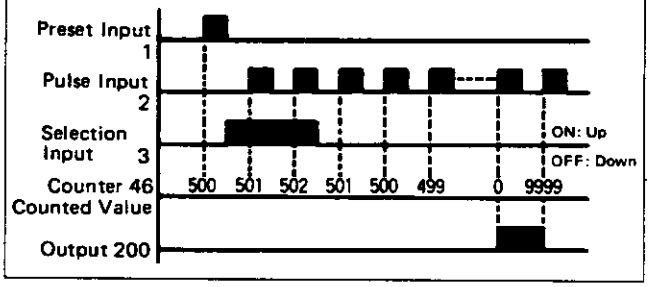

Supplementary

- When both UP and DOWN pulses are ON simultaneously, the counter does not perform counting.
- Three inputs are required: preset input, UP pulse and DOWN pulse.
- When the preset input goes ON, the preset value is set, and when the preset input goes OFF, counting is started.
- The counter output is ON only when the counted value is 0.
- After the counted value reaches 0 or 9999, it changes from 0 to 9999 or from 9999 to 0.
- When a reversible counter is programmed and operated for the first time, the counter will not operate properly if the preset input has not turned ON. The preset input must be turned ON to set the preset value into the counter. The preset value is not cleared by the reset input designated by FUN5.

Supplementary

- The UP/DOWN selection input selects the counting mode depending on the input condition.

  ON: UP count
  OFF: DOWN count

- The same counter number cannot be programmed more than once.
- When the preset value is changed during counter operation, the new preset value becomes effective immediately.

FUN100 to FUN146 Counter Equivalent Comparison Instruction, FUN200 to FUN246 Counter Equal To or Greater Than Comparison Instruction

●Counter Multi-stage Setting Example

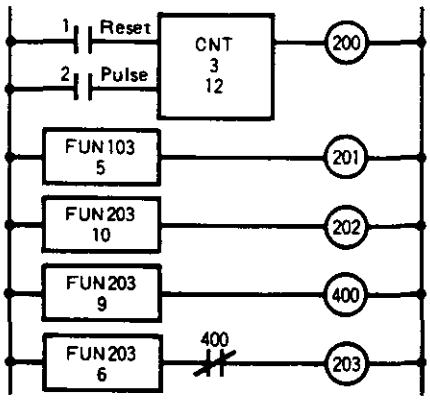

●Program List

Address	Instruction Word	Data	Address	Instruction Word	Data
0	LOD	1	9		10
1	LOD	2	10	OUT	202
2	CNT	3	11	FUN	203
3		12	12		9
4	OUT	200	13	OUT	400
5	FUN	103	14	FUN	203
6		5	15		6
7	OUT	201	16	AND·N	400
8	FUN	203	17	OUT	203

●Key Operation

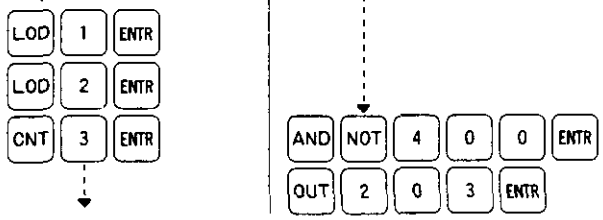

●Time Chart

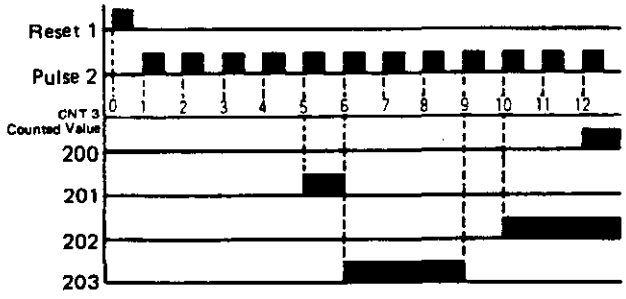

- ●47 counters (0 to 46) can perform equivalent comparison and equal to or greater than comparison operations with respect to optional values.
- ●Corresponding to counter Nos. 0 to 46, FUN100 to FUN146 (Counter No. + 100) are equivalent comparison instructions and FUN200 to FUN246 (Counter No. + 200) are equal to or greater than comparison instructions.

Supplementary

1. ●Regardless of the status of the counter, this instruction merely compares the counted value.
   - ●Both comparison instructions have the same functions as the LOD instruction but do not have a function corresponding to the AND and OR instructions; therefore, insert an internal relay if required.
   - ●The same FUN number can be used repeatedly for different preset values.
2. Sample Program for Equivalent Comparison

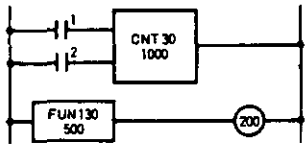

Instruction Word	Data
LOD	1
LOD	2
CNT	30
	1000
FUN	130
	500
OUT	200

●Time Chart

Output 200 is turned ON when the counted value is 500.

3. Sample Program 1 for Equal To or Greater Than Comparison

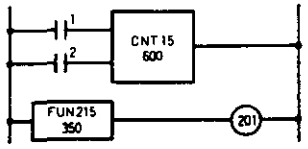

Instruction Word	Data
LOD	1
LOD	2
CNT	15
	600
FUN	215
	350
OUT	201

●Time Chart

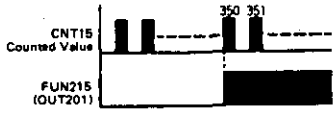

Output 201 is turned ON when the counted value is between 350 and 600.

4. Sample Program 2 for Equal To or Greater Than Comparison

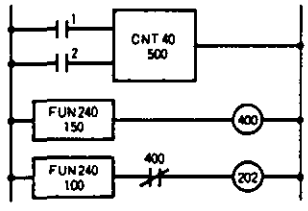

Instruction Word	Data
LOD	1
LOD	2
CNT	40
	500
FUN	240
	150
OUT	400
FUN	240
	100
AND·N	400
OUT	202

●Time Chart

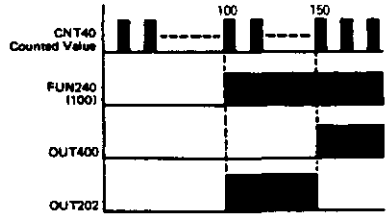

Output 202 is turned ON when the counted value is between 100 and 149.

SFR Shift Register in Forward Direction

●Relay Circuit

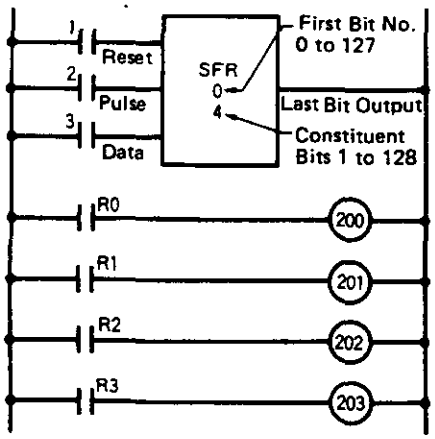

●Program List

Address	Instruction Word	Data	
0	LOD	1	
1	LOD	2	
2	LOD	3	
3	SFR	0	←First bit
4		4	←4-bit configuration
5	LOD·R	0	←Load Bit 0 status
6	OUT	200	
7	LOD·R	1	←Load Bit 1 status
8	OUT	201	
9	LOD·R	2	←Load Bit 2 status
10	OUT	202	
11	LOD·R	3	←Load Bit 3 status
12	OUT	203	

●Key Operation

LOD	1	ENTR		
LOD	2	ENTR		
LOD	3	ENTR		
SFR	0	ENTR		
4	ENTR			
LOD	SHF	SFR	0	ENTR
OUT	2	0	0	ENTR

LOD	SHF	SFR	1	ENTR
OUT	2	0	1	ENTR
LOD	SHF	SFR	2	ENTR
OUT	2	0	2	ENTR
LOD	SHF	SFR	3	ENTR
OUT	2	0	3	ENTR

●Time Chart

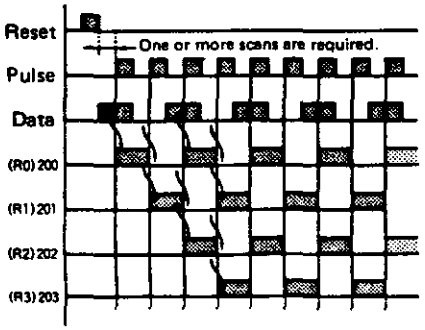

●Structural Concept

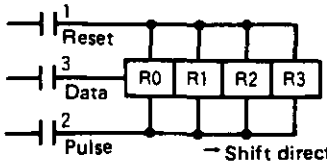

- The shift register has a total of 128 bits, and an optional number of bits can be specified for the shift register.
- The shift register must be programmed in the order of reset input, pulse input, data input, and shift register instruction.
- The shift register requires two addresses for programming. The first bit number is set at the first address and the number of constituent bits at the second address.

Forward Shift Register

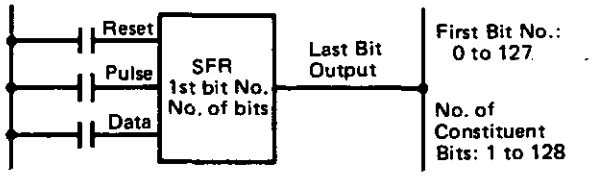

Supplementary

- Each bit status can be loaded using LOD, SHF and SFR instructions.
- The last bit status can also be outputted after the SFR instruction.

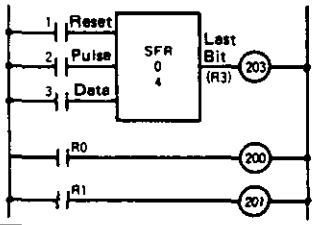

Instruction Word	Data	
LOD	1	
LOD	2	
LOD	3	
SFR	0	
	4	
OUT	203	←The last bit status is outputted.
LOD·R	0	} Each bit status is loaded.
OUT	200	
LOD·R	1	
OUT	201	

- An optional bit can be turned ON (SET) or OFF (RST) using the SET or RST instruction.

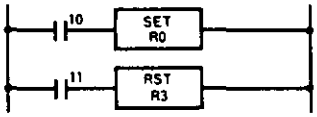

The SET or RST instruction can be actuated by an optional input condition. The bit number to be turned ON or OFF must be specified after the SET or RST instruction.

SFR NOT Shift Register in Reverse Direction

●Relay Circuit

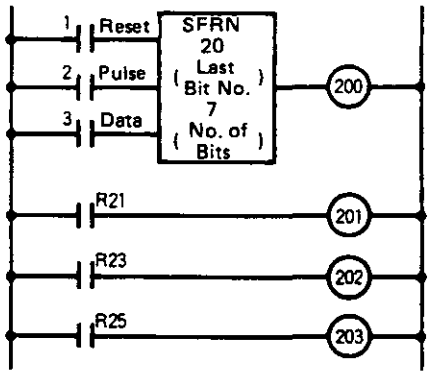

●Program List

Address	Instruction Word	Data	
0	LOD	1	
1	LOD	2	
2	LOD	3	
3	SFR·N	20	← Last bit
4		7	← 7-bit configuration
5	OUT	200	
6	LOD·R	21	← Load Bit 21 status
7	OUT	201	
8	LOD·R	23	← Load Bit 23 status
9	OUT	202	
10	LOD·R	25	← Load Bit 25 status
11	OUT	203	

●Key Operation

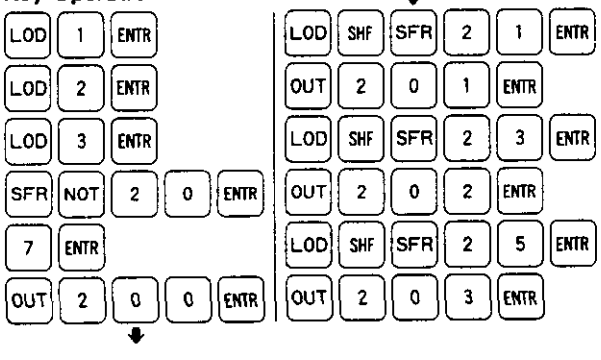

●Structural Concept

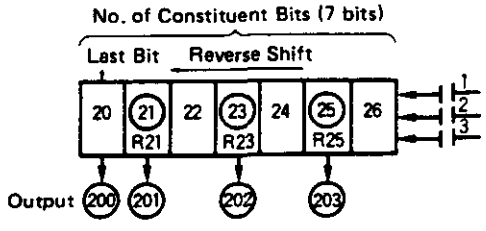

Only the bits marked with ○ are outputted.

●For the reverse shifting, use the SFR NOT instruction and program the last bit No. at the first address.

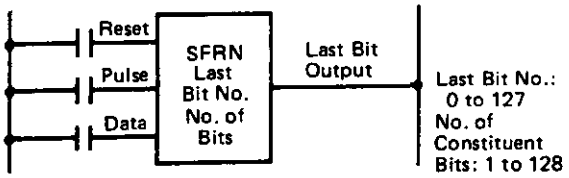

Supplementary

●A bidirectional shift register can be made by combining a forward shift register and a reverse shift register.

●Example of a bidirectional shift register

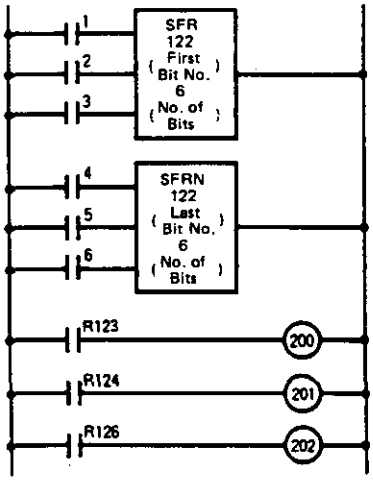

Instruction Word	Data
LOD	1
LOD	2
LOD	3
SFR	122
	6
LOD	4
LOD	5
LOD	6
SFR·N	122
	6
LOD·R	123
OUT	200
LOD·R	124
OUT	201
LOD·R	126
OUT	202

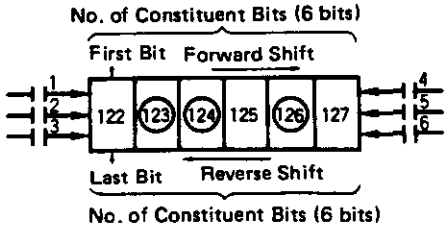

Only the bits marked with ○ are outputted.

SOT Single Output

●**Relay Circuit**

(Leading edge differentiation of NO input)

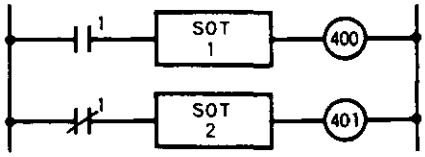

(Trailing edge differentiation of NC input)

●**Program List**

Address	Instruction Word	Data
0	LOD	1
1	SOT	1
2	OUT	400
3	LOD·NOT	1
4	SOT	2
5	OUT	401

●**Key Operation**

LOD 1 ENTR

SOT 1 ENTR

OUT 4 0 0 ENTR

LOD NOT 1 ENTR

SOT 2 ENTR

OUT 4 0 1 ENTR

●**Time Chart**

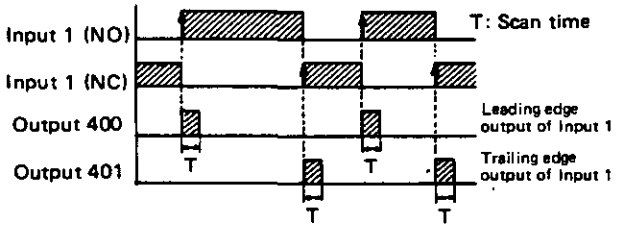

- The SOT instruction converts (differentiates) an input to a single pulse signal.
- When the input signal goes ON, the SOT output goes ON for a period of one scan.
- When a relay output is specified, the output may not operate depending on the scan time.
- A maximum of 96 SOT instructions (0 to 95) can be used.
- The same SOT number cannot be used repeatedly.

Note

1. If operation is started with SOT input signal ON, the SOT output does not turn ON. To turn ON the SOT output, the input signal must turn ON after starting operation.
2. If an SOT instruction is used between MCS and MCR instructions and the SOT input 2 turns ON before or at the same time as the MCS input 1, the SOT output 401 does not turn ON.

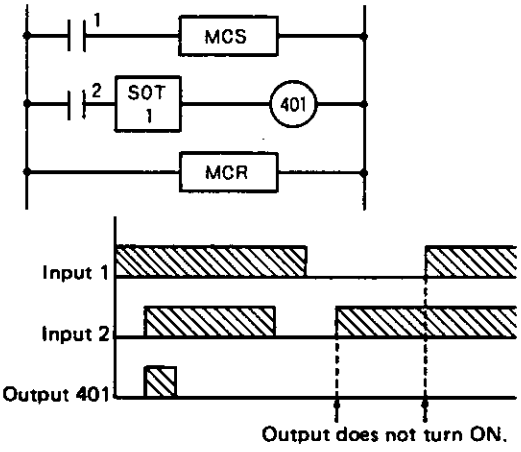

MCS Master Control Set , MCR Master Control Reset

MCS and MCR instructions are set using the double key MCS/MCR. Each time the key is pressed, the key alternates MCS and MCR instructions. Confirm the display when programming.

●Relay Circuit

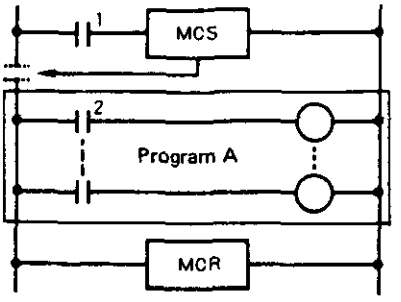

●Program List

Address	Instruction Word	Data
0	LOD	1
1	MCS	
2	LOD	2
3		⋮
⋮		⋮
N	MCR	
⋮		⋮

●Key Operation

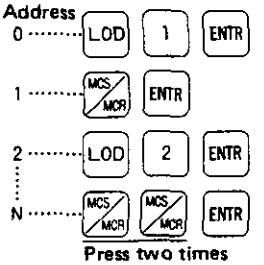

- When the input to the MCS instruction is OFF, all inputs to the program (Program A) read after the MCS instruction are forced OFF until the MCR instruction is executed: when the input to the MCS instruction is turned OFF, the program (Program A) up to the MCR is inhibited from operating.
- The MCS instruction must be used in combination with the MCR instruction.

Supplementary

1. Input conditions cannot be set for the MCR instruction. When the MCS ends with an MCR or END, all values of the logical operation and stack registers are turned OFF. The END instruction has the same function as the MCR instruction.
2. Instruction statuses during execution of MCS instruction

Instruction	Status
SOT, OUT	All instructions are turned OFF.
SET, RST	All instructions are kept.
TIM	Counted values and outputs are reset.
CNT, SFR	Counted values are kept. Pulse inputs are turned OFF. Outputs are turned OFF.

Note: The execution of MCS instruction means that the input condition is in the OFF state.

3. More than one MCS instruction can be set for one MCR instruction.

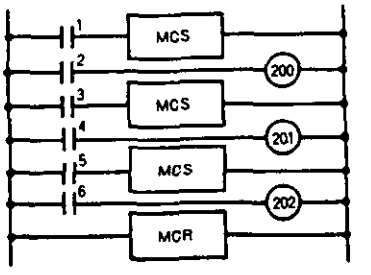

The above master control circuit gives priority to Input 1, Input 3, and Input 5 in this order.

4. MCS/MCR instructions cannot be nested in another pair of MCS/MCR instructions.

SET Set , RST Reset

●Relay Circuit

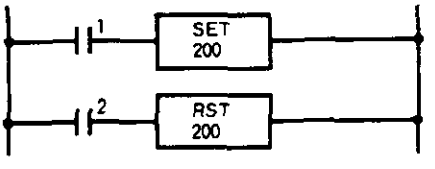

●Program List

Address	Instruction Word	Data
0	LOD	1
1	SET	200
2	LOD	2
3	RST	200

●Key Operation

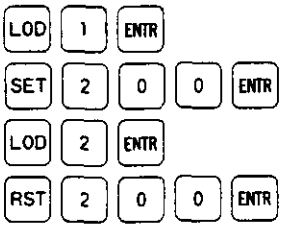

●Time Chart

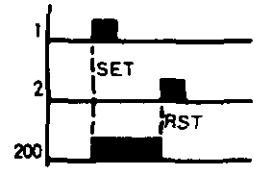

- Outputs, internal relays and shift registers can be set (ON) or reset (OFF) using the SET or RST instruction.

Supplementary

1. Sample Program

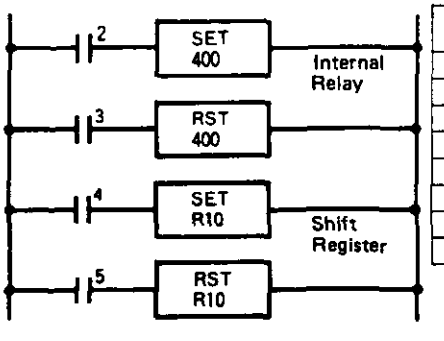

Instruction Word	Data
LOD	2
SET	400
LOD	3
RST	400
LOD	4
SET	R10
LOD	5
RST	R10

2. SET and RST instructions can be used for the same output repeatedly.

Note: SET and RST instructions operate in each scan while the input signal is ON.

JMP Jump , JEND Jump End

JMP and JEND instructions are set using the double key JMP/JEND. Each time the key is pressed, the key alternates JMP and JEND instructions. Confirm the display when programming.

●Relay Circuit

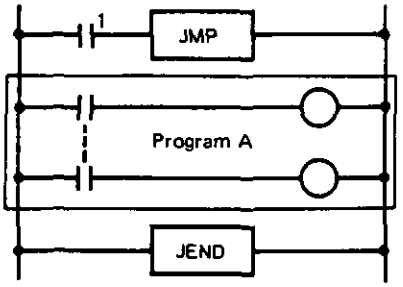

●Program List

Address	Instruction Word	Data
0	LOD	1
1	JMP	
⋮	Program A	
N	JEND	

●Key Operation

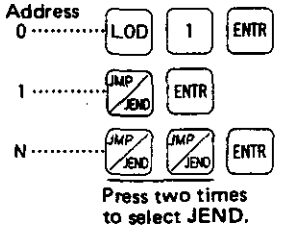

●When the input to the JMP instruction is ON, the JMP becomes valid, thus executing the program up to the JEND instruction without processing (holding all statuses): when the input is OFF, the JMP becomes invalid and the subsequent program is executed.

Supplementary

1. JMP/JEND instructions cannot be nested in another pair of JMP/JEND instructions.
2. During execution of a JMP instruction, all statuses between the JMP and JEND are held.
   ●Outputs, internal relays, timers, counters, and shift registers are held in their current statuses.
   ●Timer and counter counted values are also held.
   ●SOT instructions are all turned OFF.
3. The difference between MCS and JMP is that the program within the JMP/JEND instructions is not executed: for example, if an output has been ON before JMP execution, the output remains ON during the JMP execution.

END End

●Relay Circuit

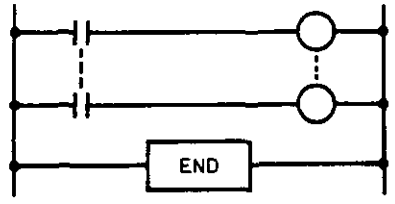

●Program List

Address	Instruction Word	Data
0		
1		
2		
⋮		
N	END	

●An END instruction is always required at the end of a program.

Supplementary

1. When the entire user memory is cleared, END instructions are written at all addresses.
2. ●Execution of instructions from address 0 of the program memory to the address where the END instruction is written is referred to as a scan. The time required for this execution is referred to as the scan time. Therefore, the scan time depends on the address of the END instruction.
   ●The END instruction transfers the results processed within one scan for every END instruction to the output, and then reads in the status of the input in preparation for the next scanning operation.

START/STOP OPERATION

1. Start & Stop Using Program Loader

MICRO-1 operation can be started and stopped using the switch on the program loader.

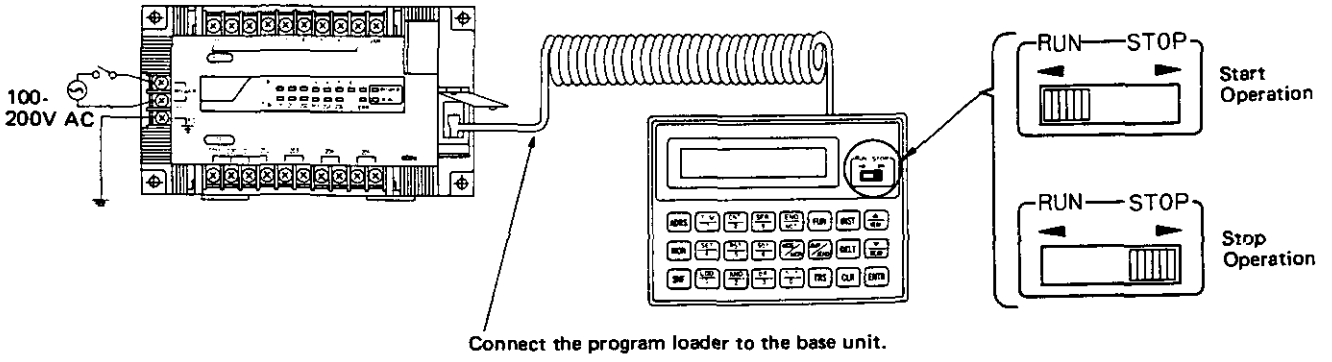

2. Start & Stop by Power Supply

When power is turned ON, operation starts, and when power is turned OFF, operation stops.
(After the RUN/STOP switch on the program loader has been set to STOP, operation cannot be started by turning power ON. Set the switch to RUN before starting operation using power supply.)

•AC Voltage Type

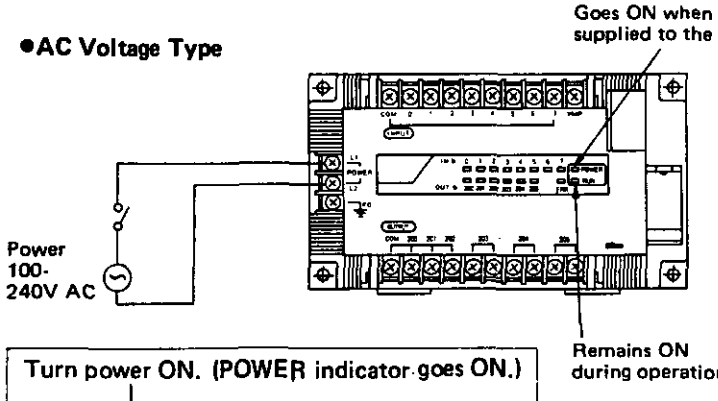

•DC Voltage Type

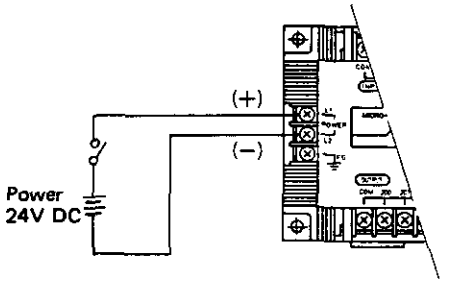

Turn power ON. (POWER indicator goes ON.)
↓
(Approx. 5 sec later)
↓
RUN state (RUN indicator goes ON.)

Supplementary

1. The MICRO-1 memorizes the RUN/STOP status immediately before power is turned OFF. *Therefore, when power is restored in the power failure protection period of 3 days,* the MICRO-1 maintains the same RUN or STOP status as before power was turned OFF. When power is restored after 3 days, the MICRO-1 takes the RUN status regardless of the status before power outage, but the program is maintained.
2. If the RUN/STOP status stored in the MICRO-1 differs from the RUN/STOP switch position on the program loader when power is restored, set the RUN/STOP switch to match the status stored in the MICRO-1 and return the switch, then the MICRO-1 status is changed as the switch position.

[Ex.] If the RUN/STOP switch on the program loader is at RUN but operation does not start when power is turned ON, then set the RUN/STOP switch to STOP and return the switch to RUN.

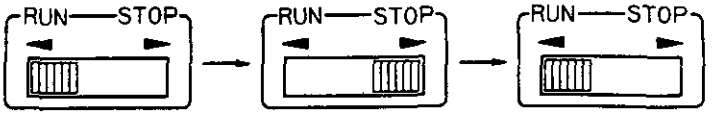

If the RUN/STOP switch is at STOP but operation starts when power is turned ON, then set the switch to RUN and return the switch to STOP.

Note

RUN/STOP Operation Response Time

1. RUN to STOP: The MICRO-1 stops operation immediately.
   After 2 seconds, "PC-STOP" is displayed on the program loader.
   After another 7 seconds, the program is displayed.
2. STOP to RUN: The MICRO-1 starts operation after 1.5 seconds.
   After another 1.5 seconds, "PC-RUN" is displayed on the program loader.
   After another 7 seconds, the program is displayed.

3. Stop & Reset by External Signal

- For systems requiring stop and reset inputs, any input number can be designated using FUN. For the setting method, see FUN4 and FUN5 on page 46.
- When a stop or reset input is turned ON during program operation, the RUN LED goes OFF and operation stops. (All outputs are turned OFF.)
- The reset input has precedence over the stop input.

(When the RUN/STOP switch on the program loader is at RUN)

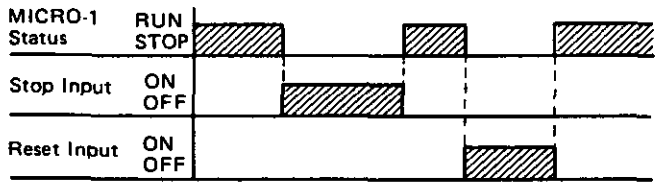

(When the RUN/STOP switch on the program loader is at STOP)

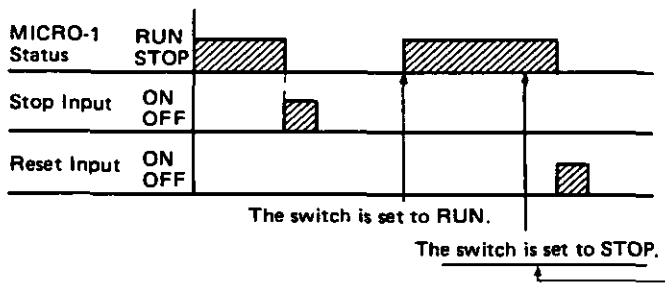

Note:
When a stop input has been designated by FUN4 and the stop input is OFF (during RUN), operation cannot be stopped using the program loader.

4. Start & Stop by Special Internal Relay

Special internal relays 701 and 702 take the status shown below while the MICRO-1 is in RUN or STOP status.

Special IR / Status	701	702
RUN	OFF	OFF
STOP	ON	OFF

Operation can be started or stopped by turning special internal relay 701 OFF or ON using the RST or SET key on the program loader.

- Internal relay 701 can be reset (OFF) to start operation by pressing: TRS RST 7 0 1 ENTR
- Internal relay 701 can be set (ON) to stop operation by pressing: TRS SET 7 0 1 ENTR

Supplementary

Data statuses in start, stop and reset modes.

Mode	Output	IR/SFR Status CNT Counted Value		TIM Current Value	CNT45 & 46 Counted Value
		Power-failure Keep Area	Power-failure Non-keep Area		
RUN	Operating	Operating	Operating	Operating	Operating
Reset	OFF	Cleared	Cleared	Maintained	Maintained
Stop	OFF	Maintained	Maintained	Maintained	Maintained
At start	Maintained	Maintained	Cleared	Cleared	Maintained

CATCH INPUT (Short-pulse Input: 0.5 msec) READ FUNCTION

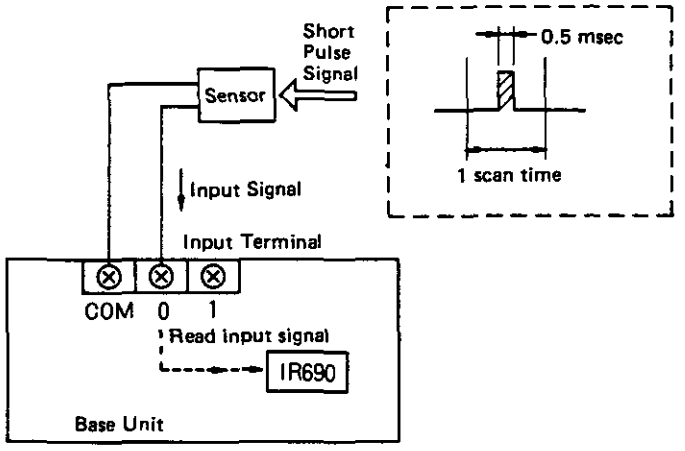

Input 0 terminal has a catch input (short-pulse input) read function in addition to the ordinary input function.
Since ordinary input signals are read simultaneously when the END instruction is executed at the end of a scan, input signals shorter than one scan time may not be read. Input 0 has a function to read short-pulse signals of 0.5 msec without fail. (When short-pulse inputs are counted by a counter, one catch input can be counted in every two scans.)
The read short-pulse input is set to special internal relay 690 (IR690) which can be programmed in a relay circuit. Operations of ordinary input and short-pulse input are illustrated below.

1. Catch Input Operation Chart

(1) Normally Open Input

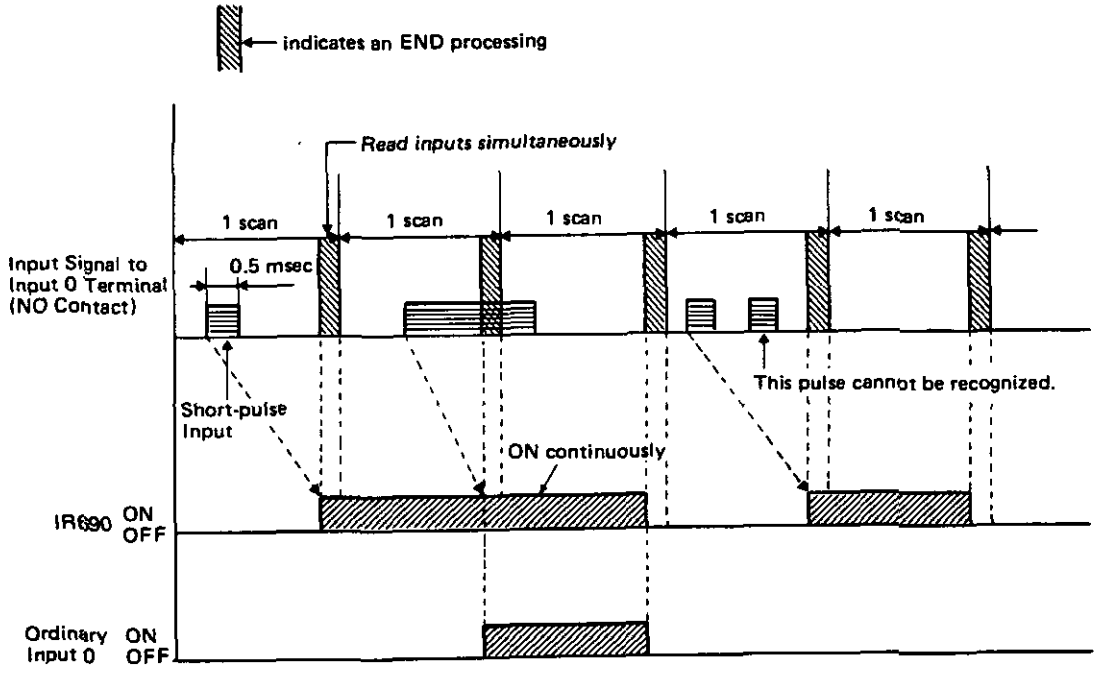

Note 1: If the catch input turns ON in every scan, IR690 remains ON.

Note 2: IR690 goes ON for a period of one scan after the catch input has turned ON.

Note 3: If Input 0 is ON at the time of simultaneous reading, the input is read to the ordinary input (No. 0). Pulse inputs shorter than one scan time are read to IR690.

(2) Normally Closed Input

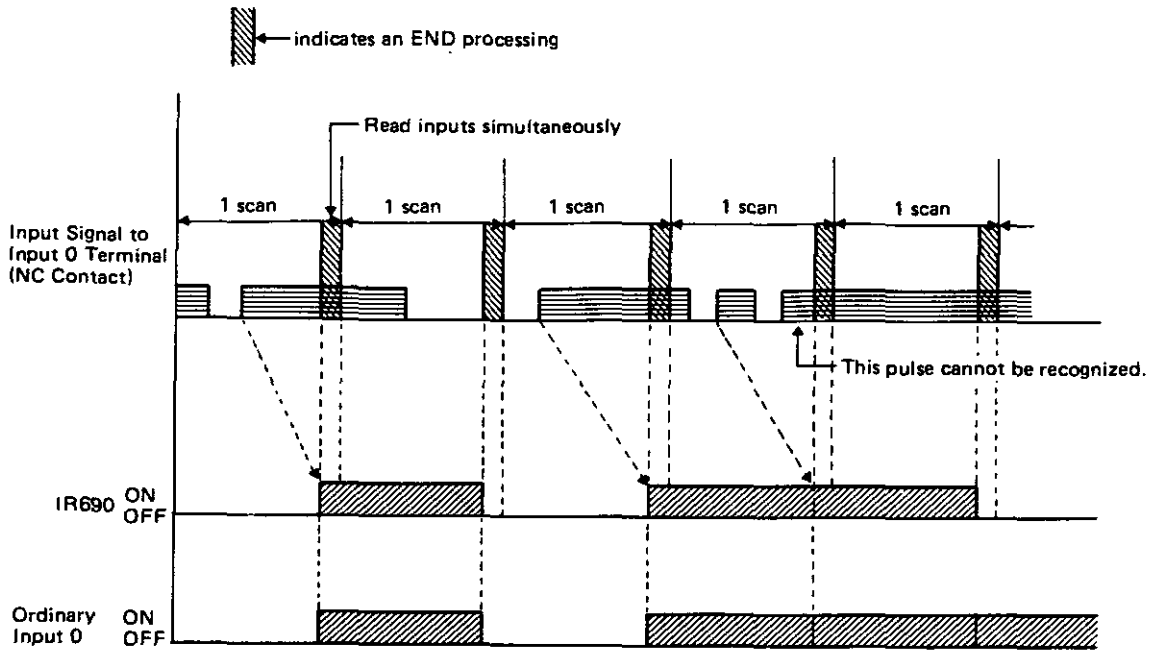

2. Sample Programs

(1) Example to count catch inputs using a counter

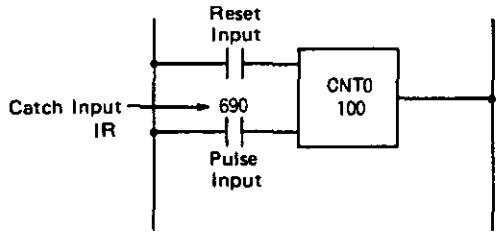

Note: When the catch input (IR690) is used for the pulse input of the counter, one pulse input can be counted in two scans. Pulse inputs occurring in every scan cannot be counted.

(2) Example of self-maintained circuit to hold the catch input for more than one scan

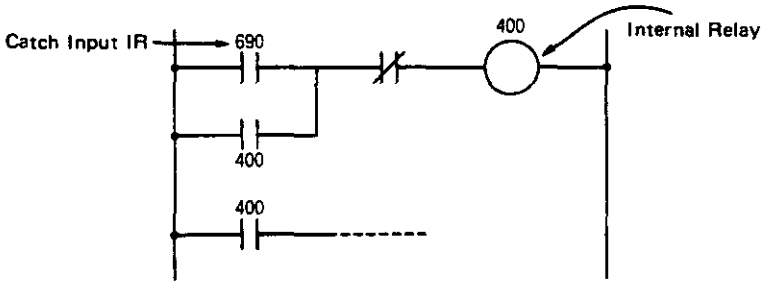

Note: When the input terminal No. 0 is not used for the catch input, Input No. 0 can be programmed as an ordinary input.

PROGRAMMING

User programs for the MICRO-1 programmable controller are programmed using the FC1A-HL1E program loader.
In addition, programs can also be made using the PFA-1H401RE, PFA-1H404RE or PF2-2H4RE program loader and the optional loader extension cable FC1A-KL3.
Application software Ladder Input Program is available for programming on an IBM compatible personal computer.
This chapter describes the programming method using the FC1A-HL1E program loader.

1. Program Loader (FC1A-HL1E)

(1) Part Description and Function

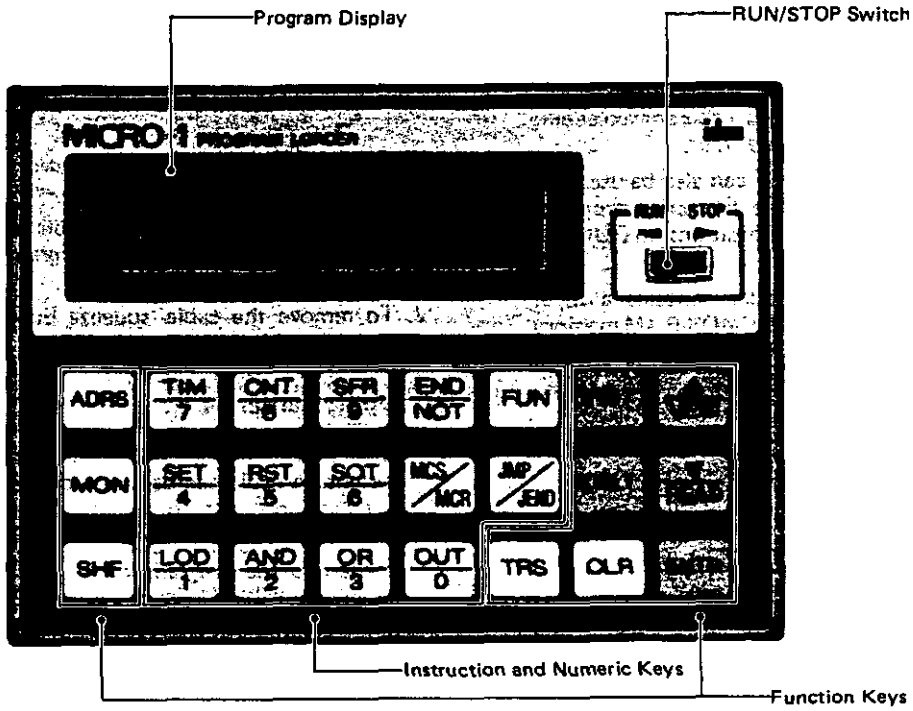

Program Display . . . . . Displays programs and other data on the LCD.
RUN/STOP Switch . . . . . Allows to start or stop the MICRO-1 operation.
Instruction and Numeric Keys . . . . . See page 19 for their functions.
Function Keys . . . . . See the table below.

●Function Keys

Key	Function
ADRS	Reads out the address to the display.
MON	Monitors the I/O, IR, timer, counter or shift register status on the display.
SHF	Changes the function of double keys TIM, CNT and SFR. [Ex.] To enter LOD TIM, press the LOD, SHF and TIM keys, then ⬚ blinks on the right of the display.
TRS	Transfers or verifies programs between the program loader and the base unit.
INST	Inserts program instructions.
DELT	Deletes program instructions.
CLR	Initializes the display or aborts the processing.
▲	Changes the display of address, monitor, FUN or searching program instructions in the ascending order.
▼	Changes the display of address, monitor, FUN or searching program instructions in the descending order.
VERI	Verifies programs between the base unit and the program loader
READ	Reads out FUN on the display or programs in the base unit to the program loader.
ENTR	Transfers a program from the program loader to the base unit or acknowledges key operation.

(2) Program Capacity

Program Loader Type No.	Program Capacity
FC1A-HL1E	964 steps maximum

Supplementary

1. The FC1A-HL1E program loader has a program capacity of 964 steps, but the MICRO-1 base unit has a program capacity of 600 steps. Therefore, if operation of a program including more than 600 steps is attempted, an error will result.
2. In programming, inputs and outputs can be allocated up to the allocation numbers of the FA series programmable controller (128 inputs and 128 outputs), but the MICRO-1 can use Inputs 0 to 7 and 10 to 17 and Outputs 200 to 205 and 210 to 217 (16 inputs and 14 outputs). Transferring a program exceeding this range will result in a program error.
3. The FC1A-HL1E program loader can also be used as a 1K-step program loader for the FA series programmable controllers, with some limitations on FUN and other operations.
4. The FC1A-HL1E program loader contains a super capacitor to back up the built-in CMOS-RAM memory for a period of approximately 3 minutes.

(3) Display Examples

●Program Display

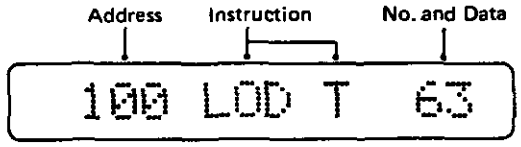

●FUN (Function) Display

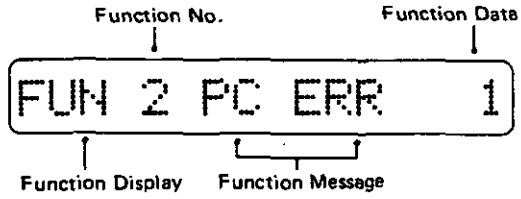

●Monitor Display

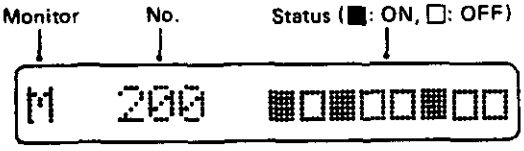

●Message Display

(4) Connection and Mounting on Base Unit

(Cable Connection to Base Unit)

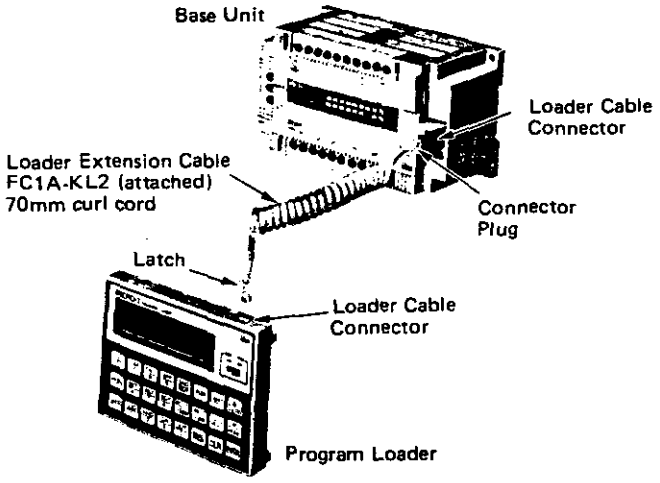

1. Plug in the loader extension cable into the connectors in the base unit and the program loader until the latch is locked.
2. To remove the cable, squeeze the latch and pull the connector plug out.

Supplementary

1. The connector plugs on both ends of the loader extension cable can be inserted to either connector in the base unit or the program loader.
2. In addition to the FC1A-KL2 (70mm curl cord) attached to the program loader, the FC1A-KL1 loader extension cable (1.5m long) is also available optionally.

●Mounting on Base Unit

The base unit has four slots to mount the program loader. Insert the latches on the back of the program loader into the slots and push the loader downward. The program loader is held in place.

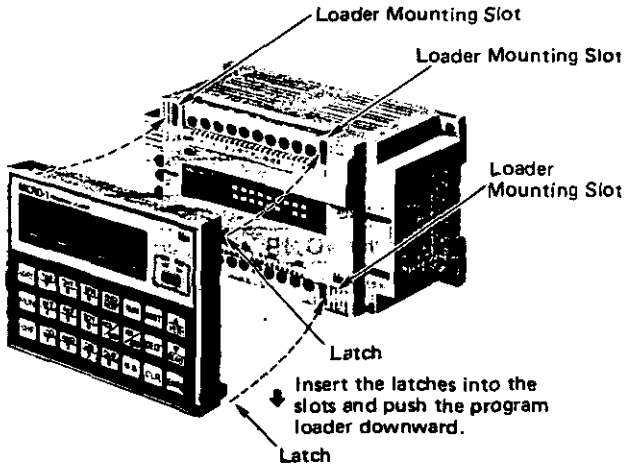

●Removing from Base Unit

Push the program loader upward to release the latches.
The program loader can be removed.

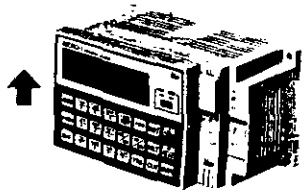

2. Programming Procedures

1 Supply power.

1. Connect the program loader to the base unit using the loader extension cable. The program loader is powered by the base unit.
2. When power is supplied, a beep is heard and "POWER ON" is displayed.
3. After approximately 5 seconds, the base unit status is displayed.
   "PC — RUN" when the base unit is in operation.
   "PC — STOP" when the base unit is in halt.
   Whether the base unit is in operation or halt, programming can be done with the program loader.

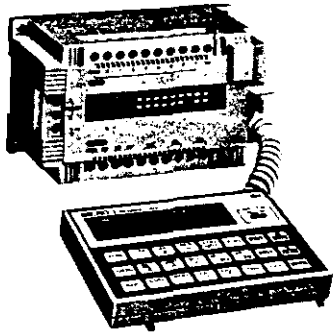

2 Clear the user memory in the program loader.

●Key Operation [DELT] [END] [ENTR]

●Display 0 END

3 Programming.

FUN initial settings . . . . . See page 47.
Basic operating procedures . . . . . See page 41.

Ⓐ

4 Check the program.

●Key Operation [FUN] [9] [8] [READ]

Program is correct.

NO

●Display

PROGRAM ERR

Syntax error address is displayed. — Address

Correct the program.

Go to Check the program Ⓐ

YES

●Display (Note)

FUN98 CHECK OK

5 Transfer the program to the base unit.

●Key Operation [TRS] [ENTR] [ENTR]

Note: Program cannot be transferred while the base unit is in operation.

●Display when program transfer is complete.

TRS LTP END

Start operation.

If the ERROR LED is ON, see page 77.

Note: FUN98 program check does not check inputs and outputs, therefore after checking a program including I/O numbers over the MICRO-1 I/O allocation, "CHECK OK" is displayed. When such a program is transferred, an error will result and the program cannot be run.

Supplementary **Relation between FUN initial setting and user program**

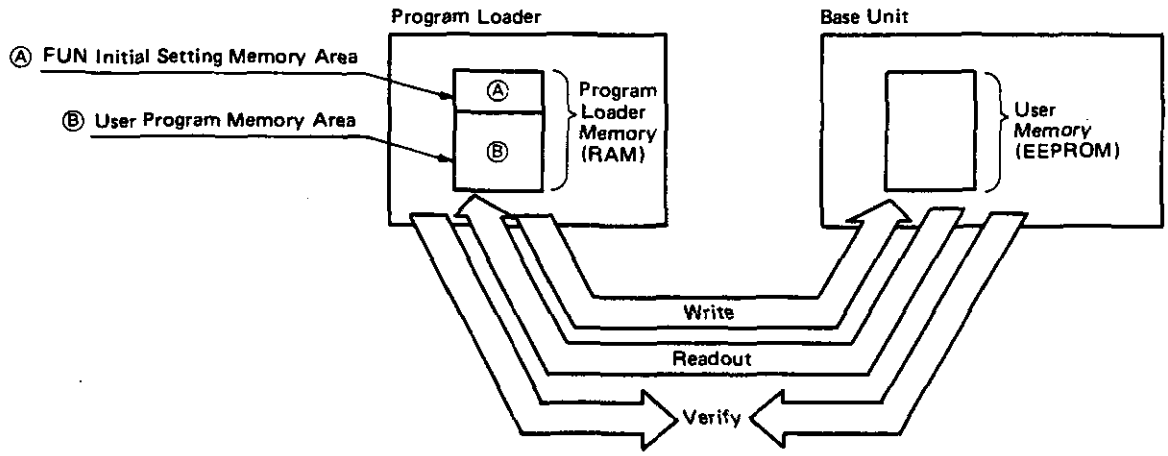

The FUN initial settings and user program are stored in the program loader RAM memory. They *are written into the user memory in the base unit by writing operation simultaneously.*

Supplementary **Programming for the FA series programmable controller using the MICRO-1 program loader.**

1. The following can be programmed:
   - *Program of 0 to 963 steps (1K steps)*
   - FA series instruction words (except 2. listed below)
   - Inputs and outputs within the range of the FA series
   - Addressed jump instruction (FUN300)
2. The following cannot be programmed:
   - Computing instructions (FUN147 and FUN247)
   - CNT FUN instruction (for FA-1)
   - FUN36 to FUN39 and FUN96 settings
   - Program capacity (FUN1 is fixed at 1K steps)

Note: A special cable is required for connecting the MICRO-1 program loader to the FA series programmable controller.
Loader Extension Cable: Type No. FC1A-KL4

3. Basic Operating Procedures

- Basic Operations List

Operation	Purpose	Key Operating Procedures	Page
Clear User Memory	The entire user program memory in the program loader is cleared.	DELT END ENTR	42
Select Program Address	An address is selected for the program in the program loader and the contents at the address are read out.	ADRS Address No. READ (VERI)	42
Enter Program Instruction	A program instruction is entered into the program loader.	Select Address ↓ Instruction Key No. ENTR	43
Read Out Program Instruction	Program instructions in the program loader are read out in the descending or ascending order.	▼ READ or ▲ VERI	43
Delete Program Instruction	A specified number of program instructions are deleted starting at the selected address.	Select Address ↓ DELT No. of Instructions ENTR	44
Insert Program Instruction	A program instruction is inserted at the selected address.	Select Address ↓ Instruction Key No. INST	44
Change Timer/ Counter Preset Value during Operation	A timer or counter preset value is changed during operation.	TRS □ × × READ (No. TIM or CNT) × × × × ENTR (New Preset Value)	45
Operation by SET/ RST Instruction	An I/O, internal relay, special internal relay or shift register is set (ON) or reset (OFF) using the program loader only during operation.	TRS SET (or RST) (SHF SFR) × × × ENTR (No. Required only for shift register)	46

Clear User Memory

The entire program memory in the program loader is cleared and END instructions are written at all addresses. Be sure to clear the program memory before starting programming.

Operation

DELT END ENTR

●Key Operation and Display

DELT END ENTR

Supplementary

1. Initial settings and FUN settings are also cleared by this operation.
2. The program in the base unit user memory is not cleared.

Select Program Address

An address is selected for the program in the program loader. When the selected address is larger than the maximum step number (963 steps), *a beep is heard to indicate an error, then retry to select a correct address.*

Operation

ADRS Address No. READ (VERI)

●Key Operation and Display

ADRS 1 2 3 READ

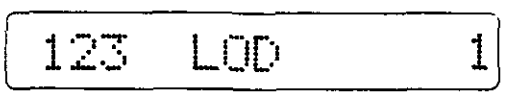

Supplementary

1. An address can be selected either in operation or halt.
2. Pressing the CLR key three times indicates Address 0.

●Key Operation

CLR CLR CLR

●Display

(Address)

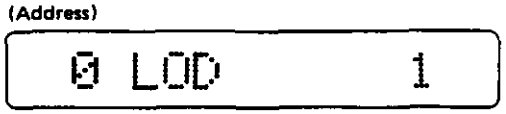

Note: The maximum address for the MICRO-1 is step 599. The program loader allows a maximum of 964 steps to be programmed for a 1K-step program used for the FA series programmable controller.

Enter Program Instruction

A program instruction is entered into the memory in the program loader.

Operation

Select Address → [Instruction Key] [No.] [ENTR]

●Key Operation and Display

Key operation procedure for this circuit is shown below.

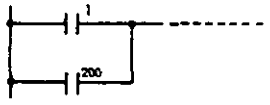

[LOD] [1] → 0 LOD 1

[ENTR] → 1 END

[OR] [2] [0] [0] → 1 OR 200

[ENTR] → 2 END

Supplementary

1. An output number is normally programmed only once; however, some program may require two or more output instructions of the same number. Each time the same output number is pressed on the program loader more than once, a beep is heard but the output instruction is entered.
2. The same timer or counter number cannot be used. When the same timer or counter number is entered repeatedly, DOUBLE ERROR is displayed on the program loader.

DOUBLE ERROR

3. When programming TIM, CNT or SFR instructions requiring two addresses, the first instruction must be programmed first, otherwise the program instruction cannot be entered.

Note 1: When the ENTR key is pressed, the instruction word and data are checked. If an error is found, a beep is heard and the program is not entered.

Note 2: When a program instruction is entered, the address on the display advances to the next address and the program at the address is displayed.

Note 3: A maximum of 964 steps of program instructions can be entered into this program loader, however the MICRO-1 can run a program of up to 600 steps.

Read Out Program Instructions

Program instructions in the program loader are read out in the descending or ascending order.

Operation

[READ] ····· Read out in the descending order

[VERI] ····· Read out in the ascending order

●Key Operation and Display

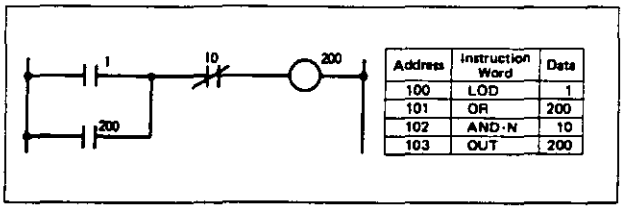

Address	Instruction Word	Data
100	LOD	1
101	OR	200
102	AND-N	10
103	OUT	200

Key operation procedure for the above program is shown at right

(Select the first address to read out.)

[ADRS] [1] [0] [0] [READ]

(Address)

100 LOD 1

[READ]

101 OR 200

Delete Program Instructions

A specified number of program instructions are deleted starting at the selected address. When deletion is complete, the subsequent program instructions are shifted up.

Operation

Select Address

↓

DELT | No. of Instructions | ENTR

•Key Operation and Display

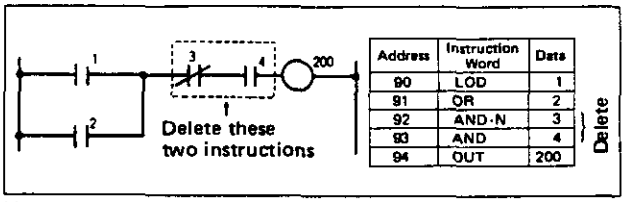

Address	Instruction Word	Data
90	LOD	1
91	OR	2
92	AND·N	3
93	AND	4
94	OUT	200

Delete

Key operation procedure for the above program is shown below.

(Select Address 92 to start deleting.)

ADRS | 9 | 2 | READ

(Address)

92 ANDN 3

(Enter 2 to delete two instructions.)

DELT | 2 | ENTR

92 OUT 200

Supplementary

When an instruction (TIM, CNT, SFR, FUN100 to 146, FUN200 to 246) requiring two addresses is included in the program to be deleted, both addresses are deleted as one program instruction. Therefore, when the first or second address of such a two-address instruction is displayed, a delete operation deletes the instruction from the two addresses at the same time.

	Address	Instruction Word	Data	
	50	LOD	1	
First Address →	51	TIM	5	Deleted
(Delete 1 address) →	52		50	simultaneously
	53	LOD	2	
	54	AND	3	

Address	Instruction Word	Data
50	LOD	1
51	LOD	2
52	AND	3

When deleting one address at Address 51, two addresses 51 and 52 are deleted simultaneously. Similarly when deleting two addresses at Address 51, two address are deleted.

Insert Program Instruction

A program instruction is inserted at a specified address. Select the address to insert a program instruction and enter the program instruction by pressing the INST key instead of the ENTR key. When insertion is complete, the subsequent program instructions are shifted down by one address.

Operation

Select Address

↓

Instruction Key | No. | INST

•Key Operation and Display

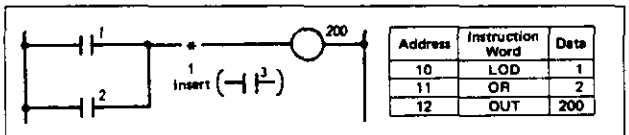

Address	Instruction Word	Data
10	LOD	1
11	OR	2
12	OUT	200

This example is to insert the ⊣I²⊢ at the position*.
For this purpose, insert an "AND3" between addresses 11 and 12.

Select address 12.

ADRS | 1 | 2 | READ

(Address)

12 OUT 200

AND | 3 | INST

13 OUT 200

Supplementary

1. When the second address of a two-address instruction (TIM, CNT, etc.) is displayed, a program instruction cannot be inserted.
2. When inserting a two-address instruction, the instruction word for the first address must be inserted before inserting the second address.

Display Remaining Steps

The number of remaining steps in the program loader available for programming can be displayed.

Operation

Key Operation: ADRS | ▼

(Address) 100 ADRS 598

Steps available for programming

Note: The MICRO-1 can run a program of steps displayed minus 364 steps.

Change Timer/Counter Preset Value during Operation

Timer or counter preset values can be changed during operation.

Operation

(1) Read out the timer or counter number to change its preset value.

Key Operation

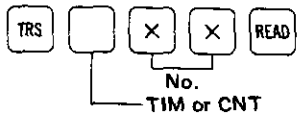

Display

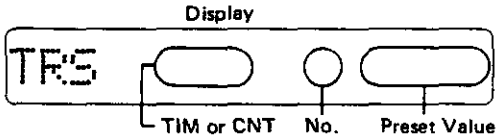

(2) Enter a new preset value.

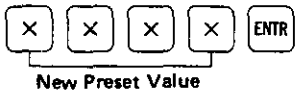

Note: In procedures (1) and (2) above, the new preset value is written into the RAM memory in the base unit; the program in the user memory (EEPROM) is not changed.

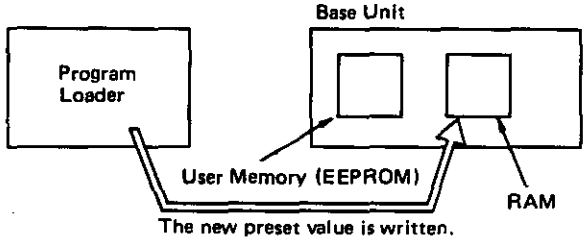

The new timer/counter preset value in the base unit RAM is maintained for approximately 3 days during a power failure at 25°C.

Write the new timer/counter preset value into the user memory (EEPROM)

(1) Stop operation.

(2) Transfer the new preset value from the base unit RAM to the program loader.

Key Operation

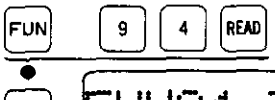

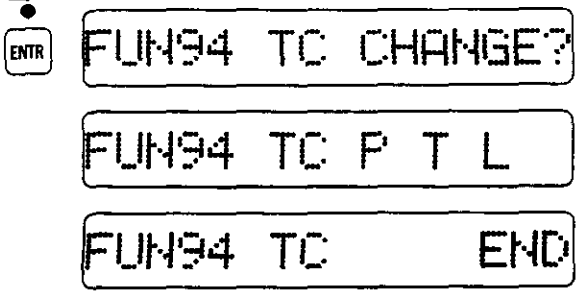

●Movement of program and data

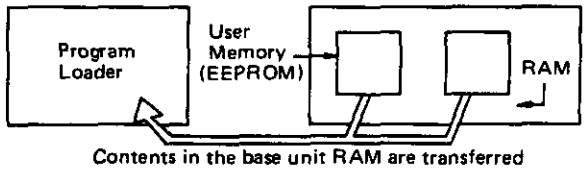

(3) Transfer the new preset value from the program loader to the base unit user memory (EEPROM) where the program is stored.

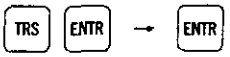

Note: If this operation is not performed, the new preset value will be lost after 3 days.

Supplementary 1

Operating procedure to restore the old preset value.

Key Operation

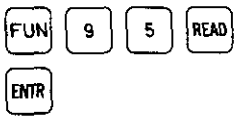

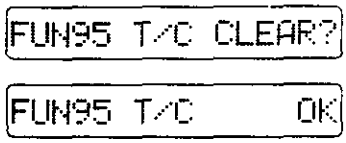

●Movement of program and data

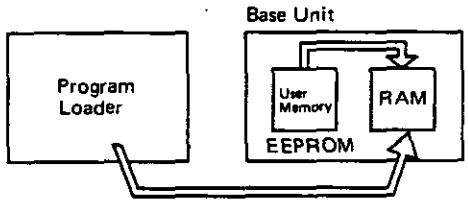

The data (timer/counter old preset value) in the base unit user memory (EEPROM) is written into the base unit RAM.
This operation restores all timer/counter old preset values. When you want to restore specific timer/counter old preset values, enter the original values individually.

Supplementary 2

●**User Memory**
This memory stores the user program.

●**RAM Memory**
This memory temporarily stores the current values of internal relays, timers, counters, and shift registers.

Operation by SET/RST Instruction

An I/O, internal relay, special internal relay or shift register can be set (ON) or reset (OFF) using the program loader only during operation.

Operation

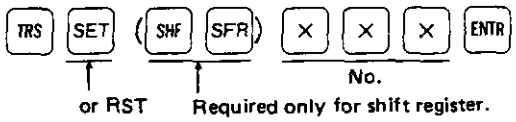

●Key Operation and Display
(To set Output 200.)

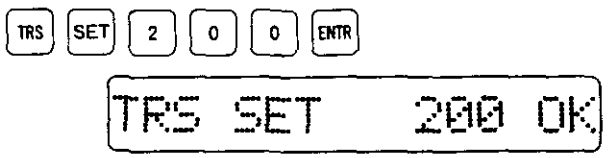

Note

The following can be controlled.

(1) Both SET/RST instruction turn ON or OFF only when the ENTR key is pressed. In the next execution, operation is performed as per the program.
- ●Output: Nos. 200 to 205, Nos. 210 to 217
- ●Internal Relay: Nos. 400 to 597
- ●Special Internal Relay: Nos. 703 to 713
- ●Shift Register: Nos. 0 to 127

(2) The input is set (ON) or reset (OFF) during one scan time.
- ●Input: Nos. 0 to 17

[Example]

In the following example circuit, Input 1 is turned ON by a SET instruction to actuate the self-holding circuit, and Input 2 is turned ON by a SET instruction to release the self-holding circuit.

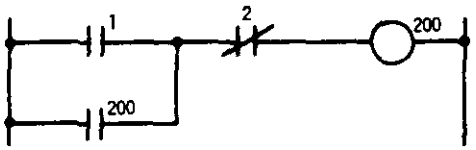

Supplementary

The time charts when the output in the following sample circuit is turned ON by the SET instruction:
These time charts show the difference in operation of the SET instruction performed (1) before and (2) after the execution of output.

(1) When SET201 is entered before OUT201 is executed.

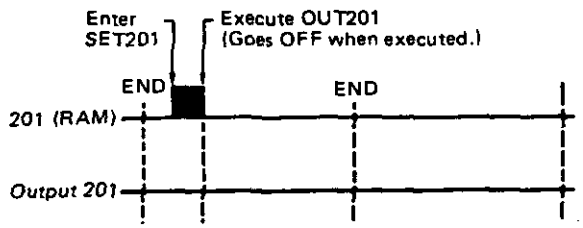

(2) When SET201 is entered after OUT201 is executed.

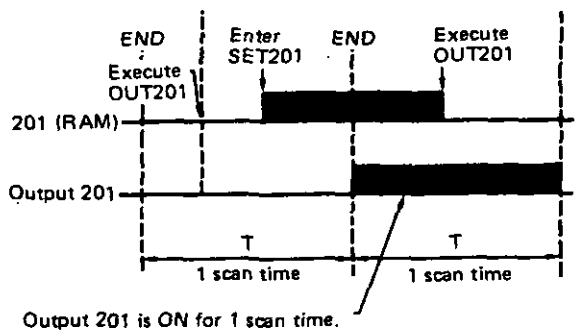

Note 1: If 201 (RAM memory) is ON when an END instruction is executed, Output 201 also goes ON. If 201 (RAM memory) is OFF, Output 201 also goes OFF.

Note 2: As described above, it should be noted that the output cannot be turned ON or OFF, depending on the timing when the SET/RST instruction is entered.

4. FUN Initial Settings

The MICRO-1 allows for function settings using the FUN key on the program loader. The settings are written into the base unit user memory by transferring the user program from the program loader.

•FUN Initial Settings List

Name	Function	Setting Range	Default	Clearing Method	FUN No.	Page
Stop Input No. Setting	Any input terminal can be designated as a stop input terminal.	Inputs: 0 to 17	0	Enter an output number. [Ex.] 200	FUN4	48
Reset Input No. Setting	Any input terminal can be designated as a reset input terminal.	Inputs: 0 to 17	0	Enter an output number. [Ex.] 200	FUN5	48
Internal Relay Keeping Designation	•Internal relay statuses (IR400-597) are cleared during a power failure. •Internal relays can be designated as keep types whose statuses are maintained or clear types whose statuses are cleared when restarting operation. •The default is all clear types.	Internal relays: 400 to 597 All internal relays are designated as keep types by setting 700.	0	•Enter No. 400. •Enter No. 0.	FUN6	49
Counter Keeping Designation	•Counter counted values (adding counter Nos. 0-44) are cleared during a power failure. •Counters can be designated as keep types whose counted values are maintained or clear types whose counted values are cleared when restarting operation. •The default is all clear types.	Counters: 0 to 44 All counters are designated as keep types by setting 45.	0	Enter No. 0.	FUN7	50
Shift Register Keeping Designation	•Shift register bit statuses (Nos. 0-127) are cleared during a power failure. •Shift register bits can be designated as keep types whose statuses are maintained or clear types whose statuses are cleared when restarting operation. •The default is clear types.	Shift register bits: 0 to 127 All shift register bits are designated as keep types by setting 128.	0	Enter No. 0.	FUN8	50
Timer/Counter Counted Value External Display	Timer current values or counter counted values can be displayed on an external digital display unit.	•Counters 0 to 46: 900 to 946 •Timers 0 to 79: 1000 to 1079	0	Enter No. 0.	FUN32	51
Key Matrix Setting	A key matrix can be set for a maximum of 64 points consisting of 8 inputs and 8 outputs.	•Key matrix scan disable: 0 •Inputs 0 to 7 enable: 1 •Inputs 10 to 17 enable: 10	0	Enter No. 0.	FUN34	51
External Display Latch Condition Setting	The latch condition for the digital display unit can be set when using the external display function.	•Low (L) latch: 0 •High (H) latch: 1	0	–	FUN35	52
Communication Device No. Registration	Device numbers can be registered for a 1:N communication personal computer link system.	•Device No.: 1 to 255	0	Enter No. 0.	FUN60	52

Note: When the user program is cleared, all FUN settings are reset to default value 0.

Stop Input No. Setting (Readout and Registration) FUN4

The MICRO-1 is not provided with a special stop input terminal and any input terminal can be designated as a stop input terminal. When the designated input terminal goes ON, the MICRO-1 stops operation.

Operation

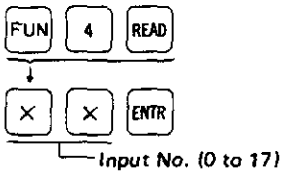

●Key Operation and Display

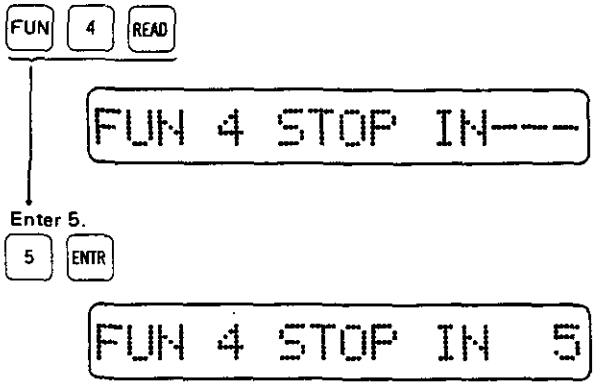

Note 1: This setting must be completed before transferring the user program to the base unit.

Note 2: For the start/stop operation with the RUN/STOP switch on the program loader when a stop input is designated, see page 34.

Clearing Stop Input Setting

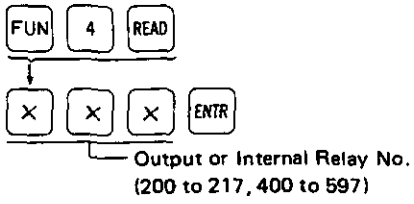

●Key Operation and Display

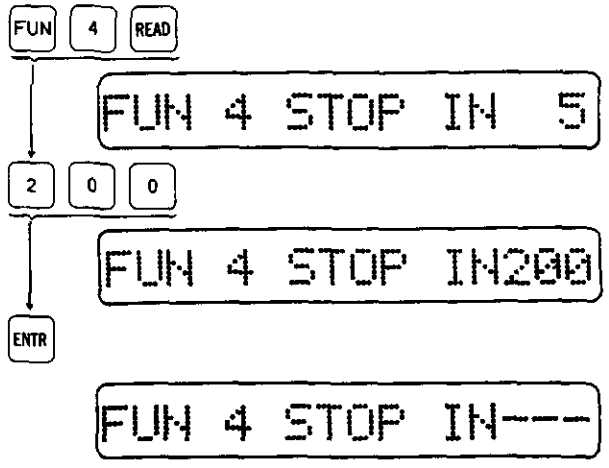

Reset Input No. Setting (Readout and Registration) FUN5

The MICRO-1 is not provided with a special reset input terminal and any input terminal can be designated as a reset input terminal. When the designated input terminal goes ON, all statuses in the MICRO-1 are reset. While the reset input is ON, the MICRO-1 is in halt.

Operation

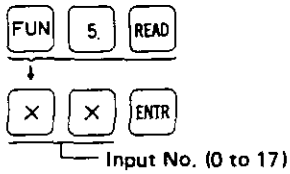

●Key Operation and Display

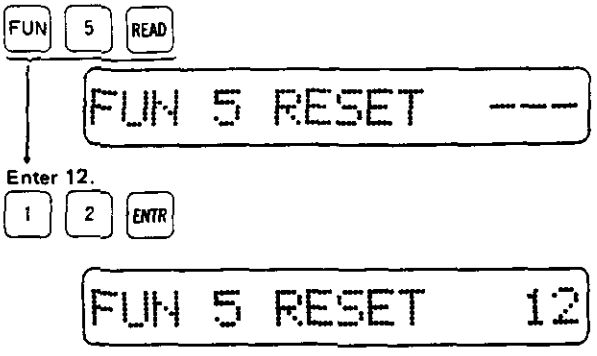

Note: This setting must be completed before transferring the user program to the base unit.

Clearing Reset Input Setting

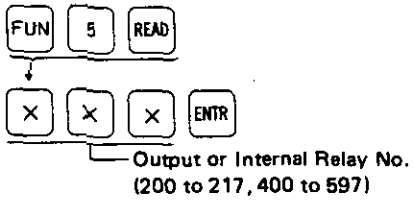

●Key Operation and Display

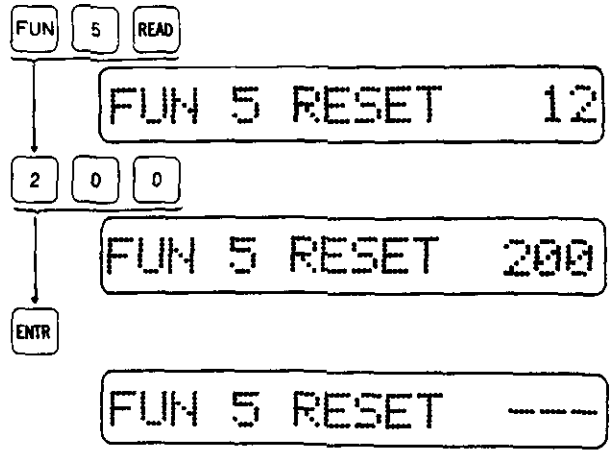

Internal Relay Keeping Designation — FUN6

1. Internal relay statuses (IR400 to 597) are cleared when a power failure occurs. It is also possible to designate internal relays as keep types whose statuses are maintained when restarting operation.
2. Internal relays from No. 0 to immediately before the designated number are keep types and the other internal relays remain clear types.

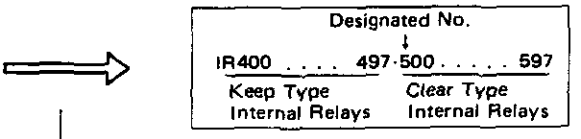

Operation

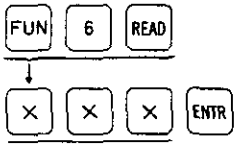

Internal Relay No. (400 to 597)

●Key Operation and Display

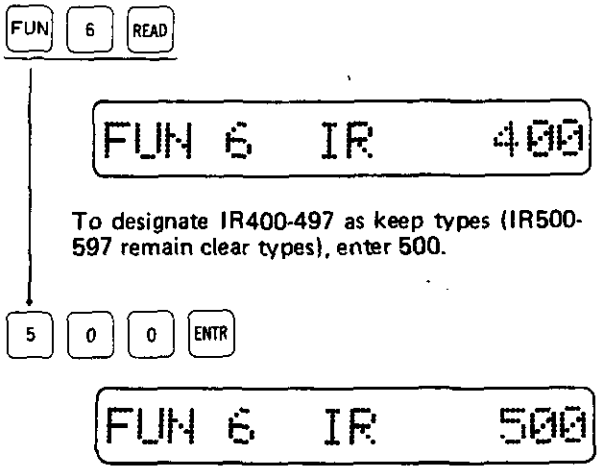

To designate IR400-497 as keep types (IR500-597 remain clear types), enter 500.

Note: This setting must be completed before transferring the user program to the base unit.

Supplementary

1. To designate all internal relays as keep types, enter 700.
2. Special internal relays 600 to 697 are always clear types regardless of the keeping designation.
3. Internal relay Nos. 400 to 597 designation must be *done in contiguous blocks.*
4. This setting can be modified at any time.

Clearing Internal Relay Keeping Designation

To clear the internal relay keeping designation, enter 400.

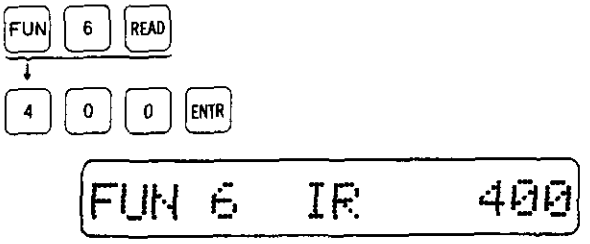

Note: After clearing the internal relay keeping designation, transfer the user program to the base unit once again.

Sample Circuit Configuration

Keep type internal relays perform the same function as *clear type internal relays under normal service conditions.* However, if a power failure occurs after a keep type internal relay has been set in a self-holding circuit, the internal relay stores the status before power failure and operates when restart is initiated.

[Ex. 1]

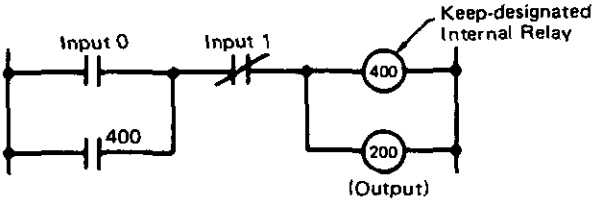

[Ex. 2] When a keep type internal relay is self-maintained by the SET instruction, the status before power failure is also stored in the memory.

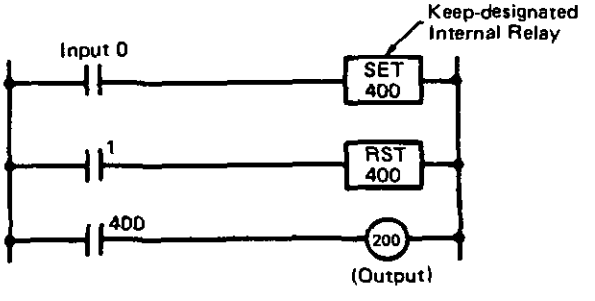

Counter Keeping Designation — FUN7

1. Counter counted values (Adding counter No. 0 to 44) are cleared when a power failure occurs. It is also possible to designate counters as keep types whose counted values are maintained when restarting operation.
2. Counters from No. 0 to immediately before the designated number are keep types and the other counters remain clear types.

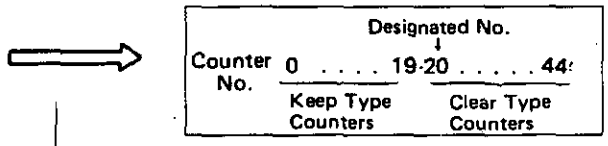

Operation

FUN 7 READ
↓
× × ENTR
Counter No. (0 to 44)

●Key Operation and Display

FUN 7 READ

FUN 7 CNT 0

To designate Counters 0 to 19 as keep types (Counters 20 to 44 remain clear types), enter 20.

2 0 ENTR

FUN 7 CNT 20

Note: This setting must be completed before transferring the user program to the base unit.

Supplementary

1. To designate all counters (Nos. 0 to 44) as keep types, enter 45.
2. Reversible counters 45 and 46 are keep types. However, their counted values can also be programmed to be cleared when restarting operation.
3. This setting can be modified at any time.

Clearing Counter Keeping Designation

To clear the counter keeping designation, enter 0.

FUN 7 READ 0 ENTR

FUN 7 CNT 0

Note: After clearing the counter keeping designation, transfer the user program to the base unit once again.

Shift Register Keeping Designation — FUN8

1. The status of each bit (0 to 127) of the shift register is cleared when a power failure occurs. It is also possible to designate shift register bits as keep types whose statuses are maintained when restarting operation.
2. Shift register bits from No. 0 to immediately before the designated number are keep types and the other bits remain clear types.

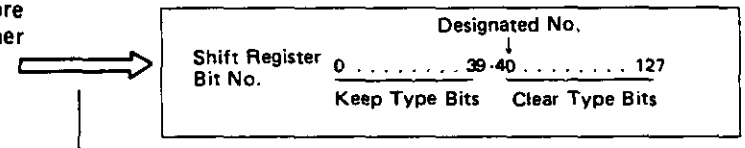

Operation

FUN 8 READ
↓
× × × ENTR
Shift Register Bit No. (0 to 127)

●Key Operation and Display

FUN 8 READ

FUN 8 SFR 0

To designate shift register bits 0 to 39 as keep types (bits 40 to 127 remain clear types), enter 40.

4 0 ENTR

FUN 8 SFR 40

Note: This setting must be completed before transferring the user program to the base unit.

Supplementary

1. To designate all shift register bits (Nos. 0 to 127) as keep types, enter 128.
2. This setting can be modified at any time.

Clearing Shift Register Keeping Designation

To clear the shift register keeping designation, enter 0.

FUN 8 READ 0 ENTR

FUN 8 SFR 0

Note: After clearing the shift register keeping designation, transfer the user program to the base unit once again.

Timer/Counter Counted Value External Display — FUN32

FUN32 setting is required to display timer current values or counter counted values on an external digital display unit.

Operation

FUN 3 2 READ

↓

× × × × ENTR

- To display counters 0 to 46: 900 to 946
- To display timers 0 to 79: 1000 to 1079

●Key Operation and Display

FUN 3 2 READ

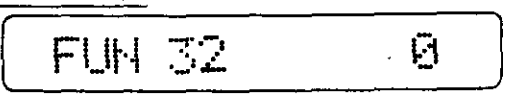

To display Timer 8 current value:

1 0 0 8 ENTR

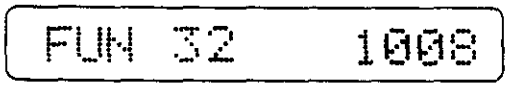

Note: This setting must be completed before transferring the user program to the base unit.

Clearing Timer/Counter Counted Value External Display

To clear the timer/counter counted value external display function, enter 0.

FUN 3 2 READ 0 ENTR

Note: After clearing the counter/timer counted value external display function, transfer the user program to the base unit once again.

For details of timer/counter counted value external display functions, see Serial I/O Module Users Manual EM230.

Key Matrix Setting — FUN34

FUN34 setting is used to set a key matrix for a maximum of 64 points consisting of 8 inputs and 8 outputs and to output the ON/OFF statuses to internal relays 600 to 677.

Operation

FUN 3 4 READ

↓

× × ENTR

- To disable key matrix scan: 0
- To designate Inputs 0 to 7: 1
- To designate Inputs 10 to 17: 10

●Key Operation and Display

FUN 3 4 READ

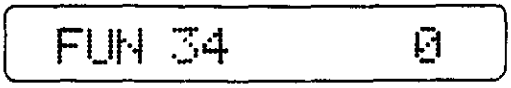

To designate Inputs 10 to 17:

1 0 ENTR

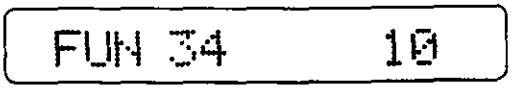

Note: This setting must be completed before transferring the user program to the base unit.

Clearing Key Matrix Setting

To clear the key matrix setting, enter 0.

FUN 3 4 READ 0 ENTR

Note: After clearing the key matrix setting, transfer the user program to the base unit once again.

For details of key matrix setting functions, see Serial I/O Module Users Manual EM230.

External Display Latch Condition Setting — FUN35

FUN35 is used to set the latch condition for the digital display unit when using the external display function.

Operation

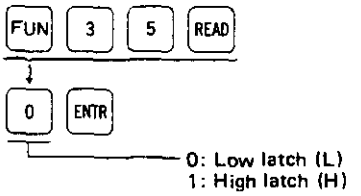

For details of external display functions, *see Serial I/O Module Users Manual EM230.*

Note: This setting must be completed before transferring the user program to the base unit.

Communication Device No. Registration — FUN60

FUN60 is used to allocate a device number (1 to 255) to each of the MICRO-1 base units connected in a 1:N communication personal computer link system.

Operation

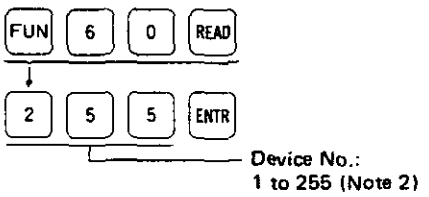

Note 1: This setting must be completed before transferring the user program to the base unit.

Note 2. Device numbers 1 to 255 can be set but a maximum of 32 MICRO-1 base units can be connected in a 1:N communication personal computer link system.

Supplementary

1. Only the MICRO-1 base unit with the device number called by the personal computer using the device number designation command can be communicated.
2. All MICRO-1 base units in one personal computer link system must be allocated to different device numbers.
3. When the user program is cleared, device number 0 is set.

Clearing Communication Device No. Registration

To clear the communication device number registration, enter 0.

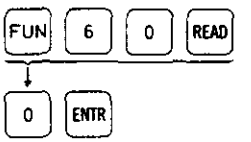

For details of communication device numbers, see *FA series 1:N Communication Personal Computer Link System Users Manual EM071.*

5. Other Operations

Other FUN operations include checking the program loader and format error checking for a written program.

•Other Operations List

Name	Function	Key Operation	Page
Display System Program Version	The system program version is displayed.	FUN 9 7 READ	54
Readout and Clear Error Data	Error codes are read out and cleared.	•Readout FUN 2 READ •Clear (after readout) 0 ENTR	54
Readout Operating Status	Operating status of the MICRO-1 is read out. Timer/counter preset value modification status is also displayed at the same time.	FUN 3 READ	55
Sequential Monitor	Program instructions at each address are displayed sequentially and the operating status of I/O, internal relay, shift register, timer or counter at the address is also monitored.	FUN 9 3 READ (Start monitoring) 1 ENTR ADRS Address No. for monitoring READ (End monitoring) 0 ENTR (Note)	63
Readout TIM/CNT Modified Preset Value Data	When timer/counter preset values are changed during operation, the preset values in the program loader are replaced by the new preset values.	FUN 9 4 READ ENTR	55
Clear TIM/CNT Modified Preset Value Data	The modified timer/counter preset values are cleared and the old timer/counter preset values are restored.	FUN 9 5 READ ENTR	56
User Program Check	The user program is checked at each step. If an error is found, the error code and its address are displayed.	FUN 9 8 READ	57
Program Loader Hardware Check	The program version of the program loader is displayed, and then the program loader display and internal memory functions are checked.	FUN 9 9 READ	56

Note: After starting the sequential monitoring using the FUN93 setting, disconnecting the program loader from the base unit, thus turning power OFF, will clear this setting.

Display System Program Version — FUN97

The MICRO-1 system program version is displayed.

Operation

FUN 9 7 READ

● Key Operation and Display

FUN 9 7

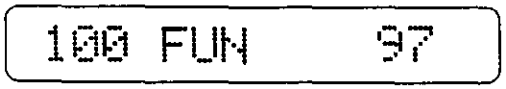

READ

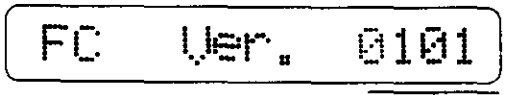

The version number changes each time the MICRO-1 system program is updated.

Readout and Clear Error Data — FUN2

If errors are found in the MICRO-1, the error codes are read out and cleared.

Operation

FUN 2 READ

● Key Operation and Display

FUN 2 READ

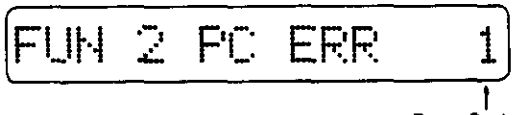

Error Code

Note 1: When the program loader is not connected to the base unit, the following message is displayed.

(Receive Error)

Note 2: If the base unit is out of use for a long period of time, the built-in super capacitor discharges, causing an erroneous display of error data codes. Clear the error data codes after turning power ON.

Clearing Error Data Codes

To clear the display of error data codes, enter 0.

FUN 2 READ

0 ENTR

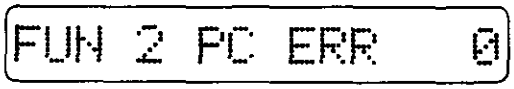

Note: Entering a number other than 0 will also clear the error data code display.

For details of error data codes, see page 71.

Readout Operating Status — FUN3

Operating status of the MICRO-1 is read out.
Timer/counter preset value modification status is also displayed at the same time.

Operation

FUN 3 READ

● Display

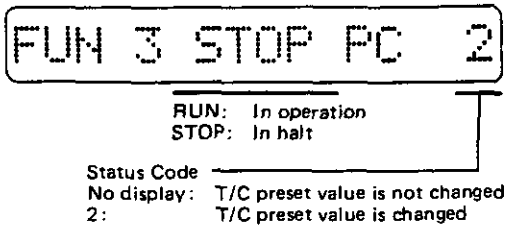

Supplementary

After reading out the data once, the display does not change even when the operating status changes. Perform the FUN3 readout operation once again.

Readout TIM/CNT Modified Preset Value Data — FUN94

When timer/counter preset values are changed during operation, the preset values in the program loader can be replaced by the new preset values using the FUN94 operation.

Operation

FUN 9 4 READ

Make sure that the preset value data may be replaced. If OK, press ENTR.

ENTR

Operation is complete.

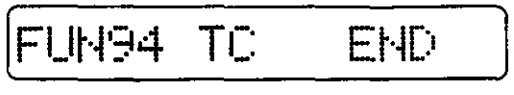

Supplementary

1. Before performing this operation, make sure that the program in execution is the same program as in the program loader.
2. For the procedure to change timer/counter preset values during operation, see page 45.

Clear TIM/CNT Modified Preset Value Data — FUN95

The modified timer/counter preset values are cleared and the old timer/counter preset values are restored.

Operation

FUN 9 5 READ

Make sure that the modified preset value data may be cleared. If OK, press ENTR.

ENTR

Operation is complete.

Supplementary

When FUN95 is executed, the preset values in the base unit user memory (EEPROM) are written into the base unit RAM.

Program Loader Hardware Check — FUN99

The program version of the program loader is displayed, and then the program loader display and internal memory functions are checked.

Operation

FUN 9 9 READ

● Display

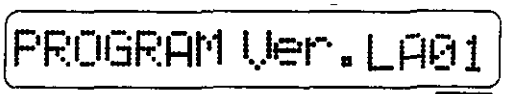

The number changes each time the program version is updated.

When all functions are normal, the following message is displayed at the end.

If an error is found during internal RAM checking, the following message is displayed.

Supplementary

1. Numbers 0 to 9 are displayed sequentially during display checking. Check to see if all numbers are displayed correctly.
2. The internal memory function is checked by reading and writing the entire internal RAM for every 0.5K bytes displaying ▦.

User Program Check — FUN98

The user program is checked at each step. If an error is found, the error code and its address are displayed. Correct the program for every error displayed and repeat the FUN98 operation until a "CHECK OK" is displayed.

Operation

After entering a user program, check the program using the following procedure.

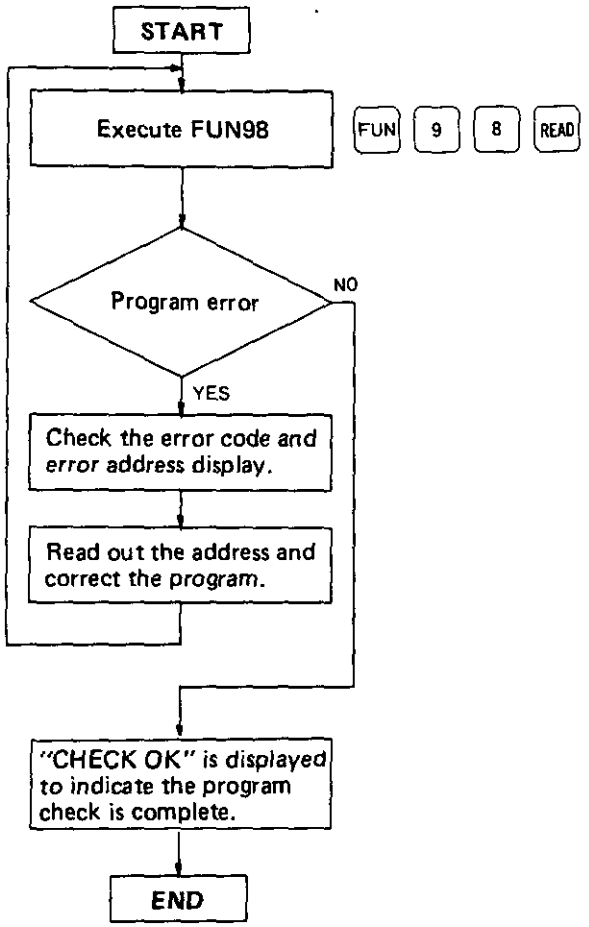

●Key Operation and Display

FUN 9 8 READ

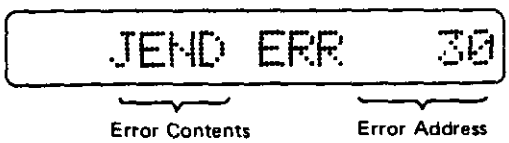

Note: The FUN98 operation does not check input and output numbers, therefore after checking a program including I/O numbers over the MICRO-1 I/O allocation, "CHECK OK" is displayed. When such a program is transferred, an error will result and the program cannot be run.

Display Message

The user program check operation is responded by seven messages.

① 

Program check is complete.

② 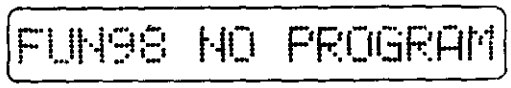

No user program is found.

③ 

END is missing.

④ 

MCS or MCR is missing.

⑤ 

JMP or JEND is missing.

⑥ 

One of a two-address instruction is missing.
The user program is damaged.

⑦ 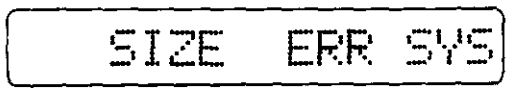

The program capacity data is damaged.

Supplementary

If more than one error is found in a user program, the error at the smallest address is displayed.

6. Search for Program Instruction

The user program in the program loader is searched for a program instruction in the ascending or descending order starting *at the current address.*

Operation

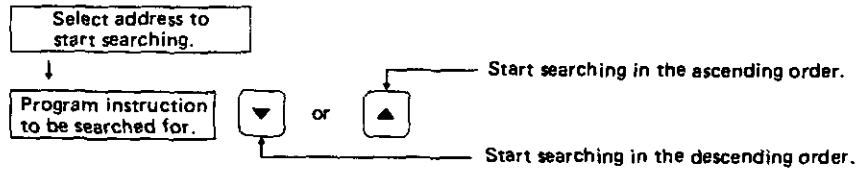

●Key Operation Examples of Searching

[Ex. 1] OUT 2 0 0 ▼

[Ex. 2] AND NOT SHF TIM 8 ▼

Example of Searching

●Relay Circuit

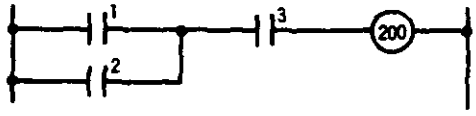

●Program List

Address	Instruction Word	Data
100	LOD	1
101	OR	2
102	AND	3
103	OUT	200

To search for OUT200 in the above circuit.

●Key Operation and Display

ADRS 0 READ Start searching at address 0.

OUT 2 0 0

▼

Supplementary

Only one program instruction is searched for at one time, i.e. when the program instruction is located, the searching ends. To search for another instruction, repeat the procedure from the beginning.

7. Transfer Program

User programs can be transferred between the program loader and the base unit in three ways:

(1) Write Program
Writing a program from the program loader to the base unit.

(2) Read Program
Reading a program from the base unit to the program loader.

(3) Verify Program
Verifying programs between the base unit and the program loader.

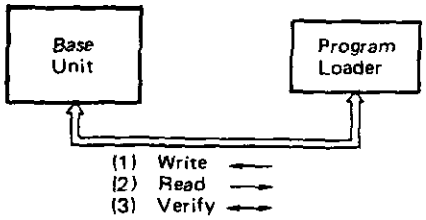

Note 1: If the program loader is not connected to the base unit, a "Receive Error" will result.

Display

Note 2: If timer/counter preset values have been changed during operation and the user program is written into the base unit without changing the program in the program loader, the program in the program loader replaces the program in the base unit, thus the new timer/counter preset values will be lost.

1 Write Program

This operation is to write a user program from the program loader to the base unit.

Operation

Make sure that the MICRO-1 is in halt before starting the following procedure.

●Key Operation and Display

TRS ENTR

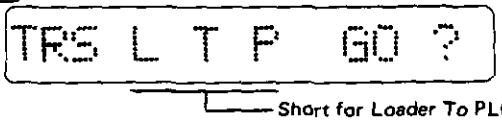

Short for Loader To PLC

Make sure that the write operation may be executed.

ENTR

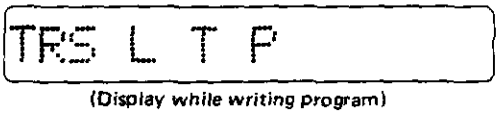

(Display while writing program)

Display when operation is complete.

●When the ERROR LED on the base unit goes ON approximately 3 seconds after starting, perform the FUN2 operation (readout and clear error data) to check for the error and take appropriate actions to correct the error.

●Program transfer from the program loader to the base unit takes approximately 4.5 seconds.

Error Display

1. When a user program is written into the base unit during MICRO-1 operation, the following error message is displayed.

2. When a communication error other than an abnormal receive command occurs, the following error message is displayed.

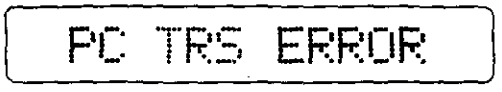

3. When an abnormal receive command error occurs in the base unit, the following error message is displayed.

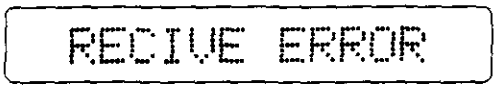

2 Read Program

This operation is to read out a user program from the base unit user memory to the program loader.

Operation

The read program operation can be performed whether the MICRO-1 is in operation or halt.

●Key Operation and Display

TRS READ

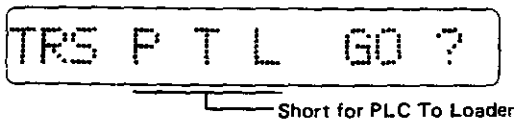

Short for PLC To Loader

Make sure that the read operation may be executed.

ENTR

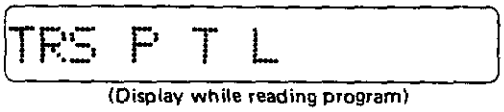

(Display while reading program)

Display when operation is complete.

Error Display

1. When the program CRC finds an error, the following error message is displayed.

2. When a communication error occurs, the following error message is displayed.

3 Verify Program

This operation is to verify user programs between the base unit and the program loader.

Operation

The verify program operation can be performed whether the MICRO-1 is in operation or halt.

●Key Operation and Display

TRS VERI

Short for Loader And PLC

ENTR

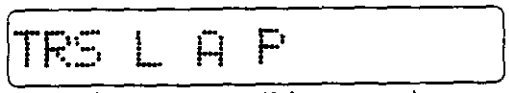

(Display while verifying programs)

Display when operation is complete.

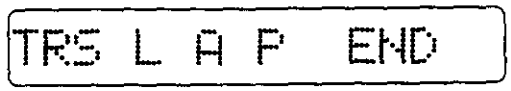

Error Display

1. When a communication error occurs, the following error message is displayed.

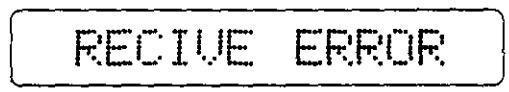

2. When a verify error occurs, the following error message is displayed.

Error Address No.

FUN Registration Area Error

MONITORING OPERATION

I/O, timer, counter and shift register operation and also timer/counter counted values can be monitored during operation by simple key operation. Monitoring operation are performed in two ways: simultaneous monitoring and sequential monitoring.

1. Simultaneous Monitoring

The simultaneous monitoring operation includes monitoring of the following items.

(1) I/O status, (2) Timer current value and status, (3) Counter counted value and status, (4) Internal relay status, and (5) Shift register bit status

Supplementary

1. Connect the program loader to the base unit to perform monitoring.
2. Pressing the ▼ or ▲ key will allow monitoring of the subsequent or preceding area.
3. Monitored data are updated every 100 msec.
4. To cancel monitoring, press the CLR key.

1 Monitor I/O and Internal Relay

Monitored statuses are displayed in units of 8 points from the specified number.
The monitored status is indicated as follows:

■ indicates ON.
□ indicates OFF.

Operation

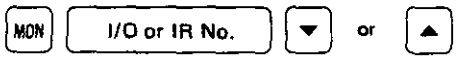

●Key Operation and Display

[Ex.] To monitor Output No. 200.

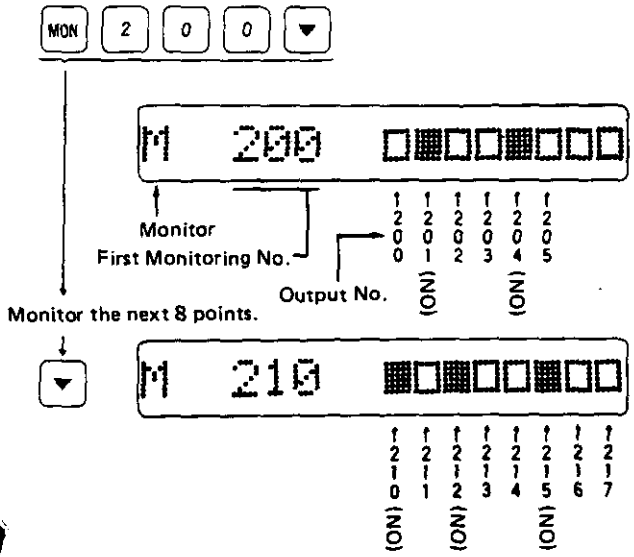

2 Monitor Timer/Counter

The timer current value is monitored in the subtracting mode and the counter counted value is monitored in the adding mode. The monitor display includes the timer/counter number, ON/OFF status, and the current/counted value.
The monitored timer/counter status is indicated as follows:

■ indicates ON. (Time up or count up)
□ indicates OFF. (Operation in progress or halt)

Operation

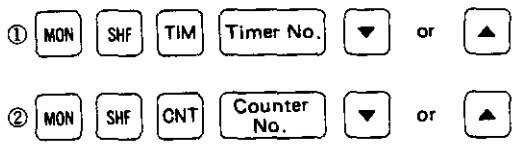

●Key Operation and Display

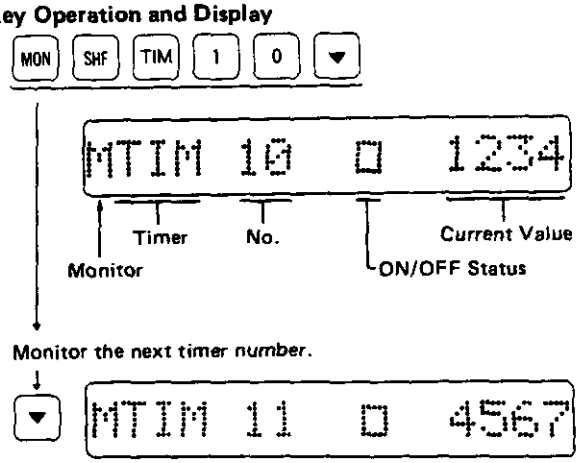

3 Monitor Shift Register

Monitored shift register bit statuses are displayed in units of 8 points from the specified bit number.
The monitored status is indicated as follows:

■ indicates ON.
□ indicates OFF.

Operation

MON SHF SFR Bit No. ▲ or ▼

● **Key Operation and Display**

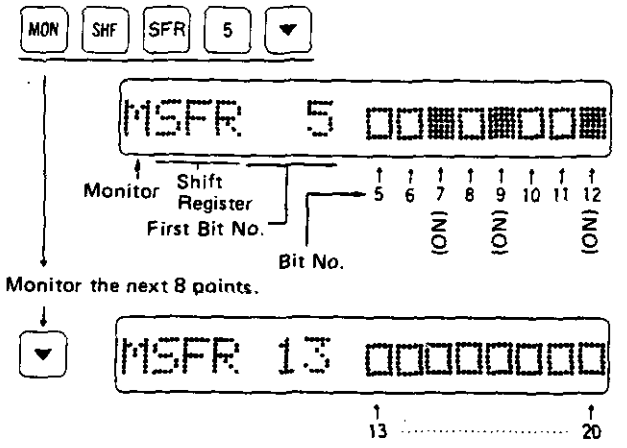

2. Sequential Monitoring

(1) The sequential monitoring operation is performed by using FUN93 and allows monitoring of the operating status of an *I/O, internal relay, shift register, timer* or counter at each address sequentially.

(2) The sequential monitoring operation can be performed at each address containing a LOD, AND, OR, OUT, SET, RST, TIM or CNT instruction.

(3) The monitored status is indicated as follows:

- *I/O, IR* or SFR
  - ■: ON
  - □: OFF
  - No display: Cannot communicate or perform monitoring at the address or instruction.
- Timer or Counter
  - ■: ON (Time up or count up)
  - □: OFF (Operation in progress or halt)
  - No display: Cannot communicate or perform monitoring at the address or instruction.

Note: Where a NOT instruction is included, the display is reversed.

Operation

•Key Operation

FUN 9 3 READ

(To execute monitoring)

1 ENTR → FUN 93 TRS MON 1

ADRS × × × READ

Address No. to start sequential monitoring

(Display Example)

123 LOD 3 ■

Address No. | Instruction Word | No. for Monitoring | Status Display

•Display

FUN 93 TRS MON 0

To execute monitoring: 1
To abort monitoring: 0

(To abort monitoring)

0 ENTR → FUN TRS MON 0

The above display example indicates that Input 3 of LOD instruction at Address 123 is ON.
The subsequent or preceding address can be monitored simply by pressing the ▼ or ▲ key.
Unless the sequential monitoring is canceled, selecting another address will execute monitoring the selected address continuously.

Supplementary

With FUN93 set to 1, instruction keys are valid.

Note: After starting the sequential monitoring using the FUN93 setting, disconnecting the program loader from the base unit, thus turning power OFF, will clear this setting.

[Ex.]

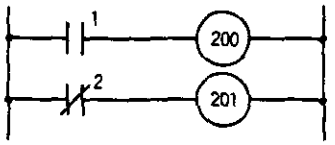

Address	Instruction Word	Data
0	LOD	1
1	OUT	200
2	LOD NOT	2
3	OUT	201

When sequential monitoring is executed for Addresses 0 and 2 of the above program, the display will appear as shown below.

Address 0

..... indicates that Input 1 is ON.

Address 2

..... indicates that Input 2 is OFF.

3. Scan Time Monitoring

The scan time for the user program written in the MICRO-1 base unit can be read out.

Operation

- **Key Operation and Display**

MON SHF CNT 4 7 READ

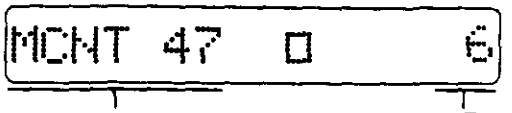

Scan Time Monitor

Scan Time (msec)

Instruction Execution Time

Instruction Word	Operand	Maximum Time (μsec)	Compilation Bytes
END		4000	3
LOD	IN, OUT, IR	9.7	12
AND	IN, OUT, IR	5.5	5
OR	IN, OUT, IR	7.6	7
OUT	OUT, IR	9.7	9
SET	SFR, OUT, IR	8.6	8
RST	SFR, OUT, IR	8.6	8
LOD N	IN, OUT, IR	10.8	13
AND N	IN, OUT, IR	5.5	5
OR N	IN, OUT, IR	7.6	7
LOD	T	10.8	12
LOD	C	9.7	12
LOD	R	8.6	12
OR-LOD		5.5	7
AND-LOD		5.5	7
SOT		45.2	8
MCS		12	3
MCR		10	3
JMP		13.3	3
JEND		11	3

Instruction Word	Number, etc.	Maximum Time (μsec)	Average Time (μsec)	Compilation Bytes
TIM	0 to 79	129	106	5
CNT	0 to 44	104	93	5
CNT	45 to 46	96	80	5
SFR(N)	n bits	(Note)	141	9
FUN100		43		9
FUN200		43		9

Note: The execution time varies with the number of shift bits.

8 points	186 μsec
64 points	287 μsec
128 points	391 μsec

CONNECTION TO FA SERIES PLC

1. Connecting FA Series Program Loader to MICRO-1 Base Unit

(Cable Connection)

The FA series program loader PFA-1H401RE, PFA-1H404RE or PF2-2H4RE can be connected to the MICRO-1 base unit using the optional loader extension cable FC1A-KL3 as shown below.

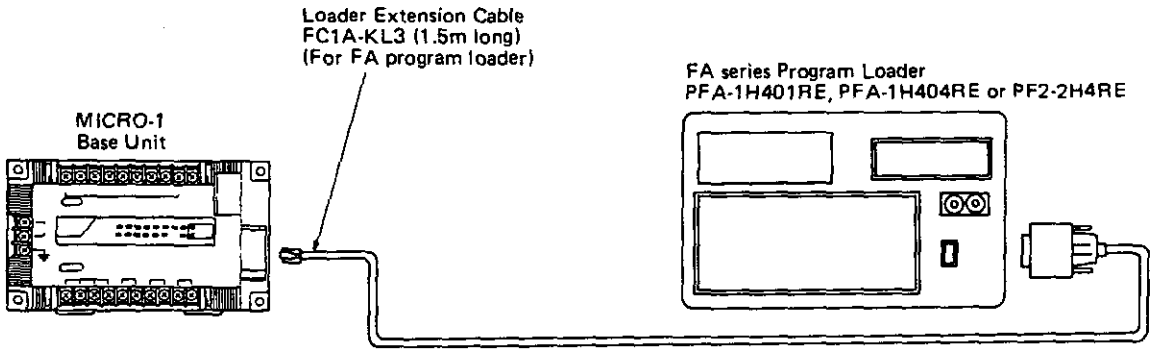

(1) The FA series program loader can be used for programming the MICRO-1 user programs by connecting the program loader as illustrated above, then the following must be taken into consideration.

- The FA series program loader can make programs of the maximum program capacity and computing instructions of the FA series programmable controllers. The MICRO-1, however, can run programs within the maximum program capacity and instruction words of the MICRO-1.
- When a program exceeding the MICRO-1 capability is transferred from the FA series program loader to the MICRO-1 base unit, an error will result.
- Program capacity of the 4K-step program loader must be set to 1K steps. When transferring a program from the FA series program loader with 4K-step capacity selected, error 200 will be displayed. Then, select 1K-step program capacity by pressing the FUN, 1, READ, 1, and ENTR keys on the program loader.

(2) MICRO-1 user programs can be stored in memory packs for the FA series using the following procedure.

- Connect the FA series program loader to the MICRO-1 base unit and read out the program to the FA series program loader using the transfer program operation.
- When readout is complete, disconnect the loader extension cable and connect an AC adapter to supply power to the program loader. Install a memory pack PFA-1M14 (EEPROM) or PFA-1M34 (EPROM) into the program loader.

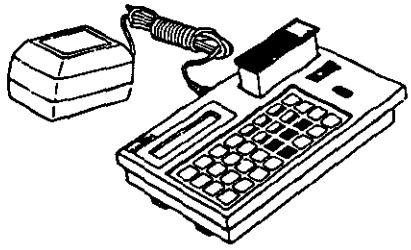

- Transfer the program from the program loader to the memory pack using the PROM writing operation. The program can be stored in the memory pack. For details of memory packs, readout program, and PROM writing operation, see the FA series programmable controller users manual.

CAUTION

If PROM writing operation is performed with the loader extension cable connected to the MICRO-1 base unit without using an AC adapter, both the MICRO-1 base unit and program loader will malfunction.

2. Connecting MICRO-1 Program Loader to FA Series CPU

(Cable Connection)

The MICRO-1 program loader FC1A-HL1E can be connected to the FA series programmable controller CPU using the optional loader extension cable FC1A-KL4 as shown below.

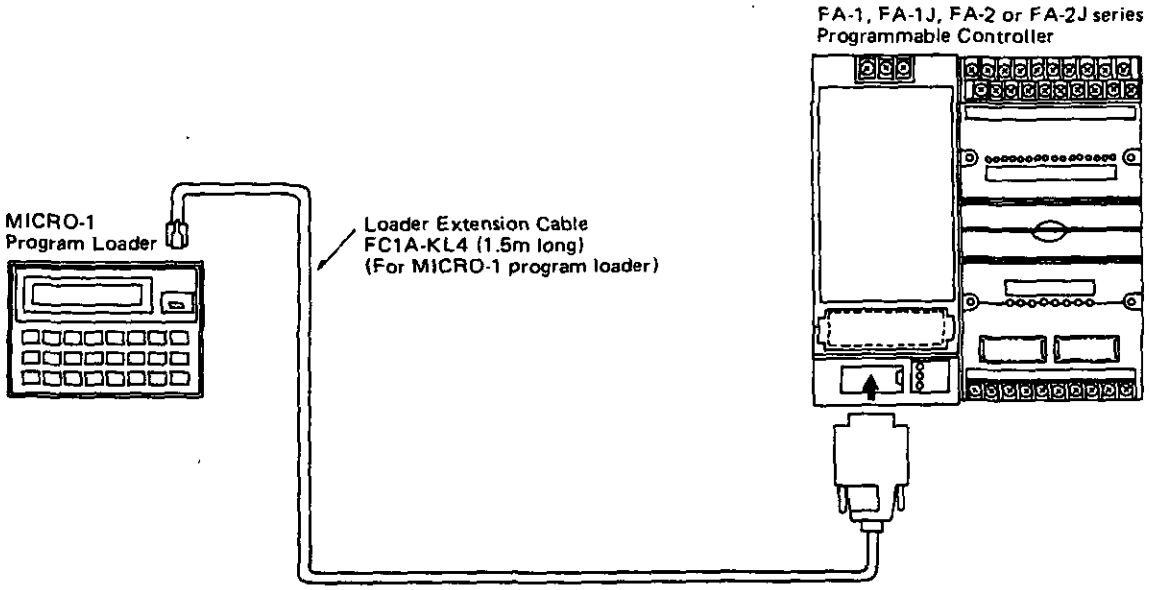

The MICRO-1 program loader can be used for programming user programs for the FA series programmable controllers by connecting the program loader as illustrated above, then the following must be taken into consideration.

Supplementary

Programming for the FA series programmable controller using the MICRO-1 program loader.

1. The following can be programmed:
   - Program of 0 to 963 steps (1K steps)
   - FA series instruction words (except 2. listed below)
   - Inputs and outputs within the range of the FA series
   - Addressed jump instruction (FUN300)
2. The following cannot be programmed:
   - Computing instructions (FUN147 and FUN247)
   - CNT FUN instruction (for FA-1)
   - FUN1, FUN10 to FUN21, FUN36 to FUN59, and FUN96 settings
   - Program capacity (FUN1 is fixed at 1K steps)

INSTALLATION & WIRING

Installation and wiring operations should be carried out with due consideration taken for operating convenience, maintainability and resistance to the environment so that the MICRO-1 can perform at full capacity.

1. Installation Location

(1) Avoid installing the MICRO-1 in the following locations.

- Where ambient temperature drops below 0°C or exceeds +55°C.
- Where ambient humidity drops below 45% or exceeds 85% RH.
- Where the MICRO-1 is exposed to large amounts of dust, salt, iron powder, etc.
- Where the MICRO-1 is exposed to direct sunlight.
- Where the MICRO-1 is subject to vibrations or shocks.
- Where corrosive or flammable gas is present.

Note: If any wire chips or metal chips fall into the MICRO-1 housing, malfunction may result. To prevent such object from entering the MICRO-1 during installation work, place a cover over the ventilation holes on top of the MICRO-1.

(2) Keep sufficient spaces from surrounding fixtures and heating objects to ensure good ventilation. Always install the MICRO-1 horizontally along a vertical surface as illustrated below.

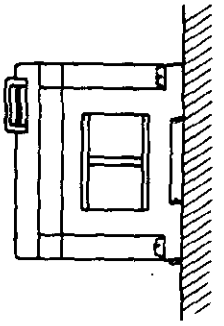

2. Mounting

The MICRO-1 base and expansion units can be mounted on a panel and a 35mm-wide DIN rail.

Panel Mounting

Mounting hole layout for MICRO-1 panel mounting is shown below.

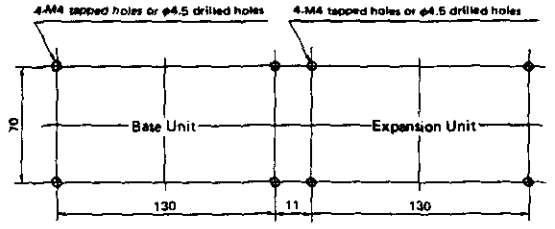

35mm-wide DIN Rail Mounting

The MICRO-1 base unit can be mounted on a 35mm-wide DIN rail available from IDEC.

Applicable DIN Rail: Type BAA500 (500 mm long)
Type BAA1000 (1000 mm long)

(Mounting on DIN Rail)

(1) Fasten the DIN rail to the mounting plate firmly using screws.

(2) When installing the MICRO-1 base or expansion unit on a DIN rail, as illustrated below, with the input terminal side up, put the groove on the rail and press the unit in the direction of the arrow.

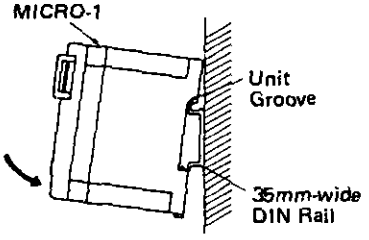

(Removing from DIN Rail)

As illustrated below, insert a flat screwdriver into the slot in the clamp, pull the screwdriver up and turn the MICRO-1 unit bottom out.

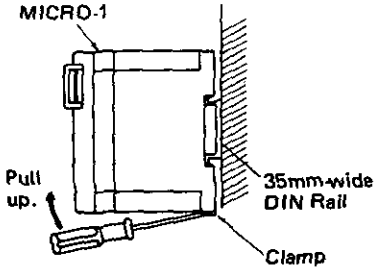

I/O Expansion Cable

When using an expansion unit, connect the expansion unit to the base unit using an I/O expansion cable. I/O expansion cable FC1A-KE1 (40mm long) is attached to an expansion unit for close mounting of the base and expansion units. For separate mounting of the base and expansion units, longer I/O expansion cables are optionally available: PFA-1A21 (500mm long), PFA-1A22 (750mm long), and PFA-1A23 (1m long). These long I/O expansion cables have a shield terminal but the shield terminal need not be connected to any terminal. Cut off the shield terminal from the I/O expansion cable.

3. Wiring

Power, input and output terminals are M3 screws. Tightening torque is 0.5 N-m (approx. 5 kgf-cm) maximum.

(1) Power Supply Wiring

- Use stranded wires of 1.25 mm^2 and make the wiring as short as possible.
- Keep the power supply line away from motor lines.

(To prevent electric shocks and malfunction due to noise, make sure of the following.)

- Ground the FG terminal (grounding resistance 100Ω or less).
- Do not connect the grounding wire to the grounding wire for motor equipment.
- Use a wire of 2mm^2 or more for the grounding wire.

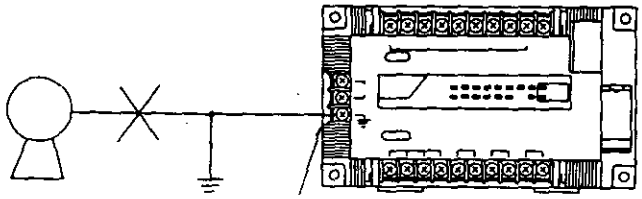

(2) Input Wiring

- Separate the input wiring from the output line, power supply line, and motor line.
- Use wires of 0.75 to 1.25mm^2 for input wiring. (M3 screw terminal)

(3) Output Wiring

- When driving a load involving an electromagnet or solenoid valve which generates noise, it is recommended to use a surge suppressor for AC power or a diode for DC power.
- Use wires of 0.75 to 1.25mm^2 for output wiring. (M3 screw terminal)

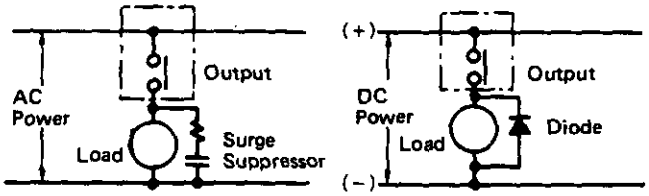

(4) Wiring Duct

When wiring input and output lines in ducts, keep at least 20mm between the MICRO-1 unit and the duct to allow for easy maintenance.

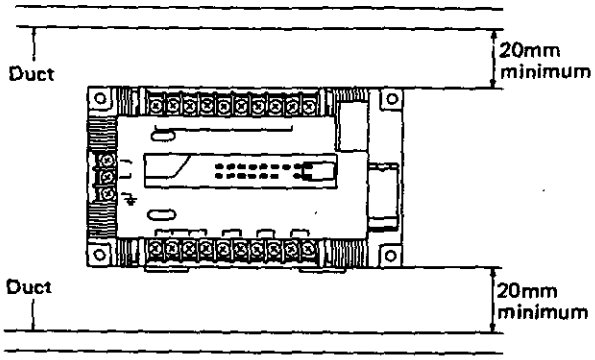

(5) Power Supply

- The applicable power voltage range for the MICRO-1 is 85 to 264V AC or 19.2 to 28.8V DC.

(Power OFF)

- The power failure voltage varies with the operating conditions of the program loader and the number of I/O points. Basically, when the power voltage drops below 85V AC or 18V DC, power failure is detected, stopping operation to prevent malfunctioning.
- Momentary power failure of 50msec or less is not detected.

(Inrush Current When Turning Power ON)

When the MICRO-1 base unit is turned ON, the following inrush current flows:

- AC Type: 30A maximum (at 264V AC, maximum load)
- DC Type: 30A maximum (at 28.8V DC, maximum load)

(6) Crimping Terminal

- When connecting one wire to one terminal, the crimping terminal shown at right can be used.

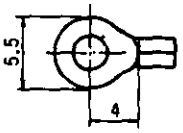

- Only when connecting two wires to one terminal, use the crimping terminal shown below on the bottom side.

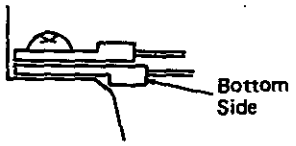

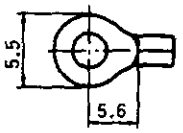

4. Removing Terminal Cover

Finger protection terminal covers are attached to all terminal blocks. When wiring, remove the cover as shown at right.

- Insert the tip of a flat screwdriver diagonally into the the round hole at the end of the terminal cover and disengage the latch by pulling up the tip of the screwdriver.
- Use a flat screwdriver with a tip that can be inserted into the terminal cover hole of 4 mm dia.
- When two or three fingers can be inserted under the terminal cover, the terminal cover can be removed with fingers by pulling the terminal cover out.

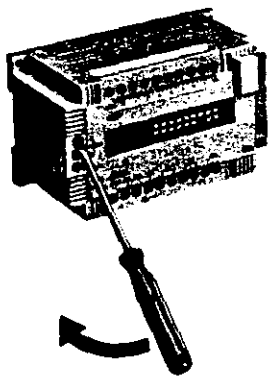

- Side View

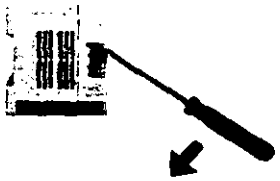

- Front View

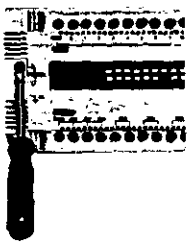

DIMENSIONS

1. Base Unit

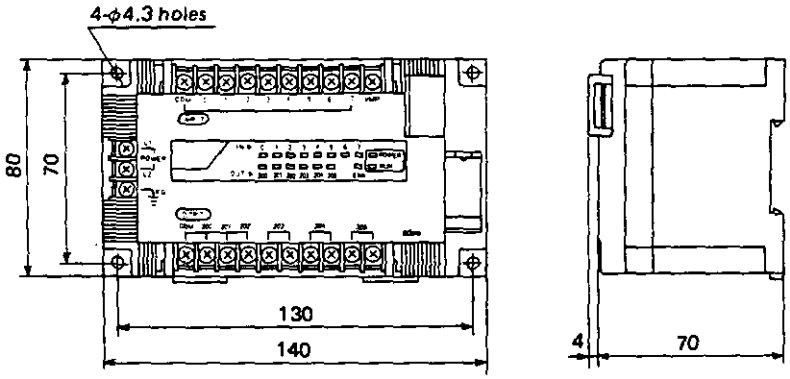

2. Expansion Unit

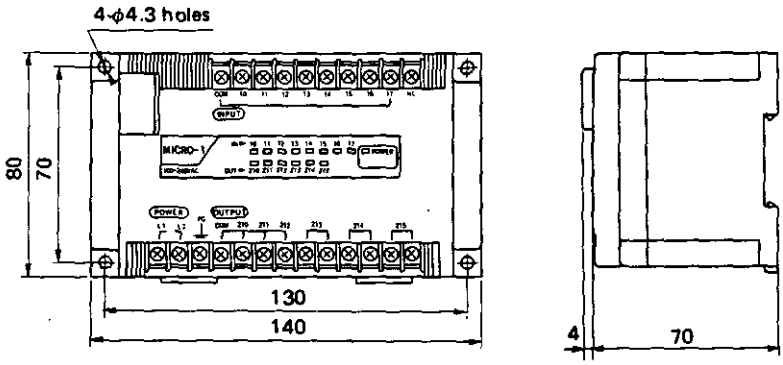

3. Program Loader

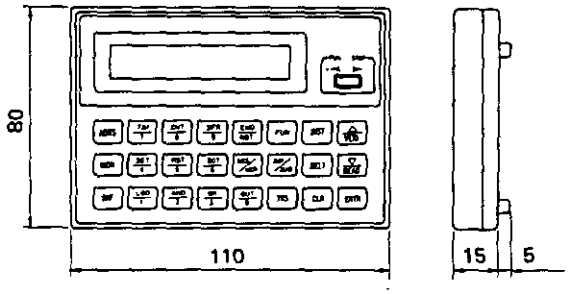

4. Serial I/O Module

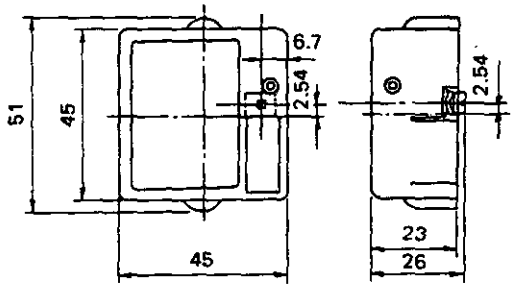

5. Mounting Hole Layout

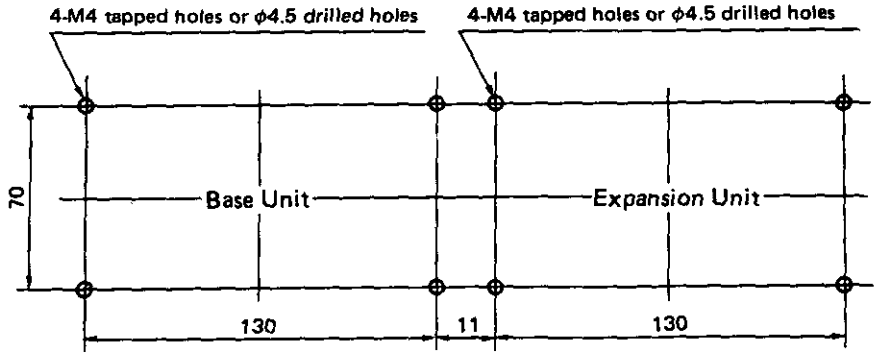

All dimensions in mm.

DIAGNOSTIC FUNCTIONS & MAINTENANCE

The MICRO-1 has various diagnostic functions to ensure safety if any trouble should occur.
When the ERROR LED on the base unit goes ON, check the following.

Cause	Remedy
1. Low power voltage	When the power voltage is lower than the specified value, the ERROR LED on the base unit goes ON, stopping the MICRO-1 operation. Apply the rated power voltage.
2. Memory check error	When the memory check function detects a temporary error, the ERROR LED goes ON. Such a temporary error is cleared automatically and the ERROR LED goes OFF. An error code is stored and can be read out as a warning signal.
3. System program error	When a trouble is detected in the system program, the base unit must be replaced.
4. User program error	When the user program is incorrect, correct the program using the program loader. The ERROR LED will go OFF.
5. User program writing error	When program writing is incomplete in the program transfer operation from the program loader to the base unit, the base unit must be replaced.

1. Error Codes

Error data can be checked by the following procedure.

●Key Operation ●Display

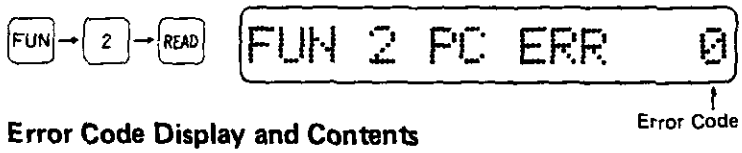

(1) Error Code Display and Contents

Error codes are displayed in a maximum of three digits of hexadecimal codes consisting of four items each in the fist and second digits and two items in the third digit.

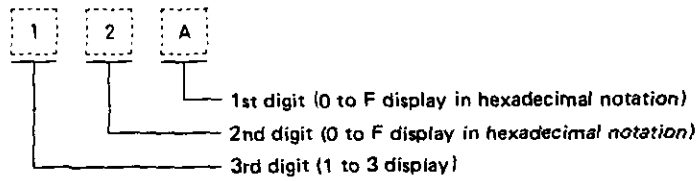

(2) List of Error Codes

Third Digit Error Codes

Error Code Display \ Error Item	Unused	Unused	User Program Writing Error	System Program Error
(No error) 0				
1				●
2			●	
3			●	●
4				
5				
6				
7				
8				
9				
A				
B				
C				
D				
E				
F				

Second Digit Error Codes

Error Code Display \ Error Item	User Program Syntax Error	Keep Data Sum Check Error	Program Sum Check Error	T/M/CNT Preset Value CRC Error
(No error) 0				
1				●
2			●	
3			●	●
4		●		
5		●		●
6		●	●	
7		●	●	●
8	●			
9	●			●
A	●		●	
B	●		●	●
C	●	●		
D	●	●		●
E	●	●	●	
F	●	●	●	●

First Digit Error Codes

Error Code Display \ Error Item	User Program CRC Error	CRC Comparison Code Keep Error	WDT Error	Power Failure
(No error) 0				
1				●
2			●	
3			●	●
4		●		
5		●		●
6		●	●	
7		●	●	●
8	●			
9	●			●
A	●		●	
B	●		●	●
C	●	●		
D	●	●		●
E	●	●	●	
F	●	●	●	●

Each error code display indicates that the error marked with ● has occurred. Two or more ● marks indicate that multiple errors have occurred at the same time.

Note: FUN2 operation can read out the error data codes stored in the base unit. Since the error data code display does not update automatically, FUN2 operation must be performed again to read out the latest error data.

(3) Error Items and Operating Statuses

	Error Items		Error Code	Operating Status	Output	ERROR LED	Checking performed
①	Power failure		1st digit: 1	Stop	OFF	ON only during error	In every scan
②	WDT error (CPU operation error)		1st digit: 2	Stop	OFF	OFF	In every scan
③	CRC comparison code keep error	Memory Diagnosis	1st digit: 4	RUN	Maintained	OFF	At start
④	User program CRC error		1st digit: 8	Stop	OFF	ON	At start
⑤	TIM/CNT preset value CRC error		2nd digit: 1	RUN	Maintained	OFF	At start
⑥	Program sum check error		2nd digit: 2	Stop	OFF	ON	In every scan
⑦	Keep data sum check error		2nd digit: 4	RUN	Maintained	OFF	When turning power ON
⑧	User program syntax error		2nd digit: 8	Stop	OFF	ON	When writing program
⑨	System program error		3rd digit: 1	Stop	OFF	ON	In every scan
⑩	User program writing error		3rd digit: 2	Stop	OFF	ON	When writing program

(4) Error Description and Corrective Action

① Power Failure
This error is detected when the power voltage is lower than the rated power voltage.

Action:
Supply the rated power voltage.

② WDT Error (Watchdog Timer Error)
The watchdog timer monitors the time required for one program cycle to detect abnormal repeating operation functions, and announces an alarm if the processing is not complete in a specific period of time.

Action:
If the error is temporary, the system program restarts operation automatically. If the MICRO-1 does not restart operation, the base unit must be replaced.

③ CRC Comparison Code Keep Error
This error is detected when the contents of the user program CRC comparison codes in the base unit RAM have changed during a power failure.

Action:
No particular action is required because the system program restores operation automatically. An error data code is stored as an alarm signal.

④ User Program CRC Error
On starting operation, the CRC is executed on the user program to verify with the stored CRC comparison codes. Discrepancy results in a CRC error.

Action:
Transfer a correct program from the program loader. The ERROR LED will go OFF when the program transfer is complete.

⑤ Timer/Counter Preset Value CRC Error
On starting operation, the CRC is executed on the timer/counter preset value data stored in the base unit RAM to verify with the stored CRC comparison codes. Discrepancy results in a CRC error.

Action:
Clear the modified timer/counter preset value data using the program loader (FUN95).

⑥ Program Sum Check Error
This error is detected when an error occurs during executing the user program.

Action:
The system program resets this error automatically. The ERROR LED remains ON. To turn the ERROR LED OFF, reset the error code by pressing the FUN, 2, READ, 0 and ENTR keys on the program loader.

⑦ Keep Data Sum Check Error
If timer/counter data or internal relay ON/OFF statuses stored in the base unit RAM have changed during a power failure, this error is detected when power is restored.

Action:
The system program resets this error automatically. An error data code is stored as an alarm signal. If the power failure duration is much shorter than three days yet this error occurs, the base unit must be replaced.

⑧ User Program Syntax Error
This error occurs when a syntax error is found in the user program.

Action:
Correct the user program using the program loader and transfer the corrected program to the base unit. For details of syntax errors, see the syntax error list on page 71. When the transferred program is correct, the ERROR LED goes OFF.

⑨ System Program Error
This error is detected when the system program is damaged.

Action:
Replace the base unit.

⑩ User Program Writing Error
This error is detected when the user program is not correctly written into the base unit memory during program transfer.
In addition, this error is also detected when a memory size other than 1K steps is selected using the FA series program loader.

Action:
Replace the base unit.
When the selected memory size is not 1K steps, correct the memory size selection in the program loader by pressing keys FUN, 1, READ, 1, ENTR.

Supplementary

Error codes other than ⑧ user program syntax error are maintained until cleared by FUN2 operation.

2. Reading Out Error Contents

When ERR80 occurs, the error contents can be read out to the program loader display by the following procedure.

●Key Operation

MON → SHF → CNT → READ

●Display

Error Code Display

●Syntax Error List

Error Code	Error Details	
10004	Stop input No. setting error (FUN4)	
10005	Reset input No. setting error (FUN5)	
10032	Timer/counter external display operand No. setting error (FUN32)	
10034	Key matrix scan input No. setting error (FUN34)	
10035	Timer/counter external display latch phase setting error (FUN35)	
10060	Computer link system device No. setting error (FUN60)	
( ) 0 to 4035 Adjacent address with an improper instruction word is displayed. (Note)	(2) Improper operation code	Detected when turning power ON or when changing program.
	(3) Improper operand	
	(4) Improper timer/counter data	
	(5) Computing instruction operation code setting error	
	(6) Unused	
	(7) Program over	

Supplementary

Operation codes and operands in the following sample program:
●Operation codes are LOD, SOT and OUT.
●Operands are 10, 16, and 400.

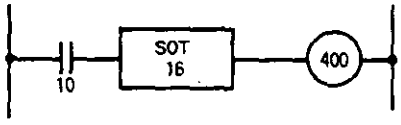

Program
LOD 10
SOT 16
OUT 400

Note: For example, when error code 20126 is displayed, this error code indicates that (2) Improper operation code occurs around Address 0126.

TROUBLESHOOTING PROCEDURES

The MICRO-1 has various diagnostic functions to ensure safety if any trouble should occur.
This chapter describes troubleshooting procedures.

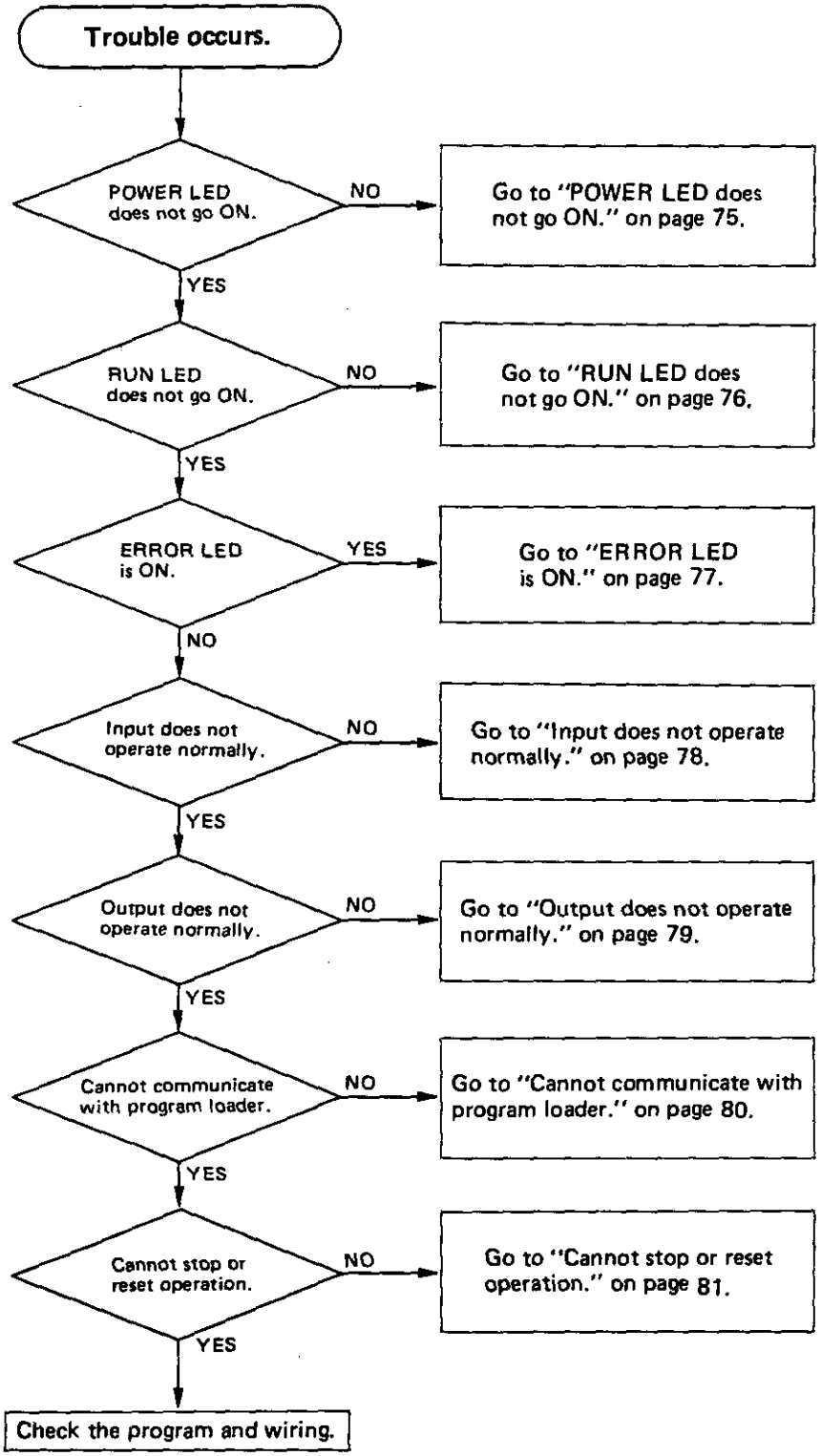

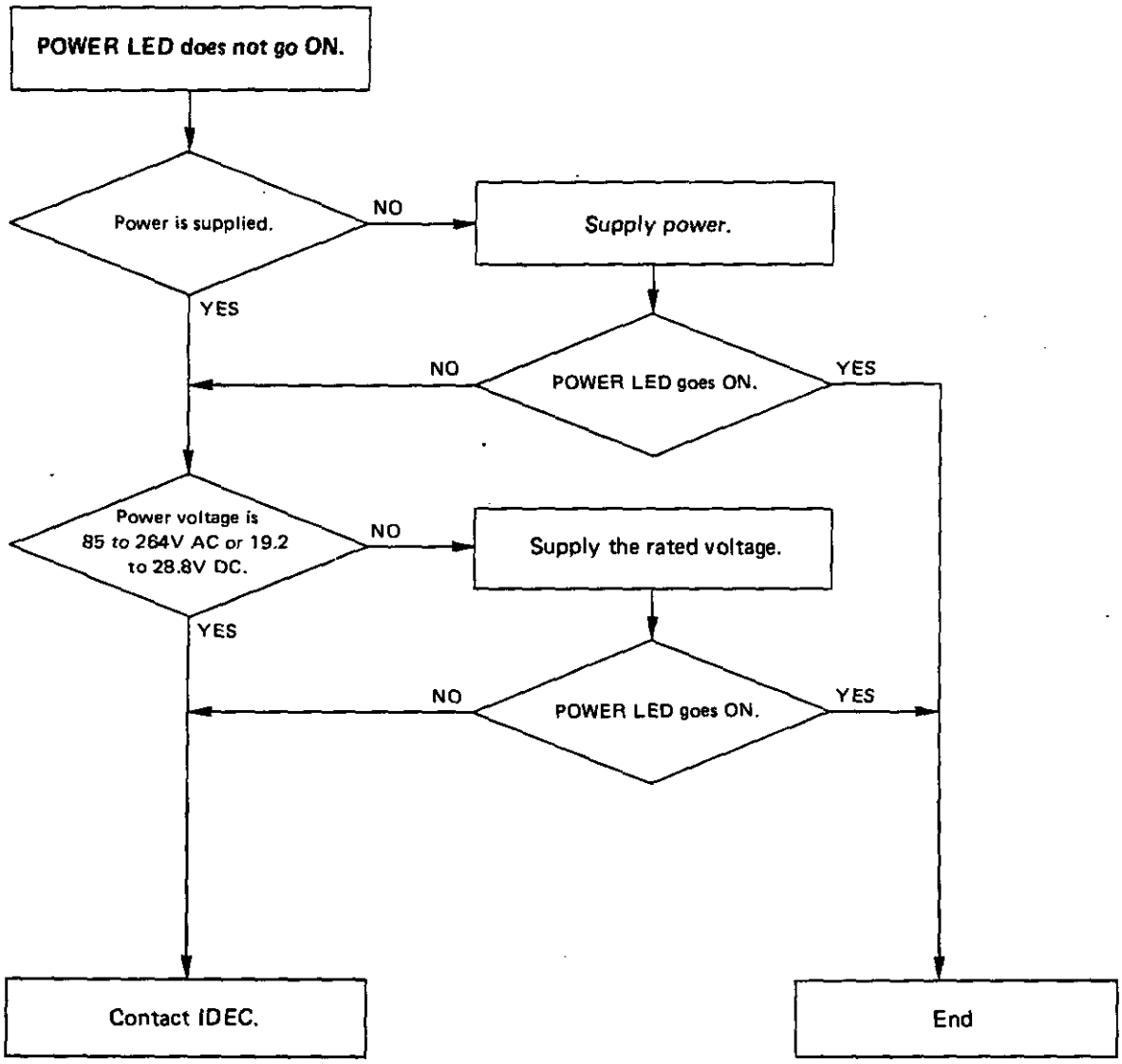
POWER LED does not go ON.
Power is supplied.
NO
Supply power.
YES
NO
POWER LED goes ON.
YES
Power voltage is
85 to 264V AC or 19.2
to 28.8V DC.
NO
Supply the rated voltage.
YES
NO
POWER LED goes ON.
YES
Contact IDEC.
End

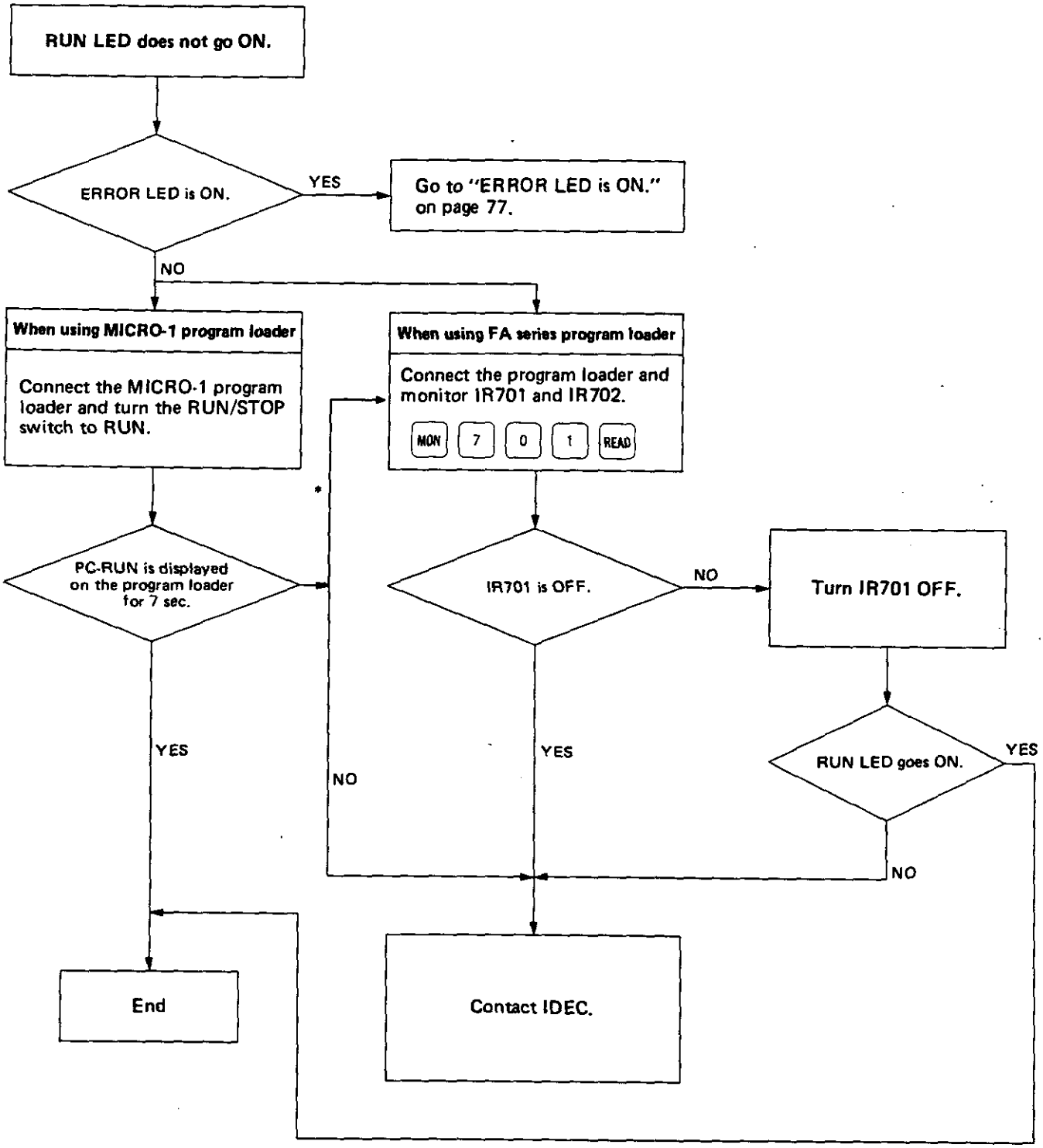

*If the RUN LED is turned on by turning the IR701 OFF, the RUN/STOP switch on the MICRO-1 program loader may be defective, then contact IDEC.

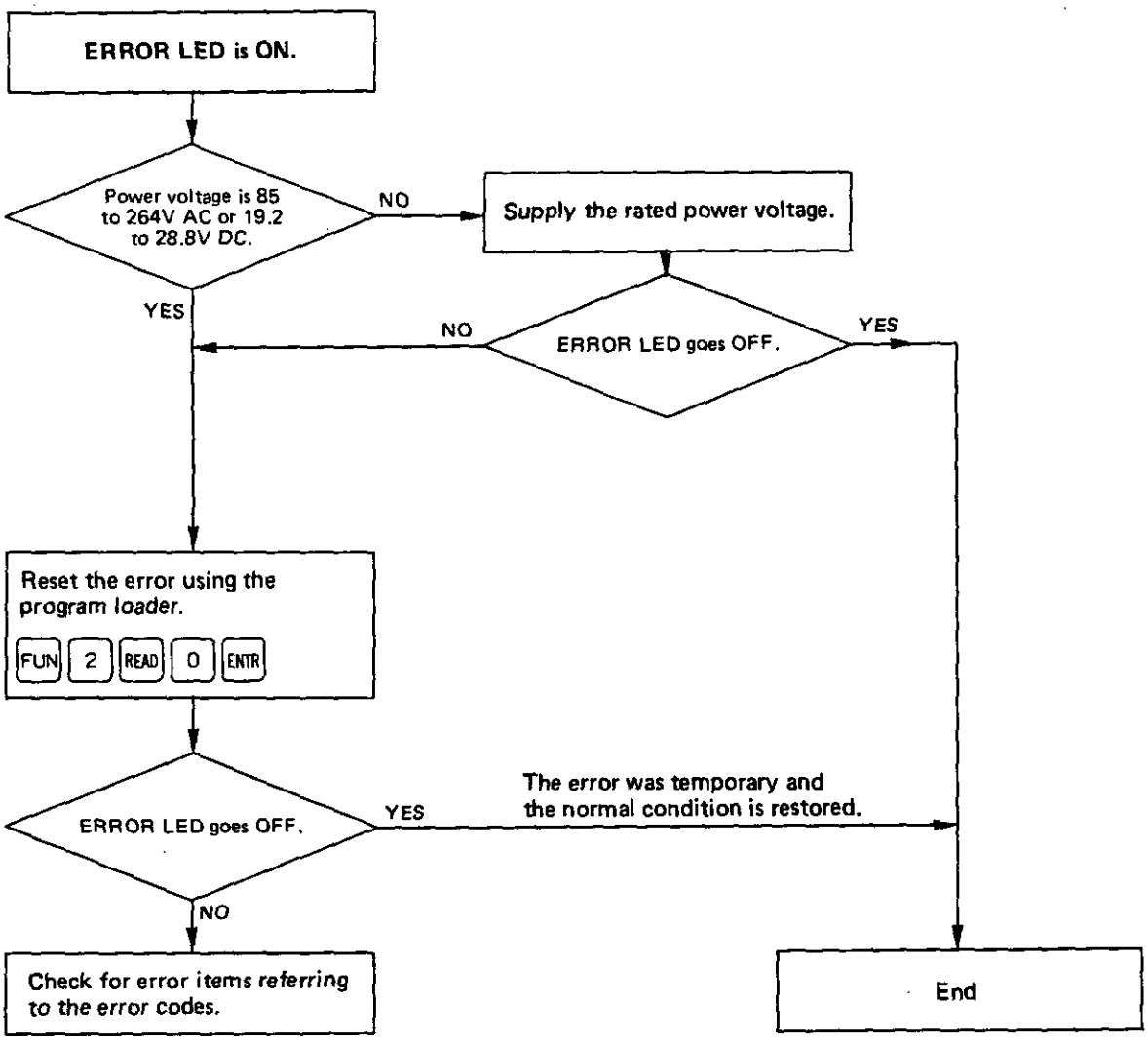

See DIAGNOSTIC FUNCTIONS & MAINTENANCE on page 70.

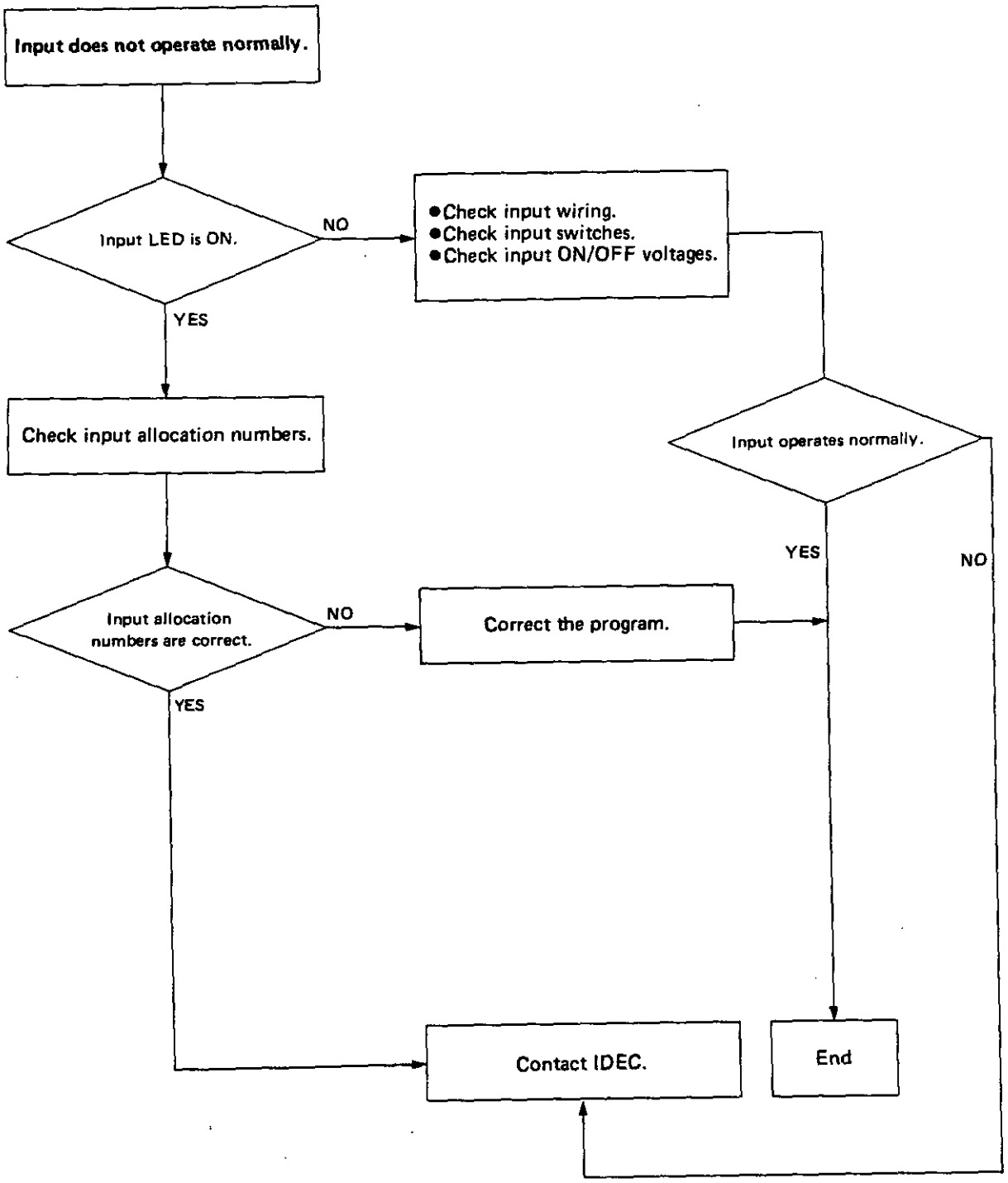
Input does not operate normally.
Input LED is ON.
NO
YES
●Check input wiring.
●Check input switches.
●Check input ON/OFF voltages.
Check input allocation numbers.
Input operates normally.
YES
NO
Input allocation numbers are correct.
NO
Correct the program.
YES
Contact IDEC.
End

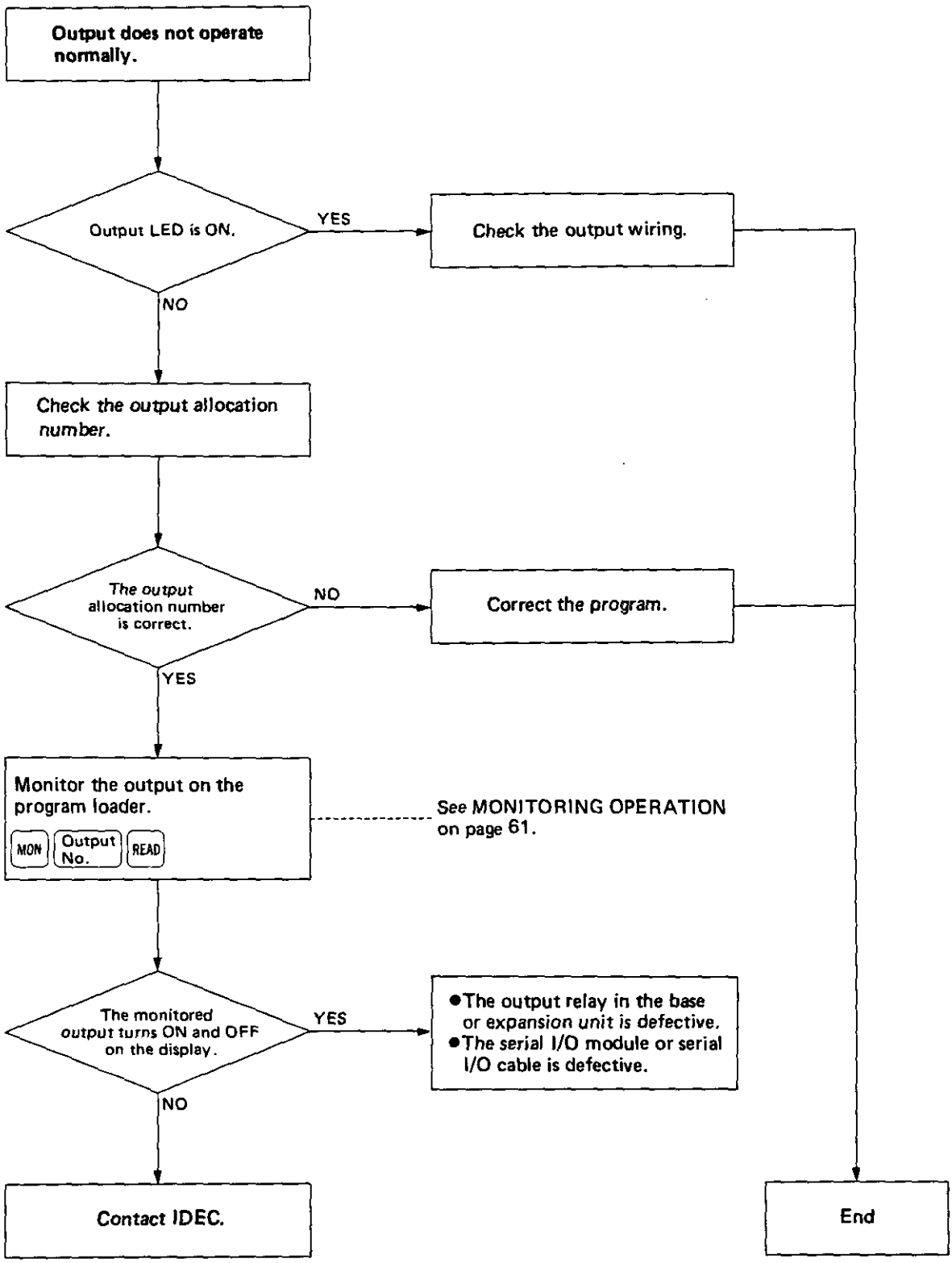
Output does not operate normally.
Output LED is ON.
YES
Check the output wiring.
NO
Check the output allocation number.
The output allocation number is correct.
NO
Correct the program.
YES
Monitor the output on the program loader.
MON
Output No.
READ
See MONITORING OPERATION on page 61.
The monitored output turns ON and OFF on the display.
YES
●The output relay in the base or expansion unit is defective.
●The serial I/O module or serial I/O cable is defective.
NO
Contact IDEC.
End

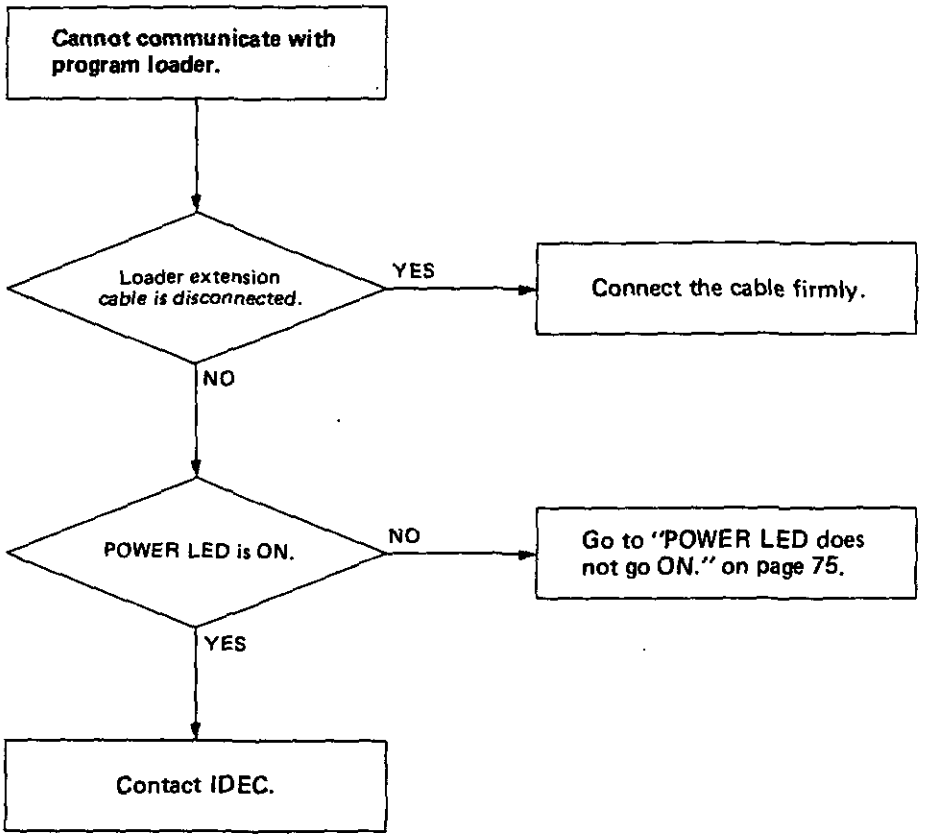
Cannot communicate with program loader.
Loader extension cable is disconnected.
YES
Connect the cable firmly.
NO
POWER LED is ON.
NO
Go to "POWER LED does not go ON." on page 75.
YES
Contact IDEC.

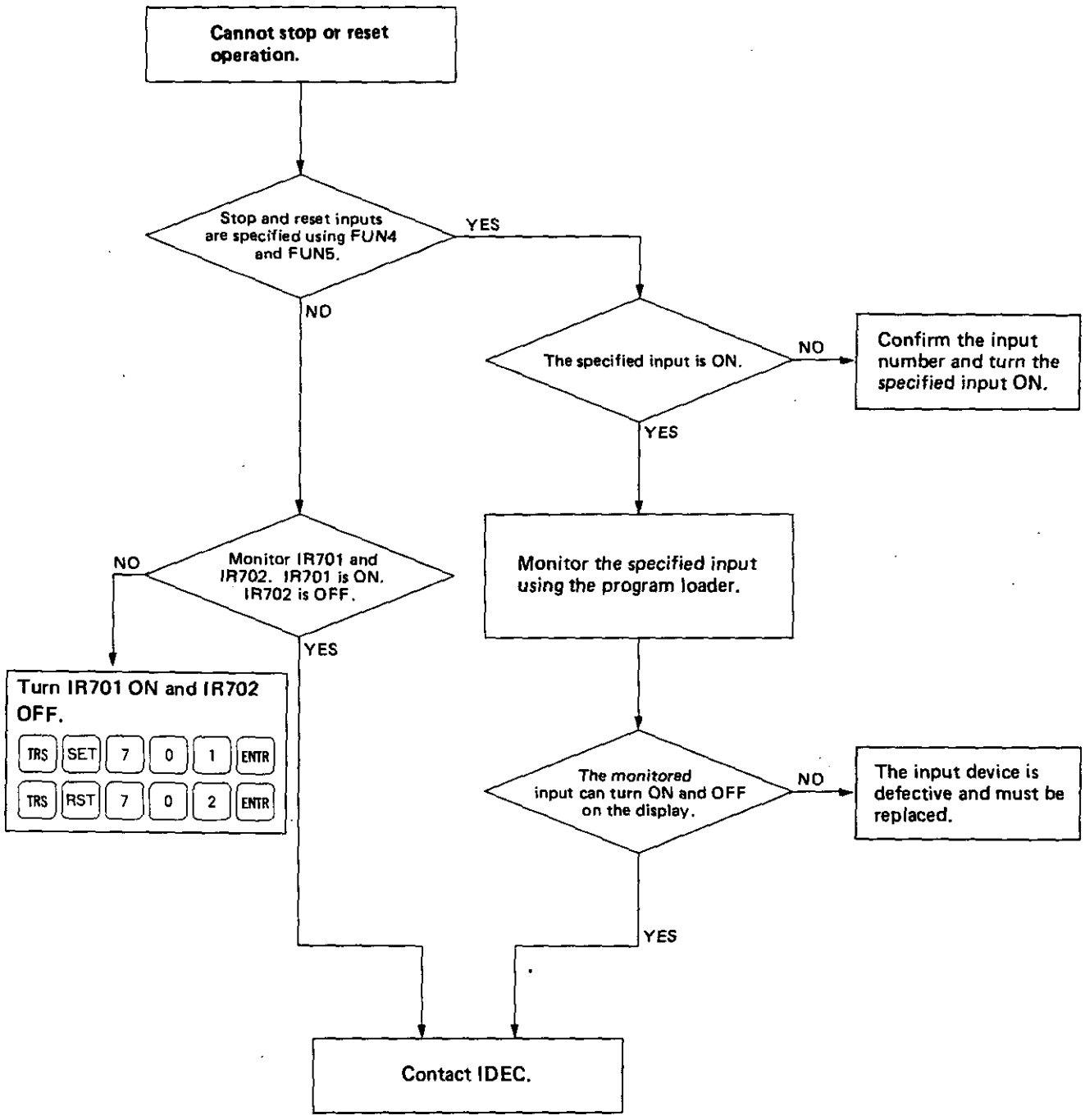
Cannot stop or reset operation.
Stop and reset inputs are specified using FUN4 and FUN5.
YES
NO
The specified input is ON.
NO
Confirm the input number and turn the specified input ON.
YES
Monitor the specified input using the program loader.
Monitor IR701 and IR702. IR701 is ON. IR702 is OFF.
NO
YES
Turn IR701 ON and IR702 OFF.
TRS SET 7 0 1 ENTR
TRS RST 7 0 2 ENTR
The monitored input can turn ON and OFF on the display.
NO
The input device is defective and must be replaced.
YES
Contact IDEC.

TYPE LIST

Name				Type No.	Remarks	
Base Unit	AC Type	Relay Output	Source Input	FC1A-C1A1E	Power voltage: 100-240V AC	Accepts NPN transistor inputs
			Sink Input	FC1A-C2A1E		Accepts PNP transistor inputs
		Transistor Output	Source Input Sink Output	FC1A-C1B1E		Accepts NPN transistor inputs Contains NPN transistor outputs
			Sink Input Source Output	FC1A-C2C1E		Accepts PNP transistor inputs Contains PNP transistor outputs
	DC Type	Relay Output	Source Input	FC1A-C1A4E	Power voltage: 24V DC	Accepts NPN transistor inputs
			Sink Input	FC1A-C2A4E		Accepts PNP transistor inputs
		Transistor Output	Source Input Sink Output	FC1A-C1B4E		Accepts NPN transistor inputs Contains NPN transistor outputs
			Sink Input Source Output	FC1A-C2C4E		Accepts PNP transistor inputs Contains PNP transistor outputs
Program Loader				FC1A-HL1E	24 keys, 16-character LCD	
Data Preset Loader			Standard	FC1A-PL1E	For changing timer/counter preset values and monitoring I/O, IR, timer, counter	
			Multi-function	FC1A-PL2E	For changing preset values, monitoring, direct set/reset, reading program, etc.	
Loader Extension Cable				FC1A-KL1	1.5m long, for connecting the program or data preset loader to the base unit	
				FC1A-KL2	70mm long curl cord (attached to the program or data preset loader) For connecting the program or data preset loader to the base unit	
				FC1A-KL3	1.5m long, for connecting the FA series program loader to the MICRO-1 base unit	
				FC1A-KL4	1.5m long, for connecting the MICRO-1 loader to the FA series CPU	
Expansion Unit	AC Type	Relay Output	Source Input	FC1A-E1A1E	Power voltage: 100-240V AC	Accepts NPN transistor inputs
			Sink Input	FC1A-E2A1E		Accepts PNP transistor inputs
		Transistor Output	Source Input Sink Output	FC1A-E1B1E		Accepts NPN transistor inputs Contains NPN transistor outputs
			Sink Input Source Output	FC1A-E2C1E		Accepts PNP transistor inputs Contains PNP transistor outputs
	DC Type	Relay Output	Source Input	FC1A-E1A4E	Power voltage: 24V DC	Accepts NPN transistor inputs
			Sink Input	FC1A-E2A4E		Accepts PNP transistor inputs
		Transistor Output	Source Input Sink Output	FC1A-E1B4E		Accepts NPN transistor inputs Contains NPN transistor outputs
			Sink Input Source Output	FC1A-E2C4E		Accepts PNP transistor inputs Contains PNP transistor outputs
I/O Expansion Cable				FC1A-KE1	40mm long (attached to the expansion or analog timer unit)	For connecting the expansion or analog timer unit to the base unit
				PFA-1A21	500mm long	
				PFA-1A22	750mm long	
				PFA-1A23	1m long	
Serial I/O Module				FC1A-SM1E	Allows for expansion of 8 inputs and 8 outputs using a serial cable	
Serial Cable				FC1A-KS1	1m long	For connecting the serial I/O module to the base unit (with a shield terminal on one end)
				FC1A-KS2	2m long	
				FC1A-KS3	3m long	
Analog Timer Unit				FC1A-TA1	Contains four analog timers (eight time ranges from 1 sec to 10 min)	
Digital Display Mother Board				FC1A-PD1	For DD33	PC board for mounting a serial I/O module and four IDEC's DD series digital display units
				FC1A-PD2	For DD48	
Fiber Link Unit				PFJ-U11	Interface between the IBM PC and MICRO-1 base units using an optical fiber for 1:N communication	
Fiber Link Main Unit				PFJ-U12		
Cable Link Unit				PFJ-U21	Interface between the IBM PC and MICRO-1 base units using a 4-core twisted pair cable (RS-422) for 1:N communication	
Cable Link Main Unit				PFJ-U22		
Link Adapter				PF2-CLA	Interface between the IBM PC and MICRO-1 base unit for 1:1 communication	
FC Link Cable				FC1A-KC1	150mm curl cord For connecting the MICRO-1 base unit to the PFJ-U11, PFJ-U21 or PF2-CLA	
Computer Link Cable				PFA-1A54	2m long, for connecting the IBM PC to the PFJ-U12, PFJ-U22 or PF2-CLA	
DIN Rail Mount Power Supply Unit				PSR-AD0712E	Output: 12V DC, 0.6A	For supplying power to 3-wire sensors used with MICRO-1
				PSR-AD0724E	Output: 24V DC, 0.32A	
DIN Rail				BAA500	500mm long	35mm-wide DIN rail for mounting the base, expansion, analog timer or DIN rail mount power supply unit
				BAA1000	1000mm long	
Mounting Clip				BNL5	Used at both ends of the MICRO-1 base/expansion and other units mounted on a DIN rail to prevent the unit from moving sideways	
Application Software FA2SYS/FA2MON				PFA-8S23A-2DD	3.5-inch diskette	Ladder input program and monitor program for use on an IBM personal computer or compatible
				PFA-8S25A-2DD	5-inch diskette	

For details of the Serial I/O Module, see Users Manual EM230.
For details of the Data Preset Loader and Analog Timer Unit, see Users Manual EM251.

Optional Units and Accessories

Serial I/O Module
• FC1A-SM1E

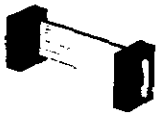

I/O Expansion Cable
• FC1A-KE1 (40mm long)
(attached to expansion unit)

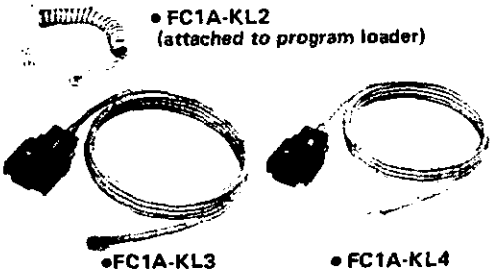

• FC1A-KL2
(attached to program loader)

•FC1A-KL3 • FC1A-KL4

Loader Extension Cable

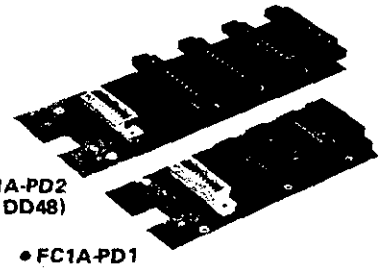

• FC1A-PD2
(For DD48)

• FC1A-PD1
(For DD33)

Digital Display Mother Board

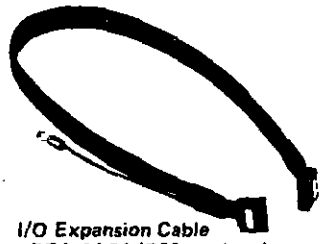

I/O Expansion Cable
• PFA-1A21 (500mm long)
• PFA-1A22 (750mm long)
• PFA-1A23 (1m long)
Serial Cable
• FC1A-KS1 (1m long)
• FC1A-KS2 (2m long)
• FC1A-KS3 (3m long)

FC Link Cable
• FC1A-KC1

Note: I/O expansion cables PFA-1A21, PFA-1A22, and PFA-1A23 are identical in shape with serial cables except length. The shield terminal on the I/O expansion cables need not be connected to any terminal. See page 67.

PROGRAM KEY OPERATING PROCEDURES

Clear User Memory

The entire user program memory in the program loader is cleared.

DELT END ENTR

Select Program Address

A program address can be selected either during operation or halt.

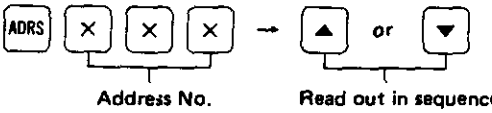

Enter Program Instruction

After program instructions have been entered, they can be changed by superimposing new program instructions.

1. LOD, AND, or OR Instruction

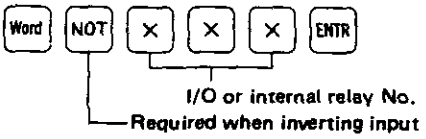

2. OUT, SET, or RST Instruction

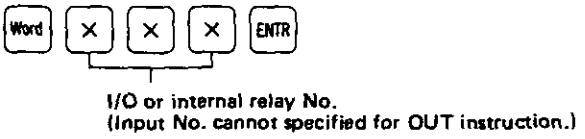

3. SOT Instruction

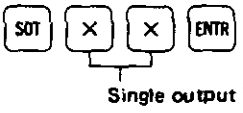

4. TIM or CNT Instruction

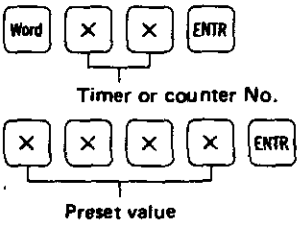

5. SFR Instruction

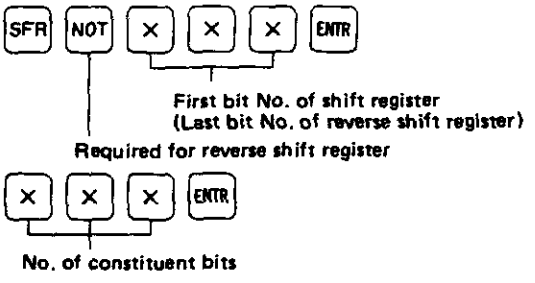

6. LOD TIM, AND TIM, OR TIM, LOD CNT, AND CNT, or OR CNT Instruction

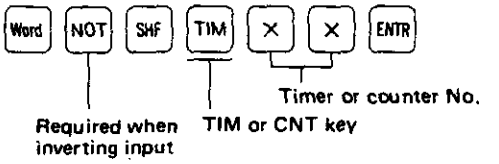

7. LOD SFR, AND SFR, or OR SFR Instruction

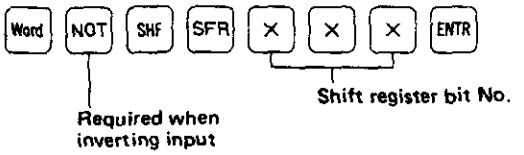

8. AND LOD or OR LOD Instruction

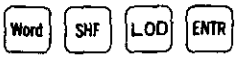

9. SET SFR or RST SFR Instruction

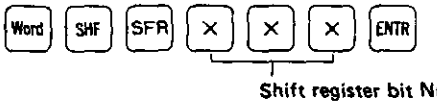

10. MCS or MCR Instruction

MCS/MCR ENTR (MCS)

MCS/MCR MCS/MCR ENTR (MCR)

Note: The MCS/MCR key alternates MCS and MCR instructions each time pressed.

11. JMP or JEND Instruction

JMP/JEND ENTR (JMP)

JMP/JEND JMP/JEND ENTR (JEND)

Note: The JMP/JEND key alternates JMP and JEND instructions each time pressed.

12. FUN100 to FUN146 or FUN200 to FUN246 Instruction

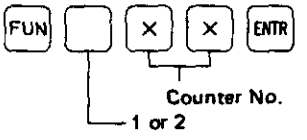

13. END Instruction

END ENTR

Note: Word denotes an instruction word key such as LOD, AND, OR, OUT, SET, RST, TIM or CNT key.

Change Timer/Counter Preset Values during Operation

Timer or counter preset values can be changed either during operation or halt.

1. Read out the timer or counter number.

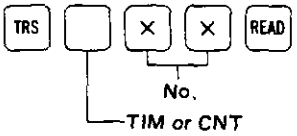

2. Enter a new preset value

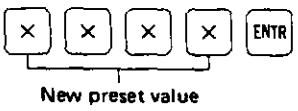

Preset values stored in the base unit user program memory are not changed by the above procedures 1 and 2.

3. Restore preset values

After changing a preset value, the new preset value can be cleared and the old value can be restored.

FUN 9 5 READ → ENTR

When this procedure is completed, all timer/counter preset values return to the original values.

4. Enter the new timer/counter preset values to the user memory in the base unit.

(1) Stop operation

(2) Transfer the new preset value data and program from the base unit RAM to the program loader.

FUN 9 4 READ → ENTR

(3) Transfer the new preset value from the program loader to the base unit user memory (EEPROM).

TRS ENTR → ENTR

Delete Program Instructions

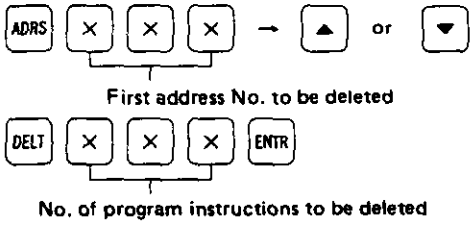

The subsequent program instructions are shifted up.

Insert Program Instruction

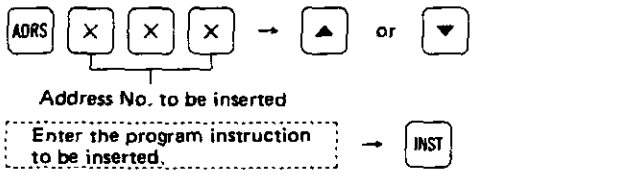

The subsequent program instructions are shifted down by one step.

Search for Program Instruction

An instruction and its address can be searched for and displayed.

Instruction to be searched for → ▲ or ▼

[Ex.] To search for AND17

AND 1 7 → ▲ or ▼

Searching is started from the step next to the currently displayed step. When the required instruction is located, the instruction and its address are displayed.

Monitoring

1. Monitoring I/O or Internal Relays

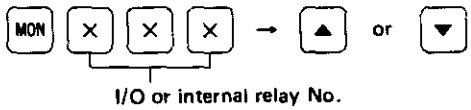

Eight points are displayed at one time from the displayed address included, with ■ for ON or □ for OFF.

2. Monitoring Timer Current Value or Counter Counted Value

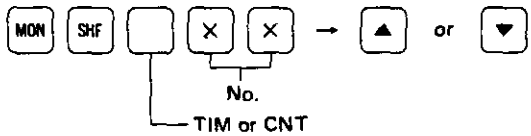

Timers operate in the subtracting mode and counters in the adding mode. The monitored timer current value or counter counted value is displayed, with ■ when the preset value is reached or □ during operation.

3. Monitoring Shift Register

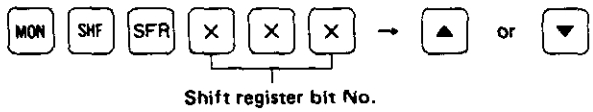

Eight bits from the displayed bit number are displayed, with ■ for ON or □ for OFF.
Pressing the ▲ or ▼ key will display the preceding or subsequent eight bits. To cancel monitoring, press the CLR key. Monitored data is renewed every 100 msec.

Transfer Programs between Loader and Base Unit

1. Transfer from The Program Loader to The Base Unit

[TRS] [ENTR]

When "TRS L T P GO?" is displayed, make sure the base unit is in halt. To continue, press the ENTR key. "TRS L T P" is displayed during execution. When completed, "TRS L T P END" is displayed.

2. Transfer from The Base Unit to The Program Loader

[TRS] [READ]

"TRS P T L GO?" is displayed. To continue, press the ENTR key. "TRS P T L" is displayed during execution. When completed, "TRS P T L END" is displayed.

3. Verification between The Base Unit and The Program Loader

[TRS] [VERI]

"TRS L A P GO?" is displayed. To continue, press the ENTR key. "TRS L A P" is displayed during execution. When completed, "TRS L A P END" is displayed.

FUN (Function) Operation

[FUN] [X] [X] [X] [READ]

FUN No.

Program allocated to the FUN No. → [ENTR]

MICRO-1 PROGRAMMING SHEET

Sheet No. | of

Step (Address)	Instruction Word	Number Data	Remarks	Step (Address)	Instruction Word	Number Data	Remarks
0				50			
1				51			
2				52			
3				53			
4				54			
5				55			
6				56			
7				57			
8				58			
9				59			
10				60			
11				61			
12				62			
13				63			
14				64			
15				65			
16				66			
17				67			
18				68			
19				69			
20				70			
21				71			
22				72			
23				73			
24				74			
25				75			
26				76			
27				77			
28				78			
29				79			
30				80			
31				81			
32				82			
33				83			
34				84			
35				85			
36				86			
37				87			
38				88			
39				89			
40				90			
41				91			
42				92			
43				93			
44				94			
45				95			
46				96			
47				97			
48				98			
49				99			

Title				Approved by	Checked by	Designed by
Program Name						
Data		Dwg. No.				

Allocation Table

No.	Symbol	Description	Remarks	No.	Symbol	Description	Remarks
0				0			
1				1			
2				2			
3				3			
4				4			
5				5			
6				6			
7				7			
0				0			
1				1			
2				2			
3				3			
4				4			
5				5			
6				6			
7				7			
0				0			
1				1			
2				2			
3				3			
4				4			
5				5			
6				6			
7				7			
0				0			
1				1			
2				2			
3				3			
4				4			
5				5			
6				6			
7				7			
0				0			
1				1			
2				2			
3				3			
4				4			
5				5			
6				6			
7				7			

Approved by
Checked by
Designed by

Specifications and other descriptions in this manual are subject to change without notice.

idec CORPORATION

Programmable Controllers Group

CORPORATE OFFICE
1213 ELKO DRIVE
SUNNYVALE, CA 94089-2211
TEL.: (408) 747-0550
TOLL FREE: 800-262-IDEC
WESTERN REGION
SUNNYVALE, CA 94089-2211
TEL.: (408) 747-0550
CENTRAL REGION
SCHAUMBURG, IL 60173
TEL.: (708) 706-3880
EASTERN REGION
FORT PIERCE, FL 34982
TEL.: (407) 461-4994

CANADIAN LOCATIONS
IDEC CANADA LTD.

CORPORATE OFFICE
Unit 121-7350-72 Street
DELTA, BRITISH COLUMBIA, V4G 1C3
TEL.: (604) 946-1271
FACSIMILE: (604) 946-0368

EASTERN REGIONAL OFFICE
#22-151 BRUNEL ROAD,
MISSISSAUGA, ONTARIO, L4Z 1X3
TEL.: (416) 890-8561
FACSIMILE: (416) 890-8562

Cat. No. EM228-1U AUGUST '91 5T PRINTED IN JAPAN

```
**************************************************************************
*                                                                        *
*                                                                        *
*                    MICRO-1        Program List                         *
*                                                                        *
*                                                                        *
*                                                                        *
*   Title          : BECHTEL ENVIRONMENTAL, INC.                         *
*   ---------------------------------------------------------------      *
*   Program Number : BEI10322                                            *
*   ---------------------------------------------------------------      *
*   Date           : 1996 Y   06 M   13 D                                *
*   ---------------------------------------------------------------      *
*   Programmer     : G T ELLINGHAM                                       *
*   ---------------------------------------------------------------      *
*   Remarks        : KEY WEST, FL                                        *
*   ---------------------------------------------------------------      *
*                                                                        *
**************************************************************************
```

```
 1 |          * BECHTEL ENVIRONMENTAL, INC.                          *
 2 |          * C/O NAS KEY WEST (BOCA CHICA)                       *
 3 |          * KEY WEST, FL  33040                                  *
 4 |          * SALES ORDER #5276   SERIAL #10322                    *
 5 |          * FILE NAME: BEI10322                                  *
 6 |          * CUSTOM SYSTEM PROGRAM FOR IDEC MICRO-1 PLC          *
 7 |          * PROGRAM WRITTEN BY: G T ELLINGHAM                    *
 8 |          * GEOPURE CONTINENTAL SYSTEMS & SERVICES              *
 9 |          * (352) 376-7833 OR (800) 342-1103                    *
10 |          * ANY CHANGES TO THIS PROGRAM WITHOUT APPROVAL        *
11 |          * FROM GEOPURE WILL EFFECT YOUR WARRANTY.             *
12 |          * PROGRAM DATE: 06/12/96                              *
13 |          *                                                     *
14 |

   |CLOSED  U/S     15                                        U/S
   |WHEN    LOW     SECOND                                    LOW
   |U/S     PSI     TIME                                      PSI
   |IS ON   SIGNAL  DELAY                                     RELAY
15 +--| |-----|/|---[T   0]-----------------------------------------(    )+
   |     6       5     150                                       401  |

   |U/S     U/S                                               U/S
   |LOW     LOW                                               LOW
   |PSI     PSI                                               PSI
   |RELAY   RESET                                             LIGHT
16 +--| |--+--|/|-----------------------------------------------(    )+
   |   401  |     7                                             202  |
   |        |
   |U/S     |
   |LOW     |
   |PSI     |
   |LIGHT   |
17 +--| |--+
   |   202

   |U/S
   |LOW                                                       U/S
   |PSI                                                       AUTO
   |LIGHT                                                     SIGNAL
18 +--|/|-----------------------------------------------------(    )+
   |   202                                                     200  |

   |P-20    P-20                                              P-20
   |START   STOP                                              AUTO
   |SIGNAL  SIGNAL                                            SIGNAL
19 +--| |--+--| |-----------------------------------------------(    )+
   |     1  |     0                                             203  |
```

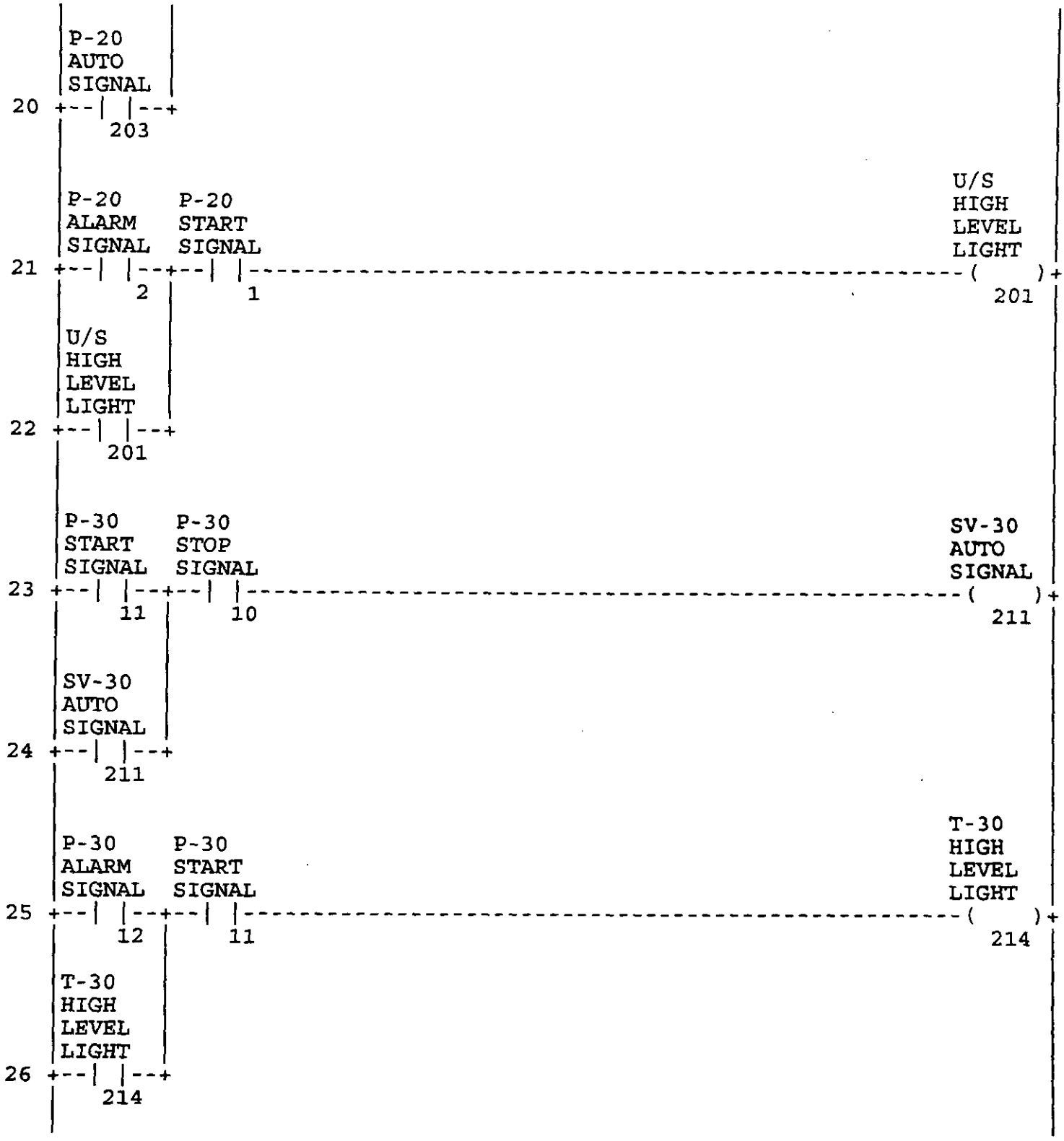
P-20
AUTO
SIGNAL
20
203
P-20
ALARM
SIGNAL
21
2
P-20
START
SIGNAL
1
U/S
HIGH
LEVEL
LIGHT
201
U/S
HIGH
LEVEL
LIGHT
22
201
P-30
START
SIGNAL
23
11
P-30
STOP
SIGNAL
10
SV-30
AUTO
SIGNAL
211
SV-30
AUTO
SIGNAL
24
211
P-30
ALARM
SIGNAL
25
12
P-30
START
SIGNAL
11
T-30
HIGH
LEVEL
LIGHT
214
T-30
HIGH
LEVEL
LIGHT
26
214

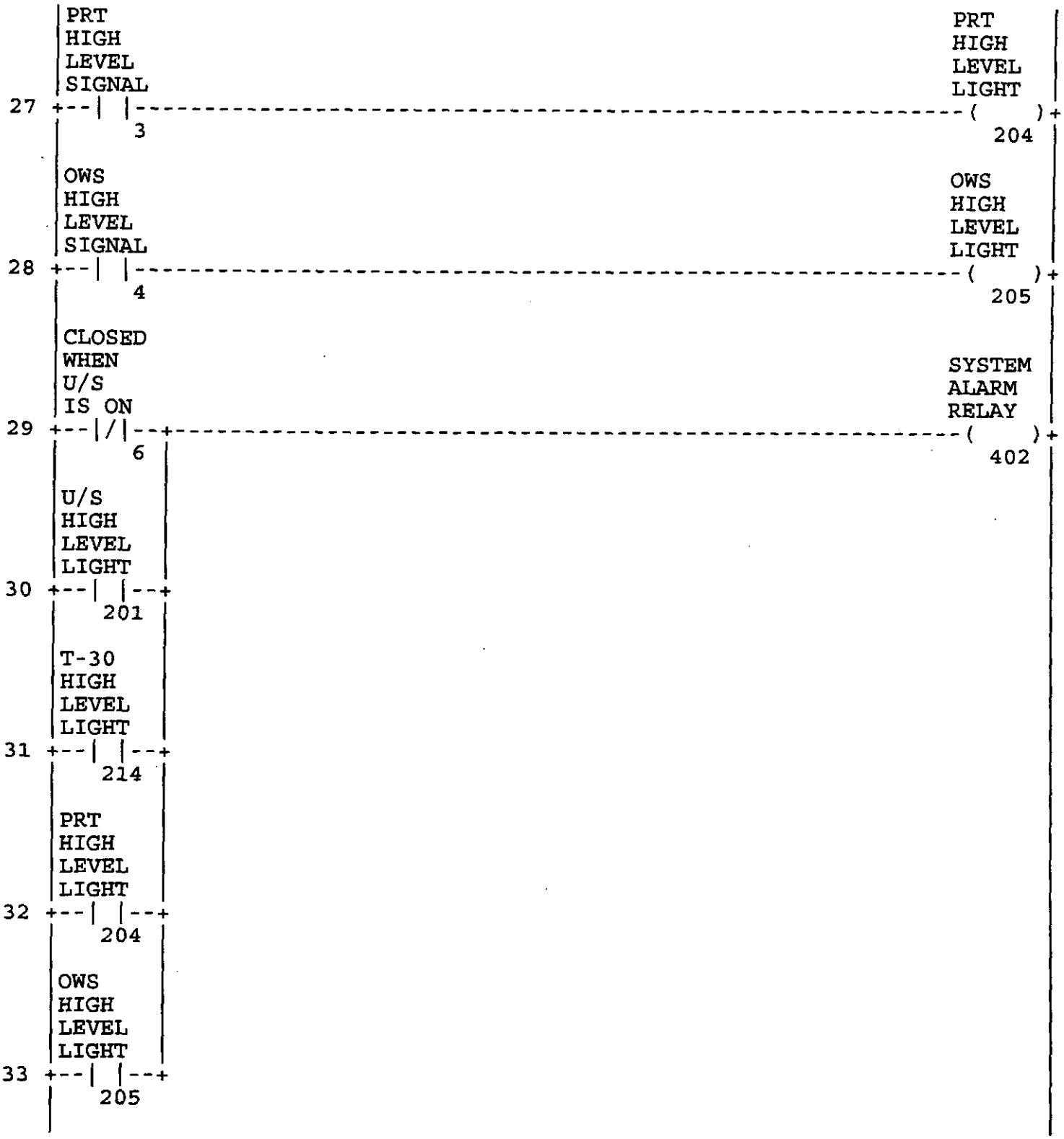
PRT HIGH LEVEL SIGNAL
3
PRT HIGH LEVEL LIGHT
204
OWS HIGH LEVEL SIGNAL
4
OWS HIGH LEVEL LIGHT
205
CLOSED WHEN U/S IS ON
6
SYSTEM ALARM RELAY
402
U/S HIGH LEVEL LIGHT
201
T-30 HIGH LEVEL LIGHT
214
PRT HIGH LEVEL LIGHT
204
OWS HIGH LEVEL LIGHT
205
27
28
29
30
31
32
33

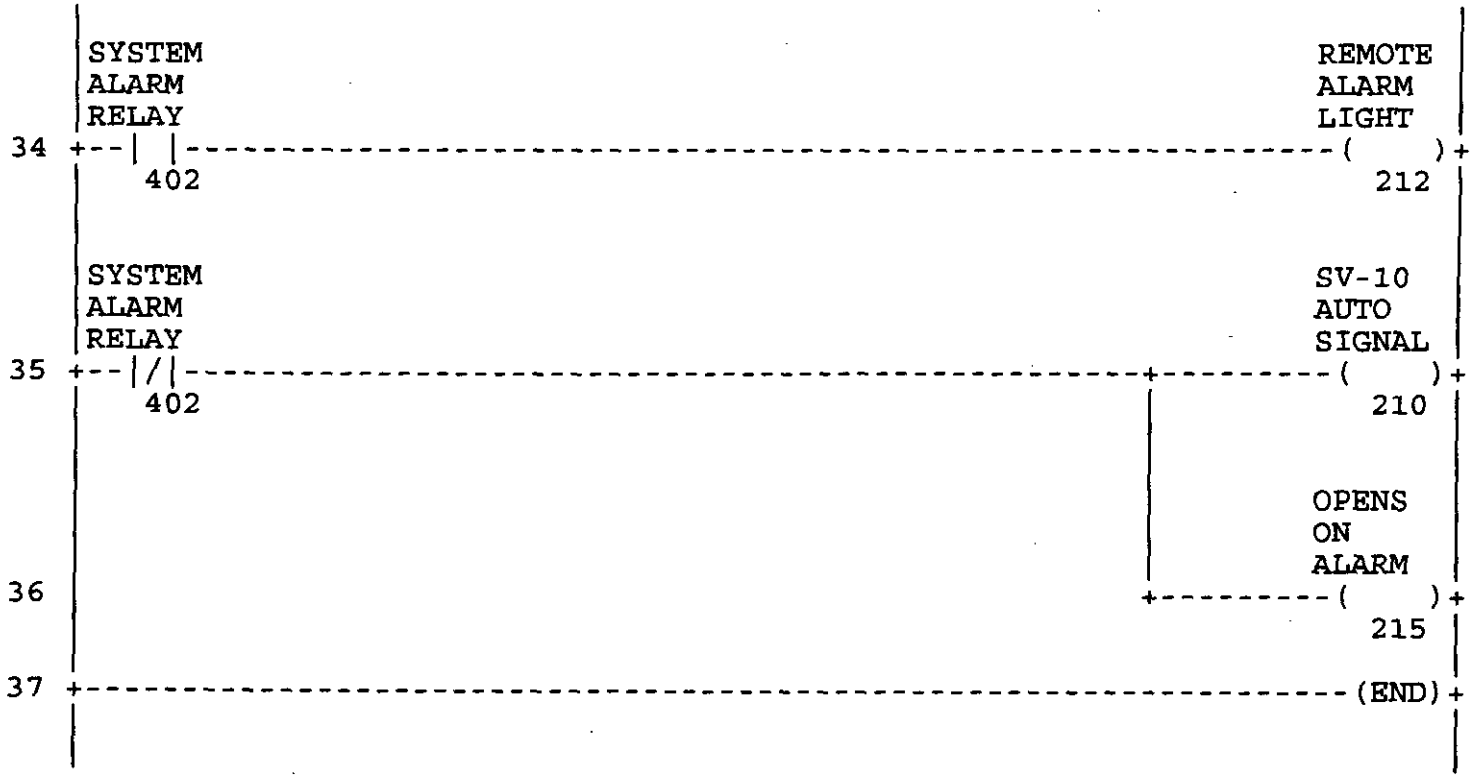
SYSTEM
ALARM
RELAY
402
REMOTE
ALARM
LIGHT
212
34
SYSTEM
ALARM
RELAY
402
SV-10
AUTO
SIGNAL
210
35
OPENS
ON
ALARM
215
36
(END)
37

```
00000 LOD        6
00001 AND N      5
00002 TIM        0
00003          150
00004 OUT      401
00005 LOD      401
00006 OR       202
00007 AND N      7
00008 OUT      202
00009 LOD N    202

00010 OUT      200
00011 LOD        1
00012 OR       203
00013 AND        0
00014 OUT      203
00015 LOD        2
00016 OR       201
00017 AND        1
00018 OUT      201
00019 LOD       11

00020 OR       211
00021 AND       10
00022 OUT      211
00023 LOD       12
00024 OR       214
00025 AND       11
00026 OUT      214
00027 LOD        3
00028 OUT      204
00029 LOD        4

00030 OUT      205
00031 LOD N      6
00032 OR       201
00033 OR       214
00034 OR       204
00035 OR       205
00036 OUT      402
00037 LOD      402
00038 OUT      212
00039 LOD N    402

00040 OUT      210
00041 OUT      215
00042 END
```

FUN01	Program capacity	0 1 K
FUN04	Stop input number	- - -
FUN05	Reset input number	- - -
FUN06	Start clear IR number	4 0 0
FUN07	Start clear CNT number	0 0 0
FUN08	Start clear SFR number	0 0 0

FUN32	External display timer/counter number	- - - -

FUN34	Key matrix setting	- -
FUN35	LOW/HIGH latch external display	(LOW) 0

FUN60	1 : N communication device number	0 0 0

PLC PROGRAMING

INPUTS

0: STOP ┐
1: START P-20 FLOATS
2: ALARM ┘
3: PRT HIGH LEVEL N/O
4: OWS HIGH LEVEL N/O
5: U/S LOW PSI N/O
6: U/S NOT RUNNING N/C
7: U/S LOW PSI RESET N/O
10: STOP ┐
11: START P-30 FLOATS
12: ALARM ┘
13-17: SPARES

OUTPUTS

200: U/S AUTO
201: U/S HIGH LEVEL LT.
202: U/S LOW PSI LT.
203: P-20 AUTO
204: PRT HIGH LEVEL LT.
205: OWS HIGH LEVEL LT.
210: SV-10 AUTO
211: SV-30 AUTO
212: REMOTE ALARM LT.
213: SPARE
214: T-30 HIGH LEVEL LT.
215: OPENS ON ALARM

DESIGNED BY	G T Ellingham	DATE 06/11/96
DRAWN BY	G T Ellingham	06/11/96
APPROVED BY		6/13
REVISED BY		
CUSTOMER	BECHTEL ENVIRONMENTAL, INC. SITE: KEY WEST, FL	

COMPANY	GeoPure Continental		
TITLE	REMEDIATION SYSTEM		
SIZE A	UL NO. AB-864497	SERIAL NO / FILE NAME 10322PLC	
SALES ORDER NO. 5276	DATE 06/11/96	SHEET 1 of 4	

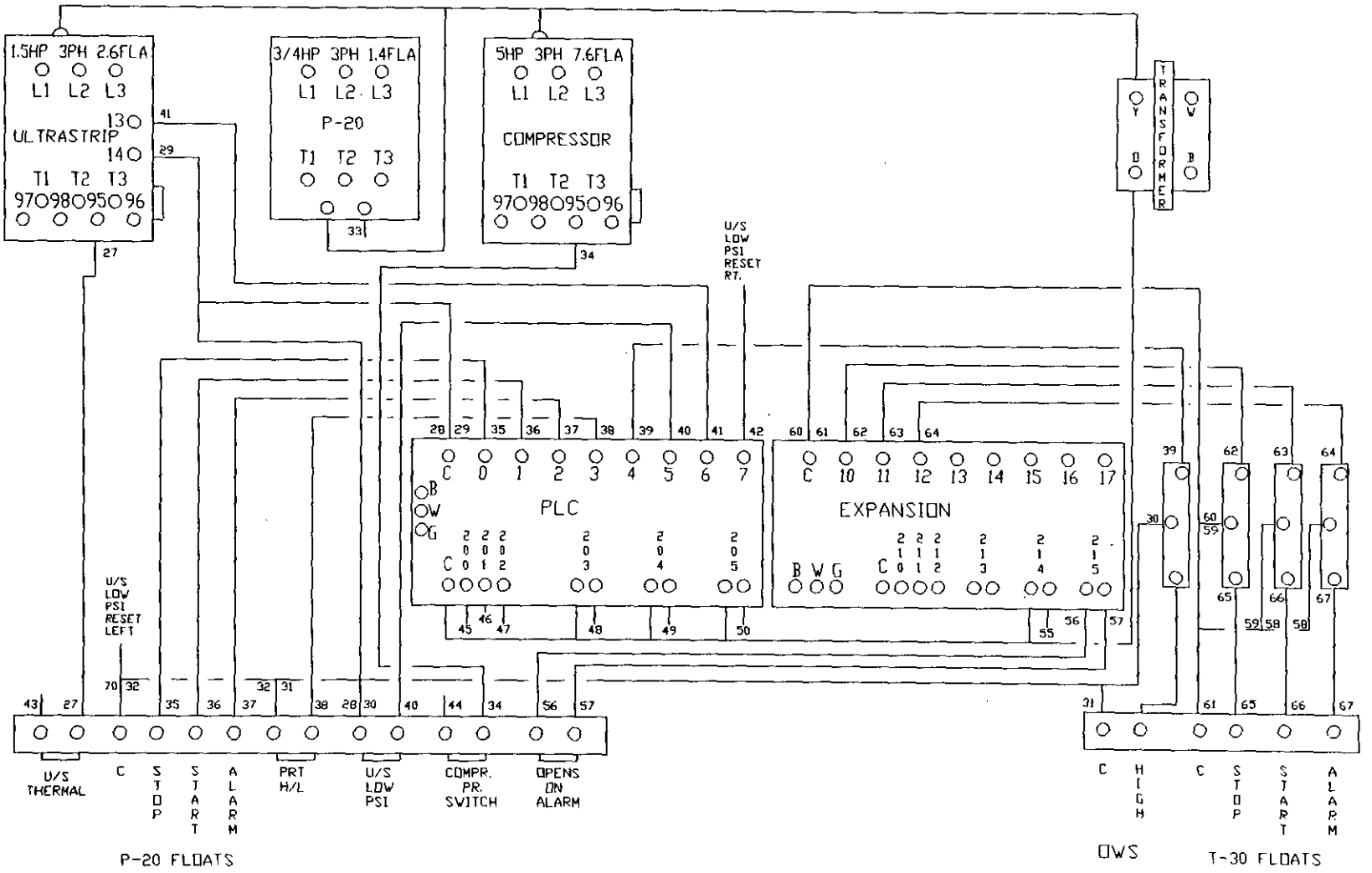

THIS DRAWING CONTAINS PROPRIETARY INFORMATION AND IS CONFIDENTIAL AND IS PROVIDED SO THAT A PURCHASE DECISION MAY BE MADE. THE DOCUMENT IS NOT TO BE DUPLICATED, LOANED OR IN ANY WAY PROVIDED TO OTHERS WITHOUT THE WRITTEN CONSENT OF:
GEOPURE CONTINENTAL SERVICES
GAINESVILLE, FLORIDA

DESIGNED BY	G T Ellingham	DATE 06/11/96
DRAWN BY	G. T Ellingham	06/11/96
APPROVED BY		6-24
REVISED BY		
CUSTOMER	BECHTEL ENVIRONMENTAL, INC. SITE: KEY WEST, FL	

COMPANY	GeoPure Continental		
TITLE	REMEDIATION SYSTEM		
SIZE A	UL NO. AB-864497	SERIAL NO. / FILE NAME 10322	
SALES ORDER NO. 5276	DATE 06/11/96	SHEET 2 of 4	

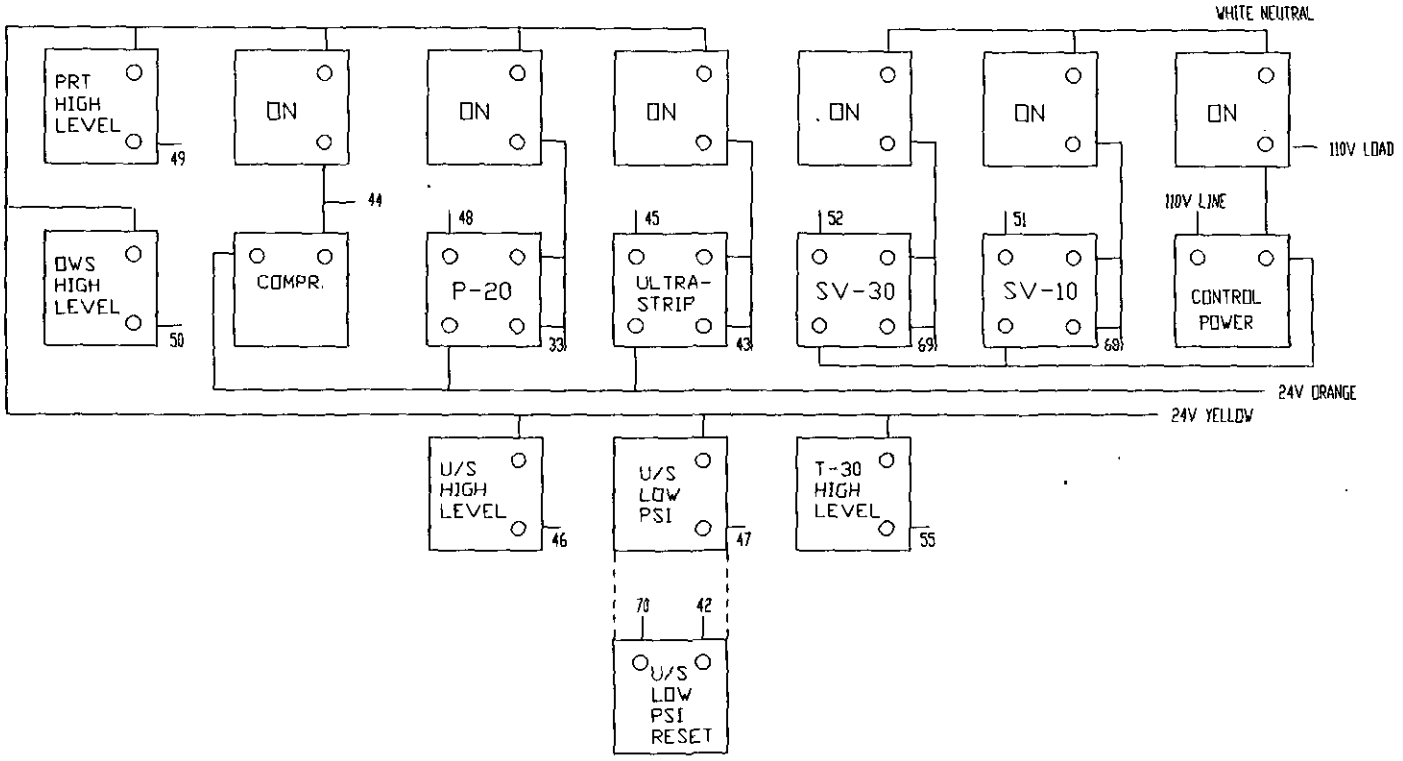

DESIGNED BY	G T Ellingham	DATE 06/11/96
DRAWN BY	G T Ellingham	06/11/96
APPROVED BY	[signature]	6-11
REVISED BY		
CUSTOMER	BECHTEL ENVIRONMENTAL, INC. SITE: KEY WEST, FL	

COMPANY	GeoPure Continental		
TITLE	REMEDIATION SYSTEM		
SIZE	UL NO.	SERIAL NO. / FILE NAME	
A	AB-864497	10322DR	
SALES ORDER NO.	DATE	SHEET	
5276	06/11/96	3 of 4	

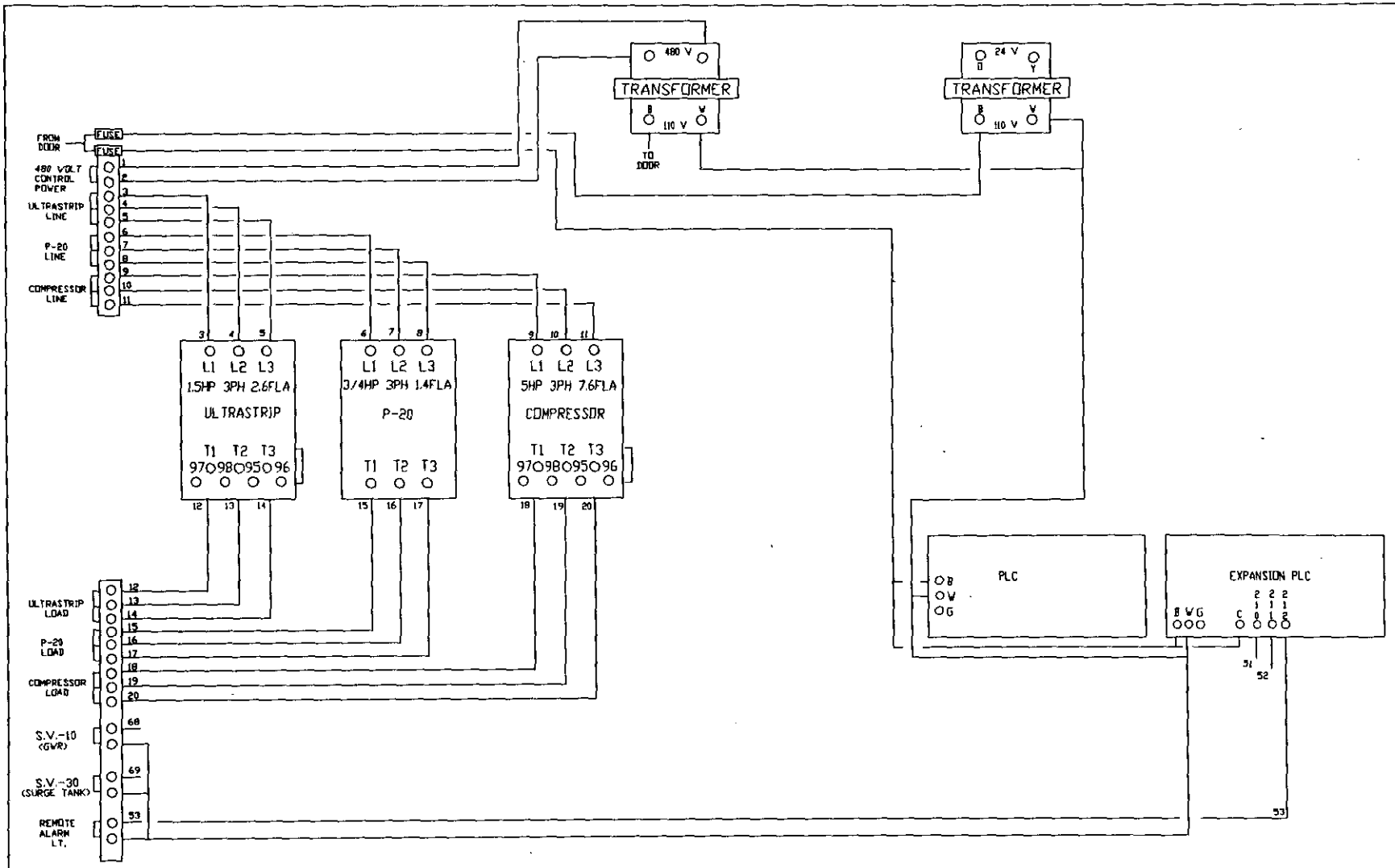

DESIGNED BY	G T Ellingham	DATE 06/11/96
DRAWN BY	G T Ellingham	06/11/96
APPROVED BY		6/14
REVISED BY		
CUSTOMER	BECHTEL ENVIRONMENTAL, INC. SITE: KEY WEST, FL	

COMPANY	GeoPure Continental		
TITLE	REMEDIATION SYSTEM		
SIZE A	UL NO. AB-864497	SERIAL NO. / FILE NAME 10322HV	
SALES ORDER NO. 5278	DATE 06/11/96	SHEET 4 of 4	

Terminal Strip Identification

High Voltage

1: 480V Control Power
2: 480V Control Power

3: 480V line UltraStrip Blower
4: 480V line UltraStrip Blower
5: 480V line UltraStrip Blower

6: 480V line P-20 Transfer Pump
7: 480V line P-20 Transfer Pump
8: 480V line P-20 Transfer Pump

9: 480V line Air Compressor
10: 480V line Air Compressor
11: 480V line Air Compressor

12: 480V load UltraStrip Blower
13: 480V load UltraStrip Blower
14: 480V load UltraStrip Blower

15: 480V load P-20 Transfer Pump
16: 480V load P-20 Transfer Pump
17: 480V load P-20 Transfer Pump

18: 480V load Air Compressor
19: 480V load Air Compressor
20: 480V load Air Compressor

68: SV-10 Recovery Pump Solenoid Valve
SV-10 Recovery Pump Solenoid Valve

69: SV-30 Transfer Pump Solenoid Valve
SV-30 Transfer Pump Solenoid Valve

53: Remote Alarm Light
Remote Alarm Light

Low Voltage

43: UltraStrip Blower Thermal Overload input
27: UltraStrip Blower Thermal Overload input

P-20 Sump Floats
70/32: Common
35: Stop
36: Start
37: Alarm

32/31: Product Recovery Tank High Level input
38: Product Recovery Tank High Level input

31/30: Oil/Water Separator High Level input
39: Oil/Water Separator High Level input

30/28: UltraStrip Blower Low Disch Pressure input
40: UltraStrip Blower Low Disch Pressure input

44: Air Compressor Pressure Switch
34: Air Compressor Pressure Switch

56: Opens on Alarm output
57: Opens on Alarm output

Zener Barrier inputs

T-30 Floats
61: Common
65: Stop
66: Start
67: Alarm

DESIGNED BY	G T Ellingham	DATE 06/11/96
DRAWN BY	Stephen Kerslake	06/13/96
APPROVED BY		
REVISED BY		
CUSTOMER	Bechtel Environmental, Inc. Site: Key West, FL	

COMPANY	GeoPure Continental		
TITLE	REMEDIATION SYSTEM		
SIZE A	UL NO. AB-864497	SERIAL NO. / FILE NAME 10322	
SALES ORDER NO. 5276	DATE 06/11/96	SHEET 1 of 1	

GEMS®

Instruction Bulletin
No. 111970

65800 Series
Single Channel Zener Barrier

INSTALLATION AND MAINTENANCE

GEMS 65800 Series, shunt diode, safety barriers are one channel devices which pass a unidirectional signal (D.C.) and limit the energy to a level that cannot ignite an explosive atmosphere. **Approvals include FM, UL, CSA.**

Installation Requirements

Location: Barriers must be installed and grouped in a non-hazardous location. If necessary to locate in a hazardous area, barriers must be mounted in a suitable enclosure which, along with its installation, must be suitable for the location.

Environment: The operating temperature range of these barriers is -40°F to +140°F. They should be mounted in a clean, dry environment and well ventilated, so that the maximum temperature is not exceeded. If an enclosure is used, it must be suitable for the location.

Earth Connection: The bracket on which the barrier is mounted must be connected to an earth ground. Grounding should be adequate for conduction of line-generated fault currents and should have an impedance of less than one ohm. See Figs. 1 and 2.

Safe Area Apparatus: Safe area apparatus must not generate, or be connected to, sources having voltages greater than 250 Vrms or VDC.

Installation

It is expected that the installation will be in accordance with ISA RP-12.6, NEC Chapters 5 and 7 and FM Standards Approval. The following specific points should be kept in mind:

1. Check that the barrier is of specified type and polarity.
2. For multiple barrier installation, the barrier's safe area sides should face one side of the enclosure and the I.S. sides should face the opposite side (Fig 1). Wiring must be channeled and segregated as shown, so that no mis-wiring can occur during servicing, testing or replacement.
3. Connect the hazardous area equipment to terminals marked "3" and "2" (Fig. 3). Hazardous area field wiring will store energy due to distributed capacitance and inductance in proportion to its length. Common, commercially available signal wire may be used; provided the capacitance and inductance are below the following maximum values:

Installation (Cont.)

Example: Typical values of capacitance for a twisted pair of copper wires is between 20 and 60 pf per foot. Using the maximum value of 60 pf/ft., inductance of a typical twisted pair is between 0.10 and 0.20 uh/ft. The maximum values of capacitance/or inductance should be used to determine field wiring length.

GEMS P/N	Rated Volt.	GEMS P/N	Rated Volt.	Group	Parellel Capac. - uf	Series Induct. - mH
111950	+15	111951	-15	A,B,C, D,E,G	0.32	2.0
111952	+20	111953	-20		0.18	4.1
111954	+24	111955	-24		0.12	3.0
111956	+30	111957	-30		0.07	1.8
113000	+30	114071	-30	C, D, E, G	0.20	3.0
114072	+24	114073	-24		0.33	3.1
114074	+18	114075	-18		0.72	3.6
114175	+27	114176	-27		0.24	3.3

Signal Return Barriers

114162	+18	114163	-18	A, B, C, D, E, G	0.23	.35
114164	+24	114165	-24		0.11	.35
114166	+30	114167	-30		0.07	.35

Safety depends on earth continuity. The resistance to earth ground must be less than 1 ohm.

Inspection and Test of Barrier

A routine inspection should be made at intervals of not more than two years. Harsh locations should be inspected more frequently to:

1. **Check integrity of earth grounding** (Less than one ohm).
2. **Check unit labeling** for legibility.
3. **Check all interconnections** for good electrical connection.

> **CAUTION**
> Never conduct tests while circuit is active. Use of instruments between input and output will bypass barrier.

Testing:

1. All testing is to be done with circuit inactive and all but earth grounding disconnected.

2. With a suitable ohmmeter (resolution to 1 ohm), measure the resistance from input (1) to output (3). The total resistance readings shown in the chart on the next page indicate a good unit.

GEMS P/N	Rated Volt.	GEMS P/N	Rated Volt.	Total Resist. Ohms**	Limit Resist. Ohms**	Fuse Rating ma	Max. Voc	ISC ma
111950	+15	111951	-15	183	153	250	17.3	112.8
111952	+20	111953	-20	303	273	125	22.2	81.2
111954	+24	111955	-24	390	360	62	26.2	72.7
111956	+30	111957	-30	750	720	62	33.1	46.0
113000	+30	114071	-30	303	273	250	36.1	132.3
114072	+24	114073	-24	234	204	62	26.2	123.2
114074	+18	114075	-18	183	153	125	19.9	130
114175	+27	114176	-27	276	246	62	29.1	118.3
Signal Return Barriers								
114162	+18	114163	-18	33.9	30	125	19.9	0
114164	+24	114165	-24	33.9	30	62	26.2	0
114166	+30	114167	-30	33.9	30	250	36.1	0

**All resistance values are ±5%

Fig. 1: Multiple Barrier Mounting

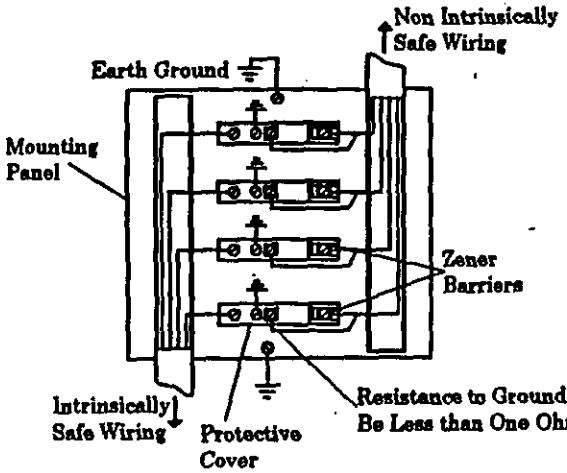

Important Notes:

All barriers used for multiple barrier mounting must be of the same polarity.

All intrinsically safe wiring must be segregated from non-intrinsically safe wiring and shall have a minimum insulation thickness of .010".

Fig. 2: Optional Mounting Clip (P/N 113530)

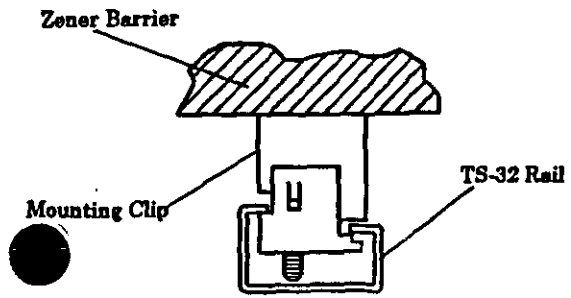

Fig. 3: Installation Diagram

Note: Positive signal channel shown. Sensor switch may be any non-voltage producing, essentially resistive device; containing no energy storing components. Flow and level switches, temperature switches, pressure switches or resistive transducers or transmitters are typical.

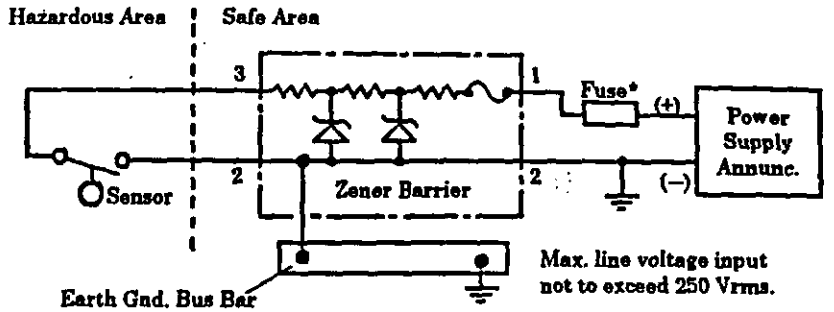

Fig. 4: Supply and Signal Return Barrier Installation(4-20 ma Transducer with Both Leads Floating & Neg. Signal Common

Note: Redundant grounding required by CSA.

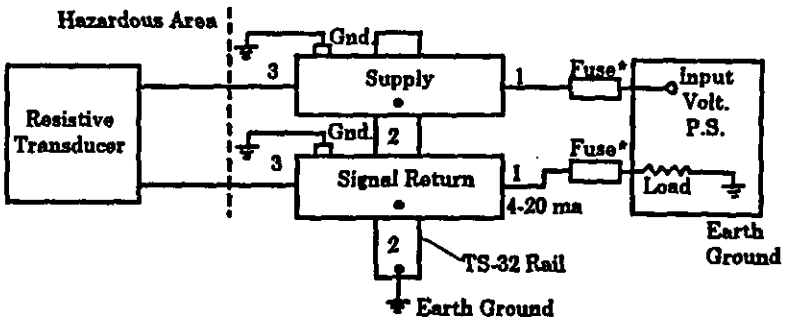

*Little fuse type 3AG or equal (optional). External fuses are recommended to protect barrier from incorrect wiring or equipment faults at start-up.

P/N 111970
(Rev. V)

Imo Industries Inc.
Gems Sensors Division
1 Cowles Road
Plainville, CT. 06062-1198 U.S.
TEL: 203-747-3000 FAX: 203-747-4244

Myers®

CENTRI-THRIFT PUMPS

INSTALLATION

PACKAGE CONTENTS – 1. Each pump is carefully tested and packaged at the factory.
2. The catalog lists all parts included with package. A packing list packed with pump, also lists contents.
3. Be sure all parts have been furnished and that nothing has been damaged in shipment.
4. OPEN PACKAGES AND MAKE THIS CHECK BEFORE GOING ON JOB.

PIPING – Pipes must line up and not be forced into position by unions. **Piping should be independently supported near the pump so that no strain will be placed on the pump casing.** Where any noise is objectionable, pump should be insulated from the piping with rubber connections. Always keep pipe size as large as possible and use a minimum of fittings to reduce friction losses.

A hole is located in the bottom of the pump bracket for draining purposes. A drain pipe may be attached to maintain a dry installation in the event seal leakage should occur. This hole and pipe should be kept open.

SUCTION PIPING – Suction pipe should be direct and as short as possible. It should be at least one size larger than suction inlet tapping and should have a minimum of elbows and fittings. The piping should be laid out so that it slopes upward to pump without dips or high points so that air pockets are eliminated. The highest point in the suction piping should be the pump inlet except where liquid flows to the pump inlet under pressure. A foot valve must be used to keep pump primed. Where liquid flows to the pump, it may be desirable to use a check valve in the suction line or discharge line to keep pump primed.

To prevent air from being drawn into suction pipe due to a suction whirlpool, the foot valve should be submerged at least three feet below the low water level. The suction pipe must be tight and free of air leaks or pump will not operate properly.

DISCHARGE PIPING – Discharge piping should never be smaller than pump tapping and should preferably be one size larger. A gate valve should always be installed in discharge line to serve as a shut-off for throttling if capacity is not correct. To protect the pump and foot valve from water hammer and to prevent backflow, a check valve should be installed in the discharge line between the pump and gate valve.

ELECTRICAL CONNECTIONS – Be sure motor wiring is connected for voltage being used. Unit should be connected to a separate circuit, direct from main switch. A fused disconnect switch or circuit breaker must be used in this circuit. Wire of sufficient size should be used to keep voltage drop to a maximum of 5%. All motors, unless provided with built-in overload protection, must be protected with an overload switch, either manual or magnetic. Single phase 1/3-3 HP motors have built-in overload protection. **Never install a pump without proper overload protection.** When motor is mounted on a base plate or on slide rails for adjustment, flexible metallic conduit should be used to protect the motor leads.

PRIMING – The pump must be primed before starting. The pump casing and suction piping must be filled with water before starting motor. Remove vent plug in top of casing while pouring in priming water. A hand pump or ejector can be used for priming when desired. When water is poured into pump to prime, use care to remove all air before starting motor.

If pump does not start immediately, stop and reprime.

STARTING – It is good practice to close the discharge valve when starting the pump as it puts less starting load on the motor. When the pump is up to operating speed, open the discharge valve to obtain desired capacity or pressure. Do not allow the pump to run for long periods with the discharge valve tightly closed. If the pump runs for an extended period of time without liquid being discharged, the liquid in the pump case can get extremely hot.

ROTATION – The pump must run in direction of arrow on pump case. All single phase motors are single rotation and leave factory with proper rotation. Three phase motors may run either direction. If rotation is wrong when first starting motor, interchange any two line leads to change rotation.

STOPPING – Before stopping pump, close the discharge valve. This will prevent water hammer and is especially important on high head pumps.

FREEZING – Care should be taken to prevent the pump from freezing during cold weather. It may be necessary, when there is any possibility of this, to drain the pump casing when not in operation. Drain by removing the pipe plug in the bottom of the casing.

ROTARY SEAL – Centri-Thrift pumps are fitted only with rotary seal. This seal is recommended for water free from abrasives. If liquid contains abrasives, the Centri-Thrift pump should not be used.

BEARINGS – Lubricate motor bearings in accordance with motor manufacturer's instructions.

Single seal ball bearings are used on 125B, 150B, 200B bearing bracket units. Proper amount of grease has been provided in the bracket cavity between the bearings. This should be sufficient grease for 4000 hour operation. After this usage the old grease should be cleaned out and new grease added. Use only best grade ball bearing greases.

The 100BB pump uses sealed ball bearings that are factory lubricated and require no further lubrication.

BELT DRIVES – On V-belt drives, if possible, the tight side of the belt should be at the bottom. Adjust belt tension just tight enough to prevent slippage; excess tension unnecessarily loads the bearings. Normally the belt speed should not exceed 5000 feet per minute and the pulley ratio should not exceed 5 to 1. The distance between the shaft centers should be at least twice the diameter of the larger pulley.

SERVICE

TROUBLE SHOOTING GUIDE

A No water delivered
B Not enough water delivered
C Not enough pressure
D Pump runs for short while; then loses prime

POSSIBLE CAUSE OF PROBLEM	D	C	B	A
1. Pump not properly primed; repeat priming operation.				X
2. Discharge head too high. Check total head with gauge at pump inlet and discharge. (With no water, the gauge at discharge would show shut-off pressure.)			X	X
3. Excessive volume being discharged. Throttle discharge valve.		X		
4. Speed too low. Check pump drive belts for slippage. If hot, tighten belts. Check motor voltage and speed.		X	X	
5. Rotation wrong. Change shaft rotation.		X	X	X
6. Suction lift too high. Check with vacuum gauge. This should not exceed 15 feet.	X		X	X
7. Air leak in suction line. Check line under pressure to find leak.	X	X	X	X
8. Air pocket in suction line. Check line for proper slope.	X			X
9. Insufficient submergence of suction pipe. Foot valve should be three feet below lowest water level.	X		X	
10. Sediment chamber clogged. Remove and clean thoroughly. Make sure gasket is in good condition and sealing surfaces clean before reassembly of sediment chamber cap.		X		
11. Impeller or suction line plugged.		X	X	X
12. Impeller and Volute case badly worn. Disassemble pump; if clearance on diameter is over .030", replace worn impeller and worn volute case.		X	X	
13. Suction strainer plugged. Clean strainer.	X			
14. Impeller diameter too small for condition required.		X	X	
15. Seal*leaking – seal is worn or seal face cocked. Replace with new seal and carefully follow directions.				

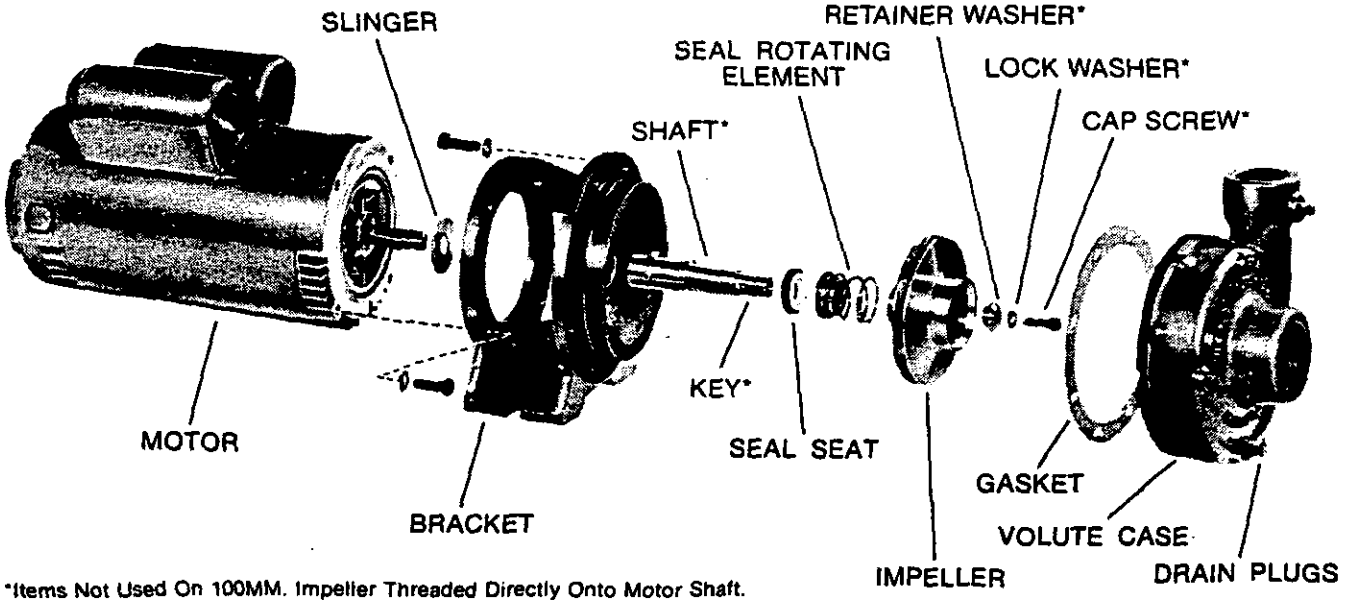

*Items Not Used On 100MM. Impeller Threaded Directly Onto Motor Shaft.

DISASSEMBLY INSTRUCTIONS

All pumping parts can be removed from case without disturbing the piping.

POWER SUPPLY – Open the power supply switch contacts and remove fuses. Disconnect the electrical wiring from the motor.

VOLUTE CASE

(a) Drain pump case by removing drain plugs.
(b) Remove the bolts securing volute case to pump bracket.
(c) To pry components apart, use two screwdrivers – opposite each other – in openings provided between the bracket and case. (Fig. 1)

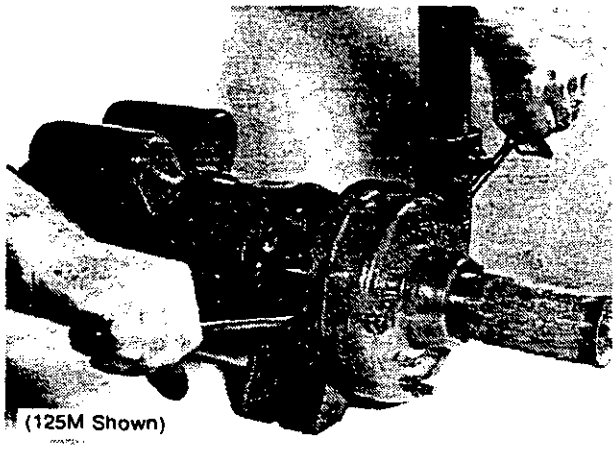
(125M Shown)

FIG. 1

IMPELLER

(a) On 100MM, remove impeller by holding motor shaft with water pump pliers and unscrew by hand.
(b) On 100M, 125M, 150M, and 200M, remove impeller by holding stub shaft with water pump pliers and unscrewing capscrew. (Fig. 2)

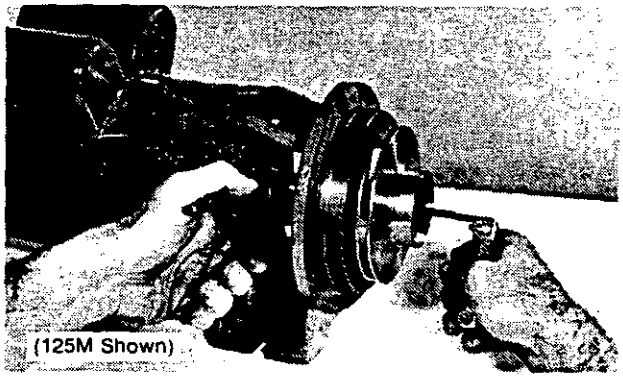
(125M Shown)

FIG. 2

SEAL

(a) The seal used on 100MM, 100BB, is ⅝"; 100M is ¾"; 125M, 125B, 150M, 200M, is ⅞".
(b) Always replace both rotating assembly and stationary ceramic seat. DO NOT USE OLD STATIONARY SEAT WITH NEW ROTATING SEAL ASSEMBLY.
(c) Using two screwdrivers, pry out rotating assembly of shaft seal. (Fig. 3)
(d) Old ceramic ring can be removed from housing by cracking with a chisel or screwdriver without removing the pump shaft.
(e) A new shaft seal should always be used when rebuilding a pump. All pump parts should be cleaned thoroughly before being reassembled.

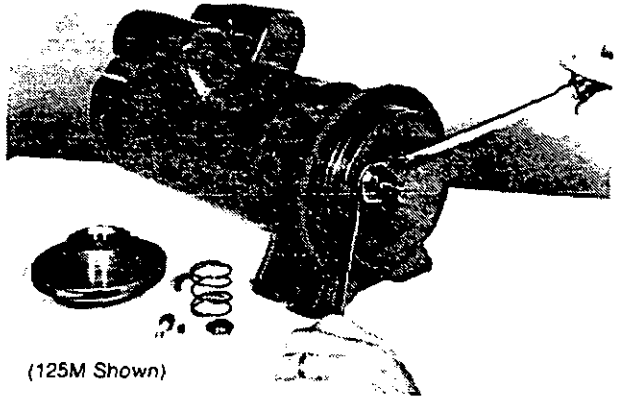
(125M Shown)

FIG. 3

MOTOR

(a) Remove four bolts holding bracket to motor and remove motor. (Fig. 4)
(b) Remove set screw in stub shaft coupling to disconnect motor pump shaft.

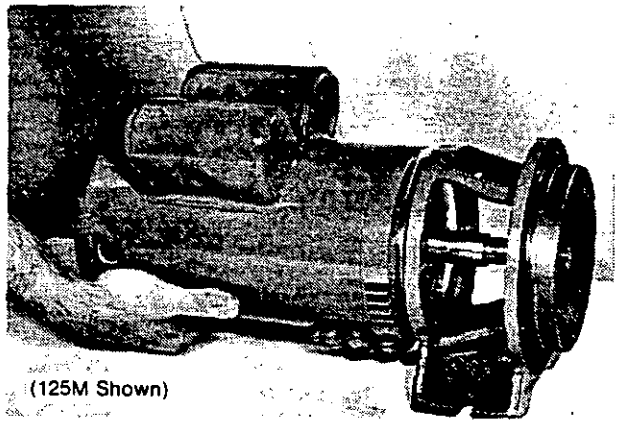
(125M Shown)

FIG. 4

	H.P.	IMPELLER NUMBER	IMPELLER O.D.
100MM	1/3	11070B6	3 9/16
	1/2	11070B7	3 15/16
	3/4	11074B8	4 7/16
	1	11074B10	4 7/8
C100MM	1	11074B12 (Iron)	4 7/8
125M	1 1/2	11725B1	5 1/16
	2	11725B2	5 3/8
	3	11725B3	5 13/16
150M	2	12935B2	4 5/8
	3	12935B1	5 1/8
	5	12935B3	5 15/16
200M	3	12936B2	4 7/16
	5	12936B1	5 1/8
	7 1/2	12936B3	5 3/4
100BB		11074B10	4 7/8
125B		11725B3	5 13/16
150B		12935B3	5 15/16
200B		12936B3	5 3/4
100M	1/3	11070B1	3 9/16
	1/2	11070B	3 15/16
	3/4	11074B1	4 7/16
	1	11074B	4 7/8

FIG. 5

ASSEMBLY INSTRUCTIONS

SPOTTING MOTOR SHAFT — Locate "Spotting Position" from motor mounting face to center of spot. A drilling guide and locating fixture is recommended for uniform and accurate spotting. Make two spots with a drill point, at 90 degrees apart — must be on motor shaft keyway. (Fig. 6)

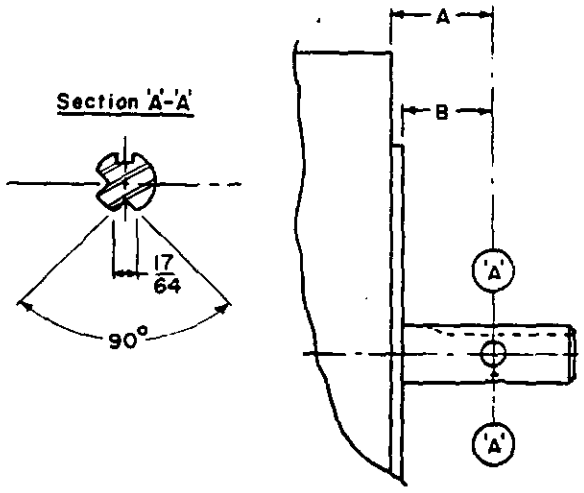

CATALOG NO.	A	B
100M, 125M	1.125 ± .005	—
150M2 & 3	1.125 ± .005	—
150M5	—	1.562 ± .005
200M3	1.125 ± .005	—
200M5 & 7½	—	1.562 ± .005

FIG. 6

NOTE—100MM impeller threads directly onto motor shaft.

MOTOR

(a) Place rubber deflector over motor shaft, slide shaft extension into position and tighten set screws. (**NOTE**—100MM does not have shaft extension).

(b) Assemble motor and shaft onto bracket, using (4) ⅜-16UNC Hex Head Cap Screws, 1⅛" long on all except the 150M5, 200M3, 200M5 & 7½. On these units use (4) ½-13UNC Hex Head Cap Screws, 1¼" long. **NOTE**—Cap screws on 100MM are ⅞" long.

SEAL INSTALLATION

(a) Insert seal seat in position by using finger pressure to press firmly and squarely until it bottoms. The use of light oil (SAE10) on the rubber element will facilitate assembly. Care must be taken to keep oil, grease and dirt off face areas of seal. Be sure the seal faces are not damaged during assembly (cracked, scratched or chipped) or the seal will leak during operation.

(b) Check dimension from face of ceramic seat to shaft shoulder. This distance should be as noted in Figure 7 within a tolerance of ± 1/64.

(c) Install rotating element of seal on shaft (Fig. 8), be sure the lapped sealing surface is toward seal seat, and assemble impeller. Check diameter of impeller against motor horsepower rating to insure proper performance (Fig. 5).

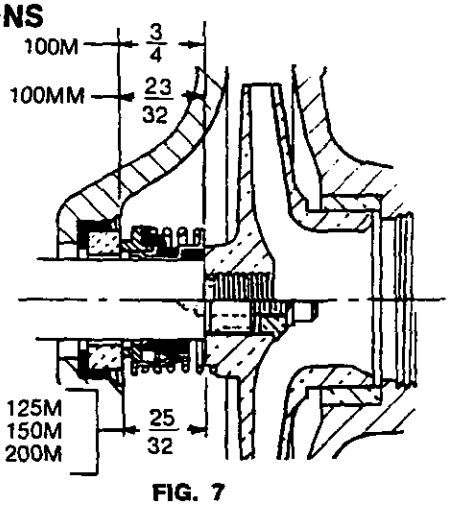

FIG. 7

IMPELLER

(a) On 100M, screw on impeller and secure using special washer and 1/4-28UNF Socket Head Cap Screw, 3/4" long — must be stainless steel.

(b) On 100MM screw on impeller and secure by tightening hand tight.

5On all others secure impeller using Key (3/16 square × 21/32" lg), impeller retainer washer, 5/16 stainless steel helical spring lockwasher and 5/16-18UNC socket head cap screw, 1" long (stainless steel). It is also recommended that a locking type sealant be applied to both cap screw thread prior to assembly.

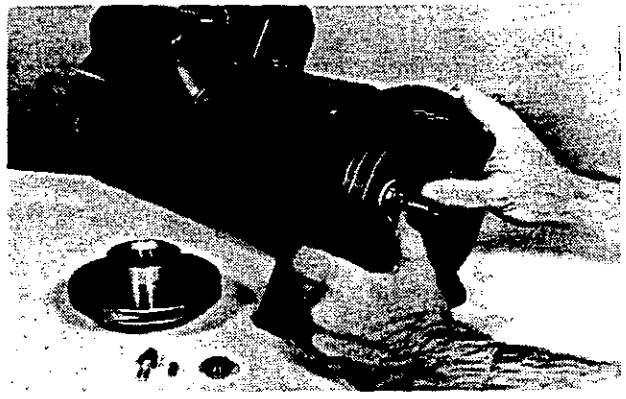

FIG. 8

VOLUTE CASE

(a) Worn volute case will cause excessive leakage with a new impeller, thereby reducing the amount of service obtained from a new impeller.

(b) Assemble gasket and volute case with ⅜-16UNC Hex Head Cap Screws 1⅛" long. Four used on 100M, 100MM and eight on all others.

Rotate pump shaft with fingers, being sure that there is no tight spot or binding of assembly. A uniform drag of the seal faces will be present.

Centri-thrift field assembly kits

Myers Centri-Thrift Field Assembly Kits offer you the economy and flexibility of assembling your own centrifugal pump in the field or shop. They contain all the basic liquid end components and instructions. The customer supplies the motor to complete assembly.

Whether it is a new or repair installation, this kit provides a low cost method of assembling or completely rebuilding pumps. Because many components are common to several models, only a minimum parts stock is required. This eliminates stocking of complete pumps and allows them to be built as needed.

When properly assembled, the pumps will provide years of satisfactory service — the same as factory units. The kit's parts are guaranteed for one year to be free from defects (final assembly is not guaranteed).

The Centri-Thrift field kits are available in 1", 1¼", 1½" and 2" discharge sizes. They are offered only as standard fitted for operating temperatures up to 150°F. Horsepower requirements range from 1/3 HP to 7-1/2 HP. Myers motor-mounted kits use a standard NEMA C face, open drip-proof, 3600 RPM, 60 Hertz motor.

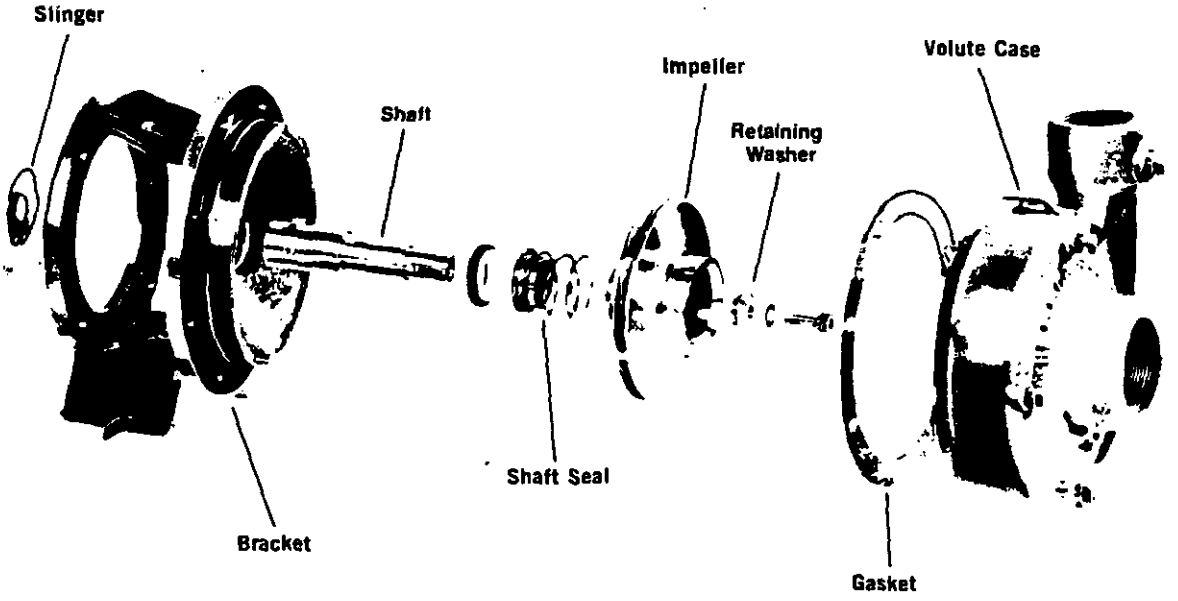

CONSTRUCTION MATERIALS

VOLUTE CASE. High tensile gray iron with threaded suction and discharge connections. Drain plug holes provided in four positions for easy draining of case.

BRACKET. High tensile gray iron. Provides mount for motor and volute case.

GASKET. Field proven material resistant to most liquids – provides a seal between the volute case and bracket.

IMPELLER. Closed impeller is bronze, one piece design, dynamically balanced to prevent vibration. Threaded on 100M Series while keyed on 125M, 150M, & 200M Series. Impeller is matched to horsepower size to prevent overloading.

SHAFT. Stainless steel stub shaft couples motor and pump together. This corrosion resistant shaft provides perfect alignment for quiet, trouble-free operation.

SHAFT SEAL. Mechanical seal features a ceramic seat, carbon washer, stainless steel spring, synthetic rubber bellows and brass metal parts. All seals are self-adjusting and easily replaced.

SLINGER. Rubber slinger protects motor from moisture damage.

SPECIFICATIONS

Kit Catalog Number	Complete Pump Catalog Number	No. of Pumps per Kit	Suction Size	Discharge Size	Motor Required			Impeller Dia.	Approx. Wt. Lbs.
					H.P.	NEMA Frame 1ø	NEMA Frame 3ø		
100M-FA	100M-⅓	10	1¼"	1"	⅓	56C	56C	3 9/16"	195
	100M-½		1¼"	1"	½	56C	56C	3 15/16"	
	100M-¾		1¼"	1"	¾	56C	56C	4 7/16"	
	100M-1		1¼"	1"	1	56C	56C	4⅞"	
125M-1½FA	125M-1½	1	1½"	1¼"	1½	56C	56C	5 1/16"	29
125M-2FA	125M-2	1	1½"	1¼"	2	56C	56C	5⅜"	29
125M-3FA	125M-3	1	1½"	1¼"	3	56C	56C	5 13/16"	29
150M-2FA	150M-2	1	2"	1½"	2	56C	56C	4⅝"	31
150M-3FA	150M-3	1	2"	1½"	3	56C	56C	5⅛"	31
150M-5FA	150M-5	1	2"	1½"	5	184TC	182TC	5 15/16"	35
200M-3FA	200M-3	1	2½"	2"	3	56C	56C	4 7/16"	32
200M-5FA	200M-5	1	2½"	2"	5	184TC	182TC	5⅛"	37
200M-7½FA	200M-7½	1	2½"	2"	7½	N/A	184TC	5¾"	38

100M-FA SERIES is available only in one kit with 10 pumps. Individual models are selected by specifying the impeller diameters for the desired model. Impeller diameters may be mixed to a maximum quantity of 10 per kit.

N.A. — Not available

All hardware (bolts, capscrews, washers) included in kits.

PERFORMANCE CHART

For proper pump selection, refer to individual pump performance curves.

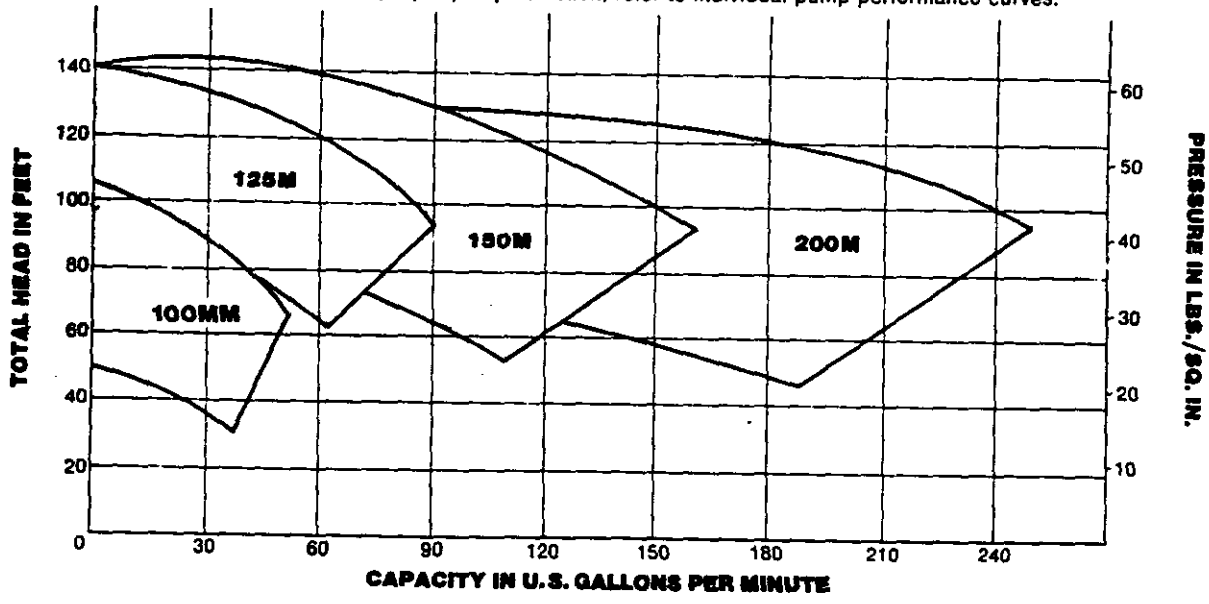

Myers®
F.E. Myers,
1101 Myers Parkway
Ashland, Ohio 44805-1923
419/289-1144
FAX: 419/289-6658, TLX: 98-7443

Printed in U.S.A. 4/91

Centri-Thrift Field Assembly Kits Parts List

100M-FA, C100M-FA
125M-FA Series
150M-FA Series
200M-FA Series

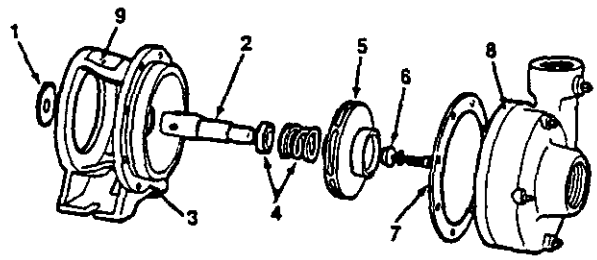

REF. NO.	PART NO.	DESCRIPTION
	16837A13	Kit, Cat. No. 100M-FA — Includes Parts to Build 10 Pumps
	16837A17	Kit, Cat. No. C100M-FA — Includes Parts to Build 10 Pumps
	16837A1	Kit, Cat. No. 125M-1½FA
	16837A2	Kit, Cat. No. 125M-2FA
	16837A14	Kit, Cat. No. 125M-3FA
	16837A5	Kit, Cat. No. 150M-2FA
	16837A15	Kit, Cat. No. 150M-3FA
	16837A8	Kit, Cat. No. 150M-5FA
	16837A16	Kit, Cat. No. 200M-3FA
	16837A11	Kit, Cat. No. 200M-5FA
	16837A12	Kit, Cat. No. 200M-7½FA — Kits Consist of all listed
1	5059A318	Slinger — All Units Except 150M-5FA, 200M-5FA, 200M-7½FA
1	5059A321	Slinger — 150M-5FA, 200M-5FA, 200M-7½FA
2	9037A3	Shaft w/Set Screws — 100M-FA, C100M-FA
2	11714B1	Shaft w/Set Screws — 125M-1½FA, 125M-2FA, 125M-3FA, 150M-2FA, 150M-3FA, 200M-3FA
2	11914B1	Shaft w/Set Screws — 150M-5FA, 200M-5FA, 200M-7½FA
	5013A15	Screw, Set ⅜-18UNC x ⅜" Lg. — 2 Used on All Units Except 150M-5FA, 200M-5FA, 200M-7½FA
	6024A1	Screw, Set ⅜-16UNC x ⅜" Lg. — 2 Used on 150M-5FA, 200M-5FA, 200M-7½FA
3	11069D	Bracket — 100M-FA
3	11069D10	Bracket — C100M-FA
3	11715D	Bracket — All 125M Units, 150M-2FA, 150M-3FA, 200M-3FA
3	11912D	Bracket — 150M-5FA, 200M-5FA, 200M-7½FA
	19101A16	Screw, Cap ⅜-16UNC x 1¼" — 4 Req'd. on All Units Except 150M-5FA, 200M-5FA, 200M-7½FA
	19103A4	Screw, Cap ½-13UNC x 1¾" — 4 Req'd. on 150M-5FA, 200M-5FA, 200M-7½FA
4	11416A	Seal — 100M-FA
4	18284A	Seal — C100M-FA
4	11716A1	Seal — All 125M, 150M, 200M Units

REF. NO.	PART NO.	DESCRIPTION
5	1107081	Impeller — 100M-FA ⅓ HP
5	110708	Impeller — 100M-FA ½ HP
5	1107481	Impeller — 100M-FA ¾ HP
5	110748	Impeller — 100M-FA 1 HP
5	1107083	Impeller — C100M-FA ⅓ HP
5	1107082	Impeller — C100M-FA ½ HP
5	1107486	Impeller — C100M-FA ¾ HP
5	1107485	Impeller — C100M-FA 1 HP — Impellers Must Be Specified When Ordering 100M-FA and C100M-FA Kits
5	11725B1	Impeller — 125M-1½FA
5	11725B2	Impeller — 125M-2FA
5	11725B3	Impeller — 125M-3FA
5	12935B2	Impeller — 150M-2FA
5	12935B1	Impeller — 150M-3FA
5	12935B3	Impeller — 150M-5FA
5	12936B2	Impeller — 200M-3FA
5	12936B1	Impeller — 200M-5FA
5	12936B3	Impeller — 200M-7½FA
	5818A25	Key — ⅛ Sq. x 25/32" Lg. — All 125M, 150M, 200M Units
6	10186A	Washer — 100M-FA
6	10186A1	Washer — C100M-FA
6	11718A	Washer — All 125M Units
6	12933A	Washer — All 150M, 200M Units
	6106A4	Screw, Socket Head SST ¼-28UNF x ¾" Lg. — 100M-FA, C100M-FA
	19100A4	Screw, Cap SST ⅜-18UNC x ¾" — All 125M Units
	6106A8	Screw, Socket Head SST ⅜-18UNC x 1" Lg. — All 150M, 200M Units
	5454A14	Lockwasher, ⅜ SST — All 125M, 150M, 200M Units
7	5059A312	Gasket — 100M-FA, C100M-FA
7	5863A13	Gasket — 125M, 150M, 200M Units
8	1107101	Case, Volute — 100M-FA
8	11071011	Case, Volute — C100M-FA
8	11726D1	Case, Volute — All 125M Units
8	1293701	Case, Volute — All 150M Units
8	1293801	Case, Volute — All 200M Units
	11072A	Ring, Wearing — For 100M-FA, C100M-FA w/Wearing Ring
	11720A	Ring, Wearing — For 125M Units w/Wearing Ring
	12934A	Ring, Wearing — For 150M, 200M Units w/Wearing Ring
	19101A16	Screw, Cap ⅜-16 UNC x 1¼" — 4 Req'd. on 100M-FA, C100M-FA — 8 Req'd. on 125M, 150M, 200M Units
	5022A4	Plug, Pipe ⅛" NPT — 4 Req'd. on All Units
	5022A9	Plug, Pipe ¼" NPT — 1 Req'd. on All 125M, 150M, 200M Units
9	22005A	Nameplate, Blank
	5160A1	Screw, Drive ½" x ¼" — 2 Req'd.

Printed in U.S.A.

Myers®
F.E. Myers, A Pentair Company
1101 Myers Parkway
Ashland, Ohio 44805-1923
419/289-1144
FAX: 419/289-6658. TLX: 98-7443

WILDEN®

AIR OPERATED DOUBLE DIAPHRAGM PUMPS

M1 Engineering Operation and Maintenance

MODEL M1 METAL
MODEL M1 CHAMP
MODEL M1 FOOD PROCESSING
MODEL M1 SOLENOID-OPERATED
MODEL M1 CARBON-FILLED ACETAL
MODEL M1 ULTRAPURE III

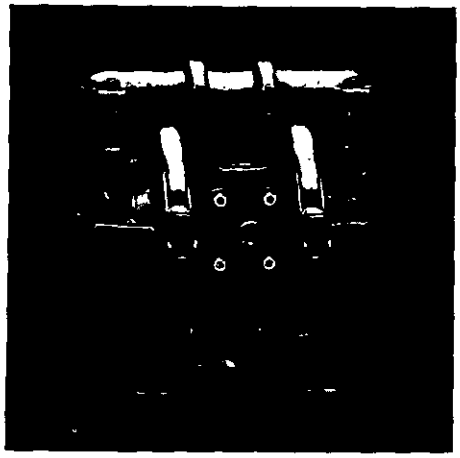

M1 METAL *LUBED AND LUBE-FREE*

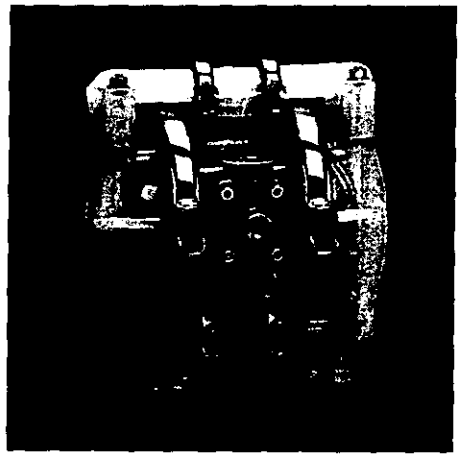

M1 CHAMP *LUBED AND LUBE-FREE*

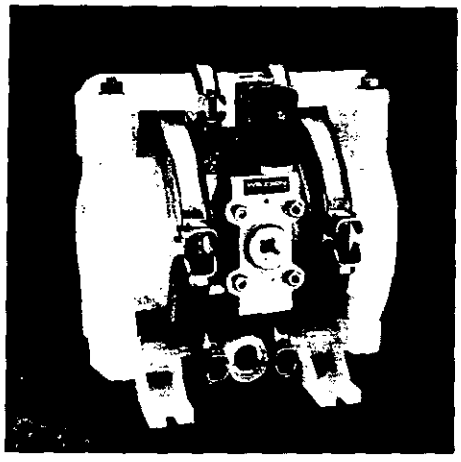

M1 SOLENOID-OPERATED *CHAMP AND METAL*

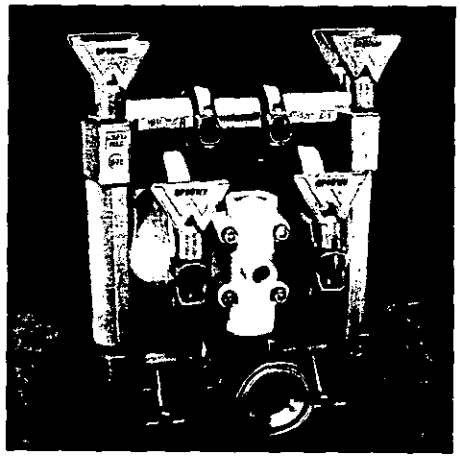

M1 FOOD PROCESSING *LUBED AND LUBE-FREE*

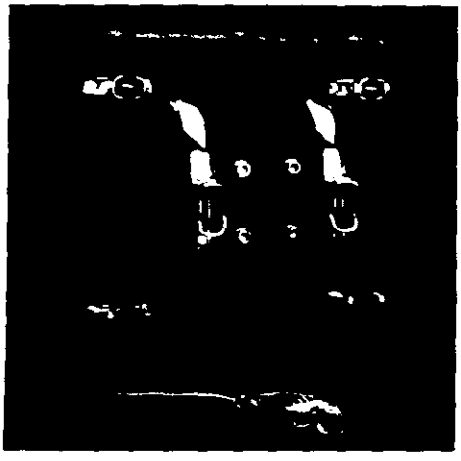

M1 CARBON-FILLED ACETAL

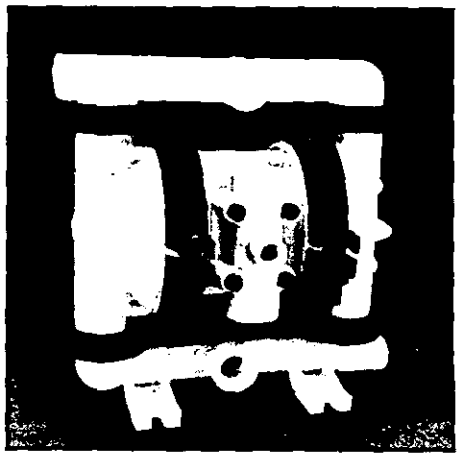

M1 ULTRAPURE III

RBG P/S-01 11/95
REPLACES 8/95

THE WILDEN PUMP — HOW IT WORKS

The Wilden diaphragm pump is an air-operated, positive displacement, self-priming pump. These drawings show flow pattern through the pump upon its initial stroke. It is assumed the pump has no fluid in it prior to its initial stroke.

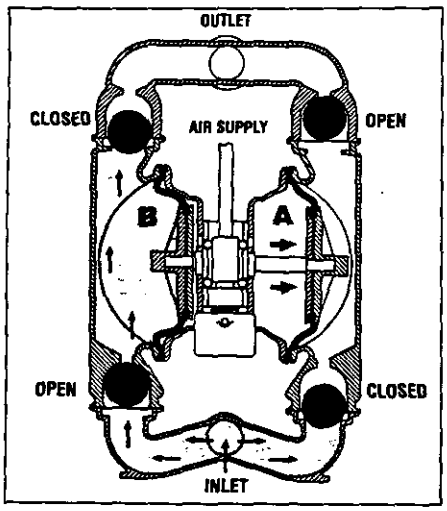

FIGURE 1 The air valve directs pressurized air to the back side of diaphragm A. The compressed air is applied directly to the liquid column separated by elastomer diaphragms. The diaphragm acts as a separation membrane between the compressed air and liquid, balancing the load and removing mechanical stress from the diaphragm which allows for millions of flex cycles. The compressed air moves the diaphragm away from the center block of the pump. The opposite diaphragm is pulled in by the shaft connected to the pressurized diaphragm. Diaphragm B is now on its suction stroke; air behind the diaphragm has been forced out to the atmosphere through the exhaust port of the pump. Diaphragm A is working against atmospheric air pressure. The movement of diaphragm B toward the center block of the pump creates a vacuum within chamber B. Atmospheric pressure forces fluid into the inlet manifold forcing the inlet valve ball off its seat. Liquid is free to move past the inlet valve ball and fill the liquid chamber.

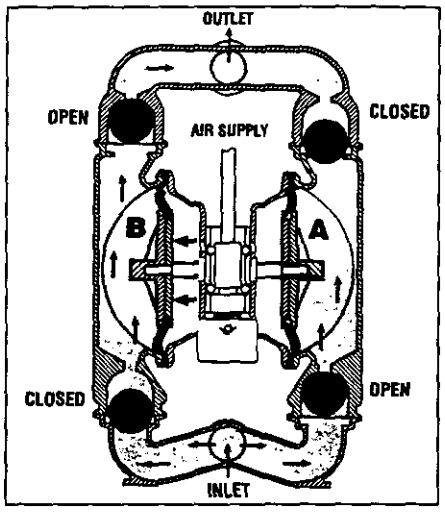

FIGURE 2 When the pressurized diaphragm, diaphragm A, reaches the limit of its discharge stroke, the air valve redirects pressurized air to the back side of diaphragm B. The pressurized air forces diaphragm B away from the center block while pulling diaphragm A to the center block. Diaphragm B is now on its discharge stroke. Diaphragm B forces the inlet valve ball onto its seat due to the hydraulic forces developed in the liquid chamber and manifold of the pump. These same hydraulic forces lift the discharge valve ball off its seat, while the opposite discharge valve ball is forced onto its seat, forcing fluid to flow through the pump discharge. The movement of diaphragm A to the center block of the pump creates a vacuum within liquid chamber A. Atmospheric pressure forces fluid into the inlet manifold of the pump. The inlet valve ball is forced off its seat allowing the fluid being pumped to fill the liquid chamber.

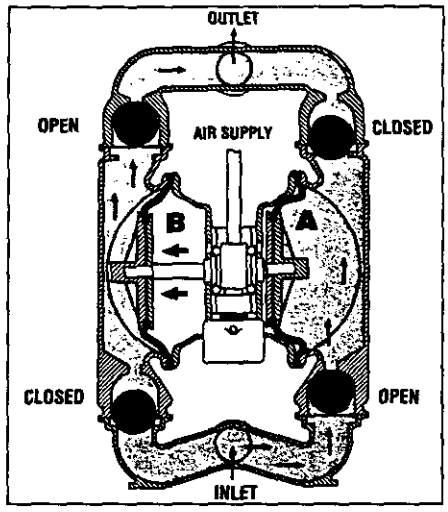

FIGURE 3 At completion of the stroke, the air valve again redirects air to the back side of diaphragm A, which starts diaphragm B on its exhaust stroke. As the pump reaches its original starting point, each diaphragm has gone through one exhaust and one discharge stroke. This constitutes one complete pumping cycle. The pump may take several cycles to completely prime depending on the conditions of the application.

WILDEN PUMP DESIGNATION SYSTEM

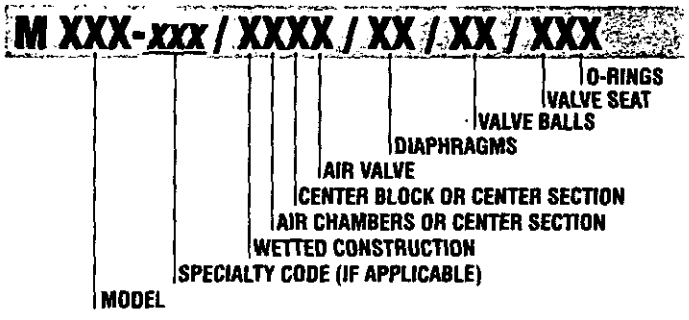

In the case where a center section is used instead of a center block and air chambers, the designation will be as follows: Aluminum = AA, Polypropylene = PP, Carbon-filled Acetal = GG, Nylon = YY, Acetal = LL

SUGGESTED INSTALLATION

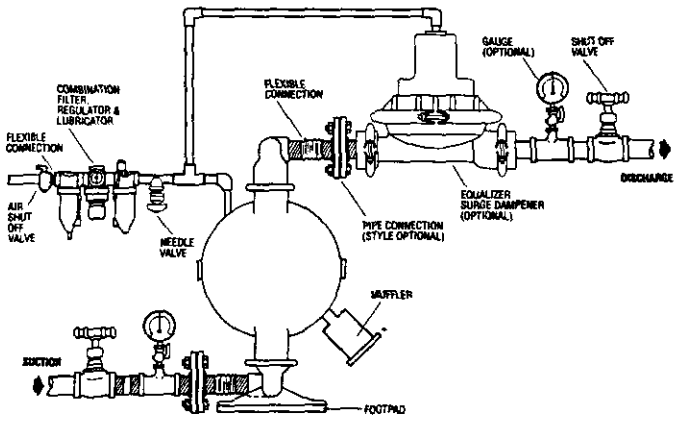

CAUTIONS! READ FIRST

Temperature Limits:

Carbon-filled Acetal	**–20°F to 150°F**	**(–28.9°C to 65.6°C)**
Polypropylene	**+32°F to 175°F**	**(0°C to 79.4°C)**
PVDF	**+10°F to +225°F**	**(–12.2°C to 107.2°C)**
Teflon® PFA	**–20°F to 300°F**	**(–28.9°C to 148.9°C)**

CAUTION: Maximum temperature limits are based upon mechanical stress only. Certain chemicals will significantly reduce maximum safe operating temperatures. Consult engineering guide for chemical compatibility and temperature limits.

CAUTION: ALWAYS WEAR SAFETY GLASSES WHEN OPERATING PUMP. WHEN DIAPHRAGM RUPTURE OCCURS, MATERIAL BEING PUMPED MAY BE FORCED OUT AIR EXHAUST.

"Champ" series pumps are made of virgin plastic and are not UV stabilized. Direct sunlight for prolonged periods can cause deterioration of plastics.

NOTE: Standard pumps must be lubricated. Wilden suggests an arctic 5 weight oil (ISO grade 15). Unless (F) is present pump must be lubricated.

WARNING: Prevention of static sparking — If static sparking occurs, fire or explosion could result. Pump, valves, and containers must be grounded when handling flammable fluids and whenever discharge of static electricity is a hazard. To ground the Wilden "Champ," all clamp bands must be grounded to a proper grounding point.

®TEFLON IS A REGISTERED TRADEMARK OF E.I. DUPONT CORP.

TABLE OF CONTENTS

CAUTION: DO NOT EXCEED 125 PSIG AIR SUPPLY PRESSURE.

BLOW OUT AIR LINE FOR 10 TO 20 SECONDS BEFORE ATTACHING TO PUMP TO MAKE SURE ALL PIPE LINE DEBRIS IS CLEAR. ALWAYS USE AN IN-LINE AIR FILTER.

WARNING: The solenoid valve should not be used in an area where explosion proof equipment is required unless Nema 7 valve is specified.

Carbon-filled acetal must be adequately grounded through strap provided.

When removing end cap using compressed air, the air valve end cap may come out with considerable force. Hand protection such as a padded glove or a rag should be used to capture the end cap.

CAUTION: Before any maintenance or repair is attempted, the compressed air line to the pump should be disconnected and all air pressure allowed to bleed from pump. Disconnect all intake, discharge, and air lines. Drain the pump by turning it upside down and allowing any fluid to flow into a suitable container.

SECTION 1A — DIMENSIONAL DRAWING
MODEL M1 METAL PUMP

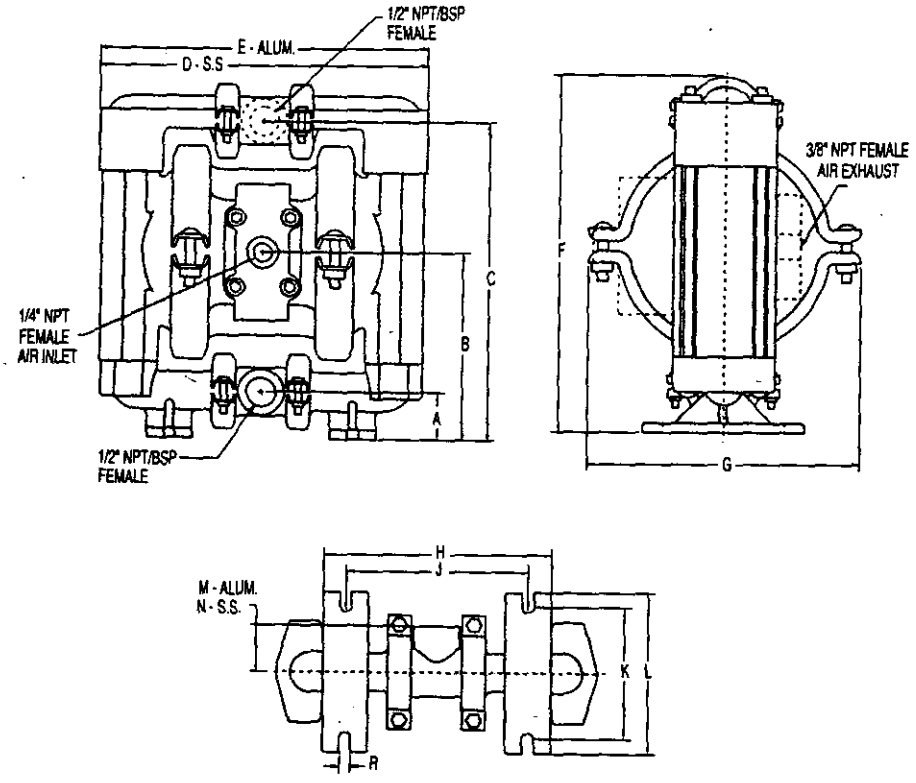

DIMENSIONS – M1 (METAL)		
ITEM	STANDARD (inch)	METRIC (mm)
A	1 1/8	28.6
B	4 9/16	115.9
C	7 13/16	198.5
D	8	203.2
E	8 5/32	207.2
F	8 3/4	222.3
G	6 7/8	174.6
H	5 1/2	139.7
J	4 13/32	111.9
K	3 1/4	82.6
L	4	101.6
M	1 3/16	30.2
N	1 3/16	30.2
P	9/32	7.1

BSP threads available.

SECTION 1B — DIMENSIONAL DRAWING
MODEL M1 METAL SOLENOID-OPERATED PUMP

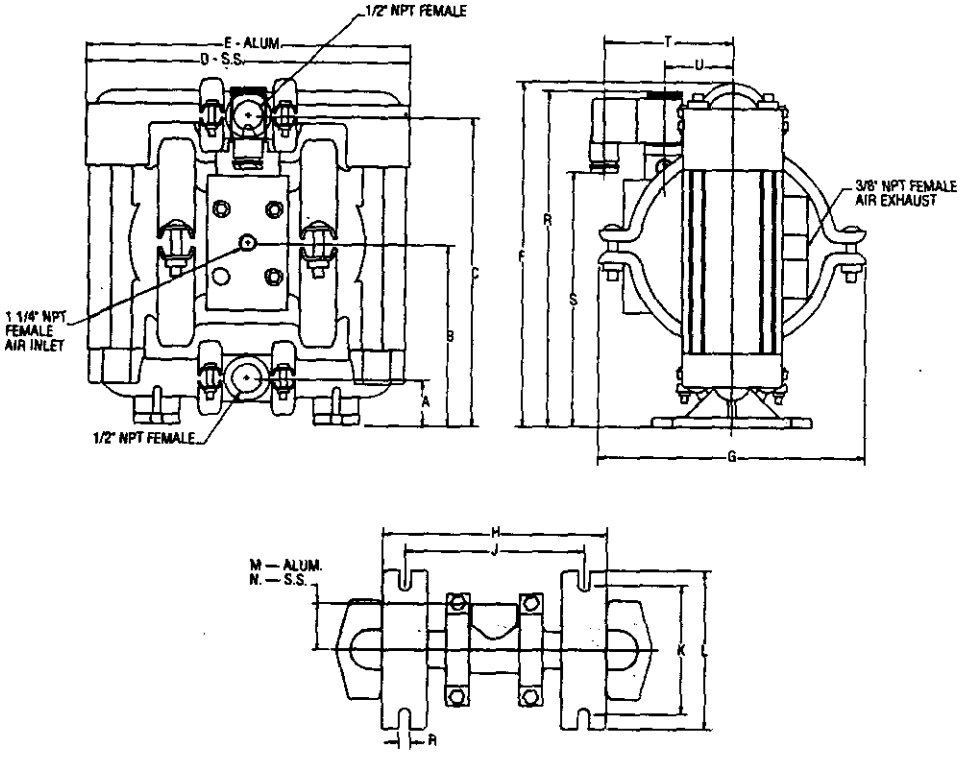

DIMENSIONS – M1 SOLENOID OPERATED (METAL)		
ITEM	STANDARD (inch)	METRIC (mm)
A	1 1/8	28.6
B	4 5/16	115.9
C	7 13/16	198.5
D	8	203.2
E	8 5/32	207.2
F	8 3/4	222.3
G	6 7/8	174.6
H	5 1/2	139.7
J	4 13/32	111.9
K	3 1/4	82.6
L	4	101.6
M	1 3/16	30.2
N	1 3/16	30.2
P	9/32	7.1
R	8 7/8	225.4
S	6 3/8	161.9
T	3 7/32	81.8
U	1 3/4	44.5

*BSP threads available.

SECTION 1C — DIMENSIONAL DRAWING
MODEL M1 FOOD PROCESSING PUMP

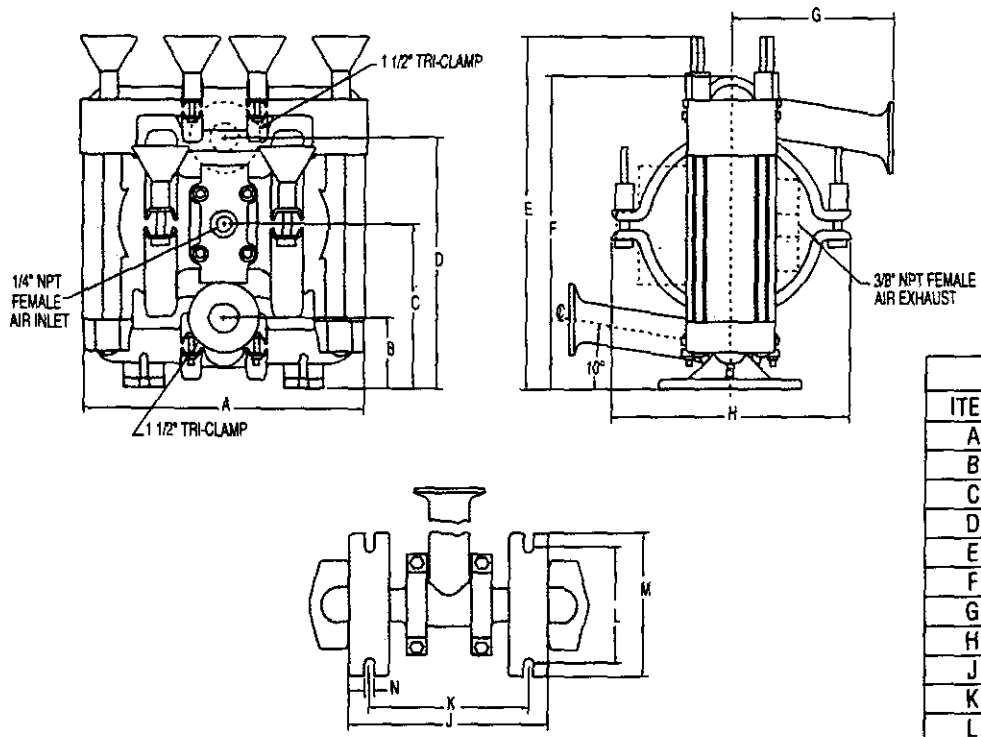

DIMENSIONS – M1 (FOOD PROCESSING)		
ITEM	STANDARD (inch)	METRIC (mm)
A	8 1/32	204.0
B	1 29/32	48.4
C	4 21/32	118.3
D	6 7/8	174.6
E	10 1/32	254.8
F	8 3/4	222.3
G	4 17/32	115.1
H	6 13/16	173.0
J	5 5/8	142.9
K	4 15/32	113.5
L	3 1/4	82.6
M	4	101.6
N	9/32	7.1

Interior/Exterior Food Processing finish is 50 GRIT.

SECTION 1D — DIMENSIONAL DRAWING
MODEL M1 FOOD PROCESSING SOLENOID-OPERATED PUMP

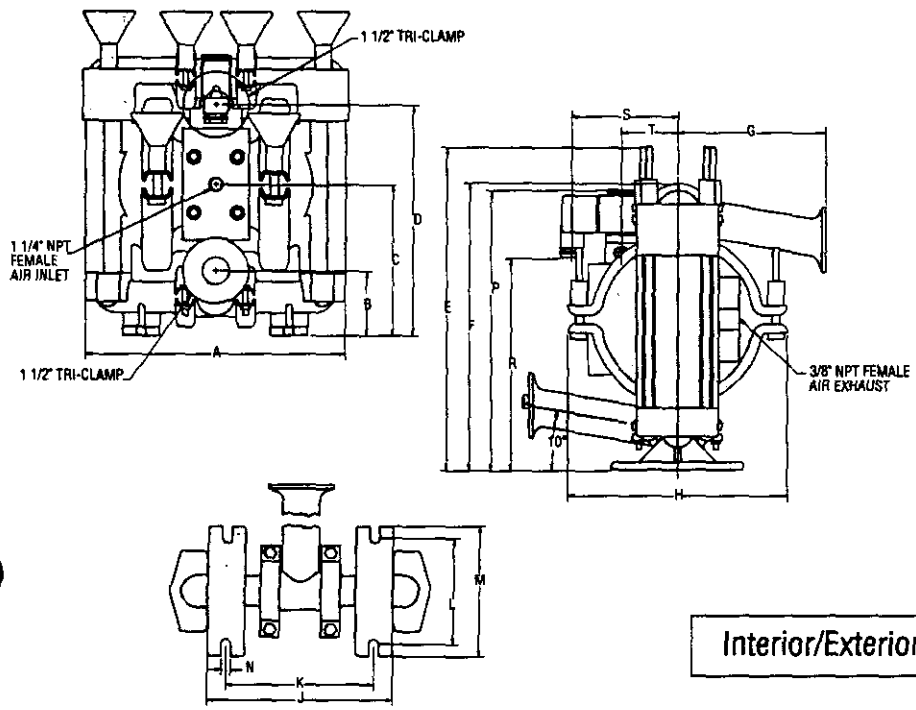

DIMENSIONS – M1 SOLENOID OPERATED (FOOD GRADE)		
ITEM	STANDARD (inch)	METRIC (mm)
A	8 1/32	204.0
B	1 29/32	48.4
C	4 21/32	118.3
D	6 7/8	174.6
E	10 1/32	254.8
F	8 3/4	222.3
G	4 17/32	115.1
H	6 13/16	173.0
J	5 5/8	142.9
K	4 15/32	113.5
L	3 1/4	82.6
M	4	101.6
N	9/32	7.1
P	8 15/32	215.1
R	6 13/32	162.7
S	3 7/32	81.8
T	1 3/4	44.5

Interior/Exterior Food Processing finish is 50 GRIT.

SECTION 1E — DIMENSIONAL DRAWING
MODEL M1 CHAMP PUMP (Plastic)

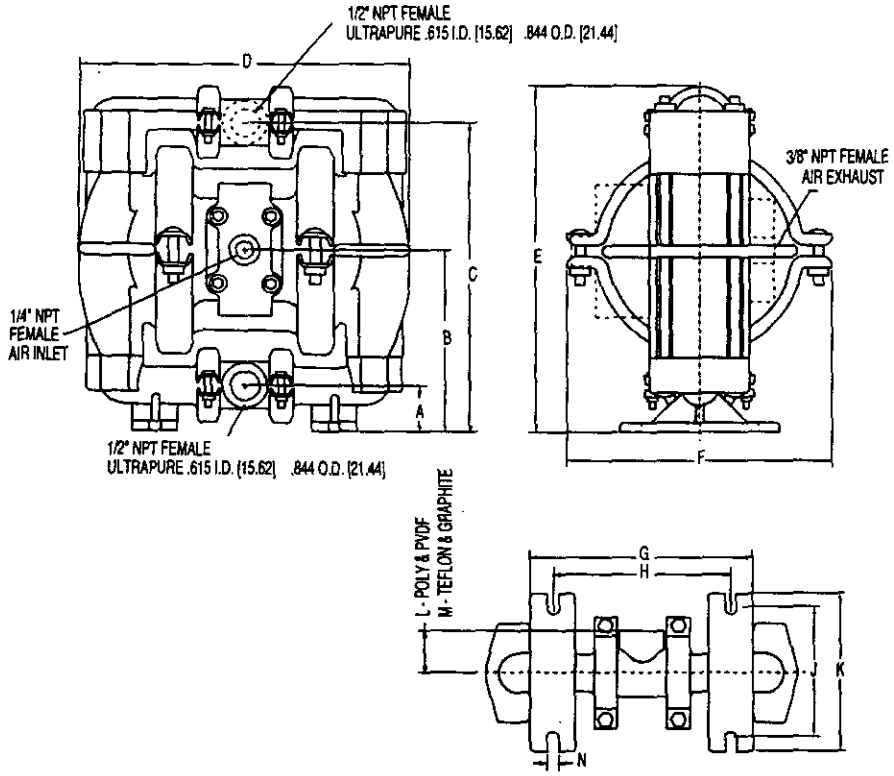

DIMENSIONS – M1 (PLASTIC)		
ITEM	STANDARD (inch)	METRIC (mm)
A	1 5/32	29.3
B	4 1/2	114.2
C	7 11/16	195.3
D	8 3/16	207.8
E	8 5/8	219.1
F	7	177.8
G	5 21/32	143.7
H	4 1/2	114.2
J	3 1/4	82.6
K	4	101.5
L	1 3/32	27.8
M	27/32	21.4
N	9/32	7.1

SECTION 1F — DIMENSIONAL DRAWING
MODEL M1 CHAMP (Plastic)
SOLENOID-OPERATED PUMP

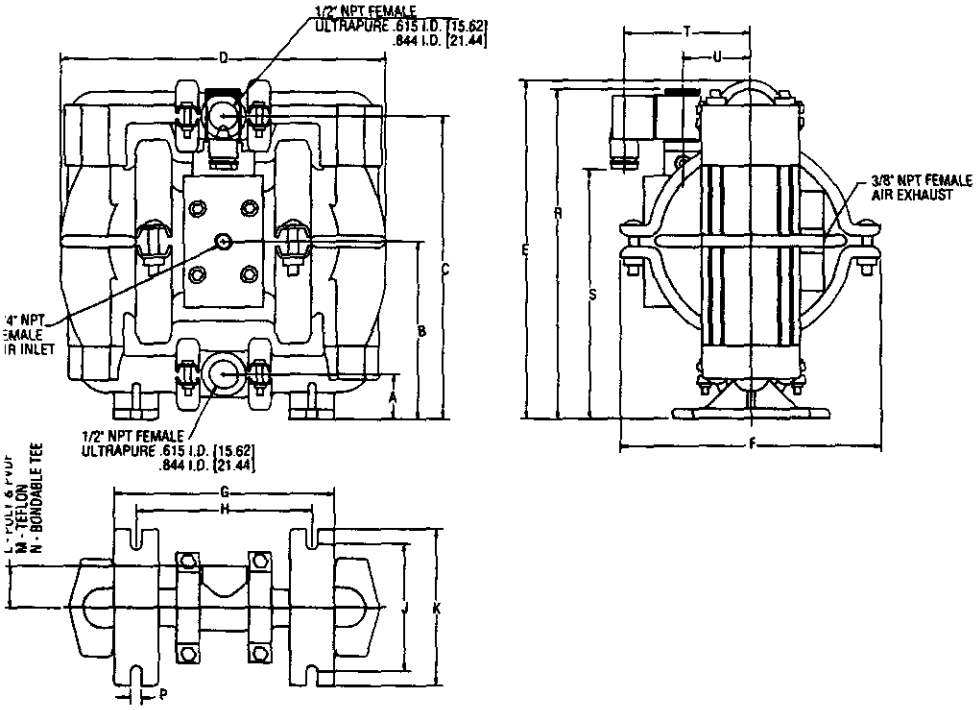

DIMENSIONS – M1 SOLENOID OPERATED (PLASTIC)		
ITEM	STANDARD (inch)	METRIC (mm)
A	1 5/32	29.4
B	4 1/2	114.2
C	7 11/16	195.3
D	8 3/16	208.0
E	8 5/8	219.1
F	7	177.8
G	5 21/32	143.7
H	4 1/2	114.2
J	3 1/4	82.6
K	4	101.6
L	1 3/32	27.8
M	27/32	21.4
N	3 5/16	83.4
P	9/32	7.1
R	8 3/8	212.7
S	6 5/16	160.3
T	3 7/32	81.8
U	1 3/4	44.5

SECTION 1G — DIMENSIONAL DRAWING
MODEL M1 ULTRAPURE III PUMP (Teflon® PFA)

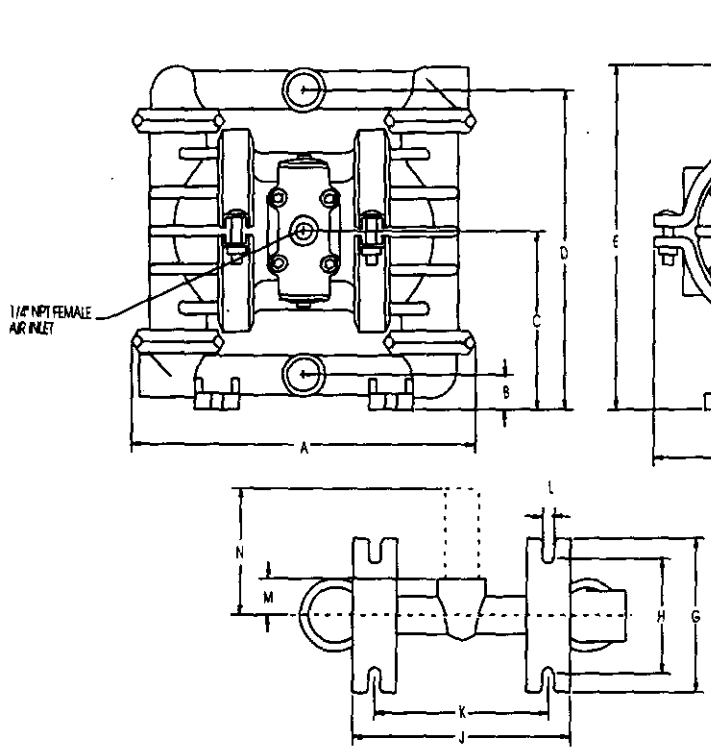

DIMENSIONS – M1 (ULTRAPURE III)		
ITEM	STANDARD (inch)	METRIC (mm)
A	8 7/8	223.6
B	15/16	23.6
C	4 3/4	119.7
D	8 3/8	211
E	9	226.7
F	6 3/4	170.0
G	4	100.8
H	3	75.6
J	5 5/8	141.7
K	4 1/2	113.4
L	1/4	6.3
M	1	25.2
FOR BONDABLE TEE SECTION		
N	3 5/16	83.5

SECTION 1H — DIMENSIONAL DRAWING
MODEL M1 CARBON-FILLED ACETAL

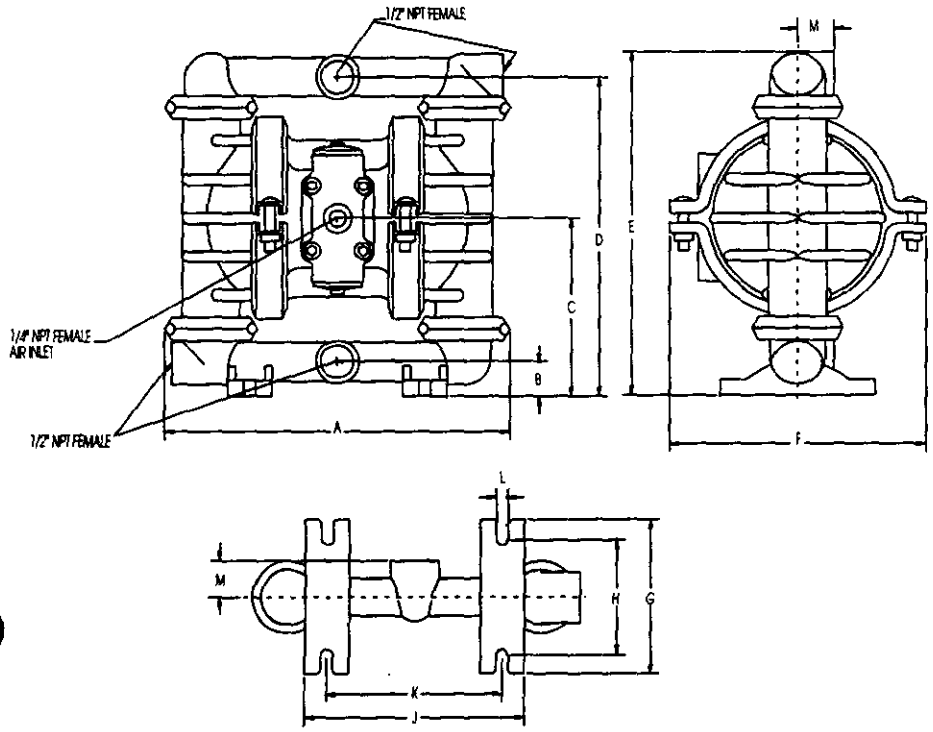

DIMENSIONS – M1 CARBON-FILLED ACETAL (WITH ONE PIECE MANIFOLD)		
ITEM	STANDARD (inch)	METRIC (mm)
A	8 25/32	223.0
B	1	25.4
C	4 21/32	118.3
D	8 1/2	215.9
E	9 3/32	231.0
F	6 3/4	171.4
G	4 1/16	103.2
H	9 3/32	83.3
J	5 3/4	146.0
K	4 9/32	116.7
L	9/32	7.1
M	1	25.4

SECTION 2A — MODEL M1 METAL (Rubber/TPE-Fitted) Pump Performance Curve

Weight.....Aluminum 12 lbs.
Stainless Steel 19.5 lbs.
Air Inlet.....¼" Female NPT
Inlet.....½" Female NPT[1]
Outlet.....½" Female NPT[1]
Suction Lift.....**Rubber 10' Dry**
25' Wet
TPE 7' Dry
25' Wet
Displacement per Stroke.... .026 gal.[2]
Solenoid-operated .016 gal.
Max. Size Solids.....⅛" Dia.

Example: To pump 5 gpm against a discharge pressure of 40 psig requires 50 psig and 3 scfm air consumption. (See dot on chart.)

[1]BSP threads available.
[2]Displacement per stroke calculated at 70 psig air inlet against 30 psig discharge head pressure.

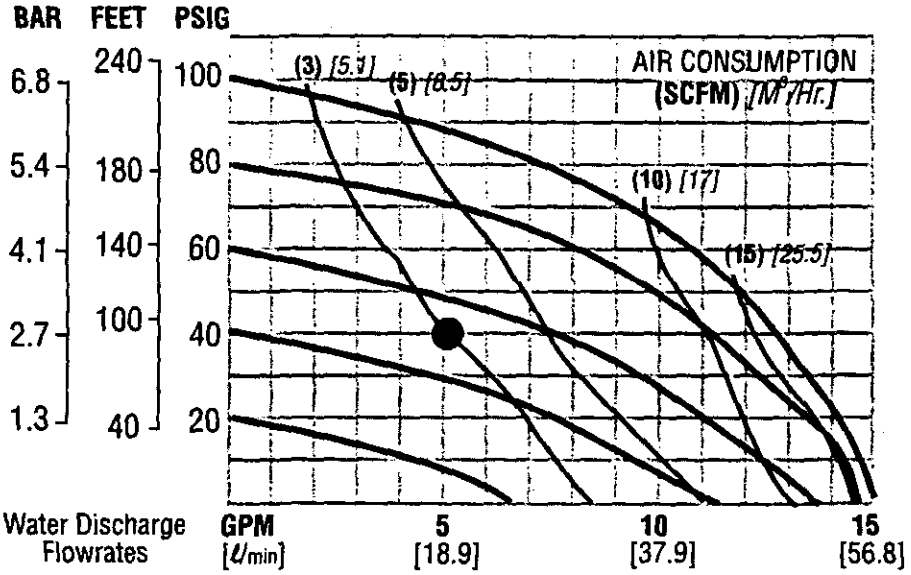

Volumes indicated on chart were determined by actually pumping water in calibrated tanks.

SECTION 2B — MODEL M1 METAL (Teflon®-Fitted) Pump Performance Curve

Weight.....Aluminum 12 lbs.
Stainless Steel 19.5 lbs.
Air Inlet.....¼" Female NPT
Inlet.....½" Female NPT[1]
Outlet.....½" Female NPT[1]
Suction Lift.....**8' Dry**
25' Wet
Displacement per stroke..... .02 gal.[2]
Solenoid-operated .013 gal.
Max. Size Solids.....⅛" Dia.

Example: To pump 5 gpm against a discharge pressure of 40 psig requires 57 psig and 3.8 scfm air consumption. (See dot on chart.)

[1]BSP threads available.
[2]Displacement per stroke calculated at 70 psig air inlet against 30 psig discharge head pressure.

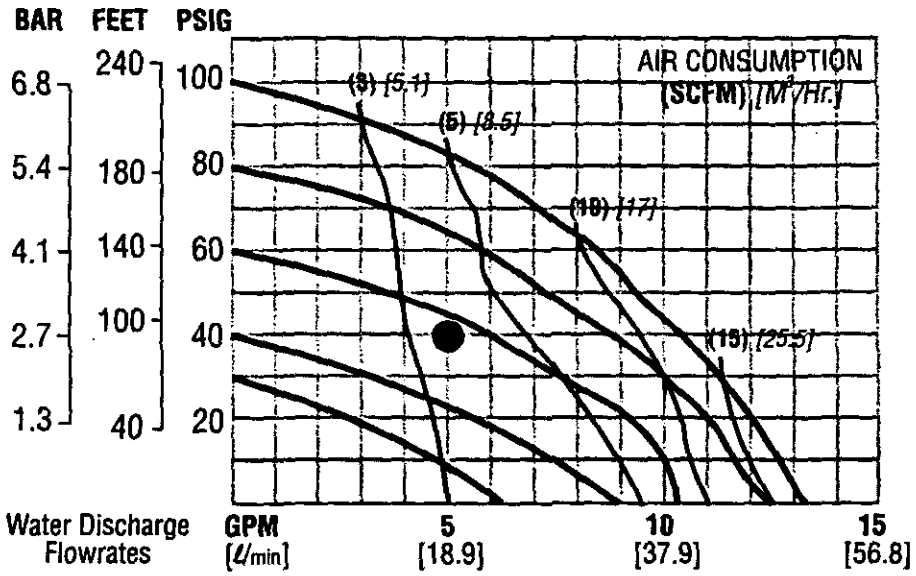

Volumes indicated on chart were determined by actually pumping water in calibrated tanks.

SECTION 2C — MODEL M1 CHAMP (Rubber/TPE-Fitted) Pump Performance Curve

Weight .....Polypropylene 9.25 lbs.
PVDF 10.75 lbs.
Air Inlet .....¼" Female NPT
Inlet.....½" Female NPT
Outlet .....½" Female NPT
Suction Lift .....**Rubber 10' Dry**
25' Wet
TPE 8'Dry
25' Wet
Displacement per stroke..... .018 gal.[1]
Lube-free .027 gal.[1]
Solenoid-operated .018 gal.[1]
Max. Size Solids .....⅛" Dia.

Example: To pump 5 gpm against a discharge pressure of 40 psig requires 50 psig and 3.2 scfm air consumption. (See dot on chart.)

[1]Displacement per stroke calculated at 70 psig air inlet against 30 psig discharge head pressure.

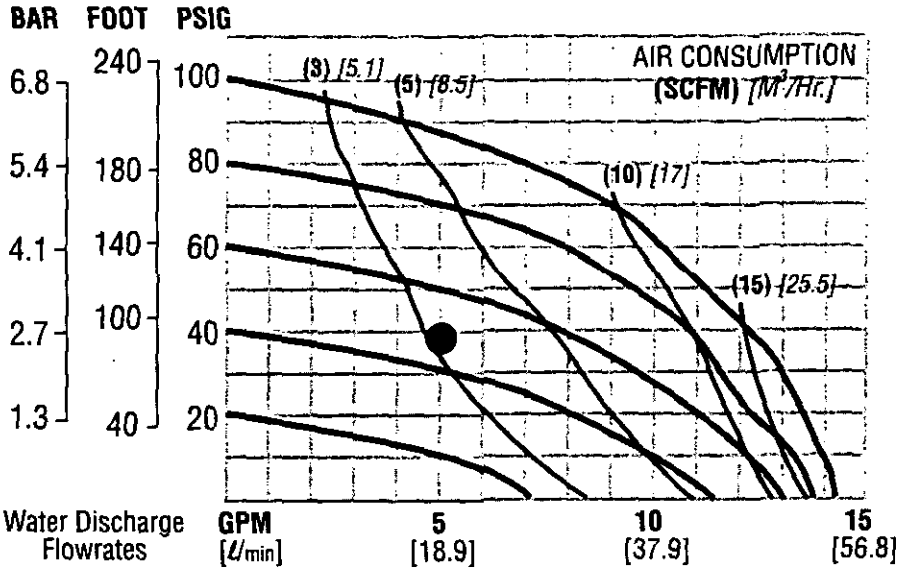

Volumes indicated on chart were determined by actually pumping water in calibrated tanks.

SECTION 2D — MODEL M1 CHAMP (Teflon®-Fitted) Pump Performance Curve

Weight .....Polypropylene 9.25 lbs.
PVDF 10.75 lbs.
Teflon® PFA 11.6 lbs.
Air Inlet .....¼" Female NPT
Inlet.....½" Female NPT
Outlet .....½" Female NPT
Suction Lift.....**7' Dry**[1]
25' Wet
Displacement per stroke..... .015 gal.[2]
Lube-free .021 gal.[2]
Solenoid-operated .014 gal.[2]
Max. Size Solids .....⅛" Dia.

Example: To pump 5 gpm against a discharge pressure of 40 psig requires 52 psig and 3.7 scfm air consumption. (See dot on chart.)

[1]M1 pumps with wetted construction of Teflon® and Teflon® valve seats have a dry suction lift of 6'.
[2]Displacement per stroke calculated at 70 psig air inlet against 30 psig discharge head pressure.

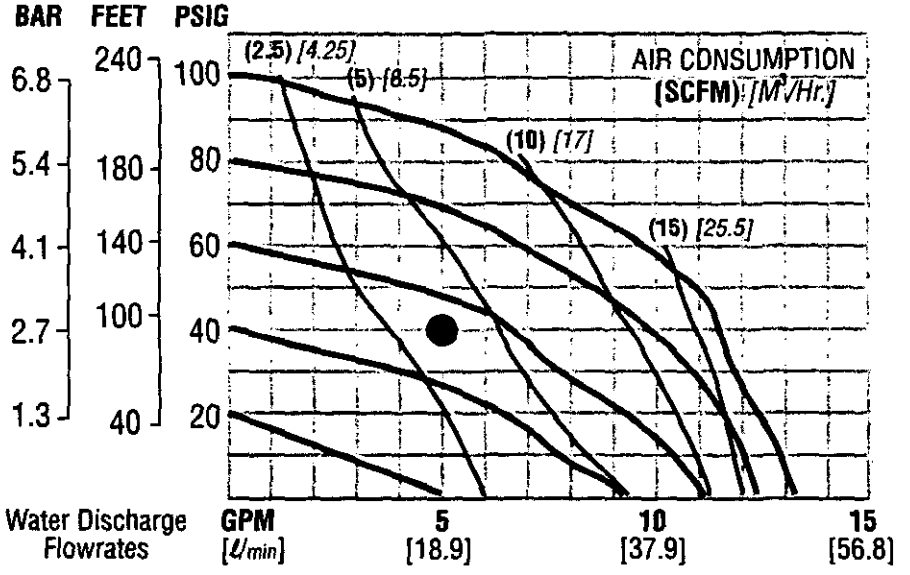

Volumes indicated on chart were determined by actually pumping water in calibrated tanks.

SECTION 3A

INSTALLATION — M1 AIR-OPERATED PUMPS

The Model M1 has a 1/2" inlet and 1/2" outlet and is designed for flows to 14 gpm. The **M1 Metal** pump is manufactured with wetted parts of aluminum or stainless steel. The center section of the **M1 Metal** pump is of nylon construction. The **M1 Champ** pump is manufactured with wetted parts of PVDF, polypropylene, graphite-filled polypropylene, or Teflon® PFA. The center section of the **M1 Champ** is constructed of polypropylene or carbon-filled Acetal. Two types of air distribution systems are available: *LUBED AND LUBE-FREE.* The Lubed air distribution system consists of a brass air valve body, aluminum air valve piston, Buna-N O-rings and a bronze center section bushing. The LUBE-FREE air distribution system is constructed solely of high-tech, engineered thermoplastics which function together without lubrication. The encircled letters "LF" stamped on the top of the pump's center section denotes that the pump is LUBE-FREE. The lube-free air valve body is off-white in color and also has "LF" molded into the valve body. A variety of diaphragms, valve balls, valve seats, and O-rings are available to satisfy temperature, chemical compatibility, abrasion and flex concerns.

The suction pipe size should be at least 1/2" diameter or larger if highly viscous material is being pumped. The suction hose must be non-collapsible, reinforced type as the M1 is capable of pulling a high vacuum. Discharge piping should be at least 1/2"; larger diameter can be used to reduce friction losses. It is critical that all fittings and connections are airtight or a reduction or loss of pump suction capability will result.

The M1 can be used in submersible applications only when both wetted and non-wetted portions are compatible with the material being pumped. If the pump is to be used in a submersible application, a hose should be attached to the pump's air exhaust and the exhaust air piped above the liquid level.

If the pump is to be used in a self-priming application, be sure that all connections are airtight and that the suction lift is within the pump's ability. Note: Materials of construction and elastomer material have an effect on suction lift parameters. Please refer to pump performance data.

Pumps in service with a positive suction head are most efficient when inlet pressure is limited to 7–10 psig. Premature diaphragm failure may occur if positive suction is 11 psig and higher.

THE MODEL M1 WILL PASS 1/16" SOLIDS. WHENEVER THE POSSIBILITY EXISTS THAT LARGER SOLID OBJECTS MAY BE SUCKED INTO THE PUMP, A STRAINER SHOULD BE USED ON THE SUCTION LINE.

CAUTION: DO NOT EXCEED 125 PSIG AIR SUPPLY PRESSURE.

BLOW OUT AIR LINE FOR 10 TO 20 SECONDS BEFORE ATTACHING TO PUMP TO MAKE SURE ALL PIPE LINE DEBRIS IS CLEAR. ALWAYS USE AN IN-LINE AIR FILTER.

SECTION 3B

INSTALLATION — M1 SOLENOID-OPERATED PUMPS

The solenoid-operated Model M1 has a ½" inlet and ½" outlet and is designed for flows to 8.5 gpm. This maximum flow rate was calculated at 550 strokes per minute with 100 psig air inlet against 0 psig discharge head. The **M1 Champ** pump is manufactured with wetted parts of pure, unpigmented PVDF, polypropylene or Teflon® PFA. The center section of the **M1 Champ** is constructed of polypropylene. The **M1 Metal** pump is manufactured with wetted parts of aluminum or 316 stainless steel. The center section of the **M1 Metal** pump is of nylon construction. A variety of diaphragms, valve balls, and O-rings are available to satisfy temperature, chemical compatibility, abrasion and flex concerns.

In the solenoid-operated pump models, the standard air valve is replaced with a two position, four-way solenoid valve that has a single operator and spring return.

When the solenoid is unpowered, one air chamber is pressurized with air, while the opposite chamber is exhausted. When electric power is applied, the solenoid shifts, and the pressurized air chamber is exhausted while the opposite chamber is pressurized. By alternately applying and removing power, the solenoid-operated pump runs like a standard Wilden pump.

The speed of the pump is controlled electrically. Since each stroke is controlled by an electrical signal, the pump is ideal for batching and other electrically controlled dispensing applications.

Although the speed of the pump is controlled electrically, the air pressure is important. Air pressure displaces the fluid, and if the pressure is insufficient to complete the physical stroke before an electronic impulse signals the pump to shift, the stroke will not be completed, and the displacement per stroke will be reduced. This does not harm the unit in any way, but it may cause inaccuracy when attempting to batch specific quantities with high precision.

The suction pipe size should be at least ½" diameter or larger if highly viscous material is being pumped. The suction hose must be non-collapsible, reinforced type as the M1 is capable of pulling a high vacuum. Discharge piping should be at least ½"; larger diameter can be used to reduce friction losses. It is critical that all fittings and connections are airtight or a reduction or loss of pump suction capability will result.

All wiring used to operate the pump should be placed and connected according to the proper electrical codes. It is important that the wiring is of adequate gauge to carry the current required to operate the pump. In addition, it is necessary that the electrical power supply is large enough to supply the current required to operate the pump. Wiring should be above ground level if possible (in case of fluid spill or leakage), and all wiring and connections which could become wet or damp should be made watertight.

If the pump is to be used in a self-priming application, be sure that all connections are airtight and that the suction lift is within the pump's ability. Note: Materials of construction and elastomer material have an effect on suction lift parameters. Please refer to pump performance data.

Pumps in service with a positive suction head are most efficient when inlet pressure is limited to 7–10 psig. Premature diaphragm failure may occur if positive suction head is 11 psig and higher.

The solenoid valve is rated for continuous duty; however, stopping on an even number stroke count insures that the electrical power is off when pump is stopped. This practice is safer and also eliminates unwanted strokes when the system is shut down and electrical power is off.

THE MODEL M1 WILL PASS ⅛" SOLIDS. WHENEVER THE POSSIBILITY EXISTS THAT LARGER SOLID OBJECTS MAY BE SUCKED INTO THE PUMP, A STRAINER SHOULD BE USED ON THE SUCTION LINE.

CAUTION: DO NOT EXCEED 125 PSIG AIR SUPPLY PRESSURE.

BLOW OUT AIR LINE FOR 10 TO 20 SECONDS BEFORE ATTACHING TO PUMP TO MAKE SURE ALL PIPE LINE DEBRIS IS CLEAR. ALWAYS USE AN IN-LINE AIR FILTER.

WARNING: The solenoid valve should not be used in an area where explosion proof equipment is required unless Nema 7 valve is specified.

There are three coil options available in both Nema 4 and Nema 7 ratings. One coil allows for 110V AC operation, one allows for 24V DC operation, and the third allows for either 24V AC or 12V DC operation.

ELECTRICAL CONNECTIONS

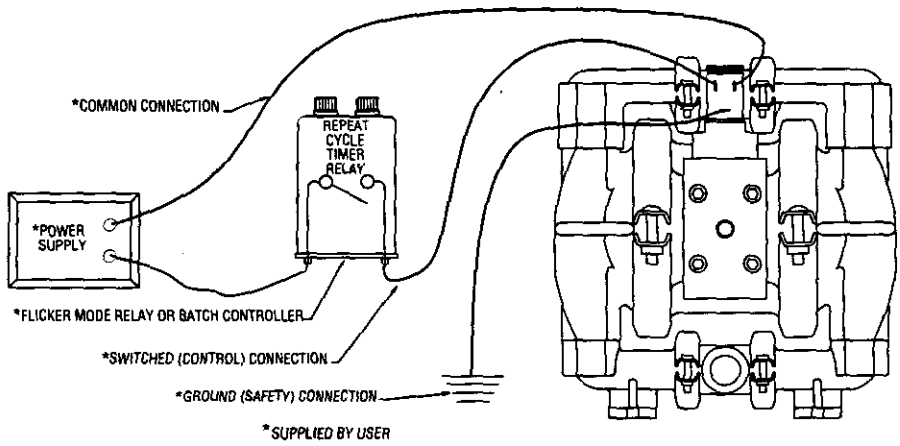

PLUMBING CONNECTIONS

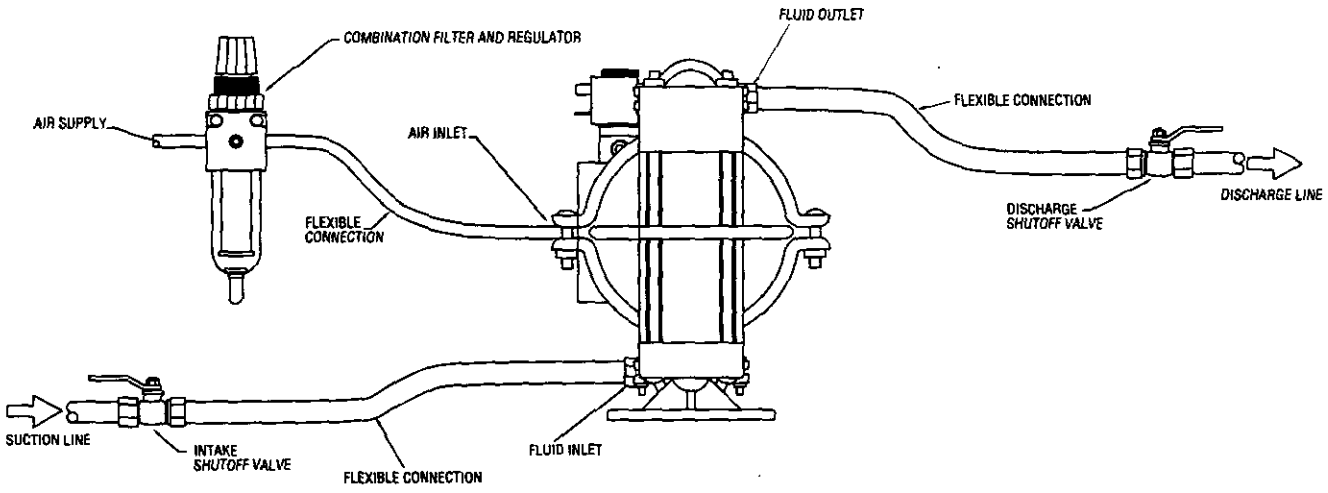

SECTION 3C

WILDEN SOLENOID-OPERATED PUMPS

QUICK REFERENCE

	M1 PLASTIC		M1 METAL	
SPECIFICATIONS	**RUBBER**	**TEFLON**	**RUBBER**	**TEFLON**
Maximum Flow Rate at 0 Head	7.5 gpm	7 gpm	8 gpm	7.4 gpm
# of Strokes per Minute @ Maximum Flow[1]	600	600	600	600
Maximum Air Pressure	125 psi	125 psi	125 psi	125 psi
Minimum Air Pressure Required	45 psi	45 psi	45 psi	45 psi
Displacement per Stroke[2]	.018 gal.	.014 gal.	.016 gal.	.013 gal.
Air Inlet Size (Female NPT)	1/4"	1/4"	1/4"	1/4"
Dry Suction Lift	10'	7'	10'	8'
Wet Suction Lift	25'	25'	25'	25'
Lubrication (Pre-Lube)	Buna Compatible NLGI Grade 2 Grease			
Inner Piston P/N	01-3710-01-150	01-3710-01-150	01-3710-01-150	01-3710-01-150
Terminal Connector P/N	00-2130-99	00-2130-99	00-2130-99	00-2130-99

[1]Maximum flow based on full stroke completion.
[2]Displacement per stroke is dynamic. Above figures were calculated with 70 psi air pressure against 30 psi discharge head at 200 strokes per minute.

ELECTRICAL INFORMATION

VOLTAGE	PART NUMBER	RATING	AMPS (INRUSH)	AMPS (HOLDING)	RESISTIVITY (OHMS)
24V DC	00-2110-99-150	NEMA 4	.25	.25	96
24V DC	00-2110-99-154	NEMA 7	.25	.25	25
24V DC[5]	00-2110-99-157	—	.135	.135	177
12V DC	00-2110-99-151	NEMA 4	.445	.445	26
12V DC	00-2110-99-153	NEMA 7	.445	.445	26
24V AC[3]	00-2110-99-151	NEMA 4	.445	.34	26
24V AC[3]	00-2110-99-153	NEMA 7	.445	.34	26
110V AC[4]	00-2110-99-155	NEMA 4	.25	.166	156
110V AC[4]	00-2110-99-156	NEMA 7	.25	.166	156

[3]24 Volts @ 60 Hz., 22 Volts @ 50 Hz.
[4]120 Volts @ 60 Hz., 110 Volts @ 50 Hz.
[5]Meets European standards and regulations, Cenelec/PTB file # EX-91.C.2027

SECTION 3D

INSTALLATION — MODEL M1 ULTRAPURE III AND CARBON-FILLED ACETAL

The M1 Ultrapure III was engineered in response to your request for a reliable, lube-free, sealless pump constructed of the purest materials available to industry. The M1 carbon-filled Acetal was engineered in response to your request for a reliable, lube-free, sealless pump constructed of conductive and solvent compatible materials available to industry. The UPIII utilizes specially engineered "wrap-around" clamp bands apply uniform pressure to all sealing surfaces. The Wil-Seal™ O-ring design which utilizes inboard and outboard O-rings increase sealing capability. The LUBE-FREE air valve constructed solely of plastic composites in conjunction with a newly designed center section, enhances reliability and pump performance. These selected plastic composites have the ability to function together without lubrication, which reduces contamination and fugitive emissions via the air exhaust port.

The suction pipe size should be at least ½" diameter or larger if highly viscous matreial is being pumped. The suction hose must be non-collapsible, reinforced type as the M1 is capable of pulling a high vacuum. Discharge piping should be at least ½"; larger diameter can be used to reduce friction losses. It is critical that all fittings and connections are air-tight or a reduction or loss of pump suction capability will result. The carbon-filled acetal pump employs a one-piece manifold allowing for a variety of plumbing options. Simply plug the unused port of each manifold.

The M1 can be used in submersible applications only when both wetted and non-wetted portions are compatible with the material being pumped. If the pump is to be used in a submersible application, a hose should be attached to the pump's air exhaust and the exhaust air piped above the liquid level.

If the pump is to be used in a self-priming application, be sure that all connections are airtight and that the suction lift is within the pump's ability. The M1 Ultrapure III has a dry suction lift of 6 feet.

Pumps in service with a positive suction head are most efficient when inlet pressure is limited to 7–10 psig. Premature diaphragm failure may occur if positive suction is 11 psig and higher.

THE MODEL M1 WILL PASS 1/16" SOLIDS. WHENEVER THE POSSIBILITY EXISTS THAT LARGER SOLID OBJECTS MAY BE SUCKED INTO THE PUMP, A STRAINER SHOULD BE USED ON THE SUCTION LINE.

CAUTION: DO NOT EXCEED 125 PSIG AIR SUPPLY PRESSURE.

BLOW OUT AIR LINE FOR 10 TO 20 SECONDS BEFORE ATTACHING TO PUMP TO MAKE SURE ALL PIPE LINE DEBRIS IS CLEAR. ALWAYS USE AN IN-LINE AIR FILTER.

TEMPERATURE LIMITS:

Ultrapure II & III	**+40°F to +300°F (4.4°C to 148.9°C)**
Carbon-filled Acetal	**–20°F to +150°F (–28.9°C to 65.6°C)**

SECTION 4

SUGGESTED OPERATION AND MAINTENANCE INSTRUCTIONS — AIR-OPERATED M1 PUMPS

INSTALLATION: Months of careful planning, study, and selection efforts can result in unsatisfactory pump performance if installation details are left to chance.

Premature failure and long term dissatisfaction can be avoided if reasonable care is exercised throughout the installation process.

LOCATION: Noise, safety, and other logistical factors usually dictate that "utility" equipment be situated away from the production floor. Multiple installations with conflicting requirements can result in congestion of utility areas, leaving few choices for siting of additional pumps.

Within the framework of these and other existing conditions, every pump should be located in such a way that four key factors are balanced against each other to maximum advantage.

1. ACCESS: First of all, the location should be accessible. If it's easy to reach the pump, maintenance personnel will have an easier time carrying out routine inspections and adjustments. Should major repairs become necessary, ease of access can play a key role in speeding the repair process and reducing total downtime.

2. AIR SUPPLY: Every pump location should have an air line large enough to supply the volume of air necessary to achieve the desired pumping rate (see pump performance chart). Use air pressure up to a maximum of 125 psi depending upon pumping requirements.The use of an air filter before the pump will ensure that the majority of any pipeline contaminants will be eliminated.

FOR LUBED PUMPS: For best results, the pumps should use an air filter, regulator, and lubricator system. The use of a lubricant, suitable for the application, helps perform a number of functions. Lubricants reduce friction to minimize required shifting forces and reduce wear. Lubricants provide a protective coating against some forms of corrosion and contaminants. **Wilden suggests a hydraulic oil with arctic characteristics (ISO 15-5Wt.) This oil is chemically compatible with the center block O-rings and has a low pour point to guard against problems associated with low temperatures.** The amount of lubrication required is directly related to the amount of oil introduced from the factory air system. We therefore suggest that the lowest setting on the lubricator be utilized and then increased as necessary.

FOR LUBE-FREE PUMPS: For best results, the pump should use an air filter and regulator. Lube-free pump models do not require lubrication during assembly or while in operation. Pump discharge rate can be controlled by limiting the volume and/or pressure of the air supply to the pump. The use of a needle valve installed at the air inlet to the pump is suggested for this purpose. Pump discharge rate can also be controlled by throttling the pump discharge by installing a valve in the discharge line of the pump when the need to control the pump from a remote location exists. When the pump discharge pressure equals or exceeds the air supply pressure, the pump will stall out; no bypass or pressure relief valve is needed, and pump damage will not occur. When operation is controlled by a solenoid valve in the air line, a three-way valve should be used. Pumping volume can be set by counting the number of strokes per minute.

A muffler installed on the pump's air exhaust will give quiet exhaust. Sound levels are reduced below OSHA specifications using a Wilden muffler.

FOR SOLENOID PUMPS: For best results, the pumps should use an air filter and a regulator. The use of an air filter before the pump inlet will ensure that the majority of pipeline contaminants will be eliminated. The solenoid operated pump is permanently lubricated during assembly, and requires no additional lubrication under normal operation. If the unit runs under extreme conditions (continuous operation at high speeds), it may be necessary to relubricate center block with a **buna compatible NLGI Grade 2 grease** every 50 million cycles. Continuous lubrication with a compatible oil is not harmful, and will provide longer seal life, but it may flush all grease out of the unit.

Pump discharge rate is controlled electrically by varying the rate of alternation of the stroke signals. The pump will continue to shift if the liquid discharge line is closed, however no media will be pumped. This will not harm the pump in any way, but it is wasteful of the pressurized air. The pump will not shift until the air inlet pressure exceeds the minimum supply pressure requirement of approximately 40 psig. A minimum of 45 psi is recommended to ensure reliable operation.

A muffler can be installed to reduce the amount of noise generated by the pump. Use of the specified Wilden muffler will reduce noise levels below OSHA specifications.

3. ELEVATION: Selecting a site that is well within the pump's suction lift capability will assure that loss-of-prime troubles will be eliminated. In addition, pump efficiency can be adversely affected if proper attention is not given to elevation (see pump performance chart).

4. PIPING: Final determination of the pump site should not be made until the piping problems of each possible location have been evaluated. The impact of current and future installations should be considered ahead of time to make sure that inadvertent restrictions are not created for any remaining sites.

The best choice possible will be site involving the shortest and the straightest hook-up of suction and discharge piping. Unnecessary elbows, bends, and fittings should be avoided. Pipe sizes should be selected so as to keep friction losses within practical limits. All piping should be supported independently of the pump. In addition, it should line up without placing stress on the pump fittings.

Expansion joints can be installed to aid in absorbing the forces created by the natural reciprocating action of the pump. If the pump is to be bolted down to a solid foundation, a mounting pad placed between the pump and foundation will assist in minimizing pump vibration. Flexible connections between the pump and rigid piping will also assist in minimizing pump vibration. If quick-closing valves are installed at any point in the discharge system, or if pulsation within a system becomes a problem, a surge suppressor should be installed to protect the pump, piping and gauges from surges and water hammer.

When pumps are installed in applications involving flooded suction or suction head pressures, a gate valve should be installed in the suction line to permit closing of the line for pump service.

INSPECTIONS: Periodic inspections have been found to offer the best means for preventing unscheduled pump downtime.

Individuals responsible for checking and maintaining lubrication levels in the pumps should also check for any abnormal noise or leakage. Personnel familiar with the pumps' construction and service should be informed of any abnormalities that are detected.

RECORDS: When service is required, a record should be made of all necessary repairs and replacements. Over a period of time, such records can become a valuable tool for predicting and preventing future maintenance problems and unscheduled downtime. In addition, accurate records make it possible to identify pumps that are poorly suited to their applications.

SECTION 5A
TROUBLESHOOTING — AIR-OPERATED M1 PUMPS

Pump will not run or runs slowly.

1. Check air inlet screen and air filter for debris.
2. Check for sticking air valve, flush air valve in solvent.
3. Check for worn out air valve. If piston face in air valve is shiny instead of dull, air valve is probably worn beyond working tolerances and must be replaced.
4. Check center block O-rings. If worn excessively, they will not seal and air will simply flow through pump and out air exhaust. Use only Wilden O-rings as they are of special construction and ISO 15-5 wt oil with arctic characteristics.
5. Check for rotating piston in air valve.
6. Check for over-torquing of air valve (lube-free only). Over-torquing may cause air valve piston to stick.

Pump runs but little or no product flows.

1. Check for pump cavitation; slow pump speed down to match thickness of material being pumped.
2. Check for sticking ball checks. If material being pumped is not compatible with pump elastomers, swelling may occur. Replace ball check valves and O-ring with the proper elastomers.
3. Check to make sure all suction connections are air tight, especially clamp bands around intake balls.

Pump air valve freezes.

Check for excessive moisture in compressed air. Either install dryer or hot air generator for compressed air.

Air bubbles in pump discharge.

1. Check for ruptured diaphragm.
2. Check tightness of clamp bands, and the integrity of the O-rings, especially at intake manifold.

Product comes out air exhaust.

1. Check for diaphragm rupture.
2. Check tightness of piston plates to shaft.

SECTION 5B
TROUBLESHOOTING — SOLENOID-OPERATED M1 PUMPS

Pump will not run.

1. Check for pressurized air at the inlet. (Min. 45 psig.)
2. Check air inlet and filter for debris.
3. Connect a test lamp to the two wires which run to pump and ensure that the lamp cycles on and off.
4. Make sure that the air valve manual override (small red knob on front of valve) is switched to the "0" position.
5. Check pilot pressure vent at the top of the operator/coil assembly to ensure that it is not clogged.
6. Check for a worn out air valve. If air continually blows out the exhaust in very large quantities, the air valve seals may be worn beyond their ability to function. In this case, the valve must be replaced.

NOTE: Before the valve is scrapped, it is possible that it may be saved by completely disassembling the valve, cleaning all components and relubricating the valve.

Pump runs but little or no fluid comes out.

1. Check that the discharge isolation valve is not closed.
2. Check that the electronic signal is slow enough that the pump is able to complete each physical stroke before it is signaled to change direction. The time required to complete the stroke is determined by a variety of factors which include fluid viscosity and head pressure. The shaft can be viewed if the muffler is removed to verify that the pump is stroking.
3. Check for pump cavitation; slow pump speed down to match the thickness of the material being pumped.
4. Check for sticking ball check valves. If the material being pumped is not compatible with the pump elastomers, swelling may occur. Replace ball check valves and O-ring with the proper elastomers.
5. Check to make sure that all suction connections are air tight, and that the clamp bands are properly tightened.

Pump air passages blocked with ice.

Check for excessive moisture in compressed air line. As the air expands out the exhaust during the operation of the pump, water vapor entrapped in the compressed air can freeze and block the air passageways in the pump. If this occurs, it may be necessary to install a coalescing filter, an air dryer, or a hot air generator for the compressed air.

Air bubbles in pump discharge.

1. Check for ruptured diaphragm.
2. Check tightness of clamp bands, and the integrity of the O-rings, especially at intake manifold.

Product comes out of the air exhaust.

1. Check for diaphragm rupture.
2. Check tightness of piston plates to shaft.

SECTION 6A

DIRECTIONS FOR DISASSEMBLY/REASSEMBLY
AIR-OPERATED AND SOLENOID-OPERATED M1 METAL AND M1 CHAMP (PLASTIC)

CAUTION: Before any maintenance or repair is attempted, the compressed air line to the pump should be disconnected and all air pressure allowed to bleed from pump. Disconnect all intake, discharge, and air lines. Drain the pump by turning it upside down and allowing any fluid to flow into a suitable container.

The Wilden® M1 has a 1/2" inlet and a 1/2" outlet and is designed for flows up to 14 gpm. The single-piece center section, consisting of center block and air chambers, is molded from glass-filled polypropylene or graphite-filled Acetal on the Champ and nylon on the Metal pump. All fasteners and hardware are stainless steel and the air valve is manufactured of brass or high-tech, engineered thermoplastics. All O-rings used in the pump are of a special material and shore hardness which should only be replaced with factory-supplied parts.

Tools required to perform maintenance on the Model M1 pumps are 3/16 inch Allen wrench, 7/16 inch, 5/16 inch, and 3/8 inch wrenches, two open end adjustable wrenches, and an O-ring pick.

PLEASE read all directions before starting disassembly.

NOTE: The following directions for disassembly and reassembly pertain to both metal and plastic constructed Wilden pumps. There are a few differences which are discussed in the text.The procedures for the solenoid-operated M1 are the same except for the air distribution system.

DISASSEMBLY

Step 1.

Before actual disassembly is started, turn pump upside down and drain all liquid trapped in the pump into a suitable container. Be sure to use proper caution if liquid is corrosive or toxic. Mark each liquid chamber to its respective air chamber for easy alignment during reassembly.

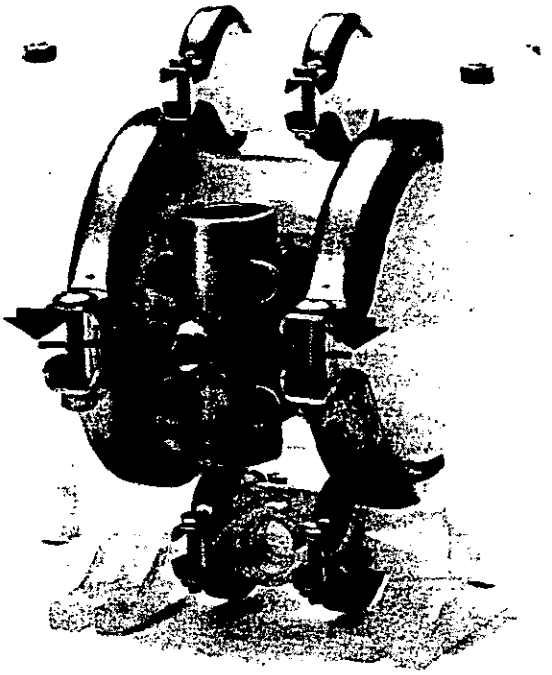

Figure 1

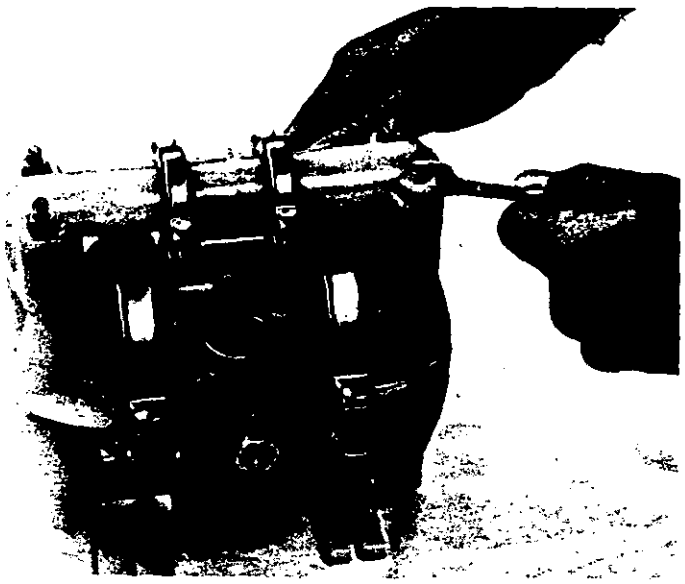

Figure 2

Start by removing the nuts from the four long bolts that hold the top and bottom manifold to the center section.

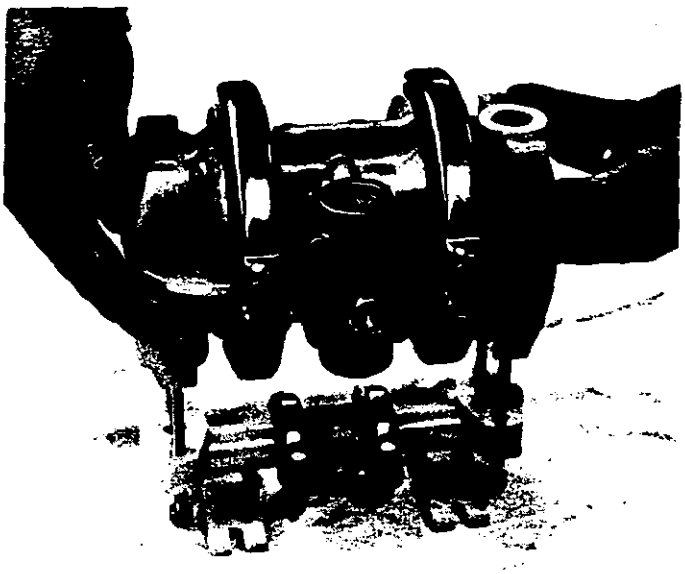

Figure 3

Remove the top manifold and lift the center section off the inlet manifold.

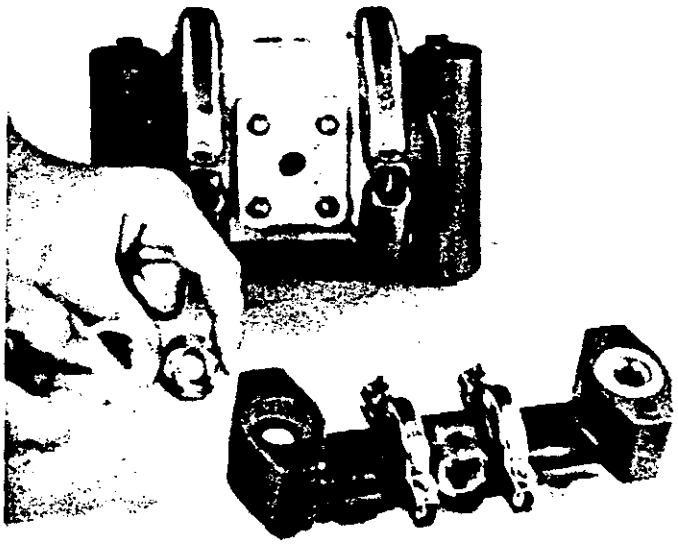

M1 METAL *Figure 4A*

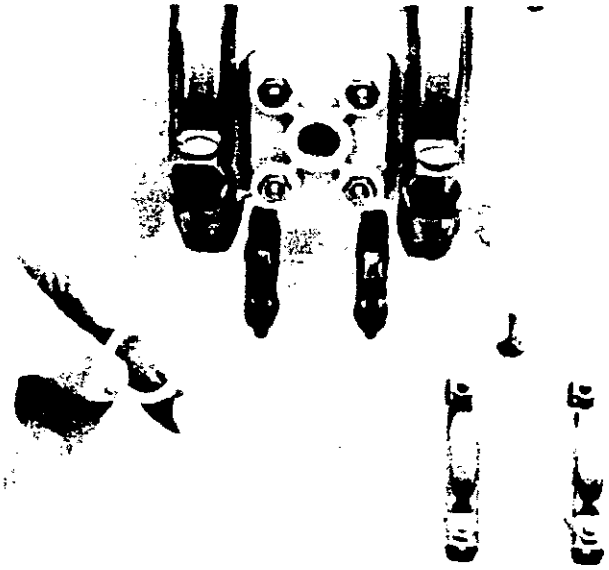

M1 PLASTIC *Figure 4B*

Step 2.

Set the center section aside and inspect the discharge manifold. The discharge valve ball, seat, and sealing O-rings should now be inspected for wear and chemical attack. If the ball is round and not deeply scratched, it is still serviceable. Inspect the seat area where the ball valve rests. It should be smooth with no cuts. If this area is damaged, poor vacuum will result.

METAL PUMPS are constructed with a single valve seat O-ring configuration. Solid Teflon® PTFE O-rings are utilized when pump is Teflon®-fitted. These Teflon® O-rings should be replaced when reassembled. *(Figure 4A.)*

PLASTIC PUMPS are constructed with a double valve seat O-ring configuration. Teflon® encapsulated O-rings are utilized when pump is Teflon®-fitted. These O-rings may be reused. *(Figure 4B.)*

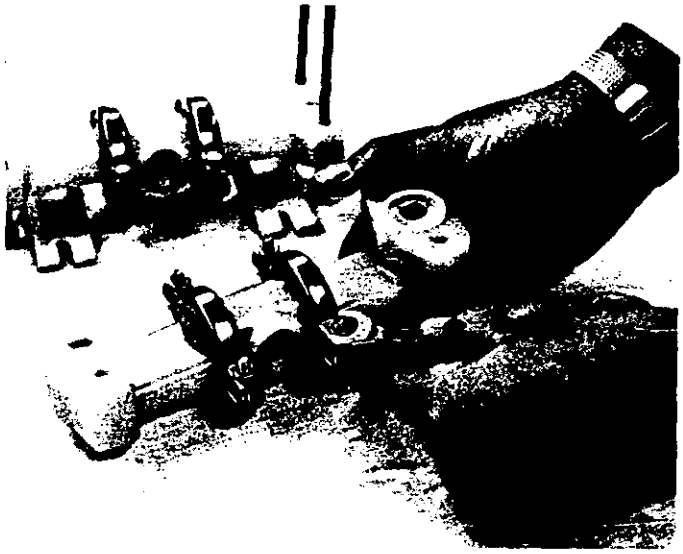

Figure 5

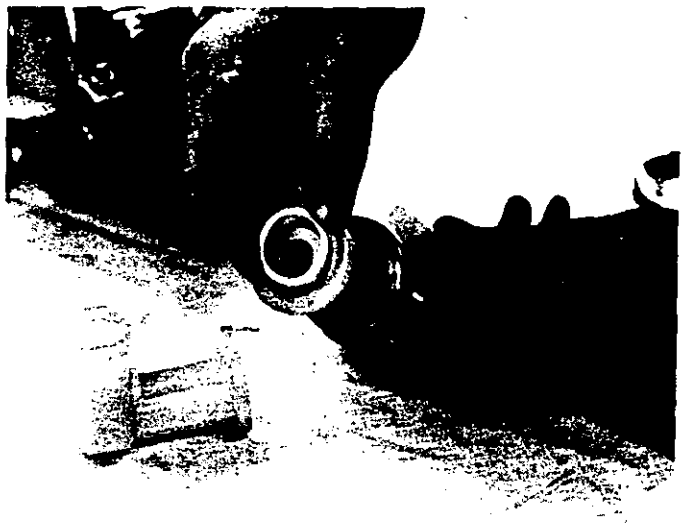

Figure 5A

Step 3.

Normally the inlet or discharge manifold should not be disassembled during pump maintenance or repair. However, if this is necessary, or if the angle of the discharge or inlet opening needs to be changed, the clamp bands should be completely removed and the band itself should be disassembled. Taking the bands apart is necessary to simplify manifold reassembly. Set the manifold and bands aside.

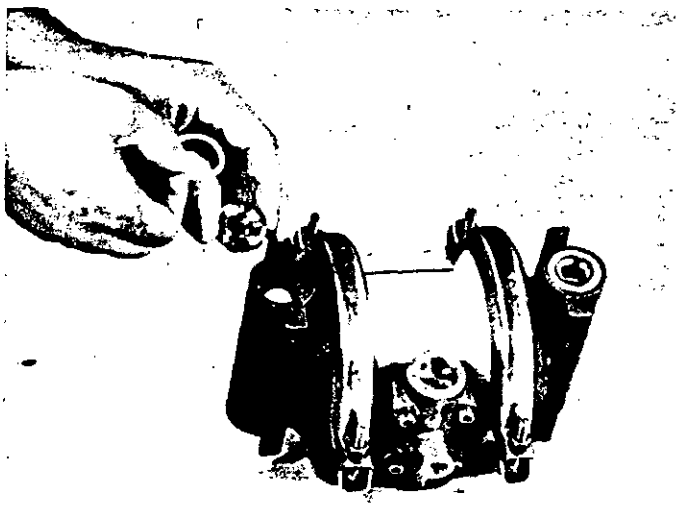

M1 METAL Figure 6A

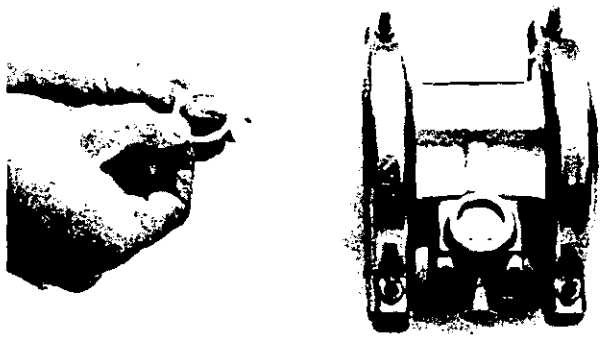

M1 PLASTIC Figure 6B

Step 4.

Turn the pump center section upside down and remove and inspect the inlet valve balls, seats, and sealing O-rings. If damage is apparent, or swelling or cracking of the valve balls is observed, these parts should be replaced upon pump reassembly.

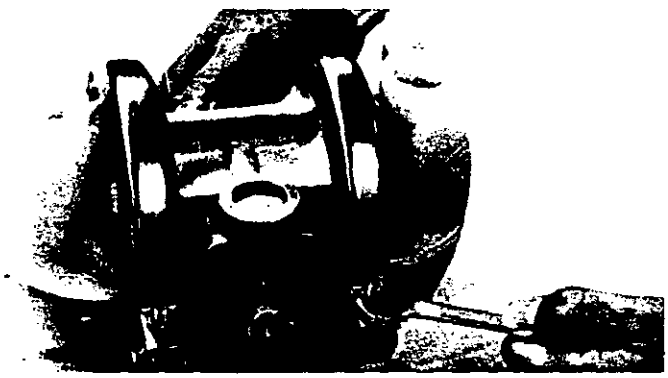

Figure 7

Use a 7/16-inch wrench to remove the clamp bands that hold the liquid chambers to the one-piece center section.

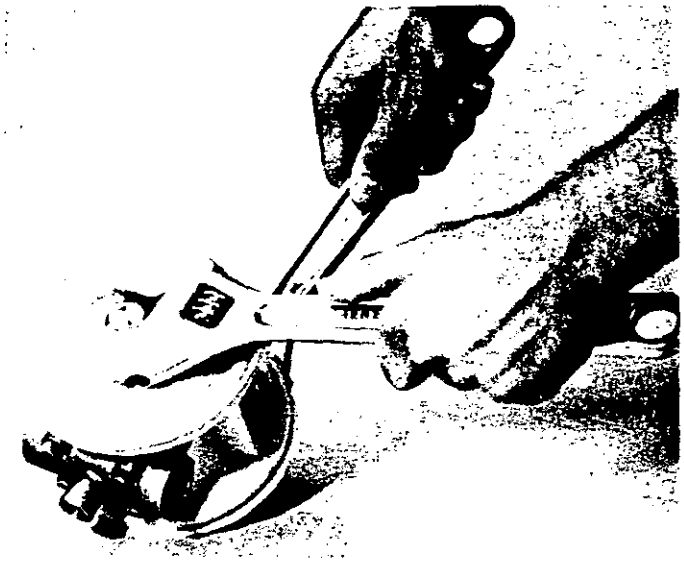

Figure 8A

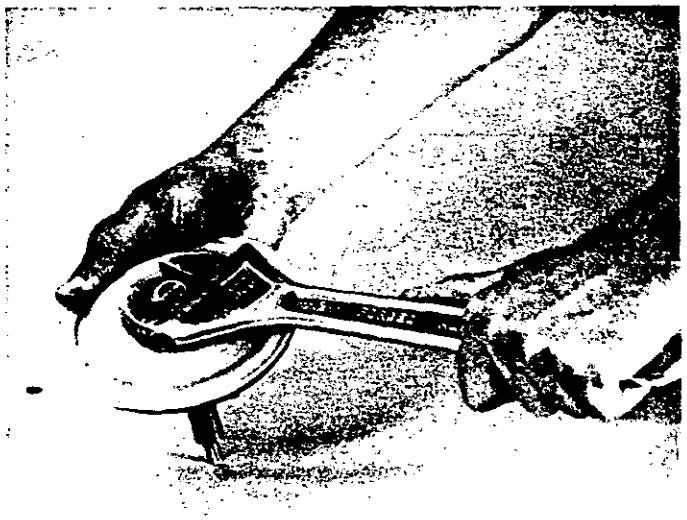

Figure 8B

Step 5.

Use the two adjustable wrenches to loosen the diaphragm piston plate from the connecting shaft. Only one piston plate will loosen. Remove it and the diaphragm. Remove the shaft and attached diaphragm from the center block. To remove the diaphragm from the shaft, hold the outer rim of the diaphragm and loosen the diaphragm piston plate with the adjustable wrench. If the plate will not loosen, the shaft must be placed in a vise. **Protect the shaft from damage by using wood blocks or soft jaws in the vise.** The plate can now be easily removed with the adjustable wrench.

At this point of disassembly, all wetted parts of the pump are available for inspection or repair.

If inspection, and/or servicing, of the non-wetted air section is necessary, please see Section 2.

REASSEMBLY

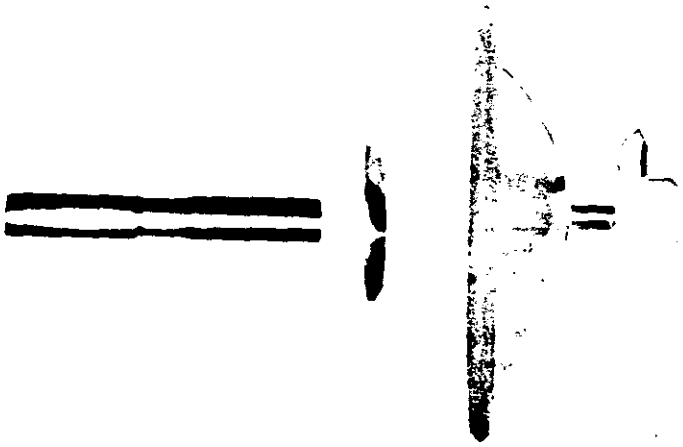

Figure 9A

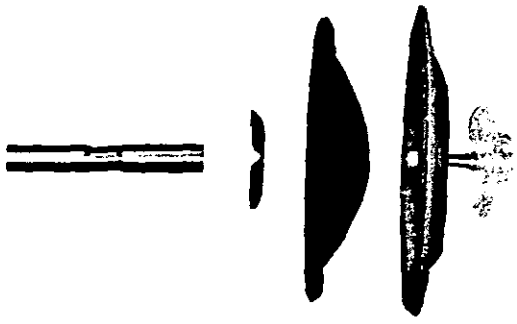

Figure 9B

Step 1.

First, install diaphragm and inner and outer piston on shaft. Observe **this side out** markings on diaphragm. Hand tighten only at this time, the outer piston to the shaft. Note: Pumps equipped with Teflon® diaphragms require that back-up diaphragm (P/N 01-1060-51) be used. See *Figure 9B.* O-rings and/or slipper seals may need to be replaced.

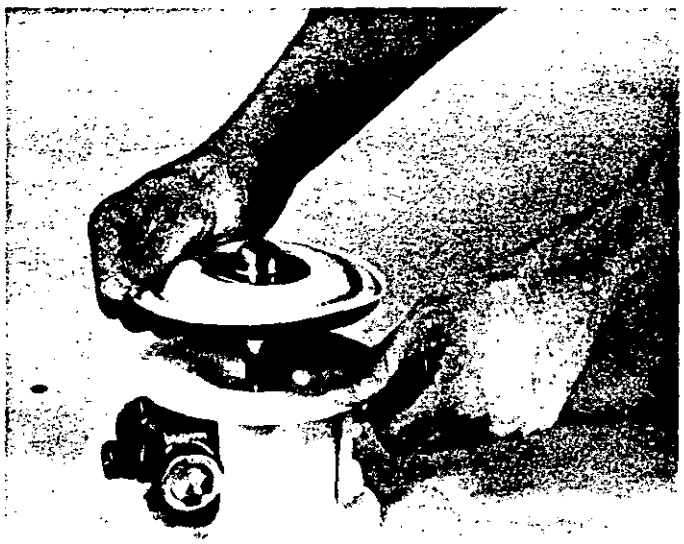

Figure 10A

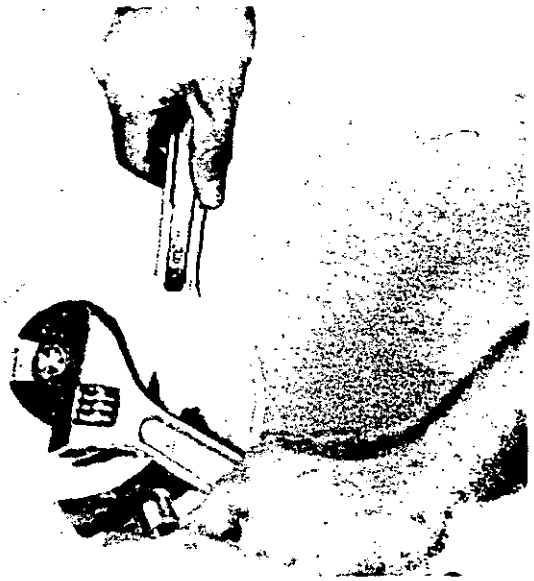

Figure 10B

Step 2.

Insert the shaft through the center block bushing. Install the opposite outer piston, diaphragm(s) and inner piston and tighten to the required torque specifications* (Item #2). **NOTE:** For lubed models, Wilden suggests an oil with arctic characteristics (ISO 15-5 wt.) to lubricate bushing prior to inserting shaft. Lube-free models do not require any lubrication during assembly or while in operation.

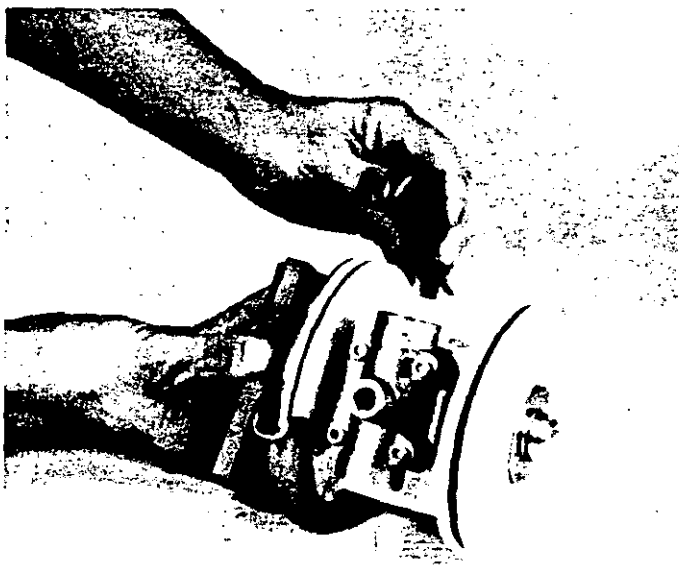

Figure 11A

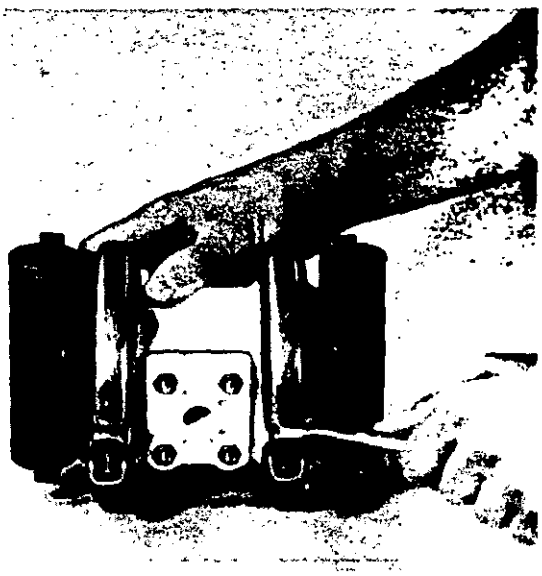

Figure 11B

Step 3.

Rubber/TPE Diaphragms. Locate one diaphragm so that its outer bead gently rests in the groove provided for it in the center section. Place the water chamber on the diaphragm using the alignment marks previously made during disassembly. Install and tighten the clamp band to the required torque specification*.

Install the second water chamber as above. Note: It may be necessary to adjust the diaphragm position slightly so that the bead gently rests in its groove in the center section.

*Refer to Section 8 for the required torque specifications.

Step 3A.

Teflon® Diaphragms. M1 Plastic Pumps fitted with Teflon® diaphragms require the use of a Teflon® gasket kit, P/N 01-9500-99. The Teflon® gasket material in this kit is an expanded type of Teflon® which is very strong but soft. Its use assures a positive seal between the Teflon® diaphragm outer bead and its corresponding groove in the water chamber. This gasket material should be replaced each time the pump is disassembled. No gasket material is needed in the assembly of metal pumps.

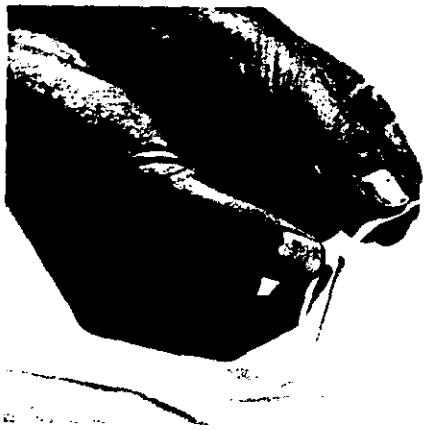

Figure 12A

Select a strip of 1/4" wide material approximately 15 inches in length and carefully remove the covering from the adhesive strip (see *Figure 12A).* Ensure that the adhesive remains attached to the gasket material.

Figure 12B

Starting at any point, place the gasket strip in the center of the diaphragm bead groove on the water chamber and press lightly on the gasket to ensure that the adhesive holds it in place during assembly (see *Figure 12B).*

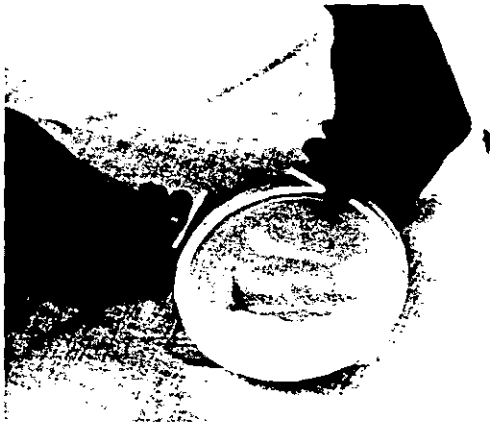

Figure 12C

The ends of the gasket strip should overlap approximately 1/2 inch (see *Figure 12C).*

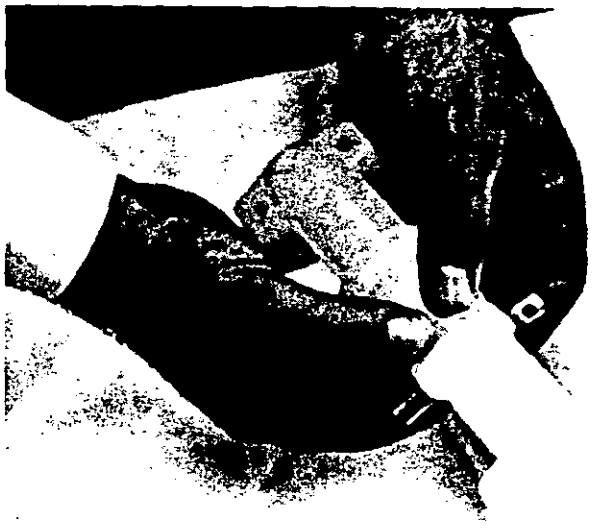

Figure 13A

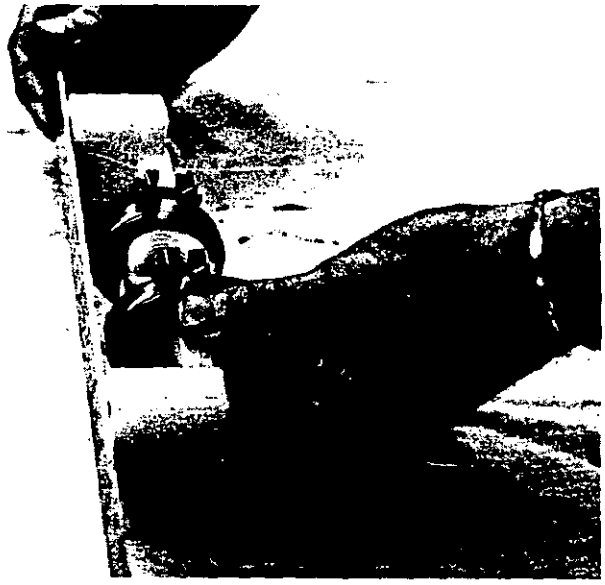

Figure 13B

Step 4.

Manifold Assembly. If the inlet and/or discharge manifold was taken apart, it should be reassembled now. The easiest way to do this is to take one half clamp band and wedge it onto the flanges of the elbow and center T-section. (See *Figure 13A).* This holds the two parts together while the second half band is installed and the bolts are hand-tightened. Attach the other elbow to the center T-section as above. Align the manifold parts as in *Figure 13B,* and tighten the clamps to the required torque specification*. Note: All PVDF and Teflon® pumps fitted with Teflon® elastomers, utilize gasket material around the seat area as well. If sealing is a concern, the gasket material can be used with the polypropylene pumps as well.

*Refer to Section 8 for the required torque specifications.

Step 5.

If the pump is equipped with optional Teflon® diaphragms, valve balls, and sealing rings around the valve seats, new Teflon® gaskets must be installed. The small flange manifold connections of the M1 "Champ" PVDF and Teflon® pumps are sealed with a Teflon® O-ring and a circular gasket. The gaskets are held in place during assembly by two adhesive strips. After installing the valve balls, valve seats and O-rings in the bottom of each water chamber and discharge manifold elbow place a circular gasket in position. No gasket material is needed for metal construction.

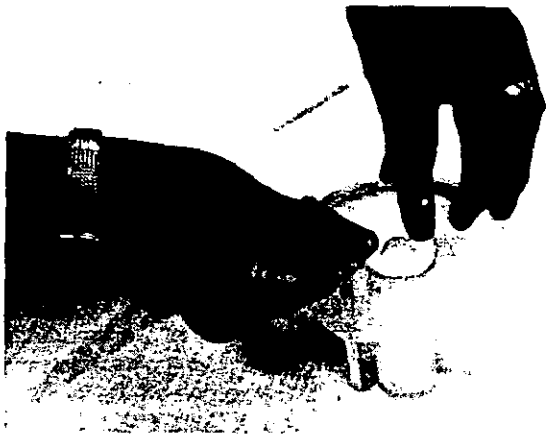

Figure 13B

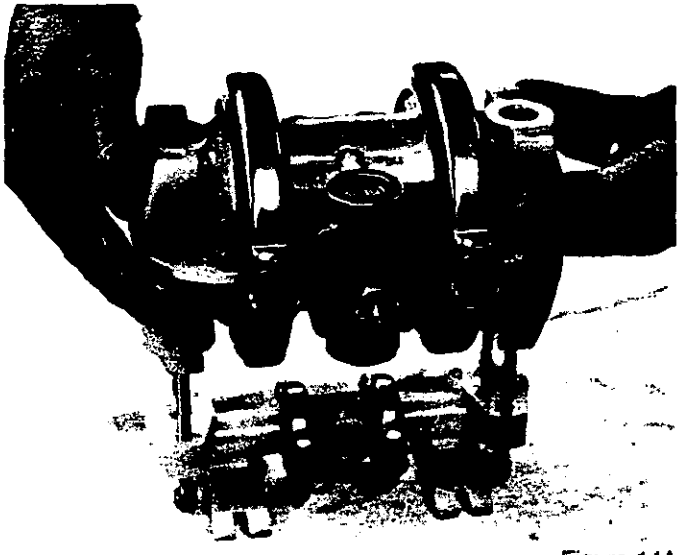

Figure 14A

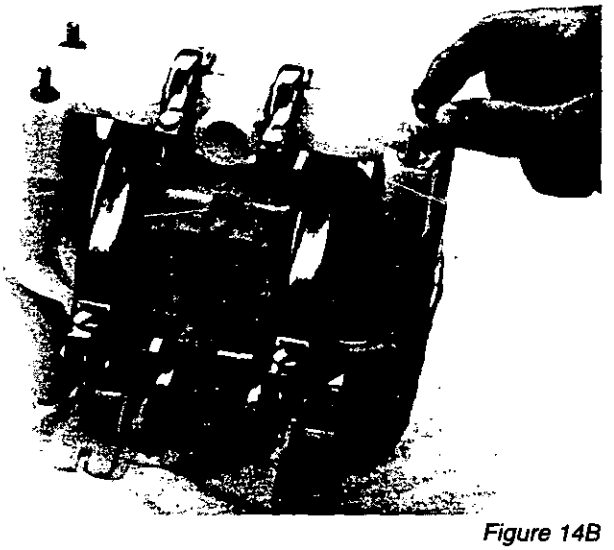

Figure 14B

Step 6.

Make sure the valve balls, valve seats, sealing O-rings, and Teflon® gaskets, if needed, are installed. Install the four long body bolts into the inlet manifold and place the main body of the pump onto the inlet housing. Place the discharge manifold on the center section. Put the washers and nuts on the bolts and tighten to the required torque specification*.

Step 7.

Retighten all clamp bands. When all maintenance and/or repairs are accomplished, an air line should be connected to the pump's air valve and the pump run dry. Be sure to blow out air line for 10 to 20 seconds before reinstalling pump in service. Good suction should be observed at the pump inlet. Approximately 10 inches of vacuum, should be observed with pumps fitted with rubber diaphragms and 7 inches with pumps fitted with Teflon® diaphragms. If pump does not operate or pull sufficient vacuum, refer to trouble-shooting section.

*Refer to Section 8 for the required torque specifications.

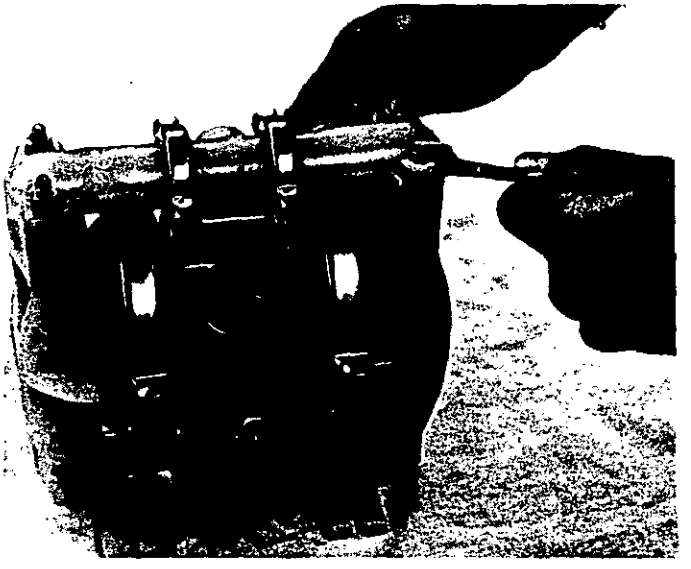

Figure 15B

SECTION 6B

DIRECTIONS FOR DISASSEMBLY/REASSEMBLY
SINGLE-PIECE MANIFOLD PUMPS

CAUTION: Before any maintenance or repair is attempted, the compressed air line to the pump should be disconnected and all air pressure allowed to bleed from pump. Disconnect all intake, discharge, and air lines. Drain the pump by turning it upside down and allowing any fluid to flow into a suitable container.

The Wilden® single-piece manifold pump models are air-operated, double-diaphragm pumps with all wetted parts molded in Teflon® PFA and carbon-filled acetal. The single-piece center section, consisting of center block and air chambers, is molded from glass-filled Polypropylene on UP models and carbon-filled acetal on conductive models. All fasteners and hardware are stainless steel. The primary diaphragm is constructed of Teflon® PTFE. All wetted sealing O-rings are Teflon® encapsulated Viton on the UPII, carbon-filled acetal, and Chemraz® on the UPIII. The standard air distribution system is used on UPII. The UPIII and carbon-filled Acetal air distribution system is made solely of plastic composites and is lube-free. All O-rings used in the pump are of a special material, and should only be replaced with Wilden factory-supplied parts.

Tools required to perform maintenance on the Model M1 pump are: 3/16-inch, 5/16-inch and 9/64-inch Allen wrench, 7/16-inch wrench, two open end adjustable wrenches, and an O-ring pick.

PLEASE read all directions before starting disassembly.

DISASSEMBLY

Step 1.

Before actual disassembly is started, turn pump upside down and drain all liquid trapped in the pump into a suitable container. Be sure to use proper caution if liquid is corrosive or toxic. Mark each liquid chamber to its respective air chamber for easy alignment during reassembly.

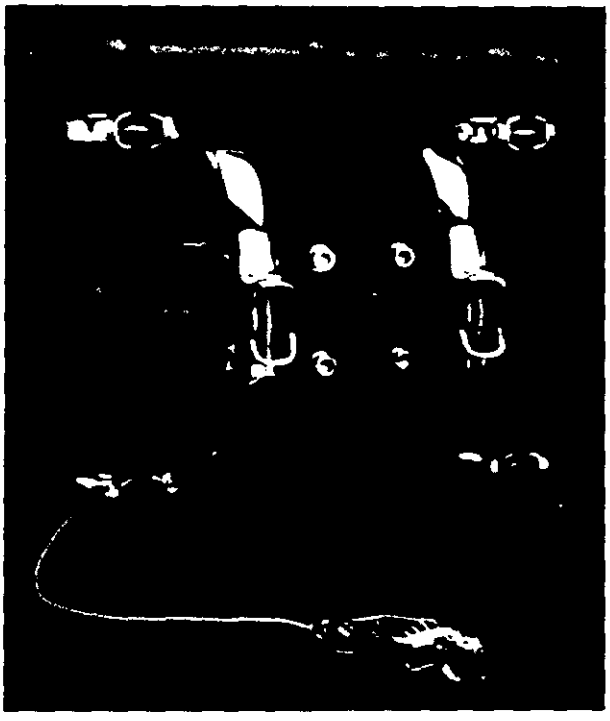

M1 Carbon-filled Acetal

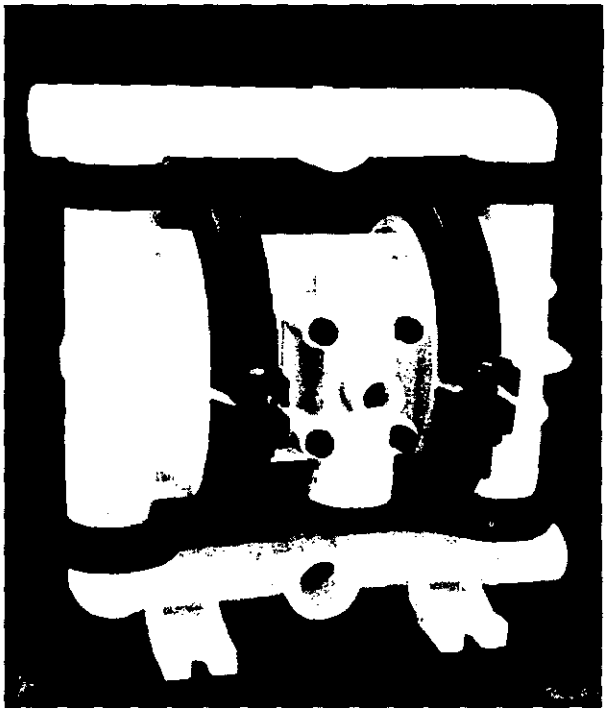

M1 UPIII Teflon® PFA Construction

NOTE: The UPIII pump is photographed for the assembly instructions. The carbon-filled acetal instructions are the same unless noted.

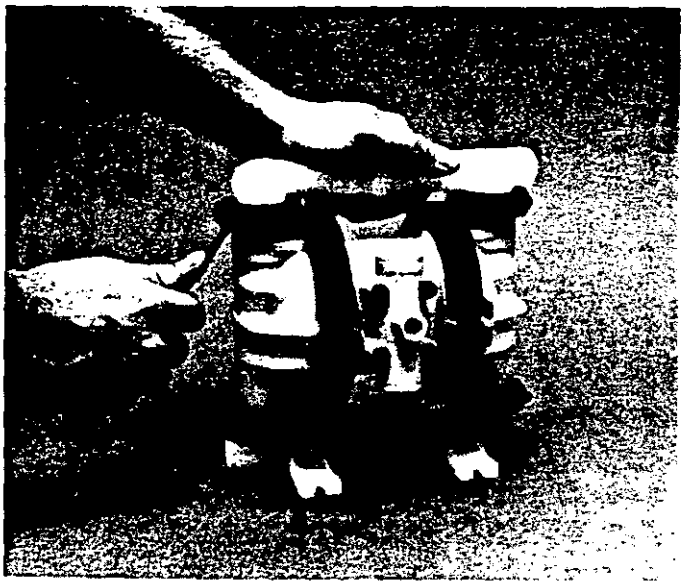

Figure 2

Step 1.

Using an appropriate sized Allen wrench, remove clamp bands that hold the discharge manifold to the water chambers.

NOTE: Carbon-filled acetal pumps are shipped with a grounding strap. The strap is attached to the manifold clamp band bolt. This strap must be attached via the clip to a proper grounding point.

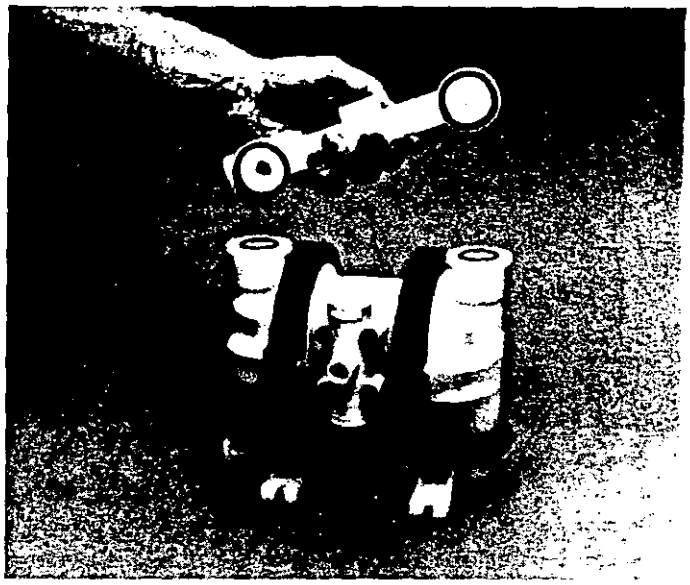

Figure 3

Step 2.

Remove discharge manifold. It is now possible to inspect the outboard O-rings.

NOTE: The carbon-filled acetal pump has a removable end plug. Teflon® tape must be used to assure a proper seal. End plug placement will vary depending upon installation logistics.

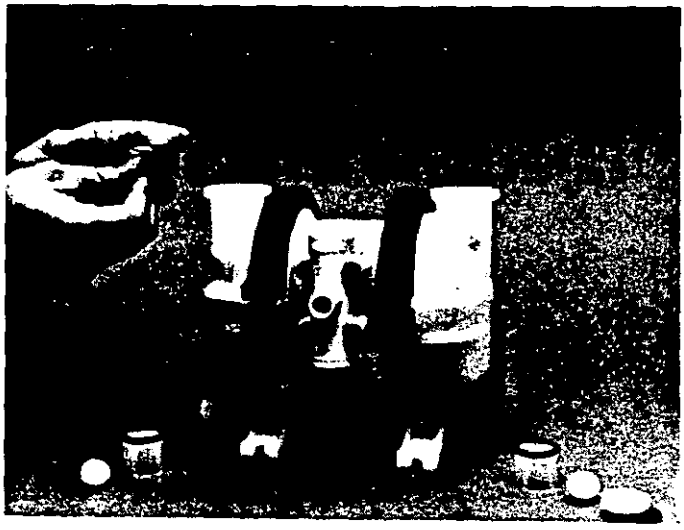

Figure 4

Step 3.

Remove the O-ring, ball cage and ball valve from the water chamber. It is now possible to inspect these parts (see *Figure 4*). Using the O-ring pick, remove the seat and seat O-ring from the water chamber for further inspection. If swelling, cracking or other damage is apparent, these parts must be replaced.

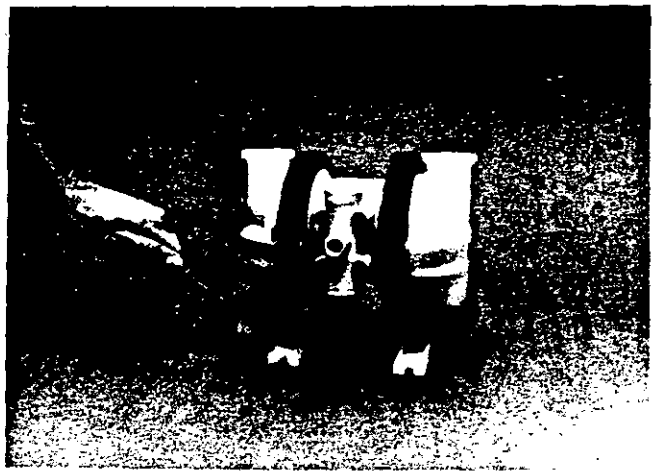

Figure 5

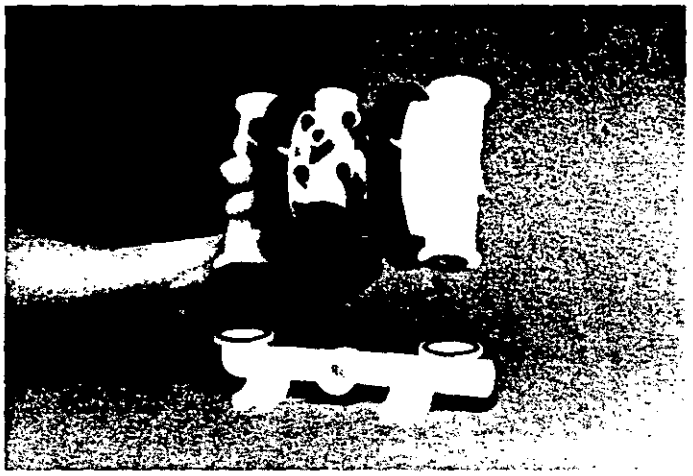

Figure 6

Step 4.

Loosen and remove clamp bands from around the inlet manifold (see *Figure 5).* Lift center section off of the inlet manifold (see *Figure 6).* It is now possible to inspect the outboard O-rings on the inlet manifold.

Step 5.

Place center section upside-down on a flat surface. Remove the O-ring, seat and valve ball from the bottom of the water chamber. It is now possible to inspect these parts. If swelling, cracking or other damage is apparent these parts must be replaced (see *Figure 7).*

Figure 7

Figure 8

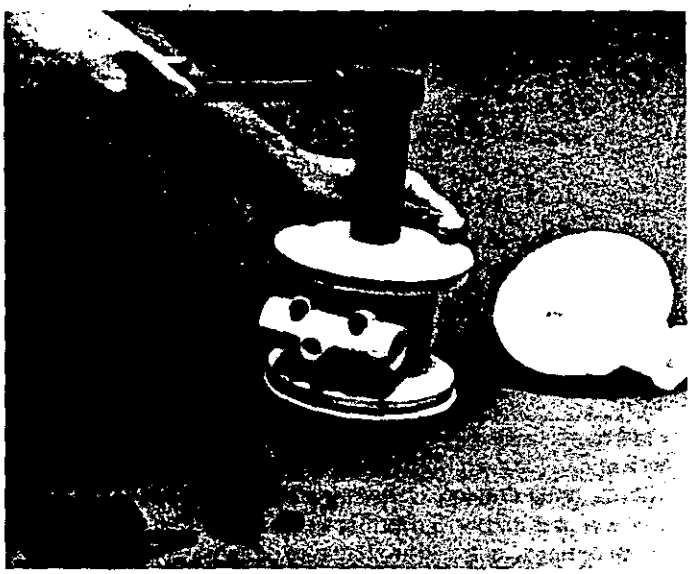

Figure 9

Step 6.

Loosen and remove clamp bands from around the water chambers (see *Figure 8).* This allows for inspection of the primary and containment diaphragms. Use the six point box wrench to loosen the diaphragm outer piston plate from the connecting shaft.

Figure 10

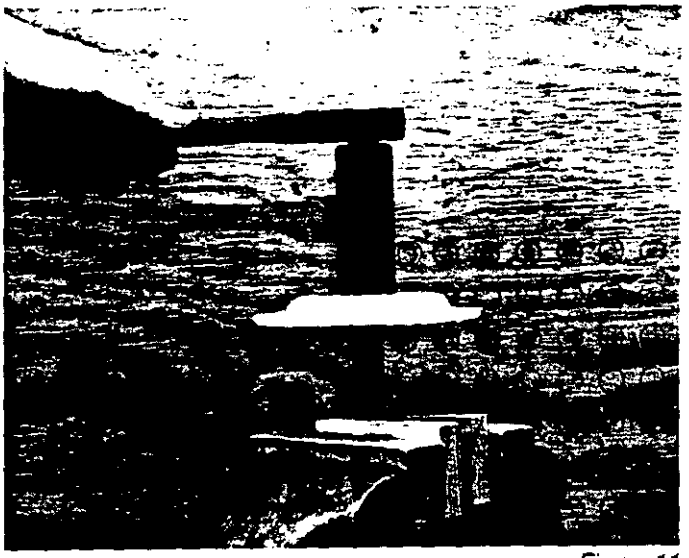

Figure 11

Step 7.

Only one piston plate will loosen in Step 6. Remove it and the diaphragms. Remove the shaft and attached diaphragms from the center block. To remove the diaphragms from the shaft, hold the outer rim of the diaphragm and loosen the diaphragm piston plate with the box wrench. If the plate will not loosen, the shaft must be placed in a vise. **Protect the shaft from damage by using wood blocks or soft jaws in the vise.** The plate can now be easily removed with the box wrench.

At this point of disassembly, all wetted parts of the pump are available for inspection or repair.

If inspection and/or servicing of the non-wetted air section is necessary, please see Section 6C and 6D.

REASSEMBLY

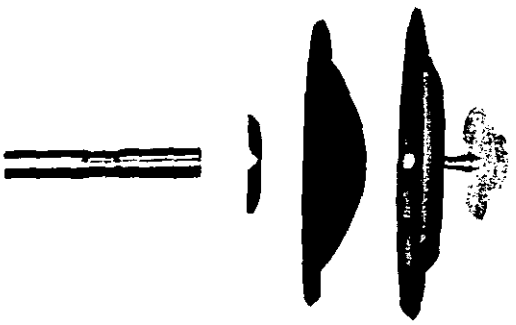

Figure 12A

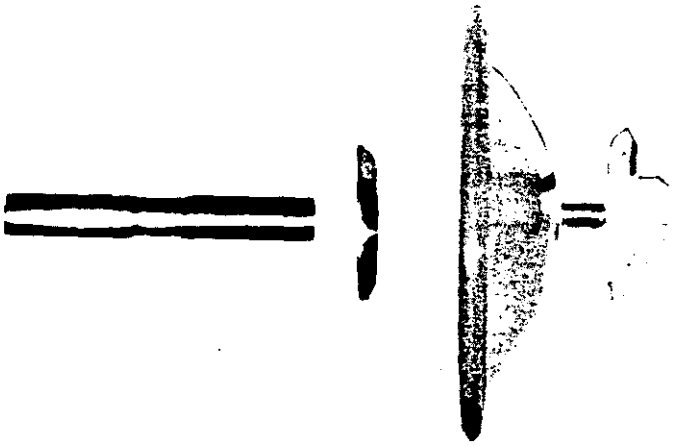

Figure 12B

Step 1.

Insert the outer piston stud through the Teflon® diaphragm, containment diaphragm and inner piston. Hand-tighten this assembly onto the shaft. The back-up diaphragm is utilized for sealing purposes. It is installed between the containment diaphragm and bead area of the center section. (See *Figure 12A).* Note: Rubber/TPE fitted carbon-filled acetal models do not have back-up diaphragm. (See *Figure 12B).*

Step 2.

Insert the shaft through the center section bushing. Install the opposite back-up O-ring, inner piston, diaphragms, and outer piston and tighten to the required torque specifications*. (See *Figure 13.)*

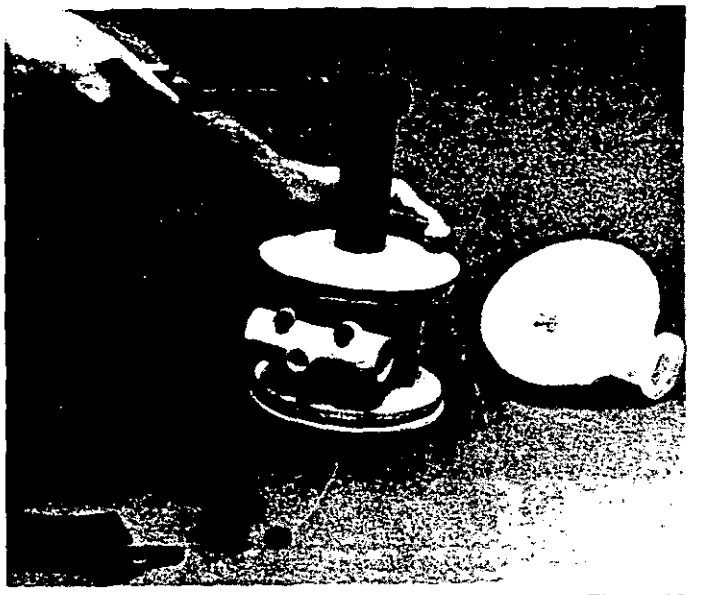

Figure 13

*Refer to Section 8 for the required torque specifications.

Step 3.

Teflon® Diaphragms. M1 pumps fitted with Teflon® diaphragms require the use of a Teflon® gasket kit, P/N 01-9500-99. The Teflon® gasket material in this kit is an expanded type of Teflon® which is very strong but soft. Its use assures a positive seal between the Teflon® diaphragm outer bead and its corresponding groove in the water chamber. This gasket material should be replaced each time the pump is disassembled.

Figure 14

Select a strip of 1/4" wide material approximately 15 inches in length and carefully remove the covering from the adhesive strip (see *Figure 14).* Ensure that the adhesive remains attached to the gasket material.

Figure 15

Starting at any point, place the gasket strip in the center of the diaphragm bead groove on the water chamber and press lightly on the gasket to ensure that the adhesive holds it in place during assembly (see *Figure 15).*

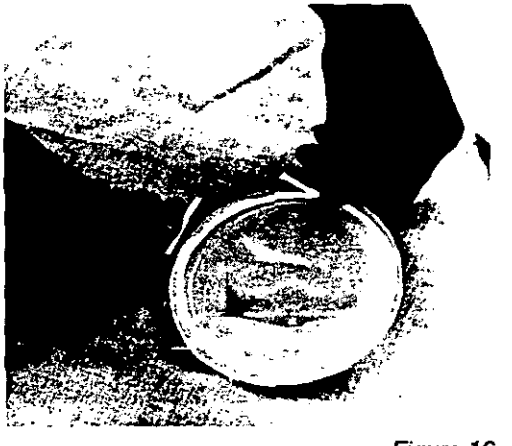

Figure 16

The ends of the gasket strip should overlap approximately 1/2 inch (see *Figure 16).*

Figure 17

Figure 18

Step 4.

Attach water chambers to the center block making certain to realign your marks (see *Figure 17).* Replace large clamp bands and tighten to the required torque specification*.

Step 5.

With center section upside-down, insert valve balls, seat and O-rings into the bottom of the water chambers. Install outboard O-rings in inlet manifold. Realign the inlet manifold (see *Figure 18)* and attach clamp bands. Tighten to the required torque specification*. The inlet should be facing the same direction as the air valve.

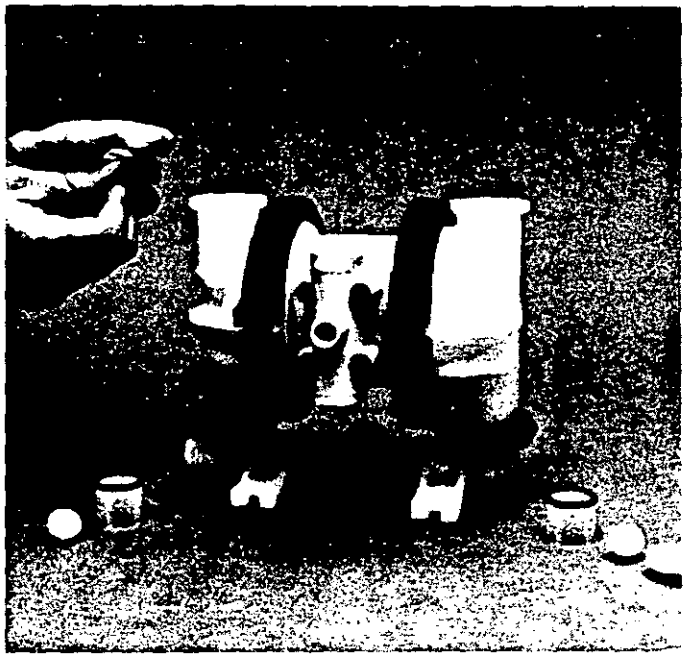

Figure 19

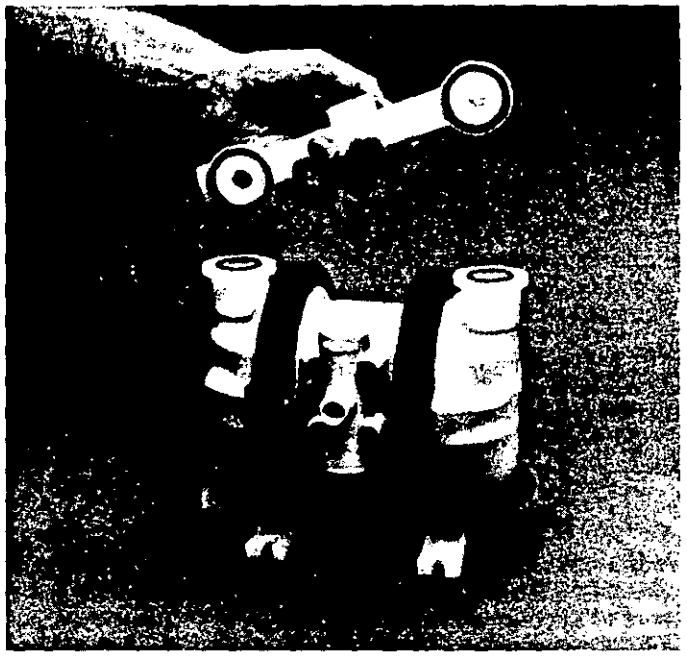

Figure 20

Step 6.

Turn the pump right-side-up. Insert the seat with O-ring installed in bottom groove, ball valve, ball cage and O-ring in the top of the water chamber. Install outboard Chemraz® O-rings in discharge manifold. Realign the discharge manifold with the discharge facing toward the air valve. Attach clamp bands (see *Figure 20).* Tighten to the required torque specification*.

*Refer to Section 8 for the required torque specifications.

SECTION 6C

LUBED PUMPS
AIR VALVE / CENTER SECTION REPAIR / MAINTENANCE

The center section assembly consists of both the air valve body and piston and the center section. The unique design of the air valve relies only on differential pressure to cause the air valve to shfit. It is reliable and simple to maintain. The bushing in the center block, along with the diaphragm shaft, provides the signal to tell the air valve to shift. The following procedure will ensure that the air valve on your Wilden pump will provide long trouble-free service.

AIR VALVE BODY AND PISTON ASSEMBLY AND DISASSEMBLY

The air valve body and piston (P/N 01-2000-07) can be disconnected from the pump by removing the four socket-head cap screws which attach it to the center section. The piston in the air valve is aluminum with a dark gray anodized coating. The piston should move freely and the ports in the piston should line up with the ports on the face of the air valve body. The piston should also appear to be a dull, dark gray color. If the piston appears to be a shiny aluminum color, the air valve is probably worn beyond working tolerances and should be replaced.

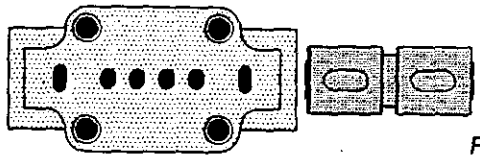

Figure A

If the piston does not move freely in the air valve, the entire air valve should be immersed in a cleaning solution. (NOTE: Do not force the piston by inserting a metal object.) This soaking should remove any accumulation of sludge and grit which is preventing the air valve piston from moving freely. If the air valve piston does not move freely after the above cleaning, the air valve should be disassembled as follows: Remove the snap ring from the top end of the air valve cylinder and apply an air jet to the 1/8-inch hole on the opposite end of the air valve face. **[CAUTION:** The air valve end cap (P/N 01-2330-23 may come out with considerable force. Hand protection such as a padded glove or a rag should be used to capture the end cap.] Inspect the piston and cylinder bore for nicks and scoring.

Inspect the air valve side of the center section for flatness and to insure no nicks or other damage exists that would prevent the air valve from sealing when installed. Inspect the two channels and their ports to make sure they are clean and the ports are open to the bushing. The air valve will not shift if these ports are plugged or an O-ring is in the wrong groove of the center section closing off a port. Inspect the air valve gasket and muffler plate gasket and replace if damaged. **Attach the air valve to the center section and tighten to the required torque specifications*.**

O-RING REPLACEMENT/ CENTER SECTION

The pump's center section consists of a molded housing with a bronze bushing. (Bushing is not removable.) This bushing has grooves cut into the inside diameter. O-rings are installed in these grooves. When the O-rings become worn or flat, they will no longer seal and must be replaced. This is most easily accomplished by using a tool called an O-ring pick, available through most industrial supply companies.

There are two versions of center sections: PRE-ENHANCED and ENHANCED. An encircled letter "E" stamped on the top of the center section denotes the ENHANCED type center section *(Figure C)*.

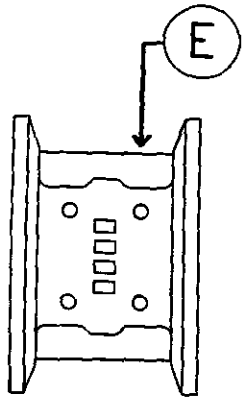

Figure C

If the encircled "E" is not present, a pre-enhanced shaft (01-3800-09) must be utilized. An enhanced (non-dented) shaft will not function correctly in the pre-enhanced center section. The center section O-rings (01-3200-52) must be installed in the appropriate grooves as shown (1, 3, 4, 6).

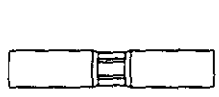

PRE-ENHANCED SHAFT

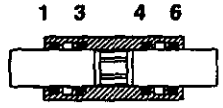

PRE-ENHANCED CONFIGURATION

If the encircled "E" is present, an enhanced (01-3800-09-07) shaft should be utilized to maximize performance. The center section O-rings (01-3200-52) must be installed in the appropriate grooves as shown (1, 3, 6, 8).

ENHANCED SHAFT

ENHANCED CONFIGURATION

*Refer to Section 8 for the required torque specifications.

SECTION 6D

LUBE-FREE PUMPS
AIR VALVE / CENTER SECTION REPAIR / MAINTENANCE

AIR VALVE/CENTER SECTION REPAIR/MAINTENANCE

The center section assembly consists of both the air valve body and piston, and the center section. The lube-free design utilizes high-tech, engineered thermoplastics in place of the brass air valve, aluminum piston, and bronze bushing. This new system also includes slipper seals to reduce the coefficient of friction between the shaft and center section. This lube-free design includes the straight shaft and altered exhaust port configuration utilized in the enhanced M1 air distribution system. Low start-up pressure, on/off reliability, and increased sealing in a dead-head condition are a few of the advantages of the lube-free air distribution system. The selected thermoplastics have the ability to function together without lubrication making the M1 Wilden pump truly lube-free. ***The M1 lube-free pumps are not pre-lubed with oil or grease.***

AIR VALVE BODY AND PISTON ASSEMBLY AND DISASSEMBLY

The air valve body and piston (P/N 01-2000-65-200) is externally serviceable by removing the four socket-head cap screws which attach it to the center section. The lube-free air valve body is off-white in color and has an encircled "LF" molded into the exterior. The thermoplastic air valve piston is gray color like the aluminum lubed style, but is differentiated by a "D-shaped hole" in the top of the piston, and two small holes in the annular groove. (See *Figure B.*)

The piston should move freely and the ports in the piston must line-up with the ports on the face of the air valve body (see *Figure B).* If the piston does not move freely in the valve body, the entire air valve assembly should be immersed in a mild soap solution to remove any accumulation of sludge and/or grit. If the air valve does not move freely after the above cleaning, the air valve should be disassembled as follows: Remove the snap ring from the top of the air valve cylinder and apply an air jet to the 1/8" hole on the opposite end of the air valve face. Caution: The end cap may come out with considerable force. Verify that the guide pin molded into one of the end caps (P/N 01-2300-23-200) is straight and smooth to allow the piston to shift properly. Inspect the piston and cylinder bore for nicks and scoring. Small nicks can be dressed with fine sandpaper and the piston returned to service. Clean and reassemble. **Install air valve to center section and tighten to the required torque specifications*.**

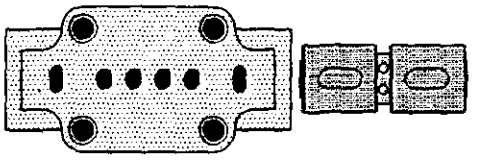

Figure B

O-RING REPLACEMENT/CENTER SECTION

The M1 lube-free Champ series pumps are constructed with a glass-filled polypropylene center section with a thermoplastic bushing. The M1 lube-free Metal pumps are constructed with a nylon center section with a thermoplastic bushing. These center sections are easily distinguished by the encircled letter "LF" stamped on the top of the center section. These bushings are not removable. This bushing has grooves cut into the inside diameter where back-up O-rings and slipper seals are installed. It is important that the correct O-ring is utilized. The back-up O-ring for the lube-free model has a bigger diameter and smaller cross-section in comparison to the "Lubed" model. The straight shaft (P/N 01-3800-09-07) must be utilized in the lube-free pump.

The back-up O-ring is installed first. This is most easily accomplished by using a tool called an O-ring pick, available through most industrial supply companies. The O-rings must be installed in the appropriate grooves as shown in *Figure C* (1, 3, 6, 8). Upon completion of the O-ring installation, the slipper seals (P/N 01-3210-55-200) must be installed in the same grooves (1, 3, 6, 8). This task is accomplished by utilizing long nose pliers and a flat head screw driver. Please see *Figures D, E,* and *F.*

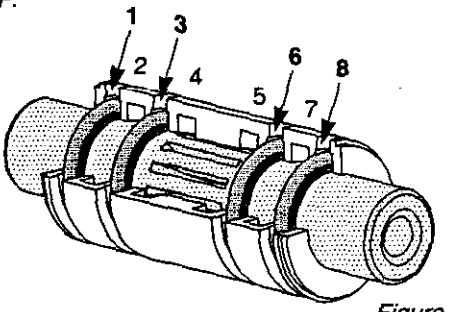

Figure C

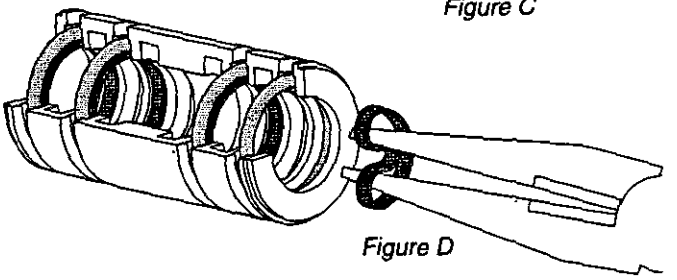

Figure D

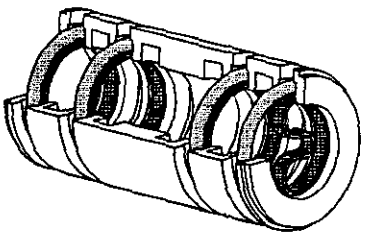

Figure E

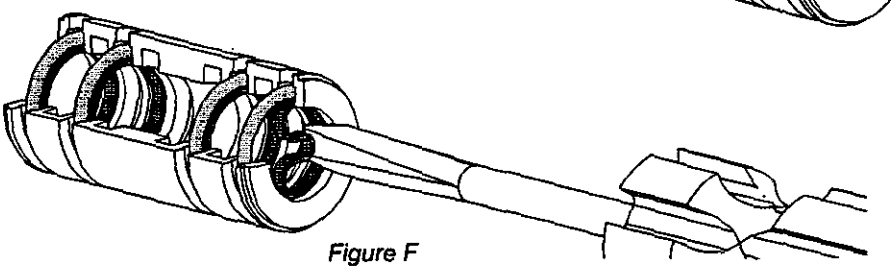

Figure F

M1
METAL
AIR-OPERATED

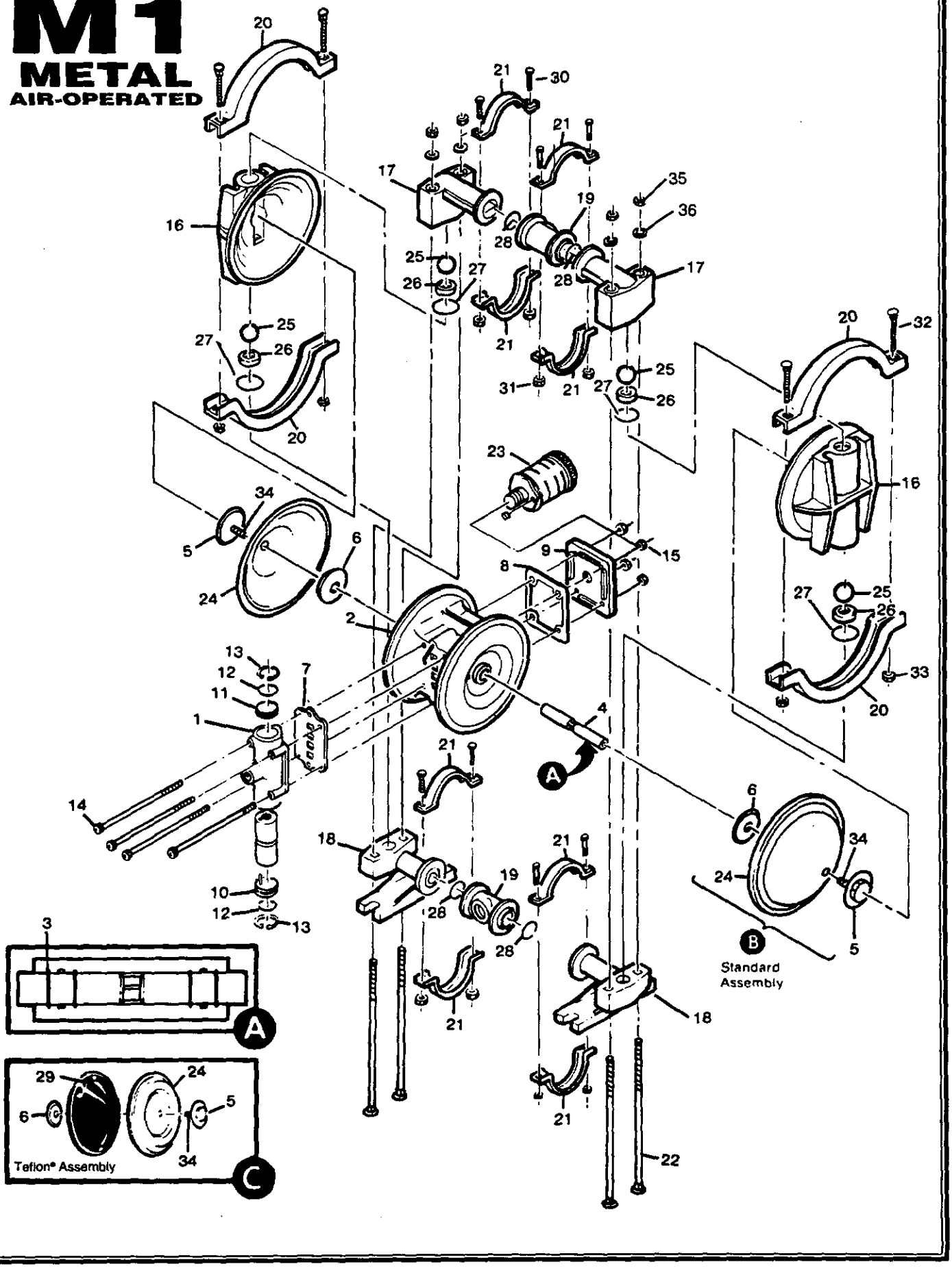

MODEL M1 METAL

Item	Part Description	Qty. Per Pump	Rubber-Fitted M1/ AYYB P/N	Rubber-Fitted M1/ SYYB P/N	Teflon®-Fitted M1/ AYYB P/N	Teflon®-Fitted M1/ SYYB P/N	Food Processing M1-70/ SYYN Saniflex™ P/N	Food Processing M1-70 SYYN Teflon® P/N
1	Air Valve Assembly[1]	1	01-2000-07	01-2000-07	01-2000-07	01-2000-07	01-2000-06	01-2000-06
2	Center Section[2]	1	01-3152-23[2]	01-3152-23[2]	01-3152-23[2]	01-3152-23[2]	01-3152-23[2]	01-3152-23[2]
3	Center Block O-Ring	4	01-3200-52	01-3200-52	01-3200-52	01-3200-52	01-3200-52	01-3200-52
4	Shaft[2]	1	01-3800-09-07[2]	01-3800-09-07[2]	01-3800-09-07[2]	01-3800-09-07[2]	01-3800-09-07[2]	01-3800-09-07[2]
5	Pistons/Outer	2	01-4570-01	01-4570-03	01-4570-01	01-4570-03	01-4570-03	01-4570-03
6	Pistons/Inner	2	01-3710-01	01-3710-01	01-3710-01	01-3710-01	01-3710-01	01-3710-01
7	Air Valve Gasket	1	01-2600-52	01-2600-52	01-2600-52	01-2600-52	01-2600-52	01-2600-52
8	Muffler Plate Gasket	1	01-3500-52	01-3500-52	01-3500-52	01-3500-52	01-3500-52	01-3500-52
9	Muffler Plate	1	01-3180-23	01-3180-23	01-3180-23	01-3180-23	01-3180-23	01-3180-23
10	End Cap w/Guide	1	01-2300-23	01-2300-23	01-2300-23	01-2300-23	01-2300-23	01-2300-23
11	End Cap w/o Guide	1	01-2330-23	01-2330-23	01-2330-23	01-2330-23	01-2330-23	01-2330-23
12	Buna O-Ring - 115 70 Shore	2	01-2390-52	01-2390-52	01-2390-52	01-2390-52	01-2390-52	01-2390-52
13	End Cap Snap Ring	2	01-2650-03	01-2650-03	01-2650-03	01-2650-03	01-2650-03	01-2650-03
14	Air Valve Cap Screw	4	01-6000-03	01-6000-03	01-6000-03	01-6000-03	01-6000-03	01-6000-03
15	Air Valve Cap Screw Nut	4	04-6400-03	04-6400-03	04-6400-03	04-6400-03	04-6400-03	04-6400-03
16	Water Chamber	2	01-5000-01	01-5000-03	01-5000-01	01-5000-03	01-5000-03	01-5000-03
17	Discharge Manifold Elbow	2	01-5230-01	01-5230-03	01-5230-01	01-5230-03	01-5230-03	01-5230-03
18	Inlet Manifold Elbow	2	01-5220-01	01-5220-03	01-5220-01	01-5220-03	01-5220-03	01-5220-03
19	Manifold "T" Section	2	01-5160-01	01-5160-03	01-5160-01	01-5160-03	01-5160-03-70	01-5160-03-70
20	Clamp Band (Large)	2	01-7300-03	01-7300-03	01-7300-03	01-7300-03	01-7300-03	01-7300-03
21	Clamp Band (Small)	4	01-7100-03	01-7100-03	01-7100-03	01-7100-03	01-7100-03	01-7100-03
22	Vertical Bolt	4	01-6080-03	01-6080-03	01-6080-03	01-6080-03	01-6080-03	01-6080-03
23	Muffler	1	01-3510-99	01-3510-99	01-3510-99	01-3510-99	01-3510-99	01-3510-99
24	Diaphragm	2	*	*	01-1010-55	01-1010-55	01-1010-56	01-1010-55
25	Valve Ball	4	*	*	01-1080-55	01-1080-55	01-1080-56	01-1080-55
26	Valve Seat	4	01-1120-01	01-1120-03	01-1120-01	01-1120-03	01-1120-03	01-1120-03
27	Valve Seat O-Ring	4	*	*	01-1200-55	01-1200-55	01-1200-56	01-1200-55
28	Manifold O-Ring	4	*	*	01-1300-55	01-1300-55	01-1300-56	01-1300-55
29	Back-up Diaphragm	2	N/R	N/R	01-1060-51	01-1060-51	N/R	01-1060-51
30	Small Clamp Band Bolt	8	01-6100-03	01-6100-03	01-6100-03	01-6100-03	01-6100-03	01-6100-03
31	Small Clamp Band Nut	8	01-6400-03	01-6400-03	01-6400-03	01-6400-03	01-6400-03	01-6400-03
32	Large Clamp Band Bolt	4	01-6070-03	01-6070-03	01-6070-03	01-6070-03	01-6070-03	01-6070-03
33	Large Clamp Band Nut	4	04-6400-03	04-6400-03	04-6400-03	04-6400-03	04-6650-03-70	04-6650-03-70
34	Shaft Stud	2	01-6150-08	01-6150-08	01-6150-08	01-6150-08	01-6150-08	01-6150-08
35	Vertical Bolt Nut	4	04-6400-03	04-6400-03	04-6400-03	04-6400-03	04-6400-03	04-6400-03
36	Vertical Bolt Washer	4	01-6730-03	01-6730-03	01-6730-03	01-6730-03	01-6730-03	01-6730-03

LUBE-FREE MODEL M1 METAL

Item	Part Description	Qty. Per Pump	Rubber-Fitted M1/ AYYZ LF P/N	Rubber-Fitted M1/ SYYZ LF P/N	Teflon®-Fitted M1/ AYYZ LF P/N	Teflon®-Fitted M1/ SYYZ LF P/N	Food Processing M1-73/ SYYZ LF-Saniflex™ P/N	Food Processing M1-73/ SYYZ LF-Teflon® P/N
1	Air Valve Assembly — Lube-Free[1]	1	01-2000-65-200	01-2000-65-200	01-2000-65-200	01-2000-65-200	01-2000-65-200	01-2000-65-200
2	Nylon Center Section — Lube-Free[2]	1	01-3150-23-200	01-3150-23-200	01-3150-23-200	01-3150-23-200	01-3150-23-200	01-3150-23-200
3	Buna O-Ring - 115 70 Shore	4	01-2390-52	01-2390-52	01-2390-52	01-2390-52	01-2390-52	01-2390-52
	Slipper Seal (Not shown)	4	01-3210-55-200	01-3210-55-200	01-3210-55-200	01-3210-55-200	01-3210-55-200	01-3210-55-200
4	Shaft[2]	1	01-3800-09-07[2]	01-3800-09-07[2]	01-3800-09-07[2]	01-3800-09-07[2]	01-3800-09-07[2]	01-3800-09-07[2]
5	Pistons/Outer	2	01-4570-01	01-4570-03	01-4570-01	01-4570-03	01-4570-03	01-4570-03
6	Pistons/Inner	2	01-3710-01	01-3710-01	01-3710-01	01-3710-01	01-3710-01	01-3710-01
7	Air Valve Gasket	1	01-2600-52	01-2600-52	01-2600-52	01-2600-52	01-2600-52	01-2600-52
8	Muffler Plate Gasket	1	01-3500-52	01-3500-52	01-3500-52	01-3500-52	01-3500-52	01-3500-52
9	Muffler Plate	1	01-3180-23	01-3180-23	01-3180-23	01-3180-23	01-3180-23	01-3180-23
10	End Cap w/Plastic Guide	1	01-2300-23-200	01-2300-23-200	01-2300-23-200	01-2300-23-200	01-2300-23-200	01-2300-23-200
11	End Cap w/o Guide	1	01-2330-23	01-2330-23	01-2330-23	01-2330-23	01-2330-23	01-2330-23
12	Buna O-Ring - 115 70 Shore	2	01-2390-52	01-2390-52	01-2390-52	01-2390-52	01-2390-52	01-2390-52
13	End Cap Snap Ring	2	01-2650-03	01-2650-03	01-2650-03	01-2650-03	01-2650-03	01-2650-03
14	Air Valve Cap Screw	4	01-6000-03	01-6000-03	01-6000-03	01-6000-03	01-6000-03	01-6000-03
15	Air Valve Cap Screw Nut	4	04-6400-03	04-6400-03	04-6400-03	04-6400-03	04-6400-03	04-6400-03
16	Water Chamber	2	01-5000-01	01-5000-03	01-5000-01	01-5000-03	01-5000-03	01-5000-03
17	Discharge Manifold Elbow	2	01-5230-01	01-5230-03	01-5230-01	01-5230-03	01-5230-03	01-5230-03
18	Inlet Manifold Elbow	2	01-5220-01	01-5220-03	01-5220-01	01-5220-03	01-5220-03	01-5220-03
19	Manifold "T" Section	2	01-5160-01	01-5160-03	01-5160-01	01-5160-03	01-5160-03-70	01-5160-03-70
20	Clamp Band (Large)	2	01-7300-03	01-7300-03	01-7300-03	01-7300-03	01-7300-03	01-7300-03
21	Clamp Band (Small)	4	01-7100-03	01-7100-03	01-7100-03	01-7100-03	01-7100-03	01-7100-03
22	Vertical Bolt	4	01-6080-03	01-6080-03	01-6080-03	01-6080-03	01-6080-03	01-6080-03
23	Muffler	1	01-3510-99	01-3510-99	01-3510-99	01-3510-99	01-3510-99	01-3510-99
24	Diaphragm	2	*	*	01-1010-55	01-1010-55	01-1010-56	01-1010-55
25	Valve Ball	4	*	*	01-1080-55	01-1080-55	01-1080-56	01-1080-55
26	Valve Seat	4	01-1120-01	01-1120-03	01-1120-01	01-1120-03	01-1120-03	01-1120-03
27	Valve Seat O-Ring	4	*	*	01-1200-55	01-1200-55	01-1200-56	01-1200-55
28	Manifold O-Ring	4	*	*	01-1300-55	01-1300-55	01-1300-56	01-1300-55
29	Back-up Diaphragm	2	N/R	N/R	01-1060-51	01-1060-51	N/R	01-1060-51
30	Small Clamp Band Bolt	8	01-6100-03	01-6100-03	01-6100-03	01-6100-03	01-6100-03	01-6100-03
31	Small Clamp Band Nut	8	01-6400-03	01-6400-03	01-6400-03	01-6400-03	01-6400-03	01-6400-03
32	Large Clamp Band Bolt	4	01-6070-03	01-6070-03	01-6070-03	01-6070-03	01-6070-03	01-6070-03
33	Large Clamp Band Nut	4	04-6400-03	04-6400-03	04-6400-03	04-6400-03	04-6650-03-70	04-6650-03-70
34	Shaft Stud	2	01-6150-08	01-6150-08	01-6150-08	01-6150-08	01-6150-08	01-6150-08
35	Vertical Bolt Nut	4	04-6400-03	04-6400-03	04-6400-03	04-6400-03	04-6400-03	04-6400-03
36	Vertical Bolt Washer	4	01-6730-03	01-6730-03	01-6730-03	01-6730-03	01-6730-03	01-6730-03

[1]Air Valve Assembly includes items 10, 11, 12, 13.
[2]Refer to Section 6C or 6D prior to ordering these parts.
*Refer to corresponding elastomer chart in Section 8.

M1 CHAMP AIR-OPERATED

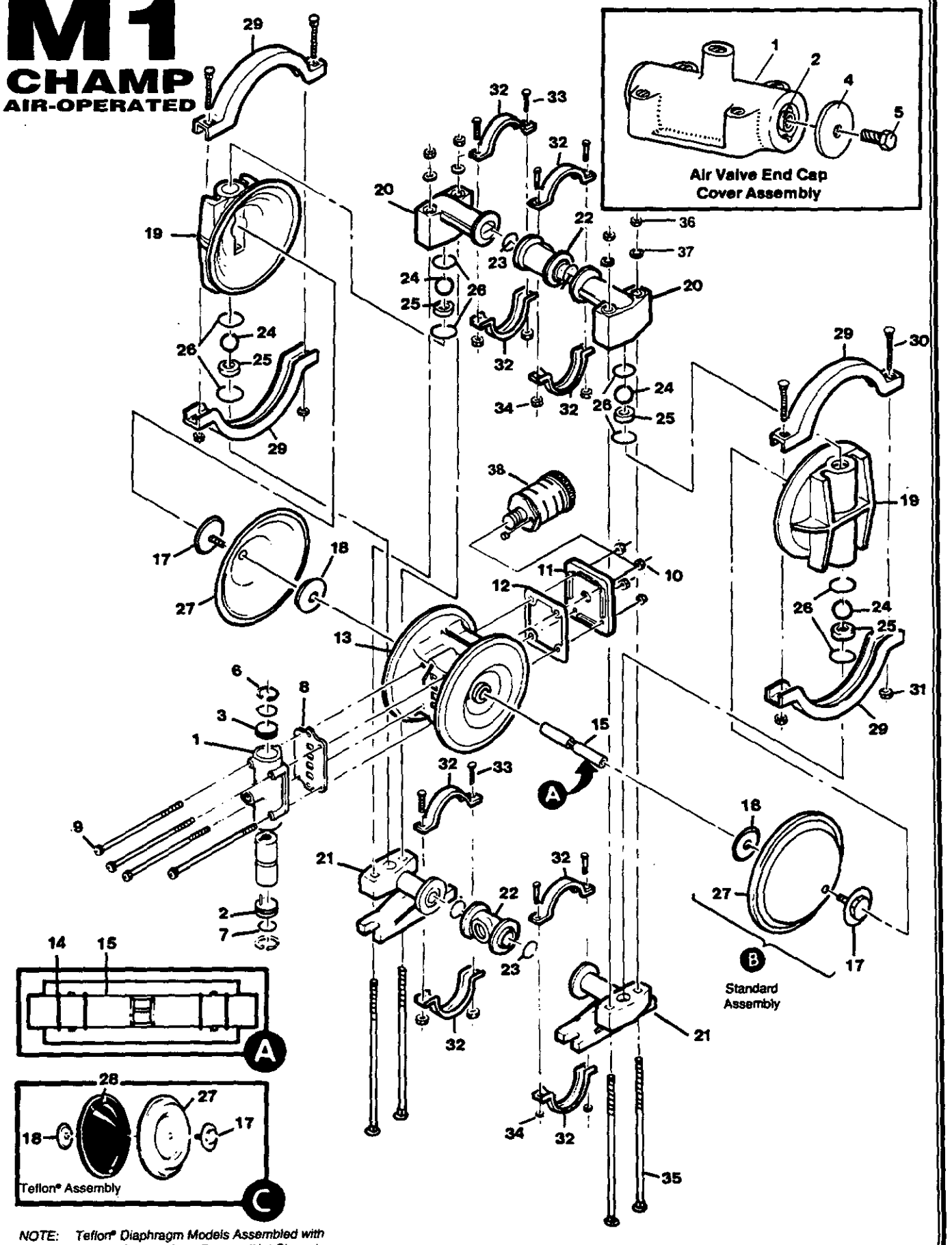

NOTE: Teflon® Diaphragm Models Assembled with Teflon® Gasket Kit At Factory (Not Shown)

MODEL M1 CHAMP RUBBER/TPE-FITTED

Item	Part Description	Qty. Per Pump	M1/PPPB P/N	M1/KPPB P/N	M1-502/PPPC P/N	M1-502/KPPC P/N
1	Air Valve Assembly[1]	1	01-2000-07	01-2000-07	01-2000-05	01-2000-05
2	Air Valve End Cap w/Guide (Top)	1	01-2300-23	01-2300-23	01-2300-23	01-2300-23
3	Air Valve End Cap w/o Guide (Bottom)	1	01-2330-23	01-2330-23	01-2330-23	01-2330-23
4	Air Valve End Cap Cover	2	N/A	N/A	01-2420-55	01-2420-55
5	Air Valve End Cap Bolt	2	N/A	N/A	01-2450-22	01-2450-22
6	Snap Ring	2	01-2650-03	01-2650-03	01-2650-03	01-2650-03
7	Buna O-Ring - 115 70 Shore	2	01-2390-52	01-2390-52	01-2390-52	01-2390-52
8	Air Valve Gasket	1	01-2600-52	01-2600-52	01-2600-52	01-2600-52
9	Air Valve Screw	4	01-6000-03	01-6000-03	01-6000-05	01-6000-05
10	Air Valve Screw Nut	4	04-6400-03	04-6400-03	04-6400-05	04-6400-05
11	Muffler Plate	1	01-3180-20	01-3180-20	01-3180-20	01-3180-20
12	Muffler Plate Gasket	1	01-3500-30	01-3500-30	01-3500-30	01-3500-30
13	Center Section[2]	1	01-3151-20[2]	01-3151-20[2]	01-3151-20[2]	01-3151-20[2]
14	Center Block O-Ring	4	01-3200-52	01-3200-52	01-3200-52	01-3200-52
15	Shaft[2]	1	01-3800-09-07[2]	01-3800-09-07[2]	01-3800-09-07[2]	01-3800-09-07[2]
16	Shaft Stud[1]	2	N/A	N/A	N/A	N/A
17	Piston, Outer	2	01-4570-20-500	01-4570-21-500	01-4570-20-500	01-4570-21-500
18	Piston, Inner	2	01-3710-01	01-3710-01	01-3710-01	01-3710-01
19	Liquid Chamber	2	01-5000-20	01-5000-21	01-5000-20	01-5000-21
20	Discharge Manifold Elbow	2	01-5230-20	01-5230-21	01-5230-20	01-5230-21
21	Inlet Manifold Elbow	2	01-5220-20	01-5220-21	01-5220-20	01-5220-21
22	Manifold Tee Section (Female, Threaded)	2	01-5160-20	01-5160-21	01-5160-20	01-5160-21
23	Manifold O-Ring	4	*	*	*	*
24	Valve Ball	4	*	*	*	*
25	Valve Seats	4	01-1120-21-500	01-1120-21-500	01-1120-21-500	01-1120-21-500
26	Valve Seat O-Ring	8	*	*	*	*
27	Diaphragm	2	*	*	*	*
28	Back-up Diaphragm	2	N/A	N/A	N/A	N/A
29	Large Clamp Band	2	01-7300-03	01-7300-03	01-7300-05	01-7300-05
30	Large ClampBand Bolt	4	01-6070-03	01-6070-03	01-6070-05	01-6070-05
31	Large Clamp Band Nut	4	04-6400-03	04-6400-03	04-6400-05	04-6400-05
32	Small Clamp Band	4	01-7100-03	01-7100-03	01-7100-05	01-7100-05
33	Small Clamp Band Bolt	8	01-6100-03	01-6100-03	01-6100-05	01-6100-05
34	Small Clamp Band Nut	8	01-6400-03	01-6400-03	01-6400-05	01-6400-05
35	Vertical Bolt	4	01-6080-03	01-6080-03	01-6080-05	01-6080-05
36	Vertical Bolt Nut	4	04-6400-03	04-6400-03	04-6400-05	04-6400-05
37	Vertical Bolt Washer	4	01-6730-03	01-6730-03	01-6730-05	01-6730-05
38	Muffler	1	01-3510-99	01-3510-99	01-3510-99	01-3510-99

LUBE-FREE MODEL M1 CHAMP RUBBER/TPE-FITTED

Item	Part Description	Qty. Per Pump	M1-200/PPPZ LF P/N	M1-200/KPPZ LF P/N	M1-201/PPPZ LF P/N	M1-201/PPPZ LF P/N
1	Air Valve Assembly[1] — Lube-free	1	01-2000-65-200	01-2000-65-200	01-2000-65-200	01-2000-65-200
2	Air Valve End Cap w/Plastic Guide (Top)	1	01-2300-23-200	01-2300-23-200	01-2300-23-200	01-2300-23-200
3	Air Valve End Cap w/o Guide (Bottom)	1	01-2330-23	01-2330-23	01-2330-23	01-2330-23
4	Air Valve End Cap Cover	2	N/A	N/A	01-2420-55	01-2420-55
5	Air Valve End Cap Bolt — Lube-free	2	N/A	N/A	01-2450-22-200	01-2450-22-200
6	Snap Ring	2	01-2650-03	01-2650-03	01-2650-03	01-2650-03
7	Buna O-Ring - 115 70 Shore	2	01-2390-52	01-2390-52	01-2390-52	01-2390-52
8	Air Valve Gasket	1	01-2600-52	01-2600-52	01-2600-52	01-2600-52
9	Air Valve Screw	4	01-6000-03	01-6000-03	01-6000-05	01-6000-05
10	Air Valve Screw Nut	4	04-6400-03	04-6400-03	04-6400-05	04-6400-05
11	Muffler Plate	1	01-3180-20	01-3180-20	01-3180-20	01-3180-20
12	Muffler Plate Gasket	1	01-3500-52	01-3500-52	01-3500-52	01-3500-52
13	Polypropylene Center Section[2] — Lube-free	1	01-3152-20-200	01-3152-20-200	01-3152-20-200	01-3152-20-200
14	Buna O-Ring - 115 70 Shore	4	01-2390-52	01-2390-52	01-2390-52	01-2390-52
	Slipper Seal (Not shown)	4	01-3210-55-200	01-3210-55-200	01-3210-55-200	01-3210-55-200
15	Shaft[2]	1	01-3800-09-07[2]	01-3800-09-07[2]	01-3800-09-07[2]	01-3800-09-07[2]
16	Shaft Stud[1]	2	N/A	N/A	N/A	N/A
17	Piston, Outer	2	01-4570-20-500	01-4570-21-500	01-4570-20-500	01-4570-21-500
18	Piston, Inner	2	01-3710-01	01-3710-01	01-3710-01	01-3710-01
19	Liquid Chamber	2	01-5000-20	01-5000-21	01-5000-20	01-5000-21
20	Discharge Manifold Elbow	2	01-5230-20	01-5230-21	01-5230-20	01-5230-21
21	Inlet Manifold Elbow	2	01-5220-20	01-5220-21	01-5220-20	01-5220-21
22	Manifold Tee Section (Female, Threaded)	2	01-5160-20	01-5160-21	01-5160-20	01-5160-21
23	Manifold O-Ring	4	*	*	*	*
24	Valve Ball	4	*	*	*	*
25	Valve Seats	4	01-1120-21-500	01-1120-21-500	01-1120-21-500	01-1120-21-500
26	Valve Seat O-Ring	8	*	*	*	*
27	Diaphragm	2	*	*	*	*
28	Back-up Diaphragm	2	N/A	N/A	N/A	N/A
29	Large Clamp Band	2	01-7300-03	01-7300-03	01-7300-05	01-7300-05
30	Large ClampBand Bolt	4	01-6070-03	01-6070-03	01-6070-05	01-6070-05
31	Large Clamp Band Nut	4	04-6400-03	04-6400-03	04-6400-05	04-6400-05
32	Small Clamp Band	4	01-7100-03	01-7100-03	01-7100-05	01-7100-05
33	Small Clamp Band Bolt	8	01-6100-03	01-6100-03	01-6100-05	01-6100-05
34	Small Clamp Band Nut	8	01-6400-03	01-6400-03	01-6400-05	01-6400-05
35	Vertical Bolt	4	01-6080-03	01-6080-03	01-6080-05	01-6080-05
36	Vertical Bolt Nut	4	04-6400-03	04-6400-03	04-6400-05	04-6400-05
37	Vertical Bolt Washer	4	01-6730-03	01-6730-03	01-6730-05	01-6730-05
38	Muffler	1	01-3510-99	01-3510-99	01-3510-99	01-3510-99

[1]Shaft stud is molded into outer piston on all plastic pumps.
[2]Refer to Section 6C or 6D prior to ordering these parts.
*Refer to corresponding elastomer chart in Section 8

MODEL M1 CHAMP TEFLON®-FITTED

Item	Part Description	Qty. Per Pump	M1/PPPB P/N	M1/KPPB P/N	M1-502/PPPC P/N	M1-502/KPPC P/N	M1-502/TPPB P/N	M1-502/TPPC P/N	M1-622/TPPB P/N	M1-612/TPPC P/N
1	Air Valve Assembly[1]	1	01-2000-07	01-2000-07	01-2000-05	01-2000-05	01-2000-07	01-2000-05	01-2000-07	01-2000-05
2	Air Valve End Cap w/Guide (Top)	1	01-2300-23	01-2300-23	01-2300-23	01-2300-23	01-2300-23	01-2300-23	01-2300-23	01-2300-23
3	Air Valve End Cap w/o Guide (Bottom)	1	01-2330-23	01-2330-23	01-2330-23	01-2330-23	01-2330-23	01-2330-23	01-2330-23	01-2330-23
4	Air Valve End Cap Cover	2	N/A	N/A	01-2420-55	01-2420-55	N/A	01-2420-55	N/A	01-2420-55
5	Air Valve End Cap Bolt	2	N/A	N/A	01-2450-22	01-2450-22	N/A	01-2450-22	N/A	01-2450-22
6	Snap Ring	2	01-2650-03	01-2650-03	01-2650-03	01-2650-03	01-2650-03	01-2650-03	01-2650-03	01-2650-03
7	Buna O-Ring - 115 70 Shore	2	01-2390-52	01-2390-52	01-2390-52	01-2390-52	01-2390-52	01-2390-52	01-2390-52	01-2390-52
8	Air Valve Gasket	1	01-2600-52	01-2600-52	01-2600-52	01-2600-52	01-2600-55	01-2600-55	01-2600-55	01-2600-55
9	Air Valve Screw	4	01-6000-03	01-6000-03	01-6000-05	01-6000-05	01-6000-03	01-6000-05	01-6000-03	01-6000-05
10	Air Valve Screw Nut	4	04-6400-03	04-6400-03	04-6400-05	04-6400-05	04-6400-03	04-6400-05	04-6400-03	04-6400-05
11	Muffler Plate	1	01-3180-20	01-3180-20	01-3180-20	01-3180-20	01-3180-20	01-3180-20	01-3180-20	01-3180-20
12	Muffler Plate Gasket	1	01-3500-52	01-3500-52	01-3500-52	01-3500-52	01-3500-55	01-3500-55	01-3500-55	01-3500-55
13	Center Section[2]	1	01-3151-20[2]	01-3151-20[2]	01-3151-20[2]	01-3151-20[2]	01-3151-20[2]	01-3151-20[2]	01-3151-20[2]	01-3151-20[2]
14	Center Block O-Ring	4	01-3200-52	01-3200-52	01-3200-52	01-3200-52	01-3200-52	01-3200-52	01-3200-52	01-3200-52
15	Shaft[2]	1	01-3800-09-07[2]	01-3800-09-07[2]	01-3800-09-07[2]	01-3800-09-07[2]	01-3800-09-07[2]	01-3800-09-07[2]	01-3800-09-07[2]	01-3800-09-07[2]
16	Shaft Stud[1]	2	N/A	N/A	N/A	N/A	N/A	N/A	N/A	N/A
17	Piston, Outer	2	01-4570-20-500	01-4570-21-500	01-4570-20-500	01-4570-21-500	01-4570-22-500	01-4570-22-500	01-4570-22-500	01-4570-22-500
18	Piston, Inner	2	01-3710-01	01-3710-01	01-3710-01	01-3710-01	01-3710-01	01-3710-01	01-3710-01	01-3710-01
19	Liquid Chamber	2	01-5000-20	01-5000-21	01-5000-20	01-5000-21	01-5000-22	01-5000-22	01-5000-22	01-5000-22
20	Discharge Manifold Elbow	2	01-5230-20	01-5230-21	01-5230-20	01-5230-21	01-5230-22	01-5230-22	01-5230-22	01-5230-22
21	Inlet Manifold Elbow	2	01-5220-20	01-5220-21	01-5220-20	01-5220-21	01-5220-22	01-5220-22	01-5220-22	01-5220-22
22	Manifold Tee Section	2	01-5160-20	01-5160-21	01-5160-20	01-5160-21	01-5160-22	01-5160-22	01-5160-22-552	01-5160-22-552
23	Manifold O-Ring	4	01-1300-59-500	01-1300-60-500	01-1300-59-500	01-1300-60-500	01-1300-60-500	01-1300-60-500	01-1300-60-500	01-1300-60-500
24	Valve Ball	4	01-1080-55	01-1080-55	01-1080-55	01-1080-55	01-1080-55	01-1080-55	01-1080-55	01-1080-55
25	Valve Seats	4	01-1120-21-500	01-1120-21-500	01-1120-21-500	01-1120-21-500	01-1120-22-500	01-1120-22-500	01-1120-22-500	01-1120-22-500
26	Valve Seat O-Ring	8	00-1230-59	00-1230-60	00-1230-59	00-1230-60	00-1230-60	00-1230-60	00-1230-60	00-1230-60
27	Diaphragm	2	01-1010-55	01-1010-55	01-1010-55	01-1010-55	01-1010-55	01-1010-55	01-1010-55	01-1010-55
28	Back-up Diaphragm	2	01-1060-51	01-1060-51	01-1060-51	01-1060-51	01-1060-51	01-1060-51	01-1060-51	01-1060-51
29	Large Clamp Band	2	01-7300-03	01-7300-03	01-7300-05	01-7300-05	01-7300-03	01-7300-05	01-7300-03	01-7300-05
30	Large Clamp Band Bolt	4	01-6070-03	01-6070-03	01-6070-05	01-6070-05	01-6070-03	01-6070-05	01-6070-03	01-6070-05
31	Large Clamp Band Nut	4	04-6400-03	04-6400-03	04-6400-05	04-6400-05	04-6400-03	04-6400-05	04-6400-03	04-6400-05
32	Small Clamp Band	4	01-7100-03	01-7100-03	01-7100-05	01-7100-05	01-7100-03	01-7100-05	01-7100-03	01-7100-05
33	Small Clamp Band Bolt	8	01-6100-03	01-6100-03	01-6100-05	01-6100-05	01-6100-03	01-6100-05	01-6100-03	01-6100-05
34	Small Clamp Band Nut	8	01-6400-03	01-6400-03	01-6400-05	01-6400-05	01-6400-03	01-6400-05	01-6400-03	01-6400-05
35	Vertical Bolt	4	01-6080-03	01-6080-03	01-6080-05	01-6080-05	01-6080-03	01-6080-05	01-6080-03	01-6080-05
36	Vertical Bolt Nut	4	04-6400-03	04-6400-03	04-6400-05	04-6400-05	04-6400-03	04-6400-05	04-6400-03	04-6400-05
37	Vertical Bolt Washer	4	01-6730-03	01-6730-03	01-6730-05	01-6730-05	01-6730-03	01-6730-05	01-6730-03	01-6730-05
38	Muffler	1	01-3510-99	01-3510-99	01-3510-99	01-3510-99	01-3510-99	01-3510-99	01-3510-99	01-3510-99

LUBE-FREE MODEL M1 CHAMP TEFLON®-FITTED

Item	Part Description	Qty. Per Pump	M1-200/ PPPZ LF P/N	M1-200/ KPPZ LF P/N	M1-201/ PPPZ LF P/N	M1-201/ KPPZ LF P/N	M1-200/ TPPZ LF P/N	M1-201/ TPPZ LF P/N	M1-625/ TPPZ LF P/N	M1-615/ TPPZ LF P/N
1	Air Valve Assembly[1] — Lube-free	1	01-2000-65-200	01-2000-65-200	01-2000-65-200	01-2000-65-200	01-2000-65-200	01-2000-65-200	01-2000-65-200	01-2000-65-200
2	Air Valve End Cap w/Plastic Guide (Top)	1	01-2310-23-200	01-2300-23-200	01-2300-23-200	01-2300-23-200	01-2300-23-200	01-2300-23-200	01-2300-23-200	01-2300-23-200
3	Air Valve End Cap w/o Guide (Bottom)	1	01-2330-23	01-2330-23	01-2330-23	01-2330-23	01-2330-23	01-2330-23	01-2330-23	01-2330-23
4	Air Valve End Cap Cover	2	N/A	N/A	01-2420-55	01-2420-55	N/A	01-2420-55	N/A	01-2420-55
5	Air Valve End Cap Bolt — Lube-free	2	N/A	N/A	01-2450-22-200	01-2450-22-200	N/A	01-2450-22-200	N/A	01-2450-22-200
6	Snap Ring	2	01-2650-03	01-2650-03	01-2650-03	01-2650-03	01-2650-03	01-2650-03	01-2650-03	01-2650-03
7	Buna O-Ring - 115 70 Shore	2	01-2390-52	01-2390-52	01-2390-52	01-2390-52	01-2390-52	01-2390-52	01-2390-52	01-2390-52
8	Air Valve Gasket	1	01-2600-52	01-2600-52	01-2600-52	01-2600-52	01-2600-48	01-2600-48	01-2600-48	01-2600-48
9	Air Valve Screw	4	01-6000-03	01-6000-03	01-6000-05	01-6000-05	01-6000-03	01-6000-05	01-6000-03	01-6000-05
10	Air Valve Screw Nut	4	04-6400-03	04-6400-03	04-6400-05	04-6400-05	04-6400-03	04-6400-05	04-6400-03	04-6400-05
11	Muffler Plate	1	01-3180-20	01-3180-20	01-3180-20	01-3180-20	01-3180-20	01-3180-20	01-3180-20	01-3180-20
12	Muffler Plate Gasket	1	01-3500-52	01-3500-52	01-3500-52	01-3500-52	01-3500-55	01-3500-55	01-3500-55	01-3500-55
13	Polypropylene Center Section[2] — Lube-free	1	01-3152-20-200	01-3152-20-200	01-3152-20-200	01-3152-20-200	01-3152-20-200	01-3152-20-200	01-3152-20-200	01-3152-20-200
14	Buna O-Ring - 115 70 Shore	4	01-2390-52	01-2390-52	01-2390-52	01-2390-52	01-2390-52	01-2390-52	01-2390-52	01-2390-52
	Slipper Seal (Not shown)	4	01-3210-55-200	01-3210-55-200	01-3210-55-200	01-3210-55-200	01-3210-55-200	01-3210-55-200	01-3210-55-200	01-3210-55-200
15	Shaft[2]	1	01-3800-09-07[2]	01-3800-09-07[2]	01-3800-09-07[2]	01-3800-09-07[2]	01-3800-09-07[2]	01-3800-09-07[2]	01-3800-09-07[2]	01-3800-09-07[2]
16	Shaft Stud[1]	2	N/A	N/A	N/A	N/A	N/A	N/A	N/A	N/A
17	Piston, Outer	2	01-4570-20-500	01-4570-21-500	01-4570-20-500	01-4570-21-500	01-4570-22-500	01-4570-22-500	01-4570-22-500	01-4570-22-500
18	Piston, Inner	2	01-3710-01	01-3710-01	01-3710-01	01-3710-01	01-3710-01	01-3710-01	01-3710-01	01-3710-01
19	Liquid Chamber	2	01-5000-20	01-5000-21	01-5000-20	01-5000-21	01-5000-22	01-5000-22	01-5000-22	01-5000-22
20	Discharge Manifold Elbow	2	01-5230-20	01-5230-21	01-5230-20	01-5230-21	01-5230-22	01-5230-22	01-5230-22	01-5230-22
21	Inlet Manifold Elbow	2	01-5220-20	01-5220-21	01-5220-20	01-5220-21	01-5220-22	01-5220-22	01-5220-22	01-5220-22
22	Manifold Tee Section (Female, Threaded)	2	01-5160-20	01-5160-21	01-5160-20	01-5160-21	01-5160-22	01-5160-22	04-5160-22-552	04-5160-22-552
23	Manifold O-Ring	4	01-1300-59-500	01-1300-60-500	01-1300-59-500	01-1300-60-500	01-1300-60-500	01-1300-60-500	01-1300-60-500	01-1300-60-500
24	Valve Ball	4	01-1080-55	01-1080-55	01-1080-55	01-1080-55	01-1080-55	01-1080-55	01-1080-55	01-1080-55
25	Valve Seats	4	01-1120-21-500	01-1120-21-500	01-1120-21-500	01-1120-21-500	01-1120-22-500	01-1120-22-500	01-1120-22-500	01-1120-22-500
26	Valve Seat O-Ring	8	00-1230-59	00-1230-60	00-1230-59	00-1230-60	00-1230-60	00-1230-60	00-1230-60	00-1230-60
27	Diaphragm	2	01-1010-55	01-1010-55	01-1010-55	01-1010-55	01-1010-55	01-1010-55	01-1010-55	01-1010-55
28	Back-up Diaphragm	2	01-1060-51	01-1060-51	01-1060-51	01-1060-51	01-1060-51	01-1060-51	01-1060-51	01-1060-51
29	Large Clamp Band	2	01-7300-03	01-7300-03	01-7300-05	01-7300-05	01-7300-03	01-7300-05	01-7300-03	01-7300-05
30	Large Clamp Band Bolt	4	01-6070-03	01-6070-03	01-6070-05	01-6070-05	01-6070-03	01-6070-05	01-6070-03	01-6070-05
31	Large Clamp Band Nut	4	04-6400-03	04-6400-03	04-6400-05	04-6400-05	04-6400-03	04-6400-05	04-6400-03	04-6400-05
32	Small Clamp Band	4	01-7100-08	01-7100-08	01-7100-05	01-7100-05	01-7100-08	01-7100-05	01-7100-08	01-7100-05
33	Small Clamp Band Bolt	8	01-6100-03	01-6100-03	01-6100-05	01-6100-05	01-6100-03	01-6100-05	01-6100-03	01-6100-05
34	Small Clamp Band Nut	8	01-6400-03	01-6400-03	01-6400-05	01-6400-05	01-6400-03	01-6400-05	01-6400-03	01-6400-05
35	Vertical Bolt	4	01-6080-03	01-6080-03	01-6080-05	01-6080-05	01-6080-03	01-6080-05	01-6080-03	01-6080-05
36	Vertical Bolt Nut	4	04-6400-03	04-6400-03	04-6400-05	04-6400-05	04-6400-03	04-6400-05	04-6400-03	04-6400-05
37	Vertical Bolt Washer	4	01-6730-03	01-6730-03	01-6730-05	01-6730-05	01-6730-03	01-6730-05	01-6730-03	01-6730-05
38	Muffler	1	01-3510-99	01-3510-99	01-3510-99	01-3510-99	01-3510-99	01-3510-99	01-3510-99	01-3510-99

*Refer to corresponding elastomer chart for correct part numbers.

[1]Shaft stud is molded into outer piston on all plastic pumps.

[2]Refer to Section 6C or 6D prior to ordering these parts.

SECTIONS 7C, 7D, 7E, 7F, 7G

EXPLODED VIEWS

M1 METAL — SOLENOID-OPERATED
M1 CHAMP — SOLENOID-OPERATED
M1 ELASTOMER OPTIONS
M1 ULTRAPURE III
M1 CARBON-FILLED ACETAL

M1 METAL SOLENOID-OPERATED

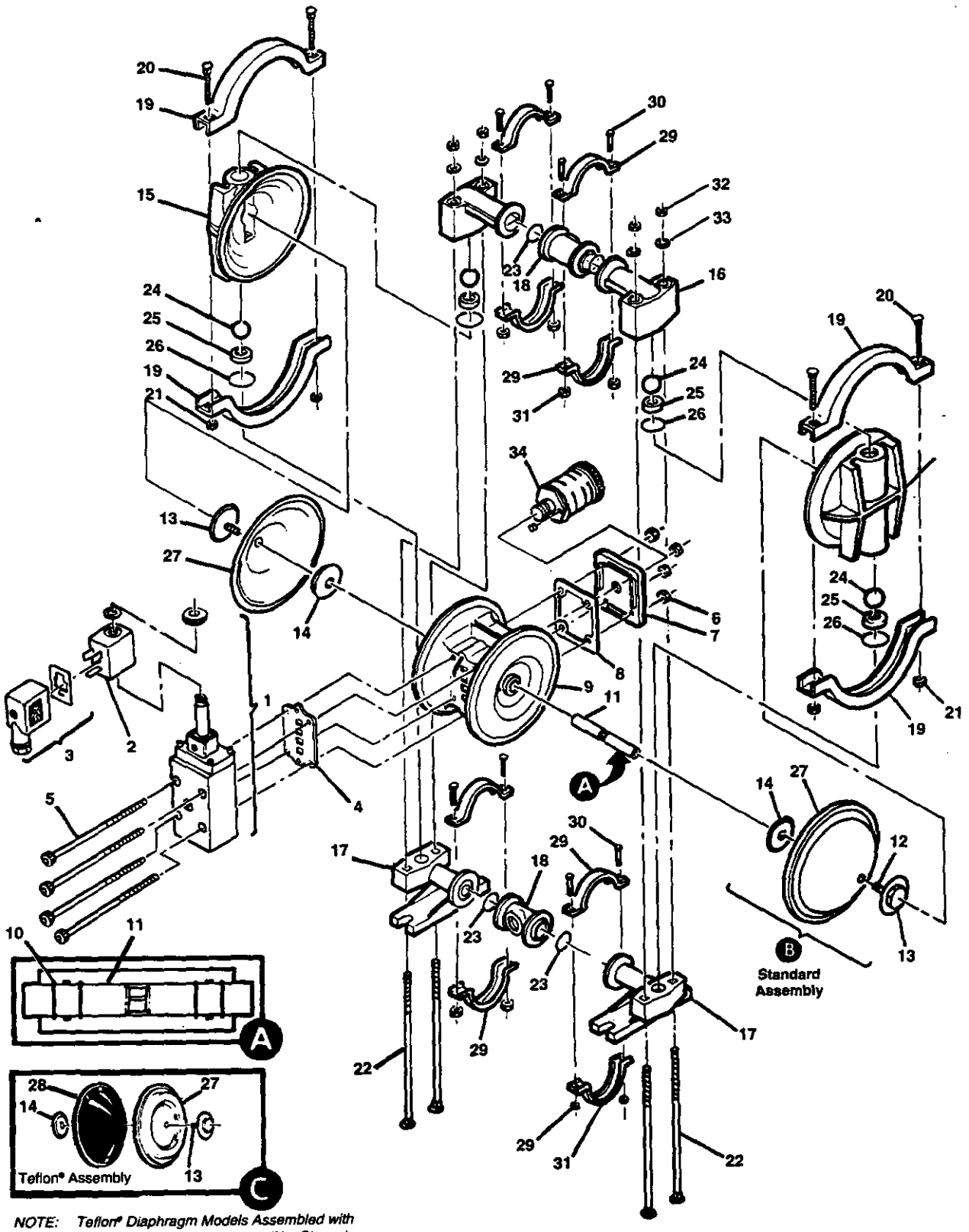

NOTE: Teflon® Diaphragm Models Assembled with Teflon® Gasket Kit At Factory (Not Shown)

METAL MODEL M1 SOLENOID-OPERATED — DC

Item	Part Description	Qty. Per Pump	Rubber-Fitted		Teflon®-Fitted		Food Processing	
			M1-150/ AYYE	M1-150/ SYYE	M1-150/ AYYE	M1-150/ SYYE	M1-125/ SYYE	M1-125/ SYYE
			P/N	P/N	P/N	P/N	Rubber P/N	Teflon® P/N
	24 Volt DC Valve Assembly'	1	01-2000-99-150	01-2000-99-150	01-2000-99-150	01-2000-99-150	01-2000-99-150	01-2000-99-150
1	Main Valve Body	1	01-2000-01-150	01-2000-01-150	01-2000-01-150	01-2000-01-150	01-2000-01-150	01-2000-01-150
2	24 Volt DC Coil	1	00-2110-99-150	00-2110-99-150	00-2110-99-150	00-2110-99-150	00-2110-99-150	00-2110-99-150
3	Terminal Connector	1	00-2130-99	00-2130-99	00-2130-99	00-2130-99	00-2130-99	00-2130-99
4	Air Valve Gasket	1	01-2600-52	01-2600-52	01-2600-52	01-2600-52	01-2600-52	01-2600-52
5	Air Valve Cap Screw	4	01-6000-03	01-6000-03	01-6000-03	01-6000-03	01-6000-03	01-6000-03
6	Air Valve Cap Screw Nut	4	04-6400-03	04-6400-03	04-6400-03	04-6400-03	04-6400-03	04-6400-03
7	Muffler Plate	1	01-3180-23	01-3180-23	01-3180-23	01-3180-23	01-3180-23	01-3180-23
8	Muffler Plate Gasket	1	01-3500-52	01-3500-52	01-3500-52	01-3500-52	01-3500-52	01-3500-52
9	Center Section	1	01-3152-23	01-3152-23	01-3152-23	01-3152-23	01-3152-23	01-3152-23
10	Center Block O-Ring	4	01-3200-52	01-3200-52	01-3200-52	01-3200-52	01-3200-52	01-3200-52
11	Shaft	1	01-3800-09-07	01-3800-09-07	01-3800-09-07	01-3800-09-07	01-3800-09-07	01-3800-09-07
12	Shaft Stud	2	01-6150-08	01-6150-08	01-6150-08	01-6150-08	01-6150-08	01-6150-08
13	Pistons/Outer	2	01-4570-01	01-4570-03	01-4570-01	01-4570-03	01-4570-03	01-4570-03
14	Pistons/Inner	2	01-3710-01-150	01-3710-01-150	01-3710-01-150	01-3710-01-150	01-3710-01-150	01-3710-01-150
15	Water Chamber	2	01-5000-01	01-5000-03	01-5000-01	01-5000-03	01-5000-03	01-5000-03
16	Discharge Manifold Elbow	2	01-5230-01	01-5230-03	01-5230-01	01-5230-03	01-5230-03	01-5230-03
17	Inlet Manifold Elbow	2	01-5220-01	01-5220-03	01-5220-01	01-5220-03	01-5220-03	01-5220-03
18	Manifold "T" Section	2	01-5160-01	01-5160-03	01-5160-01	01-5160-03	01-5160-03-70	01-5160-03-70
19	Clamp Band (Large)	2	01-7300-03	01-7300-03	01-7300-03	01-7300-03	01-7300-03-70	01-7300-03-70
20	Large Clamp Band Bolt	4	01-6070-03	01-6070-03	01-6070-03	01-6070-03	01-6070-03	01-6070-03
21	Large Clamp Band Nut	4	04-6400-03	04-6400-03	04-6400-03	04-6400-03	04-6650-03-70	04-6650-03-70
22	Vertical Bolt	4	01-6080-03	01-6080-03	01-6080-03	01-6080-03	01-6080-03	01-6080-03
23	Manifold O-Ring	4	*	*	01-1300-55	01-1300-55	01-1300-56	01-1300-55
24	Valve Ball	4	*	*	01-1080-55	01-1080-55	01-1080-56	01-1080-55
25	Valve Seat	4	01-1120-01	01-1120-03	01-1120-01	01-1120-03	01-1120-03	01-1120-03
26	Valve Seat O-Ring	4	*	*	01-1200-55	01-1200-55	01-1200-56	01-1200-55
27	Diaphragm	2	*	*	01-1010-55	01-1010-55	01-1010-56	01-1010-55
28	Back-up Diaphragm	2	N/R	N/R	01-1060-51	01-1060-51	N/R	01-1060-51
29	Clamp Band (Small)	4	01-7100-03	01-7100-03	01-7100-03	01-7100-03	01-7100-03	01-7100-03
30	Small Clamp Band Bolt	8	01-6100-03	01-6100-03	01-6100-03	01-6100-03	01-6100-03	01-6100-03
31	Small Clamp Band Nut	8	01-6400-03	01-6400-03	01-6400-03	01-6400-03	01-6400-03	01-6400-03
32	Vertical Bolt Nut	4	04-6400-03	04-6400-03	04-6400-03	04-6400-03	04-6400-03	04-6400-03
33	Vertical Bolt Washer	4	01-6730-03	01-6730-03	01-6730-03	01-6730-03	01-6730-03	01-6730-03
34	Muffler	1	01-3510-99	01-3510-99	01-3510-99	01-3510-99	01-3510-99	01-3510-99

*Refer to Section 8 for elastomer options.
'Air valve assembly includes items 1, 2 and 3.

M1 CHAMP SOLENOID-OPERATED

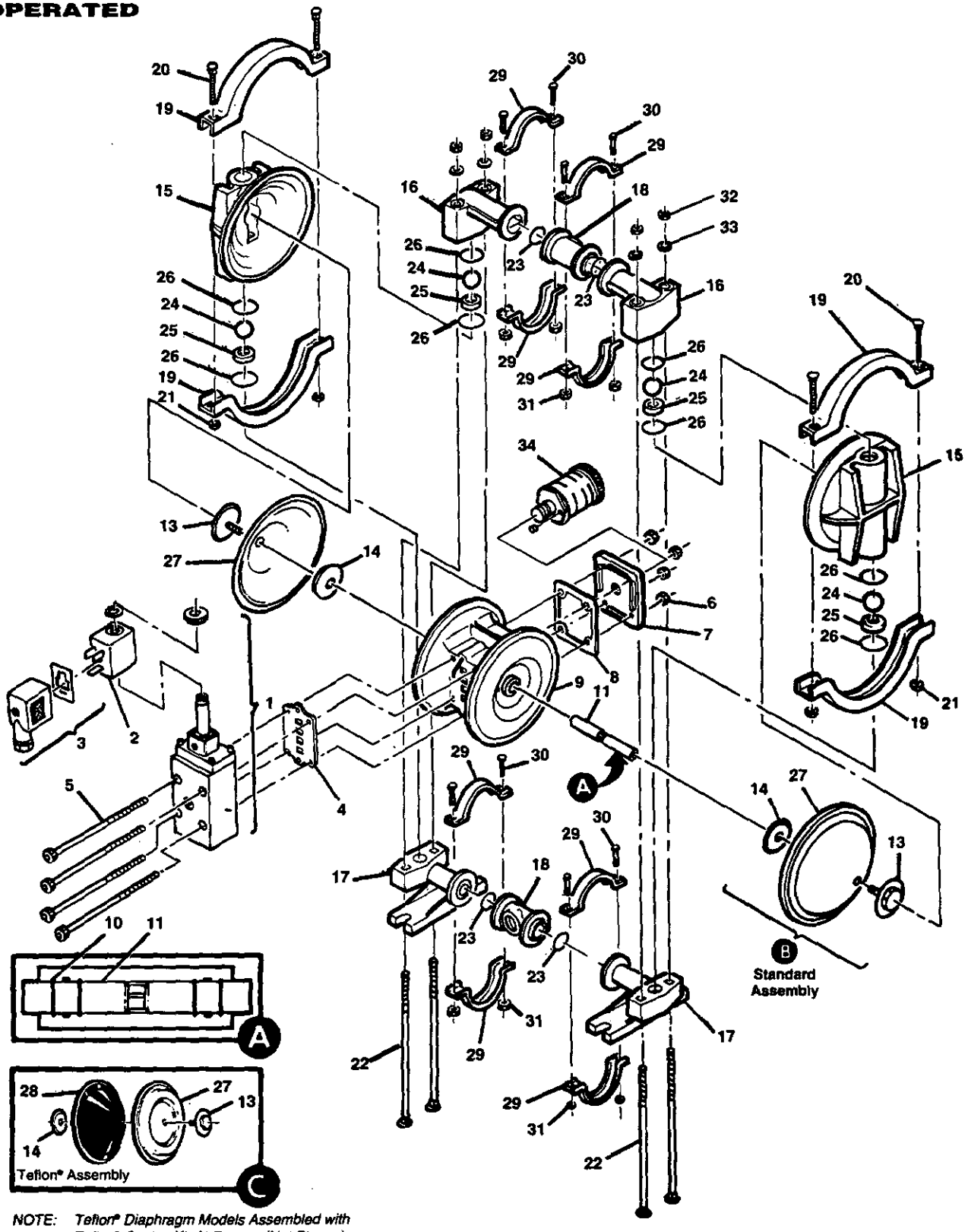

NOTE: *Teflon® Diaphragm Models Assembled with Teflon® Gasket Kit At Factory (Not Shown)*

PLASTIC MODEL M1 SOLENOID-OPERATED — DC (RUBBER/TPE-FITTED)

			Rubber-Fitted		Teflon®-Fitted			
Item	Part Description	Qty. Per Pump	M1-150/PPPE P/N	M1-150/KPPE P/N	M1-150/PPPE P/N	M1-150/KPPE P/N	M1-150/TPPE P/N	M1-184/TPPE P/N
	24 Volt DC Valve Assembly[1]	1	01-2000-99-150	01-2000-99-150	01-2000-99-150	01-2000-99-150	01-2000-99-150	01-2000-99-150
1	Main Valve Body	1	01-2000-01-150	01-2000-01-150	01-2000-01-150	01-2000-01-150	01-2000-01-150	01-2000-01-150
2	24 Volt DC Coil	1	00-2110-99-150	00-2110-99-150	00-2110-99-150	00-2110-99-150	00-2110-99-150	00-2110-99-150
3	Terminal Connector	1	00-2130-99	00-2130-99	00-2130-99	00-2130-99	00-2130-99	00-2130-99
4	Air Valve Gasket	1	01-2600-52	01-2600-52	01-2600-52	01-2600-52	01-2600-52	01-2600-52
5	Air Valve Screw	4	01-6000-03	01-6000-03	01-6000-03	01-6000-03	01-6000-03	01-6000-05
6	Air Valve Screw Nut	4	04-6400-03	04-6400-03	04-6400-03	04-6400-03	04-6400-03	04-6400-05
7	Muffler Plate	1	01-3180-20	01-3180-20	01-3180-20	01-3180-20	01-3180-20	01-3180-20
8	Muffler Plate Gasket	1	01-3500-52	01-3500-52	01-3500-52	01-3500-52	01-3500-52	01-3500-52
9	Center Section	1	01-3151-20	01-3151-20	01-3151-20	01-3151-20	01-3151-20	01-3151-20
10	Center Block O-Ring	4	01-3200-52	01-3200-52	01-3200-52	01-3200-52	01-3200-52	01-3200-52
11	Shaft	1	01-3800-09-07	01-3800-09-07	01-3800-09-07	01-3800-09-07	01-3800-09-07	01-3800-09-07
12	Shaft Stud	2	N/A	N/A	N/A	N/A	N/A	N/A
13	Piston, Outer	2	01-4570-20-500	01-4570-21-500	01-4570-20-500	01-4570-21-500	01-4570-22-500	01-4570-22-500
14	Piston, Inner	2	01-3710-01-150	01-3710-01-150	01-3710-01-150	01-3710-01-150	01-3710-01-150	01-3710-01-150
15	Liquid Chamber	2	01-5000-20	01-5000-21	01-5000-20	01-5000-21	01-5000-22	01-5000-22
16	Discharge Manifold Elbow	2	01-5230-20	01-5230-21	01-5230-20	01-5230-21	01-5230-22	01-5230-22
17	Inlet Manifold Elbow	2	01-5220-20	01-5220-21	01-5220-20	01-5220-21	01-5220-22	01-5220-22
18	Manifold Tee Section (Female, Threaded)	2	01-5160-20	01-5160-21	01-5160-20	01-5160-21	01-5160-22	01-5160-22
19	Large Clamp Band	2	01-7300-03	01-7300-03	01-7300-03	01-7300-03	01-7300-03	01-7300-05
20	Large ClampBand Bolt	4	01-6070-03	01-6070-03	01-6070-03	01-6070-03	01-6070-03	01-6070-05
21	Large Clamp Band Nut	4	04-6400-03	04-6400-03	04-6400-03	04-6400-03	04-6400-03	04-6400-05
22	Vertical Bolt	4	01-6080-03	01-6080-03	01-6080-03	01-6080-03	01-6080-03	01-6080-05
23	Manifold O-Ring	4	*	*	01-1300-59-500	01-1300-60-500	01-1300-60-500	01-1300-60-500
24	Valve Ball	4	*	*	01-1080-55	01-1080-55	01-1080-55	01-1080-55
25	Valve Seats	4	01-1120-21-500	01-1120-21-500	01-1120-21-500	01-1120-21-500	01-1120-22-500	01-1120-22-500
26	Valve Seat O-Ring	8	*	*	00-1230-59	00-1230-59	00-1230-59	00-1230-59
27	Diaphragm	2	*	*	01-1010-55	01-1010-55	01-1010-55	01-1010-55
28	Back-up Diaphragm	2	N/A	N/A	01-1060-51	01-1060-51	01-1060-51	01-1060-51
29	Small Clamp Band	4	01-7100-03	01-7100-03	01-7100-08	01-7100-08	01-7100-08	01-7100-05
30	Small Clamp Band Bolt	8	01-6100-03	01-6100-03	01-6100-03	01-6100-03	01-6100-03	01-6100-05
31	Small Clamp Band Nut	8	01-6400-03	01-6400-03	01-6400-03	01-6400-03	01-6400-03	01-6400-05
32	Vertical Bolt Nut	4	04-6400-03	04-6400-03	04-6400-03	04-6400-03	04-6400-03	04-6400-05
33	Vertical Bolt Washer	4	01-6730-03	01-6730-03	01-6730-03	01-6730-03	01-6730-03	01-6730-05
34	Muffler	1	01-3510-99	01-3510-99	01-3510-99	01-3510-99	01-3510-99	01-3510-99

[1]Air valve assembly includes items 1, 2 and 3.

*Refer to Section 8 for elastomer options.

SOLENOID-OPERATED VALVE ASSEMBLY OPTIONS (CONSISTS OF VALVE BODY, COIL AND CONNECTOR)

Pump Models Designating Specialty Code #	Part Number	Description
151	01-2000-99-151	24V AC / 12V DC Valve Assembly
153	01-2000-99-153	24V AC / 12V DC Valve Assembly (Nema 7)
150	01-2000-99-150	24V DC Valve Assembly
154	01-2000-99-154	24V DC Valve Assembly (Nema 7)
157	01-2000-99-157	24V DC Valve Assembly[1]
155	01-2000-99-155	110V AC Valve Assembly
156	01-2000-99-156	110V AC Valve Assembly (Nema 7)

ITEM 1 MAIN VALVE BODY OPTIONS

Part Number	Description
02-2040-01	Main Valve Body
02-2040-01-154	Main Valve Body (Nema 7)

ITEM 2 COIL OPTIONS

Pump Models Designating Specialty Code #	Part Number	Description
151	00-2110-99-151	24V AC / 12V DC Coil
153	00-2110-99-153	24V AC / 12V DC Coil (Nema 7)
150	00-2110-99-150	24V DC Coil
154	00-2110-99-154	24V DC Coil (Nema 7)
155	00-2110-99-155	110V AC Coil
156	00-2110-99-156	110V AC Coil (Nema 7)

M1

ULTRAPURE II, ULTRAPURE III AND CARBON-FILLED ACETAL

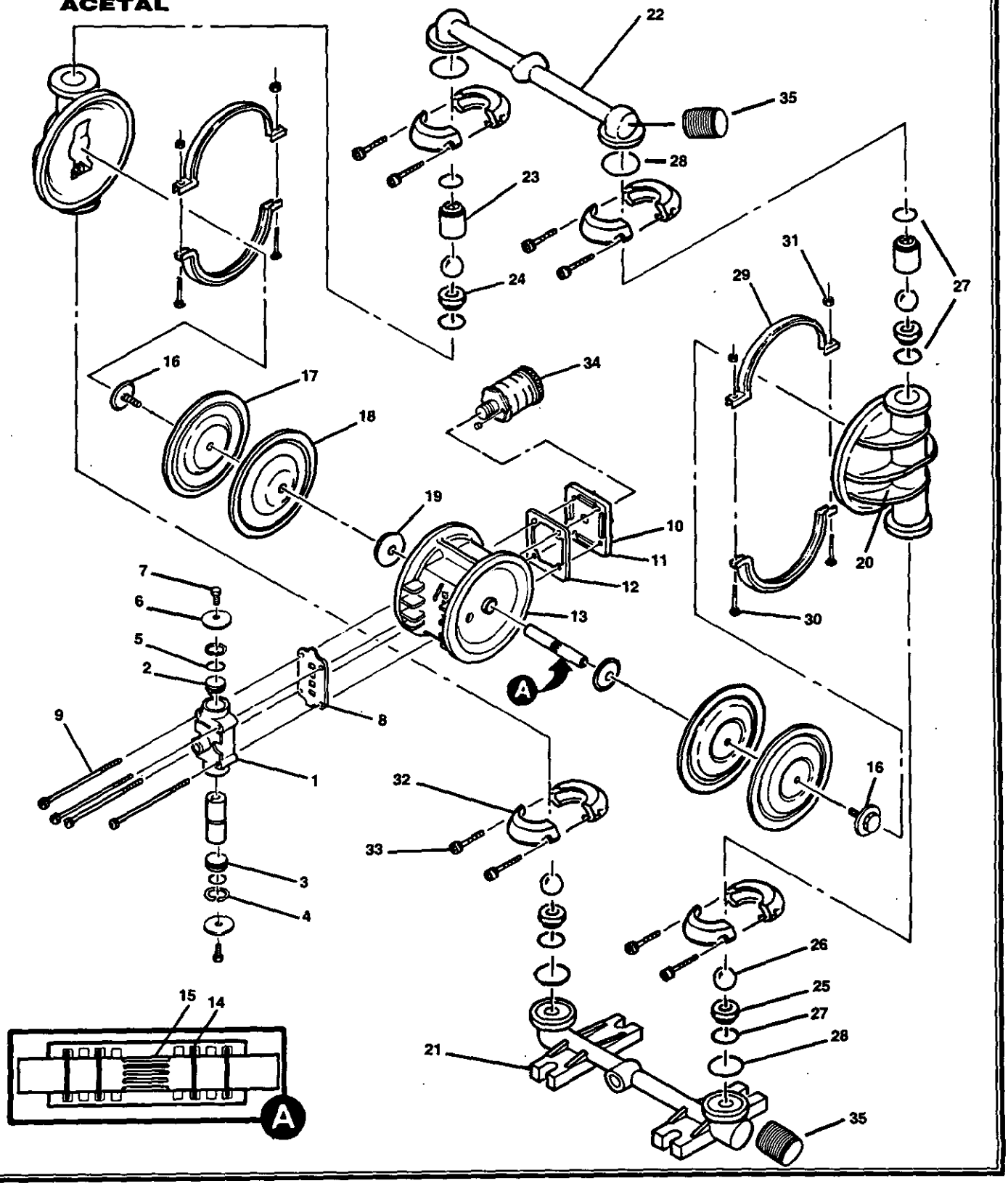

MODEL M1 ULTRAPURE III TEFLON®-FITTED, LUBE-FREE

Item	Part Description	Qty. Per Pump	M1-520/ TPPZ LF P/N	M1-521/ TPPZ LF P/N	M1-522/ TPPZ LF P/N	M1-523/ TPPZ LF P/N
1	Air Valve Assembly — Lube-free	1	01-2000-65-200	01-2000-65-200	01-2000-65-200	01-2000-65-200
2	Air Valve End Cap w/Plastic Guide	1	01-2300-23-200	01-2300-23-200	01-2300-23-200	01-2300-23-200
3	Air Valve End Cap w/o Guide	1	01-2330-23	01-2330-23	01-2330-23	01-2330-23
4	Snap Ring	2	01-2650-03	01-2650-03	01-2650-03	01-2650-03
5	Buna O-Ring - 115 70 Shore	2	01-2390-52	01-2390-52	01-2390-52	01-2390-52
6	End Cap Cover	2	N/A	01-2420-55	N/A	01-2420-55
7	End Cap Bolt	2	N/A	01-2450-22-200	N/A	01-2450-22-200
8	Air Valve Gasket	1	01-2600-48	01-2600-48	01-2600-48	01-2600-48
9	Air Valve Cap Screws	4	01-6000-03	01-6000-05	01-6000-03	01-6000-05
10	Air Valve Nut	4	04-6400-03	04-6400-05	04-6400-03	04-6400-05
11	Muffler Plate	1	01-3180-20	01-3180-20	01-3180-20	01-3180-20
12	Muffler Plate Gasket	1	01-3500-55	01-3500-55	01-3500-55	01-3500-55
13	Polypropylene Center Section — Lube-free	1	01-3152-20-200	01-3152-20-200	01-3152-20-200	01-3152-20-200
	Slipper Seal (Not shown)	4	01-3210-55-200	01-3210-55-200	01-3210-55-200	01-3210-55-200
14	Buna O-Ring - 115 70 Shore	4	01-2390-52	01-2390-52	01-2390-52	01-2390-52
15	Shaft	1	01-3800-09-07	01-3800-09-07	01-3800-09-07	01-3800-09-07
16	Outer Piston	2	01-4570-22-500	01-4570-22-500	01-4570-22-500	01-4570-22-500
17	Teflon® PTFE Primary Diaphragm	2	01-1010-55	01-1010-55	01-1010-55	01-1010-55
18	Containment Diaphragm	2	01-1060-61	01-1060-61	01-1060-61	01-1060-61
19	Inner Piston	2	01-3710-01	01-3710-01	01-3710-01	01-3710-01
20	Water Chamber	2	01-5000-22	01-5000-22	01-5000-22	01-5000-22
21	Inlet Manifold	1	01-5080-22-520	01-5080-22-520	01-5080-22-522	01-5080-22-522
22	Discharge Manifold	1	01-5020-22-520	01-5020-22-520	01-5020-22-522	01-5020-22-522
23	Ball Cage	2	01-5350-22-520	01-5350-22-520	01-5350-22-520	01-5350-22-520
24	Valve Seat (Top)	2	01-1140-55	01-1140-55	01-1140-55	01-1140-55
25	Valve Seat (Bottom)	2	01-1160-55	01-1160-55	01-1160-55	01-1160-55
26	Valve Ball	4	01-1080-55	01-1080-55	01-1080-55	01-1080-55
27	Chemraz® Valve Seat O-Ring	6	01-1200-33-540	01-1200-33-540	01-1200-33-540	01-1200-33-540
28	Chemraz® Outboard O-Ring	4	01-1370-33	01-1370-33	01-1370-33	01-1370-33
29	Large Clamp Band	2	01-7300-03-520	01-7300-05-521	01-7300-03-520	01-7300-05-521
30	Large Carriage Bolt	4	01-6070-03	01-6070-05	01-6070-03	01-6070-05
31	Large Hex Nut	4	04-6400-03	04-6400-05	04-6400-03	04-6400-05
32	Small Clamp Band	4	01-7100-03-520	01-7100-05-521	01-7100-03-520	01-7100-05-521
33	Small Clamp Band Bolt*	8	01-6040-03-520	01-6040-05-521	01-6040-03-520	01-6040-05-521
34	Muffler	1	01-3510-99	01-3510-99	01-3510-99	01-3510-99

M1-520/TPPZ — Teflon® PFA with Teflon® PTFE elastomers, female threaded inlet/discharge connections and standard hardware.
M1-521/TPPZ — Teflon® PFA with Teflon® PTFE elastomers, female threaded inlet/discharge connections and Teflon®-coated hardware.
M1-522/TPPZ — Teflon® PFA with Teflon® PTFE elastomers, male non-threaded inlet/discharge connections and standard hardware.
M1-523/TPPZ — Teflon® PFA with Teflon® PTFE elastomers, male non-threaded inlet/discharge connections and Teflon®-coated hardware.

MODEL M1 CARBON-FILLED ACETAL, LUBE-FREE

Item	Part Description	Qty. Per Pump	M1-200/ GGGQ Rubber P/N	M1-200/ GGGQ Teflon® P/N
1	Air Valve Assembly — Lube-free	1	01-2000-70-200	01-2000-70-200
2	Air Valve End Cap w/Guide	1	01-2300-23-200	01-2300-23-200
3	Air Valve End Cap w/o Guide	1	01-2330-23	01-2330-23
4	Snap Ring	2	01-2650-03	01-2650-03
5	Buna O-Ring - 115 70 Shore	2	01-2390-52	01-2390-52
6	End Cap Cover	2	N/A	N/A
7	End Cap Bolt	2	N/A	N/A
8	Air Valve Gasket	1	01-2600-52	01-2600-52
9	Air Valve Screw	4	01-6000-03	01-6000-03
10	Air Valve Nut	4	04-6400-03	04-6400-03
11	Muffler Plate	1	01-3180-16	01-3180-16
12	Muffler Plate Gasket	1	01-3500-52	01-3500-52
13	Carbon-filled Acetal Center Section	1	01-3152-16-200	01-3152-16-200
	Slipper Seal (Not shown)	4	01-3210-55-200	01-3210-55-200
14	O-Ring	4	01-2390-52	01-2390-52
15	Shaft	1	01-3800-09-07	01-3800-09-07
16	Outer Piston	2	01-4570-16	01-4570-16
17	Primary Diaphragm	2	—	01-1010-55
18	Containment Diaphragm	2	N/A	01-1060-51
19	Inner Piston	2	01-3710-01	01-3710-01
20	Liquid Chamber	2	01-5000-16	01-5000-16
21	Inlet Manifold	1	01-5080-16	01-5080-16
22	Discharge Manifold	1	01-5020-16	01-5020-16
23	Ball Cage	2	01-5350-16	01-5350-16
24	Valve Seat (Top)	2	01-1140-16	01-1140-16
25	Valve Seat (Bottom)	2	01-1160-16	01-1160-16
26	Valve Ball	4	—	01-1080-55
27	Valve Seat O-Ring	6	—	01-1200-60-520
28	Outboard O-Ring	4	02-1200-60-500	02-1200-60-500
29	Large Clamp Band Assembly*	2	01-7300-03	01-7300-03
30	Large Carriage Bolt	4	01-6070-03	01-6070-03
31	Large Hex Nut	4	04-6400-03	04-6400-03
32	Small Clamp Band Assembly*	4	01-7100-03	01-7100-03
33	Small Clamp Band Bolt	8	01-6100-03	01-6100-03
	Small Hex Nut (not shown)	9	01-6400-03	01-6400-03
34	Muffler	1	01-3510-99	01-3510-99
35	Pipe Plug	1	01-7010-16	01-7010-16
36	Grounding Strap (Not shown)	1	00-8300-99	00-8300-99

*Actual clamp band different than pictured.

SECTION 8

ELASTOMERS FOR M1 CHAMP MODELS

MATERIAL	MANIFOLD O-RINGS (4)	VALVE BALLS (4)	VALVE SEATS (4)	VALVE SEAT O-RINGS (8)	DIAPHRAGMS (2)
Polyurethane	01-1300-50	01-1080-50	N/A	01-1200-50	01-1010-50
Buna N	01-1300-52	01-1080-52	N/A	01-1200-52	01-1010-52
Viton	N/A	01-1080-53	01-1120-53*	N/A	01-1010-53
Wil-Flex™	01-1300-58	01-1080-58	N/A	01-1200-58	01-1010-58
Saniflex	01-1300-56	01-1080-56	N/A	01-1200-56	01-1010-56
Teflon® PTFE	N/A	01-1080-55	01-1120-22-500	N/A	01-1010-55
PVDF	N/A	N/A	01-1120-21-500	N/A	N/A
Teflon® Encapsulated/ Silicon	01-1300-59-500	N/A	N/A	00-1230-59	N/A
Teflon® Encapsulated/ Viton	01-1300-60-500	N/A	N/A	00-1230-60	N/A

*Must be used with part number 01-5010-21-500.

ELASTOMERS FOR M1 METAL MODELS

MATERIAL	MANIFOLD O-RINGS (4)	VALVE BALLS (4)	VALVE SEATS (4)	VALVE SEAT O-RINGS (8)	DIAPHRAGMS (2)
Polyurethane	01-1300-50	01-1080-50	N/A	01-1200-50	01-1010-50
Buna N	01-1300-52	01-1080-52	N/A	01-1200-52	01-1010-52
Viton	N/A	01-1080-53	N/A	N/A	01-1010-53
Wil-Flex™	01-1300-58	01-1080-58	N/A	01-1200-58	01-1010-58
Saniflex	01-1300-56	01-1080-56	N/A	01-1200-56	01-1010-56
Teflon® PTFE	01-1300-55	01-1080-55	N/A	01-1200-55	01-1010-55
Stainless Steel	N/A	N/A	01-1120-03	N/A	N/A
Aluminum	N/A	N/A	01-1120-01	N/A	N/A

TORQUE SPECIFICATIONS FOR MODEL M1 (PLASTIC AND METAL)

ITEM #	DESCRIPTION OF PART	REQUIRED TORQUE
1	Air Valve, Standard & Solenoid	20 in.-lbs. [2.3 m-N]
2	Outer Piston	75 in.-lbs. [8.7 m-N]
3	Small Clamp Band	15 in.-lbs. [1.7 m-N]
4	Large Clamp Band (Rubber-Fitted)	65 in.-lbs. [7.4 m-N]
5	Large Clamp Band (Teflon-Fitted)	85 in.-lbs. [9.6 m-N]
6	Vertical Bolts (Metal Pump)	125 in.-lbs. [14.1 m-N]
7	Vertical Bolts (Kynar [rubber only], all poly)	50 in.-lbs. [5.6 m-N]
8	Vertical Bolts (Kynar and PFA — Teflon-Fitted)	25 in.-lbs. [2.8 m-N]
9	Air Valve (All PFA pumps)	30 in.-lbs. [3.4 m-N]
10	Small Clamp Bands (All PFA pumps)	30 in.-lbs. [3.4 m-N]
11	Air Valve — Lube-Free	10 in.-lbs. [1.1 m-N]

MAINTENANCE RECORD

DATE	SERVICE RENDERED	SERVICED BY

WILDEN'S SPECIALTY PUMPS

M8 STALLION

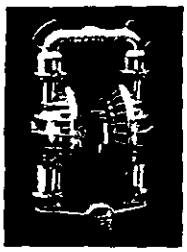

2" inlet. Solids clearance up to ¾". Built to handle rough treatment: cast-in handles for easy portability, reinforced shaft and high impact polyurethane base.

SOLENOID-OPERATED

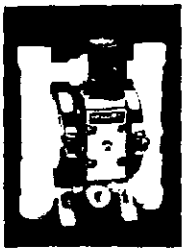

Each stroke of this pump is controlled by electrical impulses making it ideal for batching, metering, and other electrically controlled dispensing applications.

M1 ULTRAPURE III

½" inlet. Teflon® PFA construction, temperatures to 300°F. Up to 14 GPM. Materials of construction have been selected to reduce contamination while providing a safer work environment.

FOOD PROCESSING

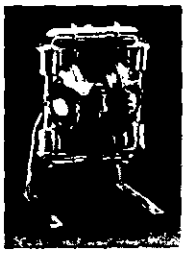

Constructed with FDA approved materials: bead blasted 316 Stainless Steel construction with tri-clamp porting and wing-nut fasteners. Foodmaster™ (pictured) is USDA accepted.

THE WILDEN PUMP LINE

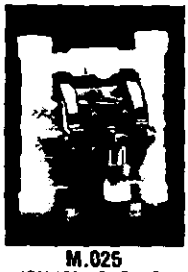

M.025 (CHAMP SERIES)

MODEL M.025

- ¼" Inlet
- Up To 4.5 GPM
- 125 Max. PSIG
- Max. Particle Size: ¼"

Materials of Construction:
PVDF, Acetal, Polypropylene, Carbon-filled Acetal

Suction Lift:		
(Rubber)	Dry:	4.5'
	Wet:	25'
(Teflon®)	Dry:	4.5'
	Wet:	25'

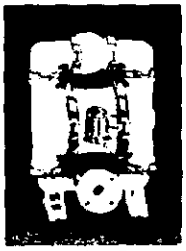

M4 PLASTIC (CHAMP SERIES)

MODEL M4

- 1½" Inlet
- Up To 73 GPM
- 125 Max. PSIG
- Max. Particle Size: ⅜"

Materials of Construction:
Aluminum, Cast Iron, Stainless Steel, Hastelloy, Polypropylene, PVDF, Teflon® PFA

Suction Lift:	Plastic	Metal
(Rubber)	Dry: 17'	21'
	Wet: 25'	25'
(Teflon®)	Dry: 7'	7'
	Wet: 25'	25'

M4 METAL

LUBE-FREE AVAILABLE

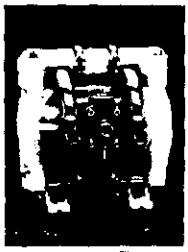

M1 PLASTIC (CHAMP SERIES)

MODEL M1

- ½" Inlet
- Up To 14 GPM
- 110 Max. PSIG
- Max. Particle Size: ⅛"

Materials of Construction:
Polypropylene, PVDF, Teflon®, Graphite-filled Polypropylene, Aluminum, Stainless Steel

Suction Lift:	Plastic	Metal
(Rubber)	Dry: 10'	10'
	Wet: 25'	25'
(Teflon®)	Dry: 7'	8'
	Wet: 25'	25'

M1 METAL

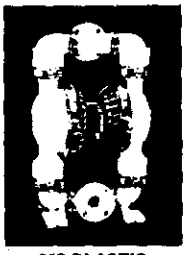

M8 PLASTIC (CHAMP SERIES)

MODEL M8

- 2" Inlet
- Up To 155 GPM
- 125 Max. PSIG
- Max. Particle Size: ¼"

Materials of Construction:
Aluminum, Cast Iron, Stainless Steel, Hastelloy, PVDF, Polypropylene

Suction Lift:	Plastic	Metal
(Rubber)	Dry: 17'	20'
	Wet: 25'	25'
(Teflon®)	Dry: 8'	8'
	Wet: 25'	25'

M8 METAL

M2R PLASTIC (CHAMP SERIES)

MODEL M2

- 1" Inlet
- Up To 37 GPM
- 125 Max. PSIG
- Max. Particle Size: ¼"

Materials of Construction:
Aluminum, Stainless Steel, Hastelloy, Polypropylene, PVDF

Suction Lift:	Plastic	Metal
(Rubber)	Dry: 17'	19'
	Wet: 25'	25'
(Teflon®)	Dry: 7'	8'
	Wet: 25'	25'

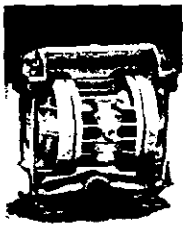

M2 METAL

M15

MODEL M15

- 3" Inlet
- Up To 230 GPM
- 125 Max. PSIG
- Max. Particle Size: ¾"

Materials of Construction:
Aluminum, Cast Iron, Stainless Steel, Hastelloy

Suction Lift:	
(Rubber)	Dry: 17'
	Wet: 25'
(Teflon®)	Dry: 14'
	Wet: 25'

For further information contact your local Wilden distributor:

M20

MODEL M20

- 4" Inlet
- Up To 304 GPM
- 125 Max. PSIG
- Max. Particle Size: 1¾"

Materials of Construction:
Cast Iron

Suction Lift:
Dry: 13'
Wet: 25'

WILDEN PUMP & ENGINEERING COMPANY
22069 Van Buren St., Grand Terrace, CA 92313-5651
(909) 422-1730 • FAX (909) 783-3440

INSTRUCTIONS FOR THE INSTALLATION AND USE OF ASHCROFT® BI-METAL DIAL THERMOMETERS

GENERAL

In removing the thermometer out of the packing box, handle it by the case or case outlet. Avoid handling it by the stem.

INSTALLATION OF THERMOMETERS

The thermometer should be mounted at any convenient location where it will be subjected to the average temperature variations to be indicated.

Avoid bending the stem as this will cause misalignment of the internal parts, resulting in undue frictional errors.

To tighten the thermometer to the apparatus, use a wrench applied to the hexagon head of the threaded connection located just outside of the case.

INSTALLATION

Locate the stem so that at least the last two inches will be subjected to the average temperature to be measured.

Exposing the stem to a temperature in excess of the highest dial reading should be avoided.

The thermometer is normally provided with a threaded connection. To tighten the thermometer to the apparatus or into the well, use an open-end wrench applied to the hexagon head of the threaded connection. Turn until reasonably tight, then tighten still further in the same manner as a pipe elbow or similar pipe fitting until the scale is in the desired position for reading. DO NOT TIGHTEN BY TURNING THE THERMOMETER CASE. *Install the thermometer so that the maximum case temperature is kept below 200°F at all times.*

When a thermometer is equipped with a well, the well should be installed onto the apparatus first. The stem of the thermometer should then be coated with a heat conducting medium (a mixture of glycerine and graphite or vaseline or any other heavy lubricant may be used), after which the thermometer stem is inserted, and tightened into the well.

CAUTION: Thermowells should be used on all pressurized applications, to protect the thermometer stem from corrosion or physical damage, and to facilitate removal of thermometer without disturbing the process.

TESTING

Ashcroft Bi-metal Dial Thermometers are carefully calibrated at the factory and under most operating conditions will retain their accuracy indefinitely. However, as in the case of all instruments, it is well to make periodic checks for accuracy against known standards.

ADJUSTMENT

If it is necessary to make an adjustment to the thermometer, proceed as follows:

On thermometers fitted with an "External Adjustment"—Use a small wrench, small screwdriver or a coin to turn the slotted hexagon head in the back of the case until the pointer indicates the proper temperature on the dial.

MAINTENANCE OF DIAL THERMOMETERS

Aside from occasional testing, little or no maintenance is required.

Be sure that the gasketed glass cover is on the case at all times, as moisture and dirt inside the case will eventually cause the thermometer to lose its accuracy. (See caution note below).

If the thermometer is used for measuring the temperature of a material that may harden and build up an insulating layer on the stem, the thermometer should be removed from the apparatus occasionally, and the stem cleaned. Observe this precaution to insure the sensitivity of the instrument.

CAUTION: Bi-metal Thermometers operating below freezing must have a perfectly tight case to prevent entrance of moisture which eventually will condense and freeze inside the stem. This condition shows up as a failure of the thermometer to read accurately below 32°F or 0°C. For this reason it is important to avoid damage to the glass front, while the stem temperature is at freezing or below.

Thermometers fitted with the non-removable ring are hermetically sealed in a dry atmosphere at the factory and require no further maintenance.

DRESSER INDUSTRIES

INSTRUMENT DIVISION
DRESSER INDUSTRIES INC.
STRATFORD, CONNECTICUT 06497

Form No. 250-999-J

Printed in U.S.A.

INSTRUCTIONS FOR THE SELECTION, INSTALLATION AND USE OF THE TYPE 91 SERIES ADAPTER SET

The Type 91 series adapter sets were designed to provide a simple means of installing a Bi-metal Dial Thermometer into an existing Industrial Glass Thermometer well.

The adapter set consists of:

1. A metal liner and spring assembly.
2. An adapter nut.
3. A small supply of heat conducting medium.

METHOD OF SELECTING THE SET

The adapter sets are available in four different sizes, to cover various depths of wells. The "Selection Chart" shows the adapter set number and the Bi-metal Dial Thermometer stem length to use for any well depth from 3⅝" up to 25⅛".

To select the proper adapter set and Bi-metal Dial Thermometer stem length, measure first the well depth by inserting a pencil, or any small diameter rod or stiff wire until it reaches the bottom. (See Figure 1). Be sure the rod does not hang up on any shoulder inside the well. Using your thumb as an index, withdraw the rod and measure the distance from the end of the rod to the index point. (See Figure 2).

Then use the chart to select the adapter set and the Bi-metal Dial Thermometer stem length to fit the well.

Note that one stem length of thermometer covers several different well depths by using the correct adapter set.

For example, a thermometer with a 9" long stem can be used for all well depths between 7⅛" and 10⅛", by choosing the correct adapter set.

The liner is tapped with a 5/16"—18 machine thread so it can be removed from the well if desired.

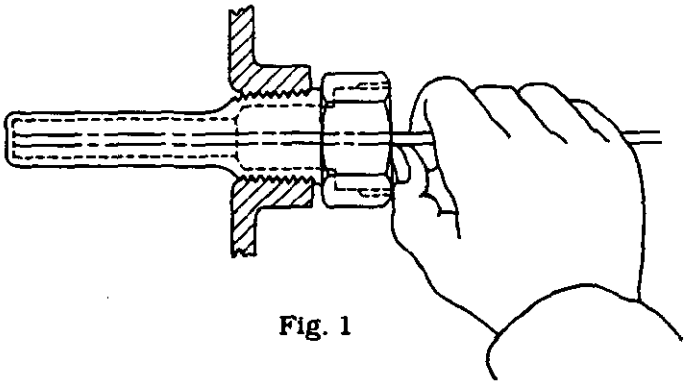

Fig. 1

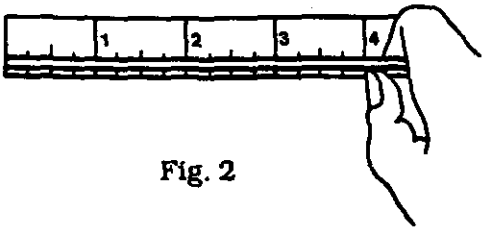

Fig. 2

INSTALLATION

Assemble the adapter nut into the well and tighten securely. (See Figure 3).

Before installing the Bi-metal Dial Thermometer into the adapter and well, coat the lower 3" section of the thermometer stem with a layer of heat conducting medium. This will improve the temperature response of the thermometer.

The metal liner is then slipped over the end of the thermometer stem and a coating of heat conducting medium is applied to the outside wall of the liner.

The thermometer and liner are then inserted into the well and tightened in position. Do not tighten more than is necessary to prevent the thermometer from turning.

Where service temperatures exceed 350°F the heat conducting medium may smoke when first subjected to a high temperature. This is caused by the vehicle, in the heat conducting medium, vaporizing and leaving the dry solids behind. This should not be cause for alarm. The dry solids will act equally well as a heat conducting medium for temperatures up to 1000°F.

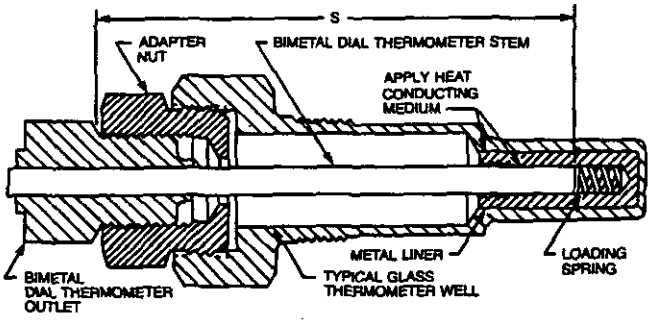

Fig. 3

SELECTION CHART

WELL DEPTH IN INCHES	ADAPTER SET NO	STEM LENGTH "S"
3		4
4	91B	
5	91A	
6	91C	6
7	91B	
8	91A	
9	91D	9
10	91C	
11	91B	
12	91A	
10		12
11	91D	
12	91C	
13	91B	
14	91A	
15	91D	15
16	91C	
17	91B	
18	91A	
18		18
19	91D	
20	91C	
21	91B	
22	91A	
23	91D	24
24	91C	
25	91B	
	91A	

INSTALLATION INFORMATION

F-400N, F-500, F-500E & F-500A

GENERAL

- Always use Teflon tape or a similar sealing material on pipe threads when making connections. Never use oil base pipe dopes or solvents.
- Remember you are installing an instrument and fittings should be tightened only enough to prevent leaking. Over tightening may result in damage to the meter.
- Never hold the meter with pliers or like tools during installation.
- Install the meter in an exactly vertical plane to obtain the best possible reading.
- Whatever the installation circumstances, meters should never be allowed to support the weight of related pipe or tubing.
- When installing F-400N series meters be certain of proper pipe alignment, misalignment will put excessive stress on the meter.
- F-500 series meters are designed for panel mounting. Two #8-32 threaded mounting holes are provided on the rear of the meter body for this purpose.

MAINTENANCE

The "Exploded View" drawings illustrate assembly of the F-400N and F-500 series meters. If your flowmeter needs to be cleaned refer to these and the "Float Facsimile" drawing when reassembling the unit. The tapered tube may be cleaned with a soft bottle brush. Use a MILD soap and water solution for cleaning purposes.

F-400N

DIMENSIONS	A	B
F-40250	8-1/4"	1-1/4"
F-40375	8-1/4"	1-1/4"
F-40376	8-1/4"	1-1/4"
F-40500	8-1/4"	1-1/4"
F-40750	11"	1-3/4"
F-41017	11"	1-3/4"
F-41000	11"	1-3/4"

F-400N

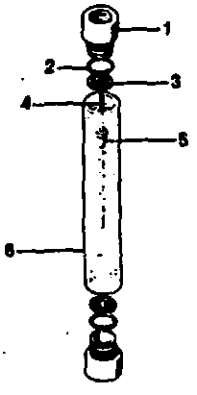

PARTS

1. Adapters (2)
2. "O" Ring Seal (2)
3. Wire Holder (2)
4. Guide Wire (1)
5. Float (1)
6. Meter Body (1)

EXPLODED VIEW

Maximum temperature up to 150°F† or pressures up to 200 psi.†

F-500E

DIMENSIONS	A	B
F-501E	3"	1-1/4"
F-502E	3"	1-1/4"
F-503E	3"	1-1/4"
F-504E	3"	1-1/4"
F-505E	3"	1-1/4"
F-506E	3"	1-1/4"
F-507E	3"	1-1/4"
F-508E	3"	1-1/4"
F-509E	3"	1-1/4"
F-510E	3"	1-1/4"
F-511E	3"	1-1/4"
F-512E	3"	1-1/4"
F-513E	3"	1-1/4"
F-514E	3"	1-1/4"

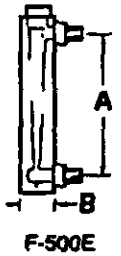

F-500E

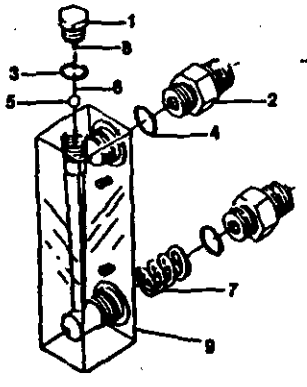

PARTS

1. Cap (1)
2. Adapter (2)
3. "O" Ring Seal Cap (1)
4. "O" Ring Seal Adapter (2)
5. Float (1)
6. Guide Wire 505 E - 510E (1)
7. Spring (1) Except 505E - 510E
8. Float Stop 505E (2)
9. Meter Body (1)

EXPLODED VIEW

Maximum temperature up to 150°F† or pressures up to 120 psi.†

F-500

DIMENSIONS	A	B
F-50250L	5-5/8"	1-1/8"
F-50375LN	6-1/2"	1-1/2"
F-50376LN	6-1/2"	1-1/2"
F-50500LN	6-1/2"	1-1/2"
F-50750L	6-1/2"	1-3/4"
F-51000L	8"	2"

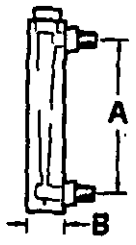

F-500

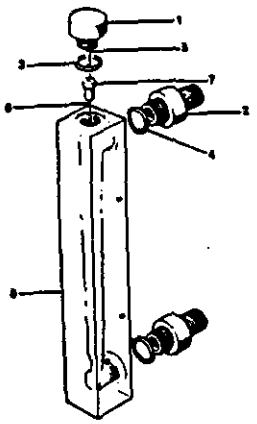

PARTS

1. Cap (1)
2. Adapter (2)
3. "O" Ring Seal Cap (1)
4. "O" Ring Seal Adapter (2)
5. Float Stop (2)
6. Guide Wire (1)
7. Float (1)
8. Meter Body (1)

EXPLODED VIEW

Maximum temperature up to 150°F† or pressures to 120 psi.†

F-500A

DIMENSIONS	A	B	C
F-50250LA	6"	1-1/8"	2-1/4"
F-50375LNA	6-1/2"	1-1/2"	3"
F-50376LNA	6-1/2"	1-1/2"	3"
F-50500LNA	6-1/2"	1-1/2"	3"

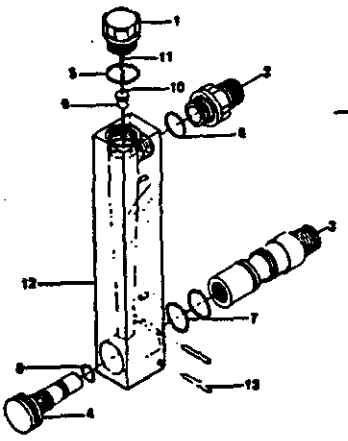

EXPLODED VIEW

PARTS

1. Cap (1)
2. Adapter Top (1)
3. *Valve Body (1)*
4. Needle Valve (1)
5. "O" Ring Seal Cap (1)
6. "O" Ring Seal Top Adapter (1)
7. "O" Ring Seal Valve Body (2)
8. "O" Ring Seal Needle Valve (2) except F-50250 (1)
9. Float (1)
10. Guide Wire (1)
11. Float Stop (1)
12. Meter Body (1)
13. Steel Pin All 500 A (1)

Maximum temperature up to 120°F† or pressures up to 120 psi.†

FLOAT FACSIMILE

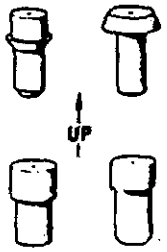

BLUE WHITE®
14931 Chestnut St., Westminster, CA
714/893-8529

†PRESSURE AND TEMPERATURE

Pressure and temperature limits are inversely proportional. At the maximum suggested pressure the temperature should approach 70°F, at the maximum suggested temperature the pressure should approach zero psi. We cannot guarantee our flowmeters will not be damaged either at or below the suggested limits simply because of many factors which influence meter integrity; stress resulting from meter misalignment, damage due to excessive vibration and deterioration caused by contact with *certain chemicals to name a few.* These situations and others tend to reduce the strength of the materials from which the meters were manufactured.

REV (8-91)

F-400N/F-500 (4-87)
80000-047

INSTALLATION INSTRUCTIONS

C A U T I O N

FOLLOW INSTRUCTIONS TO AVOID FAILURE

BLUE WHITE IND.
Westminster, CA
Tel 714/893-8529

THANK YOU for purchasing BLUE WHITE FLOWMETERS. . . . . .

PLEASE BE AWARE; COMPARED TO OTHER PLUMBING PARTS, CLEAR PLASTIC FLOWMETERS WITH WEIGHTED FLOATS ARE SOMEWHAT DELICATE AND MUST BE DEALT WITH CAREFULLY. COMPLY WITH THESE F.M. INSTRUCTIONS.

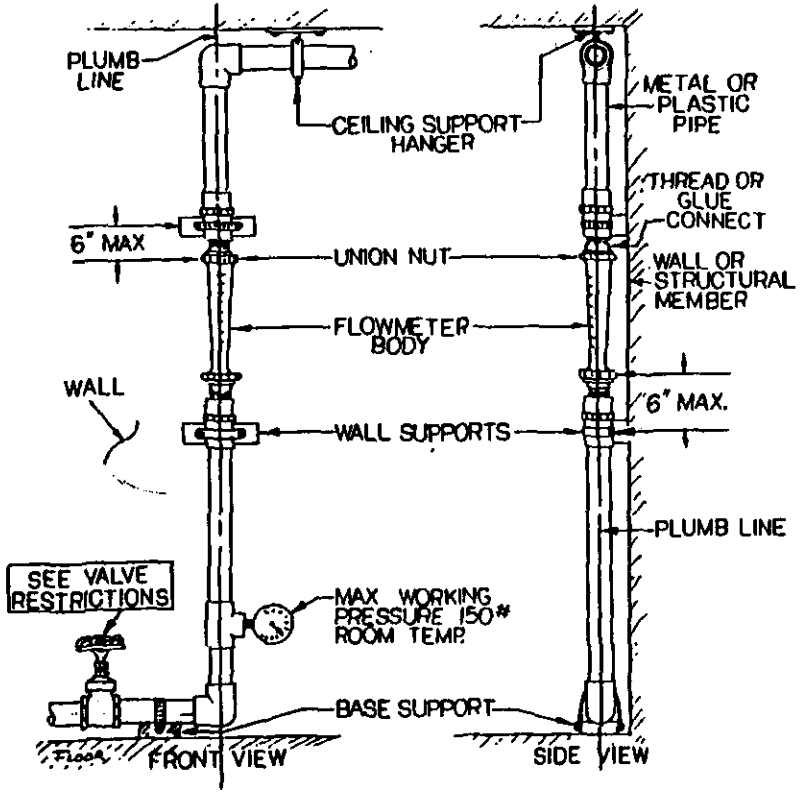

1. Finish piping to be plumb and true.
2. Polysulfone and other exotic plastics cannot tolerate P.V.C. glue and pipe dope. Even the fumes can cause crazing. . . . .
3. Use teflon tape for threaded joints.
4. Make up assembly and fit pipes, then: remove F.M. to glue joints. Replace F.M. after glue fumes are vented out.
5. Meter cannot support attached pipes.
6. Excessive vibration may cause float to give poor readings or cause possible fracture.
7. Wall, floor and ceiling mounts to be carefully aligned and sturdy. A support should be at top and bottom of meter. See drawing.
8. Hand tighten union nuts. *No wrenches.*
9. *Protect meter from ultra violet (UV) rays.*
10. VALVES-avoid a system that will impose a sudden burst of flow to the meter. Such a burst will cause the float to impact the guide assembly with destructive force. Magnet, solenoid, or other quick opening valves cannot be used unless meter is protected against sudden burst of flow.
11. Failure to comply **VOIDS WARRANTY!**

NOTE: BE SURE FLUID OR GAS BEING METERED IS COMPATABLE WITH FLOWMETER. . . . . TESTED WITH WATER ONLY. . . . . .

MULTI-JET WATER METERS
5/8", 3/4" and 1"

MASTER METER

5/8" x 3/4"

5/8" x 3/4" Frost Proof

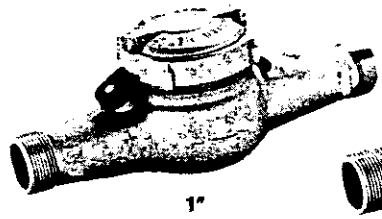

1"

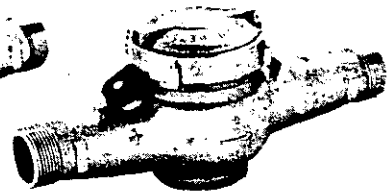

1" Frost Proof

TECHNICAL SPECIFICATIONS

AWWA Specification — Meets or exceeds all sections of AWWA Standard C-708, most recent revision.

Design/Operation — Velocity-type meter. Water, evenly distributed by multiple jet nozzles, flows past an impeller in the measuring chamber, creating an impeller velocity directly proportional to water velocity. The meter's register integrates velocity into totalized flow.

Main Case — Bronze main case of 81 percent copper composition, with externally threaded ends. Bronze register retaining rings and lids are standard. Main case design incorporates wrench pads to aid installation.

Measuring Chamber — The measuring chamber housing and measurement element are constructed of a durable synthetic polymer, and can be easily removed from the main case without removal of the meter from the line. The chamber housing is constructed in two parts, to allow access to the impeller.

Measurement surfaces are not wear surfaces, providing sustained accuracy despite the presence in the water of entrained solids. A long-life, sapphire rotor bearing serves as a wear surface, with balanced water flows reducing bearing wear.

Magnetic Drive — A reliable, direct magnetic drive provides linkage between measurement element and register. No intermediate gearing is required; no gearing is exposed to water.

Register — Standard direct read, DIALOG™ Automated Meter Reading System, and Electrical Contact Registers are available. A six wheel odometer is standard.

Register Sealing — Direct read and DIALOG registers are permanently sealed, with a tempered glass lens, stainless steel base and wrap-around gasket to prevent intrusion of dirt or moisture.

Registration Units — Registration available in gallons, cubic feet, or cubic metres.

Test Circle — Large center sweep hand with ten clearly indicated gradations per minimum registration unit.

Low Flow/Leak Indicator — Center mounted indicator, with high sensitivity, resulting from direct measurement element linkage.

Strainer — A rugged, 360-degree polymer strainer protects the critical measuring element from damage.

Frost Protection — Patented, pressure-activated frost plug is expelled from the meter by the expansion of freezing water. The frost plug can be replaced without meter removal or disassembly.

Adjusting Port — Sealed after factory calibration. Port is accessible for utility recalibration, to compensate for inaccuracy in older meters without parts replacement.

Tamper Detection — The Master Meter Multi-jet adjusting port is sealed to prevent tampering and provides a visual indication of tampering attempts.

Meter Operating Characteristics and Dimensions

Characteristic/Dimension	5/8" x 1/2"	5/8" x 3/4"	3/4" SL	3/4"	3/4" x 1"	1"
Flow Rating (gpm)	20	25	30	30	30	50
Continuous Flow (gpm)	10	15	20	20	20	30
Normal Flow Range (gpm)	1 – 20	1 – 20	2 – 30	2 – 30	2 – 30	3 – 50
Low Flow (gpm)	1/4	1/4	1/2	1/2	1/2	3/4
Maximum Working Pressure (psi)	150	150	150	150	150	150
Maximum Working Temperature (degrees F)	122°	122°	122°	122°	122°	122°
Length	7-1/2"	7-1/2"	7-1/2"	9"	9"	10-3/4"
Height (standard register with lid)	4-1/8"	4-1/8"	4-1/8"	4-1/8"	4-1/8"	3-7/8"
Height, Frost Proof (standard register with lid)	4-3/8"	4-3/8"	4-3/8"	NA	NA	4-3/8"
Height (with DIALOG register)	4-7/8"	4-7/8"	4-7/8"	4-7/8"	4-7/8"	4-5/8"
Width	3-3/4"	3-3/4"	3-3/4"	3-3/4"	3-3/4"	4-1/8"
Width (with side mounted DIALOG Electronics)	4-1/2"	4-1/2"	4-1/2"	4-1/2"	4-1/2"	4-1/2"
Weight (lbs.)	3-3/4	4	4	4-1/4	4-1/4	5
Packed To Carton	12	12	12	8	8	8
Carton Weight (lbs.)	46	50	50	35	35	41

Head Loss Curves

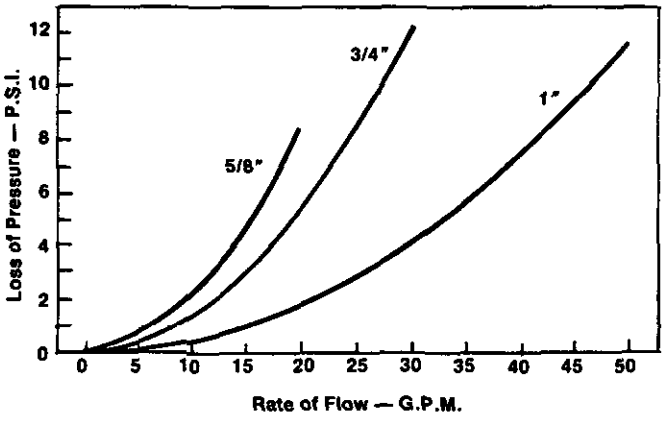

Accuracy Curve

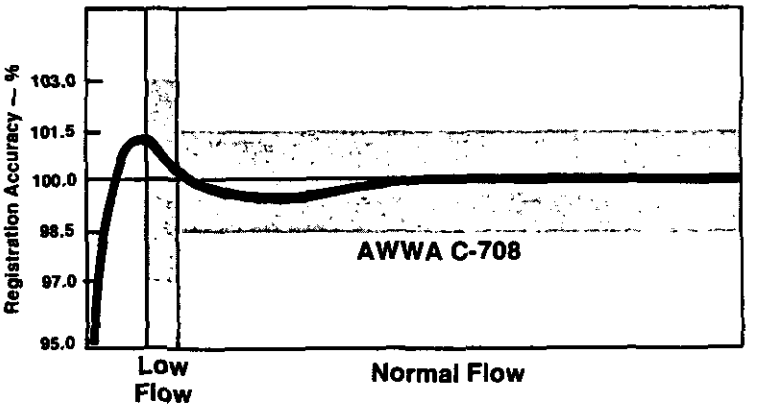

Distributed by:

1001 McKESSON DRIVE
LONGVIEW, TEXAS 75604
903-297-0635
800-765-6518
FAX 903-297-5963

MASTER METER

Installation & Operation

ERDCO direct reading flowmeters provide simple and reliable flow rate measurement. These rugged variable area meters work well in a wide variety of applications. Measurement is generally linear over 80% of the range.

The indicating pointer is part of the vane and directly visible through the sight window of the See-Flo® indicator/meter. Compare the vane position with the externally mounted scale to determine flow rate. The sight window may also be used to observe turbulence, cleanliness and other fluid conditions.

The Armor-Flo meter utilizes the same simple design with the added benefit of a flow isolated housing. High intensity magnets couple the vane and indicator without mechanical linkage and dynamic seals. Temporary decoupling of the vane and indicator may occur due to abrupt changes in flow rate. This condition will self correct as the indicator moves through the flow range.

Installation

Your ERDCO flowmeter is complete and ready to use. It has been individually calibrated and tested in accordance with your order. Orient the face of the meter in a vertical plane. Piping must be the same pipe size as the flowmeter. Install in a full pipe system noting the inlet and outlet markings. For maximum accuracy, ten pipe diameters of straight pipe on the upstream side and five pipe diameters of straight pipe on the downstream side of the meter are recommended. Locate valves and other restrictions downstream of the flowmeter where possible.

Do not exceed the maximum operating parameters (pressure, temperature) as stated on the nameplate of the flowmeter. Accuracy will be affected if fluid or operating conditions vary from those specified.

Limit Switches

Mount the flowmeter in its specified orientation. Contacts are rated 0.25 amepere at 120 (single pole, double throw). Reed switches can be set for High or Low flow actuation depending on option selected.

To adjust set points:

1. Remove cover retaining ring and window.
2. Locate the indicator at the desired trip point, and temporarily hold it in place. Do not bend the indicator arm.
3. Monitor switch continuity (light, horn, ohmmeter, etc.) while sliding the switch along the switch guide until the switch contacts open or close.
4. Secure switch and release indicator arm.
5. If a second switch is provided, repeat Steps 2 through 4 for the second switch.
6. Position window on O-ring for good seal. Reinstall retaining ring.

Signal Outputs

Please refer to the detailed Instruction Manual furnished.

Service

Factory repair and recalibration services are available. For more information or assistance call 708-328-0550. (Fax 708-328-3535)

ERDCO®

ERDCO Engineering Corporation
Box 6318, 721 Custer Avenue
Evanston, IL 60202-6318
USA
Form FM 0690

HYDRO-KOTE™

HARD WATER SCALING

Water is the universal solvent. It dissolves everything it comes in contact with, whether it is as "hard" as iron or as "soft" as acid in the air (acid rain). Because of this, the water we use is usually saturated with many dissolved minerals. Mineral saturated water is water that has been in contact with minerals for a prolonged period of time, usually under pressure, and has dissolved as much minerals as it can hold in solution. The amount of dissolved minerals depends on the water source (ground, surface, or municipal supply) and the water chemistry such as pH, oxygen content, temperature, along with other factors. Any change made to the water chemistry will affect the water's ability to hold these minerals in solution.

When water is heated, its ability to hold calcium carbonate (limescale or hardness) in solution is decreased. This causes limescale deposits in hot water boilers and other water fed equipment. *A pressure change, such as water run through an air stripper, will cause calcium carbonate to come out of solution and form hard water scale deposits.* Water which has been treated in municipal water systems is subject to the same conditions.

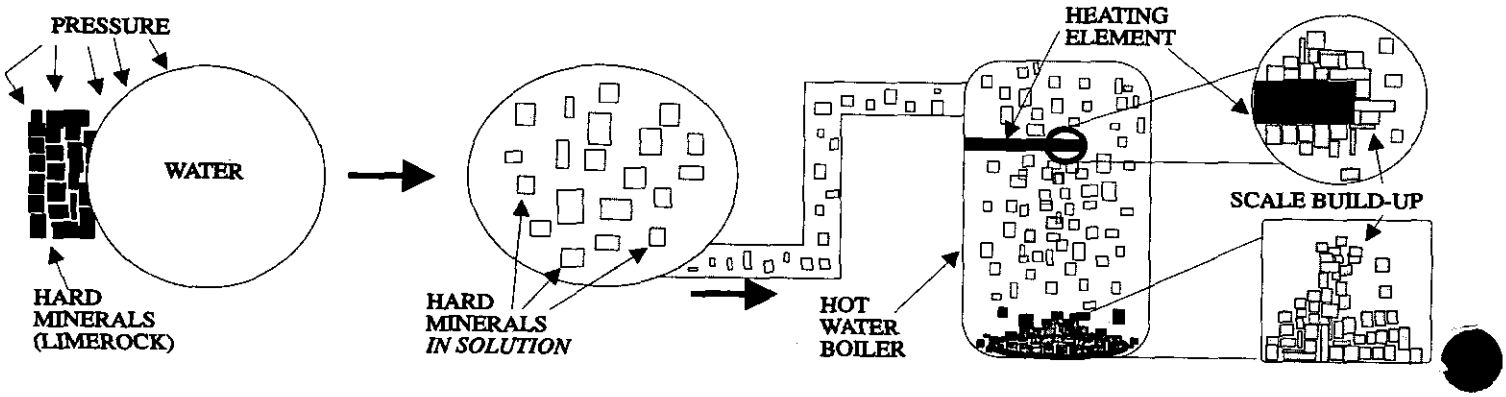

Removing scale causing minerals is usually accomplished by water softening and reverse osmosis. This type of treatment however is not always cost effective since the up-front costs are high and the equipment must be correctly applied, installed, set up, and maintained. Sequestering (binding up) the dissolved scale causing minerals has proven to be an effective treatment. The sequestering agent, HYDRO-KOTE™, is added to the water which binds with the scale causing minerals and keeps them in solution, thus preventing hard water scale.

HYDRO-KOTE™ / ANTI-SCALE - ANTI-CORROSION

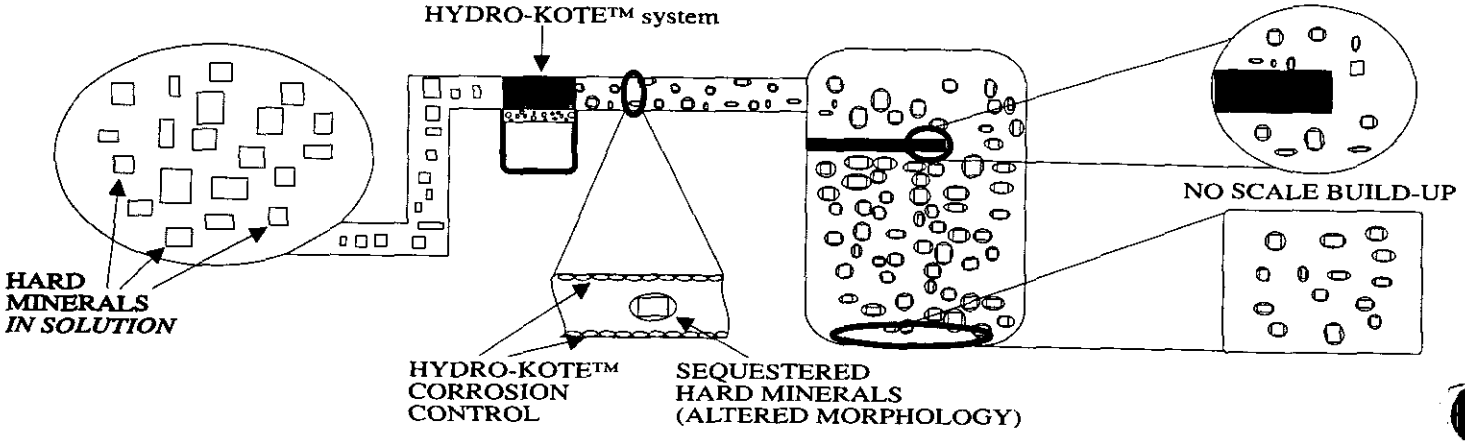

HYDRO-KOTE™ - The Proven Solution

HYDRO-KOTE™ is a unique composition blended to exhibit superior limescale (calcium carbonate) prevention and corrosion control. It is superior in the treatment of scaling caused by hard water minerals, plus controls fouling caused by the precipitation of iron and manganese. **HYDRO-KOTE™** utilizes the same principals of preventing scale build-up and corrosion control as polyphosphates. However, this is accomplished without any of the problems which often plague the use of common polyphosphates.

HYDRO-KOTE™ is utilized as a solid block in cartridge form, exposing a predetermined amount of surface area, from which accurate dissolution rates can be predicted. The system feeds a controlled, consistent amount of **HYDRO-KOTE™** into the water stream by way of a specially designed media delivery head (MDH), which diverts water into the cartridge sump, dissolving a predetermined amount of **HYDRO-KOTE™**. This system allows accurate feed rates and predictable treatment volumes unlike standard polyphosphate treatments. The media delivery heads are designed to treat water flows from as low as .1 gpm to as high as 50 gpm.

HOT WATER APPLICATIONS - The most important advantage in using **HYDRO-KOTE™** instead of standard polyphosphates is that unlike polyphosphates, **HYDRO-KOTE™** is not affected by high temperatures or pressure drops, retaining its full ability to alter the morphology (shape) of scale causing minerals. This provides the greatest amount of scale prevention available. Moreover, **HYDRO-KOTE™** will remove existing scale once formed in pipes and water fed equipment, plus provide corrosion control in high temperature

When compared to the cost of standard water softening equipment, **HYDRO-KOTE™** provides effective corrosion control (which softeners aggravate) and scale prevention, at a fraction of the cost and maintenance. Since the **HYDRO-KOTE™** systems work on water volume, not time, there is no waste with its use. When it has dissolved, you simply replace it. A simple glance at the clear or translucent housing lets one know when replacement is needed. **HYDRO-KOTE™** systems require no electricity, maintenance, or guess work.

HYDRO-KOTE™ WORKS IN THREE UNIQUE WAYS

1) It acts as a scale inhibitor by distorting the almost perfect cube shape of calcium carbonate as it precipitates out of solution. By distorting the uniform shape, it will not allow the calcium carbonate to build up (deposit) on itself. It will also over time remove existing scale in the system.
2) It is a sequestrant to iron and manganese in that it prevents these minerals from forming oxides (rust) and precipitating out of solution, thus eliminating the red & black staining caused by iron and manganese.
3) It combines with the calcium carbonate in the water forming a protective film on the inside of pipes and water fed equipment which acts as a deterrent to corrosion and scale. This microfilm does not increase in thickness as it is continually washed off and replaced.

HYDRO-KOTE™ eliminates the need for acid-based liquids typically used for the removal of scale build-up. Acid based products actually etch the steel surfaces they come in contact with thus creating a "scale friendly" surface. The use of acid-based products requires equipment down-time and labor, increasing cost while decreasing production. Acid based products are not only hazardous, they require much more storage space.

INNOVATIVE SOLUTIONS TO WATER PROBLEMS

HK-40

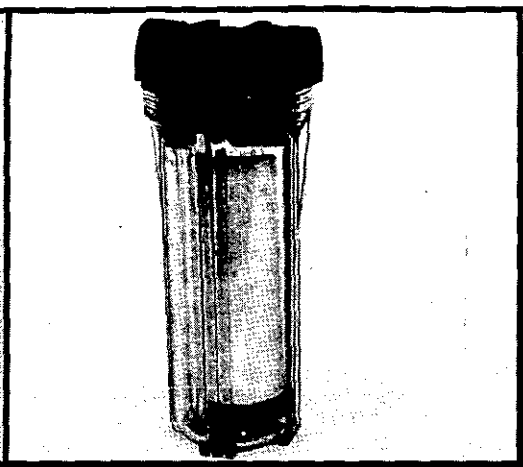

HK-80

HK-500

HYDRO-KOTE™

SYSTEM SPECIFICATIONS

SWMU-9 Application

UNIT	WATER FLOW GPM	WATER VOLUME TREATED	LINE SIZE	MAX. PRES. TEMP	SHIPPING DIMENSION	SHIP WEIGHT	REPLACEMENT CARTRIDGES	SPECIFIC APPLICATIONS
HK-40	1-20	40,000 gal	3/4" 3/8" 1/4"	125 psi 85° F	5¼x5¼x7½	4 lbs.	HK-R40	Low to moderate flow applications/ .5 to 5 gpm continuos flow rates.
HK-80	5-20	80,000 gal.	3/4"	125 psi 85° F	5¼x5¼x12	6 lbs	HK-R80	Moderate flow rate applications / 5 to 10 gpm continuos flow rates.
HK-500	7.5 MIN. FLOW	500,000 gal.	1" 1½"	80 psi 80° F	7½x7½x15½	21 lbs	HK-R500	High flow rate applications / 10 gpm + continous flow rates.

CUSTOM DESIGNED SYSTEMS AVAILABLE UPON REQUEST

EQUIPMENT BENEFITING FROM USING HYDRO-KOTE™:

AIR STRIPPING TOWERS

BOILERS & COOLING TOWERS

ODOR CONTROL SYSTEMS

WATER FILTRATION EQUIPMENT

WET SCRUBBER SYSTEMS

REVERSE OSMOSIS MEMBRANES

HYDRO-KOTE™ contains no hazardous materials and is an environmentally safe product requiring no special handling, discharge, storage, or documentation. It is provided in a very stable brick form eliminating chance of spilling or leakage. Since no electricity is required, HYDRO-KOTE™ is ideal for field applications.

sfes SOUTHEASTERN FILTRATION & EQUIPMENT SYSTEMS

DISTRIBUTED BY:

SFES
P.O. Drawer 1068
CANTON, GA
30114
770-720-2800

Warning

Controllers, Pumps, Floats, and Electric Valves are possible electric shock hazards!

Pneumatic Recovery Pump Troubleshooting Checklist

Problem	Possible Cause	Solutions Sections
Pumps are not working.	1. The pumps are not receiving air.	A. Check the Control Panel for an alarm condition, if there are any alarm lights lit, the solenoid valve will be shut. B. Check the solenoid valve and make sure that it is receiving 24/110/240 volts from the controller. C. Check the main power light on the controller and make sure that it is lit. If this light is not lit check the fuse in the controller. Replace it if it has blown. D. Check the breaker for main controller power and make sure that it is not tripped. If the breaker has tripped, reset the breaker. Check the circuit breaker for the pump and make sure that it is not tripped. E. If the solenoid valve is definitely open, then check the discharge of the air compressor: 1. Check the ball valve on the tank outlet, the handle should be in-line with the pipe. 2. Check the regulator and make sure that it is set correctly. 3. Check air pressure at the well head.

Refer to the supplied pump technical manual for any problems not covered in this list.

UltraStrip Troubleshooting Checklist

Problem	Possible Cause	Solutions Sections
Blower will not start.	1. No electrical power.	A. Check the Off/On switch for the blower on the main controller, and make sure that it is not in the Off position. B. Check the main power light on the controller and make sure that it is lit. If this light is not lit: 1. Check the fuse in the controller. Replace it if it has blown. 2. Check the breaker for main controller power and make sure that it is not tripped. If the breaker has tripped, reset the breaker. C. Check the circuit breaker for the blower and make sure that it is not tripped. If the breaker has tripped, reset the breaker. D. Place the Off/On switch for the pump in the On position: 1. If the contactor for the blower pulls in, and the blower does not start, have a qualified electrician or a GeoPure technician check the power supply. 2. If the contactor does not pull in, notify GeoPure of the problem.
	2. Blower is frozen.	If the shaft of the blower cannot be rotated physically by hand, or if the shaft of the blower is binding, then please refer to the supplied blower maintenance manual for troubleshooting of mechanical problems.
Blower starts but will not stay running.	1. There is a low pressure condition at the discharge of the blower.	Check the integrity of the blower discharge hose. If the hose has blown off or has become loose it will need to be reattached and tightened.
	2. The amp overload on the motor starter for the blower is activating.	A. Check the amp overload indicator for the blower motor starter. Reset the amp overload device and proceed to step B. B. Place the Off/On switch for the blower in the Off position. Check the blower for ease of rotation. Refer to the enclosed blower operations manual if the blower does not rotate easily or binds. C. If the blower rotates freely check for a proper power supply for the blower. There may be insufficient voltage to run the blower.

Blower starts but will not stay running.	2. The amp overload on the motor starter for the blower is activating.	D. There may be damage to the blower motor, refer to the enclosed blower manual, and have a qualified electrician check the motor.
	3. The circuit breaker for the blower is being tripped.	A. Check the amp overload indicator for the blower motor starter. Reset the amp overload device and proceed to step B. B. Place the Off/On switch for the blower in the Off position. Check the blower for ease of rotation. Refer to the enclosed blower operations manual if the blower does not rotate easily or binds. C. If the blower rotates freely check for a proper power supply for the blower. There may be insufficient voltage to run the blower. D. There may be damage to the blower motor, refer to the enclosed blower manual, and have a qualified electrician check the motor.

Centrifugal Pump Troubleshooting Checklist

Problem	Possible Cause	Solutions Sections
Transfer pumps will not run.	1. No electrical power.	A. Check the Hand/Off/Auto switch for the pump on the main controller, and make sure that it is not in the Off position. B. Check the level in the sump and make sure that it is high enough to start the pump. C. Check the main power light on the controller and make sure that it is lit. If this light is not lit: 1. Check the fuse in the controller. Replace it if it has blown. 2. Check the breaker for main controller power and make sure that it is not tripped. If the breaker has tripped, reset the breaker. D. Check the circuit breaker for the pump and make sure that it is not tripped. E. If the breaker has tripped, reset the breaker. F. Place the Hand/Off/Auto switch for the pump in the Hand position: 1. If the pump starts see section G. 2. If the contactor for the pump pulls in, and the pump does not start, have a qualified electrician or a GeoPure technician check the power supply. 3. If the contactor does not pull in, notify GeoPure of the problem. G. If the level in the sump is high enough to run the pump, but the pump will not run with the switch in the Auto position, then check the level control system.
	2. Pump is frozen.	If the shaft of the pump cannot be rotated physically by hand, or if the shaft of the pump is binding, then please refer to the supplied pump maintenance manual for troubleshooting of mechanical problems.

Transfer pumps will not run.	3. The system high pressure switch is being activated.	A. Check for a closed valve, stuck check valve, or kinked hose in the discharge of the pump. B. Check the pressure drop across the Ag and carbon tanks. If there is an excessive pressure drop (greater than 20 PSI) across any of these tanks, this bank of is clogged and may need to be replace. Ags may be manually backwashed into the trickle filter. (See the manual backwash procedure in the *Start-up instructions.*) C. Check the system discharge flowpath, including the infiltration gallery, or injection well, and the backwash stop valve included in 10FGB2L systems. D. Disassemble and check the valves on the control stand for possible pluggage, clean or replace if necessary E. If the solenoid valve is not plugged check and make sure that it is the proper position for the current mode of operation.
	4. The stock centrifugal pump high pressure switch is improperly set.	Refer to the enclosed pump technical manual on instructions for changing the setting of the pressure switch. The pressure switch should be set to the maximum setting to effectively bypass the stock pressure switch.
Pump is running, but it is not pumping water.	1. Pump is not primed.	Prime the pump, by filling the casing completely with water, and restart the pump.
	2. Pump has a suction leak.	Check the suction piping for possible leaks. This includes checking: 1. The unions for tightness, and for proper placement of o-rings 2. Threaded fittings may need to be disassembled, and the threads retaped and doped. 3. Glued joints may also leak.
	3. Foot valve or inlet check valve is clogged.	A. Check the foot valve for scale deposits. If the foot valve is dirty or clogged clean or replace it. B. Check all valves on the pump suction for proper operation. If there is a bad or dirty check valve, clean or replace it.
	4. High back pressure	A. Check for a closed valve, stuck check valve, or kinked hose in the discharge of the pump.

Pump is running, but it is not pumping water.	4. High back pressure	B. Check the pressure drop across the Ag and carbon tanks. If there is an excessive pressure drop (greater than 20 PSI) across any of these tanks, this bank of is clogged and may need to be replace. Ags may be manually backwashed into the trickle filter. (See the manual backwash procedure in the Start-up instructions.) C. Check the system discharge flowpath, including the infiltration gallery, or injection well, and the backwash stop valve included in 10FGB2L systems.
	5. Pump casing and impeller is fouled.	A. If the shaft of the pump cannot be rotated physically by hand, or if the shaft of the pump is binding, then please refer to the supplied pump maintenance manual for troubleshooting of mechanical problems. B. If the shaft rotates freely, but the running pump cannot achieve the desired pressure, then the pump must be cleaned. The pump may be cleaned by pumping a solution of muratic acid through the system. However, for a thorough cleaning it is recommended that you disassemble the pump per the enclosed manual instructions.
Sump overflows because the pumps are not keeping up.	1. Pump casing and impeller is fouled.	A. If the shaft of the pump cannot be rotated physically by hand, or if the shaft of the pump is binding, then please refer to the supplied pump maintenance manual for troubleshooting of mechanical problems. B. If the shaft rotates freely, but the running pump cannot achieve the desired pressure, then the pump must be cleaned. The pump may be cleaned by pumping a solution of muratic acid through the system. However, for a thorough cleaning it is recommended that you disassemble the pump per the enclosed manual instructions. C. Check the foot valve for scale deposits. If the foot valve is dirty or clogged clean or replace it. D. Check all valves on the pump suction for proper operation. If there is a bad or dirty check valve, clean or replace it. E. Check for a closed valve, stuck check valve, or kinked hose in the discharge of the pump.

Sump overflows because the pumps are not keeping up.	1. Pump casing and impeller is fouled.	F. Check the pressure drop across the Ag and carbon tanks. If there is an excessive pressure drop (greater than 20 PSI) across any of these tanks, this bank of is clogged and may need to be replace. Ags may be manually backwashed into the trickle filter. (See the manual backwash procedure in the Start-up instructions.) G. Check the system discharge flowpath, including the infiltration gallery, or injection well, and the backwash stop valve included in 10FGB2L systems.
	2. Bad level probe or float.	A. Check to see if the probes are scaled or covered in slime. B. Check the float and make sure it has not flooded and that the mercury switch is working properly. C. Check for the continuity of each probe or float and make sure that it is operational.
	3. Influent flow rate to the sump is greater than the designed flow rate.	Reduce the influent rate of flow to designed specifications.
	4. Inlet or discharge valve is shut.	Open valve.
	5. High pressure.	A. Check for a closed valve, stuck check valve, or kinked hose in the discharge of the pump. B. Check the pressure drop across the Ag and carbon tanks. If there is an excessive pressure drop (greater than 20 PSI) across any of these tanks, this bank of is clogged and may need to be replace. Ags may be manually backwashed into the trickle filter. (See the manual backwash procedure in the Start-up instructions.) C. Check the system discharge flowpath, including the infiltration gallery, or injection well, and the backwash stop valve included in 10FGB2L systems.

Refer to the supplied pump technical manual for any problems not covered in this list.

GEOPURE SYSTEMS & SERVICES, INC.

One Year Limited Warranty

All products are warranted by GeoPure to be free from defects in materials and workmanship for a period of one (1) year after shipment from its manufacturing facility. The buyer may be required to satisfy to GeoPure that the product was properly installed, maintained and operated under normal conditions as specified in the Operations and Maintenance Manual and/or other documentation.

This warranty is limited to the repairing and/or replacement by GeoPure (or its authorized agent of any parts manufactured by GeoPure which in GeoPure's opinion are defective. Parts not manufactured by GeoPure shall carry the original manufacturer's warranty only, which warranty GeoPure shall maintain and make available to the buyer on request.

GeoPure shall have the sole right to determine whether defective parts manufactured by GeoPure shall be repaired or replaced. GeoPure shall not be liable for equipment failure or reduced performance due to naturally occurring conditions such as excessive hardness, iron, scaling or biological fouling., or contaminant levels which differ significantly from design criteria.

Except during the thirty (30)- day period from start-up referenced herein, this warranty does not cover any customer and/or GeoPure provided labor or transportation charges for diagnosis of problem, removal or replacement of parts, adjustments or repairs, or any other work unless such charges shall be assumed or authorized in advance, in writing by GeoPure.

This warranty does not cover any products which in the judgement of GeoPure, has been subject to misuses or neglect, or which has been repaired or altered outside GeoPure's facilities in any way, nor to any product which has been subject to accident either natural or man-made including lightning damage.

If purchased/leased equipment is used on multiple sites during the term of this lease (includes any equipment installed on/in a trailer or transportable skid). GeoPure warrants that the system does not leak at the time of shipment or release from its manufacturing facility. This warranty shall not cover leakage within the system at destination upon initial delivery or subsequent transfer to another site within the term of the normal one year warranty, unless GeoPure provides delivery and installation/start-up schased/leased equipment is used on multiple sites during the term of this lease (includes any equipment installed on/in a trailer or transportable skid). GeoPure warrants that the system does not leak at the time of shipment or release from its manufacturing facility. This warranty shall not cover leakage within the system at destination upon initial delivery or subsequent transfer to another site within the term of the normal one year warranty, unless GeoPure provides delivery and installation/start-up sucts shall have been substituted and used in place of a part manufactured or supplied by GeoPure for such use.

This is non-transferrable warranty, unless new user of equipment pays for and receives start-up and/or operation and maintenance training from Geo-Pure or it's authorized agent.

GeoPure may provide (at customer's option) freeze protection packages. The freeze protection equipment is for the purpose of providing freeze resistance only, not as a guarantee against equipment freeze during extreme/adverse weather conditions, lack of power supply on site or in periods of extended power failure. Normal warranties apply on freeze protection equipment as provided by the manufacturer. GeoPure will not be responsible for any damage to equipment if freeze damage equipment fails.

Except as provided herein, there are no other warranties or obligations expressed or implied including no warranty of merchantability or fitness for a particular purpose given in connection with the sale of these goods. The buyer agrees that his sole and exclusive remedy, and the limit of GeoPure's liability for loss from any cause whatsoever shall be the purchase price of goods sold hereunder as to which a claim is made.

Version 12/8/95 wrty1295.wrt

MALLINCKRODT -- HYDROGEN PEROXIDE SOLUTION 3% - HYDROGEN PEROXIDE, A
MATERIAL SAFETY DATA SHEET
FSC: 6505
NIIN: 001538480
Manufacturer's CAGE: 62910
Part No. Indicator: A
Part Number/Trade Name: HYDROGEN PEROXIDE SOLUTION 3%

General Information

Item Name: HYDROGEN PEROXIDE, ACS
Company's Name: MALLINCKRODT INC
Company's Street: PARIS BYPASS
Company's P. O. Box: M
Company's City: PARIS
Company's State: KY
Company's Country: US
Company's Zip Code: 40361
Company's Emerg Ph #: 314-982-5000
Company's Info Ph #: 606-987-7000
Distributor/Vendor # 1: MALLINCKRODT INC
Distributor/Vendor # 1 Cage: 37940
Distributor/Vendor # 2: RENOW INC
Distributor/Vendor # 2 Cage: 3X545
Record No. For Safety Entry: 006
Tot Safety Entries This Stk#: 009
Status: SMJ
Date MSDS Prepared: 06APR89
Safety Data Review Date: 29OCT90
Supply Item Manager: JDC
MSDS Serial Number: BJFMV

Ingredients/Identity Information

Proprietary: NO
Ingredient: HYDROGEN PEROXIDE (SARA III)
Ingredient Sequence Number: 01
Percent: 3
NIOSH (RTECS) Number: MX0900000
CAS Number: 7722-84-1
OSHA PEL: 1 PPM
ACGIH TLV: 1 PPM; 9192

Proprietary: NO
Ingredient: AQUEOUS SOLUTION
Ingredient Sequence Number: 02
Percent: 97
NIOSH (RTECS) Number: 1001434AU
OSHA PEL: NOT APPLICABLE
ACGIH TLV: NOT APPLICABLE

Physical/Chemical Characteristics

Appearance And Odor: CLEAR, COLORLESS SOLUTION. ODORLESS
Boiling Point: 212F,100C
Melting Point: 32.0F,0.0C
Solubility In Water: INFINITELY SOLUBLE

Fire and Explosion Hazard Data

Flash Point: NONE
Lower Explosive Limit: N/A
Upper Explosive Limit: N/A
Extinguishing Media: WATER
Special Fire Fighting Proc: WEAR FULL PROTECTIVE CLOTHING AND NIOSH-APPROVED SCBA WITH FULL FACEPIECE OPERATED IN THE PRESSURE DEMAND OR POSITIVE PRESSURE MODE.
Unusual Fire And Expl Hazrds: WATER SPRAY MAY BE USED TO EXTINGUISH SURROUNDING FIRE AND COOL EXPOSED CONTAINERS. WATER SPRAY WILL ALSO FUME AND IRRITANT GASES.

Reactivity Data

Stability: NO
Cond To Avoid (Stability): EXPOSURE TO HEAT
Materials To Avoid: TEXTILE AND PAPER
Hazardous Decomp Products: DECOMPOSES TO WATER AND OXYGEN W/ RAPID H RELEASE. USE VENTED CNTNRS. THE SOLUTION CAN DECOMP VIOLENTLY UPON H
Hazardous Poly Occur: NO
Conditions To Avoid (Poly): NOT RELEVANT

Health Hazard Data

LD50-LC50 Mixture: NONE SPECIFIED BY MANUFACTURER.
Route Of Entry - Inhalation: YES
Route Of Entry - Skin: NO
Route Of Entry - Ingestion: NO
Health Haz Acute And Chronic: NONE SPECIFIED BY MANUFACTURER.
Carcinogenicity - NTP: NO
Carcinogenicity - IARC: NO
Carcinogenicity - OSHA: NO
Explanation Carcinogenicity: NOT RELEVANT
Signs/Symptoms Of Overexp: INHAL: MAY CAUSE IRRITATION TO MUCOUS MEM OF THE NOSE & THROAT WHEN HEATED. INGEST: LARGE DOSES MAY CAUSE IRRITATION/BLISTERING TO THE MOUTH, THROAT & ABDOMEN, ABDOMINAL PAIN VOMITING AND DIARRHEA. EYE: CTC MAY CAUSE IRRITATION, REDNESS & PAIN
Med Cond Aggravated By Exp: NONE SPECIFIED BY MANUFACTURER.
Emergency/First Aid Proc: INHAL: REMOVE TO FRESH AIR. GET MD IF DIFF BRTHNG. INGEST: GIVE SEVERAL GLASSES OF WATER TO DILUTE. GET MD FOR AMOUNTS. SKIN: WASH W/ SOAP & WATER. EYES: FLUSH WITH WATER FOR AT L MIN, LIFTING EYELIDS OCCASIONALLY. GET MD IMMED.

Precautions for Safe Handling and Use

Steps If Matl Released/Spill: VENTILATE AREA OF LEAK/SPILL. PROTECTI

CLOTHING MAY BE REQUIRED. ABSORB SPILLS W/ DRY ABSORB OR DILUTE W/ L QUANTITIES OF WATER. HANDLE AS NON-HAZARDOUS WASTE. CONTAINERIZE UNU MATERIAL FOR DISPOSAL IN AN APPROVED WASTE FACILITY.
Neutralizing Agent: NONE SPECIFIED BY MANUFACTURER.
Waste Disposal Method: DISPOSE I/A/W LOCAL, STATE & FEDERAL REGULATI
Precautions-Handling/Storing: STORE IN A COOL, WELL-VENTILATED DARK ISOLATE FROM INCOMPATIBLE SUBSTANCES. PROTECT CONTAINER FROM PHYSICA DAMAGE.
Other Precautions: KEEP AWAY FROM COMBUSTIBLE MATERIALS. STORE IN A TIGHTLY CLOSED CONTAINER. REMOVE AND WASH CONTAMINATED CLOTHING PROM AVOID CONTACT W/ EYES, SKIN & CLOTHING. WASH THOROUGHLY AFTER HANDLI

Control Measures

Respiratory Protection: USE NIOSH/MSHA APPROVED RESPIRATOR APPROPRIA EXPOSURE OF CONCERN (FP N)
Ventilation: IF CONDITIONS OF USE CREATE DISCOMFORT TO THE WORKER, A EXHAUST SYSTEM SHOULD BE CONSIDERED.
Protective Gloves: NONE SPECIFIED BY MANUFACTURER.
Eye Protection: CHEMICAL WORKERS' GOGGLES (FP N)
Other Protective Equipment: CLEAN BODY-COVERING CLOTHING
Work Hygienic Practices: MAINTAIN EYE WASH FOUNTAIN AND QUICK-DRENCH FACILITIES IN WORK AREA.
Suppl. Safety & Health Data: NONE SPECIFIED BY MANUFACTURER.

Transportation Data

Trans Data Review Date: 90331
DOT PSN Code: ZZZ
DOT Proper Shipping Name: NOT REGULATED BY THIS MODE OF TRANSPORTATI
IMO PSN Code: ZZZ
IMO Proper Shipping Name: NOT REGULATED FOR THIS MODE OF TRANSPORTAT
IATA PSN Code: ZZZ
IATA Proper Shipping Name: NOT REGULATED BY THIS MODE OF TRANSPORTAT
AFI PSN Code: ZZZ
AFI Prop. Shipping Name: NOT REGULATED BY THIS MODE OF TRANSPORTATIO
Additional Trans Data: NOT REGULATED FOR TRANSPORTATION

Disposal Data

Label Data

Label Required: YES
Technical Review Date: 20JUN91
Label Date: 20JUN91
Label Status: G
Common Name: HYDROGEN PEROXIDE SOLUTION 3%
Signal Word: WARNING!
Acute Health Hazard-Slight: X
Contact Hazard-Slight: X
Fire Hazard-None: X
Reactivity Hazard-Moderate: X

Special Hazard Precautions: ACUTE: OXIDIZER. KEEP FROM CONTACT WITH CLOTHING AND OTHER COMBUSTIBLE MATERIALS. DO NOT STORE NEAR COMBUSTI MATERIALS. STORE IN TIGHTLY CLOSED CONTAINER. CAUSES SLIGHT EYE AND IRRITATION. AVOID BREATHING VAPOR. WASH THOROUGHLY AFTER HANDLING. H IF INHALED OR SWALLOWED. CHRONIC: HAZARDS NOT DETERMINED.
Protect Eye: Y
Protect Skin: Y
Protect Respiratory: Y
Label Name: MALLINCKRODT INC
Label Street: PARIS BYPASS
Label P.O. Box: M
Label City: PARIS
Label State: KY
Label Zip Code: 40361
Label Country: US
Label Emergency Number: 314-982-5000

MONSANTO -- MURIATIC ACID - HYDROCHLORIC ACID,TECHNICAL
MATERIAL SAFETY DATA SHEET
FSC: 6810
NIIN: 000458918
Manufacturer's CAGE: 76541
Part No. Indicator: A
Part Number/Trade Name: MURIATIC ACID

General Information

Item Name: HYDROCHLORIC ACID,TECHNICAL
Company's Name: MONSANTO CO
Company's Street: 800 N. LINDBERGH BLVD
Company's City: ST. LOUIS
Company's State: MO
Company's Zip Code: 63141
Company's Emerg Ph #: 314-694-1000
Company's Info Ph #: 314-694-1000
Record No. For Safety Entry: 001
Tot Safety Entries This Stk#: 003
Status: SE
Date MSDS Prepared: 24APR84
Safety Data Review Date: 15NOV88
Supply Item Manager: CX
MSDS Serial Number: BCVZP
Specification Number: O-H-765
Hazard Characteristic Code: C1
Net Unit Weight: UNKNOWN

Ingredients/Identity Information

Proprietary: NO
Ingredient: HYDROGEN CHLORIDE (HYDROCHLORIC ACID) (SARA III)
Ingredient Sequence Number: 01
Percent: 31.4
NIOSH (RTECS) Number: MW4025000
CAS Number: 7647-01-0
OSHA PEL: C 5 PPM
ACGIH TLV: C 5 PPM; 9192

Proprietary: NO
Ingredient: WATER
Ingredient Sequence Number: 02
Percent: 68.6
NIOSH (RTECS) Number: ZC0110000
CAS Number: 7732-18-5

Physical/Chemical Characteristics

Appearance And Odor: COLORLESS TO LIGHT YELLOW FUMING LIQUID. PUNGEN SUFFOCATING ODOR.
Boiling Point: 182F,83C

Melting Point: UNKNOWN
Vapor Pressure (MM Hg/70 F): UNKNOWN
Vapor Density (Air=1): UNKNOWN
Specific Gravity: 1.16
Decomposition Temperature: UNKNOWN
Evaporation Rate And Ref: UNKNOWN
Solubility In Water: COMPLETE
Percent Volatiles By Volume: 99
Viscosity: UNKNOWN
Autoignition Temperature: NONE

Fire and Explosion Hazard Data

Flash Point: NONFLAMMABLE
Extinguishing Media: SELECT SUITABLE EXTINGUISHING MEDIA FOR SURROUN FIRE.
Special Fire Fighting Proc: WEAR SELF-CONTAINED BREATHING APPARATUS PROTECTIVE CLOTHING. THOROUGHLY DECONTAMINATE EQUIPMENT AFTER USE. C FIRE EXPOSED CONTAINERS TO PREVENT RUPTUR
Unusual Fire And Expl Hazrds: HYDROGEN, A HIGHLY FLAMMABLE AND EXPLO GAS, IS GENERATED BY THE ACTION OF THE ACID ON MOST METALS. WILL REA ORGANIC MATERIAL PRODUCING HEAT & WHITESMOK

Reactivity Data

Stability: YES
Materials To Avoid: METALS, METAL OXIDES, HYDROXIDES, AMINES, CARBON AND OTHER ALKALINE MATERIALS. HIGHLY CORROSIVE TO MANY MATERIALS.
Hazardous Decomp Products: REACTION WITH MOST METALS WILL PRODUCE HYDROGEN, A HIGHLY FLAMMABLE AND EXPLOSIVE GAS.
Hazardous Poly Occur: NO

Health Hazard Data

LD50-LC50 Mixture: ORAL LD50 (RAT): 700MG/KG
Route Of Entry - Inhalation: YES
Route Of Entry - Skin: YES
Route Of Entry - Ingestion: YES
Health Haz Acute And Chronic: ACUTE: INHALATION: ULCERATION OF NOSE, THROAT & LARNYX. EDEMA OF THE LUNGS MAY OCCUR. EYE: SEVERE BURNS. MA CAUSES SEVERE BURNS. INGESTION: SEVERE BURNS OF MUCOUS MEMBRANE OF M ESOPHAGUS & STOMACH, FOLLOWED BY POSSIBLE COLLAPSE AND DEATH.
Carcinogenicity - NTP: NO
Carcinogenicity - IARC: NO
Carcinogenicity - OSHA: NO
Explanation Carcinogenicity: NOT LISTED.
Signs/Symptoms Of Overexp: CHRONIC EXPOSURE TO LOW CONCENTRATIONS CA EROSION OF THE TEETH, DERMATITIS AND BLEEDING OF THE NOSE AND GUMS. INGESTION: LIPS&MOUTH TURN WHITE TO BROWN. PAIN IN THE THROAT & STOM DIFFICULTY IN SWALLOWING. INTENSE THIRST, NAUSEA & VOMITING FOLLOWED DIARRHEA. CONTACT MAY PRODUCE SEVERE BURNS.
Emergency/First Aid Proc: EYES & SKIN: IMMEDIATELY FLUSH WITH PLENTY WATER FOR AT LEAST 15 MINUTES WHILE REMOVING CONTAMINATED CLOTHING &

CALL A PHYSICIAN. INHALED: REMOVE TO FRESH AIR. IF NOT BREATHING, GI ARTIFICIAL RESPIRATION. CALL A PHYSICIAN. INGESTED: DO NOT INDUCE VO GIVE LARGE QUANTITIES OF WATER. CALL A PHYSICIAN IMMEDIATELY. MATERI CORROSIVE TO INTESTINAL TRACT. USE GASTRIC LAVAGE W/CAUTION.

Precautions for Safe Handling and Use

Steps If Matl Released/Spill: KEEP PEOPLE AWAY. SHUT OFF OR EXTINGUI SOURCES OF IGNITION. KEEP UPWIND. SHUT OFF LEAK IF WITHOUT RISK. WEA & FULL PROTECTIVE CLOTHING INCLUDING BOOTS. DIKE W/SAND OR EARTH & P INTO SALVAGE TANK. FLUSH SPILL AREA W/WATER & NEUTRALIZE.
Neutralizing Agent: LIME OR SODA ASH.
Waste Disposal Method: FOLLOW LOCAL,STATE AND FEDERAL REGULATIONS. F NEUTRALIZED MATERIAL TO THE SEWER WITH MUCH WATER. IF NOT DILUTED & NEUTRALIZED, THIS PRODUCT CAN BECOME A HAZARDOUS WASTE PER EPA/RCRA.
Precautions-Handling/Storing: AVOID BREATHING VAPOR. HANDLE ONLY IN WITH SUFFICIENT VENTILATION TO PREVENT EXPOSURE OR WEAR A SUITABLE RESPIRATOR. DO NOT GET IN EYES,ON SKIN.
Other Precautions: WEAR CHEMICAL GOGGLES, FACE SHIELD, RUBBER GLOVES FULL PROTECTIVE CLOTHING INCLUDING BOOTS. DO NOT TAKE INTERNALLY. WA THOROUGHLY AFTER HANDLING. EMPTIED CONTAINER RETAINS VAPOR & PRODUCT RESIDUE. OBSERVE ALL LABELED SAFEGUARDS.

Control Measures

Respiratory Protection: USE NIOSH APPROVED FULL FACE EQUIPMENT WHEN AIRBORNE EXPOSURE LIMITS ARE EXPECTED. CONSULT RESPIRATOR MANUFACTUR DETERMINE APPROPRIATE TYPE EQUIPMENT FOR GIVEN APPLICATION.
Ventilation: PROVIDE VENTILATION TO CONTROL EXPOSURE LEVELS BELOW AI EXPOSURE LIMITS. LOCAL EXHAUST VENTILATION PERFERRED.
Protective Gloves: IMPERVIOUS GLOVES.
Eye Protection: CHEMICAL SAFETY GOGGLES.
Other Protective Equipment: EYE BATHS, SAFETY SHOWERS, FACE SHIELDS, IMPERVIOUS APRON.
Work Hygienic Practices: REMOVE CONTAMINATED CLOTHING PROMPTLY AND L BEFORE REUSE. WASH IMMEDIATELY WHEN SKIN IS CONTAMINATED.
Suppl. Safety & Health Data: WASH THOROUGHLY AFTER HANDLING. CAUSES BURNS TO EYES AND SKIN. VAPOR IS SEVERELY IRRITATING TO RESPIRATORY KEEP CONTAINER CLOSED WHEN NOT IN USE. NSN CANCELLED.

Transportation Data

Trans Data Review Date: 88320
DOT PSN Code: HJG
DOT Proper Shipping Name: HYDROCHLORIC ACID, SOLUTION
DOT Class: 8
DOT ID Number: UN1789
DOT Pack Group: II
DOT Label: CORROSIVE
IMO PSN Code: IEX
IMO Proper Shipping Name: HYDROCHLORIC ACID,SOLUTION
IMO Regulations Page Number: 8183
IMO UN Number: 1789

IMO UN Class: 8
IMO Subsidiary Risk Label: -
IATA PSN Code: NPG
IATA UN ID Number: 1789
IATA Proper Shipping Name: HYDROCHLORIC ACID SOLUTION
IATA UN Class: 8
IATA Label: CORROSIVE
AFI PSN Code: NPG
AFI Symbols: T
AFI Prop. Shipping Name: HYDROCHLORIC ACID, SOLUTION
AFI Class: 8
AFI ID Number: UN1789
AFI Pack Group: II
AFI Label: CORROSIVE
AFI Special Prov: A3,A6,N41
AFI Basic Pac Ref: 12-5
Additional Trans Data: DANGER! CAUSES SEVERE BURNS TO EYES AND SKIN. IS SEVERELY IRRITATING TO RESPIRATORY TRACT. KEEP CONTAINER CLOSED. ALL LABELED SAFEGUARDS. NSN CANCELLED.

Disposal Data

Disposal Data Review Date: 90150
Rec # For This Disp Entry: 01
Tot Disp Entries Per NSN: 002
Landfill Ban Item: YES
Disposal Supplemental Data: 1WASH THOROUGHLY AFTER HANDLING. CAUSES BURNS TO EYES AND SKIN. VAPOR IS SEVERELY IRRITATING TO RESPIRATORY KEEP CONTAINER CLOSED WHEN NOT IN USE. NSN CANCELLED. IN CASE OF ACC EXPOSURE OR DISCHARGE, CONSULT HEALTH AND SAFETY FILE FOR PRECAUTION
1st EPA Haz Wst Code New: D002
1st EPA Haz Wst Name New: CORROSIVE
1st EPA Haz Wst Char New: CORROSIVITY
1st EPA Acute Hazard New: NO

Label Data

Label Required: YES
Label Status: F
Special Hazard Precautions: CONTACT CAUSES BURNS TO SKIN AND EYES. I INHALED, MAY BE HARMFUL. FIRE MAY PRODUCE IRRITATING OR POISONOUS GA RUNOFF FROM FIRE CONTROL OR DILUTION WATER MAY CAUSE POLLUTION.
Label Name: MONSANTO CO
Label Street: 800 N LINDBERGH BLVD
Label City: ST LOUIS
Label State: MO
Label Zip Code: 63141
Label Country: US

URL for this msds http://siri.org. If you wish to change, add to, o delete information in this archive please sent updates to dan@siri.o

HACH -- SODIUM HYDROXIDE SOLUTION 50% (W-W) - SODIUM HYDROXIDE SOLUT
MATERIAL SAFETY DATA SHEET
FSC: 6810
NIIN: 013409742
Manufacturer's CAGE: 4T252
Part No. Indicator: B
Part Number/Trade Name: SODIUM HYDROXIDE SOLUTION 50% (W/W)

General Information

Item Name: SODIUM HYDROXIDE SOLUTION
Company's Name: HACH CO.
Company's Street: 5600 LINDBERGH DR.
Company's P. O. Box: 389
Company's City: LOVELAND
Company's State: CO
Company's Country: US
Company's Zip Code: 80539
Company's Emerg Ph #: 800-227-4224 OR 303-623-5716 SUPP.
Company's Info Ph #: 800-227-4224
Record No. For Safety Entry: 001
Tot Safety Entries This Stk#: 001
Status: SE
Date MSDS Prepared: 02NOV93
Safety Data Review Date: 19APR96
Supply Item Manager: KX
MSDS Serial Number: BYTMH
Hazard Characteristic Code: C1
Unit Of Issue: BT
Unit Of Issue Container Qty: 1 PT
Type Of Container: BOTTLE
Net Unit Weight: 1.6 LBS

Ingredients/Identity Information

Proprietary: NO
Ingredient: SODIUM HYDROXIDE
Ingredient Sequence Number: 01
Percent: 50
NIOSH (RTECS) Number: WB4900000
CAS Number: 1310-73-2
OSHA PEL: NOT ESTABLISHED
ACGIH TLV: NOT ESTABLISHED
Other Recommended Limit: NONE RECOMMENDED

Proprietary: NO
Ingredient: WATER
Ingredient Sequence Number: 02
Percent: 50
NIOSH (RTECS) Number: ZC0110000
CAS Number: 7732-18-5
OSHA PEL: NOT ESTABLISHED

ACGIH TLV: NOT ESTABLISHED
Other Recommended Limit: NONE RECOMMENDED

Physical/Chemical Characteristics

Appearance And Odor: LIQUID. CLEAR, COLORLESS. PUNGENT ODOR.
Boiling Point: 284F,140C
Vapor Pressure (MM Hg/70 F): 13 MM
Specific Gravity: 1.530
Solubility In Water: MISCIBLE
pH: 14

Fire and Explosion Hazard Data

Flash Point: NOT APPLICABLE
Extinguishing Media: NOT APPLICABLE
Special Fire Fighting Proc: NONE SPECIFIED BY MANUFACTURER.
Unusual Fire And Expl Hazrds: MAY REACT VIOLENTLY WITH ACIDS OR ORGA HALOGEN COMPOUNDS.

Reactivity Data

Stability: YES
Cond To Avoid (Stability): PROTECT FROM AIR TO AVOID FORMATION OF CARBONATES; AVOID EXPOSURE TO MOISTURE.
Materials To Avoid: AVOID EXPOSURE TO ACIDS, ORGANIC HALOGEN COMPOUN NITRO COMPOUNDS OR METALS SUCH AS ALUMINUM, TIN & ZINC.

Health Hazard Data

Precautions for Safe Handling and Use

Control Measures

Transportation Data

Trans Data Review Date: 96110
DOT PSN Code: NGY
DOT Proper Shipping Name: SODIUM HYDROXIDE SOLUTION
DOT Class: 8
DOT ID Number: UN1824
DOT Pack Group: II
DOT Label: CORROSIVE
IMO PSN Code: NTB
IMO Proper Shipping Name: SODIUM HYDROXIDE, SOLUTION
IMO Regulations Page Number: 8226
IMO UN Number: 1824
IMO UN Class: 8
IMO Subsidiary Risk Label: -
IATA PSN Code: WST

IATA UN ID Number: 1824
IATA Proper Shipping Name: SODIUM HYDROXIDE SOLUTION
IATA UN Class: 8
IATA Label: CORROSIVE
AFI PSN Code: WST
AFI Prop. Shipping Name: SODIUM HYDROXIDE, SOLUTION
AFI Class: 8
AFI ID Number: UN1824
AFI Pack Group: II
AFI Label: CORROSIVE
AFI Special Prov: N34
AFI Basic Pac Ref: A12.3
MMAC Code: NR

Disposal Data

Label Data

Label Required: YES
Technical Review Date: 19APR96
Label Date: UNDATED
Label Status: D
Common Name: SODIUM HYDROXIDE SOLUTION 50% (W/W)
Chronic Hazard: NO
Signal Word: WARNING!
Acute Health Hazard-Moderate: X
Contact Hazard-Moderate: X
Fire Hazard-None: X
Reactivity Hazard-None: X
Special Hazard Precautions: STORE TIGHTLY CLOSED. IN CASE OF SPILL: THE SPILL WITH CITRIC ACID OR ANOTHER SOL ACID MATERIAL. SCOOP SLURR BEAKER. ADD WATER AND NEUTRALIZE LIQUID TO PH BETWEEN 6 AND 9. FLUSH NEUTRALIZED WASTE TO THE DRAIN WITH EXCESS WATER. FIRST AID: EYE AND IMMEDIATELY FLUSH EYES AND SKIN WITH WATER FOR 15 MINUTES. REMOVE CONTAMINATED CLOTHING. CALL PHYSICIAN. INGESTION-DO NOT INDUCE VOMIT GIVE 1-2 GLASSES OF WATER. CALL A PHYSICIAN IMMEDIATELY. NEVER GIVE ANYTHING BY MOUTH TO AN UNCONSCIOUS PERSON. INHALATION-REMOVE TO FRE GIVE ARTIFICIAL RESPIRATION IF NECESSARY. CALL PHYSICIAN.
Protect Eye: X
Protect Skin: X
Label Name: HACH CO.
Label Street: 5600 LINDBERGH DR.
Label P.O. Box: 389
Label City: LOVELAND
Label State: CO
Label Zip Code: 80539
Label Country: US
Label Emergency Number: 800-227-4224 OR 303-623-5716 SUPP.

UNION OIL -- UNOCAL AIR TOOL LUBRICANT
MATERIAL SAFETY DATA SHEET
FSC: 9150
NIIN: 00N055129
Manufacturer's CAGE: 23034
Part No. Indicator: A
Part Number/Trade Name: UNOCAL AIR TOOL LUBRICANT

General Information

Company's Name: UNION OIL CO
Company's Street: 1201 W 5TH ST
Company's City: LOS ANGELES
Company's State: CA
Company's Country: US
Company's Zip Code: 90017
Company's Emerg Ph #: 213-664-2121
Company's Info Ph #: 213-977-7589
Record No. For Safety Entry: 001
Tot Safety Entries This Stk#: 001
Status: SMJ
Date MSDS Prepared: 22MAR89
Safety Data Review Date: 06NOV95
MSDS Serial Number: BVZWL
Hazard Characteristic Code: N1

Ingredients/Identity Information

Proprietary: NO
Ingredient: MINERAL OIL; (OIL MIST, IF GENERATED)
Ingredient Sequence Number: 01
NIOSH (RTECS) Number: PY8030000
CAS Number: 8012-95-1
OSHA PEL: 5 MG/M3 (MFR)
ACGIH TLV: N/K (FP N)

Physical/Chemical Characteristics

Appearance And Odor: YELLOW LIQUID, CHARACTERISTIC ODOR
Boiling Point: 310F,154C
Vapor Density (Air=1): HVR/AIR
Specific Gravity: 0.83 (H20=1)
Evaporation Rate And Ref: SLOWER THAN BUTYL ACETATE
Solubility In Water: NEGLIGIBLE

Fire and Explosion Hazard Data

Flash Point: 230F,110C
Flash Point Method: COC
Extinguishing Media: USE DRY CHEMICAL, CO2, FOAM, SAND, OR EARTH.
Special Fire Fighting Proc: USE NIOSH/MSHA APPROVED SCBA & FULL PROTECTIVE EQUIPMENT (FP N). WATER SPRAY MAY BE USEFUL IN MINIMIZING VAPORS & COOLING CONTAINERS EXPOSED TO HEAT & FLAME.
Unusual Fire And Expl Hazrds: THIS MATERIAL WILL BURN BUT WILL NOT IGNITE READILY.

Reactivity Data

Stability: YES
Cond To Avoid (Stability): NONE SPECIFIED BY MANUFACTURER.
Materials To Avoid: STRONG ACIDS OR BASES, OXIDIZING AGENTS & SELECTED AMINES.
Hazardous Decomp Products: COMBUSTION MAY YIELD CO, CO2, AND OXIDES OF

SULFUR AND NITROGEN.
Hazardous Poly Occur: NO
Conditions To Avoid (Poly): NOT RELEVANT.

Health Hazard Data

LD50-LC50 Mixture: NONE SPECIFIED BY MANUFACTURER.
Route Of Entry - Inhalation: YES
Route Of Entry - Skin: YES
Route Of Entry - Ingestion: YES
Health Haz Acute And Chronic: THIS MATERIAL MAY CAUSE IRRITATION TO THE EYE, SKIN, NOSE, THROAT AND DIGESTIVE TRACT. EYES:DIRECT CONTACT MAY CAUSE BURNING, TEARING AND REDNESS. SKIN:PROLONGED OR REPEATED CONTACT MAY CAUSE REDNESS, BURNING AND DERMATITIS.
Carcinogenicity - NTP: NO
Carcinogenicity - IARC: NO
Carcinogenicity - OSHA: NO
Explanation Carcinogenicity: NOT RELEVANT.
Signs/Symptoms Of Overexp: SEE HEALTH HAZARDS.
Med Cond Aggravated By Exp: PERSONS WITH PRE-EXISTING SKIN DISORDERS MAY BE MORE SUSCEPTIBLE TO THE EFFECTS OF THIS MATERIAL.
Emergency/First Aid Proc: INGEST:CONTACT PHYS IMMED. DO NOT INDUCE VOMIT. INHAL:TREAT IRRITATION BY REMOVING FROM EXPOSURE. EYE:FLUSH WITH CLEAN WATER FOR @ LEAST 15 MINUTES. SKIN:WIPE MATL FROM SKIN, THEN WASH WITH MILD SOAP AND WATER. IF IRRITATION PERSISTS, SEEK MEDICAL ATTENTION.

Precautions for Safe Handling and Use

Steps If Matl Released/Spill: COLLECT LEAKING FLUID IN SEALABLE CONTAINERS. ABSORB SPILLED LIQUID IN SAND OR INERT ABSORBANT. CONTACT FIRE AUTHORITIES & APPROPRIATE STATE/LOCAL AGENCIES, OR COAST GUARD (800-424-8802).
Neutralizing Agent: NONE SPECIFIED BY MANUFACTURER.
Waste Disposal Method: DISPOSE OF PRODUCT IN ACCORDANCE WITH LOCAL, COUNTY, STATE AND FEDERAL REGULATIONS.
Precautions-Handling/Storing: STORE IN COOL, DRY LOCATION. AVOID GENERATING OIL MISTS WHILE HANDLING. AVOID PROLONGED OR REPEATED SKIN CONTACT.
Other Precautions: NONE SPECIFIED BY MANUFACTURER.

Control Measures

Respiratory Protection: IF AIRBORNE CONCENTRATIONS EXCEED REC EXPOSURE LIMITS, A NIOSH/MSHA SUITABLE FILTER-TYPE RESPIRATOR SHOULD BE WORN.
Ventilation: LOCAL EXHAUST:USE, IF NEEDED.
Protective Gloves: IMPERMEABLE GLOVES.
Eye Protection: ANSI APPRVD CHEM WORKERS GOGGLES (FP N).
Other Protective Equipment: IT IS SUGGESTED THAT A SOURCE OF CLEAN WATER BE AVAILABLE IN WORK AREA FOR FLUSHING EYES AND SKIN.
Work Hygienic Practices: NONE SPECIFIED BY MANUFACTURER.
Suppl. Safety & Health Data: NONE SPECIFIED BY MANUFACTURER.

Transportation Data

Disposal Data

Label Data

Label Required: YES
Technical Review Date: 18NOV94
Label Date: 22NOV94
Label Status: G

Common Name: UNOCAL AIR TOOL LUBRICANT
Chronic Hazard: NO
Signal Word: WARNING!
Acute Health Hazard-Slight: X
Contact Hazard-Moderate: X
Fire Hazard-Slight: X
Reactivity Hazard-None: X
Special Hazard Precautions: ACUTE:THIS MATERIAL MAY CAUSE IRRITATION TO THE EYE, SKIN, NOSE, THRAOT AND DIGESTIVE TRACT. EYES:DIRECT CONTACT MAY CAUSE BURNING, TEARING AND REDNESS. SKIN:PROLONGED OR REPEATED CONTACT MAY CAUSE REDNESS, BURNING AND DERMATITIS. CHRONIC:NONE LISTED BY MANUFACTURER.
Protect Eye: Y
Protect Skin: Y
Protect Respiratory: Y
Label Name: UNION OIL CO
Label Street: 1201 W 5TH ST
Label City: LOS ANGELES
Label State: CA
Label Zip Code: 90017
Label Country: US
Label Emergency Number: 213-664-2121

MOBIL OIL -- RARUS 427 - LUBRICATING OIL,AIR COMPRESSOR
MATERIAL SAFETY DATA SHEET
FSC: 9150
NIIN: 011582881
Manufacturer's CAGE: 3U728
Part No. Indicator: A
Part Number/Trade Name: RARUS 427

General Information

Item Name: LUBRICATING OIL,AIR COMPRESSOR
Company's Name: MOBIL OIL CORP
Company's Street: 3225 GALLONS ROAD
Company's City: FAIRFAX
Company's State: VA
Company's Country: US
Company's Zip Code: 22037-0001
Company's Emerg Ph #: 609-737-4411/CHEMTREC 800-424-9300
Company's Info Ph #: 800-662-4525/800-227-0707 X3265
Distributor/Vendor # 1: MOBIL OIL CORP ENVIRONMENTAL AFFAIRS & T
Distributor/Vendor # 1 Cage: 0AHK0
Record No. For Safety Entry: 006
Tot Safety Entries This Stk#: 010
Status: SE
Date MSDS Prepared: 09SEP94
Safety Data Review Date: 22SEP95
Supply Item Manager: CX
MSDS Serial Number: BQDPX
Specification Number: NONE
Spec Type, Grade, Class: NONE
Hazard Characteristic Code: N1
Unit Of Issue: CN
Unit Of Issue Container Qty: 5 GALLONS
Type Of Container: PPP-P-704
Net Unit Weight: 36.7 LBS
NRC/State License Number: NONE
Net Propellant Weight-Ammo: NONE

Ingredients/Identity Information

Proprietary: NO
Ingredient: MANUFACTURER CLAIMS ONLY NON-HAZARDOUS INGREDIENTS W/O SPECIFYING ANY INDIVIDUAL INGREDIENT.
Ingredient Sequence Number: 01
Percent: 100
NIOSH (RTECS) Number: 1000314NH
OSHA PEL: NOT ESTABLISHED
ACGIH TLV: NOT ESTABLISHED
Other Recommended Limit: NONE RECOMMENDED

Proprietary: NO
Ingredient: ALKYL AMIDE
Ingredient Sequence Number: 02
Percent: <3
NIOSH (RTECS) Number: 1000929AA
OSHA PEL: NOT ESTABLISHED
ACGIH TLV: NOT ESTABLISHED
Other Recommended Limit: NONE RECOMMENDED

Proprietary: NO
Ingredient: VOLATILE ORGANIC COMPOUNDS (<5.00 (WT %); 0.367 LBS/GAL)
Ingredient Sequence Number: 03
NIOSH (RTECS) Number: 9999999VO

OSHA PEL: NOT RELEVANT
ACGIH TLV: NOT RELEVANT
Other Recommended Limit: NONE RECOMMENDED

Physical/Chemical Characteristics

Appearance And Odor: AMBER LIQUID, MILD ODOR
Boiling Point: 601F,316C
Melting Point: N/A
Vapor Pressure (MM Hg/70 F): <1.0
Vapor Density (Air=1): >2.0
Specific Gravity: 0.88
Decomposition Temperature: UNKNOWN
Evaporation Rate And Ref: N/A
Solubility In Water: NEGLIGIBLE
Percent Volatiles By Volume: EXEMPT
Viscosity: 95.7 CST
pH: N/A
Corrosion Rate (IPY): UNKNOWN
Autoignition Temperature: NE

Fire and Explosion Hazard Data

Flash Point: >450F,>232C
Flash Point Method: COC
Lower Explosive Limit: N/A
Upper Explosive Limit: N/A
Extinguishing Media: CARBON DIOXIDE, FOAM, DRY CHEMICAL & WATER FOG.
Special Fire Fighting Proc: WEAR SELF-CONTAINED BREATHING APPARATUS IN ENCLOSED AREA. WATER/FOAM MAY CAUSE FROTHING. USE WATER TO COOL CONTAINERS. USE WATER TO FLUSH SPILLS FROM EXPOSURE.
Unusual Fire And Expl Hazrds: PREVENT FIRE CONTROL RUNOFF FROM ENTERING STREAMS, SEWERS OR DRINKING WATER SUPPLY.

Reactivity Data

Stability: YES
Cond To Avoid (Stability): EXTREME HEAT
Materials To Avoid: STRONG OXIDIZING AGENTS
Hazardous Decomp Products: CARBON MONOXIDE
Hazardous Poly Occur: NO
Conditions To Avoid (Poly): WILL NOT OCCUR.

Health Hazard Data

LD50-LC50 Mixture: ORAL LD50 (RAT) IS >2000 MG/KG
Route Of Entry - Inhalation: NO
Route Of Entry - Skin: YES
Route Of Entry - Ingestion: NO
Health Haz Acute And Chronic: ACUTE-INGESTION:PRACITCALLY NON-TOXIC. INHALATION:NOT APPLICABLE. HARMFUL CONCENTRATIONS OF MISTS ARE UNLIKELY TO OCCUR IN NORMAL HANDLINR &/OR MISUSE OF THE PRODUCT. EYE:PRACTICALLY NON-IRRITATING. SKIN:PRACTICALLY NON-IRRITATING & NON-TOXIC. CHRONIC:MOBIL TESTS SHOWED NOT ADVERSE EFFECTS AND NO SENSITIZATION.
Carcinogenicity - NTP: NO
Carcinogenicity - IARC: NO
Carcinogenicity - OSHA: NO
Explanation Carcinogenicity: CHRONIC MOUSE SKIN PAINTING STUDIES HAVE SHOWED NO EVIDENCE OF CARCINOGENIC EFFECTS.
Signs/Symptoms Of Overexp: POSSIBLE SKIN AND EYE IRRITATION ESPECIALLY W/PROLONGED &/OR REPEATED CONTACT.
Med Cond Aggravated By Exp: MFR GAVE NO INFORMATION ON MSDS.
Emergency/First Aid Proc: IF IRRITATION OCCURS, GET MEDICAL ATTENTION. EYE:FLUSH W/WATER 15 MIN. SKIN:WASH W/SOAP & WATER. REMOVE CONTAMINATED

CLOTHING & LAUNDER BEFORE REUSE. INHALED:NOT EXPECTED TO BE A PROBLEM. INGESTED:IF >0.5 L INGESTED, DO NOT INDUCE VOMITING. GIVE 1-2 GLASSES OF WATER TO DRINK. GET IMMEDIATE MEDICAL ATTENTION. NOTHING BY MOUTH IF UNCONSCIOUS. ASPIRATION HAZARD:MAY CAUSE CHEMICAL PNEUMONITIS.

Precautions for Safe Handling and Use

Steps If Matl Released/Spill: ABSORB ON FIRE RETARDANT MATERIAL. SHOVEL UP & DISPOSE. REPORT SPILLS TO APPROPRIATE AUTHOUITIES AS REQUIRED. U S COAST GUARD (800-424-8802) REQUIRES IMMEDIATE REPORTING OF SPILLS THAT COULD REACH ANY WATERWAY. CHEMTREC (800-424-9300) FOR ROAD SPILL.
Neutralizing Agent: NOT APPLICABLE
Waste Disposal Method: DISPOSE OF AT APPROPRIATE WASTE DISPOSAL FACILITY I/A/W CURRENT APPLICABLE LAWS & REGULATIONS & PRODUCT CHARACTERISTICS AT TIME OF DISPOSAL. PREVENT SPILLS FROM ENTERING STORM SEWERS, DRAINS, SOIL. SEE SUPP DATA.
Precautions-Handling/Storing: DO NOT STORE IN OPEN OR UNLABELLED CONTAINERS. STORE AWAY FROM STRONG OXIDIZING AGENTS OR COMBUSTIBLE MATERIAL.
Other Precautions: THIS MATERIAL IS NOT INTENDED FOR USE IN AIR COMPRESSORS FOR BREATHING APPLICATIONS.

Control Measures

Respiratory Protection: NO SPECIAL REQUIREMENTS UNDER ORDINARY CONDITIONS ON USE & W/ADEQUATE VENTILATION.
Ventilation: USE IN A WELL VENTILATED AREA.
Protective Gloves: OIL RESISTANT GLOVES
Eye Protection: NORMAL INDUSTRIAL EYE PROTECTION PRACTIC
Other Protective Equipment: MFR GAVE NO INFORMATION ON MSDS.
Work Hygienic Practices: MFR:? HMIS:USE GOOD INDUSTRIAL HYGIENE PRACTICES. MINIMIZE CONTACT & WASH THOROUGHLY AFTER HANDLING.
Suppl. Safety & Health Data: PRODUCT IS SUITABLE FOR BURNING IN A CONTROLLED INCINERATOR PER RCRA. PRODUCT IS SUITABLE FOR PROCESSING BY AN APPROVED RECYCLING FACILITY OR DISPOSED AT ANY GOVERNMENT APPROVED WASTE DISPOSAL FACILITY. USE OF THESE METHODS IS SUBJECT TO USER COMPLIANCE W/ FEDERAL, STATE & LOCAL REGULATIONS AT THE TIME OF DISPOSAL.

Transportation Data

Trans Data Review Date: 95265
DOT PSN Code: ZZZ
DOT Proper Shipping Name: NOT REGULATED BY THIS MODE OF TRANSPORTATION
IMO PSN Code: ZZZ
IMO Proper Shipping Name: NOT REGULATED FOR THIS MODE OF TRANSPORTATION
IATA PSN Code: ZZZ
IATA Proper Shipping Name: NOT REGULATED BY THIS MODE OF TRANSPORTATION
AFI PSN Code: ZZZ
AFI Prop. Shipping Name: NOT REGULATED BY THIS MODE OF TRANSPORTATION

Disposal Data

Label Data

Label Required: YES
Technical Review Date: 22SEP95
MFR Label Number: NONE
Label Status: F
Common Name: RARUS 427
Signal Word: CAUTION!
Acute Health Hazard-Slight: X
Contact Hazard-Slight: X
Fire Hazard-Slight: X

Reactivity Hazard-None: X
PRACITCALLY NON-TOXIC. INHALATION:NOT APPLICABLE. HARMFUL CONCENTRATIONS OF MISTS ARE UNLIKELY TO OCCUR IN NORMAL HANDLING &/OR MISUSE OF THE PRODUCT. EYE:PRACTICALLY NON-IRRITATING. SKIN:PRACTICALLY NON-IRRITATING & NON-TOXIC. DO NOT STORE IN OPEN OR UNLABELLED CONTAINERS. STORE AWAY FROM STRONG OXIDIZING AGENTS OR COMBUSTIBLE MATERIAL. IN CASE OF SPILL: ABSORB ON FIRE RETARDANT MATERIAL. SHOVEL UP & DISPOSE. REPORT SPILLS TO APPROPRIATE AUTHOUITIES AS REQUIRED. U S COAST GUARD (800-424-8802) REQUIRES IMMEDIATE REPORTING OF SPILLS THAT COULD REACH ANY WATERWAY. CHEMTREC (800-424-9300) FOR ROAD SPILL
Protect Eye: Y
Protect Skin: Y
Label Name: MOBIL OIL CORP
Label Street: 3225 GALLONS ROAD
Label City: FAIRFAX
Label State: VA
Label Zip Code: 22037-0001
Label Country: US
Label Emergency Number: 609-737-4411/CHEMTREC 800-424-9300

DEPARTMENT OF ENVIRONMENTAL REGULATION

STANDARD OPERATING PROCEDURES

FOR

LABORATORY OPERATIONS AND SAMPLE COLLECTION ACTIVITIES

DER - QA-001/92

Florida Department of Environmental Regulation

2600 Blair Stone Road

Tallahassee, Florida 32399-2400

QUALITY ASSURANCE SECTION

September 30, 1992

FOREWORD

This document presents standard operating procedures for laboratory and field activities. These protocols may be incorporated by reference into the Comprehensive Quality Assurance Plans required by Chapter 17-160, F.A.C.

In addition, this document specifies the format, content and requirements of a Comprehensive Quality Assurance Plan that adopts these procedures.

ACRONYMS

AOAC	Association of Official Analytical Chemists
ASTM	American Society for Testing and Materials
CCC	Continuing Calibration Check
CFR	Code of Federal Regulations
CL	Confidence Level
CLP	Contract Laboratory Program
CompQAP	Comprehensive Quality Assurance Plan
CV	Coefficient of Variation
DER	(State of Florida) Department of Environmental Regulation
DQO	Data Quality Objective
EPA	(United States) Environmental Protection Agency
FR	Federal Register
HRS	(Florida Department of) Health and Rehabilitative Services
I	Industrial Index
IDL	Instrument Detection Limit
MDL	Method Detection Limit
NIST	National Institute of Standards and Technology (previously NBS)
NPDES	National Pollutant Discharge Elimination System
NTIS	National Technical Information Service
OGC	Office of General Counsel (DER)
PEA	Performance Evaluation
PQL	Practical Quantitation Limit
QA	Quality Assurance
QAP	Quality Assurance Plan
QAPP	Quality Assurance Project Plan
QAO	Quality Assurance Officer
QAS	Quality Assurance Section
QC	Quality Control
R	Recovery (%R: Percent R)
RPD	Relative Percent Difference
RQAP	Research Quality Assurance Plan
RSD	Relative Standard Deviation (%RSD: Percent RSD)
SD	Standard Deviation
SOP	Standard Operating Procedure
SRM	Standard Reference Material
UIC	Underground Injection Control
U.S.C.	United State Congress
USGS	United States Geological Survey
UST	Underground Storage Tank
VOC	Volatile Organic Compound
WMD	Water Management District

4.2 AQUEOUS SAMPLING PROCEDURES

4.2.1 General

There are several requirements that are common to all types of surface water sampling events and are independent of technique. Several of these requirements are concerned with sample parameters that are inherently difficult to sample. In addition to the below procedures, overall care must be taken in regards to equipment handling, container handling/storage, decontamination, and record keeping.

4.2.1.1 Sample collection equipment and non-preserved sample containers must be rinsed with sample water before the actual sample is taken. Exceptions to this are: oil & grease, TRPH, microbiological, VOCs, or any pre-preserved container.

4.2.1.2 If protective gloves are used (see Section 4.0.2), they shall be clean, new and disposable. These should be changed prior to moving to the next sampling point.

4.2.1.3 Sample containers for source (i.e. concentrated wastes) samples or samples suspected of containing high concentrations of contaminants shall be placed in separate plastic bags immediately after collecting, preserving, tagging, etc.

4.2.1.4 If possible, ambient, or background samples should be collected by different field teams. If separate collection is not possible, the ambient or background samples shall be collected first and placed in separate ice chests or shipping containers. Highly contaminated samples shall never be placed in the same ice chest as environmental samples. It is a good practice to enclose highly contaminated samples in a plastic bag before placing them in ice chests. Ice chests or shipping containers with samples suspected of being highly contaminated shall be lined with new, clean, plastic bags.

4.2.1.5 If possible, one member of the field team should take all the notes, fill out tags, etc., while the other member does all of the sampling.

4.2.1.6 Teflon or glass is preferred for collecting samples where trace contaminants are of concern. Equipment constructed of rubber or plastic (e.g., PVC, Tygon, most Van Dorn Samplers) shall not be used to collect samples for trace organic compound analyses.

4.2.2 Special Parameter - Specific Handling Procedures

1. Since the concentration standards and/or guidance criteria for many analytes are in the (sub)parts per billion range, extreme care must be taken to prevent cross-contamination.
2. Most of the parameter groups listed in sections 4.2.2.1 through 4.2.2.8 below, shall be taken as grab samples unless Department requirements dictate otherwise. The exceptions are extractable organics and total metals which may be taken as composites, if required.
3. There is a greater chance of cross contamination when collecting composites because of increased sample handling and more equipment.
4. The following eight categories of parameters have specific sampling techniques and considerations which must be followed to collect unbiased, uncontaminated samples.

THE PROCEDURES OUTLINED BELOW SHALL BE USED FOR ALL AQUEOUS SAMPLING (I.E. SURFACE WATER, WASTEWATER, GROUNDWATER, STORMWATER ETC.).

4.2.2.1 Metals Sampling

a. Sample containers
1. New or properly cleaned plastic containers shall be used for metals sampling. Glass bottles may be used, but are prone to breakage and occasionally react with the sample to either leach or adsorb metals from the glass itself.
2. Containers for metals sampling, new or previously used, shall be cleaned following protocols outlined in Section 4.4.1.
3. Visually inspect polyethylene or glass containers for defects or contamination. Discard if defects are present or containers do not appear clean.

b. Preservation
1. Samples shall be preserved with nitric acid (HNO_3) of a grade that is suitable for ultra trace metals analysis.
2. Preservation shall occur within 15 minutes of sample collection or filtration (if applicable). Samples collected as a 24-hour composite (see 4.2.4.6.b.5).
3. Adequate HNO_3 shall be added per liter of sample to reduce the pH to below 2.0 to keep metals in solution and prevent them from adsorbing or absorbing to the container wall.
4. If only dissolved metals are to be measured, the sample shall be filtered immediately after sample

5. Samples must be extracted within 7 days of sample collection and the extracts analyzed within 40 days of extraction.

If residual chlorine is present, sodium thiosulfate must be added.

c. Sample collection protocol:

1. Sample bottles should be prerinsed with sample before collection except Total Recoverable Petroleum Hydrocarbons (TRPH or Oil & Grease, see 4.0.3) or any prepreserved sample container.

2. Remove the cap from the bottle without touching the Teflon liner.

3. Do not allow the sampling equipment or hands to touch the rim of the sample container.

a. For bailer sampling, it may be necessary to utilize a stainless steel or Teflon delivery tube (fits into bottom of the bailer).

4. Fill bottle with sample to almost full capacity.

5. Quickly cap the Teflon lined cap over the bottle and tighten securely.

6. Affix sample label, seal (if required) and complete the chain-of-custody form.

7. Place the sample bottle in a plastic sample bag and place packed ice immediately.

Make a note on the lab transmittal form identifying samples that appear highly contaminated or exhibit other abnormal characteristics (i.e. foaming, odor, etc.).

4.2.2.3 Volatiles Sampling

a. Sample containers

1. Analysis of volatile organic substances requires a glass sample vial, sealed with a teflon-coated septum.

2. AT A MINIMUM, duplicate samples must be collected, although some laboratories require three or more vials. If the containers are not supplied by the laboratory, verify the laboratory's policy on how many vials are necessary and collect the specified number of vials.

3. Visually inspect the glass vials to assure that there are no glass or septum defects (e.g. rim must have not nicks or visible depressions); septum must not be deformed, etc.). If defects are present and/or sample containers or septums do not appear to be clean, the vials must be discarded.

4. Sample vials may be purchased precleaned from commercial vendors, or must be cleaned according to protocols outlined in Section 4.4.1.

5. NOTE: VIALS FOR VOCS ARE NOT RINSED WITH SAMPLE.

b. Preservation

1. Table 4.2 must be followed to determine the specific preservation method for each group of volatile organic compounds.

2. If residual chlorine is not present, the vials shall be filled with the sample, acidified (prepreserved containers are acceptable) with HCl and labeled "preserved".

3. If the volatile aromatics are to be analyzed within 7 days, HCl is not necessary.

4. Sodium thiosulfate must be added to samples with residual chlorine (see sampling protocols below).

5. Samples must be placed on wet ice immediately after sample collection. A temperature of 4 C must be maintained until the sample has arrived at the laboratory.

c. Sample collection protocols:

1. All fuel or exhaust sources which could cause VOC contamination must be situated well away and downwind of the sampling site (see Section 4.0.5).

   a. If possible, fuels should be transported and stored in a separate vehicle from empty vials and collected samples.

   b. All petroleum fueled engines (including the vehicle) must be situated downwind of the sampling operations.

2. Samples shall not be aerated during sample collection.

   a. Extreme caution must be exercised when filling a vial to avoid any turbulence which could promote volatilization.

   b. Carefully pour the sample down the SIDE of the vial to minimize turbulence. As a rule, it is best to gently pour the last few drops into the vial so that surface tension holds the water in a "convex meniscus."

3. Do not allow the sampling equipment to touch the rim of the sample container.

   a. For bailer sampling, it may be necessary utilize a stainless steel or Teflon delivery tube or "pigtail" to obtain a gentle trickle of sample into the vial.

   b. It is sometimes difficult to completely fill the vial directly from some waste streams. The sample may be collected in a precleaned intermediate sample collection device made of the appropriate materials (see Table 4.1) and carefully poured into the VOC vials.

4. The investigator must determine if the water to be sampled contains residual chlorine.

a. If residual chlorine is present; add 10 mg of sodium thiosulfate to the vial (laboratory may supply vials with premeasured quantities).
b. Fill the vial 90% with sample.
c. Add four drops of concentrated HCl (more acid may be needed if the sample is known to contain high levels of bicarbonate or is otherwise buffered). Add additional sample (if needed) to create a convex meniscus and cap with zero headspace (see 5 below).
d. Label vial appropriately (preserved/sodium thiosulfate/acid).

5. The sample must be collected so that there are no air bubbles in the container after the screw cap and septum seal are applied.
a. Vial must be filled so that the sample surface is above the container rim (convex meniscus).
b. The cap with the septum is then quickly applied (make sure teflon side of septum is down). Some sample may overflow, but air space in the bottle must be eliminated.
c. If acid has been added to the sample, tip the vial gently two or three times to distribute the preservative.
d. Turn the bottle over and tap it to check for bubbles.
1. If any are present, remove the cap, add a few more drops of sample, recap and test for bubbles. REPEAT NO MORE THAN 3 TIMES.

6. Sampling and preservation containers may be prelabeled prior to any field activities. This may reduce confusion during a sampling event.

7. All the vials must be labeled. Make note in the field records of any samples that appear highly contaminated or appear to effervesce when acid is added. NOTE: If the sample reacts with the acid by generating gas, DER recommends collecting unpreserved samples for analysis (seven-day holding time must be met).

8. Wrap each vial in bubble-wrap, or equivalent, and place each vial in a small ziplock-type bag and immediately place on wet ice.

9. Complete field records.

10. Protect samples from environmental contamination during storage and transport to the laboratory (4.2.2.3.c.1 above).
a. As an added measure, replicate samples may be sealed in a container with vermiculite. This will add further protection from potential contamination.

5. Fill the bottle to almost to capacity (if collecting VOC or trihalomethane samples, see 4.2.7.2.i below).
6. Replace the screw cap securely on the bottle.

f. Sample containers with preservatives.
1. Follow the same protocol outlined above, deleting the rinse.
2. Since some of the preservatives may react with the sample water, hold the open end of the container away from you while filling.
3. After replacing the cap, gently tip the container several times to mix the preservatives.

g. Affix a sample label and seal (if required) and complete the chain-of-custody form.

h. Place the sample bottle in a plastic sample bag and cool to 4 C on wet ice.

i. Special Sampling Protocols
The special precautions for the types of samples discussed in Section 4.2.7.2 shall be followed.

4.2.7.3 Sampling Drinking Water Sources for Lead and Copper
a. Selection of the sampling point is dependent on whether the sample is being taken to verify compliance with the Drinking Water Regulations. If so, the sample must be collected from a COLD WATER tap in either the kitchen or bathroom.
b. Samples must be collected after the water HAS NOT been used for at least SIX HOURS.
c. DO NOT FLUSH OR PURGE THE SYSTEM.
d. Collect the first flush into the sample container for trace metals. DO NOT RINSE SAMPLE CONTAINER.
e. Tilt the container so that the initial flow falls onto the interior surface. DO NOT AGITATE.
f. If the container was prepreserved, hold the open end of the container away from you while filling.
g. Add preservatives (if needed).
h. Replace screw cap and gently tip the container several times to mix the preservatives.
i. Affix a sample label and seal (if required), and complete the chain-of-custody form.
j. Place the sample bottle in a plastic sample bag.

4.2.8 Drinking Water Supply System Sampling

The following protocols shall be followed:
1. When sampling for drinking water compliance, the sampling spigot is normally designated by permit or municipal authorities.

The location may be near the supply line or may be an outside spigot on a private residence.

2. Procedures to sample drinking water directly from the supply system is the same as above, except for treatment of residual chlorine.

a. Lines shall be flushed for 2 to 5 minutes before collecting any samples.

b. Reduce the flow rate to less than 500 ml/min (1/8" stream) before collecting samples.

3. In many instances, the water supply to residences may be treated with chlorine which may cause interference with certain types of analyses (ex: VOC; Semi-Volatiles and some bacteriological samples). Residual chlorine must be treated with the addition of sodium thiosulfate ($Na_2S_2O_3$).

4. Utilizing chemical kits (such as HACH), test the water in a separate container for residual chlorine. If residual chlorine is present, collect the sample in the appropriate sample container(s) using the required preservatives.

a. Immediately upon sample collection add 0.008% $Na_2S_2O_3$ or 100 mg of $Na_2S_2O_3$ per 1 liter of sample water directly into the sample container.

b. After replacing the cap, tip the container several times to mix the preservative.

5. Affix a sample label, seal and transport on wet ice.

6. Lead and copper shall be sampled according to protocols outlined in 4.2.7.3.

4.2.9 Temporary Well Points

Temporary well points include those drilled with augers as well as those pushed with "direct push" or DPT devices. These types of wells are not permanently installed.

4.2.9.1 Use

a. Temporary well points may be used for PRELIMINARY INVESTIGATIONS and as a SCREENING TOOL.

[[b. For formal site work (not preliminary or PCAP), temporary well points may only be allowed under emergency situations. These are:

1. DOT right-of-way,

2. private property where a permanent well cannot be placed, or

3. inside or against a structure.]]

c. DER will determine whether temporary well points are warranted.

d. If these wells are used to provide formal data, these restrictions apply:

1. precleaned equipment as described in Table 4.1;

2. well must be purged of 3-5 well volumes (or dry);

3. Sampling with a peristaltic pump

a. Extractable organics shall be collected via an [illegible]-Teflon and -glass organic trap configuration (see Figure 4.2.1);
b. VOCs shall not be collected through a [illegible] but the Teflon pump tubing is allowed to [illegible] ambient pressure, capped with stopper or [illegible] finger, carefully withdrawn from the [illegible] and drained into appropriate vials.
c. Refer to protocols listed in 4.2.5.5 and 4.2.5.6 for specific information on sampling and configuration.

4. Sampling with Bailers
a. In some cases, sampling may be accomplished with a 3/4" bailer.
b. Bailer equipment construction restrictions shall be followed.
c. Refer to bailer sampling protocols in section 4.2.6.5.

4.2.10 Airstripper and Remedial Treatment System Sampling

a. Collect effluent samples from airstripper units in a similar manner to those described for Drinking Water Supply Systems (Section 4.2.8).
b. Remove any tubing from the sampling port and flush for one to two minutes.
c. Reduce flow rate to less than 500 ml/min. and begin sample collection.

4.2.11 Bioassay Sampling

When collecting samples for bioassays, the sampling protocols outlined in Section 4.2.3 (Surface Water) and 4.2.4 (Wastewater) shall be followed.

The holding time for bioassay samples is 72 hours.