N00213.AR.001557
NAS KEY WEST
5090.3a

FINAL REMOVAL OF SUSPECTED UNDERGROUND STORAGE TANK (UST) AT BUILDING A-126 NAS KEY WEST FL

12/19/2011

SMALL BUSINESS GROUP, INC.

NAVFAC
Naval Facilities Engineering Command

FINAL REPORT

REMOVAL OF SUSPECTED UST AT BUILDING A-126 Naval Air Station Key West

KEY WEST, FLORIDA

(N69450-11-D-0036/002)

SBG EEG

Small Business Group, Inc.
10179 Highway 78
Ladson, SC 29456

Small Business Group, Inc.
10179 Highway 78
Ladson, SC 29456
843.879.0400
843.879.0401 fax
www.sbg-eeg.com

December 19, 2011

Beverly Washington
NAVFAC SE
P.O. Box 30, Bldg 903
Jacksonville, FL 32212-0030

RE: Closure Report for Suspected UST at Building A-126

Ms. Washington,

SBG, Inc. was tasked with performing a 2000 gallon gasoline UST removal behind Building A-126 at NAS Key West, Boca Chica Field. A site check performed at the site revealed that it was not a typical UST site based on features observed above and below ground. However, all operations were geared toward a gasoline tank removal. Below is a summary of how work was performed and what was found at the site followed by scaled site maps, lab report, pictures, manifests, and the DEP form 62-761.900(2).

Site work started on November 29, 2011. The suspected UST was pumped of all fluids/sand/debris and cleaned. The concrete slab was removed over the suspected UST and excavation proceeded cautiously until all below ground utilities and the suspected UST were exposed. Excavation revealed a 12 inch diameter x 7 foot long steel casing buried vertically in the excavation. There was one 1½" steel (Schedule 160) piping run from the bottom of the casing to the piping exposed above ground next to the building. The piping was cut from the casing and at the edge of the excavation. All above ground piping was cut flush with the surrounding concrete and grouted in place. The casing was removed from the excavation and taken for recycling.

Per the direction of Mr. Michael Winkler of the Monroe County Health Department, who was on-site, one confirmatory soil sample was taken at the area where the casing was removed. Two each PID readings were taken from the soil removed from the excavation (approx 3 cyds) and one was taken from the soil attached to the bottom of the casing. Both readings from the excavated soil read 0 ppm and the reading from the bottom of the casing read 0.1 ppm. Soil field screening procedures followed the direction of paragraph B.1. of the Storage Tank System Closure Assessment Requirements.

The excavation was then backfilled with the excavated soil, topped with gravel and the site restored to preexisting conditions. The fluids were drummed for disposal (see manifest) and the concrete was loaded into a dumpster for disposal as C&D waste with Waste Management (see manifest).

Piping from the grass area adjacent to the suspected UST site was exposed and removed. The above ground piping extended into the grass area and then ended. Two other pieces of piping were found buried under the grass along with concrete with wire that appears to be from a former concrete slab over the area.

Small Business Group, Inc.
10179 Highway 78
Ladson, SC 29456
843.879.0400
843.879.0401 fax
www.sbg-eeg.com

In conclusion, no UST was found at this site. The casing and piping found appear to be for a former hydraulic cylinder/vehicle lift that was removed previously. The soil 2 feet outside of the casing seemed to be virgin soil that had not been disturbed previously. No odor or visual staining of soil was observed during the excavation. See attached documents to assist with closure of this site.

If you have any questions regarding the included information, please feel free to give me a call at (843)412-2097.

Sincerely,

Thomas L. McElwee
VP of Operations

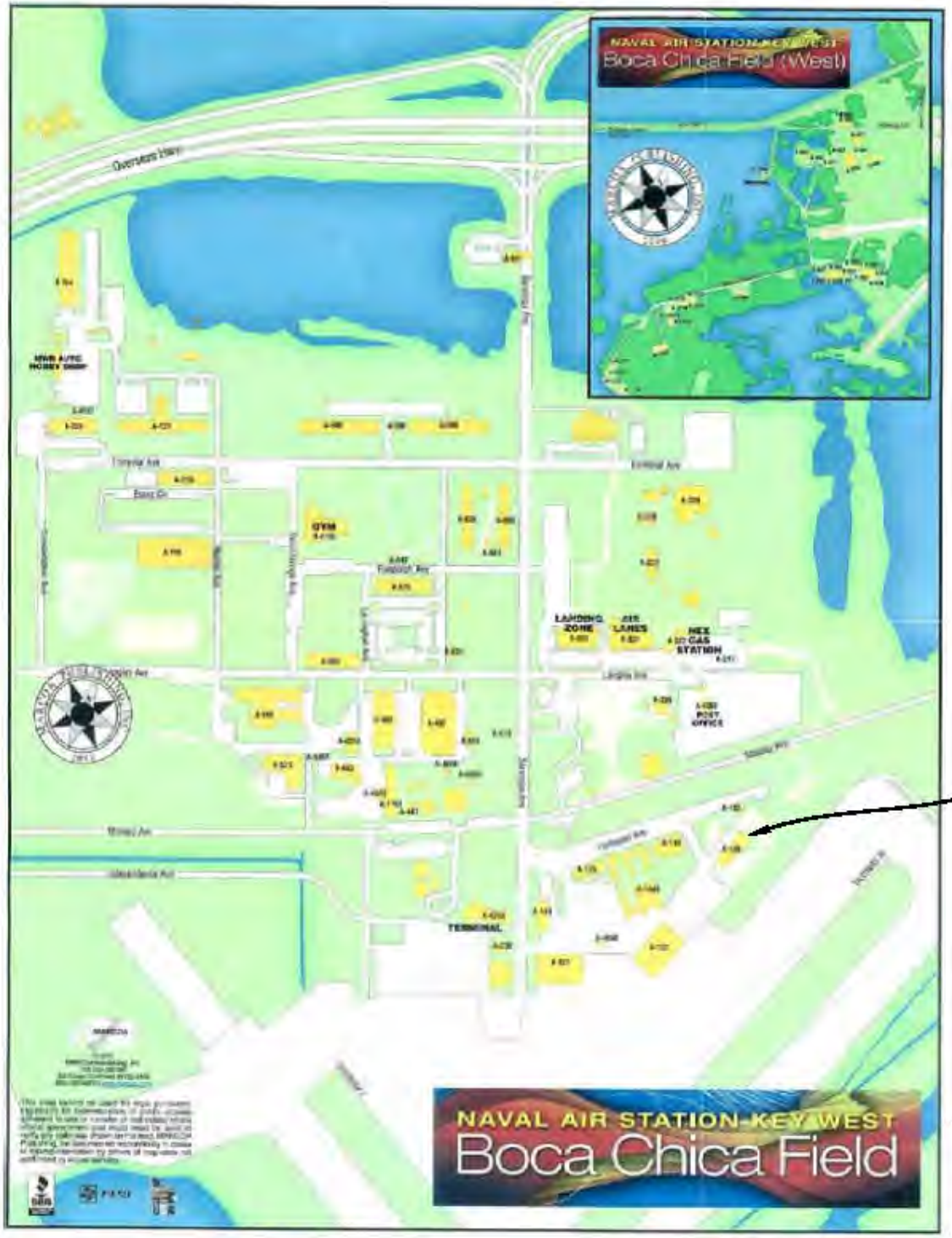

LOCATION OF
BUILDING A-126

SBG
7301 Rivers Ave., Suite 245
N. Charleston SC 29406-9643
(843) 573-7140

SITE MAP
BUILDING A-126
BOCA CHICA FIELD
NAS KEY WEST, FL.

DWG SCALE: NTS

DWG DATE: DEC 2011

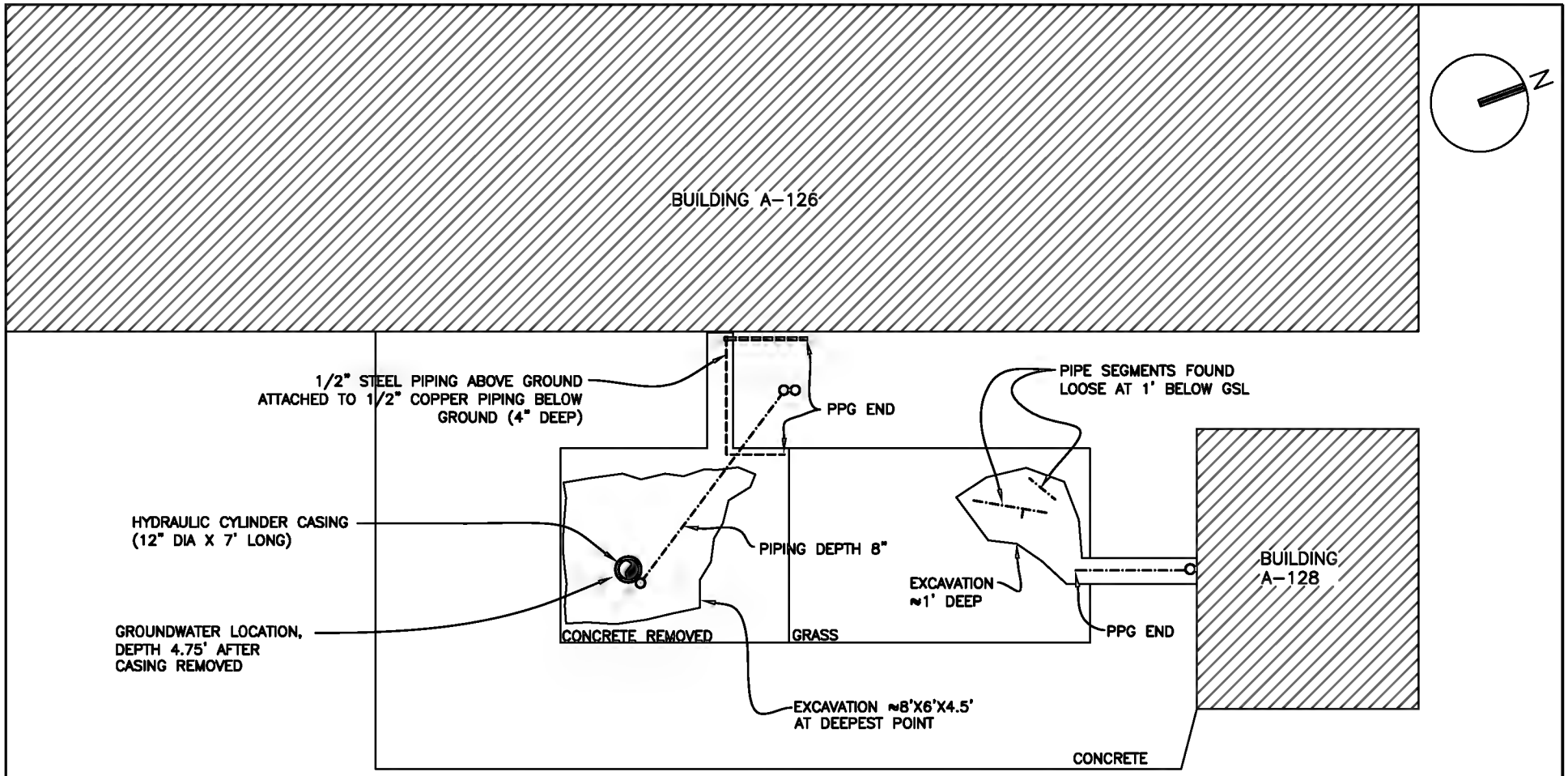

NOTES:
1. THREE (3) CUBIC YDS SOIL EXCAVATED
2. ALL EXCAVATED SOIL WAS RETURNED TO THE PIT

SCALE:1/8"=1'-0"

12" 0 4' 8' 12'

KEY

1/2 INCH PIPING ----------

1½ INCH STEEL PIPING —·—·—·—

SBG IEG
7301 Rivers Ave., Suite 245
N. Charleston SC 29406-9643
(843) 573-7140

SITE LAYOUT
BUILDING A-126
BOCA CHICA FIELD
NAS KEY WEST, FL.

DWG SCALE: 1/8" = 1' | DWG DATE: DEC 2011

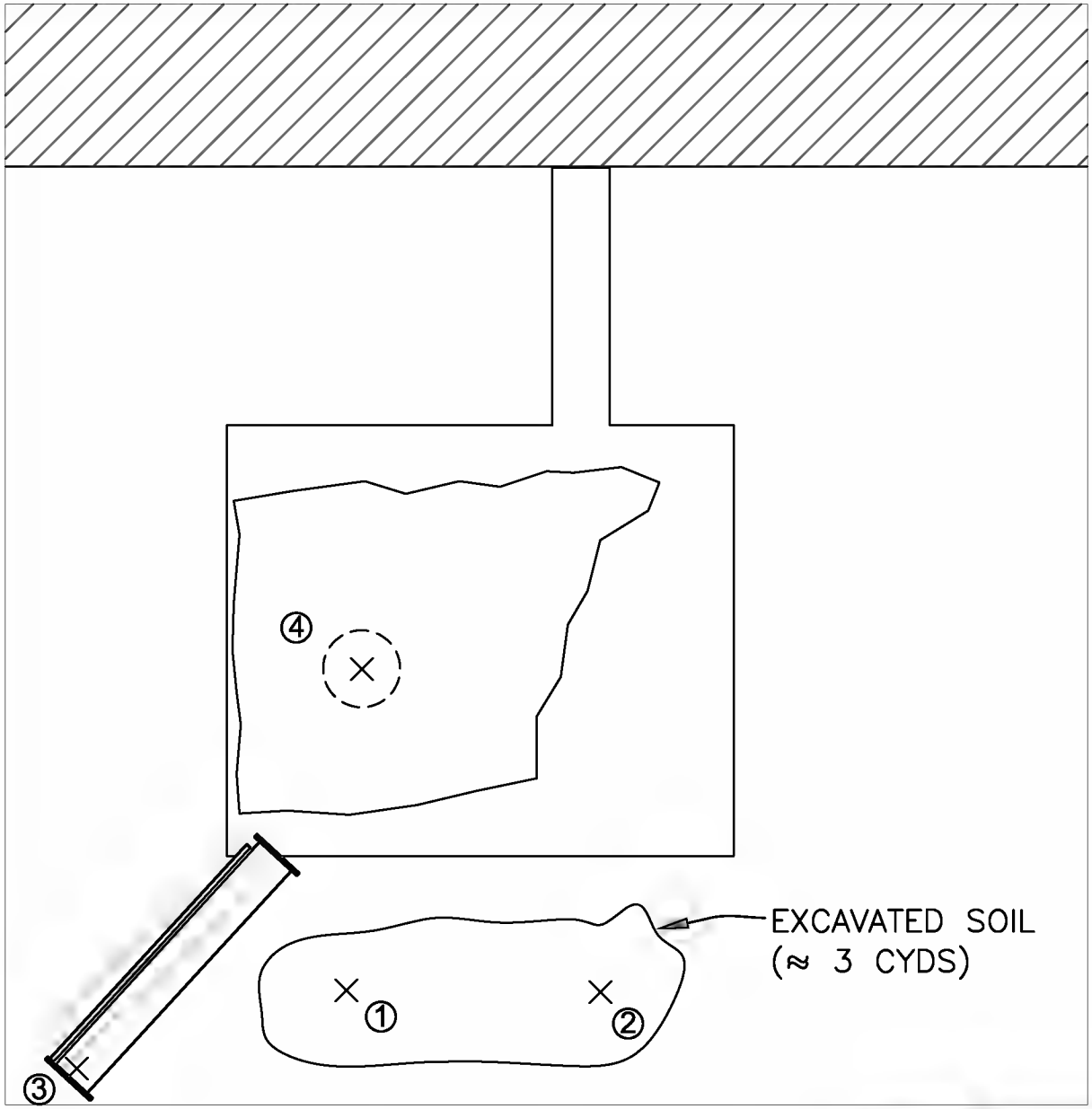

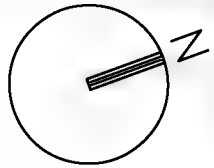

PID READINGS		
Sample #	Reading	Location
①	0.0 ppm	Excav. soil
②	0.0 ppm	Excav. soil
③	0.1 ppm	Soil on casing ext.

SOIL SAMPLE		
Sample #	Depth	Location
④	4.5'	Bottom of excavation where casing was removed

SBG IEG
7301 Ave., Suite 245
N. Charleston SC 29406-9643
(843) 573-7140

SITE SAMPLING
BUILDING A-126
BOCA CHICA FIELD
NAS KEY WEST, FL.

DWG SCALE: 1 4" = 1' | DWG DATE: DEC 2011

Pace Analytical Services, Inc.
8 East Tower Circle
Ormond Beach, FL 32174
(386)672-5668

December 06, 2011

Craig Music
Micah Group
389 Waller Avenue
Suite 210
Lexington, KY 40504

RE: Project: 445 NAS Bldg-A-126
Pace Project No.: 3544255

Dear Craig Music:
Enclosed are the analytical results for sample(s) received by the laboratory on December 01, 2011. The results relate only to the samples included in this report. Results reported herein conform to the most current TNI standards and the laboratory's Quality Assurance Manual, where applicable, unless otherwise noted in the body of the report.

The sample 3544255001 (NAS Bldg A-126 B-1) was diluted for EPA8270 due to heavy oil-like matrix which interfered with the analysis.

If you have any questions concerning this report, please feel free to contact me.

Sincerely,

Jeff Baylor

Jeff Baylor

jeff.baylor@pacelabs.com
Project Manager

Enclosures

This report shall not be reproduced, except in full,
without the written consent of Pace Analytical Services, Inc..

Pace Analytical Services, Inc.
8 East Tower Circle
Ormond Beach, FL 32174
(386)672-5668

CERTIFICATIONS

Project: 445 NAS Bldg-A-126
Pace Project No.: 3544255

Ormond Beach Certification IDs
8 East Tower Circle, Ormond Beach, FL 32174
Alabama Certification #: 41320
Arizona Certification #: AZ0735
Colorado Certification: FL NELAC Reciprocity
Connecticut Certification #: PH 0216
Florida Certification #: E83079
Georgia Certification #: 955
Guam Certification: FL NELAC Reciprocity
Hawaii Certification: FL NELAC Reciprocity
Illinois Certification #: 200068
Indiana Certification: FL NELAC Reciprocity
Kansas Certification #: E-10383
Kentucky Certification #: 90050
Louisiana Certification #: FL NELAC Reciprocity
Louisiana Environmental Certificate #: 05007
Maine Certification #: FL01264
Massachusetts Certification #: M-FL1264
Michigan Certification #: 9911
Mississippi Certification: FL NELAC Reciprocity
Missouri Certification #: 236
Montana Certification #: Cert 0074
Nevada Certification: FL NELAC Reciprocity
New Hampshire Certification #: 2958
New Jersey Certification #: FL765
New York Certification #: 11608
North Carolina Environmental Certificate #: 667
North Carolina Certification #: 12710
Pennsylvania Certification #: 68-00547
Puerto Rico Certification #: FL01264
Tennessee Certification #: TN02974
Texas Certification: FL NELAC Reciprocity
U.S.Virgin Islands Certification: FL NELAC Reciprocity
Virginia Certification #: 00432
Virginia Environmental Certificate #: 460165
Washington Certification #: C955
Wyoming Certification: FL NELAC Reciprocity
Wyoming (EPA Region 8): FL NELAC Reciprocity

This report shall not be reproduced, except in full,
without the written consent of Pace Analytical Services, Inc..

Pace Analytical Services, Inc.
8 East Tower Circle
Ormond Beach, FL 32174
(386)672-5668

SAMPLE SUMMARY

Project: 445 NAS Bldg-A-126
Pace Project No.: 3544255

Lab ID	Sample ID	Matrix	Date Collected	Date Received
3544255001	**NAS Bldg A-126 B-1**	Solid	11/29/11 12:10	12/01/11 11:50

This report shall not be reproduced, except in full,
without the written consent of Pace Analytical Services, Inc..

Pace Analytical Services, Inc.
8 East Tower Circle
Ormond Beach, FL 32174
(386)672-5668

SAMPLE ANALYTE COUNT

Project: 445 NAS Bldg-A-126
Pace Project No.: 3544255

Lab ID	Sample ID	Method	Analysts	Analytes Reported
3544255001	**NAS Bldg A-126 B-1**	FL-PRO	KMH	2
		EPA 8270	EAO	21
		EPA 8260	ABD	9
		ASTM D2974-87	GMD	1

This report shall not be reproduced, except in full,
without the written consent of Pace Analytical Services, Inc..

Pace Analytical Services, Inc.
8 East Tower Circle
Ormond Beach, FL 32174
(386)672-5668

ANALYTICAL RESULTS

Project: 445 NAS Bldg-A-126
Pace Project No.: 3544255

Sample: NAS Bldg A-126 B-1 **Lab ID: 3544255001** Collected: 11/29/11 12:10 Received: 12/01/11 11:50 Matrix: Solid

Results reported on a "dry-weight" basis

Parameters	Results	Units	PQL	MDL	DF	Prepared	Analyzed	CAS No.	Qual
FL-PRO Soil Microwave	Analytical Method: FL-PRO Preparation Method: EPA 3546								
Petroleum Range Organics	**271**	mg/kg	4.7	3.0	1	12/02/11 02:00	12/03/11 05:30		
Surrogates									
o-Terphenyl (S)	119	%	62-109		1	12/02/11 02:00	12/03/11 05:30	84-15-1	J(S0)
8270 MSSV Short List Microwave	Analytical Method: EPA 8270 Preparation Method: EPA 3546								
Acenaphthene	**19.5U**	ug/kg	194	19.5	5	12/02/11 02:00	12/05/11 19:11	83-32-9	
Acenaphthylene	**23.0U**	ug/kg	194	23.0	5	12/02/11 02:00	12/05/11 19:11	208-96-8	
Anthracene	**12.0U**	ug/kg	194	12.0	5	12/02/11 02:00	12/05/11 19:11	120-12-7	
Benzo(a)anthracene	**17.4U**	ug/kg	194	17.4	5	12/02/11 02:00	12/05/11 19:11	56-55-3	
Benzo(a)pyrene	**21.3U**	ug/kg	194	21.3	5	12/02/11 02:00	12/05/11 19:11	50-32-8	
Benzo(b)fluoranthene	**13.7U**	ug/kg	194	13.7	5	12/02/11 02:00	12/05/11 19:11	205-99-2	
Benzo(g,h,i)perylene	**18.0U**	ug/kg	194	18.0	5	12/02/11 02:00	12/05/11 19:11	191-24-2	
Benzo(k)fluoranthene	**28.9U**	ug/kg	194	28.9	5	12/02/11 02:00	12/05/11 19:11	207-08-9	
Chrysene	**39.3 I**	ug/kg	194	17.4	5	12/02/11 02:00	12/05/11 19:11	218-01-9	
Dibenz(a,h)anthracene	**20.8U**	ug/kg	194	20.8	5	12/02/11 02:00	12/05/11 19:11	53-70-3	
Fluoranthene	**21.8U**	ug/kg	194	21.8	5	12/02/11 02:00	12/05/11 19:11	206-44-0	
Fluorene	**14.6U**	ug/kg	194	14.6	5	12/02/11 02:00	12/05/11 19:11	86-73-7	
Indeno(1,2,3-cd)pyrene	**20.7U**	ug/kg	194	20.7	5	12/02/11 02:00	12/05/11 19:11	193-39-5	
1-Methylnaphthalene	**24.6U**	ug/kg	194	24.6	5	12/02/11 02:00	12/05/11 19:11	90-12-0	N2
2-Methylnaphthalene	**27.1U**	ug/kg	194	27.1	5	12/02/11 02:00	12/05/11 19:11	91-57-6	
Naphthalene	**20.7U**	ug/kg	194	20.7	5	12/02/11 02:00	12/05/11 19:11	91-20-3	
Phenanthrene	**18.5U**	ug/kg	194	18.5	5	12/02/11 02:00	12/05/11 19:11	85-01-8	
Pyrene	**23.6U**	ug/kg	194	23.6	5	12/02/11 02:00	12/05/11 19:11	129-00-0	
Surrogates									
Nitrobenzene-d5 (S)	70	%	10-110		5	12/02/11 02:00	12/05/11 19:11	4165-60-0	
2-Fluorobiphenyl (S)	96	%	18-110		5	12/02/11 02:00	12/05/11 19:11	321-60-8	
Terphenyl-d14 (S)	46	%	10-123		5	12/02/11 02:00	12/05/11 19:11	1718-51-0	
8260 MSV 5030 Low Level	Analytical Method: EPA 8260								
Benzene	**3.5 I**	ug/kg	6.7	0.67	1		12/05/11 13:53	71-43-2	
Ethylbenzene	**0.92 I**	ug/kg	6.7	0.67	1		12/05/11 13:53	100-41-4	
Methyl-tert-butyl ether	**1.1 I**	ug/kg	6.7	0.67	1		12/05/11 13:53	1634-04-4	
Toluene	**3.7 I**	ug/kg	6.7	0.67	1		12/05/11 13:53	108-88-3	
Xylene (Total)	**14.8 I**	ug/kg	20.1	0.67	1		12/05/11 13:53	1330-20-7	
Surrogates									
Dibromofluoromethane (S)	96	%	82-115		1		12/05/11 13:53	1868-53-7	
Toluene-d8 (S)	110	%	84-117		1		12/05/11 13:53	2037-26-5	
4-Bromofluorobenzene (S)	112	%	55-148		1		12/05/11 13:53	460-00-4	
1,2-Dichloroethane-d4 (S)	94	%	80-131		1		12/05/11 13:53	17060-07-0	
Percent Moisture	Analytical Method: ASTM D2974-87								
Percent Moisture	**15.7**	%	0.10	0.10	1		12/02/11 16:33		

This report shall not be reproduced, except in full,
without the written consent of Pace Analytical Services, Inc..

Pace Analytical Services, Inc.
8 East Tower Circle
Ormond Beach, FL 32174
(386)672-5668

QUALITY CONTROL DATA

Project: 445 NAS Bldg-A-126
Pace Project No.: 3544255

QC Batch: MSV/4272 | Analysis Method: EPA 8260
QC Batch Method: EPA 8260 | Analysis Description: 8260 MSV 5030 Low
Associated Lab Samples: 3544255001

METHOD BLANK: 301529 | Matrix: Solid
Associated Lab Samples: 3544255001

Parameter	Units	Blank Result	Reporting Limit	Analyzed	Qualifiers
Benzene	ug/kg	0.50U	5.0	12/05/11 06:23	
Ethylbenzene	ug/kg	0.50U	5.0	12/05/11 06:23	
Methyl-tert-butyl ether	ug/kg	1.5 I	5.0	12/05/11 06:23	
Toluene	ug/kg	0.50U	5.0	12/05/11 06:23	
Xylene (Total)	ug/kg	0.50U	15.0	12/05/11 06:23	
1,2-Dichloroethane-d4 (S)	%	88	80-131	12/05/11 06:23	
4-Bromofluorobenzene (S)	%	104	55-148	12/05/11 06:23	
Dibromofluoromethane (S)	%	92	82-115	12/05/11 06:23	
Toluene-d8 (S)	%	112	84-117	12/05/11 06:23	

LABORATORY CONTROL SAMPLE: 301530

Parameter	Units	Spike Conc.	LCS Result	LCS % Rec	% Rec Limits	Qualifiers
Benzene	ug/kg	19.9	19.2	97	70-130	
Ethylbenzene	ug/kg	19.9	22.5	113	70-130	
Methyl-tert-butyl ether	ug/kg	19.9	21.8	110	70-130	
Toluene	ug/kg	19.9	21.2	106	70-130	
Xylene (Total)	ug/kg	59.6	71.9	121	70-130	LS
1,2-Dichloroethane-d4 (S)	%			90	80-131	
4-Bromofluorobenzene (S)	%			117	55-148	
Dibromofluoromethane (S)	%			97	82-115	
Toluene-d8 (S)	%			114	84-117	

MATRIX SPIKE & MATRIX SPIKE DUPLICATE: 301531 301532

Parameter	Units	3544472007 Result	MS Spike Conc.	MSD Spike Conc.	MS Result	MSD Result	MS % Rec	MSD % Rec	% Rec Limits	RPD	Max RPD	Qual
Benzene	ug/kg	0.64U	23.5	21.7	16.7	16.2	71	75	24-141	3	40	
Ethylbenzene	ug/kg	0.64U	23.5	21.7	15.3	14.3	65	66	30-130	7	40	
Methyl-tert-butyl ether	ug/kg	0.64U	23.5	21.7	26.2	24.3	111	112	31-156	8	40	
Toluene	ug/kg	0.64U	23.5	21.7	17.3	17.8	72	80	24-137	3	40	
Xylene (Total)	ug/kg	14.7 I	70.5	65.1	51.5	44.6	52	46	26-130	15	40	
1,2-Dichloroethane-d4 (S)	%						86	88	80-131			
4-Bromofluorobenzene (S)	%						118	98	55-148			
Dibromofluoromethane (S)	%						95	96	82-115			
Toluene-d8 (S)	%						107	103	84-117			

This report shall not be reproduced, except in full,
without the written consent of Pace Analytical Services, Inc..

Pace Analytical Services, Inc.
8 East Tower Circle
Ormond Beach, FL 32174
(386)672-5668

QUALITY CONTROL DATA

Project: 445 NAS Bldg-A-126
Pace Project No.: 3544255

QC Batch: OEXT/6634
QC Batch Method: EPA 3546
Analysis Method: EPA 8270
Analysis Description: 8270 Solid MSSV Microwave Short Spike
Associated Lab Samples: 3544255001

METHOD BLANK: 300170
Matrix: Solid
Associated Lab Samples: 3544255001

Parameter	Units	Blank Result	Reporting Limit	Analyzed	Qualifiers
1-Methylnaphthalene	ug/kg	4.2U	33.0	12/05/11 16:00	N2
2-Methylnaphthalene	ug/kg	4.6U	33.0	12/05/11 16:00	
Acenaphthene	ug/kg	3.3U	33.0	12/05/11 16:00	
Acenaphthylene	ug/kg	3.9U	33.0	12/05/11 16:00	
Anthracene	ug/kg	2.0U	33.0	12/05/11 16:00	
Benzo(a)anthracene	ug/kg	13.2 I	33.0	12/05/11 16:00	
Benzo(a)pyrene	ug/kg	3.6U	33.0	12/05/11 16:00	
Benzo(b)fluoranthene	ug/kg	5.5 I	33.0	12/05/11 16:00	
Benzo(g,h,i)perylene	ug/kg	3.0U	33.0	12/05/11 16:00	
Benzo(k)fluoranthene	ug/kg	7.4 I	33.0	12/05/11 16:00	
Chrysene	ug/kg	10 I	33.0	12/05/11 16:00	
Dibenz(a,h)anthracene	ug/kg	3.5U	33.0	12/05/11 16:00	
Fluoranthene	ug/kg	3.7U	33.0	12/05/11 16:00	
Fluorene	ug/kg	2.5U	33.0	12/05/11 16:00	
Indeno(1,2,3-cd)pyrene	ug/kg	3.5U	33.0	12/05/11 16:00	
Naphthalene	ug/kg	3.5U	33.0	12/05/11 16:00	
Phenanthrene	ug/kg	3.1U	33.0	12/05/11 16:00	
Pyrene	ug/kg	4.0U	33.0	12/05/11 16:00	
2-Fluorobiphenyl (S)	%	70	18-110	12/05/11 16:00	
Nitrobenzene-d5 (S)	%	66	10-110	12/05/11 16:00	
Terphenyl-d14 (S)	%	98	10-123	12/05/11 16:00	

LABORATORY CONTROL SAMPLE: 300171

Parameter	Units	Spike Conc.	LCS Result	LCS % Rec	% Rec Limits	Qualifiers
1-Methylnaphthalene	ug/kg	1670	1090	66	53-110	N2
2-Methylnaphthalene	ug/kg	1670	1140	68	53-110	
Acenaphthene	ug/kg	1670	1160	69	55-110	
Acenaphthylene	ug/kg	1670	1150	69	60-110	
Anthracene	ug/kg	1670	1430	86	70-110	
Benzo(a)anthracene	ug/kg	1670	1580	95	70-110	
Benzo(a)pyrene	ug/kg	1670	1710	103	71-110	
Benzo(b)fluoranthene	ug/kg	1670	1720	103	64-110	
Benzo(g,h,i)perylene	ug/kg	1670	1630	98	60-116	
Benzo(k)fluoranthene	ug/kg	1670	1820	109	70-110	
Chrysene	ug/kg	1670	1590	95	70-110	
Dibenz(a,h)anthracene	ug/kg	1670	1620	97	63-116	
Fluoranthene	ug/kg	1670	1560	94	62-113	
Fluorene	ug/kg	1670	1230	74	42-120	
Indeno(1,2,3-cd)pyrene	ug/kg	1670	1640	98	64-117	
Naphthalene	ug/kg	1670	1110	66	50-110	

This report shall not be reproduced, except in full,
without the written consent of Pace Analytical Services, Inc..

Pace Analytical Services, Inc.
8 East Tower Circle
Ormond Beach, FL 32174
(386)672-5668

QUALITY CONTROL DATA

Project: 445 NAS Bldg-A-126
Pace Project No.: 3544255

LABORATORY CONTROL SAMPLE: 300171

Parameter	Units	Spike Conc.	LCS Result	LCS % Rec	% Rec Limits	Qualifiers
Phenanthrene	ug/kg	1670	1510	90	70-110	
Pyrene	ug/kg	1670	1670	100	53-123	
2-Fluorobiphenyl (S)	%			64	18-110	
Nitrobenzene-d5 (S)	%			63	10-110	
Terphenyl-d14 (S)	%			100	10-123	

MATRIX SPIKE & MATRIX SPIKE DUPLICATE: 300537 300538

Parameter	Units	3544205004 Result	MS Spike Conc.	MSD Spike Conc.	MS Result	MSD Result	MS % Rec	MSD % Rec	% Rec Limits	RPD	Max RPD	Qual
1-Methylnaphthalene	ug/kg	0.021U mg/kg	1680	1700	1180	1300	70	77	50-110	10	40	N2
2-Methylnaphthalene	ug/kg	0.023U mg/kg	1680	1700	1140	1330	68	78	46-110	15	40	
Acenaphthene	ug/kg	0.017U mg/kg	1680	1700	1290	1370	77	81	46-110	6	40	
Acenaphthylene	ug/kg	0.020U mg/kg	1680	1700	1280	1340	76	79	47-113	4	40	
Anthracene	ug/kg	0.010U mg/kg	1680	1700	1470	1560	88	92	53-115	6	40	
Benzo(a)anthracene	ug/kg	0.067 I mg/kg	1680	1700	1640	1610	94	91	53-113	2	40	
Benzo(a)pyrene	ug/kg	0.062 I mg/kg	1680	1700	1620	1680	93	95	53-113	3	40	
Benzo(b)fluoranthene	ug/kg	0.063 I mg/kg	1680	1700	1650	1620	95	92	41-119	2	40	
Benzo(g,h,i)perylene	ug/kg	0.064 I mg/kg	1680	1700	1660	1930	95	110	47-121	15	40	
Benzo(k)fluoranthene	ug/kg	0.052 I mg/kg	1680	1700	1540	1710	89	98	53-116	11	40	
Chrysene	ug/kg	0.057 I mg/kg	1680	1700	1610	1570	92	89	44-119	3	40	
Dibenz(a,h)anthracene	ug/kg	0.018U mg/kg	1680	1700	1570	1800	93	106	54-116	14	40	
Fluoranthene	ug/kg	0.019U mg/kg	1680	1700	1720	1560	102	92	30-133	10	40	
Fluorene	ug/kg	0.013U mg/kg	1680	1700	1270	1570	76	93	39-125	22	40	
Indeno(1,2,3-cd)pyrene	ug/kg	0.054 I mg/kg	1680	1700	1610	1870	93	107	51-119	15	40	
Naphthalene	ug/kg	0.018U mg/kg	1680	1700	1120	1250	67	74	43-110	11	40	
Phenanthrene	ug/kg	0.016U mg/kg	1680	1700	1540	1560	92	92	45-123	2	40	
Pyrene	ug/kg	0.029 I mg/kg	1680	1700	1690	1490	99	86	33-136	13	40	
2-Fluorobiphenyl (S)	%						68	79	18-110			
Nitrobenzene-d5 (S)	%						65	70	10-110			
Terphenyl-d14 (S)	%						91	78	10-123			

This report shall not be reproduced, except in full,
without the written consent of Pace Analytical Services, Inc..

Pace Analytical Services, Inc.
8 East Tower Circle
Ormond Beach, FL 32174
(386)672-5668

QUALITY CONTROL DATA

Project: 445 NAS Bldg-A-126
Pace Project No.: 3544255

QC Batch: OEXT/6635 | Analysis Method: FL-PRO
QC Batch Method: EPA 3546 | Analysis Description: FL-PRO Soil
Associated Lab Samples: 3544255001

METHOD BLANK: 300173 | Matrix: Solid
Associated Lab Samples: 3544255001

Parameter	Units	Blank Result	Reporting Limit	Analyzed	Qualifiers
Petroleum Range Organics	mg/kg	2.5U	4.0	12/03/11 01:31	
o-Terphenyl (S)	%	111	62-109	12/03/11 01:31	S3

LABORATORY CONTROL SAMPLE: 300174

Parameter	Units	Spike Conc.	LCS Result	LCS % Rec	% Rec Limits	Qualifiers
Petroleum Range Organics	mg/kg	200	248	124	63-153	
o-Terphenyl (S)	%			116	62-109	J(S0)

MATRIX SPIKE & MATRIX SPIKE DUPLICATE: 300534 300535

Parameter	Units	3544205001 Result	MS Spike Conc.	MSD Spike Conc.	MS Result	MSD Result	MS % Rec	MSD % Rec	% Rec Limits	RPD	Max RPD	Qual
Petroleum Range Organics	mg/kg	10.2	207	205	238	263	110	123	63-153	10	20	
o-Terphenyl (S)	%						96	94	62-109			

This report shall not be reproduced, except in full,
without the written consent of Pace Analytical Services, Inc..

Pace Analytical Services, Inc.
8 East Tower Circle
Ormond Beach, FL 32174
(386)672-5668

QUALITY CONTROL DATA

Project: 445 NAS Bldg-A-126
Pace Project No.: 3544255

QC Batch: PMST/1016
QC Batch Method: ASTM D2974-87
Associated Lab Samples: 3544255001

Analysis Method: ASTM D2974-87
Analysis Description: Dry Weight/Percent Moisture

SAMPLE DUPLICATE: 300983

Parameter	Units	3544205001 Result	Dup Result	RPD	Max RPD	Qualifiers
Percent Moisture	%	3.3	3.5	6	10	

SAMPLE DUPLICATE: 300984

Parameter	Units	3544304001 Result	Dup Result	RPD	Max RPD	Qualifiers
Percent Moisture	%	0.12	0.13	3	10	

SAMPLE DUPLICATE: 300985

Parameter	Units	3544330013 Result	Dup Result	RPD	Max RPD	Qualifiers
Percent Moisture	%	10.4	16.0	42	10	J(D6)

This report shall not be reproduced, except in full,
without the written consent of Pace Analytical Services, Inc..

Pace Analytical Services, Inc.
8 East Tower Circle
Ormond Beach, FL 32174
(386)672-5668

QUALIFIERS

Project: 445 NAS Bldg-A-126
Pace Project No.: 3544255

DEFINITIONS

DF - Dilution Factor, if reported, represents the factor applied to the reported data due to changes in sample preparation, dilution of the sample aliquot, or moisture content.

ND - Not Detected at or above adjusted reporting limit.

MDL - Adjusted Method Detection Limit.

S - Surrogate

1,2-Diphenylhydrazine (8270 listed analyte) decomposes to Azobenzene.

Consistent with EPA guidelines, unrounded data are displayed and have been used to calculate % recovery and RPD values.

LCS(D) - Laboratory Control Sample (Duplicate)

MS(D) - Matrix Spike (Duplicate)

DUP - Sample Duplicate

RPD - Relative Percent Difference

NC - Not Calculable.

SG - Silica Gel - Clean-Up

U - Indicates the compound was analyzed for, but not detected.

N-Nitrosodiphenylamine decomposes and cannot be separated from Diphenylamine using Method 8270. The result reported for each analyte is a combined concentration.

Pace Analytical is TNI accredited. Contact your Pace PM for the current list of accredited analytes.

ANALYTE QUALIFIERS

I	The reported value is between the laboratory method detection limit and the laboratory practical quantitation limit.
J(D6)	Estimated Value. The relative percent difference (RPD) between the sample and sample duplicate exceeded laboratory control limits.
J(S0)	Estimated Value. Surrogate recovery outside laboratory control limits.
LS	Analyte recovery in the laboratory control sample (LCS) was outside QC limits for one or more of the constituent analytes used in the calculated result.
N2	The lab does not hold TNI accreditation for this parameter.
S3	Surrogate recovery exceeded laboratory control limits. Analyte presence below reporting limits in associated samples. Results unaffected by high bias.

This report shall not be reproduced, except in full,
without the written consent of Pace Analytical Services, Inc..

Pace Analytical Services, Inc.
8 East Tower Circle
Ormond Beach, FL 32174
(386)672-5668

QUALITY CONTROL DATA CROSS REFERENCE TABLE

Project: 445 NAS Bldg-A-126
Pace Project No.: 3544255

Lab ID	Sample ID	QC Batch Method	QC Batch	Analytical Method	Analytical Batch
3544255001	**NAS Bldg A-126 B-1**	EPA 3546	OEXT/6635	FL-PRO	GCSV/4843
3544255001	**NAS Bldg A-126 B-1**	EPA 3546	OEXT/6634	EPA 8270	MSSV/2706
3544255001	**NAS Bldg A-126 B-1**	EPA 8260	MSV/4272		
3544255001	**NAS Bldg A-126 B-1**	ASTM D2974-87	PMST/1016		

This report shall not be reproduced, except in full,
without the written consent of Pace Analytical Services, Inc..

Pace Analytical®
www.pacelabs.com

CHAIN-OF-CUSTODY / Analytical Request Document

The Chain-of-Custody is a LEGAL DOCUMENT. All relevant fields must be completed accurately.

3544255

Page: of

1463899

Section A Required Client Information:

Company: Micah Group
Address: 746 Westland Drive STE: 110 Lexington Ky. 40504
Email To: CMusic@Micah Group.com
Phone: 859-338-5156 Fax: 859-260-7760
Requested Due Date/TAT: 5 DAY TAT

Section B Required Project Information:

Report To: Craig Music
Copy To: CMusic@Micah Group.com
Purchase Order No.:
Project Name: NAS Bldg - A-126
Project Number: 445

Section C Invoice Information:

Attention: D. McCallum
Company Name: Micah Group
Address: 746 Westland Drive Lexington Ky. 40504
Pace Quote Reference:
Pace Project Manager:
Pace Profile #:

REGULATORY AGENCY: ☐ NPDES ☐ GROUND WATER ☐ DRINKING WATER ☒ UST ☐ RCRA ☐ OTHER

Site Location STATE: FL

Section D Required Client Information

SAMPLE ID (A-Z, 0-9 / ,-) Sample IDs MUST BE UNIQUE

Matrix Codes MATRIX / CODE: Drinking Water DW, Water WT, Waste Water WW, Product P, Soil/Solid SL, Oil OL, Wipe WP, Air AR, Tissue TS, Other OT

ITEM #	SAMPLE ID	MATRIX CODE (see valid codes to left)	SAMPLE TYPE (G=GRAB C=COMP)	COLLECTED COMPOSITE START DATE	COLLECTED COMPOSITE START TIME	COLLECTED COMPOSITE END/GRAB DATE	COLLECTED COMPOSITE END/GRAB TIME	SAMPLE TEMP AT COLLECTION	# OF CONTAINERS	Preservatives: Unpreserved	H_2SO_4	HNO_3	HCl	NaOH	$Na_2S_2O_3$	Methanol	Other	Analysis Test (Y/N): BTEX MTBE 8021	PAH TRPH 8270	Extra Volume Needed	Residual Chlorine (Y/N)	Pace Project No./ Lab I.D.
1	NAS Bldg A-126 B-1	SL	C	11-29	12:10				4	X				X		X		X				
2	NAS Bldg A-126 B-1	SL	C	11-29	12:10				1	X									X			
3	NAS Bldg A-126 B-1	SL	C	11-29	12:15				1	X										X		
4																						
5																						
6																						
7																						
8																						
9																						
10																						
11																						
12																						

ADDITIONAL COMMENTS	RELINQUISHED BY / AFFILIATION	DATE	TIME	ACCEPTED BY / AFFILIATION	DATE	TIME	SAMPLE CONDITIONS
	[signature]	11-30-11	5:00pm	Fed Ex	11-30	1:30	12/1/11
				[signature]	12/1/11	11:50	14.4 Y
							5.9

ORIGINAL

SAMPLER NAME AND SIGNATURE: TTJ

PRINT Name of SAMPLER: Mark Wilks

SIGNATURE of SAMPLER: [signature] DATE Signed (MM/DD/YY): 11-29-11

Temp in °C | Received on Ice (Y/N) | Custody Sealed Cooler (Y/N) | Samples Intact (Y/N)

*Important Note: By signing this form you are accepting Pace's NET 30 day payment terms and agreeing to late charges of 1.5% per month for any invoices not paid within 30 days.

F-ALL-Q-020rev.07, 15-May-2007

Pace Analytical	Document Name: Sample Condition Upon Receipt Form	Document Revised: September 23, 2011
	Document No.: F-FL-C-007 rev. 04	Issuing Authorities: Pace Florida Quality Office

Sample Condition Upon Receipt Form (SCUR)

Table Number: _____

Client Name: MCGH Project # 3544255

Courier: ☑ Fed Ex ☐ UPS ☐ USPS ☐ Client ☐ Commercial ☐ Pace ☐ Other _____

Tracking # 8738 7338 6020

Custody Seal on Cooler/Box Present: ☐ yes ☐ no Seals Intact: ☐ yes ☐ no

Packing Material: ☐ Bubble Wrap ☐ Bubble Bags ☐ None ☐ Other _____

Thermometer Used T3 **Type of Ice:** Wet Blue None

Cooler Temperature°C 6.1 **(Visual)** -0.2 **(Correction Factor)** 5.9 **(Actual)**

(Temp should be above freezing to 6°C). If below 0°C, then was sample frozen? ☐ Yes ☐ No

Date and Initials of person examining contents: WW 12/1/11

Receipt of samples satisfactory: ☐ Yes ☐ No **Rush TAT requested on COC:**

If yes, then all conditions below were met:	If no, then mark box & describe issue (use comments area if necessary):
Chain of Custody Present	☐
Chain of Custody Filled Out	☐
Relinquished Signature & Sampler Name COC	☐
Samples Arrived within Hold Time	☐
Sufficient Volume	☐
Correct Containers Used	☐
Containers Intact	☐
Sample Labels match COC (sample IDs & date/time of collection)	☐ No Labels: ☐ No Time/Date on Labels: ☐
All containers needing preservation are found to be in compliance with EPA recommendation.	☐
No Headspace in VOA Vials (>6mm):	☐

Client Notification/ Resolution:

Person Contacted: _____ Date/Time: _____

Comments/ Resolution (use back for additional comments): _____

Project Manager Review: _____ **Date:** 12/7/11

Finished Product Information Only

F.P. Sample ID: _____

Production Code: _____

Date/Time Opened: _____

Number of Unopened Bottles Remaining: _____

Extra Sample in Shed: Yes No

Size & Qty of Bottles Received

_____ x 5 Gal
_____ x 2.5 Gal
_____ x 1 Gal
_____ x 1 Liter
_____ x 500 mL
_____ x 250 mL
_____ x Other: _____

Photo 1: Site prior to concrete removal

Photo 2: Above ground piping at Bldg A-126

Photo 3: Above ground piping at Bldg A-128

Photo 4: Site prior to excavation

Photo 5: Hydraulic cylinder casing full of rain water

Photo 6: Hydraulic cylinder casing after pumping water. Approx 6” to 12” of oily sand/gravel mixture remained.

Photo 7: Site during concrete slab removal

Photo 8: Site after excavation but before piping/casing removal.

Photo 9: Site after excavation but before piping/casing removal.

Photo 10: Area of excavation immediately after casing removal. Small amount of GW appeared.

Photo 11: 1 ½” and ½” piping cut at edge of excavation and abandoned in place.

Photo 12: Hydraulic cylinder casing after removal (12” dia x 7’ long).

Photo 13: Piping removed from area next to Bldg A-128.

Photo 14: Area after piping removal next to Bldg A-128.

Photo 15: Site after restoration.

Photo 16: Site after restoration. Note above ground piping cut and grouted or removed.

NON-HAZARDOUS WASTE MANIFEST	1. Generator ID Number	2. Page 1 of	3. Emergency Response Phone	4. Waste Tracking Number

5. Generator's Name and Mailing Address

Generator's Site Address (if different than mailing address)

Generator's Phone:

6. Transporter 1 Company Name — U.S. EPA ID Number

7. Transporter 2 Company Name — U.S. EPA ID Number

8. Designated Facility Name and Site Address — U.S. EPA ID Number

Facility's Phone:

	9. Waste Shipping Name and Description	10. Containers No.	10. Containers Type	11. Total Quantity	12. Unit Wt./Vol.	
	1.					
	2.					
	3.					
	4.					

13. Special Handling Instructions and Additional Information

14. **GENERATOR'S CERTIFICATION:** I certify the materials described above on this manifest are not subject to federal regulations for reporting proper disposal of Hazardous Waste.

Generator's/Offeror's Printed/Typed Name — Signature — Month Day Year

15. International Shipments ☐ Import to U.S. ☐ Export from U.S. Port of entry/exit:

Transporter Signature (for exports only): Date leaving U.S.:

16. Transporter Acknowledgment of Receipt of Materials

Transporter 1 Printed/Typed Name — Signature — Month Day Year

Transporter 2 Printed/Typed Name — Signature — Month Day Year

17. Discrepancy

17a. Discrepancy Indication Space ☐ Quantity ☐ Type ☐ Residue ☐ Partial Rejection ☐ Full Rejection

Manifest Reference Number:

17b. Alternate Facility (or Generator) — U.S. EPA ID Number

Facility's Phone:

17c. Signature of Alternate Facility (or Generator) — Month Day Year

18. Designated Facility Owner or Operator: Certification of receipt of materials covered by the manifest except as noted in item 17a

Printed/Typed Name — Signature — Month Day Year

GENERATOR | INT'L | TRANSPORTER | DESIGNATED FACILITY

WEIGHMASTER CERTIFICATE
TRUCK SCALE

TICKET #: 111860?

Purchased From: DYKOT
NICOR GROUP

BAKER IRON & METAL CO
1558 OLD FRANKFORT PIKE
LEXINGTON, KY 40504
859-259-0815
ISO 9001

Veh # NICOR GROU Cl # NICOR GROUP

COMMODITY	GROSS	TARE	NET	ADJ REASON	PO #:	PRICE	TOTAL AMT
# 1 STEEL UNPREPARED	11200	10680	520		[redacted]		

ALL WEIGHTS ARE REPORTED IN POUNDS UNLESS OTHERWISE INDICATED

TOTALS	11200	10680	520	0%	[redacted]

WEIGHTMASTER SIGNATURE _____

CUSTOMER SIGNATURE _____

WB Date 12/15/11	GROSS TON
WB Time 14:54	.2521
TRE Date 12/15/11	
TRE Time 15:04	

A-SCALE 1 B-SCALE 2 C-SCALE 3 D-SCALE 4 E-MANUAL WEIGH

VOID AFTER 90 DAYS

CASHIERS SYSTEM * * * CASH RECEIPT * * *

RECEIPT #: 532140
ENTERED DATE: 12/15/11

Purchased From:
NICOR GROUP

BAKER IRON & METAL CO.
1558 OLD FRANKFORT PIKE
LEXINGTON, KY 40504
859-259-0815
ISO 9001

Veh # NICOR GROU I.D. #

TICKET#	SHP DATE	COMMODITY	GROSS	TARE	NET	ADJ REASON	PRICE	UM	FRT EXT	TOTAL AMT
111860	12/15/11	# 1 STEEL UNPREPARED	11200	10680	520	0	[redacted]			

NICOR GROUP TOTALS (POUNDS): 11200 10680 520 TOTAL AMOUNT DUE CUSTOMER: [redacted]

By signing this receipt you are representing that you own the material being sold and also that you properly removed and recovered any CFCs that may have been stored in the material being sold.

GROSS TON
.2521

WEIGHTMASTER SIGNATURE _____

CUSTOMER SIGNATURE _____

VOID AFTER 90 DAYS

NON-HAZARDOUS WASTE MANIFEST	1. Generator ID Number	2. Page 1 of 1	3. Emergency Response Phone (859)260-7760	4. Waste Tracking Number

5. Generator's Name and Mailing Address
Micah Group Energy + Environmental
328 Walker Avenue
Lexington Ky. 40504
Generator's Phone: 859-260-7760

Generator's Site Address (if different than mailing address)
Key West Air Station Naval
Key West FL.
Building A-126

6. Transporter 1 Company Name: Micah Group
U.S. EPA ID Number: KYR-000-053-157

7. Transporter 2 Company Name:
U.S. EPA ID Number:

8. Designated Facility Name and Site Address
Baker Iron + Metal CO.
1558 Old Frankfort Pike
Lexington Ky.
Facility's Phone: 859-257-0815
U.S. EPA ID Number:

9. Waste Shipping Name and Description	10. Containers No.	Type	11. Total Quantity	12. Unit Wt./Vol.
1. Scrap Steel Hydraulic Cylinder			520 [redacted]	lb
2.				
3.				
4.				

13. Special Handling Instructions and Additional Information

14. GENERATOR'S CERTIFICATION: I certify the materials described above on this manifest are not subject to federal regulations for reporting proper disposal of Hazardous Waste.

Generator's Officer's Printed/Typed Name: Micah Group / Aaron Jamison
Signature:
Month 11 Day 29 Year 11

15. International Shipments ☐ Import to U.S. ☐ Export from U.S. Port of entry/exit:
Transporter Signature (for exports only): Date leaving U.S.:

16. Transporter Acknowledgment of Receipt of Materials

Transporter 1 Printed/Typed Name: Jimmy Smith
Signature:
Month 11 Day 29 Year 11

Transporter 2 Printed/Typed Name: Ryan Brown
Signature:
Month 12 Day 15 Year 11

17. Discrepancy

17a. Discrepancy Indication Space ☐ Quantity ☐ Type ☐ Residue ☐ Partial Rejection ☐ Full Rejection

Manifest Reference Number:

17b. Alternate Facility (or Generator)
U.S. EPA ID Number:
Facility's Phone:

17c. Signature of Alternate Facility (or Generator)
Month Day Year

18. Designated Facility Owner or Operator: Certification of receipt of materials covered by the manifest except as noted in Item 17a

Printed/Typed Name: Matt Spurlin
Signature:
Month 12 Day 15 Year 11

GENERATOR

INT'L

TRANSPORTER

DESIGNATED FACILITY

169 BLC-O 5 11977 (Rev. 8/06)

DESIGNATED FACILITY TO GENERATOR

WASTE MANAGEMENT

K2G

Ticket: 145883 Driver: LLUISEL FLEITA Date Requested: 12/01/2011
Opened by: ASMITH26 Date Dispatched: 12/02/2011
Customer: 990-21044 MICAH GROUP (COD)
BOCA CHICA NAS BLDG A126
KEY WEST FL 33040 - BLDG A-126
Contact: MARK WILKSO
859-983-1884
Requested by: TOM 843.412.2097

Load Type: DO NOT RETURN Map Code: * Map Grid: 2D28
Dump Site: WMI ROCKLAND C&D Swappable? Y Mandate Disposal Site? N

Service	Quantity	P	Yds	Type	Weight	Job	Special Description
20 YD FLAT ROLLOFF	1.00	T	20	DEMO			FLAT RATE - C&D Concrete Key West Air Station Bldg A-126

DEMO
TOM 843.412.2097 CONTRACTOR DONE NEEDS CAN REMOVED DNR

WD % DCC % MT % CN % DW % MSW % OTH %

SERVICES ACCEPTED SUBJECT TO THE TERMS AND CONDITIONS ON THE REVERSE SIDE AND PAYMENT AGREED TO BE MADE IN ACCORDANCE WITH THE CONTRACTOR'S CURRENT RATE SCHEDULE.
Signature: _____ Date: _____

WASTE MANAGEMENT

Portland C&D Transfer Station
125 Topaino Industrial Dr
Key West, Fl. 33045
Ph: (305) 296-8297

Original
Ticket# 6954

Customer Name WMI-WMHAUL WM KEY WEST HAUL IN
Ticket Date 12/02/2011
Payment Type Credit Account
Manual Ticket#
Hauling Ticket# 145883
Route
State Waste Code
Manifest
Destination
PO
Profile ()
Generator

Carrier WMREYWESTHAULIN WMIREYWESTHAULING
Vehicle# 4002392
Container
Driver LLOISEL
Check#
Billing # 0000070
Gen EPA ID
Grid
Volume

	Time	Scale	Operator	Inbound	
In	12/02/2011 14:42:34	MANUAL NT	Felicia		Gross
Out	12/02/2011 14:42:34		Felicia		Tare
					Net
					Tons

Comments MICAH GROUP
BOCA CHICA NAS - BIXC - A12C

	Product	LDM	Qty	UOM	Rate	Fee	Amount	Origin
1	20000Y-C&D YARD	100	20.00	Yards				

"I certify that the waste I delivered to this facility on this date does not contain any regulated hazardous, toxic, radioactive waste or substances, or other non-allowable wastes. I also agree to remove any non-allowable wastes I bring to this facility, or pay all costs for proper removal of such wastes, upon request from this facility."

DRIVER: PLEASE SIGN HERE

Total Fees
Total Ticket

405WMFL

FD3157M (1-3)

Workflow Solutions

WASTE MANAGEMENT

125 Toppino Industrial Dr.
P.O. Box 2431
Key West, Florida 33041
(305) 296-8297 • (305) 296-8175 Fax

C & D ☐ YARDWASTE ☐ METAL ☐

WEIGHT 19.33 TON

TIME 03:25 PM 02 DEC 11

B106- 0-1-1-6

Driver's Signature _____ Rec'd By _____

Florida Department of Environmental Protection
Twin Towers Office Bldg. • 2600 Blair Stone Road • Tallahassee, Florida 32399-2400

Storage Tank Facility Registration Form

DEP Form # 62-761.900(2)
Form Title Storage Tank Registration Form
Effective Date July 13, 1998
DEP Application No. _____
(Filled in by DEP)

Submit a completed form for the facility when registration of storage tanks or compression vessels is required by Chapter 376.303, Florida Statutes

Please review *Registration Instructions* before completing the form.

Check all that apply		New Facility Registration		New Owner		New Tanks
		Information for existing facility changed or updated		Information for existing owner changed or updated	X	Information for existing tank(s) changed or updated

FACILITY INFORMATION	County	Monroe	DEP Facility ID Number	XXXXXXXXXX 9812951
Facility Name	Naval Air Station – Key West, Florida			
Address, City, Zip	P.O. Box 9007 Key West, Florida 33040-9007			
Facility Contact	Robert Courtright		Contact Telephone	(305) 293-2881
Facility Type Description	Federal Facility		Financial Responsibility	Federal – N/A
24 Hr Emergency Contact	Command Duty Officer		24 Hr Emergency Phone	(305) 797-4428

RESPONSIBLE PARTY INFORMATION - Identify individual or business responsible for storage tank registration & registration renewal.

Name	LCDR Meagher – Public Works Officer						[√] Facility Account Owner - pays registration fees	
Mail Address	P.O. Box 9007						STCM Account Number	#22860
City, State, Zip	Key West, Florida 33040-9007						Effective Date of Ownership	
Contact	Edward Barham						Provide Email Address for Contact in space below	
Telephone	(305) 293-2911						Edward.barham@navy.mil	
Check all roles that apply	Facility Owner	X	Tank Owner	X	Tank Operator	X	Property Owner	

ADDITIONAL RESPONSIBLE PARTY INFORMATION – Identify additional individual or business responsible for storage tank management, fueling operations, and/or cleanup activities at the facility location above. Provide additional information in an attachment if necessary.

Name		Other relationship type(s)	Effective Date
Mail Address		Facility Owner	
City, State, Zip		Tank Owner	
Contact	Edward.barham@navy.mil	Tank Operator	
Telephone		Property Owner	

TANK/VESSEL INFORMATION - Complete one row for each storage tank or compression vessel system located at this facility.

Tank ID	T/V	A/U	Capacity	Installed	Content	Status/Effective Date		Construction	Piping	Monitoring
Bldg A-126	T	U	~ 2,000	Unknown	L / H	B	30 Nov 2011	C,D	N/A	N/A
This vessel was recently discovered and has no historical records of recordation with FDEP										

Certified Contractor – performing tank install/removal	Randy Slater \ Slater Corporation	DBPR License No	PCC050761

Registration Certification - **To the best of my knowledge and belief, all information submitted on this form is true, accurate, and complete.**

Printed Name & Title	Edward Barham- Environmental Director By Direction	Signature		Date	18 Nov 2011

FL DEP DISTRICT OFFICES	Central District 3319 Maguire Blvd, Suite 232 Orlando, FL 32803 407-894-7555	Southeast District 400 Congress Ave. W Palm Beach, FL 33416 561-681-6600	South District 2295 Victoria Ave, Suite 364 Fort Myers, FL 33901 941-332-6975
Northwest District 160 Governmental Center Blvd. Pensacola, FL 32501 850-595-8360	Northeast District 7825 Baymeadows Way, Suite 200 Jacksonville, FL 32256 904-448-4300	Southwest District 13051 N. Telecom Pkwy Temple Terrace, FL 33619 813-744-6100	Marathon Branch 2796 Overseas Hwy, Suite. 221 Marathon, FL 33050 305-289-2310