N60201.AR.000072
NS MAYPORT
5090.3a

INTERIM FINAL RESOURCE CONSERVATION AND RECOVERY ACT FACILITY INVESTIGATION WORK PLAN VOLUME 1 OF 3 WORK PLAN NS MAYPORT FL
10/1/1991
ABB ENVIRONMENTAL SERVICES

INTERIM FINAL

NAVSTA Mayport Administrative Record
Document Index Number

32228-000
19.03.00.0002

RCRA FACILITY INVESTIGATION WORKPLAN

VOLUME I. WORKPLAN
U.S. NAVAL STATION
MAYPORT, FLORIDA

UIC: N60201

Contract No. N62467-89-D-0317

Prepared by:

ABB Environmental Services Inc.
2571 Executive Center Circle, East
Tallahassee, Florida 32301-5001

Prepared for:

Department of the Navy, Southern Division
Naval Facilities Engineering Command
2155 Eagle Drive
Charleston, South Carolina 29411-0068

Jim Reed, Engineer-in-Charge

OCTOBER 1991

TABLE OF CONTENTS

RCRA Facility Investigation
Mayport, Florida

Section	Title	Page No.
1.0	INTRODUCTION	1-1
1.1	PURPOSE	1-1
1.2	OVERVIEW	1-1
2.0	BACKGROUND INFORMATION	2-1
2.1	FACILITY DESCRIPTION	2-1
2.2	EXISTING SITE CONDITIONS	2-3
2.2.1	Geography ~~and~~ Land Use	2-3
2.2.2	Physiography and Topography	2-3
2.2.3	Climate	2-5
2.2.4	Soils	2-5
2.2.5	Regional Geology	2-9
2.2.5.1	Surficial Deposits	2-9
2.2.5.2	Hawthorn Formation	2-11
2.2.5.3	Marine Carbonates Sequences (Floridan Aquifer System)	2-11
2.2.6	Regional Hydrology	2-12
2.2.6.1	Surface Water	2-12
2.2.6.2	Surficial Aquifer	2-14
2.2.6.3	Secondary Artesian Aquifer	2-18
2.2.6.4	Floridan Aquifer System	2-18
2.2.7	Potential Receptors	2-21
2.2.7.1	Human Receptors	2-21
2.2.7.2	Flora and Fauna	2-24
2.3	SOLID WASTE MANAGEMENT UNITS (SWMU)	2-24
2.3.1	Previous Investigations	2-24
2.3.2	SWMU Descriptions	2-32
2.3.2.1	SWMU 1, (NIRP Site 1) Landfill A	2-32
2.3.2.2	SWMUs 2, 3, 4, and 5 (NIRP Site 2, 4, 5, and 6) Landfills B, D, E, and F	2-32
2.3.2.3	SWMU 6, 7, 8, and 9 (NIRP Site 8, 8A, 8B, and 8C) Waste Oil Pit and Oily Waste Treatment Plant Area)	2-35
2.3.2.4	SWMU 10, (NIRP Site 8D) RCRA Hazardous Waste Storage Facility	2-35
2.3.2.5	SWMU 11, (NIRP Site 9) Fuel Spill Area	2-36
2.3.2.6	SWMU 12, (NIRP Site 11) Neutralization Basin	2-36
2.3.2.7	SWMU 13, (NIRP Site 13), Old Fire Training Area	2-36
2.3.2.8	SWMU 14 (NIRP Site 14), Mercury/-Oily Waste Spill Area	2-37

TABLE OF CONTENTS (Continued)

RCRA Facility Investigation
Mayport, Florida

Section	Title	Page No.
	2.3.2.9 SWMU 15 (NIRP Site 15), Old Pesticide Area	2-38
	2.3.2.10 SWMU 16 (NIRP Site 16), Old Transformer Storage Yard	2-38
	2.3.2.11 SWMU 17 (NIRP Site 17), Carbonaceous Fuel Boiler	2-38
	2.3.2.12 SWMU 22, Building 1600 Blasting Area	2-39
3.0	RCRA FACILITY INVESTIGATION	3-1
3.1	DATA QUALITY OBJECTIVES	3-1
3.2	TECHNICAL APPROACH AND METHODOLOGY	3-1
3.2.1	Magnetometer Survey	3-2
3.2.2	Monitoring Well and Piezometer Installation	3-2
3.2.3	Well Elevation and Location Survey	3-9
3.2.4	Potentiometric Surface Survey	3-9
3.2.5	Aquifer Hydraulic Properties	3-9
3.2.6	Sampling and Analysis	3-10
3.3	PRELIMINARY ACTIVITIES	3-10
3.4	FACILITY-WIDE ACTIVITIES	3-11
3.4.1	Background Characterization	3-11
3.4.2	Potential Receptor Identification	3-13
	3.4.2.1 Human Receptor Survey	3-13
	3.4.2.2 Environmental Receptors	3-14
3.5	SITE-SPECIFIC ACTIVITIES	3-15
3.5.1	SWMU 1 (NIRP Site 1), Landfill A	3-16
	3.5.1.1 Source Characterization	3-16
	3.5.1.2 Environmental Setting	3-16
	3.5.1.3 Release Characterization	3-17
	3.5.1.4 Potential Receptors	3-21
3.5.2	SWMU 2, 3, 4, and 5 (NIRP Sites 2, 4, 5, and 6), Landfills B, D, E, and F	3-22
	3.5.2.1 Source Characterization	3-22
	3.5.2.2 Environmental Setting	3-24
	3.5.2.3 Release Characterization	3-28
	3.5.2.4 Potential Receptors	3-30
3.5.3	SWMU 6, 7, 8, 9, and 10 (NIRP Sites 8, 8A, 8B, 8C, and 8D), Waste Oil Pit, Oily Waste Treatment Plant Area, and Hazardous Waste Storage Facility	3-31
	3.5.3.1 Source Characterization	3-31
	3.5.3.2 Environmental Setting	3-33
	3.5.3.3 Release Characterization	3-34
	3.5.3.4 Potential Receptors	3-37

TABLE OF CONTENTS (Continued)

RCRA Facility Investigation
Mayport, Florida

Section	Title	Page No.
3.5.4	SWMU 11 (NIRP Site 9), Fuel Spill Area	3-38
3.5.4.1	Source Characterization	3-38
3.5.4.2	Environmental Setting	3-38
3.5.4.3	Release Characterization	3-39
3.5.4.4	Potential Receptors	3-40
3.5.5	SWMU 12 (NIRP Site 11), Neutralization Basin	3-40
3.5.5.1	Source Characterization	3-40
3.5.5.2	Environmental Setting	3-42
3.5.5.3	Release Characterization	3-43
3.5.6	SWMU 13 (NIRP Site 13), Old Fire Training Area	3-46
3.5.6.1	Source Characterization	3-46
3.5.6.2	Environmental Setting	3-46
3.5.6.3	Release Characterization	3-49
3.5.6.4	Potential Receptors	3-51
3.5.7	SWMU 14 (NIRP Site 14), Mercury/Oily Waste Spill Area	3-52
3.5.7.1	Source Characterization	3-52
3.5.7.2	Environmental Setting	3-52
3.5.7.3	Release Characterization	3-54
3.5.7.4	Potential Receptors	3-56
3.5.8	SWMU 15 (NIRP Site 15), Old Pesticide Area	3-57
3.5.8.1	Source Characterization	3-57
3.5.8.2	Environmental Setting	3-57
3.5.8.3	Release Characterization	3-57
3.5.9	SWMU 16 (NIRP Site 16), Old Transformer Area	3-60
3.5.9.1	Source Characterization	3-60
3.5.9.2	Environmental Setting	3-60
3.5.9.3	Release Characterization	3-60
3.5.9.4	Potential Receptors	3-62
3.5.10	SWMU 17 (NIRP Site 17), Carbonaceous Fuel Boiler	3-62
3.5.10.1	Source Characterization	3-62
3.5.10.2	Environmental Setting	3-62
3.5.10.3	Release Characterization	3-62
3.5.10.4	Potential Receptors	3-64
3.5.11	SWMU 22, Building 1600 Blasting Area	3-65
3.5.11.1	Source Characterization	3-65
3.5.11.2	Environmental Setting	3-65
3.5.11.3	Release Characterization	3-66
3.5.11.4	Potential Receptors	3-67

TABLE OF CONTENTS (Continued)

RCRA Facility Investigation
Mayport, Florida

Section	Title	Page No.
3.6	HEALTH AND ENVIRONMENTAL ASSESSMENT (HEA)	3-68
3.6.1	Constituents of Concern	3-68
3.6.2	Human Health Assessment	3-68
3.6.2.1	Exposure Assessment	3-68
3.6.2.2	Human Health Toxicity Assessment	3-70
3.6.2.3	Risk Assessment	3-70
3.6.3	Environmental Assessment	3-71
3.6.3.1	Exposure Assessment	3-71
3.6.3.2	Toxicity Assessment	3-71
3.6.3.3	Risk Assessment	3-73
4.0	DATA MANAGEMENT PLAN	4-1
4.1	DATA DOCUMENTATION	4-1
4.2	PROJECT FILE REQUIREMENTS	4-1
4.3	PROGRESS REPORTING	4-1
4.4	DATA PRESENTATION FORMAT	4-2
5.0	PROJECT MANAGEMENT PLAN	5-1
5.1	TECHNICAL APPROACH TO RFI	5-1
5.2	MANAGEMENT APPROACH	5-1
5.3	KEY PROJECT PERSONNEL	5-1
5.4	PROJECT SCHEDULE	5-5
5.5	PROJECT LOGISTICS	5-5
5.5.1	Security Arrangements	5-6
5.5.2	Communications	5-6
5.5.3	Field Operations	5-6
5.5.4	Decontamination Facilities	5-6
5.5.5	Disposal of Wastes	5-6

APPENDICES

Appendix A - Neutralization Basin Monitoring Data
Appendix B - Project Personnel Resumes
Appendix C - Expanded Site Investigation (ESI) Field Sampling Techniques
Appendix D - Expanded Site Investigation (ESI) Monitoring Well Installation Data
Appendix E - Expanded Site Investigation (ESI) Boring Logs
Appendix F - Corrective Action Management Plan

LIST OF FIGURES

RCRA Facility Investigation
Mayport, Florida

Figure	Title	Page No.
2-1	Facility Location Map	2-2
2-2	Site Location map	2-4
2-3	Soil Types Found on Naval Station Mayport	2-8
2-4	Generalized Geologic Column	2-10
2-5	Approximate Piezometric Surface (Surficial Aquifer), October 8, 1987	2-15
2-6	Location of Production Wells	2-17
2-7	Proposed Piezometer and Monitoring Well Network	2-22
2-8	Locations of Ecosystems	2-25
2-9	Location of Potential Contamination Sites	2-34
3-1A	Piezometer Installation Detail (Surficial Aquifer)	3-5
3-1B	Typical Shallow Monitoring Well Installation Detail (Surficial Aquifer)	3-6
3-1C	Typical Deep Monitoring Well Installation Detail (Surficial Aquifer)	3-7
3-1D	Monitoring Well Installation Detail Double-Cased Well (Secondary Aquifer)	3-8
3-2	Background Sampling Locations	3-12
3-3	Location of Explorations, SWMU 1 (NIRP Site 1)	3-18
3-4	Location of Explorations, SWMU 2, 3, 4, and 5 (NIRP Sites 2, 4, 5, and 6, and 12)	3-23
3-5	Location of Explorations , SWMU 6, 7, 8, 9, and 10 (NIRP Sites 8, 8A, 8B, 8C, 8D, 9, and 16)	3-32
3-6	Location of Explorations, SWMU 12 (NIRP Site 11)	3-41
3-7	Location of Explorations, SWMU 13	3-48
3-8	Locations of Explorations, SWMU 14	3-53
3-9	Location of Explorations, SWMU 15	3-58
3-10	Location of Explorations, SWMU 17	3-63
5-1	Project Organization	5-2

LIST OF TABLES

RCRA Facility Investigation
Mayport, Florida

Tables	Title	Page No.
2-1	Aggregate Weather Measurements for Duval County and Vicinity	2-6
2-2	Water Quality in the Surficial Aquifer	2-16
2-3	Water Quality in the Secondary Artesian Aquifer	2-19
2-4	Water Quality in the Floridan Aquifer System	2-20
2-5	Description of Water Wells in the Vicinity	2-23
2-6	Potential Ecological Receptors	2-26
2-7	Endangered, Threatened, and Rare Species	2-28
2-8	Solid Waste Management Units	2-33
3-1	Summary of Analytical Results First Quarter Sampling, Site 11 - Neutralization Basin	3-44
3-2	Summary of Analytical Results Second and Third Quarter Sampling, Site 11 - Neutralization Basin	3-47
3-3	Potential Exposure Routes for Human Receptors	3-69
3-4	Potential Exposure Routes for Environmental Receptors	3-72
4-1	Example Table of Contents	4-3
4-2	Data Format, Final Report	4-6

LIST OF ACRONYMS AND ABBREVIATIONS

ABB-ES	ABB Environmental Services, Inc.
AFFF	Aqueous Film Forming Foam
AIMD	Aircraft Intermediate Maintenance Department
AOC	Area of Concern
ASTM	American Society of Testing and Materials
BLS	Below Land Surface
BOD_5	Biochemical Oxygen Demand
CAA	Clean Air Act
CAMP	Corrective Action Management Plan
CERCLA	Comprehensive Environmental Response, Compensation, and Liability Act of 1980
CFR	Code of Federal Regulations
CLEAN	Comprehensive Long-Term Environmental Action-Navy
CO	Corporate Officer
CPF	Carcinogen Potency Factors
CRP	Community Relations Plan
CSF	Carcinogen Slope Factor
CWA	Clean Water Act
DFM	Diesel Fuel, Marine
EIC	Engineer in Charge
EP	Equilibrium Partioning
ESI	Expanded Site Investigation
FDER	Florida Department of Environmental Regulation
FTC	Fleet Training Center
GC	Gas Chromatograph
g/d/ft	gallon per day per foot
HASO	Health and Safety Officer
HASP	Health and Safety Plan
HEA	Health Environmental Assessment
HEED	Health and Environmental Effects Document
HEEP	Health and Environmental Effects Profile
HSWA	Hazardous and Solid Waste Amendments of 1984
IAS	Initial Assessment Study
ICP	Inductively Coupled Plasma
ID	inner diameter
IRP	Installation Restoration Program
IRIS	Integrated Risk Information System

LIST OF ACRONYMS AND ABBREVIATIONS (Continued)

MCL	Maximum Contaminant Level
mg/ℓ	milligrams per liter
MPT	Mayport
MSL	mean sea level
NACIP	Navy Assessment and Control of Installation Pollutants
NADEP	Naval Avionics Depot
NAS	Naval Air Station
NAVSTA	Naval Station
NEESA	Naval Energy and Environmental Support Activity
NGVD	National Geodetic Vertical Datum of 1929
NIRP	Navy Installation Restoration Program
NOAA	Nation Oceanic and Atmospheric Administration
NPDES	National Pollutant Discharge Elimination System
NPL	National Priorities List
NSC	Naval Supply Center
OWTP	Oily Waste Treatment Plant
PCB	Polychlorinated biphenyl
PM	Program Manager
QA	Quality Assurance
QAO	Quality Assurance Officer
QAPP	Quality Assurance Project Plan
QC	Quality Control
RCRA	Resource Conservation and Recovery Act of 1976, as amended
RFA	RCRA Facility Assessment
RfD	The reference dose
RFI	RCRA Facility Investigation

LIST OF ACRONYMS AND ABBREVIATIONS (Continued)

RI/FS	Remedial Investigation/Feasibility Study
ROD	Record of Decision
RSD	Risk-Specific Dose
SAP	Sampling and Analysis Plan
SARA	Superfund Amendments and Reauthorization Act of 1986
SAS	Special Analytical Services
SCS	Soil Conservation Service
SDWA	Safe Drinking Water Act
SOUTHNAV-FACENGCOM	Southern Division Naval Facilities Engineering Command
SI	Site Inspection
SIMA	Shore Intermediate Maintenance Activity
SMP	Site Management Plan
SOP	Standard Operating Procedure
SOW	Statement of Work
SPHEM	Superfund Public Health Evaluation Manual
SQC	Sediment Quality Criteria
SUPSHIPS	Supervisor of Shipbuilding
SWDA	Solid Waste Disposal Act
SWMU	Solid Waste Management Unit
TBC	To be considered
TCL	Target Compound List
TD	Technical Director
TOM	Task Order Manager
TRB	Technical Review Board
TSCA	Toxic Substances Control Act
TSS	Total Suspended Solids
USDA	U.S. Department of Agriculture
USEPA	U.S. Environmental Protection Agency
VOA	Volatile Organic Compound Analyses
VSI	Visual Site Inspection

EXECUTIVE SUMMARY

This three-volume set presents the planning documents for undertaking a Resource Conservation and Recovery Act (RCRA) Facility Investigation (RFI) at the U.S. Naval Station (NAVSTA), Mayport, Florida.

The purpose of the Mayport RFI is to provide the information necessary to conduct a health and environmental assessment and to design corrective measures, if required, for each of the solid waste management units (SWMUs) identified in the station hazardous waste management permit (H016-118598) issued March 25, 1988. To achieve this objective, the RFI will collect data sufficient to determine the nature and extent of any releases of contaminants and the potential pathways of contaminant migration via air, land, surface water, and groundwater.

The RFI planning documents consist of the following plans presented in three volumes.

Volume I Workplan
Data Management Plan
Project Management Plan

Volume II Sampling and Analysis Plan
Site Management Plan
Quality Assurance Plans

Volume III Health and Safety Plan

Together the three volumes present the scope of the RFI with associated methodology and rationale; quality assurance and health and safety procedures; data storage, handling, and presentation formats; and the project management approach.

The RFI conducted at NAVSTA Mayport will be consistent with the requirements of the Hazardous and Solid Waste Amendments (HSWA) permit. The following sites have been identified as solid waste management units and are included in the RFI at NAVSTA Mayport. Site numbering and nomenclature are in accordance with the U.S. Environmental Protection Agency (USEPA) RCRA Facility Assessment, September 1989.

SWMU 1 Landfill A
SWMU 2 Landfill B
SWMU 3 Landfill D
SWMU 4 Landfill E
SWMU 5 Landfill F
SWMU 6 Waste Oil Pit
SWMU 7 Oily Waste Treatment Plant Sludge Beds
SWMU 8 Oily Waste Treatment Plant Percolation Pond
SWMU 9 Oily Waste Treatment Plant
SWMU 10 RCRA Hazardous Waste Storage Area
SWMU 11 Fuel Spill Area
SWMU 12 Neutralization Basin

SWMU 13	Old Fire Training Area
SWMU 14	Mercury/Oily Waste Spill Area
SWMU 15	Old Pesticide Handling Area
SWMU 16	Old Transformer Storage Yard
SWMU 17	Carbonaceous Fuel Boiler
SWMU 22	Building 1600 Blasting Area

Existing well and sample location designations were defined under the Navy Installation Restoration Program (NIRP). For consistency, the same well and sample location designation scheme will be maintained. Therefore, well and sample designations may vary from SWMU numbers. NIRP site numbers and SWMUs will be cross referenced as needed.

1.0 INTRODUCTION

The U.S. Naval Station (NAVSTA) Mayport, Florida, was commissioned in 1942 on approximately 700 acres of land. The original mission of the station included use by patrol craft, target, and rescue boats. The station was placed in caretaker status from 1946 to 1948. In 1948 the station reopened, and in 1952 an aircraft carrier was assigned to the station. NAVSTA Mayport is presently the homeport for two aircraft carriers and various other surface ships and now occupies more than 3,400 acres. General wastes generated by the base are those normally associated with ship and on-shore maintenance activities.

Eighteen solid waste management units (SWMU) have been identified by the U.S. Environmental Protection Agency (USEPA) at NAVSTA Mayport. Under provisions of the Hazardous and Solid Waste Amendments (HSWA) of 1984 permit number H016-118598 issued by Region IV USEPA on March 25, 1988, a Resource Conservation and Recovery Act (RCRA) of 1976 Facility Investigation (RFI) is required to determine the nature and extent of releases and potential pathways of contamination emanating from these sites via air, land, surface water, or groundwater.

1.1 PURPOSE. This RFI Workplan is submitted by the U.S. Department of the Navy for the NAVSTA Mayport, Florida, in compliance with Part IIC and Appendix A of the HSWA permit. This Workplan describes the existing information and the additional investigations necessary to characterize NAVSTA Mayport and its environmental setting, define the sources of possible contaminants, define the degree and extent of releases of hazardous constituents, and identify actual or potential receptors. In addition, this Workplan describes the Health and Environmental Assessment that is necessary to evaluate the potential impacts of releases of contaminants at NAVSTA Mayport on human and ecological receptors.

1.2 OVERVIEW. The RFI planning documents are submitted in three volumes. Volume I consists of the Workplan itself, presented in five chapters. Chapter 1 introduces and presents an overview of the set of documents. Chapter 2 presents background information, including a description of NAVSTA Mayport and its environmental setting as well as a review of the previous investigations undertaken at the base. Chapter 3 describes the overall approach and methodology for the RFI, followed by specific investigations to be conducted at each of the 18 sites. The Data Management Plan and Project Management Plan are presented as Chapters 4 and 5, respectively.

Volume II contains the Sampling and Analysis Plan, including the Site Management Plan and the Field Sampling Plan. The laboratory and field Quality Assurance Project Plans are also presented in Volume II. Volume III consists of the Health and Safety Plan for the RFI at NAVSTA Mayport.

2.0 BACKGROUND INFORMATION

2.1 FACILITY DESCRIPTION. The Mayport Naval Complex is located within the corporate limits of the city of Jacksonville, Florida, approximately 12 miles to the northeast of downtown Jacksonville (Figure 2-1). The complex is located on the northern end of a peninsula bounded by the Atlantic Ocean to the east and the St. Johns River to the north and west. The Mayport Naval Complex occupies the entire northern part of the peninsula except for the town of Mayport to the west between the base and the St. Johns River. Mayport Basin is an improved harbor surrounded on three sides by ship piers and located at the northern end of the peninsula.
The Mayport Naval Complex houses two naval installations: Naval Station Mayport supports the surface fleet, and Naval Air Station Mayport supports naval air operations. The support operations at the base, such as the Public Works Department, provide support for both stations. The ship facilities are located in the northern and eastern areas of the complex near the Mayport Basin, and the air facilities are located in the central and western areas near the runways.

NAVSTA Mayport is the fourth largest Navy homeport in the United States, employing approximately 20,000 active duty personnel and 3,000 civilians. Currently, destroyers, frigates, two aircraft carriers, one destroyer tender, and three minesweepers are homeported at NAVSTA Mayport. The Naval Air Station is home to four helicopter squadrons, with approximately 200,000 take-offs and landings on the 8,000-foot runway per year.

The Naval Station and Naval Air Station provide all necessary support services for the ships and aircraft stationed at or visiting Mayport. Services include personnel support, facilities support, and ship and aircraft repair and maintenance. The major industrial operations conducted at the Mayport Naval complex involve intermediate level maintenance for both ships and aircraft, and vehicle maintenance and repair. For ships, any maintenance activities that can be conducted without putting a ship into drydock are considered intermediate. For aircraft, largely upkeep maintenance is conducted.

Maintenance and repair operations for ships are carried out by five organizations on the base. The Navy organizations are Shore Intermediate Maintenance Activity (SIMA) and Supervisor of Shipbuilding (SUPSHIP). SIMA conducts repair and maintenance operations onboard ships at the piers and in the SIMA operations building. SUPSHIPs is a contracting organization that contracts out maintenance and repair work. Three organizations currently under contract with SUPSHIPs have facilities at the Mayport Naval Complex. Jacksonville Shipyards, North Florida Shipyards, and Atlantic Marine, Inc., carry out maintenance work onboard ships while they are docked at the piers surrounding Mayport Basin as well as work on removable parts at their facilities.

Aircraft maintenance is largely conducted in the hangar buildings by squadron personnel. One Navy organization, Naval Aircraft Depot (NADEP), conducts small maintenance operations on aircraft and launching arresting systems in its own building on base.

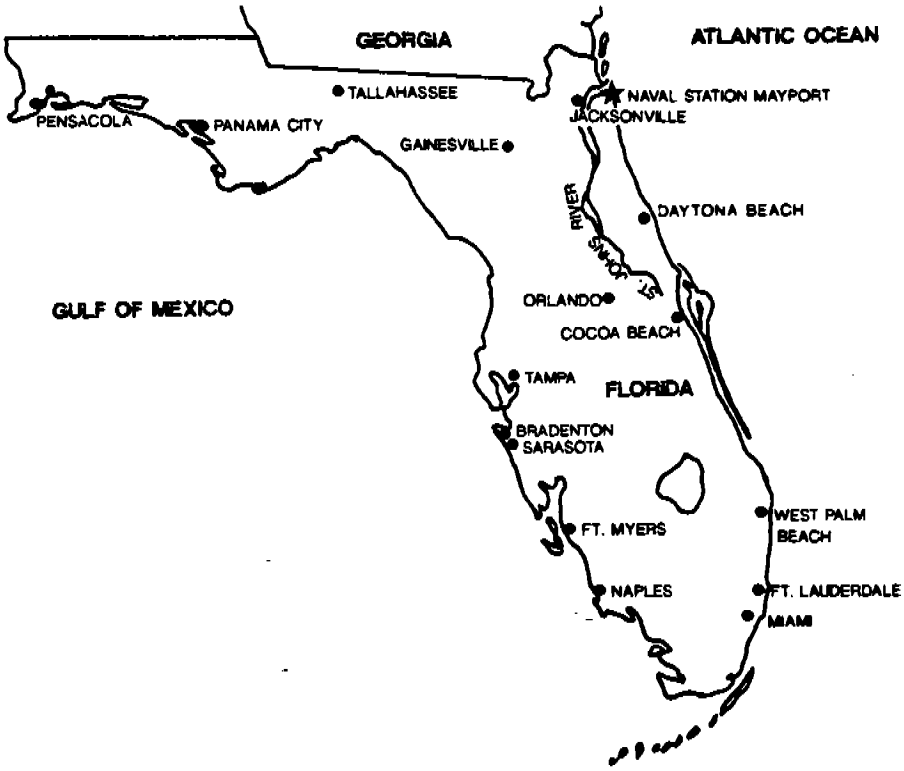

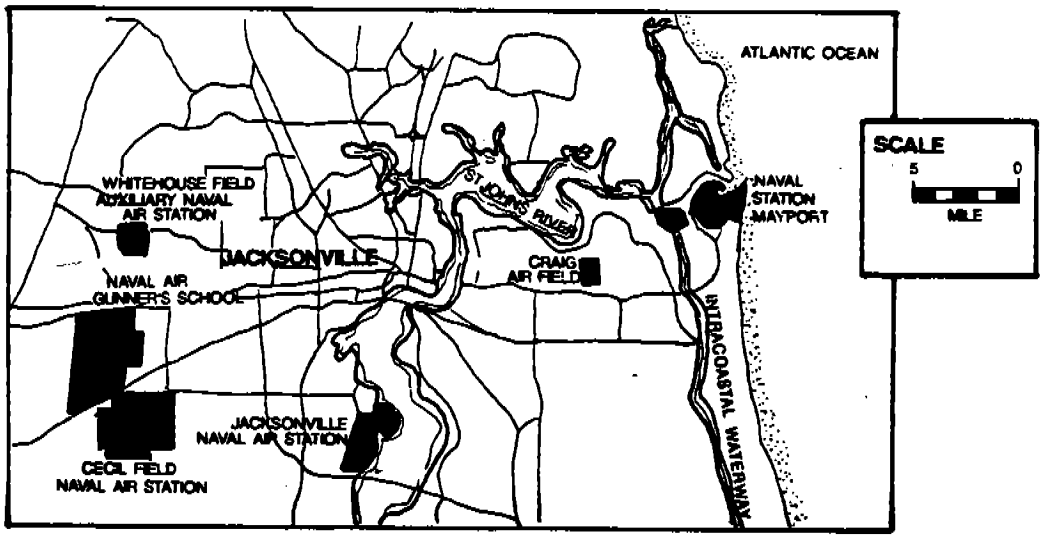

FIGURE 2-1

FACILITY LOCATION MAP

RCRA FACILITY INVESTIGATION WORKPLAN

U.S. NAVAL STATION MAYPORT, FLORIDA

In addition to the ship and aircraft support activities, the base maintains housing and recreational facilities for the active duty personnel and their families.

Wastes generated and disposed of at the base include waste oils, fuels, lubricants, solvents, paints, and general refuse associated with ship, aircraft, vehicle, and building maintenance activities. From 1942 to 1979, all wastes were disposed of in landfills on the base. Some of the landfilled wastes were burned at the site to reduce their volume. Waste oils were used for mosquito control around the base. Since 1979, all burnable wastes have been incinerated in the carbonaceous fuel boiler. Incinerator ash, unburnable debris, construction rubble, and large scrap materials were landfilled on the base until early 1985, when all onsite landfills were closed.

2.2 EXISTING SITE CONDITIONS.

2.2.1 Geography and Land Use NAVSTA Mayport lies on the south bank of the St. Johns River at its confluence with the Atlantic Ocean (Figure 2-2), formerly the site of Ribault Bay. Parts of the bay were dredged for construction of the Mayport Basin. Other areas of the bay were filled to accommodate on-shore construction. Most of the station located west of Route A1A and the area south of the dredge spoil piles is comprised of coastal marsh and tidal creeks.

The installation encompasses 3,401 acres, of which approximately half (1,667 acres) is brackish marsh, sand spits, beach (vegetated and nonvegetated), and dredge spoil areas. Other land-use types on NAVSTA Mayport include regularly mowed lawns, roadsides, and a golf course (527 acres); irregularly mowed road and runway shoulders (420 acres); buildings and pavement (387 acres); and managed forest (285 acres). The station also has one 20-acre freshwater lake, Lake Wonderwood.

2.2.2 Physiography and Topography NAVSTA Mayport is situated in the southeastern Coastal Plain physiographic province. The topography of the Coastal Plain in northeastern Florida is controlled by a series of ancient marine terraces, which formed during the Pleistocene when sea level was higher than at present (Leve, 1966). Seven terraces are located in northeast Florida. Moving from west to east and decreasing in elevation, these terraces are the Coharie, Sunderland, Wicomico, Penholoway, Talbot, Pamlico and Silver Bluff terraces. NAVSTA Mayport lies upon remnants of the Pamlico, and the Silver Bluff terraces, which form a low coastal plain throughout most of the central and eastern part of northeast Florida. Elevations of the plain range from slightly above mean sea level (MSL) to 25 feet above MSL. These original terraces have been modified by sand dune development, stream erosion, and especially by the dredging and filling activities at NAVSTA Mayport.

The land surface exhibits little relief and elevations on station range from about 0 to 30 feet above MSL. Many areas at NAVSTA Mayport have been filled with dredge spoil resulting from the construction and maintenance of the turning basin. The elevations of the runways are higher than most of the surrounding land to provide drainage, and they serve as a drainage divide between the southeast and northwest areas of the station.

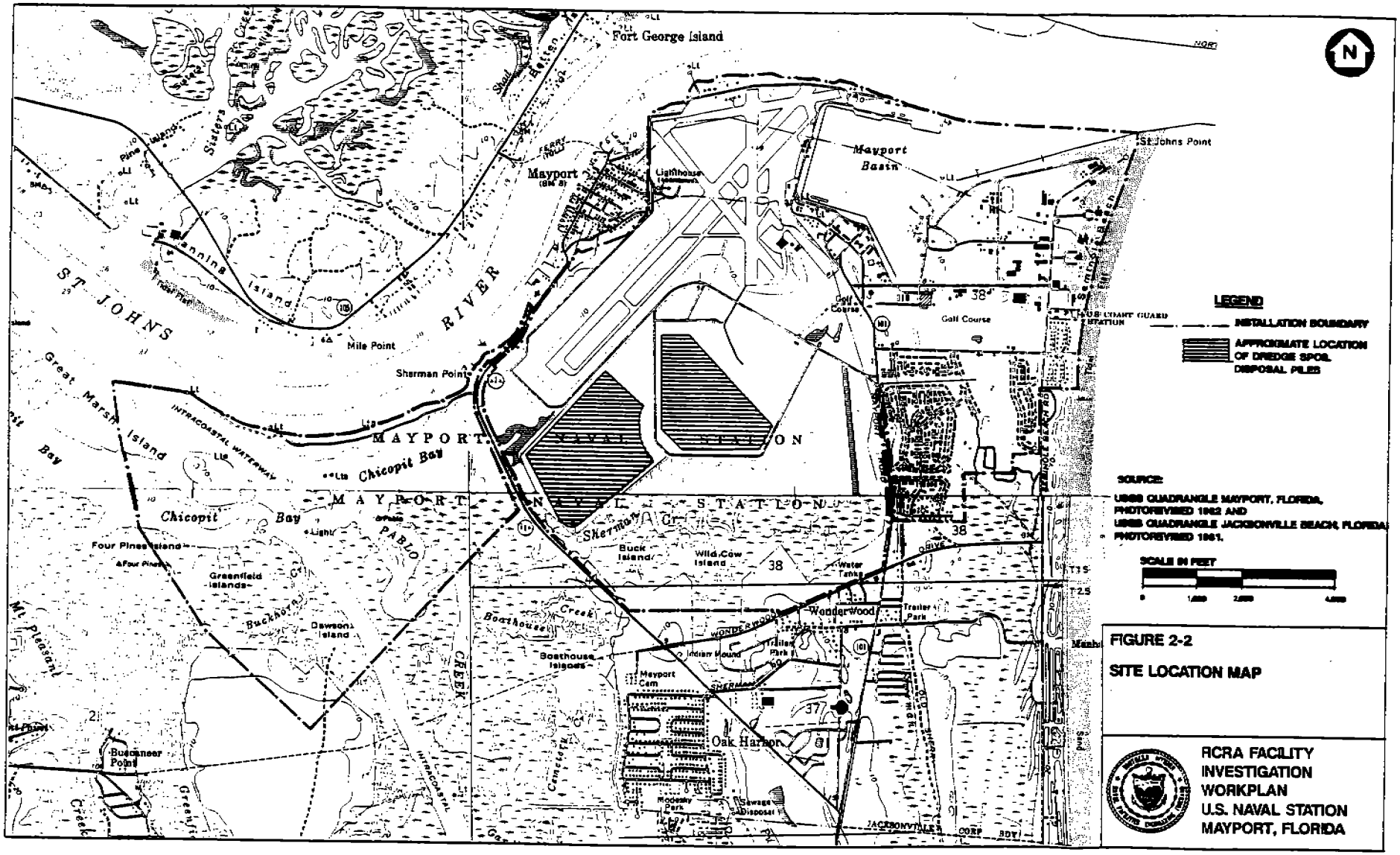

FIGURE 2-2

SITE LOCATION MAP

RCRA FACILITY INVESTIGATION WORKPLAN
U.S. NAVAL STATION
MAYPORT, FLORIDA

2.2.3 Climate NAVSTA Mayport is located in the northeastern part of Duval County on the Atlantic Coast. Duval County is in the temperate zone, 7 degrees latitude north of the torrid zone, resulting in a climate that tends to be more tropical than temperate. The area is located near the northern boundary of the trade winds, which dominate summer season climate patterns. During winter months, the southerly penetration of the North American Polar Front jet stream dictates the number and intensity of polar air mass penetrations into Florida. Table 2-1 "Aggregate Weather Measurements for Duval County and Vicinity" summarizes important weather measurements for the Jacksonville area for the 30-year period between 1941 to 1970 (NOAA, 1979).

The atmosphere is moist with an average relative humidity of about 75 percent, ranging from about 90 percent in the early morning hours to about 55 percent during the afternoon. The average daily sunshine is from 5.5 hours in December to 9.0 hours in May (NOAA, 1983).

Jacksonville's temperatures are more varied than in the more subtropical part of peninsular Florida. The annual mean temperature for Jacksonville is between 68 and 69 degrees Fahrenheit (°F). June, July, and August are the hottest months, with temperatures averaging near 80 °F; December, January, and February are the coolest months, with mean temperatures near the mid-50 °F. (NOAA, 1983). Extreme high temperatures are normally associated with low rainfall and drought conditions. Temperatures in excess of 100 °F are not common, and have occurred in every month from May through September. The highest temperature recorded in Jacksonville, 105 degrees F, occurred in July 1942.

Mean annual precipitation for the area is 51.49 inches (NOAA, 1983). From November to February, monthly rainfall normally ranges between 1.96 and 3.11 inches; however, monthly accumulations of 7 inches to over 11 inches have occurred during this period. Jacksonville's rainy season is from June to September with monthly rainfall accumulations typically between 6 and 8 inches; extreme accumulations of 13 inches to more than 19 inches per month have occurred. However, these extremes are generally associated with the passage of tropical storms. Rainfall of an inch or more in 24 hours normally occurs 14 times a year (NOAA, 1983).

Prevailing winds are northeasterly in the fall and winter months, and southwesterly in spring and summer (NOAA, 1983). The annual mean wind speed is 8.9 miles per hour (mph). Wind speeds of less than 12 mph can be expected 99 percent of the time. Although Jacksonville lies within the Hurricane Belt, it has been fortunate in escaping hurricane-force winds, with the exception of Hurricane Dora in 1964, which produced winds of 82 mph (NOAA, 1983).

Snow has fallen in measurable amounts twice since 1871: 1.9 inches in 1899 and 1.5 inches in 1958. Sleet and freezing rainstorms, likewise, have only been recorded twice: once in 1879 and a 16-hour storm in 1962 (NOAA, 1983).

2.2.4 Soils In the vicinity of NAVSTA Mayport, soils consist predominantly of sand, shells, and clay with organic peats in the salt marsh areas. The western area of the station has been built up by dredge spoil material from the St. Johns

Table 2-1
Aggregate Weather Measurements for Duval County and Vicinity
(years between 1941 and 1970, NOAA)

RCRA Facility Investigation
NAVSTA Mayport
Mayport, Florida

Measurement	Unit	Value
TEMPERATURE		
January		
Daily Maximum	C	18.1
Daily Minimum	C	6.9
July		32.2
Daily Maximum	C	22.2
Daily Minimum	C	20.2
Annual Extremes	C	
Length (yrs)		38
Record Highest	C	40.6
Record Lowest	C	-11.1
NORMAL HEATING DEGREE DAYS		
January	days	193
Seasonal	days	737
WIND SPEED (MPS)		
Mean Speed		
January	m/sec	3.8
July	m/sec	3.3
RELATIVE HUMIDITY (PERCENT)		
January		
7 a.m. EST	%	87
1 p.m. EST	%	57
7 p.m. EST	%	74
July		
7 a.m. EST	%	88
1 p.m. EST	%	58
7 p.m. EST	%	75

Measurement	Unit	Value
PRECIPITATION (millimeters)		
Normal		
Wettest Month	mm	200
Driest Month	mm	45
Annual	mm	1,384
Extremes		
Wettest Month	mm	492
Driest Month	mm	trace
Maximum in 24 hours	mm	258
SNOW		
Mean total		
January	mm	trace
Seasonal	mm	trace
Extremes		
Maximum in 24 hours	mm	38
SUNSHINE (% POSSIBLE)		
January	%	57
July	%	61
ANNUAL MEAN NUMBER OF DAYS		
Sunrise to Sunset		
Clear	days	98
Partly Cloudy	days	127
Cloudy	days	140
Precipitation		
0.25 mm or more	days	116
Snow, Sleet, Hail		
0.25 mm or more	days	
Thunderstorms	days	64
Heavy Fog	days	37
Temperature		
>32.2 C	days	81
<=0 C	days	14
<= -17.9 C	days	0

River and the NAVSTA Mayport Turning Basin. The dredge spoil materials range from sand to silt.

In accordance with the U.S. Department of Agriculture, Soil Conservation Service (USSCS) survey (SCS, 1978) for the City of Jacksonville, Duval County, Florida, 14 soil types are recognized in the immediate vicinity of NAVSTA Mayport. Figure 2-3 "Soil Types Found on Naval Station Mayport" presents the horizontal distributions of these soils. These soils can be placed into three groups:

- soils of the sand ridges,
- soils of the tidal marsh, and
- soils of the flatwoods.

Soils of the sand ridges are sandy to a depth of 80 inches or more and are well-drained, occurring on nearly level to moderately steep terrain. At NAVSTA Mayport, these soils cover approximately two-thirds of the station and have been filled or reworked by dredging and earth moving operations. At the station, sand ridge soils are represented by Aquic Quartzipsamments; arents and sanitary landfill arents; and several soil series comprised of fine sand including beach sand, Mandarin fine sand, Fripp fine sand, and Canaveral fine sand.

Aquic Quartzipsamments are sandy soils that are variable in composition. Thicknesses of layers range from 2 to 12 feet and under natural conditions these soils have very rapid permeabilities. Arents soils are nearly level, poorly drained soils that have been altered by earth-moving operations. Layers of these soils are typically 2 to 20 feet thick, variable in permeability, and consist of mixed soil material, fine sand, sandy loam, and sandy clay loam. Sanitary landfill Arents soils are similar to Arents but are distinguished by the fact that they overlie sanitary landfill cells.

Beach soils consist of narrow strips of nearly level sand along the Atlantic Ocean. Compositionally they are a mixture of quartz sand, heavy minerals (i.e., rutile and ilmenite), and seashell fragments. The Mandarin fine sand is a nearly level, somewhat poorly drained soil found on narrow to broad ridges slightly higher than the adjacent flatwoods. The soil is composed of fine sand with organic coatings and exhibits moderate to rapid permeabilities (Environmental Science and Engineering, 1986).

Fripp fine sand is a gently sloping to sloping, excessively drained soil on narrow to broad ridges along the Atlantic Coast. Generally the surface 6 inches is fine sand that changes to fine sand containing horizontal bands of black, heavy minerals below 6 inches. Permeability is rapid throughout the soil. Canaveral fine sand is a nearly level to gently sloping, well to poorly drained soil on a broad ridge near the Atlantic Coast. Permeability is very rapid and the soil consists of fine sand that grades to a mix of fine sand and shell fragments.

Soils of the tidal marsh make up most of the remainder of the soils on NAVSTA Mayport and generally occur in broad expanses of tidal marsh. At NAVSTA Mayport, these soils are represented by the Tisonia mucky peat, which is underlain by clay.

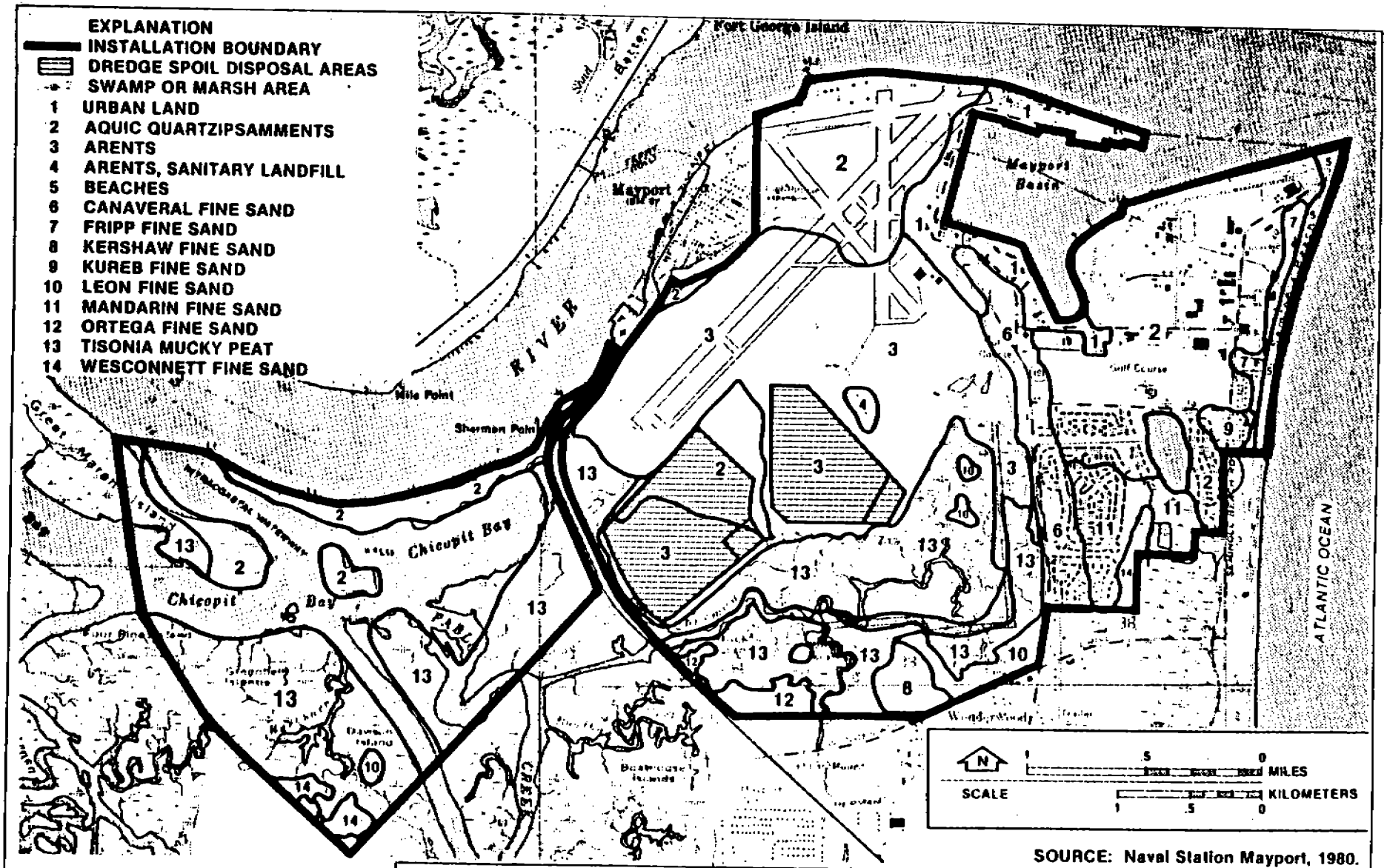

SOURCE: Naval Station Mayport, 1980.

FIGURE 2-3

SOIL TYPES FOUND ON NAVAL STATION MAYPORT

RCRA FACILITY INVESTIGATION WORKPLAN

U.S. NAVAL STATION MAYPORT, FLORIDA

Soils are nearly level, poorly drained, and permeability is rapid in the peat and very slow in the clay.

Soils of the flatwoods are sparse at NAVSTA Mayport and are represented by the Wesconnet fine sand found within the tidal marshes. This soil occurs on nearly level to gently sloping terrain, is very poorly drained, and is typically composed of a thin, black, fine sand layer underlain by fine sand. Permeabilities are moderate to rapid.

2.2.5 Regional Geology In northeastern Florida, the distribution of sediments is controlled by the Peninsular Arch and the Southeast Georgia Embayment. NAVSTA Mayport lies at the boundary of this embayment. More than 1,500 feet of Eocene and younger age sediments were deposited in the region underlying the station.

The limestones of Eocene age composed of the Ocala Group are the principal consolidated formations of concern near Mayport. The limestone formations of Eocene age in the western part of Duval County, sloping northeastward, and in the eastern part of the county, sloping northwestward, form an irregular trough or basin extending from south-central Duval County northeastward into northeastern Nassau County. A fault extends generally along the axis of this basin, the upthrown side to the west. In southern Duval County, the vertical displacement of the top of both the Ocala Group and the Avon Park Limestone by the fault is about 125 feet. The vertical displacement decreases northward and the fault probably does not extend farther north than northern Duval County. The irregularities in the surface of the Eocene limestone formations were filled and blanketed by the thick series of post-Eocene sediments, and there is no surface reflection of the subsurface structural features in the area (Leve, 1966).

The underlying geologic sequence consists of flat-lying unconsolidated deposits of sands, silts, and clays overlying a thick sequence of marine carbonates (Figure 2-4). Essentially, there are three discernible geologic units underlying the station.

- Surficial deposits. form a unit approximately 40 to 100 feet thick and are of late Miocene to Recent age.
- The Hawthorn Formation. is approximately 300 feet thick and of middle Miocene age.
- Marine carbonate sequences. of the Floridan aquifer system, are of Eocene age and comprise a unit greater than 1,000-feet thick.

These geologic units are described in more detail in the following sections.

2.2.5.1 **Surficial Deposits** The surficial deposits consist of sediments of upper Miocene age and younger. These deposits can be divided into undifferentiated sediments of Pleistocene and Recent age and sediments of upper Miocene and Pliocene age. These sediments were deposited in lagoon and estuarine environments. The Pleistocene and Recent age sediments extend from the surface to about

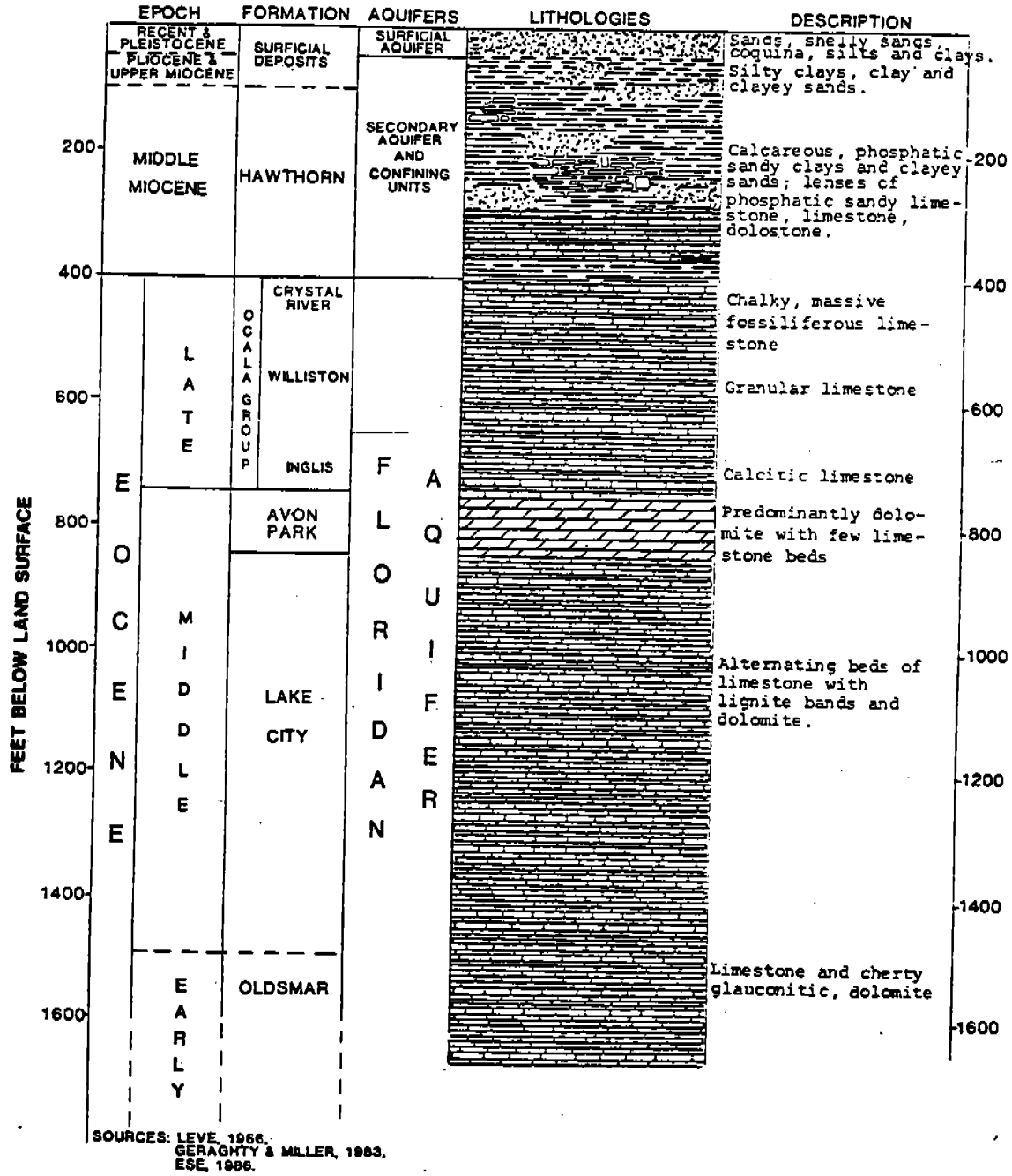

FIGURE 2-4

GENERALIZED GEOLOGIC COLUMN

RCRA FACILITY INVESTIGATION WORKPLAN

U.S. NAVAL STATION MAYPORT, FLORIDA

40 feet below land surface (BLS) and comprise the shallow aquifer. These highly variable sediments include sands, shelly sands, coquina, silts, clay, and shell beds. The upper Miocene and Pliocene sediments consist of silty clays, clay, and clayey sands. The contact between the upper Miocene and Pliocene deposits and the underlying Hawthorn Formation is an unconformity marked by a coarse phosphatic sand and gravel bed (Leve, 1966).

2.2.5.2 **Hawthorn Formation** Lithologically the Hawthorn Formation is quite variable and consists of calcareous, phosphatic sandy clays and clayey sands interbedded with thin discontinuous lenses of phosphatic sand, phosphatic sandy limestone, limestone, and dolostones. The limestone and dolostone lenses are thicker and more prevalent near the base of the Hawthorn. The permeable sand and limestone layers within the Hawthorn's confining clays form the secondary artesian aquifer. The Hawthorn Formation serves as a confining layer that separates the shallow aquifer from the underlying Floridan aquifer system. It lies unconformably above the Ocala Group (Crystal River Formation).

2.2.5.3 **Marine Carbonates Sequences (Floridan Aquifer System)** The marine carbonate sequences that make up the Floridan aquifer system beneath NAVSTA Mayport consists of the following formations in descending order:

- the Ocala Group, which consists of the Crystal River Formation, the Williston Formation, and the Inglis Formation;
- the Avon Park Limestone;
- the Lake City Limestone; and
- the Oldsmar Limestone.

These formations range in age from the late Eocene Crystal River Formation to the early Eocene Oldsmar Limestone.

The Crystal River Formation is a white to cream, chalky, massive fossiliferous limestone and is the youngest Eocene formation underlying NAVSTA Mayport. The Williston Formation, which lies conformably between the overlying Crystal River Formation and the underlying Inglis Formation, is a tan to buff granular limestone. The Inglis Formation, of early late Eocene age, is lithologically a tan to buff calcitic limestone that is very similar to the Williston Formation (Leve, 1966).

The Avon Park Limestone, of late middle Eocene age, unconformably underlies the Ocala Group. It consists of alternating beds of tan, hard, massive dolomite and brown to cream, granular, calcitic limestone. The Lake City Limestone unconformably underlies the Avon Park Limestone and is early middle Eocene in age. Lithologically, it consists of alternating beds of white to brown, chalky to granular limestone with lignite bands and gray to tan dolomite. Below the Lake City Limestone is the Oldsmar Limestone of early Eocene age. It consists of a cream to brown, soft, granular limestone and cherty, glauconitic, massive to finely crystalline dolomite (Leve, 1966).

2.2.6 Regional Hydrology

2.2.6.1 Surface Water NAVSTA Mayport is situated at the mouth of the St. Johns River, on the south bank (see Figure 2-2). Average discharge of the St. Johns River is estimated to be between 6,000 and 8,300 cubic feet per second (cfs) or about 3,900 million gallons per day (mgd) (Heath and Conover, 1981; USGS, 1967). The facility is bordered on the east by the Atlantic Ocean and to the north and northwest by the St. Johns River. To the south and southwest, an extensive tract of tidal marsh exists within the boundaries of the facility.

The facility has one manmade, freshwater lake, Lake Wonderwood, located in the onbase housing area. Lake Wonderwood occupies approximately 20 acres and was created to provide fill for the adjacent housing area. The lake has a depth of approximately 20 feet and is used by facility personnel for recreation.

The other dominant surface water feature onbase is the turning basin, i.e., Mayport Basin. The turning basin was constructed during the early 1940's by dredging the eastern part of Ribault Bay. Dredge spoil was pumped behind the west bulkhead to fill the old bay in order to elevate the land surface. Subsequent maintenance dredge spoil has been used to fill in other areas of the facility. Originally Mayport Basin was dredged to a depth of 29 feet. In 1952 the basin was deepened to a depth of 40 feet to provide access to larger ships.

Surface runoff from NAVSTA Mayport enters Mayport Basin, the St. Johns River, Lake Wonderwood, Sherman Creek, Pablo Creek, Chicopit Bay, and the Atlantic Ocean. The runways provide an artificial drainage divide between the northwest and southeast parts of the facility. To the north, soils along the St. Johns River tend to be very sandy and have high infiltration capacities. In this area there exists little surface runoff and few drainage features are evident.

To the south of the runways, soils are underlain by less permeable deposits and the topography is flatter and lower in elevation. The predominant drainage feature in this area is Sherman Creek.

The St. Johns River is the major freshwater surface feature near Mayport. The lower St. Johns River, below the mouth of the Okalawaha River, flows along a floodplain which in places exceeds 10 miles in width. The lower part of the river averages about 1 mile in width and its gradient is lower than the upper reaches of the main channel. Because the river is strongly affected by tides, its flow characteristics cannot be accurately determined. Storage capacity of the main channel is high because of the size of the stream, the low gradient, the wide floodplain, and the upstream lakes. The range in stage, which averages 8.3 feet, represents considerable volumes of water temporarily held in storage over the broad, flat floodplain, prior to discharge into the Atlantic Ocean.

Strong tidal action in the lower reaches of the river makes the determination of flow characteristics subject to error. Average flow, as estimated by the U.S. Geological Survey (1967), is 8,300 cfs based on average unit runoff values determined in upstream and downstream flow measurements with maximums to 130,000 cfs (FDNR, 1967).

The St. Johns River area south of Jacksonville has good water quality, as do many of the upper parts of the tributaries to the St. Johns. However, tributaries in the residential and commercial parts of Jacksonville area have fair to poor water quality and the St. Johns River, which drains these polluted areas, is degraded to fair water quality. Cedar River, Wills Branch, Butcher Pen Creek and Strawberry Creek are the Jacksonville area creeks with the worst overall quality. Studies by the Northeast District Office of the Florida Department of Environmental Regulation have indicated that Goodby's Creek also has very poor water quality. Pablo Creek is part of the IntraCoastal WaterWay (ICWW) near NAVSTA Mayport and water quality is generally good along its reach up to the confluence with the St. Johns River.

The specific water quality problems in these areas include elevated nutrient and bacterial concentrations, and low levels of dissolved oxygen. High nutrient values are recorded in the Six Mile Creek, Ribault River, and Cedar Creek areas; low dissolved oxygen levels are found in these areas plus the Ortega River area. Elevated levels of bacteria are more uniformly distributed throughout Duval County. No general overall trends are evident for nutrients and dissolved oxygen; however, bacteria concentrations show a marked improvement from 1973 through 1978 due to improved sewage treatment (FDER, 1986) Florida Department of Environmental Regulations, 1986).

Results for seven STORET water quality sites for data from 1975 to 1979 (monitoring at these sites has ceased, therefore, more recent data are not available) indicate that metals exceeded the State water quality criteria 141 times for cadmium (approximately 73 percent of times sampled), 110 times for copper (53 percent), 11 times for chromium (37 percent), once for mercury (10 percent), and 22 times for lead (10 percent). The existence of elevated metals concentrations in the water column and in the sediments appears to be common in the Duval County part of the St. Johns River basin (FDER, 1986).

Major site-specific drainage features associated with SWMUs at NAVSTA Mayport are presented in topographic maps of the sites prepared by photogrammetric methods (see figures). These features include drainage ditches, canals, storm drains, detention ponds, and a constructed lake (i.e., Lake Wonderwood). Elevations of specific surface water features associated with SWMUs at NAVSTA Mayport (e.g., invert elevations of conveyance structures and appurtenances) will be field verified during the well head survey.

Flood hazards exist at NAVSTA Mayport where isolated temporary inundation may occur in low-lying areas during heavy rainfall events. Site grading, detention ponds, and drainage ditches have been used to manage localized flooding. The North Florida Atlantic coastline is also subject to hurricane hazards with an average return frequency of approximately 5 years between major storm events. Major flooding can occur in low-lying coastal areas during a hurricane as a result of storm surges caused by low-pressure-induced high tides and "water-piling" caused by high winds, shallow shores, and the landfall aspect of the storm. Storm surges in the Gulf Coast area of Florida have been recorded to 8 meters above MSL. Because of the shoreline depth and configuration near Mayport, such large storm surges are not expected. Storm surges near Jacksonville can be

significant, nonetheless, depending on the particular storm and existing environmental conditions.

According to the National Flood Insurance Program (1989), the immediate shoreline area of NAVSTA Mayport is subject to potential coastal flooding with velocity hazardous (wave action). No base flood elevations were determined for these areas. The southern area in close proximity with Sherman Creek had base flood elevation of 7 to 8-feet and are within the 100-year flood plain. The majority of NAVSTA Mayport which includes all SWMUs were determined to be outside the 500-year flood plain.

2.2.6.2 Surficial Aquifer The surficial aquifer extends to a depth of approximately 70 feet bls (Causey and Phelps, 1978; Franks, 1980). It is comprised of unconsolidated deposits of sand, shells, and clay, which vary in lithology, thickness, and permeability throughout the facility. Causey and Phelps (1978) report that the surficial aquifer under most of Duval County is composed of an upper and a lower zone that are separated by deposits of lower permeability at a depth from 25 to 50 feet BLS. Franks (1980), however, found no evidence of this confining bed in the area east of Jacksonville Shipyard.

Throughout much of NAVSTA Mayport, it is anticipated that surficial groundwater flow is radial towards the major surface water features (Figure 2-5). These water bodies include the Atlantic Ocean to the east, the St. Johns River to the north and west, and Sherman Creek to the south. This general pattern is disrupted in the vicinity of the dredge spoil area. Fill activities in the past have resulted in a topographic high in the northern one-third of the northeastern dredge spoil areas. Groundwater elevations measured during site investigations in the fall of 1987 (E.C. Jordan, 1988) indicate groundwater mounding was occurring under this topographic high. During these studies, the southwestern dredge spoil area was receiving dredge material. A third complicating factor in this area is the peripheral drainage ditch. It is anticipated that the ditch provides a discharge point and, thus, alters flow patterns. The drainage ditch is also tidally influenced. Franks (1980) estimated the transmissivity of the primary water-bearing sand and shell zone (35 to 55 feet BLS) of the surficial aquifer to be 2,400 square feet per day (ft^2/day) (horizontal hydraulic conductivity equal to 34 feet per day [ft/day]). Results from single-hole permeability tests conducted during the 1987 Expanded Site Investigation (ESI) study indicate that the horizontal hydraulic conductivity throughout much of the facility exceeds 2.8 ft/day (the upper limit of the test procedure).

Geraghty and Miller (1984), citing the work of Causey and Phelps (1978), report that groundwater in the surficial aquifer at NAVSTA Mayport is fresh in the upper part but becomes brackish below a depth of 40 feet. Water quality data are shown in Table 2-2. Production well locations are shown in Figure 2-6. This was also confirmed by Frazee and McClaugherty (1979) in other areas near NAVSTA Mayport. Frazee and McClaugherty (1979) found chloride concentration to be less than 250 mg/ℓ in samples obtained near the water table. At depths greater than 50 feet, the chloride concentration exceeded 4,000 mg/ℓ. This condition should be more pronounced near the coast and the St. Johns River.

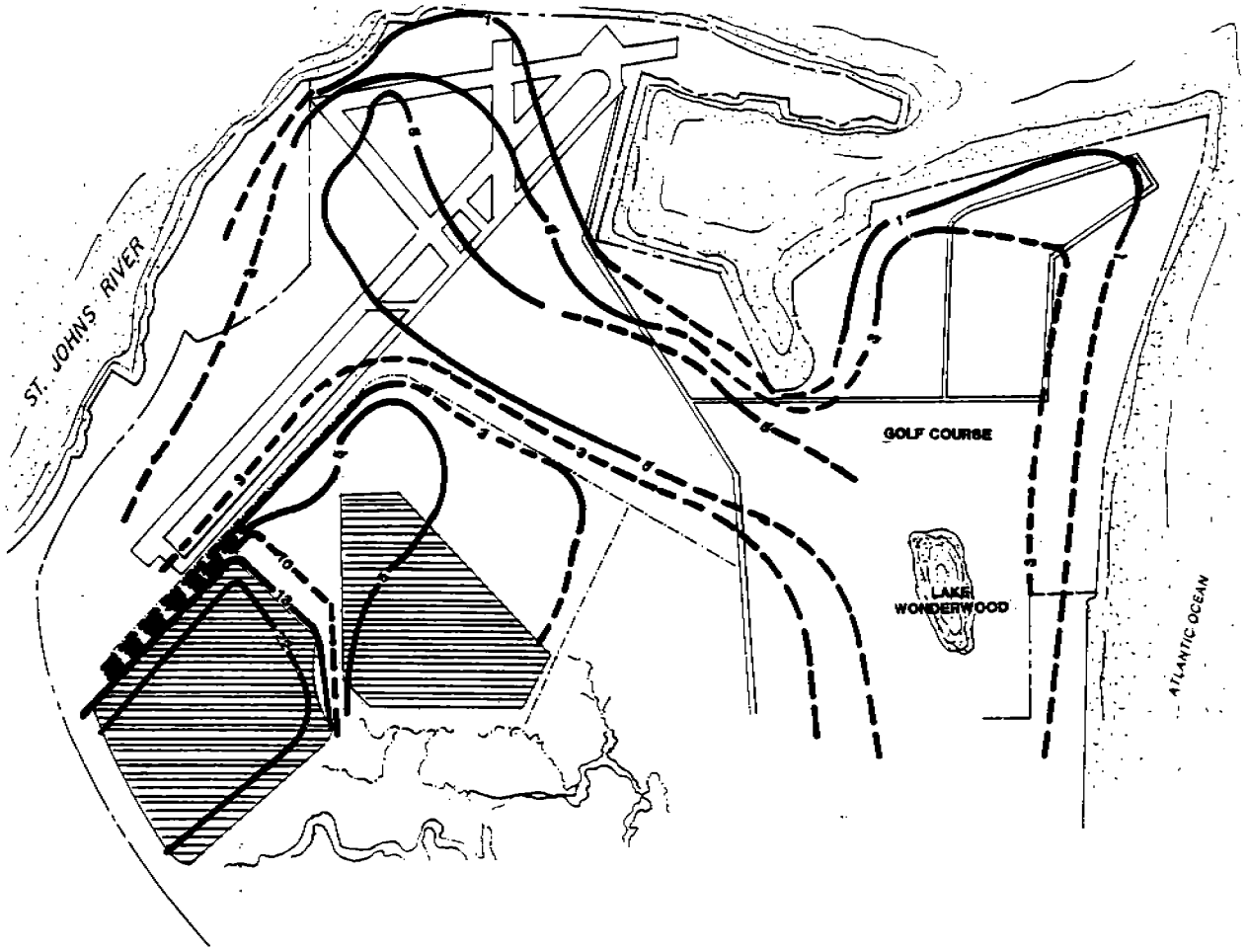

SOURCE: E.C. JORDAN 1988

FIGURE 2-5

APPROXIMATE PIEZOMETRIC SURFACE (SURFICIAL AQUIFER)

8 OCTOBER 1987

RCRA FACILITY INVESTIGATION WORKPLAN
U.S. NAVAL STATION
MAYPORT, FLORIDA

Table 2-2
Water Quality in the Surficial Aquifer

RCRA Facility Investigation
NAVSTA Mayport
Mayport, Florida

Parameter	Well DS-256	Well DS-263
Well depth (feet)	63	14
Casing depth (feet)	51	10
Sampling date	7/7/76	7/8/76
Temperature (degrees Celsius)	22.5	23
pH	7.3	6.8
Specific conductance (μmhos/cm)	2,250	750
Chloride (mg/ℓ)	452	18
Hardness, as $CaCO_3$ (mg/ℓ)	290	424
Iron (mg/ℓ)	0.09	0.34
Calcium (mg/ℓ)	74	--
Magnesium (mg/ℓ)	21	--
Sodium (mg/ℓ)	420	--
Potassium (mg/ℓ)	18	--
Sulfate (mg/ℓ)	16	--
Strontium (mg/ℓ)	0.5	--

Source: Causey and Phelps (1978).

Notes: See Figure 2-6 for well locations.

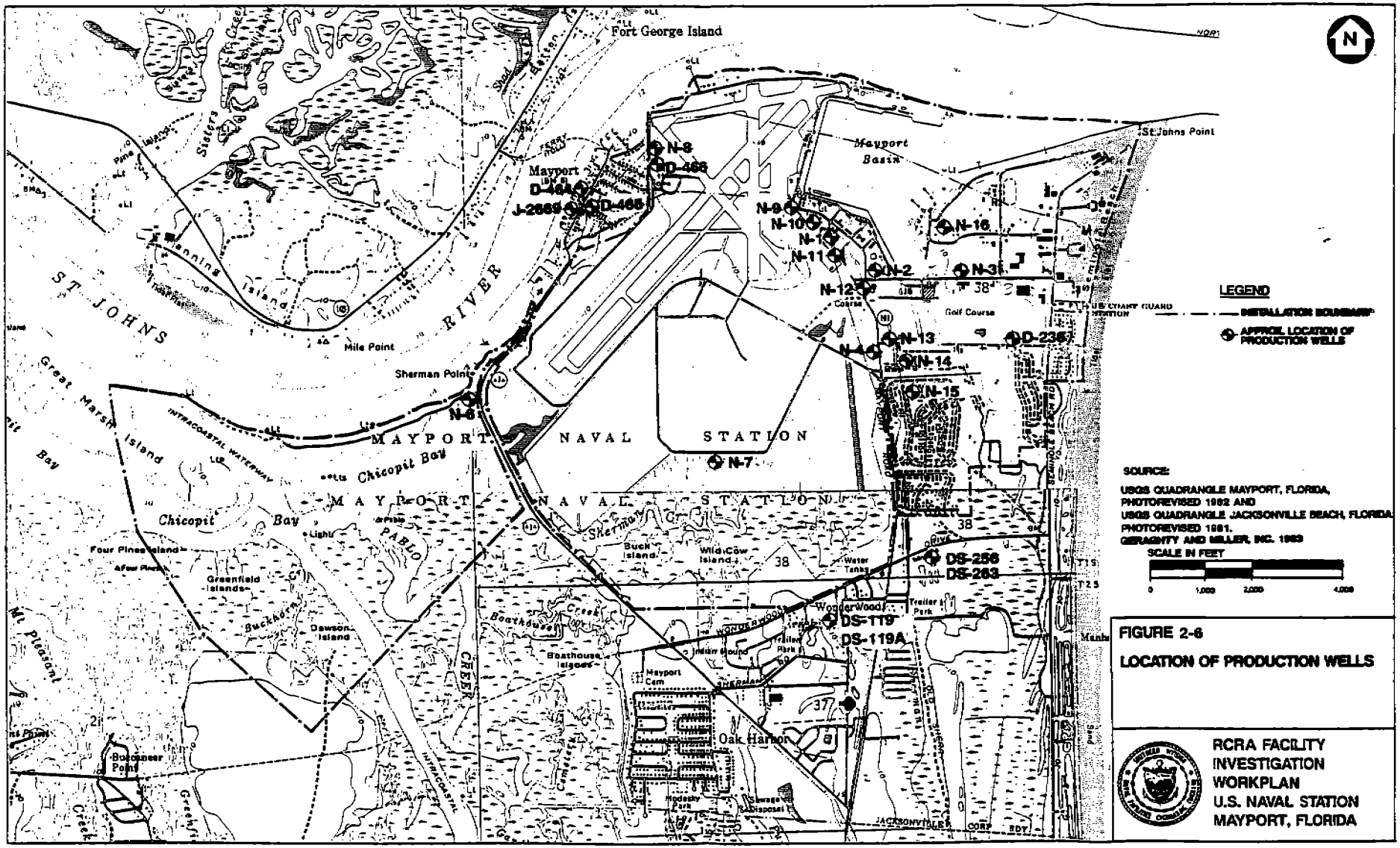

FIGURE 2-6

LOCATION OF PRODUCTION WELLS

RCRA FACILITY INVESTIGATION WORKPLAN
U.S. NAVAL STATION
MAYPORT, FLORIDA

Tidal and seasonal influences have not been measured. However, tidal and seasonal groundwater measurement programs will be implemented to obtain these data as described in Section 3.2.2.

2.2.6.3 Secondary Artesian Aquifer The secondary artesian aquifer consists of sand and limestone lenses interbedded in the clayey sands and sandy clays of the Hawthorn Formation and is situated between the surficial aquifer and the underlying Floridan aquifer system. Spechler (1982) noted that the most productive zone, a limestone layer in the upper part of the Hawthorn, is notably absent in the Mayport area. Water levels in the secondary artesian aquifer indicate that groundwater flow in the Mayport area is towards the northeast (Fairchild, 1972). Fairchild (1972) presents data on water quality for the secondary artesian aquifer (Table 2-3). Water quality is within State and Federal standards.

2.2.6.4 Floridan Aquifer System The Floridan aquifer system is the principal source of freshwater in northeast Florida. It is comprised in part or all by the Oldsmar, Lake City, and Avon Park Limestones; the Ocala Group; and a few discontinuous thin water bearing zones in the lower part of the Hawthorn Formation.

The Ocala Group is a homogeneous sequence of permeable, hydraulically connected, marine limestone beds that contain few hard dolomite or limestone beds to restrict the vertical movement of water. The Avon Park Limestone consists almost entirely of hard, relatively impermeable, dolomite beds that restrict the vertical movement of water between the overlying and underlying permeable zones. The Lake City and Oldsmar Limestone each contain alternating hard, relatively impermeable dolomite confining beds and soft, permeable limestone and dolomite water-bearing zones.

The top of the Floridan aquifer occurs at a depth of about 400 feet BLS at NAVSTA Mayport. Published transmissivities of the Floridan aquifer in eastern Duval County range from approximately 85,000 to 160,000 grams per day per feet (g/d/ft) (Leve, 1966).

Geraghty and Miller (1983) report that groundwater in the Floridan aquifer in the vicinity of Mayport is moving southward toward areas of heavy pumpage along the coast. Floridan wells in the vicinity of NAVSTA Mayport are under sufficient artesian pressure to flow at the surface. Water quality in the Floridan aquifer system is potable in the Mayport area, as shown in Table 2-4. The concentration of total dissolved solids is approximately 400 milligram per liter (mg/ℓ) and the concentration of chlorides is around 25 mg/ℓ.

The potentiometric surface of the Floridan aquifer exists at elevations above land surface, resulting in a net upward hydraulic gradient between the Floridan and surficial aquifers (Geraghty and Miller, 1983). This information indicates that the secondary artesian aquifer located in the Hawthorn Formation receives recharge from the Floridan aquifer.

According to Fairchild (1972), the potentiometric surface of the secondary artesian aquifer roughly follows the configuration of the land surface. This indicates that no hydraulic gradient can be observed between the surficial

Table 2-3
Water Quality in the Secondary Artesian Aquifer

RCRA Facility Investigation
NAVSTA Mayport
Mayport, Florida

Parameter	Well DS-119A
Well Depth (feet)	162
Casing Depth (feet)	Unknown
Sampling Date	9/26/68
pH	8.1
Specific Conductance (μmhos/cm)	442
Chloride (mg/ℓ)	25
Hardness, as $CaCO_3$ (mg/ℓ)	182
Calcium (mg/ℓ)	46
Magnesium (mg/ℓ)	16
Sodium	25
Potassium (mg/ℓ)	4.7
Sulfate (mg/ℓ)	14
Silica (mg/ℓ)	55
Bicarbonate (mg/ℓ)	228
Fluoride (mg/ℓ)	0.9
Nitrate (mg/ℓ)	0.3
Phosphate (mg/ℓ)	0
Dissolved solids (mg/ℓ)	299

Source: Fairchild (1972).

Note: See Figure 2-6 for well locations.

Table 2-4
Water Quality in the Floridan Aquifer System

RCRA Facility Investigation
NAVSTA Mayport
Mayport, Florida

Parameter	Well N-2	Well N-4
Well depth (ft)	1,000	1,000
Casing depth (ft)	435	419
Sampling date	10/12/61	5/31/79
pH	7	7.6
Alkalinity as $CaCO_3$ (mg/ℓ)	152	138
Bicarbonate (mg/ℓ)	--	138
Total hardness as $CaCO_3$ (mg/ℓ)	196	280
Calcium hardness (mg/ℓ)	–	182
Magnesium hardness (mg/ℓ)	–	98
Non-carbonate hardness (mg/ℓ)	48	142
Total solids (mg/ℓ)	444	–
Dissolved solids (mg/ℓ)	--	394
Suspended solids (mg/ℓ)	--	11
Calcium (mg/ℓ)	35.3	72.83
Chloride (mg/ℓ)	21.3	22.2
Iron (mg/ℓ)	0.2	0.4
Magnesium (mg/ℓ)	26.2	23.71
Nitrate (mg/ℓ)	–	0.04
Potassium (mg/ℓ)	--	2.53
Sodium (mg/ℓ)	--	15.14
Sodium and potassium as Na (mg/ℓ)	33.5	–
Silica (mg/ℓ)	1	22.2
Sulfate (mg/ℓ)	74.2	129

Source: Causey and Phelps (1978).

Note: See Figure 2-6 for well locations.

aquifer and the secondary artesian aquifer. Recharge to the secondary artesian aquifer comes primarily from upward leakage from the Floridan aquifer.

At least four deep monitoring wells will be installed at NAVSTA Mayport at selected SWMUs in order to confirm the vertical gradients anticipated by previous investigations. These wells will be completed at the top of the Hawthorn Formation, which is estimated to be at a depth of approximately 100 to 125 feet below the site. The depth of the wells and the length of the screened intervals will be based on the stratigraphy observed during bore-hole construction. The proposed locations of the deep wells are shown in Figure 2-7 "Proposed Piezometer and Monitoring Well Network." Data collected from existing and proposed monitoring wells and piezometers will be combined to form piezometric surface maps for individual SWMUs and appropriate groups to assess the extent of vertical gradients at the site.

2.2.7 Potential Receptors This section provides a summary of the available information on potential receptors at NAVSTA Mayport. The information is from the Navy Installation Restoration Program (IRP) Expanded Site Investigation (E.C. Jordan, 1988) and the Initial Assessment Study (IAS) (Environmental Science and Engineering, 1986). Collection of further information necessary to fully describe potential receptors as part of the RFI is described, in general, in Section 3.4.2 and on a site-specific basis in Section 3.5.

2.2.7.1 Human Receptors Information available for human receptors includes descriptions of the general use of adjacent lands and the location and status of water supply wells (Environmental Science and Engineering, 1986).

Adjacent Land Use. The town of Mayport is located west of NAVSTA Mayport, on the bank of the St. Johns River. The primary land use in the town of Mayport is residential housing and small businesses including restaurants, gas stations, and others.

The west end of NAVSTA Mayport is bounded by salt marsh. No housing or industrial activities are located in this area. There is, however, commercial boating in the Intracoastal Waterway located at the west end of the base. The areas south of NAVSTA Mayport are used for residential housing.

Water Supply Wells. The shallow groundwater and the surface water downgradient from NAVSTA Mayport are both potential pathways for contaminant migration. However, neither of these are reported as sources of potable water because of the availability of larger quantities of higher quality water in the Floridan aquifer system (Section 2.2.6.2). The deeper Floridan aquifer is overlain by approximately 300 feet of the Hawthorn Formation, which acts as a confining layer and offers considerable protection from contamination. Protection is further enhanced by an upward hydraulic gradient from the Floridan to the surficial aquifer.

There are several Floridan aquifer system wells located on and downgradient of NAVSTA Mayport (see Figure 2-6) that are reported to be used as sources of potable water. Table 2-5 shows characteristics of these wells. Although the potential for contamination of the Floridan aquifer is minimal, the following three things should be considered.

Additional background samples may be necessary after assessment of the initial RFI data if the following is observed.

- the coefficient of variation of the data for contaminants of concern is high,
- concentration of contaminants of concern is generally low, or
- the relative difference between background concentrations and site concentrations is low.

3.4.2 Potential Receptor Identification This section describes, in general, the types of data that will be collected to describe potential human populations and ecosystems that may be receptors of contamination at NAVSTA Mayport. Information on potential receptors to be collected on a site-specific basis is described in Section 3.5. The general identification of potential human receptors will be based upon information obtained from a records search of appropriate naval files; a search of pertinent State and Federal records, statutes, and documents; appropriate interviews with naval and State personnel; and a visual survey of the sites and surrounding area by a qualified public health scientist.

3.4.2.1 Human Receptor Survey

Identification of Current and Potential Future Uses of Groundwater. The following information will be collected with regard to groundwater uses:

- location of groundwater users of the surficial aquifer, secondary artesian aquifer, and Floridan aquifer system including withdrawal and discharge wells within a 1-mile radius of NAVSTA Mayport;
- classification of the aquifers under the State of Florida Administrative Code; and
- identification of the types of use of groundwater.

The location and status of water supply wells at NAVSTA Mayport were identified as part of the 1983 Geraghty and Miller report. This information will be verified and updated. In addition it will be necessary to identify any potable wells in the area of Site 14. This area was not included in the previous study. Nonpotable water supply wells were also not previously identified and if these are any of these, they will be located.

Identification of Current and Potential Future Uses of Surface Water. General descriptions of surface water bodies on NAVSTA Mayport including Lake Wonderwood, parts of the St. Johns River, and parts of the Atlantic Ocean are provided in Section 2.2.6.1. The current and potential future uses of the surface water bodies will be described including possible domestic, municipal, recreational, agricultural, industrial, and environmental uses. The information will be obtained by contacting local and State agencies and base personnel.

Identification of Land Uses and Access to the Facility. Uses of land on, or adjacent to the base will be described as well as the type and number of people who have access to the land(s).. Information to be collected includes, but is not limited to recreation, hunting, residential, and commercial uses. Any zoning of lands will be reported. The relationship between population locations and prevailing wind direction will also be predicted. Collection of information will be from base personnel and local agencies responsible for land use planning. Information available in the IAS (Environmental Science and Engineering, 1986) will be included.

Demographic Profile. A demographic profile of populations who use or have access to the sites and the adjacent land(s) will be compiled. The profile will include age, sex, sensitive subgroups (e.g., schools or nursing homes), and other factors as appropriate. The demographic profile will include the base and surrounding areas. Information will be compiled from reviews of base records and census information for the town of Mayport.

3.4.2.2 **Environmental Receptors** Environmental receptors include aquatic and terrestrial wildlife species that may be exposed to contamination emanating from the sites. In order to accurately assess environmental receptors, a biological field investigation will be conducted. The biological field investigation is fully described in the Sampling and Analysis Plan.

The objectives of the receptor survey and biological field investigation include:

- identification of environmental characteristics,
- identification of important aquatic and terrestrial organisms (receptors),
- identification of areas of contamination and ecological effects, and
- estimation of the magnitude and variation of toxic effects.

Survey of Aquatic Biota. The biota of surface water bodies on, adjacent to, or affected by each of the sites will be characterized. Aquatic biota include amphibians, fish, invertebrates, plants, and algae. Aquatic biota will be sampled from surface waters potentially impacted by contaminant releases. The sampling will be conducted by field biologists. The sampling is qualitative in nature and designed to collect as many species as possible. Organisms will be identified if feasible, to the genus level.

Survey of Terrestrial Biota and Plants. The terrestrial biota inhabiting NAVSTA Mayport and/or lands adjacent to it will be characterized. Terrestrial biota include birds, reptiles, invertebrates, amphibians, and mammals. Information on habitats collected during the biological field investigation will aid in identifying species that may be susceptible to exposures to contaminants.

Description of Ecosystems. Ecosystems present on, or adjacent to, NAVSTA Mayport will be described based upon information previously collected (Section 2.2.7.2) and the results of the aquatic and terrestrial survey. The ecosystem descriptions will include identification of possible food webs that will aid in assessment of potential food chain transport of contamination.

Identification of wetland habitats will be included in this part of the receptor survey. The wetlands assessment will include descriptions of the wetland areas; their classification according to State, Federal, and local regulations; and their functional attributes.

Identification of Rare, Endangered, or Threatened Species and Sensitive Habitats. Any rare, endangered, or threatened species on, near, or affected by the site will be described. Information on such species as previously collected is provided in Section 2.2.7.2. This information will be verified and amended as necessary.

Natural Resource Management. Natural resource management practices at NAVSTA Mayport will be summarized. These practices include landscape maintenance, drainage, erosion, and pest control. These practices impact potential habitats and, in turn, receptors.

Identification of Recreationally Important Wildlife. Recreationally important wildlife will be described. This description will include fish and game sport species on or near NAVSTA Mayport.

Bioassessment Methods. Bioassessment methods will be used on a site-specific basis to identify areas of contamination and ecological effects and to estimate the magnitude and variation of toxic effects.

Bioassessment methods include quantitative surveys of vegetation, aquatic macroinvertebrates, and fish; bioassays; and tissue residue analyses. Specific information on each bioassessment method is provided in the SAP. Possible implementation of biomonitoring is discussed on a site-by-site basis in Section 3.5.

The sampling of aquatic biota for tissue analyses will be dependant upon the results of the release characterizations described in Section 3.5. If inorganic or organic constituents having bioaccumulative potential are measured in sediments or the water column, sampling and analyses of aquatic species may be implemented. Tissue analyses of aquatic species would provide evidence of bioaccumulative potential and potential exposures via consumption for humans.

3.5 SITE-SPECIFIC ACTIVITIES. Site-specific activities for the RFI at NAVSTA Mayport are designed to describe the environmental setting, characterize the source of potential contamination, define the presence and extent of any release of contaminants, and identify potentially impacted receptors. The following sections present a discussion of source characterization, environmental setting, release characterization, and potential receptors for each site included in the RFI. The source characterization sections describe the nature of the site (landfill, spill site, treatment facility, etc.), history, and current use of the

site, and the types of materials disposed of or used at the site. The environmental setting sections describe the site topography, soils, vegetation, and any available information on groundwater and surface water at the site. The sections on release characterization describe any previous investigations at the site (i.e., ESI) and summarize their findings. Investigations planned for the site during the RFI are also discussed in these sections. Potential receptors are described and additional activities planned to characterize receptors at each site are discussed in a separate section for each site.

At each site, consideration is given to possible releases to air, soil, surface water, and groundwater. For each of these environmental media, the RFI is designed to identify the constituent(s) of concern, the general characteristics of any release, the concentration of constituents and extent of any release, and the rate of migration of any constituents released into the environment. Selection of sampling locations and target analytes is based on information gathered during the ESI.

Data from the ESI and other previous investigations are referenced and/or presented in the RFI Workplan when it is applicable to an individual site.

3.5.1 SWMU 1 (NIRP Site 1), Landfill A

3.5.1.1 Source Characterization SWMU 1, (NIRP Site 1) Landfill A is described in Section 2.3.2.1. Closure documentation for SWMU 1 is not available or does not exist. The landfill operation consisted of digging approximately 18 trenches, 15 feet wide and 8 feet deep. The landfilled materials were ignited in the afternoons each Monday through Friday and allowed to burn. When the site was no longer used, the area was graded and a shallow layer of topsoil placed on the surface to support a vegetative growth. Over the years, development has taken place and much of the area is now covered with structures, roadways, and parking lots.

In 1989, construction activities northwest of the landfill location uncovered 27 drums containing xylene, as well as scrap metal sheeting and piping. In order to determine the extent of the drum and scrap metal disposal area, a magnetometer survey will be conducted during the RFI in the area northwest of Jacksonville Shipyards and west of the wastewater treatment plant.

Information on waste characteristics that has been provided in earlier reports is all that is presently known (IAS, 1986; ESI, 1988). Planned activities include sampling and analysis for Appendix IX constituents of groundwaters, soils, and sediments. All borings will be logged to provide local geological data. Soils will be analyzed for density, moisture content, and permeability. Aquifer characteristics will be measured by slug tests.

3.5.1.2 Environmental Setting SWMU 1 is located approximately 600 feet from the St. Johns River at the mouth of the Mayport Basin. The area is between 12 feet and 15 feet above msl. Surface runoff drains north via a drainage ditch alongside Bon Homme Richard Street or overland to the northwest into the St. Johns River.

The shallow surface soils at SWMU 1 consist mainly of fine quartz sands. A thin clay layer (less than 1-foot thick) was noted in each of the borings conducted during the ESI at a depth of 7 to 10 feet bls (2 to 7 feet MSL). This thin clay layer slopes downward towards the St. Johns River. Below this clay layer lies a fine quartz sand to a depth of at least 17 feet BLS.

Water level measurements were obtained on four separate occasions during the ESI at SWMU 1. Data from October 8, 1987, indicate an average horizontal hydraulic gradient of 0.004 across the site. Groundwater flows north directly towards the St. Johns River, which is located 600 feet north of the site.

The Sampling and Analysis Plan (Volume II) specifies the collection of representative soil samples during borehole construction at SWMU 1 in order to characterize physical and general chemical soil properties. Analyses will include: bulk density, cation exchange capacity, organic content, soil pH, particle size distribution, and moisture content. These samples and analyses are in addition to samples collected for Appendix IX chemical analyses.

A qualified geologist or engineer will be onsite to log boreholes during drilling and sample collection. Borehole logs will be prepared based on the geologist's or engineer's observations. Borehole logs from the ESI have been prepared and are presented in Appendix E of Volume I as examples of the expected geology.

Monitoring wells will be installed in boreholes at SWMU 1. Aquifer characteristics will be measured by slug tests after the wells are developed and groundwater samples collected.

3.5.1.3 **Release Characterization** Three monitoring wells (MPT-1-1, MPT-1-2, and MPT-1-3) were installed in the vicinity of SWMU 1 during the ESI. Soil and groundwater samples were collected and analyzed for priority pollutants. Elevated levels of 4,4'-DDE were measured in the groundwater at monitoring well MPT-1-2 (0.01 $\mu g/\ell$) and in both soil (58 $\mu g/kg$) and groundwater (0.14 $\mu g/\ell$) at monitoring well MPT-1-3. Elevated levels of lead (122 $\mu g/\ell$) and cadmium (1.0 $\mu g/\ell$) were also observed in the groundwater at monitoring well MPT-1-3.

Four new monitoring well clusters (MPT-1-4S/D through MPT-1-7S/D) composed of paired deep and shallow wells are proposed for SWMU 1. The proposed locations are presented in Figure 3-3. One of these wells will be constructed to the top of the Hawthorn Formation. All deep wells completed to the top of the Hawthorn Formation will be double-cased to the first confining layer. The horizontal placement of this well will be approximately between the northern extent of SWMU 1 and the area where the magnetometer survey will be conducted to confirm the extent of SWMU 1 boundaries. The purpose of this well is to obtain lithologic data below the site to the Hawthorn Formation, groundwater quality information at depth, and vertical hydraulic gradient information between water bearing zones. A shallow monitoring well completed in the upper part of the surficial aquifer will be nested with the deeper Hawthorn well.

Previous hydrogeologic investigations (Causey and Phelps, 1979) have reported that the surficial aquifer in much of Duval County is composed of two zones, separated by deposits of lower permeability at depths ranging from 25 to 50 feet

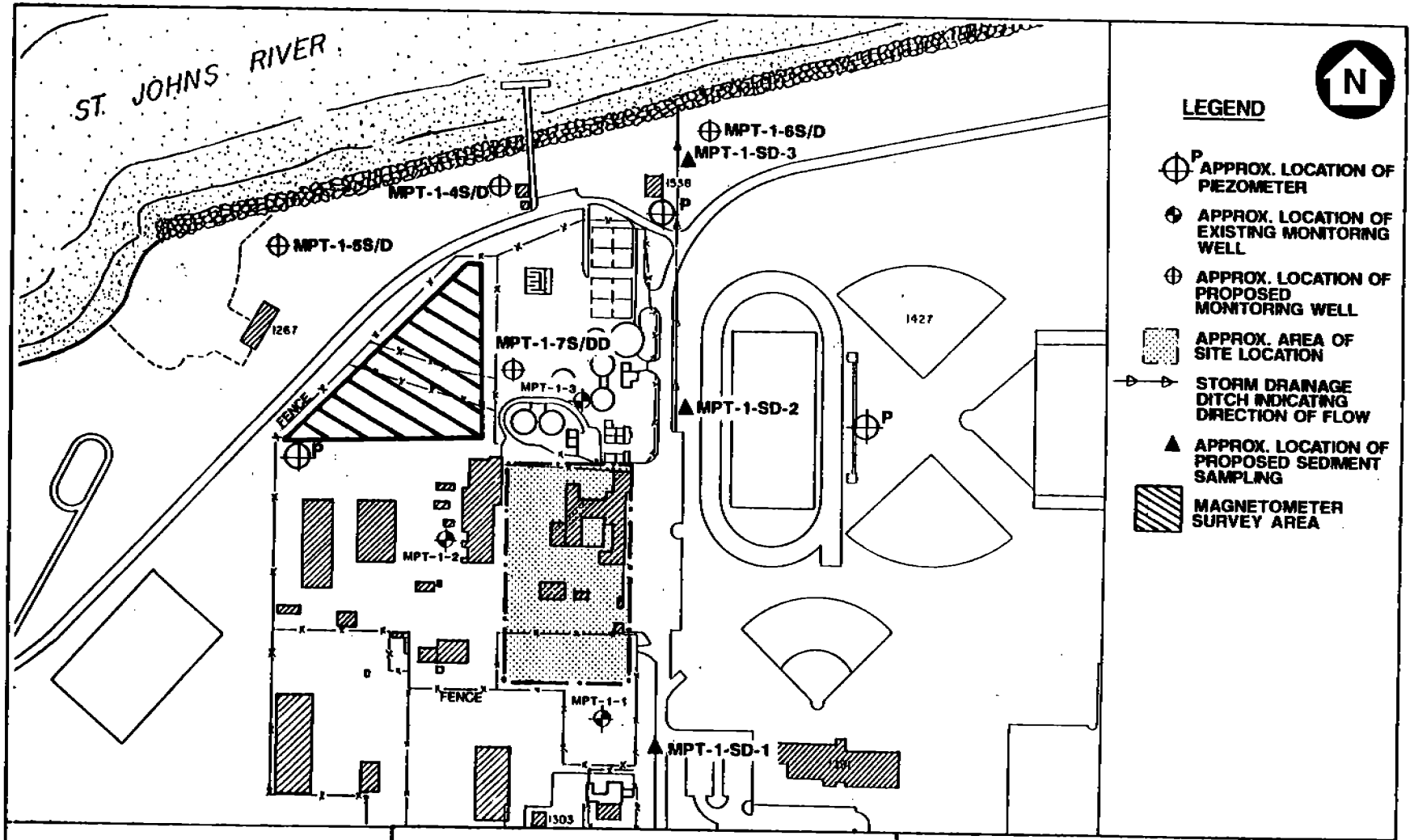

APPROX. SCALE

0 225 450 FT

FIGURE 3-3

LOCATION OF EXPLORATIONS (SITE 1) SWMU 1

RCRA FACILITY INVESTIGATION WORKPLAN
U.S. NAVAL STATION MAYPORT, FLORIDA

below land surface. This low-permeability horizon should be observed during construction of the deep borehole if it exists at SWMU 1.

Three additional nests of paired surficial aquifer monitoring wells are proposed downgradient of the suspected area of SWMU 1. The locations of these nested well-pairs were selected in order to intercept possible plumes of contaminants that may be migrating toward the St. Johns River and to estimate the downgradient western and eastern fringes of possible plumes. Groundwater elevation data from these wells will improve estimation of groundwater flow rates and direction in the shallow aquifer, and help assess the influence of tidal fluctuations on the site hydrogeology.

The depths of these nested wells will be estimated from the boring log of the well completed in the upper Hawthorn Formation, which will be constructed first. The deeper well of each pair will be completed to the top of the first aquitard (if one is observed), which is anticipated to be at a depth of 25 to 30 feet. The deeper well will be screened 5 feet in length extending from the bottom of the well upward. The shallower wells will be approximately 15 feet deep and the screened interval will be approximately 10 feet long extending from about 3 feet above the water table surface downward. The intent of the nested well design is to permit sampling of dense non-aqueous phase liquids (DNAPLs), floating product, and soluble-phase aquifer water quality parameters.

Groundwater samples from the existing wells will be analyzed for metals using USEPA SW-846 Method 6010 inductively coupled plasma (ICP), Method 7470 (mercury), and Method 7870 (tin); organochlorine pesticides and PCBs by USEPA SW-846 Method 8080 (gas chromatography), volatile organic compounds by USEPA Method 8240; and semivolatile organic compounds by USEPA SW-846 Method 8270. Groundwater flow rate will be determined as outlined in Section 3.2.5.

Investigation of the subsurface soils is planned for SWMU 1 during installation of monitoring wells. The draft RFI Workplan prepared in 1987 was revised and implemented as the ESI under the NIRP. Subsurface soil samples were collected during the ESI (1987) and analyzed for priority pollutant metals, volatile organic compounds, and semivolatile organic compounds. The findings of the ESI are reported in the Final ESI Report (E.C. Jordan, April 1988). Data from these subsurface soil samples at SWMU 1 indicated elevated levels of 4,4'-DDE (58 $\mu g/kg$) in soils at the location of the downgradient well, MPT-1-3.

Additional subsurface soil samples will be collected at the borehole locations of the wells proposed for SWMU 1 during RFI implementation to confirm previous findings and to further characterize the vertical and horizontal extent of SWMU 1 contaminants. Soil samples will be collected just above groundwater level and analyzed for Appendix IX compounds. Other soil samples will be collected for analysis of general physical and chemical properties. These properties will include: bulk density, cation exchange capacity, organic content, soil pH, particle size distribution, moisture content, and infiltration (at each bore-hole location). Porosity and soil sorptive capacity will be derived from basic soil properties. These general physical and chemical parameters will assist in assessing contaminant fate and transport models and to provide fundamental data to support future potential corrective measures at the site.

The following subsurface soil samples will be collected at SWMU 1 during RFI implementation.

Location	Frequency	Analyses
MPT-1-4D/S MPT-1-5D/S MPT-1-6D/S MPT-1-7D/S	One per boring	Appendix IX volatile organic compounds (USEPA Method 8240). semivolatile organic compounds (USEPA Method 8270), PCB and pesticides (USEPA Method 8080), and metals (USEPA Method 6010, 7870, 7470)
MPT-1-4D/S MPT-1-5D/S MPT-1-6D/S MPT-1-7D/S	One per boring	Bulk density (ASTM D2937-83), cation exchange capacity (USEPA Method 9081), organic content (USEPA Method 9060), soil pH (USEPA Method 9045), particle size distribution (ASTM D422-63), moisture content ASTM D2216-80), and infiltration (ASTM D3385).

No permanent surface water that may contact contaminated media such as subsurface soils and groundwater exists at the site. Wastes at the site were buried below ground and the surrounding surface was regraded when land disposal operations were discontinued. A significant portion of the site has since been covered with structures and asphalt paving. Soil, sediment, and groundwater samples and analyses will be obtained to characterize horizontal and vertical extent of suspected RCRA contamination.

Sediment samples will be collected from the drainage ditch east of SWMU 1 (MPT-1-SD-1, and MPT-1-SD-2, MPT-1-SD-3) at both upgradient and downgradient locations as shown in Figure 3-3 in order to assess surface transport of contaminants. These samples will be analyzed for metals by USEPA Methods 6010, 7470, and 7870; PCB and pesticides by USEPA Method 8080; volatile organic compounds by USEPA Method 8240; semivolatile organic compounds by USEPA Method 8270; and total organic carbon by USEPA SW-846 Method 9060.

The storm drain sampling locations were chosen to determine if site contaminants were migrating via stormwater runoff sediment loads, and being deposited in the inverts of the conveyance system. Persistent pollutants in particular, such as metals and semivolatile organic compounds, could accumulate in sediments over time if releases were occurring. The sample locations were chosen to determine the horizontal spacial distribution of sediment contamination and to assess if obvious differences exist between upstream sediments and downstream sediments. Sediment samples will be taken immediately upstream from SWMU 1, immediately downstream near the site boundary, and near the discharge to the St. Johns River just above the mean high tide elevation where sediment deposition could be

influenced by backwater effects during storm events. Samples would be taken from 0 inch to 6 inches below surface where recent deposits would be expected.

The following sediment samples will be collected at SWMU 1 during RFI implementation.

Location	Frequency	Analyses
MPT-1-SD-1 MPT-1-SD-2 MPT-1-SD-3	One per location	Appendix IX volatile organic compounds (USEPA Method 8240), semivolatile organic compounds (USEPA Method 8270), PCB/pesticides (USEPA Method 8080) and metals (USEPA Method 6010, 7870, 7470)

The following field quality control samples will be collected during field sampling activities. QA/QC requirements are presented in detail in Appendix A, Volume II.

- **Duplicates**. Duplicates of soil, waste, groundwater, surface water, and sediments samples will be submitted for analysis of all parameters specified for the original samples (e.g., Appendix IX compounds) at a rate of 10 percent of the samples analyzed, or a minimum of 1 per event for each media sampled.

- **Trip Blanks**. A trip blank will be included with each shipment of water samples scheduled for volatile organic analysis (VOA) and will be analyzed with other VOA samples.

- **Equipment Rinsate**. A minimum of one equipment rinsate (sampler) blank per day for bailers, sampling pumps, and/or tubing will be scheduled during monitoring well sampling. A minimum of two soil sampler blanks will be collected each day during field soil sampling. One will be collected at the initiation of daily soil sampling activities and the other at the completion.

- **Field Blank**. A minimum of one field blank per day will be collected during field activities.

Subsurface gas probes will be installed in the vicinity of buildings at SWMU 1 to assess the potential for contaminant migration via soil gas and to assess the potential for buildup of hazardous vapors.

All soil, sediment, groundwater, and surface water will be analyzed for Appendix IX constituents. Upon assessment of initial analytical data, contaminants of concern will be identified for subsequent analysis, as appropriate.

3.5.1.4 Potential Receptors Groundwater from SWMU 1 flows northward directly to the St. Johns River 600 feet north of the site. No water supply wells have been documented in the area of the landfill or north to the St. Johns. One

abandoned Navy Well (N-16) is located south of the site according to available information. As groundwater is not currently being used from this area, direct exposures for human receptors are not anticipated. The receptor survey will, however, verify the location and status of the N-16 well and determine future uses to the extent possible.

Use of the immediate area near the former landfill is restricted to naval and other authorized personnel. Incidental exposures to soil contamination is possible for these individuals. Human use and access to the buildings near SWMU 1 will be determined as part of the receptor identification. This process is described in Section 3.4.2.1.

Human receptors may be exposed to contamination migrating to the St. Johns River via direct contact or ingestion of contaminated biota. Current and future uses of the St. Johns River in areas near SWMU 1 will be identified as described in Section 3.4.2.1.

Ecological receptors are potentially exposed to contamination migrating to the St. Johns River or the drainage ditch to the east of the Site. Site-specific ecological receptor identification activities will include: a survey of aquatic biota in tidal ponds (located south of the river and to the northeast of the former landfill), a survey of aquatic biota in the drainage ditch (which flows from south to north to the east of the site), and collection of information on aquatic and terrestrial organisms inhabiting or using the St. Johns River. If, after review of data on the St. Johns River, it is determined that receptors are not adequately characterized using available information, then biota sampling in the St. Johns River will be proposed to fill the data gaps.

If analyses of sediment samples from the drainage ditch (Section 3.5.1.3) reveals the presence of any persistent or bioaccumulative contamination, then sampling of aquatic biota for tissue analyses may be implemented. The results of the tissue analyses would provide necessary information on potential exposures and exposure routes for both ecological and human receptors.

3.5.2 SWMU 2, 3, 4, and 5 (NIRP Sites 2, 4, 5, and 6), Landfills B, D, E, and F

3.5.2.1 Source Characterization These four landfills are discussed together due to their physical proximity (Figure 3-4) and the similarity of wastes disposed in these areas. They are described in Section 2.3.2.2.

Available closure information is as follows.

SWMU 2 (NIRP Site 2) - The area has been covered with soil, paved with asphalt, and fenced. An ordnance storage yard now occupies the site.

SWMU 3 (NIRP Site 4) - The area has been covered with topsoil.

SWMU 4 (Site 5) - The area has been covered with topsoil.

SWMU 5 (NIRP Site 6) - The area has been covered with topsoil.

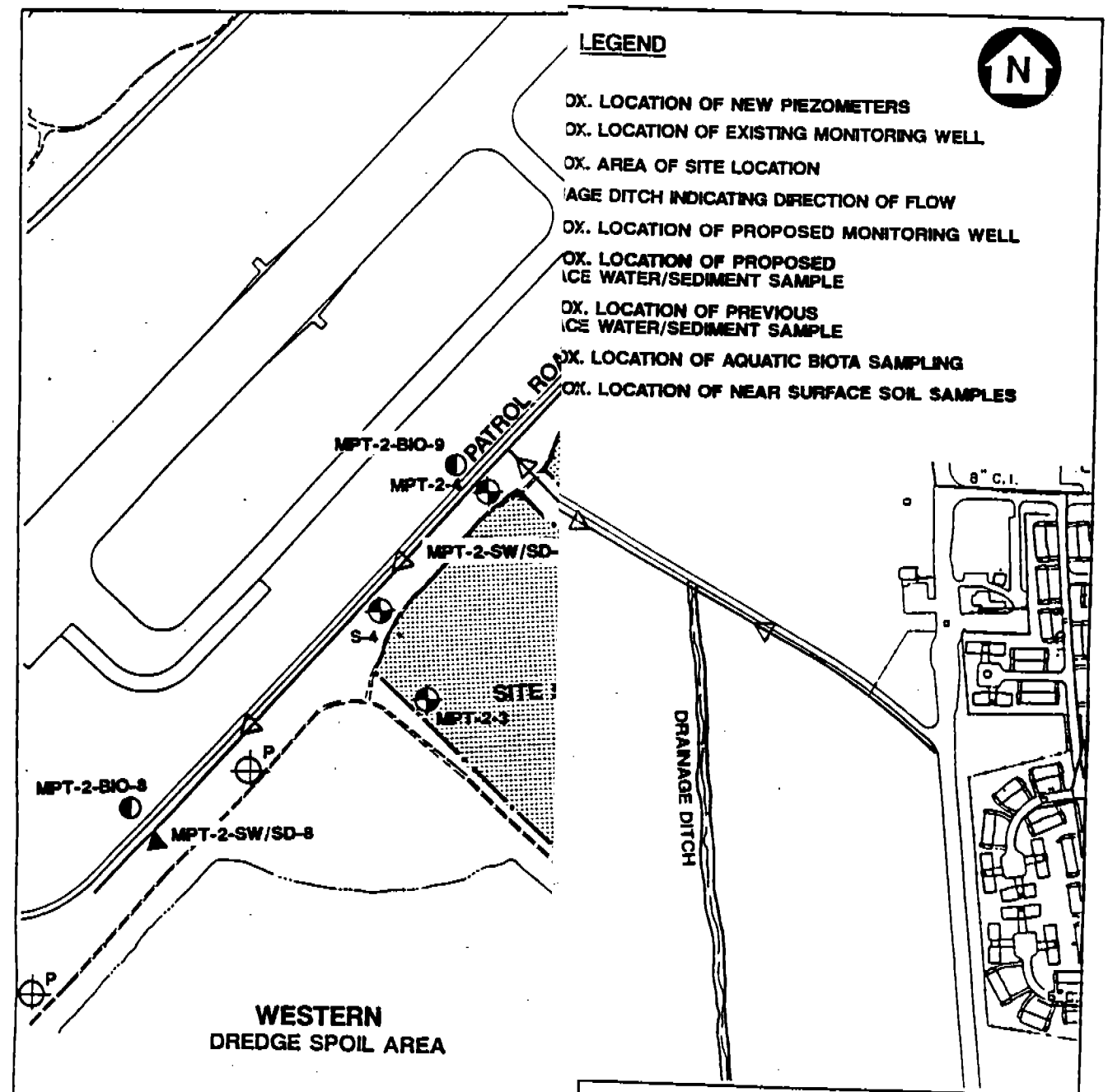

FIGURE 3-4

LOCATION OF EXPLORATIONS (SITES 2, 4, 5, & 6) SWMU 2, 3, 4, 5, & 22

RCRA FACILITY INVESTIGATION WORKPLAN
U.S. NAVAL STATION
MAYPORT, FLORIDA

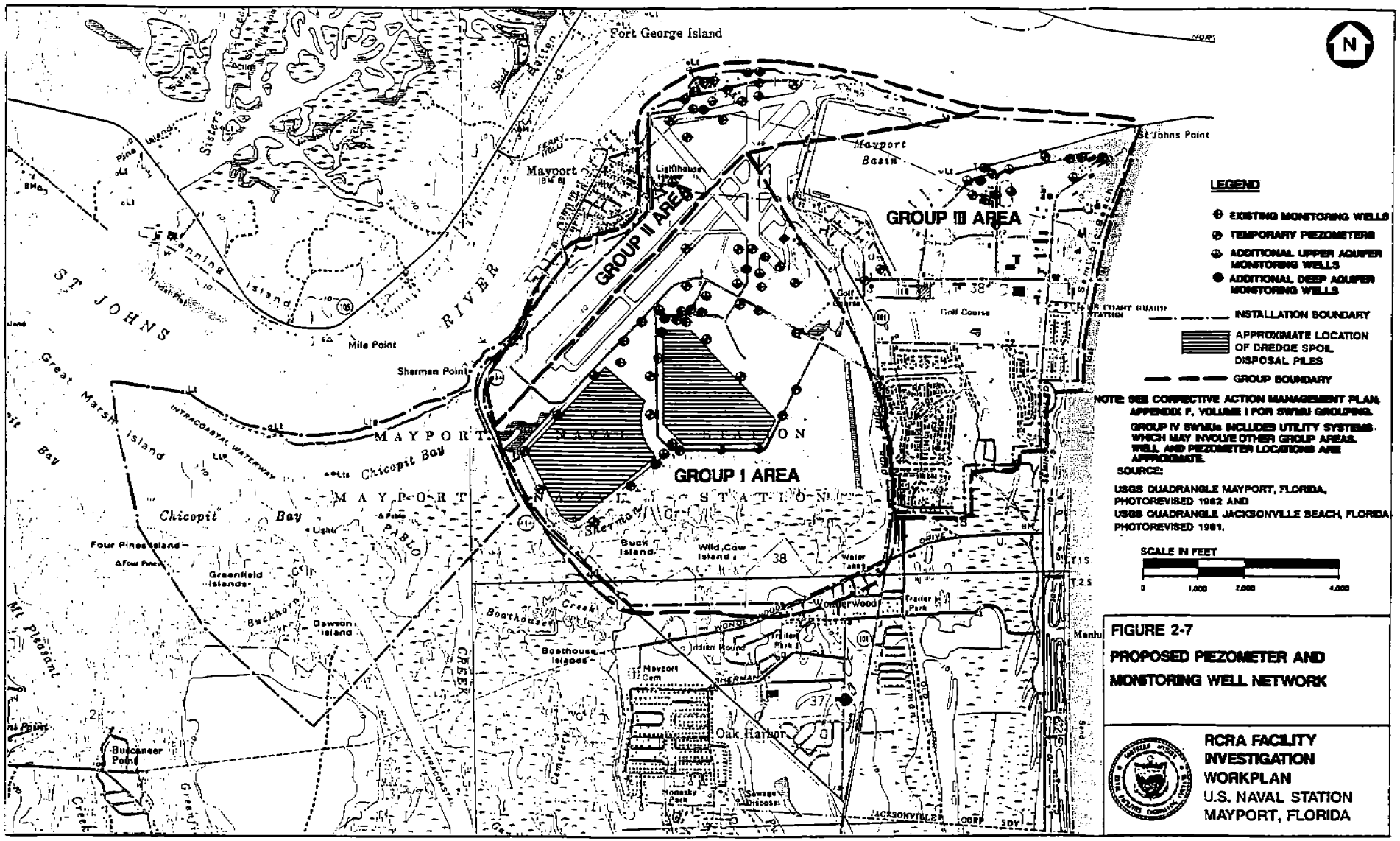

FIGURE 2-7

PROPOSED PIEZOMETER AND MONITORING WELL NETWORK

RCRA FACILITY INVESTIGATION WORKPLAN
U.S. NAVAL STATION
MAYPORT, FLORIDA

Table 2-5
Description of Water Wells in the Vicinity

RCRA Facility Investigation
NAVSTA Mayport
Mayport, Florida

Well Designation	Owner	Date Installed	Casing Diameter (inches)	Surface Elevation (ft msl)	Total Depth (feet)	Interval Open to Formation (feet depth)	Status
N-1	U.S. Navy	1961	12	10	1,001	435 to 1,001	In use
N-2	U.S. Navy	1958	12	10	1,000	435 to 1,000	In use
N-3	U.S. Navy	1979	16	10	1,000	433 to 1,000	In use
N-4	U.S. Navy	1979	16	10	1,000	419 to 1,000	In use
D-466	U.S. Navy	?	?	12	?	?	Plugged
D-236	U.S. Navy	1962	6	9	814	440 to 814	Used for irrigation
D-465	City of Jacksonville	?	?	10	700	?	Plugged
N-6	U.S. Navy	?	6	<10	?	?	Plugged
N-7	U.S. Navy	?	2		?	?	Plugged
N-8	U.S. Navy	?	4		?	?	Unknown
N-9	U.S. Navy	?	6		?	?	Plugged
N-10	U.S. Navy	?	4		?	?	Plugged
N-11	U.S. Navy	?	3		?	?	Plugged
N-12	U.S. Navy	?	3		?	?	Plugged
N-13	U.S. Navy	?	6		?	?	Plugged
N-14	U.S. Navy	?	?		?	?	Plugged
N-15	U.S. Navy	?	?		?	?	Plugged
N-16	U.S. Navy	?	?		?	?	Abandoned
N-17	U.S. Navy	?	?		?	?	Plugged
D-464	City of Jacksonville	1973	6	10	1,219	430 to 1,219	In use
J-2669	Private Duval County	?	3	<10	500	399 to 500	Unknown
DS-256	Duval County	1976	2	9	63	51 to 63	Monitor well
DS-263	Duval County	1976	2	9	14	10 to 14	Monitor well
DS-119	?	?	2	10	98	?	Not used
DS-119A	?	?	2	8	162	?	Unknown

Source: Geraghty and Miller, 1983.
Notes: ft. msl = feet above mean sea level.
? = unknown.

- Improper well construction could allow contaminated surface groundwater to travel down into the Floridan aquifer system.

- Pumping for a long period of time, particularly excessive pumping, could reverse the present gradient and allow downward migration of contaminated water into the Floridan aquifer system.

- Some downward migration may occur over very long periods of time, even through confining layers.

2.2.7.2 Flora and Fauna Aquatic habitats for natural resources on NAVSTA Mayport include wetlands and water bodies within and adjacent to its boundaries. The Atlantic Ocean forms the station's eastern boundary. The St. Johns River bounds the station on the north and northwest (with the exception of the area adjacent to the town of Mayport). Most of the station located west of Route A1A and the area south of the dredge spoil disposal areas (adjacent to Sherman Creek) is comprised of coastal marsh and tidal creeks and includes a part of the Intracoastal Waterway.

The NAVSTA Mayport installation encompasses 3,401 acres, of which approximately half is brackish marsh, sand spits, beach (vegetated and nonvegetated), and dredge spoil areas (1,667 acres). Other land-use types on NAVSTA Mayport include regularly mowed lawns, roadside, and golf course (527 acres); irregularly mowed road and runway shoulders (420 acres); buildings and pavement (387 acres); and managed forest (285 acres) (U.S. Navy, 1984). The locations of ecosystems on NAVSTA Mayport as identified in the IAS (Environmental Sciences and Engineering, 1986) are presented in Figure 2-8.

Ecosystems Identified at or in the Vicinity of NAVSTA Mayport. Ecosystems at NAVSTA Mayport characterized in the IAS include coastal marsh, dune and beach communities, developed and ruderal lands, managed forests, and coastal hammock forests. Information from the characterizations of flora and fauna within these ecosystems is summarized in Table 2-6.

Rare, Threatened, or Endangered Species. Species determined to be endangered or threatened are protected by the U.S. Fish and Wildlife Service under the Endangered Species Act of 1973. In addition, the State of Florida protects a number of wildlife species under its Endangered and Threatened Species Act of 1977. The Florida Game and Fresh Water Fish Commission administers this law and publishes official lists. The threatened, endangered, or protected species listed in Table 2-7 were reported in the IAS as potentially occurring in the vicinity of NAVSTA Mayport.

2.3 SOLID WASTE MANAGEMENT UNITS (SWMU).

2.3.1 Previous Investigations Two investigations of SWMUs at NAVSTA Mayport have been conducted under the Navy's IRP and its predecessor, the Navy Assessment and Control of Installation Pollutants (NACIP) Program. An IAS was conducted in late 1985 by Environmental Science and Engineering, Inc. (Environmental Science and Engineering, 1986), and an ESI was conducted in late 1987 by E.C. Jordan, Company (1988).

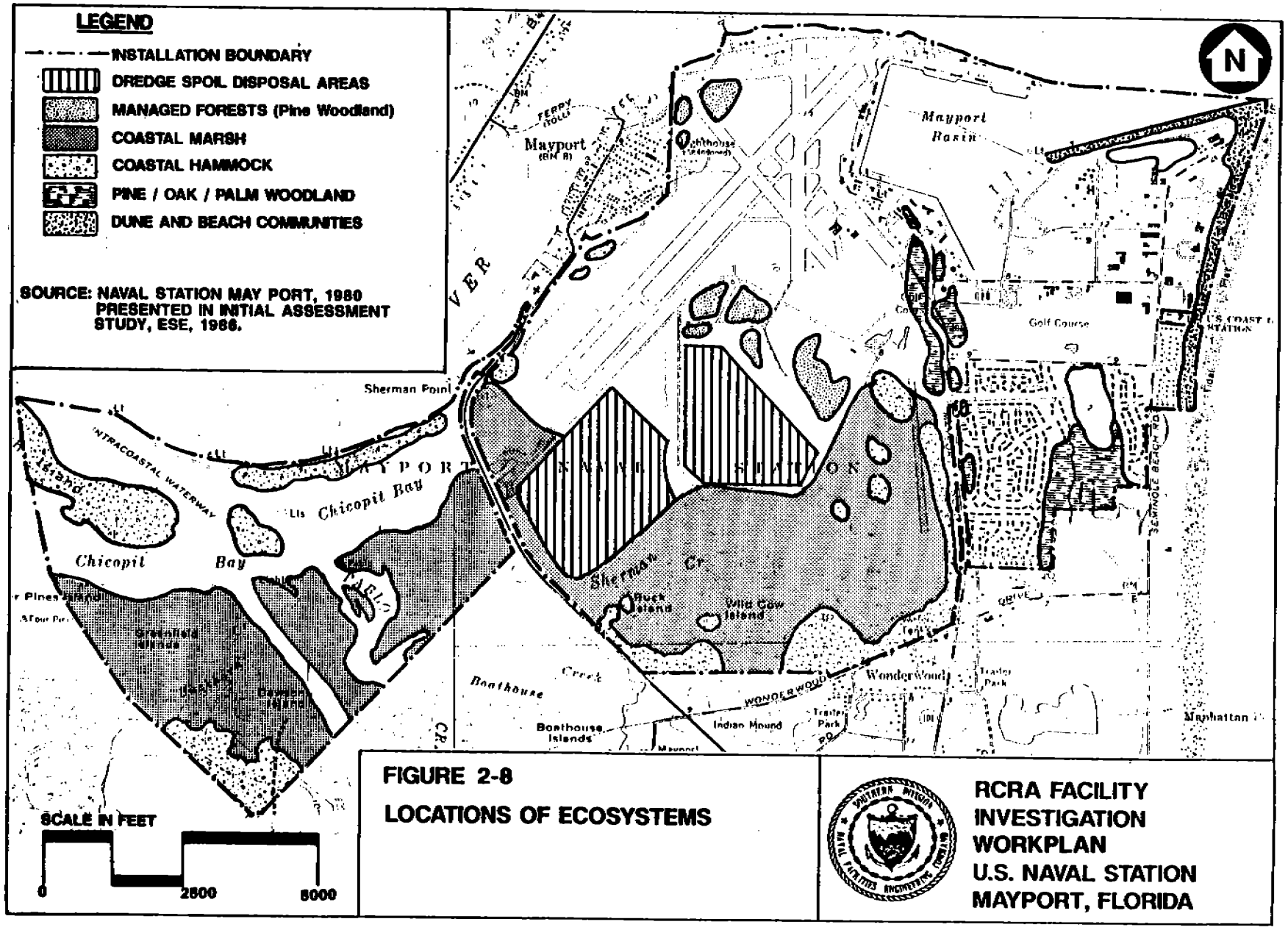

FIGURE 2-8

LOCATIONS OF ECOSYSTEMS

RCRA FACILITY
INVESTIGATION
WORKPLAN
U.S. NAVAL STATION
MAYPORT, FLORIDA

Table 2-6
Potential Ecological Receptors

RCRA Facility Investigation
NAVSTA Mayport
Mayport, Florida

Habitat	Potential Receptor	Genus/Species	Comment
Coastal Marsh	Glasswort	Salicornia virginica	Predominant vegetation
	Glasswort	S. bigelovi	Predominant vegetation
	Cordgrass	Spartina angustifolia	Codominant along tidal creeks
	Needlerush	Juncus roemerianus	Codominant along tidal creeks
	False willow	Baccharis angustifolia	Transition areas and spoils banks
	Wax myrtle	Myrica cerifera	Transition areas and spoils banks
	Bluestem grass	Andropogon sp.	Transition areas and spoils banks
	Marsh rabbit	Sylvilagus palustris	Reported to be common
	Raccoon	Procyon lotor	Reported to be common
	Laughing gull	Laurus atricilla	
	Ring-billed gull	L. delawarensis	
	Herring gull	L. argentatus	
	Goat-tailed grackle	Quiscalus major	
	Red-winged blackbird	Agelaius phoeniceius	
	Tree swallow	Tachycineta bicolor	
	Killdeer	Charadrius vociferus	
Dune and Beach Communities	–	–	Poorly developed dune system
	Railroad vine	Ipomea pescaprae	St. Johns Point
	Ragweed	Euphatorium sp.	St. Johns Point
	Sea oats	Uniola peniculata	St. Johns Point
	Groundsel-tree	Baccharis glomeruliflora	St. Johns Point
	Wax myrtle	Myrica cerifera	St. Johns Point
	Greenbriar	Smilax sp.	St. Johns Point
	Native grasses	–	St. Johns Point
Developed and Ruderal Lands	Live oak	Quercus virginiana	Native tree
	Cabbage palm	Sabal palmetto	Native tree
	Slash pine	Pinus elliottii	Native tree
	Mourning dove	Zenaida maccroura	
	Rock dove	Columbia livia	
	Cattle egret	Bubulcus ibis	
	Meadowlark	Sturnella magna	
	Blue jay	Cyanocitta cristata	
	Fish crow	Cornus ossifragus	
	Northern mocking bird	Mimus polyglottos	
	American robin	Turdus migratorius	
	European starling	Sturnus vulgaris	
	House sparrow	Passer migratorius	
	Gray squirrel	Sciurus carolinensis	
Managed Forests	Slash pine plantations		Low plant and wildlife diversity observed; plantations had closed canopies
	Virginia creeper	Parthenocissus quinquefolia	
	Greenbriar	Smilax sp.	
	Pennywort	Hydrocoyle sp.	

Table 2-6 (Continued)
Potential Ecological Receptors

RCRA Facility Investigation
NAVSTA Mayport
Mayport, Florida

Habitat	Potential Receptor	Genus/Species	Comment
Coastal Hammock Forests	Cabbage palm	Sabal palmetto	
	Live oak	Quercus virginiana	
	Hickory	Carya sp.	
	American holly	Ilex opara	
	Sweet bay magnolia	Magnolia virginiana	
	Red maple	Acer rubrum	
	Red cedar	Juniperus silicicola	
	Wax myrtle	Myrica cerifera	
	Dahoon	Ilex cassine	
	Pokeweed	Phytolacca repens	
	Greenbriar	Smilax sp.	
	Muscadive	Vitus rotundifolia	
	Poison ivy	Toxicodendron radicans	
	Pennywort	Hydrocoyle sp.	

Table 2-7
Endangered, Threatened, and Rare Species

RCRA Facility Investigation
NAVSTA Mayport
Mayport, Florida

Common Name	Genus/Species	Habitat Requirements	Comments
Shortnose Sturgeon	Acipenser brevirostrum	Coastal marine waters and estuaries	Endangered south of South Carolina.
American Alligator	Alligator mississippiensis	Canals and wetland area	Species of concern.
Eastern Indigo Snake	Drymarchon corias cooperi	Coastal hammocks and forests	Threatened.
Atlantic Loggerhead Turtle	Caretta C. caretta	Nests on north Florida beaches	–
Arctic Peregrine Falcon	Falco peregrinus tundrius	Adequate prey and trees	Migrant and winter resident.
Bald Eagle	Haliaeetus leucocephalus	–	Endangered/threatened; none on NAVSTA Mayport; nest reported 3 miles west.
Wood Stork	Mycteria americana	Wetlands and shrub swamp	Endangered; suitable habitat on base.
Least Tern	Sterna antillarum	Open, sandy beaches	Will nest in landfills, parking lots, construction sites, roof tops.
Southeastern Kestrel	Falco sparverius paulus	Open, pine forests, clearings, open areas along rivers, coasts, urban areas	Likely to be found on base n forested areas with dead trees.
West Indian Manatee	Trichechus manatus latirostris	St. Johns River and offshore	Use of river heaviest in fall and spring.

The purpose of the IAS was to identify and assess sites posing a potential threat to human health or the environment due to contamination from past hazardous waste operations. The IAS included a records search both at the base and at other government agencies followed by an onsite survey and interviews with facility personnel. Each site identified during this process was then evaluated for contamination characteristics, migration pathways, and potential receptors. Recommendations were made regarding the need for additional investigations. The IAS identified 17 potentially contaminated sites at NAVSTA Mayport, and recommended 8 for further study.

The purpose of the ESI was to determine whether specific toxic and hazardous materials are present at suspected waste disposal sites and to recommend further action if required. Ten sites identified in the IAS were investigated during the ESI. The investigations included a terrain conductivity survey; 30 soil borings, installation of 28 monitoring wells, and collection and analysis of 4 surface water and sediment samples, 30 groundwater samples, and 27 soil samples. Based on evaluation of the data, the ESI recommended remedial action at one site based on high levels of polychlorinated biphenyls (PCB) in the soil. Additional investigations were recommended for two sites to further clarify the site conditions and verify the presence of contamination. Risk assessments were recommended at seven sites based on elevated levels of pesticides or metals found in groundwater or surface water samples.

An RCRA Facility Assessment (RFA) for NAVSTA was conducted on behalf of the USEPA Region IV by their contractor, A.T. Kearney, Inc. The RFA identified 56 SWMUs and two Areas of Concern (AOC) at the NAVSTA Mayport facility. Fifteen of these SWMUs were determined not to require further action. Twenty-three of the remaining SWMUs were determined to require further investigation. The remaining 18 SWMUs were determined to require an RFI.

Sampling procedures and rationale used for previous sampling strategies were presented in the Final ESI Report (April 1988). Past sampling procedures used for the ESI are presented in Appendix C of Volume I for reference. The samples collected during the ESI were analyzed for priority pollutant base/neutral extractable compounds, priority pollutant acid extractable compounds, priority pollutant pesticides and PCBs, USEPA Method 624 volatile organic compounds, EPTOX metals, cadmium, chromium, lead, and mercury because limited quantitative data existed to characterize suspected contaminants at the NIRP sites. The following is a summary of the soil boring and well installation rationale used during the ESI and is presented here for.

- MPT-1-1 is a shallow monitoring well located south of the Site 1 (SWMU 1) and is upgradient of Site 1 (SWMU 1).

- MPT-1-2 is a shallow monitoring well located west of Site 1 (SWMU 1) and is downgradient of Site 1 (SWMU 1).

- MPT-1-3 is a shallow monitoring well located north of Site 1 (SWMU 1) and is downgradient of Site 1 (SWMU 1).

- MPT-2-5 is a shallow monitoring well located southwest of Site 2 (SWMU 2) and is upgradient of Site 2 (SWMU 2).

- MPT-2-9S is a shallow monitoring well (10 feet deep) located north of Site 2 (SWMU 2) and is downgradient of Site 2 (SWMU 2).

- MPT-2-9D is a deep monitoring well (25 feet deep) located north of Site 2 (SWMU 2) and is nested with MPT-2-9S. It is located downgradient of Site 2 (SWMU 2).

- MPT-2-10 is a shallow monitoring well located north-northeast of Site 2 (SWMU 2) and is downgradient of Site 2 (SWMU 2).

- MPT-2-6 is a shallow monitoring well located southwest of Site 4 (SWMU 3) and because of mounding in the adjacent inactive (northeast) dredge spoil area the well is downgradient of Site 4 (SWMU 3).

- MPT-2-8 is a shallow monitoring well located northeast of Site 4 (SWMU 3) and because of mounding in the adjacent inactive dredge spoil area the well is downgradient of Site 4 (SWMU 3).

- MPT-2-3 is a shallow monitoring well located southwest of Site 5 (SWMU 4) and is upgradient of Site 5 (SWMU 4).

- MPT-2-4 is a shallow monitoring well located northwest of Site 5 (SWMU 4) and is downgradient of Site 5 (SWMU 4).

- MPT-2-1 is a shallow monitoring well located northeast of Site 5 (SWMU 4) and is downgradient of Site 5 (SWMU 4).

- MPT-2-7S is a shallow monitoring well (10 feet deep) located southwest of Site 6 (SWMU 5) and is located upgradient of Site 6 (SWMU 5) as well as upgradient of all adjacent sites.

- MPT-2-7D is a deep monitoring well (25 feet deep) located southwest of Site 6 (SWMU 5) and is nested with MPT-2-7S. It is located upgradient of all adjacent sites and was used with MPT-2-7S as a background well.

- MPT-2-2 is a shallow monitoring well located east of Site 6 (SWMU 5) and is downgradient of Site 6 (SWMU 5).

- MPT-2-15S is a shallow monitoring well (14 feet deep) located north of Site 6 (SWMU 5) and is downgradient of Site 6 (SWMU 5).

- MPT-2-15D is a deep monitoring well (25 feet deep) located north of Site 6 (SWMU 5) and is nested with MPT-2-15S and is downgradient of Site 6 (SWMU 5).

- MPT-8-1 is a shallow monitoring well located southwest of Site 8 (SWMU 6) and is upgradient of Site 8 (SWMU 6) .

- MPT-8-2 is a shallow monitoring well located northwest of Site 8 (SWMU 6) and is downgradient of Site 8 (SWMU 6).

- MPT-8-3 is a shallow monitoring well located north of Site 8 (SWMU 6) and is downgradient of Site 8 (SWMU 6).

- MPT-9-1 is a shallow monitoring well located northeast of Tank 203 and south of Tank 201 (south of Site 9 [(SWMU 11]) and is upgradient of a suspected fuel spill area.

- MPT-9-2 is a shallow monitoring well located northwest of Tank 201 and is downgradient of the suspected fuel spill area.

- MPT-9-3 is a shallow monitoring well located northeast of Tank 201 downgradient of the suspected fuel spill area.

- MPT-13-1 is a shallow monitoring well located northeast of the northernmost fire training area and is downgradient of Site 13 (SWMU 13).

- MPT-13-2 is a shallow monitoring well located southwest of the center fire training area and northwest of the southernmost fire training area. This well is in the upgradient position of the three training areas.

- MPT-13-3 is a shallow monitoring well located south of the southernmost fire training area and is downgradient of Site 13 (SWMU 13) and upgradient of the drainage ditch.

- MPT-14-1 is a shallow monitoring well located north-northeast of the site and is the apparent downgradient position from the oil-water separator and upgradient of the St. Johns River.

- MPT-14-2 is a shallow monitoring well located north of Site 14 (SWMU 14) and is in the apparent downgradient position from the fire training area and upgradient of the St. Johns River.

Of these 18 SWMUs, 17 had been previously identified in an HSWA permit issued by the USEPA on March 25, 1988. This permit required that an RFI be conducted at these 17 SWMUs. The Navy prepared a Draft Final RFI Workplan (SDIV, 1989) in response to the HSWA permit requirements addressing these 17 SWMUs. The Draft Final RFI Workplan was reviewed by applicable regulatory agencies and their comments were sent to the Navy on May 6, 1991. The additional SWMU determined by the USEPA during the RFA to require a RFI was the Building 1600 Blasting Area. The USEPA reported in their May 6, 1991, comments to the existing Draft Final RFI Workplan that they would address the 39 additional SWMUs, identified during the RFA under revised permit conditions, at a later date.

The revised RFI Workplan addresses the original 17 SWMUs identified in the HSWA Permit of March 28, 1988. In addition, RFA SWMU 22 (Building 1600 Blasting Area) is included in the RFI. The management strategy for addressing remaining SWMUs

is described in the Corrective Action Management Plan (CAMP), Appendix F, Volume I.

The site description NIRP site numbers, and SWMU identification numbers shown in Table 2-8 will be used consistently throughout the RFI Workplan. The SWMU numbering system defined by the USEPA RFA (September 1989) will be used. The original NIRP site numbers will be cross referenced where applicable. Existing well designations were defined under the NIRP investigations. For consistency, the same well and sample location designation scheme will be maintained.

2.3.2 SWMU Descriptions The HSWA permit number H016-118598 issued to NAVSTA Mayport by USEPA Region IV on March 25, 1988, lists 17 SWMUs that require an RFI. Table 2-8 lists these SWMUs and whether they were included in the IAS and the ESI. Figure 2-9 shows the locations of these sites. Brief descriptions of each site follow.

2.3.2.1 **SWMU 1, (NIRP Site 1) Landfill A** SWMU 1 consists of a former landfill, which operated from 1942 to 1960. The site is located east of the Mayport Basin under an area currently occupied by Jacksonville Shipyards, which is a tenant on NAVSTA Mayport. SWMU 1 occupies approximately 4 acres and consisted of a series of trenches approximately 15 feet wide, 400 feet long, and 8 feet deep. The SWMU received industrial and sanitary wastes during the years of operation. These wastes included waste oils (potentially containing toxic metals including lead), solvents, mercury lamps, asbestos, sulfuric acid, pesticide cans, and general garbage and construction rubble.

2.3.2.2 **SWMUs 2, 3, 4, and 5 (NIRP Site 2, 4, 5, and 6) Landfills B, D, E, and F** These four landfills were active at various times from 1960 to 1985. They encompass a total of about 40 acres located to the north and east of the dredge spoils piles in the central area of NAVSTA Mayport, and parts of the reported landfill area are now covered by dredge spoils.

SWMU 2 (NIRP Site 2) was a landfill that was operated as a trench and fill landfill from 1960 to 1964 and as an area-fill landfill from 1979 to 1980. The site is located north of the eastern dredge spoil area. The area was subsequently covered with soil and paved. An ordnance storage yard area now occupies the site. The former landfill was approximately 2 acres in size. It consisted of a series of trenches that were approximately 15 feet wide, 300 feet long, and 8 feet deep. The trenches are known to have intersected the water table. Combustible items floating on water in the trenches were burned daily. Items disposed of in the landfill included waste oils (potentially containing toxic metals including lead), other petroleum products, mercury lamps, asbestos, sulfuric acid, pesticide cans, and general refuse.

SWMU 3 (NIRP Site 4) was a former landfill that was operated from 1963 to 1965. The site is located southwest of SWMU 2 and extends under the northwestern corner of the eastern dredge spoil area. SWMU 3 occupies approximately 3 acres and consists of several pits (eight are estimated) constructed by dragline. Each pit

Table 2-8
Solid Waste Management Units

RCRA Facility Investigation
NAVSTA Mayport
Mayport, Florida

RFA SWMU No.	HSWA SWMU No.	NIRP Site No.	Site Name	IAS	ESI	RFI Required
1	A	1	Landfill A	Yes	Yes	Yes
2	B	2	Landfill B	Yes	Yes	Yes
3	C	4	Landfill D	Yes	Yes	Yes
4	D	5	Landfill E	Yes	Yes	Yes
5	E	6	Landfill F	Yes	Yes	Yes
6	F	8	Waste Oil Pit	Yes	Yes	Yes
7	G	8A	OWTP Sludge Beds	No	No	Yes
8	H	8B	OWTP Percolation Pond	No	No	Yes
9	I	8C	OWTP	No	No	Yes
10	J	8D	RCRA Hazardous Waste Storage Area	No	No	Yes
11	K	9	Fuel Spill Area	Yes	Yes	Yes
12	L	11	Neutralization Basin	Yes	No	Yes
13	M	13	Old Fire Training Area	Yes	Yes	Yes
14	N	14	Mercury/Oily Waste Spill Area	Yes	Yes	Yes
15	O	15	Old Pesticide Handling Area	Yes	No	Yes
16	P	16	Old Transformer Storage Yard	Yes	Yes	Yes
17	Q	17	Carbonaceous Fuel Boiler	No	No	Yes
22	NA	NA	Building 1600 Blasting Area	No	No	Yes

Notes: RFA = RCRA (Resource Conservation and Recovery Act) Facility Assessment, A.T. Kearney, 1989 (draft).
HSWA = Hazardous and Solid Waste Amendments Permit No. H016-118598.
NIRP = Naval Installation Restoration Program.
IAS = Initial Assessment Study, Environmental Science and Engineering, 1986.
ESI = Expanded Site Investigation, E.C. Jordan, 1988.
RFI = RCRA Facility Investigation.
SWMU = Solid Waste Management Unit.
OWTP = Oily Waste Treatment Plant.

was approximately 40 feet by 40 feet and 8 feet deep, and intersected the water table. Items were dumped into standing water contained in the pits. Disposed waste included waste oil, mercury, solvents, asbestos, acids, pesticide containers, sanitary wastes, and construction rubble.

SWMU 4 (NIRP Site 5) is a landfill area that was operated as a trench and fill landfill from 1963 to 1966 and as an area fill landfill from 1974 to 1980. The site is located west of SWMU 3 and north of the NAVSTA Mayport western dredge spoil area. The site consists of two adjacent areas divided by a drainage ditch with a total acreage of approximately 11 acres. The trenches on this site were constructed with a dragline and were approximately 15 feet wide, 750 feet long, and 8 feet deep. These trenches intersected the water table and wastes were disposed into standing water. Wastes disposed of at SWMU 4 are similar to those that were disposed of at SWMU 2 and 3.

SWMU 5 (NIRP Site 6)is located south of Patrol Road and north of the eastern dredge spoil area. The Site 6 Landfill was operational from 1966 to 1985. Originally the site was a trench and fill operation. Upon completion of the trench and fill operation and addition of a soil cover, a surface disposal operation was initiated. The site encompasses approximately 24 acres and originally consisted of trenches (constructed by dragline) that were 8 feet deep, 15 feet wide, and several hundred feet long. Trenches intersected the shallow aquifer and wastes were disposed of into standing water. Items disposed of in the landfill were the same as those at NIRP Sites 2, 4, and 5.

2.3.2.3 **SWMU 6, 7, 8, and 9 (NIRP Site 8, 8A, 8B, and 8C) Waste Oil Pit and Oily Waste Treatment Plant Area)** The inactive waste oil pit and the active oily waste treatment plant are located at the north end of the base adjacent to the St. Johns River. The waste oil pit (SWMU 6) was used from 1973 to 1978 to store bilge water pumped directly from ships. The bilge water contains waste oils potentially contaminated with lead, mercury, cadmium, solvents, transformer oils, and pesticides. In 1979, a permitted oily waste treatment plant (SWMU 9) was constructed adjacent to the waste oil pit to treat oily bilge water. The treatment plant consists of a rapid mix/flocculation tank, clarifier, and neutralization tank. Treatment effluent is discharged to a leaching pond (SWMU 8) from which it infiltrates into the soil or overflows to the St. Johns River. The oil and lime sludge collected in the clarifier is transferred to a series of sludge lagoons (SWMU 7) for long-term storage.

2.3.2.4 **SWMU 10, (NIRP Site 8D) RCRA Hazardous Waste Storage Facility** SWMU 10 (NIRP Site 8D), the NAVSTA Mayport Hazardous Waste Storage Facility, is located on the north side of the station adjacent to the oily waste treatment plant. The facility is operated under Florida Department of Environmental Regulation (FDER) permit number H016-118598, dated March 2, 1988. The hazardous waste storage unit is a containerized hazardous waste storage site with approximate dimensions of 63 feet 3 inches by 60 feet. Hazardous wastes are stored in containers ranging in size from 1-gallon to 85-gallon drums in the building which is designed for maximum storage volume of 26,400 gallons or 480 55-gallon drums. Hazardous waste stored at this facility and their designated hazardous waste numbers are as follows.

Halogenated Toxic Wastes (F001, F002, U226)
Ignitable Wastes (F003, D001, D002, U112, U239)
Toxic/Ignitable Wastes (F005, U012, U220)
E.P. Toxic Waste (D004, D007, D009, D011)
Toxic Waste (F004, U228)
Reactive/Toxic Waste (F007)
Corrosive Waste (D002)

The 3,920-square-foot building has a 6-inch reinforced concrete slab underlain by a moisture barrier. The floor surface is coated with a synthetic epoxy to prevent possible seepage into subsurface soils. The storage building is divided into 7 bays with a spill containment system for each bay; 6 bays are designed for a maximum storage of 64 drums (55 gallons) and the 7th for 96 drums (55 gallons). Each bay is surrounded by a 12" curb on three sides with the fourth side being sloped toward the containment basin. The entire structure has a 10-foot high woven fence to enclose the storage area with two locked access gates. In addition, the structure is enclosed in a compound with a 6-foot fence and secured by a locked gate.

2.3.2.5 **SWMU 11, (NIRP Site 9) Fuel Spill Area** SWMU 11 is located in the Naval Supply Center (NSC) fuel farm area northwest of the oily waste treatment plant. This site was identified from stained soil samples obtained from a boring program that was part of a road construction plan. Although the source and quantity of fuel is unknown, it is believed that it originated in the fuel farm area. It is suspected that the fuel is either JP-4, JP-5, or diesel fuel, marine (DFM).

2.3.2.6 **SWMU 12, (NIRP Site 11) Neutralization Basin** The Neutralization Basin is located in the northern part of NAVSTA Mayport, approximately 40 feet to the north of Boiler Building 1241. The Basin is approximately 75 feet from the St. Johns River, and is used to store treatment effluent from the anion/cation exchange process used in the boiler plant.

The Neutralization Basin was determined to be a RCRA hazardous waste management unit during a site inspection in 1987 because the effluent entering the basin sometimes had a pH less than 2 or greater than 12.5. FDER issued NAVSTA Mayport a Notice of Violation for operating a hazardous waste surface impoundment and required NAVSTA Mayport to submit a closure plan for the unit. A closure plan has been submitted to FDER, and groundwater monitoring is currently being conducted at the site.

2.3.2.7 **SWMU 13, (NIRP Site 13), Old Fire Training Area** SWMU 13 consists of three areas identified from aerial photographs and discussions with site personnel. The areas were located at the south end of an abandoned runway now occupied by buildings, parking areas, and grassy medians. This site was used as a fire fighting training area from 1973 to 1982. The areas consisted of low, earthen berms constructed on the abandoned asphalt runway. Materials used in the training exercises included waste oil (potentially containing lead), mercury wastes, solvents, and fuels (JP-4, JP-5, and DFM). Fuels and other items not combusted during training exercises remained in the pit or ran off the sides of the runway.

During construction of a new pipeline, the soil of the southernmost area was disturbed to a depth of 4 to 6 feet. The soils were spread over the area and the area was paved with asphalt as part of a parking lot.

2.3.2.8 SWMU 14 (NIRP Site 14), Mercury/Oily Waste Spill Area SWMU 14 is located west of the Fleet Training Center, Building 1456. The site, constructed in 1977, consists of two areas located on or adjacent to a concrete pad used for fire fighting training activities. One of the areas was used for storage of 55-gallon drums containing mercuric nitrate wastes. In the past, drums have occasionally rusted, allowing the mercuric nitrate solution to leach into the soils adjacent to the concrete pad. The other area is located around an oil-water separator. This separator removes oily wastes from wastewaters generated during fire fighting training exercises. In the past, the unit has malfunctioned and contaminated the soils directly behind Building 1456 with oils and oily wastes.

The fire fighting apron is a concrete apron that is roughly 400-feet square on which fire fighting training activities occur. Fire fighting activities are conducted on the apron using several types of equipment: DFM is floated on water in two circular half tanks and ignited, pots of DFM are burned inside two small bunkers; or a mock-up of a helicopter and of a plane are doused with DFM and lighted. Small 2-inch berms are located around the helicopter and plane mock-ups to contain the fuel.

The apron is constructed of concrete sections. In some places, tar has been placed along the cracks between the sections to prevent leaks through the concrete. Small cracks in the concrete were noted during the RFA, and some cracks and other discontinuities in the concrete had dark stains along the edges. The oil/water separator, wet well, and concrete pond are located in the northeast side of the apron, between the apron and Building 1456.

Grated drains in the old concrete apron lead to 24-foot and 15-foot reinforced concrete piping that flows to the oil-water separator. The oil/water separator is a 10,000-gallon painted, asphalt-coated tank with metal piping (SWMU 54A). Exact tank dimensions are unknown. The tank was installed in 1974 and is in good condition. The effluent from the oil-water separator is piped to the Wastewater Treatment Facility. Also in the area of the apron, an underground diesel tank was removed in approximately 1986 and replaced with a new diesel tank. It is not known whether the old tank was in the same location as the new tank or whether any leak or soil testing was done to evaluate whether any leaks had occurred from the tank. It is believed that the old tank was installed in the early 1970's, at the same time that the FTC Buildings were constructed. No data have been found on the design, size, or condition of the old diesel tank.

A new fire fighting apron was constructed in approximately 1987 adjacent to and west of the old apron. The new apron is constructed of concrete sections and is slightly thicker than the old apron. No breaches or cracks were noted in the new apron during the RFA.

An unlined earthen storm drainage ditch runs from east to west along the northern side of Building 1456 and a small unlined retention pond (FTC retention pond east) is located just to the west of monitoring well MPT-14-1. Another unlined retention pond is located at the northwestern corner of the new fire fighting training apron (FTC retention pond west). The influent and effluent for this pond is an unlined earthen storm drainage ditch.

The following items at SWMU 14 are of concrete construction: old fire fighting training apron, wet wells, concrete pond, new fire fighting training apron, and the new apron equalization tanks. The east and west retention ponds are unlined earthen basins. The 10,000-gallon oil-water separator is painted, asphalt-coated steel with metal piping.

Recent modifications have been made to the oil/water separator system that treats the runoff from the old fire fighting training apron. Because the capacity of the oil-water separator was not sufficient to handle the effluent for fire fighting operations, a 4,000- to 5,000-gallon capacity concrete pond was constructed to temporarily hold any overflow from the oil/water separator. A baffle from the concrete pond would allow overflow from the concrete pond to the storm drainage ditch and the FTC retention pond east, but in tests of the system conducted by the Public Works Department it was found not possible to overflow the concrete pond. It is believed that the problem of overflow of oil and oily water from the oil/water separator has been eliminated through these modifications.

2.3.2.9 SWMU 15 (NIRP Site 15), Old Pesticide Area The old pesticide area was reportedly located in former Building 484 on the western side of the station. The area was in use for approximately 1 year from 1963 to 1964. Pesticides and pesticide application equipment were stored in a shed attached to the southwestern corner of the building. Pesticide mixing and formulating activities were conducted at the job site, but the cleaning of spray equipment occurred adjacent to the building. Rinse waters from washing activities were discarded directly onto the soils of the area. The quantities of contaminants spilled at the site are estimated at less than 55 gallons during the brief period of use (Environmental Science and Engineering, 1986).

2.3.2.10 SWMU 16 (NIRP Site 16), Old Transformer Storage Yard SWMU 16 is located in the NSC fuel farm on the east side of Tank 204. The site was situated on an abandoned concrete runway and has been used since 1981 to store out-of-service transformers. At the time of the IAS, approximately 30 non-PCB containing transformers were stored in the area. All transformers had been removed by the time of the ESI in late 1987. Minor spills or leaks have occurred during storage at the site. It is not known if PCB transformers were stored in this area; therefore, it is unknown whether any PCB oils have been spilled. ESI sampling and analysis did not detect PCB contamination.

2.3.2.11 SWMU 17 (NIRP Site 17), Carbonaceous Fuel Boiler Since 1979, the carbonaceous fuel boiler, located in Building 1430, has been used to dispose of refuse and burnable garbage generated by both NAVSTA Mayport and the onbase housing area. The incinerator is contractor-operated 24 hours a day, and has a

design capacity of 48 tons per day with a current loading of 42 to 45 tons per day. Waste oil and diesel fuel are used to augment burning.

The waste oil (collected from various locations on-station and also recovered from bilge water and berthed ships) is obtained from the NSC fuel farm.

Heat from the incinerator is used to generate steam for ships docked at NAVSTA Mayport. The boiler has an operating pressure of 180 pounds per square inch. Blowdown is continuous and is used to quench the ash generated by the incinerator. Phosphate and sulfite are used to treat the boiler water. Fly ash is collected by a multi-cyclone and disposed of with the wet ash. Wet ash is removed from the bottom of the incinerator and placed in a dumpster. The ash was taken to the station landfill (NIRP Sites 2, 5, and 6) until early 1985. Current ash disposal is at an off-station landfill. Approximately 6,260 cubic yards of wet ash and fly ash are generated yearly.

2.3.2.12 SWMU 22, Building 1600 Blasting Area The Building 1600 Blasting Area is a fenced area located just to the northeast of Building 1600, which is located in the central part of Mayport, to the north of the eastern dredge spoil disposal area. Abrasive media blasting was conducted in a sheet metal Baker hut set on a concrete base and concrete foundation. The concrete base extends past the Baker hut approximately 10 feet and is encircled by a chain link fence. A dust collector attached to the back of the building collected dust and abrasives during blasting operations.

The equipment blasted in this area was largely ground support equipment, most of which was painted with yellow enamel paint and zinc-containing primers. The abrasive media used for blasting was Black Beauty™. The used Black Beauty™ was determined to be EP toxic. The area has been in use since 1985. Blasting operations have recently terminated at this site. It is presently used as a temporary storage area for ground support equipment.

3.0 RCRA FACILITY INVESTIGATION

The RFI at NAVSTA Mayport is designed to determine the nature and extent of releases from SWMUs; to characterize the potential pathways of contaminant migration in the air, soil, surface water, and groundwater; and to identify potential receptors. The discussion that follows presents the technical approach, methodology, and supporting rationale to complete the RFI.

Activities to be undertaken during the RFI can be divided into facility-wide activities and site-specific activities. Facility-wide activities include background characterization and identification of potential receptors. Site-specific investigations include a magnetometer survey; monitoring well and piezometer installation, well measuring point and potentiometric surface survey; aquifer hydraulic properties testing; and collection and analysis of soil, sediment, sludge, soil gas, surface water, and groundwater samples. The individual site investigations have been planned using existing site data as the basis for additional explorations. Adjustments to the proposed investigations may be made during the RFI as additional data become available. Such adjustments will be agreed upon by the Task Order Manager, and Southern Division's Engineer-in-Charge (EIC) prior to implementation. Any changes are subject to approval by the USEPA Regional Administrator.

3.1 DATA QUALITY OBJECTIVES. The data collected during the RFI will be of adequate technical content and quality to support preparation of a health and environmental assessment and, if necessary, the development of a corrective action plan for NAVSTA Mayport. The data will be sufficient to characterize the environmental setting, define the source, delineate the degree and extent of release of hazardous constituents, and identify actual or potential receptors, both human and ecological.

In order to ensure that the data collected during the RFI will meet these objectives, the Navy's Level E Quality Control will be employed for laboratory analyses. Level E corresponds with Comprehensive Environmental Response, Compensation, and Liability Act (CERCLA) Level V data quality, and is recommended for sites located away from a populated area, not on the National Priorities List (NPL), and with a low probability of litigation. Level E allows the use of non-contract laboratory program (CLP) methods for analysis, but requires that the methods be accepted USEPA methods. As required by Permit Condition II.C.3. and Section I.B.2. of Appendix A of the HSWA Permit, all methods of sample analyses will follow SW846: Test Methods for Evaluating Solid Waste - Physical/Chemical Methods. Field and laboratory quality assurance requirements and procedures are discussed in more detail in the ABB-ES Quality Assurance Program Plan, presented as Appendix A to Volume II of this Workplan. Data will be validated at NEESA Level C to assure data of known quality.

3.2 TECHNICAL APPROACH AND METHODOLOGY. In order to fully characterize the nature and extent of releases at NAVSTA Mayport, and to identify potential receptors, the RFI will include both facility-wide and site-specific explorations. The facility-wide activities will focus on defining background levels of contaminants found at the base and identifying and describing potential

receptors. These activities are discussed further in Section 3.4. Site-specific activities include six subtasks:

- magnetometer survey (SWMU 1 only);
- monitoring well and piezometer installation;
- well measuring point survey;
- potentiometric surface survey;
- aquifer hydraulic properties testing; and
- sampling and analysis of groundwater, surface water, soil, soil gas sediments, and sludge.

These investigative subtasks and methods were selected based on a site understanding gained through a thorough review of the data from previous investigations at NAVSTA Mayport. Information derived from these subtasks will be used to conduct a health and environmental assessment and, if necessary, to perform corrective action.

Due to the multi-site nature of the RFI to be conducted at NAVSTA Mayport, the methods of investigation and supporting rationale selected to complete the subtasks will be presented in the following sections to avoid repetition. A more detailed discussion of sample locations, types, frequencies, and methods is presented in Volume II, the Sampling and Analysis Plan. The following sections discuss the methods of exploration and supporting rationale for the activities to be undertaken during the RFI.

3.2.1 Magnetometer Survey A magnetometer will be used at SWMU 1 to clarify the boundaries of the inactive landfill by locating any buried drums or scrap metal in the vicinity. Construction activities during the summer of 1989 excavated 27 drums of xylene northwest of the known boundaries of the site. It is important to define the boundaries of the contamination source in order to accurately predict the potential migration of contaminants and to ensure the safety of workers during subsurface investigations.

NIRP Site 1 (RFA SWMU 1), Landfill A, was operated from 1942 to 1960. The remaining seventeen SWMUs were generally in operation after 1960, up to the early 1980's. Some SWMUs are presently in use (e.g., NIRP Site 8 group and SWMU 22). Site histories are complete for these sites and it is believed that boundaries are well known for these SWMUs. Because operations ceased at SWMU 1 in 1960, and land use in the area has significantly changed in interceding years, uncertainty exists in defining its exact boundary. To reduce the uncertainty, a geophysical survey is proposed for this specific site. A magnetometer survey will be performed in an area northwest of the documented boundaries of SWMU 1, as presently known, where buried metal containers labeled "xylene" were found in 1989.

3.2.2 Monitoring Well and Piezometer Installation Additional monitoring wells will be installed at SWMUs or SWMU groups at NAVSTA Mayport. These wells are needed to complete characterization of the groundwater flow direction and hydraulic gradient at each site and to allow for collection of both upgradient and downgradient groundwater samples at each site. Prior to additional monitoring well installation, a network of shallow piezometers will be installed

to collect groundwater elevation data for the surficial aquifer. Initial information obtained from the piezometer measurements will be used to refine actual locations of new monitoring wells to improve the likelihood of intercepting potential contaminant plumes.

The surficial aquifer at NAVSTA Mayport is located in surficial deposits consisting primarily of sands, shelly sands, coquina, silts and clays, silty clays, clays, and clayey sands. Large near-surface areas of NAVSTA Mayport have been re-worked and filled with dredge spoils and other derived materials.

Hazardous wastes managed at the SWMUs included both liquid and solid wastes. The known wastes vary in their dispersivity characteristics (e.g., volatile organic compounds are generally more mobile than metals or semi-volatile organic compounds).

NAVSTA Mayport is located near tidally influenced water bodies (e.g., Pablo Creek, Sherman Creek, the St. Johns River, and the Atlantic Ocean). Due to its proximity to these water bodies, it is possible that hydraulic gradients in the surficial aquifer will be variable as a function of tidal influences.

Rising head slug tests conducted in shallow monitoring wells during the ESI (E.C. Jordan, 1987) estimated hydraulic conductivities between 0.03 to 8.5 ft/day (0.00001 to 0.003 cm/s) with an average of 3.4 ft/day (0.001 cm/s).

The proposed well placement and screen depths are designed to address the heterogeneity of the site geology, the types of wastes managed at the SWMUs, the potential for varying hydraulic gradients, and moderate to high hydraulic conductivities. A network of temporary piezometers will be initially placed on the site in order to more accurately define groundwater hydrology of the surficial aquifer. The proposed placement of these piezometers are shown in Figure 2-7 "Proposed Piezometer and Monitoring Well Network." The piezometer information will be used to aid in locating addition monitoring wells.

A tidal influence study will be conducted over a two day period (48 hours) to determine if there is a significant tidal influence across the study area. Monitoring during a 48-hour period will ensure that at least two complete tidal cycles are studied. Water levels from representative piezometers and monitoring wells will be measured initially, then every hour during the study to observe any tidal impacts. A staff gauge will be installed at all potentially affected surface water bodies (i.e., the Atlantic Ocean, the St. Johns River, and tidal marshes) to compare groundwater level fluctuations with tidal fluctuations. At the completion of the study the data will be tabulated and water level data will be reduced and analyzed. Scheduling of the study will be correlated with a time period of predicted large tidal differences between mean higher high water (MHHW) and mean lower low water (MLLW) to provide significant changes in groundwater table fluctuations during the study.

In addition, data gathered during the study will assist in observing the effects that seasonal water level fluctuations have on the configuration of the surficial aquifer. The study will consist of installing, at a minimum, 30 temporary, manually installed piezometers at select locations across the study area. Newly

installed piezometers and monitoring wells and previously existing wells will then be measured every month for a 12-month period. The data will then be reduced and correlated with the well survey and a series of potentiometric surface maps will be prepared and reviewed for incorporation into the RCRA Corrective Action Program at NAVSTA Mayport.

In addition to existing groundwater monitoring wells, additional monitoring wells will be installed at selected SWMUs to collect both groundwater samples and additional water elevation data. Initially, four deep wells completed to the top of the Hawthorn Formation will be installed. These wells will be continuously sampled at 5-foot intervals for the length of their depth in order to obtain stratigraphic information on subsurface geology. Water samples will also be collected upon installation and development of these deep wells. Subsequent wells will be constructed using site stratigraphy to identify appropriate well depths and screened intervals. The proposed placement of these additional monitoring wells are presented in Figure 2-7 "Proposed Piezometer and Monitoring Well Network". The actual location of these wells will depend on an assessment of the piezometer information and tidal influence study, as well as the geometry of particular SWMUs, known wastes managed at the SWMUs, and existing well locations and screened depths.

Boreholes for monitoring well placement will be advanced using the hollow-stem auger technique. Standard penetration tests (ASTM D1586-84) will be conducted at 5-foot intervals throughout each overburden boring. Overburden samples will be logged by the onsite field geologist for the purpose of identifying geological characteristics at each location.

Figures 3-1A through 3-1D present typical monitoring well installation details for NAVSTA Mayport. Volume II, the Sampling and Analysis Plan contains site-specific monitoring well installation requirements for each RFI SWMU. Single-cased monitoring wells will be constructed of 2-inch inner diameter (ID), flush-threaded Schedule 40 PVC with a 10-foot section of machine-slotted PVC well screen (0.01-inch slot size). The annulus around the screen will be filled using 20/30 graded silica sand. Both slot size and sand pack grade are typical for the surficial aquifer. The sand pack will be tremied into the annular space to a maximum of 2 feet above the top of the screen. A 6-inch to 2-foot bentonite pellet seal will be installed above the sand pack. A mixture of Portland cement and bentonite will be tremied into the annular space above the bentonite seal to the surface to eliminate a vertical conduit created by the drilling process. Material and construction of single-cased monitoring wells will conform with Southern Division's *Guidelines for Groundwater Monitoring Well Installation* (March 27, 89; Rev. on 4). This guide is used by Navy contractors to assure that the Navy obtains consistent and uniform well installations. Guidelines are based on standard industry practices and is generally consistent with USEPA Region IV SOPQAM. A copy of the Navy guidelines is presented in Appendix F of the Sampling and Analysis Plan, Volume II.

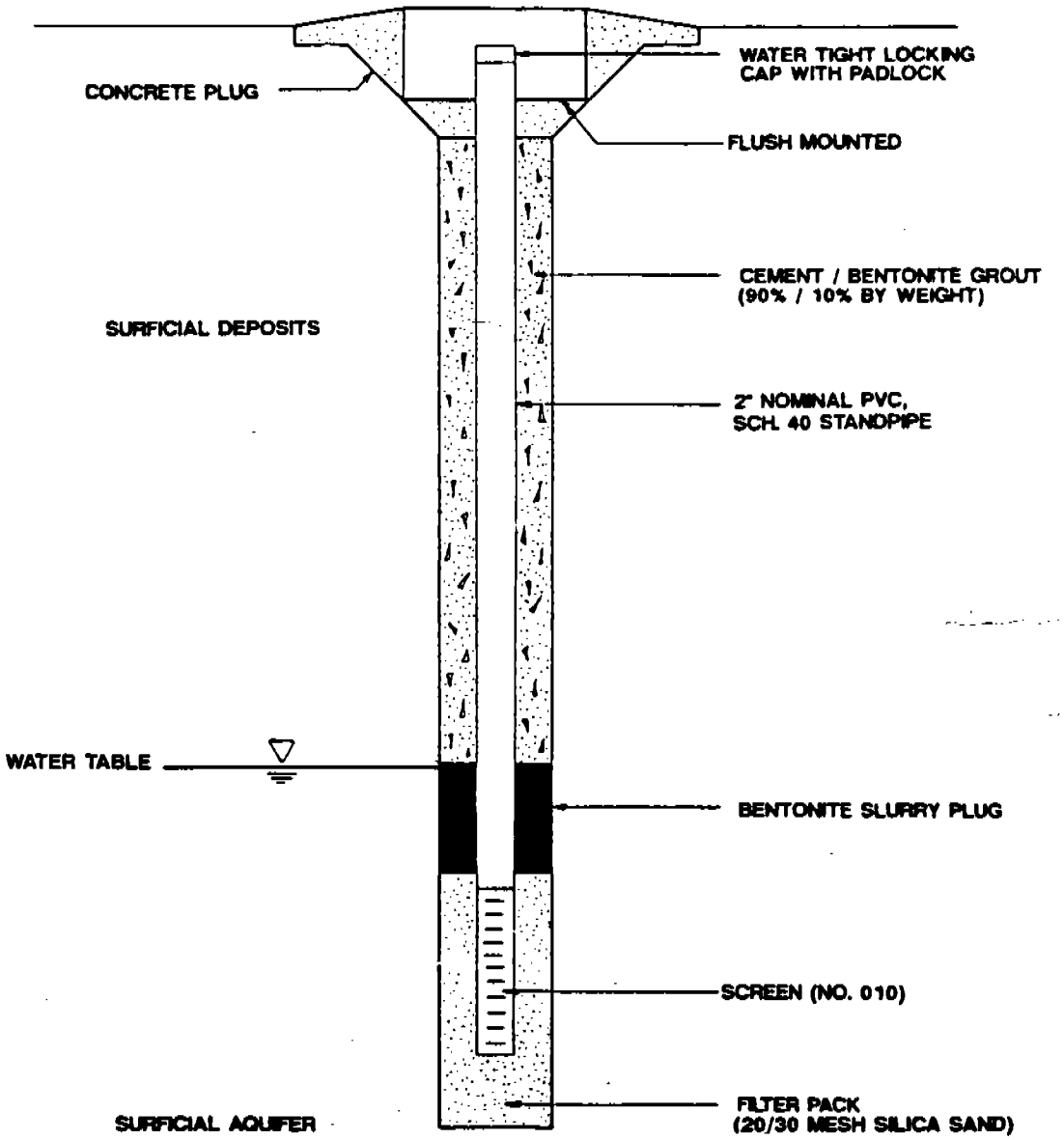

NOT TO SCALE

FIGURE 3-1A

PIEZOMETER INSTALLATION DETAIL (SURFICIAL AQUIFER)

RCRA FACILITY INVESTIGATION WORKPLAN
U.S. NAVAL STATION MAYPORT, FLORIDA

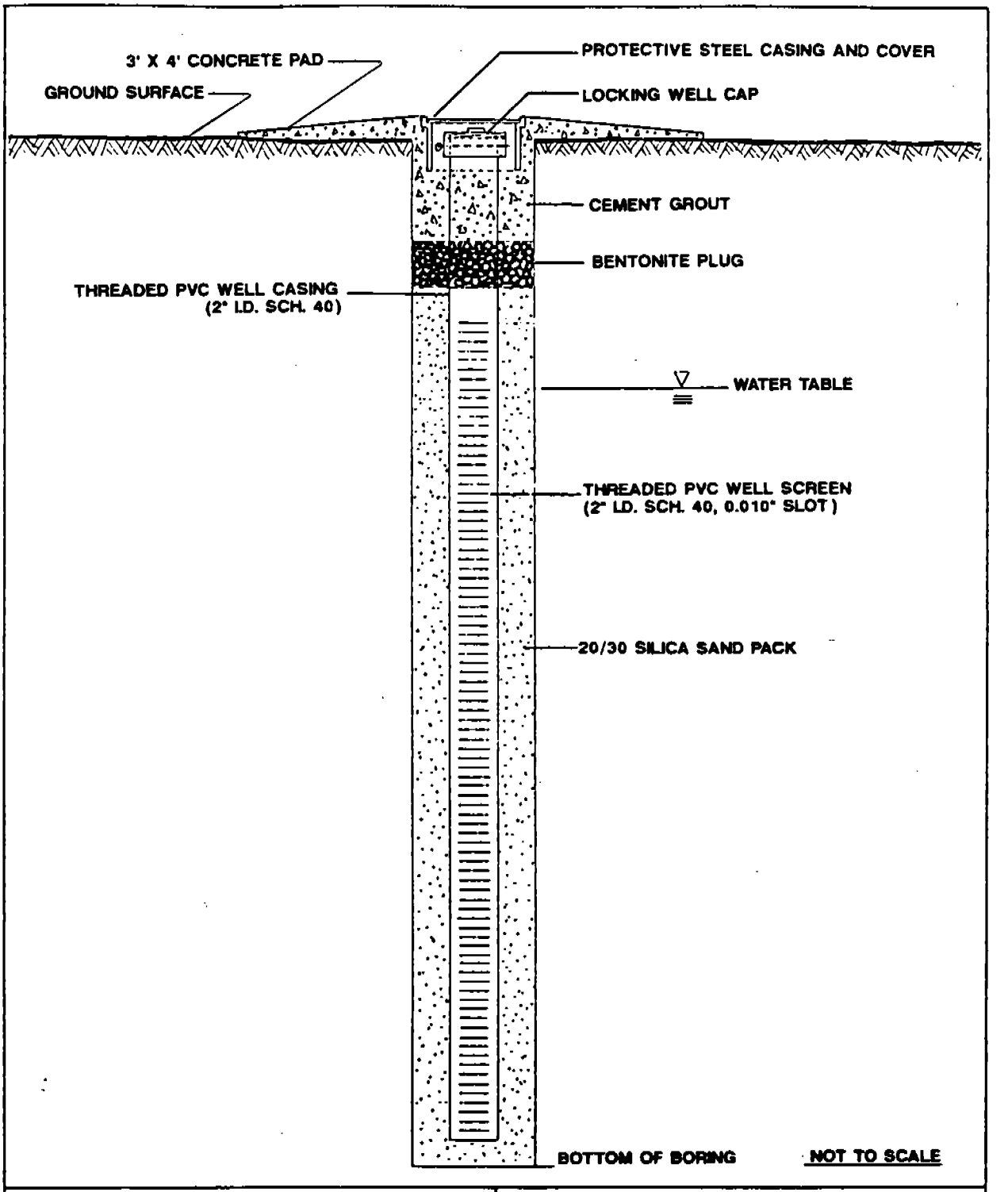

FIGURE 3-1B

TYPICAL SHALLOW MONITORING WELL INSTALLATION DETAIL (SURFICIAL AQUIFER)

RCRA FACILITY INVESTIGATION WORKPLAN
U.S. NAVAL STATION
MAYPORT, FLORIDA

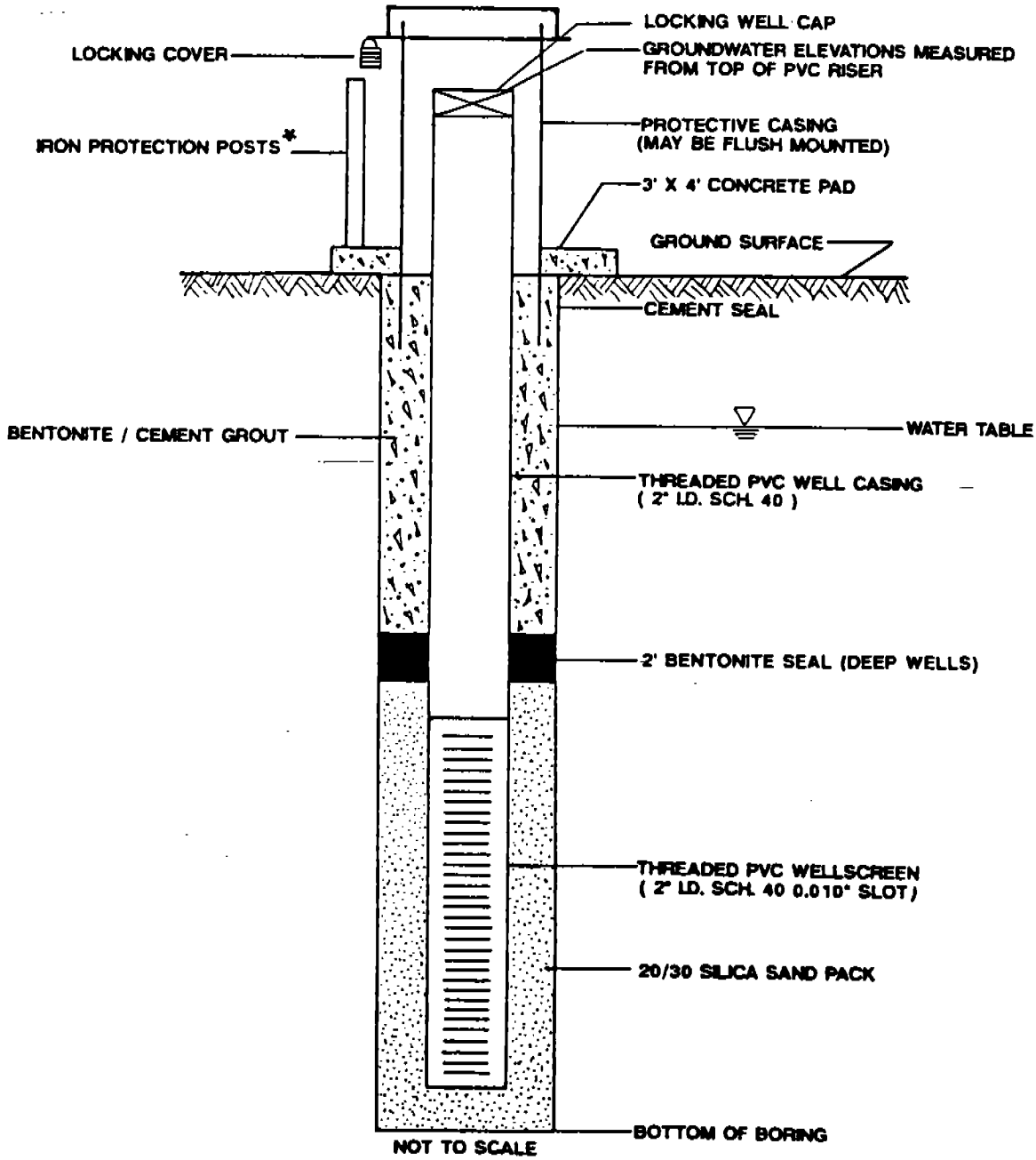

* INSTALLED ONLY AT BORING LOCATIONS WHERE THERE IS A RISK OF DAMAGE TO THE MONITORING WELL FROM EQUIPMENT OPERATIONS OR VEHICULAR TRAFFIC.

FIGURE 3-1C

TYPICAL DEEP MONITORING WELL INSTALLATION DETAIL (SURFICIAL AQUIFER)

RCRA FACILITY INVESTIGATION WORKPLAN
U.S. NAVAL STATION
MAYPORT, FLORIDA

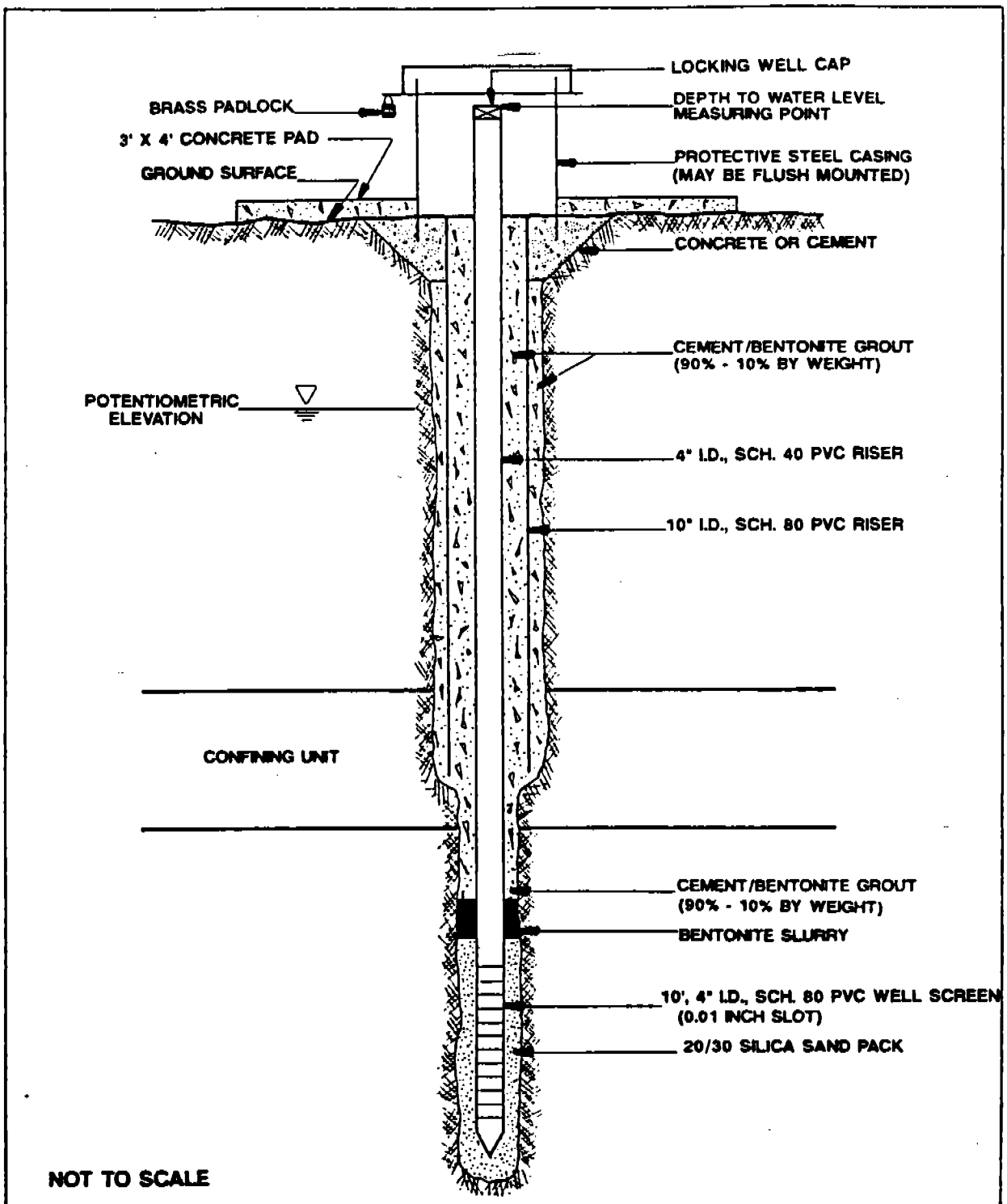

FIGURE 3-1D
MONITORING WELL INSTALLATION DETAIL DOUBLE CASED WELL (SECONDARY AQUIFER)

RCRA FACILITY INVESTIGATION WORKPLAN
U.S. NAVAL STATION MAYPORT, FLORIDA

USEPA Region IV SOPQAM requirements for well installation will be followed during borehole construction, well installation, and well development. However, surface well protection and well designation will be in accordance with Navy requirements, which are compatible.

Temporary piezometers will be installed at SWMU 13 and well as other locations. Water level measurements obtained from these piezometers will be used to calculate the hydraulic gradient across the site.

3.2.3 Well Elevation and Location Survey Subsequent to monitoring well and piezometer installation, a well elevation and location survey will be conducted by a Florida-registered land surveyor. The horizontal location, elevation of water level measuring point, and ground elevation will be surveyed for each new monitoring well and piezometer installed at NAVSTA Mayport. Water level measuring points will be clearly marked on each well casing for future use. Horizontal location of monitoring wells and piezometers will be referenced to the NAVSTA Mayport grid coordinate system. All elevations will be based on the National Geodetic Vertical Datum (NGVD) of 1929. These locational data will be easily converted to other location coordinate systems that may be required by State or Federal regulatory agencies.

Third order accuracy will be required for the survey. Horizontal locations will be located to an accuracy of 0.1 foot and elevations will be surveyed to an accuracy of 0.01 foot.

3.2.4 Potentiometric Surface Survey Water levels in all new and existing wells and piezometers will be measured and correlated with the results of the well survey in order to determine the potentiometric surface of the groundwater at NAVSTA Mayport.

3.2.5 Aquifer Hydraulic Properties In order to characterize the hydraulic properties of the surficial aquifer at NAVSTA Mayport, slug tests will be performed.

Single-hole hydraulic conductivity tests (slug tests) will be performed on each new monitoring well installed at NAVSTA Mayport. Information derived from the slug test program will aid in the delineation of the spatial variability of the hydraulic conductivity within the surficial aquifer. Both rising- and falling-head slug tests will be performed in each individual well, except for wells that are screened across the water table. In this case, only rising head tests will be performed. Data will be analyzed by either the method of Cooper and others. (1967) for confined conditions, or the method of Bouwer and Rice (1976) for unconfined conditions.

Results from the analysis of the slug tests will be used in calculations of the fate and migration of contaminants from existing sources. Information derived from this modeling effort will be used in conducting the health and environmental assessment and developing corrective action, if required.

Slug tests performed during the ESI resulted in recovery rates higher than the test method was able to measure manually. An electronic data logger will be used to record water levels during the slug tests performed for the RFI.

Once an average hydraulic conductivity has been obtained at each site, estimates of average pore water velocities will be calculated using the following formula:

$$Q=\frac{K\times I}{n}$$

where

- Q = average pore water velocity (ft/day or ft/year)
- K = hydraulic conductivity (ft/day)
- I = hydraulic gradient (calculated for each site from potentiometric surface maps), and
- n = estimated porosity.

3.2.6 Sampling and Analysis Groundwater and subsurface soil samples will be collected from all new monitoring wells and analyzed for contaminants as described in the site-specific part of this Workplan (Section 3.5) in order to characterize the nature and extent of contamination at NAVSTA Mayport. Existing wells will also be resampled for groundwater. Samples of surface water, soils, sediments, and sludges will also be collected at various sites, as described in Section 3.5 of this Workplan and in more detail in Section 3.3 of Volume II, the Sampling and Analysis Plan. Analytes have been selected based on the types of wastes managed at NAVSTA Mayport and the contaminants found at the various sites during the ESI. All analyses will be conducted using USEPA SW-846 Methods.

This concludes the Workplan discussion of background and approach for the RFI. Additional information on specific procedures may be found in Volume II, the Sampling and Analysis Plan. The following sections present the preliminary activities, facility-wide, and site-specific exploration programs for the RFI.

3.3 PRELIMINARY ACTIVITIES. Preliminary activities associated with the RFI at NAVSTA Mayport include securing subcontractors to perform the monitoring well installations and well measuring point survey, arranging for the acquisition of necessary permits and other authorizations, conducting a reconnaissance of the sites to determine logistics (i.e., location of exploration, decontamination stations, etc.), and mobilization of equipment and supplies at NAVSTA Mayport.

The mobilization subtask consists of field personnel orientation and equipment mobilization, and will be performed at the initiation of the subsurface investigation and sampling program. A field team orientation meeting will be held to familiarize personnel with site history, health and safety requirements, and field procedures.

Equipment mobilization will include the procurement, rental (if appropriate), and set-up of the following items:

- field office (portable trailer),
- sampling equipment,
- health and safety equipment, and
- decontamination materials.

3.4 FACILITY-WIDE ACTIVITIES.

3.4.1 Background Characterization In order to document the concentration of contaminants in areas of the base that have not been affected by past waste management practices, samples of soil, sediment, surface water, and groundwater will be collected and analyzed for the same constituents found at locations where releases are believed to have occurred.

Six background soil samples and three background sediment samples will be collected at the locations shown in Figure 3-2. Background soil samples will be collected from the area west of the main runway (MPT-B-SS-1, MPT-B-SS-2, and MPT-B-SS-3), in the wooded area between Mayport Road and the golf course (MPT-B-SS-4), south of Lake Wonderwood in the base housing area (MPT-B-SS-5), and in a wooded area in the northeast corner of the base (MPT-B-SS-6). Background sediment samples will be collected from tributaries to Sherman Creek just outside the base boundary (MPT-B-SW/SD-1), Lake Wonderwood, and from a drainage ditch west of Mayport Road and south of the golf course (MPT-B-SW/SD-3).

Background groundwater samples will be collected from Duval County monitoring well DS-263 located off Wonderwood Drive south of the Naval Station, provided that the well can be located and permission obtained from the county (approximate location is shown on Figure 2-5).

Monitoring well MPT-1-1 and Geraghty and Miller well S-1 will also be used as background groundwater sampling locations. Monitoring well MPT-1-1 is located just south of the Jacksonville Shipyards at SWMU 1 and is believed to be upgradient of any contamination originating from that site. No contaminants were observed in monitoring well MPT-1-1 during the ESI. Geraghty and Miller monitoring well S-1 is located south of Sites 8B and 8D, and is believed to be upgradient of any release originating from those sites. It will be sampled for background concentrations.

All soil, sediment, groundwater, and surface water samples will be analyzed for Appendix IX constituents. Upon assessment of initial analytical data, contaminants of concern will be identified for subsequent analysis, as appropriate.

All background samples will be analyzed for metals, volatile organics, semivolatile organic compounds, pesticides, and PCBs using USEPA SW-846 Methods as described in more detail in the Sampling and Analysis Plan. Organochlorine pesticides were used for many years for mosquito control at NAVSTA Mayport, and used oils were also used for insect control and dust suppression at the base; therefore, trace concentrations of these contaminants may be found in the background samples.

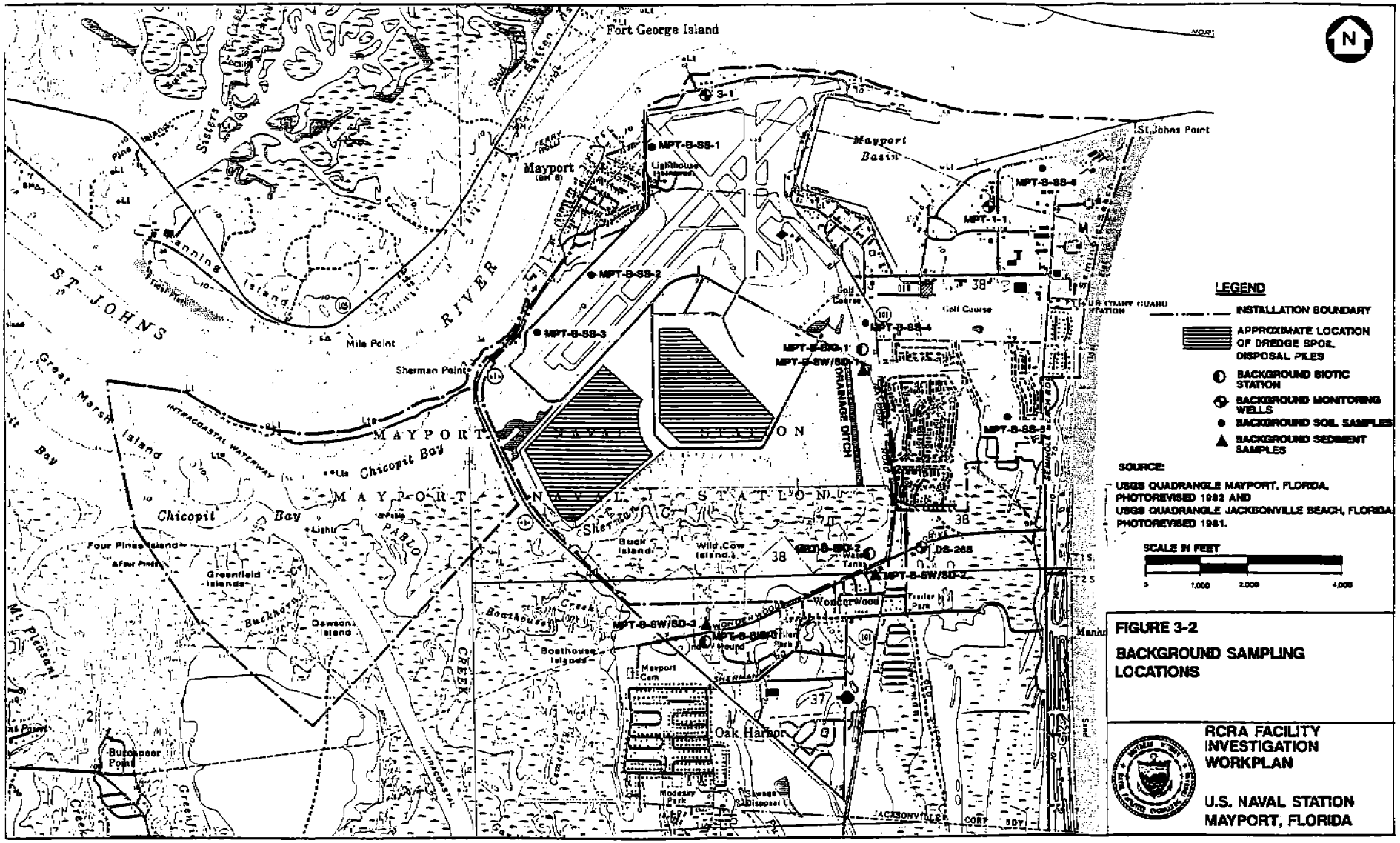

LEGEND

- INSTALLATION BOUNDARY
- APPROXIMATE LOCATION OF DREDGE SPOIL DISPOSAL PILES
- BACKGROUND BIOTIC STATION
- BACKGROUND MONITORING WELLS
- BACKGROUND SOIL SAMPLES
- BACKGROUND SEDIMENT SAMPLES

SOURCE:

USGS QUADRANGLE MAYPORT, FLORIDA, PHOTOREVISED 1982 AND USGS QUADRANGLE JACKSONVILLE BEACH, FLORIDA PHOTOREVISED 1981.

SCALE IN FEET

0 1,000 2,000 4,000

FIGURE 3-2

BACKGROUND SAMPLING LOCATIONS

RCRA FACILITY INVESTIGATION WORKPLAN

U.S. NAVAL STATION MAYPORT, FLORIDA

Additional background samples may be necessary after assessment of the initial RFI data if the following is observed.

- the coefficient of variation of the data for contaminants of concern is high,
- concentration of contaminants of concern is generally low, or
- the relative difference between background concentrations and site concentrations is low.

3.4.2 Potential Receptor Identification This section describes, in general, the types of data that will be collected to describe potential human populations and ecosystems that may be receptors of contamination at NAVSTA Mayport. Information on potential receptors to be collected on a site-specific basis is described in Section 3.5. The general identification of potential human receptors will be based upon information obtained from a records search of appropriate naval files; a search of pertinent State and Federal records, statutes, and documents; appropriate interviews with naval and State personnel; and a visual survey of the sites and surrounding area by a qualified public health scientist.

3.4.2.1 Human Receptor Survey

Identification of Current and Potential Future Uses of Groundwater. The following information will be collected with regard to groundwater uses:

- location of groundwater users of the surficial aquifer, secondary artesian aquifer, and Floridan aquifer system including withdrawal and discharge wells within a 1-mile radius of NAVSTA Mayport;
- classification of the aquifers under the State of Florida Administrative Code; and
- identification of the types of use of groundwater.

The location and status of water supply wells at NAVSTA Mayport were identified as part of the 1983 Geraghty and Miller report. This information will be verified and updated. In addition it will be necessary to identify any potable wells in the area of Site 14. This area was not included in the previous study. Nonpotable water supply wells were also not previously identified and if these are any of these, they will be located.

Identification of Current and Potential Future Uses of Surface Water. General descriptions of surface water bodies on NAVSTA Mayport including Lake Wonderwood, parts of the St. Johns River, and parts of the Atlantic Ocean are provided in Section 2.2.6.1. The current and potential future uses of the surface water bodies will be described including possible domestic, municipal, recreational, agricultural, industrial, and environmental uses. The information will be obtained by contacting local and State agencies and base personnel.

Identification of Land Uses and Access to the Facility. Uses of land on, or adjacent to the base will be described as well as the type and number of people who have access to the land(s).. Information to be collected includes, but is not limited to recreation, hunting, residential, and commercial uses. Any zoning of lands will be reported. The relationship between population locations and prevailing wind direction will also be predicted. Collection of information will be from base personnel and local agencies responsible for land use planning. Information available in the IAS (Environmental Science and Engineering, 1986) will be included.

Demographic Profile. A demographic profile of populations who use or have access to the sites and the adjacent land(s) will be compiled. The profile will include age, sex, sensitive subgroups (e.g., schools or nursing homes), and other factors as appropriate. The demographic profile will include the base and surrounding areas. Information will be compiled from reviews of base records and census information for the town of Mayport.

3.4.2.2 **Environmental Receptors** Environmental receptors include aquatic and terrestrial wildlife species that may be exposed to contamination emanating from the sites. In order to accurately assess environmental receptors, a biological field investigation will be conducted. The biological field investigation is fully described in the Sampling and Analysis Plan.

The objectives of the receptor survey and biological field investigation include:

- identification of environmental characteristics,
- identification of important aquatic and terrestrial organisms (receptors),
- identification of areas of contamination and ecological effects, and
- estimation of the magnitude and variation of toxic effects.

Survey of Aquatic Biota. The biota of surface water bodies on, adjacent to, or affected by each of the sites will be characterized. Aquatic biota include amphibians, fish, invertebrates, plants, and algae. Aquatic biota will be sampled from surface waters potentially impacted by contaminant releases. The sampling will be conducted by field biologists. The sampling is qualitative in nature and designed to collect as many species as possible. Organisms will be identified if feasible, to the genus level.

Survey of Terrestrial Biota and Plants. The terrestrial biota inhabiting NAVSTA Mayport and/or lands adjacent to it will be characterized. Terrestrial biota include birds, reptiles, invertebrates, amphibians, and mammals. Information on habitats collected during the biological field investigation will aid in identifying species that may be susceptible to exposures to contaminants.

Description of Ecosystems. Ecosystems present on, or adjacent to, NAVSTA Mayport will be described based upon information previously collected (Section 2.2.7.2) and the results of the aquatic and terrestrial survey. The ecosystem descriptions will include identification of possible food webs that will aid in assessment of potential food chain transport of contamination.

Identification of wetland habitats will be included in this part of the receptor survey. The wetlands assessment will include descriptions of the wetland areas; their classification according to State, Federal, and local regulations; and their functional attributes.

Identification of Rare, Endangered, or Threatened Species and Sensitive Habitats. Any rare, endangered, or threatened species on, near, or affected by the site will be described. Information on such species as previously collected is provided in Section 2.2.7.2. This information will be verified and amended as necessary.

Natural Resource Management. Natural resource management practices at NAVSTA Mayport will be summarized. These practices include landscape maintenance, drainage, erosion, and pest control. These practices impact potential habitats and, in turn, receptors.

Identification of Recreationally Important Wildlife. Recreationally important wildlife will be described. This description will include fish and game sport species on or near NAVSTA Mayport.

Bioassessment Methods. Bioassessment methods will be used on a site-specific basis to identify areas of contamination and ecological effects and to estimate the magnitude and variation of toxic effects.

Bioassessment methods include quantitative surveys of vegetation, aquatic macroinvertebrates, and fish; bioassays; and tissue residue analyses. Specific information on each bioassessment method is provided in the SAP. Possible implementation of biomonitoring is discussed on a site-by-site basis in Section 3.5.

The sampling of aquatic biota for tissue analyses will be dependant upon the results of the release characterizations described in Section 3.5. If inorganic or organic constituents having bioaccumulative potential are measured in sediments or the water column, sampling and analyses of aquatic species may be implemented. Tissue analyses of aquatic species would provide evidence of bioaccumulative potential and potential exposures via consumption for humans.

3.5 SITE-SPECIFIC ACTIVITIES. Site-specific activities for the RFI at NAVSTA Mayport are designed to describe the environmental setting, characterize the source of potential contamination, define the presence and extent of any release of contaminants, and identify potentially impacted receptors. The following sections present a discussion of source characterization, environmental setting, release characterization, and potential receptors for each site included in the RFI. The source characterization sections describe the nature of the site (landfill, spill site, treatment facility, etc.), history, and current use of the

site, and the types of materials disposed of or used at the site. The environmental setting sections describe the site topography, soils, vegetation, and any available information on groundwater and surface water at the site. The sections on release characterization describe any previous investigations at the site (i.e., ESI) and summarize their findings. Investigations planned for the site during the RFI are also discussed in these sections. Potential receptors are described and additional activities planned to characterize receptors at each site are discussed in a separate section for each site.

At each site, consideration is given to possible releases to air, soil, surface water, and groundwater. For each of these environmental media, the RFI is designed to identify the constituent(s) of concern, the general characteristics of any release, the concentration of constituents and extent of any release, and the rate of migration of any constituents released into the environment. Selection of sampling locations and target analytes is based on information gathered during the ESI.

Data from the ESI and other previous investigations are referenced and/or presented in the RFI Workplan when it is applicable to an individual site.

3.5.1 SWMU 1 (NIRP Site 1), Landfill A

3.5.1.1 Source Characterization SWMU 1, (NIRP Site 1) Landfill A is described in Section 2.3.2.1. Closure documentation for SWMU 1 is not available or does not exist. The landfill operation consisted of digging approximately 18 trenches, 15 feet wide and 8 feet deep. The landfilled materials were ignited in the afternoons each Monday through Friday and allowed to burn. When the site was no longer used, the area was graded and a shallow layer of topsoil placed on the surface to support a vegetative growth. Over the years, development has taken place and much of the area is now covered with structures, roadways, and parking lots.

In 1989, construction activities northwest of the landfill location uncovered 27 drums containing xylene, as well as scrap metal sheeting and piping. In order to determine the extent of the drum and scrap metal disposal area, a magnetometer survey will be conducted during the RFI in the area northwest of Jacksonville Shipyards and west of the wastewater treatment plant.

Information on waste characteristics that has been provided in earlier reports is all that is presently known (IAS, 1986; ESI, 1988). Planned activities include sampling and analysis for Appendix IX constituents of groundwaters, soils, and sediments. All borings will be logged to provide local geological data. Soils will be analyzed for density, moisture content, and permeability. Aquifer characteristics will be measured by slug tests.

3.5.1.2 Environmental Setting SWMU 1 is located approximately 600 feet from the St. Johns River at the mouth of the Mayport Basin. The area is between 12 feet and 15 feet above msl. Surface runoff drains north via a drainage ditch alongside Bon Homme Richard Street or overland to the northwest into the St. Johns River.

The shallow surface soils at SWMU 1 consist mainly of fine quartz sands. A thin clay layer (less than 1-foot thick) was noted in each of the borings conducted during the ESI at a depth of 7 to 10 feet bls (2 to 7 feet MSL). This thin clay layer slopes downward towards the St. Johns River. Below this clay layer lies a fine quartz sand to a depth of at least 17 feet BLS.

Water level measurements were obtained on four separate occasions during the ESI at SWMU 1. Data from October 8, 1987, indicate an average horizontal hydraulic gradient of 0.004 across the site. Groundwater flows north directly towards the St. Johns River, which is located 600 feet north of the site.

The Sampling and Analysis Plan (Volume II) specifies the collection of representative soil samples during borehole construction at SWMU 1 in order to characterize physical and general chemical soil properties. Analyses will include: bulk density, cation exchange capacity, organic content, soil pH, particle size distribution, and moisture content. These samples and analyses are in addition to samples collected for Appendix IX chemical analyses.

A qualified geologist or engineer will be onsite to log boreholes during drilling and sample collection. Borehole logs will be prepared based on the geologist's or engineer's observations. Borehole logs from the ESI have been prepared and are presented in Appendix E of Volume I as examples of the expected geology.

Monitoring wells will be installed in boreholes at SWMU 1. Aquifer characteristics will be measured by slug tests after the wells are developed and groundwater samples collected.

3.5.1.3 **Release Characterization** Three monitoring wells (MPT-1-1, MPT-1-2, and MPT-1-3) were installed in the vicinity of SWMU 1 during the ESI. Soil and groundwater samples were collected and analyzed for priority pollutants. Elevated levels of 4,4'-DDE were measured in the groundwater at monitoring well MPT-1-2 (0.01 $\mu g/\ell$) and in both soil (58 $\mu g/kg$) and groundwater (0.14 $\mu g/\ell$) at monitoring well MPT-1-3. Elevated levels of lead (122 $\mu g/\ell$) and cadmium (1.0 $\mu g/\ell$) were also observed in the groundwater at monitoring well MPT-1-3.

Four new monitoring well clusters (MPT-1-4S/D through MPT-1-7S/D) composed of paired deep and shallow wells are proposed for SWMU 1. The proposed locations are presented in Figure 3-3. One of these wells will be constructed to the top of the Hawthorn Formation. All deep wells completed to the top of the Hawthorn Formation will be double-cased to the first confining layer. The horizontal placement of this well will be approximately between the northern extent of SWMU 1 and the area where the magnetometer survey will be conducted to confirm the extent of SWMU 1 boundaries. The purpose of this well is to obtain lithologic data below the site to the Hawthorn Formation, groundwater quality information at depth, and vertical hydraulic gradient information between water bearing zones. A shallow monitoring well completed in the upper part of the surficial aquifer will be nested with the deeper Hawthorn well.

Previous hydrogeologic investigations (Causey and Phelps, 1979) have reported that the surficial aquifer in much of Duval County is composed of two zones, separated by deposits of lower permeability at depths ranging from 25 to 50 feet

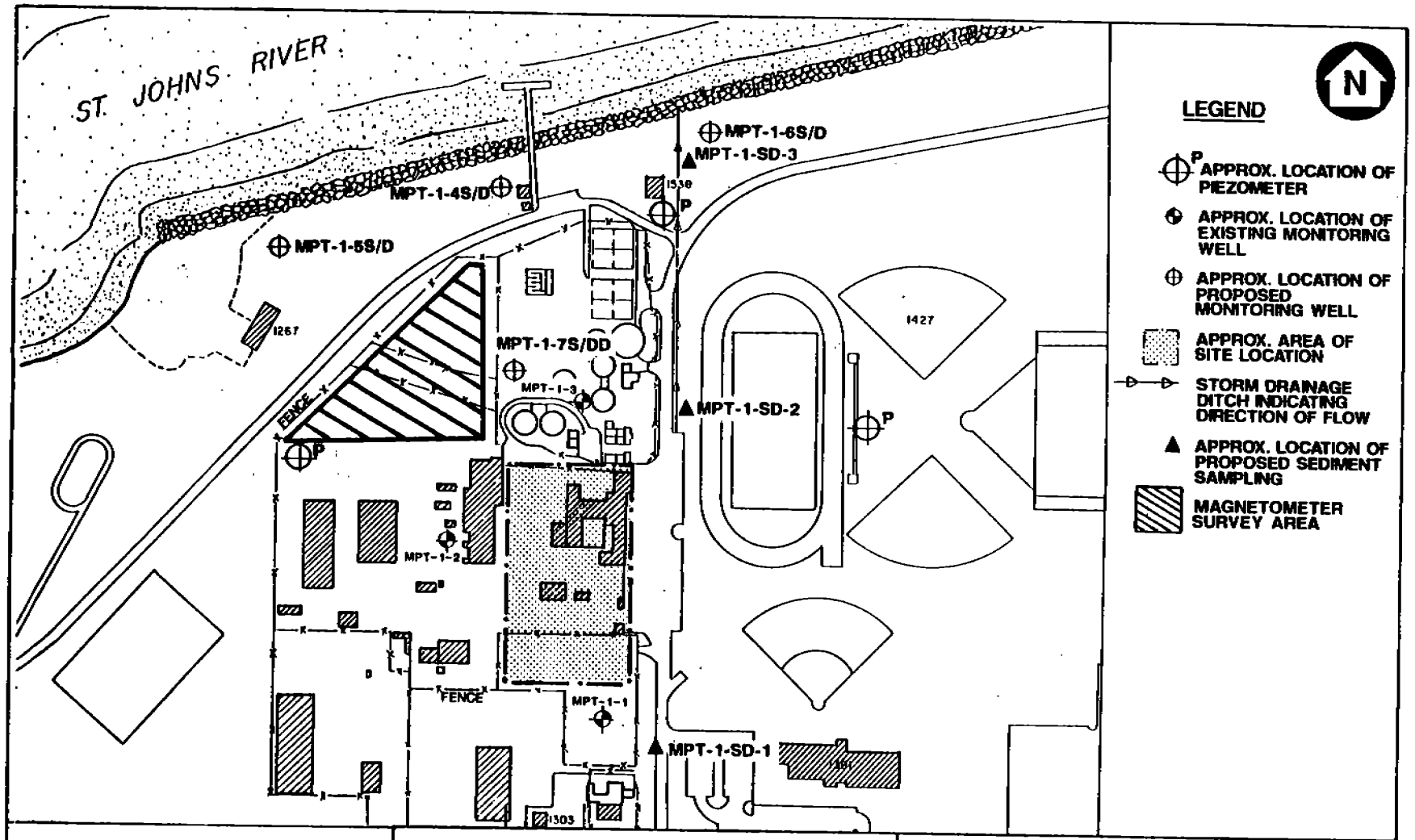

APPROX. SCALE

0 225 450 FT

FIGURE 3-3

LOCATION OF EXPLORATIONS (SITE 1) SWMU 1

RCRA FACILITY INVESTIGATION WORKPLAN
U.S. NAVAL STATION
MAYPORT, FLORIDA

below land surface. This low-permeability horizon should be observed during construction of the deep borehole if it exists at SWMU 1.

Three additional nests of paired surficial aquifer monitoring wells are proposed downgradient of the suspected area of SWMU 1. The locations of these nested well-pairs were selected in order to intercept possible plumes of contaminants that may be migrating toward the St. Johns River and to estimate the downgradient western and eastern fringes of possible plumes. Groundwater elevation data from these wells will improve estimation of groundwater flow rates and direction in the shallow aquifer, and help assess the influence of tidal fluctuations on the site hydrogeology.

The depths of these nested wells will be estimated from the boring log of the well completed in the upper Hawthorn Formation, which will be constructed first. The deeper well of each pair will be completed to the top of the first aquitard (if one is observed), which is anticipated to be at a depth of 25 to 30 feet. The deeper well will be screened 5 feet in length extending from the bottom of the well upward. The shallower wells will be approximately 15 feet deep and the screened interval will be approximately 10 feet long extending from about 3 feet above the water table surface downward. The intent of the nested well design is to permit sampling of dense non-aqueous phase liquids (DNAPLs), floating product, and soluble-phase aquifer water quality parameters.

Groundwater samples from the existing wells will be analyzed for metals using USEPA SW-846 Method 6010 inductively coupled plasma (ICP), Method 7470 (mercury), and Method 7870 (tin); organochlorine pesticides and PCBs by USEPA SW-846 Method 8080 (gas chromatography), volatile organic compounds by USEPA Method 8240; and semivolatile organic compounds by USEPA SW-846 Method 8270. Groundwater flow rate will be determined as outlined in Section 3.2.5.

Investigation of the subsurface soils is planned for SWMU 1 during installation of monitoring wells. The draft RFI Workplan prepared in 1987 was revised and implemented as the ESI under the NIRP. Subsurface soil samples were collected during the ESI (1987) and analyzed for priority pollutant metals, volatile organic compounds, and semivolatile organic compounds. The findings of the ESI are reported in the Final ESI Report (E.C. Jordan, April 1988). Data from these subsurface soil samples at SWMU 1 indicated elevated levels of 4,4'-DDE (58 $\mu g/kg$) in soils at the location of the downgradient well, MPT-1-3.

Additional subsurface soil samples will be collected at the borehole locations of the wells proposed for SWMU 1 during RFI implementation to confirm previous findings and to further characterize the vertical and horizontal extent of SWMU 1 contaminants. Soil samples will be collected just above groundwater level and analyzed for Appendix IX compounds. Other soil samples will be collected for analysis of general physical and chemical properties. These properties will include: bulk density, cation exchange capacity, organic content, soil pH, particle size distribution, moisture content, and infiltration (at each bore-hole location). Porosity and soil sorptive capacity will be derived from basic soil properties. These general physical and chemical parameters will assist in assessing contaminant fate and transport models and to provide fundamental data to support future potential corrective measures at the site.

The following subsurface soil samples will be collected at SWMU 1 during RFI implementation.

Location	Frequency	Analyses
MPT-1-4D/S MPT-1-5D/S MPT-1-6D/S MPT-1-7D/S	One per boring	Appendix IX volatile organic compounds (USEPA Method 8240). semivolatile organic compounds (USEPA Method 8270), PCB and pesticides (USEPA Method 8080), and metals (USEPA Method 6010, 7870, 7470)
MPT-1-4D/S MPT-1-5D/S MPT-1-6D/S MPT-1-7D/S	One per boring	Bulk density (ASTM D2937-83), cation exchange capacity (USEPA Method 9081), organic content (USEPA Method 9060), soil pH (USEPA Method 9045), particle size distribution (ASTM D422-63), moisture content ASTM D2216-80), and infiltration (ASTM D3385).

No permanent surface water that may contact contaminated media such as subsurface soils and groundwater exists at the site. Wastes at the site were buried below ground and the surrounding surface was regraded when land disposal operations were discontinued. A significant portion of the site has since been covered with structures and asphalt paving. Soil, sediment, and groundwater samples and analyses will be obtained to characterize horizontal and vertical extent of suspected RCRA contamination.

Sediment samples will be collected from the drainage ditch east of SWMU 1 (MPT-1-SD-1, and MPT-1-SD-2, MPT-1-SD-3) at both upgradient and downgradient locations as shown in Figure 3-3 in order to assess surface transport of contaminants. These samples will be analyzed for metals by USEPA Methods 6010, 7470, and 7870; PCB and pesticides by USEPA Method 8080; volatile organic compounds by USEPA Method 8240; semivolatile organic compounds by USEPA Method 8270; and total organic carbon by USEPA SW-846 Method 9060.

The storm drain sampling locations were chosen to determine if site contaminants were migrating via stormwater runoff sediment loads, and being deposited in the inverts of the conveyance system. Persistent pollutants in particular, such as metals and semivolatile organic compounds, could accumulate in sediments over time if releases were occurring. The sample locations were chosen to determine the horizontal spacial distribution of sediment contamination and to assess if obvious differences exist between upstream sediments and downstream sediments. Sediment samples will be taken immediately upstream from SWMU 1, immediately downstream near the site boundary, and near the discharge to the St. Johns River just above the mean high tide elevation where sediment deposition could be

influenced by backwater effects during storm events. Samples would be taken from 0 inch to 6 inches below surface where recent deposits would be expected.

The following sediment samples will be collected at SWMU 1 during RFI implementation.

Location	Frequency	Analyses
MPT-1-SD-1 MPT-1-SD-2 MPT-1-SD-3	One per location	Appendix IX volatile organic compounds (USEPA Method 8240), semivolatile organic compounds (USEPA Method 8270), PCB/pesticides (USEPA Method 8080) and metals (USEPA Method 6010, 7870, 7470)

The following field quality control samples will be collected during field sampling activities. QA/QC requirements are presented in detail in Appendix A, Volume II.

- Duplicates. Duplicates of soil, waste, groundwater, surface water, and sediments samples will be submitted for analysis of all parameters specified for the original samples (e.g., Appendix IX compounds) at a rate of 10 percent of the samples analyzed, or a minimum of 1 per event for each media sampled.

- Trip Blanks. A trip blank will be included with each shipment of water samples scheduled for volatile organic analysis (VOA) and will be analyzed with other VOA samples.

- Equipment Rinsate. A minimum of one equipment rinsate (sampler) blank per day for bailers, sampling pumps, and/or tubing will be scheduled during monitoring well sampling. A minimum of two soil sampler blanks will be collected each day during field soil sampling. One will be collected at the initiation of daily soil sampling activities and the other at the completion.

- Field Blank. A minimum of one field blank per day will be collected during field activities.

Subsurface gas probes will be installed in the vicinity of buildings at SWMU 1 to assess the potential for contaminant migration via soil gas and to assess the potential for buildup of hazardous vapors.

All soil, sediment, groundwater, and surface water will be analyzed for Appendix IX constituents. Upon assessment of initial analytical data, contaminants of concern will be identified for subsequent analysis, as appropriate.

3.5.1.4 **Potential Receptors** Groundwater from SWMU 1 flows northward directly to the St. Johns River 600 feet north of the site. No water supply wells have been documented in the area of the landfill or north to the St. Johns. One

abandoned Navy Well (N-16) is located south of the site according to available information. As groundwater is not currently being used from this area, direct exposures for human receptors are not anticipated. The receptor survey will, however, verify the location and status of the N-16 well and determine future uses to the extent possible.

Use of the immediate area near the former landfill is restricted to naval and other authorized personnel. Incidental exposures to soil contamination is possible for these individuals. Human use and access to the buildings near SWMU 1 will be determined as part of the receptor identification. This process is described in Section 3.4.2.1.

Human receptors may be exposed to contamination migrating to the St. Johns River via direct contact or ingestion of contaminated biota. Current and future uses of the St. Johns River in areas near SWMU 1 will be identified as described in Section 3.4.2.1.

Ecological receptors are potentially exposed to contamination migrating to the St. Johns River or the drainage ditch to the east of the Site. Site-specific ecological receptor identification activities will include: a survey of aquatic biota in tidal ponds (located south of the river and to the northeast of the former landfill), a survey of aquatic biota in the drainage ditch (which flows from south to north to the east of the site), and collection of information on aquatic and terrestrial organisms inhabiting or using the St. Johns River. If, after review of data on the St. Johns River, it is determined that receptors are not adequately characterized using available information, then biota sampling in the St. Johns River will be proposed to fill the data gaps.

If analyses of sediment samples from the drainage ditch (Section 3.5.1.3) reveals the presence of any persistent or bioaccumulative contamination, then sampling of aquatic biota for tissue analyses may be implemented. The results of the tissue analyses would provide necessary information on potential exposures and exposure routes for both ecological and human receptors.

3.5.2 SWMU 2, 3, 4, and 5 (NIRP Sites 2, 4, 5, and 6), Landfills B, D, E, and F

3.5.2.1 Source Characterization These four landfills are discussed together due to their physical proximity (Figure 3-4) and the similarity of wastes disposed in these areas. They are described in Section 2.3.2.2.

Available closure information is as follows.

SWMU 2 (NIRP Site 2) - The area has been covered with soil, paved with asphalt, and fenced. An ordnance storage yard now occupies the site.

SWMU 3 (NIRP Site 4) - The area has been covered with topsoil.

SWMU 4 (Site 5) - The area has been covered with topsoil.

SWMU 5 (NIRP Site 6) - The area has been covered with topsoil.

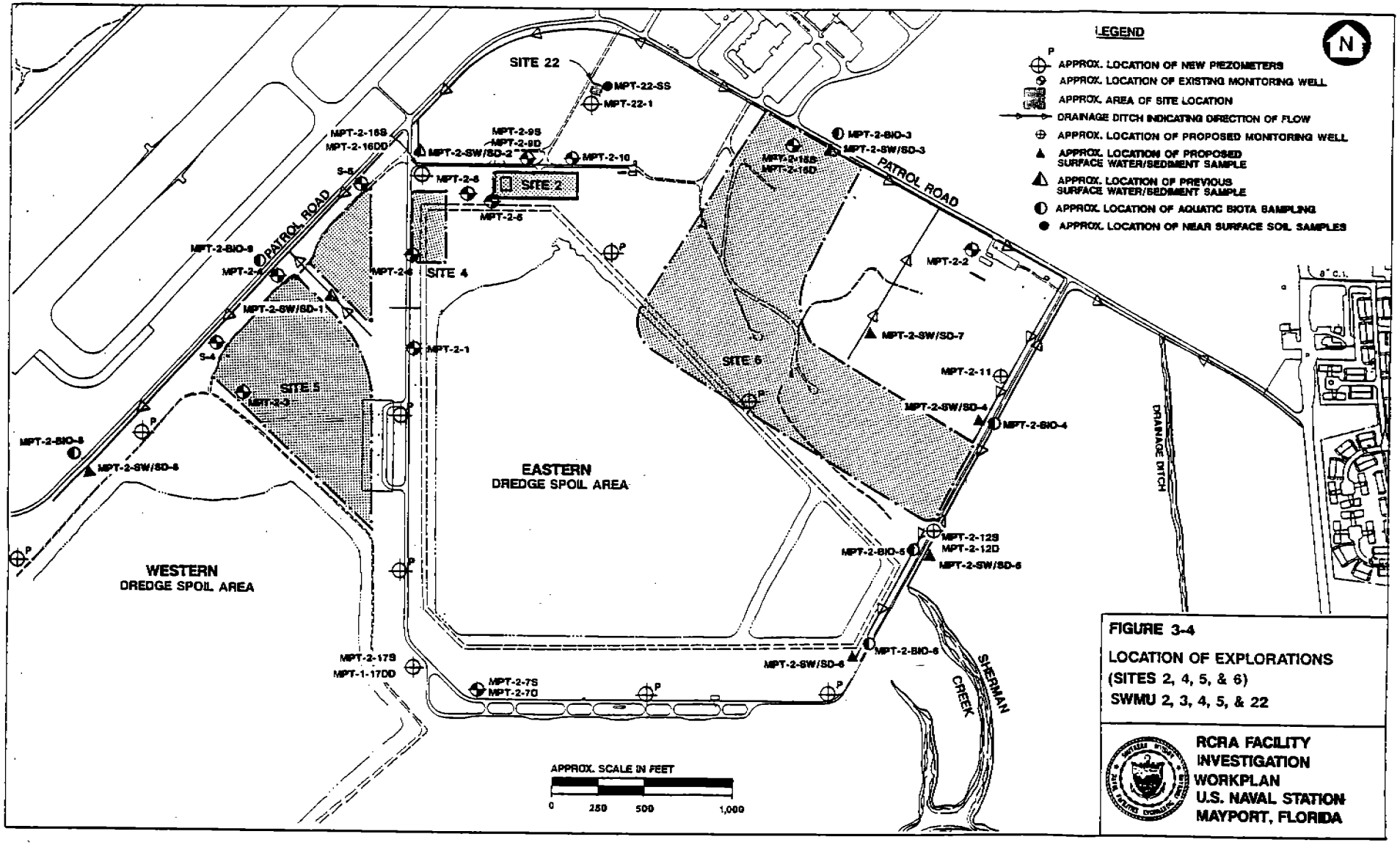

FIGURE 3-4

LOCATION OF EXPLORATIONS (SITES 2, 4, 5, & 6) SWMU 2, 3, 4, 5, & 22

RCRA FACILITY INVESTIGATION WORKPLAN U.S. NAVAL STATION MAYPORT, FLORIDA

Source characterization information that has been provided in earlier reports is all that is presently known (IAS, 1986; ESI, 1988). Planned activities include sampling and analysis for Appendix IX constituents of groundwaters, surface waters, soils, and sediments. All borings will be logged to provide local geological data. Soils will be analyzed for density, moisture content, and permeability. Aquifer characteristics will be measured by slug tests.

3.5.2.2 **Environmental Setting** Landfills B, D, E, and F are located in the central part of NAVSTA Mayport, south of the runways and north of Sherman Creek. The landfills are adjacent to, and in some cases beneath, the dredge spoil piles, which are a dominant feature of the landscape. Elevations of the landfill areas range from 6 feet to 12 feet above MSL, and the dredge spoil piles rise to 25 feet to 30 feet.

Surface water runoff in this area is carried by drainage ditches alongside the patrol road to Chicopit Bay to the southwest and Sherman Creek to the south and southeast. These drainage ditches are tidally influenced, with water levels rising and falling with the tides in the St. Johns River.

Surface soils in the landfill area are fine to coarse grained sands with shells and shell fragments and range from 9 to 12 feet thick. Occasional thin (1 to 2 feet) sandy clay layers were also encountered during soil borings conducted as part of the ESI in 1987.

Drillings during the ESI also revealed a relatively uniform clay layer at a depth of 1 to 4 feet below MSL. This clay layer consists of a stiff, dark olive clay from 2 feet to 6 feet thick, and is believed to be relatively continuous across SWMUs 2, 3, 4, and 5 (NIRP Sites 2, 4, 5, and 6). Below the clay layer is a fine grained, gray to green sand with a thin clay to sandy clay layer (about 2 feet thick) found at a depth of 25 feet below land surface.

Groundwater flow at SWMU 2, 3, 4, and 5 (NIRP Sites 2, 4, 5, and 6) is influenced by the elevated dredge spoil areas and the surface water drainage ditch bordering the sites. Eleven shallow groundwater monitoring wells were installed during the ESI to determine the hydrogeologic characteristics of the surficial aquifer beneath these sites. Water level data collected from these wells indicate that groundwater mounding occurs in the vicinity of both dredge spoil areas.

In the vicinity of the inactive (eastern) dredge spoil area, groundwater mounding is believed to be caused by the elevated ground surface in the northern third of this spoil area. Differences in elevations between the fill material within the dike and the average surface elevation outside the dike is approximately 23 feet. This is sufficient to delay groundwater recharge and produce mounding under the spoil area.

During the ESI, the western dredge spoil area was receiving dredge material from the turning basin. This resulted in an artificial groundwater mound under this spoil area. It is anticipated that the mounding dissipated once dredging ceased.

Because of the mounding of groundwater within the two dredge spoil areas and the limited number of wells installed during the ESI, a precise groundwater flow

direction is difficult to determine. Groundwater appears to be moving radially outward from the northern third of the inactive dredge spoil area towards the perimeter surface ditches. Also, groundwater under the active dredge spoil area appears to be moving radially outward. Because of the mounding of groundwater and the close proximity of surface water ditches, groundwater flow is probably towards the ditch from the mounded areas within the dredge spoil area. This surface water drainage ditch flanks the sites on the northwest, north, northeast, east, and southeast and experiences tidal influences of several feet.

A series of piezometers will be installed in an effort to clarify groundwater flow directions at each site and to provide a potentiometric surface map that will encompass the entire area. The proposed locations of the piezometers are shown in Figure 3-4. The locations were chosen in order to assess the degree that the dredge spoil areas and drainage ditches affect groundwater flow behavior at these sites. Possible tidal influences will all so be observed using the piezometers during the tidal influence study.

In addition, two deep wells will be constructed to the top of the Hawthorn Formation within the NIRP Sites 2, 4, 5, and 6 (RFA SWMU 2, 3, 4, and 5, respectively) group. The purpose of these wells is to obtain lithologic data below the site to the Hawthorn Formation, groundwater quality information at depth, and the vertical hydraulic gradient between water bearing zones. Six additional shallow wells are also proposed in order to collect near surface groundwater quality data and water table elevations. Data collected from these monitoring wells and piezometers will be used to refine estimates of groundwater flow rates and direction, contaminant migration, and tidal influences on groundwater gradients.

The depths of the shallow wells will be estimated from the boring logs of the deep wells, which will be constructed first. The wells will be completed to the top of the first aquitard if one is observed, which is presently estimated to be at a depth of 10 to 15 feet bls. Because of the anticipated shallow depths of the wells, the entire saturated lengths will be screened. The screened interval will extend to at least 1-foot above the water surface. The intent of this well design is to permit sampling of DNAPL if present at the bottom of the well, and floating products at the top, as well as soluble-phase aquifer water quality parameters.

Data gathered during the study will assist in observing the effects that seasonal water level fluctuations have on the configuration of the surficial aquifer. Newly installed piezometers and monitoring wells and previously existing wells will then be measured every month for a 12-month period. The data will then be reduced and correlated with the well survey and a series of potentiometric surface maps will be prepared and reviewed for incorporation into the RCRA Corrective Action Program at NAVSTA Mayport.

Subsurface soil samples will be collected at these sites during the RFI and will be analyzed for Appendix IX volatile organic compounds, semivolatile organic compounds, and metals to further characterize the specific contaminants of concern that may exist at these sites. Subsurface soil samples will be collected during installation of additional proposed monitoring wells MPT-2-16S,

MPT-2-16DD, MPT-2-17S, MPT-2-17DD, and MPT-22-1. These samples will further characterize horizontal and vertical extent of contamination at the NIRP Sites 2, 4, 5, and 6 (RFA SWMU 2, 3, 4, and 5, respectively).

PCB contamination was detected above regulatory action levels in surface soils at MPT-2-9D during the ESI. The source of the PCB contamination is unknown but is assumed to have been deposited by surface spillage. Based on present site data and the expected mobility of PCB in soils, it is assumed that contamination would be found in the near surface soils within the interval of 0 inch to 6 inches under a surface deposition scenario. Discrete grab samples will be collected at this interval to characterize the horizontal extent of PCB contamination in the near surface soils. A "hotspot" sampling strategy will be implemented using a grid sample point layout.

The grid will be positioned within the vicinity of MPT-2-9D where the PCB contamination was originally detected. The grid spacing geometry will be triangular and the spacing will be defined to identify a circular target to achieve a false-negative level (e.g., the probability of a Type II error [ß] where the null hypothesis is rejected when it is true). In the sampling strategy at SWMU 2, the null hypothesis is that the site does not attain cleanup levels; therefore, a Type II error would occur if it is assumed that the site is below the attainment level (i.e., "clean") when it is actually above attainment levels (i.e., "dirty"). Grid dimensions and number of initial surface soil samples are described in the Sampling and Analysis Plan, Volume II.

The grid will be designed to achieve with a semi-major axis of 5 feet detection at a ß of 5 percent for a circular target. Because a field screening method will be used to detect the presence of PCBs, the proxy attainment level for characterization will be any positive analysis obtained using the field kit analysis. The method detection limit for the PCB field kit is 50 parts per million. A copy of the field kit method instructions is presented in Appendix B, Volume II.

Duplicate samples will be collected simultaneously during field activities. The duplicates of positive samples will be sent for laboratory analysis to confirm field results and to quantify site contamination by laboratory means (i.e., USEPA Method 8080). Upon initial horizontal site characterization, additional samples will be collected at lower depths (e.g., 12 inches and greater) to characterize the vertical extent of PCB contamination within surface areas where PCB concentrations greater than 50 $\mu g/kg$ were found. The number of subsurface soil samples will be dependent on previous findings. Use of the field kit to detect PCB will provide the flexibility needed to respond to site conditions readily.

Surface water sampling at tidally influenced drainage ditches will be scheduled during daylight hours between storm events on an outgoing tide. These temporal constraints are imposed to minimize hazards to sampling personnel, minimize possible dilution effects that could be caused by stormwater runoff, and to improve the likelihood of collection of the base-flow contribution of groundwater from adjacent SWMUs to the drainage ditches. Collection of surface water samples coupled with sediment samples will permit assessment of the surface water drainage system as a route of contaminant migration.

The sediment sampling locations were chosen to determine: if site contaminants are migrating via sediment loads, if site contaminants are being deposited in the inverts of the drainage channels, the spacial distribution of sediment contamination along the channels, and if obvious differences exist between upstream sediments and downstream sediments. Sediment samples will be taken immediately upstream from SWMU 4 (NIRP Site 5) near the confluence of the drainage ditch from SWMU 2, in the upper reaches of the drainage branch in SWMU 4, immediately downstream from SWMU 4 near the site boundary, on the upper reaches of the drainage branches in and around SWMU 5 (NIRP Site 6), downstream from SWMU 5, and near the discharge to Sherman Creek to the south, just above the mean high tide elevation where sediment deposition could be influenced by backwater effects. Samples would be taken from near surface sediments in the interval from 0 inch to 6 inches bls where recent deposits would be expected.

The following surface water and sediment samples will be collected in the surface water drainage ditches in and around Sites 2, 4, 5, and 6 (RFA SWMU 2, 3, 4, and 5, respectively) during RFI implementation. The original well and sample designation scheme is used to remain consistent with previous work.

Location	Frequency	Analyses
MPT-2-SD/SW-1 MPT-2-SD/SW-2 MPT-2-SD/SW-3 MPT-2-SD/SW-4 MPT-2-SD/SW-5 MPT-2-SD/SW-6	One sediment and one surface water sample at each location	Appendix IX volatile organic compounds (8240), semivolatile organic compounds (8270), and metals (6010, 7870)

The following field quality control samples will be collected during field sampling activities: QA/QC requirements are presented in detail in Appendix, Volume II.

- Duplicates. Duplicates of soil, waste, groundwater, surface water, and sediment samples will be submitted for analysis of all parameters specified for the original samples (e.g., Appendix IX compounds) at a rate of 10 percent of the samples analyzed, or a minimum of 1 per event for each media sampled.

- Trip Blanks. A trip blank will be included with each shipment of water samples scheduled for VOA analysis and will be analyzed with other VOA samples.

- Equipment Rinsate. A minimum of one equipment rinsate (sampler) blank per day for bailers, sampling pumps, and/or tubing will be scheduled during monitoring well sampling. A minimum of two soil sampler blanks will be collected each day during field soil sampling. One will be collected at the initiation of daily soil sampling activities and the other at the completion.

- Field Blanks. A minimum of one field blank per day of field activities be collected.

All soil, sediment, groundwater, and surface water will be analyzed for Appendix IX constituents. Upon assessment of initial analytical data, contaminants of concern will be identified for subsequent analysis, as appropriate.

3.5.2.3 Release Characterization As part of the ESI, a terrain conductivity survey was conducted in the landfill area in an attempt to define a leachate plume extending beyond the surface water drainage ditches. However, the presence of brackish groundwater relatively close to the land surface made it impossible to distinguish the presence of any leachate plume. Eleven shallow soil borings (MPT-2-1, MPT-2-2, MPT-2-3, MPT-2-4, MPT-2-5, MPT-2-6, MPT-2-7S, MPT-2-8, MPT-2-9S, MPT-2-10, and MPT-2-15S) and three deep soil borings (MPT-2-7D, MPT-2-9D, and MPT-2-15D) were completed with monitoring well installations in the landfill area. The shallow wells are about 10 feet deep, and the deeper wells 25 feet deep, in order to extend below the clay layer observed at 1 to 4 feet below mean sea level. Soil samples were collected from each boring just above the water table. Groundwater samples were collected from each new monitoring well and from two existing wells (S4 and S5). Three sediment and surface water samples were collected from the drainage ditches. Sample locations are shown in Figure 3-4.

Volatile Organics. Chlorobenzene (44 μg/kg) and toluene (553 μg/kg) were detected in the soil at NIRP Site 2 (monitoring well MPT-2-5). Volatile organic compounds were not detected in groundwater samples obtained from NIRP Site 4 but were present in soil samples. Chlorobenzene (37 μg/kg), toluene (232 μg/kg), and 1,1,1-trichloroethane (122 μg/kg) were detected in the soil sample obtained from boring MPT-2-8 but not in a field duplicate of that sample. No volatile organics were detected in soils at NIRP Site 5 but groundwater contained both benzene (1 μg/ℓ) and chlorobenzene (139 μg/ℓ) in monitoring well MPT-2-3.

Volatile organics were also detected in a surface water sample (MPT-2-SW/SD-1) obtained from a ditch that crosses NIRP Site 5. This sample contained both trans-1,2-dichloroethene (6 μg/ℓ) and vinyl chloride (3 μg/ℓ). No volatile organics were detected in soil, groundwater, surface water, or sediment samples collected at NIRP Site 6.

Semivolatile Organics. The only semivolatile organic detected at NIRP Site 2 was di-n-butyl phthalate. This compound was found in the groundwater sample collected from monitoring well MPT-2-9S at a concentration of 20 μg/ℓ. PCB-1260 was detected in the soil sample obtained from boring MPT-2-9S at 2,576,000 μg/kg. This concentration exceeds the Toxic Substances Control Act (TSCA) standard for removal of PCB-contaminated soil of 50,000 μg/kg. Priority pollutant pesticides were not detected in either soil or groundwater samples collected at NIRP Site 2.

The semivolatile organic compounds bis (2-ethylhexyl) phthalate (15 μg/ℓ) and 2,4-dimethylphenol (13 μg/ℓ) were detected in groundwater at Site 4. No PCBs or pesticides were detected in groundwater but PCB-1260 and heptachlor were detected in soils. PCB-1260 was detected in the sample obtained from boring MPT-2-6 at

990 μg/kg, which does not exceed the TSCA standard of 50,000 μg/kg for removal. Heptachlor was detected in the soil sample obtained from the field duplicate MPT-2-8 DUP at 6 μg/kg.

The pesticide 4,4'-DDD (20 μg/ℓ) was detected in a surface water sample collected from the drainage ditch that crosses NIRP Site 5.

Semivolatile organics detected in groundwater at NIRP Site 6 include acenaphthene (35 μg/ℓ) and bis (2-ethylhexyl) phthalate (20 to 35 μg/ℓ). A groundwater sample from monitoring well MPT-2-15S contained heptachlor at 0.03 μg/ℓ. Surface water sample MPT-2-SW-3 contained 4,4'-DDE at 0.01 μg/ℓ. Soils from boring MPT-2-2 contained PCB-1260 at 190 μg/kg. As mentioned, this concentration is below the TSCA standard of 50,000 μg/ℓ set as a clean-up level by the USEPA.

Metals. Priority pollutant metals detected at NIRP Site 2 consist of total lead in groundwater samples obtained from monitoring wells MPT-2-5 (2 μg/ℓ) and MPT-2-10 (4 μg/ℓ). Soil samples collected from NIRP Site 4 contained no detectable levels of priority pollutant metals. However, groundwater contained both cadmium and lead. A groundwater sample from monitoring well MPT-2-8 contained total cadmium at 0.9 μg/ℓ. The same sample also contained total lead at 160 μg/ℓ. The groundwater sample from monitoring well MPT-2-5 also contained lead at a concentration of 2 μg/ℓ.

Both chromium and lead were detected in groundwater at NIRP Site 5. Total lead was detected in monitoring well S-4 at a concentration of 5 μg/ℓ. The concentration of total chromium found in groundwater from monitoring wells MPT-2-4, S-4, and S-5 was 100 μg/ℓ. Chromium was also detected in surface water sample MPT-2-SW-1 at 100 μg/ℓ. Total lead was detected at 4 μg/ℓ in the groundwater sample obtained from monitoring well MPT-2-2 near NIRP Site 6.

Additional explorations planned for the RFI at SWMU 2, 3, 4, and 5 (NIRP Sites 2, 4, 5, and 6) and SWMU 22 include resampling of the existing monitoring wells and installation of three additional shallow monitoring wells (MPT-2-11, MPT-2-12S, and MPT-2-12D) on the southeast side of SWMU 6 in order to characterize groundwater migration towards Sherman Creek, and installation of pairs of nested wells: One pair of nested wells will be north of NIRP Site 4 (SWMU 3) (MPT-2-16S and MPT-2-16D), and one pair with be south of NIRP Site 5 (SWMU 4) (MPT-2-17S and MPT-2-17D). A shallow monitoring well (MPT-22-1) will be installed at SWMU 22. Additional surface water and sediment samples will be collected in the drainage ditches to the east and west of the group of landfills to characterize any migration of contaminants into the wetlands along Sherman Creek and Chicopit Bay. Locations are shown in Figure 3-4.

Groundwater, surface water, and sediment samples will be analyzed for metals (USEPA Method 6010), halogenated volatiles (USEPA Method 8015), aromatic volatiles (USEPA Method 8020), phenols (USEPA Method 8040), and pesticides and PCBs (USEPA Method 8020). Analytes have been selected based on the contaminants observed at these sites during the ESI. Gas chromatography (GC) methods are specified for organic analytes because of their increased sensitivity.

Surface soils will be collected in the vicinity of monitoring well MPT-2-9D north of SWMU 2 and analyzed for PCB using field test kits to define the extent of the PCB hot spot identified during the ESI. Test kit results will be verified by laboratory analyses of representative samples.

3.5.2.4 Potential Receptors Groundwater flow from the area of SWMU 2, 3, 4, and 5 (NIRP Sites 2, 4, 5, and 6) is believed to be moving from the dredge spoils areas radially toward the perimeter surface ditches. Surface water drainage ditches flank the sites on the northwest, north, northeast, east, and southeast and the ditches experience tidal influences. Groundwater eventually discharges to Sherman Creek and associated wetlands. There is no evidence that groundwater from the sites flows toward the northwest into the town of Mayport.

Direct human contact with groundwater is not expected in this area as no water supply wells are present in the vicinity. The nearest identified downgradient water supply well (N-6) is approximately 1,500 feet southwest. This well is reported to be inactive. Human receptors may be exposed to contamination in soils or contamination migrating to the drainage ditches and/or Sherman Creek. Exposures would be expected to be by direct contact or ingestion of contaminated biota. Human access to the sites is limited as this is a restricted area controlled by the Navy and is fenced. The receptor identification will describe human access and use of the areas of SWMU 2, 3, 4, and 5 (NIRP Sites 2, 4, 5, and 6).

The human receptor identification for SWMU 2, 3, 4, and 5 (NIRP Sites 2, 4, 5, and 6) will include determination of current uses of the drainage ditches, Chicopit Bay, and Sherman Creek by humans. Fishing from the ditches has been reported but not verified.

Ecological receptors may be exposed to contamination migrating from the sites to the drainage ditches, Chicopit Bay, Sherman Creek, and the Sherman Creek wetlands. Receptors may also be exposed to soil contamination on the sites.

Site-specific ecological receptor identification tasks include a survey of aquatic biota in the drainage ditches with survey stations being located concurrently with sediment and surface water sampling locations in Figure 3-4. Additional survey stations will be located in the drainage ditches north and west of the landfill area. The general goals and steps of the survey of aquatic biota are described in Section 3.4.2.1.

A survey of terrestrial biota will be conducted in the ~~area of~~ Sherman Creek and its associated coastal marsh to identify potential receptors and provide information necessary to support a wetlands assessment. The wetlands assessment process is described in Section 3.4.2.3 and will be conducted for the coastal marsh area, which lies to the south, west, and east of the sites. The terrestrial biota survey is detailed in Section 3.4.2.2.

A survey of aquatic biota in Sherman Creek will also be conducted with survey stations at two locations as well as a terrestrial biota survey of the landfill and dredge spoils areas.

Sampling of biota for tissue analyses will be conducted if the results of proposed sediment sampling show extensive contamination of drainage ditch sediments with persistent bioaccumulative chemicals (i.e. DDT/DDD/DDE and PCBs). If it is determined that the public consumes fish or shellfish from the drainage ditches it may be necessary to conduct biota sampling for analyses to determine if exposures to contaminants are occurring via food ingestion.

3.5.3 SWMU 6, 7, 8, 9, and 10 (NIRP Sites 8, 8A, 8B, 8C, and 8D), Waste Oil Pit, Oily Waste Treatment Plant Area, and Hazardous Waste Storage Facility These sites include three units of the active oily waste treatment plant (OWTP) (NIRP Sites 8A, 8B, 8C), the inactive waste oil pit (NIRP Site 8), and the RCRA permitted hazardous waste storage facility (NIRP Site 8D). These sites are RFA SWMU 6, 7, 8, 9, and 10, respectively.

3.5.3.1 Source Characterization SWMU 6, 7, 8, and 9 are located on the western end of a fuel farm adjacent to the St. Johns River (Figure 3-5). SWMU 6, 7, 8, and 9 are described in Section 2.3.2.3. SWMU 10, the RCRA Hazardous Waste Storage Area, is located in the same area. SWMU 10 is described in Section 2.3.2.4.

Source characterization information that has been provided in earlier reports is all that is presently known (IAS, 1986; ESI, 1988). Planned activities include sampling and analysis for Appendix IX constituents of groundwaters, surface waters, soils, sediments, and sludges. All borings will be logged to provide local geological data. Soils will be analyzed for density, moisture content, and permeability. Aquifer characteristics will be measured by slug tests.

No information concerning the characterization of the influent wastewater at SWMU 9 is available, but the effluent is sampled and analyzed regularly for compliance with the requirements of the NPDES permit. The draft RFA report (Kearney, 1989) states that a study conducted by USEPA in July 1987 determined that the quality of the effluent was acceptable with a biochemical oxygen demand (BOD_5) of 28 mg/ℓ, total suspended solids (TSS) of 16 mg/ℓ, and oil and grease content of 9.9 mg/ℓ. Organic compounds detected in the effluent included acetone, benzene, toluene, ethyl benzene, methyl ethyl ketone, and 2,4-dimethylphenol. A study conducted by the Naval Facilities Engineering Command noted that the effluent from the OWTP violated the NPDES standard for monthly average oil and grease content (10 mg/ℓ) for 6 months during the 12-month period from April 1986 to March 1987 and that 17 percent of all samples exceeded the daily maximum standard of 15 mg/ℓ.

The oil and lime sludge from the clarifier is transferred to one of three sludge lagoons for concentration and storage (NIRP Site 8A). These lagoons have a capacity of 4.85 acre-feet and were designed to provide 3 to 4 years of sludge storage.

Materials of construction at these SWMUs are as follows.

> SWMU 6 (NIRP Site 8), Waste Oil Pit/Sludge Drying - Unlined earthen basin filled-in with site-derived soils.

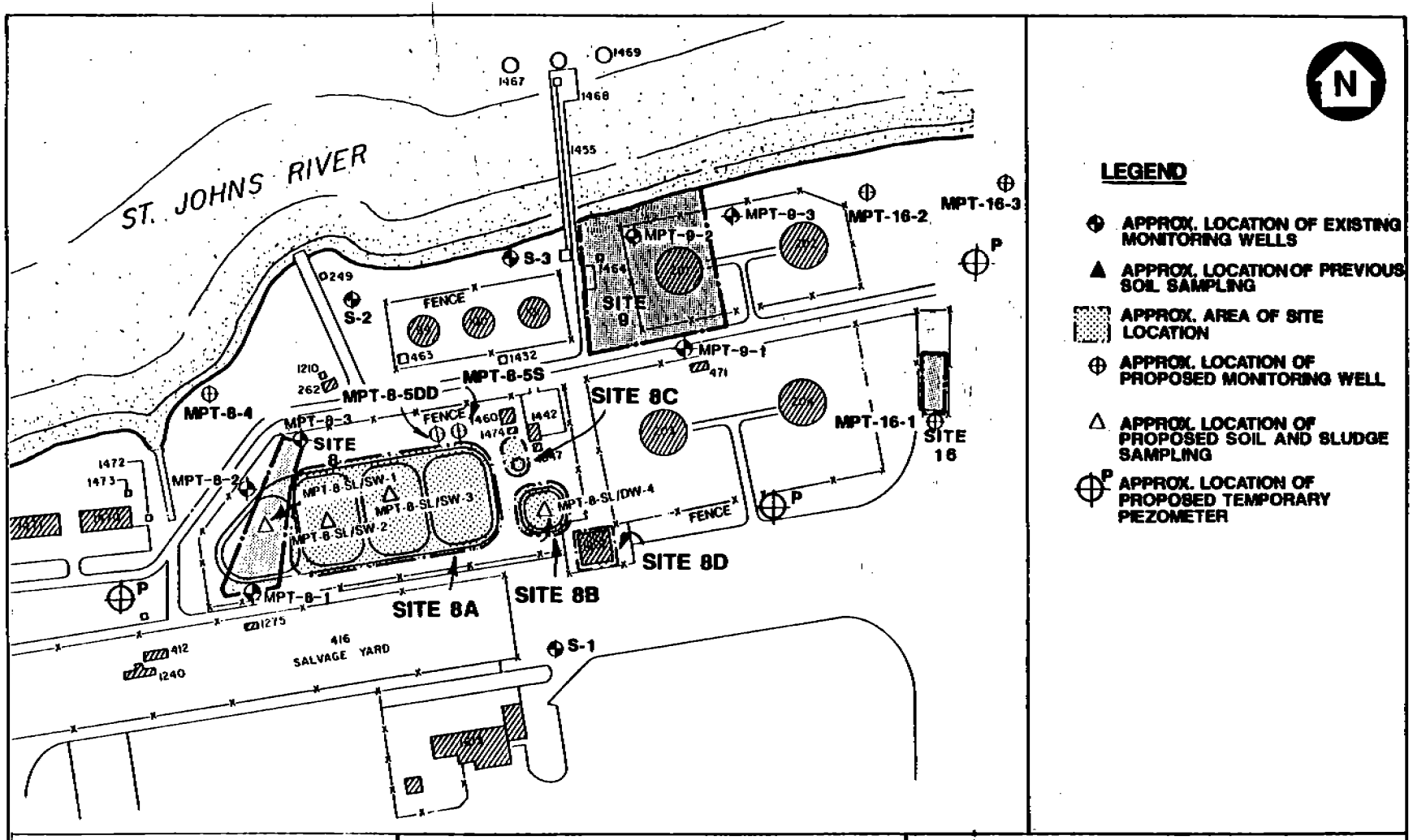

FIGURE 3-5

LOCATIONS OF EXPLORATIONS (SITE 8, 8A, 8B, 8C, 8D, 9, AND 16) SWMU 6, 7, 8, 9, 10, 11, AND 16

RCRA FACILITY INVESTIGATION WORKPLAN
U.S. NAVAL STATION
MAYPORT, FLORIDA

SWMU 7 (NIRP Site 8A), OTWP Sludge Drying Beds - The eastern most lagoon has been lined with geomembranes for spill protection for the three 30,000-gallon steel storage tanks erected in the lagoon. The other two lagoons are unlined earthen basins. This site has been active since 1977.

SWMU 8 (NIRP Site 8B), OWTP Percolation Pond - This is an unlined earthen basin that was active from 1977 to 1991.

SWMU 9 (NIRP Site 8C), Oily Waste Treatment Plant (OWTP) - This is an active Kraus treatment system, using aboveground steel tankage.

Closure information available on each site is as follows.

SWMU 6 (NIRP Site 8), Waste Oil Pit/Sludge Drying Bed - This is an unlined earthen basin that was used in a standby mode for sludge storage. It was filled and the site was graded at closure.

SWMU 7 (NIRP Site 8A), OWTP Sludge Drying Beds - The eastern most lagoon is active and has had three 30,000-gallon steel storage tanks installed in it. The lagoon has been lined with a geosynthetic membrane for overflow and spill protection. The other two lagoons are active unlined earthen basins.

SWMU 8 (NIRP Site 8B), OWTP Percolation Pond - The pond is active.

SWMU 9 (NIRP Site 8C), Oily Waste Treatment Plant (OWTP) - This is an active treatment plant using the Kraus treatment system.

SWMU 10 (NIRP Site 8D), RCRA Hazardous Waste Storage Area - This is an active site.

3.5.3.2 **Environmental Setting** The oily waste treatment area and the RCRA Hazardous Waste Storage area are located on the north side of NAVSTA Mayport, near the St. Johns River. Ground level elevations in this area are 11 to 13 feet above MSL, except for the berms surrounding the oily sludge lagoons, which rise to about 17 feet above MSL. Surface water drainage flows north directly into the St. Johns River.

The shallow surface soils at SWMU 6 (NIRP Site 8) consist mainly of fine to medium quartz sand. A thin (less than 0.5 foot) clay layer was noted during the ESI in boring MPT-8-1 at 15 feet BLS. This clay layer was not noted in borings MPT-8-2 and MPT-8-3. Water level measurements were collected on two occasions during the ESI at Site 8. Water level measurements in monitoring well MPT-8-3 were not used to assess flow direction due to the presence of free product. Water level measurements obtained from monitoring wells on Site 8 and Site 9 on October 8, 1987, indicate an average hydraulic gradient of 0.01 across Site 8. Groundwater flows north-northwest directly towards the St. Johns River, which is located approximately 275 feet north of monitoring well MPT-8-3.

Assuming a conservative estimate of 0.25 for the effective porosity of the soil medium and a value for the hydraulic conductivity of 2.8 ft/day (upper limit of aquifer test procedure), the seepage velocity within the surficial aquifer was

calculated to be greater than 0.1 ft/day. Due to the actual hydraulic conductivity exceeding the test procedure's maximum limit, a more accurate calculation of the seepage velocity cannot be made.

3.5.3.3 Release Characterization Three monitoring wells were installed at SWMU 6 (NIRP Site 8) during the ESI (see Figure 3-5). Specifications for existing monitoring wells are presented in Appendix D, Volume I, for wells installed during the ESI (1987). Soil samples collected just above the water table in each boring and groundwater samples from each well were analyzed for priority pollutants.

Volatile Organics. Trichlorofluoromethane was found in the soil sample collected upgradient of Site 8 but was not detected in groundwater. Trichlorofluoromethane is a highly volatile fluorocarbon commonly known as Freon 11. Benzene (2 $\mu g/\ell$) and ethyl benzene (12 $\mu g/\ell$) detected in the groundwater samples from monitoring wells MPT-8-2 and MPT-8-3 are indicative of petroleum contamination.

Endrin aldehyde (0.05 $\mu g/\ell$) and G-BHC (0.03 $\mu g/\ell$) were also detected in the groundwater sample collected from monitoring well MPT-8-3. Approximately 0.9 foot of free petroleum hydrocarbon product was observed in monitoring well MPT-8-3, and a high concentration of unidentified hydrocarbons in the groundwater sample from that well resulted in elevated analytical detection limits for base/neutral and acid extractable organics.

Other Organics. Naphthalene and bis (2-ethylhexyl) phthalate were detected in the groundwater sample collected from monitoring well MPT-8-2. The naphthalene (46 $\mu g/\ell$) is indicative of petroleum contamination and bis (2-ethylhexyl) phthalate is a constituent of plastics.

Inorganics. Total lead was detected at 2 $\mu g/\ell$ in the groundwater sample collected from monitoring well MPT-8-2.

The ESI focused on inactive sites. Because the oily waste treatment system (sites 8A, 8B, 8C) and the hazardous waste storage facility (Site 8D) are currently operating, they were not included in the ESI.

In order to characterize releases associated with SWMU 6, 7, 8, 9, and 10 (NIRP Sites 8, 8A, 8B, 8C, and 8D), groundwater samples will be collected from the three monitoring wells installed around SWMU 6 during the ESI and three other existing monitoring wells upgradient and downgradient of SWMU 6, 7, 8, 9, and 10 (NIRP Sites 8A, 8B, 8C, and 8D) (see Figure 3-5). An additional monitoring well will be installed northwest of (NIRP Sites 8 and 8A) close to the St. Johns River in order to assess migration of contaminants towards the river. Sludge samples will be collected from the effluent leaching pond (NIRP Site 8B) and the oily sludge lagoons (NIRP Site 8A). Any standing water in the sludge lagoons will also be sampled, as well as the effluent from the oily waste treatment plant.

Groundwater, effluent, and sludge samples will be analyzed for metals (USEPA Methods 6010, 7870, and 7470), volatile organic compounds (USEPA Method 8240), pesticides/PCBs (USEPA Method 8080), and semivolatile organic compounds (USEPA Method 8270).

Subsurface soil samples were collected at each of the three boreholes constructed during monitoring well installation at NIRP Sites 8, 8A, 8B, 8C, and 8D (RFA SWMU 6, 7, 8, 9, and 10, respectively) during the ESI (1987). They were analyzed for priority pollutant metals, volatile organic compounds, and semivolatile organic compounds. The findings of the ESI are reported in the Final ESI Report (April 1988). Data from these subsurface soil samples indicated detectable concentrations of trichlorofluoromethane (79 μg/kg) in soils at the location of the upgradient well, MPT-8-1.

Additional subsurface soil samples will be collected at the borehole locations of the wells proposed for NIRP Site 8, 8A, 8B, 8C, and 8D (SWMU 6, 7, 8, 9, and 10) area during RFI implementation to confirm previous findings and to further characterize the vertical and horizontal extent of possible contamination. Soil samples will be collected just above groundwater level and analyzed for Appendix IX compounds. Other soil samples will be collected for analysis of general physical and chemical properties. These properties will include: bulk density, cation exchange capacity, organic content, soil pH, particle size distribution, moisture content, and infiltration (at each bore-hole location). Porosity and soil sorptive capacity will be derived from basic soil properties. These general physical and chemical parameters will assist in assessing contaminant fate and transport models and to provide fundamental data to support future potential corrective measures at the site.

The following subsurface soil samples will be collected near Site 8 (SWMU 6) during RFI implementation. The original well designation scheme is used in order to remain consistent with previous work.

Location	Frequency	Analyses
MPT-8-4 MPT-8-5S MPT-8-5D	One per boring	Appendix IX volatile organic compounds (USEPA Method 8240), semivolatile organic compounds (USEPA Method 8270), PCB/pesticides (USEPA Method 8080) and metals (USEPA Method 6010, 7480, 7470)
MPT-8-4 MPT-8-5S MPT-8-5D	One per boring	Bulk density (ASTM D2937-83), cation exchange capacity (USEPA Method 9081), organic content (USEPA Method 9060), soil pH (USEPA Method 9045), particle size distribution (ASTM D422-63), moisture content (ASTM D2216-80), and infiltration (ASTM D3385)

A network of piezometers will be installed at NAVSTA Mayport in order to more accurately assess groundwater flow rates and directions in the surficial aquifer.

Many of these piezometers will be installed near SWMU 8, 8A, 8B, 8C and 8D (RFA SWMU 6, 7, 8, 9, and 10, respectively). In addition, one deep well will be constructed to the top of the Hawthorn Formation within the Sites 8, 8A, 8B, 8C and 8D (RFA Sites 6, 7, 8, 9, and 10, respectively) group. The purpose of this well is to obtain lithologic data below the site to the Hawthorn Formation, groundwater quality information at depth, and vertical hydraulic gradient information between water-bearing zones. Two additional shallow wells (MPT-8-4 and MPT-8-5S) are also proposed in order to collect near surface groundwater quality data and water table elevations. Data collected from these monitoring wells and piezometers will be used to refine estimates of groundwater flow rates and direction, contaminant migration, and tidal influences on groundwater gradients.

The depths of the shallow wells will be estimated from the boring log of the deep well, which will be constructed first. The shallow wells will be completed to the top of the first aquitard if one is observed, which is presently estimated to be at a depth of 10 to 15 feet below land surface. Because of the anticipated shallow depths of the wells, the entire saturated lengths will be screened. The screened interval will extend to 3 feet above the water surface. The intent of this well design is to permit sampling of DNAPL if present at the bottom of the well, and floating products at the top, as well as soluble-phase aquifer water quality parameters.

The following samples are proposed for sludge and wastewater sampling at NIRP Site 8A (RFA SWMU 7) and NIRP Site 8B (RFA SWMU 8) during the RFI. The purpose of these samples is to characterize the contaminants discharged to these SWMUs, and therefore identify the array of contaminants that may have been released from these sites to soil and groundwater. Sample locations are presented in Figure 3-5 "Locations of Explorations SWMU 6, 7, 8, 9, and 10 (NIRP Site 8, 8A, 8B, 8C, & 8D)."

Location	Frequency	Analyses
MPT-8-SD-1 MPT-8-SD-2	One sediment sample per location	Appendix IX volatile organic compounds (USEPA Method 8240), semivolatile organic compounds (USEPA Method 8270), PCB/pesticide (USEPA Method 8080) and metals (USEPA Method 6010, 7480, 7470)
MPT-8-SW-1 MPT-8-SW-2	One surface water sample per location	Appendix IX volatile organic compounds (USEPA Method 8240), semivolatile organic compounds (USEPA Method 8270), and metals (USEPA Method 6010, 7480, 7470)

The following field quality control samples will be collected during field sampling activities.

- **Duplicates**. Duplicates of soil, waste, groundwater, surface water, and sediment samples will be submitted for analysis of all parameters specified for the original samples (e.g., Appendix IX compounds) at a rate of 10 percent of the samples analyzed, or a minimum of 1 per event for each media sampled.

- **Trip Blanks**. A trip blank will be included with each shipment of water samples scheduled for VOA and will be analyzed with other VOA samples.

- **Equipment Rinsate**. A minimum of one equipment rinsate (sampler) blank per day for bailers, sampling pumps, and/or tubing will be scheduled during monitoring well sampling. A minimum of two soil sampler blanks will be collected each day during field soil sampling. One will be collected at the initiation of daily soil sampling activities and the other at the completion.

- **Field Blanks**. A minimum of one field blank will be collected each sampling day.

All soil, sediments, groundwater, and surface water samples will be analyzed for Appendix IX constituents. Upon assessment of initial analytical data, contaminants of concern will be identified for subsequent analysis, as appropriate.

3.5.3.4 Potential Receptors Direct human exposure to groundwater contamination at SWMU 6, 7, 8, 9, and 10 (NIRP Sites 8, 8A, 8B, 8C, and 8D) is not expected. Groundwater flow from the sites as explained in Section 3.5.3.2 is directly north to the St Johns River, 275 feet north of the sites. There are no identified water supply wells within the area between the sites and the river.

Humans may, however, be exposed to contaminants that migrate from the sites to the St. Johns River via direct contact or consumption of contaminated biota. Exposures are dependent upon uses of the river by humans. Current and potential future uses of the St. Johns River near the sites will be determined as part of the receptor identification. Additional exposures may occur for humans on the sites to soil, surface water, or sediment contamination. Use of the sites, however, is restricted to Navy personnel. Uses and access to the sites will be further described as part of the receptor identification.

Ecological receptors may be exposed to contamination migrating to the St. Johns River and to contamination in the inactive waste oil ~~pit and~~ the three sludge lagoons. Site-specific ecological receptor identification activities include collection of information on aquatic and terrestrial organisms inhabiting or using the St. Johns River as well as terrestrial organisms that may come into contact with the wastes in the waste oil pit or sludge lagoons. If receptors cannot be adequately characterized using the available information collected, then biota sampling in the St. Johns River will be proposed to fill the data gaps.

3.5.4 SWMU 11 (NIRP Site 9), Fuel Spill Area

3.5.4.1 Source Characterization SWMU 11 (NIRP Site 9) is located in the NSC fuel farm area on the north side of NAVSTA Mayport adjacent to the St. Johns River and Tank 201 (see Figure 3-5). SWMU 11 is described in Section 2.3.2.5.

3.5.4.2 Environmental Setting Ground level elevations at SWMU 11 (NIRP Site 9) range from 10 to 12 feet above MSL adjacent to the road and pier to 25 feet above MSL where soil is bermed around the fuel tank (Tank 201). Surface water runoff drains directly into the St. Johns River.

The shallow surface deposits at SWMU 11 consist mainly of fine quartz sands with shells. Two thin clay lenses (less than 0.5-foot thick) were identified in boring MPT-9-1 at about 6 feet BLS. The clay lenses were not identified in either borings MPT-9-2 or MPT-9-3. Monitoring wells installed in these borings were screened in the fine to medium sand with shells.

Water levels were measured in the monitoring wells twice during the ESI. The water level measurements were used to calculate a hydraulic gradient of 0.003 across SWMU 11. Groundwater flows north, directly to the St. Johns River, which is located approximately 30 feet north of monitoring wells MPT-9-2 and MPT-9-3.

Rising head tests were conducted on monitoring wells installed during the ESI. The upper limit for hydraulic conductivity was calculated to be 2.8 feet per day. Assuming a conservative estimate of 0.25 for the effective porosity of the aquifer, the calculated seepage velocity for the surficial aquifer exceeds $3x10^{-2}$ ft/day. Due to the actual hydraulic conductivity exceeding the rising head test procedure upper limit, a more accurate calculation of the seepage velocity cannot be made.

Groundwater flow direction during the ESI (1987) was determined by measuring depth to water and subtracting the values from the top of surveyed casing elevation for each monitoring well. The resulting water level elevation was then observed for each monitoring well and a direction based on the hydraulic gradient was obtained. Data gathered from two separate dates (September 18, 1987, and October 8, 1987) was obtained to develop the existing conditions potentiometric map showing the flow direction to the north towards the St. Johns River (ESI, 1987).

The existing monitoring wells were placed in the anticipated downgradient direction based on surface elevations and the proximity to the river. Future water level data and contour maps will be produced based on updated information. The ESI Report presented the following rationales for monitoring well placement:

- MPT-9-1 is a shallow monitoring well located northeast of Tank 203 and south of Tank 201 (south of SWMU 11) and is upgradient of the suspected fuel spill area.

- MPT-9-2 is a shallow monitoring well located northwest of Tank 201 and is downgradient of the suspected fuel spill area.

- MPT-9-3 is a shallow monitoring well located northeast of Tank 201 and is anticipated to be downgradient of the suspected fuel spill area.

Additional monitoring wells are proposed for SWMU 16 in order to characterize downgradient water quality in the surficial aquifer flowing towards the St. Johns River from this site. The proposed locations of these new monitoring wells are presented in Figure 2-7 "Proposed Piezometer and Monitoring Well Network" and Figure 3-5. Because of their proximity to SWMU 11, these wells will also help to determine the eastern extent of possible plumes arising from SWMU 11.

3.5.4.3 Release Characterization Three monitoring wells were installed in the vicinity of SWMU 11 during the ESI (see Figure 3-5). Soil samples were collected from each boring just above the water table, and groundwater samples were collected from each well.

Volatile Organics. Methylene chloride (186 $\mu g/kg$) was found in the soil sample obtained from boring MPT-9-3; however, it was not detected in any of the groundwater samples taken from SWMU 11.

Other Organics. Naphthalene (120 $\mu g/\ell$) was detected in the groundwater sample collected from monitoring well MPT-9-2. The naphthalene is most likely a contaminant from a fuel spill. The pesticides B-BHC (0.07 $\mu g/\ell$) and 4,4'-DDE (0.04 $\mu g/\ell$) were detected in the groundwater sample collected from monitoring well MPT-9-1.

Inorganics. Concentrations of total lead (2 to 3 $\mu g/\ell$) in groundwater were detected in monitoring wells MPT-9-2 and MPT-9-3, respectively. Total mercury detected in the groundwater sample obtained from monitoring well MPT-9-3 was 0.8 $\mu g/\ell$.

Existing monitoring wells at SWMU 11 (e.g., MPT-9-1, MPT-9-2, and MPT-9-3) will be resampled and analyzed for Appendix IX compounds in order to more accurately identify and characterize contaminants of concern suspected of being released from the site. Specifications for existing monitoring wells are presented in Appendix D, Volume I, for wells installed during the ESI (E.C. Jordan, 1987).

The three monitoring wells at Site 11 will be resampled during the RFI and analyzed for metals (USEPA Methods 6010, 7480, and 7470), volatile organic compounds (USEPA Method 8240), semivolatile organic compounds (USEPA Method 8270), and pesticides and PCBs (USEPA Method 8080).

Well screens for monitoring wells MPT-9-1, MPT-9-2, and MPT-9-3 extend from at least 1 to 3 feet above the water table to the full penetrating depths of the wells. The intent of this well design was to permit sampling of DNAPL if present at the bottom of the well, and floating products at the top, as well as soluble-phase aquifer water quality parameters. Future upper aquifer monitoring wells installed in this area will be of similar design.

The following field quality control samples will be collected during field sampling activities. QA/QC requirements are presented in detail in Appendix A, Volume II.

- **Duplicates**. Duplicates of soil, waste, groundwater, surface water, and sediments sample will be submitted for analysis of all parameters specified for the original samples (e.g., Appendix IX compounds) at a rate of 10 percent of the samples analyzed, or a minimum of 1 per event for each media sampled.

- **Trip Blanks**. A trip blank will be included with each shipment of water samples scheduled for VOA and will be analyzed with other VOA samples.

- **Equipment Rinsate Blanks**. A minimum of one equipment rinsate (sampler) blank per day for bailers, sampling pumps, and/or tubing will be scheduled during monitoring well sampling. A minimum of two soil sampler blanks will be collected each day during field soil sampling. One will be collected at the initiation of daily soil sampling activities and the other at the completion.

- **Field Blanks**. A minimum of one field blank will be collected each sampling day.

All soil, sediment, groundwater, and surface water samples will be analyzed for Appendix IX constituents. Upon assessment of initial analytical data, contaminants of concern will be identified for subsequent analysis, as appropriate.

3.5.4.4 Potential Receptors Direct human exposure to groundwater contamination at SWMU 11 is not expected. Groundwater flow from the site as explained in Section 3.5.4.2 is directly north 30 feet to the St. Johns River. There are no previously identified production or other supply wells located within this area (Section 2.2.7.1). Ecological and human receptors may, however, be exposed to contamination migrating to the St. Johns River.

Receptor identification activities at SWMU 11 will include determination of current and future uses of the St. Johns River near SWMU 11 and collection of information on aquatic and terrestrial biota inhabiting or using the St. Johns River.

3.5.5 SWMU 12 (NIRP Site 11), Neutralization Basin

3.5.5.1 Source Characterization The neutralization basin is located in the northern part of NAVSTA Mayport, approximately 40 feet to the north of boiler building 1241 (Figure 3-6). SWMU 12 is described in Section 2.3.2.6. The basin is approximately 75 feet from the St. Johns River, and is used to store treatment effluent from the anion/cation exchange process used in the boiler plant. The original neutralization basin was first put into operation in February 1971 and was constructed of an asphalt base covered with a synthetic liner. The liner and asphalt were in good condition until the liner was damaged by a hurricane in 1985.

A new basin was constructed and a new liner installed in 1986. The basin began operations in January 1987. The new basin, which is currently in use, is constructed of 6-inch-thick concrete on top of 12 inches of compacted soil. The

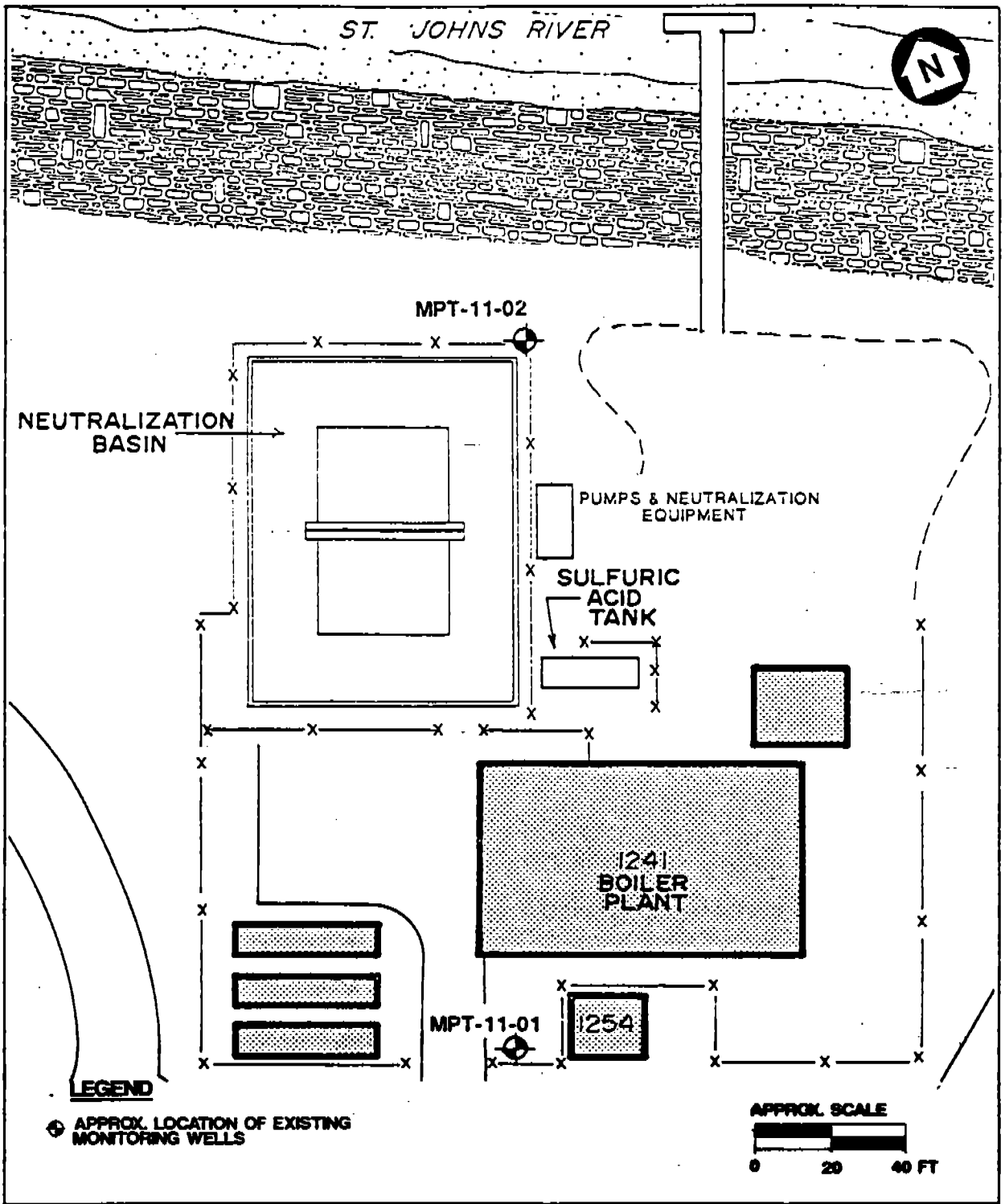

FIGURE 3-6

LOCATION OF EXPLORATIONS
(SITE 11)
SWMU 12

RCRA FACILITY INVESTIGATION WORKPLAN

U.S. NAVAL STATION MAYPORT, FLORIDA

concrete is covered with a Hypalon liner. No records were found of soil analysis done during construction. Four soil samples were subsequently collected in May of 1989 as part of the April 1988 Basin Closure Plan. Results of these analysis are presented in Appendix A of Volume I.

The basin is 6 feet deep, 59 feet wide, and 78 feet long. Influent from the boiler building enters the basin through a 6-inch underground pipeline. The basin is divided into two cells and the effluent is discharged through sewer pipes to the Wastewater Treatment Facility. Release controls for the unit include 6-foot-high berms on all sides of the basin and flow rate controls in the regenerate systems.

During a site inspection by FDER on February 23, 1987, the neutralization basin was determined to be a RCRA solid waste management unit because the effluent entering the basin sometimes had a pH less than 2 or greater than 12.5. FDER issued NAVSTA Mayport a Notice of Violation (OGC Case No. 87-0539, June 10, 1987) for operating a hazardous waste surface impoundment and required NAVSTA Mayport to submit a closure plan for the unit.

A closure plan and groundwater monitoring plan for the neutralization basin were approved by FDER in December 1988. The FDER-approved closure was in accordance with RCRA closure requirements of a regulated hazardous waste management unit. A copy of the certification letter from an independent Professional Engineer is located in Appendix A of Volume I. The closure plan proposed soil and sediment sampling to demonstrate clean closure for the unit, to be verified by 1 year of quarterly groundwater sampling and analysis. NAVSTA Mayport plans to continue to use the neutralization basin after closure for management of nonhazardous boiler regenerant water.

3.5.5.2 **Environmental Setting** The neutralization basin at Building No. 1241 is located on the south bank of the St. Johns River at the north edge of Mayport Naval Station. The site is on a man-modified sand spit between the river and the Mayport Basin. This site is described in Section 2.3.2.6.

The geology of the site consists of beach sand deposits, dredge spoil, and rock rip-rap debris, which have been built up and intermingled over the last 45 years. Topography of the site is flat with a 10-foot rip-rap slope down to the edge of the St. Johns River. Site elevation is 11 feet above MSL and the soil surface around the basin is sandy. The first confining bed of gray green marl is expected to occur at a depth of 50 to 70 feet below land surface, based upon soil boring logs at the station. Subsurface geology below the confining bed consists of several hundred feet of shale and marl of the Hawthorn Formation overlying the Floridan aquifer system.

The St. Johns River and the Mayport Basin are tidally influenced with a diurnal tide of 5 feet. This tidal fluctuation can also be expected in the groundwater beneath the site. The estimated depth to water is 9 to 10 feet bls. Groundwater flow direction should be from the recharge area on the sand spit to the river, and thus should be northward under the basin and into the St. Johns River.

The surficial sands under the basin constitute the first significant aquifer at the site. This aquifer is not used as a source of drinking water at NAVSTA Mayport.

3.5.5.3 Release Characterization In accordance with Addendum A to the Closure Plan for the neutralization basin at Building 1241, a slant drilling exploration program was undertaken in May 1989, for the purpose of obtaining soil samples for laboratory analysis. Slant borings were advanced under each neutralization basin cell with an Atlas™ CAPCO Model 601 drilling rig. The angle of boring was 25 degrees from the horizontal, which paralleled the side slope of the neutralization basin. At both boring locations, soil samples were collected at the 2.5- to 3.25-foot and 3.75- to 4.5-foot interval below the bottom of the basin. The horizontal position of the samples was approximately 16 to 18 feet and 21.5 to 23.5 feet from the east edge of the neutralization basin.

Both soil samples collected at the 2-foot interval consisted of a green clay. The two samples collected at the 4-foot interval were a tan-to-brown fine sand with shells. The samples were analyzed by USEPA SW-846 Method 1310, the Extraction Procedure (EP) Toxicity Test. Laboratory results are included in Appendix A.

As noted in the laboratory report, the results of the EP toxicity-metals analysis were all below method detection limits for all four soil samples. The value of soil pH ranged from 8.18 in sample B-1 S-1 to 9.16 in sample B-2 S-2. Based upon the analytical results, it would appear that a lower pH exists in the soils at the 2-foot interval than at the 4-foot interval. The pH results are consistent with the sodic soils as found in this area and do not warrant concern.

On April 25, 1989 personnel from ABB-ES and Environmental Monitoring Corp. (monitoring well/driller subcontractor) implemented the Groundwater Monitoring Plan at the neutralization basin. During the course of the day, two monitoring wells (MPT-11-01 and MPT-11-02) were installed at the locations indicated in Figure 3-6. Subsequent to monitoring well installations and development, a groundwater sample was collected from each of the new monitoring wells. The two groundwater samples, plus the four QA/QC samples (trip blank, field blank, equipment blank, and duplicate [MPT-11-02]), were shipped the next day to Pioneer Laboratory, Inc., Pensacola, Florida, for the analysis of 40 CFR 265 Appendix III constituents, 40 CFR 265.92(b)(2) and (3) constituents, and the secondary drinking water parameters.

The laboratory report on this sampling event is also included in Appendix A. This data is summarized in Table 3-1. The concentration of the majority of the parameters analyzed do not exceed Florida Drinking Water Standards. Parameters that exceeded drinking water standards are to be expected in that they reflect concentrations normally found in saline waters (e.g., chloride, sulfates, sodium, etc.). In addition, concentrations for those compounds or elements found in sea water were greater in the groundwater sample obtained from monitoring well MPT-11-02. This well is closer to the St. Johns River.

Table 3-1
Summary of Analytical Results First Quarter Sampling, Site 11 - Neutralization Basin

RCRA Facility Investigation
NAVSTA Mayport
Mayport, Florida

Parameter	Florida Drinking Water Standard	April 25, 1989		
		MPT-11-01	MPT-11-02	MPT-11-02 (DUP)
		40 CFR 265 Appendix III Metals		
Arsenic (mg/ℓ)	0.05	0.007	0.016	0.011
Barium (mg/ℓ)	1	BDL	BDL	BDL
Cadmium (mg/ℓ)	0.010	0.001	0.002	0.001
Chromium (mg/ℓ)	0.05	BDL	BDL	0.010
Lead (mg/ℓ)	0.05	BDL	0.005	BDL
Mercury (mg/ℓ)	0.002	BDL	BDL	BDL
Selenium (mg/ℓ)	0.01	BDL	BDL	BDL
Silver (mg/ℓ)	0.05	BDL	BDL	BDL
		40 CFR 265 Appendix III Non-Metals		
Endrin (μg/ℓ)	0.2	BDL	BDL	BDL
Fluoride (mg/ℓ)	4.0	0.43	1.5	1.5
Lindane (mg/ℓ)	0.004	BDL	BDL	BDL
Nitrate-N (mg/ℓ)	10	0.3	BDL	BDL
Methoxychlor (mg/ℓ)	0.1	BDL	BDL	BDL
Toxaphene (μg/ℓ)	5.0	BDL	BDL	BDL
2,4-D (mg/ℓ)	0.1	BDL	BDL	BDL
2,4,5-TP (mg/ℓ)	0.01	BDL	BDL	BDL
Radium 226+228 (pCi/l)	5.0	2.5±1.4	0.9±1.3	1.5±1.3
Gross alpha (pCi/l)	15	11.4±8.6	0.0±35.8	9.3±14.7
Coliform bacteria (CNT/100 mℓ)	1	BDL	BDL	BDL
Turbidity (NTU)	1	6.2	16	14
		40 CFR 265.92(B)(2) Parameters		
Chloride (mg/ℓ)	250	170	1,084	1,734
Iron (mg/ℓ)	0.3	6	4.7	7.3
Manganese (mg/ℓ)	0.05	0.14	0.24	0.32
Phenols (mg/ℓ)		BDL	BDL	BDL
Sodium (mg/ℓ)	160	144	740	750
Sulfate (mg/ℓ)	250	412	202	242
		40 CFR 265.92(b)(3) Parameters		
pH		7.24	7.31	7.37
Specific conductance (μmho/cm)		1,491	5,630	4,255
Total organic carbon (mg/ℓ)		4	5	4
Total organic halogen (mg/ℓ)		70	70	70

Table 3-1 (Continued)
Summary of Analytical Results First Quarter Sampling, Site 11 - Neutralization Basin

RCRA Facility Investigation
NAVSTA Mayport
Mayport, Florida

Parameter	Florida Drinking Water Standard	April 25, 1989		
		MPT-11-01	MPT-11-02	MPT-11-02 (DUP)
	Secondary Drinking Water Standards			
Color (color units)	15	30	30	30
Copper (mg/ℓ)	1	BDL	BDL	BDL
Corrosivity (LL.S.I.)		0.44	0.40	0.64
Foaming agents (mg/ℓ)	0.5	0.027	0.060	0.052
Odor (threshold odor number)	3	1	1	1
Total dissolved solids (mg/ℓ)	500	991	3,264	2,343
Zinc (mg/ℓ)	5	0.08	0.04	0.07

Notes: NA = not analyzed.
BDL = below detection limit.

Based upon the results of this sampling event, the subsequent analytical program was limited to pH, specific conductance, and 40 CFR 265 Appendix III metals. The monitoring wells at Site 11 were sampled again on July 6, 1989, and on October 10, 1989. Results of these sampling events are shown in Table 3-2, and the complete laboratory report is included in Appendix A. No results exceed the State of Florida's Drinking Water Standards.

One additional groundwater sampling event is scheduled for Site 11 in the Closure Plan submitted to FDER. Results from investigations to date indicate that no release of contaminants to the environment has occurred at Site 11 and no further investigations are planned as part of the RFI.

3.5.6 SWMU 13 (NIRP Site 13), Old Fire Training Area

3.5.6.1 Source Characterization SWMU 13 includes three areas at the south end of an abandoned runway (Figure 3-7); SWMU 13 is described in Section 2.3.2.7.

Operating practices involved placement of approximately 4,880 gallons per year of waste oils, solvents, and mercury wastes in a low earthen-bermed pit built on top of an abandoned asphalt runway and ignited for firefighting training. Unburned materials could have seeped into the soil beneath the runway or flowed off the edges of the runway. Unit dimensions are approximate and shown in Figure 3-7 "Location of Explorations, SWMU 13." The pits were leveled and graded during new construction.

During construction of a new pipeline, soil of the southern-most area was disturbed to a depth of 4 to 6 feet. The soils were spread over the area and the area was paved with asphalt as part of a parking lot. The areas are now covered by the Aircraft Intermediate Maintenance Department (AIMD) building, roads, parking areas, and grassy median strips.

Source characterization information that has been provided in earlier reports is all that is presently known (IAS, 1986; ESI, 1986). Planned activities include sampling and analysis for Appendix IX constituents of groundwaters, soils, and sediments. All borings will be logged to provide local geological data. Soils will be analyzed for density, moisture content, and permeability. Aquifer characteristics will be measured by slug tests.

3.5.6.2 Environmental Setting SWMU 9 is located in the central part of the base, north of Site 6 and south and east of the main runway. Ground surface elevations across the site range from 7 to 10 feet MSL. Much of the site is now covered by roads, parking lots, hangar pads, and buildings. A few grassy areas are present within medians and around buildings.

Surficial geology at SWMU 13 is similar to that underlying SWMUs 2, 3, 4, and 5. From the surface to around 0 to -2 feet MSL the soil is comprised of a fine to medium sand with occasional shells and shell fragments. Below the sand lies a stiff, dark olive clay. The thickness of the clay layer is unknown but is at least 2 feet in places.

Table 3-2
Summary of Analytical Results Second and Third Quarter Sampling, Site 11 - Neutralization Basin

RCRA Facility Investigation
NAVSTA Mayport
Mayport, Florida

Parameter	Florida Drinking Water Standard	July 6, 1989			October 10, 1989		
		MPT-11-01	MPT-11-01D	MPT-11-02	MPT-11-02	MPT-11-02	MPT-11-02D
	40 CFR 265 Appendix III Metals						
Arsenic (mg/ℓ)	0.05	0.008	0.008	0.006	BDL	0.004	0.004
Barium (mg/ℓ)	1	BDL	BDL	BDL	BDL	BDL	BDL
Cadmium (mg/ℓ)	0.010	0.0011	0.0004	0.0002	0.010	BDL	BDL
Chromium (mg/ℓ)	0.05	BDL	BDL	BDL	BDL	BDL	BDL
Lead (mg/ℓ)	0.05	0.006	0.002	BDL	0.002	BDL	BDL
Mercury (mg/ℓ)	0.002	BDL	BDL	0.001	BDL	0.0001	BDL
Selenium (mg/ℓ)	0.01	BDL	BDL	BDL	BDL	BDL	BDL
Silver (mg/ℓ)	0.05	0.0001	BDL	BDL	BDL	BDL	BDL

Notes: NA = not analyzed.
BDL = below detection limit.

Water levels were measured on three occasions during the ESI in the three monitoring wells located around the site. This data plus inference made from local topography suggest that groundwater is flowing in a radial pattern in the vicinity of SWMU 13. Flow trends towards the turning basin in the eastern part of the site and towards the drainage ditch network throughout the southwestern part of the site. Future potentiometric surface maps will be prepared based on updated information.

Past water level measurements of existing wells are presented in Appendix A-7 of the ESI (1987). The following measurements were recorded at SWMU 13:

Location	Ground Elevation (feet above msl)	Water Elevation (feet above msl)		
		9/18/87	9/24/87	10/8/87
MPT-13-1	10.28	5.61	5.43	5.20
MPT-13-2	9.31	6.65	6.35	6.00
MPT-13-3	7.48	5.33	5.45	6.19

As described in Section 3.2, a network of piezometers will be installed at NAVSTA Mayport in order to more accurately measure groundwater elevations and flow patterns. Some of these piezometers will be located near SWMU 13. Figure 2-7 "Proposed Piezometer and Monitoring Well Locations" presents the proposed network configuration. In addition to the piezometers, additional monitoring wells will be installed in the same geologic strata as the existing monitoring wells. The existing and new monitoring wells and piezometers will provide data to characterize groundwater flow rate and direction at the site.

New water level contour maps will be produced during the potentiometric survey. Groundwater flow rates will be determined as outlined in Section 3.2.5.

3.5.6.3 Release Characterization Three monitoring wells (MPT-13-1, MPT-13-2, and MPT-13-3) were installed in the vicinity of SWMU 13 during the ESI (see Figure 3-7). Soil and groundwater samples were collected from each boring and analyzed for priority pollutant volatile and semi-volatile organics, pesticides and PCBs, and metals. The only contaminants observed in these samples were lead at a concentration of 2 $\mu g/\ell$ in the groundwater from monitoring well MPT-13-3, and mercury at a concentration of 5.3 $\mu g/\ell$ in the groundwater from monitoring well MPT-13-1.

Additional investigations will be conducted at this site during the RFI to characterize groundwater flow and contamination. The initial investigation will involve the installation of monitoring wells and piezometers in the configuration shown in Figure 3-7. The intent of the piezometer installation program is to establish groundwater flow direction. The locations of the piezometers were based on areas where data points were missing and could provide interpretation

of groundwater flow direction. Once groundwater flow direction has been determined, three additional monitoring wells (MPT-13-4, MPT-13-5, and MPT-13-6) will be installed to characterize contamination at the site. The locations of the proposed monitoring wells were based on water level data and topographical inferences. Actual locations will be determined in the field based on water level data collected from the piezometers and the existing monitoring wells. Activities in this area will be closely coordinated with base personnel to avoid interference with aircraft flight and maintenance activities in the area. All drilling locations will be coordinated with the base public works department to avoid damage to underground utilities.

In addition to the groundwater sampling program, sediment samples will be collected along the drainage ditch carrying stormwater runoff from SWMU 13 to the golf course and Sherman Creek wetlands in order to determine whether this ditch is serving as a migration pathway for contaminants. Sample locations are presented in Figure 3-7 "Location of Explorations, SWMU 13." These locations were chosen to determine if site contaminants are migrating via stormwater runoff sediment loads, or are being deposited in the inverts of the conveyance system, and to assess if obvious differences exist between upstream and downstream sediments.
Sediment samples will be taken immediately upstream from SWMU 13, immediately downstream near the site boundary, and immediately upstream of the junction with the stormwater drainage ditch along the Patrol Road. Samples will be taken from near surface sediments in the interval from 0 inch to 6 inches below surface where recent deposits would be expected.

The following sediment samples will be collected at Site 13 during RFI implementation.

Location	Frequency	Analyses
MPT-13-SD-1 MPT-13-SD-2 MPT-13-SD-3	One sediment sample per location	Appendix IX volatile organic compounds (USEPA Method 8240), semivolatile organic compounds (USEPA Method 8270) and PCBs/-pesticides (USEPA Method 8080), and metals (USEPA Method 6010, 7480, 7470)

Groundwater and sediment samples taken at SWMU 13 will be analyzed for metals using USEPA Methods 6010, 7480, and 7470, for volatile organic compounds using USEPA Method 8240, for semi-volatile organic compounds using USEPA Method 8270 and for PCBs and pesticides using USEPA Method 8080.

The following field quality control samples will be collected during field sampling activities. QA/QC requirements are presented in detail in Appendix A, Volume II.

- <u>Duplicates</u>. Duplicates of soil, waste, groundwater, surface water, and sediment samples will be submitted for analysis of all parameters

specified for the original samples (e.g., Appendix IX compounds) at a rate of 10 percent of the samples analyzed, or a minimum of 1 per event for each media sampled.

- **Trip Blanks**. A trip blank will be included with each shipment of water samples scheduled for VOA and will be analyzed with other VOA samples.

- **Equipment Rinsate Blanks**. A minimum of one equipment rinsate (sampler) blank per day for bailers, sampling pumps, and/or tubing will be scheduled during monitoring well sampling. A minimum of two soil sampler blanks will be collected each day during field soil sampling. One will be collected at the initiation of daily soil sampling activities and the other at the completion.

- **Field Blanks**. A minimum of one field blank per sampling day will be collected.

All soil, sediment, groundwater, and surface water samples will be analyzed for Appendix IX constituents. Upon assessment of initial analytical data, contaminants of concern will be identified for subsequent analysis, as appropriate.

3.5.6.4 Potential Receptors Human receptors may come into contact with contamination migrating from SWMU 13 via drainage ditches to the nearby golf course. Exposures would be expected to be by incidental direct contact or consumption of contaminated biota. Direct human contact with contaminated groundwater is not expected at SWMU 13 as the surficial aquifer where contamination has been measured is not used as a water supply source. The nearest water supply wells are located approximately 1,000 feet to the northeast and include three inactive wells (N-11, N-10, and N-9; see Figure 2-5) and one active Naval supply well (N-1; see Figure 2-5). Well N-1 is screened at a depth of 435 to 1,001 feet BLS.

Human receptor identification activities will include identification of current use and human access to the area where the fire training areas were previously located and human use and access to the golf course.

Fire training area activities typically result in surface soil contamination and therefore potential exposures for humans and/or wildlife usually evaluated. In the case of SWMU 13, the former fire training areas have been disturbed or paved over making exposures to soil contamination improbable.

Ecological receptors are potentially exposed to contaminants in sediment and surface water within the drainage ditches, Sherman Creek, and the Sherman Creek wetlands. Exposures are dependant upon migration of contamination from the site. Ecological receptors will be identified in these areas by conducting an aquatic survey at two locations in the southwestern drainage ditch system and two locations in the golf course drainage. Survey locations will be concurrent with sediment sampling locations.

Other ecological receptor identification activities will include collection of information on aquatic and terrestrial organisms inhabiting or using Sherman Creek and the Sherman Creek wetlands. This effort is also required for the characterization of ecological receptors at SWMU 2, 3, 4, and 5.

3.5.7 SWMU 14 (NIRP Site 14), Mercury/Oily Waste Spill Area

3.5.7.1 Source Characterization Site 14 is located west of the FTC, Building 1456, and Building 1388 (Figure 3-8). The area encompasses several parts, including the old fire fighting training apron, the wet wells and oil-water separator area (SWMU 54A), the concrete pond associated with the oil-water separator, the FTC retention pond east, the new fire fighting apron, the new apron equalization tanks, and the FTC retention pond west. SWMU 14 is described in Section 2.3.2.8.

The site encompasses two major areas of releases. The first is on and adjacent to the north central part of the old fire fighting training apron where drums of waste mercuric nitrate solutions were stored at one time. The apron is of concrete construction with no known liner. The drums were found to be leaking and removed less than 5 years ago. The second area of concern is around the wet well and oil-water separator that are located to the east of the northeastern corner of the old apron. The oil-water separator reportedly overflowed numerous times in the past and oil was discharged to the area north of the old apron and Building 1456.

The draft RFA report noted that oily materials continue to appear in the FTC retention pond east, but that the source is not known. The pond has been pumped out several times in the years 1987 and 1989, but the oil continued to return even after the oil-water separator had been improved. Facility personnel suspected that the residual oil might be contamination remaining in the area from past practices (past failure of the oil-water separator, or disposal of oily materials in the drainage ditches) rather than continuing contamination from current sources. However, another possible source mentioned by facility personnel was the oil material discharged into a nearby unlined earthen storm drainage ditch from the FTC Diesel Generator Sump. The facility has conducted some soil sampling to try to locate the source of the continuing oily residues; however, the source of contamination has yet to be identified. Currently, diesel marine fuel and small amounts of gasoline are burned in fire fighting training on the old apron, but in the past contaminated fuels may have been burned. In addition, in the past, aqueous film forming foam (AFFF), a toxic material, was used as a fire extinguishing material in fire fighting training on the old apron. In the last several years, an AFFF alternative that is non-toxic has been used.

3.5.7.2 Environmental Setting SWMU 14 is located in the far northeast corner of the base, with the St. Johns River to the north and the Atlantic Ocean to the southeast. Ground level elevations in the area are approximately 6 feet above MSL. Surface water drainage is to the north directly into the St. Johns River.

The surficial deposits at SWMU 14 consist mainly of fine- to medium-grained quartz sand with shells. The lithology in the vicinity of monitoring well

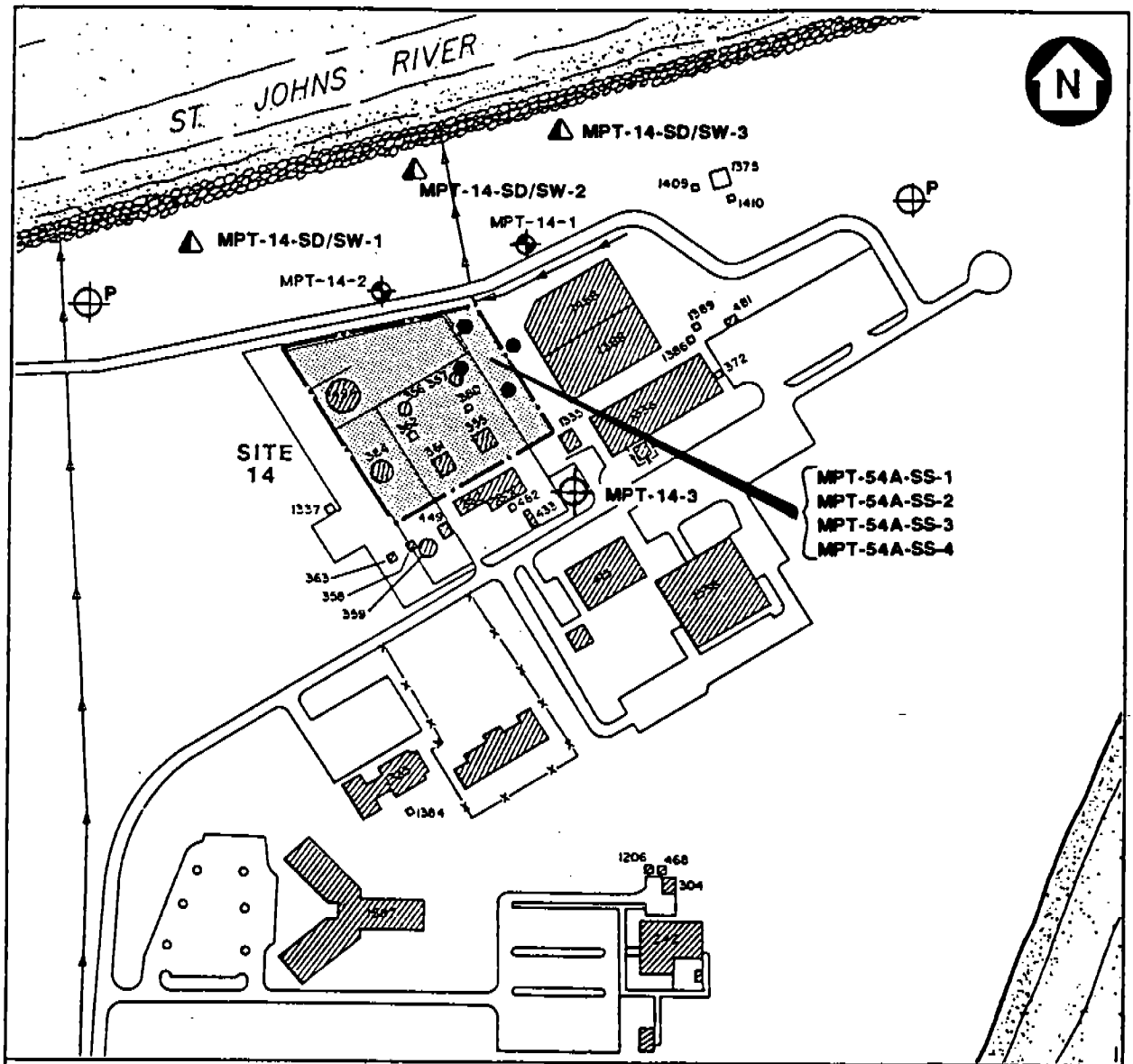

LEGEND

- APPROX. LOCATION OF EXISTING MONITORING WELLS
- APPROX. AREA OF SITE LOCATION
- STORM DRAINAGE DITCH INDICATING DIRECTION OF FLOW
- APPROX. LOCATION OF PROPOSED MONITORING WELL
- APPROX. LOCATION OF PROPOSED SURFACE SOIL SAMPLING
- APPROX. LOCATION OF PROPOSED SEDIMENT/SURFACE WATER SAMPLING
- APPROX. LOCATION OF PROPOSED PIEZOMETERS

APPROX. SCALE

0 225 450 FT

FIGURE 3-8

LOCATION OF EXPLORATION (SITE 14) SWMU 14

RCRA FACILITY INVESTIGATION WORKPLAN

U.S. NAVAL STATION MAYPORT, FLORIDA

MPT-14-1 consists of fine to medium-grained sand with shells to a depth of 13 feet BLS. The lithology around monitoring well MPT-14-2 is fine grained sand with shells, to a depth of 10 feet BLS, then changes to fine to medium grained sands with shells.

The St. Johns River is located approximately 150 feet north of monitoring wells MPT-14-1 and MPT-14-2. The Atlantic Ocean is located approximately 620 feet east of monitoring well MPT-14-1. The precise groundwater gradient and flow-direction cannot be determined for SWMU 14 due to the fact that only two wells were installed at the site. However, it is anticipated that the shallow groundwater at Site 14 discharges to the St. Johns River. Additional wells and piezometers will be installed at SWMU 14 as described below.

No permanent surface water that may contact contaminated media such as subsurface soils and groundwater exists at the site. Stormwater drains, ditches, and detention ponds exist near the site to manage temporal stormwater runoff. Stormwater will not be sampled or flow measurements obtained. Sediment samples from the stormwater drainage features and tidal ponds will be collected to assess this route as a potential migration pathway of contaminants.

A network of piezometers will be installed at NAVSTA Mayport in order to more accurately measure groundwater elevations and flow patterns. Some of these piezometers will be located near SWMU 14. Figure 2-7 "Proposed Piezometer and Monitoring Well Locations" presents the proposed network configuration. In addition to the piezometers, an additional monitoring well (MPT-14-3) upgradient of SWMU 14 will be installed in the same geologic strata as the existing downgradient monitoring wells. The existing and new monitoring wells and piezometers will provide data to characterize groundwater flow rate and direction at the site. New water level isopleth maps will be produced during the potentiometric survey.

3.5.7.3 **Release Characterization** Two monitoring wells (MPT-14-1, MPT-4-2) were installed in the vicinity of SWMU 14 during the ESI (see Figure 3-8). Soil and groundwater samples were collected and analyzed. No volatile, semivolatile, organochlorine pesticides, or PCB compounds were detected in the soil or groundwater samples. Total mercury was detected in the groundwater sample from monitoring well MPT-14-2 at a concentration of 1.8 $\mu g/\ell$.

Additional investigations planned for the RFI at SWMU 14 include installation of an upgradient monitoring well, collection of soil samples around the oil-water separator (SWMU 54A), and collection of sediment samples from the tidal pools behind the seawall, downgradient from the site.

One additional monitoring well (MPT-14-3) will be installed southeast of the site in order to more clearly define the direction of groundwater flow in the area. Water levels will be measured and groundwater samples collected from both new and existing wells. The locations of the proposed monitoring well are based on topographical inferences and are subject to change based on water level data collected from the piezometers and the existing monitoring wells.

The RCRA Facility Assessment (RFA) identified the oil-water separator (RFA SWMU 54A) near SWMU 14 as a SWMU requiring further investigation. The CAMP proposes RFA sampling visits at SWMUs that require further investigations. Sampling visits will obtain samples to verify release of contamination to the environment at suspected SWMUs. The CAMP places SWMU 54 (oil-water separators) in Group IV.

Because SWMU 54A is in close proximity to SWMU 14, four surface soil samples will be collected, one on each side of the oil-water separator. The intent is not to characterize contamination at SWMU 54A, but to confirm if a release to the environment had occurred. Additional sampling will be required if contamination is detected.

Site history indicates that the likely release scenario at the oil-water separator (RFA SWMU 54A) near SWMU 14 is spillage to the surface by overflowing. Near surface soils would indicate the likely horizontal extent of contamination. Surface samples at each of the four corners of the oil-water separator will be obtained. Surface soil samples will be composed of discrete grab samples of native soil collected from just below any engineered base or asphalt surface materials. It is anticipated that this will be at the interval between 6-inches to 12-inches below surface.

The following surface soil samples will be collected at the oil/water separator (RFA SWMU 54A) near SWMU 14 during RFI implementation:

Location	Frequency	Analyses
MPT-54A-S-1 MPT-54A-S-2 MPT-54A-S-3 MPT-54A-S-4	One soil per location	Appendix IX volatile organic compounds (USEPA Method 8240), semivolatile organic compounds (USEPA Method 8270), PCB/pesticides (USEPA Method 8080) and metals (USEPA Method 6010, 7480, 7470)

Three sediment samples will be collected from tidal pools behind the seawall to determine whether contaminants from the site are migrating to this area via surface drainage or groundwater discharge.

Groundwater, soil, and sediment samples collected at Site 14 will be analyzed for metals (Method 6010 7480, and 7470), volatile organic compounds (Method 8240), semivolatile organic compounds (Method 8270) and pesticides/PCBs (Method 8080).

The following field quality control samples will be collected during field sampling activities. QA/QC requirements are presented in detail in Appendix A, Volume II.

- **Duplicates**. Duplicates of soil, waste, groundwater, surface water, and sediments samples will be submitted for analysis of all parameters specified for the original samples (e.g., Appendix IX compounds) at a

rate of 10 percent of the samples analyzed, or a minimum of 1 per event for each media sampled.

- **Trip Blanks**. A trip blank will be included with each shipment of water samples scheduled for volatile organic analysis and will be analyzed with other VOA samples.

- **Equipment Rinsate Blanks**. A minimum of one equipment rinsate (sampler) blank per day for bailers, sampling pumps, and/or tubing will be scheduled during monitoring well sampling. A minimum of two soil sampler blanks will be collected each day during field soil sampling. One will be collected at the initiation of daily soil sampling activities and the other at the completion.

- **Field Blanks**. A minimum of one field blank per sample day will be collected.

All soil, sediment, groundwater, and surface water will be analyzed for Appendix IX constituents. Upon assessment of initial analytical data, contaminants of concern will be identified for subsequent analysis, as appropriate.

3.5.7.4 **Potential Receptors** Direct human exposure to groundwater contamination at SWMU 14 is not expected. Groundwater flow from the site as explained in Section 3.5.7.2 is directly north to the St Johns River, 150 feet north of the site. The available information on water supply wells from Geraghty and Miller, Inc. (1983), does not extend to the area of Site 14. However, there are no water supply wells downstream of the site in the area between the site and the river.

Human receptors may be exposed to contamination in soils onsite or contamination migrating to the St. Johns River and/or tidal pools present along the river north of the site and north of monitoring wells MPT-14-1 and MPT-14-2 (see Figure 3-8). Potential exposures for soil contamination are expected to be via direct contact or incidental ingestion. Exposures may also occur via ingestion of contaminated biota from the river and/or direct contact or ingestion of contaminated surface water or sediments.

Exposures to soil contamination near the oil-water separator are expected to be minimal as the area is restricted to Naval and other authorized personnel. The receptor survey will identify access and uses of the site as well as the river front property to the north of the site and south of the river where the tidal pools are located. Current and potential human use of the St. Johns River near the site will also be determined.

Ecological receptors are potentially exposed to contamination migrating to the St. Johns River or tidal pools. Ecological receptors are not expected to encounter soil contamination near the oil-water separator as the area does not provide habitat.

Site specific ecological receptor identification activities include collection of information on aquatic and terrestrial organisms inhabiting or using the St. Johns River. If receptors cannot be adequately characterized using the available information collected, then biota sampling in the St. Johns River will be proposed to fill the data gaps. A survey of aquatic biota in the tidal ponds will be conducted to identify receptors in these areas. The survey stations will be located concurrently with the sediment sampling locations in Section 3.5.7.3.

3.5.8 SWMU 15 (NIRP Site 15), Old Pesticide Area

3.5.8.1 Source Characterization The old pesticide area was located in former Building 484 on the western side of the station (Figure 3-9). It is described in Section 2.3.2.9. Location of the site is believed to be indicated by the "ruins" shown on the Utility Distribution map 1G about 150 feet east of Building 48A. This location corresponds to an old foundation described in the RFA report (Kearney, 1989).

3.5.8.2 Environmental Setting SWMU 15 is in the northwest part of NAVSTA Mayport, approximately 350 feet from the western boundary of the station where it abuts the town of Mayport. Ground level elevations in the area are about 12 feet above MSL, and surface runoff drains to the west, towards the town of Mayport and the St. Johns River.

No borings have been conducted in the area of SWMU 15; therefore, no site-specific information is available on soils or groundwater. Soils are expected to consist of fine-grained sands similar to those found elsewhere on the base. Groundwater flow is anticipated to be towards the St. Johns River to the north and west.

3.5.8.3 Release Characterization No investigations were conducted at SWMU 15 during the ESI so the presence of contamination at SWMU 15 has not been verified. Because the pesticides reported to be used at SWMU 15 are relatively hydrophobic and not very mobile in the environment, surface soil samples will be collected at SWMU 15, on each side of the old foundation located at the site (see Figure 3-9), in an attempt to verify the presence of contamination. These samples will be analyzed for Appendix IX constituents.

Two foundations exist at SWMU 15. Four soil sample locations are proposed at each of the foundations. Therefore, eight soil sample locations are proposed. Because the HSWA permit requires characterization of unconfirmed suspected contamination at this site, two sets of soil samples at each location will be collected, for a total of 16 soil samples. The first set of eight soil samples will be discrete grab samples obtained near the surface at the interval of 0 inch to 6 inches. The second set of eight soil samples will be discrete grab samples obtained at subsurface at the interval of 12 inches to 18 inches. A shallow groundwater monitoring well will be installed at SWMU 15 and one subsurface soil sample will be collected just above the groundwater table during installation. A groundwater sample will also be collected. The intent of this sampling is to confirm the horizontal and vertical extent of suspected contamination.

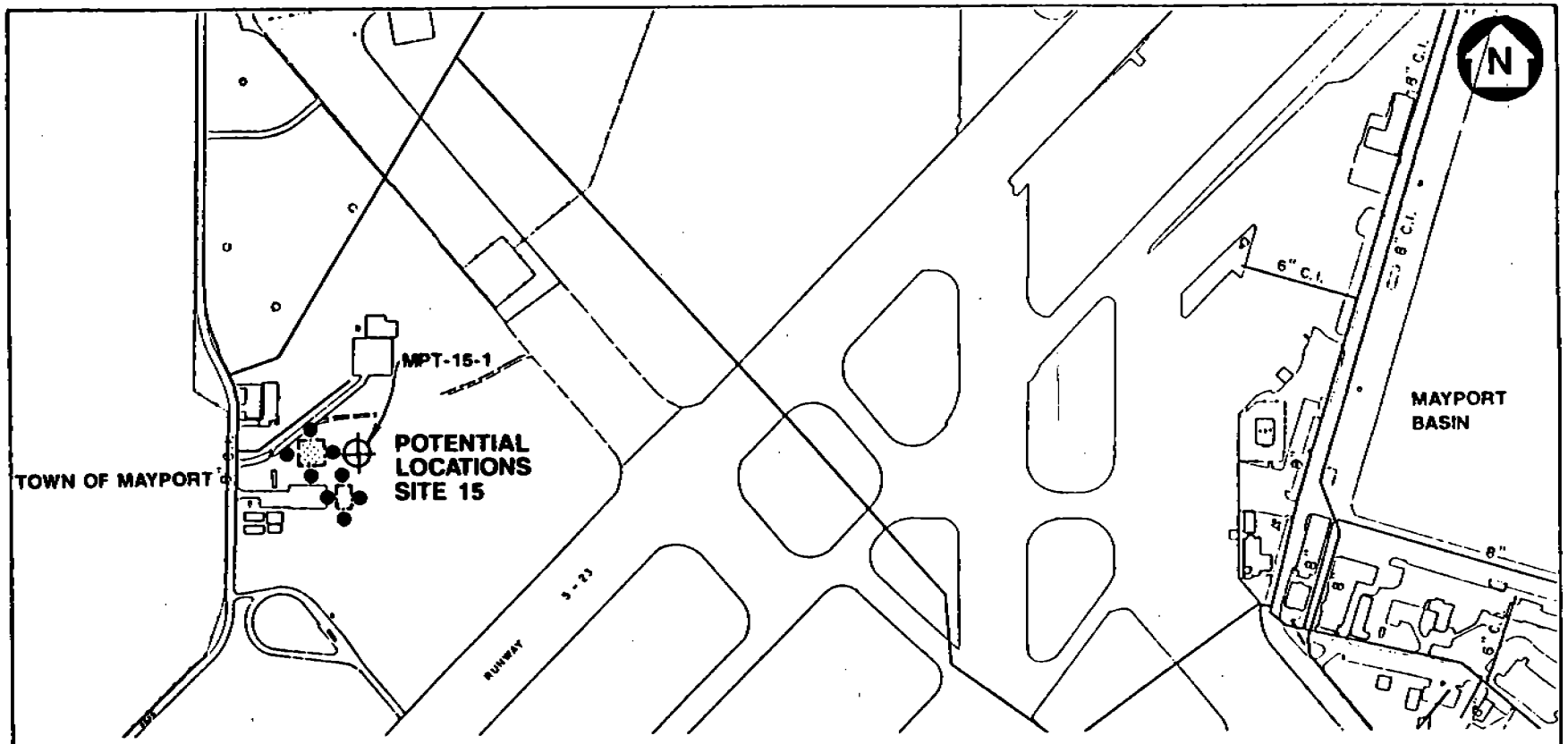

LEGEND

- APPROX. AREA OF SITE LOCATION
- APPROX. LOCATION OF PROPOSED SHALLOW SOIL SAMPLING
- APPROX. LOCATION OF PROPOSED MONITORING WELL

SCALE IN FEET

0 250 500

FIGURE 3-9

LOCATION OF EXPLORATIONS (SITE 15) SWMU 15

RCRA FACILITY INVESTIGATION WORKPLAN

U.S. NAVAL STATION MAYPORT, FLORIDA

The following soil samples will be collected at Site 15 during RFI implementation.

Location	Frequency	Analyses
MPT-15-SS-1 MPT-15-SS-1D MPT-15-SS-2S MPT-15-SS-2D MPT-15-SS-3S MPT-15-SS-3D MPT-15-SS-4S MPT-15-SS-4D MPT-15-SS-5S MPT-15-SS-5D MPT-15-SS-6S MPT-15-SS-6D MPT-15-SS-7S MPT-15-SS-7D MPT-15-SS-8S MPT-15-SS-8D	One soil per location and depth.	Appendix IX volatile organic compounds (USEPA Method 8240), semivolatile organic compounds (USEPA Method 8270), and PCB/-pesticides and metals (USEPA Method 6010, 7480, 7470)
MPT-15-1-SS	one subsurface soil sample at well MPT-15-1.	

The following groundwater samples will be collected at Site 15 during RFI implementation.

Location	Frequency	Analyses
MPT-15-1	One groundwater sample per location.	Appendix IX volatile organic compounds (USEPA Method 8240), semivolatile organic compounds (USEPA Method 8270), and PCB/-pesticides (USEPA Method 8080) and metals (USEPA Method 6010, 7480, 7470)

The following field quality control samples will be collected during field sampling activities. QA/QC requirements are presented in detail in Appendix A, Volume II.

- Duplicates. Duplicates of soil, waste, groundwater, surface water, and sediments samples will be submitted for analysis of all parameters specified for the original samples (e.g., Appendix IX compounds) at a

rate of 10 percent of the samples analyzed, or a minimum of 1 per event for each media sampled.

- Trip Blanks. A trip blank will be included with each shipment of water samples scheduled for VOA and will be analyzed with other VOA samples.

- Equipment Rinsate Blanks. A minimum of one equipment rinsate (sampler) blank per day for bailers, sampling pumps, and/or tubing will be scheduled during monitoring well sampling. A minimum of two soil sampler blanks will be collected each day during field soil sampling. One will be collected at the initiation of daily soil sampling activities and the other at the completion.

- Field Blanks. A minimum of one field blank per sample day will be collected.

All soil, sediment groundwater, and surface water samples will be analyzed for Appendix IX constituents. Upon assessment of initial analytical data, contaminants of concern will be identified for subsequent analysis, as appropriate.

3.5.9 SWMU 16 (NIRP Site 16), Old Transformer Area

3.5.9.1 Source Characterization SWMU 16 is located in the NSC fuel farm on the east side of Tank 204 (see Figure 3-5). SWMU 16 is described in Section 2.3.2.10.

3.5.9.2 Environmental Setting SWMU 16 is on the northern perimeter of NAVSTA Mayport, about 300 feet south of the St. Johns River. Ground level elevation in the area is about 12 feet above MSL. Surface water runoff drains northwest to a storm drain under the patrol road and from there directly into the St. Johns River.

No monitoring wells were installed at SWMU 16 during the ESI. However, due to Site 16's close proximity to SWMUs 6 and 11, it is anticipated that the geology is similar to that found at SWMUs 6 and 11. Shallow groundwater at SWMU 16 is anticipated to be moving towards the St. Johns River to the north.

3.5.9.3 Release Characterization Two soil samples were collected west of SWMU 16 during the ESI. Analysis of the samples showed pesticides, but no PCBs. Concentrations of pesticides in the soil samples ranged from 3 μg/kg of DDD to 50 μg/kg of DDT. These concentrations are comparable to pesticide levels observed at other sites throughout NAVSTA Mayport, and are believed to reflect a residual concentration from many years of pesticides application for mosquito control on the base. Because only two samples were analyzed during the ESI, PCB's and pesticides will be analyzed to verify earlier data (USEPA Method 8080; Appendix IX subset).

Three additional monitoring wells are proposed for SWMU 16. Hydrologic data from these wells and temporary piezometers installed in the area will provide information to characterize groundwater flow rates and directions at the site.

Two wells will be installed downgradient between the St. Johns River and the site. One well will be install upgradient of the site. The downgradient wells will be near the eastern fringe of SWMU 9 and will help provide data to assess the eastern extent of possible groundwater contamination from that site.

A "hotspot" sampling strategy similar to the one proposed for SWMU 2 will be implemented to determine the horizontal and vertical extent of PCB contamination. The release scenario assumes that PCB was spilled at the surface of the site contaminating near surface soils initially.

A hexagonal sampling grid composed of triangular elements will be superimposed over the site. The dimensions of the grid are described in the Sampling and Analysis Plan, Volume II, and are based on the USEPA guidance *Verification of PCB Spill Cleanup by Sampling and Analysis* (EPA-560/5-85-026, August 1985). The number of sample points in a grid of this geometry is 37. Additional judgmental sample locations may be chosen depending on site conditions observed during field activities. The sampling grid is depicted in the Sampling and Analysis Plan, Volume II.

Duplicate samples will be collected simultaneously during field activities. The duplicates of positive samples will be sent for laboratory analysis to confirm field results and to quantify site contamination by laboratory means (i.e., USEPA Method 8080). Upon initial horizontal site characterization, additional samples will be collected at lower depths (e.g., 12 inches and greater) to characterize the vertical extent of PCB contamination within surface areas where PCB concentrations greater than 50 $\mu g/kg$ are found. The number of subsurface soil samples will be dependent on previous findings. Use of the field kit to detect PCB will provide the flexibility needed to respond to site conditions readily.

The following field quality control samples will be collected during field sampling activities. QA/QC requirements are presented in detail in Appendix A, Volume II.

- **Duplicates**. Duplicates of soil, waste, groundwater, surface water, and sediments samples will be submitted for analysis of all parameters specified for the original samples (e.g., Appendix IX compounds) at a rate of 10 percent of the samples analyzed, or a minimum of 1 per event for each media sampled.

- **Trip Blanks**. A trip blank will be included with each shipment of water samples scheduled for VOA and will be analyzed with other VOA samples.

- **Equipment Rinsate Blanks**. A minimum of one equipment rinsate (sampler) blank per day for bailers, sampling pumps, and/or tubing will be scheduled during monitoring well sampling. A minimum of two soil sampler blanks will be collected each day during field soil sampling. One will be collected at the initiation of daily soil sampling activities and the other at the completion.

- **Field Blanks**. A minimum of one field blank will be collected per sample day.

All soil, sediment, groundwater, and surface water will be analyzed for Appendix IX constituents. Upon assessment of initial analytical data, contaminants of concern will be identified to subsequent analysis as appropriate.

3.5.9.4 Potential Receptors Groundwater contamination at SWMU 16 has not been determined to date. Even if groundwater contamination is present, direct human exposure to groundwater is not expected. Groundwater from the site is expected to flow toward the St. Johns River to the north. There are no identified water supply wells within the area between SWMU 16 and the river.

Human receptors may be exposed to soil contamination at Site 16 via direct contact or incidental ingestion. Exposures are expected to be limited as the area near the site has restricted access. Human use and access to the buildings and facilities near the site will be determined as part of the human receptor identification.

Human and ecological receptors may be exposed to contamination migrating offsite to the St. Johns River. Humans may be exposed to contamination in the river depending upon uses of the river near this area. Uses of the river will be determined as part of the receptor identification.

Ecological receptors will be identified by collection of information on aquatic and terrestrial organisms inhabiting or using the St. Johns River. If receptors cannot be adequately characterized using the available information collected, then biota sampling in the St. Johns River will be proposed to fill the data gaps.

3.5.10 SWMU 17 (NIRP Site 17), Carbonaceous Fuel Boiler

3.5.10.1 Source Characterization Since 1979, the carbonaceous fuel boiler, located in Building 1430, has been used to dispose of refuse and burnable garbage generated by both NAVSTA Mayport and the onbase housing area (Figure 3-10). The incinerator is contractor operated 24 hours a day and has a design capacity of 48 tons per day with a current loading of 42 to 45 tons per day. Waste oil and diesel fuel are used to augment burning.

3.5.10.2 Environmental Setting SWMU 17 is located south of the Mayport Basin about 350 feet west of the destroyer slip (see Figure 3-10). Ground level elevations around Building 1430 are about 9 feet above MSL. Surface water drains into the Mayport Basin via storm drains. No soil borings have been conducted at Site 17; therefore, site-specific soil and hydrogeology data are not available. This part of the base is constructed on fill over the site of Ribault Bay. Groundwater flow is expected to be towards Mayport Basin to the northeast.

3.5.10.3 Release Characterization Air emissions from the carbonaceous fuel boiler are permitted under FDER Permit No. A019-17873 and air emissions monitoring has been conducted by the city of Jacksonville Bio-Environmental Services Department. Available air emissions data will be reviewed and the potential for contaminant migration via this route will be evaluated as part of the RFI.

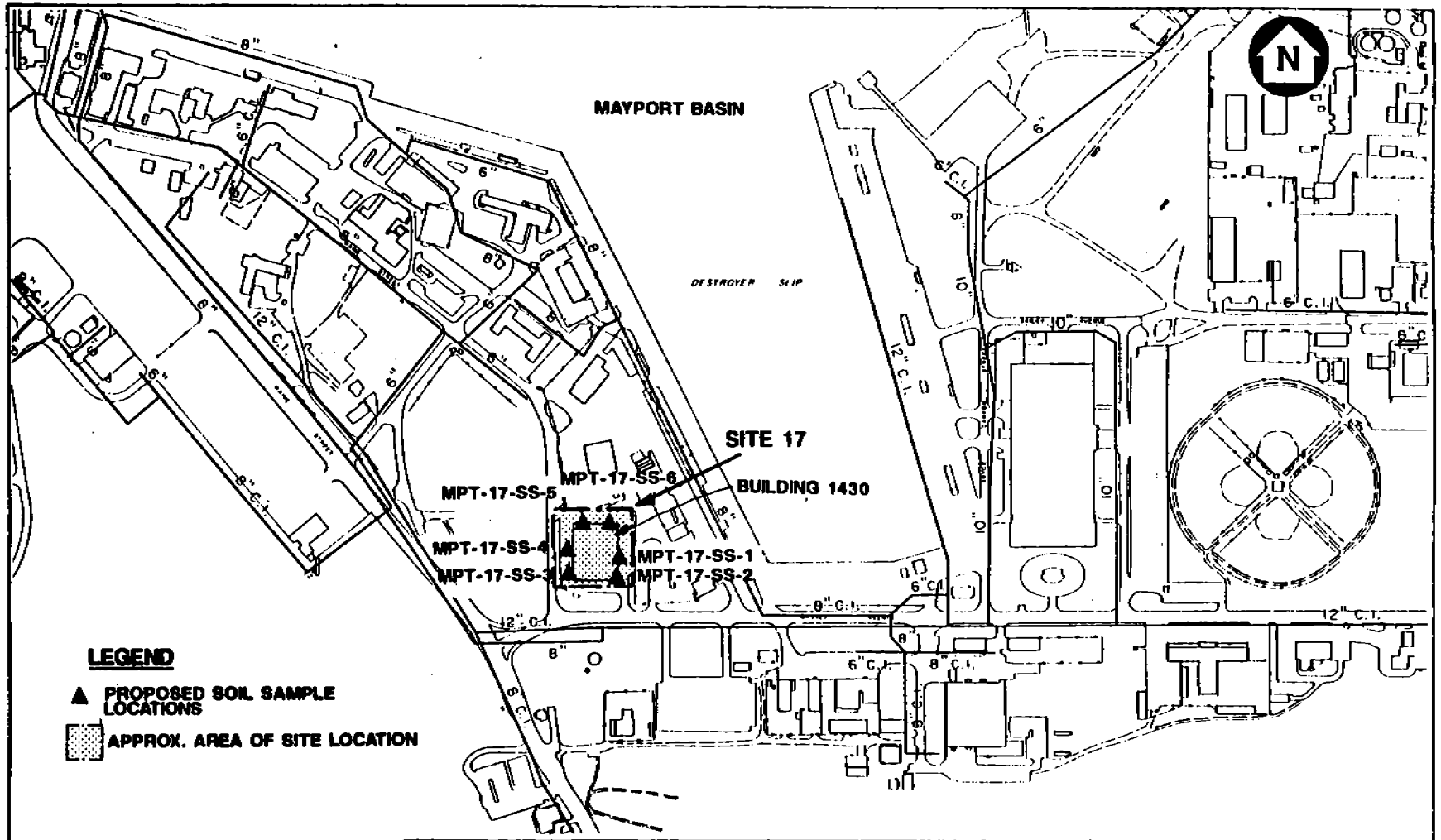

SCALE IN FEET

0 250 500

FIGURE 3-10

LOCATION OF EXPLORATION (SITE 17) SWMU 17

RCRA FACILITY INVESTIGATION WORKPLAN U.S. NAVAL STATION MAYPORT, FLORIDA

Both fly ash and bottom ash from the boiler are routinely analyzed and disposed of in accordance with applicable rules, regulations, guidelines, and criteria in effect. Results of these analyses will be evaluated and incorporated into the RFI report. SWMU 17 was not included in the ESI; therefore, no soil or groundwater analysis data are available. Six soil samples will be collected outside Building 1430 during the RFI in order to determine whether contaminants have been released to the soil. Samples will be collected from 6 to 12 inches below the surface in order to avoid contamination from automobile traffic in the area. Sampling at this depth will indicate whether migration of contaminants has occurred. The soil samples will be collected in the vicinity of the solid waste transfer area and the ash handling and storage areas, and analyzed for metals using USEPA SW-846 Method 6010.

The Carbonaceous Fuel Boiler, SWMU 17, is an enclosed structure. Surrounding area outside the building is paved with asphalt. The proposed sample locations are near entrances and loading docks where material loading activities take place such as solid waste fuel deliveries and fly ash loading and transportation. These locations are the most likely to be where releases to the environment occur.

The following field quality control samples will be collected during field sampling activities: QA/QC requirements are presented in detail in Appendix A, Volume II.

- Duplicates. Duplicates of soil, waste, groundwater, surface water, and sediment samples will be submitted for analysis of all parameters specified for the original samples (e.g., Appendix IX compounds) at a rate of 10 percent of the samples analyzed, or a minimum of 1 per event for each media sampled.

- Trip Blanks. A trip blank will be included with each shipment of water samples scheduled for VOA and will be analyzed with other VOA samples.

- Equipment Rinsate Blanks. A minimum of one (sampler) blank per day for bailers, sampling pumps, and/or tubing will be scheduled during monitoring well sampling. A minimum of two soil sampler blanks will be collected each day during field soil sampling. One will be collected at the initiation of daily soil sampling activities and the other at the completion.

- Field Blank. A minimum of one field blank will be collected each sampling day.

All soil, sediment, groundwater, and surface water will be analyzed for Appendix IX constituents. Upon assessment of initial analytical data, contaminants of concern will be identified to subsequent analysis as appropriate.

3.5.10.4 Potential Receptors Exposures at SWMU 17 are expected to be related to air and soil contamination resulting from atmospheric release and deposition of fly ash. Humans may be exposed to air emissions from the site and any soil

contamination. The receptor identification will determine human uses and access to area on the site and nearby.

Exposures for ecological receptors to soil contamination are expected to be minimal to nonexistent as the area near Site 17 is industrialized and is not expected to provide habitat for terrestrial biota.

3.5.11 SWMU 22, Building 1600 Blasting Area

3.5.11.1 Source Characterization The Building 1600 Blasting Area is a fenced area located just to the northeast of Building 1600, which is located in the central portion of Mayport to the north of the eastern dredge spoil disposal area. Abrasive media blasting is conducted in a sheet metal quonset hut set on a concrete base and concrete foundation. The concrete base extends past the quonset hut approximately 10 feet and is encircled by a chain link fence. A dust collector attached to the back of the building collects dust and abrasives during blasting operations.

The equipment blasted in this area is largely ground support equipment, most of which is painted with yellow enamel paint and zinc-containing primers. The abrasive media used for blasting is Black Beauty™. The area has been in use since 1985.

The sheet metal Baker hut is constructed on a concrete foundation and the lower 2 feet of the walls are also concrete. At the juncture between the concrete foundation walls and the sheet metal walls there are small gaps, particularly where the sheet metal is creased.

According to facility personnel, in response to a USEPA inspection conducted in February of 1988, approximately 10 55-gallon drums of used Black Beauty™ were removed from piles that had been located outside on the concrete base on the southside of the Baker hut. The used Black Beauty™ was determined to be EP toxic and was disposed of as hazardous waste. At that time, some of the gaps in the building walls were closed to prevent the abrasive from escaping during operations.

A.T. Kearney, Inc., performed a Visual Site Inspection (VSI) in June of 1989. At the time of the VSI, residual abrasive material could be observed on the concrete base outside of the building and in the sand outside of the area on the south side of the building. Small piles of abrasive could be observed along the outside edge of the building, indicating that abrasive continues to escape between the gaps in the walls at the junction of the concrete foundation walls and the sheet metal walls. At least three 55-gallon drums of used abrasive were located inside the quonset hut, and residual abrasive was visible on the floor of the hut.

3.5.11.2 Environmental Setting SWMU 22 is located in the central part of NAVSTA Mayport, north of the eastern dredge spoil disposal area and south of the runways. SWMU 22 is approximately 700 feet northeast of SWMU 2. The dredge spoil piles are the dominant features of the landscape. The elevation of SWMU 22 is approximately 8 feet above MSL.

Surface water runoff in this area is carried by drainage ditches alongside the patrol road to Chicopit Bay to the southwest and Sherman Creek to the south and southeast. These drainage ditches are tidally influenced, with water levels rising and falling with the tides in the St. Johns River.

Surface soils in the area around Site 22 are fine to coarse-grained sands with shells and shell fragments and range from 9 to 12 feet thick. Occasional thin (1 to 2 feet) sandy clay layers were encountered during soil borings taken near SWMU 2 as part of the ESI in 1987.

Drillings during the ESI also revealed a relatively uniform clay layer at a depth of 1 to 4 feet below MSL. This clay layer consists of a stiff, dark olive clay from 2 feet to 6 feet thick, and is believed to be relatively continuous across the area. Below the clay layer is a fine grained, gray to green sand with a thin clay to sandy clay layer (about 2 feet thick) found at a depth of 25 feet bls.

3.5.11.3 Release Characterization SWMU 22 was not included in the ESI; therefore, no soil or groundwater analysis data are available. Four shallow soil borings, one in each corner of the site, will be made. From each boring a surface soil sample (6 to 12 inches) and a soil sample at the 2 to 3 feet depth will be collected. These will be analyzed for Appendix IX constituents.

One new monitoring well is proposed for Site 22. The well will be installed downgradient of the suspected groundwater flow direction. The proposed location is presented in Figure 3-4. The depth of the well will be approximately 15 feet, which is the estimated top of the first aquitard. The entire saturated length will be screened. The screened interval will extend to at least 1 foot above the water surface.

One soil sample will be collected from the monitoring well boring just above the soil-water interface. One groundwater sample will be collected from the monitoring well. These samples will also be analyzed for Appendix IX constituents.

The following field quality control samples will be collected during field sampling activities. QA/QC requirements are presented in detail in Appendix A, Volume II.

- **Duplicates**. Duplicates of soil, waste, groundwater, surface water, and sediment samples will be submitted for analysis of all parameters specified for the original samples (e.g., Appendix IX compounds) at a rate of 10 percent of the samples analyzed, or a minimum of 1 per event for each media sampled.

- **Trip Blanks**. A trip blank will be included with each shipment of water samples scheduled for VOA and will be analyzed with other VOA samples.

- **Equipment Rinsate Blanks**. A minimum of one equipment rinsate (sampler) blank per day for bailers, sampling pumps, and/or tubing will be scheduled during monitoring well sampling. A minimum of two soil

sampler blanks will be collected each day during field soil sampling. One will be collected at the initiation of daily soil sampling activities and the other at the completion.

- Field Blanks. A minimum of one field blank will be collected each sampling day.

All soil, sediment, groundwater, and surface water samples will be analyzed for Appendix IX constituents. Upon assessment of initial analytical data, contaminants of concern will be identified for subsequent analysis, as appropriate.

3.5.11.4 Potential Receptors Groundwater flow from the area of SWMU 22 has not been characterized but is believed to be moving radially toward the perimeter surface ditches. Surface water drainage ditches flank the site on the northwest, north, and northeast and experience tidal influences. Groundwater eventually discharges to Sherman Creek and associated wetlands. There is no evidence that groundwater from the site flows toward the northwest into the town of Mayport.

Direct human contact with groundwater is not expected in this area as no water supply wells are present in the vicinity. The nearest downgradient identified water supply well (N-6) is approximately 2,500 feet southwest. This well is reported to be inactive. Human receptors may be exposed to contamination in soils or contamination migrating to the drainage ditches and/or Sherman Creek. Exposures would be expected to be by direct contact or ingestion of contaminated biota. Human access to the sites is limited as this is a restricted area controlled by the Navy and is fenced. The receptor identification will describe human access and use of the area of SWMU 22.

The human receptor identification for SWMU 22 will include determination of current uses of the drainage ditches, Chicopit Bay, and Sherman Creek by humans. Fishing from the ditches has been reported but not verified.

Ecological receptors may be exposed to contamination migrating from the site to the drainage ditches, Chicopit Bay, Sherman Creek, and the Sherman Creek wetlands. Receptors may also be exposed to soil contamination on the site.

Site-specific ecological receptor identification tasks include a survey of aquatic biota in the drainage ditches with survey stations being located concurrently with sediment and surface water sampling locations in Figure 3-4. Additional survey stations will be located in the drainage ditches north and west of the landfill area. The general goals and steps of the survey of aquatic biota are described in Section 3.4.2.1.

A survey of terrestrial biota will be conducted in the area of Sherman Creek and its associated coastal marsh to identify potential receptors and provide information necessary to support a wetlands assessment. The wetlands assessment process is described in Section 3.4.2.3 and will be conducted for the coastal marsh area, which lies to the south, west, and east of the site. The terrestrial biota survey is detailed in Section 3.4.2.2.

A survey of aquatic biota in Sherman Creek will also be conducted with survey stations at two locations as well as a terrestrial biota survey of the landfill and dredge spoils areas.

Sampling of biota for tissue analyses will be conducted if the results of proposed sediment sampling show extensive contamination of drainage ditch sediments with persistent bioaccumulative chemicals (i.e. DDT/DDD/DDE and PCBs). If it is determined that the public consumes fish or shellfish from the drainage ditches it may be necessary to conduct biota sampling for analyses to determine if exposures to contaminants are occurring via food ingestion.

3.6 HEALTH AND ENVIRONMENTAL ASSESSMENT (HEA).

3.6.1 Constituents of Concern Constituents of concern will be determined after a review of the analytical data collected during the exploration and sampling program (Section 3.2). Constituents of concern will be equivalent to the chemicals detected in soil, sediment, surface water, and groundwater. Inorganic chemicals will be considered to be "of concern" if they exceed background levels as determined for the site and the particular medium.

3.6.2 Human Health Assessment

3.6.2.1 Exposure Assessment

Identification of Exposure Routes. Potential routes of exposure for human receptors are listed by medium of exposure in Table 3-3. Exposure routes will be selected for each of the sites based upon the identified constituents of concern and the extent of contaminant release into environmental media (groundwater, surface water, soil, sediment, and biota).

Estimation of Exposure Point Concentrations. The concentrations of a constituent measured in environmental media at different locations will be presented and averaged to provide an estimate of mean exposures for contamination in surface water, soil, groundwater (ingestion only), sediment (ingestion only), and air. The highest contaminant concentrations measured will provide an estimate of worst-case exposures.

For contaminants in sediment, exposures will be estimated by predicting the partitioning of the chemical between the solid and dissolved phases. Exposures will be equivalent to the amount of chemical in the dissolved phase. Predictions will be according to the equilibrium partitioning theory approach for hydrophobic organics and other valid approaches for specific metals.

Exposures to groundwater contamination via expression to surrounding surface water will be predicted based upon the extent of the release, the potential rate of migration of the release, and general release characteristics (Section 3.5), as well as the potential for dilution in the surface water body.

Table 3-3
Potential Exposure Routes for Human Receptors

RCRA Facility Investigation
NAVSTA Mayport
Mayport, Florida

Medium of Exposure	Exposure Route
Soil	Ingestion, direct contact.
Groundwater	Ingestion of drinking water. Direct contact. Inhalation of volatiles during domestic use.
Air	Inhalation of vapors from contaminated soils, surface waters, or groundwater.
Subsurface gas	Inhalation of vapors from contaminated soils.
Surface waters	Ingestion of drinking waters. Direct contact. Consumption of contaminated biota.
Sediments	Direct contact. Ingestion of contaminated biota.

3.6.2.2 Human Health Toxicity Assessment

Exposure-Limit Criteria. USEPA exposure-limit criteria are levels of contaminants in a medium that present an unacceptable risk to a receptor under certain intake assumptions. The criteria are derived based upon intake assumptions and risk-based adverse contaminant levels (dose-response levels). Possible adverse contaminant levels or dose-response values include:

- Risk-Specific Doses (RSDs) based on Carcinogen Potency Factors (CPF),
- Carcinogen Slope Factor (CSF),
- Maximum Contaminant Levels (MCLs),
- Drinking Water Health Advisories,
- National Academy of Sciences Advisories,
- World Health Organization Advisories,
- Florida Water Quality Standards,
- Florida Ambient Air Quality Criteria,
- National Ambient Air Quality Standards, and
- any other relevant criteria.

This section will derive exposure limit criteria for surface water, soil, sediment, air, and groundwater as they pertain to each individual site. Intake assumptions for the exposure-limit criteria will be based upon USEPA guidance. USEPA's Integrated Risk Information System (IRIS) will be the primary source of dose-response information.

For chemicals and other parameters for which no dose-response values are available, the chronic, subchronic, acute, and carcinogenic effects will be characterized by a literature search. Documents that will be searched include:

- Health and Environmental Effects Profiles (HEEPs),
- Health Effects Assessment documents, and
- Health and Environmental Effects Documents (HEEDs).

Toxicity Profiles. The toxicity profiles will be brief and describe the short- and long-term effects associated with exposures to the respective constituents of concern.

3.6.2.3 Risk Assessment

Comparison of Predicted Exposures with Criteria. The predicted exposure point concentrations (Section 3.6.2.1) for selected exposure routes (Section 3.6.2.1) will be compared with the exposure-limit criteria in Section 3.6.2.2. Exceedance of the criteria implies a potential risk.

Evaluation of Risks for Chemical Mixtures. Total potential human health risks associated with each exposure route will be determined by comparing the total exposure concentrations of chemicals from Section 3.6.2.1 with dose response values from Section 3.6.2.2. The evaluation will integrate total potential exposures in oral, dermal, and inhalation routes from contaminant(s) in groundwater, soil, surface water, sediment, and air.

3.6.3 Environmental Assessment

3.6.3.1 Exposure Assessment

Identification of Exposure Routes. Potential routes of exposure for environmental receptors are listed by medium of exposure in Table 3-4. Exposure routes will be selected for each of the sites based upon the identified constituents of concern and the extent of contaminant release into environmental media (groundwater, surface water, soil, sediment, and biota).

Estimation of Exposure Point Concentrations. Estimation of exposure point concentrations will be the same as that described for the human health assessment in Section 3.6.2.1. Expression of exposure concentrations will include uncertainty analyses.

3.6.3.2 Toxicity Assessment

Ecological Criteria. Criteria protective of aquatic organisms are available in the form of:

- Ambient Water Quality Criteria (USEPA, 1986),
- Florida Water Quality Standards (Chapter 17-550, FAC), and
- Interim Sediment Quality Criteria.

These criteria are levels of contaminants in surface water or sediment that are protective of chronic or acute toxic effects to aquatic life. The sediment quality criteria (SQC) are site specific based upon the organic carbon content of the sediments.

Available and applicable criteria for constituents of concern will be calculated and summarized. Where criteria are not available, dose-response information will be collected and used to derive protective levels. The dose-response information for aquatic organisms will be summarized as part of the ecotoxicity profiles as described later. Where possible, uncertainty associated with dose-response levels (including criteria) will be expressed by equation.

In addition to numeric criteria, qualitative criteria will be assessed including:

- presence of sensitive ecosystems;
- presence of rare, endangered, or threatened species;
- important exposure routes not addressed by quantitative criteria; and
- presence of chemicals that cause secondary ecological effects (alter pH or dissolved oxygen, or change habitat).

Bioassessment Results. Results of bioassessment methods employed at any of the sites will be presented in this section. The result may include use of quantitative benthos or fish sampling, sediment or aquatic bioassays, soil bioassays, vegetative sampling, and tissue residue analyses.

Table 3-4
Potential Exposure Routes for Environmental Receptors

RCRA Facility Investigation
NAVSTA Mayport
Mayport, Florida

Medium of Exposure	Route of Exposure	Populations Exposed
Soil	Dermal contact with contaminated soil or organic matter.	Burrowing mammals, reptiles, amphibians, invertebrates, and dust-bathing birds.
Soil	Ingestion of contaminated soil or organic matter.	Earthworms and insects.
Soil	Consumption of animals that have contact with contaminated soil or organic matter.	Predatory and omnivorous mammals, birds, reptiles, and amphibians; insects.
Soil/air	Inhalation of vapors from contaminated soil or organic matter.	All terrestrial animals.
Surface water	Dermal contact with contaminated water.	Fish, terrestrial animals, reptiles, and amphibians; invertebrate larvae.
Surface water	Ingestion of contaminated water	most terrestrial animals, fish (via gills).
Sediments	Dermal contact with or ingestion of contaminated sediments or organic matter.	Aquatic invertebrates.
Sediments	Ingestion of sediment-dwelling aquatic invertebrates.	Fish.
Surface water/sediments	Ingestion of fish contaminated as above.	Predatory fish, reptiles, birds, and mammals.

Quantitative benthos, fish, or vegetative sampling results will help to define areas of contamination where ecological effects are occurring. Results of bioassays (soil, sediment, and surface water) and tissue residue analyses provide information on the magnitude and variation of toxic effects associated with contaminant exposure.

Ecotoxicity Profiles. The toxicity profiles will provide information on the long- and short-term effects of the constituents of concern upon aquatic and terrestrial wildlife. Information on species that are particularly sensitive to respective contaminants will be included as part of the profile as well as a compilation of data on the tendency of respective contaminants to bioconcentrate in biota and biomagnify within food chains. The profiles will include dose-response information for terrestrial and aquatic organisms via oral and direct exposures.

3.6.3.3 Risk Assessment

Comparison of Predicted Exposures with Criteria. A joint probability analysis procedure will be used to compare predicted exposures from Section 3.6.3.1 with dose-response values for respective chemicals from Section 3.6.3.2. The analyses will be used for sediment and surface water exposures and will provide probability-based risk estimates.

Risks for soil exposures will be evaluated by comparing dose-response levels from Section 3.6.3.2 with exposure estimates from 3.6.3.1.

Evaluation of Risks for Chemical Mixtures. Total potential ecological risks associated with each exposure route will be determined in theory by comparing the total exposure concentrations of chemicals from Section 3.6.3.3 with dose-response values from Section 3.6.3.1. The evaluation will integrate total potential exposures to contaminant(s) in groundwater, surface water, and sediment. If bioassay results are available, they will provide a direct measure of toxic effects associated with chemical mixtures in a particular medium.

4.0 DATA MANAGEMENT PLAN

4.1 DATA DOCUMENTATION Data for this project encompass both field and laboratory measurements as specified in Chapter 3 and the Sampling and Analysis Plan. Field measurements and observations will be recorded in project-dedicated field notebooks at the time of collection. Information to be recorded will include sample location, identification code (if applicable), date and time, environmental setting, and any other pertinent information. At appropriate time intervals, data from the field notebook will be transposed onto data summary sheets, soil boring logs, or inspection reports to facilitate data verification and interpretation.

Samples collected for laboratory analysis will be given a unique identification code. This code will appear on all sample containers, the chain-of-custody form, and in the field notebook. Details of this procedure are specified in the Sampling and Analysis Plan. Additional information will be recorded in the field notebook. Typical information to be recorded will include sample location, site, date and time of sampling, sampling method, sample medium, sampler, analyses to be performed, etc.

Analytical results from samples submitted to the laboratory will be sent to ABB-ES along with copies of chain-of-custody forms. Summary sheets will be developed from the laboratory reports to aid in the interpretation of the data. In addition, large chemical databases will be stored on microcomputer diskettes using commercially available software such as Lotus 1,2,3™ or dBase III™ to facilitate data handling and analysis. Backup copies of diskettes containing data files will be stored in the project files.

4.2 PROJECT FILE REQUIREMENTS. Originals of all field notebooks, analytical laboratory reports, data summary sheets, logs, etc., will be stored in the project file. Access to this file will be controlled by the Task Order Manager. In addition, material removed from the file will be logged on a tracking sheet to maintain file integrity.

Data files will consist of three parts: field data, laboratory data, and calculations and analysis. Field data will consist of field notebooks, boring logs, monitoring well installation reports, survey data, and field air monitoring summary sheets. The laboratory data file will consist of original laboratory reports segregated by site and sample medium and microcomputer diskettes. The calculation and analysis section of the file will contain results of all data manipulations and will include originals of all calculation forms and computer outputs.

4.3 PROGRESS REPORTING. Quarterly progress reports shall be sent to SOUTHNAVFACENGCOM in Charleston, S.C., for transmittal to USEPA during the course of the RFI. Progress reports will contain a description of work completed: a summary of findings to date; summaries of any changes in the RFI; summaries of any problems encountered; projected work for the next quarter; and copies of all inspection reports, laboratory and monitoring data, and other relevant information.

Upon completion of field activities and data analysis, a draft RFI Report will be submitted to USEPA for their review. The report will describe the type and extent of contamination relative to background levels, including sources and migration pathways, and a description of actual and potential receptors. A Final RFI report will be submitted within 30 days of receipt of USEPA comments on the draft report.

A proposed outline of the Table of Contents for the RFI report is presented in Table 4-1. Tabular and graphical displays of data will be presented in the report to supplement the narrative.

4.4 DATA PRESENTATION FORMAT. The reduction of field and analytical data will consist of summarizing water level measurements, soil boring logs, well logs, field parameters, and analytical results. These summaries will be presented in the forms of tables, illustrations, and graphs. Original field data generated during soil borings and well installation will be stored in the project files as described previously. Original data collected by the field staff will be stored at the field office.

Chemical data and some physical data will be stored and managed using a data management system (e.g., dBase III Plus™). The system will be capable of various sorting routines so that data can be sorted by medium, location, parameter, etc., and presented in a tabular format. The program will also be capable of statistical evaluations by expansion of the programming.

Graphical presentation of the data and site conditions will also be included in the final report. Sampling locations, boundaries, plume definition, potential receptors, etc., will be illustrated on site maps based upon the data collected. Water level contours, geologic cross sections, and horizontal and vertical concentration profiles will be plotted.

Raw data will be included in the appendices using a spreadsheet type of format. The spreadsheet format will allow the display of more samples per page and more information on blanks and their association with samples. At a minimum, the information shown in Table 4-2 will be presented. The contractor may add other information that will assist in review. Data on calibration, tuning, spikes, surrogates, and duplicates will also be presented.

Table 4-1
Example Table of Contents

RCRA Facility Investigation
NAVSTA Mayport
Mayport, Florida

Section	Title	Page No.
EXECUTIVE SUMMARY		
1.0	INTRODUCTION	
1.1	Background	
1.2	Purpose	
1.3	Scope	
2.0	EXISTING SITE CONDITIONS	
2.1	Facility Description	
2.2	Environmental Setting	
2.3	Previous Investigations	
3.0	RCRA FACILITY INVESTIGATION	
3.1	Data Compilation	
3.2	Summary of Exploration and Sampling Program	
3.2.1	Boring and Monitoring Well Installations	
3.2.2	Soil Sampling	
3.2.3	Surface Water and Sediment Sampling	
3.2.4	Groundwater Sampling	
3.2.5	Air Monitoring	
3.3	SWMU (NIRP Site 1), Landfill A	
3.3.1	Field Exploration and Sampling Program	
3.3.2	Environmental Setting	
3.3.3	Source Characteristics	
3.3.4	Release Characteristics, Groundwater, Soil, Surface Water and Sediment, and Air	
3.3.5	Potential Receptors	
3.3.6	Recommendation	
3.4	SWMU (NIRP Sites 2, 4, 5, and 6), Landfills B, D, E, and F	
3.4.1	Field Exploration and Sampling Program	
3.4.2	Environmental Setting	
3.4.3	Source Characteristics	
3.4.4	Release Characteristics, Groundwater, Soil, Surface Water and Sediment, and Air	
3.4.5	Potential Receptors	
3.4.6	Recommendation	
3.5	SWMU 6, 7, 8, 9, and 10 (NIRP Sites 8, 8A, 8B, 8C, and 8D), Oily Waste Treatment System and Hazardous Waste Storage Facility	
3.5.1	Field Exploration and Sampling Program	
3.5.2	Environmental Setting	

Table 4-1 (Continued)
Example Table of Contents

RCRA Facility Investigation
NAVSTA Mayport
Mayport, Florida

Section	Title	Page No.
	3.5.3 Source Characteristics	
	3.5.4 Release Characteristics, Groundwater, Soil, Surface Water, Sediment, and Air	
	3.5.5 Potential Receptors	
	3.5.6 Recommendations	
3.6	SWMU 11 (NIRP Site 9), Fuel Spill Area	
	3.6.1 Field Exploration-and Sampling Program	
	3.6.2 Environmental Setting	
	3.6.3 Source Characteristics	
	3.6.4 Release Characteristics, Groundwater, Soil, Surface Water, Sediment and Air	
	3.6.5 Potential Receptors	
	3.6.6 Recommendations	
3.7	SWMU 12 (NIRP Site 11), Neutralization Basin	
	3.7.1 Field Exploration and Sampling Program	
	3.7.2 Environmental Setting	
	3.7.3 Source Characteristics	
	3.7.4 Release Characteristics, Groundwater, Soil, Surface Water, Sediment, and Air	
	3.7.5 Potential Receptors	
	3.7.6 Recommendations	
3.8	SWMU 13 (NIRP Site 13), Old Fire Training Area	
	3.8.1 Field Exploration and Sampling Program	
	3.8.2 Environmental Setting	
	3.8.3 Source Characteristics	
	3.8.4 Release Characteristics, Groundwater, Soil, Surface Water, Sediment, and Air	
	3.8.5 Potential Receptors	
	3.8.6 Recommendations	
3.9	SWMU 14 (NIRP Site 14), Mercury/Oily Waste Spill Site	
	3.9.1 Field Exploration and Sampling Program	
	3.9.2 Environmental Setting	
	3.9.3 Source Characteristics	
	3.9.4 Release Characteristics, Groundwater, Soil, Surface Water, Sediment, and Air	
	3.9.5 Potential Receptors	
	3.9.6 Recommendations	
3.10	SWMU 15 (NIRP Site 15), Old Pesticide Area	
	3.10.1 Field Exploration and Sampling Program	
	3.10.2 Environmental Setting	
	3.10.3 Source Characteristics	
	3.10.4 Release Characteristics, Groundwater, Soil, Surface Water, Sediment, and Air	

Table 4-1 (Continued)
Example Table of Contents

RCRA Facility Investigation
NAVSTA Mayport
Mayport, Florida

Section	Title	Page No.
3.10.5	Potential Receptors	
3.10.6	Recommendations	
3.11	SWMU 16 (NIRP Site 16), Old Transformer Storage Yard	
3.11.1	Field Exploration and Sampling Program	
3.11.2	Environmental Setting	
3.11.3	Source Characteristics	
3.11.4	Release Characteristics, Groundwater, Soil, Surface Water, Sediment, and Air	
3.11.5	Potential Receptors	
3.11.6	Recommendations	
3.12	SWMU 17 (NIRP Site 17), Solid Waste Incinerator	
3.12.1	Field Exploration and Sampling Program	
3.12.2	Environmental Setting	
3.12.3	Source Characteristics	
3.12.4	Release Characteristics	
3.12.5	Potential Receptors	
3.12.6	Recommendations	
3.13	SWMU 22, Building 1600 Blasting Area	
3.13.1	Field Exploration and Sampling Program	
3.13.2	Environmental Setting	
3.13.3	Source Characteristics	
3.13.4	Release Characteristics	
3.13.5	Potential Receptors	
3.13.6	Recommendations	
4.0	SUMMARY OF CONCLUSIONS	
4.1	Presentation of Data Analysis	
5.0	SUMMARY OF RECOMMENDATIONS	
REFERENCES		

Table 4-2
Data Format, Final Report

RCRA Facility Investigation
NAVSTA Mayport
Mayport, Florida

Sample Number	J25019	JS5020
Date Sampled	03/18/87	11/25/87
Sample Prep. Date	11/25/87	11/25/87
Sample Analysis Data	11/26/87	11/26/87
Sample Numbers of Associated Analytes, Field, Trip, and Equipment Blanks	J4455667	L4455667

Analyte	Sample Limit	Sample Results	Results
Volatile Organic Compounds (µg/kg)			
Tetrachloroethane	5	50	50
Chlorobenzene	5		
Semivolatile Organic Compounds (µg/kg)			
Bis(2-ethylhexyl)phthalate	330		750
2-methylnaphthalene	330		2,500
Inorganic Compounds (mg/kg)			
Lead	10	360	25
Hydrocarbons			
Petroleum hydrocarbon	1	0.611	0.268
Oil and grease	1		

Source: Oak Ridge Gaseous Diffusion Plant, 1988.

Notes: ug/kg = microgram per kilogram.
mg/kg = milligram per kilogram.

5.0 PROJECT MANAGEMENT PLAN

The Project Management Plan for the RFI at Mayport NAVSTA, in accordance with Attachment A of the HSWA Permit, includes technical and management approach, schedules for conducting the project, and qualifications of the key personnel involved.

5.1 TECHNICAL APPROACH TO RFI. ABB-ES typically recommends a two-phased approach for investigations such as the RFI at NAVSTA Mayport. This approach involves a verification phase and, if necessary, a subsequent characterization phase. During the verification phase initial analytical testing and monitoring are conducted at each site. The intent of this phase is to determine whether there has been a release of hazardous materials from any of the SWMUs.

A characterization study is conducted for sites at which: (1) sufficient evidence exists to indicate the presence of contamination, and (2) the contamination poses a potential threat to human health or to the environment. The characterization phase (using a more extensive testing and monitoring program) will provide detailed information on the degree and extent of contamination migrating from an SWMU as well as more specific information on the site hydrogeology. Such information is used to aid in the analysis of potential impacts and development of appropriate corrective actions.

Investigations conducted as part of the NIRP described in Section 2.3.1) and the USEPA's RFA have verified the release of hazardous materials at 17 sites specified in the HSWA permit for NAVSTA Mayport (Sites 1, 2, 4, 5, 6, 8, 8A, 8B, 8C, 8D, 9, 13, 14, 15, 16 and 17). Site 22 has also been identified as requiring characterization. Activities conducted at these sites during the RFI will constitute characterization phase investigations. No further investigations are planned at Site 11.

5.2 MANAGEMENT APPROACH. In undertaking the NAVSTA Mayport RFI, ABB-ES will be responsible for overall program management with senior ABB-ES personnel filling the key roles of Corporate Officer, Program Manager, Quality Assurance Coordinator, Health and Safety Coordinator, Task Order Manager, and technical support staff. The proposed organizational chart for this project is shown in Figure 5-1.

5.3 KEY PROJECT PERSONNEL. The designated key roles for the NAVSTA Mayport RFI and their specific responsibilities are as follows.

Corporate Officer. The Corporate Officer (CO) is Mr. Raymond A. Allen, III, CPSS. He is responsible for committing the corporate resources necessary to conduct the program work activities, for supplying corporate-level input for problem resolution; and for assisting the Program Manager and Task Order Manager, as needed during project implementation.

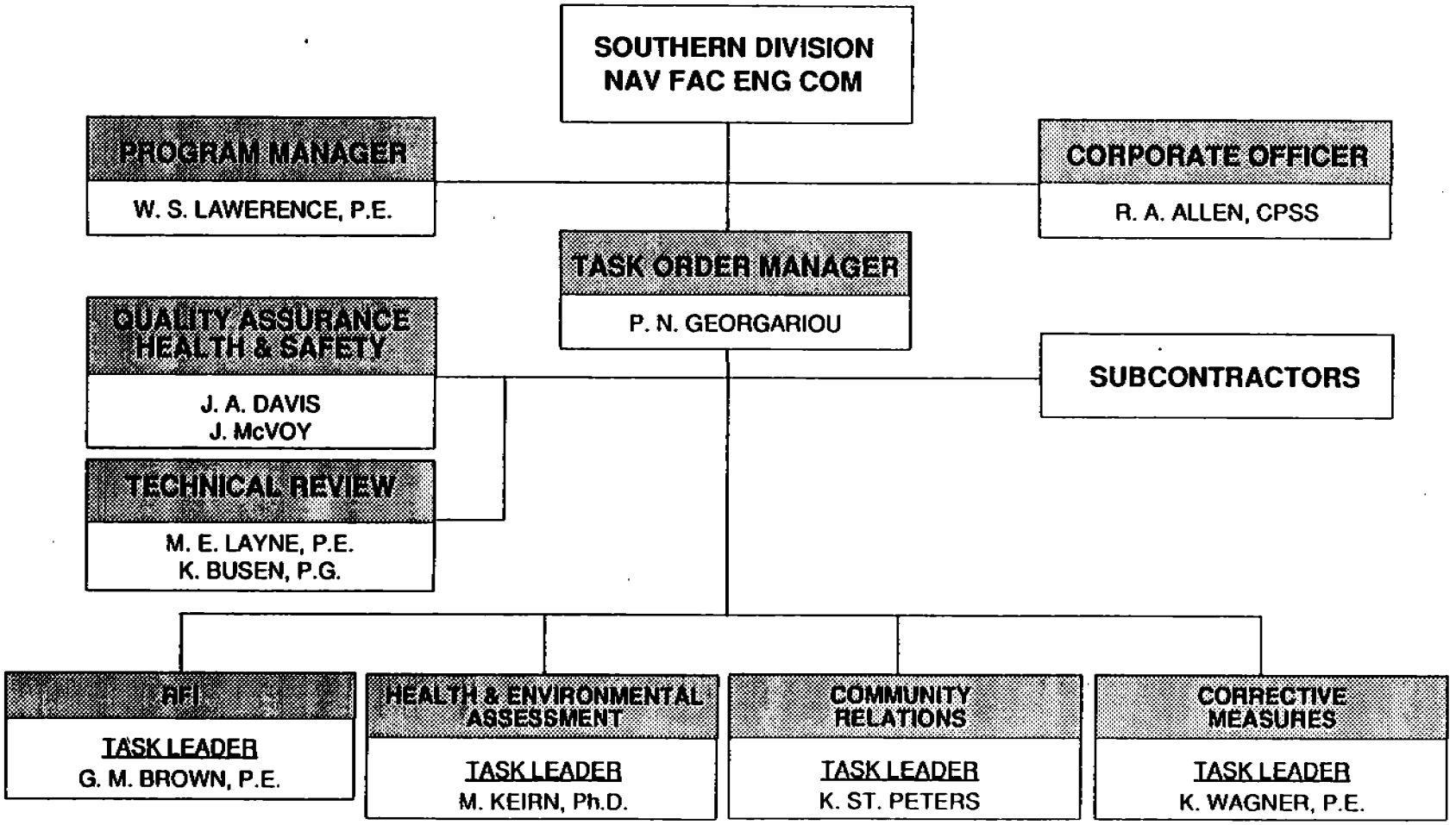

FIGURE 5-1

PROJECT ORGANIZATION

RCRA FACILITY INVESTIGATION WORKPLAN
U.S. NAVAL STATION
MAYPORT, FLORIDA

Program Manager. The Program Manager (PM), Mr. W.S. Lawrence, P.E., is responsible for the overall Southern Division program. Some specific responsibilities of his role include:

- oversee and manage the overall multi-installation Comprehensive Long-term Environmental Action, Navy (CLEAN) Program,
- identify overall program needs and facilitate meeting those needs;
- direct resources as appropriate for effective and timely completion of program activities;
- ensure overall program quality assurance,
- promote technical and programmatical information transfer, and
- establish contracts and negotiate amendments.

Task Order Manager. Mr. Philip Geogariou will hold the position of the Task Order Manager (TOM). In this role he is responsible for the management of scope, schedule, and budget for the NAVSTA Mayport project. Some specific responsibilities of his role include:

- assuming overall responsibility for the project to the Navy,
- establishing and overseeing all subcontracts for support services,
- initiating project activities,
- implementing the subcontracting plan to significantly involve small and disadvantaged businesses in the program,
- participating in the workplan preparation and staff assignments,
- identifying and fulfilling equipment and other resource requirements,
- monitoring task activities to ensure compliance with established budgets, schedules, and the scope of work,
- regularly interacting with the Southern Division EIC, the Installation's Commanding Officer, and others, as appropriate, on the status of the project,
- preparing monthly technical, management, and cost progress reports; and
- ensuring that appropriate financial record and reporting requirements are met.

RFI Task Leader. Mr. Gregory M. Brown, P.E., will hold the position of RFI Task Leader. Mr. Brown will be responsible for the technical effectiveness of field investigations, data analysis, and investigation conclusions and recommendations. He will assist the TOM to assure adequate technical resources are applied to the project in order to achieve the RFI goal and objectives. He will also assist the TOM in the efficient allocation of these resources over the life-cycle of the project.

Contracts Administrator. Ms. Laurie Huffman will hold the position of Contracts Administrator for the NAVSTA Mayport RFI project. This position is established to assist the TOM with the important tasks of day-to-day scope, schedule, and budget monitoring both within ABB-ES and between ABB-ES and the U.S. Navy's EIC. It is expected that project decisions will be occurring frequently; therefore, it is necessary to anticipate and immediately implement the administrative actions (initiate internal work orders, followup on support needs, amend subcontracts, track cost-charges, etc.) to carry out the program plans.

Technical Review Board. A Technical Review Board (TRB), made up of senior technical staff from the ABB-ES team, will assist the TOM and TD by providing review of the technical aspects of the project to assure that the services reflect the accumulated experience of the firm, that they are produced in accordance with the corporate policy, and that they meet the intended needs of SOUTHNAVFACENGCOM's EIC. The primary function of this board is to assure the application of technically sound methodologies and the development of defensible data, interpretations, and conclusions. Members of the TRB are Ms. Peggy Layne, P.E., and Mr. Ken Busen, P.G.

Quality Assurance and Health and Safety Coordinators. The TOM is supported by a Quality Assurance Officer (QAO) and a Health and Safety Officer (HSO). The QAO will assure that appropriate Navy and USEPA protocols are followed and will be responsible for the development of the Site-Specific Quality Assurance Plan Addendum (Appendix B, Volume II). The QAO will work with the TOM and the TD to ensure that established quality control procedures are implemented. The HSO is responsible for ensuring that the project team complies with the Health and Safety Program. He is also responsible for seeing that a Health and Safety Plan is developed for each site activity.

Other key line positions are the technical activity leaders, i.e., the senior or most-experienced individual in each technical area of the project. These technical activity leaders are identified on the Project Organization Chart.

The following is a list of key project staff. Revisions and identification of additional personnel may be made prior to the initiation of RFI activities. A list of emergency numbers is also contained in the HASP.

ABB Environmental Services
William Lawrence, P.E., Program Manager
Philip Geogariou, Task Order Manager
Jack Davis, HSO
John McVoy, QAO
Michael Keirn, Ph.D., Health and Environmental Assessment
Gregory Brown, P.E., RFI Task Leader

SOUTHNAVFACENGCOM
Jim Reed, Engineer-in-Charge

NAVSTA Mayport
Mike Davenport, Environmental Coordinator

Technical Staff and Field Personnel. Qualified technical staff and field personnel from ABB-ES or their subcontractors will accomplish specific tasks such as well installation, sample collection, subcontractor oversight, data analysis, and report preparation. Oversight of staff activities will be accomplished by the management team described above. Specific roles and responsibilities for staff members are described in Section 3.1.2, Field Personnel Responsibilities located in Volume II, Sampling and Analysis Plan.

The main technical staff member responsible for routine management of field activities is the Field Operations Leader (FOL). The FOL is responsible for day-to-day review of the field activities performed onsite, overall management and coordination of the field work, and supervision and scheduling of work. The FOL will maintain consistency and require that field teams follow project-specific plans and that the implementation of field investigations are in compliance with appropriate guidelines. The FOL will be selected once field activities are scheduled.

5.4 PROJECT SCHEDULE. The schedule is presented in the CAMP, Appendix F, Volume I. The schedule will begin upon the approval of the Workplan and the Notice to Proceed. The schedule will assume ready access to the sites. The schedule also assumes there will be no delays due to the securing of required permits. The schedule may also be modified by the nature and extent of regulatory review cycles and new data collected during the RFI. The assumptions, tasks, sequences, and durations are described in the CAMP located in Appendix F, of Volume I.

5.5 PROJECT LOGISTICS. This section is devoted to the logistics of the onsite field work. Sites 4 and 5 are located adjacent to a highly restricted magazine area. To ensure proper security arrangements for access and operations in these area and for the base in general, a meeting will be held at NAVSTA Mayport with representatives from weapons, security, public works, engineering, safety, and the NAVSTA Mayport fire department to discuss the operational aspects of implementing the RFI. The following sections address the logistics of security

arrangements, communications, field operations, decontamination facilities, and disposal of wastes as a result of the meeting with base personnel.

5.5.1 Security Arrangements Access to the base in general and to the restricted area will be with one security pass per vehicle. All information on ABB-ES personnel involved in the project and a copy of the contract for the project will be provided to security at least 2 weeks before the field work begins.

5.5.2 Communications ABB-ES personnel will use telephones while on the base to communicate with off-base parties and will have a list of emergency phone numbers available at all times. Personnel conducting onsite work in one area of the base will use two-way radios with frequencies approved by the Navy to maintain a communication link with personnel working in other areas. Daily communications for access needs and scheduling site operations will be coordinated with one representative from the Naval Station and one representative from the Naval Air Station. As of this writing, the representative from the Naval Station will be Mike Davenport from the Environmental Branch of the Engineering Division. The representative from the Naval Air Facility has not been named.

5.5.3 Field Operations Drill rigs and backhoes left in the restricted area overnight will be disabled each night before onsite personnel leave the restricted area. Final approval for boring locations will be given during a site reconnaissance prior to the beginning of the field work. Potable water, which is necessary for drilling and decontamination procedures, will be obtained at fire hydrant locations specified by Public Works.

5.5.4 Decontamination Facilities The field work at the NAVSTA Mayport sites will require mobilization and field support by subcontractors, sampling crews, and survey crews. Staging and decontamination facilities will be needed to conduct these operations. Staging of the field operations will be done from vehicles used by ABB-ES personnel. These vehicles will be parked in uncontaminated areas identified at each site and will not require decontamination. Decontamination zones for personnel and equipment during the reconnaissance will be established at locations to be determined for each site. All contaminated materials and protective gear will either be disposed of or decontaminated in these areas before site personnel proceed into the clean zone.

A heavy equipment decontamination zone will be designated at each site. Drill rigs, casing, rods, and associated equipment will be decontaminated and steam cleaned prior to setting up at each boring or monitoring well location. In addition, the drill rig and all tools will be decontaminated prior to entering and leaving NAVSTA Mayport. Sampling tools will be decontaminated more frequently as required by the sampling protocol provided in the accompanying Sampling and Analysis Plan for the RFI at NAVSTA Mayport.

5.5.5 Disposal of Wastes All fluids generated by personnel and by equipment decontamination will be collected onsite, inside the contamination reduction area. Contaminated items such as disposable safety and sampling equipment will be placed in doubled plastic bags, which will be collected daily and stored in 55-gallon drums with locking ring lids. The drums will be supplied by NAVSTA Mayport Engineering and left onsite for future transportation by the Department

of the Navy to a suitable disposal facility. This will be coordinated with the Environmental Coordinator.

Drill fluids, drill cuttings, and water resulting from monitoring well and piezometer installation and development will be collected and stored onsite. Samples of these materials will be analyzed for the presence of hazardous constituents. Materials found to be hazardous will be transported to a suitable disposal facility by the Department of the Navy. Materials found to be nonhazardous will be disposed of onsite under the direction of the Environmental Coordinator.

REFERENCES

Bouwer, H., and Rice J., 1976, A slug test for determining hydraulic conductivity of unconfined aquifers with completely or partially penetrating wells. Water Resource Research, v. 12, p. 423-428.

Causey, L.V., and Phelps, G.G., 1978, Availability and quality of water from shallow aquifers in Duval County, Florida: U.S. Geological Survey Water-Resources Investigation 78-92, 36 p.

Cooper, H.H., Bredehoeft, J.D., and Papadopolis, I.S., 1967, Response of a finite-diameter well to an instantaneous change in water: Water Resources Research v. 3, no. 1, p. 263-269.

E.C. Jordan Co., 1988, NIRP expanded site investigation, final report, U.S. Naval Station, Mayport, Florida: 91 p.

Environmental Science and Engineering, Inc., 1986, Initial Assessment Study, Naval Station, Mayport, Florida: 149 p.

Fairchild, R.W., 1972, The shallow-aquifer system in Duval County, Florida: Florida Bureau of Geology Report of Investigations No. 59, 50 p.

Franks, B.J., 1980, The surficial aquifer at the U.S. Naval Station near Mayport Florida: U.S. Geological Survey Open-File Report 80-765, 13 p.

Frazee, J.M., and McClaugherty, D.R., 1979, Investigation of ground water resources and saltwater intrusion in the coastal areas of northeast Florida: St. Johns River Water Management District Technical Report No. 3.

Geraghty and Miller, Inc., 1983, Hydrogeologic assessment and ground-water monitoring plan, U.S. Naval Station, Mayport, Florida: 33 p.

_____, 1984, As-built ground-water monitoring network, Naval Air Station, Mayport, Florida.

_____, 1985, Year-end report of ground-water monitoring as NS-Mayport, Mayport, Florida.

_____, 1986, Results of sampling of potable water wells, Mayport Naval Station, Mayport, Florida.

Heath, R.C., and Conover, C.S., 1981, Hydrologic almanac of Florida: U.S. Geological Survey Open-File Report 81-1107, 239 p.

Kearney, A.T., Inc., 1989, RCRA facility assessment of the Naval Station, Mayport, Jacksonville, Florida: Draft, September 1989, 165 p.

REFERENCES (Cont.)

Leve, G.W., 1966, Ground water in Duval and Nassau Counties, Florida: Florida Geological Survey Report of Investigations No. 43, 91 p.

Oak Ridge Gaseous Diffusion Plant, 1988, Sampling and chemical analysis quality assurance requirements for the Navy Installation Restoration Program: NEESA 20.2-047B.

Spechler, R.M., 1982, Generalized configuration of the top of the limestone unit of the lower part of the surficial aquifer, Duval County, Florida: U.S. Geological Survey Water-Resources Investigations Report 82-336, 1 sheet.

USEPA, 1986, Quality Criteria for Water, Office of Water Regulations and Standards, EPA 440/5-86-001.

U.S. Navy, 1984, Long range natural resources management plan, U.S. Naval Station, Mayport, Florida.

U.S. Soil Conservation Service, 1978, Soil survey of city of Jacksonville, Duval County, Florida: U.S. Government Printing office, Washington, D.C.

APPENDIX A

NEUTRALIZATION BASIN MONITORING DATA

ABB
ASEA BROWN BOVERI

October 26, 1990

Mark Taylor
Southern Division
Naval Facilities Engineering Command
P.O. Box 10068
2155 Eagle Drive
Charleston, SC 29411-0068

RE: Neutralization Basin Closure at Mayport Naval Station

Dear Mr. Taylor:

Enclosed please find a revised closure certificate as you requested by telephone today. If I can be of any further assistance, please do not hesitate to call.

Very truly yours,

ABB ENVIRONMENTAL SERVICES, INC.

Peggy Layne

Margaret E. Layne, P.E.

ABB Environmental Services, Inc.

2571 Executive Center Circle East
Suite 100
Tallahassee, Florida 32301

Telephone (904) 656-1293

Fax (904) 656-3386

ABB
ASEA BROWN BOVERI

Closure Certification
for
Neutralization Basin at Building 1241
(USEPA ID No. FL9170024260)
U.S. Naval Station - Mayport
Mayport, Florida

I certify that I have personally reviewed the approved Closure Plan for the facility, dated December 1988, and Addendum A to the Closure Plan, dated April 1989, and understand the closure procedures specified in that plan.

On 11 May 1989 soil and groundwater samples were collected as specified in Addendum A to the Closure Plan. Samples were analyzed by Pioneer Laboratory, Inc., Pensacola, Florida in accordance with the approved Closure Plan.

Based upon my inquiry and review of the sampling and analysis, I certify that the facility was closed in accordance with the December 1988 Closure Plan.

Owner:_____

Engineer: Margaret E. Layne

Margaret E. Layne
Registration No. FL42425

Date: 10/26/90

ABB Environmental Services, Inc.

2571 Executive Center Circle East
Suite 100
Tallahassee, Florida 32301

Telephone (904) 656-1293

Fax (904) 656-3386

Pioneer
PLI LABORATORY, INC.
11 EAST OLIVE ROAD PENSACOLA, FLORIDA 32514
PHONE (904) 474-1001

Client: E.C.JORDAN
10001 2571 EXECUTIVE CENTER CIR
SUITE 100
TALLAHASSEE FL 32301-5001

Lab I.D.#: 89-1477
Order Number: P19789
Order Date: 04/27/89
Sampled By: R. GONZALEZ
Sample Date: 04/25/89
Sample Time: VARIOUS

Project Number: 1575-05
Project Name: MAYPORT - BASIN CLOSURE
Sample Site: JACKSONVILLE
Sample Type: SURFACE WATER

N/S = Not Submitted

Lab ID	Sample ID	Parameter	Units	Results	Detection Limit
89-1477-1	MPT-11-01	SILVER	PPM	BDL	0.0001
89-1477-2	MPT-11-02	SILVER	PPM	BDL	0.0001
89-1477-3	DUPLICATE	SILVER	PPM	BDL	0.0001
89-1477-4	EQUIPMENT BLANK	SILVER	PPM	BDL	0.0001
89-1477-5	FIELD BLANK	SILVER	PPM	BDL	0.0001
89-1477-6	PLI TRIP BLANK	SILVER	PPM	BDL	0.0001
89-1477-1	MPT-11-01	ARSENIC	PPM	0.007	0.001
89-1477-2	MPT-11-02	ARSENIC	PPM	0.016	0.001
89-1477-3	DUPLICATE	ARSENIC	PPM	0.011	0.001
89-1477-4	EQUIPMENT BLANK	ARSENIC	PPM	BDL	0.001
89-1477-5	FIELD BLANK	ARSENIC	PPM	BDL	0.001
89-1477-6	PLI TRIP BLANK	ARSENIC	PPM	BDL	0.001
89-1477-1	MPT-11-01	BARIUM	PPM	BDL	0.03
89-1477-2	MPT-11-02	BARIUM	PPM	BDL	0.03
89-1477-3	DUPLICATE	BARIUM	PPM	BDL	0.03
89-1477-4	EQUIPMENT BLANK	BARIUM	PPM	BDL	0.03
89-1477-5	FIELD BLANK	BARIUM	PPM	BDL	0.03
89-1477-6	PLI TRIP BLANK	BARIUM	PPM	BDL	0.03
89-1477-1	MPT-11-01	CADMIUM	PPM	0.0010	0.0005*
89-1477-2	MPT-11-02	CADMIUM	PPM	0.0020	0.0005*
89-1477-3	DUPLICATE	CADMIUM	PPM	0.0010	0.0005*
89-1477-4	EQUIPMENT BLANK	CADMIUM	PPM	BDL	0.0001
89-1477-5	FIELD BLANK	CADMIUM	PPM	BDL	0.0001
89-1477-6	PLI TRIP BLANK	CADMIUM	PPM	BDL	0.0001
89-1477-1	MPT-11-01	CHLORIDE	PPM	170	1
89-1477-2	MPT-11-02	CHLORIDE	PPM	1084	1
89-1477-3	DUPLICATE	CHLORIDE	PPM	1734	1
89-1477-4	EQUIPMENT BLANK	CHLORIDE	PPM	BDL	1
89-1477-5	FIELD BLANK	CHLORIDE	PPM	BDL	1
89-1477-1	MPT-11-01	COLOR	C.U.	30	5
89-1477-2	MPT-11-02	COLOR	C.U.	30	5

Comments: PPM =Parts Per Million, mg/l.PPB =Parts Per Billion, ug/l.Method Refs: EPA 600/4-79-020, Revised 3/83 and Fed Reg 40 CFR Part 136, 7/1/88.BDL = Below Detection Limits. * Elevated Detection Limit Due to Matrix Interference.

Approved By : W. F. Bowers

CERTIFICATION NUMBERS: FL LAB ID # 81142 • EPA # FL094 • FDER # EL020 • AL LAB ID # 40150 • NIOSH # 32514-001 • FL ENV # E81010

Pioneer
PLI LABORATORY, INC.
11 EAST OLIVE ROAD PENSACOLA, FLORIDA 32514
PHONE (904) 474-1001

Client: E.C.JORDAN
10001

Lab I.D.#: 89-1477
Order Date: 04/27/89
Sampled By: R. GONZALEZ

Sample Site: JACKSONVILLE
Sample Type: SURFACE WATER

Single Tests continued Sample Date: 04/25/89 Time: VARIOUS

Lab ID	Sample ID	Parameter	Units	Results	Detection Limit
89-1477-3	DUPLICATE	COLOR	C.U.	30	5
89-1477-4	EQUIPMENT BLANK	COLOR	C.U.	BDL	5
89-1477-5	FIELD BLANK	COLOR	C.U.	BDL	5
89-1477-1	MPT-11-01	CONDUCTIVITY	UMH/CM	1491	0.1
89-1477-2	MPT-11-02	CONDUCTIVITY	UMH/CM	5630	0.1
89-1477-3	DUPLICATE	CONDUCTIVITY	UMH/CM	4255	0.1
89-1477-4	EQUIPMENT BLANK	CONDUCTIVITY	UMH/CM	9.4	0.1
89-1477-5	FIELD BLANK	CONDUCTIVITY	UMH/CM	4.0	0.1
89-1477-1	MPT-11-01	CHROMIUM	PPM	BDL	0.01
89-1477-2	MPT-11-02	CHROMIUM	PPM	BDL	0.01
89-1477-3	DUPLICATE	CHROMIUM	PPM	0.01	0.01
89-1477-4	EQUIPMENT BLANK	CHROMIUM	PPM	BDL	0.01
89-1477-5	FIELD BLANK	CHROMIUM	PPM	BDL	0.01
89-1477-6	PLI TRIP BLANK	CHROMIUM	PPM	BDL	0.01
89-1477-1	MPT-11-01	COPPER	PPM	BDL	0.02
89-1477-2	MPT-11-02	COPPER	PPM	BDL	0.02
89-1477-3	DUPLICATE	COPPER	PPM	BDL	0.02
89-1477-4	EQUIPMENT BLANK	COPPER	PPM	BDL	0.02
89-1477-5	FIELD BLANK	COPPER	PPM	BDL	0.02
89-1477-6	PLI TRIP BLANK	COPPER	PPM	BDL	0.02
89-1477-1	MPT-11-01	FLUORIDE	PPM	0.43	0.01
89-1477-2	MPT-11-02	FLUORIDE	PPM	1.5	0.01
89-1477-3	DUPLICATE	FLUORIDE	PPM	1.5	0.01
89-1477-4	EQUIPMENT BLANK	FLUORIDE	PPM	0.03	0.01
89-1477-5	FIELD BLANK	FLUORIDE	PPM	0.03	0.01
89-1477-1	MPT-11-01	IRON	PPM	6.0	0.02
89-1477-2	MPT-11-02	IRON	PPM	4.7	0.02
89-1477-3	DUPLICATE	IRON	PPM	7.3	0.02
89-1477-4	EQUIPMENT BLANK	IRON	PPM	BDL	0.02
89-1477-5	FIELD BLANK	IRON	PPM	BDL	0.02
89-1477-6	PLI TRIP BLANK	IRON	PPM	BDL	0.02
89-1477-1	MPT-11-01	MERCURY	PPM	BDL	0.0001
89-1477-2	MPT-11-02	MERCURY	PPM	BDL	0.0001
89-1477-3	DUPLICATE	MERCURY	PPM	BDL	0.0001
89-1477-4	EQUIPMENT BLANK	MERCURY	PPM	BDL	0.0001
89-1477-5	FIELD BLANK	MERCURY	PPM	BDL	0.0001
89-1477-6	PLI TRIP BLANK	MERCURY	PPM	BDL	0.0001
89-1477-1	MPT-11-01	METHYLENE BLUE ACTIVE	PPM	0.027	0.025

CERTIFICATION NUMBERS: FL LAB ID # 81142 • EPA # FL094 • FDER # EL020 • AL LAB ID # 40150 • NIOSH # 32514-001 • FL ENV # E81010

Pioneer
PLI LABORATORY, INC.
11 EAST OLIVE ROAD PENSACOLA, FLORIDA 32514
PHONE (904) 474-1001

Client: E.C.JORDAN
10001

Lab I.D.#: 89-1477
Order Date: 04/27/89
Sampled By: R. GONZALEZ

Sample Site: JACKSONVILLE
Sample Type: SURFACE WATER

Single Tests continued Sample Date: 04/25/89 Time: VARIOUS

Lab ID	Sample ID	Parameter	Units	Results	Detection Limit
89-1477-2	MPT-11-02	METHYLENE BLUE ACTIVE	PPM	0.060	0.025
89-1477-3	DUPLICATE	METHYLENE BLUE ACTIVE	PPM	0.052	0.025
89-1477-4	EQUIPMENT BLANK	METHYLENE BLUE ACTIVE	PPM	BDL	0.025
89-1477-5	FIELD BLANK	METHYLENE BLUE ACTIVE	PPM	BDL	0.025
89-1477-1	MPT-11-01	MANGANESE	PPM	0.14	0.01
89-1477-2	MPT-11-02	MANGANESE	PPM	0.24	0.01
89-1477-3	DUPLICATE	MANGANESE	PPM	0.32	0.01
1477-4	EQUIPMENT BLANK	MANGANESE	PPM	BDL	0.01
1477-5	FIELD BLANK	MANGANESE	PPM	BDL	0.01
89-1477-6	PLI TRIP BLANK	MANGANESE	PPM	BDL	0.01
89-1477-1	MPT-11-01	NITROGEN, NITRATE	PPM	0.3	0.1
89-1477-2	MPT-11-02	NITROGEN, NITRATE	PPM	BDL	0.1
89-1477-3	DUPLICATE	NITROGEN, NITRATE	PPM	BDL	0.1
89-1477-4	EQUIPMENT BLANK	NITROGEN, NITRATE	PPM	BDL	0.1
89-1477-5	FIELD BLANK	NITROGEN, NITRATE	PPM	BDL	0.1
89-1477-1	MPT-11-01	SODIUM	PPM	144	0.20
89-1477-2	MPT-11-02	SODIUM	PPM	740	0.20
89-1477-3	DUPLICATE	SODIUM	PPM	750	0.20
89-1477-4	EQUIPMENT BLANK	SODIUM	PPM	BDL	0.20
89-1477-5	FIELD BLANK	SODIUM	PPM	BDL	0.20
89-1477-6	PLI TRIP BLANK	SODIUM	PPM	BDL	0.20
89-1477-1	MPT-11-01	ODOR	T.O.N.	1	1
89-1477-2	MPT-11-02	ODOR	T.O.N.	1	1
89-1477-3	DUPLICATE	ODOR	T.O.N.	1	1
89-1477-4	EQUIPMENT BLANK	ODOR	T.O.N.	1	1
89-1477-5	FIELD BLANK	ODOR	T.O.N.	1	1
89-1477-1	MPT-11-01	LEAD	PPM	BDL	0.010
89-1477-2	MPT-11-02	LEAD	PPM	0.005	0.005
89-1477-3	DUPLICATE	LEAD	PPM	BDL	0.010
89-1477-4	EQUIPMENT BLANK	LEAD	PPM	BDL	0.001
89-1477-5	FIELD BLANK	LEAD	PPM	BDL	0.001
89-1477-6	PLI TRIP BLANK	LEAD	PPM	BDL	0.001
89-1477-1	MPT-11-01	PHENOLS,TOTAL	PPM	BDL	0.001
89-1477-2	MPT-11-02	PHENOLS,TOTAL	PPM	BDL	0.001
89-1477-3	DUPLICATE	PHENOLS,TOTAL	PPM	BDL	0.001
89-1477-4	EQUIPMENT BLANK	PHENOLS,TOTAL	PPM	BDL	0.001
89-1477-5	FIELD BLANK	PHENOLS,TOTAL	PPM	BDL	0.001
1477-1	MPT-11-01	SELENIUM	PPM	BDL	0.015*

CERTIFICATION NUMBERS: FL LAB ID # 81142 • EPA # FL094 • FDER # EL020 • AL LAB ID # 40150 • NIOSH # 32514-001 • FL ENV # E81010

Pioneer LABORATORY, INC.
11 EAST OLIVE ROAD PENSACOLA, FLORIDA 32514
PHONE (904) 474-1001

Client: E.C.JORDAN
10001

Lab I.D.#: 89-1477
Order Date: 04/27/89
Sampled By: R. GONZALEZ

Sample Site: JACKSONVILLE
Sample Type: SURFACE WATER

Single Tests continued Sample Date: 04/25/89 Time: VARIOUS

Lab ID	Sample ID	Parameter	Units	Results	Detection Limit
89-1477-2	MPT-11-02	SELENIUM	PPM	BDL	0.015*
89-1477-3	DUPLICATE	SELENIUM	PPM	BDL	0.030*
89-1477-4	EQUIPMENT BLANK	SELENIUM	PPM	BDL	0.003
89-1477-5	FIELD BLANK	SELENIUM	PPM	BDL	0.003
89-1477-6	PLI TRIP BLANK	SELENIUM	PPM	BDL	0.003
89-1477-1	MPT-11-01	SULFATE	PPM	412	1.0
89-1477-2	MPT-11-02	SULFATE	PPM	202	1.0
89-1477-3	DUPLICATE	SULFATE	PPM	242	1.0
89-1477-4	EQUIPMENT BLANK	SULFATE	PPM	2.4	1.0
89-1477-5	FIELD BLANK	SULFATE	PPM	2.4	1.0
89-1477-1	MPT-11-01	TOTAL COLIFORM	CNT/100	BDL	1
89-1477-2	MPT-11-02	TOTAL COLIFORM	CNT/100	BDL	1
89-1477-3	DUPLICATE	TOTAL COLIFORM	CNT/100	BDL	1
89-1477-4	EQUIPMENT BLANK	TOTAL COLIFORM	CNT/100	BDL	1
89-1477-5	FIELD BLANK	TOTAL COLIFORM	CNT/100	BDL	1
89-1477-1	MPT-11-01	TURBIDITY	N.T.U.	6.2	0.1
89-1477-2	MPT-11-02	TURBIDITY	N.T.U.	16	0.1
89-1477-3	DUPLICATE	TURBIDITY	N.T.U.	14	0.1
89-1477-4	EQUIPMENT BLANK	TURBIDITY	N.T.U.	0.16	0.1
89-1477-5	FIELD BLANK	TURBIDITY	N.T.U.	0.12	0.1
89-1477-1	MPT-11-01	ZINC	PPM	0.08	0.01
89-1477-2	MPT-11-02	ZINC	PPM	0.04	0.01
89-1477-3	DUPLICATE	ZINC	PPM	0.07	0.01
89-1477-4	EQUIPMENT BLANK	ZINC	PPM	BDL	0.01
89-1477-5	FIELD BLANK	ZINC	PPM	BDL	0.01
89-1477-6	PLI TRIP BLANK	ZINC	PPM	BDL	0.01
89-1477-1	MPT-11-01	TOTAL ORGANIC CARBON	PPM	4	1
89-1477-2	MPT-11-02	TOTAL ORGANIC CARBON	PPM	5	1
89-1477-3	DUPLICATE	TOTAL ORGANIC CARBON	PPM	4	1
89-1477-4	EQUIPMENT BLANK	TOTAL ORGANIC CARBON	PPM	BDL	1
89-1477-5	FIELD BLANK	TOTAL ORGANIC CARBON	PPM	BDL	1
89-1477-1	MPT-11-01	TOTAL ORGANIC HALIDES	PPB	70	10
89-1477-2	MPT-11-02	TOTAL ORGANIC HALIDES	PPB	70	10
89-1477-3	DUPLICATE	TOTAL ORGANIC HALIDES	PPB	70	10
89-1477-4	EQUIPMENT BLANK	TOTAL ORGANIC HALIDES	PPB	BDL	10
89-1477-5	FIELD BLANK	TOTAL ORGANIC HALIDES	PPB	BDL	10

CERTIFICATION NUMBERS: FL LAB ID # 81142 • EPA # FL094 • FDER # EL020 • AL LAB ID # 40150 • NIOSH # 32514-001 • FL ENV # E81010

Pioneer
PL LABORATORY, INC.
11 EAST OLIVE ROAD PENSACOLA, FLORIDA 32514
PHONE (904) 474-1001

Client: E.C.JORDAN
10001

Lab I.D.#: 89-1477-1
Order Date: 04/27/89
Sampled By: R. GONZALEZ

Sample Site: JACKSONVILLE
Sample Type: SURFACE WATER

Sample ID.: MPT-11-01 Sample Date: 04/25/89 Time: VARIOUS

CORROSIVITY LANGLIER'S SATURATION INDEX

Parameter	Units	Result	Detection Limit
ALKALINITY, AS CACO3	PPM	220	1
HARDNESS	PPM	587	
PH	UNIT	7.24	
TOTAL DISSOLVED SOLIDS	PPM	991	1
CORROSIVITY	L.S.I.	0.44	

Sample ID.: MPT-11-02 Lab I.D.#: 89-1477-2

CORROSIVITY LANGLIER'S SATURATION INDEX

Parameter	Units	Result	Detection Limit
ALKALINITY, AS CACO3	PPM	240	1
HARDNESS	PPM	1400	
PH	UNIT	7.31	
TOTAL DISSOLVED SOLIDS	PPM	3264	1
CORROSIVITY	L.S.I.	0.40	

CERTIFICATION NUMBERS: FL LAB ID # 81142 • EPA # FL094 • FDER # EL020 • AL LAB ID # 40150 • NIOSH # 32514-001 • FL ENV # E81010

Pioneer
PLI LABORATORY, INC.
11 EAST OLIVE ROAD PENSACOLA, FLORIDA 32514
PHONE (904) 474-1001

Client: E.C.JORDAN
10001

Lab I.D.#: 89-1477-3
Order Date: 04/27/89
Sampled By: R. GONZALEZ

Sample Site: JACKSONVILLE
Sample Type: SURFACE WATER

Sample ID.: DUPLICATE Sample Date: 04/25/89 Time: VARIOUS

CORROSIVITY LANGLIER'S SATURATION INDEX

Parameter	Units	Result	Detection Limit
ALKALINITY, AS CACO3	PPM	235	1
HARDNESS	PPM	1467	
PH	UNIT	7.37	
TOTAL DISSOLVED SOLIDS	PPM	2343	1
CORROSIVITY	L.S.I.	0.64	

Sample ID.: EQUIPMENT BLANK Lab I.D.#: 89-1477-4

CORROSIVITY LANGLIER'S SATURATION INDEX

Parameter	Units	Result	Detection Limit
ALKALINITY, AS CACO3	PPM	1	1
HARDNESS	PPM	BDL	
PH	UNIT	5.75	
TOTAL DISSOLVED SOLIDS	PPM	3	1
CORROSIVITY	L.S.I.	-5.85	

CERTIFICATION NUMBERS: FL LAB ID # 81142 • EPA # FL094 • FDER # EL020 • AL LAB ID # 40150 • NIOSH # 32514-001 • FL ENV # EB1010

Pioneer LABORATORY, INC.
11 EAST OLIVE ROAD PENSACOLA, FLORIDA 32514
PHONE (904) 474-1001

Client: E.C.JORDAN
10001

Lab I.D.#: 89-1477-5
Order Date: 04/27/89
Sampled By: R. GONZALEZ

Sample Site: JACKSONVILLE
Sample Type: SURFACE WATER

Sample ID.: FIELD BLANK Sample Date: 04/25/89 Time: VARIOUS

CORROSIVITY LANGLIER'S SATURATION INDEX

Parameter	Units	Result	Detection Limit
ALKALINITY, AS CACO3	PPM	BDL	1
HARDNESS	PPM	BDL	
PH	UNIT	5.57	
TOTAL DISSOLVED SOLIDS	PPM	3	1
CORROSIVITY	L.S.I.	-6.14	

CERTIFICATION NUMBERS: FL LAB ID # 81142 • EPA # FL094 • FDER # EL020 • AL LAB ID # 40150 • NIOSH # 32514-001 • FL ENV # E81010

Pioneer LABORATORY, INC.
11 EAST OLIVE ROAD PENSACOLA, FLORIDA 32514
PHONE (904) 474-1001

Client: E.C.JORDAN
10001

Lab I.D.#: 89-1477-1
Order Date: 04/27/89
Sampled By: R. GONZALEZ

Sample Site: JACKSONVILLE
Sample Type: SURFACE WATER

Sample ID.: MPT-11-01 Sample Date: 04/25/89 Time: VARIOUS

DW/PRIMARY DW ORGANICS (17.550) - PESTS/HERBS

Parameter	Units	Result	Detection Limit
ENDRIN	PPM	BDL	0.00007
LINDANE	PPM	BDL	0.0002
METHOXYCHLOR	PPM	BDL	0.005
TOXAPHENE	PPM	BDL	0.001
2,4-D	PPM	BDL	0.02
2,4,5 TP-SILVEX	PPM	BDL	0.002

Sample ID.: MPT-11-02 Lab I.D.#: 89-1477-2

DW/PRIMARY DW ORGANICS (17.550) - PESTS/HERBS

Parameter	Units	Result	Detection Limit
ENDRIN	PPM	BDL	0.00007
LINDANE	PPM	BDL	0.0002
METHOXYCHLOR	PPM	BDL	0.005
TOXAPHENE	PPM	BDL	0.001
2,4-D	PPM	BDL	0.02
2,4,5 TP-SILVEX	PPM	BDL	0.002

CERTIFICATION NUMBERS: FL LAB ID # 81142 • EPA # FL094 • FDER # EL020 • AL LAB ID # 40150 • NIOSH # 32514-001 • FL ENV # E81010

Pioneer
PL LABORATORY, INC.
11 EAST OLIVE ROAD PENSACOLA, FLORIDA 32514
PHONE (904) 474-1001

Client: E.C.JORDAN
10001

Lab I.D.#: 89-1477-3
Order Date: 04/27/89
Sampled By: R. GONZALEZ

Sample Site: JACKSONVILLE
Sample Type: SURFACE WATER

Sample ID.: DUPLICATE Sample Date: 04/25/89 Time: VARIOUS

DW/PRIMARY DW ORGANICS (17.550) - PESTS/HERBS

Parameter	Units	Result	Detection Limit
ENDRIN	PPM	BDL	0.00007
LINDANE	PPM	BDL	0.0002
METHOXYCHLOR	PPM	BDL	0.005
TOXAPHENE	PPM	BDL	0.001
2,4-D	PPM	BDL	0.02
2,4,5 TP-SILVEX	PPM	BDL	0.002

Sample ID.: EQUIPMENT BLANK Lab I.D.#: 89-1477-4

DW/PRIMARY DW ORGANICS (17.550) - PESTS/HERBS

Parameter	Units	Result	Detection Limit
ENDRIN	PPM	BDL	0.00007
LINDANE	PPM	BDL	0.0002
METHOXYCHLOR	PPM	BDL	0.005
TOXAPHENE	PPM	BDL	0.001
2,4-D	PPM	BDL	0.02
2,4,5 TP-SILVEX	PPM	BDL	0.002

CERTIFICATION NUMBERS: FL LAB ID # 81142 • EPA # FL094 • FDER # EL020 • AL LAB ID # 40150 • NIOSH # 32514-001 • FL ENV # E81010

Pioneer
PL LABORATORY, INC.
11 EAST OLIVE ROAD PENSACOLA, FLORIDA 32514
PHONE (904) 474-1001

Client: E.C.JORDAN
10001

Lab I.D.#: 89-1477-5
Order Date: 04/27/89
Sampled By: R. GONZALEZ

Sample Site: JACKSONVILLE
Sample Type: SURFACE WATER

Sample ID.: FIELD BLANK Sample Date: 04/25/89 Time: VARIOUS

DW/PRIMARY DW ORGANICS (17.550) - PESTS/HERBS

Parameter	Units	Result	Detection Limit
ENDRIN	PPM	BDL	0.00007
LINDANE	PPM	BDL	0.0002
METHOXYCHLOR	PPM	BDL	0.005
TOXAPHENE	PPM	BDL	0.001
2,4-D	PPM	BDL	0.02
2,4,5 TP-SILVEX	PPM	BDL	0.002

end of report

CERTIFICATION NUMBERS: FL LAB ID # 81142 • EPA # FL094 • FDER # EL020 • AL LAB ID # 40150 • NIOSH # 32514-001 • FL ENV # E81010

Pioneer
PL LABORATORY, INC.
11 EAST OLIVE ROAD PENSACOLA, FLORIDA 32514
PHONE (904) 474-1001

QUALITY CONTROL DATA

Pioneer
PL LABORATORY, INC.
11 EAST OLIVE ROAD PENSACOLA, FLORIDA 32514
PHONE (904) 474-1001

CLIENT: E.C. JORDAN

PROJECT: 1575-05/MAYPORT--BASIN CLOSURE

LAB ID: 89-1477

BATCH: 25

PESTICIDES

LAB ID	CLIENT ID	DATE SAMPLED	DATE RECEIVED	EXTRACTION DATE	ANALYSIS DATE
89-1477-1	MPT-11-01	04-25-89	04-27-89	04-27-89	05-02-89
89-1477-2	MPT-11-02	04-25-89	04-27-89	04-27-89	05-02-89
89-1477-3	DUPLICATE	04-25-89	04-27-89	04-27-89	05-02-89
89-1477-4	EQUIPMT BLANK	04-25-89	04-27-89	04-27-89	05-02-89
89-1477-5	FIELD BLANK	04-25-89	04-27-89	04-27-89	05-02-89

Pioneer LABORATORY, INC.
11 EAST OLIVE ROAD PENSACOLA, FLORIDA 32514
PHONE (904) 474-1001

3E1
PESTICIDE REAGENT WATER SPIKE/SPIKE DUPLICATE RECOVERY

CLIENT: E.C. JORDAN

PROJECT NO: 1575-05/MAYPORT--BASIN CLOSURE

LAB ID: 89-1477

METHOD: 25

		EXTRACTION DATE	ANALYSIS DATE
SPIKE		04-26-89	05-01-89
SPKDUP		04-26-89	05-01-89

COMPOUND	SPIKE ADDED (ug/L)	SAMPLE CONCENTRATION (ug/L)	SPIKE CONCENTRATION (ug/L)	SPK % REC #	QC LIMITS REC.
gamma-BHC (Lindane)	20	BDL	14	70	56-123
Heptachlor	20	BDL	13	65	40-131
Aldrin	20	BDL	15	75	40-120
Dieldrin	50	BDL	33	66	52-126
Endrin	50	BDL	40	80	56-121
4,4'-DDT	50	BDL	36	72	38-127

COMPOUND	SPIKE ADDED (ug/L)	SPIKE DUP CONCENTRATION (ug/L)	SD % REC #	% RPD #	QC LIMITS RPD	QC LIMITS REC.
gamma-BHC (Lindane)	20	14	70	0	15	56-123
Heptachlor	20	15	75	14	20	40-131
Aldrin	20	17	85	13	22	40-120
Dieldrin	50	34	68	3	18	52-126
Endrin	50	42	84	5	21	56-121
4,4'-DDT	50	33	66	9	27	38-127

Column to be used to flag recovery and RPD values with an asterisk

* Values outside of QC limits

RPD: 0 out of 6 outside limits
Spike Recovery: 0 out of 12 outside limits

Note: PPB = Parts per billion, ug/l.
BDL = Below detection limits.
Results reported are blank corrected.
Source for quality control is internal laboratory quality assurance program and the method below.

Reference: Federal Register, 40 CFR, Part 136, July 1, 1988.

FORM III PEST-1 8/87 Rev.

Pioneer
PLI LABORATORY, INC.
11 EAST OLIVE ROAD PENSACOLA, FLORIDA 32514
PHONE (904) 474-1001

CLIENT: E. C. JORDAN

PROJECT: 1575-05/MAYPORT--BASIN CLOSURE

LAB ID: 89-1477

BATCH: 12

HERBICIDES

LAB ID	CLIENT ID	DATE SAMPLED	DATE RECEIVED	EXTRACTION DATE	ANALYSIS DATE
89-1477-1	MPT-11-01	04-25-89	04-27-89	05-01-89	05-04-89
89-1477-2	MPT-11-02	04-25-89	04-27-89	05-01-89	05-04-89
89-1477-3	DUPLICATE	04-25-89	04-27-89	05-01-89	05-04-89
89-1477-4	EQUIPMT BLANK	04-25-89	04-27-89	05-01-89	05-04-89
89-1477-5	FIELD BLANK	04-25-89	04-27-89	05-01-89	05-04-89

Pioneer LABORATORY, INC.
11 EAST OLIVE ROAD PENSACOLA, FLORIDA 32514
PHONE (904) 474-1001

E. C. JORDAN
2571 EXECUTIVE CENTER CIRCLE
SUITE 100
TALLAHASSEE, FL 32301-5001

PROJECT: 1575-05/MAYPORT--BASIN CLOSURE

METHOD: 615

QC LEVEL II

LAB ID: 89-1477

LAB ID	CLIENT ID	EXTRACTION DATE	ANALYSIS DATE
SPIKE		05-01-89	05-04-89
SPIKE DUP		05-01-89	05-04-89
DI BLANK - BDL		05-01-89	05-04-89

REAGENT WATER SPIKE/SPIKE DUPLICATE RECOVERY

PARAMETER	SPIKE RESULT	SPIKE DUPLICATE RESULT	SPIKE EXPECTED VALUE	% REC. SPIKE	% REC. SPIKE DUPLICATE	% REC. CONTROL LIMITS	SPIKE RPD	MAXIMUM RPD
2,4-DICHLOROPHENOXY-ACETIC ACID	55	54	50	110	108	34-136	2	25
2,4,5-TP; SILVEX	6.5	6	5	130	120	30-130	15	25

Note: ppb = parts per billion, ug/l
BDL = below detection limits
Results reported are blank corrected.
Source for control limits is internal laboratory quality assurance program and the reference below.

Reference: Federal Register, 40 CFR, Part 136, July 1, 1988.

CLIENT NAME: E.C. JORDAN
2571 EXECUTIVE CENTER CIRCLE
SUITE 100
TALLAHASSEE, FL 32301

PROJECT NO: 1575-05/MAYPORT--BASIN CLOSURE

QC LEVEL I (INORGANIC)

LAB ID: 89-1477

Pioneer LABORATORY, INC.
11 EAST OLIVE ROAD PHONE (904) 474-1001
PENSACOLA, FLORIDA 32514

LAB ID	CLIENT ID
89-1477-1	MPT-11-01
89-1477-2	MPT-11-02
89-1477-3	DUPLICATE
89-1477-4	EQUIPMT BLANK
89-1477-5	FIELD BLANK

PARAMETER	PREPARATION DATE	ANALYSIS DATE	BATCH #	METHOD	DETECTION LIMIT	BLANK RESULT	SPIKE SOURCE	SPIKE RECOVERED	SPIKE ADDED	% REC. MATRIX SPIKE	% REC. CONTROL LIMITS	SAMPLE RESULT	SAMPLE DUPLICATE RESULT	RPD	MAX. RPD
SILVER	04-27-89	04-28-89	89-AgS-35	272.2	0.0001	BDL	IN-HOUSE	0.0017	0.0020	85	63-141	BDL	BDL	0	27
ARSENIC	04-27-89	05-01-89	89-AsG-34	206.2	0.001	BDL	IN-HOUSE	0.020	0.022	110	64-136	0.016	0.013	21	27
BARIUM	04-27-89	04-28-89	89-LW-14	200.7	0.1	BDL	IN-HOUSE	0.49	0.50	98	68-128	BDL	BDL	0	15
CADMIUM	04-27-89	05-03-89	89-CdG-33	213.2	0.0005	BDL	IN-HOUSE	0.0020	0.0020	100	38-134	0.0003	0.0003	0	15
CHLORIDE	05-03-89	05-03-89	89-Cl-33	325.3	1	1	IN-HOUSE	54	55	98	89-107	1122	1046	7	22
COLOR	04-28-89	04-28-89	17	110.2	5	N/A	IN-HOUSE	N/A	N/A	N/A	N/A	30	30	0	20
CONDUCT.	04-28-89	04-28-89	17	120.1	0.1	N/A	IN-HOUSE	N/A	N/A	N/A	N/A	2	2	0	8
CHROMIUM	04-27-89	04-28-89	89-LW-14	200.7	0.01	BDL	IN-HOUSE	0.56	0.50	112	80-122	BDL	BDL	0	12
COPPER	04-27-89	04-28-89	89-LW-14	200.7	0.02	BDL	IN-HOUSE	0.55	0.50	110	74-116	BDL	BDL	0	12
FLUORIDE	05-02-89	05-02-89	10	340.2	0.01	0.03	IN-HOUSE	1.00	1.00	100	78-123	0.50	0.53	6	42
IRON	04-27-89	04-28-89	89-LW-14	200.7	0.02	0.03	IN-HOUSE	3.4	1.0	340**	67-121	4.7	4.9	4	12
MERCURY	04-28-89	04-30-89	89-Hg-38	245.1	0.0001	0.0006	IN-HOUSE	0.0062	0.0070	89	48-120	BDL	BDL	0	48
MBAS	04-27-89	04-27-89	89-MBAS-3	425.1	0.025	BDL	N/A	N/A	N/A	N/A	N/A	0.052	0.027	63*	20
MANGANESE	04-27-89	04-28-89	89-LW-14	200.7	0.01	BDL	IN-HOUSE	0.57	0.50	114	68-128	0.05	0.05	0	12
NITRATE	05-04-89	05-04-89	19	353.2	0.1	BDL	IN-HOUSE	1.1	1.0	110	86-115	BDL	BDL	0	8
SODIUM	04-27-89	05-01-89	89-Na-16	200.7	0.2	BDL	IN-HOUSE	5.0	5.0	100	79-116	740	730	1	14
ODOR	04-28-89	04-28-89	17	140.1	1	N/A	N/A	N/A	N/A	N/A	N/A	1	1	0	20
LEAD	04-27-89	04-28-89	89-PbG-98	239.2	0.001	0.002	IN-HOUSE	0.011	0.010	110	57-147	0.003	0.005	50*	18
PHENOLS	04-28-89	04-28-89	89-PHENOL-8	420.1	0.001	BDL	IN-HOUSE	0.116	0.100	116	64-130	BDL	BDL	0	20
SELENIUM	04-27-89	05-03-89	89-SeG-24	270.2	0.003	BDL	IN-HOUSE	0.016	0.020	80	68-134	BDL	BDL	0	24
SULFATE	04-28-89	04-28-89	89-$SO_4$1-13	375.4	1	BDL	IN-HOUSE	19	20	95	74-134	BDL	BDL	0	10
TL.COLIF.	04-27-89	04-28-89	04-27-89	909-A	1	BDL	N/A	N/A	N/A	N/A	N/A	BDL	BDL	0	20
TURBIDITY	04-28-89	04-28-89	17	180.1	0.01	BDL	N/A	N/A	N/A	N/A	N/A	0.12	0.12	0	20
ZINC	04-27-89	04-28-89	89-LW-14	200.7	0.01	BDL	IN-HOUSE	0.56	0.50	112	69-117	0.04	0.05	22*	15
ALKALINITY	04-28-89	04-28-89	4	310.1	1	BDL	IN-HOUSE	12.0	12.5	96	78-138	40	36	11	8
HARDNESS	04-28-89	04-28-89	4	130.2	1	BDL	IN-HOUSE	10.5	12.5	84	81-123	17	18	6	11
pH	04-28-89	04-28-89	17	150.1	0.01	N/A	N/A	N/A	N/A	N/A	N/A	5.56	5.57	0.2	2.2
TDS	04-28-89	04-28-89	17	160.1	1	BDL	N/A	N/A	N/A	N/A	N/A	4	2	67*	30

Notes: Results reported in ppm, parts per million, mg/l.
BDL = Below Detection Limit.
Results reported are blank corrected.
Source for control limits is internal laboratory quality assurance program and references below.

* = Sample duplicated ≤ 5x the detection limit.
** = Sample spiked > 10x the detection limit.

Reference: EPA 600/4-79-020, Revised March 1983.

Pioneer
LABORATORY, INC.
11 EAST OLIVE ROAD PHONE (904) 474-1001
PENSACOLA, FLORIDA 32514

CLIENT NAME: E.C. JORDAN
2571 EXECUTIVE CENTER CIR.
SUITE 100
TALLAHASSEE, FL 32301

PROJECT #: 1575-05/MAYPORT--BASIN CLOSURE

QC LEVEL I

LAB ID: 89-1477

LAB ID	CLIENT ID
89-1477-1	MPT-11-01
89-1477-2	MPT-11-02
89-1477-3	DUPLICATE
89-1477-4	EQUIPMT BLANK
89-1477-5	FIELD BLANK

PARAMETER	ANALYSIS DATE	METHOD	DETECTION LIMIT	BLANK	SPIKE RESULTS	SPIKE DUPLICATE RESULTS	EXPECTED SPIKE	% REC. SPIKE	% REC. SPIKE DUP.	% REC. CONTROL LIMITS	RPD	MAX RPD
TOH	05-02-89	450.1	10	BDL	9.9	9.3	10.0	99	93	75-125	6	20

Notes: ppm = parts per million mg/l

Source for control limits is internal laboratory quality assurance program and reference below.

References: EPA 600/4-79-020, Revised March, 1983.

Pioneer
PLI LABORATORY, INC.
11 EAST OLIVE ROAD PENSACOLA, FLORIDA 32514
PHONE (904) 474-1001

SAMPLE INSPECTION AND IDENTIFICATION SHEET

Client: E. C. Jordan

Method of Shipment: Federal Express

Bill of Lading/Air Bill #103723-5986

Date Received: 4-27-89 -5990 -6001

Sample Type: Surface Water

Pioneer Lab I.D.# 89-1477

Sample					
1	MPT-11-01	11		21	
2	MPT-11-02	12		22	
3	Duplicate	13		23	
4	Equipment Blank	14		24	
5	Field Blank	15		25	
6	Pli Trip Blank	16		26	
7		17		27	
8		18		28	
9		19		29	
10		20		30	

Is there a chain of custody?	Y	N
Is it a Pioneer Lab chain of custody?	Y	N
Is the chain of custody signed?	Y	N
Is chain of custody complete?	Y	N
Are sample tags present?	Y	N
Do sample tags and chain of custody agree?	Y	N
Were samples received cold?	Y	N
* Were any containers broken or leaking?	Y	N
Were samples received within holding time?	Y	N
Were all samples preserved correctly?	Y	N

Extra Information From Bottles

Project Number:

Sampled By:

Sample Site:

Sample Date:

Sample Time:

Sample Type:

Special Instructions

Special turnaround time? _____ Q.C. Level 1 2 3 4 N

Bottle Order? Y N Purchase Order #: _____

Task Order # _____

- - - - - LIMIT OF LIABILITY - - - - -

PLI WILL PERFORM THE SERVICES IN ACCORDANCE WITH NORMAL PROFESSIONAL STANDARDS FOR THE INDUSTRY. THE TOTAL LIABILITY OF PLI, ITS OFFICERS, AGENTS, EMPLOYEES OR SUCCESSORS, TO CLIENTS, ARISING OUT OF OR IN CONNECTION WITH THE SERVICES TO BE PROVIDED HEREIN, SHALL NOT EXCEED THE INVOICE AMOUNT FOR SAID SERVICES. CLIENT ACCEPTANCE OF A PROPOSAL RELEASES PLI FROM ANY LIABILITY IN EXCESS THEREOF, NOT WITHSTANDING ANY PROVISION TO THE CONTRARY IN ANY CLIENT PURCHASE ORDER OR CONTRACT.

CLIENT NOTIFIED DATE/TIME: 4-27-89 YES ✓ NO John Hawkins talked with Mike Nuggent

NOTES: * Duplicate fecal was broken; 1 lamber for MPT-11-01 was broken - No trip blank for fecal or radium. Dup fecal was taken from non-preserved bottle, MPT-11-01. Phenols were spld with TOC.

INSPECTED BY: M Boe / Pioneer Lab

DATE INSPECTED: 4-27-89

CERTIFICATION NUMBERS: FL LAB ID # 81142 • EPA # FL094 • FDER # EL020 • AL LAB ID # 40150 • NIOSH # 32514 001 • FL ENV # EB1010

89-1477

CHAIN OF CUSTODY RECORD

PROJECT NO.: 1575-05

PROJECT NAME: MAYPORT - BASIN Closure

SAMPLERS (SIGNATURE): Rick Gonzalez

STA. NO.	DATE	TIME	COMP	GRAB	STATION LOCATION	NO. OF CONTAINERS	Fl, NO_3, Turbidity	App IX. Metals	App IX, Nonmetals	Corrosivity	MBAS	Cu, Zn	Color, Odor, TDS	Cl, SO_4	pH, Cond.	Na, Fe, Mn	TOH	TOC	REMARKS INDICATE SOIL/WATER/AIR SEDIMENT/SLUDGE
MPT-11-01	4/25	VAR			MAYPORT NAS	12	X	X	X	X	X	X	X	X	X	X	X	X	WATER
Trip Blank	4/25					1		X				X				X			

RELINQUISHED BY: (SIGNATURE)	DATE/TIME	RECEIVED BY: (SIGNATURE)	RELINQUISHED BY: (SIGNATURE)	DATE/TIME	RECEIVED BY: (SIGNATURE)
Rick Gonzalez	4/26 5PM	Federal Express			
Federal Express		Melissa Pepi Mercer Lab	4-27-89 1100		

RELINQUISHED BY: (SIGNATURE)	DATE/TIME	RECEIVED FOR DISPOSAL BY: (SIGNATURE)	DATE/TIME	REMARKS

E.C.JORDAN CO.

89-K177

CHAIN OF CUSTODY RECORD

PROJECT NO. 1575-05

PROJECT NAME MAYPORT - BASIN closure

SAMPLERS (SIGNATURE) Rick Gonzalez

STA. NO.	DATE	TIME	COMP.	GRAB	STATION LOCATION	NO. OF CONTAINERS	Phenols	Radium	Cadmium									REMARKS INDICATE SOIL/WATER/AIR SEDIMENT/SLUDGE
MPF11-01	4/25	VAR			MAYPORT NAS	3	X	X	X									WATER
TRIP BLANK				1				X	X									

16

RELINQUISHED BY: (SIGNATURE)	DATE / TIME	RECEIVED BY: (SIGNATURE)	RELINQUISHED BY: (SIGNATURE)	DATE / TIME	RECEIVED BY: (SIGNATURE)
Rick Gonzalez	4/26 5PM	Federal Express			
RELINQUISHED BY: (SIGNATURE)	DATE / TIME	RECEIVED BY: (SIGNATURE)	RELINQUISHED BY: (SIGNATURE)	DATE / TIME	RECEIVED BY: (SIGNATURE)
Federal Express		Federal Express 4/27/89 1100			
RELINQUISHED BY: (SIGNATURE)	DATE / TIME	RECEIVED FOR DISPOSAL BY: (SIGNATURE)	DATE / TIME	REMARKS	

E.C.JORDAN CO.

89-K177

CHAIN OF CUSTODY RECORD

PROJECT NO.: 1575-05

PROJECT NAME: MAYPORT-BASIN CLOSURE

SAMPLERS (SIGNATURE): Rick Hongoly

STA. NO.	DATE	TIME	COMP.	GRAB	STATION LOCATION	NO. OF CONTAINERS	FL, NO3 TURB, DITY	App IX METAL	App IX NON METALS	CORROSIVITY	MBAS	Cu Zn	Color, Odor TDS	Cl, SO4	pH Cond	Na Fe Mn	TPH	TOC	REMARKS INDICATE SOIL/WATER/AIR SEDIMENT/SLUDGE
MPT-11-02	4/25	VAR					X	X	X	X	X	X	X	X	X	X	X	X	
DUPLICATE	4/25	VAR	//				X	X	X	X	X	X	X	X	X	X	X	X	

RELINQUISHED BY: (SIGNATURE)	DATE / TIME	RECEIVED BY: (SIGNATURE)	RELINQUISHED BY: (SIGNATURE)	DATE / TIME	RECEIVED BY: (SIGNATURE)
Rick Hongoly	4/26 5PM	Federal Express			
RELINQUISHED BY: (SIGNATURE)	DATE / TIME	RECEIVED BY: (SIGNATURE)	RELINQUISHED BY: (SIGNATURE)	DATE / TIME	RECEIVED BY: (SIGNATURE)
Federal Express		[illegible]	4-27-89 1100		
RELINQUISHED BY: (SIGNATURE)	DATE / TIME	RECEIVED FOR DISPOSAL BY: (SIGNATURE)	DATE / TIME	REMARKS	

ECJORDANCO

89-K177

CHAIN OF CUSTODY RECORD

PROJECT NO.: 1575-05

PROJECT NAME: Mayport-Basin Closure

SAMPLERS (SIGNATURE): Rick Gonzalez

	STA. NO.	DATE	TIME	COMP.	GRAB	STATION LOCATION	NO. OF CONTAINERS	Phenols	Radium	Coliform										REMARKS INDICATE SOIL/WATER/AIR SEDIMENT/SLUDGE
2	MPT-11-02	4/25	VAR.			MPT-11-02	3	X	X	X										
3	DUPLCATE	4/25	VAR.			DUPLCATE	3	X	X	X										

RELINQUISHED BY: (SIGNATURE)	DATE/TIME	RECEIVED BY: (SIGNATURE)	RELINQUISHED BY: (SIGNATURE)	DATE/TIME	RECEIVED BY: (SIGNATURE)
Rick Gonzalez	4/26 5PM	Federal Express			
Federal Express		Melissa Pope Pioneer Lab	11-27-89 1100		

RELINQUISHED BY: (SIGNATURE)	DATE/TIME	RECEIVED FOR DISPOSAL BY: (SIGNATURE)	DATE/TIME	REMARKS

E.C.JORDAN CO.

89-1177

CHAIN OF CUSTODY RECORD

PROJECT NO.: 1575-05

PROJECT NAME: Mayport Basin Closure

SAMPLERS (SIGNATURE): Rick Hongaley

STA. NO.	DATE	TIME	COMP.	GRAB	STATION LOCATION	NO. OF CONTAINERS	F, NO_3, Turb.	App IV Metals	App IV Non Metals	Corrosivity	M BAS	Cu Zn	Color, Odor, TDS	Cl, SO_4	pH, Cond.	N_3, Fe, Mn	TOH	TOC	REMARKS INDICATE SOIL/WATER/AIR SEDIMENT/SLUDGE
	4/25				EQPT BLANK	11	X	X	X	X	X	X	X	X	X	X	X	X	Water
	4/25				Field BLANK	~~9~~ 10	X	X	X	X	X	X	X	X	X	X	X	X	Water

RELINQUISHED BY: (SIGNATURE)	DATE / TIME	RECEIVED BY: (SIGNATURE)	RELINQUISHED BY: (SIGNATURE)	DATE / TIME	RECEIVED BY: (SIGNATURE)
Rick Hongaley	4/26 5PM	Federal Express			
RELINQUISHED BY: (SIGNATURE)	DATE / TIME	RECEIVED BY: (SIGNATURE)	RELINQUISHED BY: (SIGNATURE)	DATE / TIME	RECEIVED BY: (SIGNATURE)
Federal Express		Delivered to Denver lab	4-27-89 1100		
RELINQUISHED BY: (SIGNATURE)	DATE / TIME	RECEIVED FOR DISPOSAL BY: (SIGNATURE)	DATE / TIME	REMARKS	

ECJORDANCO

89-1177

CHAIN OF CUSTODY RECORD

PROJECT NO.: 1575-05

PROJECT NAME: MAYPORT BASIN CLOSURE

SAMPLERS (SIGNATURE): Rick Bonzaley

STA. NO.	DATE	TIME	COMP.	GRAB	STATION LOCATION	NO. OF CONTAINERS	Phenols	Radium	Coliform										REMARKS INDICATE SOIL/WATER/AIR SEDIMENT/SLUDGE
4/5	4/25	VAR			EQPT. BLANK	3	X	X	X										Water
	4/25	VAR			Field BLANK	3	X	X	X										Water

RELINQUISHED BY: (SIGNATURE)	DATE / TIME	RECEIVED BY: (SIGNATURE)	RELINQUISHED BY: (SIGNATURE)	DATE / TIME	RECEIVED BY: (SIGNATURE)
Rick Bonzaley	4/26 5PM	Federal Express			
RELINQUISHED BY: (SIGNATURE)	DATE / TIME	RECEIVED BY: (SIGNATURE)	RELINQUISHED BY: (SIGNATURE)	DATE / TIME	RECEIVED BY: (SIGNATURE)
Federal Express		[illegible]	4-27-89 1100		
RELINQUISHED BY: (SIGNATURE)	DATE / TIME	RECEIVED FOR DISPOSAL BY: (SIGNATURE)	DATE / TIME	REMARKS	

E.C.JORDAN CO.

Pioneer
PL LABORATORY, INC.

RECEIVED
19

W. F. BOWERS
PRESIDENT/MANAGER
PAUL CANEVARO
LABORATORY MANAGER
R. W. (BOB) WOLFE
Q. A. OFFICER

July 18, 1989

Michael Nugent
CE Environmental
2571 Executive Center Circle
Suite 100
Tallahassee, FL 32301-5001

Dear Mr. Nugent:

Enclosed is your report for Gross Alpha and Radium 226 and 228. I am very sorry that it took so long to report the data out. The company that we used to subcontract the work out to no longer has our business.

Also because it has taken so long to report out the data there will be no charge for these results. If you have any questions, please do not hesitate to give me a call.

Sincerely,

Kathy R. Avery

Kathy R. Avery
Office Manager

Enclosure

KRA

11 EAST OLIVE ROAD • PENSACOLA, FLORIDA 32514 • PHONE (904) 474-1001

Pioneer
PLI LABORATORY, INC.
11 EAST OLIVE ROAD PENSACOLA, FLORIDA 32514
PHONE (904) 474-1001

Client: 10001
E.C. JORDAN
2571 EXECUTIVE CENTER CIRCLE
SUITE 100
TALLAHASSEE, FLORIDA 32301-5001

Lab I.D.#: 89-1477R
Order Number: P19857
Order Date: 04/28/89
Sampled By: R. GONZALEZ
Sample Date: 04/25/89
Sample Time: VARIOUS

Project Number: 1575-05
Project Name: MAYPORT - BASIN CLOSURE
Sample Site: JACKSONVILLE
Sample Type: SURFACE WATER

N/S = Not Submitted

Lab ID	Sample ID	Parameter	Units	Results
89-1477-1	MPT-11-01	GROSS ALPHA	pCi/l	11.4 ± 8.6
89-1477-1	MPT-11-01	RADIUM 226	pCi/l	0.8 ± 0.1
89-1477-1	MPT-11-01	RADIUM 228	pCi/l	1.7 ± 1.3
89-1477-2	MPT-11-02	GROSS ALPHA	pCi/l	0.0 ± 35.[illegible]
89-1477-2	MPT-11-02	RADIUM 226	pCi/l	0.9 ± 0.[illegible]
89-1477-2	MPT-11-02	RADIUM 228	pCi/l	0.0 ± 1.2
89-1477-3	DUPLICATE	GROSS ALPHA	pCi/l	9.3 ± 14.7
89-1477-3	DUPLICATE	RADIUM 226	pCi/l	0.3 ± 0.1
89-1477-3	DUPLICATE	RADIUM 228	pCi/l	1.2 ± 1.2
89-1477-4	EQUIPMENT BLANK	GROSS ALPHA	pCi/l	0.0 ± 1.2
89-1477-4	EQUIPMENT BLANK	RADIUM 226	pCi/l	0.2 ± 0.1
89-1477-4	EQUIPMENT BLANK	RADIUM 228	pCi/l	0.7 ± 1.2
89-1477-5	FIELD BLANK	GROSS ALPHA	pCi/l	1.2 ± 1.3
89-1477-5	FIELD BLANK	RADIUM 226	pCi/l	0.2 ± 0.1
89-1477-5	FIELD BLANK	RADIUM 228	pCi/l	0.0 ± 1.1

Note: This analysis was performed by Burmah Technical Services, Inc., Gulfport, Mississippi. Florida Certification Number 87240.

Approved By: John V Hawkins

 end of report

CERTIFICATION NUMBERS: FL LAB ID # 81142 • EPA # FL094 • FDER # EL020 • AL LAB ID # 40150 • NIOSH # 32514-001 • FL ENV # E81010

Pioneer
PLI LABORATORY, INC.
11 EAST OLIVE ROAD PENSACOLA, FLORIDA 32514
PHONE (904) 474-1001

Client: C-E ENVIRONMENTAL, INC
10001 2571 EXECUTIVE CENTER CIR
SUITE 100
TALLAHASSEE FL 32301-5001

Lab I.D.#: 89-2472
Order Number: P21305
Order Date: 07/07/89
Sampled By: R. GONZALEZ
Sample Date: 07/06/89
Sample Time: VARIOUS

Project Number: 5097-05
Project Name: BASIN CLOSURE
Sample Site: MAYPORT, N.A.S.
Sample Type: GROUNDWATER

N/S = Not Submitted

Lab ID	Sample ID	Parameter	Units	Results	Detection Limit
89-2472-1	MPT-11-01	SILVER	PPM	0.0001	0.0001
89-2472-2	MPT-11-02	SILVER	PPM	BDL	0.0001
89-2472-3	DUP	SILVER	PPM	BDL	0.0001
89-2472-4	FB	SILVER	PPM	BDL	0.0001
89-2472-5	EB	SILVER	PPM	BDL	0.0001
89-2472-6	PLI TRIP BLANK	SILVER	PPM	BDL	0.0001
89-2472-1	MPT-11-01	ARSENIC	PPM	0.008	0.001
89-2472-2	MPT-11-02	ARSENIC	PPM	0.006	0.001
89-2472-3	DUP	ARSENIC	PPM	0.008	0.001
89-2472-4	FB	ARSENIC	PPM	BDL	0.001
89-2472-5	EB	ARSENIC	PPM	BDL	0.001
89-2472-6	PLI TRIP BLANK	ARSENIC	PPM	BDL	0.001
89-2472-1	MPT-11-01	BARIUM	PPM	BDL	0.1
89-2472-2	MPT-11-02	BARIUM	PPM	BDL	0.1
89-2472-3	DUP	BARIUM	PPM	BDL	0.1
89-2472-4	FB	BARIUM	PPM	BDL	0.1
89-2472-5	EB	BARIUM	PPM	BDL	0.1
89-2472-6	PLI TRIP BLANK	BARIUM	PPM	BDL	0.1
89-2472-1	MPT-11-01	CADMIUM	PPM	0.0011	0.0001
89-2472-2	MPT-11-02	CADMIUM	PPM	0.0002	0.0001
89-2472-3	DUP	CADMIUM	PPM	0.0004	0.0001
89-2472-4	FB	CADMIUM	PPM	BDL	0.0001
89-2472-5	EB	CADMIUM	PPM	BDL	0.0001
89-2472-6	PLI TRIP BLANK	CADMIUM	PPM	BDL	0.0001
89-2472-1	MPT-11-01	CHROMIUM	PPM	BDL	0.01
89-2472-2	MPT-11-02	CHROMIUM	PPM	BDL	0.01
89-2472-3	DUP	CHROMIUM	PPM	BDL	0.01
89-2472-4	FB	CHROMIUM	PPM	BDL	0.01
89-2472-5	EB	CHROMIUM	PPM	BDL	0.01
89-2472-6	PLI TRIP BLANK	CHROMIUM	PPM	BDL	0.01
89-2472-1	MPT-11-01	NICKEL	PPM	BDL	0.05

Comments: PPM = Parts Per Million, mg/l. Method Reference: EPA 600/4-79-020, Revised March 1983. BDL = Below Detection Limits. * Elevated Detection Limit Due Matrix Intereference.

Approved By : W. F. Bowen

CERTIFICATION NUMBERS: FL LAB ID # B1142 • EPA # FL094 • FDER # EL020 • AL LAB ID # 40150 • NIOSH # 32514-001 • FL ENV # E81010

Pioneer
PLI LABORATORY, INC.
11 EAST OLIVE ROAD PENSACOLA, FLORIDA 32514
PHONE (904) 474-1001

Client: C-E ENVIRONMENTAL, INC
10001

Lab I.D.#: 89-2472
Order Date: 07/07/89
Sampled By: R. GONZALEZ

Sample Site: MAYPORT, N.A.S.
Sample Type: GROUNDWATER

Single Tests continued Sample Date: 07/06/89 Time: VARIOUS

Lab ID	Sample ID	Parameter	Units	Results	Detection Limit
89-2472-2	MPT-11-02	NICKEL	PPM	BDL	0.05
89-2472-3	DUP	NICKEL	PPM	BDL	0.05
89-2472-4	FB	NICKEL	PPM	BDL	0.05
89-2472-5	EB	NICKEL	PPM	BDL	0.05
89-2472-6	PLI TRIP BLANK	NICKEL	PPM	BDL	0.05
89-2472-1	MPT-11-01	LEAD	PPM	0.006	0.001
89-2472-2	MPT-11-02	LEAD	PPM	BDL	0.01*
89-2472-3	DUP	LEAD	PPM	0.002	0.001
89-2472-4	FB	LEAD	PPM	BDL	0.001
89-2472-5	EB	LEAD	PPM	BDL	0.001
89-2472-6	PLI TRIP BLANK	LEAD	PPM	BDL	0.001
89-2472-1	MPT-11-01	ANTIMONY	PPM	BDL	0.10
89-2472-2	MPT-11-02	ANTIMONY	PPM	BDL	0.10
89-2472-3	DUP	ANTIMONY	PPM	BDL	0.10
89-2472-4	FB	ANTIMONY	PPM	BDL	0.10
89-2472-5	EB	ANTIMONY	PPM	BDL	0.10
89-2472-6	PLI TRIP BLANK	ANTIMONY	PPM	BDL	0.10
89-2472-1	MPT-11-01	SELENIUM	PPM	BDL	0.003
89-2472-2	MPT-11-02	SELENIUM	PPM	BDL	0.003
89-2472-3	DUP	SELENIUM	PPM	BDL	0.003
89-2472-4	FB	SELENIUM	PPM	BDL	0.003
89-2472-5	EB	SELENIUM	PPM	BDL	0.003
89-2472-6	PLI TRIP BLANK	SELENIUM	PPM	BDL	0.003

end of report

CERTIFICATION NUMBERS: FL LAB ID # 81142 • EPA # FL094 • FDER # EL020 • AL LAB ID # 40150 • NIOSH # 32514-001 • FL ENV # E81010

Pioneer
PLI LABORATORY, INC.
11 EAST OLIVE ROAD PENSACOLA, FLORIDA 32514
PHONE (904) 474-1001

QUALITY CONTROL DATA

CERTIFICATION NUMBERS: FL LAB ID # 81142 • EPA # FL094 • FDER # EL020 • AL LAB ID # 40150 • NIOSH # 32514-001 • FL ENV # E81010

CLIENT NAME: C-E ENVIRONMENTAL
2571 EXECUTIVE CENTER CIRCLE
SUITE 100
TALLAHASSEE, FL 32301

Pioneer LABORATORY, INC.
11 EAST OLIVE ROAD PHONE (904) 474-1001
PENSACOLA, FLORIDA 32514

PROJECT NO: 5097-05/MAYPORT--BASIN CLOSURE

QC LEVEL I (INORGANIC)

LAB ID: 89-2472

LAB ID	CLIENT ID
89-2472-1	MPT-11-01
89-2472-2	MPT-11-02
89-2472-3	DUP
89-2472-4	FB
89-2472-5	EB
89-2472-6	TRIP BLANK

PARAMETER	PREPARATION DATE	ANALYSIS DATE	BATCH #	METHOD	DETECTION LIMIT	BLANK RESULT	SPIKE SOURCE	SPIKE RECOVERED	SPIKE ADDED	% REC. MATRIX SPIKE	% REC. CONTROL LIMITS	SAMPLE RESULT	SAMPLE DUPLICATE RESULT	RPD	MAX. RPD
SILVER	07-12-89	07-12-89	89-AgG-60	272.2	0.0001	0.0001	IN-HOUSE	0.0022	0.0020	100	63-141	0.0001	BDL	0	27
ARSENIC	07-12-89	07-12-89	89-AsS-57	206.2	0.001	0.005	IN-HOUSE	0.022	0.020	110	64-136	BDL	BDL	0	27
BARIUM	07-12-89	07-19-89	89-LW-46	200.7	0.1	BDL	IN-HOUSE	0.46	0.50	92	68-128	BDL	BDL	0	15
CADMIUM	07-12-89	07-12-89	89-CdG-64	213.2	0.0001	BDL	IN-HOUSE	0.0019	0.0020	95	68-134	BDL	BDL	0	15
CHROMIUM	07-12-89	07-19-89	89-LW-46	200.7	0.01	BDL	IN-HOUSE	0.51	0.50	102	80-122	BDL	BDL	0	12
NICKEL	07-12-89	07-19-89	89-LW-46	200.7	0.05	BDL	IN-HOUSE	1.01	1.00	101	67-127	BDL	BDL	0	17
LEAD	07-12-89	07-12-89	89-PbG-159	239.2	0.001	BDL	IN-HOUSE	0.012	0.010	120	57-147	0.001	0.001	0	18
ANTIMONY	07-12-89	07-19-89	89-LW-46	200.7	0.1	BDL	IN-HOUSE	1.4	1.0	140*	60-120	BDL	BDL	0	15
SELENIUM	07-12-89	07-12-89	89-SeG-38	270.1	0.003	BDL	IN-HOUSE	0.021	0.020	105	68-134	BDL	BDL	0	24

Notes: Results reported in ppm, parts per million, mg/l. * = MATRIX INTERFERENCE
BDL = Below Detection Limit.
Results reported are blank corrected.
Source for control limits is internal laboratory quality assurance program and references below.

Reference: EPA 600/4-79-020, Revised March 1983.

Pioneer LABORATORY, INC.
11 EAST OLIVE ROAD PENSACOLA, FLORIDA 32514
PHONE (904) 474-1001

SAMPLE INSPECTION AND IDENTIFICATION SHEET

Client: EC Jordan
Method of Shipment: FEDEX
Bill of Lading/Air Bill # 7784785275
Date Received: 07/07/89
Sample Type: Groundwater

Pioneer Lab I.D.# 89-2472-

Sample 1	MPT1101	11		21	
2	MPT1102	12		22	
3	DUP	13		23	
4	EB	14		24	
5	EB	15		25	
6	Rinsup	16		26	
7		17		27	
8		18		28	
9		19		29	
10		20		30	

Is there a chain of custody? (Y) N
Is it a Pioneer Lab chain of custody? Y (N)
Is the chain of custody signed? (Y) N
Is chain of custody complete? (Y) N
Are sample tags present? (Y) N
Do sample tags and chain of custody agree? (Y) N
Were samples received cold? (Y) N
Were any containers broken or leaking? Y (N)
Were samples received within holding time? (Y) N
Were all samples preserved correctly? (Y) N

Extra Information From Bottles
Project Number:
Sampled By:
Sample Site:
Sample Date:
Sample Time:
Sample Type:

Special Instructions
Special turnaround time? 10
Q.C. Level (1) 2 3 4 N
Bottle Order? (Y) N
Purchase Order #: 6016--00
Task Order #

- - - - - LIMIT OF LIABILITY - - - - -

PLI WILL PERFORM THE SERVICES IN ACCORDANCE WITH NORMAL PROFESSIONAL STANDARDS FOR THE INDUSTRY. THE TOTAL LIABILITY OF PLI, ITS OFFICERS, AGENTS, EMPLOYEES OR SUCCESSORS, TO CLIENTS, ARISING OUT OF OR IN CONNECTION WITH THE SERVICES TO BE PROVIDED HEREIN, SHALL NOT EXCEED THE INVOICE AMOUNT FOR SAID SERVICES. CLIENT ACCEPTANCE OF A PROPOSAL RELEASES PLI FROM ANY LIABILITY IN EXCESS THEREOF, NOT WITHSTANDING ANY PROVISION TO THE CONTRARY IN ANY CLIENT PURCHASE ORDER OR CONTRACT.

CLIENT NOTIFIED DATE/TIME: YES ( ) NO (X)

NOTES:

INSPECTED BY: Patricia Hosian/Pioneer
DATE INSPECTED: 07/07/89

CERTIFICATION NUMBERS: FL LAB ID # 81142 • EPA # FL084 • FDER # EL020 • AL LAB ID # 40150 • NIOSH # 32514-001 • FL ENV # E81010

PAGE ___ OF ___

CHAIN OF CUSTODY RECORD

31-111

PROJECT NO. 5097-05

PROJECT NAME MAYPORT N.A.S. - BASIN closure

SAMPLERS (SIGNATURE) Richard Hanyaly

STA. NO.	DATE	TIME	COMP.	GRAB	STATION LOCATION	NO. OF CONTAINERS	SAMPLE TYPE: APPX. III METALS	REMARKS: INDICATE SOIL/WATER/AIR SEDIMENT/SLUDGE
MPT-11-01	7-6-89	10:30		✓	NEUTRALIZATION	1	✓	1
MPT-11-02	7-6-89	11:10		✓	BASIN - MAYPORT N.A.S.	1	✓	1
DUP.	7-6-89	—		✓	"	1	✓	1
FB	7-6-89	10:45		✓	"	1	✓	1
EB	7-6-89	10:45		✓	"	1	✓	1
TB	7-6-89	—		✓	"	1	✓	1

RELINQUISHED BY: (SIGNATURE)	DATE / TIME	RECEIVED BY: (SIGNATURE)	RELINQUISHED BY: (SIGNATURE)	DATE / TIME	RECEIVED BY: (SIGNATURE)
Richard Hanyaly	7-6-89 4PM	Federal Express			
RELINQUISHED BY: (SIGNATURE)	DATE / TIME	RECEIVED BY: (SIGNATURE)	RELINQUISHED BY: (SIGNATURE)	DATE / TIME	RECEIVED BY: (SIGNATURE)
RELINQUISHED BY: (SIGNATURE)	DATE / TIME	RECEIVED FOR DISPOSAL BY: (SIGNATURE)	DATE / TIME	REMARKS	

ECJORDANCO

FILE 5097-05
LAB DATA

Pioneer
LABORATORY, INC.
11 EAST OLIVE ROAD PENSACOLA, FLORIDA 32514
PHONE (904) 474-1001

RICK

August 15, 1989

Dear Client:

Due to a backlog in the Quality Control Department, the accompanying quality control report will be sent within the next few days.

I hope this has not caused any inconvenience. Thank you for your cooperation.

Sincerely,

Susan S Rembert

Susan S. Rembert
Quality Assurance Officer

Pioneer
PL LABORATORY, INC.
11 EAST OLIVE ROAD PENSACOLA, FLORIDA 32514
PHONE (904) 474-1001

Client: C-E ENVIRONMENTAL, INC
10001 2571 EXECUTIVE CENTER CIR
SUITE 100
TALLAHASSEE FL 32301-5001

Lab I.D.#: 89-2472A
Order Number: P22088
Order Date: 08/07/89
Sampled By: R. GONZALEZ
Sample Date: 07/06/89
Sample Time: VARIOUS

Project Number: 5097-05
Project Name: BASIN CLOSURE
Sample Site: MAYPORT, N.A.S.
Sample Type: GROUNDWATER

N/S = Not Submitted

Lab ID	Sample ID	Parameter	Units	Results	Detection Limit
89-2472A-1	MPT-11-01	MERCURY	PPM	BDL	0.0001
89-2472A-2	MPT-11-02	MERCURY	PPM	0.0001	0.0001
89-2472A-3	DUPLICATE	MERCURY	PPM	BDL	0.0001
89-2472A-4	FIELD BLANK	MERCURY	PPM	BDL	0.0001
89-2472A-5	RINSATE BLANK	MERCURY	PPM	BDL	0.0001
89-2472A-6	TRIP BLANK	MERCURY	PPM	BDL	0.0001

Comments: PPM = Parts Per Million, mg/l; BDL = Below Detection Limit.
Method Reference: EPA 600/4-79-020, Revised March 1983.

Approved By : John V Hawkins

end of report

CERTIFICATION NUMBERS: FL LAB ID # 81142 • EPA # FL094 • FDER # EL020 • AL LAB ID # 40150 • NIOSH # 32514-001 • FL ENV # E81010

CHAIN OF CUSTODY RECORD

PAGE ___ OF ___

PROJECT NO. 5097-05

PROJECT NAME MATPORT N.A.S. - BASIN closure

SAMPLERS (SIGNATURE) Richard Hayaley

STA. NO.	DATE	TIME	COMP.	GRAB	STATION LOCATION	NO. OF CONTAINERS	APPX. III METALS											REMARKS INDICATE SOIL/WATER/AIR SEDIMENT/SLUDGE
MPT-11-C	7-6-89	10:30		✓	NEUTRALIZATION	1	✓											
MPT-11-C2	7-6-89	11:10		✓	BASIN - MATPORT N.A.S.	1	✓											
DUP.	7-6-89	—		✓	"	1	✓											
FB	7-6-89	10:45		✓	"	1	✓											
EB	7-6-89	10:45		✓	"	1	✓											
TB	7-6-89	—		✓	"	1	✓											

RELINQUISHED BY: (SIGNATURE)	DATE / TIME	RECEIVED BY: (SIGNATURE)	RELINQUISHED BY: (SIGNATURE)	DATE / TIME	RECEIVED BY: (SIGNATURE)
Richard Hayaley	7-6-89 4PM	Federal Express			
...ISHED BY: (SIGNATURE)	DATE / TIME	RECEIVED BY: (SIGNATURE)	RELINQUISHED BY: (SIGNATURE)	DATE / TIME	RECEIVED BY: (SIGNATURE)
...BY: (SIGNATURE)	DATE / TIME	RECEIVED FOR DISPOSAL BY: (SIGNATURE)	DATE / TIME	REMARKS	

E.C.JORDAN CO.

Pioneer
PLI LABORATORY, INC.
11 EAST OLIVE ROAD PENSACOLA, FLORIDA 32514
PHONE (904) 474-1001

SAMPLE INSPECTION AND IDENTIFICATION SHEET

Client: EC Jordan

Method of Shipment: Fedex

Bill of Lading/Air Bill #: 2784785275

Date Received: 07/07/89

Sample Type: gr. water

Pioneer Lab I.D.# 89-2472

Sample 1	MPT1102	11		21	
2	MPT1102	12		22	
3	DUP	13		23	
4	EB	14		24	
5	EB	15		25	
6	Qltrip	16		26	
7		17		27	
8		18		28	
9		19		29	
10		20		30	

Is there a chain of custody?	(Y) N
Is it a Pioneer Lab chain of custody?	Y (N)
Is the chain of custody signed?	(Y) N
Is chain of custody complete?	(Y) N
Are sample tags present?	(Y) N
Do sample tags and chain of custody agree?	(Y) N
Were samples received cold?	(Y) N
Were any containers broken or leaking?	Y (N)
Were samples received within holding time?	(Y) N
Were all samples preserved correctly?	(Y) N

Extra Information From Bottles

Project Number:

Sampled By:

Sample Site:

Sample Date:

Sample Time:

Sample Type:

Special Instructions

Special turnaround time? no

Q.C. Level (1) 2 3 4 N

Bottle Order? (Y) N

Purchase Order #: 60066--00

Task Order #

- - - - - LIMIT OF LIABILITY - - - - -

PLI WILL PERFORM THE SERVICES IN ACCORDANCE WITH NORMAL PROFESSIONAL STANDARDS FOR THE INDUSTRY. THE TOTAL LIABILITY OF PLI, ITS OFFICERS, AGENTS, EMPLOYEES OR SUCCESSORS, TO CLIENTS, ARISING OUT OF OR IN CONNECTION WITH THE SERVICES TO BE PROVIDED HEREIN, SHALL NOT EXCEED THE INVOICE AMOUNT FOR SAID SERVICES. CLIENT ACCEPTANCE OF A PROPOSAL RELEASES PLI FROM ANY LIABILITY IN EXCESS THEREOF, NOT WITHSTANDING ANY PROVISION TO THE CONTRARY IN ANY CLIENT PURCHASE ORDER OR CONTRACT.

CLIENT NOTIFIED YES ( ) NO (X)
DATE/TIME:

NOTES:

INSPECTED BY: Patricia Holston/Pioneer Lab

DATE INSPECTED: 07/07/89

CERTIFICATION NUMBERS: FL LAB ID # 81142 • EPA # FL084 • FDER # EL020 • AL LAB ID # 40150 • NIOSH # 32514-001 • FL ENV # E81010

Pioneer
PL LABORATORY, INC.
11 EAST OLIVE ROAD PENSACOLA, FLORIDA 32514
PHONE (904) 474-1001

Client: C-E ENVIRONMENTAL, INC
10001 2571 EXECUTIVE CENTER CIR
SUITE 100
TALLAHASSEE FL 32301-5001

Lab I.D.#: 89-4220
Order Number: P23986
Order Date: 10/16/89
Sampled By: E. BLOMBERG
Sample Date: 10/10/89
Sample Time: VARIOUS

Project Number: 5097-05
Project Name: N/S
Sample Site: VARIOUS SITES
Sample Type: WATER

N/S = Not Submitted

Lab ID	Sample ID	Parameter	Units	Results	Detection Limit
89-4220-1	MPT-11-02	SILVER	PPM	BDL	0.0001
89-4220-2	MPT-11-02D	SILVER	PPM	BDL	0.0001
89-4220-3	MPT-11-01	SILVER	PPM	BDL	0.0001
-4220-4	TRIP BLANK	SILVER	PPM	BDL	0.0001
-4220-1	MPT-11-02	ARSENIC	PPM	0.004	0.001
89-4220-2	MPT-11-02D	ARSENIC	PPM	0.004	0.001
89-4220-3	MPT-11-01	ARSENIC	PPM	BDL	0.001
89-4220-4	TRIP BLANK	ARSENIC	PPM	BDL	0.001
89-4220-1	MPT-11-02	BARIUM	PPM	BDL	0.1
89-4220-2	MPT-11-02D	BARIUM	PPM	BDL	0.1
89-4220-3	MPT-11-01	BARIUM	PPM	BDL	0.1
89-4220-4	TRIP BLANK	BARIUM	PPM	BDL	0.1
89-4220-1	MPT-11-02	CADMIUM	PPM	BDL	0.0001
89-4220-2	MPT-11-02D	CADMIUM	PPM	BDL	0.0001
89-4220-3	MPT-11-01	CADMIUM	PPM	0.010	0.0001
89-4220-4	TRIP BLANK	CADMIUM	PPM	BDL	0.0001
89-4220-1	MPT-11-02	CHROMIUM	PPM	BDL	0.01
89-4220-2	MPT-11-02D	CHROMIUM	PPM	BDL	0.01
89-4220-3	MPT-11-01	CHROMIUM	PPM	BDL	0.01
89-4220-4	TRIP BLANK	CHROMIUM	PPM	BDL	0.01
89-4220-1	MPT-11-02	MERCURY	PPM	0.0001	0.0001
89-4220-2	MPT-11-02D	MERCURY	PPM	BDL	0.0001
89-4220-3	MPT-11-01	MERCURY	PPM	BDL	0.0001
89-4220-4	TRIP BLANK	MERCURY	PPM	BDL	0.0001
89-4220-1	MPT-11-02	SODIUM	PPM	115	0.20
89-4220-2	MPT-11-02D	SODIUM	PPM	115	0.20
89-4220-3	MPT-11-01	SODIUM	PPM	26	0.20
89-4220-4	TRIP BLANK	SODIUM	PPM	BDL	0.20
89-4220-1	MPT-11-02	LEAD	PPM	BDL	0.001
89-4220-2	MPT-11-02D	LEAD	PPM	BDL	0.001
89-4220-3	MPT-11-01	LEAD	PPM	0.002	0.001

Comments: PPM = Parts Per Million, mg/l; BDL = Below Detection Limit.
Method Reference: EPA 600/4-79-020, Revised March 1983.

Approved By : John U Hawkins

CERTIFICATION NUMBERS: FL LAB ID # 81142 • EPA # FL094 • FDER # EL020 • AL LAB ID # 40150 • NIOSH # 32514-001 • FL ENV # E81010

Pioneer
PL LABORATORY, INC.
11 EAST OLIVE ROAD PENSACOLA, FLORIDA 32514
PHONE (904) 474-1001

Client: C-E ENVIRONMENTAL, INC
10001

Lab I.D.#: 89-4220
Order Date: 10/16/89
Sampled By: E. BLOMBERG

Sample Site: VARIOUS SITES
Sample Type: WATER

Single Tests continued Sample Date: 10/10/89 Time: VARIOUS

Lab ID	Sample ID	Parameter	Units	Results	Detection Limit
89-4220-4	TRIP BLANK	LEAD	PPM	BDL	0.001
89-4220-1	MPT-11-02	SELENIUM	PPM	BDL	0.003
89-4220-2	MPT-11-02D	SELENIUM	PPM	BDL	0.003
89-4220-3	MPT-11-01	SELENIUM	PPM	BDL	0.003
89-4220-4	TRIP BLANK	SELENIUM	PPM	BDL	0.003

end of report

CERTIFICATION NUMBERS: FL LAB ID # 81142 • EPA # FL094 • FDER # EL020 • AL LAB ID # 40150 • NIOSH # 32514-001 • FL ENV # E81010

Pioneer
LABORATORY, INC.
11 EAST OLIVE ROAD PENSACOLA, FLORIDA 32514
PHONE (904) 474-1001

QUALITY CONTROL DATA

Pioneer
PL LABORATORY, INC.
11 EAST OLIVE ROAD PENSACOLA, FLORIDA 32514
PHONE (904) 474-1001

CLIENT: C-E ENVIRONMENTAL, INC.

PROJECT: 5097-05

LAB ID: 89-4220

INORGANICS

LAB ID	CLIENT ID	DATE SAMPLED	DATE RECEIVED
89-4220-1	MPT-11-02	10-10-89	10-16-89
89-4220-2	MPT-11-02D	10-10-89	10-16-89
89-4220-3	MPT-11-01	10-10-89	10-16-89
89-4220-4	TRIP BLANK		10-16-89

Pioneer LABORATORY, INC.
11 EAST OLIVE ROAD
PENSACOLA, FLORIDA 32514
PHONE (904) 474-1001

CLIENT NAME: C-E ENVIRONMENTAL, INC.

PROJECT NO: 5097-05

QC LEVEL I (INORGANIC)

LAB ID: 89-4220

PARAMETER	PREPARATION DATE	ANALYSIS DATE	BATCH #	METHOD	DETECTION LIMIT	BLANK RESULT	SPIKE SOURCE	SPIKE RECOVERED	SPIKE ADDED	% REC. MATRIX SPIKE	% REC. CONTROL LIMITS	SAMPLE RESULT	SAMPLE DUPLICATE RESULT	RPD	MAX. RPD
SILVER	10-17-89	10-18-89	89-AgG-100	272.2	0.0001	BDL	IN-HOUSE	0.0022	0.0020	110	63-141	BDL	BDL	0	27
ARSENIC	10-17-89	10-17-89	89-AsG-92	206.2	0.001	BDL	IN-HOUSE	0.023	0.020	115	64-136	BDL	0.001	NC*	27
BARIUM	10-17-89	10-23-89	89-LW-91	200.7	0.1	BDL	IN-HOUSE	0.49	0.50	99	68-128	BDL	BDL	0	15
CADMIUM	10-17-89	10-19-89	89-CdG-110	213.2	0.0001	BDL	IN-HOUSE	0.0022	0.0020	110	68-134	BDL	BDL	0	15
CHROMIUM	10-17-89	10-23-89	89-LW-91	200.7	0.01	BDL	IN-HOUSE	0.48	0.50	96	80-122	BDL	BDL	0	12
MERCURY	10-17-89	10-17-89	89-Hg-84	245.1	0.0001	0.0002	IN-HOUSE	0.0070	0.0070	100	48-120	BDL	BDL	0	48
SODIUM	10-17-89	10-23-89	89-NA-34	200.7	0.20	BDL	IN-HOUSE	8.0	10.0	80	79-116	38	37	3	14
LEAD	10-17-89	10-17-89	89-PbG-261	239.2	0.001	BDL	IN-HOUSE	0.007	0.010	70	57-147	BDL	BDL	0	18
SELENIUM	10-17-89	10-18-89	89-SeG-67	270.2	0.003	BDL	IN-HOUSE	0.014	0.020	70	68-134	BDL	BDL	0	24

NOTES: PPM = Parts Per Million, mg/l
BDL = Below Detection Limit
Results reported are blank corrected.
Source for control limits is internal laboratory quality assurance program and references below.
*NON CALCULABLE DUE TO ONE SAMPLE RESULTING IN BDL.

REFERENCE: EPA-600/4-79-020, Revised March, 1983.

Pioneer
PLI LABORATORY, INC
11 EAST OLIVE ROAD PENSACOLA, FLORIDA 32514
PHONE (904) 474-1001

SAMPLE INSPECTION AND IDENTIFICATION SHEET

Client: C-E Environ.
Method of Shipment Fedex
Bill of Lading/Air Bill # 5066351824
Date Received: 10/16/89
Sample Type: DW water

Pioneer Lab I.D.# 39-4220

Sample 1	MPT-11-02	11		21	
2	MPT-11-02D	12		22	
3	MPT-11-01	13		23	
4	TMP	14		24	
5		15		25	
6		16		26	
7		17		27	
8		18		28	
9		19		29	
10		20		30	

Is there a chain of custody?	(Y) N
Is it a Pioneer Lab chain of custody?	Y (N)
Is the chain of custody signed?	(Y) N
Is chain of custody complete?	(Y) N
Are sample tags present?	(Y) N
Do sample tags and chain of custody agree?	(Y) N
Were samples received cold?	(Y) N
Were any containers broken or leaking?	Y (N)
Were samples received within holding time?	(Y) N
Were all samples preserved correctly?	(Y) N

Extra Information From Bottles

Project Number:
Sampled By:
Sample Site:
Sample Date:
Sample Time:
Sample Type:

Special Instructions

Special turnaround time? 10/23 Q.C. Level (1) 2 3 4 N
Bottle Order? (Y) N Purchase Order #: 5097-05
Task Order #

- - - - - LIMIT OF LIABILITY - - - - -

PLI WILL PERFORM THE SERVICES IN ACCORDANCE WITH NORMAL PROFESSIONAL STANDARDS FOR THE INDUSTRY. THE TOTAL LIABILITY OF PLI, ITS OFFICERS, AGENTS, EMPLOYEES OR SUCCESSORS, TO CLIENTS, ARISING OUT OF OR IN CONNECTION WITH THE SERVICES TO BE PROVIDED HEREIN, SHALL NOT EXCEED THE INVOICE AMOUNT FOR SAID SERVICES. CLIENT ACCEPTANCE OF A PROPOSAL RELEASES PLI FROM ANY LIABILITY IN EXCESS THEREOF, NOT WITHSTANDING ANY PROVISION TO THE CONTRARY IN ANY CLIENT PURCHASE ORDER OR CONTRACT.

CLIENT NOTIFIED YES ( ) NO (✓)
DATE/TIME:

NOTES:

INSPECTED BY: [illegible]
DATE INSPECTED: 10/16/89

CHAIN OF CUSTODY RECORD

PROJECT NO.	PROJECT NAME
5097.05	NAVY-MAYPORT CLOSURE

SAMPLERS (SIGNATURE): Eric O. Blomberg

STA. NO.	DATE	TIME	COMP.	GRAB	STATION LOCATION	NO. OF CONTAINERS	SAMPLE TYPE: 40 CFR 265 Appendix III metals	REMARKS: INDICATE SOIL/WATER/AIR SEDIMENT/SLUDGE
MPT11-02	10-10-89	10:45		X	MPT-11-02	1	X	WATER
MPT11-02	10-10-89	10:45		X	MPT-11-02	1	X	
MPT11-01	10-10-89	10:55		X	MPT-11-01	1	X	

RELINQUISHED BY: (SIGNATURE)	DATE/TIME	RECEIVED BY: (SIGNATURE)	RELINQUISHED BY: (SIGNATURE)	DATE/TIME	RECEIVED BY: (SIGNATURE)
Eric O. Blomberg	10/OCT/89 1700	R. M. NUGENT	R MICHAEL NUGENT	[illegible]	[illegible]
RELINQUISHED BY: (SIGNATURE)	DATE/TIME	RECEIVED BY: (SIGNATURE)	RELINQUISHED BY: (SIGNATURE)	DATE/TIME	RECEIVED BY: (SIGNATURE)
					[illegible]
RELINQUISHED BY: (SIGNATURE)	DATE/TIME	RECEIVED FOR DISPOSAL BY: (SIGNATURE)	DATE/TIME	REMARKS	

E.C.JORDAN CO.

89 4200

ANALYSIS REQUEST FORM

CLIENT INFORMATION: NAME NAVY

COMPANY

MAILING ADDRESS

PURCHASE ORDER/JOB NUMBER 5097-05

WHERE TO SEND REPORT: ☐ DIRECTLY TO CLIENT

☒ ECJ-NAME R. MICHAEL NUGENT

ANALYSES REQUESTED BY: R. M. NUGENT
TECHNICAL PROJECT MANAGER

APPROVED BY: R. M. NUGENT
PROJECT MANAGER

DATE RECEIVED
LAB LOCATION
RESULTS DUE
CLIENT I.D. NO.

☐ SOLID WASTE DATA FILE
☐ DATA DOCUMENTATION REQUIRED
☐ ENTERED IN COMPUTER

TYPE OF SAMPLE GW

LIST ANY HAZARDS

☐ SPECIAL PROCEDURE

☐ FILTERED IN FIELD ☒ NON-FILTERED

ADDITIONAL INFORMATION OR SPECIAL PROCEDURES:

SAMPLE IDENTIFICATION	LAB NUMBERS	DATE SAMPLED	SAMPLED BY	ANALYSES REQUIRED
MPT-11-02		10 OCT 89	EB	40 CFR 265, APPENDIX III METALS
MPT-11-02D		10 OCT 89	EB	"
MPT-11-01		10 OCT 89	EB	"
TRIP BLANK				"

[illegible]
10/16/89

E.C.JORDAN CO.
CONSULTING ENGINEERS

Pioneer
PL LABORATORY, INC.
11 EAST OLIVE ROAD PENSACOLA, FLORIDA 32514
PHONE (904) 474-1001

Client:	E.C.JORDAN	Lab I.D.#:	89-1671
10001	2571 EXECUTIVE CENTER CIR	Order Number:	P20118
	SUITE 100	Order Date:	05/12/89
	TALLAHASSEE FL 32301-5001	Sampled By:	KEVIN WARNER
		Sample Date:	05/10-11
		Sample Time:	VARIOUS

Project Number: 5097-05
Project Name: NAVAL STATION - MAYPORT
Sample Site: BLDG 1241 NEUTRALIZATION BASIN
Sample Type: SOIL

N/S = Not Submitted

R E S U L T S

reported on the following page(s)

Comments: PPM = Parts Per Million, mg/l. BDL = Below Detection Limits.
Method Reference: SW-846, 3rd Edition, November 1986.

Approved By : W. F. Bowen

CERTIFICATION NUMBERS: FL LAB ID # 81142 • EPA # FL094 • FDER # EL020 • AL LAB ID # 40150 • NIOSH # 32514-001 • FL ENV # E81010

Pioneer LABORATORY, INC.
11 EAST OLIVE ROAD PENSACOLA, FLORIDA 32514
PHONE (904) 474-1001

Client: E.C.JORDAN
10001

Sample Site: BLDG 1241 NEUTRALIZATION BASIN
Sample Type: SOIL

Lab I.D.#: 89-1671
Order Date: 05/12/89
Sampled By: KEVIN WARNER
Sample Date: 05/10-11
Sample Time: VARIOUS

Parameter	Units	B-1 S-1 89-1671-1	B-1 S-2 89-1671-2	B-2 S-1 89-1671-3	B-2 S-2 89-1671-4	Detection Limit
PH	UNIT	8.18	8.87	8.64	9.16	

CERTIFICATION NUMBERS: FL LAB ID # 81142 • EPA # FL094 • FDER # EL020 • AL LAB ID # 40150 • NIOSH # 32514-001 • FL ENV # E81010

Pioneer LABORATORY, INC.
11 EAST OLIVE ROAD PENSACOLA, FLORIDA 32514
PHONE (904) 474-1001

Client: E.C.JORDAN
10001

Sample Site: BLDG 1241 NEUTRALIZATION BASIN
Sample Type: SOIL

Lab I.D.#: 89-1671
Order Date: 05/12/89
Sampled By: KEVIN WARNER
Sample Date: 05/10-11
Sample Time: VARIOUS

EPTOX/METALS

EP TOXICITY-METALS ANALYSIS

Parameter	Units	B-1 S-1 89-1671-1	B-1 S-2 89-1671-2	B-2 S-1 89-1671-3	B-2 S-2 89-1671-4	Detection Limit
SILVER,EPTOX	PPM	BDL	BDL	BDL	BDL	0.50
ARSENIC,EPTOX	PPM	BDL	BDL	BDL	BDL	0.50
BARIUM,EPTOX	PPM	BDL	BDL	BDL	BDL	1.0
CADIUM,EPTOX	PPM	BDL	BDL	BDL	BDL	0.10
CHROMIUM,EPTOX	PPM	BDL	BDL	BDL	BDL	0.50
ERCURY,EPTOX	PPM	BDL	BDL	BDL	BDL	0.01
LEAD,EPTOX	PPM	BDL	BDL	BDL	BDL	0.50
SELENIUM,EPTOX	PPM	BDL	BDL	BDL	BDL	0.20

end of report

CERTIFICATION NUMBERS: FL LAB ID # 81142 • EPA # FL094 • FDER # EL020 • AL LAB ID # 40150 • NIOSH # 32514-001 • FL ENV # EB1010

5/11/89

CHAIN OF CUSTODY RECORD

PROJECT NO.: 5097-05

PROJECT NAME: NAVAL STATION MAYPORT BLDG 1241 NEUTRALIZATION BASIN

SAMPLERS (SIGNATURE):

	STA. NO.	DATE	TIME	COMP.	GRAB	STATION LOCATION	NO. OF CONTAINERS	PH	EPTOX/METALS											REMARKS (INDICATE SOIL/WATER/AIR SEDIMENT/SLUDGE)
1	B-1 S-1	5/11/89	15:30			BUILDING NEUTRALIZATION BASIN	1	✓	✓											
2	B-1 S-2	5/11/89	16:20			"	1	✓	✓											
3	B-2 S-1	5/11/89	7:20			"	1	✓	✓											
4	B-2 S-2	5/11/89	8:00			"	1	✓	✓											

RELINQUISHED BY: (SIGNATURE)	DATE / TIME	RECEIVED BY: (SIGNATURE)	RELINQUISHED BY: (SIGNATURE)	DATE / TIME	RECEIVED BY: (SIGNATURE)
Kevin Warner	5/11/89 16:30	[illegible]	[illegible]		
RELINQUISHED BY: (SIGNATURE)	DATE / TIME	RECEIVED BY: (SIGNATURE)	RELINQUISHED BY: (SIGNATURE)	DATE / TIME	RECEIVED BY: (SIGNATURE)
		5/12/89 [illegible]			
RELINQUISHED BY: (SIGNATURE)	DATE / TIME	RECEIVED FOR DISPOSAL BY: (SIGNATURE)	DATE / TIME	REMARKS	

ECJORDANCO

89-1671

ANALYSIS REQUEST FORM

CLIENT INFORMATION: NAME KEVIN WARNER

COMPANY C.E. ENVIRONMENTAL

MAILING ADDRESS 2571 EXECUTIVE CENT. CIR

SUITE 100 TALLAHASSEE FL 32301

PURCHASE ORDER/JOB NUMBER /5097-05

WHERE TO SEND REPORT: ☐ DIRECTLY TO CLIENT

☑ ECJ - NAME R. MICHAEL AUGENT

ANALYSES REQUESTED BY: Kevin Warner
TECHNICAL PROJECT MANAGER

APPROVED BY: _____
PROJECT MANAGER

DATE RECEIVED _____
LAB LOCATION _____
RESULTS DUE _____
CLIENT I.D. NO. _____

☐ SOLID WASTE DATA FILE
☐ DATA DOCUMENTATION REQUIRED
☐ ENTERED IN COMPUTER

TYPE OF SAMPLE _____
LIST ANY HAZARDS _____

☐ SPECIAL PROCEDURE

☐ FILTERED IN FIELD ☐ NON-FILTERED

ADDITIONAL INFORMATION OR SPECIAL PROCEDURES:

SAMPLE IDENTIFICATION	LAB NUMBERS	DATE SAMPLED	SAMPLED BY	ANALYSES REQUIRED
B-1 S-1		5-10-89	KEVIN WARNER	PH/EPTOX/METALS
B-1 S-2		"	"	"
B-2 S-1		5-11-89	"	"
B-2 S-2		"	"	"

ECJORDAN CO
CONSULTING ENGINEERS

APPENDIX B

PROJECT PERSONNEL RESUMES

GREGORY M. BROWN, P.E., Principal Engineer

EXPERIENCE SUMMARY

Mr. Brown is a registered professional engineer with over 11 years of experience in conducting and managing a wide range of environmental compliance and hazardous waste management projects for both government and private industry. He has conducted remedial investigations, bench-scale and pilot-scale treatability studies for contaminated groundwater and industrial wastewater as well as environmental compliance audits for hazardous waste sites and underground storage tank (UST) facilities. Mr. Brown has also prepared environmental impact statements, RCRA Part B permits, CERCLA/RCRA work plans and remedial investigation/feasibility study reports, and construction plans and specifications.

SPECIALIZED SKILL AREAS

- Wastewater treatment
- Feasibility studies
- Waste management/design
- Environmental planning
- Underground storage tank management
- Project management

EXPERIENCE

ABB-ENVIRONMENTAL SERVICES, Inc., Tallahassee, FL. 1991 - Present.
Principal Engineer 1991 - Present.

Mr. Brown is presently a member of the ABB-ES CLEAN Team providing environmental services to the Naval Facilities Engineering Command, Southern Division. Mr. Brown is participating in multiple environmental investigations addressing CERCLA/SARA, RCRA, and UST programs which include site characterization, feasibility studies, corrective measures studies, and remedial actions.

WOODWARD-CLYDE CONSULTANTS, Tallahassee, 1990 - 1991.
Senior Project Engineer.

Mr. Brown was the project manager for a Superfund remediation project to treat approximately 55,000 cubic yards of soil contaminated with lead. He also managed projects to design and construct groundwater recovery, treatment, and disposal systems for sites contaminated with chlorinated solvents and petroleum hydrocarbons. He was the responsible engineer for numerous feasibility studies addressing remedial alternatives for treatment of contaminated soils, sediments, and groundwater. He designed and implemented a pilot study to confirm the feasibility of using an activated sludge process to treat a mixture of contaminated groundwater and industrial process wastewater. The process proved to economically treat both waste streams, offering the potential to reduce POTW surcharges to the client for organic loading.

Mr. Brown's experience in stormwater management ranges from the analysis and design of conveyance and detention systems for flood control, to monitoring water quality impacts due to stormwater runoff.

NAVAL FACILITIES ENGINEERING COMMAND, WESTERN DIVISION, San Bruno, CA. 1986 - 1990.
Environmental Engineer 1986 - 1990.

Mr. Brown directed and managed Navy programs to comply with environmental regulations. He was responsible for project scopes, budgets, and schedules as well as contract negotiation and task coordination with regulatory agencies. As part of an assessment of the Navy's UST compliance in the central west coast region, Mr. Brown developed and implemented a program to address deficiencies, bringing all tanks into regulatory compliance.

Mr. Brown was also responsible for planning and managing all phases of a remedial investigation/feasibility study resulting in a removal action of 1,200 cubic yards of PCB-contaminated soil. The remedial investigation was conducted at a decommissioned Navy Shipyard on the San Francisco Bay. The site contained contamination from sandblasting, plating, and pickling operations as well as asbestos, PCBs, and oily wastes from improper disposal by subsequent private shipyard operations. He also helped to develop and implement a stormwater sampling program at a 250 acre industrial facility to assess the level of contamination migrating via stormwater runoff from hazardous waste sites.

U.S. PEACE CORPS, VOLUNTEER, Ecuador, S.A. 1984-1986.
Water and Sanitation Engineer 1984 - 1986.

Mr. Brown provided sanitary engineering assistance to the Ecuadorian Ministry of Health in the U.S. Peace Corps. He prepared designs, plans, and specifications, and supervised the construction of innovative potable water systems to serve small rural communities. Mr. Brown also trained native water professionals as well as community organizations in public health, water well management, and sanitary education.

WOODWARD-CLYDE CONSULTANTS, San Francisco, CA. 1980-1984
Environmental Engineer 1980 - 1984

Mr. Brown managed or participated in hazardous waste site investigations and groundwater studies, developing computer databases, conducted EIS investigations, and preparing RCRA Part B permits (e.g., for the Hawthorne Army Ammunition Plant, Nevada). For the Fallon Naval Air Station in Nevada, Mr. Brown conducted a base facility requirements assessment in support of expanded aviation operations at the base. Mr. Brown has also conducted bench-scale and pilot-scale treatability studies and developed conceptual designs for contaminated groundwater and industrial wastewater treatment. Facilities served included electroplating, steel galvanizing, and chemical manufacturing plants. Mr. Brown participated in the National Urban Runoff Program (NURP) were he assisted in the development and verification of models to predict water quality impacts due to non-point sources of pollutants.

EDUCATION

University of California, Berkeley: M.B.A., Business Administration, May 1990.
University of California, Berkeley: M.S., Civil Engineering - Sanitary, June 1981 (Regent Fellowship).
University of Florida: B.S., Environmental Engineering, March 1980 (with Honors).

REGISTRATION/CERTIFICATION

Professional Engineer: Florida, #42194
Professional Engineer: California, #36188
OSHA 1910.120 40-hour Basic Health and Safety

AFFILIATIONS

American Society of Civil Engineers
Tau Beta Pi

KENNETH L. BUSEN, Hydrogeologist

Qualifications Summary

Mr. Busen has over 13 years of experience in the areas of hydrogeology, geology and underground and above ground storage systems.

From 1975 to 1983, he was a principal investigator for numerous groundwater investigations involving petroleum contamination at gasoline service stations and large petroleum refineries in the southern California area for a large consulting company.

Mr. Busen moved to Tallahassee, Florida, in 1983 and worked for the Florida Department of Environmental Regulation (FDER) as an Environmental Supervisor and head of an Operation Response Team. With FDER, Mr. Busen continued performing groundwater investigations throughout Florida at hazardous waste and petroleum contaminated sites and was involved in studying the waste oil industry in Florida and the development of the Stationary Tank Rule (Chapter 17-61, Florida Administrative Code).

Since 1987, Mr. Busen has worked for ABB Environmental Services. He has been the Project Manager and Technical Director for a U.S. Navy contract assessing storage tank systems at Naval Facilities in Florida. He has also performed many contamination assessments for both the Navy and private clients.

Mr Busen has attended several conferences on petroleum contamination and storage systems and is familiar with the various equipment available for storage tank systems.

Education

M.S./Geology, 1978, Florida State University
B.S./Geology, 1975, Florida State University
B.S./Zoology, 1972, Michigan State University

Professional Licenses

Certified Professional Geologist - Florida

Relevant Experience

Navy Storage Systems Management Plan - Florida Activities --Mr. Busen is Project Manager and Technical Director for a U.S. Navy Project investigating over 1,000 storage tanks at 22 Naval facilities in Florida. This study involves the evaluation, retrofitting recommendation, risk assessment, cost analysis, schedule development, training, and system management to educate Naval personnel and bring the Navy tanks into compliance with the state and federal regulations.

Contamination Assessment of two Navy fuel dispensing operations, Naval Training Center, Orlando--Mr. Busen directed a study to assess the extent and nature of soil and groundwater contamination at two on-base motor fuel dispensing facilities. The investigation included soil borings, monitoring well installation and soil and groundwater sampling.

Navy Release Detection Program - Florida--Mr. Busen is currently conducting a storage system release detection program for 22 Naval activities in Florida. The program includes the installation of compliance monitoring wells around underground storage tanks, precision tank testing, inventory assessment, the development of standard inventory and monitoring procedures and a training program for Navy personnel.

KENNETH L. BUSEN, (continued)

Assessment of Groundwater Contamination, Fertilizer Plant, Moore Haven, Florida--Mr. Busen directed a study to delineate and characterize contamination from a fertilizer batch plant that had impacted a municipal well field. The investigation included geophysical electromagnetic surveying, the installation of monitoring wells, the collection of soil and groundwater samples, and performing a pumping test to determine aquifer characteristics.

Affiliations

National Water Well Association
Florida Water Well Association

Publications

"Parallel Beach Ridges of Nipissing Age at Hammond Bay, Michigan," 2nd Symposium on Coastal Sedimentation, Florida State University, June 1977.

"History and Sedimentary Analysis of the Parallel Beach Ridges at Hammond Bay, Michigan," Coastal Research Notes, Vol. 5, No. 4, February 1979.

"Various Methods for Determining Long-Shore Sediment Transport and Associated Coastal Erosion Along the Southern California Coast," 6th Symposium on Coastal Sedimentology, Geology Society of America, Southeast Section, March 1983.

Over twenty-five (25) Groundwater Investigation Reports, at groundwater contaminated sites throughout Florida, Operations Response Section, FDER, Tallahassee, Florida, 1984-87.

PHILIP N. GEORGARIOU, Task Order Manager

EXPERIENCE SUMMARY

Philip Georgariou has more than 22 years of program management experience in a variety of fields, from production management and scheduling, to project management for DOD-related, aerospace equipment development and fielding. Over ten years logistics experience in both military and commercial aviation. Over five years experience with defense systems acquisition and procurement as well as having provided instruction on procurement on a continuing basis with Embry-Riddle Aeronautical University. Has taught a variety of under-graduate and post-graduate business courses for the past six years.

SPECIALIZED SKILL AREAS

- Project/Program Management
- Financial Management/Planning
- Systems Engineering
- Federal Acquisition and Procurement
- Logistic Support Analysis
- Production Management

EXPERIENCE

ABB ENVIRONMENTAL SERVICES, INC., Tallahassee, FL. August 1991 to present
Task Order Manager

PNG/ASSOCIATES, INC., Orlando, FL, January 1990 - August 1991. As owner of a small consulting firm, provided a variety of consulting services in Government contracting and aerospace logistics. Wrote, or assisted in writing, such documents as Configuration Management Plans and Logistic Support Analysis Plans. Additionally, developed cost tracking software programs for environmental services companies.

NAVAL AIR SYSTEMS COMMAND, Washington D.C. June 1985 to January 90 As Support Equipment Program Manager, developed the initial $1.98B life-of-program support equipment budget for Defense Review Board Approval of the V-22 and managed an average yearly budget for all aircraft of $100M. Formalized procedures for support equipment identification, budgeting, design, and development for equipment ranging from simple slings and adapters to complex memory loading devices.

EMBRY-RIDDLE AERONAUTICAL UNIVERSITY, September 1985 - August 89 As an Adjunct Professor, taught four different graduate-level business courses in the MS degree curriculum for Aeronautical Business Administration: (a) Management of Supply and Distribution Systems, (b) Management of Aerospace Research and Development Programs, (c) Aircraft Production and Procurement, and (d) Aviation Maintenance Management

COMMANDER NAVAL AIR FORCES, Pacific Fleet June 1982 - June 1985 As the Marine Liaison Officer, managed maintenance advisory team, responsible for visiting all Pacific-fleet commands to ensure compliance with aircraft maintenance regulations. Planned Marine Air Wing deployments aboard Navy ships: entailed ensuring the readiness and availability of all necessary aircraft, personnel, training, and supply support. Developed database management software program to track completion of predeployment milestones.

PHILLIP N. GEORGARIOU, (continued)

THIRD MARINE AIR WING March 1974 - June 1982 As the Intermediate-level Maintenance Officer for three years, was responsible for all facets of aircraft component scheduling and repair. Assistant Aircraft Maintenance Officer for three years controlling the day-to-day maintenance efforts of a 27 aircraft RF-4B squadron. For three years, was Maintenance Control Chief for a 20 aircraft A-4M squadron.

EDUCATION

UNIVERSITY OF SOUTHERN CALIFORNIA, Los Angeles, CA
M.S. Systems Management, 1985

PEPPERDINE UNIVERSITY, Malibu, CA
B.A. Human Resources Management, 1978

PROFESSIONAL AFFILIATIONS

American Finance Association
Southern Finance Association

LAURIE A. HUFFMAN, Contracts Manager

EXPERIENCE SUMMARY

Ms. Huffman has over six years of diversified and extensive procurement experience with both the federal Government and private industry. She is thoroughly experienced in all phases of contract management, purchasing procedures, techniques and resources, and has an extensive background in the organizational aspects of program development, acquisition management and logistics support. Ms. Huffman is particularly adept at cost and value analysis, contract negotiations and supplier management. Finally, she is knowledgeable in current modern management techniques, including management by objectives, management information system applications, and personnel development.

EXPERIENCE

ABB ENVIRONMENTAL SERVICES, INC., Tallahassee, FL. February 1991 - Present. As the Contracts Manager, Ms Huffman is responsible for overall contract management, ensuring continuity of proven operating procedures; understanding and consistency of administrative procedures; and maintenance of effective communications among ABB-ES and project clients. The Contracts Manager has complete authority, management, and administrative responsibilities for all prime contracts and subcontracts required to support all Florida operations, and expends a great deal of effort working with key suppliers to upgrade product/service quality, and ensure prompt delivery or performance to support prime contract requirements. Ms. Huffman has created a highly responsive and proactive contracts organization, developing procedures to expedite the procurement process, including extensive streamlining of the acquisition cycle, accelerated supplier negotiations, and aggressive support of project manager requirements.

ADVANCED ENVIRONMENTAL TECHNOLOGIES, INC., Summerville, SC. May 1991 - January 1991. As the Contracts Manager, Ms. Huffman created and implemented a comprehensive computerized acquisition management system, so that the procurement organization became an innovative and highly responsive part of the strategic management team. In this capacity, she was active in internal quality education, training in and formulation of supplier partnerships, and promotion of cost reduction efforts. Ms. Huffman was responsible for supplier negotiations, and ordering of inventoried materials, services, supplies and capitol goods which met stringent quality requirements, cost considerations and delivery schedules, as well as for all vendor quote evaluations and vendor qualification.

NAVAL AIR SYSTEMS COMMAND, Washington, D.C. January 1987 - April 1990. As a Contracts Specialist, Ms. Huffman was responsible for negotiation and administration of the V-22 Osprey aircraft weapon system research and development program, including establishment of price and all contractual terms and conditions, ensuring contractual compliance, long-range planning for production, and coordination of flight test activities. She was solely responsible for procurement of logistic elements required for support of flight test and production aircraft. Ms. Huffman was intricately involved in the early phases of acquisition planning and specification development for logistics end items. Such actions resulted in a 65% reduction to acquisition lead time, and ensured end item delivery prior to or concurrent with introduction of production aircraft despite the continuing evolution of aircraft design during the development process.

DEFENSE FUEL SUPPLY CENTER, Alexandria, VA. September 1985 - December 1986.
Contract Administrator. As a contract administrator, Ms. Huffman was responsible for audit and administration of approximately 250 aircraft refueling contracts. In this capacity, she independently monitored contractor performance, audited all contracts, and settled contract claims. She also aggressively pursued cost avoidance actions, resulting in overall price reductions.

LAURIE A. HUFFMAN, (continued)

Accounting Technician. January 1983 - August 1985. Ms. Huffman was responsible for supervision of expenditures by customer field activities for approximately 200 contracts. She established and maintained accounts receivable/payable data bases, examined orders to preclude over-obligation of funds, generated 3000 - 4000 monthly billings, and processed all disbursements.

EDUCATION

B.A., Public Administration and English, 1982, University of North Carolina, Chapel Hill, NC

MICHAEL A. KEIRN, Senior Consultant

QUALIFICATIONS SUMMARY

Dr. Keirn's areas of expertise include environmental chemistry, aquatic microbiology and limnology, microbial ecology, and bioassay/aquatic toxicology. He brings more than ten years of experience in contaminant migration and fate, environmental risk, and impact analysis, as well as the management of hazardous waste investigations to ABB Environmental. His project management activities have focused on multidisciplinary environmental surveys, impact assessments, and remedial alternatives analysis. He is experienced in the management of all three investigative phases of the Department of Defense Installation Restoration (IR) Program and has been program manager/Technical Director for two multi-task order contracts for performing RI/FS for the U.S. Army Toxic and Hazardous Materials Agency (USATHAMA).

EDUCATION

Ph.D./Environmental Engineering Sciences, 1977, University of Florida
M.S./Environmental Engineering Sciences, 1968, University of Florida
B.S./Biological Sciences, 1965, Purdue University

RELEVANT EXPERIENCE

Remedial Investigations and Feasibility Studies Services (USATHAMA) 1987 to Present--Dr. Keirn directed all technical aspects of an ongoing task order program. This program included 13 task orders envompassing remedial investigations, site inspections, Phase I records search, RI/FS plans development, feasibility studies, and remedial design at U.S. Army Installations. Actions were performed to evaluate current compliance with environmental regulation/disposal practices, and to assess potential/documented contamination due to ongoing or historical industrial or testing operating or disposal practices. The contract included actions taken on active and standby installations as well as posts selected for closure under the Base Closure Act of 1989.

RI/FS--Vineland Development Center, Vineland, NJ (New Jersey Department of Environmental Protection 1986 - 1989--Dr. Keirn served as Technical Director of the Phase II RI to determine the extent of contamination at 5 former disposal /spill sites. Actions resulted in a No-Action decision at 4 sites and development of a focused feasibility study and remedial design for PCB removal at one spill site.

Phase I Record Search, Massachusetts Military Reservation, MA 1986--Dr. Keirn directed a comprehensive records search at U.S. Coast Guard, Air National Guard, Army National Guard, U.S. Air Force and Veterans Administration Facilities. As Task Manager, Dr. Keirn was responsible for technical direction of the project team and leadership of the assessment.

Environmental Contamination Surveys and Remedial Action Technical Support Services (USATHAMA) 1984 - 1986--Dr. Keirn performed environmental contamination verification and quantification assessments, environmental fate and human health and environmental exposure assessments and remedial alternatives analysis at U.S. Army Installations. As Program(s) Manager Dr. Keirn was responsible for the direction of Task Managers conducting Phase I records/archives searches, environmental surveys and/or remedial alternatives analysis (11 major task orders) at active and inactive army installations including: Phoenix Military Reservation, Sharpe Army Depot, Letterkenney Army Depot, Alabama Army Ammunition Plant, West Virginia Ordinance Works, Anniston Army Depot, Louisiana Army Ammunition Plant, and Vint Hill Farms Station. As principal scientist, Dr. Keirn also provided technical direction/support to the environmental chemistry aspects of each project.

West Virginia Ordinance Works, RI/FS 1984 - 1985--Dr. Keirn performed an environmental investigation, endangerment assessment, and feasibility study at a former TNT manufacturing facility in which soils, sediments, lagoons and process sewers, surface water, and groundwater were contaminated with 2,4,6 -TNT, 2,4-DNT, 2,6-DNT and other explosives transformation products and biproducts. WVOW is a site ranked 86th on the National

Priorities List. As Project Manager, Dr. Keirn was responsible for schedule, budget and for the technical performance of the project team.

Alabama Army Ammunition Plant Confirmation Environmental Survey and Control Alternatives Assessment, AL 1981 - 1983--Dr. Keirn performed confirmatory environmental survey, transport and fate assessment, environmental impact assessment and remedial/control alternatives development for the explosives manufacturing area and burning grounds. As Project Manager, Dr. Keirn was responsible for the schedule, budget, and technical performance of the project team.

Alabama Army Ammunition Plant Environmental Survey, AL 1979 - 1981--Dr. Keirn performed exploratory environmental surveys for the smokeless powder, nitrocellulose, explosives manufacturing areas, industrial chemical manufacturing areas, burning grounds, and explosives/propellants storage areas. This project involved sampling, analysis, and assessment of groundwater, surface water, sediments, surface and subsurface soils, buildings, process sewers, and biota for the extent of contamination due to 2,4,6-TNT, 2,4- and 2,6-DNT, Tetryl, other explosives transformation products, nitrocellulose, smokeless powder, nitrobenzene, diphenylamine, other industrial chemicals and metals. As Project Manager, Dr. Keirn was responsible for the schedule, budget, and technical direction of the project team.

Environmental Contamination Survey, Vint Hill Farms Station, VA 1983-- Assessment contamination of soils, surface water, and groundwater by industrial and photographic process chemicals (silver and cyanide). As Project Manager, Dr. Keirn was responsible for schedule, budget, and technical direction of the project team.

Assessment of Potential Risk, Gateway Army Ammunition Plant, MO 1982--Certification of clean-up in order to release an inactive military steel fabricating plant for sale, Dr. Keirn was responsible, as Project Manager, for assessing potential exposure and human health risks and/or off-post migration of contaminants including PCBs, asbestos, and metals.

Assessment of the Level, Concentration, and Migration of PCBs, Transformer Storage Yard in AR 1981--Dr. Keirn directed the assessment of the level, concentration, and migration of PCBs present in the soil, groundwater, and sediments after a spill at an active transformer storage yard in Arkansas. As Quality Assurance Manager for the project, he developed the study plans for the environmental survey and clean-up program.

Assessment of Water Quality, Sites in Florida and Mississippi 1978--Dr. Keirn was responsible for assessing the water quality impact due to maintenance dredging at sites in Florida and Mississippi. The project included a study of chemical water quality impact and biological impact assessment.

Water Quality and Environmental Impact Assessments, U.S. Navy 1980--Dr. Keirn developed water quality impact assessment studies, including the impact of dredging and spoiling, for the siting of a naval base installation in Georgia. He also conducted an environmental impact assessment of the proposed site due to its location adjacent to a barrier island system and protected seashore.

Environmental Impact of a Peat Harvesting Operation, NC 1984 - 1985--Due to the potential for runoff of mercury from the dredging of peat in this environmentally critical area near the Pungo River, Dr. Keirn developed and implemented an in situ mercury bioaccumulation study of shellfish and fish in the river. He conducted bioassays on fish and monitored the rate of uptake in clams and bluegill to determine the potential risks to the environment and public health.

ADDITIONAL EXPERIENCE

Dr. Keirn has managed four remedial investigation/feasibility study projects and has conducted assessments at more than 100 suspected hazardous waste sites. He is experienced in the management of all three investigative phases of the Department of Defense Installation Restoration Program for hazardous waste disposal sites. In addition he has performed numerous water quality and/or ecological assessments for the power, pulp and paper, and mining industries, for the U.S. Army Corp of Engineers and for the U.S. Navy.

MARGARET E. LAYNE, P.E., Project Manager

EXPERIENCE SUMMARY

Ms. Layne has nine years of experience in hazardous waste management, treatment process design, health and environmental assessment, and regulatory support. Currently, Ms. Layne is project manager for the Remedial Investigation and Feasibility Study at NAS Cecil Field.

Other project management experience includes preparation of planning documents for a RCRA Facility Investigation at the Mayport Naval Station, preparation of plans and specifications for removal of underground storage tanks at five Navy bases in Florida, coordination of reports, reviews, and background documents on hazardous waste characteristics and management practices for EPA's Office of Solid Waste.

SPECIALIZED SKILL AREAS

- Project Management
- Regulatory Analysis
- Contamination Assessments
- Feasibility Studies
- Source Characterization

EXPERIENCE

ABB ENVIRONMENTAL SERVICES, INC., Tallahassee, FL, 1989 - Present
Project Manager 1990 - Present
Senior Engineer 1989 - 1990

RI/FS at NAS Cecil Field, Jacksonville, FL. October 1990 - Present. Ms. Layne is project manager for the CERCLA investigations of the 18 identified sites at NAS Cecil Field, an NPL listed facility. Final work plan preparation is currently underway.

RCRA Facility Investigation, U.S. Naval Station, Mayport, FL. September 1989 - Present. Ms. Layne is project manager for the RFI of the 17 identified Solid Waste Management Units at NAVSTA Mayport. A draft work plan was submitted to USEPA Region IV for approval in January 1990.

UST Assessment Study, David Taylor Research Center. September 1989 - Present. Ms. Layne is project manager for the assessment of the fuel oil storage system at DTRC, including site investigation, preparation of contract documents for tank removal, and reporting.

Underground Tank Remediation. April 1990 - November 1990. Ms. Layne was responsible for preparation of design documents and cost estimates for removal of over 100 underground storage tanks at five Navy bases in Florida. She coordinated a team of engineers, technicians, and draftsman to conduct field investigations and prepare plans and specifications.

Site Screening Investigations, Florida Department of Environmental Regulation. February 1990 - September 1990. Ms. Layne was responsible for coordination and preparation of Phase I Site Screening Reports for CERCLIS hazardous waste sites in Florida, including file review and preliminary hazard assessment.

RESEARCH TRIANGLE INSTITUTE, Research Triangle Park, NC, 1986 - 1989
Research Environmental Engineer 1988 - 1989
Environmental Engineer 1986 - 1988

Air Toxics Workshop. February 1989 - April 1989. She coordinated preparation of the companion document for the Conference on Waste Reduction for Industrial Air Toxic Emissions, sponsored by the North Carolina Pollution Prevention Pays Program, in Greensboro, N.C., April 1989.

Exposure Assessment Workshop. September 1987 - December 1987. Ms. Layne prepared and presented a seminar on pollutant fate and transport modeling as part of a two-day workshop on exposure assessment for the Health Assessment Section of EPA's Office of Solid Waste.

Third Edition of SW-846, "Test Methods for Evaluating Solid Waste". February 1986 - November 1986. Ms. Layne was project manager for preparation of the Third Edition of EPA's solid waste testing manual, SW-846. She coordinated document development with subcontractors and an EPA work group.

Ms. Layne also provided technical support for nationwide surveys of hazardous waste generators and treatment, storage and disposal facilities. She has prepared background documents on the use of the TCLP and the development of health-based regulatory thresholds for revisions to the RCRA Toxicity Characteristic, conducted a literature review of reported levels of lead in soil, and prepared a report on medical waste menagement.

HAZEN AND SAWYER, PC, Raleigh, NC, 1984-1986
Environmental Engineer

Ms. Layne coordinated a filter performance study for a municipal water treatment plant, conducted equipment performance testing, and prepared operation and maintenance manuals for municipal wastewater treatment plants.

BECHTEL GROUP INC., Houston, TX, 1981-1982, San Francisco, CA, 1980-1981
Environmental Engineer

Ms. Layne performed air pollution dispersion modeling for PSD permit applications and developed preliminary designs for wastewater and solid waste management systems at coal gasification and liquefaction facilities.

EDUCATION

M.S./Water Resources Engineering, 1984, University of North Carolina
B.E./Environmental and Water Resources Engineering, 1980, Vanderbilt University

PROFESSIONAL LICENSES

Professional Engineer - North Carolina, Florida, Georgia

PROFESSIONAL AFFILIATIONS

National Society of Professional Engineers
American Society of Civil Engineers
Society of Women Engineers

MARGARET E. LAYNE, (continued)

PUBLICATIONS/PRESENTATIONS

Layne, M., T. Pierson, S. Kulkarni, E. Wall, "Companion Document for the Conference on Waste Reduction for Industrial Air Toxic Emissions", North Carolina Pollution Prevention Pays Program, 1989.

Mauskopf, J.A., T.K. Pierson, and M.E. Layne, "A Comparison of the Remedial Priorities Determined Using More Likely Case and Worst Case Risk Estimates", Advances in Risk Analysis, Vol. 7, Proceedings of the 1987 Annual Meeting of the Society for Risk Analysis, Plenum Publishing, 1989.

Layne, P., W. Westbrook, K. Hendry, T. Pierson, "Review and Evaluation of Existing Literature on Generation, Management, and Potential Health Effects of Medical Waste", Research Triangle Institute for EPA Office of Solid Waste, November 1988.

Layne, M.E., P.C. Singer, and M.I. Lidwin, "Ozonation of Thiocyanate". Proceedings of the Conference on Cyanide and the Environment, Tucson, AZ, 1984.

Date of Update: 3/26/91

WILLIAM S. LAWRENCE, P.E., Senior Program Manager

EXPERIENCE SUMMARY

Mr. Lawrence has more than 17 years of poject management and engineering experience in a variety of industries in the southeast. This experience includes project management of RCRA and CERCLA nuclear weapons manufacturing and asbestos sites, and engineering design of buildings, chemical plants, and power generating plants.

SPECIALIZED SKILL AREAS

- Project Management
- RCRA closures
- Asbestos Surveys

EXPERIENCE

ABB ENVIRONMENTAL SERVICES, INC., Tallahassee, Florida, 1991 - Present
Sr. Project Manger

- Navy Task Order Manager; CLEAN contractor to SDIV.

Lee Wan & Associates, Inc./Radian Corp, Tennessee, 1/90 - 8/91
Project Manager

- Y12 Site Program Manager; Tech. Support Contractor to DOE/ORO. Base three year, $19 million contract involving three major plant sites, all designated on NPL and FFA pending. Responsible for Y12 (Weapons Mfg.) Plant Progam Management. Coordinate with other site program management for programmatic consistency, planning, and integration of RCRA/CERCLA/NEPA regulatory requirements. Y12 site program reporting to DOE for status, problem recognition and resolution recommendations. Participate in regulatory working group sessions with DOE/EPA/TDC.

- Asbestos Program Manager (Acting); Federal facilities program emphasis with DOE- M&O contractors. Responsible to V.P. for program development in planning, training, and organizing project management talent. Direct program elements toward a fully comprehensive asbestos management system includin Management Plans, M&O plans, and asbestos database management system. Ongoing program contracts near one million dollars.

MARTIN MARIETTA ENERGY SYSTEMS, Engineering Division, Tennessee, 1983 - 1989
Onsite Consultant

- Project Management Team Member, Closure and Post-Closure Activities at Y12 Plant. Fast tract Closure of RCLA sites requiring $50 million and 2 1/2 years. Responsible Team member for funding source documentation and cost planning. Provide oversite and input to multiple organizations performing design and construction activities for consistency in scope and schedule. Provide official government cost estimates for bid analysis and procurement.

William S. Lawrence, (continued)

- Served as Environmental Project managements primary cost and schedule consultant for Capital Line Items funding documentation. On-going funding of Health, Safety and Environmental projects totaling $100 million and projected funding in excess of $250 million. Initiated and developed the first PC computer aided cost (spreadsheet) estimating system in OR Operations. The Lotus based system was used as the model for MMES's machine language Automated Estimating System (AES).

- Provided direct support to DOE 8A program management for Construction cost analysis and contract negotiations.

Consulting Engineer, Private Practice, Tennessee, 1982 - 1983

- Provided engineering design and construction contract documentation service for coal industry firms.

V.P. WhITE ENGINEERING, INC., Tennessee, 1978 - 1983
Chief Ctaff Engineer

- Manage multi-discipline engineering services firm of 40 professional and technical people. Provide overall responsibility for technical staffing, organization, and planning. Proposal development, contracts, client interface and professional development among other duties and responsibilities.

BURNS & McDONNELL, Construction Management, Alabama, 1977 - 1978
Resident/Owner Representative

- Provide construction management and contract administration on three prime contracts in excess of $30 million on a multi-contract power plant construction project. Total project cost over $350 million. Oversite responsibilities of construction contractors. Review/approval of payment requests, process reporting and contract finalization and closeout.

ALGERSON-BLAIR, INC., Alabama, 1974 - 1976
Project Engineer

- Provided interpretation of drawing an specification, CPM/PERT scheduling, preparation and submission of payment request, QA/QC support, and Value Engineering initiatives on nearly $30 million in construction contracts in three states.

EDUCATION

B.S., Civil Engineering, 1974, University of Tennessee, Knoxville, Tennessee

PROFESSIONAL REGISTRATIONS AND CERTIFICATIONS

Registered Professional Engineer in Tennessee and Mississippi
U.S. EPA Accredited AHERA Inspector RWJ #1165A
U.S. Accredited AHERA Management Planner RWJ #9056B

CLEARANCES

U.S. Department of Energy "Q" Clearance

APPENDIX C

EXPANDED SITE INVESTIGATION (ESI) FIELD SAMPLING TECHNIQUES

Soil Sampling

During the period of September 9 through September 24, 1987, E.C. Jordan personnel performed the task of collecting soil samples from 28 monitoring well installations at Mayport Naval Station for further chemical analysis to be performed by Pioneer Laboratory. Split-spoon sample collection procedures were conducted in compliance with both the Florida Department of Environmental Regulation's and E.C. Jordan's Quality Assurance Plan for the collection and analysis of samples.

A split-spoon sampler was used to sample the soils from each of the 28 borings. Jordan's drilling supervisor took charge of the sampling device as soon as it was withdrawn from the borehole. The spoon was opened and the sample was collected and documented employing the procedures outlined below:

1. The soil was scanned with a photoionization meter and the value was recorded. Also, the length of the recovered sample was measured and recorded.

2. The samples were visually examined and classified using the Unified Soil Classification System.

3. Samples chosen for chemical analysis were removed and placed in appropriate sampling containers using a clean spatula. Samples that were to be analyzed for VOAs were placed in a 2-ounce wide-mouth glass jar and capped immediately. The sampling jar was filled to capacity to minimize volatilization of the sample into the container headspace. Soils intended for other types of analyses were placed in the appropriate container and capped.

4. The remainder of the samples were placed in 12-ounce soil jars intended for use as headspace photoionization measurement and achieved.

5. All excessively disturbed or loose material found in the sampler that was not representative of the interval sampled was discarded at the boring site location.

6. The sampling device was decontaminated with a soap water bath, tap water, isopropanol and rinsed with distilled water.

In some instances, samples from a given boring were not prepared for chemical analysis. In these instances, step 3 of the procedure listed above was omitted and the sample placed in a soil jar.

Immediately after the samples were collected, the jars were labeled, prepared for shipping and placed on ice in a cooler. The chain-of-custody procedures were initiated and the boring log was updated by Jordan's drilling supervisor. Boring logs are usually completed by the driller but to ensure completeness

and documentation, a separate boring log was compiled by Jordan's drilling supervisor. The boring logs include the interpretations of subsurface materials and conditions encountered, sampling locations, and other notes pertinent to the boring procedures. The drilling supervisor's boring log was completed in a site field book and later transferred to a boring log form.

Considerable care was exercised by the sampler while collecting samples for analysis. Some methods to assure that high quality samples were collected are described below:

1. Samples were collected from undisturbed soil below the auger. This was accomplished by monitoring or checking the drill crew's measurements, observing the sampling process and examining the sample once it was retrieved.

2. Portions of the sample that may have become contaminated by contacting the auger were carefully removed and discarded.

Procedures employed to prevent cross-contamination during test boring sampling operations included the following:

1. Samples were taken immediately after the boring was advanced to the desired sampling elevation.

2. The sampling tools were decontaminated prior to taking each sample.

3. The drilling contractor was not permitted to use oil, grease or other petroleum based lubricants on the drill rods, auger or sampling tools.

Two additional soil samples were taken at Site 16. A stainless steel bucket hand auger was used to collect the samples. Procedures employed, as well as the sample jars used, were identical to those already mentioned.

<u>Groundwater Sampling</u>

Labels supplied by Pioneer Laboratories were filled out in the field for each groundwater samples. Each groundwater sample consisted of a set of bottles which included two 40 milliliter vials for volatile organic compounds, two 1 liter amber glass bottles for semivolatile organic compounds, and one 2 liter plastic bottle for metals. Each sample was analyzed for the parameters selected for the project. The pH, temperature and specific conductance of each sampled, except MPT-8-3 which contained free product, were determined in the field using a Tripar analyzer.

Monitoring and sampling of groundwater wells proceeded from the upgradient or background wells to the dowgradient or

contaminated wells, as well as this could be determined. The sampling procedure was as follows:

1. After unlocking the well and removing the well cap, the static water level in the well and the depth to the well bottom to the nearest 0.01 foot was then measured using the electronic water level meter and recorded. The distance between the ground and the top of the protective casing with the lid open was also measured and recorded. Upon removal, the water level wire was rinsed with laboratory-grade isopropanol and then distilled water.

2. The volume of stagnant water in the well was then calculated. Volume in gallons equals the length of the column of water in feet in a two inch well times 0.1632 (Halliburton Cementing Tables, 1981).

Following the measurements and calculations described above, sampling commenced in the following sequence:

1. Each of the 28 monitoring wells was purged using a 24-inch clear teflon bailer.

2. Monitoring of in-situ parameters included temperature, pH, and specific conductance as well as measuring the volume of water being removed from the well. The in-situ parameters were monitored in a beaker using a Tripar Analyzer. Purging of the standing well water was considered complete when either of the following was achieved:

   a. a minimum of three well volumes was purged, and in-situ parameters stabilized (up to 5 volumes); or

   b. the well was pumped dry.

3. The in-situ parameters were then recorded.

4. After purging, the well was allowed to recover before sampling to allow for the settling of suspended particles. The bailer was lowered to the top of the water column for sample collection.

5. Samples were then collected filling the metals sample bottle first so that the clearest water could be obtained. One semivolatile organic compounds (SVOC) bottle (1 liter) was then partially filled and then the two 40 ml VOA's were filled. The remainder of the first SVOC bottle was then filled before the last SVOC bottle was filled.

   All samples were filled directly from the bailer with as little agitation as possible.

6. The bailer was then removed from the well and decontaminated with both isopropyl alcohol and distilled

water. It was rinsed with both distilled water and isopropyl alcohol as needed.

7. The sample data record was completed at a later date from the appropriate information recorded in the field log book.

8. The well cap and lock were then secured.

Surface Water Sampling

Surface water samples were collected for analysis to characterize the surface water surrounding Sites 2, 4, 5 and 6. The samples were taken in the following manner:

1. Samples were collected from the surface water body by immersing the sample bottle. All surface water samples were collected from tidally influenced ditches around Sites 2, 4, 5 and 6. The samples were collected upstream of the sampler with the opening of the sampling device oriented upstream but avoiding floating debris. Samples SD/SW-1, SD/SW-2 and SD/SW-B were collected from the bank of the ditch. Sample SD/SW-3 was collected while standing in the ditch.

2. The following parameters were measured in the field:

   a. temperature measurement;
   b. pH measurement; and
   c. specific conductance measurement.

   Measurements were taken in the same manner as groundwater measurements. This information was recorded in the log book, sample labels were completed and chain-of-custody procedures initiated.

3. The sample data record was completed at a later date from information recorded in the log book.

Duplicate Samples and Trip Blanks

Duplicate samples and trip blanks were used in order to assure laboratory quality assurance. Duplicate samples were collected and handled identically to other field samples. A brief summary of the collection is summarized below:

- all surface water and groundwater duplicates were collected identically to the method used for regular samples;

- duplicate samples were collected at the same time as the other samples and were preserved, handled and transported the same way;

- in the situation of a soil duplicate sample, the sample was taken from the same depth interval as the original sample but from an adjacent boring.

- trip blanks were prepared in the laboratory before the sampling event and were handle just like any water sample collected for volatile organic analyses.

- one bailer blank was collected and labeled MD-100. The sample was collected from the decontaminated bailer filled with distilled water. All normal water sample bottles were collected for the bailer blank.

APPENDIX D

EXPANDED SITE INVESTIGATION (ESI) MONITORING WELL INSTALLATION DATA

DEPARTMENT OF THE NAVY
SOUTHERN DIVISION
NAVAL FACILITIES ENGINEERING COMMAND
2155 EAGLE DR., P. O. BOX 10068
CHARLESTON, S. C. 29411-0068

WELL CONSTRUCTION DETAILS

WELL NUMBER MPT-1-1

DATE OF INSTALLATION 9 Sept. 87

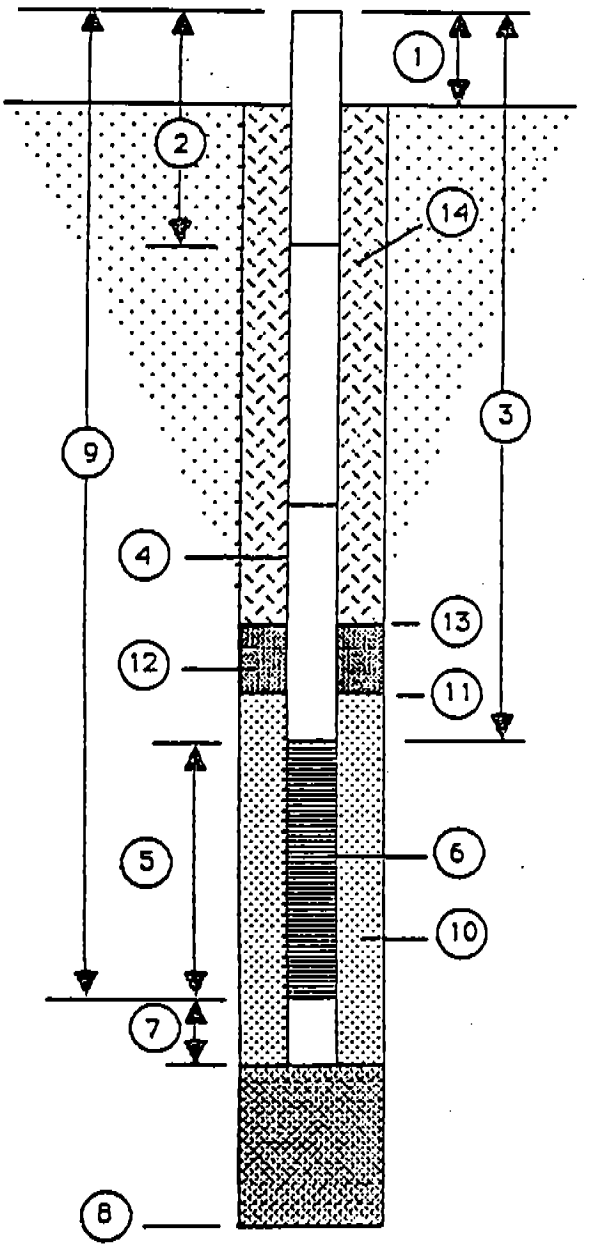

1. Height of Casing above ground 2.7'
2. Depth to First Coupling 7.5

   Coupling Interval Depths N/A
3. Total Length of Blank Pipe 7.5
4. Type of Blank Pipe Schedule 40 PVC, 2" ID
5. Length of Screen 10'
6. Type of Screen Schedule 40 PVC, #10 Slot
7. Length of Sump 0.5'
8. Total Depth of Boring 15.5 Hole Diameter 0.7'
9. Depth To Bottom of Screen 14.8
10. Type of Screen Filter Sand

    Quantity Used 250 lbs Size 6/20 U/C
11. Depth To Top of Filter 4'
12. Type of Seal Bentonite Pellets

    Quantity Used 25 lbs
13. Depth To Top of Seal 3'
14. Type of Grout Portland Cement

    Grout Mixture

    Method of Placement Tremie Pipe

COMMENTS ON INSTALLATION:

DEPARTMENT OF THE NAVY
SOUTHERN DIVISION
NAVAL FACILITIES ENGINEERING COMMAND
2155 EAGLE DR., P. O. BOX 10068
CHARLESTON, S. C. 29411-0068

WELL CONSTRUCTION DETAILS

WELL NUMBER MPT-1-2

DATE OF INSTALLATION 10 Sept. 87

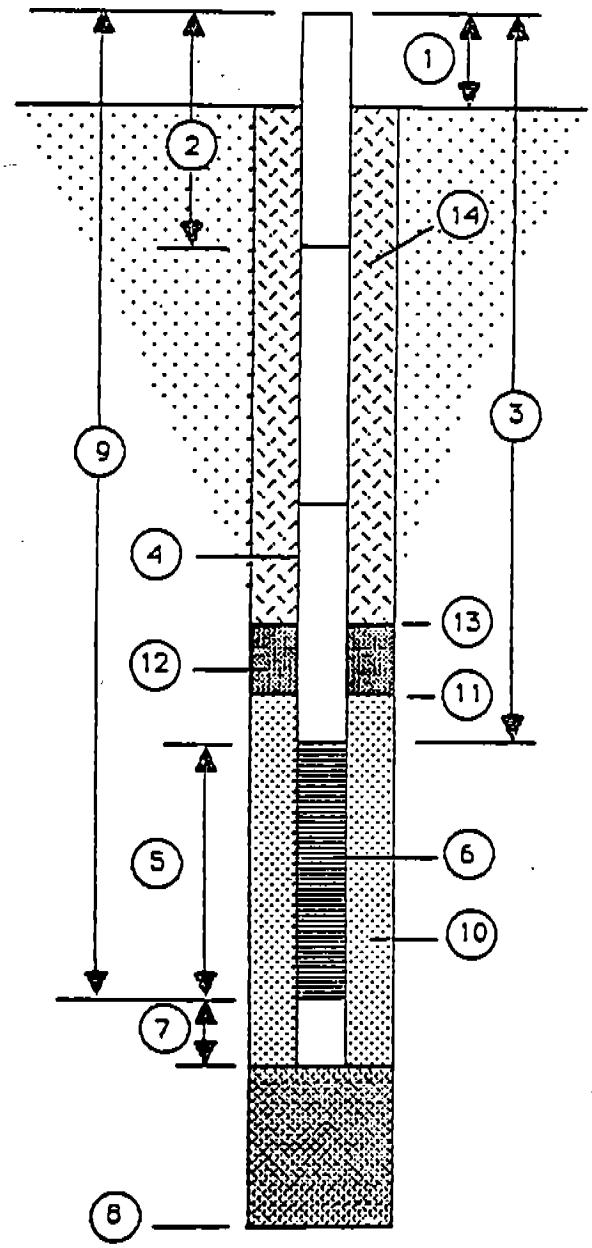

1. Height of Casing above ground 2.8'
2. Depth to first Coupling 7.5'

   Coupling Interval Depths N/A

3. Total Length of Blank Pipe 7.5'
4. Type of Blank Pipe Schedule 40 PVC, 2" ID
5. Length of Screen 10'
6. Type of Screen Schedule 40 PVC, #10 Slot
7. Length of Sump 0.5'
8. Total Depth of Boring 17' Hole Diameter 0.7'
9. Depth To Bottom of Screen 14.7'
10. Type of Screen Filter Sand

    Quantity Used 250 lbs Size 6/20 U/C

11. Depth To Top of Filter 3'
12. Type of Seal Bentonite Pellets

    Quantity Used 37 lbs

13. Depth To Top of Seal 2'
14. Type of Grout Portland Cement

    Grout Mixture

    Method of Placement Tremie Pipe

COMMENTS ON INSTALLATION:

DEPARTMENT OF THE NAVY
SOUTHERN DIVISION
NAVAL FACILITIES ENGINEERING COMMAND
2155 EAGLE DR., P. O. BOX 10068
CHARLESTON, S. C. 29411-0068

WELL CONSTRUCTION DETAILS

WELL NUMBER MPT-1-3

DATE OF INSTALLATION 10 Sept. 87

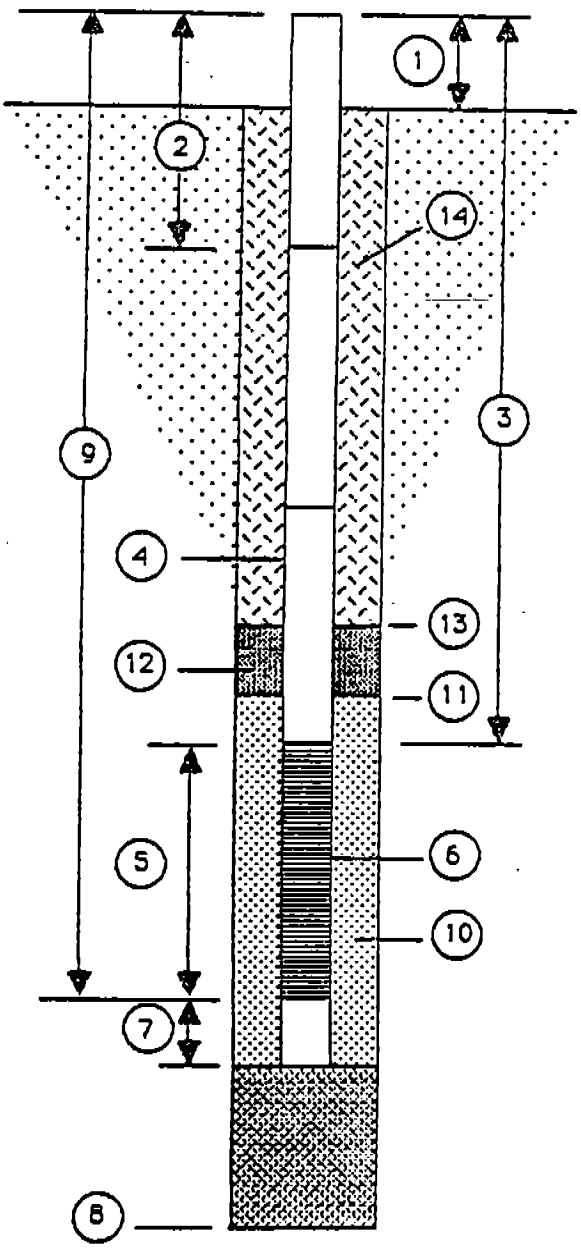

1. Height of Casing above ground 3.0'
2. Depth to first Coupling 7.5'

   Coupling Interval Depths N/A
3. Total Length of Blank Pipe 7.5'
4. Type of Blank Pipe Schedule 40 PVC, 2" ID
5. Length of Screen 10'
6. Type of Screen Schedule 40 PVC, #10 Slot
7. Length of Sump 0.5'
8. Total Depth of Boring 17' Hole Diameter 0.7'
9. Depth To Bottom of Screen 14.5
10. Type of Screen Filter Sand

    Quantity Used 450 lbs Size 6/20 U/C
11. Depth To Top of Filter 4'
12. Type of Seal Bentonite Pellets

    Quantity Used 37 lbs
13. Depth To Top of Seal 3'
14. Type of Grout Portland Cement

    Grout Mixture

    Method of Placement Tremie Pipe

COMMENTS ON INSTALLATION:

DEPARTMENT OF THE NAVY
SOUTHERN DIVISION
NAVAL FACILITIES ENGINEERING COMMAND
2155 EAGLE DR., P. O. BOX 10068
CHARLESTON, S. C. 29411-0068

WELL CONSTRUCTION DETAILS

WELL NUMBER MPT-2-1

DATE OF INSTALLATION 22 Sept. 87

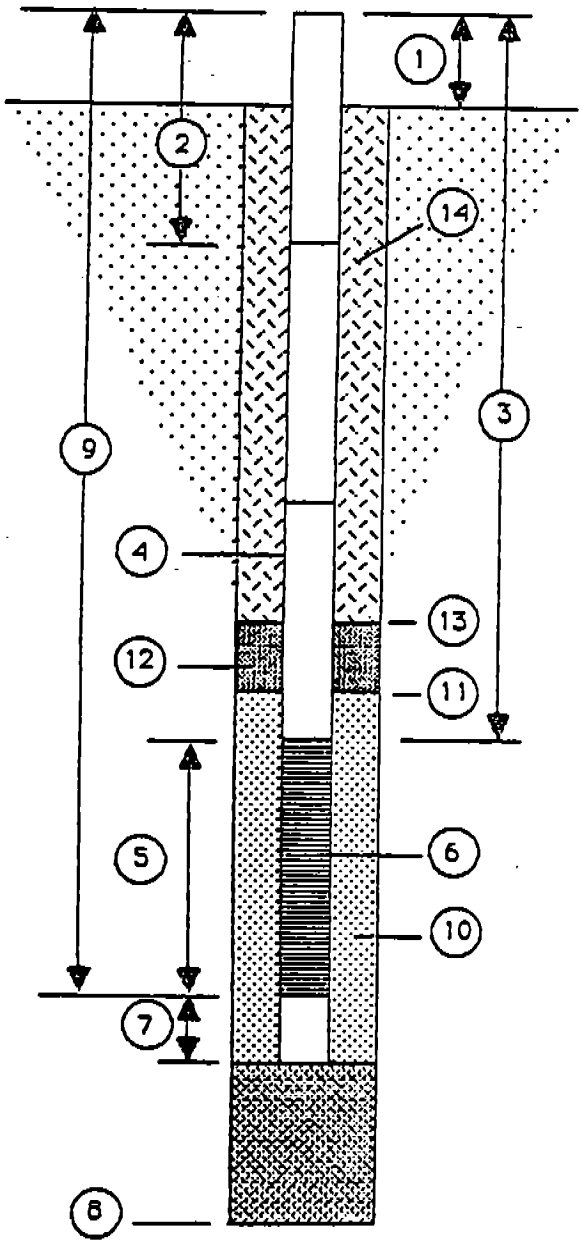

1. Height of Casing above ground 2.8'
2. Depth to first Coupling 7'

   Coupling Interval Depths _____
3. Total Length of Blank Pipe 7'
4. Type of Blank Pipe Schedule 40 PVC, 2" ID
5. Length of Screen 5'
6. Type of Screen Schedule 40 PVC, #10 Slot
7. Length of Sump 0.5'
8. Total Depth of Boring 12' Hole Diameter 0.7'
9. Depth To Bottom of Screen 9.2'
10. Type of Screen Filter Sand

    Quantity Used 200 lbs Size 6/20 U/C _____
11. Depth To Top of Filter 2.5'
12. Type of Seal Bentonite Pellets

    Quantity Used 16 lbs
13. Depth To Top of Seal 2'
14. Type of Grout Portland Cement

    Grout Mixture _____

    Method of Placement Tremie Pipe

COMMENTS ON INSTALLATION:

DEPARTMENT OF THE NAVY
SOUTHERN DIVISION
NAVAL FACILITIES ENGINEERING COMMAND
2155 EAGLE DR., P. O. BOX 10068
CHARLESTON, S. C. 29411-0068

WELL CONSTRUCTION DETAILS

WELL NUMBER MPT-2-2

DATE OF INSTALLATION 22 Sept. 87

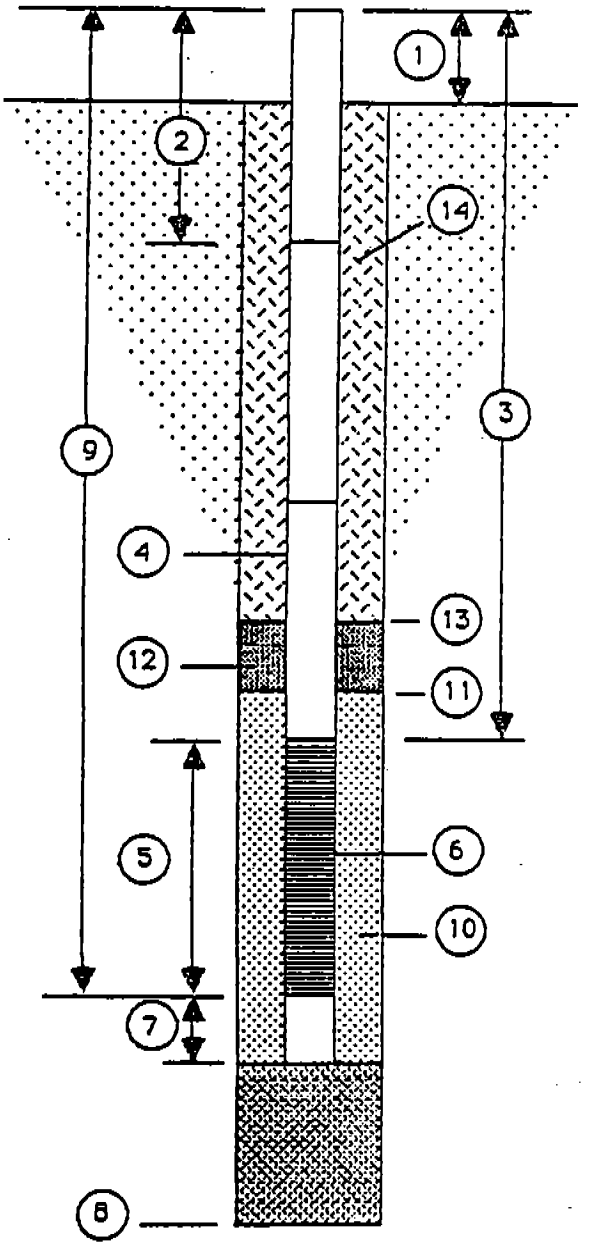

1. Height of Casing above ground 2'
2. Depth to first Coupling 7'

   Coupling Interval Depths N/A
3. Total Length of Blank Pipe 7'
4. Type of Blank Pipe Schedule 40 PVC, 2" ID
5. Length of Screen 5'
6. Type of Screen Schedule 40 PVC, #10 Slot
7. Length of Sump 0.5'
8. Total Depth of Boring 12' Hole Diameter 0.7'
9. Depth To Bottom of Screen 10'
10. Type of Screen Filter Sand

    Quantity Used 200 lbs Size 6/20 U/C
11. Depth To Top of Filter 2.5'
12. Type of Seal Bentonite Pellets

    Quantity Used 16 lbs
13. Depth To Top of Seal 2'
14. Type of Grout Portland Cement

    Grout Mixture

    Method of Placement Tremie Pipe

COMMENTS ON INSTALLATION:

DEPARTMENT OF THE NAVY
SOUTHERN DIVISION
NAVAL FACILITIES ENGINEERING COMMAND
2155 EAGLE DR., P. O. BOX 10068
CHARLESTON, S. C. 29411-0068

WELL CONSTRUCTION DETAILS

WELL NUMBER MPT-2-3

DATE OF INSTALLATION 14 Sept. 87

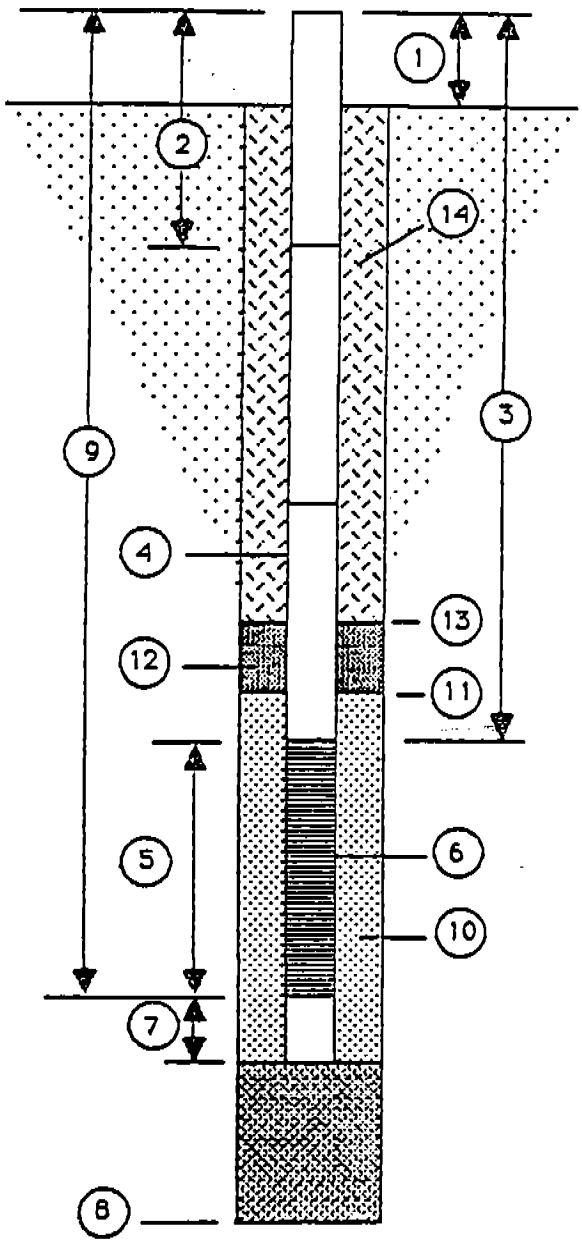

1. Height of Casing above ground 2.3'
2. Depth to first Coupling 7.5'

   Coupling Interval Depths N/A
3. Total Length of Blank Pipe 7.5'
4. Type of Blank Pipe Schedule 40 PVC, 2" ID
5. Length of Screen 10'
6. Type of Screen Schedule 40 PVC, #10 Slot
7. Length of Sump 0.5'
8. Total Depth of Boring 17' Hole Diameter 0.7'
9. Depth To Bottom of Screen 15.2'
10. Type of Screen Filter Sand

    Quantity Used 500 lbs Size 6/20 U/C
11. Depth To Top of Filter 4'
12. Type of Seal Bentonite Pellets

    Quantity Used 50 lbs
13. Depth To Top of Seal 3'
14. Type of Grout Portland Cement

    Grout Mixture

    Method of Placement Tremie Pipe

COMMENTS ON INSTALLATION:

DEPARTMENT OF THE NAVY
SOUTHERN DIVISION
NAVAL FACILITIES ENGINEERING COMMAND
2155 EAGLE DR., P. O. BOX 10068
CHARLESTON, S. C. 29411-0068

WELL CONSTRUCTION DETAILS

WELL NUMBER MPT-2-4

DATE OF INSTALLATION 11 Sept. 87

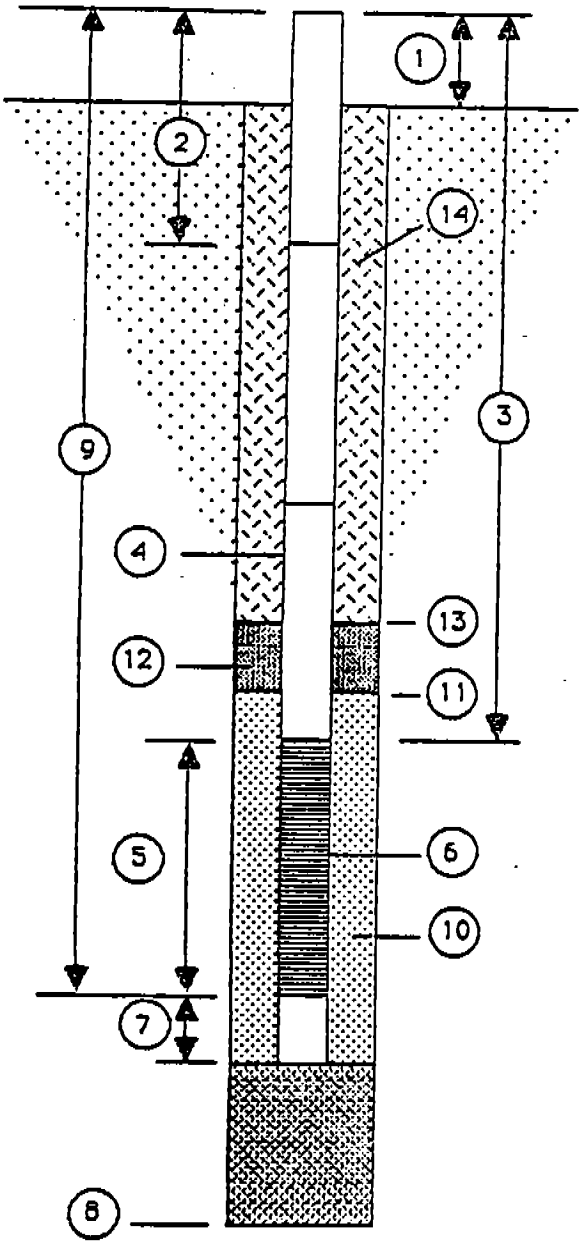

1. Height of Casing above ground 3'
2. Depth to first Coupling 6'

   Coupling Interval Depths N/A
3. Total Length of Blank Pipe 6'
4. Type of Blank Pipe Schedule 40 PVC, 2" ID
5. Length of Screen 10'
6. Type of Screen Schedule 40 PVC, #10 Slot
7. Length of Sump 0.5'
8. Total Depth of Boring 17' Hole Diameter 0.7'
9. Depth To Bottom of Screen 13'
10. Type of Screen Filter Sand

    Quantity Used 300 lbs Size 6/20 U/C
11. Depth To Top of Filter 2.5'
12. Type of Seal Bentonite Pellets

    Quantity Used 50 lbs
13. Depth To Top of Seal 1.5'
14. Type of Grout Portland Cement

    Grout Mixture

    Method of Placement Tremie Pipe

COMMENTS ON INSTALLATION:

DEPARTMENT OF THE NAVY
SOUTHERN DIVISION
NAVAL FACILITIES ENGINEERING COMMAND
2155 EAGLE DR., P. O. BOX 10068
CHARLESTON, S. C. 29411-0068

WELL CONSTRUCTION DETAILS

WELL NUMBER MPT-2-5

DATE OF INSTALLATION 23 Sept. 87

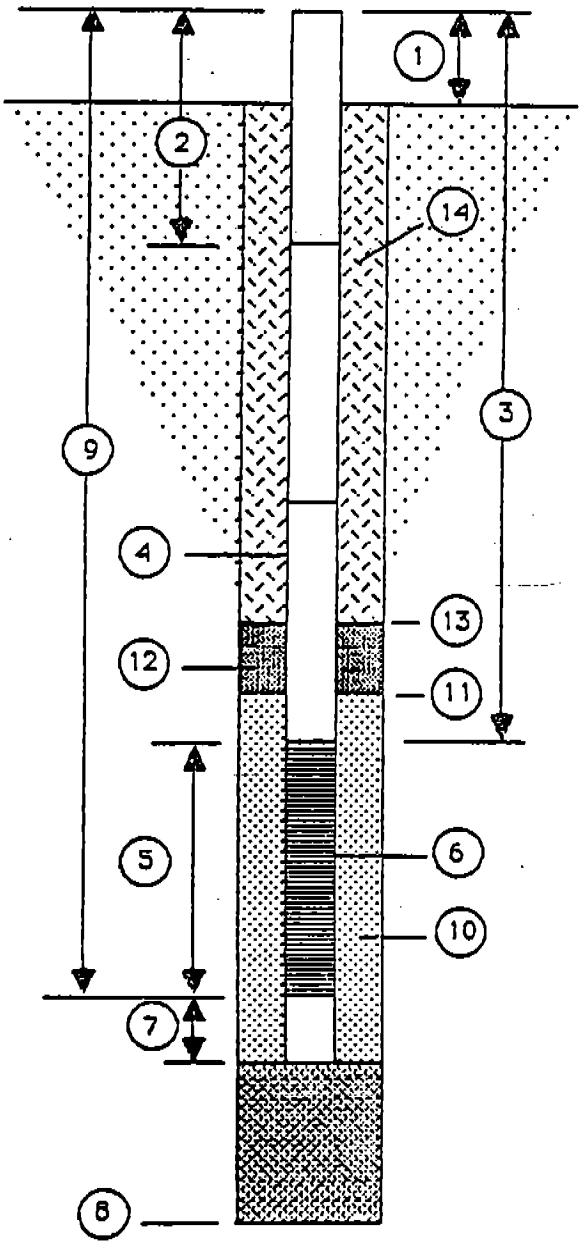

1. Height of Casing above ground 2.4'
2. Depth to first Coupling 5'

   Coupling Interval Depths N/A
3. Total Length of Blank Pipe 5'
4. Type of Blank Pipe Schedule 40 PVC, 2" ID
5. Length of Screen 7'
6. Type of Screen Schedule 40 PVC, #10 Slot
7. Length of Sump 0.5'
8. Total Depth of Boring 11' Hole Diameter 0.7'
9. Depth To Bottom of Screen 9.6'
10. Type of Screen Filter Sand

    Quantity Used 200 lbs Size 6/20 U/C
11. Depth To Top of Filter 2.5'
12. Type of Seal Bentonite Pellets

    Quantity Used 16 lbs
13. Depth To Top of Seal 2'
14. Type of Grout Portland Cement

    Grout Mixture

    Method of Placement Tremie Pipe

COMMENTS ON INSTALLATION:

DEPARTMENT OF THE NAVY
SOUTHERN DIVISION
NAVAL FACILITIES ENGINEERING COMMAND
2155 EAGLE DR., P. O. BOX 10068
CHARLESTON, S. C. 29411-0068

WELL CONSTRUCTION DETAILS

WELL NUMBER MPT-2-6

DATE OF INSTALLATION 22 Sept. 87

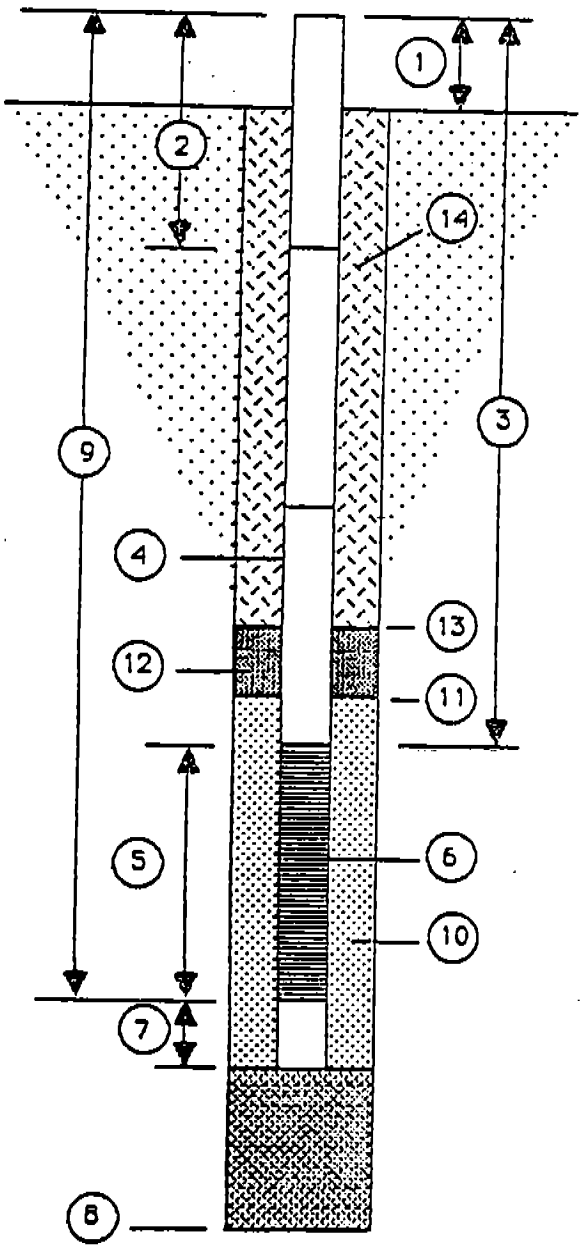

1. Height of Casing above ground 2.4'
2. Depth to first Coupling 5'

   Coupling Interval Depths N/A
3. Total Length of Blank Pipe 5'
4. Type of Blank Pipe Schedule 40 PVC, 2" ID
5. Length of Screen 7'
6. Type of Screen Schedule 40 PVC, #10 Slot
7. Length of Sump 0.5'
8. Total Depth of Boring 12' Hole Diameter 0.7'
9. Depth To Bottom of Screen 9.6'
10. Type of Screen Filter Sand

    Quantity Used 200 lbs Size 6/20 U/C
11. Depth To Top of Filter 2.5'
12. Type of Seal Bentonite Pellets

    Quantity Used 16 lbs
13. Depth To Top of Seal 2'
14. Type of Grout Portland Cement

    Grout Mixture

    Method of Placement Tremie Pipe

COMMENTS ON INSTALLATION:

DEPARTMENT OF THE NAVY
SOUTHERN DIVISION
NAVAL FACILITIES ENGINEERING COMMAND
2155 EAGLE DR., P. O. BOX 10068
CHARLESTON, S. C. 29411-0068

WELL CONSTRUCTION DETAILS

WELL NUMBER MPT-2-7S

DATE OF INSTALLATION 15 Sept. 87

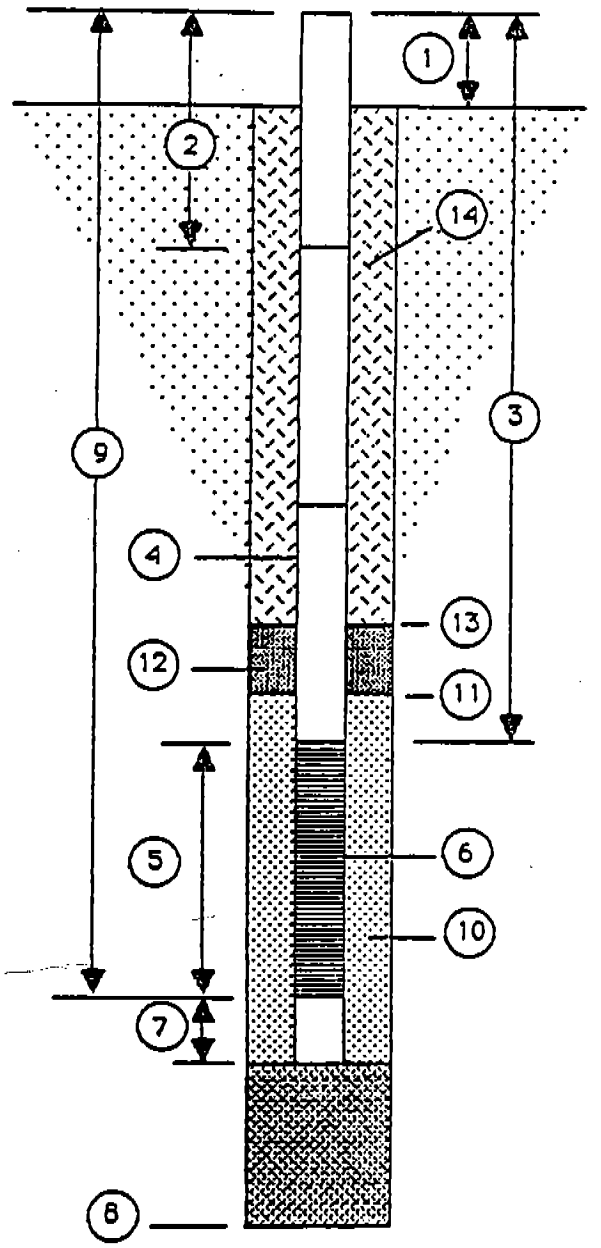

1. Height of Casing above ground 2.8'
2. Depth to first Coupling 6.5'

   Coupling Interval Depths N/A
3. Total Length of Blank Pipe 6.5'
4. Type of Blank Pipe Schedule 40 PVC, 2" ID
5. Length of Screen _____
6. Type of Screen Schedule 40 PVC, #10 Slot
7. Length of Sump 0.5'
8. Total Depth of Boring 12' Hole Diameter 0.7'
9. Depth To Bottom of Screen 10.7'
10. Type of Screen Filter Sand

    Quantity Used 200 lbs Size 6/20 U/C _____
11. Depth To Top of Filter 3.5'
12. Type of Seal Bentonite Pellets

    Quantity Used 16 lbs
13. Depth To Top of Seal 2.5'
14. Type of Grout Portland Cement

    Grout Mixture _____

    Method of Placement Tremie Pipe

COMMENTS ON INSTALLATION:

DEPARTMENT OF THE NAVY
SOUTHERN DIVISION
NAVAL FACILITIES ENGINEERING COMMAND
2155 EAGLE DR., P. O. BOX 10068
CHARLESTON, S. C. 29411-0068

WELL CONSTRUCTION DETAILS

WELL NUMBER MPT-2-7D

DATE OF INSTALLATION 23 Sept. 87

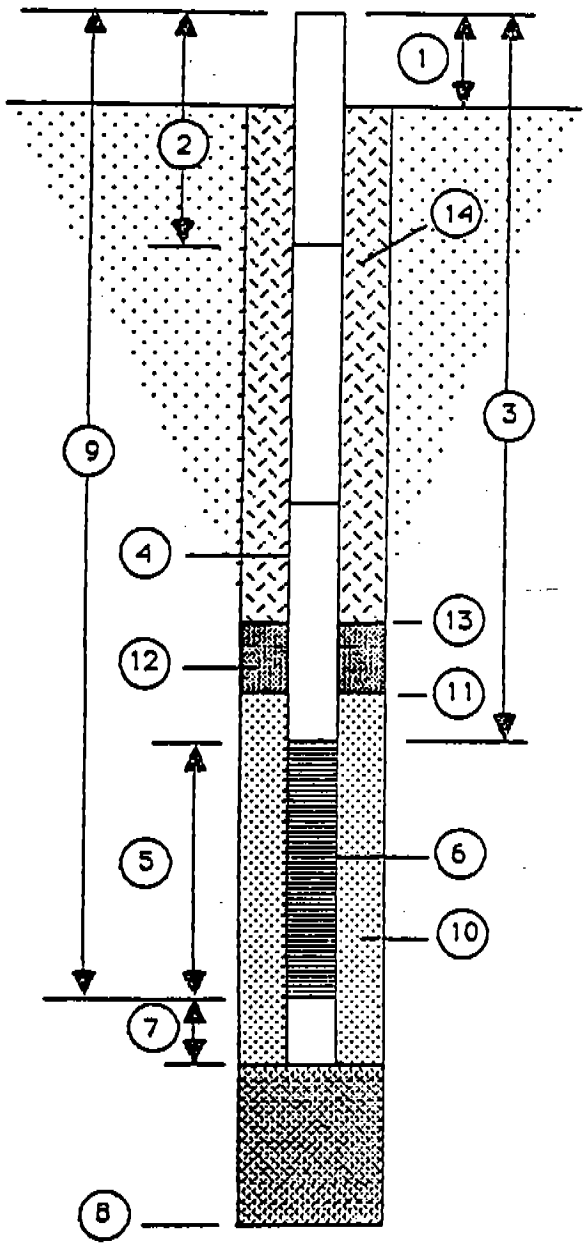

1. Height of Casing above ground 2'
2. Depth to first Coupling 7.5'

   Coupling Interval Depths 10'

3. Total Length of Blank Pipe 17.5'
4. Type of Blank Pipe Schedule 40 PVC, 2" ID
5. Length of Screen 10'
6. Type of Screen Schedule 40 PVC, #10 Slot
7. Length of Sump 0.5'
8. Total Depth of Boring 27' Hole Diameter 0.7
9. Depth To Bottom of Screen 25.5'
10. Type of Screen Filter Sand

    Quantity Used 350 lbs Size 6/20 U/C

11. Depth To Top of Filter 13.5'
12. Type of Seal Bentonite Pellets

    Quantity Used 32 lbs

13. Depth To Top of Seal 11'
14. Type of Grout Portland Cement

    Grout Mixture

    Method of Placement Tremie Pipe

COMMENTS ON INSTALLATION:

DEPARTMENT OF THE NAVY
SOUTHERN DIVISION
NAVAL FACILITIES ENGINEERING COMMAND
2155 EAGLE DR., P. O. BOX 10068
CHARLESTON, S. C. 29411-0068

WELL CONSTRUCTION DETAILS

WELL NUMBER MPT-2-8

DATE OF INSTALLATION 23 Sept. 87

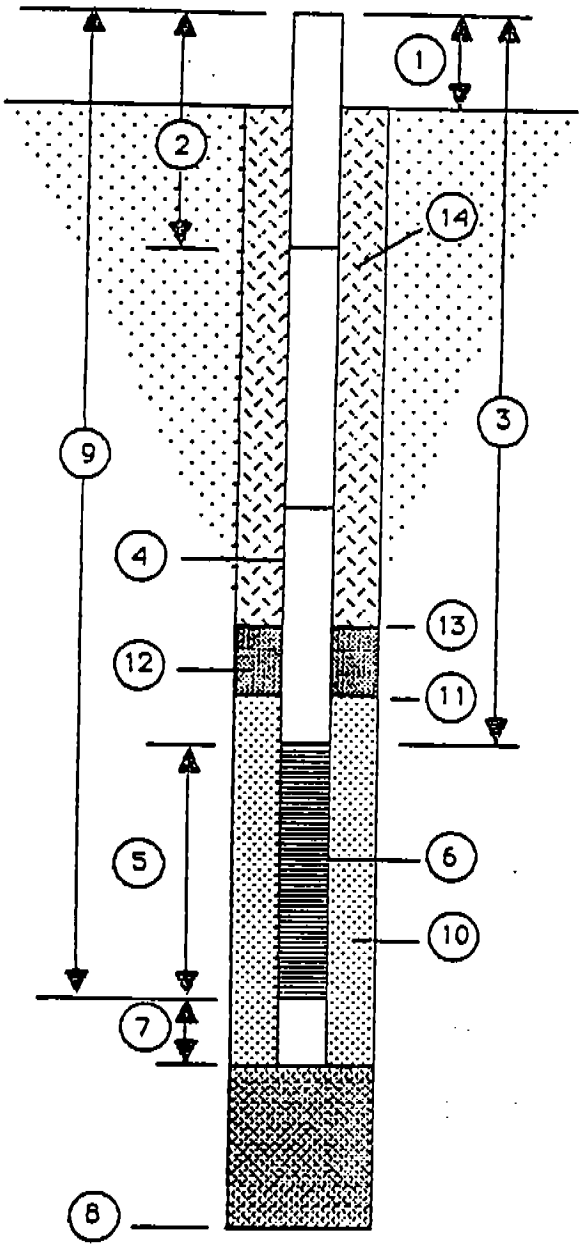

1. Height of Casing above ground 2.3'
2. Depth to first Coupling 5'

   Coupling Interval Depths N/A
3. Total Length of Blank Pipe 5'
4. Type of Blank Pipe Schedule 40 PVC, 2" ID
5. Length of Screen 7'
6. Type of Screen Schedule 40 PVC, #10 Slot
7. Length of Sump 0.5'
8. Total Depth of Boring 12' Hole Diameter 0.7'
9. Depth To Bottom of Screen 9.7'
10. Type of Screen Filter Sand

    Quantity Used 150 lbs Size 6/20 U/C
11. Depth To Top of Filter 2.5'
12. Type of Seal Bentonite Pellets

    Quantity Used 16 lbs
13. Depth To Top of Seal 2'
14. Type of Grout Portland Cement

    Grout Mixture

    Method of Placement Tremie Pipe

COMMENTS ON INSTALLATION:

DEPARTMENT OF THE NAVY
SOUTHERN DIVISION
NAVAL FACILITIES ENGINEERING COMMAND
2155 EAGLE DR., P. O. BOX 10068
CHARLESTON, S. C. 29411-0068

WELL CONSTRUCTION DETAILS

WELL NUMBER MPT-2-9S

DATE OF INSTALLATION 22 Sept. 87

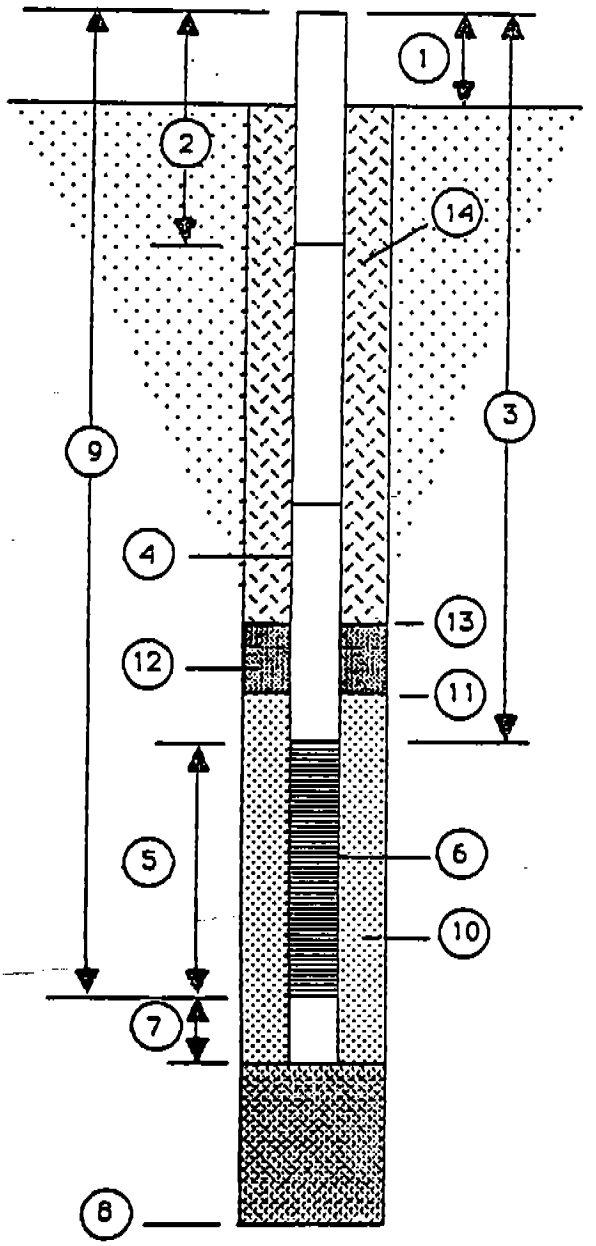

1. Height of Casing above ground 3'
2. Depth to first Coupling 5'

   Coupling Interval Depths N/A
3. Total Length of Blank Pipe 5'
4. Type of Blank Pipe Schedule 40 PVC, 2" ID
5. Length of Screen 7'
6. Type of Screen Schedule 40 PVC, #10 Slot
7. Length of Sump 0.5'
8. Total Depth of Boring 10' Hole Diameter 0.5
9. Depth To Bottom of Screen 9'
10. Type of Screen Filter Sand

    Quantity Used 200 lbs Size 6/20 U/C
11. Depth To Top of Filter 2.5'
12. Type of Seal Bentonite Pellets

    Quantity Used 16 lbs
13. Depth To Top of Seal 2'
14. Type of Grout Portland Cement

    Grout Mixture

    Method of Placement Tremie Pipe

COMMENTS ON INSTALLATION:

DEPARTMENT OF THE NAVY
SOUTHERN DIVISION
NAVAL FACILITIES ENGINEERING COMMAND
2155 EAGLE DR., P. O. BOX 10068
CHARLESTON, S. C. 29411-0068

WELL CONSTRUCTION DETAILS

WELL NUMBER MPT-2-9D

DATE OF INSTALLATION 22 Sept. 87

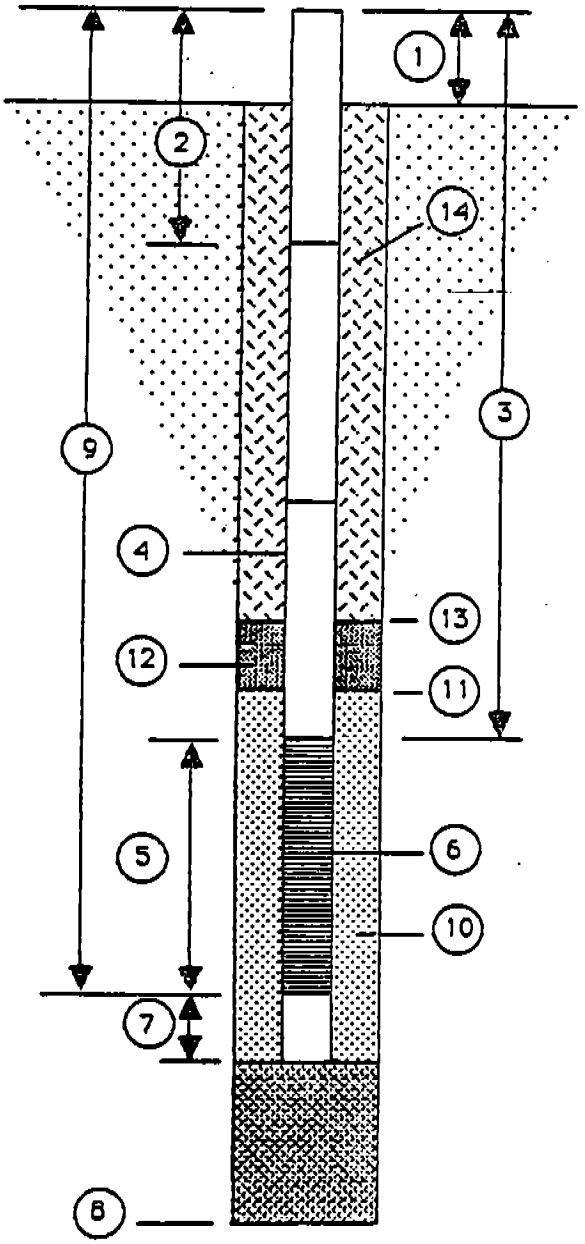

1. Height of Casing above ground 3'
2. Depth to first Coupling 7.5'

   Coupling Interval Depths 10'

3. Total Length of Blank Pipe 17.5
4. Type of Blank Pipe Schedule 40 PVC, 2" ID
5. Length of Screen 10'
6. Type of Screen Schedule 40 PVC, #10 Slot
7. Length of Sump 0.5'
8. Total Depth of Boring 27 Hole Diameter 0.7
9. Depth To Bottom of Screen 24.5
10. Type of Screen Filter Sand

    Quantity Used 300 lbs Size 6/20 U/C

11. Depth To Top of Filter 13'
12. Type of Seal Bentonite Pellets

    Quantity Used 50 lbs

13. Depth To Top of Seal 10'
14. Type of Grout Portland Cement

    Grout Mixture

    Method of Placement Tremie Pipe

COMMENTS ON INSTALLATION:

DEPARTMENT OF THE NAVY
SOUTHERN DIVISION
NAVAL FACILITIES ENGINEERING COMMAND
2155 EAGLE DR., P. O. BOX 10068
CHARLESTON, S. C. 29411-0068

WELL CONSTRUCTION DETAILS

WELL NUMBER MPT-2-10

DATE OF INSTALLATION 10 Sept. 87

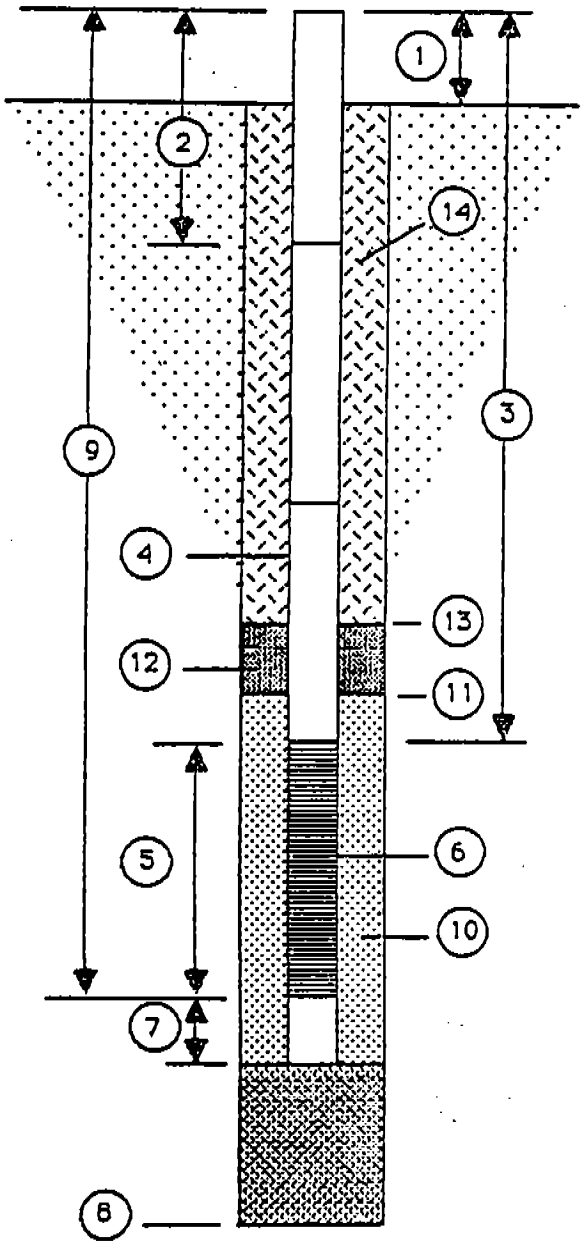

1. Height of Casing above ground 3.1
2. Depth to first Coupling 7.5'

   Coupling Interval Depths N/A
3. Total Length of Blank Pipe 7.5'
4. Type of Blank Pipe Schedule 40 PVC, 2" ID
5. Length of Screen 5'
6. Type of Screen Schedule 40 PVC, #10 Slot
7. Length of Sump 0.5'
8. Total Depth of Boring 17' Hole Diameter 0.7'
9. Depth To Bottom of Screen 9.4
10. Type of Screen Filter Sand

    Quantity Used 600 lbs Size 6/20 U/C
11. Depth To Top of Filter 3'
12. Type of Seal Bentonite Pellets

    Quantity Used 37 lbs
13. Depth To Top of Seal 2'
14. Type of Grout Portland Cement

    Grout Mixture

    Method of Placement Tremie Pipe

COMMENTS ON INSTALLATION:

DEPARTMENT OF THE NAVY
SOUTHERN DIVISION
NAVAL FACILITIES ENGINEERING COMMAND
2155 EAGLE DR., P. O. BOX 10068
CHARLESTON, S. C. 29411-0068

WELL CONSTRUCTION DETAILS

WELL NUMBER MPT-2-15S

DATE OF INSTALLATION 14 Sept. 87

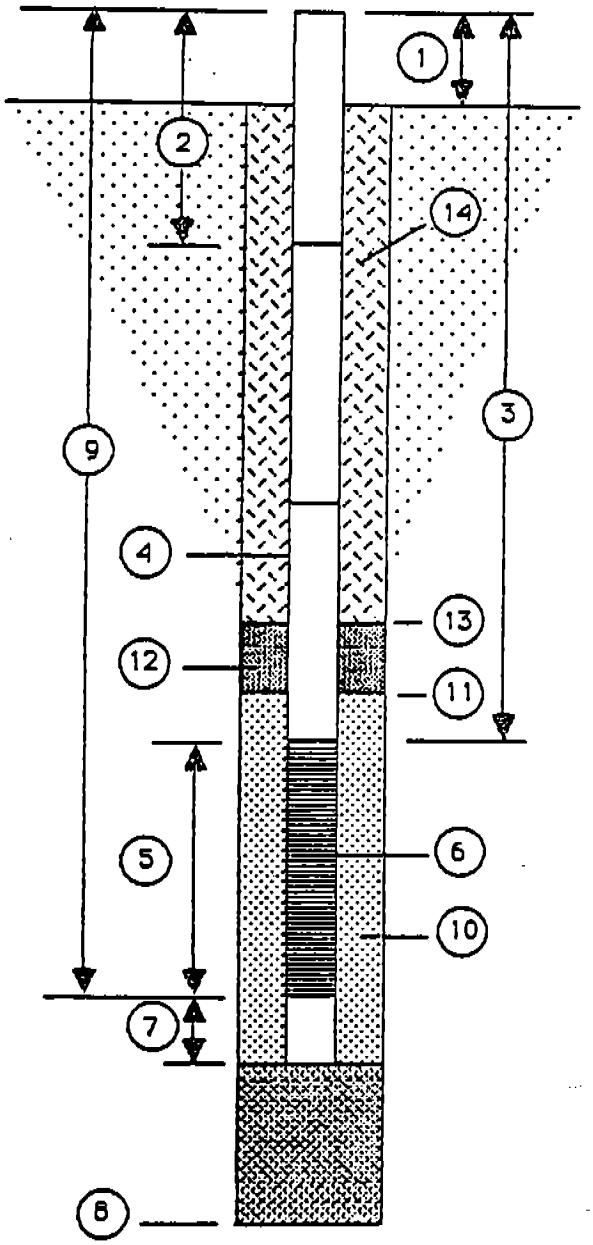

1. Height of Casing above ground 3.2'
2. Depth to first Coupling 7'

   Coupling Interval Depths N/A
3. Total Length of Blank Pipe 7'
4. Type of Blank Pipe Schedule 40 PVC, 2" ID
5. Length of Screen 10'
6. Type of Screen Schedule 40 PVC, #10 Slot
7. Length of Sump 0.5'
8. Total Depth of Boring 17' Hole Diameter 0.7'
9. Depth To Bottom of Screen 13.2
10. Type of Screen Filter Sand

    Quantity Used 550 lbs Size 6/20 U/C
11. Depth To Top of Filter 3'
12. Type of Seal Bentonite Pellets

    Quantity Used 50 lbs
13. Depth To Top of Seal 2'
14. Type of Grout Portland Cement

    Grout Mixture

    Method of Placement Tremie Pipe

COMMENTS ON INSTALLATION:

DEPARTMENT OF THE NAVY
SOUTHERN DIVISION
NAVAL FACILITIES ENGINEERING COMMAND
2155 EAGLE DR., P. O. BOX 10068
CHARLESTON, S. C. 29411-0068

WELL CONSTRUCTION DETAILS

WELL NUMBER MPT-2-15D

DATE OF INSTALLATION 23 Sept. 87

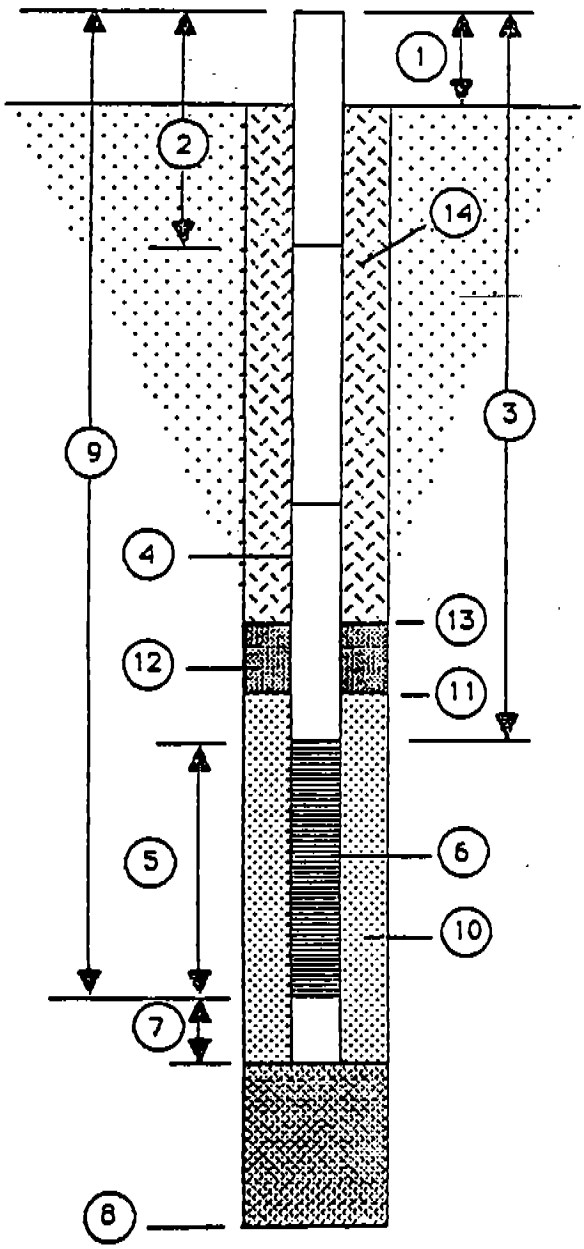

1. Height of Casing above ground 2.2'
2. Depth to first Coupling 7.5'

   Coupling Interval Depths 10'

3. Total Length of Blank Pipe 17.5'
4. Type of Blank Pipe Schedule 40 PVC, 2" ID
5. Length of Screen 10'
6. Type of Screen Schedule 40 PVC, #10 Slot
7. Length of Sump 0.5'
8. Total Depth of Boring 27' Hole Diameter 0.7'
9. Depth To Bottom of Screen 25.3'
10. Type of Screen Filter Sand

    Quantity Used 300 lbs Size 6/20 U/C

11. Depth To Top of Filter 13'
12. Type of Seal Bentonite Pellets

    Quantity Used 37 lbs

13. Depth To Top of Seal 11'
14. Type of Grout Portland Cement

    Grout Mixture

    Method of Placement Tremie Pipe

COMMENTS ON INSTALLATION:

DEPARTMENT OF THE NAVY
SOUTHERN DIVISION
NAVAL FACILITIES ENGINEERING COMMAND
2155 EAGLE DR., P. O. BOX 10068
CHARLESTON, S. C. 29411-0068

WELL CONSTRUCTION DETAILS

WELL NUMBER MPT-8-1

DATE OF INSTALLATION 17 Sept. 87

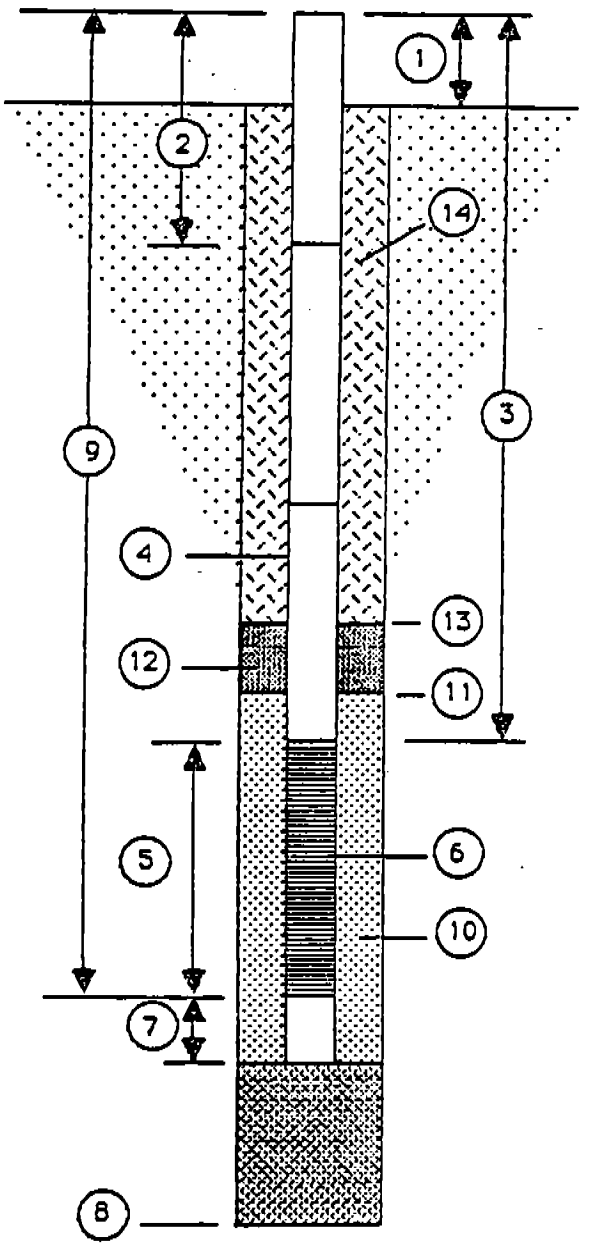

1. Height of Casing above ground 2.9
2. Depth to first Coupling 9'

   Coupling Interval Depths N/A
3. Total Length of Blank Pipe 9'
4. Type of Blank Pipe Schedule 40 PVC, 2" ID
5. Length of Screen 10'
6. Type of Screen Schedule 40 PVC, #10 Slot
7. Length of Sump 0.5'
8. Total Depth of Boring 17' Hole Diameter 0.7'
9. Depth To Bottom of Screen 16.1
10. Type of Screen Filter Sand

    Quantity Used 350 lbs Size 6/20 U/C
11. Depth To Top of Filter 5.5'
12. Type of Seal Bentonite Pellets

    Quantity Used 50 lbs
13. Depth To Top of Seal 3.5'
14. Type of Grout Portland Cement

    Grout Mixture

    Method of Placement Tremie Pipe

COMMENTS ON INSTALLATION:

DEPARTMENT OF THE NAVY
SOUTHERN DIVISION
NAVAL FACILITIES ENGINEERING COMMAND
2155 EAGLE DR., P. O. BOX 10068
CHARLESTON, S. C. 29411-0068

WELL CONSTRUCTION DETAILS

WELL NUMBER MPT-8-2

DATE OF INSTALLATION 17 Sept. 87

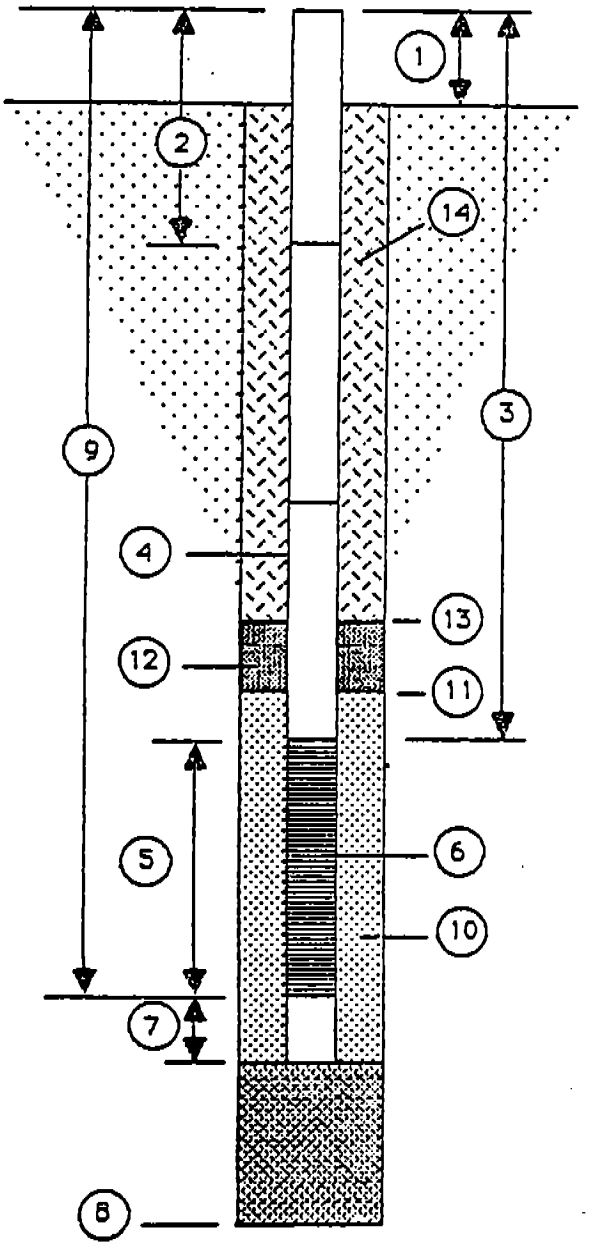

1. Height of Casing above ground 2.6'
2. Depth to first Coupling 10'

   Coupling Interval Depths N/A
3. Total Length of Blank Pipe 10'
4. Type of Blank Pipe Schedule 40 PVC, 2" ID
5. Length of Screen 10'
6. Type of Screen Schedule 40 PVC, #10 Slot
7. Length of Sump 0.5'
8. Total Depth of Boring 18' Hole Diameter 0.7'
9. Depth To Bottom of Screen 17.4'
10. Type of Screen Filter Sand

    Quantity Used 350 lbs Size 6/20 U/C
11. Depth To Top of Filter 5'
12. Type of Seal Bentonite Pellets

    Quantity Used 37 lbs
13. Depth To Top of Seal 3'
14. Type of Grout Portland Cement

    Grout Mixture

    Method of Placement Tremie Pipe

COMMENTS ON INSTALLATION:

DEPARTMENT OF THE NAVY
SOUTHERN DIVISION
NAVAL FACILITIES ENGINEERING COMMAND
2155 EAGLE DR., P. O. BOX 10068
CHARLESTON, S. C. 29411-0068

WELL CONSTRUCTION DETAILS

WELL NUMBER MPT-8-3

DATE OF INSTALLATION 16 Sept. 87

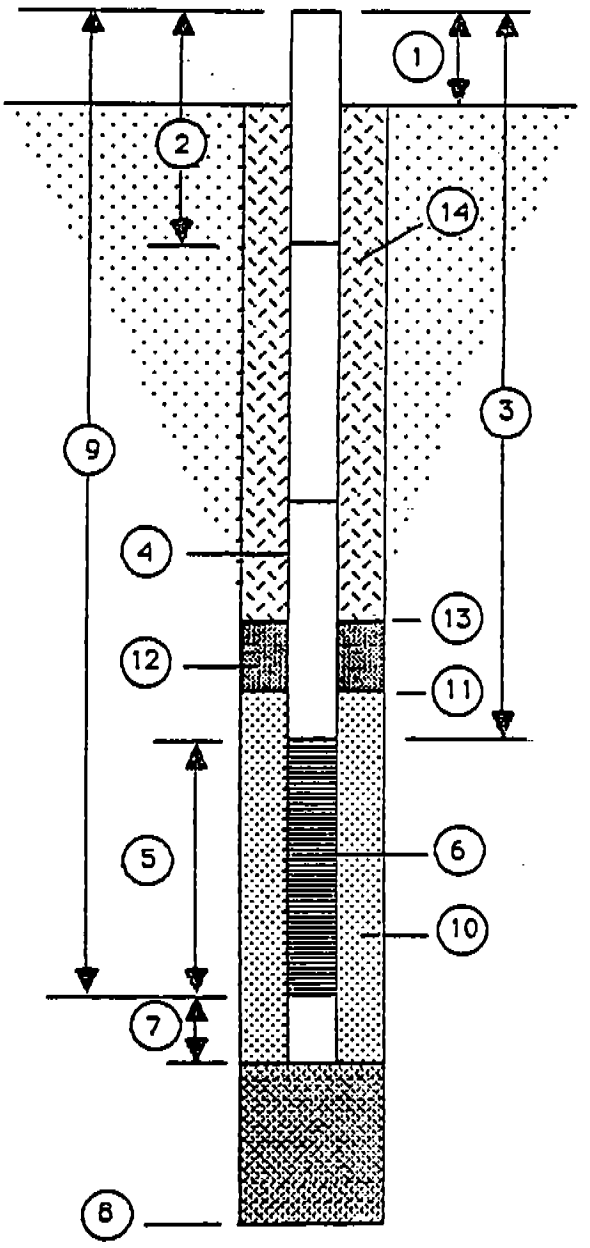

1. Height of Casing above ground 2.8
2. Depth to first Coupling 7.5'

   Coupling Interval Depths N/A
3. Total Length of Blank Pipe 7.5'
4. Type of Blank Pipe Schedule 40 PVC, 2" ID
5. Length of Screen 10'
6. Type of Screen Schedule 40 PVC, #10 Slot
7. Length of Sump 0.5'
8. Total Depth of Boring 17' Hole Diameter 0.7'
9. Depth To Bottom of Screen 14.7
10. Type of Screen Filter Sand

    Quantity Used 300 lbs Size 6/20 U/C
11. Depth To Top of Filter 4'
12. Type of Seal Bentonite Pellets

    Quantity Used 25 lbs
13. Depth To Top of Seal 2'
14. Type of Grout Portland Cement

    Grout Mixture

    Method of Placement Tremie Pipe

COMMENTS ON INSTALLATION:

DEPARTMENT OF THE NAVY
SOUTHERN DIVISION
NAVAL FACILITIES ENGINEERING COMMAND
2155 EAGLE DR., P. O. BOX 10068
CHARLESTON, S. C. 29411-0068

WELL CONSTRUCTION DETAILS

WELL NUMBER MPT-9-1

DATE OF INSTALLATION 15 Sept. 87

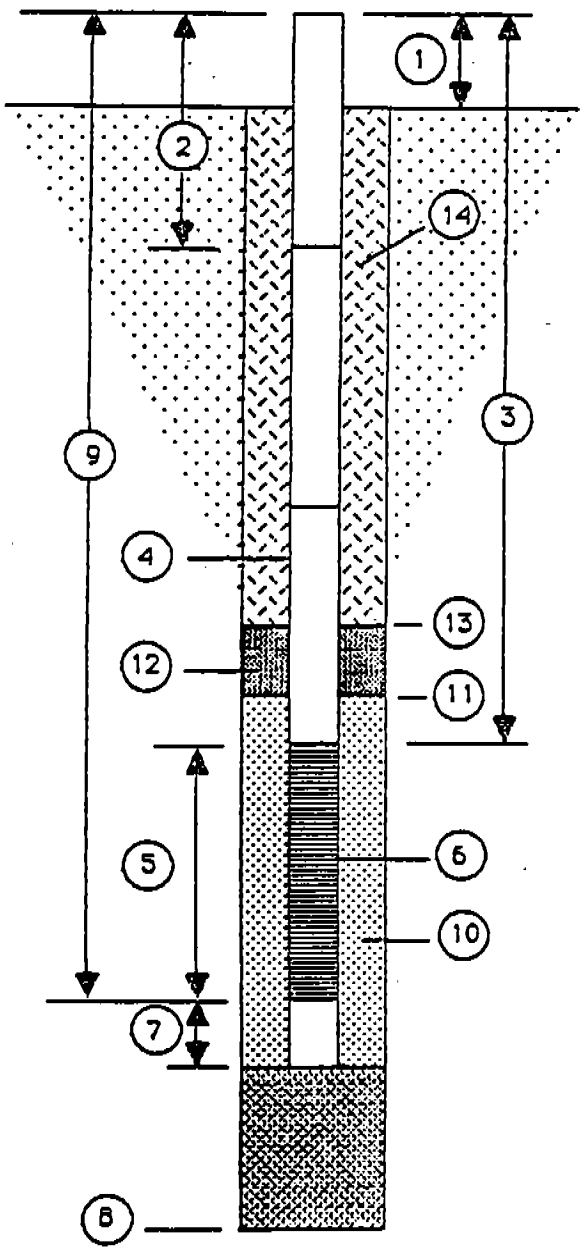

1. Height of Casing above ground 2.9'
2. Depth to first Coupling 2'
   Coupling Interval Depths 10'
3. Total Length of Blank Pipe 12'
4. Type of Blank Pipe Schedule 40 PVC, 2" ID
5. Length of Screen 10'
6. Type of Screen Schedule 40 PVC, #10 Slot
7. Length of Sump 0.5'
8. Total Depth of Boring 20' Hole Diameter 0.7'
9. Depth To Bottom of Screen 19.1'
10. Type of Screen Filter Sand
    Quantity Used 350 lbs Size 6/20 U/C
11. Depth To Top of Filter 7'
12. Type of Seal Bentonite Pellets
    Quantity Used 50 lbs
13. Depth To Top of Seal 5'
14. Type of Grout Portland Cement
    Grout Mixture
    Method of Placement Tremie Pipe

COMMENTS ON INSTALLATION:

DEPARTMENT OF THE NAVY
SOUTHERN DIVISION
NAVAL FACILITIES ENGINEERING COMMAND
2155 EAGLE DR., P. O. BOX 10068
CHARLESTON, S. C. 29411-0068

WELL CONSTRUCTION DETAILS

WELL NUMBER MPT-9-2

DATE OF INSTALLATION 16 Sept. 87

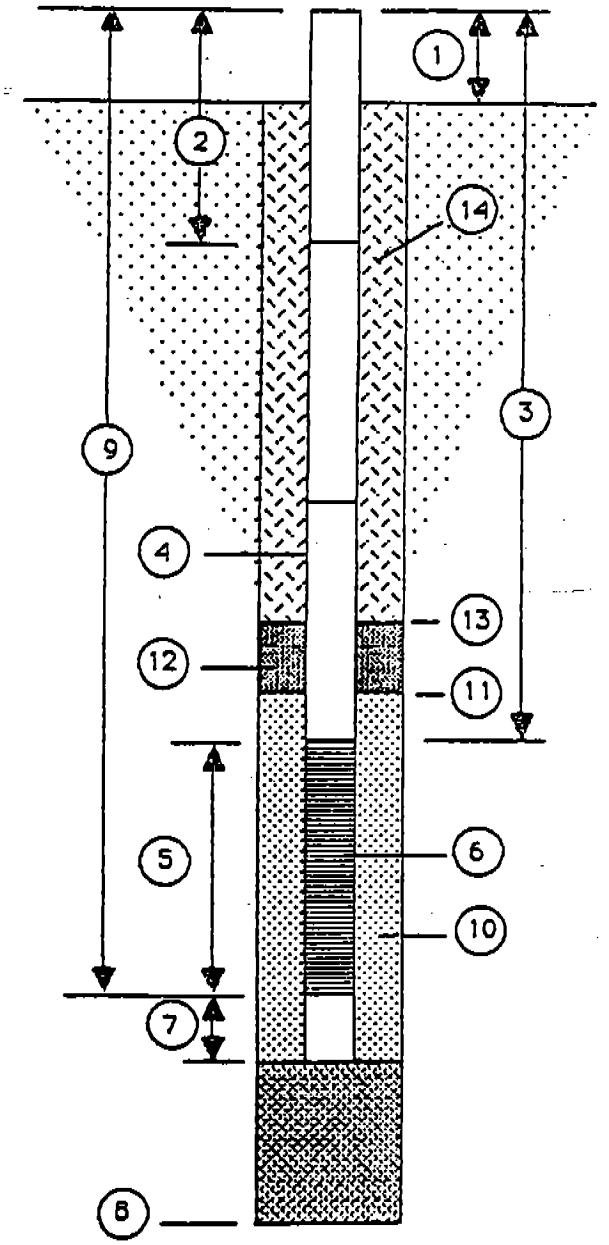

1. Height of Casing above ground 3.1
2. Depth to first Coupling 7.5'

   Coupling Interval Depths N/A
3. Total Length of Blank Pipe 7.5'
4. Type of Blank Pipe Schedule 40 PVC, 2" ID
5. Length of Screen 10'
6. Type of Screen Schedule 40 PVC, #10 Slot
7. Length of Sump 0.5'
8. Total Depth of Boring 17' Hole Diameter 0.7'
9. Depth To Bottom of Screen 14.1'
10. Type of Screen Filter Sand

    Quantity Used 250 lbs Size 6/20 U/C
11. Depth To Top of Filter 4'
12. Type of Seal Bentonite Pellets

    Quantity Used 37 lbs
13. Depth To Top of Seal 2'
14. Type of Grout Portland Cement

    Grout Mixture

    Method of Placement Tremie Pipe

COMMENTS ON INSTALLATION:

DEPARTMENT OF THE NAVY
SOUTHERN DIVISION
NAVAL FACILITIES ENGINEERING COMMAND
2155 EAGLE DR. P. O. BOX 10068
CHARLESTON, S. C. 29411-0068

WELL CONSTRUCTION DETAILS

WELL NUMBER MPT-9-3

DATE OF INSTALLATION 16 Sept. 87

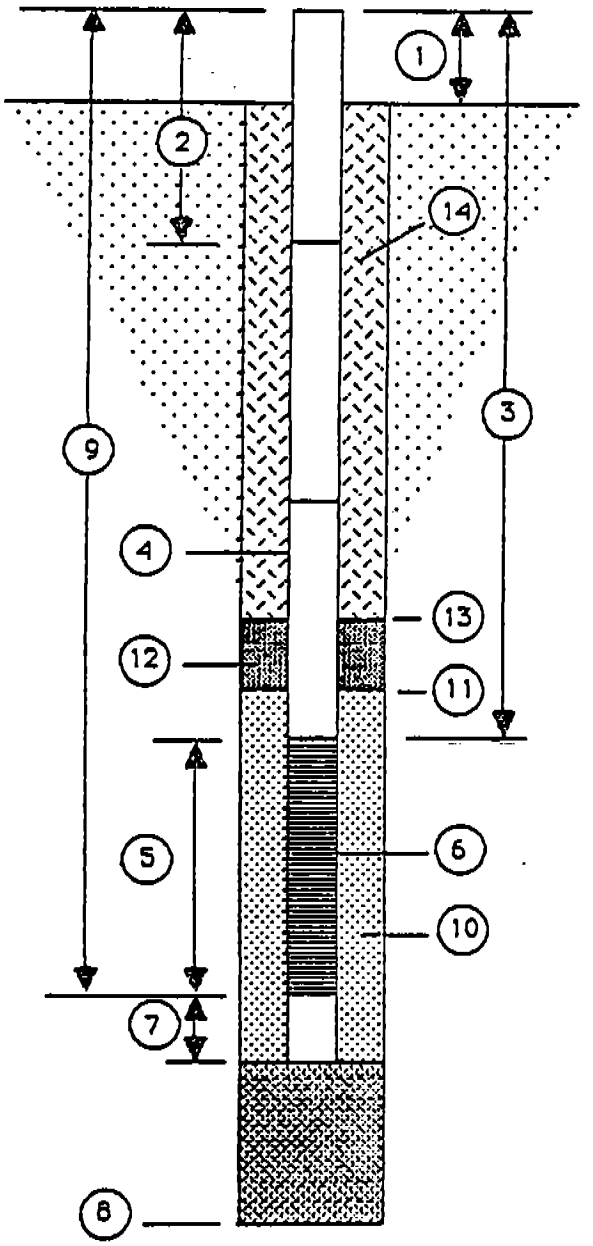

1. Height of Casing above ground 2.5'
2. Depth to first Coupling 7.5'

   Coupling Interval Depths N/A
3. Total Length of Blank Pipe 7.5'
4. Type of Blank Pipe Schedule 40 PVC, 2" ID
5. Length of Screen 10'
6. Type of Screen Schedule 40 PVC, #10 Slot
7. Length of Sump 0.5'
8. Total Depth of Boring 17' Hole Diameter 0.7'
9. Depth To Bottom of Screen 15'
10. Type of Screen Filter Sand

    Quantity Used 250 lbs Size 6/20 U/C
11. Depth To Top of Filter 4'
12. Type of Seal Bentonite Pellets

    Quantity Used 50 lbs
13. Depth To Top of Seal 2'
14. Type of Grout Portland Cement

    Grout Mixture

    Method of Placement Tremie Pipe

COMMENTS ON INSTALLATION:

DEPARTMENT OF THE NAVY
SOUTHERN DIVISION
NAVAL FACILITIES ENGINEERING COMMAND
2155 EAGLE DR., P. O. BOX 10068
CHARLESTON, S. C. 29411-0068

WELL CONSTRUCTION DETAILS

WELL NUMBER MPT-13-1

DATE OF INSTALLATION 18 Sept. 87

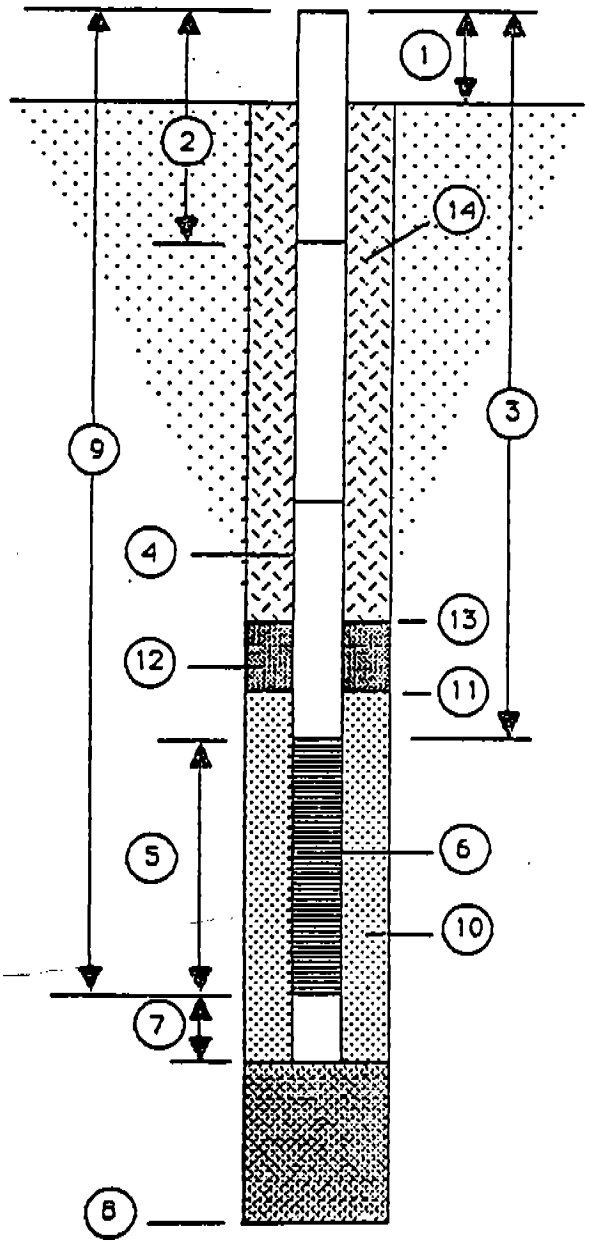

1. Height of Casing above ground 2.8'
2. Depth to first Coupling 6'

   Coupling Interval Depths N/A
3. Total Length of Blank Pipe 6'
4. Type of Blank Pipe Schedule 40 PVC, 2" ID
5. Length of Screen 7'
6. Type of Screen Schedule 40 PVC, #10 Slot
7. Length of Sump 0.5'
8. Total Depth of Boring 12' Hole Diameter 0.7'
9. Depth To Bottom of Screen 10.2'
10. Type of Screen Filter Sand

    Quantity Used 250 lbs Size 6/20 U/C
11. Depth To Top of Filter 3'
12. Type of Seal Bentonite Pellets

    Quantity Used 37 lbs
13. Depth To Top of Seal 2'
14. Type of Grout Portland Cement

    Grout Mixture

    Method of Placement Tremie Pipe

COMMENTS ON INSTALLATION:

DEPARTMENT OF THE NAVY
SOUTHERN DIVISION
NAVAL FACILITIES ENGINEERING COMMAND
2155 EAGLE DR., P. O. BOX 10068
CHARLESTON, S. C. 29411-0068

WELL CONSTRUCTION DETAILS

WELL NUMBER MPT-13-2

DATE OF INSTALLATION 15. Sept. 87

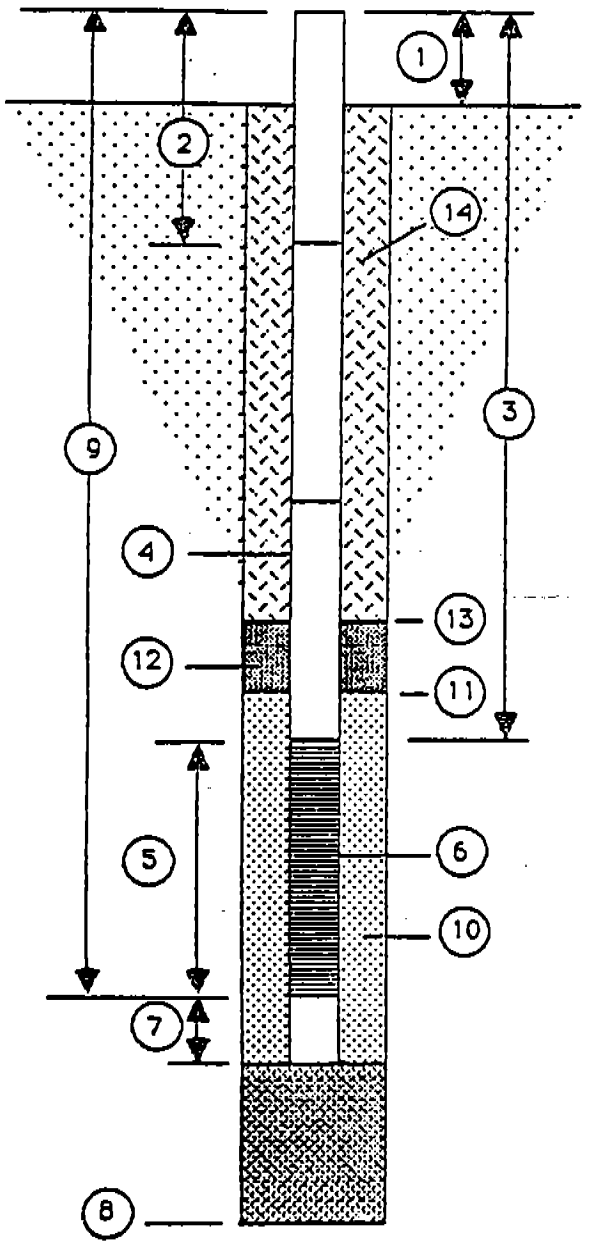

1. Height of Casing above ground 3.5'
2. Depth to first Coupling 6'

   Coupling Interval Depths N/A
3. Total Length of Blank Pipe 6'
4. Type of Blank Pipe Schedule 40 PVC, 2" ID
5. Length of Screen 7'
6. Type of Screen Schedule 40 PVC, #10 Slot
7. Length of Sump 0.5'
8. Total Depth of Boring 12' Hole Diameter 0.7'
9. Depth To Bottom of Screen 9.5'
10. Type of Screen Filter Sand

    Quantity Used 200 lbs Size 6/20 U/C
11. Depth To Top of Filter 2.5'
12. Type of Seal Bentonite Pellets

    Quantity Used 50 lbs
13. Depth To Top of Seal 1.5'
14. Type of Grout Portland Cement

    Grout Mixture

    Method of Placement Tremie Pipe

COMMENTS ON INSTALLATION:

DEPARTMENT OF THE NAVY
SOUTHERN DIVISION
NAVAL FACILITIES ENGINEERING COMMAND
2155 EAGLE DR., P. O. BOX 10068
CHARLESTON, S. C. 29411-0068

WELL CONSTRUCTION DETAILS

WELL NUMBER MPT-13-3

DATE OF INSTALLATION 18 Sept. 87

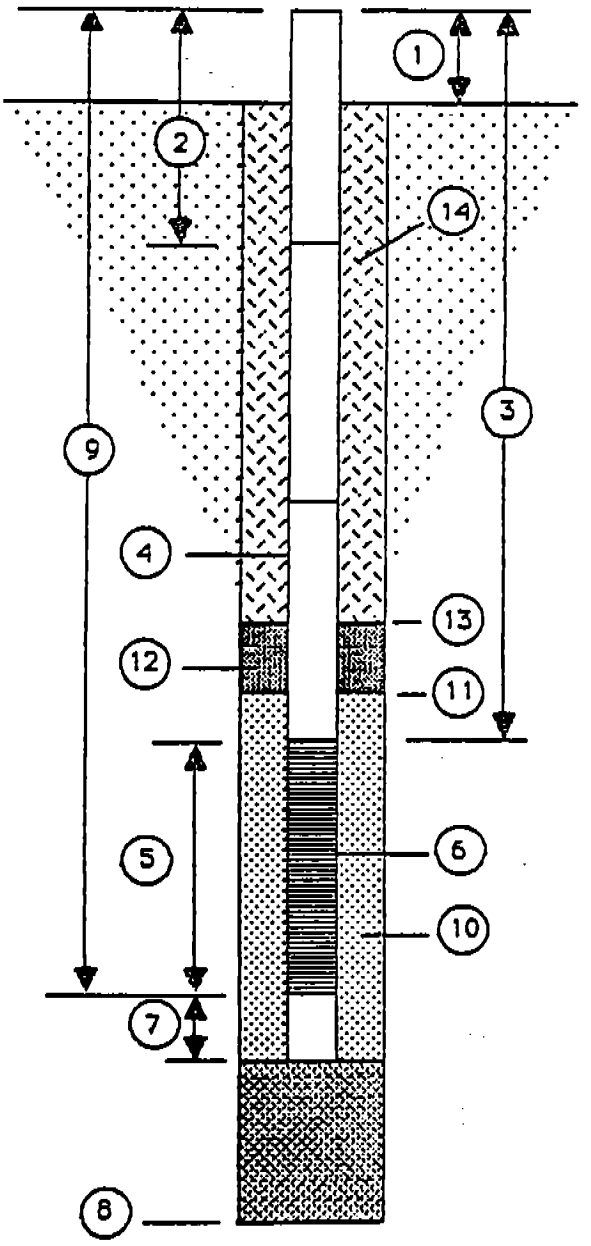

1. Height of Casing above ground 3.0
2. Depth to first Coupling 6'

   Coupling Interval Depths N/A
3. Total Length of Blank Pipe 6'
4. Type of Blank Pipe Schedule 40 PVC, 2" ID
5. Length of Screen 7'
6. Type of Screen Schedule 40 PVC, #10 Slot
7. Length of Sump 0.5'
8. Total Depth of Boring 12' Hole Diameter 0.7'
9. Depth To Bottom of Screen 10'
10. Type of Screen Filter Sand

    Quantity Used 250 lbs Size 6/20 U/C
11. Depth To Top of Filter 3'
12. Type of Seal Bentonite Pellets

    Quantity Used 16 lbs
13. Depth To Top of Seal 2'
14. Type of Grout Portland Cement

    Grout Mixture

    Method of Placement Tremie Pipe

COMMENTS ON INSTALLATION:

DEPARTMENT OF THE NAVY
SOUTHERN DIVISION
NAVAL FACILITIES ENGINEERING COMMAND
2155 EAGLE DR., P. O. BOX 10068
CHARLESTON, S. C. 29411-0068

WELL CONSTRUCTION DETAILS

WELL NUMBER MPT-14-1

DATE OF INSTALLATION 17 Sept. 87

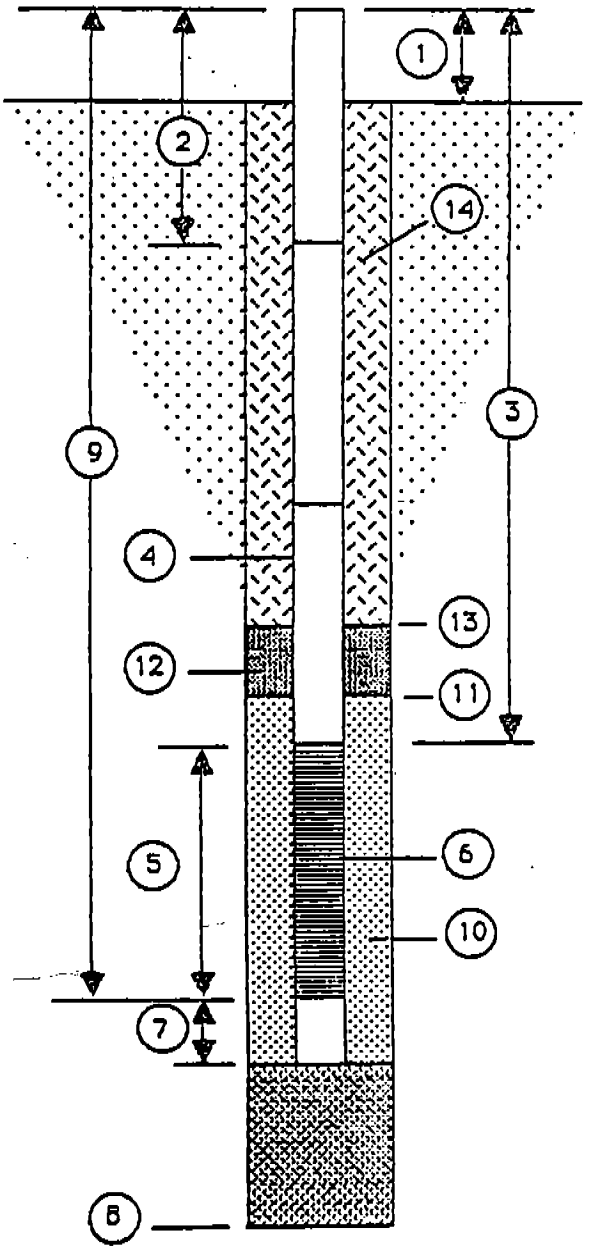

1. Height of Casing above ground 3'
2. Depth to first Coupling 6'

   Coupling Interval Depths N/A
3. Total Length of Blank Pipe 6'
4. Type of Blank Pipe Schedule 40 PVC, 2" ID
5. Length of Screen 10'
6. Type of Screen Schedule 40 PVC, #10 Slot
7. Length of Sump 0.5'
8. Total Depth of Boring 13' Hole Diameter 0.7'
9. Depth To Bottom of Screen 13'
10. Type of Screen Filter Sand

    Quantity Used 200 lbs Size 6/20 U/C
11. Depth To Top of Filter 2.5'
12. Type of Seal Bentonite Pellets

    Quantity Used 16 lbs
13. Depth To Top of Seal 2'
14. Type of Grout Portland Cement

    Grout Mixture

    Method of Placement Tremie Pipe

COMMENTS ON INSTALLATION:

DEPARTMENT OF THE NAVY
SOUTHERN DIVISION
NAVAL FACILITIES ENGINEERING COMMAND
2155 EAGLE DR., P. O. BOX 10068
CHARLESTON, S. C. 29411-0068

WELL CONSTRUCTION DETAILS

WELL NUMBER MPT-14-2

DATE OF INSTALLATION 17 Sept. 87

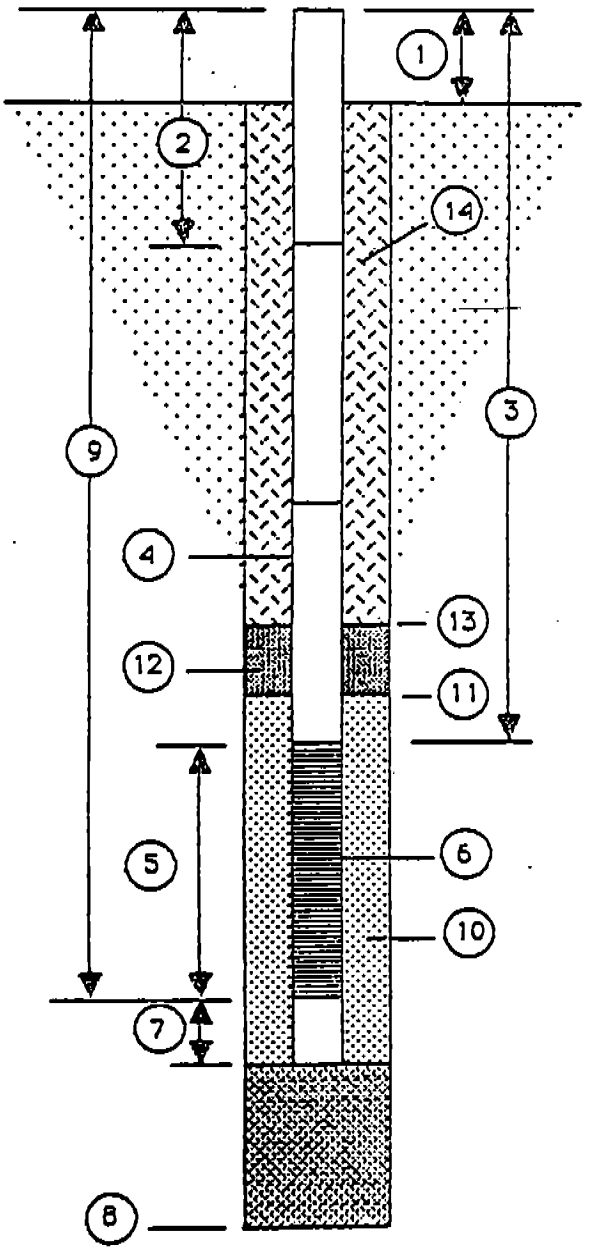

1. Height of Casing above ground 3'
2. Depth to first Coupling 6'

   Coupling Interval Depths N/A

3. Total Length of Blank Pipe 6'
4. Type of Blank Pipe Schedule 40 PVC, 2" ID
5. Length of Screen 10'
6. Type of Screen Schedule 40 PVC, #10 Slot
7. Length of Sump 0.5'
8. Total Depth of Boring 14 Hole Diameter 0.7'
9. Depth To Bottom of Screen 13'
10. Type of Screen Filter Sand

    Quantity Used 300 lbs Size 6/20 U/C

11. Depth To Top of Filter 2.5'
12. Type of Seal Bentonite Pellets

    Quantity Used 50 lbs

13. Depth To Top of Seal 2'
14. Type of Grout Portland Cement

    Grout Mixture

    Method of Placement Tremie Pipe

COMMENTS ON INSTALLATION:

APPENDIX E

EXPANDED SITE INVESTIGATION (ESI) BORING LOGS

TITLE: U.S. Naval Station, Jacksonville, Fl.		**LOG of WELL:** MPT-1-1	**BORING NO.** MPT-1-1
CLIENT: SOUTHERN DIVISION, NAVFACENGCOM			**PROJECT NO:** 5097-04
CONTRACTOR: MONITOR TESTING		**DATE STARTED:** 9/9/87	**COMPLTD:** 9/9/87
METHOD: H.S.A.	**CASE SIZE:** 2"	**SCREEN INT.:** 5-15'	**PROTECTION LEVEL:** D
TOC ELEV.: 17.01 FT.	**MONITOR INST.:** Hnu	**TOT DPTH:** 15FT.	**DPTH TO ∇** 7 FT.
LOGGED BY: R. M. Nugent	**WELL DEVELOPMENT DATE:** 9/9/87		**SITE:** #1.

DEPTH FT.	LABORATORY SAMPLE ID.	SAMPLE	RECOVERY	HEADSPACE (ppm)	SOIL/ROCK DESCRIPTION	LITHOLOGIC SYMBOL	SOIL CLASS	BLOWS/6-IN
		SS1	1.8/2'	3.3	Sand-fine to coarse, brown, moist, some organic matter		SP	3,7,18,18
		SS2	1.8/2'	3.0	Sand-as above, gray with some shell fragments Sand-as above, 2" brown layer at 1.2' of spoon			2,21,28,30
		SS3	1.5/2'	8.5	Sand-fine, dark brown, moist Sand-fine to medium, gray, some shell fragments			8,19,23,29
5	YES	SS4	1/2'	2.8	Sand-as above Clay-stiff, saturated at bottom		CL	10,11,8,9
		SS5		7.2	Sand-light tan to gray, saturated, small shell fragments		SP	7,7,18,18
10								
		SS6	2/2'	3.5	Sand-light gray, saturated with some shell fragments			5,29,50,+
15								
20								
25								
30								

WELL DATA

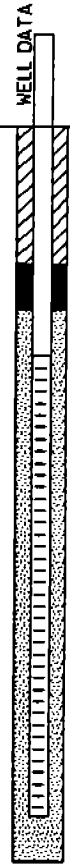

 ABB ENVIRONMENTAL SERVICES, INC.

TITLE: U.S. Naval Station, Jacksonville, Fl.		**LOG of WELL:** MPT-1-2	**BORING NO.** MPT-1-2
CLIENT: SOUTHERN DIVISION, NAVFACENGCOM			**PROJECT NO:** 5097-04
CONTRACTOR: MONITOR TESTING		**DATE STARTED:** 10/9/87	**COMPLTD:** 10/9/87
METHOD: H.S.A.	**CASE SIZE:** 2"	**SCREEN INT.:** 5-15'	**PROTECTION LEVEL:** D
TOC ELEV.: 16.93 FT.	**MONITOR INST.:** Hnu	**TOT DPTH:** 15.0FT.	**DPTH TO ∇** 5.00 FT.
LOGGED BY: R. M. Nugent	**WELL DEVELOPMENT DATE:** 10/10/87		**SITE:** #1.

DEPTH FT.	LABORATORY SAMPLE ID.	SAMPLE	RECOVERY	HEADSPACE (ppm)	SOIL/ROCK DESCRIPTION	LITHOLOGIC SYMBOL	SOIL CLASS	BLOWS/6-IN
		SS1	1.3/2'	10.0	Fill-gravel, dark brown, moist Sand-fine, lt. brown to lt. gray, moist, few shell fragments		SP	22,22,37,31
5	YES	SS2	1.3/2'	4.8	Sand-fine, gray, moist, few shell fragments, trade gravel			24,25,17,22
10		SS3	2.0/2'	13.5	Sand-fine, brown to gray, saturated, few shell fragments, with a 0.4' fine clay layer, dark gray, saturated, high plasticity		CL SP	6,2
15		SS4	2.0/2'	2.8	Sand-fine, light grey, few shells and shell fragments, saturated			12,32,51+
20								
25								
30								

WELL DATA

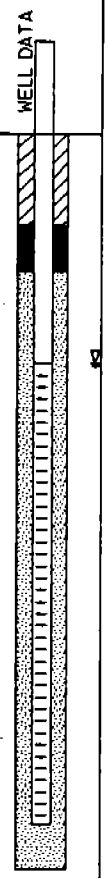

ABB ENVIRONMENTAL SERVICES, INC.

TITLE: U.S. Naval Station, Jacksonville, Fl.		**LOG of WELL:** MPT-1-3	**BORING NO.** MPT-1-3
CLIENT: SOUTHERN DIVISION, NAVFACENGCOM			**PROJECT NO:** 5097-04
CONTRACTOR: MONITOR TESTING		**DATE STARTED:** 10/9/87	**COMPLTD:** 10/9/87
METHOD: H.S.A.	**CASE SIZE:** 2"	**SCREEN INT.:** 5-15'	**PROTECTION LEVEL:** D
TOC ELEV.: 13.82 FT.	**MONITOR INST.:** Hnu	**TOT DPTH:** 15.0FT.	**DPTH TO ∇** 5.00 FT.
LOGGED BY: R. M. Nugent	**WELL DEVELOPMENT DATE:** 10/10/87		**SITE:** #1,

DEPTH FT.	LABORATORY SAMPLE ID.	SAMPLE	RECOVERY	HEADSPACE (ppm)	SOIL/ROCK DESCRIPTION	LITHOLOGIC SYMBOL	SOIL CLASS	BLOWS/6-IN
		SS1	1.5/2'	8.3	Sand-fine, lt. brown to gray, dry to moist, few shells and shell fragments, silt Sand-fine, gray, moist, few shell fragments		SP	7,14,19
5	YES	SS2	1.3/2'	7.0				13,14,6,12
10		SS3	2.0/2'	13.8	Sand-fine, dark gray, saturated, few shell fragments, with a 0.171' clay lens			5,24,50+
15		SS4	1.5/2'	3.1	Sand-fine, tanish, grey to lt. gray with a few shell fragments, (diminish with depth)			24,38,50+
20								
25								
30								

WELL DATA

 ABB ENVIRONMENTAL SERVICES, INC.

TITLE: U.S. Naval Station, Jacksonville, Fl.		**LOG of WELL:** MPT-2-1	**BORING NO.** MPT-2-1
CLIENT: SOUTHERN DIVISION, NAVFACENGCOM			**PROJECT NO:** 5097
CONTRACTOR: MONITOR TESTING		**DATE STARTED:** 9/22/87	**COMPLTD:** 9/22/87
METHOD: H.S.A.	**CASE SIZE:** 2"	**SCREEN INT.:** 3-10'	**PROTECTION LEVEL:** D
TOC ELEV.: 8.43 FT.	**MONITOR INST.:** Hnu	**TOT DPTH:** 10.0FT.	**DPTH TO ∇** 4.00 FT.
LOGGED BY: R. M. Nugent	**WELL DEVELOPMENT DATE:** 9/22/87		**SITE:** #2

DEPTH FT.	LABORATORY SAMPLE ID.	SAMPLE	RECOVERY	HEADSPACE (ppm)	SOIL/ROCK DESCRIPTION	LITHOLOGIC SYMBOL	SOIL CLASS	BLOWS/6-IN
		SS1	1.5/2'	93.1	Sand-fine to medium sand, dark brown, dry Sand-fine, tan, dry, trade shell		SP	13,14,18,26
	YES	SS2	1.8/2'	35.7	Sand-fine, tan, dry Sand-fine, tan, moist, few shell fragments, bottom saturated			7,13,13,14
5		SS3	0.7/2'	10.4	Sand-fine to medium, gray, few shell fragments, saturated			16,12,5,4
10		SS4	2.0/2'	0				11,10,1,2
15								
20								
25								
30								

WELL DATA

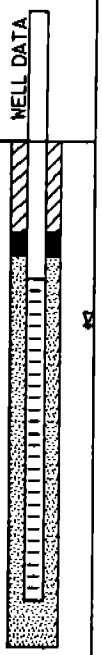

 ABB ENVIRONMENTAL SERVICES, INC.

TITLE: U.S. Naval Station, Jacksonville, Fl.	**LOG of WELL:** MPT-2-2		**BORING NO.** MPT-2-2
CLIENT: SOUTHERN DIVISION, NAVFACENGCOM			**PROJECT NO:** 5097
CONTRACTOR: MONITOR TESTING		**DATE STARTED:** 9/22/87	**COMPLTD:** 9/22/87
METHOD: H.S.A.	**CASE SIZE:** 2"	**SCREEN INT.:** 3-10'	**PROTECTION LEVEL:** D
TOC ELEV.: 5.58 FT.	**MONITOR INST.:** Hnu	**TOT DPTH:** 10.0FT.	**DPTH TO ∇** 4.00 FT.
LOGGED BY: R. M. Nugent	**WELL DEVELOPMENT DATE:** 9/22/87		**SITE:** #2.

DEPTH FT.	LABORATORY SAMPLE ID.	SAMPLE	RECOVERY	HEADSPACE (ppm)	SOIL/ROCK DESCRIPTION	LITHOLOGIC SYMBOL	SOIL CLASS	BLOWS/6-IN
		SS1	1.8/2'	0	Sand - Top (0.2') fine, dark brown, dry / Middle (0.7') fine, tan, moist / Bottom clayey, dark brown to black, moist, trade shell, stiff		SP / SC / SP	4,13,14,14
	YES	SS2	1.5/2'	0	Sand- Top (0.5') as above / Middle (0.5') fine to medium, gray moist / Bottom as above, saturated			13,17,29,30
5		SS3	1.9/2'	0	Sand-fine to medium, dry, silt, few shell fragments with a clay lens (0.5')			11,8,2,1
10		SS4	0.5/2'	0	Clay - dry, olive		CL	5
15								
20								
25								
30								

WELL DATA

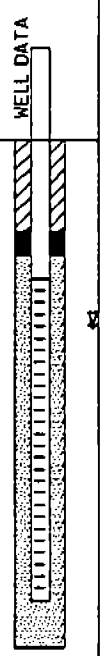

 ABB ENVIRONMENTAL SERVICES, INC.

TITLE: U.S. Naval Station, Jacksonville, Fl.	**LOG of WELL:** MPT-2-3	**BORING NO.** MPT-2-3
CLIENT: SOUTHERN DIVISION, NAVFACENGCOM		**PROJECT NO:** 5097
CONTRACTOR: MONITOR TESTING	**DATE STARTED:** 9/11/87	**COMPLTD:** 9/14/87
METHOD: H.S.A.	**CASE SIZE:** 2" / **SCREEN INT.:** 5-15'	**PROTECTION LEVEL:** D
TOC ELEV.: 17.34 FT.	**MONITOR INST.:** Hnu / **TOT DPTH:** 15.0FT.	**DPTH TO ∇** 7.00 FT.
LOGGED BY: R. M. Nugent	**WELL DEVELOPMENT DATE:** 9/11/87	**SITE:** #2.

DEPTH FT.	LABORATORY SAMPLE ID.	SAMPLE	RECOVERY	HEADSPACE (ppm)	SOIL/ROCK DESCRIPTION	LITHOLOGIC SYMBOL	SOIL CLASS	BLOWS/6-IN
		SS1	1.4/2'	0	Sand-Top (0.4') / fine to medium, top soil, dark brown, dry, trade shell, Bottom / fine, brown, few shell fragments decreaseing with depth		SP	6,15,6,9
		SS2	1.7/2'	34.4	Sand-fine, tan, dry, incesing moisture with depth			24,35,30,13
5		SS3	1.5/2'	6.7	Sand-fine to medium, gray, moist, few shell fragments, trade coarse sand concretion			23,38,29,35
	YES	SS4	1.4/2'	0				7,9,8,9
10		SS5	2.0/2'	17	Sand-fine, gray, saturated, few shell fragments, trade gravel size sand concretions			5,14,28,55
					Clay-		CL	
15		SS6	2.0/2'	7	Sand-fine, grey, saturated, few shell fragments		SP	7,50
20								
25								
30								

WELL DATA

 ABB ENVIRONMENTAL SERVICES, INC.

TITLE: U.S. Naval Station, Jacksonville, Fl.		LOG of WELL: MPT-2-4	BORING NO. MPT-2-4
CLIENT: SOUTHERN DIVISION, NAVFACENGCOM			PROJECT NO: 5097-04
CONTRACTOR: MONITOR TESTING		DATE STARTED: 9/11/87	COMPLTD: 9/11/87
METHOD: H.S.A.	CASE SIZE: 2"	SCREEN INT.: 3-13'	PROTECTION LEVEL: D
TOC ELEV.: 11.33 FT.	MONITOR INST.: Hnu	TOT DPTH: 15.0FT.	DPTH TO ∇ 5.10 FT.
LOGGED BY: M. C. Diblin	WELL DEVELOPMENT DATE: 9/11/87		SITE: #2.

DEPTH FT.	LABORATORY SAMPLE ID.	SAMPLE	RECOVERY	HEADSPACE (ppm)	SOIL/ROCK DESCRIPTION	LITHOLOGIC SYMBOL	SOIL CLASS	BLOWS/6-IN
		SS1	1.5/2'		Sand-fine to medium with top soil, vegitation, gravel, small shell fragments with a layer (0.5') of clayey sand, orange, moist at 1' depth		SP SC SP	4,12,17,20
5	YES	SS2	1.3/2'		Sand-fine, light grey, small shell fragments, saturated			8,11,5,10
10		SS3	2.0/2'		Clay-uniform, olive, decomposed organics		CL	4,5,8,10
15		SS4	1.5/2'		Clay-same as above Sand- top (0.4') very fine, greenish grey, bottom interbedded with sand and clay		SP SC	3,8,11,18
20								
25								
30								

WELL DATA

 ABB ENVIRONMENTAL SERVICES, INC.

TITLE: U.S. Naval Station, Jacksonville, Fl.		**LOG of WELL:** MPT-2-5	**BORING NO.** MPT-2-5
CLIENT: SOUTHERN DIVISION, NAVFACENGCOM			**PROJECT NO:** 5097-04
CONTRACTOR: MONITOR TESTING		**DATE STARTED:** 9/23/87	**COMPLTD:** 9/23/87
METHOD: H.S.A.	**CASE SIZE:** 2"	**SCREEN INT.:** 3-10'	**PROTECTION LEVEL:** D
TOC ELEV.: 9.81 FT.	**MONITOR INST.:** Hnu	**TOT DPTH:** 10.0FT.	**DPTH TO ▽** 3.0 FT.
LOGGED BY: M. C. Diblin	**WELL DEVELOPMENT DATE:** 9/23/87		**SITE:** #2

DEPTH FT.	LABORATORY SAMPLE ID.	SAMPLE	RECOVERY	HEADSPACE (ppm)	SOIL/ROCK DESCRIPTION	LITHOLOGIC SYMBOL	SOIL CLASS	BLOWS/6-IN
	YES	SS1	1.6/2'		Sand-top (0.5') fine to medium sand, top soil, dark brown, dry/ bottom (1.1') light to dark grey, trace coarse sand and shell fragments, dry to moist		SP	17,23,30,S
5		SS2	1.4/2'	38.2	Sand-fine to coarse, light grey, few shell fragments, saturated			1,7,10,9
10		SS3	0.7/1'		Clay-dark, olive, saturated		CL SP	11,13
15								
20								
25								
30								

WELL DATA

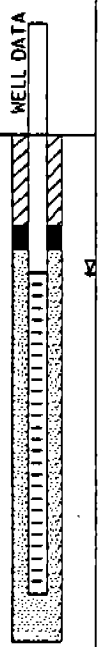

 ABB ENVIRONMENTAL SERVICES, INC.

TITLE: U.S. Naval Station, Jacksonville, Fl.		**LOG of WELL:** MPT-2-6	**BORING NO.** MPT-2-6
CLIENT: SOUTHERN DIVISION, NAVFACENGCOM			**PROJECT NO:** 5097-04
CONTRACTOR: MONITOR TESTING		**DATE STARTED:** 9/22/87	**COMPLTD:** 9/22/87
METHOD: H.S.A.	**CASE SIZE:** 2"	**SCREEN INT.:** 3-10'	**PROTECTION LEVEL:** D
TOC ELEV.: 11.25 FT.	**MONITOR INST.:** Hnu	**TOT DPTH:** 10.0FT.	**DPTH TO ▽** 4.0 FT.
LOGGED BY: R. M. Nugent	**WELL DEVELOPMENT DATE:** 9/22/87		**SITE:** #2

DEPTH FT.	LABORATORY SAMPLE ID.	SAMPLE	RECOVERY	HEADSPACE (ppm)	SOIL/ROCK DESCRIPTION	LITHOLOGIC SYMBOL	SOIL CLASS	BLOWS/6-IN
	YES	SS1	1.8/2'	0	Sand-top (0.4') fine, top soil, dark brown, dry/ middle (0.4') fine to medium, light tan, dry, few shell fragments/ bottom same as above, trade gravel, moist with a clay layer (0.4') interbedded with some sand, some shell		SP	14,31,35,41
							CL	
		SS2	1.5/2'	0			SP	19,27,26,28
5		SS3	1.5/2'	0	Sand-fine to medium, gray, saturated, few shell fragments			2,5,7,12
10		SS4	1.8/2'	0	Clay-dark olive, organic		CL	4,5,5,10
15								
20								
25								
30								

WELL DATA

 ABB ENVIRONMENTAL SERVICES, INC.

TITLE: U.S. Naval Station, Jacksonville, Fl.	**LOG of WELL:** MPT-2-7s		**BORING NO.** MPT-2-7s
CLIENT: SOUTHERN DIVISION, NAVFACENGCOM			**PROJECT NO:** 5097-04
CONTRACTOR: MONITOR TESTING		**DATE STARTED:** 9/15/87	**COMPLTD:** 9/15/87
METHOD: H.S.A.	**CASE SIZE:** 2"	**SCREEN INT.:** 3.5-10.5	**PROTECTION LEVEL:** D
TOC ELEV.: 10.58 FT.	**MONITOR INST.:** Hnu	**TOT DPTH:** 12.0FT.	**DPTH TO ∇** 4.75 FT.
LOGGED BY: M. C. Diblin	**WELL DEVELOPMENT DATE:** 9/15/87		**SITE:** #2

DEPTH FT.	LABORATORY SAMPLE ID.	SAMPLE	RECOVERY	HEADSPACE (ppm)	SOIL/ROCK DESCRIPTION	LITHOLOGIC SYMBOL	SOIL CLASS	BLOWS/6-IN
		SS1	1.3/2'	2.8	Top soil (0.2') clayey with vegitation		SP	9,20,36,27
					Clayey Sand- middle (0.2-0.4') dark brown, stiff, shell fragments and sand, dry		CL	
	YES	SS2	1.3/2'	5.2	Sand-fine to medium, light tan with few shell fragments, dry		SP	13,13,9,11
		SS3	1.0/2'	8.2	Sand-same as above		SC	11,27,3,1
5					Sand-same as above, dry to moist with a layer (0.3') clay interstetial with sand, few gravel/pebble concretions		SP	
10		SS4	1.4/2'	4.8	Sand-fine to medium, light gray, saturated, few shell fragments			5,2,2,5
					Clay-dark olive, gravelly, organic, moist		CL	
15								
20								
25								
30								

WELL DATA

 ABB ENVIRONMENTAL SERVICES, INC.

TITLE: U.S. Naval Station, Jacksonville, Fl.		**LOG of WELL:** MPT-2-7d	**BORING NO.** MPT-2-7d
CLIENT: SOUTHERN DIVISION, NAVFACENGCOM			**PROJECT NO:** 5097-04
CONTRACTOR: MONITOR TESTING		**DATE STARTED:** 9/23/87	**COMPLTD:** 9/23/87
METHOD: H.S.A.	**CASE SIZE:** 2"	**SCREEN INT.:** 15-25'	**PROTECTION LEVEL:** D
TOC ELEV.: 10.08 FT.	**MONITOR INST.:** Hnu	**TOT DPTH:** 25.0FT.	**DPTH TO ∇** 7.0 FT.
LOGGED BY: M. C. Diblin	**WELL DEVELOPMENT DATE:** 9/23/87		**SITE:** #2

DEPTH FT.	LABORATORY SAMPLE ID.	SAMPLE	RECOVERY	HEADSPACE (ppm)	SOIL/ROCK DESCRIPTION	LITHOLOGIC SYMBOL	SOIL CLASS	BLOWS/6-IN
					Clay-dark brown, saturated		CL	
5								
10		SS1	1.4/2'	0	Sand-fine to coarse, grey, some shell fragments, saturated		SP	20,31,19,18
		SS2	0.9/2'	0.3	Claayey Sand-dark brown, saturated, trace shell fragments		SC	3,4,12,17
					Clay-dark olive, saturated		CL	
15		SS3	1.2'	0	Sand-fine to medium, brown, saturated, few shell fragments, bottom grey to green, no shells		SP	-
		SS4		25				20,21,21,19
20								
25		SS5	2.0/2'	0	Clay-grey to green, plastic, stickey		CL	-
					Sandy Clay-grey to green, grading back to clay			
30								

WELL DATA

 ABB ENVIRONMENTAL SERVICES, INC.

TITLE: U.S. Naval Station, Jacksonville, Fl.	**LOG of WELL:** MPT-2-8		**BORING NO.** MPT-2-8
CLIENT: SOUTHERN DIVISION, NAVFACENGCOM			**PROJECT NO:** 5097-04
CONTRACTOR: MONITOR TESTING		**DATE STARTED:** 9/23/87	**COMPLTD:** 9/23/87
METHOD: H.S.A.	**CASE SIZE:** 2"	**SCREEN INT.:** 3-10'	**PROTECTION LEVEL:** D
TOC ELEV.: 10.5 FT.	**MONITOR INST.:** Hnu	**TOT DPTH:** 10.0FT.	**DPTH TO ∇** 3.0 FT.
LOGGED BY: M. C. Diblin	**WELL DEVELOPMENT DATE:** 9/23/87		**SITE:** #2

DEPTH FT.	LABORATORY SAMPLE ID.	SAMPLE	RECOVERY	HEADSPACE (ppm)	SOIL/ROCK DESCRIPTION	LITHOLOGIC SYMBOL	SOIL CLASS	BLOWS/6-IN
	YES	SS1	1.2/2'	8.6	Sand-top (0.4')/ top soil, fine, brown, dry, middle (0.4-1')/ fine to medium, tan, bottom/ black, similar to burnn asphalt, dry		SP	13,12,11,14
		SS2	0.2/2'		No sample in spoon-Augured mat black gravel with fine to coarse sand			18,17,19,25
5		SS3	0.8/2'	6.0	Sand-fine to coarse, dark grey, few shells, trac clay, saturated bottom/ as above, light gray, few shell fragments, saturated			13,19,17,21
10		SS4	2/2'	0	Clay-dark olive clay, saturated		CL	2,3,2,1
15								
20								
25								
30								

WELL DATA

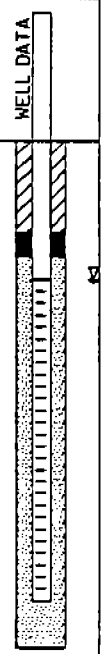

 ABB ENVIRONMENTAL SERVICES, INC.

TITLE: U.S. Naval Station, Jacksonville, Fl.	**LOG of WELL:** MPT-2-9s		**BORING NO.** MPT-2-9s
CLIENT: SOUTHERN DIVISION, NAVFACENGCOM			**PROJECT NO:** 5097-04
CONTRACTOR: MONITOR TESTING		**DATE STARTED:** 9/22/87	**COMPLTD:** 9/22/87
METHOD: H.S.A.	**CASE SIZE:** 2"	**SCREEN INT.:** 15-25'	**PROTECTION LEVEL:** D
TOC ELEV.: 10.53 FT.	**MONITOR INST.:** Hnu	**TOT DPTH:** 10.0FT.	**DPTH TO ∇** 3.0 FT.
LOGGED BY: R. M. Neugent	**WELL DEVELOPMENT DATE:** 9/22/87		**SITE:** #2

DEPTH FT.	LABORATORY SAMPLE ID.	SAMPLE	RECOVERY	HEADSPACE (ppm)	SOIL/ROCK DESCRIPTION	LITHOLOGIC SYMBOL	SOIL CLASS	BLOWS/6-IN
					Sand-fine to medium, dark to light brown, dry, few shell fragments		SP	
5								
10					Clay-dark olive, saturated		CL	
					Sand-fine, light brown, saturated, bottom gray with few shell fragments		SP	
15								
20								
25								
30								

WELL DATA

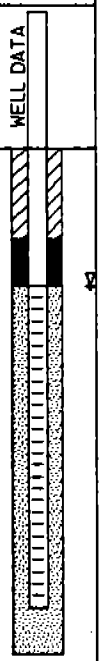

 ABB ENVIRONMENTAL SERVICES, INC.

TITLE: U.S. Naval Station, Jacksonville, Fl.		**LOG of WELL:** MPT-2-9d	**BORING NO.** MPT-2-9d
CLIENT: SOUTHERN DIVISION, NAVFACENGCOM			**PROJECT NO:** 5097-04
CONTRACTOR: MONITOR TESTING		**DATE STARTED:** 9/22/87	**COMPLTD:** 9/22/87
METHOD: H.S.A.	**CASE SIZE:** 2"	**SCREEN INT.:** 15-25'	**PROTECTION LEVEL:** D
TOC ELEV.: 10.58 FT.	**MONITOR INST.:** Hnu	**TOT DPTH:** 25.0FT.	**DPTH TO ∇** 7.0 FT.
LOGGED BY: M. C. Diblin	**WELL DEVELOPMENT DATE:** 9/23/87		**SITE:** #2

DEPTH FT.	LABORATORY SAMPLE ID.	SAMPLE	RECOVERY	HEADSPACE (ppm)	SOIL/ROCK DESCRIPTION	LITHOLOGIC SYMBOL	SOIL CLASS	BLOWS/6-IN
	YES	SS1	1.6/2'	3.5	Sand-fine to medium, dark to light brown, dry, few shell fragments		SP	8,9,27,30
			1.65/2'					
5		SS2	1.6/2'	78.3				19,28,30,21
			2.0/2'					
		SS3	2/2'	2.3				2,2,3,4
10		SS4	1.5/2'	13.0	Clay-dark olive, saturated		CL	8,8,37,22
		SS5	1.3/2'	6.7	Sand-fine, light brown, saturated, bottom gray with few shell fragments		SP	?
15		SS6	2.0/2	0.6				9,15,31,?
20		SS7	1.3/2'	11.2				?
25		SS8	–	14.5				?
30								

WELL DATA

 ABB ENVIRONMENTAL SERVICES, INC.

TITLE: U.S. Naval Station, Jacksonville, Fl.		**LOG of WELL:** MPT-2-15s	**BORING NO.** MPT-2-15s
CLIENT: SOUTHERN DIVISION, NAVFACENGCOM			**PROJECT NO:** 5097-04
CONTRACTOR: MONITOR TESTING		**DATE STARTED:** 9/14/87	**COMPLTD:** 9/14/87
METHOD: H.S.A.	**CASE SIZE:** 2"	**SCREEN INT.:** 5-15'	**PROTECTION LEVEL:** D
TOC ELEV.: 10.82 FT.	**MONITOR INST.:** Hnu	**TOT DPTH:** 15.0FT.	**DPTH TO ▽** 4.0 FT.
LOGGED BY: M. C. Diblin	**WELL DEVELOPMENT DATE:** 9/14/87		**SITE:** #2

DEPTH FT.	LABORATORY SAMPLE ID.	SAMPLE	RECOVERY	HEADSPACE (ppm)	SOIL/ROCK DESCRIPTION	LITHOLOGIC SYMBOL	SOIL CLASS	BLOWS/6-IN
		SS1	1.1/2'	2.7	Clayey Sand-with vegitation		SP	11,17,20,28
	YES	SS2	1.65/2'	0	Sand- top (0.4-0.8')/ fine, uniform, tan, shell fragments, middle (0.8-0.7')/ dark brownn clay with some sand bottom/ fine to medium, motteled greyish brown, poorly sorted			9,10,16,20
5					Sand- top (0.4')/ fine to medium, light gray to tan, dry middle (0.4-1.0)/ medium to coarse, dark to light gray bottom (1.0-1.65)/ light grey to tan, with a layer of plastic clay interbedded with sand, Fe Oxide bands			
			2.0/2'					
10		SS3		4.1	Sandy clay-fine to medium, dark brown, dry		SC	1,2,2,2
					Clay-light gray, moist, bottom/ dark green to olive with organic material, plastic, moist		CL	
15		SS5	2.0/2'	4.3	Clay-green/brown to olive, organic matter, moist			4,9,20,13
					Clayey Sand-very fine, light grey, moist		SP	
20								
25								
30								

WELL DATA

 ABB ENVIRONMENTAL SERVICES, INC.

TITLE: U.S. Naval Station, Jacksonville, Fl.	LOG of WELL: MPT-2-15d	BORING NO. MPT-2-15d
CLIENT: SOUTHERN DIVISION, NAVFACENGCOM		PROJECT NO: 5097-04
CONTRACTOR: MONITOR TESTING	DATE STARTED: 9/23/87	COMPLTD: 9/23/87
METHOD: H.S.A.	CASE SIZE: 2" / SCREEN INT.: 15-25'	PROTECTION LEVEL: D
TOC ELEV.: 9.25 FT.	MONITOR INST.: Hnu / TOT DPTH: 25.0FT.	DPTH TO ∇ 7.4 FT.
LOGGED BY: M. C. Diblin	WELL DEVELOPMENT DATE: 9/23/87	SITE: #2

DEPTH FT.	LABORATORY SAMPLE ID.	SAMPLE	RECOVERY	HEADSPACE (ppm)	SOIL/ROCK DESCRIPTION	LITHOLOGIC SYMBOL	SOIL CLASS	BLOWS/6-IN
					Clay-dark olive, saturated, some organic matter		CL	
5								
10		SS1	2.0/2'	0				1,1,3,3
	YES	SS2	2.0/2'	0				10,3,7,4
					Clayey Sand-dark grey Clayey Sand-with vegitation		SC	
15		SS3	0.8/2'	8.6	Sand- top (0.4-0.6')/ fine, uniform, tan, shell fragments, middle (0.6-0.7')/ dark brownn clay with some sand bottom/ fine to medium, motteled greyish brown, poorly sorted		SP	6,8,13,15
					Sand- top (0.4')/ fine to medium, light gray to tan, dry middle (0.4-1.0)/ medium to coarse, dark to light gray bottom (1.0-1.85)/ light grey to tan, with a layer of plastic clay interbedded with sand, Fe Oxide bands			
20					Sandy clay-fine to medium, dark brown, dry			
					Clay-light gray, moist, bottom/ dark green to olive with organic material, plastic, moist			
					Clay-green/brown to olive, organic matter, moist			
					Clayey Sand-very fine, light grey, moist			
25		SS4	2.0/2'	2.6				6,9,6,4
30								

WELL DATA

 ABB ENVIRONMENTAL SERVICES, INC.

TITLE: U.S. Naval Station, Jacksonville, Fl.	**LOG of WELL:** MPT-2-10		**BORING NO.** MPT-2-10
CLIENT: SOUTHERN DIVISION, NAVFACENGCOM			**PROJECT NO:** 5097-04
CONTRACTOR: MONITOR TESTING		**DATE STARTED:** 9/10/87	**COMPLTD:** 9/10/87
METHOD: H.S.A.	**CASE SIZE:** 2"	**SCREEN INT.:** 5-10'	**PROTECTION LEVEL:** D
TOC ELEV.: 10.3 FT.	**MONITOR INST.:** Hnu	**TOT DPTH:** 15.0FT.	**DPTH TO ∇** 5.8 FT.
LOGGED BY: M. C. Diblin	**WELL DEVELOPMENT DATE:** 9/17/87		**SITE:** #2

DEPTH FT.	LABORATORY SAMPLE ID.	SAMPLE	RECOVERY	HEADSPACE (ppm)	SOIL/ROCK DESCRIPTION	LITHOLOGIC SYMBOL	SOIL CLASS	BLOWS/6-IN
		SS1	1.5/2'	7.1	Sand-fine to medium, light gray, shell fragments, well sorted with a top sandy clay layer, slightly moist		SP	40,34,40,34
5	YES	SS2	-	15.3	Sand-fine to medium, shells and fragments, very moist			9,21,16,13
			-					
10		SS3		5.1	Silty Clay-dark olive to black, decomposed organic matter, very moist		OL	5,4,4,7
15		SS4	-	5.3	Sand-fine, light tan, organic matter, saturated		SP	8,9,11,17
20								
25								
30								

WELL DATA

 ABB ENVIRONMENTAL SERVICES, INC.

TITLE: U.S. Naval Station, Jacksonville, Fl.		**LOG of WELL:** MPT-8-1	**BORING NO.** MPT-8-1
CLIENT: SOUTHERN DIVISION, NAVFACENGCOM			**PROJECT NO:** 5097-04
CONTRACTOR: MONITOR TESTING		**DATE STARTED:** 9/17/87	**COMPLTD:** 9/17/87
METHOD: H.S.A.	**CASE SIZE:** 2"	**SCREEN INT.:** 5-16.5'	**PROTECTION LEVEL:** D
TOC ELEV.: 15.74 FT.	**MONITOR INST.:** Hnu	**TOT DPTH:** 17.0FT.	**DPTH TO ∇** 9.0 FT.
LOGGED BY: M. C. Diblin	**WELL DEVELOPMENT DATE:** 9/17/87		**SITE:** #8

DEPTH FT.	LABORATORY SAMPLE ID.	SAMPLE	RECOVERY	HEADSPACE (ppm)	SOIL/ROCK DESCRIPTION	LITHOLOGIC SYMBOL	SOIL CLASS	BLOWS/6-IN
		SS1	1.8/2'	0.8	Sand-uniform, light tan, dry with dark brown to black top soil		SP	5,5,24,38
5		SS2	1.6/2'	188	Sand- top/ fine, dark brown, organic sandy soil, middle/ light brown bottom/ fine to medium, light grey			16,17,33,41
	YES	SS3	1.1/2'		Sand-fine to medium, few shell fragments			6,9,6,2
10		SS4	2.0/2'	140	Sand-top/ fine to medium, dark gray with black silty sand layers bottom/ light grey, with clay lens			1,3,1,2
15		SS5	1.7/2'	52.3	Sand-fine, uniform, with small clay, a clay, a layer (0.15') uniform, plastic, grey , some shell fragments at the bottom			7,16,17,8
20								
25								
30								

WELL DATA

 ABB ENVIRONMENTAL SERVICES, INC.

TITLE: U.S. Naval Station, Jacksonville, Fl.		**LOG of WELL:** MPT-8-2	**BORING NO.** MPT-8-2
CLIENT: SOUTHERN DIVISION, NAVFACENGCOM			**PROJECT NO:** 5097-04
CONTRACTOR: MONITOR TESTING		**DATE STARTED:** 9/17/87	**COMPLTD:** 9/17/87
METHOD: H.S.A.	**CASE SIZE:** 2"	**SCREEN INT.:** 5-17'	**PROTECTION LEVEL:** D
TOC ELEV.: 14.00 FT.	**MONITOR INST.:** Hnu	**TOT DPTH:** 15.0FT.	**DPTH TO ▽** 9.50 FT.
LOGGED BY: M. C. Diblin	**WELL DEVELOPMENT DATE:** 9/17/87		**SITE:** #8

DEPTH FT.	LABORATORY SAMPLE ID.	SAMPLE	RECOVERY	HEADSPACE (ppm)	SOIL/ROCK DESCRIPTION	LITHOLOGIC SYMBOL	SOIL CLASS	BLOWS/6-IN
		SS1	2.0/2'		Sand-fine to medium, tan, few shell fragments, dry, bottom/ tan to grey, many shells		SP	13,20,22,36
5		SS2	1.7/2'		Sand-same as above, dark brown on the top, light grey at the bottom			17,21,30,58
	YES	SS3	1.1/2'		Sand-same as above			12,13,20,22
10		SS4	1.1/2'		Sand-fine to medium, grey, shells and fragments, grading to fine sand			6,9,13,19
15		SS5	2.0/2'		Sand-same as abov, light grey, with many shells			4,7,9,13
20								
25								
30								

WELL DATA

 ABB ENVIRONMENTAL SERVICES, INC.

TITLE: U.S. Naval Station, Jacksonville, Fl.		**LOG of WELL:** MPT-8-3	**BORING NO.** MPT-8-3
CLIENT: SOUTHERN DIVISION, NAVFACENGCOM			**PROJECT NO:** 5097-04
CONTRACTOR: MONITOR TESTING		**DATE STARTED:** 9/18/87	**COMPLTD:** 9/18/87
METHOD: H.S.A.	**CASE SIZE:** 2"	**SCREEN INT.:** 5-15'	**PROTECTION LEVEL:** D
TOC ELEV.: 14.10 FT.	**MONITOR INST.:** Hnu	**TOT DPTH:** 15.0FT.	**DPTH TO ∇** 9.50 FT.
LOGGED BY: M. C. Diblin	**WELL DEVELOPMENT DATE:** 9/11/87		**SITE:** #8

DEPTH FT.	LABORATORY SAMPLE ID.	SAMPLE	RECOVERY	HEADSPACE (ppm)	SOIL/ROCK DESCRIPTION	LITHOLOGIC SYMBOL	SOIL CLASS	BLOWS/6-IN
		SS1	1.4/2'		Sand-fine to medium, light tan, shell fragments, dry		SP	7,13,20,29
5		SS2	1.1/2'		Sand-same as above, interbedded with dark brown shells			13,14,16,7
	YES	SS3	1.8/2'		Sand-same as above, some dark brown Sand-top (0.5')/ fine, tan, shells, middle (0.5-0.55')/ blue shells bottom/ fine to medium, graded to light grey, shells			10,10,12,8
10		SS4	1.4/2'		Sand-fine to medium, grey, shells and fragments, grading to fine sand			17,17,15,7
15		SS5	2.0/2'		Sand-same as abov, many shells and fragments			17,21,21,37
20								
25								
30								

WELL DATA

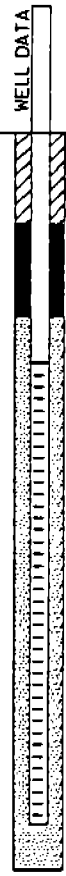

 ABB ENVIRONMENTAL SERVICES, INC.

TITLE: U.S. Naval Station, Jacksonville, Fl.	**LOG of WELL:** MPT-9-1		**BORING NO.** MPT-9-1
CLIENT: SOUTHERN DIVISION, NAVFACENGCOM			**PROJECT NO:** 5097-04
CONTRACTOR: MONITOR TESTING		**DATE STARTED:** 9/15/87	**COMPLTD:** 9/15/87
METHOD: H.S.A.	**CASE SIZE:** 2"	**SCREEN INT.:** 8-18'	**PROTECTION LEVEL:** D
TOC ELEV.: 14.39 FT.	**MONITOR INST.:** Hnu	**TOT DPTH:** 20.0FT.	**DPTH TO ∇** 11.00 FT.
LOGGED BY: M. c. Diblin	**WELL DEVELOPMENT DATE:** 9/11/87		**SITE:** #9

DEPTH FT.	LABORATORY SAMPLE ID.	SAMPLE	RECOVERY	HEADSPACE (ppm)	SOIL/ROCK DESCRIPTION	LITHOLOGIC SYMBOL	SOIL CLASS	BLOWS/6-IN
		SS1	1.55/2'		Sand-top (0.8')/ medium to coarse, light to dark grey, shell fragments bottom/ fine to medium, light tan, shell fragments		SP	7,11,21,27
		SS2	1.2/2'		Sand-same as above			
		SS3	1.7/2'		Sand-same as above, bottom dark brown, dry			20,22,29,31
5	YES	SS4	1.3/2'		Sand-top (0.8')/ same as above			7,13,14,19
		SS5	1.6/2'		Clay-uniform, plastic, grey mottled with brown stringers of clay, dry middle (1-1.4')/ fine to medium, white, shell fragments		CL	
					Sandy Clay-grey, plastic, moist		SC	18,21,27,17
10								
15		SS6	2.0/2'		Sand-fine to medium sand, light gray, shells		SP	8,32,50/ST
20								
25								
30								

WELL DATA

 ABB ENVIRONMENTAL SERVICES, INC.

TITLE: U.S. Naval Station, Jacksonville, Fl.	**LOG of WELL:** MPT-9-2		**BORING NO.** MPT-9-2
CLIENT: SOUTHERN DIVISION, NAVFACENGCOM			**PROJECT NO:** 5097-04
CONTRACTOR: MONITOR TESTING		**DATE STARTED:** 9/16/87	**COMPLTD:** 9/16/87
METHOD: H.S.A.	**CASE SIZE:** 2"	**SCREEN INT.:** 5-15'	**PROTECTION LEVEL:** D
TOC ELEV.: 13.38 FT.	**MONITOR INST.:** Hnu	**TOT DPTH:** 15.0FT.	**DPTH TO ∇** 9.00 FT.
LOGGED BY: M. C. Diblin	**WELL DEVELOPMENT DATE:** 9/11/87		**SITE:** #9

DEPTH FT.	LABORATORY SAMPLE ID.	SAMPLE	RECOVERY	HEADSPACE (ppm)	SOIL/ROCK DESCRIPTION	LITHOLOGIC SYMBOL	SOIL CLASS	BLOWS/6-IN
		SS1	1.3/2'		Sand-fine to medium, light tan, shell fragments, dry		SP	12,12,15,13
5		SS2	1.5/2'		Sand-same as above			17,9,8,8
	YES	SS3	1.3/2'		Sand-top (0.5')/ fine, tan, shells, middle (0.5-0.55')/ blue shells bottom/ fine to medium, graded to light grey, shells			7,9,12,3
10		SS4	1.5/2'		Sand-fine to medium, light grey, shells and fragments, saturated			4,8,12,13
15		SS5	0.4/2'		Sand-same as above			2,12,50/
20								
25								
30								

WELL DATA

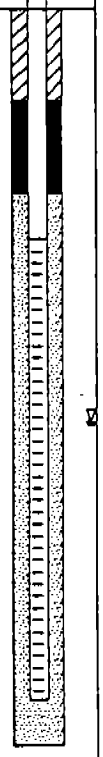

 ABB ENVIRONMENTAL SERVICES, INC.

TITLE: U.S. Naval Station, Jacksonville, Fl.		**LOG of WELL:** MPT-9-3	**BORING NO.** MPT-9-3
CLIENT: SOUTHERN DIVISION, NAVFACENGCOM			**PROJECT NO:** 5097-04
CONTRACTOR: MONITOR TESTING		**DATE STARTED:** 9/16/87	**COMPLTD:** 9/16/87
METHOD: H.S.A.	**CASE SIZE:** 2"	**SCREEN INT.:** 5-15'	**PROTECTION LEVEL:** D
TOC ELEV.: 11.49 FT.	**MONITOR INST.:** Hnu	**TOT DPTH:** 15.0FT.	**DPTH TO ∇** 9.00 FT.
LOGGED BY: M. C. Diblin	**WELL DEVELOPMENT DATE:** 9/11/87		**SITE:** #9

DEPTH FT.	LABORATORY SAMPLE ID.	SAMPLE	RECOVERY	HEADSPACE (ppm)	SOIL/ROCK DESCRIPTION	LITHOLOGIC SYMBOL	SOIL CLASS	BLOWS/6-IN
		SS1	1.5/2'		Sand-fine to medium, uniform, with 0.4' top organic soil and vegitation, bottom/ light tan, shell fragments		SP	4,13,27,28
		SS2	1.6/2'		Sand-same as above, 0.1' thick clayey sand layer, dry			18,20,20,19
		SS3	1.5/2'		Sand-same as above, 0.35' thick layer of interbedded brown clay, red sand with shells			22,13,11,12
5	YES	SS4	1.55/2'					12,8,8,7
			1.6/2'		Sand-fine to medium, tan, 50 % shelly, grading very fine, llight tan sand at the bottom			
10		SS5						7,22,22,35
15		SS6	2.0/2'		Sand-fine to medium, grey, many shells and fragments			7,11,22,30
20								
25								
30								

WELL DATA

 ABB ENVIRONMENTAL SERVICES, INC.

TITLE: U.S. Naval Station, Jacksonville, Fl.		**LOG of WELL:** MPT-13-1	**BORING NO.** MPT-13-1
CLIENT: SOUTHERN DIVISION, NAVFACENGCOM			**PROJECT NO:** 5097-04
CONTRACTOR: MONITOR TESTING		**DATE STARTED:** 9/18/87	**COMPLTD:** 9/18/87
METHOD: H.S.A.	**CASE SIZE:** 2"	**SCREEN INT.:** 3-10'	**PROTECTION LEVEL:** D
TOC ELEV.: 13.03 FT.	**MONITOR INST.:** Hnu	**TOT DPTH:** 10.0FT.	**DPTH TO ∇** 3.0 FT.
LOGGED BY: M. C. Diblin	**WELL DEVELOPMENT DATE:** 9/18/87		**SITE:** #13

DEPTH FT.	LABORATORY SAMPLE ID.	SAMPLE	RECOVERY	HEADSPACE (ppm)	SOIL/ROCK DESCRIPTION	LITHOLOGIC SYMBOL	SOIL CLASS	BLOWS/6-IN
	YES	SS1	1.4/2'	79.9	Sand-fine to medium, well graded, light tan, shell fragments, dry		SW	33,42,43,50
5		SS3	1.4/2'	132	Sand-top (0.15')/ very fine, brown, shell fragments, bottom (0.15-1.4')/ fine, uniform, light grey, few shells, saturated		SP	7,9,14,9
10		SS4		70.1	Clayey Sand- top (1')/ very fine interbedded, medium plastic, grey middle (1-1.2')/ uniform, medium plastic, grey		SC	1,2,2,2
							CL	
					Sand-very fine, brown, saturated		SP	
15								
20								
25								
30								

WELL DATA

 ABB ENVIRONMENTAL SERVICES, INC.

TITLE: U.S. Naval Station, Jacksonville, Fl.		**LOG of WELL:** MPT-13-2	**BORING NO.** MPT-13-2
CLIENT: SOUTHERN DIVISION, NAVFACENGCOM			**PROJECT NO:** 5097-04
CONTRACTOR: MONITOR TESTING		**DATE STARTED:** 9/15/87	**COMPLTD:** 9/15/87
METHOD: H.S.A.	**CASE SIZE:** 2"	**SCREEN INT.:** 3-10'	**PROTECTION LEVEL:** D
TOC ELEV.: 12.77 FT.	**MONITOR INST.:** Hnu	**TOT DPTH:** 10.0FT.	**DPTH TO ∇** 3.0 FT.
LOGGED BY: M. C. Diblin	**WELL DEVELOPMENT DATE:** 9/15/87		**SITE:** #13

DEPTH FT.	LABORATORY SAMPLE ID.	SAMPLE	RECOVERY	HEADSPACE (ppm)	SOIL/ROCK DESCRIPTION	LITHOLOGIC SYMBOL	SOIL CLASS	BLOWS/6-IN
	YES	SS1		1.4	Sand- top (0.25')/ dark brown, top soil, bottom /fine to medium, shell fragments		SP	
		SS2	1.2/2'		Sand-same as above, middle (0.2-0.5')/ medium, tan, many shell fragments (coquina), bottom/ fine, well sorted, uniform, grey		SW	17,31,50/
							SP	
5		SS3	1.3/2'	1.0	Sand-top (0.2')/ fine to medium, light grey, shell fragments, middle (0.2-0.45')/ dark brown sandy peat, saturated, (0.45-0.9')/fine, light grey, with shell fragments, bottom/ fine, uniform, no shells			9,12,22,27
10		SS4	2.0/2'	1.5	Sand-same as above			4,4,8,8
					Clay- (0.3-1')/ soft, plastic, uniform, grey, (1-1.6')/ stiff, dark brown, with mud dump vegitation, bottom/ stiff, uniform, dark olive		CL	
15								
20								
25								
30								

WELL DATA

 ABB ENVIRONMENTAL SERVICES, INC.

TITLE: U.S. Naval Station, Jacksonville, Fl.		**LOG of WELL:** MPT-13-3	**BORING NO.** MPT-13-3
CLIENT: SOUTHERN DIVISION, NAVFACENGCOM			**PROJECT NO:** 5097-04
CONTRACTOR: MONITOR TESTING		**DATE STARTED:** 9/18/87	**COMPLTD:** 9/18/87
METHOD: H.S.A.	**CASE SIZE:** 2"	**SCREEN INT.:** 3-10'	**PROTECTION LEVEL:** D
TOC ELEV.: 10.45 FT.	**MONITOR INST.:** Hnu	**TOT DPTH:** 10.0FT.	**DPTH TO ∇** 3.0 FT.
LOGGED BY: M. C. Diblin	**WELL DEVELOPMENT DATE:** 9/18/87		**SITE:** #13

DEPTH FT.	LABORATORY SAMPLE ID.	SAMPLE	RECOVERY	HEADSPACE (ppm)	SOIL/ROCK DESCRIPTION	LITHOLOGIC SYMBOL	SOIL CLASS	BLOWS/6-IN
		SS1	1.4/2'		Sand- top (0.25')/ dark brown, top soil, middle (2.5-0.9')/ fine to medium, light tan, shells, Fe Oxide layer at 0.9'		SP	40,40,50,30+
5		SS3	1.4/2'	30.2	Sand-top (0.5')/ fine, dark grey, shells middle (0.5-0.9')/ same as above, light grey bottom/ fine, uniform, no shells, saturated			13,15,28,40
10		SS4	2.0/2'	5.1	Clayey Sand- very fine, grey		SC	1,1,1,2
					Clay- (0.6-1.1') dark brown, decomposed vegitation / (1.1-1.5') firm, uniform, dark olive / (1.5-2.0) medium plastisity, grey		CL	
15								
20								
25								
30								

WELL DATA

 ABB ENVIRONMENTAL SERVICES, INC.

TITLE: U.S. Naval Station, Jacksonville, Fl.		**LOG of WELL:** MPT-14-1	**BORING NO.** MPT-14-1
CLIENT: SOUTHERN DIVISION, NAVFACENGCOM			**PROJECT NO:** 5097-04
CONTRACTOR: MONITOR TESTING		**DATE STARTED:** 9/17/87	**COMPLTD:** 9/17/87
METHOD: H.S.A.	**CASE SIZE:** 2"	**SCREEN INT.:** 3-12'	**PROTECTION LEVEL:** D
TOC ELEV.: 7.41 FT.	**MONITOR INST.:** Hnu	**TOT DPTH:** 13.0FT.	**DPTH TO ∇** 3.0 FT.
LOGGED BY: M. C. Diblin	**WELL DEVELOPMENT DATE:** 9/17/87		**SITE:** #14

DEPTH FT.	LABORATORY SAMPLE ID.	SAMPLE	RECOVERY	HEADSPACE (ppm)	SOIL/ROCK DESCRIPTION	LITHOLOGIC SYMBOL	SOIL CLASS	BLOWS/6-IN
	YES	SS1	1.4/2'		Sand-fine to medium, light tan, with few shell fragments, visible layering, dry		SP	7,14,20,29
5		SS3	1.4/2'	160	Sand-same as above, saturated			9,16,31,50
10		SS4	2.0/2'	141	Sand-fine to medium, uniform sand with shell fragments, saturated			7,23,50/5in
15								
20								
25								
30								

WELL DATA

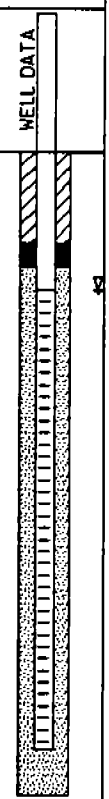

 ABB ENVIRONMENTAL SERVICES, INC.

TITLE: U.S. Naval Station, Jacksonville, Fl.		**LOG of WELL:** MPT-14-2	**BORING NO.** MPT-14-2
CLIENT: SOUTHERN DIVISION, NAVFACENGCOM			**PROJECT NO:** 5087-04
CONTRACTOR: MONITOR TESTING		**DATE STARTED:** 8/17/87	**COMPLTD:** 8/17/87
METHOD: H.S.A.	**CASE SIZE:** 2"	**SCREEN INT.:** 3-13'	**PROTECTION LEVEL:** D
TOC ELEV.: 8.47 FT.	**MONITOR INST.:** Hnu	**TOT DPTH:** 12.0FT.	**DPTH TO ∇** 3.0 FT.
LOGGED BY: M. C. Diblin	**WELL DEVELOPMENT DATE:** 8/17/87		**SITE:** #14

DEPTH FT.	LABORATORY SAMPLE ID.	SAMPLE	RECOVERY	HEADSPACE (ppm)	SOIL/ROCK DESCRIPTION	LITHOLOGIC SYMBOL	SOIL CLASS	BLOWS/6-IN
		SS1	1.8/2'	80.2	Sand-fine, uniform with layering, light tan bottom/ dark tan, some shell fragments, visible bedding		SP	7,12,20,30
	YES	SS2	1.5/2'	49.7	Sand-fine, uniform, light tan, dry, bottom/ some shell fragments			7,20,25,27
5		SS3	1.5/2'	59.8	Sand-fine, uniform, light grey, middle/ shelly, gravelly sand, saturated, bottom/ fine to medium, light grey, saturated			5,16,26,50
10		SS4	1.8/2'	4.8	Sand-fine to medium, light gray, saturated, shell fragments			11,31,50/3cm
15								
20								
25								
30								

WELL DATA

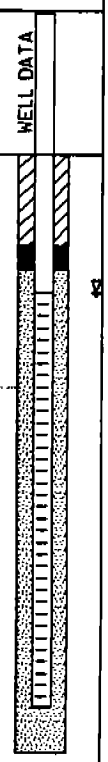

 ABB ENVIRONMENTAL SERVICES, INC.

APPENDIX F

CORRECTIVE ACTION MANAGEMENT PLAN

CORRECTIVE ACTION MANAGEMENT PLAN

NAVAL STATION MAYPORT
JACKSONVILLE, FLORIDA

EPA ID No. FL9170024260

CTO No. 028

Prepared by:

ABB Environmental Services, Inc.
2571 Executive Center Circle, East
Tallahassee, Florida 32301-5001

Prepared for:

Department of the Navy, Southern Division
Naval Facilities Engineering Command
2155 Eagle Drive
Charleston, South Carolina 29411-0068

Jim Reed, Engineer-in-Charge

OCTOBER 10, 1991

TABLE OF CONTENTS

Section		Page
1.0	INTRODUCTION	1
2.0	GOAL, OBJECTIVES, AND ASSUMPTIONS	1
3.0	SOLID WASTE MANAGEMENT UNIT GROUPS	3
4.0	PRIORITY	4
5.0	SUMMARY OF CORRECTIVE ACTION MANAGEMENT STRATEGY	5
6.0	SCHEDULE	7
	REFERENCES	9

LIST OF FIGURES

Figure	Description
3-1	SWMU Group Areas
5-1	Decision Flow Diagram for RCRA Corrective Action Management Plan

LIST OF TABLES

Table	Description
3-1	Solid Waste Management Unit Groups
4-1	Qualitative Relative Assessment of SWMU Groups
6-1	Proposed Schedule, RCRA Corrective Actions at Naval Station Mayport.
6-2	Proposed Schedule for Project Submittals. RCRA Corective Actions Naval Station Mayport.

1.0 INTRODUCTION

The Corrective Action Management Plan (CAMP) provides the overall management structure for implementing the RCRA Corrective Action Program at Naval Station (NAVSTA) Mayport, Jacksonville, Florida. It includes a grouping of known Solid Waste Management Units (SWMU), a ranking of groups by priority, a summary of the strategy to implement the Corrective Action Program, and an initial schedule for program activities.

A Resource Conservation and Recovery Act (RCRA) Facility Assessment (RFA) for NAVSTA Mayport was conducted on behalf of the U.S. Environmental Protection Agency (USEPA) Region IV by their contractor, A.T. Kearney, Inc. (USEPA 1989a). The RFA identified fifty-six Solid Waste Management Units (SWMUs) and two Areas of Concern (AOC) at the NAVSTA Mayport facility. Fifteen of these SWMUs were determined not to require further action. Twenty-three of the remaining SWMUs were determined to require further investigation. The remaining eighteen SWMUs were determined to require a RCRA Facility Investigation (RFI).

Of these eighteen SWMUs, seventeen had been previously identified in a Hazardous and Solid Waste Amendments (HSWA) permit issued by the USEPA on 25 March 1988 (EPA 1988a). This permit required that a RFI be conducted at these seventeen SWMUs. The Navy prepared a Draft Final RFI Work Plan (SDIV 1989a) in response to the HSWA permit requirements addressing these seventeen SWMUs. The Draft Final RFI Work Plan was reviewed by applicable regulatory agencies and their comments were sent to the Navy on 6 May 1991 (USEPA 1991a). The additional SWMU determined by the USEPA during the RFA to require a RFI was the Building 1600 Blasting Area. The USEPA reported in their 6 May 1991 comments to the existing Draft Final RFI Work Plan that they would address the thirty-nine additional SWMUs identified during the RFA under revised permit conditions at a later date.

Due to the number of SWMUs, the diversity of their past and/or present operations, and the magnitude of the permit requirements, the USEPA recommended that a phased approach be used to implement the RFI and other corrective action activities. The USEPA recommended that the phased approach and proposed schedule be presented as a Corrective Action Management Plan (CAMP) (USEPA 1991b) in order to describe the strategy to implement the RCRA Corrective Action Program at NAVSTA Mayport. The CAMP would identify operational groups of SWMUs, rank them by their associated risk to human health and the environment, and contain the proposed schedule.

This CAMP has been prepared in response to the USEPA's recommendations. It identifies the SWMU Groups, provides a priority for investigation of groups of sites, describes the Corrective Action Management strategy, and presents a proposed schedule for site activities and report submittals.

2.0 GOAL, OBJECTIVES, AND ASSUMPTIONS

The purpose of the Corrective Action Management Plan is to outline the strategy to achieve the goal and objectives of the RCRA Corrective Action Program at NAVSTA Mayport. The strategy proposed by the CAMP is structured to achieve the following goal:

Goal:

- To verify and characterize suspected releases to the environment of hazardous substances in accordance with the requirements of Hazardous and Solid Waste Amendment (HSWA) permit No. H016-118598 and applicable regulations.

This goal will be achieved by accomplishing the following objectives:

Objectives:

- Conduct RCRA Facility Investigations (RFI) at SWMUs with confirmed releases to the environment in order to characterize the extent of contamination.
- Define the hazards and risks to human health and the environment associated with the confirmed releases of hazardous substances.
- Identify and screen potential Corrective Measures for future response actions.
- Conduct RCRA Facility Assessment Sampling Visits (RFA/SV) at suspected SWMUs to confirm releases to the environment.
- Assess Areas of Concern.

The strategy to achieve the goal and associated objectives is based on the following assumptions:

Assumptions:

- RFI and RFA/SV activities such as work plan development, field implementation, laboratory analyses, and reporting of findings will be conducted in multiple independent Phases.
- The Phases will be defined to address specific Groups of SWMUs which may require RFA/SV and/or RFI.
- Groups will be defined by identifying geographic areas containing individual SWMUs in close proximity where synergies and economies of scale could exist during field activities and potential future corrective measures.
- SWMUs associated with utility networks and systems which may span multiple Groups or large geographic areas will be addressed as an individual Group.

- The timing of the Phases will be defined by the estimated levels of risk to human health and the environment associated with each Group. Perceived "high" risk Groups will be addressed earlier than perceived "low" risk Groups.

- During a Phase, implementation of RFI and RFA/SV activities at appropriate SWMUs in the Group will occur simultaneously. An iterative process may be necessary for SWMUs undergoing a RFA/SV which are then determined to require a RFI.

- Corrective Measures Study (CMS) and Corrective Measures Implementation at a specific Group will not occur until all RFA/SV and/or RFI activities have been completed for all SWMUs in the Group. This does not preclude Interim Corrective Measures if they are warranted.

- The existing Draft Final RFI Work Plan addressing the original seventeen SWMUs identified in the HSWA Permit will be revised in accordance with permit requirements and regulatory comments. However, the work plan will be implemented in accordance with the Group structure and timing of the Phases defined in the CAMP strategy.

3.0 SOLID WASTE MANAGEMENT UNIT GROUPS

Four SWMU Groups are defined for the NAVSTA Mayport RCRA Corrective Action Program. Three of these Groups are defined by their geography and the clustering of individual SWMUs within them. These areas are illustrated in Figure 3-1. An additional SWMU Group, which is not directly associated with a given geographical area, is also defined. The SWMUs in this Group are associated with utility networks and systems which may span multiple geographical Groups. Examples of SWMUs in this Group are the Oily Waste Collection System, Oil/Water Separators, (sanitary) sewer pipelines, and the storm sewer and drainage system. This latter Group also includes the Areas of Concern (AOC) identified in the USEPA RFA. Table 3-1 summarizes the SWMU Groupings and the type of initial investigation for each SWMU, i.e., either RFA/SV, RFI, or other data gathering activities.

The Group I area is located in the southwest portion of NAVSTA Mayport. It is composed of multiple past landfills, active dredge spoil disposal areas, and other individual SWMUs. The SWMUs were incorporated into Group I because of their: (1) proximity to each other; (2) common drainage to the Sherman Creek watershed; (3) similarity of past waste management practices; and (4) the potential for similar or related corrective measures.

The Group II area is located along the northern portion of NAVSTA Mayport contiguous with the St. Johns River. It is composed of multiple individual SWMUs associated with past hazardous/solid waste storage, petroleum waste treatment and disposal, and wastewater treatment. The SWMUs were incorporated into Group II because of their: (1) proximity to each other; (2) nearness to the St. Johns River; and (3) the potential for similar or related corrective measures.

The Group III area is located in the eastern portion of NAVSTA Mayport adjacent to the turning basin. Many of the SWMUs in this area are isolated with localized suspected contamination (principally contaminated soils), and not directly associated with others. Exceptions are Landfill A, the Wastewater Treatment Clarifiers, and Wastewater Treatment Sludge Beds which are located near each other. The SWMUs were incorporated into Group III because of their: (1) proximity to the turning basin, the St. Johns River, and Atlantic Ocean; (2) similarity of surrounding land-use; and (3) the potential for similar or related corrective measures.

The Group IV SWMUs and AOCs are composed of utility networks and system components which may span multiple geographical Groups. This Group was formed due to the similarity of investigations and corrective measures which may be required for networked utilities. In addition, some of the SWMUs and AOCs in this Group are being addressed by other environmental management, regulatory, and maintenance programs which will provide scoping data to assist in determining appropriate RCRA investigative actions.

4.0 PRIORITY

Additional data are required to perform an assessment of absolute hazards and risks at the SWMUs where known or suspected releases to the environment have occurred. Collection of these data and assessment of the associated hazards and risks are objectives of the RCRA Corrective Action Program at NAVSTA Mayport. Therefore, for the purposes of the CAMP, a qualitative assessment of hazards and risks is performed (SWMU Group basis) using existing knowledge of the SWMUs. The qualitative assessment does not attempt to provide an evaluation of the absolute risk each Group may pose, but attempts preliminary estimation of relative risks between Groups in order to prioritize corrective action operations. The qualitative assessment considers the following factors:

- Potential types of contaminants.
- Potentially affected media and migration pathways.
- Potential volume of contaminated media.
- Anticipated scope of the Corrective Action investigations (for example, the type, frequency, and analyses of samples).
- Relationship of SWMUs to other environmental management programs.

Table 4-1 summarizes the proposed ranking of the SWMU Groups. Higher ranking Groups have a higher priority and will be addressed earlier in the Corrective Action program than lower priority Groups. This is an initial ranking and could change as additional site-specific information is gathered and assessed.

The Group I SWMUs are ranked at Priority 1. This Group has the "highest" perceived relative risk based on available information. This Group as a unit has a variety of possible types of contaminants potentially affecting large areas and volumes of soil and groundwater. Due to the proximity to Sherman Creek, this

Group may potentially impact sensitive environmental receptors by groundwater, surface water, or soil migration pathways. None of the SWMUs in Group I appear to present an immediate hazard to public health. Because of the relatively large area and volume of potentially affected media as compared with other Groups, the scope of Group I investigations are anticipated to be a major portion of the Corrective Action Program at NAVSTA Mayport.

The Group II SWMUs are ranked at Priority 2. This Group has a "moderate" perceived relative risk. This Group as a unit has a variety of possible types of contaminants potentially affecting moderate areas and volumes of soil and groundwater. Some of the SWMUs operate under a National Pollutant Discharge Elimination System (NPDES) permit for point discharges. Due to the proximity to St. Johns River, this Group may potentially impact sensitive environmental receptors by groundwater or soil migration pathways. None of the SWMUs in Group II appear to present an immediate hazard to public health. Because of the relatively moderate area and volume of potentially affected media compared with other Groups, the scope of Group II investigations are anticipated to be a significant, though not major, portion of the Corrective Action Program at NAVSTA Mayport.

The Group III SWMUs are ranked at Priority 3. This Group has a "low" perceived relative risk. This Group as a unit has a variety of possible types of contaminants potentially affecting localized areas and volumes of soil and groundwater. Some of the SWMUs are operated under a NPDES permit for point discharges. Due to the proximity to the turning basin, St. Johns River, and the Atlantic Ocean, this Group may potentially impact sensitive environmental receptors by groundwater or soil pathways. None of the SWMUs in Group III appear to present an immediate hazard to public health. Because of the relatively localized area and volume of potentially affected media, the scope of Group III investigations are anticipated to be a smaller portion of the Corrective Action Program at NAVSTA Mayport as compared to Groups I and II.

The Group IV SWMUs are ranked at Priority 4. This Group has the "lowest" perceived relative risk. This Group as a unit has a variety of possible types of contaminants potentially affecting localized areas and volumes of soil and groundwater. Little quantitative analytical data exists for this Group specific to determining whether a release to the environment has occurred from any of the suspect SWMUs. The AOCs are managed as underground storage tanks (UST) or UST appurtenances under RCRA. Anticipated investigations for this Group will include RFA/SVs for designated SWMUs and assessment of AOCs to determine if designation as a RCRA SWMU is appropriate. The scope of Group IV investigations are presently anticipated to be minor relative to the other Groups.

5.0 SUMMARY OF CORRECTIVE ACTION MANAGEMENT STRATEGY

The Decision Flow Diagram presented in Figure 5-1 summarizes the proposed Corrective Action Management strategy for NAVSTA Mayport considering the goal and objectives of the RCRA Corrective Action Program, CAMP assumptions, SWMU Groups, and priority ranking of each Group. This discussion describes the general tasks and sequences anticipated for implementation of the Corrective Action Program at

NAVSTA Mayport. The proposed duration of tasks and timing of events are presented in Section 6.0, Schedule.

SWMUs and AOCs are initially distributed between those which require: (1) no further action; (2) RFA/SV; and (3) RFI. AOCs will be assessed to determine if they are appropriate RCRA SWMUs which require further investigation. If so, they will be designated as SWMUs requiring an RFA/SV. SWMUs requiring a RFA/SV are placed in appropriate SWMU Groups.

Seventeen SWMUs have already been determined to require an RFI in accordance with the HSWA permit (USEPA 1988a). In addition, the Building 1600 Blasting Area was determined to require an RFI during the USEPA's RFA (USEPA 1989a). The existing Draft Final RFI Work Plan will be revised to include these eighteen SWMUs incorporating regulatory comments (USEPA 1991a), as appropriate. SWMUs requiring an RFI are placed in appropriate SWMU Groups. Subsequent corrective action planning and field implementation will be contingent upon regulatory approval of the revised RFI Work Plan.

The corrective actions will be implemented sequentially for each Group based on the Group's priority. The following description of tasks and their sequences are therefore presented on an individual Group basis.

Implementation of RFI and RFA/SV activities at SWMUs in a Group will occur simultaneously following two parallel tracks (Figure 5-1). The first Group's activities will begin after regulatory approval of the revised RFI Work Plan. For simplicity, the two tracks are presented in Figure 5-1 as independent paths. However, their implementation could be affected by interactions caused by unanticipated field conditions and regulatory review and approval cycles for program deliverables.

The first track addresses the known SWMUs requiring an RFI addressed by the revised RFI Work Plan. The field activities will be implemented in accordance with the approved revised RFI Work Plan. Initial field data will be assessed to determine the need for immediate corrective measures. An RFI Report will be submitted for regulatory review and approval at the completion of the RFI.

The second track addresses SWMUs requiring RFA/SVs. It is anticipated that the activities along this track will be concurrent with the initial RFI field work described above. A RFA/SV Work Plan will be prepared in the form of a Technical Memorandum (TM) describing sampling and analysis requirements for a RFA/SV at the SWMU Group to verify release to the environment. General health and safety and Quality Assurance/Quality Control (QA/QC) procedures will be consistent with the approved revised RFI Work Plan, as modified by site-specific conditions. The draft TM will be submitted for regulatory review. A final TM will be prepared prior to field implementation incorporating regulatory comments as appropriate. The RFA/SV will be implemented at the SWMUs in the Group. An RFA/SV Report will be prepared for regulatory review and approval at the completion of the RFA/SV.

An iterative process would be necessary for SWMUs undergoing an RFA/SV which are determined to require an RFI. An RFI Work Plan will be prepared to address the SWMUs in the Group where release to the environment is confirmed during the RFA/SV. An RFI will be conducted at these SWMUs in accordance with the approved

RFI Work Plan. Initial field data will be assessed to determine the need for immediate corrective measures. An RFI Report will be submitted for regulatory review and approval at the completion of the RFI.

The need to conduct a Corrective Measures Study (CMS) at a Group will be based on the findings of the RFI Reports. Conducting a CMS and implementing corrective measures will not occur until all RFA/SV and/or RFI activities have been completed for that Group in order to take advantage of synergies, interactions, and economies of scale which could exist between SWMUs.

6.0 SCHEDULE

The Corrective Action Program at NAVSTA Mayport will be implemented in phases based on the ranking of the priority of the Groups. As additional site data are collected and assessed, the priority of the Groups may be modified if appropriate. The Draft Final RFI Work Plan will be revised and the AOCs will be assessed initially before the individual Groups of SWMUs are addressed. At this time, it is anticipated that the following sequence of implementation will occur:

- Phase 1: Implementation of RFA/SV and RFI activities at the Group I SWMUs.
- Phase 2: Implementation of RFA/SV and RFI activities at the Group II SWMUs.
- Phase 3: Implementation of RFA/SV and RFI activities at the Group III SWMUs.
- Phase 4: Implementation of RFA/SV and RFI activities at the Group IV SWMUs.

Table 6-1 summarizes the proposed schedule. Corrective Measures may be implemented at specific SWMU Groups upon completion of their RFA/SV and RFI, if applicable. It is anticipated that Corrective Measures may be implemented at a given Group independent of the other Groups. The schedule does not consider Corrective Measures at this time since the nature and extent of potential corrective measures are not known. The specific dates presented in Table 6-1 are best estimates based on present site knowledge and may be modified as additional information is gathered, subject to the review and approval of the Engineer-in-Charge and the USEPA Region IV Administrator.

SWMUs which are determined to require an RFI after completion of the RFA/SV will affect the actual duration of program tasks for a particular Phase. This is due to the potential iterative nature of the RFI as discussed in Section 5.0. Although each Phase is independent of the others, it has been assumed for initial planning purposes that subsequent Phases will generally begin on or about the time the RFA/SV is completed for a previous Phase. For example, the RFI for Group II is expected to begin on July 7, 1992 after completion of RFA/SV field activities for Group I. This relationship is assumed in the proposed schedule for the other Phases as well.

Table 6-2 presents the proposed schedule for project deliverables for the RCRA Corrective Action Program at NAVSTA Mayport. The sequence of submittals of project deliverables and the duration between submittals are believed to be reasonable estimates based on present site knowledge. The dates presented in Table 6-2 are best estimates, however, and are subject to the timing of RFI Work Plan and Technical Memoranda regulatory review and approval, and analysis of intermediate findings obtained during field investigations. Therefore, the implementation of future activities and preparation of project deliverables may be contingent on previous investigation findings and regulatory reviews and approvals. For initial planning purposes, it has been assumed that regulatory review and approval for project submittals will require on average 45 calendar days for each review cycle.

REFERENCES

1. USEPA 1989a — RCRA Facility Assessment of the Naval Station Mayport, Jacksonville, Florida (Final); A.T. Kearny, Inc.; September 1989.

2. USEPA 1988a — HSWA Permit No. H016-118598; U.S. Environmental Protection Agency, Region IV; March 25, 1988.

3. SDIV 1989a — RFI Work Plan; Volumes I, II, and III (Draft Final); ABB Environmental Services, Inc.; December 1989.

4. USEPA 1991a — Letter with enclosure; from USEPA (John E. Dickinson, Waste Compliance Section, RCRA and Federal Facilities Branch, Region IV) to Department of the Navy (Captain Peter Long, Commanding Officer, Naval Station Mayport); 6 May 1991.

5. USEPA 1991b — Letter; from USEPA (James H. Scarbrough, RCRA and Federal Facilities Branch, Waste Management Division, Region IV) to Department of the Navy (Captain J.B. Mitchell, Jr., Commanding Officer, Naval Air Station Mayport); 14 June 1991.

FIGURES

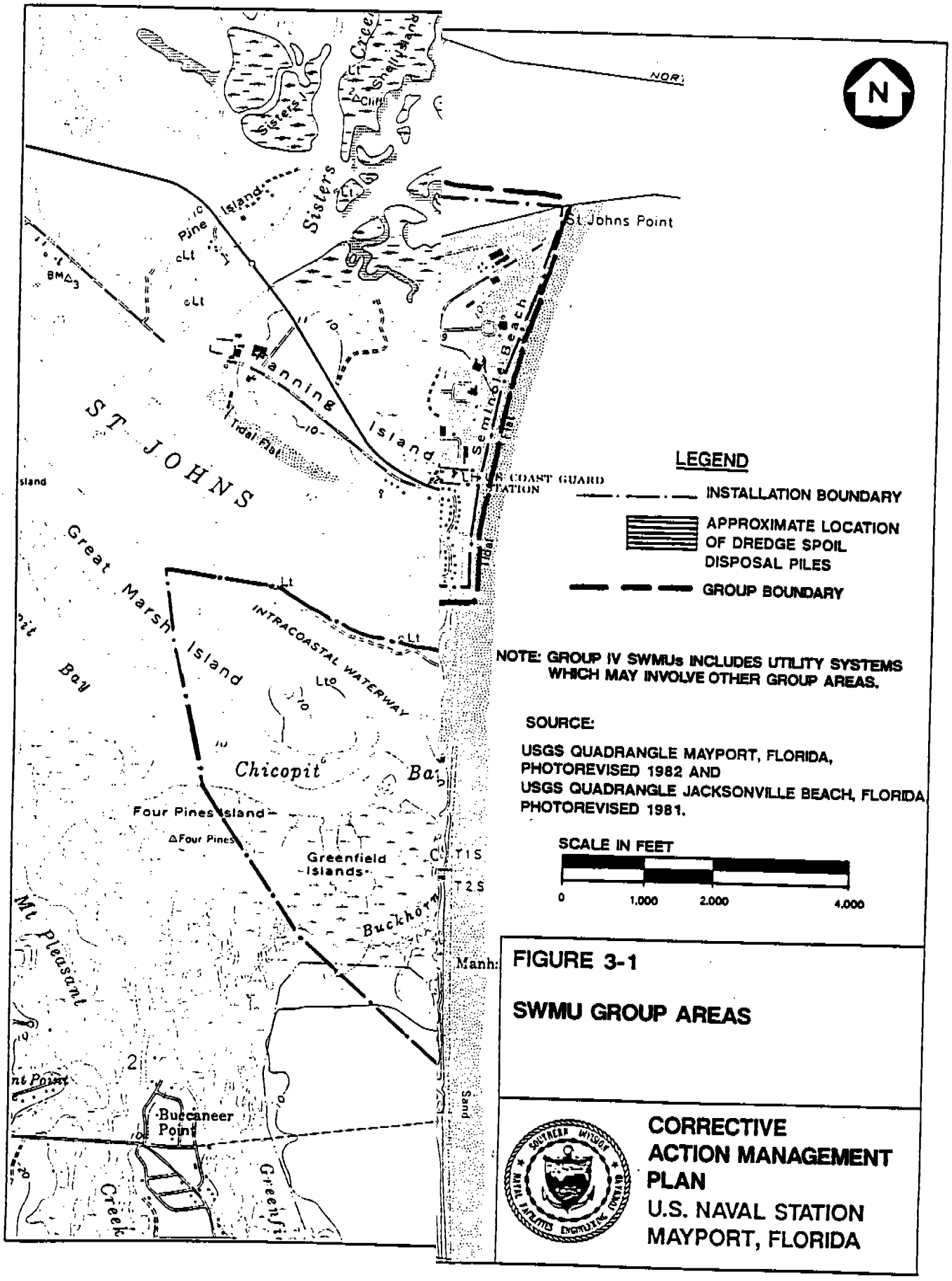

FIGURE 3-1

SWMU GROUP AREAS

CORRECTIVE ACTION MANAGEMENT PLAN
U.S. NAVAL STATION
MAYPORT, FLORIDA

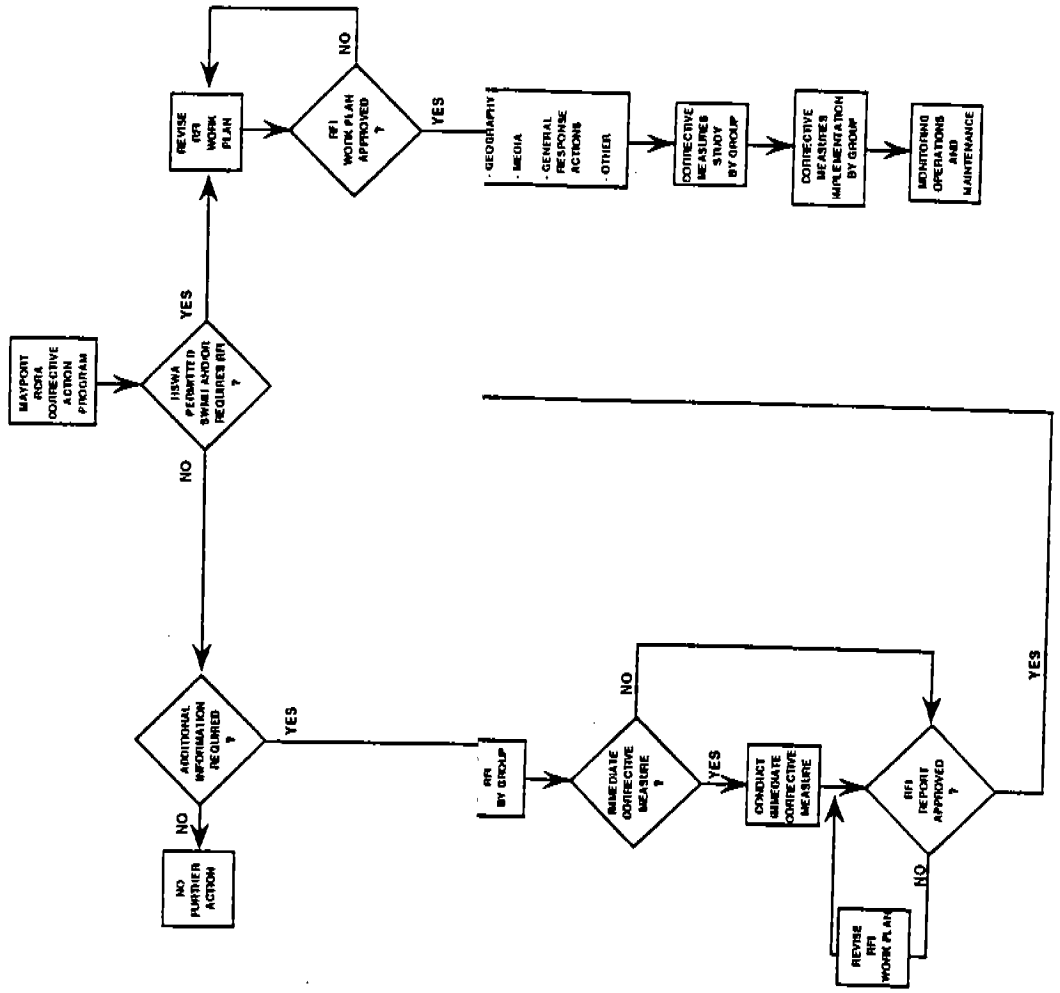

FIGURE 5-1

DECISION FLOW DIAGRAM

CORRECTIVE ACTION MANAGEMENT PLAN

U.S. NAVAL STATION MAYPORT, FLORIDA

TABLES

TABLE 3-1: SOLID WASTE MANAGEMENT UNIT GROUPS.			
NIRP SITE	RFA SWMU	DESCRIPTION	RFI RFA/SV
GROUP I SWMUs			
2	2	Landfill B	RFI
4	3	Landfill D	RFI
5	4	Landfill E	RFI
6	5	Landfill F	RFI
13	13	Old Fire Training Area	RFI
NA	22	Building 1600 Blasting Area	RFI
3	26	Landfill C	RFA/SV
NA	49	Flight Line Retention Ponds	RFA/SV
NA	50	Dredge Spoil Disposal Areas	RFA/SV
NA	56	Building 1552 Accumulation Area	RFA/SV
GROUP II SWMUs			
8	6	Waste Oil Pit/Sludge Drying Bed	RFI
8A	7	OWTP Sludge Drying Beds	RFI
8B	8	OWTP Percolation Pond	RFI
8C	9	Oily Waste Treatment Plant (OWTP)	RFI
8D	10	Hazardous Waste Storage Area	RFI
9	11	Fuel Spill Area	RFI
11	12	Neutralization Basin	ASSESS
15	15	Old Pesticide Area	RFI
16	16	Old Transformer Storage Yard	RFI
NA	19	NADEP Blasting Area	RFA/SV
10	28	DRMO Yard	RFA/SV
NA	48	Former Chemistry Lab Accumulation Area	RFA/SV
NA	51	Waste Oil Tanks	RFA/SV
GROUP III SWMUs			
1	1	Landfill A	RFI
14	14	Mercury/Oily Waste Spill Area	RFI
17	17	Carbonaceous Fuel Boiler	RFI

TABLE 3-1: SOLID WASTE MANAGEMENT UNIT GROUPS.			
NIRP SITE	RFA SWMU	DESCRIPTION	RFI RFA/SV
NA	18	FTC Diesel Generator Sump	RFA/SV
NA	20	Hobby Shop Drain	RFA/SV
NA	21	Hobby Shop Scrap Storage Area	RFA/SV
NA	23	Jacksonville Shipyard, Inc.	RFA/SV
NA	24	North Florida Shipyard, Inc.	RFA/SV
NA	25	Atlantic Marine, Inc.	RFA/SV
12	29	Oily Waste Pipeline Break	RFA/SV
NA	44	Wastewater Treatment Facility Clarifiers 1 & 2	RFA/SV
NA	45	Wastewater Treatment Facility Sludge Drying Beds	RFA/SV
NA	46	SIMA Engine Drain Sump	RFA/SV
NA	52	PWD Service Station Storage Area	RFA/SV
GROUP IV SWMUs			
NA	47	Oily Waste Collection System	RFA/SV
NA	53	Sewer Pipelines	RFA/SV
NA	54	Oil/Water Separators	RFA/SV
NA	55	Storm Sewer and Drainage System	RFA/SV
NA	AOC A	Fuel Distribution Pipelines	ASSESS
NA	AOC B	Underground Product Storage Tanks	ASSESS

Acronyms:

NIRP: Navy Installation Restoration Program
RFI: RCRA Facility Investigation
RFA: RCRA Facility Assessment
SV: Sampling Visit
SWMU: Solid Waste Management Unit
NA: Not Applicable

NOTE: "Assess" indicates additional data gathering necessary to determine RFA/RFI Requirements.

TABLE 4-1: QUALITATIVE RELATIVE ASSESSMENT OF SWMU GROUPS.						
GROUP	CONTAMINANT	MEDIA/ PATHWAYS	VOLUME/ EXTENT	RFA/RFI SCOPE	OTHER PROGRAMS	RANK
I	VOA, PCB's SVOA, & METALS	GW, SOIL, & SW	LARGE VOLUME & AREAL EXTENT	LARGE-SCALE	RCRA	1
II	VOA, SVOA, PESTICIDES, METALS, & PETRO-HYDROCARBON	GW, SOIL, & SW	MODERATE VOLUME & AREAL EXTENT	MODERATE-SCALE	RCRA; CWA/NPDES	2
III	VOA, SVOA, METALS, & PETRO-HYDROCARBON	GW, SOIL, & SW	LOCAL; MODERATE TO SMALL VOLUME & AREAL EXTENT	LOCALLY INTENSIVE	RCRA; CAA; CWA/NPDES	3
IV	SVOA, METALS, & PETRO-HYDROCARBON	GW, SOIL, & SW	MODERATE	LOCALLY INTENSIVE	RCRA/UST; CWA/NPDES	4

Acronyms:

VOA: Volatile Organic Compounds
SVOA: Semi-volatile Organic Compounds
GW: Groundwater
SW: Surface water
RCRA: Resource Conservation and Recovery Act
CAA: Clean Air Act
CWA: Clean Water Act
NPDES: National Pollutant Discharge Elimination System
UST: Underground Storage Tank Program
PCB: Polychlorinated Biphenyls

Table 6-1: Proposed Schedule, RCRA Corrective Actions at Naval Station Mayport.

NO.	PHASE	GROUP	TASK	DESCRIPTION (03-Oct-91 11:16 PM)	START DATE	DURATION	END DATE	CUMULATIVE DAYS
1	INITIAL	ALL	*1	REVISE RFI WORK PLAN	10/10/91	66.0	12/15/91	66
2	INITIAL	ALL	*2	ASSESS SWMUs & AOCs	10/10/91	66.0	12/15/91	66
3	1	I	*1	CONDUCT INITIAL RFI	12/15/91	120.0	04/13/92	186
4	1	I	*2	PREPARE DRAFT INITIAL RFI REPORT	04/13/92	28.0	05/11/92	214
5	1	I	*3	PREPARE FINAL INITIAL RFI REPORT	05/11/92	97.0	08/16/92	311
6	1	I	*4	PREPARE DRAFT RFA/SV WORK PLAN (TM)	12/15/91	31.0	01/15/92	97
7	1	I	*5	PREPARE FINAL RFA/SV WORK PLAN (TM)	01/15/92	97.0	04/21/92	194
8	1	I	*6	CONDUCT RFA/SV	04/21/92	77.0	07/07/92	271
9	1	I	*7	PREPARE DRAFT RFA/SV REPORT	07/07/92	28.0	08/04/92	299
10	1	I	*8	PREPARE FINAL RFA/SV REPORT	08/04/92	97.0	11/09/92	396
11	1	I	!9	PREPARE FOLLOW-ON DRAFT RFI WORK PLAN	11/09/92	28.0	12/07/92	424
12	1	I	!10	PREPARE FOLLOW-ON FINAL RFI WORK PLAN	12/07/92	97.0	03/14/93	521
13	1	I	!11	CONDUCT FOLLOW-ON RFI	03/14/93	77.0	05/30/93	598
14	1	I	!12	PREPARE FOLLOW-ON DRAFT RFI REPORT	05/30/93	28.0	06/27/93	626
15	1	I	!13	PREPARE FOLLOW-ON FINAL RFI REPORT	06/27/93	97.0	10/02/93	723
16	1	I	14	PREPARE DRAFT CORRECTIVE MEASURSE STUDY	10/02/93		TBD	
17	2	II	1	CONDUCT INITIAL RFI	07/07/92	120.0	11/04/92	391
18	2	II	2	PREPARE DRAFT INITIAL RFI REPORT	11/04/92	28.0	12/02/92	419
19	2	II	3	PREPARE FINAL INITIAL RFI REPORT	12/02/92	97.0	03/09/93	516
20	2	II	4	PREPARE DRAFT RFA/SV WORK PLAN (TM)	07/07/92	31.0	08/07/92	302
21	2	II	5	PREPARE FINAL RFA/SV WORK PLAN (TM)	08/07/92	97.0	11/12/92	399
22	2	II	6	CONDUCT RFA/SV	11/12/92	77.0	01/28/93	476
23	2	II	7	PREPARE DRAFT RFA/SV REPORT	01/28/93	28.0	02/25/93	504
24	2	II	8	PREPARE FINAL RFA/SV REPORT	02/25/93	97.0	06/02/93	601
25	2	II	!9	PREPARE FOLLOW-ON DRAFT RFI WORK PLAN	06/02/93	28.0	06/30/93	629
26	2	II	!10	PREPARE FOLLOW-ON FINAL RFI WORK PLAN	06/30/93	97.0	10/05/93	726
27	2	II	!11	CONDUCT FOLLOW-ON RFI	10/05/93	77.0	12/21/93	803
28	2	II	!12	PREPARE FOLLOW-ON DRAFT RFI REPORT	12/21/93	28.0	01/18/94	831
29	2	II	!13	PREPARE FOLLOW-ON FINAL RFI REPORT	01/18/94	97.0	04/25/94	928
30	2	II	14	PREPARE DRAFT CORRECTIVE MEASURSE STUDY	04/25/94		TBD	

Notes: (TM) - Technical Memorandum; (*) - Presently under CTO 028; (!) - Tasks contingent on RFA/SV findings.

Table 6-1. . .oposed Schedule, RCRA Corrective Actions at Naval Station Mayport.

NO.	PHASE	GROUP	TASK	DESCRIPTION (03-Oct-91 11:16 PM)	START DATE	DURATION	END DATE	CUMULATIVE DAYS
31	3	III	1	CONDUCT INITIAL RFI	01/28/93	120.0	05/28/93	596
32	3	III	2	PREPARE DRAFT INITIAL RFI REPORT	05/28/93	28.0	06/25/93	624
33	3	III	3	PREPARE FINAL INITIAL RFI REPORT	06/25/93	97.0	09/30/93	721
34	3	III	4	PREPARE DRAFT RFA/SV WORK PLAN (TM)	01/28/93	31.0	02/28/93	507
35	3	III	5	PREPARE FINAL RFA/SV WORK PLAN (TM)	02/28/93	97.0	06/05/93	604
36	3	III	6	CONDUCT RFA/SV	06/05/93	77.0	08/21/93	681
37	3	III	7	PREPARE DRAFT RFA/SV REPORT	08/21/93	28.0	09/18/93	709
38	3	III	8	PREPARE FINAL RFA/SV REPORT	09/18/93	97.0	12/24/93	806
39	3	III	!9	PREPARE FOLLOW-ON DRAFT RFI WORK PLAN	12/24/93	28.0	01/21/94	834
40	3	III	!10	PREPARE FOLLOW-ON FINAL RFI WORK PLAN	01/21/94	97.0	04/28/94	931
41	3	III	!11	CONDUCT FOLLOW-ON RFI	04/28/94	77.0	07/14/94	1008
42	3	III	!12	PREPARE FOLLOW-ON DRAFT RFI REPORT	07/14/94	28.0	08/11/94	1036
43	3	III	!13	PREPARE FOLLOW-ON FINAL RFI REPORT	08/11/94	97.0	11/16/94	1133
44	3	III	14	PREPARE DRAFT CORRECTIVE MEASURSE STUDY	11/16/94		TBD	
45	4	IV	1	CONDUCT INITIAL RFI	08/21/93	120.0	12/19/93	801
46	4	IV	2	PREPARE DRAFT INITIAL RFI REPORT	12/19/93	28.0	01/16/94	829
47	4	IV	3	PREPARE FINAL INITIAL RFI REPORT	01/16/94	97.0	04/23/94	926
48	4	IV	4	PREPARE DRAFT RFA/SV WORK PLAN (TM)	08/21/93	31.0	09/21/93	712
49	4	IV	5	PREPARE FINAL RFA/SV WORK PLAN (TM)	09/21/93	97.0	12/27/93	809
50	4	IV	6	CONDUCT RFA/SV	12/27/93	77.0	03/14/94	886
51	4	IV	7	PREPARE DRAFT RFA/SV REPORT	03/14/94	28.0	04/11/94	914
52	4	IV	8	PREPARE FINAL RFA/SV REPORT	04/11/94	97.0	07/17/94	1011
53	4	IV	!9	PREPARE FOLLOW-ON DRAFT RFI WORK PLAN	07/17/94	28.0	08/14/94	1039
54	4	IV	!10	PREPARE FOLLOW-ON FINAL RFI WORK PLAN	08/14/94	97.0	11/19/94	1136
55	4	IV	!11	CONDUCT FOLLOW-ON RFI	11/19/94	77.0	02/04/95	1213
56	4	IV	!12	PREPARE FOLLOW-ON DRAFT RFI REPORT	02/04/95	28.0	03/04/95	1241
57	4	IV	!13	PREPARE FOLLOW-ON FINAL RFI REPORT	03/04/95	97.0	06/09/95	1338
58	4	IV	14	PREPARE DRAFT CORRECTIVE MEASURSE STUDY	06/09/95		TBD	

Notes: (TM) – Technical Memorandum; (*) – Presently under CTO 028; (!) – Tasks contingent on RFA/SV findings.

TABLE 6-2: Proposed Schedule for Project Submittals. RCRA Corrective Actions Naval Station Mayport.					
NO.	PHASE	GROUP	PROJECT DELIVERABLE DESCRIPTION	PROPOSED SUBMITTAL DATE	CUMULATIVE DAYS
20	3	III	SUBMIT FINAL RFA/SV REPORT	12/24/93	806
21	4	IV	SUBMIT FINAL RFA/SV WORK PLAN (TM)	12/27/93	809
22	4	IV	SUBMIT DRAFT INITIAL RFI REPORT	01/16/94	829
23	4	IV	SUBMIT DRAFT RFA/SV REPORT	04/11/94	914
24	4	IV	SUBMIT FINAL INITIAL RFI REPORT	04/23/94	926
25	4	IV	SUBMIT FINAL RFA/SV REPORT	07/17/94	1011