N65928.AR.000002
NTC ORLANDO
5090.3a

REMEDIAL ACTION PLAN ADDENDUM NAVAL TRAINING CENTER MCCOY ANNEX SERVICE STATION BUILDING 7174 NTC ORLANDO FL

5/3/1993

OHM REMEDIATION SERVICES

REMEDIAL ACTION PLAN ADDENDUM
NAVAL TRAINING CENTER MCCOY ANNEX
SERVICE STATION BUILDING 7174
ORLANDO, FLORIDA

Prepared for:

Department of the Navy
Naval Facilities Engineering Command, Southern Division
2155 Eagle Drive
North Charleston, South Carolina 29418

Prepared by:

OHM Remediation Services Corp.
13400 Mohawk Road
Clermont, Florida 34711

Gregory A. Dever, PE
Project Engineer

OHM Project No. 13543

May 3, 1993

CERTIFICATION
FLORIDA REGISTERED PROFESSIONAL ENGINEER

In accordance with the provisions of Chapter 471, Florida Statutes, this Remedial Action Plan (RAP) Addendum for the NTC McCoy Annex Service Station, located in Orlando, Florida has been prepared under my responsible charge: supervision, direction and control.

This RAP Addendum satisfies the requirements set forth in Chapter 17-770, FAC for the remedial design elements included in this RAP Addendum and provides reasonable assurance of achieving the objectives stated in Chapter 17-770, FAC. This RAP Addendum is in conformity with current standards of engineering principles and meets acceptable engineering standards.

David K. Kemp, P.E.
Florida Registration #31127

5/4/93
Date

CONSTRUCTABILITY CERTIFICATION
FLORIDA REGISTERED PROFESSIONAL ENGINEER

In accordance with the provisions of Chapter 471, Florida Statutes, a review for constructability was conducted under my responsible charge: supervision, direction and control, of the remedial design documents in the original RAP prepared by others for the NTC McCoy Annex Service Station in Orlando, Florida. The original RAP combined with the RAP Addendum modifications contain sufficient information for preparation of construction documents for permitting and system implementation.

The elements of this RAP Addendum are compatible for construction with the elements of the original RAP prepared by others.

David K. Kemp, P.E.
Florida Registration #31127

5/4/93
Date

TABLE OF CONTENTS

SECTION	PAGE
1.0 INTRODUCTION	1
1.1 PURPOSE	1
2.0 GROUNDWATER QUALITY SAMPLING AND ANALYTICAL RESULTS	2
3.0 GROUNDWATER TREATMENT SYSTEM	3
3.1 AIR STRIPPING TOWER DESIGN	3
3.2 FREE PRODUCT RECOVERY	3
3.3 EFFLUENT DISPOSAL	4
4.0 VAPOR EXTRACTION SYSTEM	5
4.1 FIELD TESTING	5
4.2 TEST RESULTS	5
4.3 SUMMARY	6
5.0 REMEDIATION SYSTEM MODIFICATIONS	7

LIST OF TABLES

1.0 GROUNDWATER LABORATORY ANALYTICAL RESULTS SUMMARY . . . . . Appendix A
2.0 COMPARISON OF GROUNDWATER LABORATORY ANALYTICAL RESULTS . . . . Appendix A

LIST OF FIGURES

1.0 SITE PLAN . . . . . Appendix A
2.0 BENZENE PLUME MAP . . . . . Appendix A
3.0 SVE TEST POINT LOCATIONS . . . . . Appendix A
4.0 SOIL CONTAMINATION MAP . . . . . Appendix A
5.0 VAPOR RECOVERY WELL LOCATION PLAN . . . . . Appendix A
6.0 SVE SYSTEM P&ID . . . . . Appendix A
7.0 REMEDIATION PIPNG PLAN . . . . . Appendix A
8.0 VAPOR RECOVERY WELL DETAIL . . . . . Appendix A

LIST OF APPENDICES

A. TABLES AND FIGURES
B. GROUNDWATER SAMPLE LABORATORY RESULTS
C. AIR STRIPPING TOWER DESIGN CALCULATIONS
D. SOIL VAPOR EXTRACTION FIELD TEST DATA AND DESIGN CALCULATIONS
E. AIR SAMPLE LABORATORY RESULTS

1.0 INTRODUCTION

1.1 PURPOSE

OHM Remediation Services Corp. (OHM) was retained by the Department of the Navy, Naval Facilities Engineering Command, Southern Division to prepare a Remedial Action Plan (RAP) Addendum for the NTC McCoy Annex Service Station, Building 7174 in Orlando, Florida. The scope of work included sampling the groundwater monitor wells to verify the groundwater quality since the last sampling event and conducting a soil vapor extraction field pilot test at the site. The purpose of the RAP Addendum is to provide updated groundwater quality data and revise the soil vapor extraction system proposed in the original RAP dated April 1993. The RAP was originally prepared by ABB Environmental Services, Inc. (ABB). The original RAP proposed groundwater recovery from four recovery wells, discharge of the air stripping tower effluent to the municipal sanitary sewer, and vapor extraction of petroleum hydrocarbon contaminants from the vadose zone utilizing three vapor recovery wells. After conducting additional field investigation and analyses, OHM proposes increasing the vapor extraction system total flow to 260 cfm and addition of a fourth vapor recovery well.

2.0 GROUNDWATER QUALITY SAMPLING AND ANALYTICAL RESULTS

On November 4-5, 1992, groundwater samples were collected from all of the on-site monitor wells except for 7174-9, 7174-10, and 7174-11 and analyzed for compounds associated with the Kerosene Analytical Group. The monitor well locations are shown in Appendix A, Figure 1. Monitor wells 7174-9 and 7174-10 had broken casings and monitor well 7174-11 contained free product. EPA test methods associated with the Kerosene Analytical Group used to analyze groundwater at the NTC McCoy Annex Service Station are EPA Method 624 Modified (Priority Pollutant Volatile Organic including 1,2-Dichloroethane and Methyl tert-butyl-ether MTBE), EPA Method 504 (1,2-Dibromoethane EDB), EPA Method 610 (Polynuclear Aromatic Hydrocarbons), EPA Method 239.2 (Lead), and EPA Method 418.1 (Total Recoverable Petroleum Hydrocarbons).

Results of the sampling and analyses revealed significant levels of dissolved petroleum constituents in monitor wells 7174-1, 7174-2, 7174-5, and 7174-13. Monitor well 7174-11 contained free product and is assumed to have very high levels of dissolved petroleum hydrocarbon contamination. The groundwater laboratory analytical data is included in Appendix B. Appendix A, Table 1 provides a summary of the laboratory analytical results from the November 4-5, 1992 sampling event conducted by OHM. Appendix A, Table 2 provides a comparison of the laboratory analytical results for benzene and Total BTEX between the March 12, 1992 sampling event and the November 4-5, 1992 sampling event. Appendix A, Table 2 shows that the monitor wells which contained dissolved constituents in March 1992 had substantial increases by November 1992 by as much as an order of magnitude. These contaminated wells are located in the interior of the plume as defined in the April 1992 Contamination Assessment Report prepared by ABB. The surrounding monitor wells outside the border of the plume still contain no detectable levels of dissolved petroleum hydrocarbon compounds in November 1992. This indicates the overall shape and extent of the plume are approximately the same while the dissolved groundwater contaminant concentration inside the plume increased (see Appendix A, Figure 2). Due to the increased contaminant levels, OHM conducted a review of the groundwater contaminant influent concentrations to the air stripping tower and air stripping tower performance.

3.1 AIR STRIPPING TOWER DESIGN

OHM conducted a review of the air stripping tower groundwater contaminant influent concentrations using the most recent groundwater analytical data from November 1992. Appendix A, Figure 2 shows the current extent of the contaminant plume will be captured by the groundwater recovery system designed by ABB in the original RAP. The calculations for the air stripping tower influent concentrations are contained in Appendix C. The influent concentration for benzene increased by a factor of 2 over the influent concentration calculated for the March 1992 sampling data. Benzene had the largest influent concentration increase of all the contaminants. The effectiveness of the air stripping tower to treat the groundwater was checked using the modeling program AIRSTRIP. The calculations are contained in Appendix C. A summary of the air stripper calculation effluent concentrations are attached to the AIRSTRIP calculation sheets. The effluent concentrations still meet the recommended effluent concentrations listed in Appendix D of the original RAP, except for MTBE. The calculations in Appendix C of this RAP Addendum predict a MTBE concentration of 246 ppb. ABB recommended an effluent concentration for MTBE of 50 ppb. There are two significant differences between the air stripper calculations in the original RAP and this RAP Addendum. The original RAP used Henry's constants of 0.049 and 0.196 for Naphthalene and MTBE respectively. The values for Henry's constant for these two compounds listed in the FDER Petroleum Cleanup Compliance Manual, are 0.018 and 0.022 respectively. This is the primary reason the effluent concentration for MTBE was predicted to meet the recommended effluent concentrations listed in the original RAP.

Appendix C also contains the air quality impact calculations for the air stripper air emissions. The air quality impacts were calculated using the guidelines contained in the FDER Petroleum Cleanup Compliance Manual. The maximum ambient air impact concentrations for all of the contaminants are less than the acceptable ambient air impact concentrations.

3.2 FREE PRODUCT REMOVAL

The original ABB RAP reported 0.45 feet of free phase petroleum product present in monitor well 7174-11 on March 12, 1992. Free product was also detected in monitor well 7174-11 by OHM on November 5, 1993. No free product was detected in any of the other monitor wells. Due to the limited area impacted by free product, the procedure of manually bailing 7174-11 during the first month's weekly startup sampling as recommended in the orignal RAP should be sufficient for free product removal.

3.3 EFFLUENT DISPOSAL

The original RAP prepared by ABB proposed to discharge the air stripper effluent to the sanitary sewer. Under an existing agreement, the NTC McCoy Annex is permitted to discharge 0.75 million gallons per day (MGD) to the City of Orlando's sanitary sewer system. The Annex currently discharges 0.5 MGD. The air stripper effluent discharges at 22 gallons per minute (GPM) and will increase the daily flow to the sanitary sewer by 0.032 MGD. In addition to limitations of flowrate, the Annex must meet the pretreatment standards required by the City of Orlando Environmental Control Section. These pretreatment standards limit Total Toxic Organics (TTO) to a maximum of 2.13 ppm, pH to 5.5-9.5, and Lead to a maximum of 30 ppb. TTO are those organic substances listed in the Code of Federal Regulations 40 CFR 423. All of the organic contaminants detected in the groundwater at this site are included in the TTO list. The groundwater contaminant influent concentration for lead is 82 ppb. A 0.45 micron filter will be required to remove the lead contamination from the influent stream to meet the effluent limitations of 30 ppb. An Industrial User Discharge Permit from the City of Orlando is required to discharge the air stripper effluent to the sanitary sewer.

In conclusion, the recommended effluent limitations listed in the original RAP are much more stringent than those actually required by the City of Orlando. The MTBE effluent concentration of 246 ppb calculated from the November 1992 sampling data is well below the required limits. The summary sheet at the end of Appendix C lists the influent concentrations, effluent concentrations, and required effluent limitations.

4.1 FIELD TESTING

OHM conducted three separate SVE field pilot tests to determine the design parameters and effectiveness of a SVE system for removal of hydrocarbon vapors from the contaminated soil in the vadose zone on February 17, 1993. A summary of the field data is provided in Appendix D. The tests consisted of drawing a vacuum in the subsurface through a soil boring or monitor well and measuring the induced vacuum in adjacent soil borings and monitor wells. The vacuum was induced using a portable Rotron regenerative vacuum blower. Three separate tests were performed from different locations at the site. Effluent air samples were obtained during each test from the vacuum blower exhaust and analyzed by EPA Method TO_3 for BTEX and TPH.

4.2 TEST RESULTS

The first test used monitor well 7174-11 for the vapor extraction point and measured the induced vacuum in 7174-5, 7174-12, and 7174-2 (see Appendix A, Figure 3). The blower exhaust had a very strong petroleum odor. The blower operated at 50" H_2O vacuum and 55 cfm. A log of elapsed time and vacuum was maintained for each of the monitoring points. No influence was detected at 7174-12. A slight vacuum (0.02") was measured at 7174-2. The vacuum data from 7174-5 was used to determine the soil permeability to air flow for the first test. The calculations are included in Appendix D for all three tests. One air sample was obtained during the first test. The results of all the air samples are included in Appendix E. The tabulated values in the laboratory report are one-third of the actual values due to the nitrogen content in the sample containers. The air sample for the first test contained a total benzene, toluene, ethylbenzene, and xylene (BTEX) concentration of 87.6 ppm and 900 ppm Total Hydrocarbons.

The second test used monitor well 7174-2 for the vapor extraction point and measured the induced vacuum in 7174-5, 7174-15, and 7174-3 (see Appendix A, Figure 3). The blower exhaust had a very strong petroleum odor similar to the first test. The blower operated at 55" H_2O vacuum and 42 cfm. Only a slight vacuum was detected at 7174-15. This is due to the small amount of screen in 7174-15 exposed to the vadose zone. The vacuum data from 7174-5 was used to determine the soil permeability to air flow for the second test. The air sample for the second test contained a total benzene, toluene, ethylbenzene, and xylene (BTEX) concentration of 50.1 ppm and 1530 ppm Total Hydrocarbons.

The third test used a soil boring pilot hole augured midway between 7174-7 and 7174-13 for the vapor extraction point and measured the induced vacuum in another soil boring pilot hole midway between the vapor extraction pilot hole and 7174-7, 7174-7, and 7174-13 (see Appendix A, Figure 3). The blower exhaust had a very strong petroleum odor similar to the

first test. The blower operated at 50" H_2O vacuum and 55 cfm. No vacuum was detected in 7174-7 which was found later to be caused by a vacuum leak in the gauge connection. A vacuum leak at the blower suction caused low vacuum readings at the start of the test in the other monitor points until it was corrected 3.5 minutes into the test. The vacuum data from 7174-13 was used to determine the soil permeability to air flow for the third test. The air sample for the third test contained a total benzene, toluene, ethylbenzene, and xylene (BTEX) concentration of 107.4 ppm and 1800 ppm Total Hydrocarbons.

4.3 SUMMARY

The net results of the three tests provided the following information.

1) Vapor extraction is a viable soil contamination treatment option for this site.

2) The soil permeability to air flow based on the field testing is 2×10^{-10} ft^2.

The soil vapor extraction system of the original RAP was re-designed using the results of the field tests and air sample analytical data. The calculations are included in Appendix D. The calculations predict a flowrate of 64 cfm per well with a radius of influence of 45 feet, a 6-inch diameter well, and a well vacuum of 50" H_2O. Appendix A, Figure 4 shows the extent of the soil contamination and was reproduced from the Contamination Assessment Report prepared by ABB dated April 1992. Appendix A, Figure 5 shows the vapor recovery well location plan, which predicts that four wells are required to achieve the coverage necessary to remediate the soil.

In order to achieve the desired flow and vacuum, the vapor extraction system will require two Rotron EN707, 5 Hp, regenerative blowers or a single Rotron EN12, 15 Hp, regenerative blower. Using two, 5 Hp blowers in parallel is more capital and operationally cost effective than using a single, 15 Hp blower. The Piping and Instrumentation Diagram for the Soil Vapor Extraction System is in Appendix A, Figure 6.

5.0 REMEDIATION SYSTEM MODIFICATIONS

5.1 GROUNDWATER TREATMENT SYSTEM

A permit shall be obtained during the remediation system implementation phase from the City of Orlando in order to discharge the air stripper effluent to the City of Orlando sanitary sewer system.

A 0.45 micron cartridge filter shall be installed in the air stripper groundwater influent line to remove lead contamination to levels below the established sanitary sewer influent limitations.

5.2 SOIL VAPOR EXTRACTION SYSTEM

The soil vapor extraction system flowrate shall be increased to a total of 260 cfm operating at 65" H_2O vacuum drawing from four vapor recovery wells located as shown in Appendix A, Figure 7.

The vapor extraction system shall use two Rotron Model EN707, 5 Hp, regenerative blowers with an inline moisture separator.

The vapor recovery wells shall be modified as shown in Appendix A, Figure 8, to include a 6-inch diameter well screen in a 10-inch diameter borehole. The vapor extraction flow balancing valves shall be located inside the remediation system compound instead of in the vapor recovery well vault for ease of access. The individual vapor recovery lines between the vapor recovery wells and the piping header inside the remediation system compound shall be increased to 3-inch diameter piping.

OHM recommends that the above described modifications to the existing on-site remediation system be implemented as designed in this RAP Addendum.

APPENDIX A

TABLES AND FIGURES

TABLE 1
GROUNDWATER LABORATORY ANALYTICAL RESULTS SUMARY
NTC MCCOY ANNEX SERVICE STATION
ORLANDO, FLORIDA
NOVEMBER 4-5, 1992
(CONCENTRATIONS REPORTED IN PPB)

MONITOR WELL	BENZENE	TOLUENE	ETHYL-BENZENE	XYLENES	TOTAL BTEX	MTBE	NAPHTH-ALENE	LEAD	EDB	TPH
7174-1	320	BDL	85	10	415	680	BDL	BDL	BDL	1300
7174-2	620	17	350	85	1072	4720	135	6	BDL	2800
7174-3	BDL	BDL	BDL	BDL	BDL	36	BDL	9	BDL	BDL
7174-4	BDL	BDL	BDL	BDL	BDL	BDL	BDL	14	BDL	BDL
7174-5	164	7	42.4	66.6	280	1066	BDL	13	BDL	BDL
7174-6	BDL	BDL	BDL	BDL	BDL	BDL	BDL	59	BDL	BDL
7174-7	BDL	BDL	BDL	BDL	BDL	BDL	BDL	14	BDL	BDL
7174-8	BDL	BDL	BDL	BDL	BDL	BDL	BDL	18	BDL	BDL
7174-9	NS	NS	NS	NS	NS	NS	NS	NS	NS	NS
7174-10	NS	NS	NS	NS	NS	NS	NS	NS	NS	NS
7174-11	NS	NS	NS	NS	NS	NS	NS	NS	NS	NS
7174-12	83	BDL	12	BDL	95	2950	43	160	BDL	BDL
7174-13	950	1030	170	950	3100	130	58	105	BDL	BDL
7174-14	BDL	4.2	BDL	5.1	9.3	BDL	BDL	160	BDL	BDL
7174-15	2.7	BDL	BDL	BDL	2.7	47	BDL	8	BDL	BDL
7174-16	BDL	BDL	BDL	BDL	BDL	BDL	BDL	120	BDL	BDL
7174-17	BDL	BDL	BDL	BDL	BDL	BDL	BDL	41	BDL	BDL
7174-18	BDL	BDL	BDL	BDL	BDL	BDL	BDL	82	BDL	BDL
7174-19	BDL	BDL	BDL	BDL	BDL	BDL	BDL	53	BDL	BDL

LEGEND
BDL= BELOW LAB DETECTION LIMITS
NS= NOT SAMPLED

TABLE 2
NTC MCCOY ANNEX SERVICE STATION
COMPARISON OF GROUNDWATER LABORATORY ANALYTICAL RESULTS
MARCH 12, 1992 AND NOVEMBER 4-5 1992

Monitor Well	Benzene (ppb)		Total BTEX (ppb)	
	3/12/92	11/4-5/92	3/12/92	11/4-5/92
7174-1	12	320	21	415
7174-2	190	620	267	1072
7174-3	2	BDL	2	BDL
7174-4	BDL	BDL	BDL	BDL
7174-5	8	164	20	280
7174-6	BDL	BDL	BDL	BDL
7174-7	2	BDL	3	BDL
7174-8	BDL	BDL	BDL	BDL
7174-9	NS	NS	NS	NS
7174-10	NS	NS	NS	NS
7174-11	NS	NS	NS	NS
7174-12	5	83	14	95
7174-13	109	950	233	3100
7174-14	BDL	BDL	BDL	9.3
7174-15	BDL	2.7	BDL	2.7
7174-16	BDL	BDL	BDL	BDL
7174-17	BDL	BDL	BDL	BDL
7174-18	BDL	BDL	BDL	BDL
7174-19	BDL	BDL	BDL	BDL

BDL = Below Lab detection limits
NS = Not Sampled

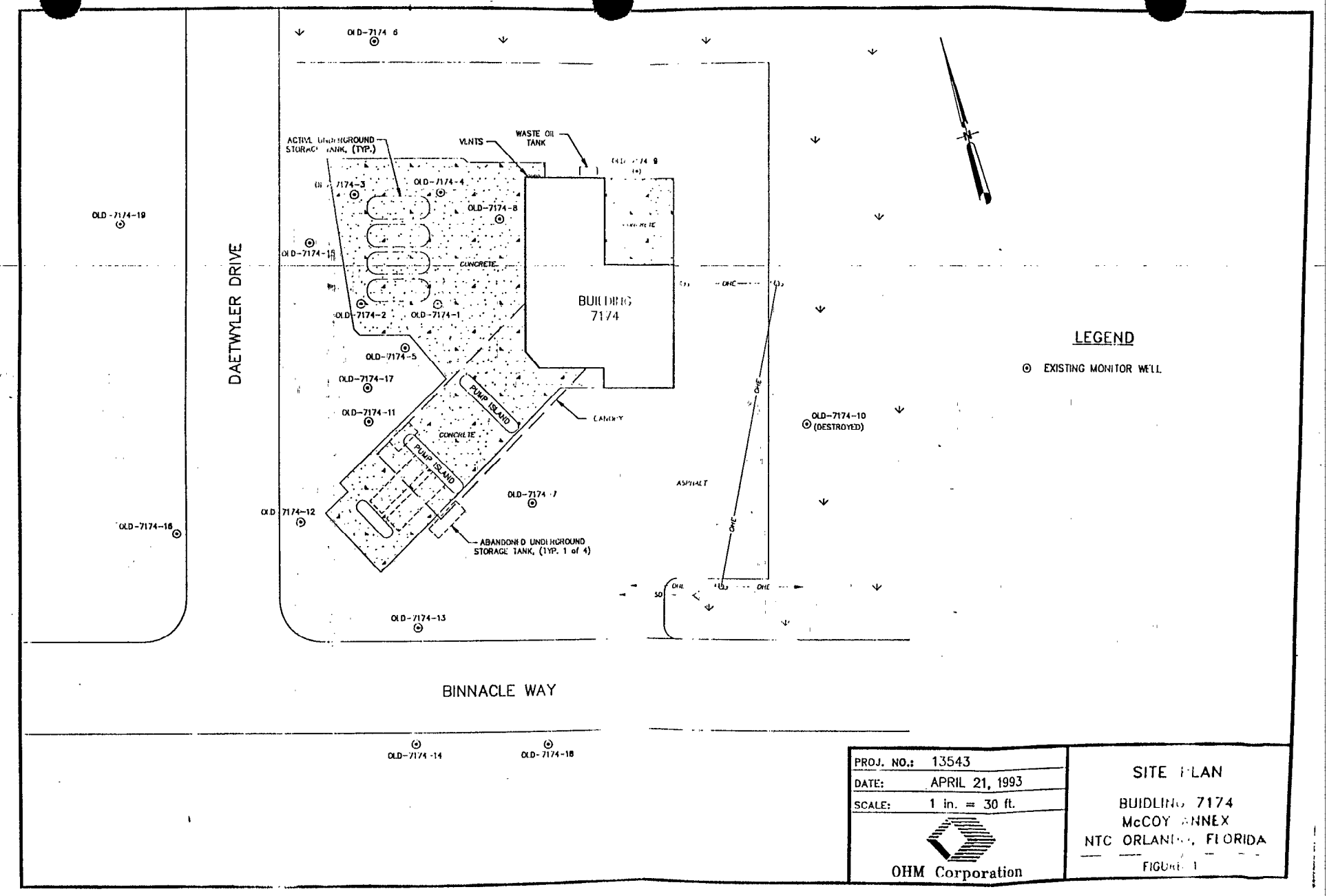

PROJ. NO.:	13543
DATE:	APRIL 21, 1993
SCALE:	1 in. = 30 ft.

OHM Corporation

SITE PLAN

BUIDLING 7174
McCOY ANNEX
NTC ORLANDO, FLORIDA

FIGURE 1

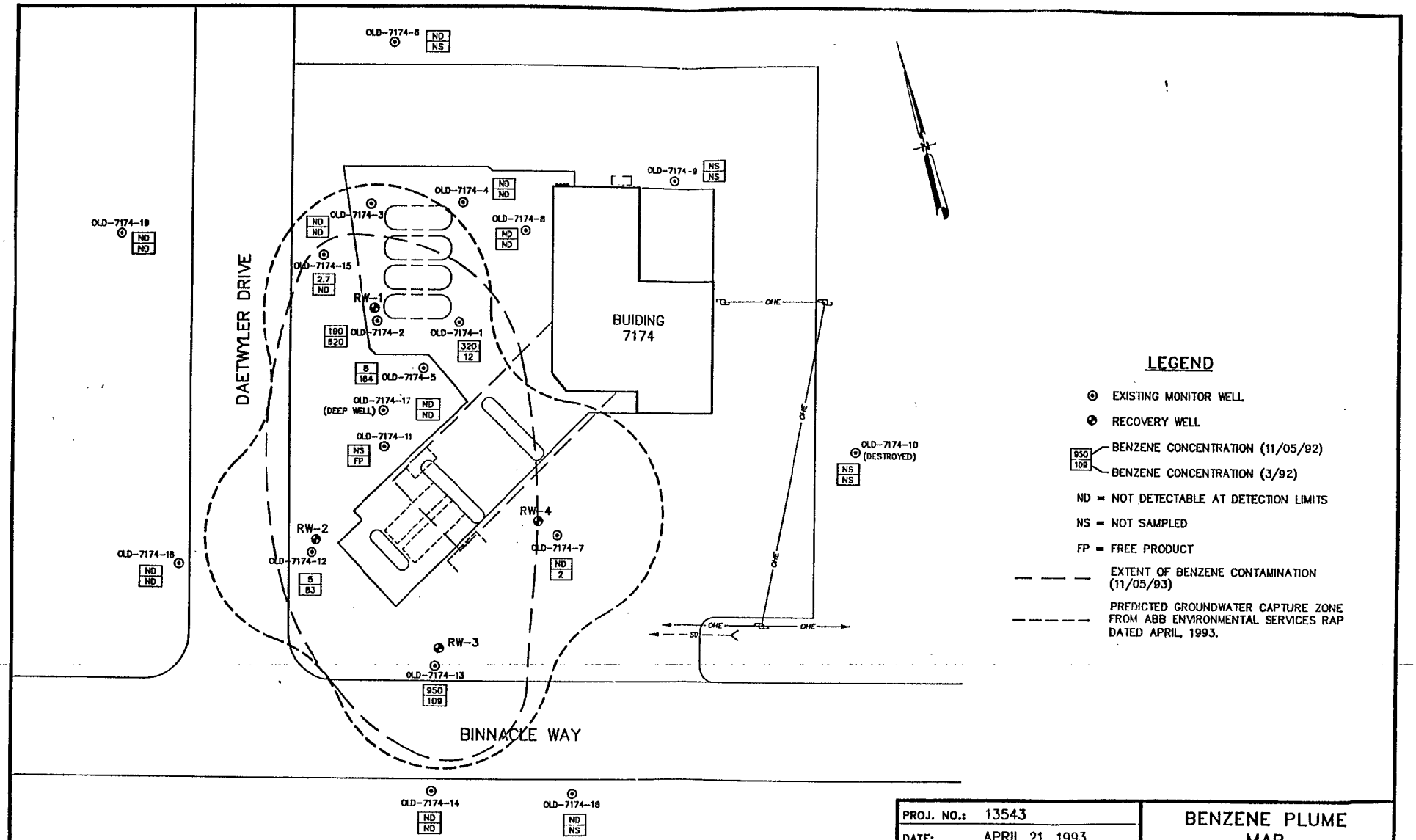

PROJ. NO.:	13543
DATE:	APRIL 21, 1993
SCALE:	1 in. = 30 ft.

OHM Corporation

BENZENE PLUME MAP

BUIDLING 7174
McCOY ANNEX
NTC ORLANDO, FLORIDA

FIGURE

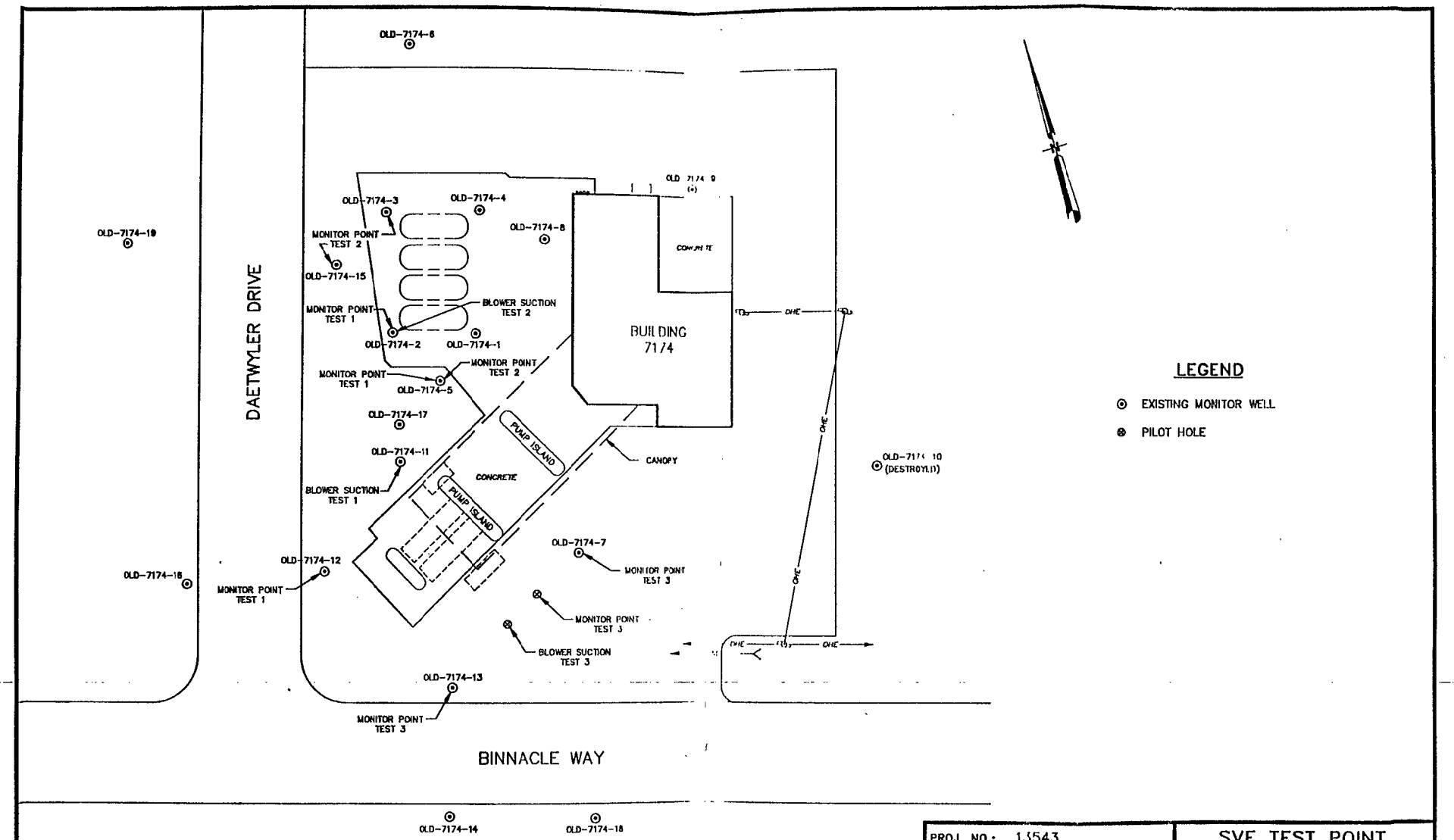

PROJ. NO.:	13543
DATE:	APRIL 21, 1993
SCALE:	1 in. = 30 ft.

OHM Corporation

SVE TEST POINT LOCATIONS (2/17/93)

BUIDLING 7174
McCOY ANNEX
NTC ORLANDO, FLORIDA

FIGURE

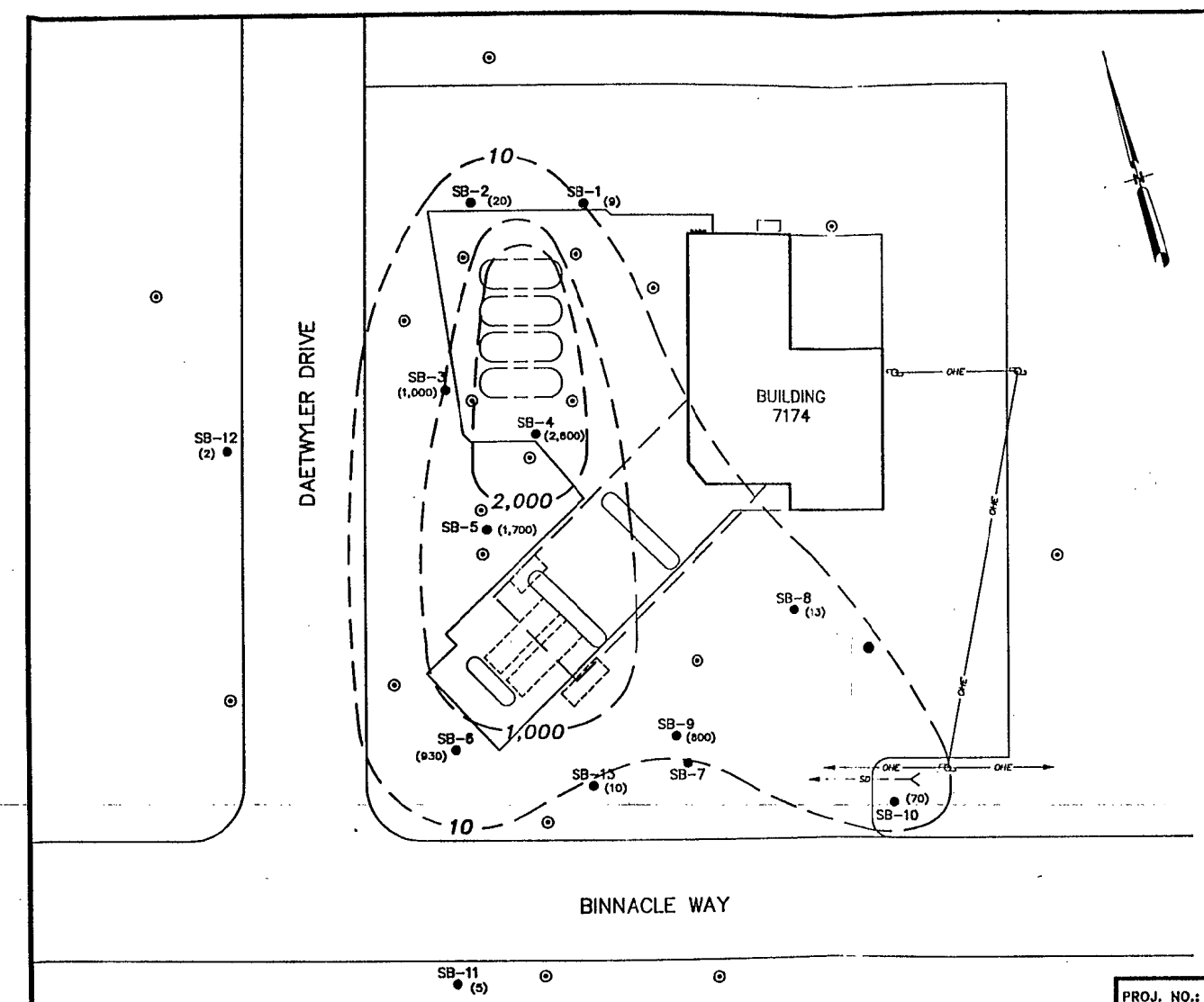

LEGEND

- ⊙ EXISTING MONITOR WELL
- ● SOIL BORING
- (2,600) OVA RESPONSE (ppm)
- ——2,000—— SOIL CONTAMINATION ISOCONCENTRATION LINE (ppm)

NOTE: THIS DRAWING WAS REPRODUCED FROM THE FIGURE 5-1 OF THE CONTAMINATION ASSESSMENT REPORT PREPARED BY ABB ENVIRONMENTAL SERVICES MAY, 1992.

PROJ. NO.:	13543
DATE:	APRIL 21, 1993
SCALE:	1 in. = 30 ft.

OHM Corporation

SOIL CONTAMINATION MAP
BUIDLING 7174
McCOY ANNEX
NTC ORLANDO, FLORIDA

FIGU

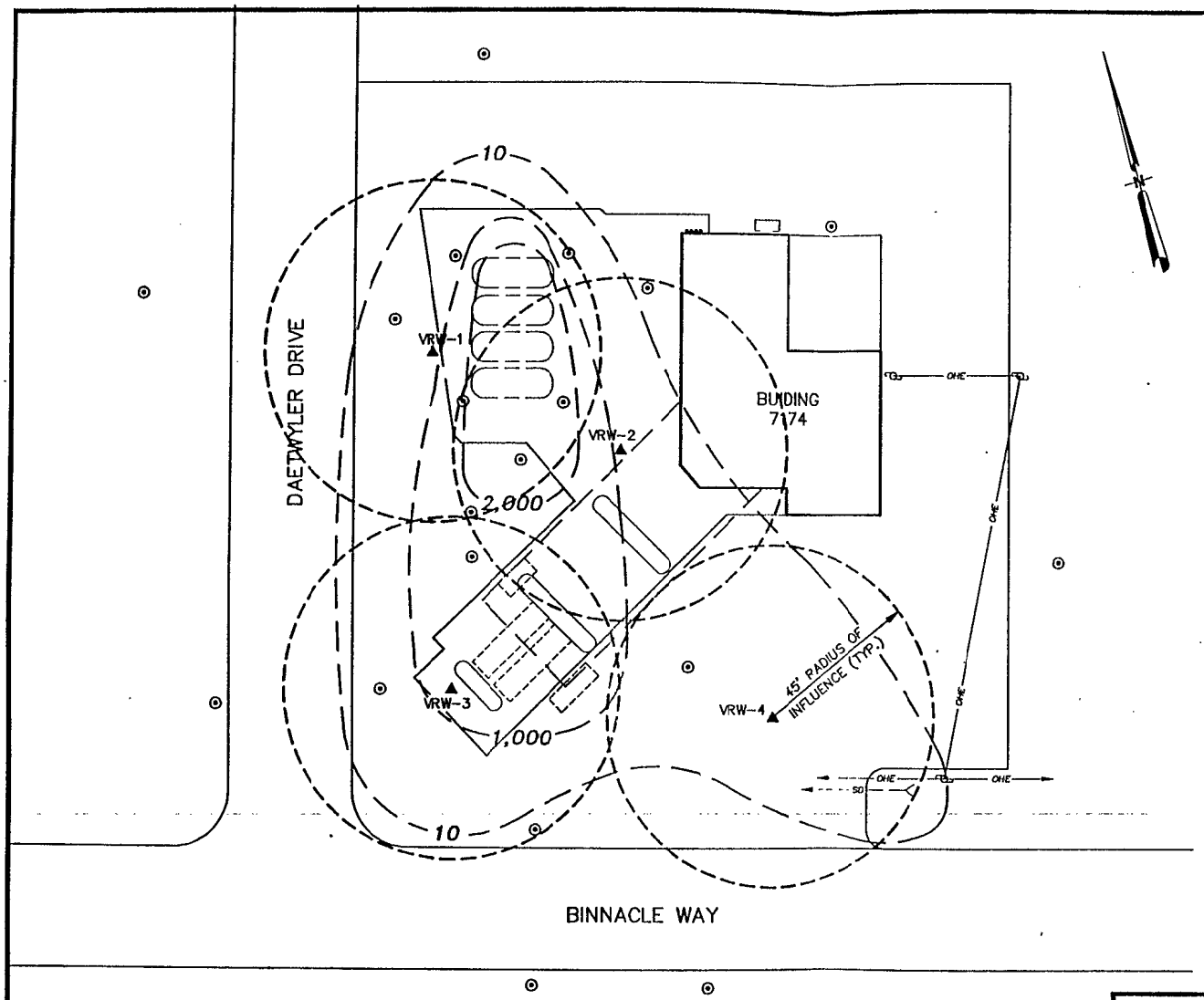

LEGEND

- EXISTING MONITOR WELL
- VAPOR RECOVERY WELL
- 2,000 — SOIL CONTAMINATION ISOCONCENTRATION LINE (ppm)

PROJ. NO.: 13543	VAPOR RECOVERY WELL LOCATION PLAN
DATE: APRIL 21, 1993	BUIDLING 7174
SCALE: 1 in. = 30 ft.	McCOY ANNEX
OHM Corporation	NTC ORLANDO, FLORIDA
	FIG[illegible]5

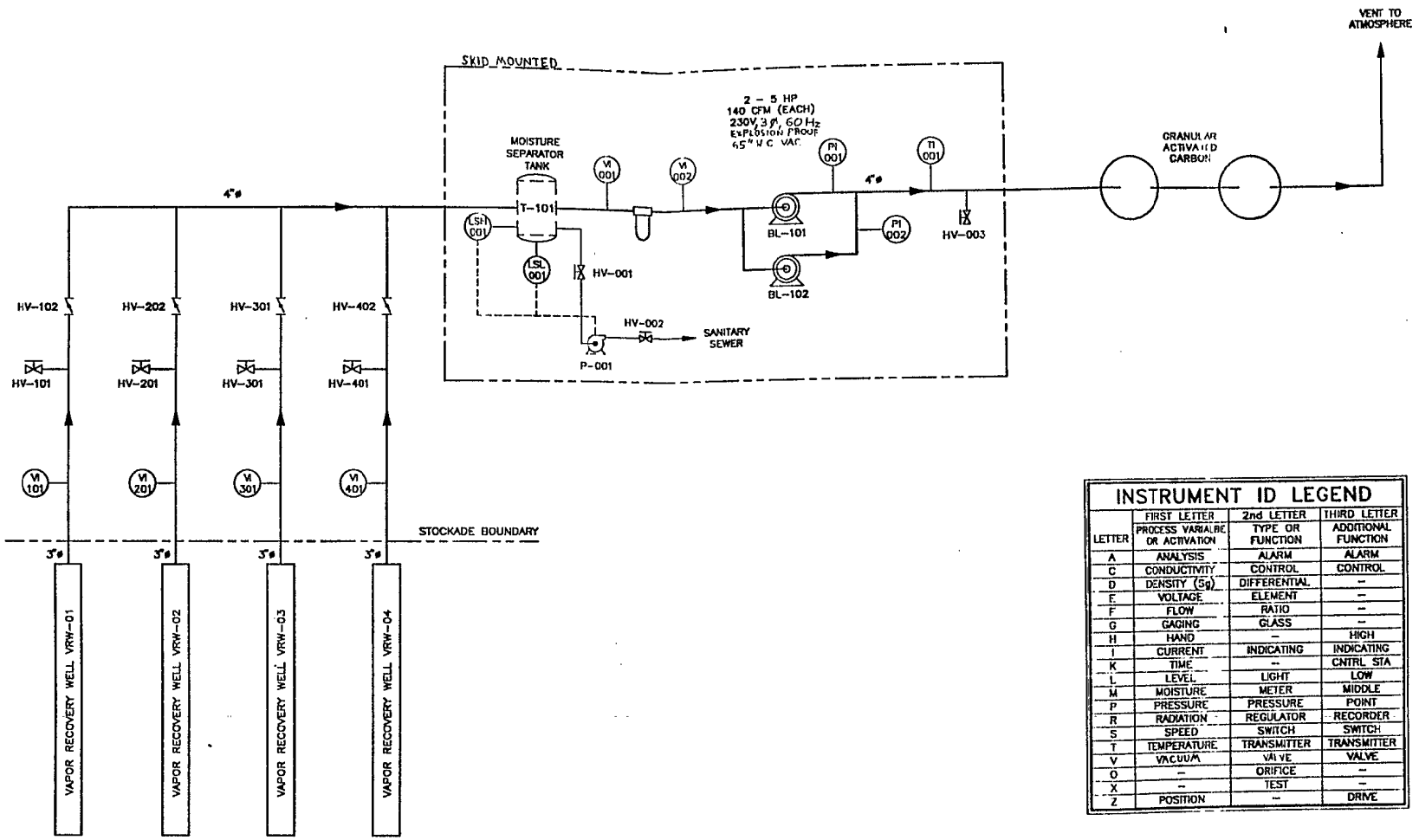

NOTE: RECOVERY WELLS SHALL BE 6" DIA. SCH 40 PVC W/ 0.010" SLOTTED SCREENING.

INSTRUMENT ID LEGEND

LETTER	FIRST LETTER PROCESS VARIABLE OR ACTIVATION	2nd LETTER TYPE OR FUNCTION	THIRD LETTER ADDITIONAL FUNCTION
A	ANALYSIS	ALARM	ALARM
C	CONDUCTIVITY	CONTROL	CONTROL
D	DENSITY (Sg)	DIFFERENTIAL	--
E	VOLTAGE	ELEMENT	--
F	FLOW	RATIO	--
G	GAGING	GLASS	--
H	HAND	--	HIGH
I	CURRENT	INDICATING	INDICATING
K	TIME	--	CNTRL STA
L	LEVEL	LIGHT	LOW
M	MOISTURE	METER	MIDDLE
P	PRESSURE	PRESSURE	POINT
R	RADIATION	REGULATOR	RECORDER
S	SPEED	SWITCH	SWITCH
T	TEMPERATURE	TRANSMITTER	TRANSMITTER
V	VACUUM	VALVE	VALVE
O	--	ORIFICE	--
X	--	TEST	--
Z	POSITION	--	DRIVE

PROJ. NO.:	13543
DATE:	APRIL 21, 1993
SCALE:	NONE

OHM Corporation

SVE PIPING & INSTRUMENTATION DIAGRAM
BUIDLING 7174
McCOY ANNEX
NTC ORLANDO, FLORIDA

FIGURE 6

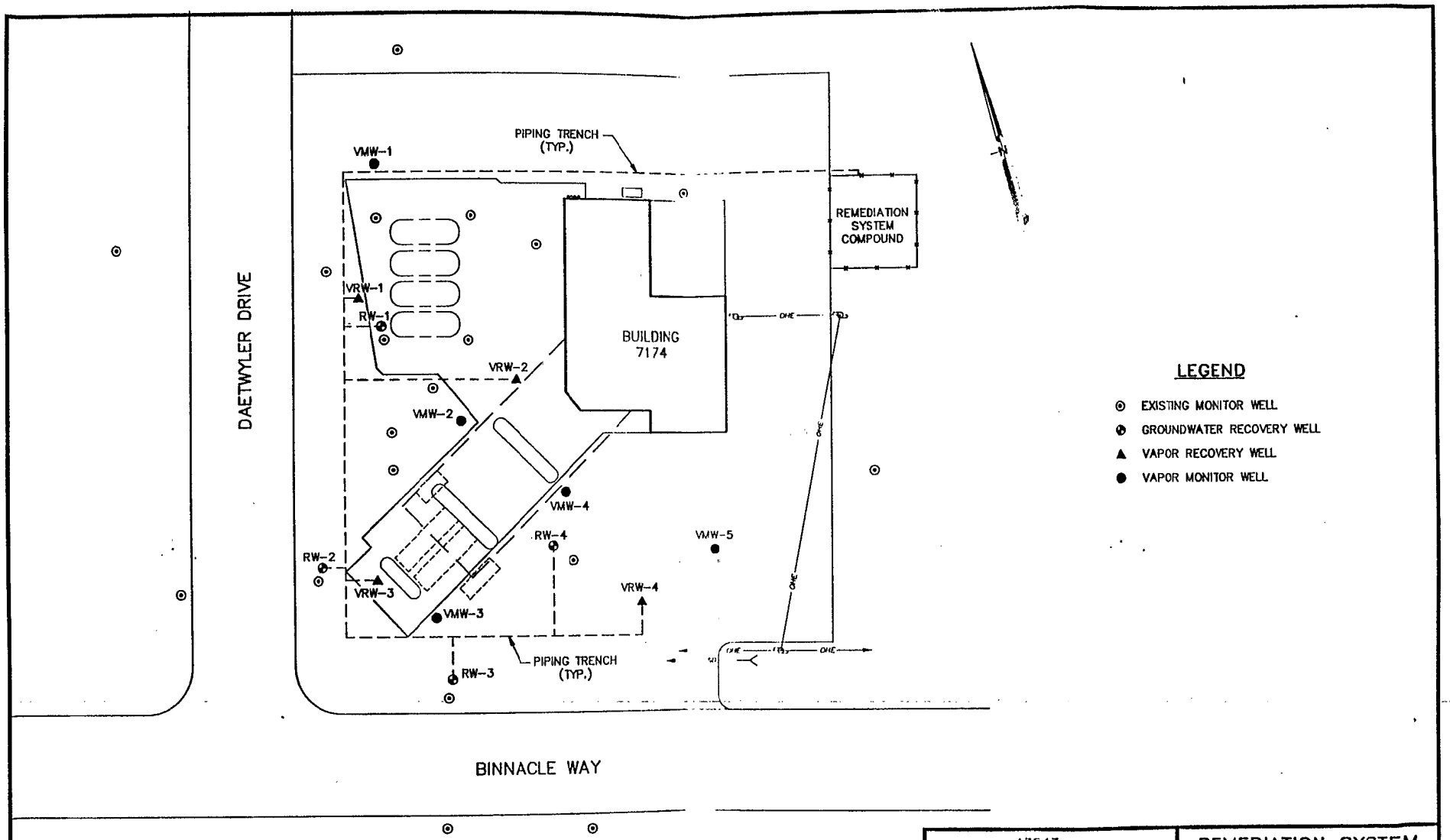

PROJ. NO.:	13543
DATE:	APRIL 21, 1993
SCALE:	1 in. = 30 ft.

OHM Corporation

REMEDIATION SYSTEM PIPING PLAN
BUIDLING 7174
McCOY ANNEX
NTC ORLANDO, FLORIDA

FIGURE 7

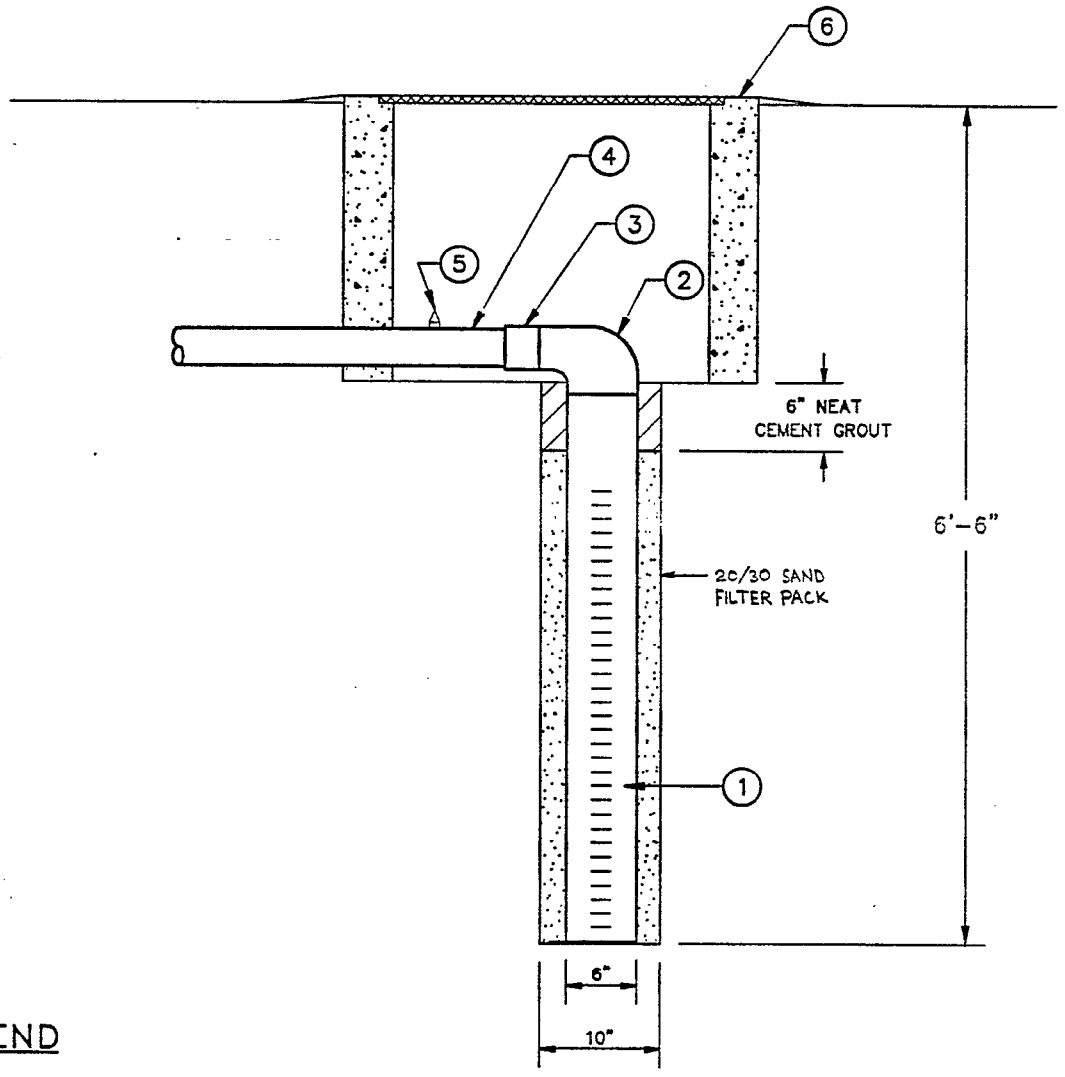

LEGEND

1. 6" – 0.010" SLOT WELL SCREEN
2. 6"x 4" REDUCING 90° ELL
3. 4"x 3" BUSHING
4. 3" PIPING
5. 1/4" THREADED BRASS BARBED NIPPLE
6. 2'x 2'x 2' PRECAST REINFORCED CONCRETE UTILITY BOX WITH H20 LOAD RATED COVER

VAPOR RECOVERY WELL DETAIL

Scale: 3/4" = 1'-0"

Proj. No.:	13543
Date:	APRIL 21, 1993
Drawn By:	ECW
Checked By:	GD

Figure 8
VAPOR RECOVERY WELL DETAIL
BUILDING 7174
McCOY ANNEX
NTC ORLANDO, FLORIDA

OHM Corporation

APPENDIX B

GROUNDWATER SAMPLE LABORATORY RESULTS

PC&B Environmental Laboratories, Inc.
3401 Lake Breeze Road, Orlando, Florida 32808
Phone: 407-290-3245 Fax: 407-297-6924

RECEIVED
NOV 16 1992

November 11, 1992

David Kemp
O.H. Materials Corporation
13400 Mohawk Road
P. O. Box 121190
Clermont, FL 34712-1190

Dear Mr. Kemp,

Enclosed are the results of the analysis of your sample received November 4, 1992.

Our laboratory is certified by the Florida DHRS (Lab #E83239) and operates under an FDER approved Comprehensive Quality Assurance Plan (#900134G). All data were determined in accordance with published procedures (EPA-600/4-79-020), Methods for Chemical Analysis of Water and Wastes, Revised March 1983 and/or Standard Methods for the Examination of Water and Wastewater 17th Edition 1989 and/or Test Methods for Evaluating Solid Waste (EPA-SW-846, Revised November 1989), unless stated otherwise in our CompQAPP under method modifications.

If you have any questions, please do not hesitate to give me a call.

Sincerely,

Declan Cowley
Laboratory Director

PC&B Environmental Laboratories, Inc.
3401 Lake Breeze Road, Orlando, Florida 32808
Phone: 407-290-3245 Fax: 407-297-6924

November 11, 1992

CLIENT: O.H. Materials Corporation
13400 Mohawk Road
P.O. Box 121190
Clermont, FL 34712-1190

CONTACT: David Kemp
1-904-394-8601

PROJECT NAME: NTC McCoy Annex
PROJECT NUMBER: 13543

REFERENCE: Work Order Number 9211028

Lab Sample Number	Matrix	Client ID	Date/Time Sampled	
9211028-1	Water	7174-6	11-04-92	15:05
9211028-2	Water	7174-7	11-04-92	15:45
9211028-3	Water	7174-14	11-04-92	13:50
9211028-4	Water	7174-16	11-04-92	14:10
9211028-5	Water	7174-18	11-04-92	13:20
9211028-6	Water	7174-19	11-04-92	14:35
9211028-7	Water	7174-7D	11-04-92	16:00
9211028-8	Water	Equip. Blank	11-04-92	16:15
9211028-9	Water	Trip Blank	11-04-92	NA

Parameters

8 Kerosene Analytical Group
EPA 601/602 Volatile Organics
EPA 610 PAHs
EPA 504 EDB
EPA 239.2 Lead

Declan Cowley
Laboratory Director

PC&B Environmental Laboratories, Inc.
3401 Lake Breeze Road
Orlando Fl 32808
PHONE : 407-290-3245

VOLATILE ORGANICS

CLIENT NAME : OH MATERIALS
PROJECT NAME : NTC MCOY ANNEX
PROJECT NUMBER : 13543
DATE RECEIVED : 11-04-92
PROTOCOL : EPA 624 MODIFIED

Lab Reference Number	9211028-1	9211028-2	9211028-3	9211028-4	9211028-5	9211028-6
Client Sample ID	7174-6	7174-7	7174-14	7174-16	7174-18	7174-19
Date Sampled	11-04-92	11-04-92	11-04-92	11-04-92	11-04-92	11-04-92
Date Extracted	NA	NA	NA	NA	NA	NA
Date Analyzed	11-10-92	11-10-92	11-10-92	11-10-92	11-10-92	11-10-92
Confirmed	GCMS	GCMS	GCMS	GCMS	GCMS	GCMS
Matrix	WATER	WATER	WATER	WATER	WATER	WATER
Chloromethane	1.0 U	1.0 U	1.0 U	1.0 U	1.0 U	1.0 U
Bromomethane	1.0 U	1.0 U	1.0 U	1.0 U	1.0 U	1.0 U
Dichlorodifluoromethane	1.0 U	1.0 U	1.0 U	1.0 U	1.0 U	1.0 U
Vinyl Chloride	1.0 U	1.0 U	1.0 U	1.0 U	1.0 U	1.0 U
Chloroethane	1.0 U	1.0 U	1.0 U	1.0 U	1.0 U	1.0 U
Methylene Chloride	1.0 U	1.0 U	1.0 U	1.0 U	1.0 U	1.0 U
Trichlorofluoromethane	1.0 U	1.0 U	1.0 U	1.0 U	1.0 U	1.0 U
1,1-Dichloroethene	1.0 U	1.0 U	1.0 U	1.0 U	1.0 U	1.0 U
1,1-Dichloroethane	1.0 U	1.0 U	1.0 U	1.0 U	1.0 U	1.0 U
trans-1,2-Dichloroethene	1.0 U	1.0 U	1.0 U	1.0 U	1.0 U	1.0 U
Chloroform	1.0 U	1.0 U	1.0 U	1.0 U	1.0 U	1.0 U
1,2-Dichloroethane	1.0 U	1.0 U	1.0 U	1.0 U	1.0 U	1.0 U
1,1,1-Trichloroethane	1.0 U	1.0 U	1.0 U	1.0 U	1.0 U	1.0 U
Carbon Tetrachloride	1.0 U	1.0 U	1.0 U	1.0 U	1.0 U	1.0 U
Bromodichloromethane	1.0 U	1.0 U	1.0 U	1.0 U	1.0 U	1.0 U
1,2-Dichloropropane	1.0 U	1.0 U	1.0 U	1.0 U	1.0 U	1.0 U
Benzene	1.0 U	1.0 U	1.0 U	1.0 U	1.0 U	1.0 U
Trichloroethene	1.0 U	1.0 U	1.0 U	1.0 U	1.0 U	1.0 U
Dibromochloromethane	1.0 U	1.0 U	1.0 U	1.0 U	1.0 U	1.0 U
1,1,2-Trichloroethane	1.0 U	1.0 U	1.0 U	1.0 U	1.0 U	1.0 U
cis-1,3-Dichloropropene	1.0 U	1.0 U	1.0 U	1.0 U	1.0 U	1.0 U
2-Chloroethylvinyl ether	1.0 U	1.0 U	1.0 U	1.0 U	1.0 U	1.0 U
Bromoform	1.0 U	1.0 U	1.0 U	1.0 U	1.0 U	1.0 U
1,1,2,2-Tetrachloroethane	1.0 U	1.0 U	1.0 U	1.0 U	1.0 U	1.0 U
Tetrachloroethene	1.0 U	1.0 U	1.0 U	1.0 U	1.0 U	1.0 U
Toluene	1.0 U	1.0 U	4.2	1.0 U	1.0 U	1.0 U
Chlorobenzene	1.0 U	1.0 U	1.0 U	1.0 U	1.0 U	1.0 U
Ethylbenzene	1.0 U	1.0 U	1.0 U	1.0 U	1.0 U	1.0 U
1,3-Dichlorobenzene	1.0 U	1.0 U	1.0 U	1.0 U	1.0 U	1.0 U
1,2-Dichlorobenzene	1.0 U	1.0 U	1.0 U	1.0 U	1.0 U	1.0 U
1,4-Dichlorobenzene	1.0 U	1.0 U	1.0 U	1.0 U	1.0 U	1.0 U
meta & para Xylenes	1.0 U	1.0 U	3.2	1.0 U	1.0 U	1.0 U
ortho Xylene	1.0 U	1.0 U	1.9	1.0 U	1.0 U	1.0 U
Styrene	1.0 U	1.0 U	1.0 U	1.0 U	1.0 U	1.0 U
MTBE	10.0 U	10.0 U	10.0 U	10.0 U	10.0 U	10.0 U
Result Units	ug/l	ug/l	ug/l	ug/l	ug/l	ug/l
% Moisture	NA	NA	NA	NA	NA	NA
Dilution Factor	1	1	1	1	1	1

U = indicates the compound was analysed for, but not detected at the specified value.

CompQAP #900134G/E83239/83353

REVIEWED BY : _____

PC&B Environmental Laboratories, Inc.
3401 Lake Breeze Road
Orlando Fl 32808
PHONE : 407-290-3245

VOLATILE ORGANICS

CLIENT NAME : OH MATERIALS
PROJECT NAME : NTC MCOY ANNEX
PROJECT NUMBER : 13543
DATE RECEIVED : 11-04-92
PROTOCOL : EPA 624 MODIFIED

Lab Reference Number	9211028-7	9211028-8	9211028-9
Client Sample ID	7174-7D	EQUIP BLANK	TRIP BLANK
Date Sampled	11-04-92	11-04-92	11-04-92
Date Extracted	NA	NA	NA
Date Analyzed	11-10-92	11-10-92	11-10-92
Confirmed	GCMS	GCMS	GCMS
Matrix	WATER	WATER	WATER
Chloromethane	1.0 U	1.0 U	1.0 U
Bromomethane	1.0 U	1.0 U	1.0 U
Dichlorodifluoromethane	1.0 U	1.0 U	1.0 U
Vinyl Chloride	1.0 U	1.0 U	1.0 U
Chloroethane	1.0 U	1.0 U	1.0 U
Methylene Chloride	1.0 U	1.0 U	1.0 U
Trichlorofluoromethane	1.0 U	1.0 U	1.0 U
1,1-Dichloroethene	1.0 U	1.0 U	1.0 U
1,1-Dichloroethane	1.0 U	1.0 U	1.0 U
trans-1,2-Dichloroethene	1.0 U	1.0 U	1.0 U
Chloroform	1.0 U	1.0 U	1.0 U
1,2-Dichloroethane	1.0 U	1.0 U	1.0 U
1,1,1-Trichloroethane	1.0 U	1.0 U	1.0 U
Carbon Tetrachloride	1.0 U	1.0 U	1.0 U
Bromodichloromethane	1.0 U	1.0 U	1.0 U
1,2-Dichloropropane	1.0 U	1.0 U	1.0 U
Benzene	2.3	1.0 U	1.0 U
Trichloroethene	1.0 U	1.0 U	1.0 U
Dibromochloromethane	1.0 U	1.0 U	1.0 U
1,1,2-Trichloroethane	1.0 U	1.0 U	1.0 U
cis-1,3-Dichloropropene	1.0 U	1.0 U	1.0 U
2-Chloroethylvinyl ether	1.0 U	1.0 U	1.0 U
Bromoform	1.0 U	1.0 U	1.0 U
1,1,2,2-Tetrachloroethane	1.0 U	1.0 U	1.0 U
Tetrachloroethene	1.0 U	1.0 U	1.0 U
Toluene	1.0 U	1.0 U	1.0 U
Chlorobenzene	1.0 U	1.0 U	1.0 U
Ethylbenzene	1.0 U	1.0 U	1.0 U
1,3-Dichlorobenzene	1.0 U	1.0 U	1.0 U
1,2-Dichlorobenzene	1.0 U	1.0 U	1.0 U
1,4-Dichlorobenzene	1.0 U	1.0 U	1.0 U
meta & para Xylenes	1.0 U	1.0 U	1.0 U
ortho Xylene	1.5	1.0 U	1.0 U
Styrene	1.0 U	1.0 U	1.0 U
MTBE	10.0 U	10.0 U	10.0 U
Result Units	ug/l	ug/l	ug/l
% Moisture	NA	NA	NA
Dilution Factor	1	1	1

U = indicates the compound was analysed for, but not detected at the specified value.

CompQAP #900134G/E83239/83353

REVIEWED BY :

PC&B Environmental Laboratories, Inc.

VOLATILE ORGANICS

MATRIX SPIKE RESULTS

MATRIX : WATER

LAB SAMPLE # : 9211029-1
ANALYSIS DATE : 11-10-92

COMPOUND	AMOUNT SPIKED	SAMPLE RESULT	MS RESULT	MS % RECOVERY	MSD RESULT	MSD% RECOVERY	RPD
1,1-Dichloroethene	50.0	0.0	52.0	104	55.0	110	6
Trichloroethene	50.0	0.0	42.0	84	47.0	94	11
Benzene	50.0	0.0	43.0	86	44.0	88	2
Toluene	50.0	0.0	38.0	76	37.0	74	3
Chlorobenzene	50.0	0.0	46.0	92	49.0	98	6

COMMENTS :

MATRIX SPIKE QUALITY CONTROL LIMITS

	WATER			SOIL		
	LOWER	UPPER	RPD	LOWER	UPPER	RPD
1,1-Dichloroethene	61	145	14	59	172	22
Trichloroethene	71	120	14	62	137	24
Benzene	76	127	11	66	142	21
Toluene	76	125	13	59	139	21
Chlorobenzene	75	130	13	60	133	21

PC&B Environmental Laboratories, Inc.
3401 Lake Breeze Road
Orlando Fl 32808
PHONE : 407-290-3245

POLYNUCLEAR AROMATICS

CLIENT NAME : OH MATERIALS
PROJECT NAME : NTC MCCOY ANNEX
PROJECT NUMBER : 13543
DATE RECEIVED : 11-04-92
PROTOCOL : EPA 610

Lab Reference Number	9211028-1	9211028-2	9211028-3	9211028-4	9211028-5	9211028-6
Client Sample ID	7174-6	7174-7	7174-14	7174-16	7174-18	7174-19
Date Sampled	11-04-92	11-04-92	11-04-92	11-04-92	11-04-92	11-04-92
Date Extracted	11-06-92	11-06-92	11-06-92	11-06-92	11-06-92	11-06-92
Date Analyzed	11-06-92	11-06-92	11-06-92	11-06-92	11-06-92	11-06-92
Confirmed	NO	NO	NO	NO	NO	NO
Matrix	WATER	WATER	WATER	WATER	WATER	WATER
Naphthalene	5 U	5 U	5 U	5 U	5 U	5 U
1-Methyl Naphthalene	5 U	5 U	5 U	5 U	5 U	5 U
2-Methyl Naphthalene	5 U	5 U	5 U	5 U	5 U	5 U
Acenaphthylene	5 U	5 U	5 U	5 U	5 U	5 U
Acenaphthene	5 U	5 U	5 U	5 U	5 U	5 U
Fluorene	5 U	5 U	5 U	5 U	5 U	5 U
Phenanthrene	5 U	5 U	5 U	5 U	5 U	5 U
Anthracene	5 U	5 U	5 U	5 U	5 U	5 U
Fluoranthene	5 U	5 U	5 U	5 U	5 U	5 U
Pyrene	5 U	5 U	5 U	5 U	5 U	5 U
Benzo(a)anthracene	5 U	5 U	5 U	5 U	5 U	5 U
Chrysene	5 U	5 U	5 U	5 U	5 U	5 U
Benzo(b)fluoranthene	5 U	5 U	5 U	5 U	5 U	5 U
Benzo(k)fluoranthene	5 U	5 U	5 U	5 U	5 U	5 U
Benzo(a)pyrene	5 U	5 U	5 U	5 U	5 U	5 U
Indeno(1,2,3-cd)pyrene	5 U	5 U	5 U	5 U	5 U	5 U
Dibenz(a,h)anthracene	5 U	5 U	5 U	5 U	5 U	5 U
Benzo(g,h,i)perylene	5 U	5 U	5 U	5 U	5 U	5 U
Result Units	ug/l	ug/l	ug/l	ug/l	ug/l	ug/l
% Moisture	NA	NA	NA	NA	NA	NA
Dilution Factor	1	1	1	1	1	1

U = indicates the compound was analysed for, but not detected at the specified value.

CompQAP #900[illegible]4G/E83239/8[illegible]3

REVIEWED BY :

PC&B Environmental Laboratories, Inc.
3401 Lake Breeze Road
Orlando Fl 32808
PHONE : 407-290-3245

POLYNUCLEAR AROMATICS

CLIENT NAME : OH MATERIALS
PROJECT NAME : NTC MCCOY ANNEX
PROJECT NUMBER : 13543
DATE RECEIVED : 11-04-92
PROTOCOL : EPA 610

Lab Reference Number	9211028-7	9211028-8
Client Sample ID	7174-7D	EQUIP BLANK
Date Sampled	11-04-92	11-04-92
Date Extracted	11-06-92	11-06-92
Date Analyzed	11-06-92	11-06-92
Confirmed	NO	NO
Matrix	WATER	WATER
Naphthalene	5 U	5 U
1-Methyl Naphthalene	5 U	5 U
2-Methyl Naphthalene	5 U	5 U
Acenaphthylene	5 U	5 U
Acenaphthene	5 U	5 U
Fluorene	5 U	5 U
Phenanthrene	5 U	5 U
Anthracene	5 U	5 U
Fluoranthene	5 U	5 U
Pyrene	5 U	5 U
Benzo(a)anthracene	5 U	5 U
Chrysene	5 U	5 U
Benzo(b)fluoranthene	5 U	5 U
Benzo(k)fluoranthene	5 U	5 U
Benzo(a)pyrene	5 U	5 U
Indeno(1,2,3-cd)pyrene	5 U	5 U
Dibenz(a,h)anthracene	5 U	5 U
Benzo(g,h,i)perylene	5 U	5 U
Result Units	ug/l	ug/l
% Moisture	NA	NA
Dilution Factor	1	1

U = indicates the compound was analysed for, but not detected at the specified value.

CompQAP #900134G/E83239/83353

REVIEWED BY :

PC&B Environmental Laboratories, Inc.

POLYNUCLEAR AROMATICS

MATRIX SPIKE RESULTS

MATRIX : WATER
ANALYSIS DATE : 11-06-92

LAB SAMPLE # : MW-11-06

COMPOUND	AMOUNT SPIKED	SAMPLE RESULT	MS RESULT	MS % RECOVERY
Naphthalene	50.0	0.0	49.0	98
Acenaphthylene	50.0	0.0	56.0	112
Acenaphthene	50.0	0.0	55.0	110
Fluorene	50.0	0.0	60.0	120
Phenanthrene	50.0	0.0	60.0	120
Anthracene	50.0	0.0	65.0	130
Fluoranthene	50.0	0.0	60.0	120
Pyrene	50.0	0.0	61.0	122
Benzo(a)anthracene	50.0	0.0	38.0	76
Chrysene	50.0	0.0	40.0	80
Benzo(b)fluoranthene	50.0	0.0	43.0	86
Benzo(k)fluoranthene	50.0	0.0	48.0	96
Benzo(a)pyrene	50.0	0.0	35.0	70
Indeno(1,2,3-cd)pyrene	50.0	0.0	30.0	60
Dibenz(a,h)anthracene	50.0	0.0	34.0	68
Benzo(g,h,i)perylene	50.0	0.0	34.0	68

COMMENTS :

MATRIX SPIKE QUALITY CONTROL LIMITS

	WATER			SOIL		
	LOWER	UPPER	RPD	LOWER	UPPER	RPD
Naphthalene	33	123	18	46	100	12
Acenaphthylene	43	127	16	50	86	18
Acenaphthene	44	128	17	47	97	9
Fluorene	45	135	17	17	131	24
Phenanthrene	47	129	19	49	97	12
Anthracene	42	138	18	51	87	9
Fluoranthene	45	135	17	49	91	10
Pyrene	23	155	27	30	120	20
Benzo(a)anthracene	31	131	24	43	103	14
Chrysene	26	152	23	18	142	27
Benzo(b)fluoranthene	10	142	30	36	102	15
Benzo(k)fluoranthene	15	147	27	29	101	20
Benzo(a)pyrene	18	138	28	39	99	15
Indeno(1,2,3-cd)pyrene	7	139	32	51	87	9
Dibenz(a,h)anthracene	21	153	26	49	87	9
Benzo(g,h,i)perylene	17	149	40	57	79	16

PC&B Environmental Laboratories, Inc.
3401 Lake Breeze Road
Orlando Fl 32808
PHONE : 407-290-3245

EDB/DBCP

CLIENT NAME : OH MATERIALS
PROJECT NAME : NTC MCOY ANNEX
PROJECT NUMBER : 13543
DATE RECEIVED : 11-04-92
PROTOCOL : EPA 504

Lab Reference Number	9211028-1	9211028-2	9211028-3	9211028-4	9211028-5	9211028-6
Client Sample ID	7174-6	7174-7	7174-14	7174-16	7174-18	7174-19
Date Sampled	11-04-92	11-04-92	11-04-92	11-04-92	11-04-92	11-04-92
Date Extracted	11-09-92	11-09-92	11-09-92	11-09-92	11-09-92	11-09-92
Date Analyzed	11-09-92	11-09-92	11-09-92	11-09-92	11-09-92	11-09-92
Confirmed	NO	NO	NO	NO	NO	NO
Matrix	WATER	WATER	WATER	WATER	WATER	WATER
EDB	0.02 U	0.02 U	0.02 U	0.02 U	0.02 U	0.02 U
DBCP	0.05 U	0.05 U	0.05 U	0.05 U	0.05 U	0.05 U
Result Units	ug/l	ug/l	ug/l	ug/l	ug/l	ug/l
% Moisture	NA	NA	NA	NA	NA	NA
Dilution Factor	1	1	1	1	1	1

U = indicates the compound was analysed for, but not detected at the specified value.

CompQAP #900134G/E83239/83353

REVIEWED BY : _____

PC&B Environmental Laboratories, Inc.
3401 Lake Breeze Road
Orlando Fl 32808
PHONE : 407-290-3245

EDB/DBCP

CLIENT NAME : OH MATERIALS
PROJECT NAME : NTC MCOY ANNEX
PROJECT NUMBER : 13543
DATE RECEIVED : 11-04-92
PROTOCOL : EPA 504

Lab Reference Number	9211028-7	9211028-8
Client Sample ID	7174-7D	EQUIP BLANK
Date Sampled	11-04-92	11-04-92
Date Extracted	11-09-92	11-09-92
Date Analyzed	11-09-92	11-09-92
Confirmed	NO	NO
Matrix	WATER	WATER
EDB	0.02 U	0.02 U
DBCP	0.05 U	0.05 U
Result Units	ug/l	ug/l
% Moisture	NA	NA
Dilution Factor	1	1

U = indicates the compound was analysed for, but not detected at the specified value.

CompQAP #900134G/E83239/83353

REVIEWED BY :

PC&B Environmental Laboratories, Inc.

EDB/DBCP

MATRIX SPIKE RESULTS

MATRIX : WATER
ANALYSIS DATE : 11-09-92

LAB SAMPLE # : 9211037-6

COMPOUND	AMOUNT SPIKED	SAMPLE RESULT	MS RESULT	MS % RECOVERY
EDB	2.00	0.00	2.11	105
DBCP	2.00	0.00	1.65	82

COMMENTS :

MATRIX SPIKE QUALITY CONTROL LIMITS

	WATER			SOIL		
	LOWER	UPPER	RPD	LOWER	UPPER	RPD
EDB	57	137	17	50	140	20
DBCP	66	130	14	60	130	20

PC&B Environmental Laboratories, Inc.
3401 Lake Breeze Road
Orlando Fl 32808
PHONE : 407-290-3245

INORGANICS ANALYSIS

CLIENT NAME : O.H.MATERIALS CORP.
PROJECT NAME : NTC MCCOY ANNEX
PROJECT NUMBER : 13543
DATE RECEIVED : 11-04-92

Lab Reference Number		9211028-1	9211028-2	9211028-3	9211028-4	9211028-5	9211028-6
Client Sample ID		7174-6	7174-7	7174-14	7174-16	7174-18	7174-19
Date Sampled		11-04-92	11-04-92	11-04-92	11-04-92	11-04-92	11-04-92
Matrix		WATER	WATER	WATER	WATER	WATER	WATER
Lead, Total	ug/l	59	14	160	120	82	53
TPH	mg/l	1.0 U	1.0 U	1.0 U	1.0 U	1.0 U	1.0 U

U = indicates the analyte was tested for, but was undetected to the specified value.

CompQAP #900134G/E83239/83353

REVIEWED BY :

PC&B Environmental Laboratories, Inc.
3401 Lake Breeze Road
Orlando Fl 32808
PHONE : 407-290-3245

INORGANICS ANALYSIS

CLIENT NAME : O.H.MATERIALS CORP.
PROJECT NAME : NTC MCCOY ANNEX
PROJECT NUMBER : 13543
DATE RECEIVED : 11-04-92

Lab Reference Number		9211028-7	9211028-8
Client Sample ID		7174-7D	EQUIP.BLK
Date Sampled		11-04-92	11-04-92
Matrix		WATER	WATER
Lead, Total	ug/l	34	3.0 U
TPH	mg/l	1.0 U	1.0 U

U = indicates the analyte was tested for, but was undetected to the specified value.

CompQAP #900134G/E83239/83353

REVIEWED BY :

PC&B Environmental Laboratories, Inc.

INORGANICS

MATRIX SPIKE RESULTS

MATRIX : WATER **LAB SAMPLE # : 9211021-2**
ANALYSIS DATE : 11-05-92

PARAMETER	AMOUNT SPIKED	SAMPLE RESULT	MS RESULT	MS % RECOVERY
Lead, Total	25.0	13.0	34.0	84
TPH	10.0	0.0	10.0	100

COMMENTS : Note: TRPH Spike was done on sample number 9211021-1.

MATRIX SPIKE QUALITY CONTROL LIMITS

	WATER			SOIL		
	LOWER	UPPER	RPD	LOWER	UPPER	RPD
Lead, Total	75	135	10	57	141	14
TPH	87	111	5	88	108	3

PC&B Environmental Laboratories, Inc.
3401 Lake Breeze Road, Orlando, Florida 32808
Phone: 407-290-3245 Fax: 407-297-6924

RECEIVED
NOV 16 1992

November 13, 1992

David Kemp
O.H. Materials Corporation
13400 Mohawk Road
P. O. Box 121190
Clermont, FL 34712-1190

Dear Mr. Kemp,

Enclosed are the results of the analysis of your sample received November 5, 1992.

Our laboratory is certified by the Florida DHRS (Lab #E83239) and operates under an FDER approved Comprehensive Quality Assurance Plan (#900134G). All data were determined in accordance with published procedures (EPA-600/4-79-020), Methods for Chemical Analysis of Water and Wastes, Revised March 1983 and/or Standard Methods for the Examination of Water and Wastewater 17th Edition 1989 and/or Test Methods for Evaluating Solid Waste (EPA-SW-846, Revised November 1989), unless stated otherwise in our CompQAPP under method modifications.

If you have any questions, please do not hesitate to give me a call.

Sincerely,

Declan Cowley
Laboratory Director

PC&B Environmental Laboratories, Inc.
3401 Lake Breeze Road, Orlando, Florida 32808
Phone: 407-290-3245 Fax: 407-297-6924

November 13, 1992

CLIENT: O.H. Materials Corporation
13400 Mohawk Road
P.O. Box 121190
Clermont, FL 34712-1190

CONTACT: David Kemp
1-904-394-8601

PROJECT NAME: NTC McCOY ANNEX
PROJECT NUMBER: 13543

REFERENCE: Work Order Number 9211036

Lab Sample Number	Matrix	Client ID	Date/Time Sampled	
9211036-1	Water	7174-1	11-05-92	10:30
9211036-2	Water	7174-2	11-05-92	12:35
9211036-3	Water	7174-3	11-05-92	11:35
9211036-4	Water	7174-4	11-05-92	11:15
9211036-5	Water	7174-5	11-05-92	13:10
9211036-6	Water	7174-8	11-05-92	10:55
9211036-7	Water	7174-12	11-05-92	10:10
9211036-8	Water	7174-13	11-05-92	09:45
9211036-9	Water	7174-15	11-05-92	12:10
9211036-10	Water	7174-17	11-05-92	12:45
9211036-11	Water	7174-5D	11-05-92	13:20
9211036-12	Water	Equip. Blank	11-05-92	13:30

Parameters

12 Kerosene Analytical Organics
___ EPA 601/602 Volatile Organics
EPA 610 PAHs
EPA 504 EDB
EPA 418.1 TRPH
Lead

Declan Cowley
Laboratory Director

PC&B Environmental Laboratories, Inc.
3401 Lake Breeze Road
Orlando Fl 32808
PHONE : 407-290-3245

VOLATILE ORGANICS

CLIENT NAME : OH MATERIALS
PROJECT NAME : NTC MCOY ANNEX
PROJECT NUMBER : 13543
DATE RECEIVED : 11-05-92
PROTOCOL : EPA 624 MODIFIED

Lab Reference Number	9211036-1	9211036-2	9211036-3	9211036-4	9211036-5	9211036-6
Client Sample ID	7174-1	7174-2	7174-3	7174-4	7174-5	7174-8
Date Sampled	11-05-92	11-05-92	11-05-92	11-05-92	11-05-92	11-05-92
Date Extracted	NA	NA	NA	NA	NA	NA
Date Analyzed	11-11-92	11-11-92	11-11-92	11-11-92	11-12-92	11-11-92
Confirmed	GCMS	GCMS	GCMS	GCMS	GCMS	GCMS
Matrix	WATER	WATER	WATER	WATER	WATER	WATER
Chloromethane	5 U	10 U	1.0 U	1.0 U	2.0 U	1.0 U
Bromomethane	5 U	10 U	1.0 U	1.0 U	2.0 U	1.0 U
Dichlorodifluoromethane	5 U	10 U	1.0 U	1.0 U	2.0 U	1.0 U
Vinyl Chloride	5 U	10 U	1.0 U	1.0 U	2.0 U	1.0 U
Chloroethane	5 U	10 U	1.0 U	1.0 U	2.0 U	1.0 U
Methylene Chloride	5 U	10 U	1.0 U	1.0 U	2.0 U	1.0 U
Trichlorofluoromethane	5 U	10 U	1.0 U	1.0 U	2.0 U	1.0 U
1,1-Dichloroethene	5 U	10 U	1.0 U	1.0 U	2.0 U	1.0 U
1,1-Dichloroethane	5 U	10 U	1.0 U	1.0 U	2.0 U	1.0 U
trans-1,2-Dichloroethene	5 U	10 U	1.0 U	1.0 U	2.0 U	1.0 U
Chloroform	5 U	10 U	1.0 U	1.0 U	2.0 U	1.0 U
1,2-Dichloroethane	5 U	10 U	1.0 U	1.0 U	2.0 U	1.0 U
1,1,1-Trichloroethane	5 U	10 U	1.0 U	1.0 U	2.0 U	1.0 U
Carbon Tetrachloride	5 U	10 U	1.0 U	1.0 U	2.0 U	1.0 U
Bromodichloromethane	5 U	10 U	1.0 U	1.0 U	2.0 U	1.0 U
1,2-Dichloropropane	5 U	10 U	1.0 U	1.0 U	2.0 U	1.0 U
Benzene	320	620	1.0 U	1.0 U	164.0	1.0 U
Trichloroethene	5 U	10 U	1.0 U	1.0 U	2.0 U	1.0 U
Dibromochloromethane	5 U	10 U	1.0 U	1.0 U	2.0 U	1.0 U
1,1,2-Trichloroethane	5 U	10 U	1.0 U	1.0 U	2.0 U	1.0 U
cis-1,3-Dichloropropene	5 U	10 U	1.0 U	1.0 U	2.0 U	1.0 U
2-Chloroethylvinyl ether	5 U	10 U	1.0 U	1.0 U	2.0 U	1.0 U
Bromoform	5 U	10 U	1.0 U	1.0 U	2.0 U	1.0 U
1,1,2,2-Tetrachloroethane	5 U	10 U	1.0 U	1.0 U	2.0 U	1.0 U
Tetrachloroethene	5 U	10 U	1.0 U	1.0 U	2.0 U	1.0 U
Toluene	5 U	17	1.0 U	1.0 U	7.0	1.0 U
Chlorobenzene	5 U	10 U	1.0 U	1.0 U	2.0 U	1.0 U
Ethylbenzene	85	350	1.0 U	1.0 U	42.4	1.0 U
1,3-Dichlorobenzene	5 U	10 U	1.0 U	1.0 U	2.0 U	1.0 U
1,2-Dichlorobenzene	5 U	10 U	1.0 U	1.0 U	2.0 U	1.0 U
1,4-Dichlorobenzene	5 U	10 U	1.0 U	1.0 U	2.0 U	1.0 U
meta & para Xylenes	10	85	1.0 U	1.0 U	52.4	1.0 U
ortho Xylene	5 U	10 U	1.0 U	1.0 U	14.2	1.0 U
Styrene	5 U	10 U	1.0 U	1.0 U	2.0 U	1.0 U
MTBE	680	4720	36.0	10.0 U	1066.0	10.0 U
Result Units	ug/l	ug/l	ug/l	ug/l	ug/l	ug/l
% Moisture	NA	NA	NA	NA	NA	NA
Dilution Factor	5	10	1	1	2	1

U = indicates the compound was analysed for, but not detected at the specified value.

CompQAP #900134G/E83239/83353

REVIEWED BY : _____

PC&B Environmental Laboratories, Inc.
3401 Lake Breeze Road
Orlando Fl 32808
PHONE : 407-290-3245

VOLATILE ORGANICS

CLIENT NAME : OH MATERIALS
PROJECT NAME : NTC MCOY ANNEX
PROJECT NUMBER : 13543
DATE RECEIVED : 11-05-92
PROTOCOL : EPA 624 MODIFIED

Lab Reference Number	9211036-7	9211036-8	9211036-9	9211036-10	9211036-11	9211036-12
Client Sample ID	7174-12	7174-13	7174-15	7174-17	7174-5D	EQUIP BLANK
Date Sampled	11-05-92	11-05-92	11-05-92	11-05-92	11-05-92	11-05-92
Date Extracted	NA	NA	NA	NA	NA	NA
Date Analyzed	11-12-92	11-12-92	11-12-92	11-12-92	11-12-92	11-12-92
Confirmed	GCMS	GCMS	GCMS	GCMS	GCMS	GCMS
Matrix	WATER	WATER	WATER	WATER	WATER	WATER
Chloromethane	10 U	10 U	1.0 U	1.0 U	10 U	1.0 U
Bromomethane	10 U	10 U	1.0 U	1.0 U	10 U	1.0 U
Dichlorodifluoromethane	10 U	10 U	1.0 U	1.0 U	10 U	1.0 U
Vinyl Chloride	10 U	10 U	1.0 U	1.0 U	10 U	1.0 U
Chloroethane	10 U	10 U	1.0 U	1.0 U	10 U	1.0 U
Methylene Chloride	10 U	10 U	1.0 U	1.0 U	10 U	1.0 U
Trichlorofluoromethane	10 U	10 U	1.0 U	1.0 U	10 U	1.0 U
1,1-Dichloroethene	10 U	10 U	1.0 U	1.0 U	10 U	1.0 U
1,1-Dichloroethane	10 U	10 U	1.0 U	1.0 U	10 U	1.0 U
trans-1,2-Dichloroethene	10 U	10 U	1.0 U	1.0 U	10 U	1.0 U
Chloroform	10 U	10 U	1.0 U	1.0 U	10 U	1.0 U
1,2-Dichloroethane	10 U	10 U	1.0 U	1.0 U	10 U	1.0 U
1,1,1-Trichloroethane	10 U	10 U	1.0 U	1.0 U	10 U	1.0 U
Carbon Tetrachloride	10 U	10 U	1.0 U	1.0 U	10 U	1.0 U
Bromodichloromethane	10 U	10 U	1.0 U	1.0 U	10 U	1.0 U
1,2-Dichloropropane	10 U	10 U	1.0 U	1.0 U	10 U	1.0 U
Benzene	83	950	2.7	1.0 U	140	1.0 U
Trichloroethene	10 U	10 U	1.0 U	1.0 U	10 U	1.0 U
Dibromochloromethane	10 U	10 U	1.0 U	1.0 U	10 U	1.0 U
1,1,2-Trichloroethane	10 U	10 U	1.0 U	1.0 U	10 U	1.0 U
cis-1,3-Dichloropropene	10 U	10 U	1.0 U	1.0 U	10 U	1.0 U
2-Chloroethylvinyl ether	10 U	10 U	1.0 U	1.0 U	10 U	1.0 U
Bromoform	10 U	10 U	1.0 U	1.0 U	10 U	1.0 U
1,1,2,2-Tetrachloroethane	10 U	10 U	1.0 U	1.0 U	10 U	1.0 U
Tetrachloroethene	10 U	10 U	1.0 U	1.0 U	10 U	1.0 U
Toluene	10 U	1030	1.0 U	1.0 U	10 U	1.0 U
Chlorobenzene	10 U	10 U	1.0 U	1.0 U	10 U	1.0 U
Ethylbenzene	12	170	1.0 U	1.0 U	32	1.0 U
1,3-Dichlorobenzene	10 U	10 U	1.0 U	1.0 U	10 U	1.0 U
1,2-Dichlorobenzene	10 U	10 U	1.0 U	1.0 U	10 U	1.0 U
1,4-Dichlorobenzene	10 U	10 U	1.0 U	1.0 U	10 U	1.0 U
meta & para Xylenes	10 U	730	1.0 U	1.0 U	37	1.0 U
ortho Xylene	10 U	220	1.0 U	1.0 U	10 U	1.0 U
Styrene	10 U	10 U	1.0 U	1.0 U	10 U	1.0 U
MTBE	2950	130	47.0	10.0 U	1430	10.0 U
Result Units	ug/l	ug/l	ug/l	ug/l	ug/l	ug/l
% Moisture	NA	NA	NA	NA	NA	NA
Dilution Factor	10	10	1	1	10	1

U = indicates the compound was analysed for, but not detected at the specified value.

CompQAP #900134G/E83239/83353

REVIEWED BY : _____

PC&B Environmental Laboratories, Inc.

VOLATILE ORGANICS

MATRIX SPIKE RESULTS

MATRIX : WATER

LAB SAMPLE # : 9211036-9
ANALYSIS DATE : 11-12-92

COMPOUND	AMOUNT SPIKED	SAMPLE RESULT	MS RESULT	MS % RECOVERY	MSD RESULT	MSD% RECOVERY	RPD
1,1-Dichloroethene	50.0	0.0	54.0	108	55.0	110	2
Trichloroethene	50.0	0.0	48.0	96	48.0	96	0
Benzene	50.0	0.0	56.0	112	58.0	116	4
Toluene	50.0	0.0	45.0	90	43.0	86	5
Chlorobenzene	50.0	0.0	45.0	90	45.0	90	0

COMMENTS :

MATRIX SPIKE QUALITY CONTROL LIMITS

	WATER			SOIL		
	LOWER	UPPER	RPD	LOWER	UPPER	RPD
1,1-Dichloroethene	61	145	14	59	172	22
Trichloroethene	71	120	14	62	137	24
Benzene	76	127	11	66	142	21
Toluene	76	125	13	59	139	21
Chlorobenzene	75	130	13	60	133	21

PC&B Environmental Laboratories, Inc.
3401 Lake Breeze Road
Orlando Fl 32808
PHONE : 407-290-3245

POLYNUCLEAR AROMATICS

CLIENT NAME : OH MATERIALS
PROJECT NAME : NTC MCOY ANNEX
PROJECT NUMBER : 13543
DATE RECEIVED : 11-05-92
PROTOCOL : EPA 610

Lab Reference Number	9211036-1	9211036-2	9211036-3	9211036-4	9211036-5	9211036-6
Client Sample ID	7174-1	7174-2	7174-3	7174-4	7174-5	7174-8
Date Sampled	11-05-92	11-05-92	11-05-92	11-05-92	11-05-92	11-05-92
Date Extracted	11-10-92	11-10-92	11-10-92	11-10-92	11-10-92	11-10-92
Date Analyzed	11-11-92	11-11-92	11-11-92	11-11-92	11-11-92	11-11-92
Confirmed	NO	NO	NO	NO	NO	NO
Matrix	WATER	WATER	WATER	WATER	WATER	WATER
Naphthalene	5 U	135	5 U	5 U	5 U	5 U
1-Methyl Naphthalene	5 U	67	5 U	5 U	5 U	5 U
2-Methyl Naphthalene	5 U	135	5 U	5 U	5 U	5 U
Acenaphthylene	5 U	9	5 U	5 U	5 U	5 U
Acenaphthene	5 U	5 U	5 U	5 U	5 U	5 U
Fluorene	5 U	5 U	5 U	5 U	5 U	5 U
Phenanthrene	5 U	5 U	5 U	5 U	5 U	5 U
Anthracene	5 U	5 U	5 U	5 U	5 U	5 U
Fluoranthene	5 U	5 U	5 U	5 U	5 U	5 U
Pyrene	5 U	5 U	5 U	5 U	5 U	5 U
Benzo(a)anthracene	5 U	5 U	5 U	5 U	5 U	5 U
Chrysene	5 U	5 U	5 U	5 U	5 U	5 U
Benzo(b)fluoranthene	5 U	5 U	5 U	5 U	5 U	5 U
Benzo(k)fluoranthene	5 U	5 U	5 U	5 U	5 U	5 U
Benzo(a)pyrene	5 U	5 U	5 U	5 U	5 U	5 U
Indeno(1,2,3-cd)pyrene	5 U	5 U	5 U	5 U	5 U	5 U
Dibenz(a,h)anthracene	5 U	5 U	5 U	5 U	5 U	5 U
Benzo(g,h,i)perylene	5 U	5 U	5 U	5 U	5 U	5 U
Result Units	ug/l	ug/l	ug/l	ug/l	ug/l	ug/l
% Moisture	NA	NA	NA	NA	NA	NA
Dilution Factor	1	1	1	1	1	1

U = indicates the compound was analysed for, but not detected at the specified value.

CompQAP #900134G/E83239/83353

REVIEWED BY : _____

PC&B Environmental Laboratories, Inc.
3401 Lake Breeze Road
Orlando Fl 32808
PHONE : 407-290-3245

POLYNUCLEAR AROMATICS

CLIENT NAME : OH MATERIALS
PROJECT NAME : NTC MCOY ANNEX
PROJECT NUMBER : 13543
DATE RECEIVED : 11-05-92
PROTOCOL : EPA 610

Lab Reference Number	9211036-7	9211036-8	9211036-9	9211036-10	9211036-11	9211036-12
Client Sample ID	7174-12	7174-13	7174-15	7174-17	7174-5D	EQUIP BLANK
Date Sampled	11-05-92	11-05-92	11-05-92	11-05-92	11-05-92	11-05-92
Date Extracted	11-10-92	11-10-92	11-10-92	11-10-92	11-10-92	11-10-92
Date Analyzed	11-11-92	11-11-92	11-11-92	11-11-92	11-11-92	11-11-92
Confirmed	NO	NO	NO	NO	NO	NO
Matrix	WATER	WATER	WATER	WATER	WATER	WATER
Naphthalene	43	58	5 U	5 U	5 U	5 U
1-Methyl Naphthalene	5 U	5	5 U	5 U	5 U	5 U
2-Methyl Naphthalene	8	12	5 U	5 U	5 U	5 U
Acenaphthylene	5 U	5 U	5 U	5 U	5 U	5 U
Acenaphthene	5 U	5 U	5 U	5 U	5 U	5 U
Fluorene	5 U	5 U	5 U	5 U	5 U	5 U
Phenanthrene	5 U	5 U	5 U	5 U	5 U	5 U
Anthracene	5 U	5 U	5 U	5 U	5 U	5 U
Fluoranthene	5 U	5 U	5 U	5 U	5 U	5 U
Pyrene	5 U	5 U	5 U	5 U	5 U	5 U
Benzo(a)anthracene	5 U	5 U	5 U	5 U	5 U	5 U
Chrysene	5 U	5 U	5 U	5 U	5 U	5 U
Benzo(b)fluoranthene	5 U	5 U	5 U	5 U	5 U	5 U
Benzo(k)fluoranthene	5 U	5 U	5 U	5 U	5 U	5 U
Benzo(a)pyrene	5 U	5 U	5 U	5 U	5 U	5 U
Indeno(1,2,3-cd)pyrene	5 U	5 U	5 U	5 U	5 U	5 U
Dibenz(a,h)anthracene	5 U	5 U	5 U	5 U	5 U	5 U
Benzo(g,h,i)perylene	5 U	5 U	5 U	5 U	5 U	5 U
Result Units	ug/l	ug/l	ug/l	ug/l	ug/l	ug/l
% Moisture	NA	NA	NA	NA	NA	NA
Dilution Factor	1	1	1	1	1	1

U = indicates the compound was analysed for, but not detected at the specified value.

CompQAP #900134G/E83239/83353

REVIEWED BY : _____

PC&B Environmental Laboratories, Inc.

POLYNUCLEAR AROMATICS

MATRIX SPIKE RESULTS

MATRIX : WATER
ANALYSIS DATE : 11-11-92

LAB SAMPLE # : MW-11-11

COMPOUND	AMOUNT SPIKED	SAMPLE RESULT	MS RESULT	MS % RECOVERY
Naphthalene	50.0	0.0	33.0	66
Acenaphthylene	50.0	0.0	39.0	78
Acenaphthene	50.0	0.0	39.0	78
Fluorene	50.0	0.0	47.0	94
Phenanthrene	50.0	0.0	46.0	92
Anthracene	50.0	0.0	43.0	86
Fluoranthene	50.0	0.0	45.0	90
Pyrene	50.0	0.0	40.0	80
Benzo(a)anthracene	50.0	0.0	38.0	76
Chrysene	50.0	0.0	23.0	46
Benzo(b)fluoranthene	50.0	0.0	28.0	56
Benzo(k)fluoranthene	50.0	0.0	26.0	52
Benzo(a)pyrene	50.0	0.0	20.0	40
Indeno(1,2,3-cd)pyrene	50.0	0.0	20.0	40
Dibenz(a,h)anthracene	50.0	0.0	18.0	36
Benzo(g,h,i)perylene	50.0	0.0	18.0	36

COMMENTS :

MATRIX SPIKE QUALITY CONTROL LIMITS

	WATER			SOIL		
	LOWER	UPPER	RPD	LOWER	UPPER	RPD
Naphthalene	33	123	18	46	100	12
Acenaphthylene	43	127	16	50	86	18
Acenaphthene	44	128	17	47	97	9
Fluorene	45	135	17	17	131	24
Phenanthrene	47	129	19	49	97	12
Anthracene	42	138	18	51	87	9
Fluoranthene	45	135	17	49	91	10
Pyrene	23	155	27	30	120	20
Benzo(a)anthracene	31	131	24	43	103	14
Chrysene	26	152	23	18	142	27
Benzo(b)fluoranthene	10	142	30	36	102	15
Benzo(k)fluoranthene	15	147	27	29	101	20
Benzo(a)pyrene	18	138	28	39	99	15
Indeno(1,2,3-cd)pyrene	7	139	32	51	87	9
Dibenz(a,h)anthracene	21	153	26	49	87	9
Benzo(g,h,i)perylene	17	149	40	57	79	16

PC&B Environmental Laboratories, Inc.
3401 Lake Breeze Road
Orlando Fl 32808
PHONE : 407-290-3245

EDB/DBCP

CLIENT NAME : OH MATERIALS
PROJECT NAME : NTC MCOY ANNEX
PROJECT NUMBER : 13543
DATE RECEIVED : 11-05-92
PROTOCOL : EPA 504

Lab Reference Number	9211036-1	9211036-2	9211036-3	9211036-4	9211036-5	9211036-6
Client Sample ID	7174-1	7174-2	7174-3	7174-4	7174-5	7174-8
Date Sampled	11-05-92	11-05-92	11-05-92	11-05-92	11-05-92	11-05-92
Date Extracted	11-09-92	11-09-92	11-09-92	11-09-92	11-09-92	11-09-92
Date Analyzed	11-09-92	11-09-92	11-09-92	11-09-92	11-09-92	11-09-92
Confirmed	NO	NO	NO	NO	NO	NO
Matrix	WATER	WATER	WATER	WATER	WATER	WATER
EDB	0.02 U	0.02 U	0.02 U	0.02 U	0.02 U	0.02 U
DBCP	0.05 U	0.05 U	0.05 U	0.05 U	0.05 U	0.05 U
Result Units	ug/l	ug/l	ug/l	ug/l	ug/l	ug/l
% Moisture	NA	NA	NA	NA	NA	NA
Dilution Factor	1	1	1	1	1	1

U = indicates the compound was analysed for, but not detected at the specified value.

CompQAP #900134G/E83239/83353

REVIEWED BY : _____

PC&B Environmental Laboratories, Inc.
3401 Lake Breeze Road
Orlando Fl 32808
PHONE : 407-290-3245

EDB/DBCP

CLIENT NAME : OH MATERIALS
PROJECT NAME : NTC MCOY ANNEX
PROJECT NUMBER : 13543
DATE RECEIVED : 11-05-92
PROTOCOL : EPA 504

Lab Reference Number	9211036-7	9211036-8	9211036-9	9211036-10	9211036-11	9211036-12
Client Sample ID	7174-12	7174-13	7174-15	7174-17	7174-5D	EQUIP BLANK
Date Sampled	11-05-92	11-05-92	11-05-92	11-05-92	11-05-92	11-05-92
Date Extracted	11-09-92	11-09-92	11-09-92	11-09-92	11-09-92	11-09-92
Date Analyzed	11-09-92	11-09-92	11-09-92	11-09-92	11-09-92	11-09-92
Confirmed	NO	NO	NO	NO	NO	NO
Matrix	WATER	WATER	WATER	WATER	WATER	WATER
EDB	0.02 U	0.02 U	0.02 U	0.02 U	0.02 U	0.02 U
DBCP	0.05 U	0.05 U	0.05 U	0.05 U	0.05 U	0.05 U
Result Units	ug/l	ug/l	ug/l	ug/l	ug/l	ug/l
% Moisture	NA	NA	NA	NA	NA	NA
Dilution Factor	1	1	1	1	1	1

U = indicates the compound was analysed for, but not detected at the specified value.

CompQAP #900134G/E83239/83353

REVIEWED BY : _____

PC&B Environmental Laboratories, Inc.

EDB/DBCP

MATRIX SPIKE RESULTS

MATRIX : WATER
ANALYSIS DATE : 11-09-92

LAB SAMPLE # : 9211037-6

COMPOUND	AMOUNT SPIKED	SAMPLE RESULT	MS RESULT	MS % RECOVERY
EDB	2.00	0.00	2.11	105
DBCP	2.00	0.00	1.65	82

COMMENTS :

MATRIX SPIKE QUALITY CONTROL LIMITS

	WATER			SOIL		
	LOWER	UPPER	RPD	LOWER	UPPER	RPD
EDB	57	137	17	50	140	20
DBCP	66	130	14	60	130	20

PC&B Environmental Laboratories, Inc.
3401 Lake Breeze Road
Orlando Fl 32808
PHONE : 407-290-3245

INORGANICS ANALYSIS

CLIENT NAME : O.H.MATERIALS CORP.
PROJECT NAME : NTC MCCOY ANNEX
PROJECT NUMBER : 13543
DATE RECEIVED : 11-05-92

Lab Reference Number		9211036-1	9211036-2	9211036-4A	9211036-4B	9211036-5	9211036-6
Client Sample ID		7174-1	7174-2	7174-3	7174-4	7174-5	7174-8
Date Sampled		11-05-92	11-05-92	11-05-92	11-05-92	11-05-92	11-05-92
Matrix		WATER	WATER	WATER	WATER	WATER	WATER
Lead, Total	ug/l	3.0 U	6.0	9.0	14	13	18
TPH	mg/l	1.3	2.8	1.0 U	1.0 U	1.0 U	1.0 U

U = indicates the analyte was tested for, but was undetected to the specified value.

CompQAP #900134G/E83239/83353

REVIEWED BY : _____

PC&B Environmental Laboratories, Inc.
3401 Lake Breeze Road
Orlando Fl 32808
PHONE : 407-290-3245

INORGANICS ANALYSIS

CLIENT NAME : O.H.MATERIALS CORP.
PROJECT NAME : NTC MCCOY ANNEX
PROJECT NUMBER : 13543
DATE RECEIVED : 11-05-92

Lab Reference Number		9211036-7	9211036-8	9211036-9	9211036-10	9211036-11	9211036-12
Client Sample ID		7174-12	7174-13	7174-15	7174-17	7174-5D	EQUIP. BLK
Date Sampled		11-05-92	11-05-92	11-05-92	11-05-92	11-05-92	11-05-92
Matrix		WATER	WATER	WATER	WATER	WATER	WATER
Lead, Total	ug/l	160	105	8.0	41	14	3.0 U
TPH	mg/l	1.0 U	1.0 U	1.0 U	1.0 U	1.0 U	1.0 U

U = indicates the analyte was tested for, but was undetected to the specified value.

CompQAP #900134G/E83239/83353

REVIEWED BY : _____

PC&B Environmental Laboratories, Inc.

INORGANICS

MATRIX SPIKE RESULTS

MATRIX : WATER
ANALYSIS DATE : 11-09-92

LAB SAMPLE # : 9211036-1

PARAMETER	AMOUNT SPIKED	SAMPLE RESULT	MS RESULT	MS % RECOVERY
Lead, Total	25.0	0.0	21.0	84
TPH	10.0	0.0	9.6	96

COMMENTS :

MATRIX SPIKE QUALITY CONTROL LIMITS

	WATER			SOIL		
	LOWER	UPPER	RPD	LOWER	UPPER	RPD
Lead, Total	75	135	10	57	141	14
TPH	87	111	5	88	108	3

OHM Corporation

CHAIN-OF-CUSTODY RECORD

921028

Form 0019
Field Technical Services
Rev. 08/89

№ 108966

O.H. MATERIALS CORP. • P.O. BOX 551 • FINDLAY, OH 45839-0551 • 419-423-3526

PROJECT NAME: NTC McCoy Annex
PROJECT LOCATION: BLDG 7174 NTC ORLANDO
PROJ. NO.: 13543
PROJECT CONTACT: ~~Atch~~ DAVID KEMP
PROJECT TELEPHONE NO.: 394-8601
CLIENT'S REPRESENTATIVE:
PROJECT MANAGER/SUPERVISOR: DAVID KEMP

ITEM NO.	SAMPLE NUMBER	DATE	TIME	COMP	GRAB	SAMPLE DESCRIPTION (INCLUDE MATRIX AND POINT OF SAMPLE)	NUMBER OF CONTAINERS	601/602	610	EDB	Pb	TRPH 418.1				REMARKS
1	~~MW-6~~	~~11-4-92~~														
2	7174-6	11-4-92	1505		X	GROUND WATER		X	X	X	X	X				
3	7174-7	11-4-92	1545		X	GROUND WATER		X	X	X	X	X				
4	7174-14	11-4-92	1350		X	GROUND WATER		X	X	X	X	X				
5	7174-16	11-4-92	1410		X	GROUNDWATER		X	X	X	X	X				
6	7174-18	11-4-92	1322		X	GROUNDWATER		X	X	X	X	X				
7	7174-19	11-4-92	1435		X	GROUNDWATER		X	X	X	X	X				
8	7174-7D	11-4-92	1600		X	GROUND WATER		X	X	X	X	X				
9	EQUIP BL.	11-4-92	1615		X	DI WTR		X	X	X	X	X				
10	TRIP BL	11-4-92			X	DI WTR		X								

TRANSFER NUMBER	ITEM NUMBER	TRANSFERS RELINQUISHED BY	TRANSFERS ACCEPTED BY	DATE	TIME
1	2-10	Karen Reed	Rob McCall	11/4/92	17:40
2					
3					
4					

REMARKS

SAMPLER'S SIGNATURE: Karen Reed

LAB COPY

OHM Corporation

CHAIN-OF-CUSTODY RECORD

9211036 7 of 2

Form 0019
Field Technical Services
Rev. 08/89

№ 108967

O.H. MATERIALS CORP. • P.O. BOX 551 • FINDLAY, OH 45839-0551 • 419-423-3526

PROJECT NAME: NTC McOy Annex
PROJECT LOCATION: NTC McOy Annex 7174
PROJ. NO.: 13543
PROJECT CONTACT: DAVID KEMP
PROJECT TELEPHONE NO.: (904) 394-8601
CLIENT'S REPRESENTATIVE:
PROJECT MANAGER/SUPERVISOR: DAVID KEMP

ANALYSIS DESIRED (INDICATE SEPARATE CONTAINERS): 601/602, 610, EDB, Pb, TRPH 418.1

ITEM NO.	SAMPLE NUMBER	DATE	TIME	COMP	GRAB	SAMPLE DESCRIPTION (INCLUDE MATRIX AND POINT OF SAMPLE)	NUMBER OF CONTAINERS	601/602	610	EDB	Pb	TRPH 418.1				REMARKS
1	7174-1	11-5-92	1030		X	GROUNDWATER	7	X	X	X	X	X				
2	7174-2	11-5-92	1235		X	GROUND WATER	7	X	X	X	X	X				
3	7174-3	11-5-92	1135		X	GROUND WATER	7	X	X	X	X	X				
4	7174-4	11-5-92	1115		X	GROUND WATER	7	X	X	X	X	X				
5	7174-5	11-5-92	1310		X	GROUNDWATER	7	X	X	X	X	X				
6	7174-8	11-5-92	1055		X	GROUNDWATER	7	X	X	X	X	X				
7	7174-10	11-5-92	1010		X	GROUND WATER	7	X	X	X	X	X				
8	7174-13	11-5-92	0945		X	GROUNDWATER	7	X	X	X	X	X				
9	7174-15	11-5-92	1210		X	GROUNDWATER	7	X	X	X	X	X				
10	7174-17	11-5-92	1245		X	GROUND WATER	7	X	X	X	X	X				

TRANSFER NUMBER	ITEM NUMBER	TRANSFERS RELINQUISHED BY	TRANSFERS ACCEPTED BY	DATE	TIME
1	1-10	Karen Reed	[illegible]	11/6/92	1440
2					
3					
4					

REMARKS

SAMPLER'S SIGNATURE: Karen Reed

LAB COPY

PC&B Laboratories, Inc.

3401 Lake Breeze Road, Orlando, Fl 32808
407-290-3245 (FAX) 407-297-6924

Chain of Custody

Work Order: 9211036

Date: _____ Page 2 of 2 #108967

COMPANY OHM
ADDRESS 13400 Mohawk Rd
SAMPLED BY K Reed, C. Lichtenstein
SIGN Karen Reed PHONE NO: 904-394-8601

#	SAMPLE ID.	DATE/TIME	MATRIX	601/602	610	EDB	Pb	TRPH 418.1										NUMBER OF CONTAINERS
1	7174-SD	11/5 1320		✓	✓	✓	✓	✓										
2	Equip Blank	11/5 1330		✓	✓	✓	✓	✓										
3																		
4																		
5																		
6																		
7																		
8																		
9																		
10																		
11																		
12																		
13																		

ANALYSIS REQUEST

RELINQUISHED BY	DATE/TIME	RECEIVED BY	DATE/TIME
1: Karen Reed	11/5/92 1437	1: [signature]	11/5/92 1440
2:		2:	
3:		3:	

SPECIAL INSTRUCTIONS/COMMENTS:

PROJECT INFORMATION
PROJECT NAME: NTS McCoy Annex
PROJECT #: 13543
SITE ADDRESS: Orlando
PROJECT MANAGER:
INVOICE TO:
(IF DIFFERENT FROM ABOVE)

SAMPLE RECEIPT
Total No. of Containers
Chain of Custody Seals
Rec'd Good Condition/Cold
PO#:
SHIPPED VIA

APPENDIX C

AIR STRIPPING TOWER DESIGN CALCULATIONS

NEESA
NTC ORLANDO MCCOY ANNEX SERVICE STATION BUILDING 7174
AIR STRIPPING TOWER DESIGN INFLUENT CONCENTRATIONS

RECOVERY WELL #1

WELL #	DISTANCE d (FEET)	1/d	1/d / SUM 1/d	BENZENE (ppb)	TOLUENE (ppb)	E-BENZENE (ppb)	XYLENE (ppb)	NAPHTHAL (ppb)	MTBE (ppb)	EDB (ppb)	LEAD (ppb)
7174-1	30	0.033	0.116	320	0	85	10	0	680	0	0
7174-2	7	0.143	0.498	620	17	350	85	135	4720	0	6
7174-3	32	0.031	0.109	0	0	0	0	0	36	0	9
7174-5	28	0.036	0.125	164	7	42	67	0	1066	0	13
7174-15	23	0.043	0.152	2.7	0	0	0	0	47	0	8
TOTAL		0.287	1.000	1107	24	477	162	135	6549	0	36
	WEIGHTED CONCENTRATION			367.06	9.34	189.56	51.87	67.28	2575.39	0.00	6.80

RECOVERY WELL #2

WELL #	DISTANCE d (FEET)	1/d	1/d / SUM 1/d	BENZENE (ppb)	TOLUENE (ppb)	E-BENZENE (ppb)	XYLENE (ppb)	NAPHTHAL (ppb)	MTBE (ppb)	EDB (ppb)	LEAD (ppb)
7174-11*	35	0.029	0.146	5600	29000	2900	19000	396	6100	1.4	0
7174-12	6	0.167	0.854	83	0	12	0	43	2950	0	160
TOTAL		0.195	1.000	5683.00	29000.00	2912.00	19000.00	439.00	9050.00	1.40	160.00
	WEIGHTED CONCENTRATION			890.37	4243.90	434.63	2780.49	94.66	3410.98	0.20	136.59

RECOVERY WELL #3

WELL #	DISTANCE d (FEET)	1/d	1/d / SUM 1/d	BENZENE (ppb)	TOLUENE (ppb)	E-BENZENE (ppb)	XYLENE (ppb)	NAPHTHAL (ppb)	MTBE (ppb)	EDB (ppb)	LEAD (ppb)
7174-13	5	0.200	1.000	950	1030	170	950	58	130	0	105
TOTAL		0.200	1.000	950.00	1030.00	170.00	950.00	58.00	130.00	0.00	105.00
	WEIGHTED CONCENTRATION			950.00	1030.00	170.00	950.00	58.00	130.00	0.00	

NEESA
NTC ORLANDO MCCOY ANNEX SERVICE STATION BUILDING 7174
AIR STRIPPING TOWER DESIGN INFLUENT CONCENTRATIONS

RECOVERY WELL #4

WELL #	DISTANCE d (FEET)	1/d	1/d / SUM 1/d	BENZENE (ppb)	TOLUENE (ppb)	E-BENZENE (ppb)	XYLENE (ppb)	NAPHTHAL (ppb)	MTBE (ppb)	EDB (ppb)	LEAD (ppb)
7174-7	8	0.125	1.000	0	0	0	0	0	0	0	14
TOTAL		0.125	1.000	0.00	0.00	0.00	0.00	0.00	0.00	0.00	14.00
	WEIGHTED CONCENTRATION			0.00	0.00	0.00	0.00	0.00	0.00	0.00	14.00
AVERAGE WEIGHTED CONCENTRATION				552	1321	199	946	55	1529	0.05	66
	SAFETY FACTOR = 1.25			690	1651	248	1182	69	1911	0.06	82

******* A N A L Y S I S O F S T R I P P I N G T O W E R *******

PROJECT : McCoy Annex Service Station DATE : 4/7/1993

ENGINEER : GD PAGE : 1/2

PHYSICAL CONSTANTS

Design temperature	:	70.0 degrees F.
Density of water	:	62.3 lb/ft^3
Density of air	:	0.0749 lb/ft^3
Viscosity of water	:	6.57E-04 lb/ft.s
Viscosity of air	:	1.19E-05 lb/ft.s
Surface tension of water	:	73 dyne/cm
Atmospheric pressure	:	1.00 atm

CONTAMINANT PROPERTIES

Name	:	Benzene
Molecular weight	:	78.1 g/mol
Boiling point	:	176 degrees F.
Molal volume at boiling point	:	0.0960 L/mol
Henry's Constant	:	0.23000
Temperature Constant	:	1849 deg K
Molecular diffusivity in air	:	1.02E-04 ft^2/s
Molecular diffusivity in water	:	9.88E-09 ft^2/s

PACKING PROPERTIES

Name	:	Lanpac
Packing Material	:	Plastic
Nominal Size	:	2.30 inch
Specific Area	:	68.0 ft^2/ft^3
Critical surface tension	:	33 dyne/cm
Packing depth	:	15.0 ft
Air friction factor	:	21

******* A N A L Y S I S O F S T R I P P I N G T O W E R *******

PROJECT : McCoy Annex Service Station DATE : 4/7/1993

ENGINEER : GD PAGE : 2/2

LOADING RATES

Water mass loading rate	:	1.73E+00 lb/ft^2.s	*
Air mass loading rate	:	2.08E-01 lb/ft^2.s	*
Water volumetric loading rate	:	1.25E+01 gpm/ft^2	*
Air volumetric loading rate	:	1.25E+03 gpm/ft^2	*
Air pressure gradient	:	0.077 " H2O/ft	#
Volumetric air/water ratio	:	100.0	
Stripping factor	:	24.2	

MASS TRANSFER PARAMETERS

Percentage of packing area wetted	:	41.7 %	
Wetted packing area	:	28.3 ft^2/ft^3	*
Transfer rate constant in water	:	6.24E-04 ft/s	
Transfer rate constant in air	:	1.36E-02 ft/s	
Overall transfer rate constant	:	5.24E-04 ft/s	
Overall mass transfer coefficient	:	1.49E-02 1/s	
NTU	:	7.8617	
HTU	:	1.9080 ft	

CONTAMINANT REMOVAL

Influent concentration	:	6.90E+02 ug/L	
Effluent concentration	:	3.53E-01 ug/L	
Fraction removed	:	99.9 %	
Mass of contaminant removed	:	1.03E-01 lb/ft^2.day	*
Concentration in airstream	:	1.81E-02 mg/ft^2.ft^3	

* Expressed per unit of stripping tower cross-sectional area

\# Expressed per unit of tower length

******* A N A L Y S I S O F S T R I P P I N G T O W E R *******

PROJECT : McCoy Annex Service Station DATE : 4/7/1993

ENGINEER : GD PAGE : 1/2

PHYSICAL CONSTANTS

Design temperature	:	70.0 degrees F.
Density of water	:	62.3 lb/ft^3
Density of air	:	0.0749 lb/ft^3
Viscosity of water	:	6.57E-04 lb/ft.s
Viscosity of air	:	1.19E-05 lb/ft.s
Surface tension of water	:	73 dyne/cm
Atmospheric pressure	:	1.00 atm

CONTAMINANT PROPERTIES

Name	:	Toluene
Molecular weight	:	92.2 g/mol
Boiling point	:	232 degrees F.
Molal volume at boiling point	:	0.1182 L/mol
Henry's Constant	:	0.19000
Temperature Constant	:	3517 deg K
Molecular diffusivity in air	:	9.01E-05 ft^2/s
Molecular diffusivity in water	:	8.72E-09 ft^2/s

PACKING PROPERTIES

Name	:	Lanpac
Packing Material	:	Plastic
Nominal Size	:	2.30 inch
Specific Area	:	68.0 ft^2/ft^3
Critical surface tension	:	33 dyne/cm
Packing depth	:	15.0 ft
Air friction factor	:	21

******* A N A L Y S I S O F S T R I P P I N G T O W E R *******

PROJECT : McCoy Annex Service Station DATE : 4/7/1993

ENGINEER : GD PAGE : 2/2

LOADING RATES

Water mass loading rate	:	1.73E+00 lb/ft^2.s	*
Air mass loading rate	:	2.08E-01 lb/ft^2.s	*
Water volumetric loading rate	:	1.25E+01 gpm/ft^2	*
Air volumetric loading rate	:	1.25E+03 gpm/ft^2	*
Air pressure gradient	:	0.077 " H2O/ft	#
Volumetric air/water ratio	:	100.0	
Stripping factor	:	21.0	

MASS TRANSFER PARAMETERS

Percentage of packing area wetted	:	41.7 %	
Wetted packing area	:	28.3 ft^2/ft^3	*
Transfer rate constant in water	:	5.86E-04 ft/s	
Transfer rate constant in air	:	1.26E-02 ft/s	
Overall transfer rate constant	:	4.80E-04 ft/s	
Overall mass transfer coefficient	:	1.36E-02 1/s	
NTU	:	7.1673	
HTU	:	2.0928 ft	

CONTAMINANT REMOVAL

Influent concentration	:	1.65 mg/L	
Effluent concentration	:	1.71E+00 ug/L	
Fraction removed	:	99.9 %	
Mass of contaminant removed	:	2.47E-01 lb/ft^2.day	*
Concentration in airstream	:	4.34E-02 mg/ft^2.ft^3	

* Expressed per unit of stripping tower cross-sectional area

\# Expressed per unit of tower length

******* A N A L Y S I S O F S T R I P P I N G T O W E R *******

PROJECT : McCoy Annex Service Station DATE : 4/7/1993

ENGINEER : GD PAGE : 1/2

PHYSICAL CONSTANTS

Design temperature	:	70.0 degrees F.
Density of water	:	62.3 lb/ft^3
Density of air	:	0.0749 lb/ft^3
Viscosity of water	:	6.57E-04 lb/ft.s
Viscosity of air	:	1.19E-05 lb/ft.s
Surface tension of water	:	73 dyne/cm
Atmospheric pressure	:	1.00 atm

CONTAMINANT PROPERTIES

Name	:	Ethylbenzene
Molecular weight	:	106.2 g/mol
Boiling point	:	277 degrees F.
Molal volume at boiling point	:	0.1404 L/mol
Henry's Constant	:	0.27000
Temperature Constant	:	1904 deg K
Molecular diffusivity in air	:	8.16E-05 ft^2/s
Molecular diffusivity in water	:	7.87E-09 ft^2/s

PACKING PROPERTIES

Name	:	Lanpac
Packing Material	:	Plastic
Nominal Size	:	2.30 inch
Specific Area	:	68.0 ft^2/ft^3
Critical surface tension	:	33 dyne/cm
Packing depth	:	15.0 ft
Air friction factor	:	21

******* A N A L Y S I S O F S T R I P P I N G T O W E R *******

PROJECT : McCoy Annex Service Station DATE : 4/7/1993

ENGINEER : GD PAGE : 2/2

LOADING RATES

Water mass loading rate	:	1.73E+00 lb/ft^2.s	*
Air mass loading rate	:	2.08E-01 lb/ft^2.s	*
Water volumetric loading rate	:	1.25E+01 gpm/ft^2	*
Air volumetric loading rate	:	1.25E+03 gpm/ft^2	*
Air pressure gradient	:	0.077 " H2O/ft	#
Volumetric air/water ratio	:	100.0	
Stripping factor	:	28.5	

MASS TRANSFER PARAMETERS

Percentage of packing area wetted	:	41.7 %	
Wetted packing area	:	28.3 ft^2/ft^3	*
Transfer rate constant in water	:	5.56E-04 ft/s	
Transfer rate constant in air	:	1.18E-02 ft/s	
Overall transfer rate constant	:	4.77E-04 ft/s	
Overall mass transfer coefficient	:	1.35E-02 1/s	
NTU	:	7.1689	
HTU	:	2.0924 ft	

CONTAMINANT REMOVAL

Influent concentration	:	2.48E+02 ug/L	
Effluent concentration	:	2.37E-01 ug/L	
Fraction removed	:	99.9 %	
Mass of contaminant removed	:	3.70E-02 lb/ft^2.day	*
Concentration in airstream	:	6.52E-03 mg/ft^2.ft^3	

* Expressed per unit of stripping tower cross-sectional area

\# Expressed per unit of tower length

******* A N A L Y S I S O F S T R I P P I N G T O W E R *******

PROJECT : McCoy Annex Service Station DATE : 4/7/1993

ENGINEER : GD PAGE : 1/2

PHYSICAL CONSTANTS

Design temperature	:	70.0 degrees F.
Density of water	:	62.3 lb/ft^3
Density of air	:	0.0749 lb/ft^3
Viscosity of water	:	6.57E-04 lb/ft.s
Viscosity of air	:	1.19E-05 lb/ft.s
Surface tension of water	:	73 dyne/cm
Atmospheric pressure	:	1.00 atm

CONTAMINANT PROPERTIES

Name	:	p-Xylene
Molecular weight	:	106.2 g/mol
Boiling point	:	280 degrees F.
Molal volume at boiling point	:	0.1404 L/mol
Henry's Constant	:	0.29000
Temperature Constant	:	1904 deg K
Molecular diffusivity in air	:	8.15E-05 ft^2/s
Molecular diffusivity in water	:	7.87E-09 ft^2/s

PACKING PROPERTIES

Name	:	Lanpac
Packing Material	:	Plastic
Nominal Size	:	2.30 inch
Specific Area	:	68.0 ft^2/ft^3
Critical surface tension	:	33 dyne/cm
Packing depth	:	15.0 ft
Air friction factor	:	21

******* A N A L Y S I S O F S T R I P P I N G T O W E R *******

PROJECT : McCoy Annex Service Station DATE : 4/7/1993

ENGINEER : GD PAGE : 2/2

LOADING RATES

Water mass loading rate	:	1.73E+00 lb/ft^2.s	*
Air mass loading rate	:	2.08E-01 lb/ft^2.s	*
Water volumetric loading rate	:	1.25E+01 gpm/ft^2	*
Air volumetric loading rate	:	1.25E+03 gpm/ft^2	*
Air pressure gradient	:	0.077 " H2O/ft	#
Volumetric air/water ratio	:	100.0	
Stripping factor	:	30.6	

MASS TRANSFER PARAMETERS

Percentage of packing area wetted	:	41.7 %	
Wetted packing area	:	28.3 ft^2/ft^3	*
Transfer rate constant in water	:	5.56E-04 ft/s	
Transfer rate constant in air	:	1.18E-02 ft/s	
Overall transfer rate constant	:	4.82E-04 ft/s	
Overall mass transfer coefficient	:	1.37E-02 1/s	
NTU	:	7.2476	
HTU	:	2.0696 ft	

CONTAMINANT REMOVAL

Influent concentration	:	1.18 mg/L	
Effluent concentration	:	1.03E+00 ug/L	
Fraction removed	:	99.9 %	
Mass of contaminant removed	:	1.77E-01 lb/ft^2.day	*
Concentration in airstream	:	3.11E-02 mg/ft^2.ft^3	

* Expressed per unit of stripping tower cross-sectional area
\# Expressed per unit of tower length

******* A N A L Y S I S O F S T R I P P I N G T O W E R *******

PROJECT : McCoy Annex Service Station DATE : 4/7/1993

ENGINEER : GD PAGE : 1/2

PHYSICAL CONSTANTS

Design temperature	:	70.0 degrees F.
Density of water	:	62.3 lb/ft^3
Density of air	:	0.0749 lb/ft^3
Viscosity of water	:	6.57E-04 lb/ft.s
Viscosity of air	:	1.19E-05 lb/ft.s
Surface tension of water	:	73 dyne/cm
Atmospheric pressure	:	1.00 atm

CONTAMINANT PROPERTIES

Name	:	Naphthalene
Molecular weight	:	128.2 g/mol
Boiling point	:	424 degrees F.
Molal volume at boiling point	:	0.1476 L/mol
Henry's Constant	:	0.01800
Temperature Constant	:	1904 deg K
Molecular diffusivity in air	:	7.56E-05 ft^2/s
Molecular diffusivity in water	:	7.63E-09 ft^2/s

PACKING PROPERTIES

Name	:	Lanpac
Packing Material	:	Plastic
Nominal Size	:	2.30 inch
Specific Area	:	68.0 ft^2/ft^3
Critical surface tension	:	33 dyne/cm
Packing depth	:	15.0 ft
Air friction factor	:	21

******* A N A L Y S I S O F S T R I P P I N G T O W E R *******

PROJECT : McCoy Annex Service Station DATE : 4/7/1993

ENGINEER : GD PAGE : 2/2

LOADING RATES

Water mass loading rate	:	1.73E+00 lb/ft^2.s	*
Air mass loading rate	:	2.08E-01 lb/ft^2.s	*
Water volumetric loading rate	:	1.25E+01 gpm/ft^2	*
Air volumetric loading rate	:	1.25E+03 gpm/ft^2	*
Air pressure gradient	:	0.077 " H2O/ft	#
Volumetric air/water ratio	:	100.0	
Stripping factor	:	1.9	

MASS TRANSFER PARAMETERS

Percentage of packing area wetted	:	41.7 %	
Wetted packing area	:	28.3 ft^2/ft^3	*
Transfer rate constant in water	:	5.48E-04 ft/s	
Transfer rate constant in air	:	1.12E-02 ft/s	
Overall transfer rate constant	:	1.53E-04 ft/s	
Overall mass transfer coefficient	:	4.34E-03 1/s	
NTU	:	2.1326	
HTU	:	7.0337 ft	

CONTAMINANT REMOVAL

Influent concentration	:	6.90E+01 ug/L	
Effluent concentration	:	1.47E+01 ug/L	
Fraction removed	:	78.7 %	
Mass of contaminant removed	:	8.12E-03 lb/ft^2.day	*
Concentration in airstream	:	1.43E-03 mg/ft^2.ft^3	

* Expressed per unit of stripping tower cross-sectional area

\# Expressed per unit of tower length

******* A N A L Y S I S O F S T R I P P I N G T O W E R *******

PROJECT : McCoy Annex Service Station DATE : 4/7/1993

ENGINEER : GD PAGE : 1/2

PHYSICAL CONSTANTS

Design temperature	:	70.0 degrees F.
Density of water	:	62.3 lb/ft^3
Density of air	:	0.0749 lb/ft^3
Viscosity of water	:	6.57E-04 lb/ft.s
Viscosity of air	:	1.19E-05 lb/ft.s
Surface tension of water	:	73 dyne/cm
Atmospheric pressure	:	1.00 atm

CONTAMINANT PROPERTIES

Name	:	Methyl-tert-butyl-Ether
Molecular weight	:	88.1 g/mol
Boiling point	:	131 degrees F.
Molal volume at boiling point	:	0.1190 L/mol
Henry's Constant	:	0.02200
Temperature Constant	:	1900 deg K
Molecular diffusivity in air	:	9.31E-05 ft^2/s
Molecular diffusivity in water	:	8.69E-09 ft^2/s

PACKING PROPERTIES

Name	:	Lanpac
Packing Material	:	Plastic
Nominal Size	:	2.30 inch
Specific Area	:	68.0 ft^2/ft^3
Critical surface tension	:	33 dyne/cm
Packing depth	:	15.0 ft
Air friction factor	:	21

******* A N A L Y S I S O F S T R I P P I N G T O W E R *******

PROJECT : McCoy Annex Service Station DATE : 4/7/1993

ENGINEER : GD PAGE : 2/2

LOADING RATES

Water mass loading rate	:	1.73E+00 lb/ft^2.s	*
Air mass loading rate	:	2.08E-01 lb/ft^2.s	*
Water volumetric loading rate	:	1.25E+01 gpm/ft^2	*
Air volumetric loading rate	:	1.25E+03 gpm/ft^2	*
Air pressure gradient	:	0.077 " H2O/ft	#
Volumetric air/water ratio	:	100.0	
Stripping factor	:	2.3	

MASS TRANSFER PARAMETERS

Percentage of packing area wetted	:	41.7 %	
Wetted packing area	:	28.3 ft^2/ft^3	*
Transfer rate constant in water	:	5.85E-04 ft/s	
Transfer rate constant in air	:	1.29E-02 ft/s	
Overall transfer rate constant	:	1.97E-04 ft/s	
Overall mass transfer coefficient	:	5.59E-03 1/s	
NTU	:	2.7819	
HTU	:	5.3920 ft	

CONTAMINANT REMOVAL

Influent concentration	:	1.91 mg/L	
Effluent concentration	:	2.46E+02 ug/L	
Fraction removed	:	87.1 %	
Mass of contaminant removed	:	2.49E-01 lb/ft^2.day	*
Concentration in airstream	:	4.38E-02 mg/ft^2.ft^3	

* Expressed per unit of stripping tower cross-sectional area

\# Expressed per unit of tower length

******* A N A L Y S I S O F S T R I P P I N G T O W E R *******

PROJECT : McCoy Annex Service Station DATE : 4/7/1993

ENGINEER : GD PAGE : 1/2

PHYSICAL CONSTANTS

Design temperature	:	70.0 degrees F.
Density of water	:	62.3 lb/ft^3
Density of air	:	0.0749 lb/ft^3
Viscosity of water	:	6.57E-04 lb/ft.s
Viscosity of air	:	1.19E-05 lb/ft.s
Surface tension of water	:	73 dyne/cm
Atmospheric pressure	:	1.00 atm

CONTAMINANT PROPERTIES

Name	:	Ethylenedibromide
Molecular weight	:	187.9 g/mol
Boiling point	:	270 degrees F.
Molal volume at boiling point	:	0.0984 L/mol
Henry's Constant	:	0.02800
Temperature Constant	:	1904 deg K
Molecular diffusivity in air	:	9.02E-05 ft^2/s
Molecular diffusivity in water	:	9.74E-09 ft^2/s

PACKING PROPERTIES

Name	:	Lanpac
Packing Material	:	Plastic
Nominal Size	:	2.30 inch
Specific Area	:	68.0 ft^2/ft^3
Critical surface tension	:	33 dyne/cm
Packing depth	:	15.0 ft
Air friction factor	:	21

******* A N A L Y S I S O F S T R I P P I N G T O W E R *******

PROJECT : McCoy Annex Service Station DATE : 4/7/1993

ENGINEER : GD PAGE : 2/2

LOADING RATES

Water mass loading rate	:	1.73E+00 lb/ft^2.s	*
Air mass loading rate	:	2.08E-01 lb/ft^2.s	*
Water volumetric loading rate	:	1.25E+01 gpm/ft^2	*
Air volumetric loading rate	:	1.25E+03 gpm/ft^2	*
Air pressure gradient	:	0.077 " H2O/ft	#
Volumetric air/water ratio	:	100.0	
Stripping factor	:	3.0	

MASS TRANSFER PARAMETERS

Percentage of packing area wetted	:	41.7 %	
Wetted packing area	:	28.3 ft^2/ft^3	*
Transfer rate constant in water	:	6.19E-04 ft/s	
Transfer rate constant in air	:	1.26E-02 ft/s	
Overall transfer rate constant	:	2.32E-04 ft/s	
Overall mass transfer coefficient	:	6.58E-03 1/s	
NTU	:	3.2601	
HTU	:	4.6011 ft	

CONTAMINANT REMOVAL

Influent concentration	:	6.00E-02 ug/L	
Effluent concentration	:	4.73E-03 ug/L	
Fraction removed	:	92.1 %	
Mass of contaminant removed	:	8.26E-06 lb/ft^2.day	*
Concentration in airstream	:	1.45E-06 mg/ft^2.ft^3	

* Expressed per unit of stripping tower cross-sectional area

\# Expressed per unit of tower length

NEESA
NTC Orlando McCoy Annex Service Station
Air Stripping Tower
Design Water Effluent Summary

Contaminant	Influent Concentration (ppb)	Allowable Effluent Concentration (ppb)	Calculated Effluent Concentration (ppb)
Benzene	690	*	0.35
Toluene	1,651	*	1.71
Ethylbenzene	248	*	0.24
[illegible]	1,182	*	1.03
Naphthalene	69	*	14.7
MTBE	1,911	*	246
EDB	0.06	*	0.005
Lead	82	< 30	< 30

* The City of Orlando Sanitary Sewer Pretreatment Standards allow a concentration of 2.13 ppm Total Toxic Organics (TTO).

Air Quality Impact Calculations

Source Identification:	Air Stripping Tower	Tower Diameter (ft):	1.5
Source Loaction:	NTC McCoy Annex	Maximum Influent Flow Rate (gpm):	22
Manufacturer:		Maximum Air Flow Rate (cfm):	295
Model Number:		Emission Point Height (ft):	20
		Maximum Hours of Operation (hrs/wk):	168

Contaminant	Max. Conc. Influent (ppb)	Max. Emission Rate (lb/sq ft/day)	Max. Emissio Rate (lb/hr)	Max. Ambient Impact (mg/m3)	TLV (mg/m3)	Category (A or B)	AAC (mg/m3)
Benzene	690	0.103	0.007584	0.002818	3	A	0.00714
Toluene	1651	0.247	0.018186	0.006759	375	B	1.785
Ethylbenzene	248	0.037	0.002724	0.001012	435	A	1.035
Xylene	1182	0.177	0.013032	0.004843	435	A	1.035
Naphthalene	69	0.008	0.000589	0.000219	50	A	0.119
MTBE	1911	0.249	0.018334	0.006814	N/A	N/A	2.5

Maximum Ambient Impact Concentration for all contaminants < Acceptable Ambient Impact Concentration

APPENDIX D

SOIL VAPOR EXTRACTION FIELD TEST DATA AND DESIGN CALCULATIONS

NEESA
NTC MCCOY ANNEX SERVICE STATION
BUILDING 7174
SOIL VAPOR EXTRACTION FIELD PILOT TEST
FEBRUARY 17, 1993
TEST #1 DATA

Elapsed Time (minutes)	Well 7174-5 ("H_2O vac)	Well 7174-12 ("H_2O vac)	Well 7174-2 ("H_2O vac)
0.25	0	0	0.02
0.50	0	0	0.02
0.75	0	0	0.02
1.25	0	0	0.02
3.0	0.2	0	0.02
4.25	0.3	0	0.025
5.50	0.4	0	0.025
6.50	0.5	0	0.025
8.50	0.6	0	0.025
9.25	0.6	0	
11.0	0.6	0	0.03
13.0	0.6	0	0.03
17.50	0.6	0	
19.0	0.6	0	0.01
21.0	0.6	0	
23.5	0.6	0	0.01
27.0	0.6	0	0.01
38.0	0.6	0	

Test Notes

1) Blower suction connected to Well 7174-11. Blower vacuum = 50" H_2O.
2) Wells 7174-2 and 7174-12 used 0-0.5 gauge range. Well 7174-5 used 0-10 gauge range.
3) Took an air sample from the blower discharge at time 21.0 minutes.

NTC McCoy Annex Service Station
SVE Field Pilot Test #1

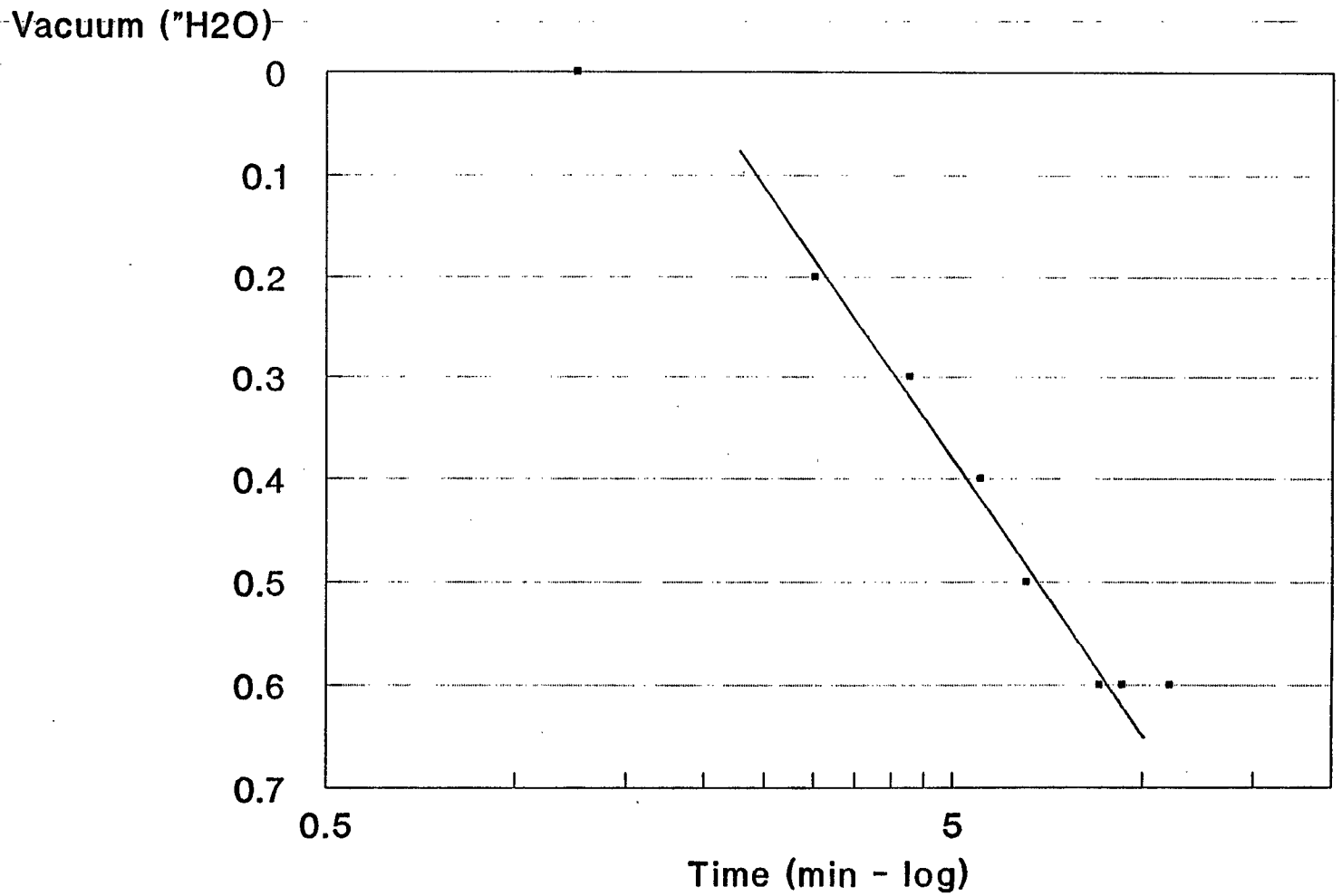

NEESA
NTC MCCOY ANNEX SERVICE STATION
BUILDING 7174
SOIL VAPOR EXTRACTION FIELD PILOT TEST
FEBRUARY 17, 1993
TEST #2 DATA

Elapsed Time (minutes)	Well 7174-5 ("H_2O vac)	Well 7174-15 ("H_2O vac)	Well 7174-3 ("H_2O vac)
0.50	0	0	0
1.0	0.1	0.1	0.01
2.25	0.2	0.1	0.02
2.75	0.3	0.1	0.02
4.75	-	-	0.02
5.25	0.8	0.02	-
6.0	0.9	0.02	0.03
7.0	1.0	0.02	0.03
9.0	-	0.02	0.03
9.75	1.2	0.02	-
11.0	-	0.02	0.035
11.25	1.3	-	0.035
12.75	1.4	-	-
15.50	-	0.02	-
16.0	1.5	0.02	0.4
18.75	1.6	0.02	0.4

Test Notes

1) Blower suction connected to Well 7174-2. Blower vacuum = 55" H_2O.
2) Wells 7174-5 and 7174-15 used 0-10 gauge range. Well 7174-3 used 0-0.5 gauge range.
3) Changed Well 7174-15 gauge to 0-0.5 at time 4.75 minutes.
4) Well 7174-15 has a very small portion of its screen exposed to the vadose zone.
5) Constant trickle of water from the blower discharge started at time 2.75 minutes.
6) Took an air sample from the blower discharge at time 15.5 minutes.

NTC McCoy Annex Service Station
SVE Field Pilot Test #2

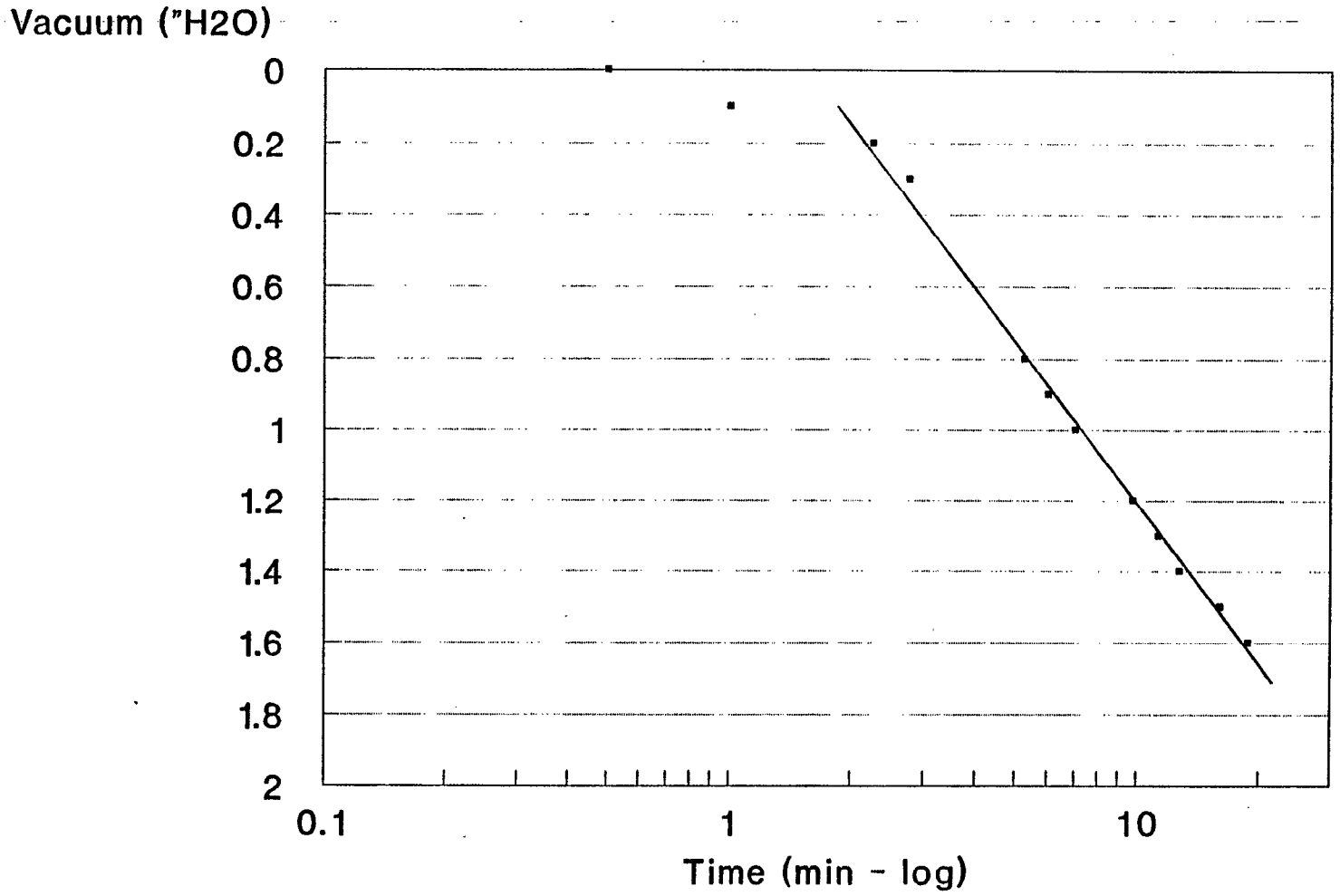

NEESA
NTC MCCOY ANNEX SERVICE STATION
BUILDING 7174
SOIL VAPOR EXTRACTION FIELD PILOT TEST
FEBRUARY 17, 1993
TEST #3 DATA

Elapsed Time (minutes)	Well 7174-7 ("H_2O vac)	Pilot Hole ("H_2O vac)	Well 7174-13 ("H_2O vac)
0.42	0	0.1	0
0.8	0	0.2	-
1.42	0	0.2	0
2.0	0	0.2	-
3.5	-	0.5	-
4.25	-	0.6	0.13
5.0	-	1.3	0.2
5.75	-	1.4	-
6.0	-	-	0.45
6.25	-	-	-
6.75	0	-	0.5
7.0	-	1.6	-
7.75	-	-	0.8
9.0	-	-	1.0
10.0	-	1.5	1.2
12.0	-	-	-
12.5	-	1.6	1.3
16.0	-	1.6	1.6
20.0	-	-	1.9
22.0	-	3.8	2.0

Test Notes

1) Blower suction connected to Pilot Hole midway between Well 7174-7 and 7174-13.
2) Blower vacuum = 50" H_2O.
3) Wells 7174-7 and 7174-13 used 0-0.5 gauge range. Pilot Hole used 0-10 gauge range.
4) Blower suction had a vacuum leak which was discovered and sealed at time 3.5 minutes.
5) Changed Well 7174-13 gauge to 0-10 at time 6.25 minutes.
6) Suspect vacuum leak on Well 7174-7 gauge connection at time 6.75 minutes, but could not locate it.
7) Found a vacuum leak on Pilot Hole gauge at time 20 minutes.

NTC McCoy Annex Service Station
SVE Field Pilot Test #3

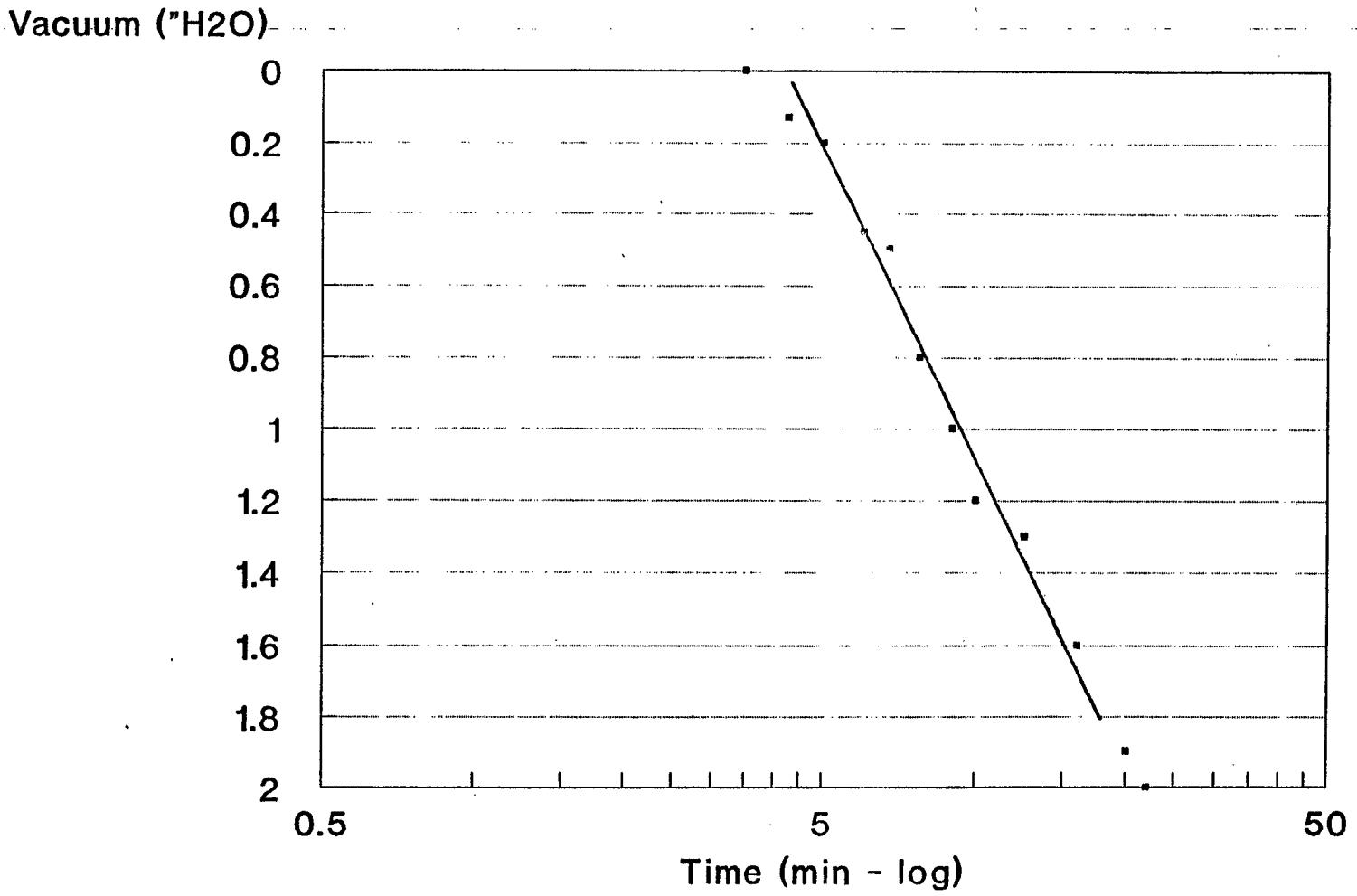

OHM Corporation

COMPUTATION SHEET

Form No. 0048
Midwest Tech. Servs.
Rev. 08 89

Page _____ of _____

Proj. No.	Client	Location	Subject
13543	NEESA	NTC McCOY ANNEX	

Preparer's Initials	Date	Reviewer's Initials	Date	Approver's Initials	Date
GD	4/2/93	[illegible]	5/4/93	[illegible]	5/4/93

DETERMINE SOIL PERMEABILITY TO AIR FLOW (K)

$$K = \frac{Q\mu}{4\pi A m}$$

Q = VAPOR FLOWRATE FROM FIELD TEST
μ = ABSOLUTE VISCOSITY OF AIR = 3.80×10^{-7} lb-sec/ft²
m = STRATUM THICKNESS = 6 ft
A = SLOPE OF VACUUM VS TIME CURVE FROM FIELD TEST

TEST #1

BLOWER SUCTION PRESSURE = 50" H_2O VACUUM ⇒ 55 CFM

$$A = \frac{0.60 - 0.1}{\log(8.8/2.4)} = \frac{0.5}{0.56} = 0.89 \text{ in } H_2O$$

$$0.89'' H_2O \times \frac{1 ft}{12 in} \times \frac{62.4 lbs}{ft^3} = 4.61 \text{ lbs/ft}^2 \text{ VACUUM}$$

$$K = \frac{55 ft^3/min \times 1 min/60 s \times 3.8 \times 10^{-7} lb\text{-}sec/ft^2}{4 \times \pi \times 4.61 lb/ft^2 \times 6 ft} = 1 \times 10^{-9} ft^2$$

TEST #2

BLOWER SUCTION PRESSURE = 55 in H_2O ⇒ 42 CFM

$$A = \frac{1.2 - 0.2}{\log(11/2.25)} = 1.60 \text{ in } H_2O = 1.6'' H_2O \times \frac{1 ft}{12 in} \times \frac{62.4 lbs}{ft^3} = 8.32 \text{ lbs/ft}^2 \text{ VACUUM}$$

$$K = \frac{42 ft/min \times 1 min/60 s \times 3.8 \times 10^{-7} lb\text{-}sec/ft^2}{4 \times \pi \times 8.32 lb/ft^2 \times 6 ft} = 4.24 \times 10^{-10} ft^2$$

OHM Corporation

COMPUTATION SHEET

Form No. 0048
Midwest Tech. Servs.
Rev. 08.89

Page _____ of _____

Proj. No.	Client	Location	Subject
12543	NEESA	NTC MCCOY ANNEX	

Preparer's Initials	Date	Reviewer's Initials	Date	Approver's Initials	Date
GD	4/2/93	RE	5/4/93	RD	5/4/93

TEST #3

BLOWER SUCTION PRESSURE = 50 in H_2O ⇒ 55 CFM

$$A = \frac{1.5 - 0.25}{\log(11.6/3A)} = 2.35 \text{ in } H_2O \text{ VACUUM} = 2.35 \text{ in} \times \frac{1 \text{ ft}}{12 \text{ in}} \times \frac{62.4 \text{ lb}}{\text{ft}^3}$$

$$= 12.20 \text{ lb/ft}^2$$

$$K = \frac{55 \text{ ft}^3/\text{min} \times 1 \text{ min}/60 \text{ s} \times 3.8 \times 10^{-7} \text{ lb-sec/ft}^2}{4 \times \pi \times 12.20 \text{ lb/ft}^2 \times 6 \text{ ft}}$$

$$= 3.79 \times 10^{-10} \text{ ft}^2$$

TEST #	K
1	1×10^{-9}
2	4.24×10^{-10}
3	3.79×10^{-10}

THE K VALUE FOR TEST 1 IS APPROXIMATELY 2.5 TIMES GREATER THAN THE K VALUE FOR TESTS 2 AND 3. THE VACUUM VALUES RECORDED IN TEST 1 ARE AT THE EXTREME LOW END OF THE GAUGE RANGE USED (SEE DATA SHEET). THIS COULD BE THE CAUSE OF THE 0 READINGS AT THE START OF TEST 1. THEREFORE, USE THE AVERAGE VALUES FOR TESTS 2 AND 3.

$$K = \frac{4.24 \times 10^{-10} + 3.79 \times 10^{-10}}{2} = 4.015 \times 10^{-10} \quad \text{USE } 4.0 \times 10^{-10} \text{ ft}^2$$

OHM Corporation

COMPUTATION SHEET

Form No. 0048
Midwest Tech. Servs.
Rev. 08 89

Page _____ of _____

Proj. No.	Client	Location	Subject
12543	NEESA	NTC McCOY ANNEX	

Preparer's Initials	Date	Reviewer's Initials	Date	Approver's Initials	Date
GD	4/6/93	[illegible]	5-5	[illegible]	5/4/93

CHECK CALCULATED AIR PERMEABILITY VALUE

$$Q/H = \pi \frac{K}{\mu} P_W \left[\frac{1-(P_{ATM}/P_W)^2}{\ln(R_W/R_I)} \right]$$

FOR TEST 1

$P_{ATM} = 14.65$ PSIA $= 2110$ PSF

$P_W = 50''\ H_2O$ VAC $= 2110 - (\frac{50}{12} \times 62.4) = 1850$ PSF

$R_W = 0.083'$ $R_I = 35'$

$$Q/H = \pi \times \frac{4\times10^{-10}}{2.8\times10^{-7}} \times 1850 \left[\frac{1-(2110/1850)^2}{\ln(0.083/35)} \right]$$

$$= 6.12 \times \left[\frac{-0.2008}{-6.04} \right]$$

$$= 0.304 \text{ CFS/FT} = 0.304 \frac{\text{CFS}}{\text{FT}} \times 6\text{ FT} \times \frac{60\text{ S}}{\text{MIN}} = 109.6 \text{ CFM}$$

≈ 110 CFM

CALCULATED Q = 110 CFM $\qquad \frac{110}{55} = 2$

OBSERVED Q = 55 CFM

FOR TEST 2

$P_W = 55''\ H_2O$ VAC $= 2110 - (\frac{55}{12} \times 62.4) = 1824$ PSF

$R_W = 0.17'$ $R_I = 35'$

$$Q/H = \pi \times \frac{4\times10^{-10}}{2.8\times10^{-7}} \times 1824 \times \left[\frac{1-(2110/1825)^2}{\ln(0.17/35)} \right] = 6.02 \times \left[\frac{-0.2282}{-5.22} \right]$$

$$= 0.282 \text{ CFS/FT} = 0.282 \text{ CFS/FT} \times 6\text{ FT} \times 60\text{ S/MIN} = 128 \text{ CFM}$$

CALCULATED Q = 128 CFM $\qquad \frac{128}{42} = 3.2$

OBSERVED Q = 42 CFM

OHM Corporation

COMPUTATION SHEET

Form No. 0048
Midwest Tech. Servs.
Rev. 08/89

Page _____ of _____

Proj. No.	Client	Location	Subject
13543	G. DEVER	NTC McCOY ANNEX	

Preparer's Initials	Date	Reviewer's Initials	Date	Approver's Initials	Date
GD	4/6/93	[illegible]	5-5-93	[illegible]	5/4/93

FOR TEST 3

SAME DATA AS TEST 1

CALCULATED Q = 110 CFM

OBSERVED Q = 55 CFM

$\frac{110}{55} = 2$

SUMMARY

TEST #	Q CALCULATED	Q OBSERVED	FACTOR
1	110	55	2
2	138	42	3.3
3	110	55	2

BASED ON OBSERVED DATA VS CALCULATED VALUES FOR Q, IT IS REASONABLE TO REDUCE THE CALCULATED VALUE OF K BY A FACTOR OF 2.

CALCULATED $K = 4 \times 10^{-10}\ FT^2$

USE $K = \frac{4 \times 10^{-10}\ FT^2}{2} = 2 \times 10^{-10}\ FT^2$

OHM Corporation

COMPUTATION SHEET

Form No. 0048
Midwest Tech. Servs.
Rev. 08.89

Page _____ of _____

Proj. No.	Client	Location	Subject
13542	NEESA	NTC McCOY ANNEX	

Preparer's Initials	Date	Reviewer's Initials	Date	Approver's Initials	Date
GD	4/2/92	[illegible]	5/1/93	[illegible]	5/4/93

DETERMINE SYSTEM FLOW AND VACUUM

USE 6" ϕ WELL ⇒ $R_W = 0.25$ ft
USE 45' FOR RADIUS OF INFLUENCE TO OBTAIN COVERAGE $R_I = 45'$
USE PRESSURE IN THE WELL OF 50" H_2O VACUUM (A LARGER WELL WILL ALLOW A GREATER R_I WITH THE SAME INDUCED VACUUM IN THE WELL)
ATMOSPHERIC PRESSURE (100'ELEV) = 14.65 PSIA = 2,110 PSF
PRESSURE IN VACUUM WELL = 50" H_2O P_W = 2110 − (50/12 × 62.4) = 1,850 PSF

$$Q/H = \pi \frac{K}{\mu} P_W \left[\frac{1-(P_{ATM}/P_W)^2}{\ln(R_W/R_I)} \right]$$

$$= \pi \frac{2\times10^{-10}\ ft^2}{1.3\times10^{-7}\ lb\text{-}sec/ft} \times 1850 \frac{lb}{ft^2} \times \left[\frac{1-(2110/1850)^2}{\ln(0.25/45)} \right]$$

$$= 3.06 \times \left[\frac{-0.3008}{-5.193} \right]$$

$$= 0.177 \frac{ft^2/s}{ft} = 0.177 \frac{ft^2/s}{ft} \times 6\ ft \times \frac{60\ s}{1\ min}$$

$$= 63.8\ ft^2/min \text{ PER WELL}$$

USE 64 CFM PER WELL

USE 4 WELLS FOR COVERAGE OF CONTAMINATED SOIL ZONE

TOTAL FLOW = 4×64 = 256 CFM

OHM Corporation

COMPUTATION SHEET

Form No. 0048
Midwest Tech. Servs.
Rev. 08 89

Page _____ of _____

Proj. No.	Client	Location	Subject
13543	NEESA	NTC MCCOY ANNEX	

Preparer's Initials	Date	Reviewer's Initials	Date	Approver's Initials	Date
GD	4/8/93	RC	5/3/93	RD	5/4/93

DETERMINE VACUUM BLOWER REQUIREMENTS

USE 3" Ø PIPING INSTEAD OF 2" PIPING PROPOSED IN ORIGINAL RAP
FLOWRATE = 64 CFM RECOVERY WELL VACUUM = 50"
LENGTH OF LONGEST LUN = 420'
NUMBER OF BENDS = 5 (EQUIVALENT LENGTH/BEND = 7
BEND LENGTH = 5 X 7 = 35
TOTAL LENGTH = 420 + 35 = 455 FT USE 500
FRICTION LOSS PER FOOT OF 2" PIPING @ 64 CFM = 0.01"

FRICTION LOSS = 500 X 0.01 = 5"

MOISTURE SUMP LOSS ≈ 3"

CARBON ABSORPTION CANISTERS CARBTROL MODEL 6-2 = 3.5"/CANISTER
2 X 3.5" = 7"

BLOWER VACUUM REQUIRED = 50" + 5" + 3" + 7" = 65" WC.

Application/Engineering

Friction Loss Per Foot of Tubing

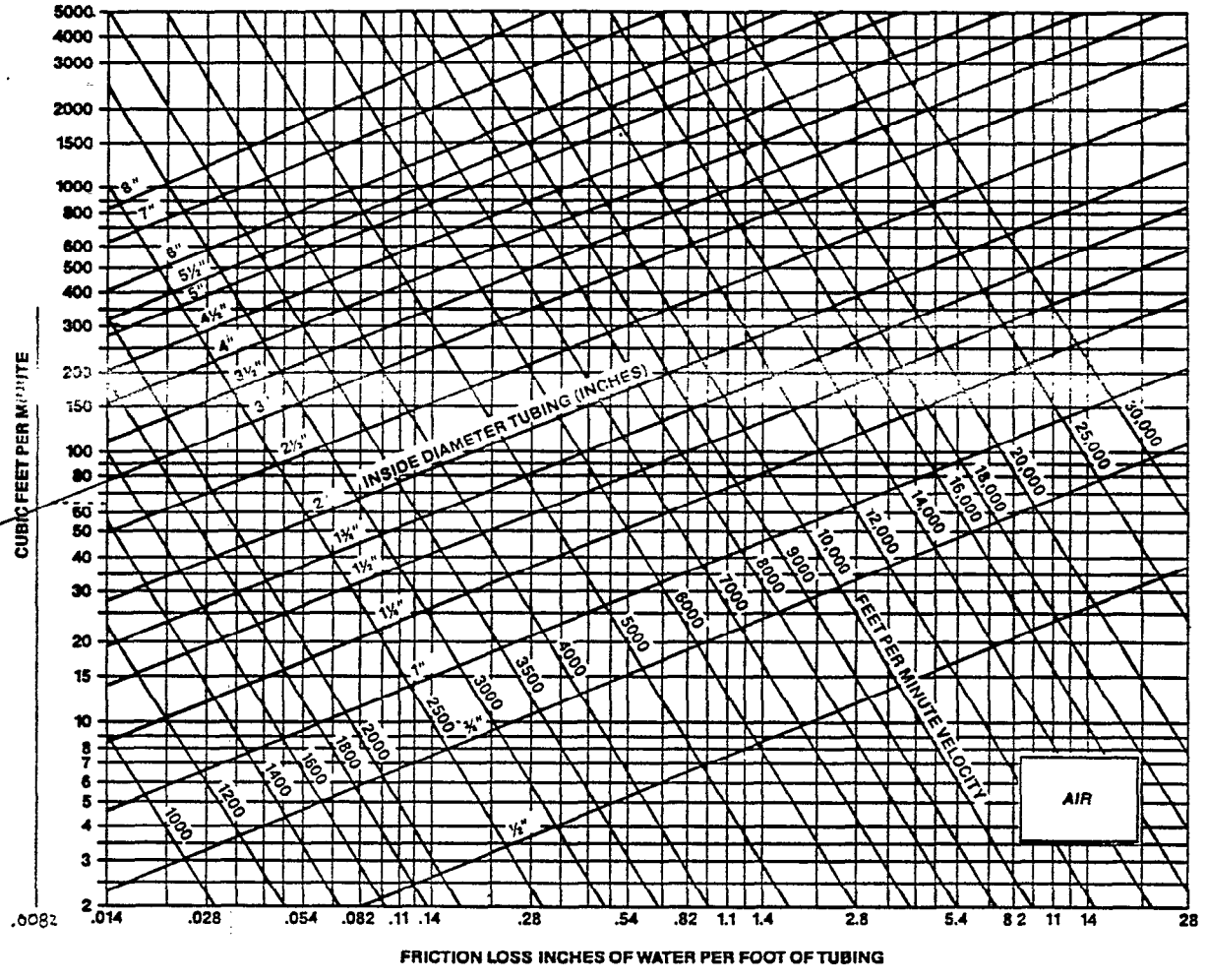

Friction Loss in Fittings

To calculate friction loss in fittings use chart below. This chart will yield equivalent lengths (in feet) of tubing. Use this length with graph above to find friction loss in inches of water column.

NOMINAL PIPE SIZE (INCHES)	EQUIVALENT TUBING LENGTH (FEET)	
	90° EL	45° EL
1¼	3	1.5
1½	4	2
2	5	2.5
2½	6	3
3	7	4
4	10	5
5	12	6
6	15	7.5
8	20	10

EG&G ROTRON
Industrial Division

EN 707

Explosion-Proof Regenerative Blower For Environmental Remediation

FEATURES

- Manufactured in the USA
- Maximum flow: 280 SCFM
- Maximum pressure: 85″ WG
- Maximum vacuum: 87″ WG
- Standard motor: 5.0 HP
- Blower construction — cast aluminum housing, impeller and cover
- UL & CSA approved motors for Class I, Group D atmospheres
- Sealed blower assembly
- Quiet operation within OSHA standards

OPTIONS

- 50 Hz motors
- International voltages
- Other HP motors
- Corrosion resistant surface treatments
- Remote drive (motorless) models

ACCESSORIES

- Moisture separators
- Explosion-proof motor starters
- Inline & inlet filters
- Vacuum & pressure gauges
- Relief valves
- External mufflers

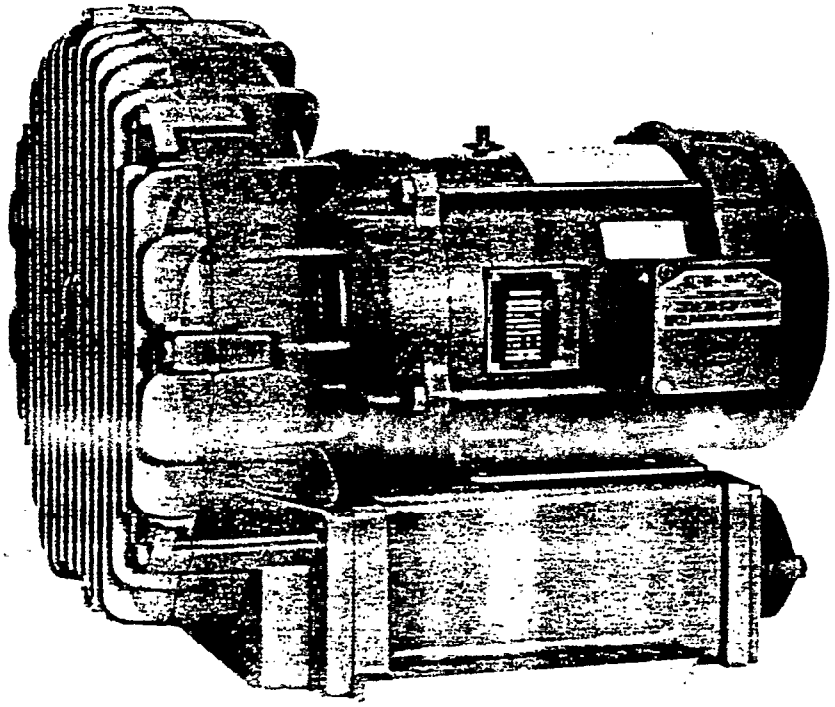

BLOWER PERFORMANCE AT STANDARD CONDITIONS

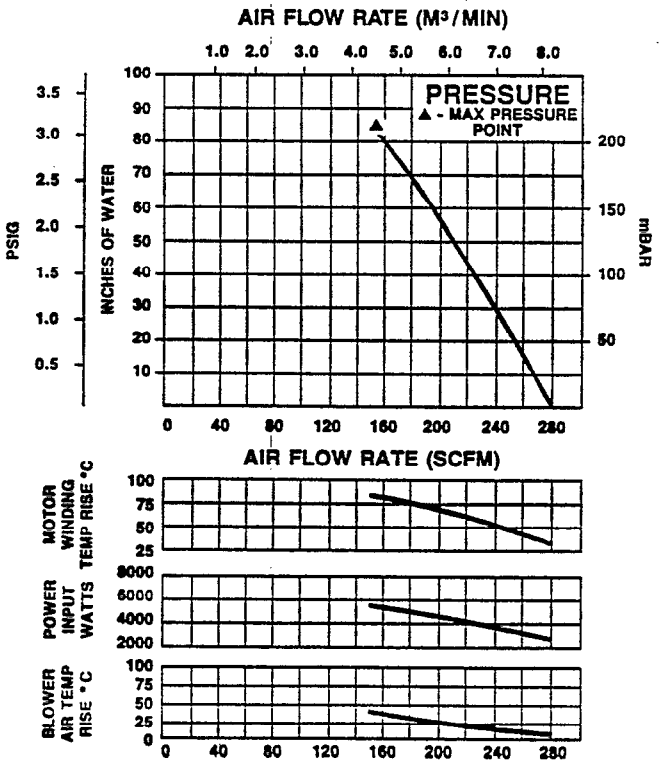

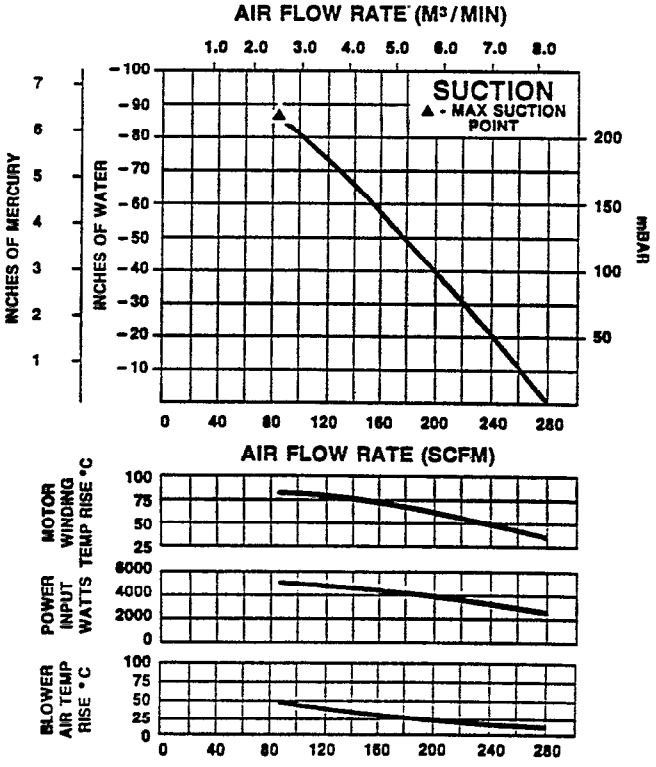

EG&G ROTRON
Industrial Division

EN 707

EG&G ROTRON
Industrial Division
North Street
Saugerties, NY 12477
Tel: 914/246-3401
Telefax: 914/246-3802
Telex: 981511

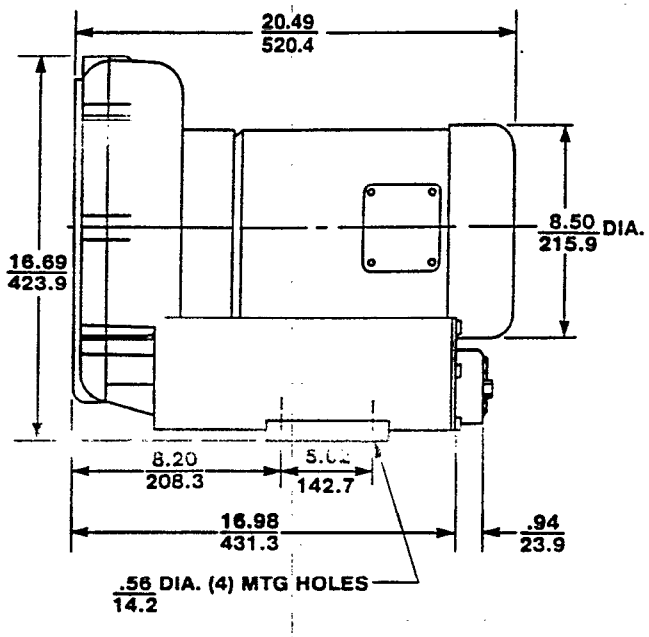

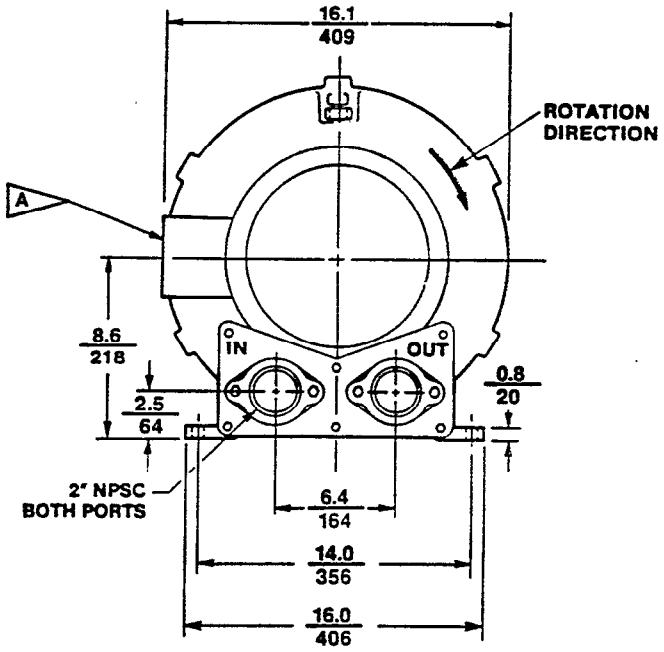

DIMENSIONS: IN / MM
TOLERANCES: .XX ± .1 / 2.5
(UNLESS OTHERWISE NOTED)

A 0.75" NPT CONDUIT CONNECTION AT 12 O'CLOCK POSITION

SPECIFICATIONS

MODEL	EN707F72XL	
Part No.	038181	
Motor Enclosure Type	Explosion-proof	
Horsepower	5.0	
Phase — Frequency	Three - 60 Hz	
Voltage	230	460
Motor Nameplate Amps	14	7
Maximum Blower Amps[1]	15.8	7.9
Inrush Amps	96	48
Starter Size	1	0
Service Factor	1.0	
Thermal Protection	Pilot Duty	
Bearing Type	Sealed, Ball	
Shipping Weight	174 lb (79 kg)	

BLOWER LIMITATIONS

Min. Flow @ Max. Suction	85 SCFM @ −87" WG
Min. Flow @ Max. Pressure	150 SCFM @ 85" WG

[1]Corresponds to the performance point at which the blower and/or motor temperature rise reaches the limit of the thermal protection in the motor.

Specifications subject to change without notice. Please contact factory for specification updates.

OHM Corporation

COMPUTATION SHEET

Form No. 0048
Midwest Tech. Servs
Rev. 08 89

Page _____ of _____

Proj. No.	Client	Location	Subject
12543	NEESA	NTC McCOY ANNEX	

Preparer's Initials	Date	Reviewer's Initials	Date	Approver's Initials	Date
GD	4/9/93	KC	5/3/93	[illegible]	5/4/93

DETERMINE VAPOR-PHASE CARBON ADSORPTION SYSTEM SIZE

FROM SVE PILOT TEST ⇒ TEST #2 HAD HIGHEST CONCENTRATION

TOTAL VOA CONCENTRATION IN AIR STREAM = $142\ mg/m^3 \times 3 = 426\ mg/m^3$

CARBON ADSORPTIVITY AT THIS CONCENTRATION IS ≈ 14%

ASSUME INLET CONCENTRATION DROPS TO 50% IN FIRST MONTH AND TO 10% AFTER 2 MONTHS

POUNDS OF BTEX REMOVED IN FIRST MONTH

$$= \frac{426 + \frac{426}{2}}{2} \frac{mg}{m^3} \times 260 \frac{ft^3}{MIN} \times \frac{1\ m^3}{35.2\ ft^3} \times \frac{1\ lb}{453{,}600\ mg} \times \frac{1440\ MIN}{DAY} \times 30\ DAYS$$

$= 224$ lbs

POUNDS OF CARBON REQUIRED = $224\ lbs\ CONTAMINANTS \times \frac{1\ lb\ CARBON}{0.14\ lbs\ CONT} = 1{,}600$ lbs

POUNDS OF BTEX REMOVED IN SECOND MONTH

$$= \frac{426/2 + 0.1(426)}{2} \times 260 \times \frac{1}{35.2} \times \frac{1}{453600} \times 1440 \times 20 = 90\ lbs$$

POUNDS OF CARBON REQUIRED = $90 \times \frac{1}{0.14} = 643$ lbs

TOTAL QUANTITY OF CARBON REQUIRED = 1600 + 643 = 2,243 lbs

OF CANISTERS = $\frac{2243\ lbs}{170\ lbs/CANISTER} = 13.2 = 14$ DRUMS

CARBTROL®

AIR PURIFICATION CANISTERS 140-200 LB. ACTIVATED CARBON

G-1
G-2
G-3

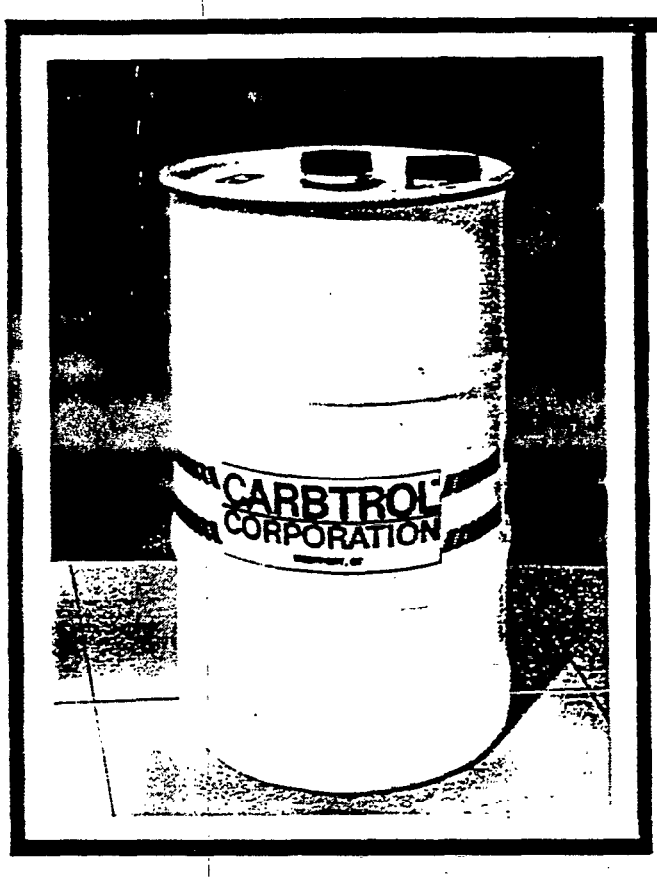

$695 - 7%

The CARBTROL "G" Series canisters handle flows up to 500 CFM.

FEATURES

- High activity carbon.
- Epoxy lined steel or polyethylene construction.
- DOT rated. Acceptable for shipment of hazardous spent carbon.
- Side drain for removal of accumulated condensate.
- Low pressure drop.
- PVC Internal Piping.
- High Temperature (180° F) steel units available.

APPLICATIONS

- Soil vapor remediation
- Air stripper exhausts
- Tank vents
- Exhaust hoods
- Work area purification
- Sewage plant odor control

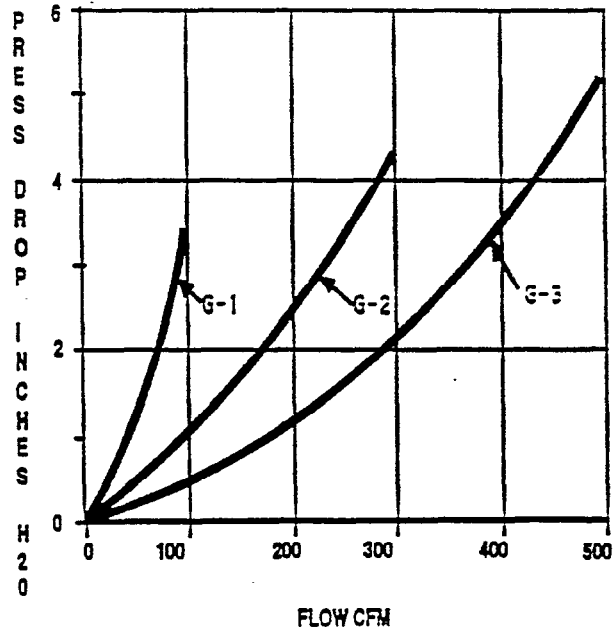

CARBTROL® CORPORATION

39 Riverside Avenue, Westport, CT 06880 • 1-800-242-1150 • (203) 226-5642

© Copyright 1991 Carbtrol Corporation - 5/29/92

CARBTROL®

AIR PURIFICATION CANISTERS
140-200 LB. ACTIVATED CARBON

G-1
G-2
G-3

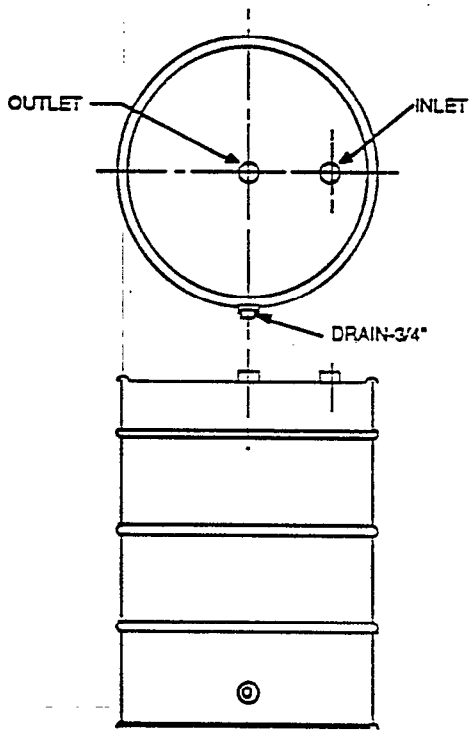

MODEL G-1

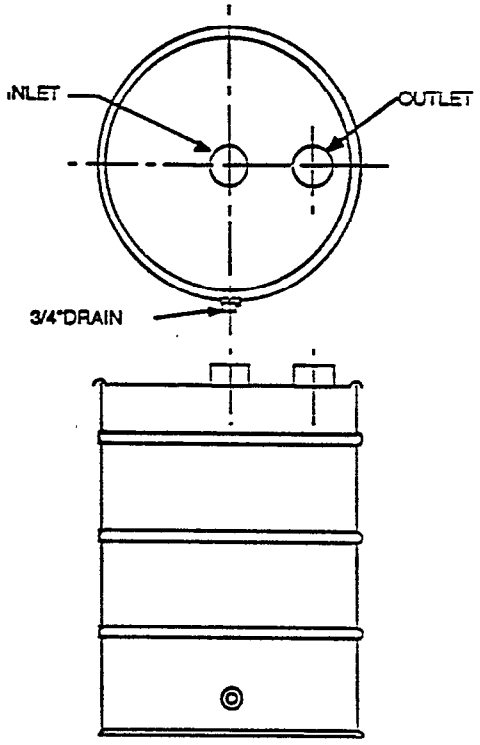

MODEL G-2, G-3

SPECIFICATIONS

MODEL	DIAMETER/HEIGHT	CARBON WEIGHT	INLET/OUTLET	MAX. RATED FLOW	APPROX. SHIP WT.
G-1	24"/36"	200 lbs.	2"/2"	100 CFM	250 lbs.
G-2	24"/36"	170 lbs.	4"/4"	300 CFM	225 lbs.
G-3	24"/36"	140 lbs.	6"/6"	500 CFM	200 lbs.

CARBTROL® CORPORATION

39 Riverside Avenue Westport, CT 06880 • 1-800-242-1150 • (203) 226-564

APPENDIX E

AIR SAMPLE LABORATORY RESULTS

QUALITY CONTROL DATA

March 04, 1993
PACE Project Number: 2302185

Client Reference: NEESA McCoy Annex 13543

HYDROCARBONS IN AIR (AT S.T.P.)
Batch: 90 36991
Samples: 90 0113552, 90 0113560, 90 0113579

METHOD BLANK AND SAMPLE DUPLICATE:

Parameter	Units	PRL	Method Blank	900088060	Duplicate of 90 0088060	R
Benzene	ppm(v/v)	0.58	ND			
Benzene	ppm(v/v)	1.2		65	66	
Toluene	ppm(v/v)	0.85	ND			
Toluene	ppm(v/v)	1.7		53	56	
Ethyl Benzene	ppm(v/v)	0.85	ND			
Ethyl Benzene	ppm(v/v)	1.7		10	11	1
Xylenes	ppm(v/v)	0.85	ND			
Xylenes	ppm(v/v)	1.7		32	34	
Total VOA	ppm(v/v)		ND	160	167	
Benzene	mg/M3	2.0	ND			
Benzene	mg/M3	4.0		230	230	
Toluene	mg/M3	3.5	ND			
Toluene	mg/M3	7.0		220	230	
Ethyl benzene	mg/M3	4.0	ND			
Ethyl benzene	mg/M3	8.0		47	52	1
Xylenes	mg/M3	4.0	ND			
Xylenes	mg/M3	8.0		150	160	
Total VOA	mg/M3		ND	647	672	
Methyl Tert-Butyl Ether	ppm(v/v)	0.56	ND			
Methyl Tert-Butyl Ether	ppm(v/v)	1.1		83	81	
Methyl Tert-Butyl Ether	mg/M3	2.0	ND			
Methyl Tert-Butyl Ether	mg/M3	4.0		330	320	
Total Hydrocarbon Content	ppm(v/v)	0.48	ND			
Total Hydrocarbon Content	ppm(v/v)	0.96		2900	2900	
Total Hydrocarbon Content	mg/M3	2.0	ND			
Total Hydrocarbon Content	mg/M3	4.0		12400	12400	

5460 Beaumont Center Blvd.
Tampa, FL 33634
TEL: 813-884-8268
FAX: 813-888-6382

An Equal Opportunity Employer

Client Reference: NEESA McCoy Annex 13543

ND Not detected at or above the PRL.
PRL PACE Reporting Limit

5460 Beaumont Center Blvd.
Tampa, FL 33634
TEL: 813-884-8268
FAX: 813-888-6382

An Equal Opportunity Employer

pace INCORPORATED
THE ASSURANCE OF QUALITY

REPORT OF LABORATORY ANALYSIS

OHM Corporation
13400 Mohawk Road
Clermont, FL 34711

March 04, 1993
PACE Project Number: 23021858

Attn: Mr. Gregory A. Dever

Client Reference: NEESA McCoy Annex 13543

PACE Sample Number:			90 0113552	90 0113560	90 011357
Date Collected:			02/17/93	02/17/93	02/17/93
Date Received:			02/18/93	02/18/93	02/18/93
Client Sample ID:			SVE Pilot	SVE Pilot	SVE Pilot
Parameter	Units	PRL	Test #1	Test #2	Test #3
ORGANIC ANALYSIS					
HYDROCARBONS IN AIR (AT S.T.P.)					
Benzene	ppm(v/v)	0.58	9.3	6.4	15
Toluene	ppm(v/v)	0.85	15	4.9	13
Ethyl Benzene	ppm(v/v)	0.85	ND	1.6	2.4
Xylenes	ppm(v/v)	0.85	4.9	3.8	5.4
Total VOA	ppm(v/v)		29.2	16.7	35.8
Benzene	mg/M3	2.0	33	22	52
Toluene	mg/M3	3.5	62	20	53
Ethyl benzene	mg/M3	4.0	ND	7.6	11
Xylenes	mg/M3	4.0	23	18	26
Total VOA	mg/M3		118	67.6	142
Methyl Tert-Butyl Ether	ppm(v/v)	0.56	4.2	ND	ND
Methyl Tert-Butyl Ether	mg/M3	2.0	16	ND	ND
Total Hydrocarbon Content	ppm(v/v)	0.48	300	510	600
Total Hydrocarbon Content	mg/M3	2.0	1300	2100	2500

These data have been reviewed and are approved for release.

Michael W. Palmer
Manager, Organic Chemistry

5460 Beaumont Center Blvd.
Tampa, FL 33634
TEL: 813-884-8268
FAX: 813-888-6382

An Equal Opportunity Employer

pace INCORPORATED
THE ASSURANCE OF QUALITY

REPORT OF LABORATORY ANALYSIS

March 04, 1993

Mr. Gregory A. Dever
OHM Corporation
13400 Mohawk Road
Clermont, FL 34711

RE: PACE Project No. 230218.585
Client Reference: NEESA McCoy Annex 13543

Dear Mr. Dever:

Enclosed is the report of laboratory analyses for samples received February 18, 1993.

Footnotes are given at the end of the report.

If you have any questions concerning this report, please feel free to contact us.

Sincerely,

Rhonda M. Rasmussen

Rhonda M. Rasmussen
Project Manager

Enclosures

RECEIVED
MAR 08 1993

Florida DER CompQAP #870529G

Lab Certification: Florida Environmental: HRS #E84003; Florida SDWA: HRS #84125

5460 Beaumont Center Blvd.
Tampa, FL 33634
TEL: 813-884-8268
FAX: 813-888-6382

An Equal Opportunity Employer

FOOTNOTES
for page 3

Client Reference: NEESA McCoy Annex 13543

ND	Not detected at or above the PRL.
PRL	PACE Reporting Limit
RPD	Relative Percent Difference

5460 Beaumont Center Blvd.
Tampa, FL 33634
TEL: 813-884-8268
FAX: 813-888-6382

An Equal Opportunity Employer

OHM Corporation

CHAIN-OF-CUSTODY RECORD

230218.585 3/1/93

Form 0019
Field Technical Services
Rev. 08/89

№ 121168

O.H. MATERIALS CORP. • P.O. BOX 551 • FINDLAY, OH 45839-0551 • 419-423-3526

PROJECT NAME	PROJECT LOCATION
NEESA McCOY ANNEX	NTC ANNEX ORLANDO

PROJ. NO.	PROJECT CONTACT	PROJECT TELEPHONE NO.
13543	GREG DEVER	(904) 394-8601

CLIENT'S REPRESENTATIVE	PROJECT MANAGER/SUPERVISOR

ITEM NO.	SAMPLE NUMBER	DATE	TIME	COMP	GRAB	SAMPLE DESCRIPTION (INCLUDE MATRIX AND POINT OF SAMPLE)	NUMBER OF CONTAINERS	ANALYSIS DESIRED (INDICATE SEPARATE CONTAINERS): EPA TO3 (RTEX)	REMARKS
1	SVE PILOT TEST #1	2/17/93	0950		X	SVE PILOT TEST AIR SAMPLE (VACUUM SAMPLE CAN)	1	✓	11355
2	SVE PILOT TEST #2	2/17/93	1048		X	SVE PILOT TEST AIR SAMPLE (VACUUM SAMPLE CAN)	1	✓	11356
3	SVE PILOT TEST #3	2/17/93	1325		X	SVE PILOT TEST AIR SAMPLE (VACUUM SAMPLE CAN)	1	✓	11357
4									
5									
6									
7									
8									
9									
10									

TRANSFER NUMBER	ITEM NUMBER	TRANSFERS RELINQUISHED BY	TRANSFERS ACCEPTED BY	DATE	TIME
1	1,2,3	Maggie Q. [illegible]	BL Bennett	2/18	1:20
2					
3					
4					

REMARKS: 3 Vacu-Samplers
7 wd TAT BLB 2/18
Client # 900227

SAMPLER'S SIGNATURE

TRANSFER 3