N65928.AR.000651
NTC ORLANDO
5090.3a

BASE REALIGNMENT AND CLOSURE ENVIRONMENTAL SITE SCREENING REPORT FOR STUDY AREA 44 NTC ORLANDO FL

6/1/1997

ABB ENVIRONMENTAL

01.03.44.0001
ID-00074

BASE REALIGNMENT AND CLOSURE ENVIRONMENTAL SITE SCREENING REPORT

STUDY AREA 44

NAVAL TRAINING CENTER ORLANDO, FLORIDA

UNIT IDENTIFICATION CODE: N65928
CONTRACT NO.: N62467-89-D-0317/107

JUNE 1997

SOUTHERN DIVISION
NAVAL FACILITIES ENGINEERING COMMAND
NORTH CHARLESTON, SOUTH CAROLINA
29419-9010

PRINTED ON RECYCLED PAPER

BASE REALIGNMENT AND CLOSURE ENVIRONMENTAL SITE SCREENING REPORT

STUDY AREA 44

NAVAL TRAINING CENTER ORLANDO, FLORIDA

Unit Identification Code: N65928

Contract No.: N62467-89-D-0317/107

Prepared by:

ABB Environmental Services, Inc.
2590 Executive Center Circle, East
Tallahassee, Florida 32301

Prepared for:

Department of the Navy, Southern Division
Naval Facilities Engineering Command
2155 Eagle Drive
North Charleston, South Carolina 29418

Barbara Nwokike, Code 1873, Engineer-in-Charge

June 1997

CERTIFICATION OF TECHNICAL
DATA CONFORMITY (MAY 1987)

The Contractor, ABB Environmental Services, Inc., hereby certifies that, to the best of its knowledge and belief, the technical data delivered herewith under Contract No. N62467-89-D-0317/107 are complete and accurate and comply with all requirements of this contract.

DATE: June 17, 1997

NAME AND TITLE OF CERTIFYING OFFICIAL: John Kaiser
Task Order Manager

NAME AND TITLE OF CERTIFYING OFFICIAL: Richard Allen
Project Technical Lead

(DFAR 252.227-7036)

TABLE OF CONTENTS

BRAC Environmental Site Screening Report
Study Area 44
Naval Training Center
Orlando, Florida

Chapter	Title	Page No.
1.0	STUDY AREA (SA) 44, MISSILE TRAINING RANGE	1-1
1.1	SA 44, BACKGROUND AND CONDITIONS	1-1
1.1.1	Former Missile Training Range	1-1
1.1.2	Alleged Silk Screening Disposal Area	1-1
1.2	SA 44, INVESTIGATION SUMMARY	1-4
1.2.1	Missile Training Range	1-4
1.2.1.1	Shallow Groundwater Screening	1-4
1.2.1.2	Deep Groundwater Screening and CPT	1-5
1.2.1.3	Supplemental Groundwater Screening	1-5
1.2.1.4	Soil Boring and Monitoring Well Installation	1-5
1.2.1.5	Piezometer Installation to Evaluate an Anomalous Groundwater Mound	1-8
1.2.1.6	Additional Monitoring Well Installation at Potential Chlorinated Solvent "Hot Spots"	1-8
1.2.2	Alleged Silk Screening Disposal Area	1-8
1.2.2.1	Geophysics	1-8
1.2.2.2	Soil Boring and Monitoring Well Installation	1-8
1.2.2.3	Test-Pitting Investigation	1-9
1.3	SA 44, RESULTS	1-9
1.3.1	Former Missile Training Range	1-9
1.3.1.1	Shallow Groundwater Screening	1-9
1.3.1.2	Deep Groundwater Screening and CPT	1-9
1.3.1.3	Soil Boring and Monitoring Well Installation	1-11
1.3.1.4	Piezometer Installation to Evaluate an Anomalous Groundwater Mound	1-12
1.3.1.5	Additional Monitoring Well Installation at Potential Chlorinated Solvent "Hot Spots"	1-13
1.3.2	Alleged Silk Screening Disposal Area	1-13
1.3.2.1	Geophysics	1-13
1.3.2.2	Soil Boring and Monitoring Well Installation	1-13
1.3.2.3	Test-Pitting Investigation	1-13
1.4	SA 44, CONCLUSIONS AND RECOMMENDATIONS	1-14

TABLE OF CONTENTS (Continued)

BRAC Environmental Site Screening Report
Study Area 44
Naval Training Center
Orlando, Florida

REFERENCES

APPENDICES

Appendix A: TerraProbe℠ Screening Investigation, Shallow Groundwater, Former Missile Training Range, Study Area 44
Appendix B: Cone Penetrometer Investigation, Former Missile Training Range, Study Area 44
Appendix C: Boring Logs, Monitoring Well Installation Diagrams, and Groundwater Sample Field Data Sheets, Study Area 44
Appendix D: Geophysical Survey Technical Memorandum, Alleged Silk Screening Disposal Area, Study Area 44
Appendix E: Summary of Positive Detections, Soil and Groundwater Samples, Study Area 44
Appendix F: Summary of Laboratory Analytical Results, Soil and Groundwater Samples, Study Area 44
Appendix G: Test-Pitting Investigation, Alleged Silk Screening Disposal Area, Study Area 44

LIST OF FIGURES

BRAC Environmental Site Screening Report
Study Area 44
Naval Training Center
Orlando, Florida

Figure	Title	Page No.
1	Location of Study Area 44	1-2
2	Areas of Potential Concern, Former Missile Training Range and Alleged Disposal Area for Silk Screening Supplies, Study Area 44	1-3
3	TerraProbe℠ and Cone Penetrometer Explorations, Missile Training Range, Study Area 44	1-6
4	Soil Boring and Monitoring Well Locations, Piezometer Locations, Geophysical Surveys, Test Pit Locations, Study Area 44	1-7
5	Groundwater Elevation Contours, February 29, 1996, Study Area 44	1-10

GLOSSARY

ABB-ES	ABB Environmental Services, Inc.
AEC	area of environmental concern
bls	below land surface
BTEX	benzene, toluene, ethylbenzene, and xylenes
CLP	Contract Laboratory program
CPT	cone penetrometer testing
DDT	4,4'- dichlorodiphenyltrichloroethane
DPT	direct-push technology
FDEP	Florida Department of Environmental Protection
FDEPG	Florida Department of Environmental Protection Groundwater Guidance
FID	flame ionization detector
GC	gas chromatograph
MCL	maximum contaminant level
$\mu g/kg$	micrograms per kilogram
$\mu g/\ell$	micrograms per liter
NTC	Naval Training Center
OPT	Orlando Partnering Team
PCE	tetrachloroethene
RBC	risk-based concentration
SA	study area
SCG	soil cleanup goals
TAL	target analyte list
TCE	trichloroethene
TCL	target compound list
USEPA	U.S. Environmental Protection Agency
VOCs	volatile organic compounds

1.0 STUDY AREA (SA) 44, MISSILE TRAINING RANGE

SA 44 consists of two areas in the northwestern portion of Main Base that were identified during the Air Force records search as potential areas of environmental concern (ABB Environmental Services, Inc. [ABB-ES], 1995c). These areas are the former Matador Missile Training Range, which includes a motor pool facility near Buildings 2816 and 2817 (area of environmental concern [AEC]-MB-13), and an alleged disposal area for silk screening supplies located near Buildings 2720 and 2723 (AEC-MB-8).

This report contains information gathered as a result of site screening activities conducted at SA 44. In October of 1997, after the review of site screening results, the Orlando Partnering Team (OPT) concluded that the site required no further action under the Installation Restoration program.

1.1 SA 44, BACKGROUND AND CONDITIONS. This section includes a brief background summary for the two locations included in SA 44. Additional details can be found in the Air Force Records Search Technical Memorandum (ABB-ES, 1995c).

1.1.1 Former Missile Training Range The former Matador Missile Training Range is located in the northwestern portion of Main Base, between Decatur Avenue and Farragut Avenue (Figure 1). The range includes existing Buildings 2816 and 2817, as well as three former buildings, 2818, 2821, and 2822, and an alleged motor pool compound (Figure 2). An irrigation well is also located within this area. The current operational status of the pump is undetermined, although water has been observed leaking from the casing. One objective of site screening activities in this area was to evaluate potential releases to the environment due to past use, storage, or disposal of oil or hazardous materials in the Missile Training Range.

The area to be investigated as SA 44 is adjacent to SA 3, which was investigated as part of the Group I site screening program. During site screening activities at SA 3, tetrachloroethene (PCE) was detected in groundwater in monitoring wells OLD-03-01A and OLD-03-04A at concentrations of 9 and 12 micrograms per liter ($\mu g/\ell$), respectively (Figure 2). Subsequent samples from these two monitoring wells have indicated significantly reduced concentrations of PCE (ABB-ES, 1997). These concentrations exceed the Florida Department of Environmental Protection (FDEP) maximum contaminant level (MCL) of 3 $\mu g/\ell$. In addition, soil gas survey results indicated the presence of PCE and benzene, toluene, ethylbenzene, and xylenes (BTEX) over much of SA 3 (refer to Site Screening Report, Groups I and II Study Areas [ABB-ES, 1995e] for additional information).

Based on the presence of PCE in groundwater at SA 3 and the assumption that the hydraulic gradient in the area is to the northeast (toward Lake Spier and Lake Baldwin), the second objective of site screening activities at the Missile Training Range was to evaluate the extent of PCE in groundwater adjacent to SA 3.

1.1.2 Alleged Silk Screening Disposal Area According to a source interviewed during the Air Force records search (ABB-ES, 1995c), waste materials from a graphic arts shop were buried in what is now a grassy field located north of

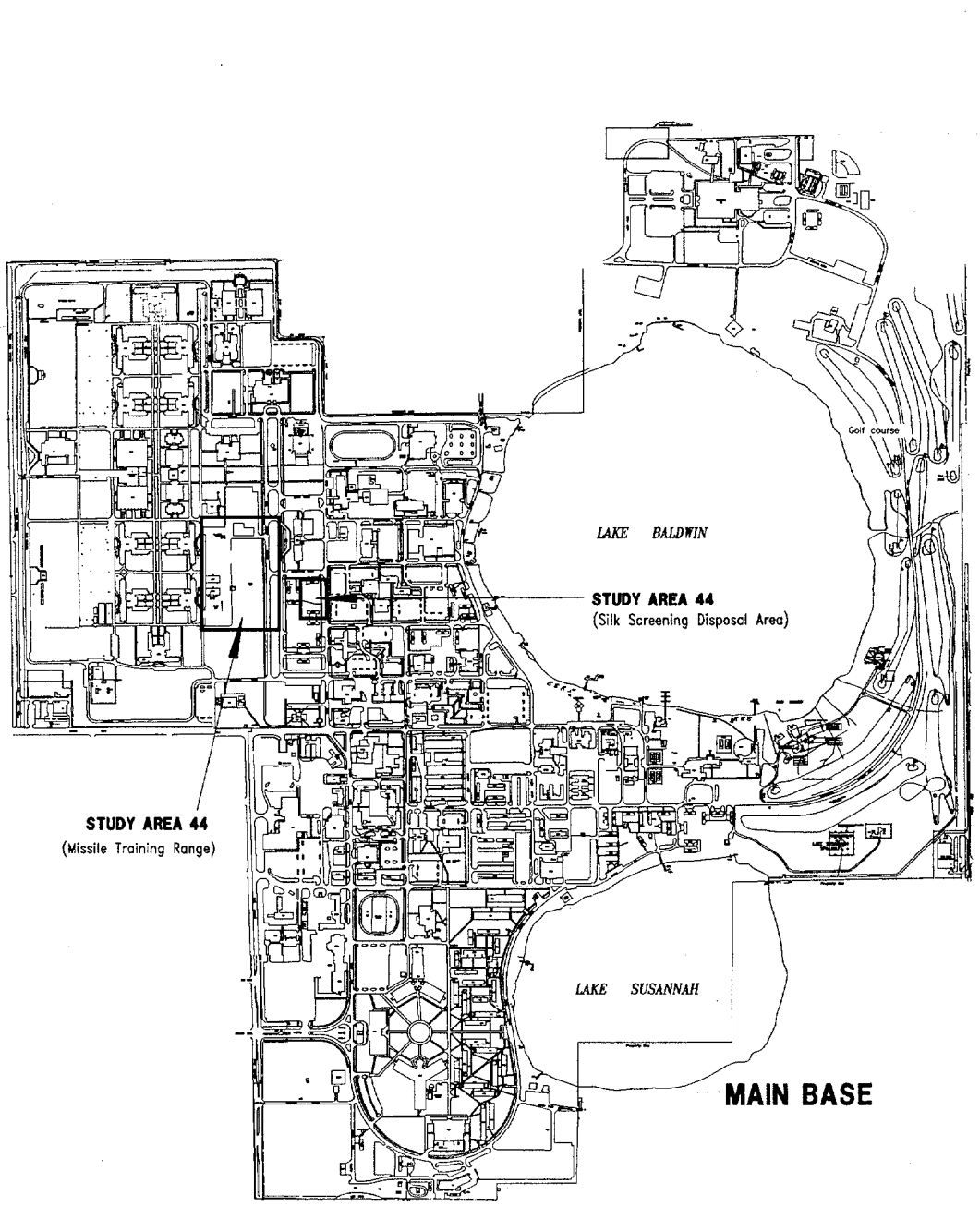

0 750 1,500

SCALE: 1 INCH = 1,500 FEET

SOURCE: ABB-ES 1994b.

FIGURE 1
LOCATION OF STUDY AREA 44

H:\OLD\171900.DWG, NP-BB 06/17/97 09:22:56, AutoCAD R12

BASE REALIGNMENT AND CLOSURE ENVIRONMENTAL SITE SCREENING REPORT

NAVAL TRAINING CENTER ORLANDO, FLORIDA

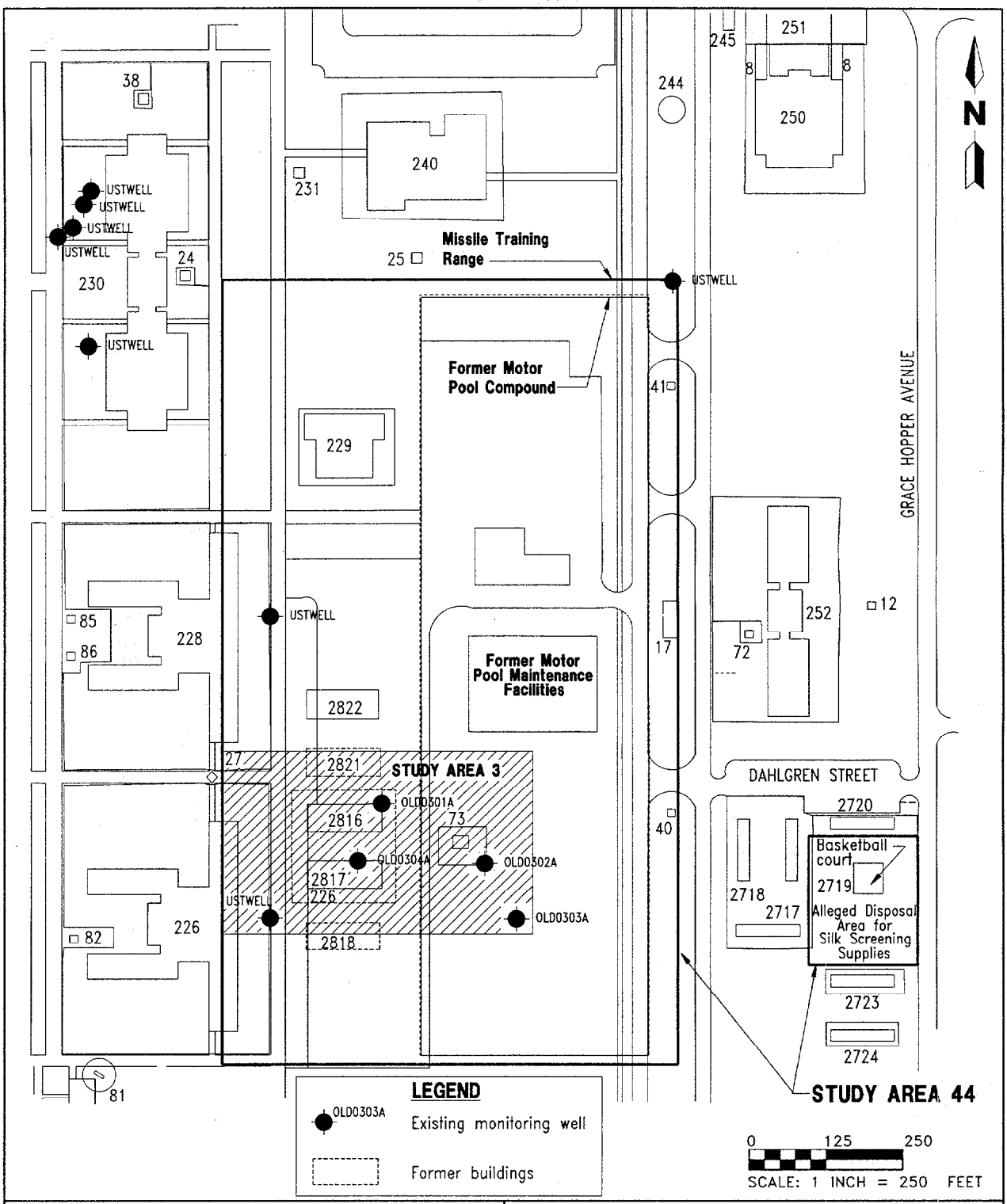

FIGURE 2
AREAS OF POTENTIAL CONCERN, STUDY AREA 44

H:\OLD\SA44\SA44FIG2.DWG, NAB-NP 06/17/97 16:43:50, AutoCAD R12

BASE REALIGNMENT AND CLOSURE ENVIRONMENTAL SITE SCREENING REPORT

NAVAL TRAINING CENTER ORLANDO, FLORIDA

Building 2723 and south of Building 2720 (Figure 2). The former graphic arts building was located approximately where the basketball court is now, and when the building was demolished and the department moved, excess materials and waste were disposed of in the vicinity of the demolition. These buried materials may have included products containing xylenes, microthinners, inks, pigments, and paint sludge. The potential environmental concern at this location is the impact of these materials on soil and groundwater quality.

1.2 SA 44, INVESTIGATION SUMMARY. Site screening activities at SA 44 included the following:

- an initial groundwater sampling and field screening investigation, a cone penetrometer test (CPT) survey, and the installation of six soil borings completed as monitoring wells after data evaluation at the Missile Training Range;
- installation of six piezometers to evaluate an anomalous groundwater mound in the north-central portion of the Missile Training Range;
- completion of two additional monitoring wells in the vicinity of chlorinated solvent detections during the field screening investigation at the Missile Training Range;
- a geophysical survey followed by completion of two soil borings with monitoring wells at the Alleged Silk Screening Disposal Area; and
- a limited test pitting program in the vicinity of two geophysical anomalies at the Alleged Silk Screening Disposal Area.

Groundwater samples were collected at 83 locations using direct push technology (DPT) (e.g., TerraProbe℠ or CPT) and were submitted for field screening analysis of volatile organic compounds (VOCs) by field gas chromatograph (GC). Subsurface soil and groundwater samples were collected (one sample from each medium) from six of the eight soil borings and all eight monitoring wells. Groundwater samples from all monitoring wells were obtained using low-flow sampling. Samples were submitted for laboratory analysis to evaluate whether or not site activities have affected soil or groundwater. Samples were analyzed for full suite Contract Laboratory program (CLP) target compound list (TCL) and target analyte list (TAL) analyses in accordance with U.S. Environmental Protection Agency (USEPA) Level IV data quality objectives.

A more detailed description of investigation activities is presented below for each of the two areas comprising SA 44.

1.2.1 Missile Training Range Investigation activities in the Missile Training Range area were conducted in three phases to help focus subsequent sampling and analysis efforts.

1.2.1.1 **Shallow Groundwater Screening** The first phase of the investigation included the collection of shallow groundwater samples (approximately 11 to 16 feet below land surface [bls]) using the TerraProbe℠. A grid 600 feet long by 600 feet wide was established over the area of investigation with sampling locations on 100-foot centers. Some sample locations were modified slightly in

the field due to the presence of utilities or cultural features. A total of 58 samples were collected in this phase of the investigation (Figure 3). Groundwater samples collected from each of these locations were analyzed for VOCs with a field GC. Specific compounds included PCE, trichloroethene (TCE), and BTEX. Field screening results (including field duplicates) are summarized in Table A-1 in Appendix A.

1.2.1.2 **Deep Groundwater Screening and CPT** The second phase of the investigation utilized a CPT rig to collect piezocone data to determine site stratigraphy. Groundwater samples were collected with either a hydrocone or TerraProbe℠ sampling device from three depth intervals: shallow, at a depth of approximately 11 feet bls; intermediate, near the top of a cemented sand layer at approximately 23 feet bls; and deep, near the top of the Hawthorn Group at a depth of approximately 65 feet bls. Groundwater samples were analyzed in the field for VOCs.

Piezocone data were collected from six locations across the SA (Figure 3, "PC" locations). These data were used to develop site stratigraphy and to identify cemented sand horizons that may act as intermediate aquitards. The total depths of the profiles ranged from 33 to 90 feet bls and were determined by either piezocone advancement refusal or confirmation of the interpreted top of the Hawthorn Group (which defines the base of the shallow aquifer at Naval Training Center [NTC], Orlando). The piezocone data were compared to an electronic database of geologic data for the southeastern United States, and a continuous geologic profile was developed for each of the locations. Piezocone logs are included in Appendix B.

1.2.1.3 **Supplemental Groundwater Screening** Following completion of the piezocone data evaluation, both groundwater sampling and field screening analysis were completed at 25 additional locations. Groundwater samples were collected at up to three depth intervals at each location: the water table (i.e., shallow, approximately 11 feet bls), the top of a cemented sand layer (i.e., intermediate, approximately 23 feet bls), and the top of the Hawthorn Group (i.e., deep, approximately 65 feet bls). Groundwater sampling was conducted using both the CPT rig with a hydrocone attachment and the TerraProbe℠. The hydrocone was used to collect samples from all three depth intervals, while the TerraProbe℠ was used to collect shallow and intermediate depth samples only. Samples collected with the hydrocone were designated HC-1 through HC-15, and TerraProbe℠ samples were designated TP-64 through TP-74. These locations are shown on Figure 3. More detailed maps and field screening analytical results are presented in Appendix B.

1.2.1.4 **Soil Boring and Monitoring Well Installation** Based on the results of the field screening analysis (discussed in Subsection 1.3.1), soil borings were completed at four locations to allow installation of six monitoring wells. One location was selected for installation of a well cluster and consisted of wells screened across the three intervals of concern. These wells (OLD-44-01C [deep], OLD-44-02B [intermediate], and OLD-44-03A [shallow]; Figure 4) were installed directly northeast of SA 3 (i.e., at locations downgradient of the area where PCE was detected in groundwater samples from SA 3 monitoring wells). The remaining three locations (OLD-44-04A, OLD-44-05A, and OLD-44-06A) were selected to provide groundwater data from areas presumed to be downgradient of the initial field screening investigation area. Soil boring logs and well construction diagrams for these locations are included in Appendix C. Six groundwater samples (44G00101 through 44G00601) were collected (one from each monitoring well)

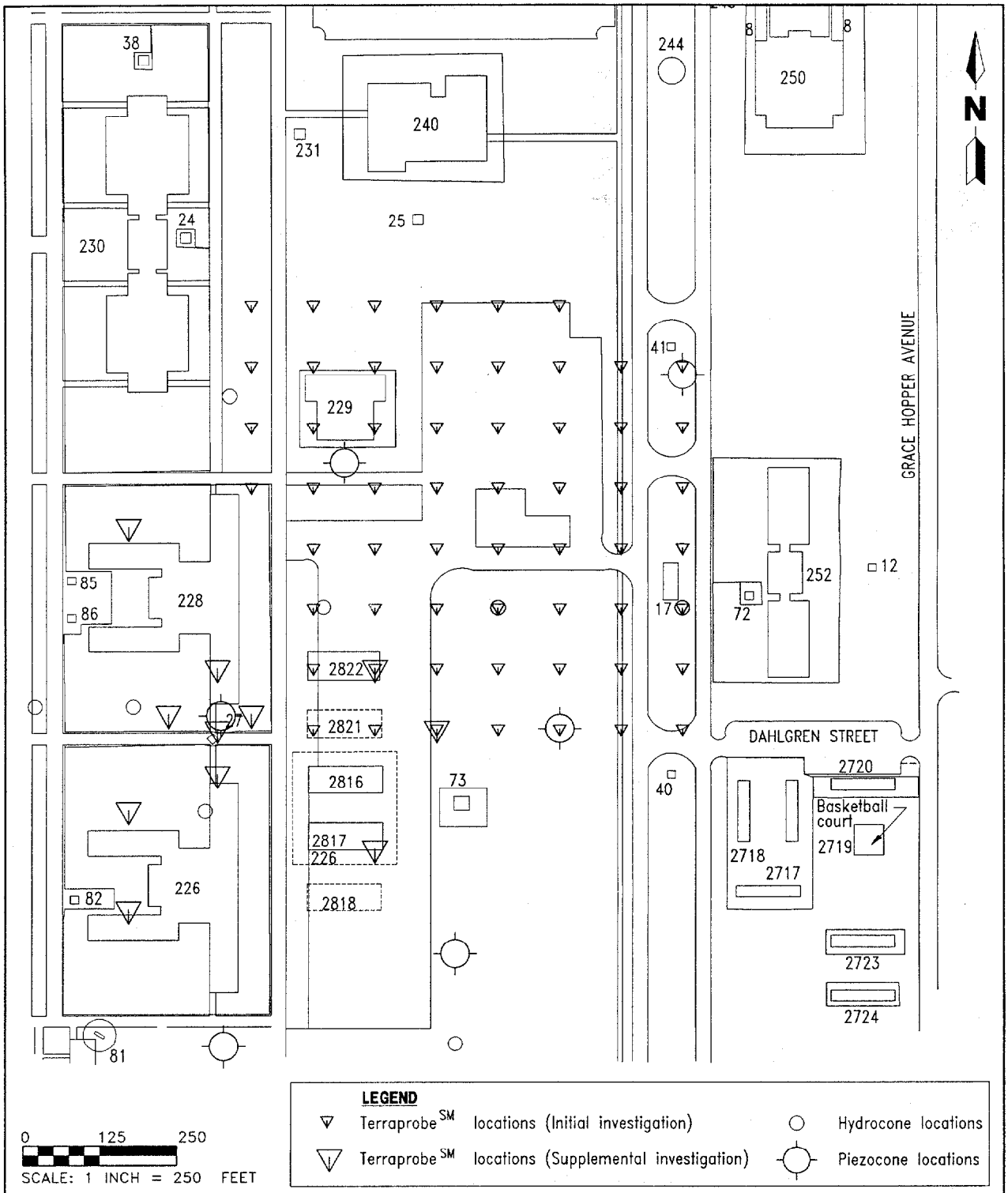

FIGURE 3
TERRAPROBE SM AND CONE PENETROMETER TESTING EXPLORATIONS, STUDY AREA 44

BASE REALIGNMENT AND CLOSURE ENVIRONMENTAL SITE SCREENING REPORT

NAVAL TRAINING CENTER ORLANDO, FLORIDA

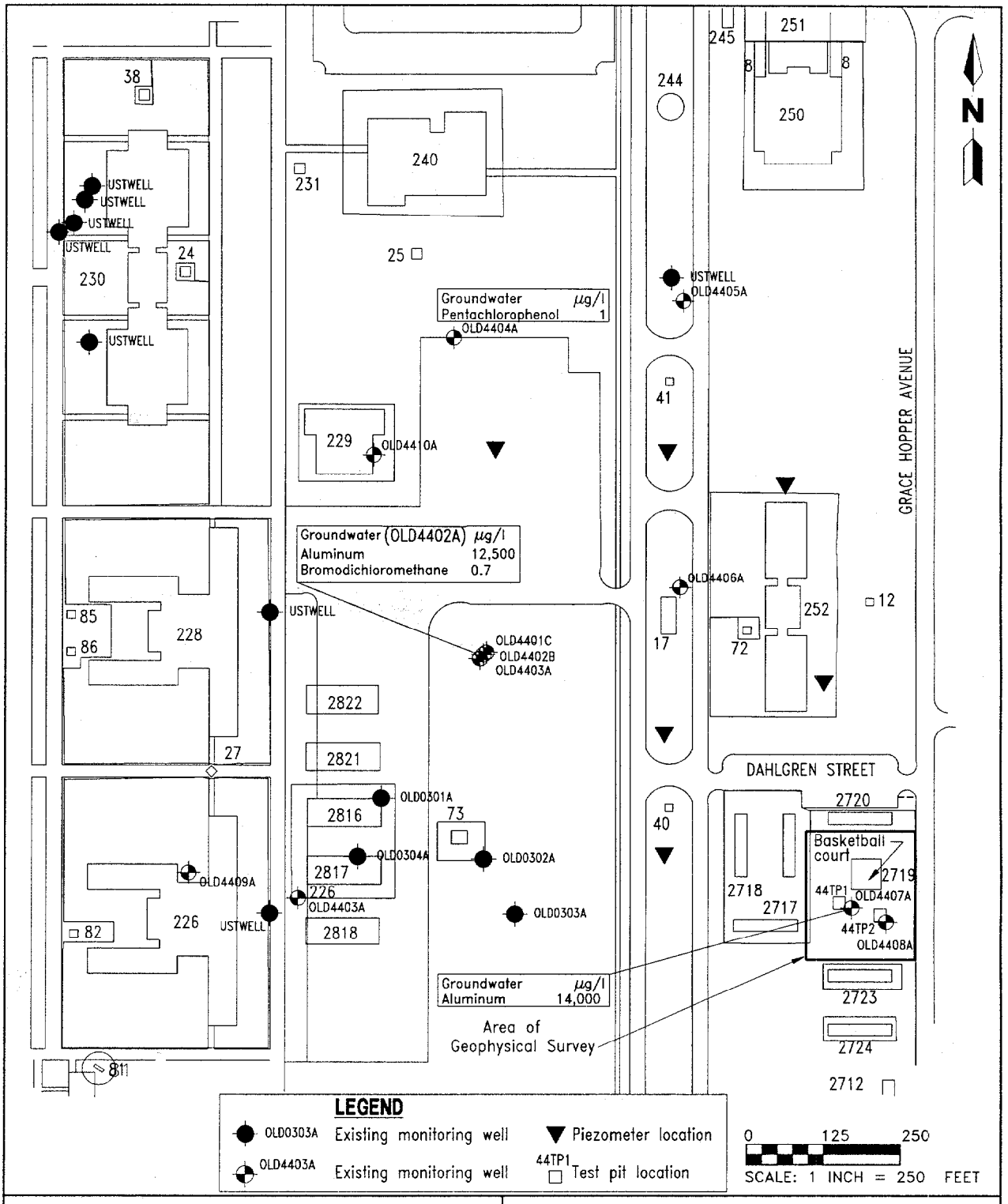

FIGURE 4
SOIL BORING AND MONITORING WELL LOCATIONS, PIEZOMETER LOCATIONS, GEOPHYSICAL SURVEYS, AND TEST PIT LOCATIONS, STUDY AREA 44

H:\SA44FIG2.DWG, NAB-NP 06/16/97 19:56:12, AutoCAD R12

BASE REALIGNMENT AND CLOSURE ENVIRONMENTAL SITE SCREENING REPORT

NAVAL TRAINING CENTER ORLANDO, FLORIDA

following well installation and development using low-flow sampling techniques. Groundwater sampling logs for these locations are included in Appendix C. No flame ionization detector (FID) deflections were noted during sample collection activities.

A total of five subsurface soil samples, including one field duplicate (44B00201, 44B00401, 44B00401D, 44B00501, and 44B00601), was collected from the interval directly above the water table at each boring location. Only one soil sample (44B00201) was collected to represent conditions at the well cluster location.

Soil and groundwater samples collected were submitted for full suite CLP TCL and TAL analyses to evaluate potential impact from materials that may have been disposed of in this area.

1.2.1.5 **Piezometer Installation to Evaluate an Anomalous Groundwater Mound** After water table elevations were measured in the newly installed monitoring wells, concerns arose that groundwater flow direction was not well defined in the central portion of the Missile Training Range due to what were perceived as anomalous water table elevations in two monitoring wells (OLD-44-04A and OLD-44-05A, Figure 4). Accordingly, six piezometers were installed to resolve the groundwater anomaly and to better define the groundwater flow direction in this area.

1.2.1.6 **Additional Monitoring Well Installation at Potential Chlorinated Solvent "Hot Spots"** Due to OPT concerns regarding detections of chlorinated solvents during the field screening investigation, two additional shallow monitoring wells were installed to confirm those detections (OLD-44-09A and OLD-44-10A, Figure 4).

1.2.2 Alleged Silk Screening Disposal Area

1.2.2.1 **Geophysics** A geophysical investigation, consisting of ground-penetrating radar and time-domain metal detector surveys, was completed in the area of the alleged disposal activity in an effort to identify subsurface anomalies indicative of debris disposal (refer to Appendix D for a complete summary of the geophysical investigation). An area bound by Building 2720 on the north, Building 2719 on the west, Grace Hopper Avenue on the east, and Building 2723 on the south (approximately 120 feet by 160 feet) was included in the survey. Two geophysical anomalies were identified that could not be readily explained by observable cultural features. These anomalies were the basis for locating two soil borings, discussed in Paragraph 1.2.2.2, below.

1.2.2.2 **Soil Boring and Monitoring Well Installation** To evaluate the potential environmental impact of materials that may have been disposed of in this area, one groundwater monitoring well was installed in each of the two anomalous areas (OLD-44-07A and OLD-44-08A, Figure 4). Soil boring logs, well construction diagrams, and groundwater sampling logs for these locations are included in Appendix C. Two subsurface soil samples (44B00701 and 44B00801; one from each boring) were collected from the interval from 8 to 10 feet bls (directly above the water table) during the soil boring completion, and a groundwater sample (44G00701 and 44G00801) was collected from each well following well installation and development using low-flow sampling techniques. No FID deflections were noted during sample collection activities.

Soil and groundwater samples were submitted for full suite CLP TCL and TAL analyses to evaluate potential impact on soil and groundwater from materials disposed of in this area.

The elevation for each of the monitoring wells was surveyed so that hydraulic head elevations could be determined. Depth-to-water measurements are recorded monthly for all monitoring wells installed at NTC, Orlando as part of the site screening program. Water table elevations from June 1996 are shown on Figure 5.

1.2.2.3 **Test-Pitting Investigation** A limited test-pitting investigation was completed in the vicinity of two geophysical anomalies. The purpose for this work was to determine whether or not the anomalies represented a potential buried contaminant source at the Alleged Silk Screening Disposal Area.

1.3 SA 44, RESULTS. The results of site screening investigations at SA 44 are discussed below. Laboratory analytical results from subsurface soil and groundwater samples collected from SA 44 are presented as Positive Detections Tables in Appendix E (Tables E-1 and E-2); exceedances of background or regulatory guidance concentrations are presented as bold and shaded in these tables. A complete set of laboratory analytical results for these media is presented in Appendix F (Tables F-1 and F-2). Field screening results are presented in tabular form and as contour maps in Appendices A and B.

1.3.1 Former Missile Training Range

1.3.1.1 **Shallow Groundwater Screening** Field screening results from the initial shallow groundwater screening investigation indicated three potential areas of concern: BTEX detections (up to 10.42 $\mu g/\ell$) in the northwestern quadrant of the sampling grid (Appendix A, Figures A-1 and A-2); a TCE detection at one location near Building 229 (5.97 $\mu g/\ell$, Appendix A, Figure A-3); and PCE detections of up to 0.34 $\mu g/\ell$ in the southwestern corner of the initial sampling grid (Appendix A, Figure A-3). PCE was detected in the vicinity of monitoring well OLD-03-01A, where PCE had been detected during the SA 3 screening investigation (ABB-ES, 1995e). Analytical results are summarized in Table A-1. These three areas of concern were the focus of the second phase of the groundwater screening investigation.

1.3.1.2 **Deep Groundwater Screening and CPT** To evaluate the vertical distribution of contaminants, groundwater samples were collected from three depth intervals at selected locations using the TerraProbe℠ (for shallow and intermediate depth sampling) and CPT (for deeper sampling) rigs. Sampling locations were selected to be within and downgradient of the areas of concern identified during the initial shallow groundwater investigation. The locations were chosen based on the direction of regional groundwater flow in the shallow (water table) aquifer, which was believed to be to the northeast, toward Lakes Spier and Baldwin.

Relatively low concentrations of PCE, TCE, and BTEX were detected at all depth intervals across the area of investigation during field screening activities. These results are presented both graphically and in table form in Appendices A (initial screening results) and B (second investigation phase results). Detected concentrations of benzene and TCE exceeded their respective FDEP MCLs at several locations:

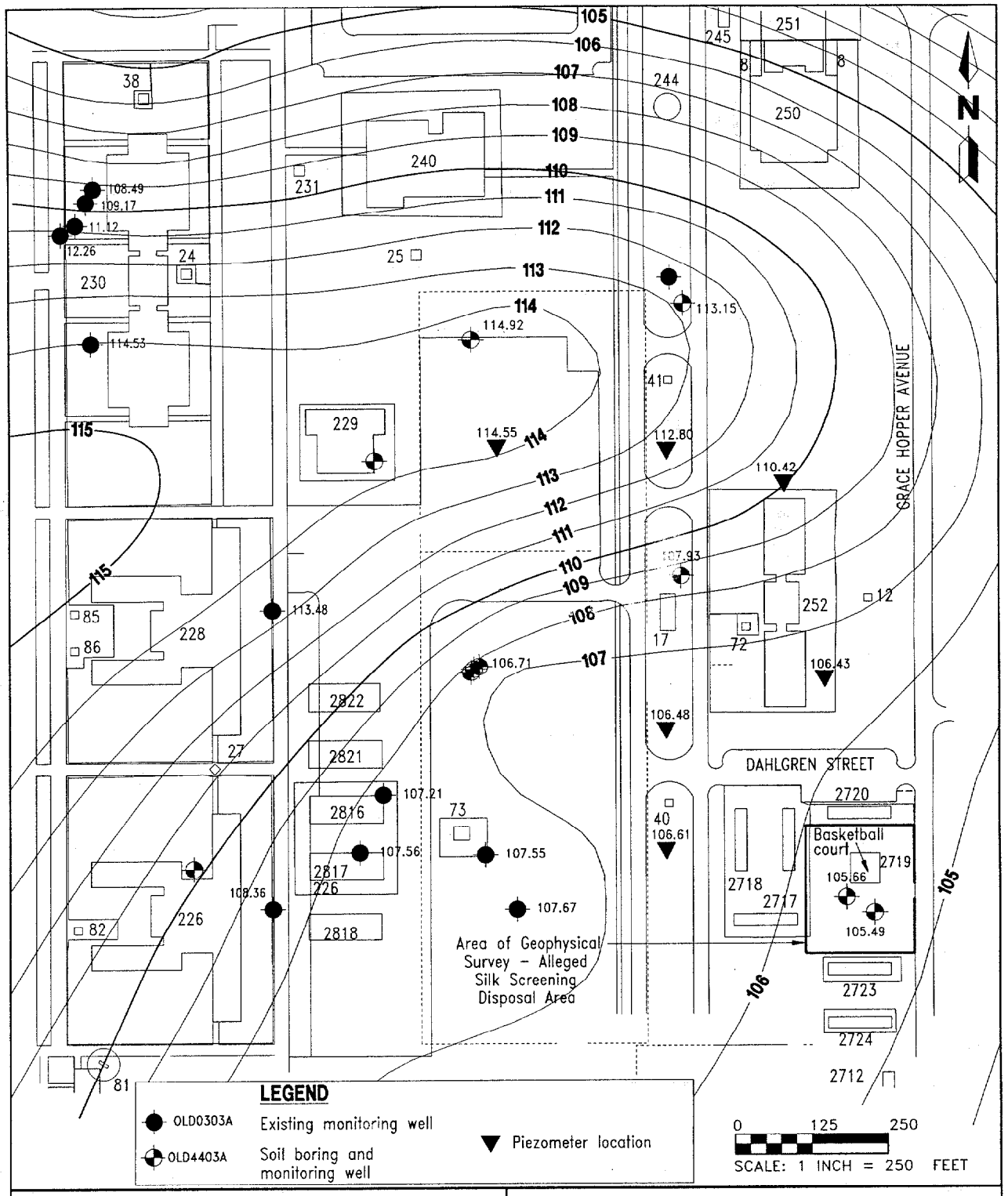

FIGURE 5
GROUNDWATER ELEVATION CONTOURS
JUNE 1996,
STUDY AREA 44

H:\OLD\SA44\SA44FIG4.DWG, NAB-NP 06/17/97 17:07:46, AutoCAD R12

BASE REALIGNMENT AND CLOSURE ENVIRONMENTAL SITE SCREENING REPORT

NAVAL TRAINING CENTER ORLANDO, FLORIDA

- Shallow groundwater screening samples from locations TP-56, TP-58, HC-6, HC-7, TP-64, TP-65, TP-70, and TP-76 exceed the FDEP MCL for benzene of 1 $\mu g/\ell$ (refer to Figure A-2 in Appendix A and Figure B-2 in Appendix B for graphic displays of these data).

- Intermediate groundwater screening samples from locations HC-10, HC-13, HC-14, TP-65, TP-66, TP-69, TP-72, TP-73, and TP-76 exceed the FDEP MCL for benzene of 1 $\mu g/\ell$ (refer to Figure B-3 in Appendix B for graphic display of these data).

- Shallow groundwater samples from locations TP-33 and HC-7 exceed the FDEP MCL for TCE of 3 $\mu g/\ell$ (refer to Figures A-2 and A-3 in Appendix A).

These locations correspond to the northwest and southwest boundaries of the area of investigation (Figure 3).

1.3.1.3 **Soil Boring and Monitoring Well Installation** Soil borings and monitoring wells were completed in areas presumed to be within and downgradient of the area where VOCs were detected in groundwater. Soil and groundwater samples were collected from each boring location (Figure 4). All groundwater samples from monitoring wells were obtained with low-flow sampling techniques. The piezometric surface elevation was calculated for each well using the June 1996 water-level data (Figure 5). Although the expected groundwater flow direction in the water table (unconfined) aquifer was to the northeast, calculated head values suggest that there is an anomalous groundwater mound in the vicinity of wells OLD-44-04A and OLD-44-05A. Refer to Paragraph 1.3.1.4, below, for additional information.

Laboratory analytical results from the four borings and six wells completed in the Missile Training Range are summarized as follows.

Subsurface Soils. Compounds detected above background screening values in subsurface soil samples include several inorganics, including calcium, copper, magnesium and mercury (Table E-1 in Appendix E). Acetone was the only VOC detected, but its presence is likely an artifact of the sampling or laboratory analytical process. Five pesticide compounds (4,4'-dichlorodiphenyldichloroethane, 4,4'-dichlorodiphenyldichloroethene, and alpha- and gamma-chlordane in boring 44B005, and 4,4'-dichlorodiphenyltrichloroethane [DDT] in boring 44B002) were detected in subsurface soils. The detected pesticide concentrations are consistent with expected concentrations in areas of regulated pesticide application. No inorganics were detected above the background screening value, and concentrations of all other compounds were below their respective residential risk-based concentrations (RBCs) and soil cleanup goals (SCGs).

Groundwater. Fourteen organic compounds were detected in groundwater samples from monitoring wells from at least one location in the Missile Training Range (Table E-2 in Appendix E). Concentrations of two organic compounds (bromodichloromethane and pentachlorophenol) exceeded their applicable regulatory screening values; bromodichloromethane (estimated concentration of 0.7 $\mu g/\ell$) in well OLD-44-02B slightly exceeded the FDEP MCL of 0.6 $\mu g/\ell$ and the tap water RBC of 0.17 $\mu g/\ell$. Pentachlorophenol in well OLD-44-04A (concentration of 1 $\mu g/\ell$) equaled the FDEP MCL of 1 $\mu g/\ell$ and exceeded the tap water RBC of 0.56 $\mu g/\ell$. Other organic compounds detected in groundwater samples were detected at

concentrations less than their corresponding Florida Department of Environmental Protection Groundwater Guidance (FDEPG). Refer to Figure 4 where the exceedances of the two organic compounds are indicated in chem-boxes.

Fifteen inorganic compounds were detected in at least one monitoring well at the Missile Training Range (Table B-3). Ten inorganic compounds were detected in at least one location at concentrations exceeding background screening values. Only aluminum in monitoring well OLD-44-02B was detected at a concentration that exceeded the FDEPG secondary standard (200 $\mu g/\ell$). This occurrence is likely related to the relatively high turbidity in the sample. Refer to Figure 4 where the exceedances for aluminum are indicated in chem-boxes.

Secondary standards have been established for Class G-I and G-II aquifers by the State of Florida, largely along Federal guidelines, to ensure that groundwater meets at least minimum criteria for taste, odor, and color, and does not pose a health risk.

Based on records reviews and interviews, there have been no known site activities that may have contributed to the observed exceedances of secondary standards for aluminum in wells OLD-44-02 and OLD-44-07 (located in the Alleged Silk Screening Disposal Area and discussed further in Paragraph 1.3.2.2, below). Two groundwater samples (44G00201 and 44G00701) exceeded the background screening concentration for aluminum (12,500 and 14,000 $\mu g/\ell$, respectively, versus a background screening concentration of 4,067 $\mu g/\ell$). Surface and subsurface soil concentrations of aluminum did not exceed screening concentrations (residential RBCs or SCGs). Both groundwater samples had high turbidity values (>195 nephelometric turbidity units), suggesting that suspended solids may have contributed to the observed secondary standard exceedances.

Analytes exceeding Florida secondary standards should also be compared with RBCs for tapwater published by the USEPA, Region III. The tapwater guidance concentration for aluminum is 37,000 $\mu g/\ell$. There were no other TAL metals exceedances, and other groundwater parameters measured during sampling were within normal limits: pH varied from 5.58 to 5.78, temperature from 81 to 82 degrees Fahrenheit, and conductivity from 80 to 195 micromhos per centimeter. ABB-ES concludes that the aluminum exceeding secondary standards is naturally occurring, is not related to past site activities, and does not pose a risk to human health or the environment.

1.3.1.4 Piezometer Installation to Evaluate an Anomalous Groundwater Mound
Groundwater contours for the six monitoring wells (and four existing wells from SA 3) suggested an anomalous groundwater mound in the vicinity of wells OLD-44-04A and OLD-44-05A. ABB-ES recommended that up to six piezometers be installed to study local groundwater flow. The piezometers were installed, and the groundwater contours were presented to the OPT during the July 1996 meeting (Figure 5). ABB-ES concluded that, although the local groundwater flow was to the east-southeast instead of northwest, existing monitoring wells were located downgradient of PCE detections in SA 3. ABB-ES further concluded and the OPT agreed that it was unlikely that PCE contamination existed in the shallow aquifer based on the analytical results. The OPT further agreed that additional monitoring wells would not be required to further define potential PCE contamination in groundwater.

1.3.1.5 Additional Monitoring Well Installation at Potential Chlorinated Solvent "Hot Spots" The OPT instructed ABB-ES to install two shallow monitoring wells in areas where chlorinated solvents had been reported by the field GC during DPT explorations. One of the monitoring wells, OLD-44-09A, was installed near the northwest corner of Building 226, west of Buildings 2816 and 2817 (Figure 4). The other, OLD-44-10A, was placed near the southeast corner of Building 229. Groundwater samples were collected from each well using low-flow sampling techniques. Laboratory analyses resulted in no detections of organic compounds (Appendix F, Table F-3, Summary of Groundwater Analytical Results).

1.3.2 Alleged Silk Screening Disposal Area

1.3.2.1 Geophysics The geophysical investigation identified two anomalous areas adjacent to the basketball court (shown on Figure D-5 in Appendix D) that may indicate buried debris. One area was located adjacent to the southwest corner of the court and the second was located adjacent to the south side of the court. The soil borings completed in each of these areas encountered uniform brown sands and some silt, and construction debris was noted in boring 44B008 (south of the court) in the upper 2 feet. Depth to water at these locations was approximately 11 feet bls. Appendix D presents the details of these survey results.

1.3.2.2 Soil Boring and Monitoring Well Installation

Subsurface Soils. Compounds detected in subsurface soils from the Alleged Silk Screening Disposal Area include traces of two organic compounds (acetone at a concentration of 6 micrograms per kilogram [μg/kg] in 44B007 and the pesticide 4,4'-DDT at an estimated concentration of 1.8 μg/kg in 44B008). Neither of these organic compounds was present at concentrations that exceeded appropriate screening values (Appendix E, Table E-1). Only three inorganic compounds (calcium, copper, and mercury) were detected at concentrations exceeding their respective background screening values, but not at concentrations that exceeded their applicable regulatory screening values.

Groundwater. Two organic compounds, carbon disulfide and bis(2-ethylhexyl)-phthalate, were detected in groundwater samples from this area (estimated concentrations of 0.3 μg/ℓ and 2.0 μg/ℓ, respectively, in well OLD-44-07A). Neither of the two organic compounds was detected at concentrations that exceeded the applicable FDEPG (Appendix E, Table E-2). Concentrations of five inorganic compounds (chromium, copper, lead, mercury, and zinc) from OLD-44-07A and one inorganic compound (zinc) from OLD-44-08A slightly exceed their respective background screening values. Only one compound (14,000 μg/ℓ of aluminum from OLD-44-07A) was detected at a concentration exceeding the FDEPG secondary standard of 200 μg/ℓ. This exceedance is believed to be related to the relatively high suspended solids present at this well location (refer to the discussion on secondary standards in Paragraph 1.3.1.3, above).

1.3.2.3 Test-Pitting Investigation Although soil and groundwater were not apparently impacted by past site use, a limited test-pitting investigation to further investigate the source of the two geophysical anomalies located adjacent to the basketball court in the central part of the area (Figure 4) was initiated. The investigation was completed on September 6, 1996. A back hoe was utilized to uncover each anomaly. The excavation involved the removal of 6 inches of soil cover from 6-foot long by 2-foot wide trenches. The operation proceeded in this manner until the source of the anomaly could be positively identified.

The first excavation (44TP1, Figure 4) was located approximately 5 to 10 feet from the southwest corner of the basketball court. The second excavation (44TP2) was located approximately 20 to 25 feet south of the southeast corner of the basketball court. At both excavations, remnants of concrete pads were uncovered at a depth of approximately 1 foot bls. The pads were not completely uncovered, but appeared to be 18 inches in width, 8 inches thick, and at least 8 eight feet in length. No organic vapors were detected with the FID at either excavation.

Additional details of the test-pitting investigation are included as Appendix G.

1.4 SA 44, CONCLUSIONS AND RECOMMENDATIONS. Based on available information and site screening data, ABB-ES makes the following recommendations and conclusions for the two areas investigated as part of SA 44.

Former Missile Training Range. Based on the available piezometric surface elevation data, there appears to be a complex local groundwater flow regime in the vicinity of SA 44. Groundwater flow around the site taken as a whole is to the east toward Lake Baldwin, although locally, the flow direction may have a northeasterly or southeasterly component (Figure 5). Nonetheless, ABB-ES concludes that there are no inorganic or organic compounds present in groundwater at concentrations of concern at SA 44. However, future users of this property should be aware that the presence of aluminum at the measured concentrations may render the groundwater from the surficial aquifer objectionable as a potable or irrigation water source.

Alleged Silk Screening Disposal Area. Based on available information and site screening data, it is concluded that there is no basis for environmental concern at the Alleged Silk Screening Disposal Area and that this parcel is eligible for transfer with no further requirement for evaluation. However, as with the Missile Training Range, future users of this property should be aware that the presence of aluminum at the measured concentrations may render the groundwater from the surficial aquifer objectionable as a potable or irrigation water source.

Accordingly, ABB-ES recommends that SA 44 be classified 1/White and made eligible for transfer with no requirement for further evaluation.

The undersigned members of the Base Realignment and Closure team concur with the findings and recommendations of the preceding investigation.

STUDY AREA 44

Nancy Rodriguez U.S. Environmental Protection Agency, Region IV	7/17/97 Date
John Mitchell Florida Department of Environmental Protection	7/17/97 Date
Wayne J. Hassel U.S. Department of the Navy	7-17-97 Date

REFERENCES

ABB Environmental Services, Inc. (ABB-ES). 1995c. Technical Memorandum, U.S. Air Force Records Search, NTC, Orlando, Florida. Prepared for Southern Division, Naval Facilities Engineering Command (SOUTHNAVFACENGCOM), Charleston, South Carolina (September).

ABB-ES. 1995e. Draft Site Screening Report, Groups I and II Study Areas, NTC, Orlando, Florida. Prepared for SOUTHNAVFACENGCOM, Charleston, South Carolina (November).

ABB-ES. 1997. BRAC Environmental Site Screening Report, Study Area 3, NTC, Orlando, Florida. Prepared for SOUTHNAVFACENGCOM, Charleston, South Carolina (July).

APPENDIX A

TERRAPROBE℠ SCREENING INVESTIGATION, SHALLOW GROUNDWATER
FORMER MISSILE TRAINING RANGE
STUDY AREA 44

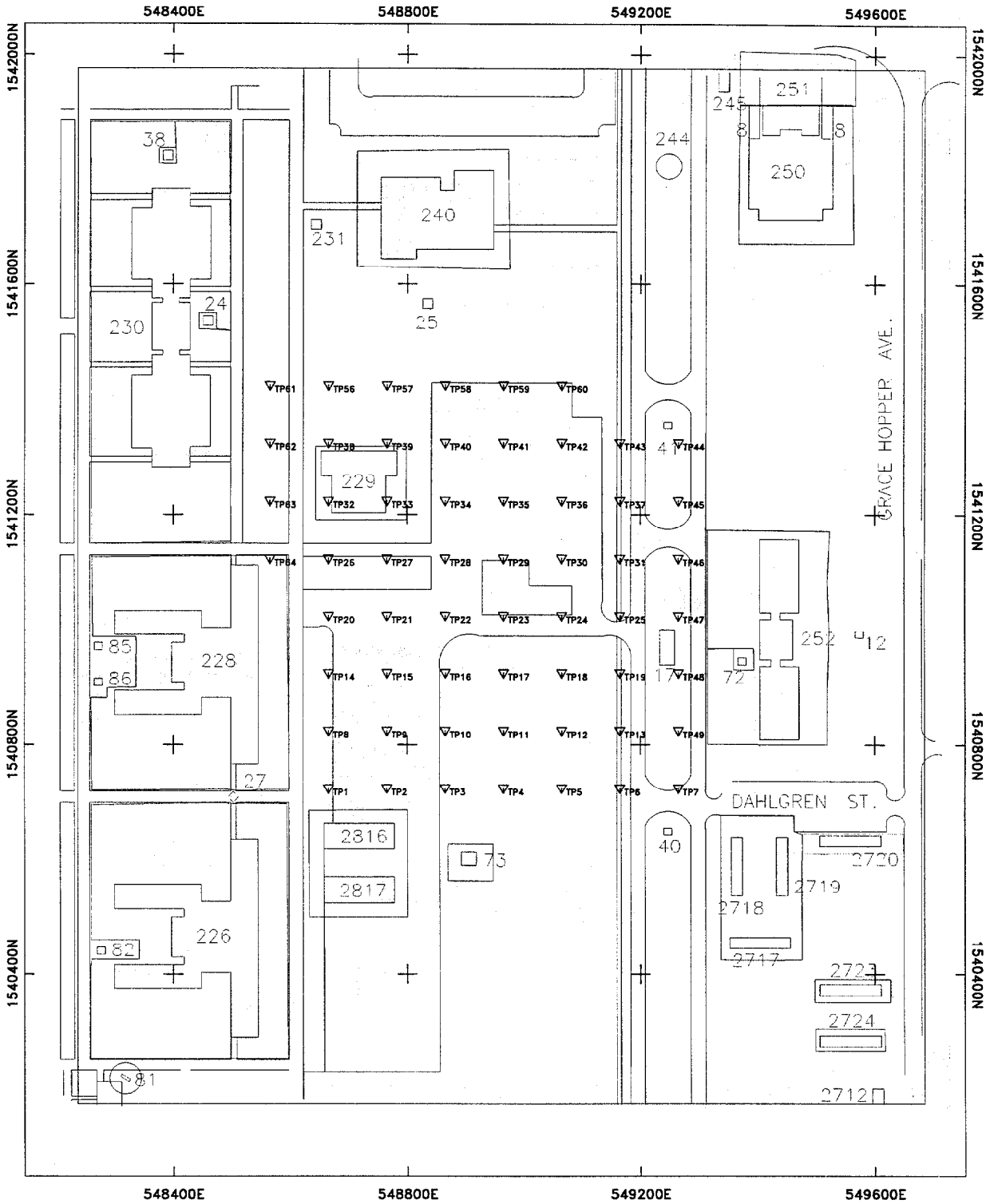

FIGURE A-1

Scale 1:3200

250 0 250

(feet)

SOUTHERN DIVISION
TERRAPROBE SURVEY LOCATIONS OF ALL EXPLORATIONS
ABB ENVIRONMENTAL SERVICES, INC.

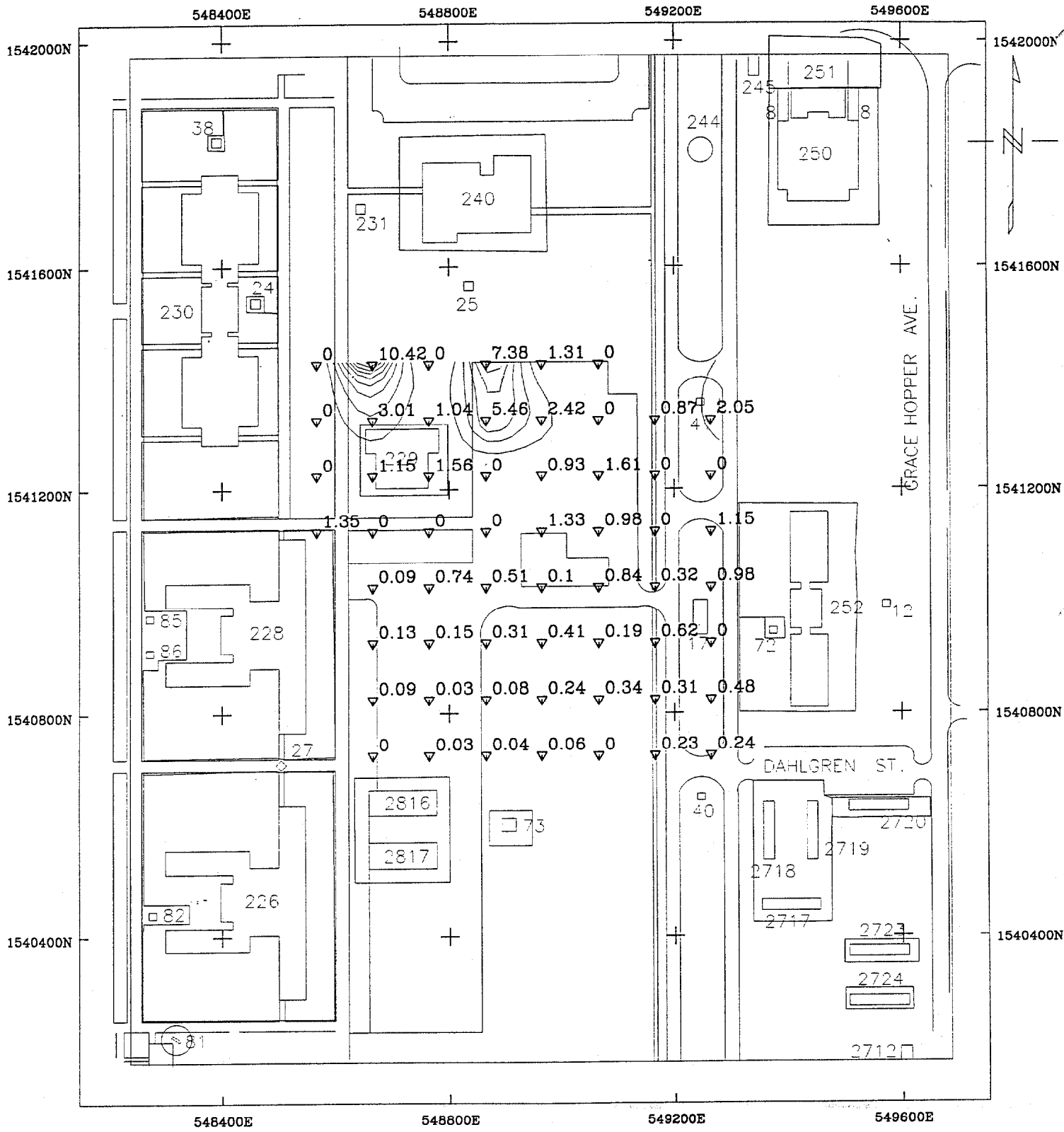

Note: contour interval 1 $\mu g/\ell$. Data shown is field screening data only.

Scale 1:3091.221

250 0 250

(feet)

FIGURE A-2

SOUTHERN DIVISION

TERRAPROBE SURVEY
FIELD GC RESULTS
BTEX CONCENTRATIONS

ABB ENVIRONMENTAL SERVICES, INC.

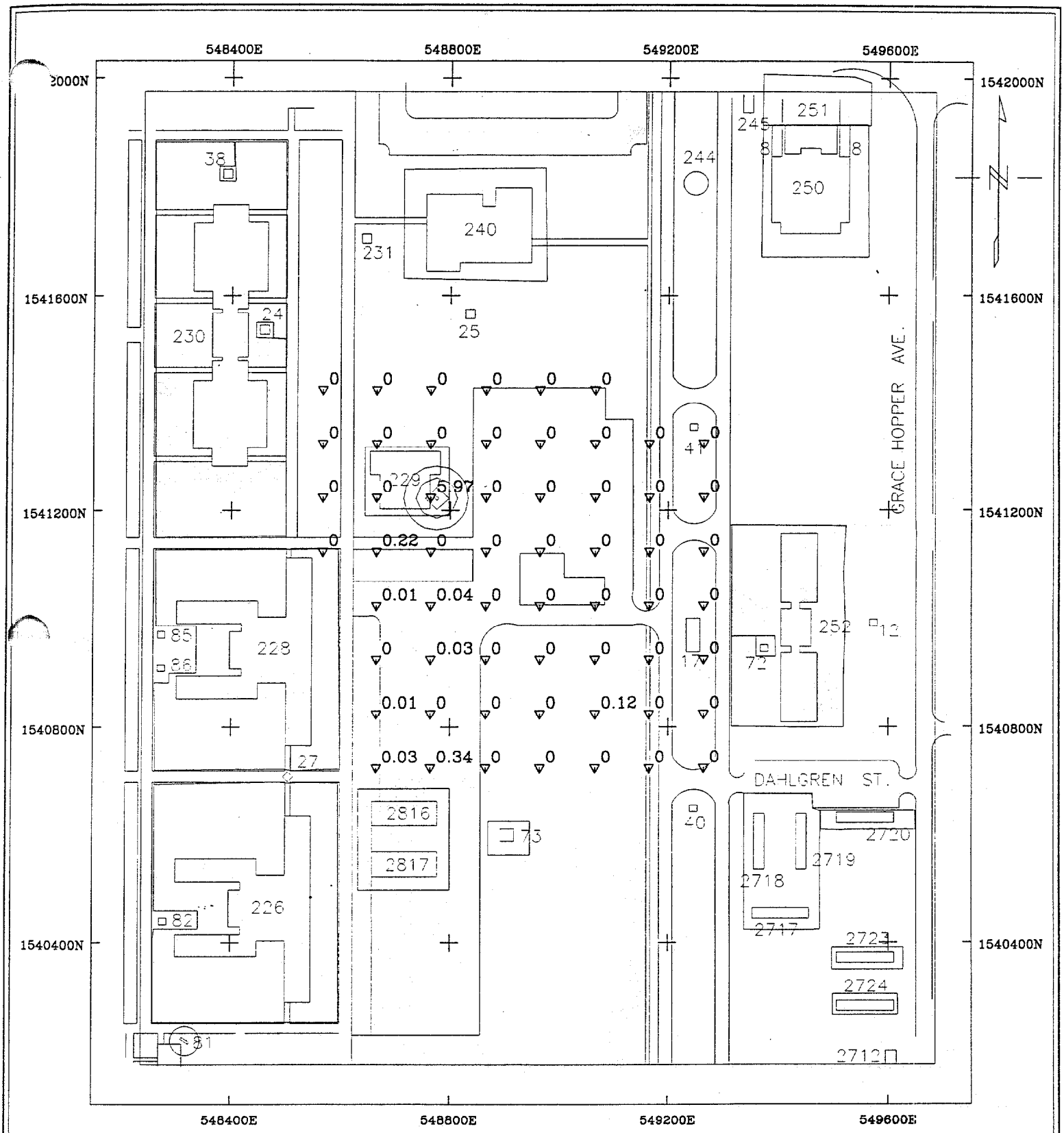

Note: contour interval 1 $\mu g/\ell$. Data shown is field screening data only.

Scale 1:3091.221

250 0 250

(feet)

FIGURE A-3

SOUTHERN DIVISION

TERRAPROBE SURVEY
FIELD GC RESULTS
CHLORINATED SOLVENT CONCENTRATIONS

ABB ENVIRONMENTAL SERVICES, INC.

Appendix A

Table A-1. Field Screening Analytical Results (VOCs)
TerraProbe Shallow Groundwater Investigation
Missile Training Range, Study Area 44

BRAC Environmental Site Screening Report
NTC, Orlando, FL

PUSH NO	X	Y	EAST	NORTH	DEPTH	DCA	TCE	PCE	BENZENE	TOLUENE	EBENZENE	XYLENE 1,2	XYLENE 3	TCHLOR	BTEX
TP1	1000	1000	548665	1540725	14.0			0.03						0.03	0.00
TP2	1100	1000	548765	1540725	16.0			0.34	0.03					0.34	0.03
TP3	1200	1000	548865	1540725	15.0				0.04					0.00	0.04
TP4	1300	1000	548965	1540725	12.0					0.06				0.00	0.06
TP5	1400	1000	549065	1540725	14.0									0.00	0.00
TP6	1500	1000	549165	1540725	15.0				0.08	0.15				0.00	0.23
TP7	1600	1000	549265	1540725	15.0				0.07	0.03	0.12	0.02		0.00	0.24
TP8	1000	1100	548665	1540825	15.0		0.01		0.04				0.05	0.01	0.09
TP9	1100	1100	548765	1540825	14.0					0.03				0.00	0.03
TP10	1200	1100	548865	1540825	15.0							0.08		0.00	0.08
TP11	1300	1100	548965	1540825	14.0					0.11			0.04	0.00	0.15
TP12	1400	1100	549065	1540825	15.0		0.12		0.23	0.06			0.05	0.12	0.34
TP13	1500	1100	549165	1540825	14.0				0.21	0.04			0.06	0.00	0.31
TP14	1000	1200	548665	1540925	14.0				0.13					0.00	0.13
TP15	1100	1200	548765	1540925	14.0		0.03		0.10		0.05			0.03	0.15
TP16	1200	1200	548865	1540925	14.0				0.29	0.02				0.00	0.31
TP17	1300	1200	548965	1540925	14.0				0.39	0.02				0.00	0.41
TP18	1400	1200	549065	1540925	14.0				0.18	0.01				0.00	0.19
TP19	1500	1200	549165	1540925	14.0				0.56	0.06				0.00	0.62
TP20	1000	1300	548665	1541025	14.0			0.01		0.09				0.01	0.09
TP21	1100	1300	548765	1541025	15.0			0.04	0.08	0.03			0.63	0.04	0.74
TP22	1200	1300	548865	1541025	15.0				0.51					0.00	0.51
TP23	1300	1300	548965	1541025	14.0					0.10				0.00	0.10
TP24	1400	1300	549065	1541025	14.0					0.84				0.00	0.84
TP25	1500	1300	549165	1541025	14.0					0.32				0.00	0.32
TP26	1000	1400	548665	1541125	13.5			0.22						0.22	0.00
TP27	1100	1400	548765	1541125	13.0									0.00	0.00
TP28	1200	1400	548865	1541125	14.5									0.00	0.00
TP29	1300	1400	548965	1541125	14.5					1.33				0.00	1.33

Appendix A

Table A-1. Field Screening Analytical Results (VOCs)
TerraProbe Shallow Groundwater Investigation
Missile Training Range, Study Area 44

BRAC Environmental Site Screening Report
NTC, Orlando, FL

PUSH NO	X	Y	EAST	NORTH	DEPTH	DCA	TCE	PCE	BENZENE	TOLUENE	EBENZENE	XYLENE 1,2	XYLENE 3	TCHLOR	BTEX
TP30	1400	1400	549065	1541125	14.5								0.98	0.00	0.98
TP31	1500	1400	549165	1541125	14.5									0.00	0.00
TP32	1000	1500	548665	1541225	14.5					1.15				0.00	1.15
TP33	1100	1500	548765	1541225	14.0		5.97			0.00			1.56	5.97	1.56
TP34	1200	1500	548865	1541225	14.5									0.00	0.00
TP35	1300	1500	548965	1541225	14.5					0.93				0.00	0.93
TP36	1400	1500	549065	1541225	14.5							1.61		0.00	1.61
TP37	1500	1500	549165	1541225	14.5									0.00	0.00
TP38	1000	1600	548665	1541325	14.5					1.80	1.21			0.00	3.01
TP39	1100	1600	548765	1541325	14.5							1.04		0.00	1.04
TP40	1200	1600	548865	1541325	14.5					2.16			3.30	0.00	5.46
TP41	1300	1600	548965	1541325	13.0					2.42				0.00	2.42
TP42	1400	1600	549065	1541325	14.5									0.00	0.00
TP43	1500	1600	549165	1541325	14.5					0.87				0.00	0.87
TP44	1600	1600	549265	1541325	14.5					2.05				0.00	2.05
TP45	1600	1500	549265	1541225	14.5									0.00	0.00
TP46	1600	1400	549265	1541125	14.5								1.15	0.00	1.15
TP47	1600	1300	549265	1541025	14.5					0.98				0.00	0.98
TP48	1600	1200	549265	1540925	14.5									0.00	0.00
TP49	1600	1100	549265	1540825	14.5								0.48	0.00	0.48
TP56	1000	1700	548665	1541425	14.0				7.90	2.52				0.00	10.42
TP57	1100	1700	548765	1541425	14.0									0.00	0.00
TP58	1200	1700	548865	1541425	14.0				5.07	1.59		0.72		0.00	7.38
TP59	1300	1700	548965	1541425	14.0					1.31				0.00	1.31
TP60	1400	1700	549065	1541425	14.0									0.00	0.00
TP61	900	1700	548565	1541425	14.0									0.00	0.00
TP62	900	1600	548565	1541325	14.0									0.00	0.00
TP63	900	1500	548565	1541225	14.0									0.00	0.00
TP64	900	1400	548565	1541125	14.0					1.35				0.00	1.35

NOTES:

1) "X"s and "Y"s are arbitrary grid coordinates, and "EAST" and "NORTH" are state grid coordinates.
2) All concentrations are in micrograms per liter, and depths are in feet below land surface.
3) Refer to Figure 4 in body of text for sample locations.
4) Samples screening on gas chromatograph (HNu Model 311) against BTEX, TCE, DCA, and PCE standards.
5) Sample identification numbers 03P050 to 03P055 used as part of a non-related investigation.

VOC = volatile organic compound
PCE = tetrachloroethylene
TCE = trichloroethylene
BTEX = benzene, toluene, ethylbenzene, and xylenes
DCA = dichloroethane
TCHLOR = total chlorinated solvents

APPENDIX B

CONE PENETROMETER INVESTIGATION, FORMER MISSILE TRAINING RANGE STUDY AREA 44

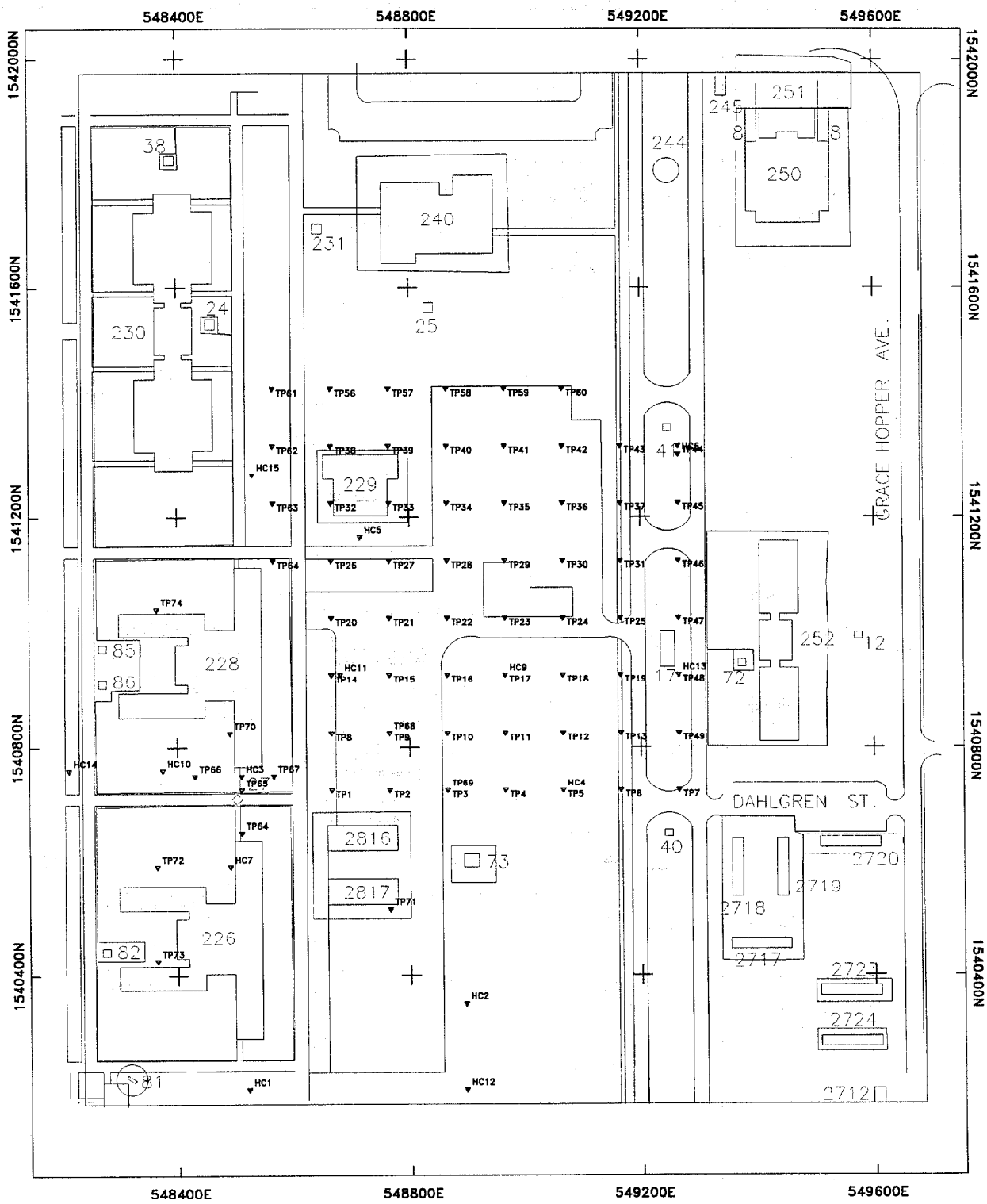

FIGURE B-1

Scale 1:3200

250 0 250

(feet)

SOUTHERN DIVISION
DIRECT PUSH TECHNOLOGY SURVEY LOCATIONS OF ALL EXPLORATIONS
ABB ENVIRONMENTAL SERVICES, INC.

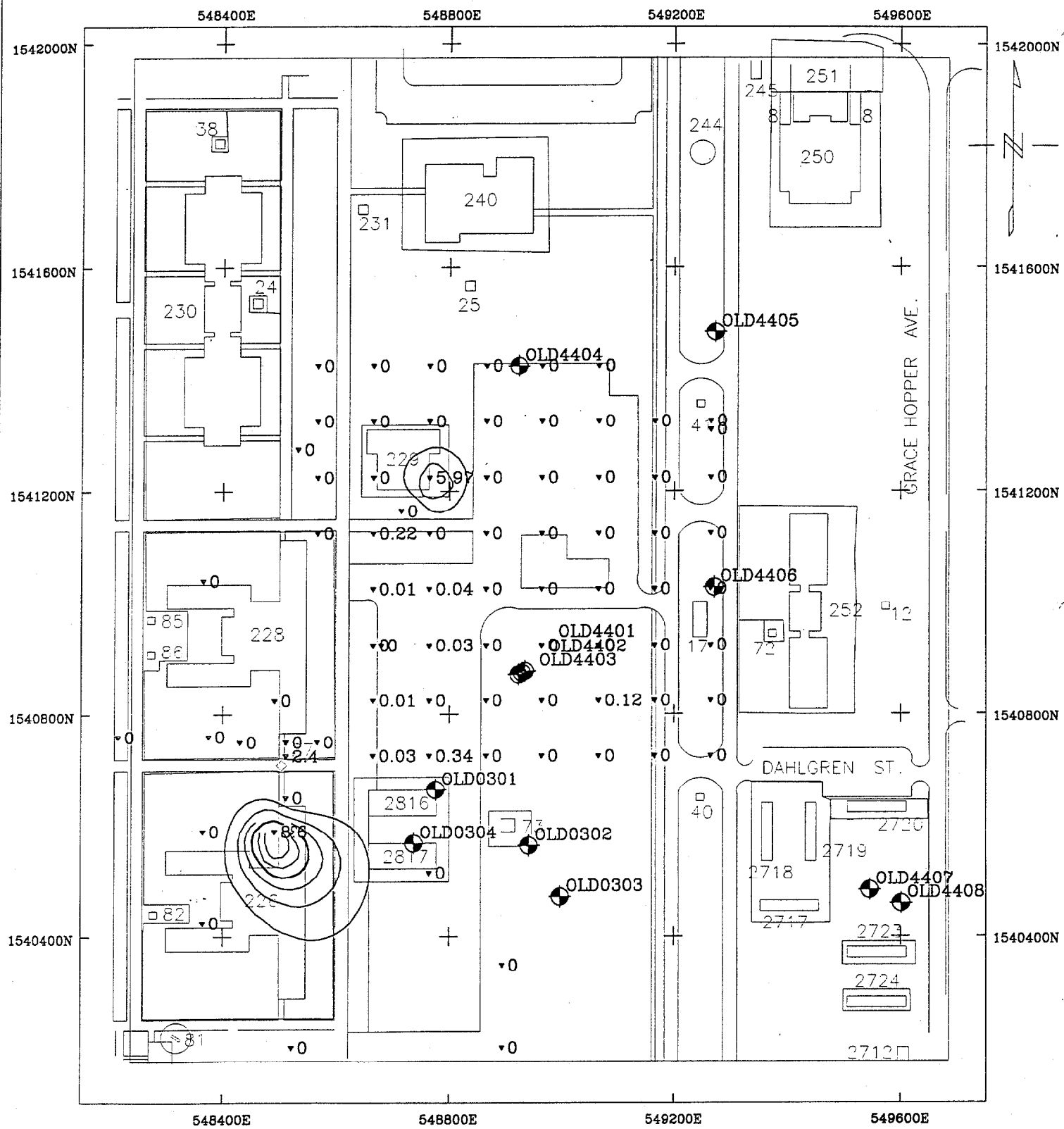

Note: contour interval 1 $\mu g/\ell$. Data shown is field screening data only.

FIGURE B-2

Scale 1:3091.221

250 0 250

(feet)

SOUTHERN DIVISION
PCE/TCE CONCENTRATIONS (SHALLOW) STUDY AREA 44 MISSILE TRAINING AREA
ABB ENVIRONMENTAL SERVICES, INC.

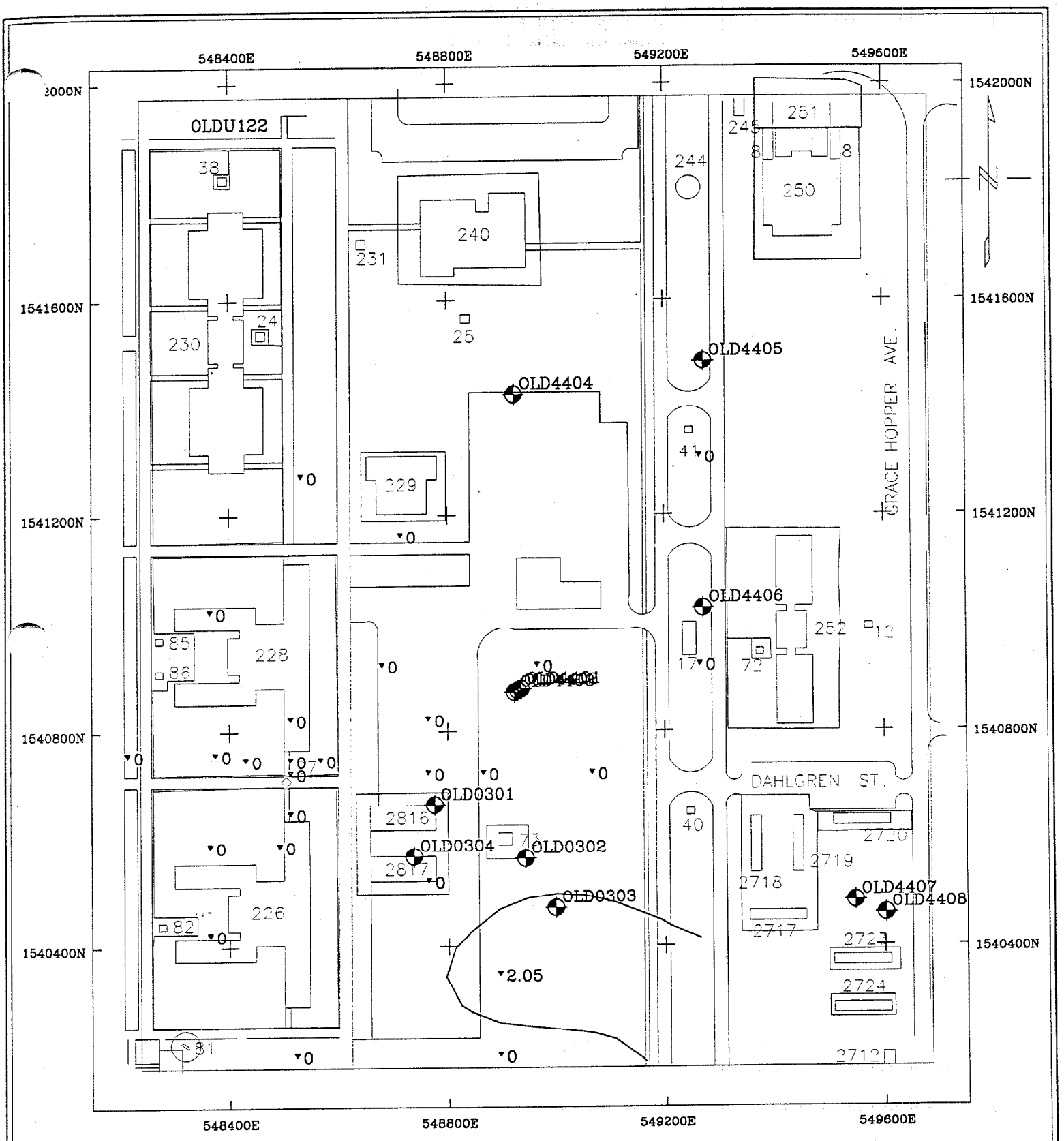

Note: contour interval 1 $\mu g/\ell$. Data shown is field screening data only.

Scale 1:3091.221

250 0 250

(feet)

FIGURE B-3

SOUTHERN DIVISION

PCE/TCE CONCENTRATIONS (INTERMEDIATE)
STUDY AREA 44
MISSILE TRAINING AREA

ABB ENVIRONMENTAL SERVICES, INC.

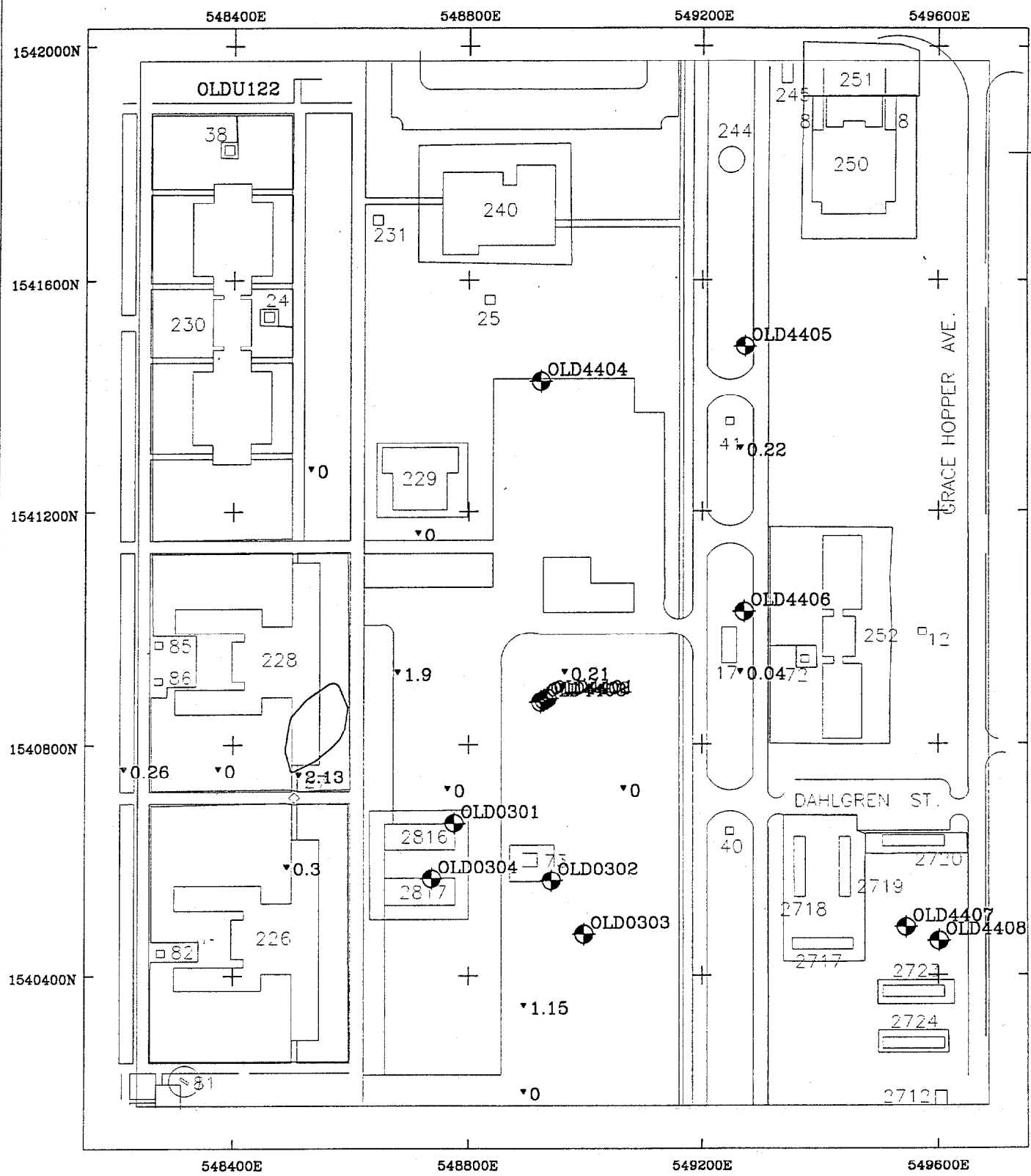

Note: contour interval 1 $\mu g/\ell$. Data shown is field screening data only.

Scale 1:3091.221

250 0 250

(feet)

FIGURE B-4

SOUTHERN DIVISION

PCE/TCE CONCENTRATIONS (DEEP)
STUDY AREA 44
MISSILE TRAINING AREA

ABB ENVIRONMENTAL SERVICES, INC.

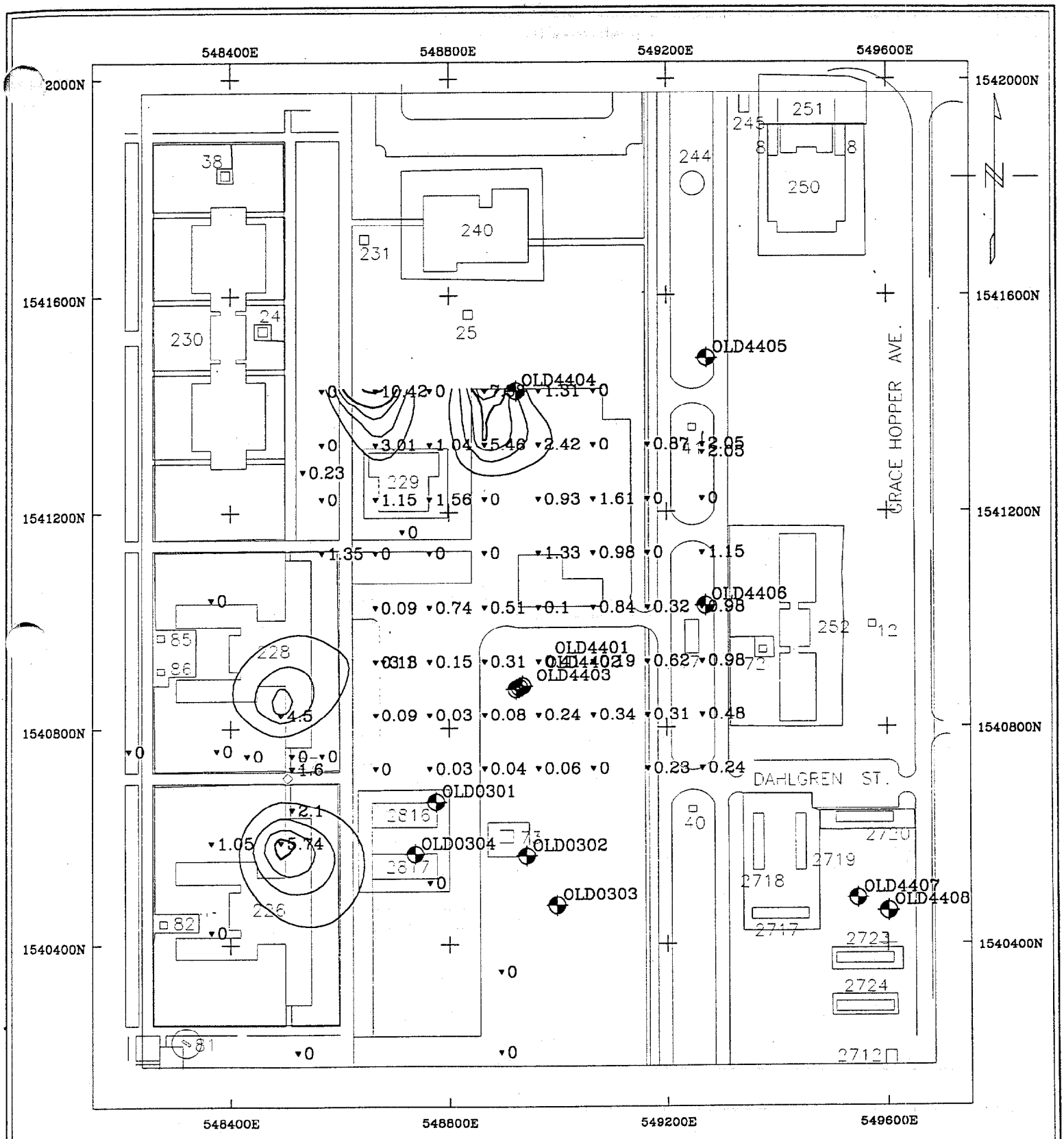

Note: contour interval 1 $\mu g/\ell$. Data shown is field screening data only.

Scale 1:3091.221

250 0 250

(feet)

FIGURE B-5

SOUTHERN DIVISION

BTEX CONCENTRATIONS (SHALLOW)
STUDY AREA 44
MISSILE TRAINING AREA

ABB ENVIRONMENTAL SERVICES, INC.

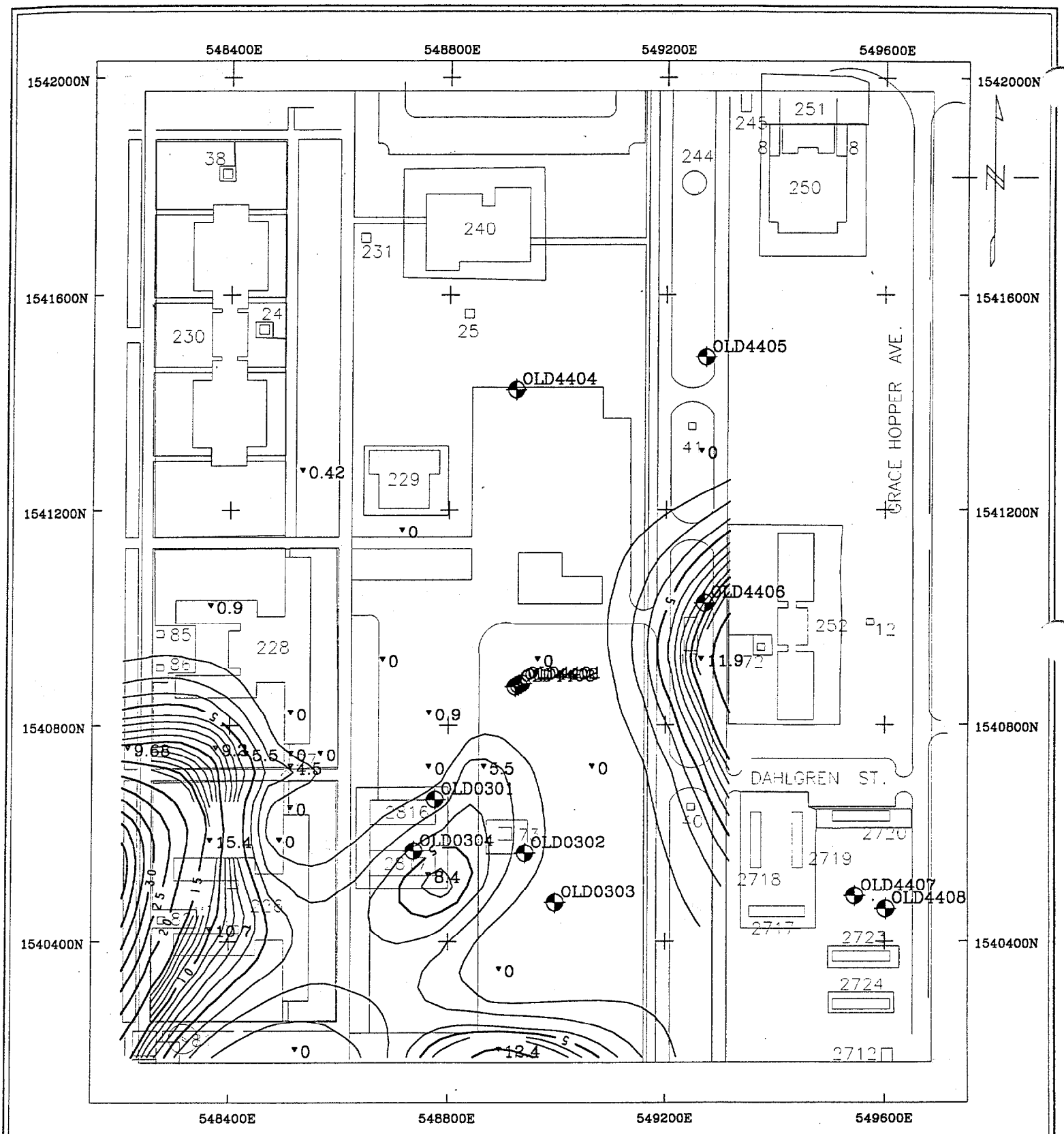

Note: contour interval 1 $\mu g/\ell$. Data shown is field screening data only.

Scale 1:3091.221

250 0 250

(feet)

FIGURE B-6

SOUTHERN DIVISION
BTEX CONCENTRATIONS (INTERMEDIATE) STUDY AREA 44 MISSILE TRAINING AREA
ABB ENVIRONMENTAL SERVICES, INC.

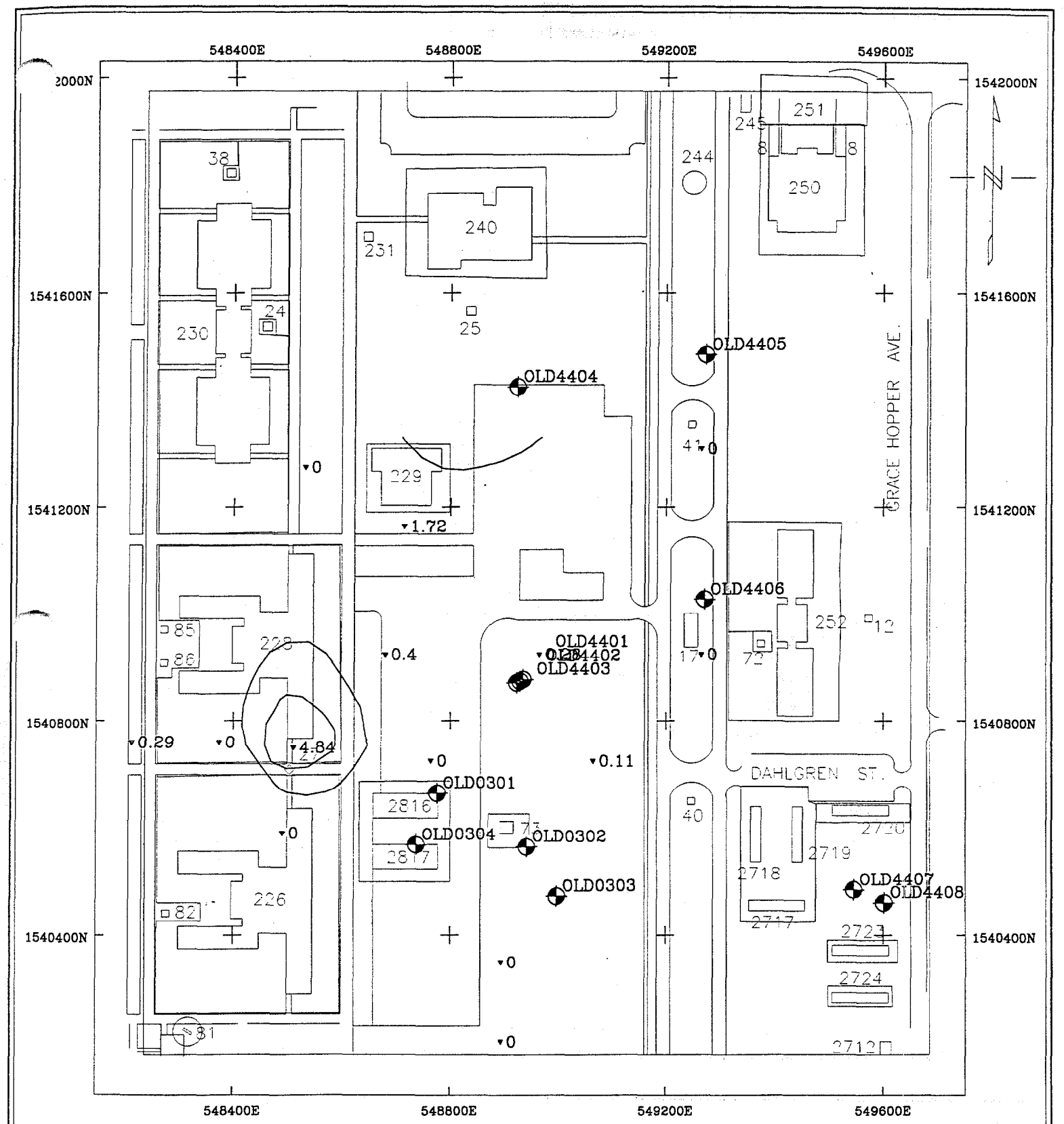

Note: contour interval 1 $\mu g/\ell$. Data shown is field screening data only.

Scale 1:3091.221

250 0 250

(feet)

FIGURE B-7

SOUTHERN DIVISION

BTEX CONCENTRATIONS (DEEP)
STUDY AREA 44
MISSILE TRAINING AREA

ABB ENVIRONMENTAL SERVICES, INC.

Appendix B

Table B-1. Field GC Results TerraProbe and
Cone Penetrometer Groundwater Samples

Study Area 44
Missile Training Range

BRAC Environmental Site Screening Report
NTC, Orlando

LOCATION	X	Y	EAST	NORTH	DEPTH BLS	BENZENE	TOLUENE	EBENZENE	XYLENE	BTEX	PCE/TCE
HC-1-SH	855	475	548520	1540200	12					0	0
HC-1-INT	855	475	548520	1540200	29					0	0
HC-2-SH	1230	625	548895	1540350	15					0	0
HC-2-INT	1230	625	548895	1540350	24					0	2.05
HC-2-DP	1230	625	548895	1540350	73					0	1.15
HC-3-SH	845	1025	548510	1540750	13					0	0
HC-3-INT	845	1025	548510	1540750	26					0	0
HC-3-DP	845	1025	548510	1540750	80	0.15			4.69	4.84	2.13
HC-4-SH	1400	1000	549065	1540725	12					0	0
HC-4-INT	1400	1000	549065	1540725	20					0	0
HC-4-DP	1400	1000	549065	1540725	76	0.11				0.11	0
HC-5-SH	1050	1440	548715	1541165	12					0	0
HC-5-INT	1050	1440	548715	1541165	18					0	0
HC-5-DP	1050	1440	548715	1541165	76			1.72		1.72	0
HC-6-SH	1600	1585	549265	1541310	12	2.05				2.05	0
HC-6-INT	1600	1585	549265	1541310	31					0	0
HC-6-DP	1600	1585	549265	1541310	85					0	0.22
HC-7-SH	825	865	548490	1540590	14	5.14			0.6	5.74	8.6
HC-7-INT	825	865	548490	1540590	22					0	0
HC-7-DP	825	865	548490	1540590	77					0	0.3
HC-8-INT	1100	1000	548765	1540725	22					0	0
HC-8-DP	1100	1000	548765	1540725	76					0	0
HC-9-SH	1300	1200	548965	1540925	11					0	0
HC-9-INT	1300	1200	548965	1540925	20					0	0
HC-9-DP	1300	1200	548965	1540925	72	0.28				0.28	0.21
HC-10-SH	710	1035	548375	1540760	14					0	0
HC-10-INT	710	1035	548375	1540760	21	9.2				9.2	0
HC-10-DP	710	1035	548375	1540760	75					0	0
HC-11-SH	1015	1200	548680	1540925	14			0.9	2.2	3.1	0
HC-11-INT	1015	1200	548680	1540925	26					0	0
HC-11-DP	1015	1200	548680	1540925	72	0.4				0.4	2
HC-12-SH	1230	475	548895	1540200	14					0	0
HC-12-INT	1230	475	548895	1540200	26		6.3		6.1	12.4	0
HC-12-DP	1230	475	548895	1540200	71					0	0
HC-13-SH	1600	1200	549265	1540925	12	0.98				0.98	0

Appendix B

Table B-1. Field GC Results TerraProbe and Cone Penetrometer Groundwater Samples

Study Area 44
Missile Training Range

BRAC Environmental Site Screening Report
NTC, Orlando

LOCATION	X	Y	EAST	NORTH	DEPTH BLS	BENZENE	TOLUENE	EBENZENE	XYLENE	BTEX	PCE/TCE
HC-13-INT	1600	1200	549265	1540925	25	11.9				11.9	0
HC-13-DP	1600	1200	549265	1540925	78					0	0.04
HC-14-SH	550	1035	548215	1540760	13					0	0
HC-14-INT	550	1035	548215	1540760	26	8.3			1.4	9.7	0
HC-14-DP	550	1035	548215	1540760	75	0.29				0.29	0.26
HC-15-SH	865	1550	548530	1541275	14			0.23		0.23	0
HC-15-INT	865	1550	548530	1541275	26			0.42		0.42	0
HC-15-DP	865	1550	548530	1541275	71					0	0
TP-64-SH	845	925	548510	1540650	14	2.1				2.1	0
TP-64-INT	845	925	548510	1540650	25					0	0
TP-65-SH	845	1000	548510	1540725	14	1.6				1.6	2.4
TP-65-INT	845	1000	548510	1540725	25	4.5				4.5	0
TP-66-SH	765	1025	548430	1540750	14					0	0
TP-66-INT	765	1025	548430	1540750	17	5.5				5.5	0
TP-67-SH	900	1025	548565	1540750	14					0	0
TP-67-INT	900	1025	548565	1540750	26					0	0
TP-68-SH	1100	1100	548765	1540825	14					0	0
TP-68-INT	1100	1100	548765	1540825	26	0.9				0.9	0
TP-69-INT	1200	1000	548865	1540725	25	4.3	1.2			5.5	0
TP-70-SH	845	1100	548510	1540825	14	2.3	2.2			4.5	0
TP-70-INT	845	1100	548510	1540825	26					0	0
TP-71-SH	1100	800	548765	1540525	14					0	0
TP-71-INT	1100	800	548765	1540525	27		7.13		1.38	8.51	0
TP-72-SH	700	865	548365	1540590	12	0.87	0.18			1.05	0
TP-72-INT	700	865	548365	1540590	25	9.6	5.8			15.4	0
TP-73-SH	700	700	548365	1540425	11					0	0
TP-73-INT	700	700	548365	1540425	26	7.9	2.8			10.7	0
TP-74-SH	700	1300	548365	1541025	14					0	0
TP-74-INT	700	1300	548365	1541025	25		0.9			0.9	0
TP-75-SH	700	900			14					NA	NA
TP-75-INT	700	900			25					NA	NA
TP-76-SH	700	1100			14	3.43	1.11			4.54	0
TP-76-INT	700	1100			25	7.36	2.31			9.67	0

EXPLANATION OF PIEZOCONE SOUNDING

BLACK	VERY STIFF FINE-GRAINED MATERIAL
BLUE	SENSITIVE FINE-GRAINED MATERIAL AND/OR SOFT CLAY
BROWN	CLAYEY FINE SAND AND/OR SILTY TO CLAYEY FINE SAND
GREEN	CLAY, SILTY CLAY, AND/OR SANDY CLAY
YELLOW	SILTY FINE SAND, FINE SAND, AND/OR DENSE OR CEMENTED SAND
ORANGE	SAND TO CLAYEY FINE SAND

KEY TO PIEZOCONE ABBREVIATIONS

VES	**VERTICAL EFFECTIVE STRESS** - TOTAL WEIGHT OF SOIL AT DEPTH MINUS THE WEIGHT OF GROUND WATER
FA	**FRICTION ANGLE (DEGREES)** - ACTUAL STRENGTH OF THE SAND (LOOSE SAND APPROXIMATELY 30, 1 TO 3 BLOW COUNTS; DENSE SAND APPROXIMATELY 45, TO 50 BLOW COUNTS)
RD	**RELATIVE DENSITY (+/- 5%)** - PERCENT OF COMPACTION
YM	**YOUNG MODULUS** - RATIO OF LOAD TO STRAIN WHERE STRAIN IS THE TOTAL LENGTH DIVIDED BY THE CHANGE IN LENGTH AND LOAD IS THE PRESSURE APPLIED
USS	**UNDRAINED SHEAR STRENGTH** - MAXIMUM PRESSURE CLAY CAN WITHSTAND BEFORE FAILING
SEN	**SENSITIVITY** - DIFFERENCE BETWEEN THE UNDRAINED SHEAR STRENGTH OF A VIRGIN SAMPLE AND A RE-CONSTRUCTED SAMPLE
CM	**CONSTRAINED MODULUS** - MEASURE OF DEFORMATION OF CLAY PER PRESSURE APPLIED
OCR	**OVER CONSOLIDATION RATIO** - RATIO OF THE HIGHEST PAST PRESSURE DURING CONSOLIDATION TO THE PRESENT PRESSURE
N	**ESTIMATED BLOW COUNTS** - DETERMINED BY MULTIPLYING THE POINT STRESS TO THE APPLICABLE MULTIPLIER FOR THE SOIL CLASSIFICATION (SHOWN ON THE "SIMPLIFIED SOIL CLASSIFICATION CHART FOR STANDARD ELECTRONIC FRICTION CONE, ROBERTSON ET AL, 1986)

CONDUCTIVITY / PIEZOCONE SOUNDING TEST

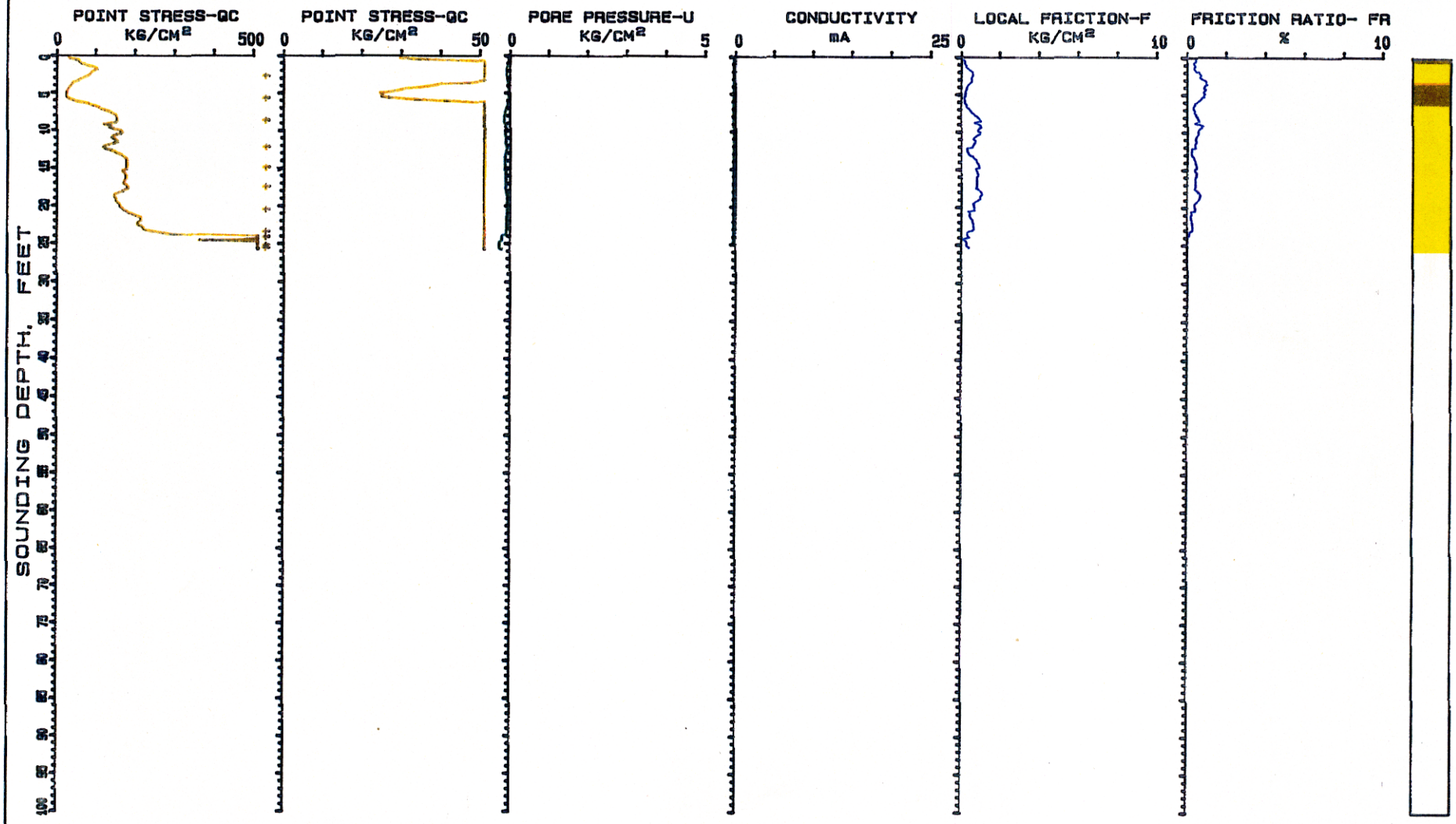

+ PUSH INTERRUPTED TO ADD ROD
PORE PRESSURE DECAY DATA MAY BE AVAILABLE

FILE #..... SE5-27-315G
NAVAL TRAINING CENTER
ORLANDO FLORIDA
SOUNDING # PC-1
TEST DATE 10-18-1995 11: 42: 04

00074DBIV

CONDUCTIVITY / PIEZOCONE SOUNDING TEST

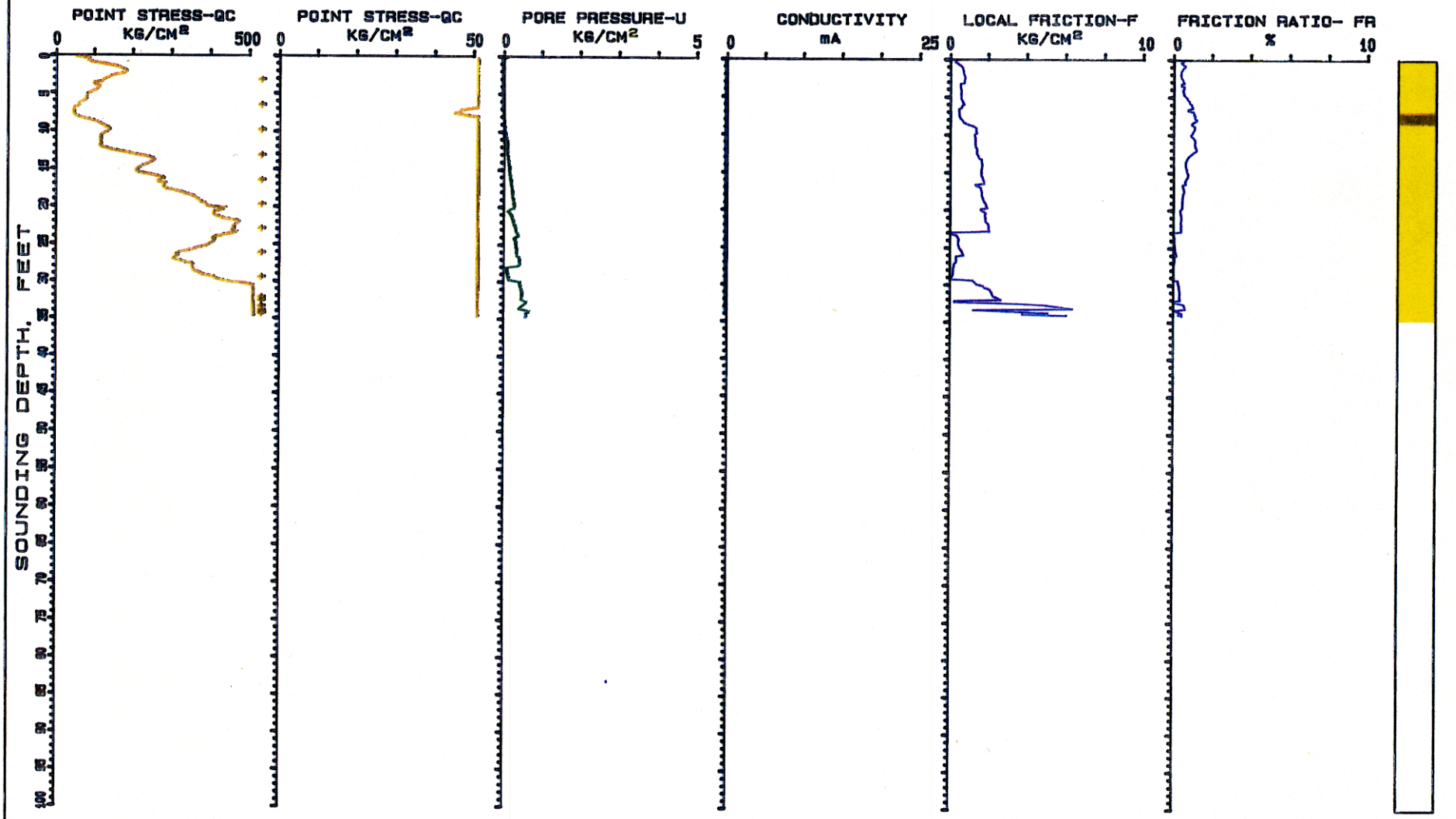

+ PUSH INTERRUPTED TO ADD ROD
PORE PRESSURE DECAY DATA MAY BE AVAILABLE

FILE #..... SE5-27-3156
NAVAL TRAINING CENTER
ORLANDO FLORIDA
SOUNDING # PC-1A
TEST DATE 10-25-1995 09: 40: 07

CONDUCTIVITY / PIEZOCONE SOUNDING TEST

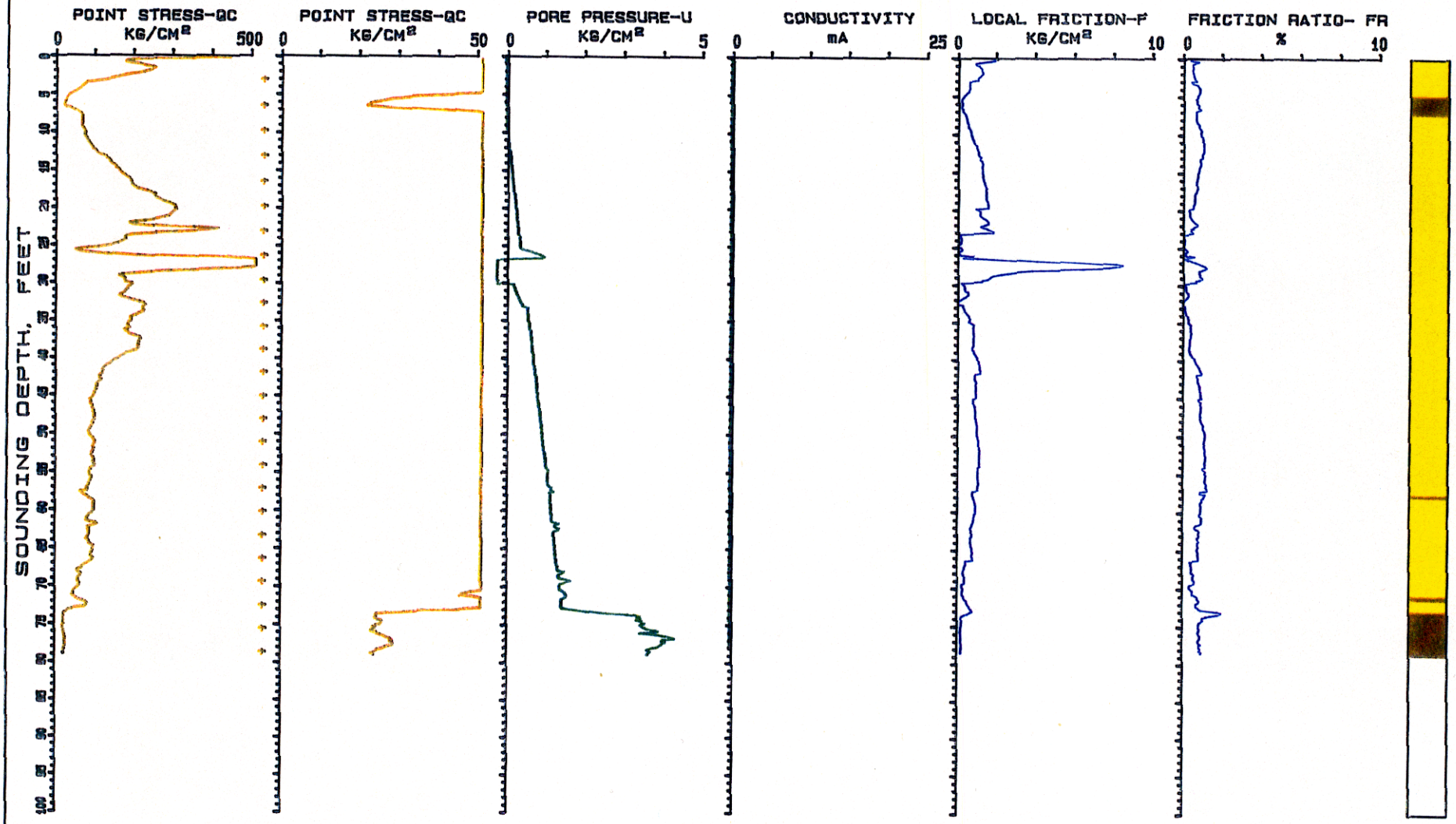

+ PUSH INTERRUPTED TO ADD ROD
PORE PRESSURE DECAY DATA MAY BE AVAILABLE

FILE #..... SE5-27-315G
NAVAL TRAINING CENTER
ORLANDO FLORIDA
SOUNDING # PC-2
TEST DATE 10-19-1995 11: 29: 23

CONDUCTIVITY / PIEZOCONE SOUNDING TEST

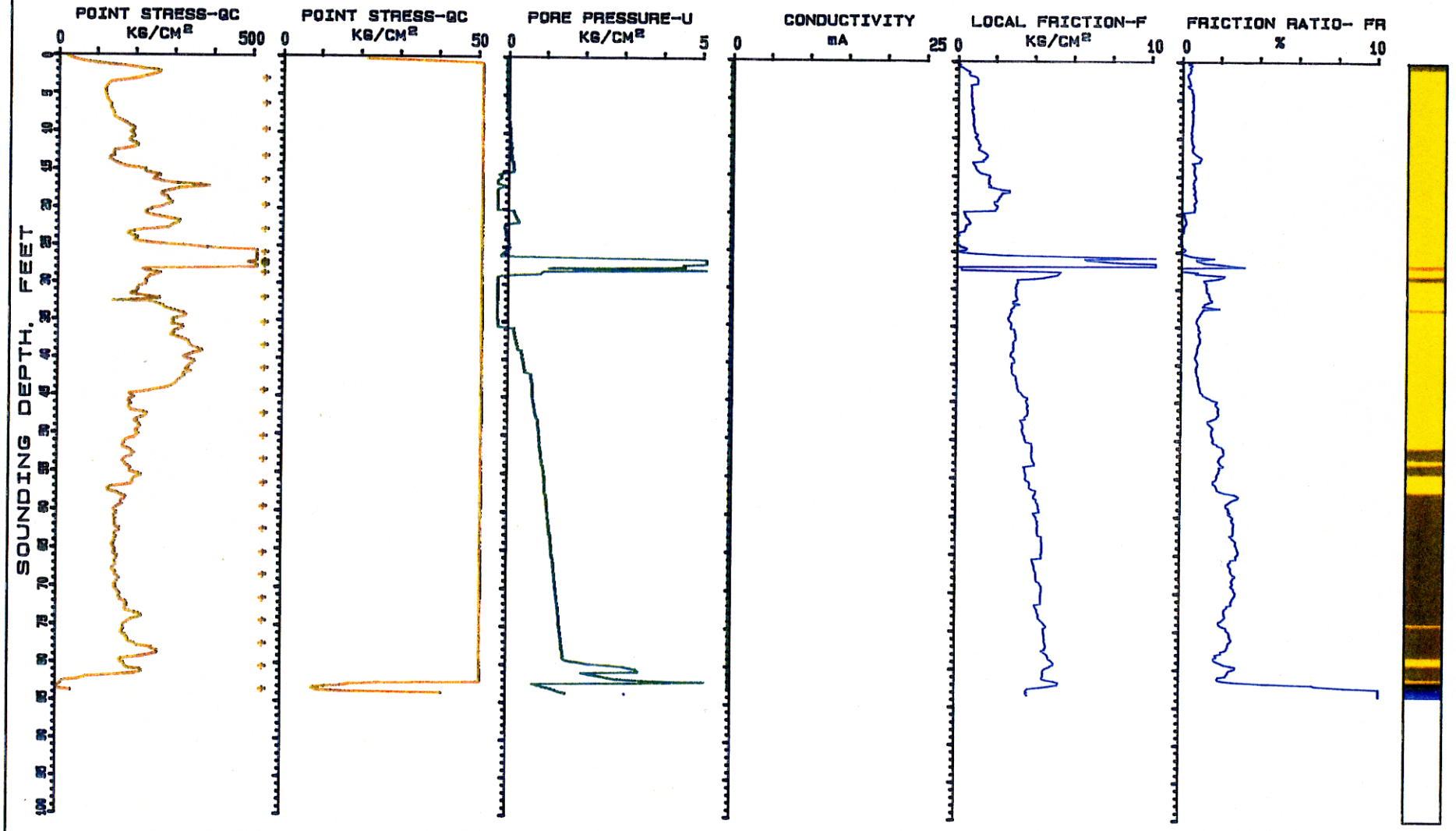

* PUSH INTERRUPTED TO ADD ROD
PORE PRESSURE DECAY DATA MAY BE AVAILABLE

FILE #..... SE5-27-315G
NAVAL TRAINING CENTER
ORLANDO FLORIDA
SOUNDING # PC-3
TEST DATE 10-20-1995 08: 29: 24

CONDUCTIVITY / PIEZOCONE SOUNDING TEST

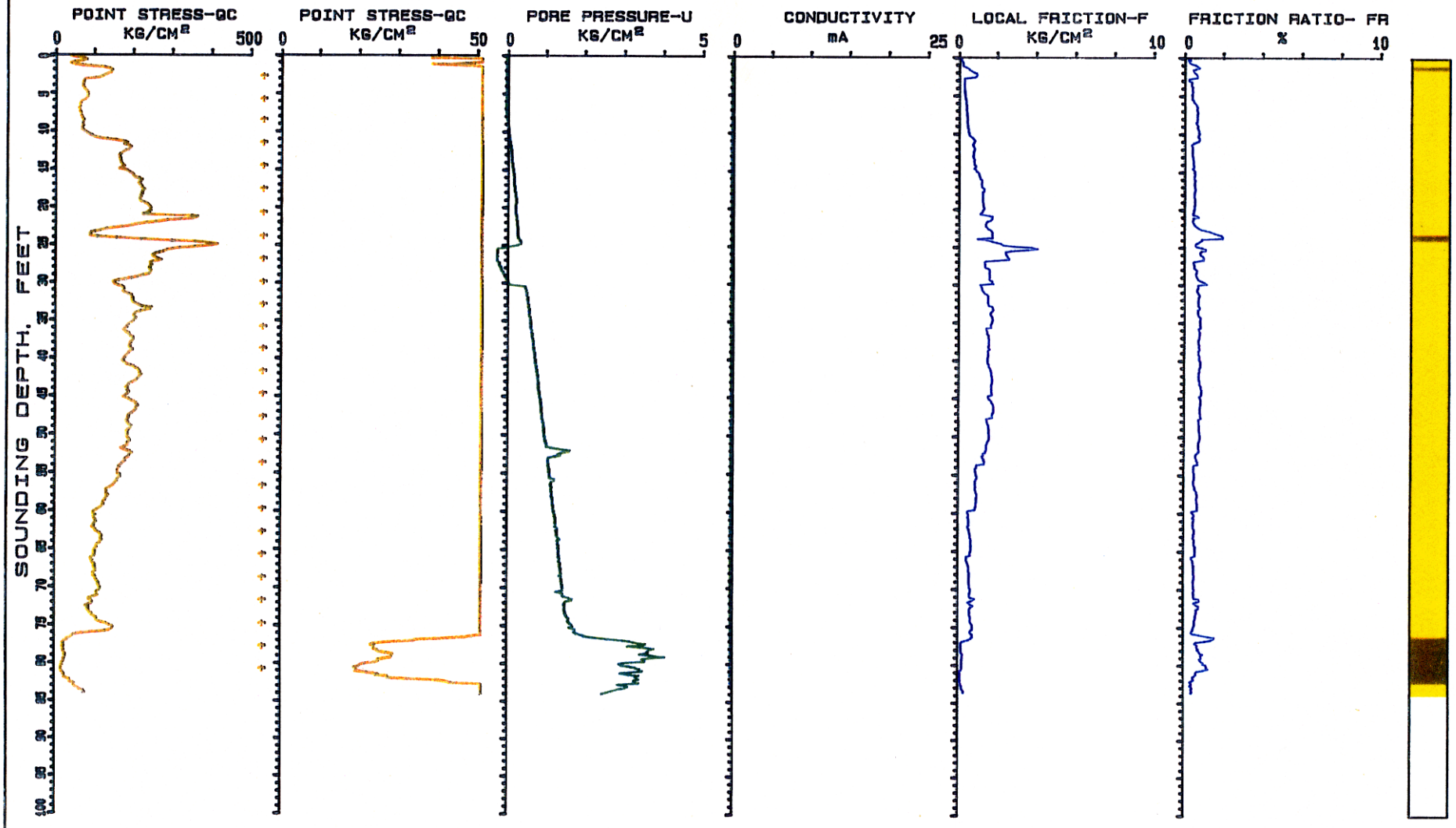

+ PUSH INTERRUPTED TO ADD ROD
PORE PRESSURE DECAY DATA MAY BE AVAILABLE

FILE #..... SE5-27-315G
NAVAL TRAINING CENTER
ORLANDO FLORIDA
SOUNDING # PC-4
TEST DATE 10-23-1995 08: 29: 07

CONDUCTIVITY / PIEZOCONE SOUNDING TEST

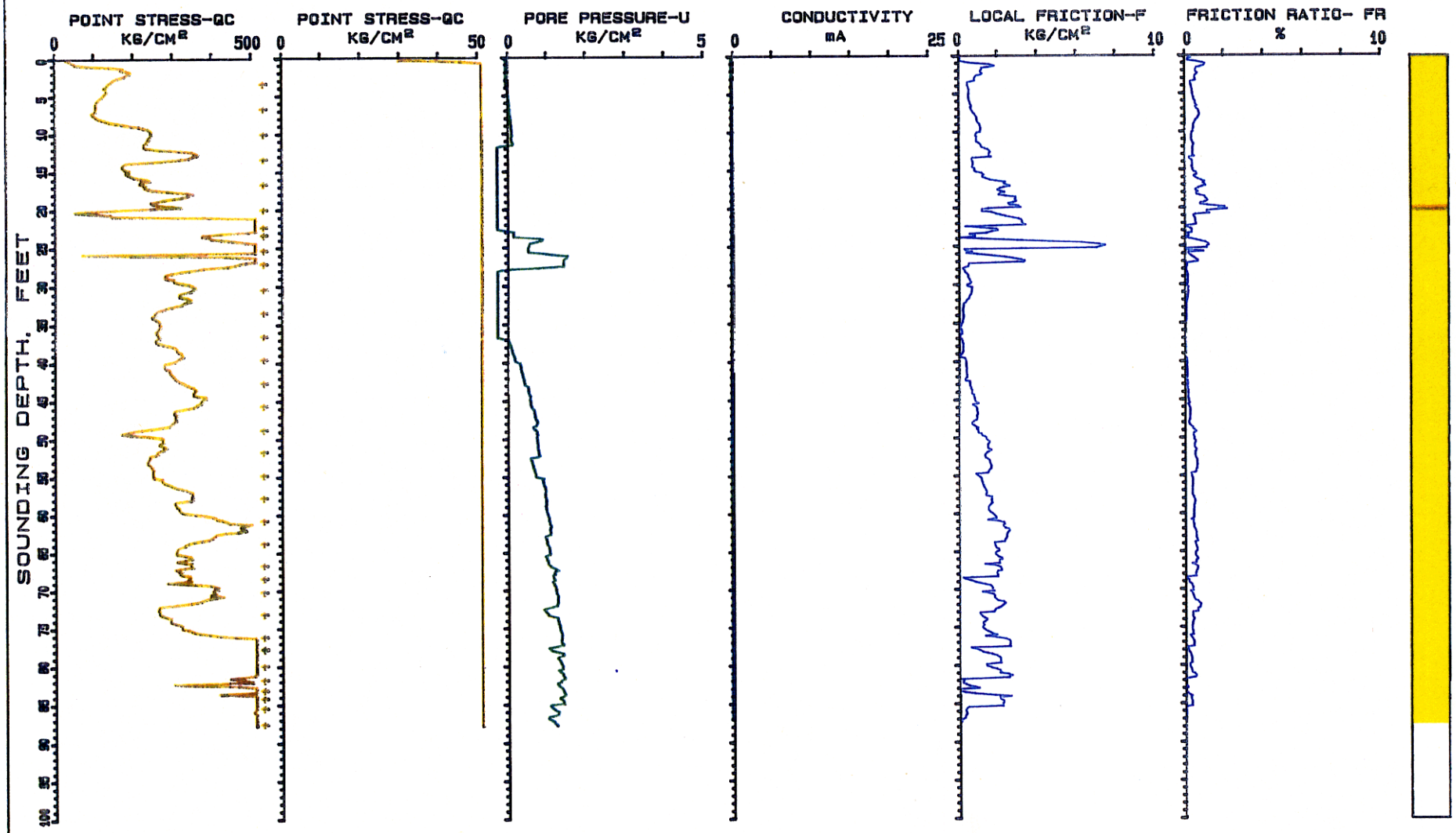

+ PUSH INTERRUPTED TO ADD ROD
PORE PRESSURE DECAY DATA MAY BE AVAILABLE

FILE #..... SE5-27-315G
NAVAL TRAINING CENTER
ORLANDO FLORIDA
SOUNDING # PC-5
TEST DATE 10-23-1995 11: 44: 35

CONDUCTIVITY / PIEZOCONE SOUNDING TEST

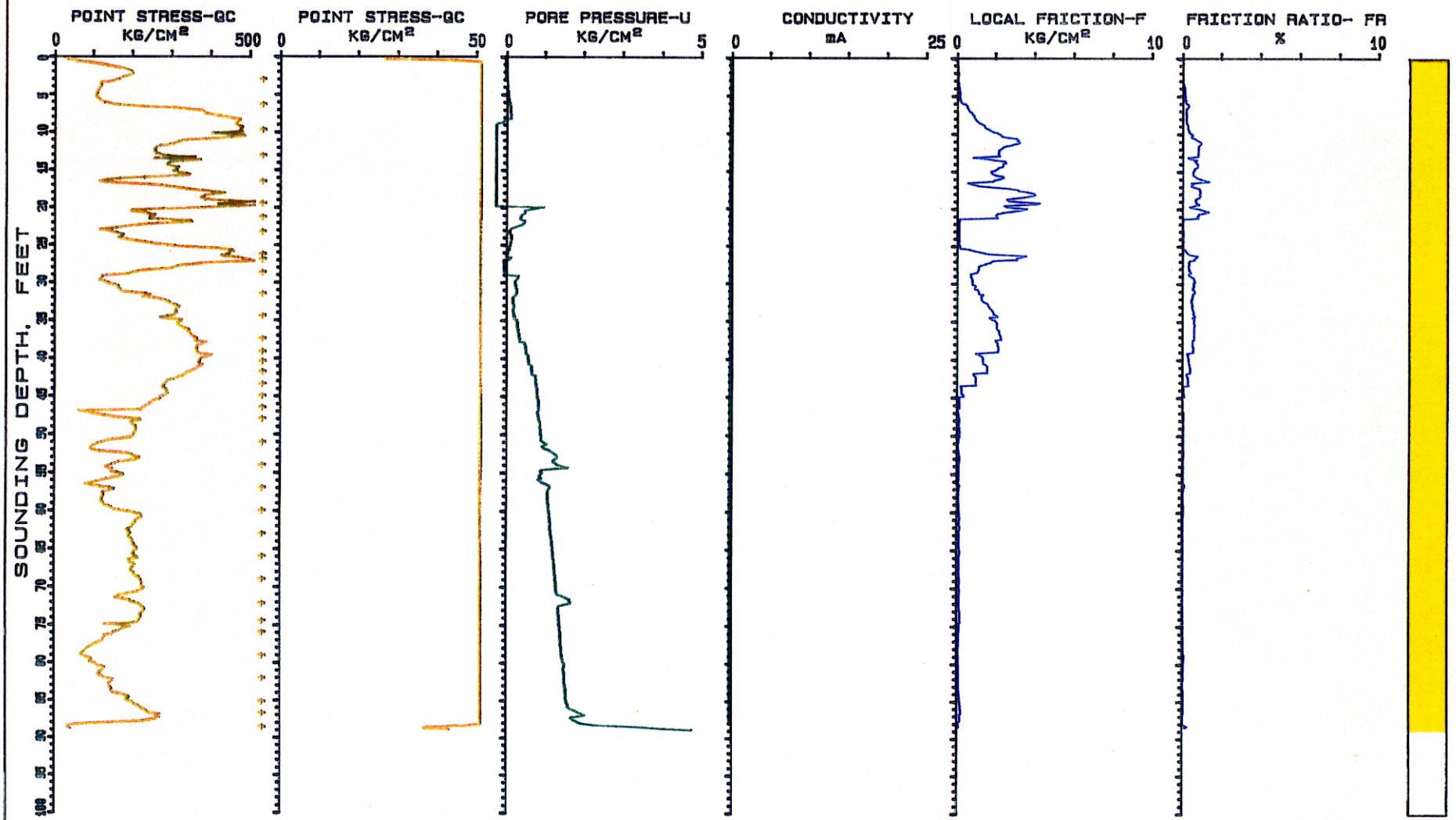

+ PUSH INTERRUPTED TO ADD ROD
PORE PRESSURE DECAY DATA MAY BE AVAILABLE

FILE #..... SE5-27-315G
NAVAL TRAINING CENTER
ORLANDO FLORIDA
SOUNDING # PC-6
TEST DATE 10-24-1995 14: 15: 17

CONDUCTIVITY / PIEZOCONE SOUNDING TEST

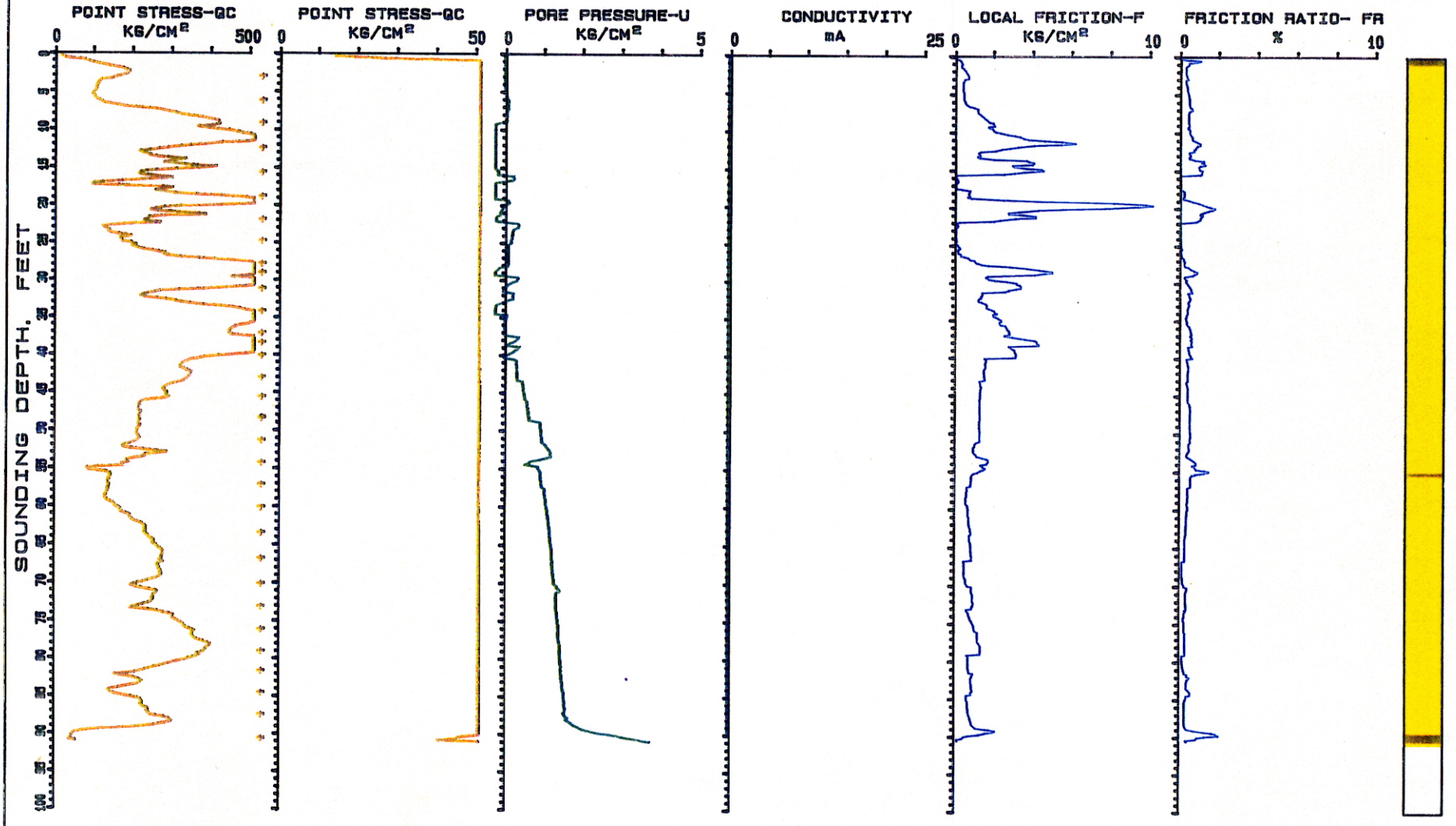

\+ PUSH INTERRUPTED TO ADD ROD
PORE PRESSURE DECAY DATA MAY BE AVAILABLE

FILE #..... SE5-27-315G
NAVAL TRAINING CENTER
ORLANDO FLORIDA
SOUNDING # PC-6A
TEST DATE 10-31-1995 12:00:31

IN-SITU TECHNOLOGY SOIL BEHAVIOR TABLE
FOR SOUTHEASTERN UNITED STATES SOILS

JOB NAME SE5-27-315G
NAVAL TRAINING CENTER
ORLANDO FLORIDA
FILE NAME..... PC-1

DEPTH FEET	SOIL BEHAVIOR TYPE	PT (KG/CM2)	LF (KG/CM2)	N VALUES	N' #	VERTICAL EFFECTIVE STRESS (KG/CM2)	RELATIVE DENSITY (%) *	FRICTION ANGLE (DEGREES) **	YOUNGS MODULUS (KG/CM2) ***	UNDRAINED SHEAR STRENGTH (KG/CM2) ****	SENSITIVITY	COMP.	OCR
1	SILTY FINE SAND	49.4	.25	12	12	.048	60%-70%	>48	108	--	--	--	--
2	SILTY FINE SAND	81.7	.43	20	20	.097	70%-80%	>48	179	--	--	--	--
3	SILTY FINE SAND	88.8	.62	22	22	.146	70%-80%	>48	195	--	--	--	--
4	SILTY FINE SAND	50.9	.45	12	12	.195	60%-70%	44-46	111	--	--	--	--
5	SILTY TO CLAYEY F.S.	30.3	.27	10	10	.244	40%-50%	40-42	66	--	--	--	--
6	SILTY TO CLAYEY F.S.	28.7	.22	9	9	.293	40%-50%	40-42	63	--	--	--	--
7	SILTY FINE SAND	78.1	.36	19	19	.341	70%-80%	44-46	171	--	--	--	--
8	FINE SAND	132.1	.72	26	26	.395	80%-90%	46-48	290	--	--	--	--
9	FINE SAND	154.5	.97	30	30	.449	>90%	46-48	339	--	--	--	--
10	FINE SAND	140.9	.99	28	28	.482	80%-90%	44-46	309	--	--	--	--
11	FINE SAND	155.4	.81	31	31	.515	80%-90%	44-46	341	--	--	--	--
[illegible]	FINE SAND	146.4	.67	29	29	.548	80%-90%	44-46	322	--	--	--	--
13	FINE SAND	134.2	.42	26	26	.582	70%-80%	44-46	295	--	--	--	--
14	FINE SAND	169.7	.74	33	33	.615	80%-90%	44-46	373	--	--	--	--
15	FINE SAND	180.3	.91	36	36	.648	80%-90%	44-46	396	--	--	--	--
16	FINE SAND	175	.88	35	35	.681	80%-90%	44-46	385	--	--	--	--
17	FINE SAND	175.4	.84	35	35	.714	80%-90%	44-46	385	--	--	--	--
18	FINE SAND	177.4	.94	35	35	.748	80%-90%	44-46	390	--	--	--	--
19	FINE SAND	156	1.04	31	31	.781	80%-90%	42-44	343	--	--	--	--
20	FINE SAND	155.5	.73	31	31	.814	70%-80%	42-44	342	--	--	--	--
21	FINE SAND	171.2	.58	34	34	.847	80%-90%	44-46	376	--	--	--	--
22	DENSE OR CEMENTED S.	206.3	.57	34	34	.884	80%-90%	44-46	453	--	--	--	--
23	DENSE OR CEMENTED S.	214.1	.68	35	35	.921	80%-90%	44-46	471	--	--	--	--
24	DENSE OR CEMENTED S.	293.2	.43	48	48	.957	>90%	44-46	645	--	--	--	--
25	DENSE OR CEMENTED S.	571.2	.16	95	95	.994	>90%	>48	1256	--	--	--	--

\# N'=POINT STRESS*(.2+.04*FRICTION RATIO)
* NORMALLY CONSOLIDATED SANDS
** FOR OVERCONSOLIDATED SANDS,SLIGHTLY REDUCE ABOVE FRICTION ANGLES
*** FOR OVERCONSOLIDATED SANDS, YOUNG'S MODULUS MAY BE AS MUCH AS 3 TO 6 TIMES HIGHER
**** NK OF 16 USED. FOR OVERCONSOLIDATED CLAYS, AN NK OF 17 IS SUGGESTED

THE ABOVE DATA WAS COMPUTED FOLLOWING 'BASIC' GUIDELINES BY P. K. ROBERTSON AND R. G. CAMPANELLA IN THE HANDBOOK 'GUIDELINES FOR USE AND INTERPERTATION OF THE ELECTRONIC CONE PENETRATION TEST'

ADDITIONAL LOCAL CORRELATIONS DEVELOPED BY IN-SITU TECHNOLOGY HAVE ALSO BEEN USED IN COMPUTING THE ABOVE DATA. IT IS THE POLICY OF IN-SITU TECHNOLOGY TO CONTINUALLY UPGRADE AND MODIFY C.P.T CORRELATIONS AS PUBLISHED RESEARCH AND LOCAL EXPERIENCE GROWS.

IN-SITU TECHNOLOGY SOIL BEHAVIOR TABLE
FOR SOUTHEASTERN UNITED STATES SOILS

JOB NAME SE5-27-315G
NAVAL TRAINING CENTER
ORLANDO FLORIDA
FILE NAME..... PC-1A

DEPTH FEET	SOIL BEHAVIOR TYPE	PT (KG/CM2)	LF (KG/CM2)	N VALUES #	N'	VERTICAL EFFECTIVE STRESS (KG/CM2)	RELATIVE DENSITY (%) *	FRICTION ANGLE (DEGREES) **	YOUNGS MODULUS (KG/CM2) ***	UNDRAINED SHEAR STRENGTH (KG/CM2) ****	SENSITIVITY	COMP.	OCR
1	SILTY FINE SAND	88.6	.58	22	22	.048	80%-90%	>48	194	--	--	--	--
2	FINE SAND	150.8	.75	30	30	.102	>90%	>48	331	--	--	--	--
3	FINE SAND	163.7	.81	32	32	.156	>90%	>48	360	--	--	--	--
4	FINE SAND	116.4	.63	23	23	.209	80%-90%	>48	256	--	--	--	--
5	FINE SAND	104.9	.62	20	20	.263	70%-80%	46-48	230	--	--	--	--
6	SILTY FINE SAND	81.2	.69	20	20	.312	70%-80%	44-46	178	--	--	--	--
7	SILTY FINE SAND	62.7	.57	15	15	.361	60%-70%	42-44	137	--	--	--	--
8	SILTY TO CLAYEY F.S.	47.5	.58	15	15	.41	50%-60%	40-42	104	--	--	--	--
9	SILTY FINE SAND	84.4	1.04	21	21	.459	70%-80%	42-44	185	--	--	--	--
10	SILTY FINE SAND	130.3	1.39	32	32	.489	80%-90%	44-46	286	--	--	--	--
11	SILTY FINE SAND	124.2	1.35	31	31	.52	70%-80%	44-46	273	--	--	--	--
12	SILTY FINE SAND	116.7	1.4	29	29	.551	70%-80%	44-46	256	--	--	--	--
13	FINE SAND	148.1	1.49	29	29	.584	80%-90%	44-46	325	--	--	--	--
14	FINE SAND	234.5	1.69	46	46	.617	>90%	46-48	515	--	--	--	--
15	FINE SAND	232.6	1.68	46	46	.65	>90%	46-48	511	--	--	--	--
16	FINE SAND	226.1	1.73	45	45	.684	>90%	46-48	497	--	--	--	--
17	DENSE OR CEMENTED S.	274.4	1.63	45	45	.72	>90%	46-48	603	--	--	--	--
18	DENSE OR CEMENTED S.	290.5	1.69	48	48	.757	>90%	46-48	639	--	--	--	--
19	DENSE OR CEMENTED S.	343.3	1.78	57	57	.794	>90%	46-48	755	--	--	--	--
20	DENSE OR CEMENTED S.	380.6	1.86	63	63	.83	>90%	46-48	837	--	--	--	--
21	DENSE OR CEMENTED S.	415.4	1.85	69	69	.867	>90%	46-48	913	--	--	--	--
22	DENSE OR CEMENTED S.	429.1	1.95	71	71	.903	>90%	46-48	944	--	--	--	--
23	DENSE OR CEMENTED S.	466.1	1.58	77	77	.94	>90%	46-48	1025	--	--	--	--
24	DENSE OR CEMENTED S.	450.6	.41	75	75	.977	>90%	46-48	991	--	--	--	--
25	DENSE OR CEMENTED S.	411.2	.5	68	68	1.013	>90%	46-48	904	--	--	--	--
26	DENSE OR CEMENTED S.	376.8	.67	62	62	1.05	>90%	46-48	828	--	--	--	--
27	DENSE OR CEMENTED S.	319.1	.4	53	53	1.087	>90%	44-46	702	--	--	--	--
28	DENSE OR CEMENTED S.	334.3	.22	55	55	1.123	>90%	44-46	735	--	--	--	--
29	DENSE OR CEMENTED S.	361.5	.16	60	60	1.16	>90%	44-46	795	--	--	--	--
30	DENSE OR CEMENTED S.	402	.97	67	67	1.196	>90%	46-48	884	--	--	--	--

-1A CONTINUED SE5-27-315G

DEPTH FEET	SOIL BEHAVIOR TYPE	PT (KG/CM2)	LF (KG/CM2)	N VALUES	N'	VERTICAL STRESS	RELATIVE DENSITY	FRICTION ANGLE	YOUNGS MODULUS	UNDRAINED SHEAR ST	SENSITIVITY	COMP.	OCR
31	DENSE OR CEMENTED S.	497.3	1.97	82	82	1.233	>90%	46-48	1094	--	--	--	--
32	DENSE OR CEMENTED S.	572.5	2.39	95	95	1.27	>90%	46-48	1259	--	--	--	--
33	DENSE OR CEMENTED S.	672.1	3.01	112									
					112	1.306	>90%	46-48	1478	--	--	--	--

\# N'=POINT STRESS*(.2+.04*FRICTION RATIO)
* NORMALLY CONSOLIDATED SANDS
** FOR OVERCONSOLIDATED SANDS,SLIGHTLY REDUCE ABOVE FRICTION ANGLES
*** FOR OVERCONSOLIDATED SANDS, YOUNG'S MODULUS MAY BE AS MUCH AS 3 TO 6 TIMES HIGHER
**** NK OF 16 USED. FOR OVERCONSOLIDATED CLAYS, AN NK OF 17 IS SUGGESTED

THE ABOVE DATA WAS COMPUTED FOLLOWING 'BASIC' GUIDELINES BY P. K. ROBERTSON AND R. G. CAMPANELLA IN THE HANDBOOK 'GUIDELINES FOR USE AND INTERPERTATION OF THE ELECTRONIC CONE PENETRATION TEST'

ADDITIONAL LOCAL CORRELATIONS DEVELOPED BY IN-SITU TECHNOLOGY HAVE ALSO BEEN USED IN COMPUTING THE ABOVE DATA. IT IS THE POLICY OF IN-SITU TECHNOLOGY TO CONTINUALLY UPGRADE AND MODIFY C.P.T CORRELATIONS AS PUBLISHED RESEARCH AND LOCAL EXPERIENCE GROWS.

IN-SITU TECHNOLOGY SOIL BEHAVIOR TABLE
FOR SOUTHEASTERN UNITED STATES SOILS

JOB NAME SE5-27-315G
NAVAL TRAINING CENTER
ORLANDO FLORIDA
FILE NAME..... PC-2

DEPTH FEET	SOIL BEHAVIOR TYPE	PT (KG/CM2)	LF (KG/CM2)	N VALUES	N'	VERTICAL EFFECTIVE STRESS (KG/CM2)	RELATIVE DENSITY (%)	FRICTION ANGLE (DEGREES)	YOUNGS MODULUS (KG/CM2)	UNDRAINED SHEAR STRENGTH (KG/CM2)	SENSITIVITY	COMP.	OCR
				#			*	**	***	****			
1	FINE SAND	222.4	1.13	44	44	.053	>90%	>48	489	--	--	--	--
2	FINE SAND	232.9	1.22	46	46	.107	>90%	>48	512	--	--	--	--
3	FINE SAND	194	1.05	38	38	.161	>90%	>48	426	--	--	--	--
4	FINE SAND	103.6	.6	20	20	.214	80%-90%	46-48	227	--	--	--	--
5	SILTY FINE SAND	58.5	.46	14	14	.263	60%-70%	44-46	128	--	--	--	--
6	SILTY TO CLAYEY F.S.	32.7	.21	10	10	.312	40%-50%	40-42	71	--	--	--	--
7	SILTY TO CLAYEY F.S.	26.1	.22	8	8	.361	40%-50%	38-40	57	--	--	--	--
8	SILTY FINE SAND	58.5	.42	14	14	.41	60%-70%	42-44	128	--	--	--	--
9	SILTY FINE SAND	67.4	.54	16	16	.459	60%-70%	42-44	148	--	--	--	--
10	SILTY FINE SAND	70.6	.68	17	17	.489	60%-70%	42-44	155	--	--	--	--
11	SILTY FINE SAND	76.6	.81	19	19	.52	60%-70%	42-44	168	--	--	--	
12	SILTY FINE SAND	87.4	.96	21	21	.551	60%-70%	42-44	192	--	--	--	--
13	SILTY FINE SAND	102.4	1.1	25	25	.582	70%-80%	42-44	225	--	--	--	--
14	FINE SAND	130.2	1.24	26	26	.615	70%-80%	44-46	286	--	--	--	--
15	FINE SAND	150.8	1.28	30	30	.648	80%-90%	44-46	331	--	--	--	--
16	FINE SAND	170.9	1.33	34	34	.681	80%-90%	44-46	375	--	--	--	--
17	FINE SAND	193	1.44	38	38	.714	80%-90%	44-46	424	--	--	--	--
18	FINE SAND	218	1.47	43	43	.748	>90%	44-46	479	--	--	--	--
19	FINE SAND	256.9	1.51	51	51	.781	>90%	46-48	565	--	--	--	--
20	DENSE OR CEMENTED S.	290.3	1.42	48	48	.817	>90%	46-48	638	--	--	--	--
21	DENSE OR CEMENTED S.	303.3	1.19	50	50	.854	>90%	46-48	667	--	--	--	--
22	FINE SAND	260.2	1.51	52	52	.887	>90%	44-46	572	--	--	--	--
23	DENSE OR CEMENTED S.	288.6	1.57	48	48	.924	>90%	44-46	634	--	--	--	--
24	DENSE OR CEMENTED S.	271.4	.11	45	45	.961	>90%	44-46	597	--	--	--	--
25	DENSE OR CEMENTED S.	168.9	.05	28	28	.997	70%-80%	42-44	371	--	--	--	--
26	FINE SAND	90.8	.1	18	18	1.03	50%-60%	40-42	199	--	--	--	--
27	DENSE OR CEMENTED S.	384.9	2.57	64	64	1.067	>90%	46-48	846	--	--	--	--
28	DENSE OR CEMENTED S.	706.8	6.88	117									
					117	1.104	>90%	>48	1554	--	--	--	--
29	FINE SAND	313.3	2.36	62	62	1.137	>90%	44-46	689	--	--	--	--

-2 CONTINUED SE5-27-315G

DEPTH FEET	SOIL BEHAVIOR TYPE	PT (KG/CM2)	LF (KG/CM2)	N VALUES	N'	VERTICAL STRESS	RELATIVE DENSITY	FRICTION ANGLE	YOUNGS MODULUS	UNDRAINED SHEAR ST	SENSITIVITY	COMP.	OCR
30	FINE SAND	175.5	.92	35	35	1.17	70%-80%	42-44	386	--	--	--	--
31	DENSE OR CEMENTED S.	189	.43	31	31	1.207	70%-80%	42-44	415	--	--	--	--
32	FINE SAND	172.8	.38	34	34	1.24	70%-80%	42-44	380	--	--	--	--
33	DENSE OR CEMENTED S.	202.5	.18	33	33	1.277	80%-90%	42-44	445	--	--	--	--
34	DENSE OR CEMENTED S.	227.1	.48	37	37	1.313	80%-90%	42-44	499	--	--	--	--
35	DENSE OR CEMENTED S.	207.1	.63	34	34	1.35	80%-90%	42-44	455	--	--	--	--
36	FINE SAND	190.3	.81	38	38	1.383	70%-80%	42-44	418	--	--	--	--
37	FINE SAND	186	.85	37	37	1.416	70%-80%	42-44	409	--	--	--	--
38	DENSE OR CEMENTED S.	211.9	.84	35	35	1.453	70%-80%	42-44	466	--	--	--	--
39	DENSE OR CEMENTED S.	212.4	.84	35	35	1.489	70%-80%	42-44	467	--	--	--	--
40	FINE SAND	186.3	1.01	37	37	1.523	70%-80%	40-42	409	--	--	--	--
41	FINE SAND	153.9	1.13	30	30	1.556	60%-70%	40-42	338	--	--	--	--
42	FINE SAND	126.7	1.11	25	25	1.589	50%-60%	38-40	278	--	--	--	--
43	FINE SAND	116.9	.94	23	23	1.622	50%-60%	38-40	257	--	--	--	--
44	FINE SAND	110.2	.98	22	22	1.656	40%-50%	38-40	242	--	--	--	--
45	SILTY FINE SAND	102.6	.99	25	25	1.686	40%-50%	38-40	225	--	--	--	--
46	SILTY FINE SAND	94.7	.87	23	23	1.717	40%-50%	38-40	208	--	--	--	--
47	SILTY FINE SAND	94.9	.92	23	23	1.748	40%-50%	38-40	208	--	--	--	--
48	SILTY FINE SAND	100.4	.96	25	25	1.779	40%-50%	38-40	220	--	--	--	--
[illegible]	SILTY FINE SAND	98.2	1.04	24	24	1.809	40%-50%	38-40	216	--	--	--	--
[illegible]	SILTY FINE SAND	90.4	1.05	22	22	1.84	<40%	36-38	198	--	--	--	--
51	SILTY FINE SAND	93.7	1.12	23	23	1.871	<40%	36-38	206	--	--	--	--
52	SILTY FINE SAND	101.5	1.16	25	25	1.902	40%-50%	36-38	223	--	--	--	--
53	SILTY FINE SAND	97.4	1.16	24	24	1.932	<40%	36-38	214	--	--	--	--
54	SILTY FINE SAND	97.7	1.17	24	24	1.963	<40%	36-38	214	--	--	--	--
55	SILTY FINE SAND	96.5	1.11	24	24	1.994	<40%	36-38	212	--	--	--	--
56	SILTY FINE SAND	91.1	1.11	22	22	2.025	<40%	36-38	200	--	--	--	--
57	SILTY FINE SAND	88.9	1.11	22	22	2.055	<40%	36-38	195	--	--	--	--
58	SILTY FINE SAND	78.3	.85	19	19	2.086	<40%	36-38	172	--	--	--	--
59	SILTY FINE SAND	90.3	.93	22	22	2.117	<40%	36-38	198	--	--	--	--
60	SILTY FINE SAND	100.5	.98	25	25	2.148	<40%	36-38	221	--	--	--	--
61	SILTY FINE SAND	94.9	.9	23	23	2.179	<40%	36-38	208	--	--	--	--
62	SILTY FINE SAND	91.2	.8	22	22	2.209	<40%	36-38	200	--	--	--	--
63	SILTY FINE SAND	93.5	.75	23	23	2.24	<40%	36-38	205	--	--	--	--
64	SILTY FINE SAND	86.6	.72	21	21	2.271	<40%	36-38	190	--	--	--	--
65	SILTY FINE SAND	92.6	.77	23	23	2.302	<40%	36-38	203	--	--	--	--
66	SILTY FINE SAND	96	.81	24	24	2.332	<40%	36-38	211	--	--	--	--
67	FINE SAND	95.7	.59	19	19	2.366	<40%	36-38	210	--	--	--	--
68	SILTY FINE SAND	73.1	.39	18	18	2.396	<40%	34-36	160	--	--	--	--
69	SILTY FINE SAND	64.1	.39	16	16	2.427	<40%	32-34	141	--	--	--	--
70	SILTY FINE SAND	62.7	.31	15	15	2.458	<40%	32-34	137	--	--	--	--
71	SILTY FINE SAND	53.2	.32	13	13	2.489	<40%	32-34	117	--	--	--	--
72	SILTY FINE SAND	55.7	.51	13	13	2.519	<40%	32-34	122	--	--	--	--
73	SILTY FINE SAND	75.7	.74	18	18	2.55	<40%	34-36	166	--	--	--	--
74	SILTY TO CLAYEY F.S.	30.4	.4	10	10	2.581	<40%	<30	66	--	--	--	--

PC-2 CONTINUED SE5-27-315G

DEPTH FEET	SOIL BEHAVIOR TYPE	PT (KG/CM2)	LF (KG/CM2)	N VALUES	N'	VERTICAL STRESS	RELATIVE DENSITY	FRICTION ANGLE	YOUNGS MODULUS	UNDRAINED SHEAR ST	SENSITIVITY	COMP.	OCR
75	SILTY TO CLAYEY F.S.	25.4	.23	8	8	2.612	<40%	<30	55	--	--	--	--
76	SILTY TO CLAYEY F.S.	24.1	.21	8	8	2.642	<40%	<30	53	--	--	--	--
77	SILTY TO CLAYEY F.S.	25.6	.24	8	8	2.673	<40%	<30	56	--	--	--	--
78	SILTY TO CLAYEY F.S.	28.1	.26	9	9	2.704	<40%	<30	61	--	--	--	--

N'=POINT STRESS*(.2+.04*FRICTION RATIO)
* NORMALLY CONSOLIDATED SANDS
** FOR OVERCONSOLIDATED SANDS,SLIGHTLY REDUCE ABOVE FRICTION ANGLES
*** FOR OVERCONSOLIDATED SANDS, YOUNG'S MODULUS MAY BE AS MUCH AS 3 TO 6 TIMES HIGHER
**** NK OF 16 USED. FOR OVERCONSOLIDATED CLAYS, AN NK OF 17 IS SUGGESTED

THE ABOVE DATA WAS COMPUTED FOLLOWING 'BASIC' GUIDELINES BY P. K. ROBERTSON AND R. G. CAMPANELLA IN THE HANDBOOK 'GUIDELINES FOR USE AND INTERPERTATION OF THE ELECTRONIC CONE PENETRATION TEST'

ADDITIONAL LOCAL CORRELATIONS DEVELOPED BY IN-SITU TECHNOLOGY HAVE ALSO BEEN USED IN COMPUTING THE ABOVE DATA. IT IS THE POLICY OF IN-SITU TECHNOLOGY TO CONTINUALLY UPGRADE AND MODIFY C.P.T CORRELATIONS AS PUBLISHED RESEARCH AND LOCAL EXPERIENCE GROWS.

IN-SITU TECHNOLOGY SOIL BEHAVIOR TABLE
FOR SOUTHEASTERN UNITED STATES SOILS

JOB NAME SE5-27-315G
NAVAL TRAINING CENTER
ORLANDO FLORIDA
FILE NAME..... PC-3

DEPTH FEET	SOIL BEHAVIOR TYPE	PT (KG/CM2)	LF (KG/CM2)	N VALUES #	N'	VERTICAL EFFECTIVE STRESS (KG/CM2)	RELATIVE DENSITY (%) *	FRICTION ANGLE (DEGREES) **	YOUNGS MODULUS (KG/CM2) ***	UNDRAINED SHEAR STRENGTH (KG/CM2) ****	SENSITIVITY	COMP.	OCR
1	SILTY FINE SAND	51.5	.32	12	12	.048	70%-80%	>48	113	--	--	--	--
2	FINE SAND	169.2	.72	33	33	.102	>90%	>48	372	--	--	--	--
3	DENSE OR CEMENTED S.	245.1	1.01	40	40	.161	>90%	>48	539	--	--	--	--
4	FINE SAND	165.2	.72	33	33	.214	>90%	>48	363	--	--	--	--
5	FINE SAND	122.6	.74	24	24	.268	80%-90%	46-48	269	--	--	--	--
6	FINE SAND	123.6	.78	24	24	.322	80%-90%	46-48	271	--	--	--	--
7	FINE SAND	133.2	.81	26	26	.376	80%-90%	46-48	293	--	--	--	--
8	FINE SAND	142	.86	28	28	.429	80%-90%	46-48	312	--	--	--	--
9	FINE SAND	159.2	.89	31	31	.483	>90%	46-48	350	--	--	--	--
10	FINE SAND	188.5	1	37	37	.516	>90%	46-48	414	--	--	--	--
	FINE SAND	192	1.13	38	38	.549	>90%	46-48	422	--	--	--	--
	FINE SAND	194.8	1.27	38	38	.583	>90%	46-48	428	--	--	--	--
13	FINE SAND	166.4	1.49	33	33	.616	80%-90%	44-46	366	--	--	--	--
14	FINE SAND	139.7	1	27	27	.649	70%-80%	44-46	307	--	--	--	--
15	FINE SAND	178.2	1.37	35	35	.682	80%-90%	44-46	392	--	--	--	--
16	FINE SAND	243.2	1.69	48	48	.715	>90%	46-48	535	--	--	--	--
17	FINE SAND	280	2.12	56	56	.749	>90%	46-48	616	--	--	--	--
18	DENSE OR CEMENTED S.	325.5	2.31	54	54	.785	>90%	46-48	716	--	--	--	--
19	FINE SAND	275.3	2.04	55	55	.818	>90%	46-48	605	--	--	--	--
20	DENSE OR CEMENTED S.	283.4	.99	47	47	.855	>90%	46-48	623	--	--	--	--
21	DENSE OR CEMENTED S.	238.1	.55	39	39	.892	>90%	44-46	523	--	--	--	--
22	DENSE OR CEMENTED S.	278	.56	46	46	.928	>90%	44-46	611	--	--	--	--
23	DENSE OR CEMENTED S.	283.5	.14	47	47	.965	>90%	44-46	623	--	--	--	--
24	DENSE OR CEMENTED S.	195.5	.06	32	32	1.002	80%-90%	42-44	430	--	--	--	--
25	DENSE OR CEMENTED S.	232.8	.19	38	38	1.038	>90%	44-46	512	--	--	--	--
26	DENSE OR CEMENTED S.	550.7	5.3	91	91	1.075	>90%	46-48	1211	--	--	--	--
27	FINE SAND	679.4	10.33	135									
					135	1.108	>90%	>48	1494	--	--	--	--
28	DENSE OR CEMENTED S.	552.1	2.54	92	92	1.145	>90%	46-48	1214	--	--	--	--
29	FINE SAND	304.4	4.01	60	60	1.178	>90%	44-46	669	--	--	--	--

PC-3 CONTINUED SE5-27-315G

DEPTH FEET	SOIL BEHAVIOR TYPE	PT (KG/CM2)	LF (KG/CM2)	N VALUES	N'	VERTICAL STRESS	RELATIVE DENSITY	FRICTION ANGLE	YOUNGS MODULUS	UNDRAINED SHEAR ST	SENSITIVITY	COMP.	OCR
30	SILTY FINE SAND	235.6	3.09	58	58	1.209	80%-90%	42-44	518	--	--	--	--
31	SILTY FINE SAND	217.3	3.09	54	54	1.239	80%-90%	42-44	478	--	--	--	--
32	SILTY FINE SAND	204.9	3.08	51	51	1.27	80%-90%	42-44	450	--	--	--	--
33	FINE SAND	238.2	2.93	47	47	1.303	80%-90%	42-44	524	--	--	--	--
34	FINE SAND	285.7	2.73	57	57	1.337	>90%	44-46	628	--	--	--	--
35	FINE SAND	318.2	2.79	63	63	1.37	>90%	44-46	700	--	--	--	--
36	FINE SAND	305.2	2.97	61	61	1.403	>90%	44-46	671	--	--	--	--
37	FINE SAND	306.4	3.04	61	61	1.436	>90%	44-46	674	--	--	--	--
38	FINE SAND	319.4	2.95	63	63	1.469	>90%	44-46	702	--	--	--	--
39	FINE SAND	350.1	2.89	70	70	1.503	>90%	44-46	770	--	--	--	--
40	FINE SAND	351.3	2.96	70	70	1.536	>90%	44-46	772	--	--	--	--
41	FINE SAND	343.5	2.89	68	68	1.569	>90%	44-46	755	--	--	--	--
42	FINE SAND	337.4	3.04	67	67	1.602	>90%	44-46	742	--	--	--	--
43	FINE SAND	323.2	3.17	64	64	1.635	>90%	42-44	711	--	--	--	--
44	FINE SAND	301.7	3.32	60	60	1.669	>90%	42-44	663	--	--	--	--
45	SILTY FINE SAND	233.8	3.63	58	58	1.699	70%-80%	42-44	514	--	--	--	--
46	SILTY FINE SAND	191	3.72	47	47	1.73	60%-70%	40-42	420	--	--	--	--
47	SILTY FINE SAND	189.1	3.69	47	47	1.761	60%-70%	40-42	416	--	--	--	--
48	SILTY FINE SAND	218.9	3.48	54	54	1.792	70%-80%	40-42	481	--	--	--	--
49	SILTY FINE SAND	208.7	3.47	52	52	1.823	70%-80%	40-42	459	--	--	--	--
50	SILTY FINE SAND	210.3	3.57	52	52	1.853	70%-80%	40-42	462	--	--	--	-
51	SILTY FINE SAND	199	3.87	49	49	1.884	60%-70%	40-42	437	--	--	--	--
52	SILTY TO CLAYEY F.S.	174.2	3.94	58	58	1.915	60%-70%	40-42	383	--	--	--	--
53	SILTY TO CLAYEY F.S.	192.4	4.01	64	64	1.946	60%-70%	40-42	423	--	--	--	--
54	SILTY TO CLAYEY F.S.	180.1	3.75	60	60	1.976	60%-70%	40-42	396	--	--	--	--
55	SILTY FINE SAND	187.2	3.64	46	46	2.007	60%-70%	40-42	411	--	--	--	--
56	SILTY FINE SAND	207.4	3.8	51	51	2.038	60%-70%	40-42	456	--	--	--	--
57	SILTY TO CLAYEY F.S.	188.2	4.03	62	62	2.069	60%-70%	40-42	414	--	--	--	--
58	SILTY TO CLAYEY F.S.	144.6	4.14	48	48	2.099	50%-60%	38-40	318	--	--	--	--
59	SILTY TO CLAYEY F.S.	172	4.31	57	57	2.13	60%-70%	40-42	378	--	--	--	--
60	SILTY TO CLAYEY F.S.	162.5	4.23	54	54	2.161	50%-60%	38-40	357	--	--	--	--
61	SILTY TO CLAYEY F.S.	152.7	4.26	50	50	2.192	50%-60%	38-40	335	--	--	--	--
62	SILTY TO CLAYEY F.S.	153.2	4.27	51	51	2.223	50%-60%	38-40	337	--	--	--	--
63	SILTY TO CLAYEY F.S.	158.7	4.41	52	52	2.253	50%-60%	38-40	349	--	--	--	--
64	SILTY TO CLAYEY F.S.	153.8	4.52	51	51	2.284	50%-60%	38-40	338	--	--	--	--
65	CLAYEY FINE SAND	148.9	4.51	59	59	2.315	40%-50%	38-40	327	--	--	--	--
66	SILTY TO CLAYEY F.S.	152.5	4.23	50	50	2.346	50%-60%	38-40	335	--	--	--	--
67	SILTY TO CLAYEY F.S.	156.2	4.13	52	52	2.376	50%-60%	38-40	343	--	--	--	--
68	SILTY TO CLAYEY F.S.	150.6	4.22	50	50	2.407	40%-50%	38-40	331	--	--	--	--
69	SILTY TO CLAYEY F.S.	156.9	4.37	52	52	2.438	50%-60%	38-40	345	--	--	--	--
70	SILTY TO CLAYEY F.S.	158.2	4.5	52	52	2.469	50%-60%	38-40	348	--	--	--	--
71	SILTY TO CLAYEY F.S.	158.7	4.48	52	52	2.499	50%-60%	38-40	349	--	--	--	--
72	SILTY TO CLAYEY F.S.	168	4.33	56	56	2.53	50%-60%	38-40	369	--	--	--	--
73	SILTY TO CLAYEY F.S.	182.9	4.33	60	60	2.561	50%-60%	38-40	402	--	--	--	--
74	SILTY TO CLAYEY F.S.	203	4.52	67	67	2.592	60%-70%	38-40	446	--	--	--	--

rC-3 CONTINUED SE5-27-315G

DEPTH FEET	SOIL BEHAVIOR TYPE	PT (KG/CM2)	LF (KG/CM2)	N VALUES	N'	VERTICAL STRESS	RELATIVE DENSITY	FRICTION ANGLE	YOUNGS MODULUS	UNDRAINED SHEAR ST	SENSITIVITY	COMP.	OCR
75	SILTY TO CLAYEY F.S.	197.7	4.67	65	65	2.622	60%-70%	38-40	434	--	--	--	--
76	SILTY TO CLAYEY F.S.	174.7	4.67	58	58	2.653	50%-60%	38-40	384	--	--	--	--
77	SILTY TO CLAYEY F.S.	180	4.72	60	60	2.684	50%-60%	38-40	396	--	--	--	--
78	SILTY TO CLAYEY F.S.	205.1	4.7	68	68	2.715	60%-70%	38-40	451	--	--	--	--
79	SILTY FINE SAND	255.9	4.96	63	63	2.746	70%-80%	40-42	562	--	--	--	--
80	SILTY TO CLAYEY F.S.	198.1	4.93	66	66	2.776	60%-70%	38-40	435	--	--	--	--
81	SILTY TO CLAYEY F.S.	185.8	4.59	61	61	2.807	50%-60%	38-40	408	--	--	--	--
82	SILTY TO CLAYEY F.S.	181.8	5.02	60	60	2.838	50%-60%	38-40	399	--	--	--	--
83	CLAY	40.3	4.23	40	40	2.863	--	--	--	2.19	.9	UD	3

\# N'=POINT STRESS*(.2+.04*FRICTION RATIO)
* NORMALLY CONSOLIDATED SANDS
** FOR OVERCONSOLIDATED SANDS,SLIGHTLY REDUCE ABOVE FRICTION ANGLES
*** FOR OVERCONSOLIDATED SANDS, YOUNG'S MODULUS MAY BE AS MUCH AS 3 TO 6 TIMES HIGHER
**** NK OF 16 USED. FOR OVERCONSOLIDATED CLAYS, AN NK OF 17 IS SUGGESTED

THE ABOVE DATA WAS COMPUTED FOLLOWING 'BASIC' GUIDELINES BY P. K. ROBERTSON AND R. G. CAMPANELLA IN THE HANDBOOK 'GUIDELINES FOR USE AND INTERPERTATION OF THE ELECTRONIC CONE PENETRATION TEST'

ADDITIONAL LOCAL CORRELATIONS DEVELOPED BY IN-SITU TECHNOLOGY HAVE ALSO BEEN USED IN COMPUTING THE ABOVE DATA. IT IS THE POLICY OF IN-SITU TECHNOLOGY TO CONTINUALLY UPGRADE AND MODIFY C.P.T CORRELATIONS AS PUBLISHED RESEARCH AND LOCAL EXPERIENCE GROWS.

IN-SITU TECHNOLOGY SOIL BEHAVIOR TABLE
FOR SOUTHEASTERN UNITED STATES SOILS

JOB NAME SE5-27-315G
NAVAL TRAINING CENTER
ORLANDO FLORIDA
FILE NAME..... PC-4

DEPTH FEET	SOIL BEHAVIOR TYPE	PT (KG/CM2)	LF (KG/CM2)	N VALUES	N' VALUES	VERTICAL EFFECTIVE STRESS (KG/CM2)	RELATIVE DENSITY (%)	FRICTION ANGLE (DEGREES)	YOUNGS MODULUS (KG/CM2)	UNDRAINED SHEAR STRENGTH (KG/CM2)	SENSITIVITY	COMP.	OCR
				#			*	**	***	****			
1	SILTY FINE SAND	66.4	.25	16	16	.048	70%-80%	>48	146	--	--	--	--
2	SILTY FINE SAND	91.3	.61	22	22	.097	80%-90%	>48	200	--	--	--	--
3	FINE SAND	133.5	.66	26	26	.151	>90%	>48	293	--	--	--	--
4	SILTY FINE SAND	78.7	.3	19	19	.2	70%-80%	46-48	173	--	--	--	--
5	SILTY FINE SAND	75.7	.34	18	18	.249	70%-80%	44-46	166	--	--	--	--
6	SILTY FINE SAND	80.3	.4	20	20	.297	70%-80%	44-46	176	--	--	--	--
7	SILTY FINE SAND	64.2	.43	16	16	.346	60%-70%	42-44	141	--	--	--	--
8	SILTY FINE SAND	64.4	.46	16	16	.395	60%-70%	42-44	141	--	--	--	--
9	SILTY FINE SAND	70.3	.49	17	17	.444	60%-70%	42-44	154	--	--	--	--
10	SILTY FINE SAND	70	.54	17	17	.475	60%-70%	42-44	154	--	--	--	--
11	SILTY FINE SAND	90.4	.74	22	22	.505	60%-70%	42-44	198	--	--	--	--
12	FINE SAND	163.3	.82	32	32	.539	80%-90%	44-46	359	--	--	--	--
13	FINE SAND	184.3	.8	36	36	.572	>90%	46-48	405	--	--	--	--
14	FINE SAND	166.5	.84	33	33	.605	80%-90%	44-46	366	--	--	--	--
15	FINE SAND	171.3	.91	34	34	.638	80%-90%	44-46	376	--	--	--	--
16	FINE SAND	189.6	1.12	37	37	.671	80%-90%	44-46	417	--	--	--	--
17	FINE SAND	215.1	1.24	43	43	.705	>90%	44-46	473	--	--	--	--
18	FINE SAND	224	1.3	44	44	.738	>90%	44-46	492	--	--	--	--
19	FINE SAND	222	1.28	44	44	.771	>90%	44-46	488	--	--	--	--
20	FINE SAND	232.5	1.32	46	46	.804	>90%	44-46	511	--	--	--	--
21	FINE SAND	240.6	1.43	48	48	.838	>90%	44-46	529	--	--	--	--
22	DENSE OR CEMENTED S.	308.1	1.56	51	51	.874	>90%	46-48	677	--	--	--	--
23	FINE SAND	191.9	1.59	38	38	.907	80%-90%	44-46	422	--	--	--	--
24	SILTY TO CLAYEY F.S.	102.9	1.6	34	34	.938	60%-70%	40-42	226	--	--	--	--
25	FINE SAND	279.9	2.34	55	55	.971	>90%	44-46	615	--	--	--	--
26	FINE SAND	335.8	3.05	67	67	1.005	>90%	46-48	738	--	--	--	--
27	FINE SAND	260.5	2.21	52	52	1.038	>90%	44-46	573	--	--	--	--
28	FINE SAND	252.6	1.42	50	50	1.071	>90%	44-46	555	--	--	--	--
29	FINE SAND	243.4	1.62	48	48	1.104	>90%	44-46	535	--	--	--	--
30	FINE SAND	194.4	1.61	38	38	1.137	80%-90%	42-44	427	--	--	--	--

..-4 CONTINUED SE5-27-315G

DEPTH FEET	SOIL BEHAVIOR TYPE	PT (KG/CM2)	LF (KG/CM2)	N VALUES	N'	VERTICAL STRESS	RELATIVE DENSITY	FRICTION ANGLE	YOUNGS MODULUS	UNDRAINED SHEAR ST	SENSITIVITY	COMP.	OCR
31	FINE SAND	162.9	1.22	32	32	1.171	70%-80%	42-44	358	--	--	--	--
32	FINE SAND	184.7	1.48	36	36	1.204	70%-80%	42-44	406	--	--	--	--
33	FINE SAND	203	1.62	40	40	1.237	80%-90%	42-44	446	--	--	--	--
34	FINE SAND	230.1	1.73	46	46	1.27	80%-90%	42-44	506	--	--	--	--
35	FINE SAND	206.9	1.75	41	41	1.303	80%-90%	42-44	455	--	--	--	--
36	FINE SAND	191.9	1.6	38	38	1.337	70%-80%	42-44	422	--	--	--	--
37	FINE SAND	185.1	1.55	37	37	1.37	70%-80%	42-44	407	--	--	--	--
38	FINE SAND	197.9	1.58	39	39	1.403	70%-80%	42-44	435	--	--	--	--
39	FINE SAND	194.8	1.57	38	38	1.436	70%-80%	42-44	428	--	--	--	--
40	FINE SAND	187.1	1.52	37	37	1.469	70%-80%	42-44	411	--	--	--	--
41	FINE SAND	180.4	1.59	36	36	1.503	70%-80%	40-42	396	--	--	--	--
42	FINE SAND	210.7	1.71	42	42	1.536	70%-80%	42-44	463	--	--	--	--
43	FINE SAND	217	1.75	43	43	1.569	70%-80%	42-44	477	--	--	--	--
44	FINE SAND	193.4	1.73	38	38	1.602	70%-80%	40-42	425	--	--	--	--
45	FINE SAND	186.4	1.67	37	37	1.635	70%-80%	40-42	410	--	--	--	--
46	FINE SAND	191.9	1.76	38	38	1.669	70%-80%	40-42	422	--	--	--	--
47	FINE SAND	210.6	1.82	42	42	1.702	70%-80%	40-42	463	--	--	--	--
48	FINE SAND	195.3	1.65	39	39	1.735	70%-80%	40-42	429	--	--	--	--
49	FINE SAND	189.9	1.57	37	37	1.768	60%-70%	40-42	417	--	--	--	--
50	FINE SAND	190.5	1.61	38	38	1.802	60%-70%	40-42	419	--	--	--	--
[illegible]	FINE SAND	189.4	1.55	37	37	1.835	60%-70%	40-42	416	--	--	--	--
52	FINE SAND	182.8	1.43	36	36	1.868	60%-70%	40-42	402	--	--	--	--
53	FINE SAND	190	1.3	38	38	1.901	60%-70%	40-42	418	--	--	--	--
54	FINE SAND	179.6	1.17	35	35	1.934	60%-70%	40-42	395	--	--	--	--
55	FINE SAND	164.8	.93	32	32	1.968	60%-70%	40-42	362	--	--	--	--
56	FINE SAND	164.9	.94	32	32	2.001	50%-60%	40-42	362	--	--	--	--
57	FINE SAND	153.1	.91	30	30	2.034	50%-60%	38-40	336	--	--	--	--
58	FINE SAND	135.4	.97	27	27	2.067	40%-50%	38-40	297	--	--	--	--
59	FINE SAND	131.3	.95	26	26	2.1	40%-50%	38-40	288	--	--	--	--
60	FINE SAND	119.4	.74	23	23	2.134	40%-50%	38-40	262	--	--	--	--
61	FINE SAND	103.5	.57	20	20	2.167	<40%	36-38	227	--	--	--	--
62	FINE SAND	104.4	.57	20	20	2.2	<40%	36-38	229	--	--	--	--
63	FINE SAND	106.4	.63	21	21	2.233	<40%	36-38	234	--	--	--	--
64	FINE SAND	121	.7	24	24	2.266	40%-50%	36-38	266	--	--	--	--
65	FINE SAND	113.3	.71	22	22	2.3	40%-50%	36-38	249	--	--	--	--
66	FINE SAND	103.8	.59	20	20	2.333	<40%	36-38	228	--	--	--	--
67	FINE SAND	99.4	.55	19	19	2.366	<40%	36-38	218	--	--	--	--
68	FINE SAND	105.5	.61	21	21	2.399	<40%	36-38	232	--	--	--	--
69	FINE SAND	104.5	.61	20	20	2.432	<40%	36-38	229	--	--	--	--
70	FINE SAND	114.3	.67	22	22	2.466	40%-50%	36-38	251	--	--	--	--
71	FINE SAND	114.9	.67	22	22	2.499	40%-50%	36-38	252	--	--	--	--
72	FINE SAND	100.5	.73	20	20	2.532	<40%	36-38	221	--	--	--	--
73	SILTY FINE SAND	89.2	.68	22	22	2.563	<40%	34-36	196	--	--	--	--
74	FINE SAND	97.6	.66	19	19	2.596	<40%	36-38	214	--	--	--	--
75	FINE SAND	120.6	.76	24	24	2.629	40%-50%	36-38	265	--	--	--	--

PC-4 CONTINUED SE5-27-315G

DEPTH FEET	SOIL BEHAVIOR TYPE	PT (KG/CM2)	LF (KG/CM2)	N VALUES	N'	VERTICAL STRESS	RELATIVE DENSITY	FRICTION ANGLE	YOUNGS MODULUS	UNDRAINED SHEAR ST	SENSITIVITY	COMP.	OCR
76	FINE SAND	137.3	.75	27	27	2.663	40%-50%	36-38	302	--	--	--	--
77	SILTY TO CLAYEY F.S.	50.6	.53	16	16	2.693	<40%	30-32	111	--	--	--	--
78	SILTY TO CLAYEY F.S.	25.8	.18	8	8	2.724	<40%	<30	56	--	--	--	--
79	SILTY TO CLAYEY F.S.	26.5	.26	8	8	2.755	<40%	<30	58	--	--	--	--
80	SILTY TO CLAYEY F.S.	26.6	.26	8	8	2.786	<40%	<30	58	--	--	--	--
81	CLAYEY FINE SAND	20.5	.2	8	8	2.816	<40%	<30	45	--	--	--	--
82	SILTY TO CLAYEY F.S.	24.4	.15	8	8	2.847	<40%	<30	53	--	--	--	--
83	SILTY FINE SAND	41.9	.2	10	10	2.878	<40%	30-32	92	--	--	--	--

\# N'=POINT STRESS*(.2+.04*FRICTION RATIO)
* NORMALLY CONSOLIDATED SANDS
** FOR OVERCONSOLIDATED SANDS,SLIGHTLY REDUCE ABOVE FRICTION ANGLES
*** FOR OVERCONSOLIDATED SANDS, YOUNG'S MODULUS MAY BE AS MUCH AS 3 TO 6 TIMES HIGHER
**** NK OF 16 USED. FOR OVERCONSOLIDATED CLAYS, AN NK OF 17 IS SUGGESTED

THE ABOVE DATA WAS COMPUTED FOLLOWING 'BASIC' GUIDELINES BY P. K. ROBERTSON AND R. G. CAMPANELLA IN THE HANDBOOK 'GUIDELINES FOR USE AND INTERPERTATION OF THE ELECTRONIC CONE PENETRATION TEST'

ADDITIONAL LOCAL CORRELATIONS DEVELOPED BY IN-SITU TECHNOLOGY HAVE ALSO BEEN USED IN COMPUTING THE ABOVE DATA. IT IS THE POLICY OF IN-SITU TECHNOLOGY TO CONTINUALLY UPGRADE AND MODIFY C.P.T CORRELATIONS AS PUBLISHED RESEARCH AND LOCAL EXPERIENCE GROWS.

IN-SITU TECHNOLOGY SOIL BEHAVIOR TABLE
FOR SOUTHEASTERN UNITED STATES SOILS

JOB NAME SE5-27-315G
NAVAL TRAINING CENTER
ORLANDO FLORIDA
FILE NAME..... PC-5

DEPTH FEET	SOIL BEHAVIOR TYPE	PT (KG/CM2)	LF (KG/CM2)	N VALUES #	N'	VERTICAL EFFECTIVE STRESS (KG/CM2)	RELATIVE DENSITY (%) *	FRICTION ANGLE (DEGREES) **	YOUNGS MODULUS (KG/CM2) ***	UNDRAINED SHEAR STRENGTH (KG/CM2) ****	SENSITIVITY	COMP.	OCR
1	SILTY TO CLAYEY F.S.	55.3	.59	18	18	.048	70%-80%	>48	121	--	--	--	--
2	FINE SAND	163.7	1.39	32	32	.102	>90%	>48	360	--	--	--	--
3	FINE SAND	171	1.01	34	34	.156	>90%	>48	376	--	--	--	--
4	FINE SAND	138.1	.61	27	27	.209	>90%	>48	303	--	--	--	--
5	FINE SAND	130.1	.55	26	26	.263	>90%	46-48	286	--	--	--	--
6	FINE SAND	112.7	.58	22	22	.317	80%-90%	46-48	247	--	--	--	--
7	FINE SAND	105.3	.68	21	21	.371	70%-80%	44-46	231	--	--	--	--
8	FINE SAND	106.3	.86	21	21	.424	70%-80%	44-46	233	--	--	--	--
9	FINE SAND	163.5	1.04	32	32	.478	>90%	46-48	359	--	--	--	--
10	DENSE OR CEMENTED S.	240	1.13	40	40	.515	>90%	46-48	528	--	--	--	--
11	DENSE OR CEMENTED S.	242.6	.94	40	40	.551	>90%	46-48	533	--	--	--	--
12	DENSE OR CEMENTED S.	238.3	1.13	39	39	.588	>90%	46-48	524	--	--	--	--
13	DENSE OR CEMENTED S.	340.5	1.57	56	56	.625	>90%	>48	749	--	--	--	--
14	DENSE OR CEMENTED S.	272.6	1	45	45	.661	>90%	46-48	599	--	--	--	--
15	FINE SAND	180.9	.78	36	36	.694	80%-90%	44-46	397	--	--	--	--
16	FINE SAND	203	1.18	40	40	.728	>90%	44-46	446	--	--	--	--
17	FINE SAND	230.5	2.12	46	46	.761	>90%	44-46	507	--	--	--	--
18	FINE SAND	291.7	2.26	58	58	.794	>90%	46-48	641	--	--	--	--
19	FINE SAND	299.9	2.63	59	59	.827	>90%	46-48	659	--	--	--	--
20	FINE SAND	257	2.68	51	51	.86	>90%	44-46	565	--	--	--	--
21	FINE SAND	153.9	1.73	30	30	.894	70%-80%	42-44	338	--	--	--	--
22	DENSE OR CEMENTED S.	527.9	3.07	87	87	.93	>90%	>48	1161	--	--	--	--
23	DENSE OR CEMENTED S.	560	2	93	93	.967	>90%	>48	1232	--	--	--	--
24	DENSE OR CEMENTED S.	413.5	.3	68	68	1.004	>90%	46-48	909	--	--	--	--
25	DENSE OR CEMENTED S.	521.3	5.31	86	86	1.04	>90%	46-48	1146	--	--	--	--
26	DENSE OR CEMENTED S.	476.5	1.93	79	79	1.077	>90%	46-48	1048	--	--	--	--
27	DENSE OR CEMENTED S.	475.2	2.57	79	79	1.113	>90%	46-48	1045	--	--	--	--
28	DENSE OR CEMENTED S.	420.2	.13	70	70	1.15	>90%	46-48	924	--	--	--	--
29	DENSE OR CEMENTED S.	299.2	.42	49	49	1.187	>90%	44-46	658	--	--	--	--
30	DENSE OR CEMENTED S.	319.6	.57	53	53	1.223	>90%	44-46	703	--	--	--	--

PC-5 CONTINUED SE5-27-315G

DEPTH FEET	SOIL BEHAVIOR TYPE	PT (KG/CM2)	LF (KG/CM2)	N VALUES	N'	VERTICAL STRESS	RELATIVE DENSITY	FRICTION ANGLE	YOUNGS MODULUS	UNDRAINED SHEAR ST	SENSITIVITY	COMP.	OCR
31	DENSE OR CEMENTED S.	344.8	.61	57	57	1.26	>90%	44-46	758	--	--	--	--
32	DENSE OR CEMENTED S.	333.1	.52	55	55	1.297	>90%	44-46	732	--	--	--	--
33	DENSE OR CEMENTED S.	307.7	.27	51	51	1.333	>90%	44-46	676	--	--	--	--
34	DENSE OR CEMENTED S.	259	.23	43	43	1.37	80%-90%	42-44	569	--	--	--	--
35	DENSE OR CEMENTED S.	261.2	.2	43	43	1.406	80%-90%	42-44	574	--	--	--	--
36	DENSE OR CEMENTED S.	266.4	.11	44	44	1.443	80%-90%	42-44	586	--	--	--	--
37	DENSE OR CEMENTED S.	262.9	.13	43	43	1.48	80%-90%	42-44	578	--	--	--	--
38	DENSE OR CEMENTED S.	278.9	.22	46	46	1.516	>90%	42-44	613	--	--	--	--
39	DENSE OR CEMENTED S.	319	.2	53	53	1.553	>90%	44-46	701	--	--	--	--
40	DENSE OR CEMENTED S.	318.5	.16	53	53	1.59	>90%	44-46	700	--	--	--	--
41	DENSE OR CEMENTED S.	286.6	.41	47	47	1.626	80%-90%	42-44	630	--	--	--	--
42	DENSE OR CEMENTED S.	299.8	.43	49	49	1.663	>90%	42-44	659	--	--	--	--
43	DENSE OR CEMENTED S.	322.8	.49	53	53	1.699	>90%	42-44	710	--	--	--	--
44	DENSE OR CEMENTED S.	354.3	.66	59	59	1.736	>90%	44-46	779	--	--	--	--
45	DENSE OR CEMENTED S.	371.5	.79	61	61	1.773	>90%	44-46	817	--	--	--	--
46	DENSE OR CEMENTED S.	363.5	.88	60	60	1.809	>90%	44-46	799	--	--	--	--
47	DENSE OR CEMENTED S.	313	.96	52	52	1.846	>90%	42-44	688	--	--	--	--
48	DENSE OR CEMENTED S.	306.4	.87	51	51	1.883	80%-90%	42-44	674	--	--	--	--
49	DENSE OR CEMENTED S.	261	.85	43	43	1.919	80%-90%	42-44	574	--	--	--	--
50	FINE SAND	227.7	1.22	45	45	1.952	70%-80%	40-42	500	--	--	--	--
51	DENSE OR CEMENTED S.	276.6	1.52	46	46	1.989	80%-90%	42-44	608	--	--	--	-
52	DENSE OR CEMENTED S.	271.4	1.51	45	45	2.026	80%-90%	42-44	597	--	--	--	--
53	FINE SAND	243.6	1.45	48	48	2.059	70%-80%	40-42	535	--	--	--	--
54	FINE SAND	246.1	1.65	49	49	2.092	70%-80%	40-42	541	--	--	--	--
55	DENSE OR CEMENTED S.	252.4	1.3	42	42	2.129	70%-80%	40-42	555	--	--	--	--
56	DENSE OR CEMENTED S.	278.4	1.19	46	46	2.165	80%-90%	42-44	612	--	--	--	--
57	DENSE OR CEMENTED S.	325.1	1.34	54	54	2.202	80%-90%	42-44	715	--	--	--	--
58	DENSE OR CEMENTED S.	350.9	1.52	58	58	2.239	>90%	42-44	771	--	--	--	--
59	DENSE OR CEMENTED S.	316	1.65	52	52	2.275	80%-90%	42-44	695	--	--	--	--
60	DENSE OR CEMENTED S.	333.9	1.62	55	55	2.312	80%-90%	42-44	734	--	--	--	--
61	DENSE OR CEMENTED S.	418.6	1.91	69	69	2.348	>90%	42-44	920	--	--	--	--
62	DENSE OR CEMENTED S.	477	2.36	79	79	2.385	>90%	42-44	1049	--	--	--	--
63	DENSE OR CEMENTED S.	441.8	2.5	73	73	2.422	>90%	42-44	971	--	--	--	--
64	DENSE OR CEMENTED S.	365.7	2.17	60	60	2.458	>90%	42-44	804	--	--	--	--
65	DENSE OR CEMENTED S.	314.5	1.95	52	52	2.495	80%-90%	42-44	691	--	--	--	--
66	DENSE OR CEMENTED S.	331.6	2.01	55	55	2.532	80%-90%	42-44	729	--	--	--	--
67	DENSE OR CEMENTED S.	338.3	1.95	56	56	2.568	80%-90%	42-44	744	--	--	--	--
68	DENSE OR CEMENTED S.	326	2.04	54	54	2.605	80%-90%	40-42	717	--	--	--	--
69	DENSE OR CEMENTED S.	334.3	.97	55	55	2.642	80%-90%	42-44	735	--	--	--	--
70	DENSE OR CEMENTED S.	385.9	1.48	64	64	2.678	>90%	42-44	848	--	--	--	--
71	DENSE OR CEMENTED S.	406.6	1.67	67	67	2.715	>90%	42-44	894	--	--	--	--
72	DENSE OR CEMENTED S.	347.7	2.13	57	57	2.751	80%-90%	42-44	764	--	--	--	--
73	FINE SAND	266.4	1.82	53	53	2.785	70%-80%	40-42	586	--	--	--	--
74	DENSE OR CEMENTED S.	283.9	1.24	47	47	2.821	70%-80%	40-42	624	--	--	--	--
75	DENSE OR CEMENTED S.	313.5	1.26	52	52	2.858	80%-90%	40-42	689	--	--	--	--

rC-5 CONTINUED SE5-27-315G

DEPTH FEET	SOIL BEHAVIOR TYPE	PT (KG/CM2)	LF (KG/CM2)	N VALUES	N'	VERTICAL STRESS	RELATIVE DENSITY	FRICTION ANGLE	YOUNGS MODULUS	UNDRAINED SHEAR ST	SENSITIVITY	COMP.	OCR
76	DENSE OR CEMENTED S.	364.8	1.52	60	60	2.894	80%-90%	42-44	802	--	--	--	--
77	DENSE OR CEMENTED S.	526.1	2.2	87	87	2.931	>90%	42-44	1157	--	--	--	--
78	DENSE OR CEMENTED S.	541.7	1.89	90	90	2.968	>90%	42-44	1191	--	--	--	--
79	DENSE OR CEMENTED S.	577.3	1.75	96	96	3.004	>90%	42-44	1270	--	--	--	--
80	DENSE OR CEMENTED S.	584	1.92	97	97	3.041	>90%	42-44	1284	--	--	--	--
81	DENSE OR CEMENTED S.	553.9	1.98	92	92	3.078	>90%	42-44	1218	--	--	--	--
82	DENSE OR CEMENTED S.	488.9	1.56	81	81	3.114	>90%	42-44	1075	--	--	--	--
83	DENSE OR CEMENTED S.	484.6	.45	80	80	3.151	>90%	42-44	1066	--	--	--	--
84	DENSE OR CEMENTED S.	577.3	.94	96	96	3.187	>90%	42-44	1270	--	--	--	--
85	DENSE OR CEMENTED S.	628	2.26	104									
					104	3.224	>90%	42-44	1381	--	--	--	--
86	DENSE OR CEMENTED S.	546.1	.49	91	91	3.261	>90%	42-44	1201	--	--	--	--
87	DENSE OR CEMENTED S.	548.3	.3	91	91	3.297	>90%	42-44	1206	--	--	--	--

\# N'=POINT STRESS*(.2+.04*FRICTION RATIO)
* NORMALLY CONSOLIDATED SANDS
** FOR OVERCONSOLIDATED SANDS,SLIGHTLY REDUCE ABOVE FRICTION ANGLES
*** FOR OVERCONSOLIDATED SANDS, YOUNG'S MODULUS MAY BE AS MUCH AS 3 TO 6 TIMES HIGHER
**** NK OF 16 USED. FOR OVERCONSOLIDATED CLAYS, AN NK OF 17 IS SUGGESTED

THE ABOVE DATA WAS COMPUTED FOLLOWING 'BASIC' GUIDELINES BY P. K. ROBERTSON AND R. G. CAMPANELLA IN THE HANDBOOK 'GUIDELINES FOR USE AND INTERPERTATION OF THE ELECTRONIC CONE PENETRATION TEST'

ADDITIONAL LOCAL CORRELATIONS DEVELOPED BY IN-SITU TECHNOLOGY HAVE ALSO BEEN USED IN COMPUTING THE ABOVE DATA. IT IS THE POLICY OF IN-SITU TECHNOLOGY TO CONTINUALLY UPGRADE AND MODIFY C.P.T CORRELATIONS AS PUBLISHED RESEARCH AND LOCAL EXPERIENCE GROWS.

IN-SITU TECHNOLOGY SOIL BEHAVIOR TABLE
FOR SOUTHEASTERN UNITED STATES SOILS

JOB NAME SE5-27-315G
NAVAL TRAINING CENTER
ORLANDO FLORIDA
FILE NAME..... PC-6

DEPTH FEET	SOIL BEHAVIOR TYPE	PT (KG/CM2)	LF (KG/CM2)	N VALUES #	N' VALUES #	VERTICAL EFFECTIVE STRESS (KG/CM2)	RELATIVE DENSITY (%) *	FRICTION ANGLE (DEGREES) **	YOUNGS MODULUS (KG/CM2) ***	UNDRAINED SHEAR STRENGTH (KG/CM2) ****	SENSITIVITY	COMP.	OCR
1	SILTY FINE SAND	67.3	.06	16	16	.048	70%-80%	>48	148	--	--	--	--
2	FINE SAND	158.6	.11	31	31	.102	>90%	>48	348	--	--	--	--
3	DENSE OR CEMENTED S.	189	.1	31	31	.161	>90%	>48	415	--	--	--	--
4	FINE SAND	138.3	.14	27	27	.214	>90%	>48	304	--	--	--	--
5	FINE SAND	112.9	.17	22	22	.268	80%-90%	46-48	248	--	--	--	--
6	FINE SAND	113.8	.26	22	22	.322	80%-90%	46-48	250	--	--	--	--
7	DENSE OR CEMENTED S.	212.3	.59	35	35	.38	>90%	>48	467	--	--	--	--
8	DENSE OR CEMENTED S.	394.6	.88	65	65	.439	>90%	>48	868	--	--	--	--
9	DENSE OR CEMENTED S.	464.3	1.23	77	77	.498	>90%	>48	1021	--	--	--	--
10	DENSE OR CEMENTED S.	475.5	1.79	79	79	.534	>90%	>48	1046	--	--	--	--
11	DENSE OR CEMENTED S.	435.1	2.83	72	72	.571	>90%	>48	957	--	--	--	
12	FINE SAND	301.6	2.64	60	60	.604	>90%	46-48	663	--	--	--	--
13	FINE SAND	260.1	1.96	52	52	.637	>90%	46-48	572	--	--	--	--
14	DENSE OR CEMENTED S.	310.5	2.01	51	51	.674	>90%	46-48	683	--	--	--	--
15	DENSE OR CEMENTED S.	301.9	2.04	50	50	.711	>90%	46-48	664	--	--	--	--
16	DENSE OR CEMENTED S.	309.2	2.06	51	51	.747	>90%	46-48	680	--	--	--	--
17	FINE SAND	171	1.3	34	34	.78	80%-90%	44-46	376	--	--	--	--
18	FINE SAND	330.3	3.2	66	66	.814	>90%	46-48	726	--	--	--	--
19	DENSE OR CEMENTED S.	398.7	3.25	66	66	.85	>90%	46-48	877	--	--	--	--
20	DENSE OR CEMENTED S.	484.9	3.3	80	80	.887	>90%	>48	1066	--	--	--	--
21	FINE SAND	286.1	2.51	57	57	.92	>90%	44-46	629	--	--	--	--
22	DENSE OR CEMENTED S.	284	.43	47	47	.957	>90%	44-46	624	--	--	--	--
23	DENSE OR CEMENTED S.	219.9	.09	36	36	.993	80%-90%	44-46	483	--	--	--	--
24	FINE SAND	154.8	.11	30	30	1.027	70%-80%	42-44	340	--	--	--	--
25	DENSE OR CEMENTED S.	213.7	0	35	35	1.063	80%-90%	44-46	470	--	--	--	--
26	DENSE OR CEMENTED S.	389.5	.85	64	64	1.1	>90%	46-48	856	--	--	--	--
27	DENSE OR CEMENTED S.	459.3	2.61	76	76	1.136	>90%	46-48	1010	--	--	--	--
28	DENSE OR CEMENTED S.	402	1.29	67	67	1.173	>90%	46-48	884	--	--	--	--
29	DENSE OR CEMENTED S.	248.5	.91	41	41	1.21	>90%	44-46	546	--	--	--	--
30	FINE SAND	133.3	.77	26	26	1.243	60%-70%	40-42	293	--	--	--	--

rC-6 CONTINUED SE5-27-315G

DEPTH FEET	SOIL BEHAVIOR TYPE	PT (KG/CM2)	LF (KG/CM2)	N VALUES	N'	VERTICAL STRESS	RELATIVE DENSITY	FRICTION ANGLE	YOUNGS MODULUS	UNDRAINED SHEAR ST	SENSITIVITY	COMP.	OCR
31	FINE SAND	155.5	.99	31	31	1.276	70%-80%	40-42	342	--	--	--	--
32	FINE SAND	209.3	1.25	41	41	1.309	80%-90%	42-44	460	--	--	--	--
33	DENSE OR CEMENTED S.	277.3	1.49	46	46	1.346	>90%	44-46	610	--	--	--	--
34	DENSE OR CEMENTED S.	314.3	1.82	52	52	1.383	>90%	44-46	691	--	--	--	--
35	DENSE OR CEMENTED S.	304.2	1.94	50	50	1.419	>90%	44-46	669	--	--	--	--
36	DENSE OR CEMENTED S.	323.7	2.08	53	53	1.456	>90%	44-46	712	--	--	--	--
37	DENSE OR CEMENTED S.	344.2	2.22	57	57	1.492	>90%	44-46	757	--	--	--	--
38	DENSE OR CEMENTED S.	365.8	2.13	60	60	1.529	>90%	44-46	804	--	--	--	--
39	DENSE OR CEMENTED S.	371.8	1.97	61	61	1.566	>90%	44-46	817	--	--	--	--
40	DENSE OR CEMENTED S.	380.4	1.24	63	63	1.602	>90%	44-46	836	--	--	--	--
41	DENSE OR CEMENTED S.	375.1	1.45	62	62	1.639	>90%	44-46	825	--	--	--	--
42	DENSE OR CEMENTED S.	360.6	.3	60	60	1.676	>90%	44-46	793	--	--	--	--
43	DENSE OR CEMENTED S.	13701	.32	2283									
					2283	1.712	>90%	>48	30142	--	--	--	--
44	DENSE OR CEMENTED S.	284.6	.52	47	47	1.749	80%-90%	42-44	626	--	--	--	--
45	DENSE OR CEMENTED S.	286.1	.25	47	47	1.785	80%-90%	42-44	629	--	--	--	--
46	DENSE OR CEMENTED S.	261.2	.14	43	43	1.822	80%-90%	42-44	574	--	--	--	--
47	DENSE OR CEMENTED S.	210.2	.09	35	35	1.859	70%-80%	40-42	462	--	--	--	--
48	FINE SAND	119.3	.12	23	23	1.892	40%-50%	38-40	262	--	--	--	--
[illegible]	DENSE OR CEMENTED S.	206.4	.13	34	34	1.929	60%-70%	40-42	454	--	--	--	--
[illegible]	DENSE OR CEMENTED S.	209.8	.16	34	34	1.965	60%-70%	40-42	461	--	--	--	--
51	DENSE OR CEMENTED S.	180.6	.11	30	30	2.002	60%-70%	40-42	397	--	--	--	--
52	FINE SAND	107.3	.08	21	21	2.035	40%-50%	36-38	236	--	--	--	--
53	DENSE OR CEMENTED S.	169.9	.14	28	28	2.072	60%-70%	40-42	373	--	--	--	--
54	DENSE OR CEMENTED S.	187.2	.12	31	31	2.108	60%-70%	40-42	411	--	--	--	--
55	FINE SAND	145	.12	29	29	2.141	40%-50%	38-40	319	--	--	--	--
56	FINE SAND	155.8	.11	31	31	2.175	50%-60%	38-40	342	--	--	--	--
57	FINE SAND	110.1	.12	22	22	2.208	40%-50%	36-38	242	--	--	--	--
58	FINE SAND	135.1	.1	27	27	2.241	40%-50%	38-40	297	--	--	--	--
59	FINE SAND	124	.1	24	24	2.274	40%-50%	38-40	272	--	--	--	--
60	FINE SAND	142.7	.13	28	28	2.307	40%-50%	38-40	313	--	--	--	--
61	DENSE OR CEMENTED S.	210.3	.16	35	35	2.344	60%-70%	40-42	462	--	--	--	--
62	DENSE OR CEMENTED S.	212.6	.16	35	35	2.381	60%-70%	40-42	467	--	--	--	--
63	DENSE OR CEMENTED S.	196.3	.16	32	32	2.417	60%-70%	40-42	431	--	--	--	--
64	DENSE OR CEMENTED S.	198	.15	33	33	2.454	60%-70%	40-42	435	--	--	--	--
65	DENSE OR CEMENTED S.	208.2	.15	34	34	2.491	60%-70%	40-42	458	--	--	--	--
66	DENSE OR CEMENTED S.	208.7	.16	34	34	2.527	60%-70%	40-42	459	--	--	--	--
67	DENSE OR CEMENTED S.	205	.15	34	34	2.564	60%-70%	38-40	451	--	--	--	--
68	DENSE OR CEMENTED S.	203.8	.16	33	33	2.6	60%-70%	38-40	448	--	--	--	--
69	DENSE OR CEMENTED S.	211.8	.16	35	35	2.637	60%-70%	40-42	465	--	--	--	--
70	DENSE OR CEMENTED S.	227.6	.15	37	37	2.674	60%-70%	40-42	500	--	--	--	--
71	DENSE OR CEMENTED S.	219.2	.16	36	36	2.71	60%-70%	40-42	482	--	--	--	--
72	DENSE OR CEMENTED S.	179.4	.14	29	29	2.747	50%-60%	38-40	394	--	--	--	--
73	DENSE OR CEMENTED S.	221.6	.17	36	36	2.784	60%-70%	38-40	487	--	--	--	--
74	DENSE OR CEMENTED S.	227.9	.2	37	37	2.82	60%-70%	40-42	501	--	--	--	--

PC-6 CONTINUED SE5-27-315G

DEPTH FEET	SOIL BEHAVIOR TYPE	PT (KG/CM2)	LF (KG/CM2)	N VALUES	N'	VERTICAL STRESS	RELATIVE DENSITY	FRICTION ANGLE	YOUNGS MODULUS	UNDRAINED SHEAR ST	SENSITIVITY	COMP.	OCR
75	DENSE OR CEMENTED S.	206.4	.17	34	34	2.857	60%-70%	38-40	454	--	--	--	--
76	DENSE OR CEMENTED S.	170.9	.14	28	28	2.894	50%-60%	38-40	375	--	--	--	--
77	FINE SAND	139.1	.12	27	27	2.927	40%-50%	36-38	306	--	--	--	--
78	FINE SAND	110.8	.1	22	22	2.96	<40%	36-38	243	--	--	--	--
79	FINE SAND	79.9	.09	15	15	2.993	<40%	32-34	175	--	--	--	--
80	FINE SAND	88.5	.11	17	17	3.026	<40%	34-36	194	--	--	--	--
81	FINE SAND	119.2	.11	23	23	3.06	<40%	36-38	262	--	--	--	--
82	FINE SAND	121.8	.12	24	24	3.093	<40%	36-38	267	--	--	--	--
83	FINE SAND	143.3	.12	28	28	3.126	40%-50%	36-38	315	--	--	--	--
84	FINE SAND	148.3	.13	29	29	3.159	40%-50%	36-38	326	--	--	--	--
85	DENSE OR CEMENTED S.	181	.18	30	30	3.196	50%-60%	38-40	398	--	--	--	--
86	DENSE OR CEMENTED S.	205.8	.23	34	34	3.232	50%-60%	38-40	452	--	--	--	--
87	DENSE OR CEMENTED S.	241.9	.23	40	40	3.269	60%-70%	38-40	532	--	--	--	--
88	DENSE OR CEMENTED S.	257.7	.16	42	42	3.306	60%-70%	38-40	566	--	--	--	--

\# N'=POINT STRESS*(.2+.04*FRICTION RATIO)
* NORMALLY CONSOLIDATED SANDS
** FOR OVERCONSOLIDATED SANDS,SLIGHTLY REDUCE ABOVE FRICTION ANGLES
*** FOR OVERCONSOLIDATED SANDS, YOUNG'S MODULUS MAY BE AS MUCH AS 3 TO 6 TIMES HIGHER
**** NK OF 16 USED. FOR OVERCONSOLIDATED CLAYS, AN NK OF 17 IS SUGGESTED

THE ABOVE DATA WAS COMPUTED FOLLOWING 'BASIC' GUIDELINES BY P. K. ROBERTSON AND R. G. CAMPANELLA IN THE HANDBOOK 'GUIDELINES FOR USE AND INTERPERTATION OF THE ELECTRONIC CONE PENETRATION TEST'

ADDITIONAL LOCAL CORRELATIONS DEVELOPED BY IN-SITU TECHNOLOGY HAVE ALSO BEEN USED IN COMPUTING THE ABOVE DATA. IT IS THE POLICY OF IN-SITU TECHNOLOGY TO CONTINUALLY UPGRADE AND MODIFY C.P.T CORRELATIONS AS PUBLISHED RESEARCH AND LOCAL EXPERIENCE GROWS.

IN-SITU TECHNOLOGY SOIL BEHAVIOR TABLE
FOR SOUTHEASTERN UNITED STATES SOILS

JOB NAME SE5-27-315G
NAVAL TRAINING CENTER
ORLANDO FLORIDA
FILE NAME..... PC-6A

DEPTH FEET	SOIL BEHAVIOR TYPE	PT (KG/CM2)	LF (KG/CM2)	N VALUES #	N'	VERTICAL EFFECTIVE STRESS (KG/CM2)	RELATIVE DENSITY (%) *	FRICTION ANGLE (DEGREES) **	YOUNGS MODULUS (KG/CM2) ***	UNDRAINED SHEAR STRENGTH (KG/CM2) ****	SENSITIVITY	COMP.	OCR
1	SILTY TO CLAYEY F.S.	39.9	.34	13	13	.048	60%-70%	>48	87	--	--	--	--
2	FINE SAND	114.7	.43	22	22	.102	>90%	>48	252	--	--	--	--
3	FINE SAND	180.7	.65	36	36	.156	>90%	>48	397	--	--	--	--
4	FINE SAND	137	.44	27	27	.209	>90%	>48	301	--	--	--	--
5	FINE SAND	107.5	.45	21	21	.263	80%-90%	46-48	236	--	--	--	--
6	FINE SAND	101.9	.5	20	20	.317	70%-80%	44-46	224	--	--	--	--
7	FINE SAND	137.2	.86	27	27	.371	80%-90%	46-48	301	--	--	--	--
8	DENSE OR CEMENTED S.	268.6	1.33	44	44	.429	>90%	>48	590	--	--	--	--
9	DENSE OR CEMENTED S.	381.6	1.81	63	63	.488	>90%	>48	839	--	--	--	--
10	DENSE OR CEMENTED S.	408.7	2	68	68	.524	>90%	>48	899	--	--	--	--
11	DENSE OR CEMENTED S.	487.3	3.35	81	81	.561	>90%	>48	1072	--	--	--	--
12	DENSE OR CEMENTED S.	515.3	4.55	85	85	.598	>90%	>48	1133	--	--	--	--
13	DENSE OR CEMENTED S.	296.1	1.75	49	49	.634	>90%	46-48	651	--	--	--	--
14	FINE SAND	260.2	2.47	52	52	.668	>90%	46-48	572	--	--	--	--
15	FINE SAND	337.4	3.78	67	67	.701	>90%	46-48	742	--	--	--	--
16	DENSE OR CEMENTED S.	271.8	1.54	45	45	.737	>90%	46-48	597	--	--	--	--
17	DENSE OR CEMENTED S.	225.8	.1	37	37	.774	>90%	44-46	496	--	--	--	--
18	DENSE OR CEMENTED S.	191.2	.41	31	31	.811	80%-90%	44-46	420	--	--	--	--
19	DENSE OR CEMENTED S.	343.5	1.49	57	57	.847	>90%	46-48	755	--	--	--	--
20	FINE SAND	639.9	7.88	127									
					127	.88	>90%	>48	1407	--	--	--	--
21	FINE SAND	299.6	3.74	59	59	.914	>90%	46-48	659	--	--	--	--
22	FINE SAND	294.3	2.19	58	58	.947	>90%	44-46	647	--	--	--	--
23	DENSE OR CEMENTED S.	192.1	.05	32	32	.984	80%-90%	42-44	422	--	--	--	--
24	FINE SAND	149.2	.04	29	29	1.017	70%-80%	42-44	328	--	--	--	--
25	DENSE OR CEMENTED S.	180.9	.1	30	30	1.053	80%-90%	42-44	397	--	--	--	--
26	DENSE OR CEMENTED S.	210.5	.19	35	35	1.09	80%-90%	42-44	463	--	--	--	--
27	DENSE OR CEMENTED S.	275.9	.55	45	45	1.127	>90%	44-46	606	--	--	--	--
28	DENSE OR CEMENTED S.	459.7	1.85	76	76	1.163	>90%	46-48	1011	--	--	--	--
29	DENSE OR CEMENTED S.	578.4	4.07	96	96	1.2	>90%	46-48	1272	--	--	--	--

PC-6A CONTINUED SE5-27-315G

DEPTH FEET	SOIL BEHAVIOR TYPE	PT (KG/CM2)	LF (KG/CM2)	N VALUES	N'	VERTICAL STRESS	RELATIVE DENSITY	FRICTION ANGLE	YOUNGS MODULUS	UNDRAINED SHEAR ST	SENSITIVITY	COMP.	OCR
30	DENSE OR CEMENTED S.	610.5	2.17	101									
					101	1.237	>90%	46-48	1343	--	--	--	--
31	DENSE OR CEMENTED S.	610.6	3.13	101									
					101	1.273	>90%	46-48	1343	--	--	--	--
32	DENSE OR CEMENTED S.	304.4	1.52	50	50	1.31	>90%	44-46	669	--	--	--	--
33	DENSE OR CEMENTED S.	268	1.42	44	44	1.346	>90%	42-44	589	--	--	--	--
34	DENSE OR CEMENTED S.	416.1	1.89	69	69	1.383	>90%	44-46	915	--	--	--	--
35	DENSE OR CEMENTED S.	574.4	2.19	95	95	1.42	>90%	46-48	1263	--	--	--	--
36	DENSE OR CEMENTED S.	547.1	2.48	91	91	1.456	>90%	46-48	1203	--	--	--	--
37	DENSE OR CEMENTED S.	461.4	2.76	76	76	1.493	>90%	44-46	1015	--	--	--	--
38	DENSE OR CEMENTED S.	544.7	3.63	90	90	1.53	>90%	46-48	1198	--	--	--	--
39	DENSE OR CEMENTED S.	634.1	3.47	105									
					105	1.566	>90%	46-48	1395	--	--	--	--
40	DENSE OR CEMENTED S.	541.6	2.9	90	90	1.603	>90%	46-48	1191	--	--	--	--
41	DENSE OR CEMENTED S.	385	1.56	64	64	1.639	>90%	44-46	847	--	--	--	--
42	DENSE OR CEMENTED S.	328.4	1.52	54	54	1.676	>90%	42-44	722	--	--	--	--
43	DENSE OR CEMENTED S.	345.1	1.53	57	57	1.713	>90%	44-46	759	--	--	--	--
44	DENSE OR CEMENTED S.	326.8	1.36	54	54	1.749	>90%	42-44	718	--	--	--	--
45	DENSE OR CEMENTED S.	286.1	1.31	47	47	1.786	80%-90%	42-44	629	--	--	--	--
46	DENSE OR CEMENTED S.	289.3	1.29	48	48	1.823	80%-90%	42-44	636	--	--	--	--
47	FINE SAND	231.2	1.29	46	46	1.856	70%-80%	40-42	508	--	--	--	-
48	FINE SAND	219.6	1.3	43	43	1.889	70%-80%	40-42	483	--	--	--	--
49	FINE SAND	219.7	1.27	43	43	1.922	70%-80%	40-42	483	--	--	--	--
50	FINE SAND	217.6	1.28	43	43	1.955	70%-80%	40-42	478	--	--	--	--
51	FINE SAND	215.4	1.29	43	43	1.989	70%-80%	40-42	473	--	--	--	--
52	FINE SAND	206	1.05	41	41	2.022	60%-70%	40-42	453	--	--	--	--
53	DENSE OR CEMENTED S.	218	1.03	36	36	2.058	70%-80%	40-42	479	--	--	--	--
54	FINE SAND	233.4	1.6	46	46	2.092	70%-80%	40-42	513	--	--	--	--
55	FINE SAND	171.6	1.48	34	34	2.125	60%-70%	40-42	377	--	--	--	--
56	FINE SAND	122.4	.98	24	24	2.158	40%-50%	38-40	269	--	--	--	--
57	FINE SAND	142.8	.8	28	28	2.191	40%-50%	38-40	314	--	--	--	--
58	FINE SAND	141.2	.63	28	28	2.224	40%-50%	38-40	310	--	--	--	--
59	FINE SAND	135.3	.6	27	27	2.258	40%-50%	38-40	297	--	--	--	--
60	FINE SAND	146.4	.67	29	29	2.291	40%-50%	38-40	322	--	--	--	--
61	FINE SAND	171.3	.73	34	34	2.324	50%-60%	38-40	376	--	--	--	--
62	DENSE OR CEMENTED S.	198.6	.78	33	33	2.361	60%-70%	40-42	436	--	--	--	--
63	DENSE OR CEMENTED S.	227.1	.83	37	37	2.397	60%-70%	40-42	499	--	--	--	--
64	DENSE OR CEMENTED S.	238.4	.82	39	39	2.434	70%-80%	40-42	524	--	--	--	--
65	DENSE OR CEMENTED S.	254.4	.85	42	42	2.471	70%-80%	40-42	559	--	--	--	--
66	DENSE OR CEMENTED S.	271.7	.9	45	45	2.507	70%-80%	40-42	597	--	--	--	--
67	DENSE OR CEMENTED S.	280.5	.8	46	46	2.544	70%-80%	40-42	617	--	--	--	--
68	DENSE OR CEMENTED S.	273.8	.52	45	45	2.58	70%-80%	40-42	602	--	--	--	--
69	DENSE OR CEMENTED S.	275.1	.53	45	45	2.617	70%-80%	40-42	605	--	--	--	--
70	DENSE OR CEMENTED S.	259.9	.63	43	43	2.654	70%-80%	40-42	571	--	--	--	--
71	DENSE OR CEMENTED S.	219.8	.89	36	36	2.69	60%-70%	40-42	483	--	--	--	--

.C-6A CONTINUED SE5-27-315G

DEPTH FEET	SOIL BEHAVIOR TYPE	PT (KG/CM2)	LF (KG/CM2)	N VALUES	N'	VERTICAL STRESS	RELATIVE DENSITY	FRICTION ANGLE	YOUNGS MODULUS	UNDRAINED SHEAR ST	SENSITIVITY	COMP.	OCR
72	DENSE OR CEMENTED S.	260	.97	43	43	2.727	70%-80%	40-42	572	--	--	--	--
73	DENSE OR CEMENTED S.	249.8	.97	41	41	2.764	60%-70%	40-42	549	--	--	--	--
74	DENSE OR CEMENTED S.	234.9	.76	39	39	2.8	60%-70%	40-42	516	--	--	--	--
75	DENSE OR CEMENTED S.	304.7	.89	50	50	2.837	70%-80%	40-42	670	--	--	--	--
76	DENSE OR CEMENTED S.	333.1	1.08	55	55	2.873	80%-90%	40-42	732	--	--	--	--
77	DENSE OR CEMENTED S.	356.5	1.24	59	59	2.91	80%-90%	40-42	784	--	--	--	--
78	DENSE OR CEMENTED S.	372	1.31	62	62	2.947	80%-90%	42-44	818	--	--	--	--
79	DENSE OR CEMENTED S.	396.9	1.39	66	66	2.983	>90%	42-44	873	--	--	--	--
80	DENSE OR CEMENTED S.	371.7	.81	61	61	3.02	80%-90%	40-42	817	--	--	--	--
81	DENSE OR CEMENTED S.	308.9	.75	51	51	3.057	70%-80%	40-42	679	--	--	--	--
82	DENSE OR CEMENTED S.	240.3	.88	40	40	3.093	60%-70%	38-40	528	--	--	--	--
83	FINE SAND	197.9	.9	39	39	3.126	50%-60%	38-40	435	--	--	--	--
84	DENSE OR CEMENTED S.	207.9	.93	34	34	3.163	50%-60%	38-40	457	--	--	--	--
85	FINE SAND	156.3	.76	31	31	3.196	40%-50%	36-38	343	--	--	--	--
86	DENSE OR CEMENTED S.	216.7	.71	36	36	3.233	60%-70%	38-40	476	--	--	--	--
87	DENSE OR CEMENTED S.	235.8	.76	39	39	3.27	60%-70%	38-40	518	--	--	--	--
88	DENSE OR CEMENTED S.	261.5	.87	43	43	3.306	60%-70%	38-40	575	--	--	--	--
89	DENSE OR CEMENTED S.	289.1	1.14	48	48	3.343	70%-80%	40-42	636	--	--	--	--
90	FINE SAND	137.1	1.45	27	27	3.376	40%-50%	36-38	301	--	--	--	--

\# N'=POINT STRESS*(.2+.04*FRICTION RATIO)
* NORMALLY CONSOLIDATED SANDS
** FOR OVERCONSOLIDATED SANDS,SLIGHTLY REDUCE ABOVE FRICTION ANGLES
*** FOR OVERCONSOLIDATED SANDS, YOUNG'S MODULUS MAY BE AS MUCH AS 3 TO 6 TIMES HIGHER
**** NK OF 16 USED. FOR OVERCONSOLIDATED CLAYS, AN NK OF 17 IS SUGGESTED

THE ABOVE DATA WAS COMPUTED FOLLOWING 'BASIC' GUIDELINES BY P. K. ROBERTSON AND R. G. CAMPANELLA IN THE HANDBOOK 'GUIDELINES FOR USE AND INTERPERTATION OF THE ELECTRONIC CONE PENETRATION TEST'

ADDITIONAL LOCAL CORRELATIONS DEVELOPED BY IN-SITU TECHNOLOGY HAVE ALSO BEEN USED IN COMPUTING THE ABOVE DATA. IT IS THE POLICY OF IN-SITU TECHNOLOGY TO CONTINUALLY UPGRADE AND MODIFY C.P.T CORRELATIONS AS PUBLISHED RESEARCH AND LOCAL EXPERIENCE GROWS.

APPENDIX C

BORING LOGS, MONITORING WELL INSTALLATION DIAGRAMS, AND GROUNDWATER SAMPLE FIELD DATA SHEETS STUDY AREA 44

Project: NTC Orlando	**Site:** SA 44	**Boring ID:** OLD-44-01/02/03
Client: SOUTHDIVNAVFACENGCOM		**Job No.:** 08519.10
Contractor: Groundwater Protection, Inc.	**Date started:** 11-15-95	**Compltd:** 11-16-95
ABB Rep.: WDO	**Type of OVM:** Porta FID	**Total Depth:** 78 ft.ft.	**Protection level:** D
Material: PVC	**Method:** HSA	**Casing Size:** 6-1/4 in. ID	**Dpth to ∇** 11 ft.
Screen: 5 ft.	**Riser:** 72 ft.	**Diam.:** 2 in. ID

Depth Ft.	Recovery	Sample No.	Sample Depth	CLP/Screening	Soil/Rock Description and comments	Lithologic symbol	Soil class.	Blows/6-in.	Headspace (ppm)
	NA				Fine SAND, gray brown, some silt, gravel-sized concrete fragments		SM	Posthole to	0
	NA						SP	4 feet	0
5	50				SAND, fine, yellow, well-sorted, loose, dry, some black mottling, concrete pieces at 5 ft.			5,5,7,7	0
	50							7,6,7,8	0
	50							7,6,5,6	0
10	80				SAND, gray, mostly fine, some medium, grades to brown, moist, loose, well-sorted, some black grains		SP	8,12,8,9	0 ∇
	50							6,6,5,10	0
15	90				SAND, dark brown, fine, soft, some medium grains, well-sorted, subrounded		SP	7,8,8,11	0
	80							8,11,12,20	0
	50							7,8,9,8	0
20	60							4,6,2,8	0
	30						SP	5,5,5,5	0
25	80				SAND, tan, fine to medium, well-sorted, well-rounded, some fine sand, phosphate clasts			4,8,10,15	0
	60							5,2,2,3	0
	50							4,4,3,9	0
30	90							10,10,7,47	0
	80				SILT, sandy, clayey, light gray, non-plastic		ML	18,11,10,14	0
35	80				Silty SAND, light brown, hard at upper contact, silt decreases with depth, almost all sand after 38 ft., some frosted coarse sandgrains, some shell material at 45 ft., sand finer 46 to 48 ft.		SP	28,25,20,25	0
	30							10,10,8,9	0
	50							9,22,23,28	0
40	90							24,20,32,38	0
	50							10,14,15,27	0
45	50							17,14,24,21	NR
	70							14,18,22,32	0
	25							50=5/10,NRNR	0
50	25							14,15,28,37	0
	90				SAND, light brown, fine to medium, subrounded, clean, some phosphate clasts; some coarse, well-rounded, opalescent grains		SW	17,16,17,28	0
55	55							8,13,12,19	0
	90							7,9,20,30	0
	80				Silty SAND, light gray, mostly fine, trace medium grains, well- rounded, some brown, fine sand stringers at 62 ft., coarsens to medium sand after 65 ft., some rounded, platy, phosphate coarse sand grains		SW	24,27,28,29	0
60	90							12,20,20,31	0
	50							11,15,18,35	0
65	50							6,28,28,29	0
	50							18,20,33,50	0
	50							23,22,20,38	0
70	50							30,23,25,13	0
	50							13,20,24,29	0
75	50							15,20,28,47	0
	50							19,10,12,13	0
80					Sandy CLAY, green, plastic		CH		

 ABB ENVIRONMENTAL SERVICES, INC.

DEPARTMENT OF THE NAVY

SOUTHERN DIVISION
NAVAL FACILITIES ENGINEERING COMMAND
CHARLESTON, SC.

WELL CONSTRUCTION DETAIL

WELL NUMBER: OLD-44-01

DATE OF INSTALLATION: 11-17/22

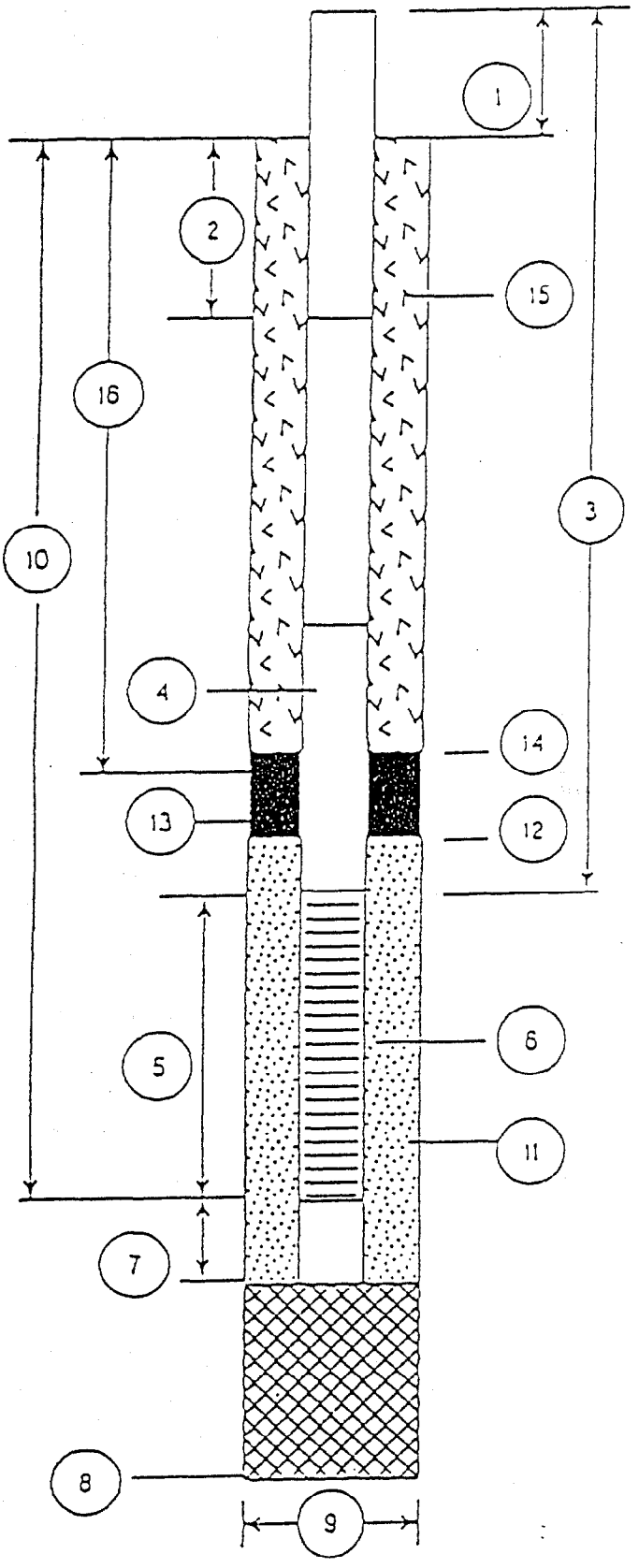

1. Height of Casing above ground: FM
2. Depth to first Coupling: 2'
   Coupling Interval Depths: 10'
3. Total Length of Riser Pipe: 72'
4. Type of Riser Pipe: 2" sched 40 PVC
5. Length of Screen: 5'
6. Type of Screen: 2" sched 40 0.010 slot
7. Length of Sump: 6"
8. Total Depth of Boring: 77'
9. Diameter of Boring: 10"
10. Depth to Bottom of Screen: 77'
11. Type of Screen Filter: Silica Sand
    Quantity Used: 300 lb Size: 20/30
12. Depth to Top of Filter: 70'
13. Type of Seal: Bentonite / Fine Sand
    Quantity Used: ____
14. Depth to Top of Seal: 68'
15. Type of Grout: Neat Cement
    Grout Mixture: 94 lb type I Portland / 8.5 l Bentonite gel / 8 gal water
    Method of Placement: tremie
16. Tot. Depth of 6 in. Steel Casing: NA

GROUNDWATER SAMPLE FIELD DATA

Project: BRAC NTC Orlando
Point of Interest: SA 44 OLD-44-01
Project Number: 8519.10
Date: 12/5/95
Sample Location ID: 44G00101
Time: Start: 1020 End: 1115
Signature of Sampler: [signature]

Water Level/Well Data

Well Depth 77.40 Ft. — ___ Measured ✓ Historical — ✓ Top of Well ___ Top of Protective Casing

Well Riser Stick-up (from ground) FM Ft.

Protective Casing/Well Difference FM Ft.

Protective Casing FM Ft.

Depth to Water 12.37 Ft.

Well Material: ✓ PVC ___ SS

Well Locked?: ✓ Yes ___ No

Well Dia. ✓ 2 inch ___ 4 inch ___ 6 inch

Water Level Equip. Used: ✓ Elect. Cond. Probe ___ Float Activated ___ Press. Transducer

Height of Water Column 65.03 Ft. X ✓ .16 Gal/Ft. (2 in.) ___ .65 Gal/Ft. (4 in.) ___ 1.5 Gal/Ft. (6 in.) ___ Gal/Ft. (__ in.) = 10.40 Gal/Vol; 3.5 Total Gal Purged

Well Integrity:	Yes	No
Prot. Casing Secure	✓	
Concrete Collar Intact	✓	
Other		

Equipment Documentation

Purging/Sampling Equipment Used:

(✓ If Used For) Purging	Sampling		Equipment ID
✓	✓	Peristaltic Pump	
		Submersible Pump	
		Bailer	
		PVC/Silicon Tubing	
✓	✓	Teflon/Silicon Tubing	
		Airlift	
		Hand Pump	
		In-line Filter	
		Press/Vac Filter	

Decontamination Fluids Used:

(✓ All That Apply at Location)
- ___ Methanol (100%)
- ___ 25% Methanol/75% ASTM Type II water
- ✓ Deionized Water
- ___ Liquinox Solution
- ___ Hexane
- ___ HNO_3/D.I. Water Solution
- ___ Potable Water
- ___ None
- ✓ Alconox
- ✓ Isopropyl

Field Analysis Data

Ambient Air VOC Ø ppm Well Mouth Ø ppm

Field Data Collected ___ In-line ✓ In Container

Sample Observations: ___ Turbid ___ Clear ___ Cloudy ___ Colored ___ Odor

Purge Data	@ 0 Gal.	@ 1.4 Gal.	@ 2.8 Gal.	@ 3.3 Gal.	@ 3.5 Gal.
Temperature, Deg. C	25.0	25.0	25.0	25.0	25.0
pH, units	6.76	6.54	6.39	6.35	6.33
Specific Conductivity (umhos/cm. @ 25 Deg. C.)	305	280	212	210	210
Oxidation - Reduction, +/- mv					
~~Dissolved Oxygen, ppm~~ Turbidity (NTU)	63.6	8.56	7.00	7.38	7.31

Sample Collection Requirements (✓ If Required at this Location)

Analytical Parameter	✓ If Field Filtered	Preservation Method	Volume Required	✓ If Sample Collected	Sample Bottle IDs
VOA		HCL	120 mL	✓	/ / /
SVOA		4OC	2.5 L	✓	/ / /
Pest/PCB		4OC	2.5 L	✓	/ / /
Inorganics		HNO_3	1 L	✓	/ / /
Explosives		4°C			/ / /
TPH		H_2SO_4			/ / /
TOC		H_2SO_4			/ / /
Nitrate		H_2SO_4			/ / /

Notes: Low Flow Sampling

DEPARTMENT OF THE NAVY

SOUTHERN DIVISION
NAVAL FACILITIES ENGINEERING COMMAND
CHARLESTON, SC.

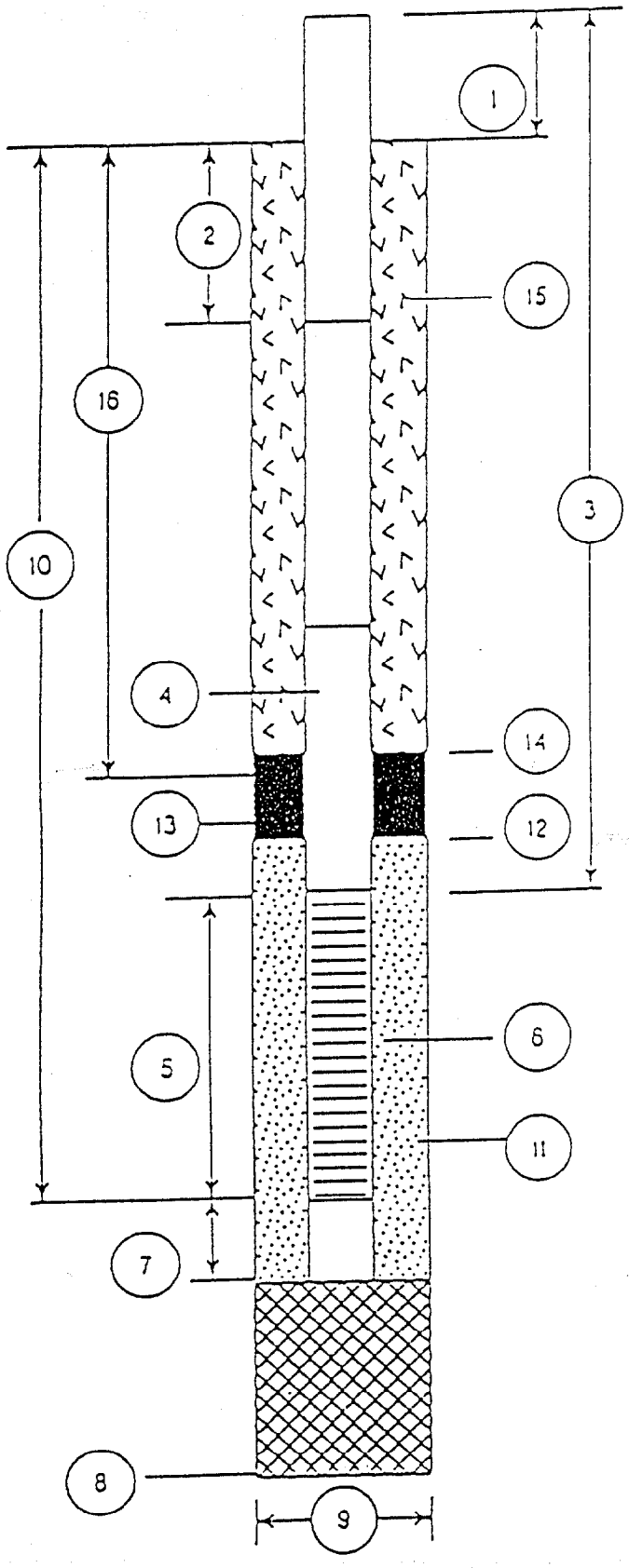

WELL CONSTRUCTION DETAIL

WELL NUMBER: OLD-44-02

DATE OF INSTALLATION: 11-16/95

1. Height of Casing above ground: FM
2. Depth to first Coupling: 6'
   Coupling Interval Depths: 10'
3. Total Length of Riser Pipe: 26'
4. Type of Riser Pipe: 2" sched 40 PVC
5. Length of Screen: 5'
6. Type of Screen: 2" sched 40 pvc 0.010 slot
7. Length of Sump: 6"
8. Total Depth of Boring: 31
9. Diameter of Boring: 10"
10. Depth to Bottom of Screen: 31'
11. Type of Screen Filter: Silica Sand
    Quantity Used: 300 lb Size: 20/30
12. Depth to Top of Filter: 24'
13. Type of Seal: Fine sand/Bentonite
    Quantity Used: ____
14. Depth to Top of Seal: 22'
15. Type of Grout: Neat Cement
    Grout Mixture:
    Method of Placement: tremie
16. Tot. Depth of 6 in. Steel Casing: NA

GROUNDWATER SAMPLE FIELD DATA

Project: BRAC NTC Orlando
Project Number: 8519.10
Sample Location ID: 44G00201
Time: Start: 1315 End: 1525

Point of Interest: SA 44 OLD-44-02
Date: 12/5/95
Signature of Sampler: John Maslo

Water Level/Well Data

Well Depth 31.15 Ft. — ✓ Measured ✓ Historical — ✓ Top of Well ___ Top of Protective Casing

Well Riser Stick-up (from ground) FM Ft. — Protective Casing/Well Difference FM Ft. — Protective Casing FM Ft.

Depth to Water 11.64 Ft. — Well Material: ✓ PVC ___ SS — Well Locked?: ✓ Yes ___ No — Well Dia. ✓ 2 inch ___ 4 inch ___ 6 inch — Water Level Equip. Used: ✓ Elect. Cond. Probe ___ Float Activated ___ Press. Transducer

Height of Water Column 19.51 Ft. X ✓ .16 Gal/Ft. (2 in.) ___ .65 Gal/Ft. (4 in.) ___ 1.5 Gal/Ft. (6 in.) ___ Gal/Ft. (__ in.) = 3.12 Gal/Vol; 6.5 Total Gal Purged

Well Integrity:	Yes	No
Prot. Casing Secure	✓	
Concrete Collar Intact	✓	
Other		

Equipment Documentation

Purging/Sampling Equipment Used:

(✓ If Used For) Purging	Sampling		Equipment ID
✓	✓	Peristaltic Pump	
		Submersible Pump	
		Bailer	
		PVC/Silicon Tubing	
✓	✓	Teflon/Silicon Tubing	
		Airlift	
		Hand Pump	
		In-line Filter	
		Press/Vac Filter	

Decontamination Fluids Used: (✓ All That Apply at Location)

___ Methanol (100%)
___ 25% Methanol/75% ASTM Type II water
✓ Deionized Water
___ Liquinox Solution
___ Hexane
___ HNO_3/D.I. Water Solution
___ Potable Water
___ None
✓ Alconox
✓ Isopropyl

Field Analysis Data

Ambient Air VOC Ø ppm Well Mouth Ø ppm Field Data Collected ___ In-line ✓ In Container

Sample Observations: ___ Turbid ___ Clear ___ Cloudy ___ Colored ___ Odor

Purge Data	@ 1.2 Gal.	@ 3.0 Gal.	@ 5.5 Gal.	@ 6.1 Gal.	@ 6.5 Gal.
Temperature, Deg. C	27.0	27.0	27.0	27.0	27.0
pH, units	6.19	5.99	5.80	5.82	5.78
Specific Conductivity (umhos/cm. @ 25 Deg. C.)	265	240	200	198	195
Oxidation - Reduction, +/- mv					
~~Dissolved Oxygen, ppm~~ Turbidity (NTU)	>200	198.4	192.4	194.3	194.6

Sample Collection Requirements (✓ If Required at this Location)

Analytical Parameter	✓ If Field Filtered	Preservation Method	Volume Required	✓ If Sample Collected	Sample Bottle IDs
VOA		HCL	120 ml	✓	/ / /
SVOA		4OC	2.5 L	✓	/ / /
Pest/PCB		4OC	2.5 L	✓	/ / /
Inorganics		HNO_3	1 L	✓	/ / /
Explosives		4°C			/ / /
TPH		H_2SO_4			/ / /
TOC		H_2SO_4			/ / /
Nitrate		H_2SO_4			/ / /

Notes: Low Flow Sampling

DEPARTMENT OF THE NAVY

SOUTHERN DIVISION
NAVAL FACILITIES ENGINEERING COMMAND
CHARLESTON, SC.

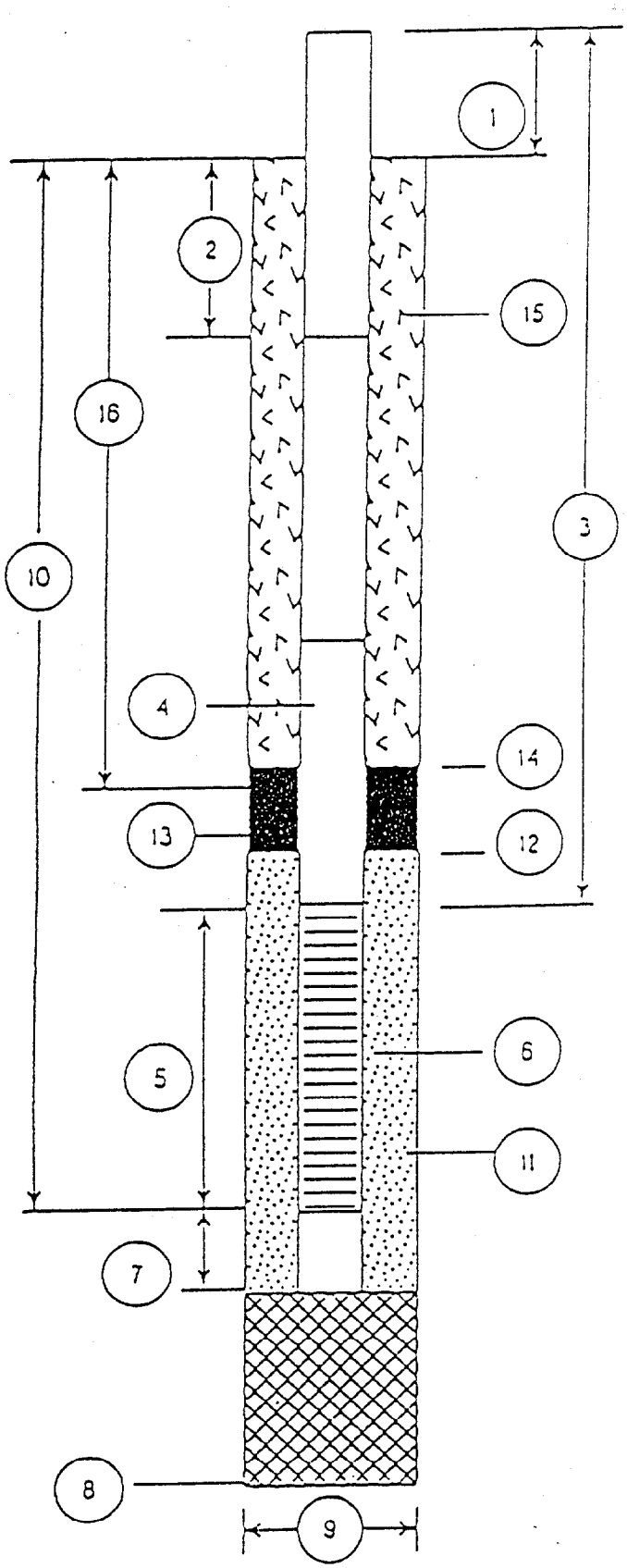

WELL CONSTRUCTION DETAIL

WELL NUMBER: OLD-44-03

DATE OF INSTALLATION: 11-17-9

1. Height of Casing above ground: FM
2. Depth to first Coupling: 8'

   Coupling Interval Depths: NA
3. Total Length of Riser Pipe: 8'
4. Type of Riser Pipe: 2" Sched 40 PVC
5. Length of Screen: 10'
6. Type of Screen: 2" sched 40 PVC 0.010 slot
7. Length of Sump: 6"
8. Total Depth of Boring: 18'
9. Diameter of Boring: 10"
10. Depth to Bottom of Screen: 18'
11. Type of Screen Filter: Silica Sand

    Quantity Used: 550 lb Size: 20/30
12. Depth to Top of Filter: 6'
13. Type of Seal: Fine Sand / Bentonite

    Quantity Used: ——
14. Depth to Top of Seal: 4'
15. Type of Grout: Neat cement

    Grout Mixture:

    Method of Placement: tremie
16. Tot. Depth of 6 in. Steel Casing: NA

GROUNDWATER SAMPLE FIELD DATA

Project: BRAC NTC Orlando
Project Number: 8519.10
Sample Location ID: 44G00301
Time: Start: 1143 End: 1310

Point of Interest: SA 44 OLD-44-03
Date: 12/5/95
Signature of Sampler: John Nash

Water Level/Well Data

Well Depth 18.20 Ft. ✓ Measured ___ Historical ✓ Top of Well ___ Top of Protective Casing ___ ___

Well Riser Stick-up (from ground) F.M Ft.

Protective Casing/Well Difference FM Ft.

Protective Casing FM Ft.

Depth to Water 11.50 Ft.

Well Material: ✓ PVC ___ SS ___

Well Locked?: ✓ Yes ___ No

Well Dia. ✓ 2 inch ___ 4 inch ___ 6 inch ___ ___

Water Level Equip. Used: ✓ Elect. Cond. Probe ___ Float Activated ___ Press. Transducer ___ ___

Height of Water Column 6.7 Ft. X ✓ .16 Gal/Ft. (2 in.) ___ .65 Gal/Ft. (4 in.) ___ 1.5 Gal/Ft. (6 in.) ___ ___ Gal/Ft. (___ in.) = 1.07 Gal/Vol; 5.0 Total Gal Purged

Well Integrity:

	Yes	No
Prot. Casing Secure	✓	___
Concrete Collar Intact	✓	___
Other ___	___	___

Equipment Documentation

Purging/Sampling Equipment Used:

(✓ If Used For) Purging	Sampling		Equipment ID
✓	✓	Peristaltic Pump	
___	___	Submersible Pump	
___	___	Bailer	
___	___	PVC/Silicon Tubing	
✓	✓	Teflon/Silicon Tubing	
___	___	Airlift	
___	___	Hand Pump	
___	___	In-line Filter	
___	___	Press/Vac Filter	
___	___		

Decontamination Fluids Used:

(✓ All That Apply at Location)
___ Methanol (100%)
___ 25% Methanol/75% ASTM Type II water
✓ Deionized Water
___ Liquinox Solution
___ Hexane
___ HNO_3/D.I. Water Solution
___ Potable Water
___ None
✓ Alconox
✓ Isopropyl

Field Analysis Data

Ambient Air VOC Ø ppm Well Mouth Ø ppm

Field Data Collected ___ In-line ✓ In Container

Sample Observations: ___ Turbid ___ Clear ___ Cloudy ___ Colored ___ Odor

Purge Data	@ 1.0 Gal.	@ 2.5 Gal.	@ 4.0 Gal.	@ 4.5 Gal.	@ 5.0 Gal.
Temperature, Deg. C	27.0	26.0	26.5	27.0	27.0
pH, units	6.72	6.71	6.78	6.79	6.78
Specific Conductivity (umhos/cm. @ 25 Deg. C.)	400	400	395	400	400
Oxidation - Reduction, +/- mv					
~~Dissolved Oxygen, ppm~~ Turbidity (NTU)	12.08	3.35	2.00	2.05	2.07

Sample Collection Requirements (✓ If Required at this Location)

Analytical Parameter	✓ If Field Filtered	Preservation Method	Volume Required	✓ If Sample Collected	Sample Bottle IDs
VOA	___	HCL	120 mL	✓	___ / ___ / ___ / ___
SVOA	___	4°C	2.5 L	✓	___ / ___ / ___ / ___
Pest/PCB	___	4°C	2.5 L	✓	___ / ___ / ___ / ___
Inorganics	___	HNO_3	1 L	✓	___ / ___ / ___ / ___
Explosives	___	4°C		___	___ / ___ / ___ / ___
TPH	___	H_2SO_4		___	___ / ___ / ___ / ___
TOC	___	H_2SO_4		___	___ / ___ / ___ / ___
Nitrate	___	H_2SO_4		___	___ / ___ / ___ / ___

Notes: Low Flow Sampling

Project: NTC Orlando	**Site:** SA 44	**Boring ID:** OLD-44-04
Client: SOUTHDIVNAVFACENGCOM		**Job No.:** 08519.10
Contractor: Groundwater Protection, Inc.	**Date started:** 11-20-95	**Compltd:** 11-20-95
ABB Rep.: WDO	**Type of OVM:** Porta FID	**Total Depth:** 14ft.
Material: PVC	**Method:** HSA	**Casing Size:** 6-1/4 in. ID
Screen: 10 ft.	**Riser:** 3 ft.	**Diam.:** 2 in. ID
		Protection level: D
		Dpth to ∇ 4 ft.

Depth Ft.	Recovery	Sample No.	Sample Depth	CLP/Screening	Soil/Rock Description and comments	Lithologic symbol	Soil class.	Blows/6-in.	Headspace (ppm)
					Silty SAND, light gray brown, loose, dry, some limerock gravel		SM		
	NA							Posthole to 4 feet	0
							SP		
	NA	44B00401 44B00401 DUP	3-4'		SAND, fine, off-white, loose, dry, well-sorted, subrounded, wet at 3 ft., saturated at 4 ft., peaty organic fibers 4 to 8 ft.				0
								3	
								3	
5	80							3	0
								5	
								3	
					(grades to)			4	
	70						SP	8	0
								15	
								17	
								21	
	NR				SAND, fine, with silt, dark brown, well-sorted quartz sand, subrounded			28	NA
								27	
10								25	
								20	
	80							25	0
								24	
								22	
								21	
	90							23	0
					SAND, silty, black, fine sand, hard		SM	25	
15									

 ABB ENVIRONMENTAL SERVICES, INC.

DEPARTMENT OF THE NAVY

SOUTHERN DIVISION
NAVAL FACILITIES ENGINEERING COMMAND
CHARLESTON, SC.

WELL CONSTRUCTION DETAIL

WELL NUMBER: OLD-44-04

DATE OF INSTALLATION: 11-20/95

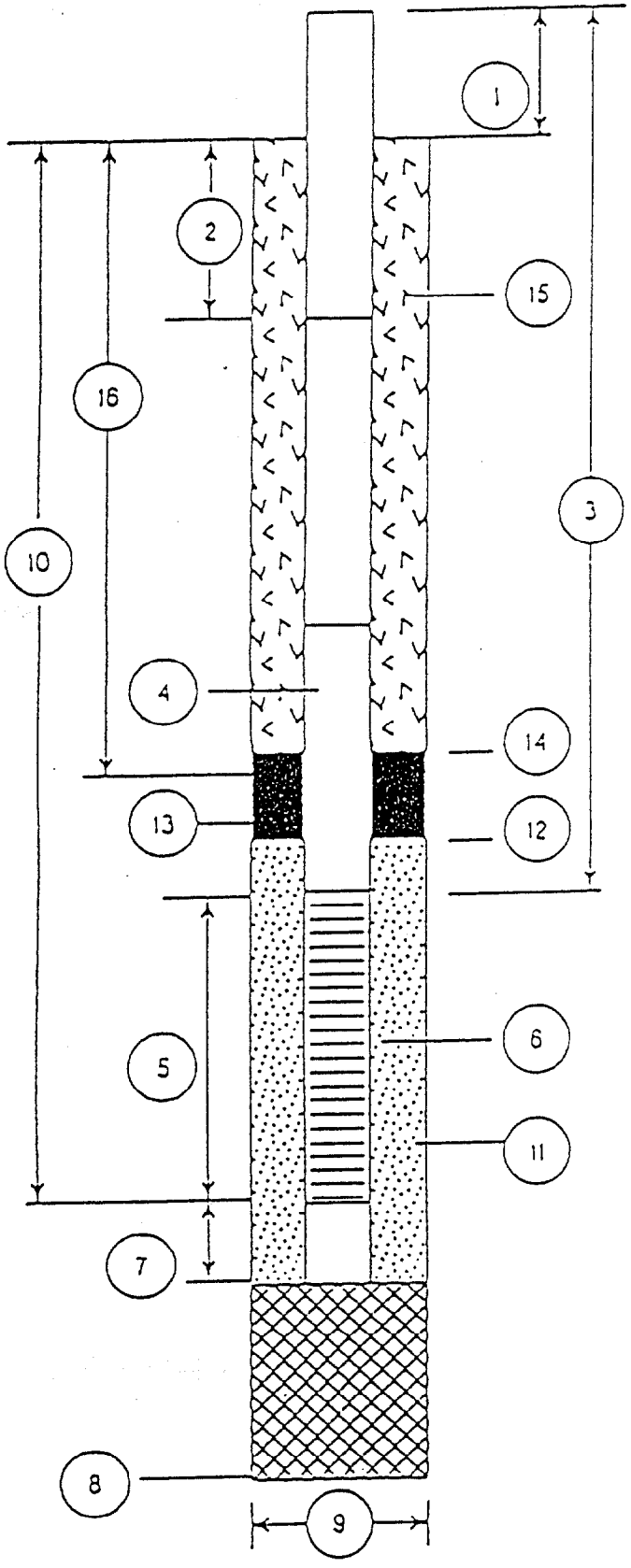

1. Height of Casing above ground: FM
2. Depth to first Coupling: 3'
   Coupling Interval Depths: NA
3. Total Length of Riser Pipe: 3'
4. Type of Riser Pipe: 2" sched 40 PVC
5. Length of Screen: 10'
6. Type of Screen: 2" sched 40 PVC 0.010 slot
7. Length of Sump: 6"
8. Total Depth of Boring: 13'
9. Diameter of Boring: 10"
10. Depth to Bottom of Screen: 13
11. Type of Screen Filter: Silica Sand
    Quantity Used: 550 lb Size: 20/30
12. Depth to Top of Filter: 2'
13. Type of Seal: Bentonite Pellet
    Quantity Used: 20 lb
14. Depth to Top of Seal: 1.5
15. Type of Grout: Neat cement
    Grout Mixture:
    Method of Placement: Pour
16. Tot. Depth of 6 in. Steel Casing: NA

GROUNDWATER SAMPLE FIELD DATA

Project: BRAC NTC Orlando
Point of Interest: SA 44 OLD-44-04
Project Number: 8519.10
Date: 12/6/95
Sample Location ID: 44G 00401
Time: Start: 1256 End: 1438
Signature of Sampler: [signature]

Water Level/Well Data

Well Depth 13.43 Ft. — ___ Measured ✓ Historical — ✓ Top of Well ___ Top of Protective Casing ___ ___ — Well Riser Stick-up (from ground) FM Ft. — Protective Casing/Well Difference FM Ft. — Protective Casing FM Ft.

Depth to Water 3.91 Ft. — Well Material: ✓ PVC ___ SS ___ — Well Locked?: ✓ Yes ___ No — Well Dia. ✓ 2 inch ___ 4 inch ___ 6 inch ___ ___ — Water Level Equip. Used: ✓ Elect. Cond. Probe ___ Float Activated ___ Press. Transducer ___ ___

Height of Water Column 9.52 Ft. X ✓ .16 Gal/Ft. (2 in.) ___ .65 Gal/Ft. (4 in.) ___ 1.5 Gal/Ft. (6 in.) ___ ___ Gal/Ft. (___ in.) = 1.5 Gal/Vol; 10.0 Total Gal Purged

Well Integrity:	Yes	No
Prot. Casing Secure	✓	
Concrete Collar Intact	✓	
Other ___		

Equipment Documentation

Purging/Sampling Equipment Used:

(✓ If Used For) Purging	Sampling		Equipment ID
✓	✓	Peristaltic Pump	
		Submersible Pump	
		Bailer	
		PVC/Silicon Tubing	
✓	✓	Teflon/Silicon Tubing	
		Airlift	
		Hand Pump	
		In-line Filter	
		Press/Vac Filter	

Decontamination Fluids Used: (✓ All That Apply at Location)

- ___ Methanol (100%)
- ___ 25% Methanol/75% ASTM Type II water
- ✓ Deionized Water
- ___ Liquinox Solution
- ___ Hexane
- ___ HNO_3/D.I. Water Solution
- ___ Potable Water
- ___ None
- ✓ Alconox
- ✓ Isopropyl

Field Analysis Data

Ambient Air VOC Ø ppm Well Mouth Ø ppm Field Data Collected ___ In-line ✓ In Container

Sample Observations: ___ Turbid ___ Colored ___ Clear ___ Odor ___ Cloudy

Purge Data	@ 0.5 Gal.	@ 6.0 Gal.	@ 9.0 Gal.	@ 9.5 Gal.	@ 10.0 Gal.
Temperature, Deg. C	27.0	25.5	25.5	25.5	25.5
pH, units	6.02	6.19	6.14	6.19	6.21
Specific Conductivity (umhos/cm. @ 25 Deg. C.)	269	347	351	351	351
Oxidation - Reduction, +/- mv					
~~Dissolved Oxygen, ppm~~ Turbidity (NTU)	199.0	117.1	86.3	84.4	85.3

Sample Collection Requirements (✓ If Required at this Location)

Analytical Parameter	✓ If Field Filtered	Preservation Method	Volume Required	✓ If Sample Collected	Sample Bottle IDs
VOA		HCL	120 mL	✓	/ / /
SVOA		4°C	2.5 L	✓	/ / /
Pest/PCB		4°C	2.5 L	✓	/ / /
Inorganics		HNO_3	1 L	✓	/ / /
Explosives		4°C			/ / /
TPH		H_2SO_4			/ / /
TOC		H_2SO_4			/ / /
Nitrate		H_2SO_4			/ / /

Notes: ___

Project: NTC Orlando	**Site:** SA 44	**Boring ID:** OLD-44-05
Client: SOUTHDIVNAVFACENGCOM		**Job No.:** 08519.10
Contractor: Groundwater Protection, Inc.	**Date started:** 11-20-95	**Compltd:** 11-20-95
ABB Rep.: WDO	**Type of OVM:** Porta FID	**Total Depth:** 14 ft.ft.	**Protection level:** D
Material: PVC	**Method:** HSA	**Casing Size:** 6-1/4 in. ID	**Dpth to ▽** 3 ft.
Screen: 10 ft.	**Riser:** 3 ft.	**Diam.:** 2 in. ID

Depth Ft.	Recovery	Sample No.	Sample Depth	CLP/Screening	Soil/Rock Description and comments	Lithologic symbol	Soil class.	Blows/6-in.	Headspace (ppm)
					Silty SAND, gray, limerock debris		SM		
	NA						SP	Posthole to 4 feet	0
		44B00501 44B00501 MS/MSD	2-3'	SCR	Fine SAND, silty, dark brown				
	NA								1000/ 1000 ▽
					Fine SAND, off-white, wet		SP	1 3	
5	90						SP	8 10 7 7	2
	80				Fine SAND, silty, dark brown, saturated			11 13 8 11	0
	80							23 21 10 30	2
10	90				SILT and SAND, black, hard, trace clay, nonplastic, dry, thin laminae		SM	40 23	0
	70				SAND, dark brown, loose		SP	NR NR NR NR	10/ 0
15									

 ABB ENVIRONMENTAL SERVICES, INC.

DEPARTMENT OF THE NAVY

SOUTHERN DIVISION
NAVAL FACILITIES ENGINEERING COMMAND
CHARLESTON, SC.

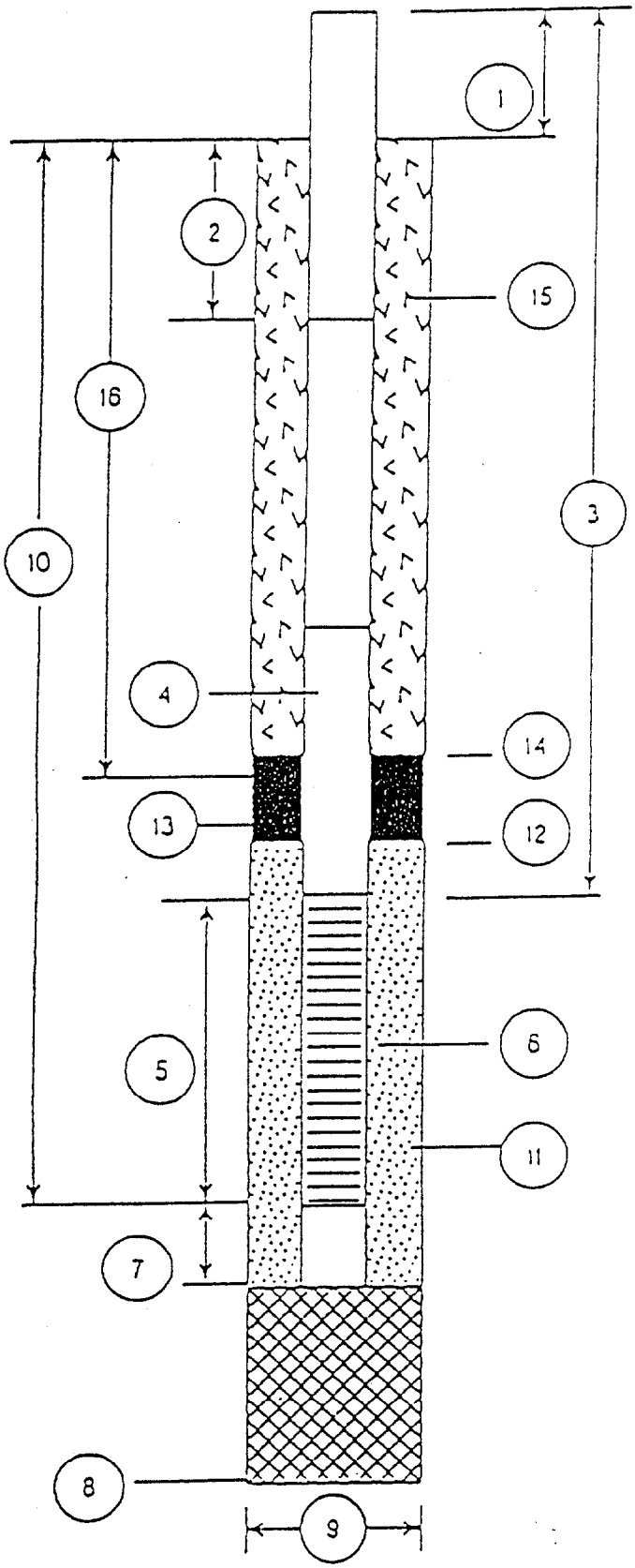

WELL CONSTRUCTION DETAIL

WELL NUMBER: OLD-44-05

DATE OF INSTALLATION: 11-20/95

1. Height of Casing above ground: FM
2. Depth to first Coupling: 3'

   Coupling Interval Depths: NA
3. Total Length of Riser Pipe: 3'
4. Type of Riser Pipe: 2" Sched 40 PVC
5. Length of Screen: 10'
6. Type of Screen: 2" sched 40 PVC 0.010 slot
7. Length of Sump: 6"
8. Total Depth of Boring: 13'
9. Diameter of Boring: 10"
10. Depth to Bottom of Screen: 13'
11. Type of Screen Filter: Silica sand

    Quantity Used: 500 lb Size: 20/30
12. Depth to Top of Filter: 2
13. Type of Seal: bentonite

    Quantity Used: 20 lb
14. Depth to Top of Seal: 1.5'
15. Type of Grout: Neat cement

    Grout Mixture:

    Method of Placement: Pour
16. Tot. Depth of 6 in. Steel Casing: NA

GROUNDWATER SAMPLE FIELD DATA

Project: BRAC NTC Orlando
Project Number: 8519.10
Sample Location ID: 44G00501
Time: Start: 1035 End: 1130

Point of Interest: SA 44 OLD-44-05
Date: 12/6/95
Signature of Sampler: [signature]

Water Level/Well Data

Well Depth 13.13 Ft. — ✓ Measured / ___ Historical — ✓ Top of Well / ___ Top of Protective Casing

Well Riser Stick-up (from ground) FM Ft. — Protective Casing/Well Difference FM Ft. — Protective Casing FM Ft.

Depth to Water 2.68 Ft. — Well Material: ✓ PVC / ___ SS — Well Locked?: ✓ Yes / ___ No — Well Dia. ✓ 2 inch / ___ 4 inch / ___ 6 inch — Water Level Equip. Used: ✓ Elect. Cond. Probe / ___ Float Activated / ___ Press. Transducer

Height of Water Column 10.45 Ft. X ✓ .16 Gal/Ft. (2 in.) / ___ .65 Gal/Ft. (4 in.) / ___ 1.5 Gal/Ft. (6 in.) / ___ Gal/Ft. (___ in.) = 1.67 Gal/Vol; 3.0 Total Gal Purged

Well Integrity: Prot. Casing Secure ✓ Yes / ___ No; Concrete Collar Intact ✓ Yes / ___ No; Other ___ Yes / ___ No

Equipment Documentation

Purging/Sampling Equipment Used:

(✓ If Used For) Purging	Sampling		Equipment ID
✓	✓	Peristaltic Pump	
		Submersible Pump	
		Bailer	
		PVC/Silicon Tubing	
✓	✓	Teflon/Silicon Tubing	
		Airlift	
		Hand Pump	
		In-line Filter	
		Press/Vac Filter	

Decontamination Fluids Used: (✓ All That Apply at Location)

- ___ Methanol (100%)
- ___ 25% Methanol/75% ASTM Type II water
- ✓ Deionized Water
- ___ Liquinox Solution
- ___ Hexane
- ___ HNO_3/D.I. Water Solution
- ___ Potable Water
- ___ None
- ✓ Alconox
- ✓ Isopropyl

Field Analysis Data

Ambient Air VOC Ø ppm — Well Mouth 1000 w/o Filter, 700 Filtered ppm — Field Data Collected ___ In-line / ✓ In Container — Sample Observations: ___ Turbid / ___ Clear / ___ Cloudy / ___ Colored / ___ Odor

Purge Data	@ 0 Gal.	@ 1.0 Gal.	@ 1.7 Gal.	@ 2.5 Gal.	@ 3.0 Gal.
Temperature, Deg. C	27.0	26.0	25.0	25.0	25.0
pH, units	6.31	6.33	6.33	6.34	6.37
Specific Conductivity (umhos/cm. @ 25 Deg. C.)	400	398	397	401	398
Oxidation - Reduction, +/- mv					
~~Dissolved Oxygen, ppm~~ Turbidity (NTU)	80.7	84.2	90.8	89.8	89.8

Sample Collection Requirements (✓ If Required at this Location)

Analytical Parameter	✓ If Field Filtered	Preservation Method	Volume Required	✓ If Sample Collected	Sample Bottle IDs
VOA		HCL	120 mL	✓	/ / /
SVOA		4OC	2.5 L	✓	/ / /
Pest/PCB		4OC	2.5 L	✓	/ / /
Inorganics		HNO_3	1 L	✓	/ / /
Explosives		4°C			/ / /
TPH		H_2SO_4			/ / /
TOC		H_2SO_4			/ / /
Nitrate		H_2SO_4			/ / /

Notes: Low Flow Sampling

Project: NTC Orlando	**Site:** SA 44	**Boring ID:** OLD-44-08
Client: SOUTHDIVNAVFACENGCOM		**Job No.:** 08519.10
Contractor: Groundwater Protection, Inc.	**Date started:** 11-20-95	**Compltd:** 11-20-95
ABB Rep.: WDO	**Type of OVM:** Porta FID	**Total Depth:** 18 ft.ft.	**Protection level:** D
Material: PVC	**Method:** HSA	**Casing Size:** 6-1/4 in. ID	**Dpth to ∇** 10 ft.
Screen: 10 ft.	**Riser:** 8 ft.	**Diam.:** 2 in. ID

Depth Ft.	Recovery	Sample No.	Sample Depth	CLP/Screening	Soil/Rock Description and comments	Lithologic symbol	Soil class.	Blows/6-in.	Headspace (ppm)
							SP		
								Posthole to 4 feet	0
									0
								4	
								6	
5	70							9	0
								7	
								7	
								5	
	70							6	0
								9	
					Fine SAND, off-white, loose, dry, well-sorted, subrounded, wet at 10 ft.			2	
								6	
	80	44B00801	8-10'	SCR				9	0
								15	
10								6	∇
								12	
	90							12	0
								27	
								21	
								19	
	80							18	0
								24	
								12	
								13	
15	80							13	0
								15	
								21	
					Fine SAND with silt, dark brown, well-sorted, subrounded		SP	11	
	90							27	0
20									

 ABB ENVIRONMENTAL SERVICES, INC.

DEPARTMENT OF THE NAVY

SOUTHERN DIVISION
NAVAL FACILITIES ENGINEERING COMMAND
CHARLESTON, SC.

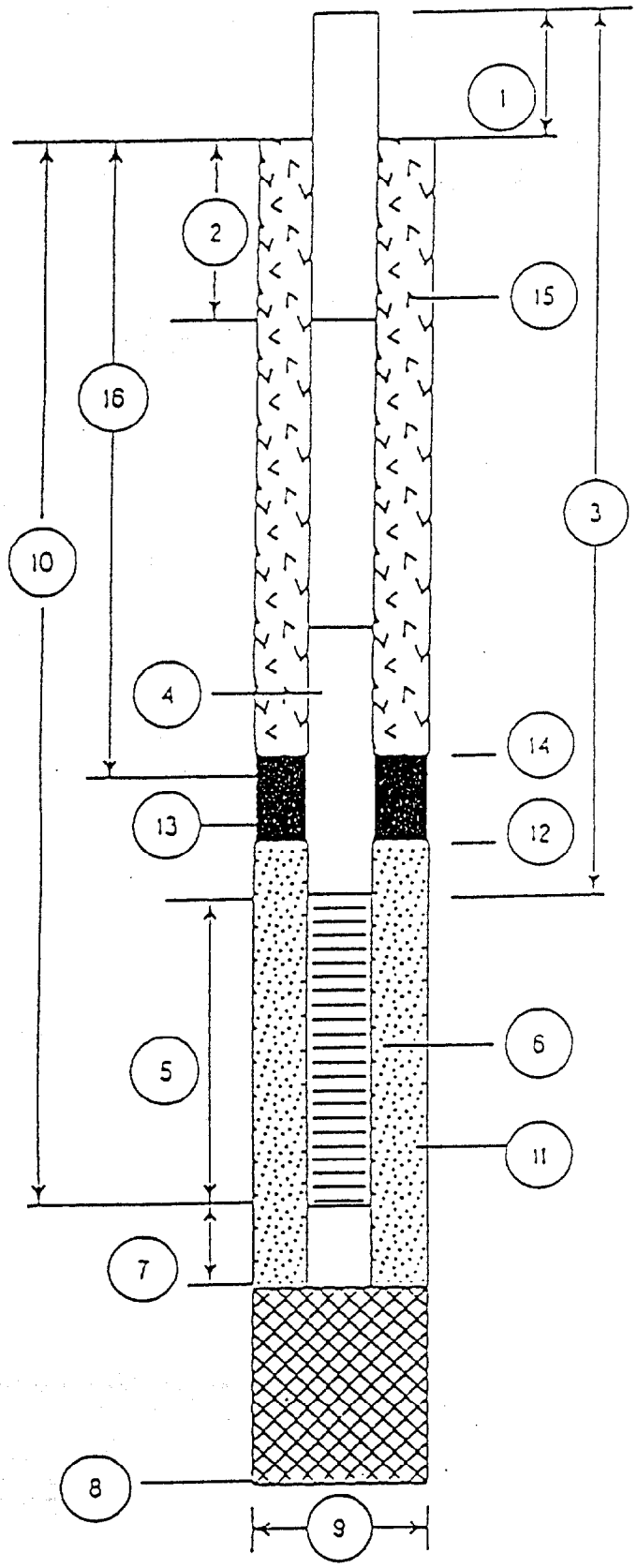

WELL CONSTRUCTION DETAIL

WELL NUMBER: OLD-44-06

DATE OF INSTALLATION: 11-20/95

1. Height of Casing above ground: FM
2. Depth to first Coupling: 8'

   Coupling Interval Depths: NA
3. Total Length of Riser Pipe: 8'
4. Type of Riser Pipe: 2" sched. 40 PVC
5. Length of Screen: 10'
6. Type of Screen: 2" sched. 40 pvc 0.010 slot
7. Length of Sump: 6"
8. Total Depth of Boring: 18'
9. Diameter of Boring: 10"
10. Depth to Bottom of Screen: 18'
11. Type of Screen Filter: Silica Sand

    Quantity Used: 550' Size: 20/30
12. Depth to Top of Filter: 6'
13. Type of Seal: fine sand / Bentonite

    Quantity Used: ——
14. Depth to Top of Seal: 4'
15. Type of Grout: Neat cement

    Grout Mixture:

    Method of Placement: tremie
16. Tot. Depth of 6 in. Steel Casing: NA

GROUNDWATER SAMPLE FIELD DATA

Project: BRAC NTC Orlando
Project Number: 8519.10
Sample Location ID: 44G00601
Time: Start: 0818 End: 1005

Point of Interest: SA 44 OLD-44-06
Date: 12/6/95
Signature of Sampler: John Nash

Water Level/Well Data

Well Depth 18.0 Ft. — ___ Measured; ✓ Historical — ✓ Top of Well; ___ Top of Protective Casing; ___ ___

Well Riser Stick-up (from ground) FM Ft.

Protective Casing/Well Difference FM Ft.

Protective Casing FM Ft.

Depth to Water 7.30 Ft.

Well Material: ✓ PVC; ___ SS; ___

Well Locked?: ✓ Yes; ___ No

Well Dia. ✓ 2 inch; ___ 4 inch; ___ 6 inch; ___ ___

Water Level Equip. Used: ✓ Elect. Cond. Probe; ___ Float Activated; ___ Press. Transducer; ___ ___

Height of Water Column 10.7 Ft. X ✓ .16 Gal/Ft. (2 in.); ___ .65 Gal/Ft. (4 in.); ___ 1.5 Gal/Ft. (6 in.); ___ ___ Gal/Ft. (___ in.) = 1.71 Gal/Vol; 7.0 Total Gal Purged

Well Integrity:

	Yes	No
Prot. Casing Secure	✓	
Concrete Collar Intact	✓	
Other		

Equipment Documentation

Purging/Sampling Equipment Used:

(✓ If Used For) Purging	Sampling		Equipment ID
✓	✓	Peristaltic Pump	
		Submersible Pump	
		Bailer	
		PVC/Silicon Tubing	
✓	✓	Teflon/Silicon Tubing	
		Airlift	
		Hand Pump	
		In-line Filter	
		Press/Vac Filter	

Decontamination Fluids Used:

(✓ All That Apply at Location)
- ___ Methanol (100%)
- ___ 25% Methanol/75% ASTM Type II water
- ✓ Deionized Water
- ___ Liquinox Solution
- ___ Hexane
- ___ HNO_3/D.I. Water Solution
- ___ Potable Water
- ___ None
- ✓ Alconox
- ✓ Isopropyl

Field Analysis Data

Ambient Air VOC Ø ppm Well Mouth Ø ppm

Field Data Collected: ___ In-line; ✓ In Container

Sample Observations: ___ Turbid; ___ Clear; ___ Cloudy; ___ Colored; ___ Odor

Purge Data	@ 1.5 Gal.	@ 4.0 Gal.	@ 6.0 Gal.	@ 6.3 Gal.	@ 7.0 Gal.
Temperature, Deg. C	24.5	24.5	24.5	24.5	24.5
pH, units	6.54	7.03	7.01	6.98	6.97
Specific Conductivity (umhos/cm. @ 25 Deg. C.)	389	412	423	423	423
Oxidation - Reduction, +/- mv					
~~Dissolved Oxygen, ppm~~ Turbidity (NTU)	17.27	18.86	23.7	28.5	21.4

Sample Collection Requirements (✓ If Required at this Location)

Analytical Parameter	✓ If Field Filtered	Preservation Method	Volume Required	✓ If Sample Collected	Sample Bottle IDs
VOA		HCL	120 mL	✓	___/___/___/___
SVOA		4°C	2.5 L	✓	___/___/___/___
Pest/PCB		4°C	2.5 L	✓	___/___/___/___
Inorganics		HNO_3	1 L	✓	___/___/___/___
Explosives		4°C			___/___/___/___
TPH		H_2SO_4			___/___/___/___
TOC		H_2SO_4			___/___/___/___
Nitrate		H_2SO_4			___/___/___/___

Notes: Low Flow Sampling

Project: NTC Orlando	**Site:** SA 44	**Boring ID:** OLD-44-07
Client: SOUTHDIVNAVFACENGCOM		**Job No.:** 08519.10
Contractor: Groundwater Protection, Inc.	**Date started:** 11-20-95	**Completd:** 11-20-95
ABB Rep.: WDO	**Type of OVM:** Porta FID	**Total Depth:** 18 ft.ft.
Protection level: D		
Material: PVC	**Method:** HSA	**Casing Size:** 8-1/4 in. ID
Dpth to ∇ 10 ft.		
Screen: 10 ft.	**Riser:** 8 ft.	**Diam.:** 2 in. ID

Depth Ft.	Recovery	Sample No.	Sample Depth	CLP/Screening	Soil/Rock Description and comments	Lithologic symbol	Soil class.	Blows/6-in.	Headspace (ppm)
							SP		
								Posthole to 4 feet	1
					Fine quartz SAND, off-white, loose, dry, well-sorted, subrounded, moist at 8 ft.				0
								1	
								3	
5	60							3	0
								7	
								5	
								5	
	60							6	0
							SP	7	
								3	
								4	
	60	44B00701	8-10'	SCR				5	0
								8	
10								3	∇
								5	
	90				Fine SAND with silt, dark brown, loose, wet			6	0
								7	
								4	
								6	
	70							7	0
								10	
								5	
								10	
15	90							11	0
								15	
								8	
								13	
	90							20	0
								14	
20									

 ABB ENVIRONMENTAL SERVICES, INC.

DEPARTMENT OF THE NAVY

SOUTHERN DIVISION
NAVAL FACILITIES ENGINEERING COMMAND
CHARLESTON, SC.

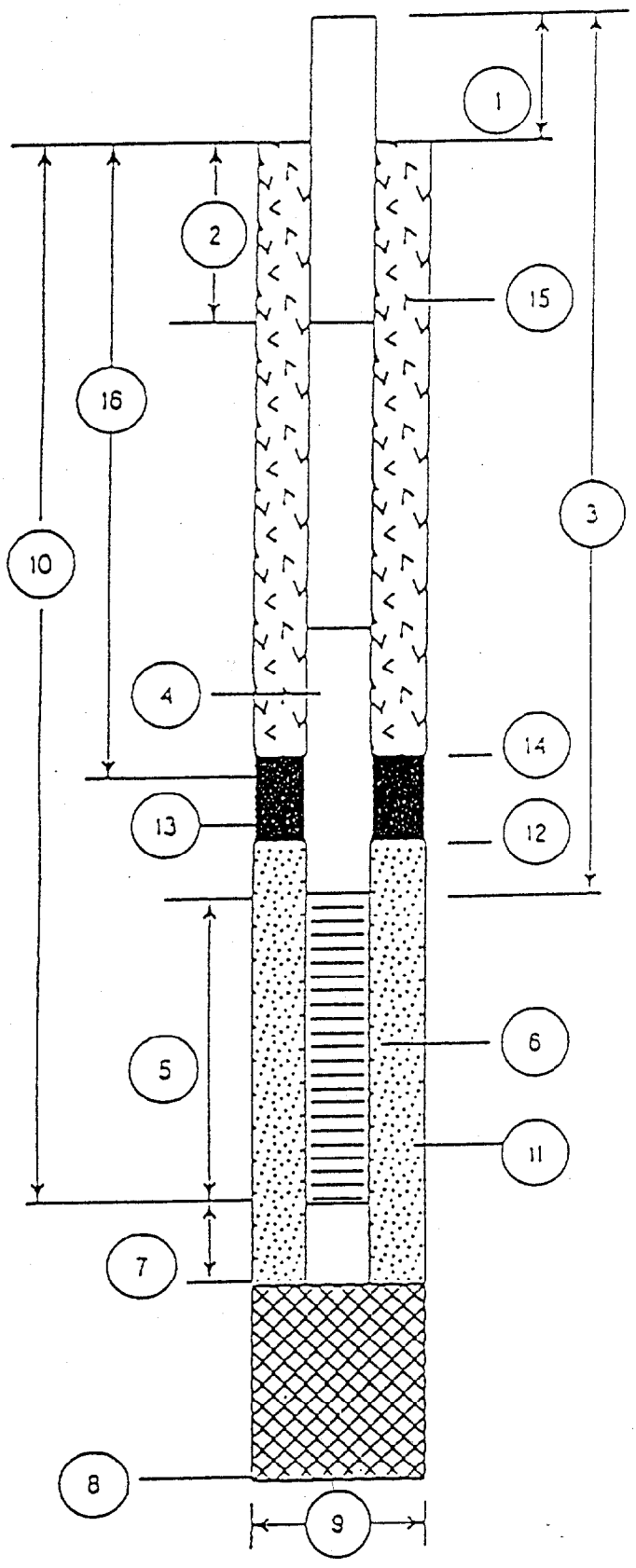

WELL CONSTRUCTION DETAIL

WELL NUMBER: OLD-44-07

DATE OF INSTALLATION: 11-20/95

1. Height of Casing above ground: FM
2. Depth to first Coupling: 8'

   Coupling Interval Depths: NA
3. Total Length of Riser Pipe: 8'
4. Type of Riser Pipe: 2" sched 40 PVC
5. Length of Screen: 10'
6. Type of Screen: 2" sched 40 pvc 0.010 slo
7. Length of Sump: 6"
8. Total Depth of Boring: 18'
9. Diameter of Boring: 10"
10. Depth to Bottom of Screen: 18'
11. Type of Screen Filter: Silica Sand

    Quantity Used: 550 lb Size: 20/30
12. Depth to Top of Filter: 6'
13. Type of Seal: fine Sand / bentonite

    Quantity Used: ——
14. Depth to Top of Seal: 4'
15. Type of Grout: Neat cement

    Grout Mixture:

    Method of Placement: tremie
16. Tot. Depth of 6 in. Steel Casing: NA

GROUNDWATER SAMPLE FIELD DATA

Project: BRAC NTC Orlando
Point of Interest: SA 44 OLD-44-07
Project Number: 8519.10
Date: 12/6/95
Sample Location ID: 44G00701
Time: Start: 1447 End: 1555
Signature of Sampler: John Mark

Water Level/Well Data

Well Depth _____ Ft. ___ Measured ___ Historical

✓ Top of Well ___ Top of Protective Casing

Well Riser Stick-up (from ground) FM Ft.

Protective Casing/Well Difference FM Ft.

Protective Casing FM Ft.

Depth to Water 9.44 Ft.

Well Material: ✓ PVC ___ SS

Well Locked?: ✓ Yes ___ No

Well Dia. ✓ 2 inch ___ 4 inch ___ 6 inch

Water Level Equip. Used: ✓ Elect. Cond. Probe ___ Float Activated ___ Press. Transducer

Height of Water Column _____ Ft. X ✓ .16 Gal/Ft. (2 in.) ___ .65 Gal/Ft. (4 in.) ___ 1.5 Gal/Ft. (6 in.) ___ Gal/Ft. (__ in.) = _____ Gal/Vol; 6.0 Total Gal Purged

Well Integrity:	Yes	No
Prot. Casing Secure	✓	
Concrete Collar Intact	✓	
Other		

Equipment Documentation

Purging/Sampling Equipment Used:

(✓ If Used For) Purging	Sampling		Equipment ID
✓	✓	Peristaltic Pump	
		Submersible Pump	
		Bailer	
		PVC/Silicon Tubing	
✓	✓	Teflon/Silicon Tubing	
		Airlift	
		Hand Pump	
		In-line Filter	
		Press/Vac Filter	

Decontamination Fluids Used:

(✓ All That Apply at Location)

- ___ Methanol (100%)
- ___ 25% Methanol/75% ASTM Type II water
- ✓ Deionized Water
- ___ Liquinox Solution
- ___ Hexane
- ___ HNO_3/D.I. Water Solution
- ___ Potable Water
- ___ None
- ✓ Alconox
- ✓ Isopropyl

Field Analysis Data

Ambient Air VOC Ø ppm Well Mouth Ø ppm

Field Data Collected ___ In-line ✓ In Container

Sample Observations: ___ Turbid ___ Clear ___ Cloudy ___ Colored ___ Odor

Purge Data	@ 2.0 Gal.	@ 3.0 Gal.	@ 4.0 Gal.	@ 5.0 Gal.	@ 6.0 Gal.
Temperature, Deg. C	28.0	28.0	28.0	28.0	28.0
pH, units	5.64	5.41	5.50	5.52	5.58
Specific Conductivity (umhos/cm. @ 25 Deg. C.)	78	80	80	80	80
Oxidation - Reduction, +/- mv					
~~Dissolved Oxygen, ppm~~ Turbidity (NTU)	198.2	197.7	198.5	198.8	198.9

Sample Collection Requirements

(✓ If Required at this Location)

Analytical Parameter	✓ If Field Filtered	Preservation Method	Volume Required	✓ If Sample Collected	Sample Bottle IDs
VOA		HCL	120 mL	✓	/ / /
SVOA		4OC	2.5 L	✓	/ / /
Pest/PCB		4OC	2.5 L	✓	/ / /
Inorganics		HNO_3	1 L	✓	/ / /
Explosives		4°C			/ / /
TPH		H_2SO_4			/ / /
TOC		H_2SO_4			/ / /
Nitrate		H_2SO_4			/ / /

Notes:

Low Flow Sampling

Project: NTC Orlando	**Site:** SA 44	**Boring ID:** OLD-44-08
Client: SOUTHDIVNAVFACENGCOM		**Job No.:** 08519.10
Contractor: Groundwater Protection, Inc.	**Date started:** 11-20-95	**Compltd:** 11-20-95
ABB Rep.: WDO	**Type of OVM:** Porta FID	**Total Depth:** 18 ft.ft.	**Protection level:** D
Material: PVC	**Method:** HSA	**Casing Size:** 6-1/4 in.	**Dpth to ∇** 10 ft.
Screen: 10 ft.	**Riser:** 8 ft.	**Diam.:** 2 in. ID

Depth Ft.	Recovery	Sample No.	Sample Depth	CLP/Screening	Soil/Rock Description and comments	Lithologic symbol	Soil class.	Blows/6-in.	Headspace (ppm)
							SP	Posthole to 4 feet	0
									0
					Fine quartz SAND, off-white, loose, dry, some construction debris in upper 2 ft.			1	
								2	
5	60							3	0
								4	
								1	
								3	
	70							8	0
								10	
								9	
								8	
	80	44B00801	8-10'	SCR				7	0
								11	
10								15	∇
							SP	8	
	50							13	0
								19	
					Fine SAND with silt, dark brown, wet at 10 ft., saturated at 12 ft., well-sorted, subrounded			12	
								11	
	60							18	0
								15	
								5	
								4	
15	80							8	0
								4	
								20	
								18	
	90							21	0
								21	
20									

 ABB ENVIRONMENTAL SERVICES, INC.

DEPARTMENT OF THE NAVY

SOUTHERN DIVISION
NAVAL FACILITIES ENGINEERING COMMAND
CHARLESTON, SC.

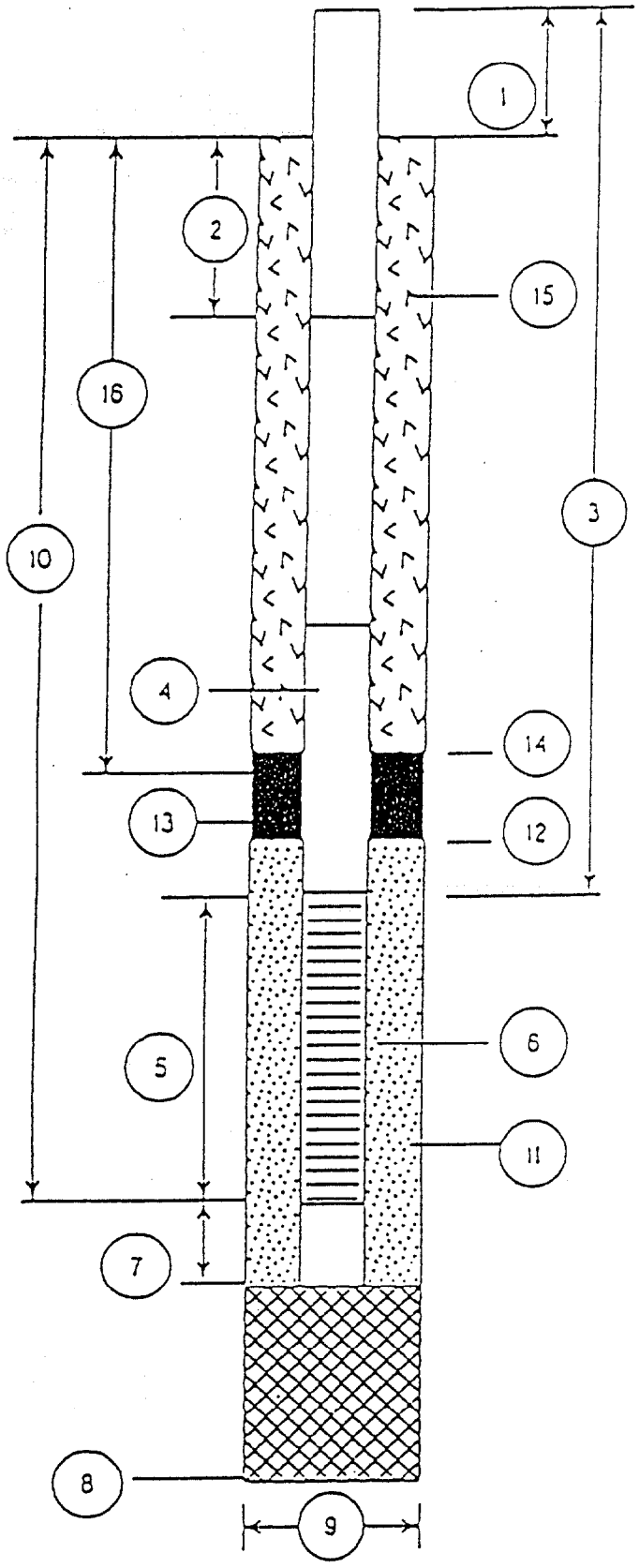

WELL CONSTRUCTION DETAIL

WELL NUMBER: OLD-44-08

DATE OF INSTALLATION: 11-20/95

1. Height of Casing above ground: FM
2. Depth to first Coupling: 8'

   Coupling Interval Depths: NA
3. Total Length of Riser Pipe: 8'
4. Type of Riser Pipe: 2" sched 40 PVC
5. Length of Screen: 10'
6. Type of Screen: 2" sched. 40 PVC 0.010 slot
7. Length of Sump: 6"
8. Total Depth of Boring: 18'
9. Diameter of Boring: 10"
10. Depth to Bottom of Screen: 18'
11. Type of Screen Filter: Silica sand

    Quantity Used: 550 lb Size: 20/30
12. Depth to Top of Filter: 6'
13. Type of Seal: fine Sand/ Bentonite

    Quantity Used: ____
14. Depth to Top of Seal: 4'
15. Type of Grout: Neat cement

    Grout Mixture:

    Method of Placement: tremie
18. Tot. Depth of 6 in. Steel Casing: NA

GROUNDWATER SAMPLE FIELD DATA

Project: BRAC NTC Orlando
Project Number: 8519.10
Sample Location ID: 44G00801
Time: Start: 1532 End: 1632

Point of Interest: SA 44 OLD-44-08
Date: 12/5/95
Signature of Sampler: John Marsh

Water Level/Well Data

Well Depth _____ Ft. ___ Measured ___ Historical

✓ Top of Well ___ Top of Protective Casing

Well Riser Stick-up (from ground) FM Ft.

Protective Casing/Well Difference FM Ft.

Protective Casing FM Ft.

Depth to Water 9.47 Ft.

Well Material: ✓ PVC ___ SS

Well Locked?: ✓ Yes ___ No

Well Dia. ✓ 2 inch ___ 4 inch ___ 6 inch

Water Level Equip. Used: ✓ Elect. Cond. Probe ___ Float Activated ___ Press. Transducer

Height of Water Column _____ Ft. X ✓ .16 Gal/Ft. (2 in.) ___ .65 Gal/Ft. (4 in.) ___ 1.5 Gal/Ft. (6 in.) ___ Gal/Ft. (__in.) = _____ Gal/Vol; 4.0 Total Gal Purged

Well Integrity:	Yes	No
Prot. Casing Secure	✓	
Concrete Collar Intact	✓	
Other _____		

Equipment Documentation

Purging/Sampling Equipment Used:

(✓ If Used For) Purging	Sampling		Equipment ID
✓	✓	Peristaltic Pump	
		Submersible Pump	
		Bailer	
		PVC/Silicon Tubing	
✓	✓	Teflon/Silicon Tubing	
		Airlift	
		Hand Pump	
		In-line Filter	
		Press/Vac Filter	

Decontamination Fluids Used:

(✓ All That Apply at Location)
___ Methanol (100%)
___ 25% Methanol/75% ASTM Type II water
✓ Deionized Water
___ Liquinox Solution
___ Hexane
___ HNO_3/D.I. Water Solution
___ Potable Water
___ None
✓ Alconox
✓ Isopropyl

Field Analysis Data

Ambient Air VOC Ø ppm Well Mouth Ø ppm

Field Data Collected ___ In-line ✓ In Container

Sample Observations: ___ Turbid ___ Clear ___ Cloudy ___ Colored ___ Odor

Purge Data	@ 1 Gal.	@ 2 Gal.	@ 3.0 Gal.	@ 3.5 Gal.	@ 4.0 Gal.
Temperature, Deg. C	28.0	26.0	26.0	26.0	26.0
pH, units	6.02	6.19	6.11	6.08	6.06
Specific Conductivity (umhos/cm. @ 25 Deg. C.)	160	142	130	130	128
Oxidation - Reduction, +/- mv					
~~Dissolved Oxygen, ppm~~ Turbidity (NTU)	42.8	32.3	29.2	25.3	26.7

Sample Collection Requirements

(✓ If Required at this Location)

Analytical Parameter	✓ If Field Filtered	Preservation Method	Volume Required	✓ If Sample Collected	Sample Bottle IDs
VOA		HCL	120 mL	✓	/ / /
SVOA		4°C	2.5 L	✓	/ / /
Pest/PCB		4°C	2.5 L	✓	/ / /
Inorganics		HNO_3	1 L	✓	/ / /
Explosives		4°C			/ / /
TPH		H_2SO_4			/ / /
TOC		H_2SO_4			/ / /
Nitrate		H_2SO_4			/ / /

Notes: Low Flow Sampling

Project: BRAC NTC		**Site:** S.A. 44	**Boring ID:** OLD-44-09
Client: SOUTHDIVNAVFACENGCOM			**Job No.:** 8519.10
Contractor: GPI		**Date started:** 07/31/98	**Compltd:** 07/31/98
Method: HSA	**Casing Size:** 6-1/4" ID	**Screen Int.:** 10 ft.	**Protection level:** D
Ground Elev.:	**Type of OVM.:** Porta FID II	**Total depth:** 16Ft.	**Dpth to ∇** 9 Ft.
Logged by: WDO	**Material:** PVC		

Depth Ft.	Sample ID (Depth) (Type)	Split Spoon	Recovery	Headspace (ppm)	Soil/Rock Description and comments	Lithologic symbol	Soil class.	Blows/6-in.
					Brown/tan fine SAND and SILT, some construction debris		SM	
				0				Posthole
				0	Off-white fine SAND, mottled with brown silt		SP	9,16,21,11
5			50%					
				0				18,22,16,14
			10%					
				0				15,10,9,14
			20%					∇
10				0				8,8,11,20
			80%					
				0				5,8,12,16
			90%		Dark brown silty fine SAND		SM	
				0				4,3,9,12
15			70%					
					Boring terminated at 16 feet bgs			
20								

 ABB ENVIRONMENTAL SERVICES, INC.

DEPARTMENT OF THE NAVY

SOUTHERN DIVISION
NAVAL FACILITIES ENGINEERING COMMAND
CHARLESTON, SC.

WELL CONSTRUCTION DETAIL

WELL NUMBER: OLD-44-09

DATE OF INSTALLATION: 8-1/90

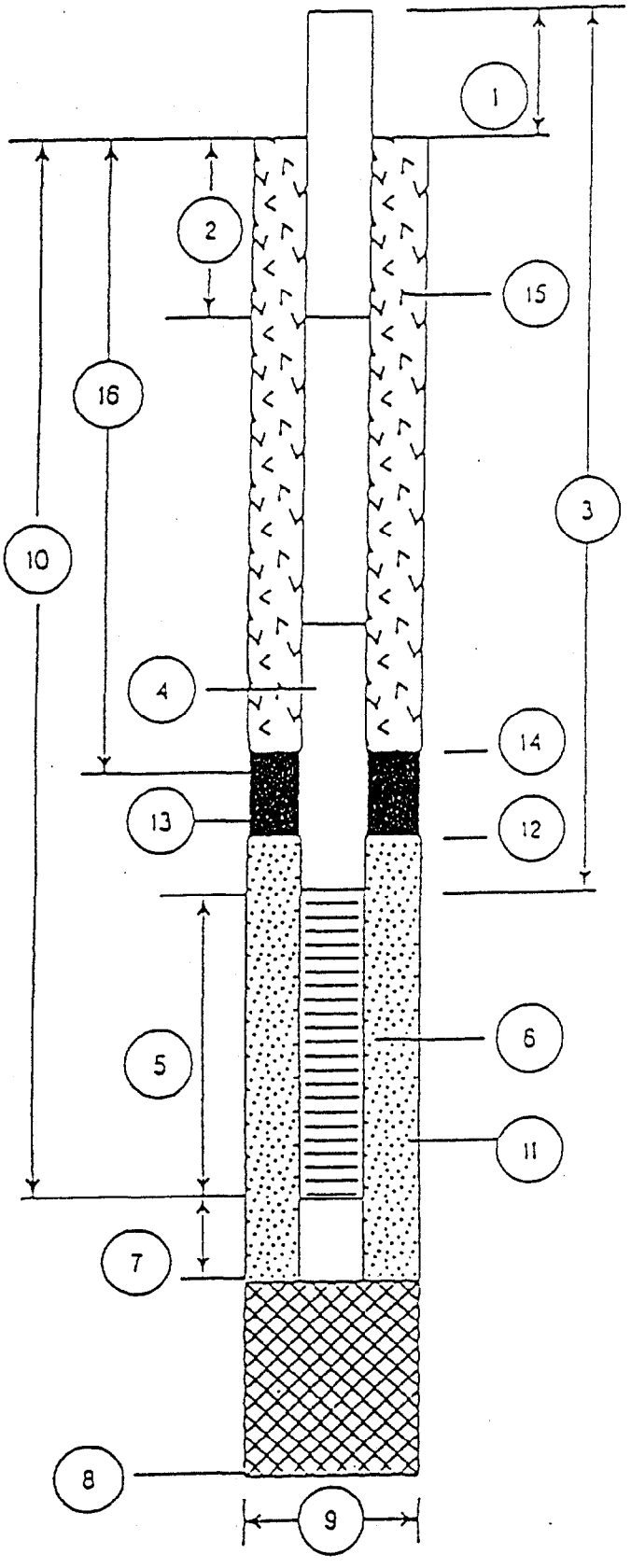

1. Height of Casing above ground: FM
2. Depth to first Coupling: 6'

   Coupling Interval Depths: NA
3. Total Length of Riser Pipe: 6'
4. Type of Riser Pipe: 2" Sched. 40 PVC
5. Length of Screen: 10'
6. Type of Screen: 2" Sched. 40 PVC 0.010 slot
7. Length of Sump: 6"
8. Total Depth of Boring: 16'
9. Diameter of Boring: 10"
10. Depth to Bottom of Screen: 16'
11. Type of Screen Filter: Silica

    Quantity Used: 550 lb Size: 20/30
12. Depth to Top of Filter: 4'
13. Type of Seal: Fine Sand / Bentonite

    Quantity Used: ——
14. Depth to Top of Seal: 2'
15. Type of Grout: Neat Cement

    Grout Mixture:

    Method of Placement: Pour
16. Tot. Depth of 6 in. Steel Casing: NA

GROUNDWATER SAMPLE FIELD DATA

Project: NTC ORLANDO Site Screening
Point of Interest: SA 44
Project Number: 08519.10
Date: 8-6/96
Sample Location ID: OLD-44-09
Time: Start: 0935 End: 1043
Signature of Sampler: [signature] D. Olser

Water Level/Well Data

Well Depth 16 Ft.
___ Measured
X Historical

X Top of Well
___ Top of Protective Casing

Well Riser Stick-up (from ground) NA Ft.

Protective Casing/Well Difference NA Ft.

Protective Casing NA Ft.

Depth to Water 7.78 Ft.

Well Material:
X PVC
___ SS

Well Locked?:
X Yes
___ No

Well Dia.
X 2 inch
___ 4 inch
___ 6 inch

Water Level Equip. Used:
X Elect. Cond. Probe
___ Float Activated
___ Press. Transducer

Height of Water Column 8.02 Ft. X
___ .16 Gal/Ft. (2 in.)
___ .65 Gal/Ft. (4 in.)
___ 1.5 Gal/Ft. (6 in.)
___ Gal/Ft. (__ in.)
= ___ Gal/Vol
___ Total Gal Purged

Well Integrity:	Yes	No
Prot. Casing Secure		
Concrete Collar Intact	✓	
Other		

Equipment Documentation

Purging/Sampling Equipment Used:

(✓ If Used For)

Purging	Sampling		Equipment ID
X	X	Peristaltic Pump	
		Submersible Pump	
		Bailer	
		PVC/Silicon Tubing	
X	X	Teflon/Silicon Tubing	
		Airlift	
		Hand Pump	
		In-line Filter	
		Press/Vac Filter	

Decontamination Fluids Used:

(✓ All That Apply at Location)
___ Methanol (100%)
___ 25% Methanol/75% ASTM Type II water
X Deionized Water
___ Liquinox Solution
___ Hexane
___ HNO_3/D.I. Water Solution
___ Potable Water
___ None

Field Analysis Data

Ambient Air VOC Ø ppm Well Mouth Ø ppm

Field Data Collected ___ In-line X In Container

Sample Observations: ___ Turbid X Clear ___ Cloudy ___ Colored ___ Odor

Purge Data	@ ___ Gal.	@ ___ Gal.	@ ___ Gal.	@ ___ Gal.	@ ___ Gal.
Temperature, Deg. C	25 ~~6.37~~	25	25	25	25
pH, units	6.37	6.26	6.17	6.14	6.21
Specific Conductivity (umhos/cm. @ 25 Deg. C.)	192	190	188	188	187
NTU	4.17	3.96	4.12	3.48	3.90
~~Oxidation - Reduction, +/- mv~~					
~~Dissolved Oxygen, ppm~~					

Sample Collection Requirements

(✓ If Required at this Location)

Analytical Parameter	✓ If Field Filtered	Preservation Method	Volume Required	✓ If Sample Collected	Sample Bottle IDs
VOA		HCL	9 x 40ml	✓	446-0070 / MS / MSD /
SVOA		4°C			/ / /
Pest/PCB		4°C			/ / /
Inorganics		HNO_3			/ / /
Explosives		4°C			/ / /
TPH		H_2SO_4			/ / /
TOC		H_2SO_4			/ / /
Nitrate		H_2SO_4			/ / /

Notes:

Project: BRAC NTC		**Site:** S.A. 44	**Boring ID:** OLD-44-10
Client: SOUTHDIVNAVFACENGCOM			**Job No.:** 8519.10
Contractor: GPI		**Date started:** 07/31/98	**Compltd:** 07/31/98
Method: HSA	**Casing Size:** 6-1/4" ID	**Screen Int.:** 10 ft.	**Protection level:** D
Ground Elev.:	**Type of OVM.:** Porta FID II	**Total depth:** 14Ft.	**Dpth to ⊽** 6 Ft.
Logged by: WDO	**Material:** PVC		

Depth Ft.	Sample ID (Depth) (Type)	Split Spoon	Recovery	Headspace (ppm)	Soil/Rock Description and comments	Lithologic symbol	Soil class.	Blows/6-in.
				0	Gray fine SAND and SILT, construction debris		SM	Posthole
				0	Tan fine SAND with SILT		SP	4,5,6,3
5			50%	0				3,3,4,8 ⊽
			90%	0				5,18,18,20
			90%	0	Dark brown silty SAND, some wood debris at 10 feet		SM	25,25,30,22
10			90%					
					Boring terminated at 14 feet bgs			
15								

 ABB ENVIRONMENTAL SERVICES, INC.

DEPARTMENT OF THE NAVY

SOUTHERN DIVISION
NAVAL FACILITIES ENGINEERING COMMAND
CHARLESTON, SC.

WELL CONSTRUCTION DETAIL

WELL NUMBER: OLD-44-~~09~~ WAD 10

DATE OF INSTALLATION: 8-1/96

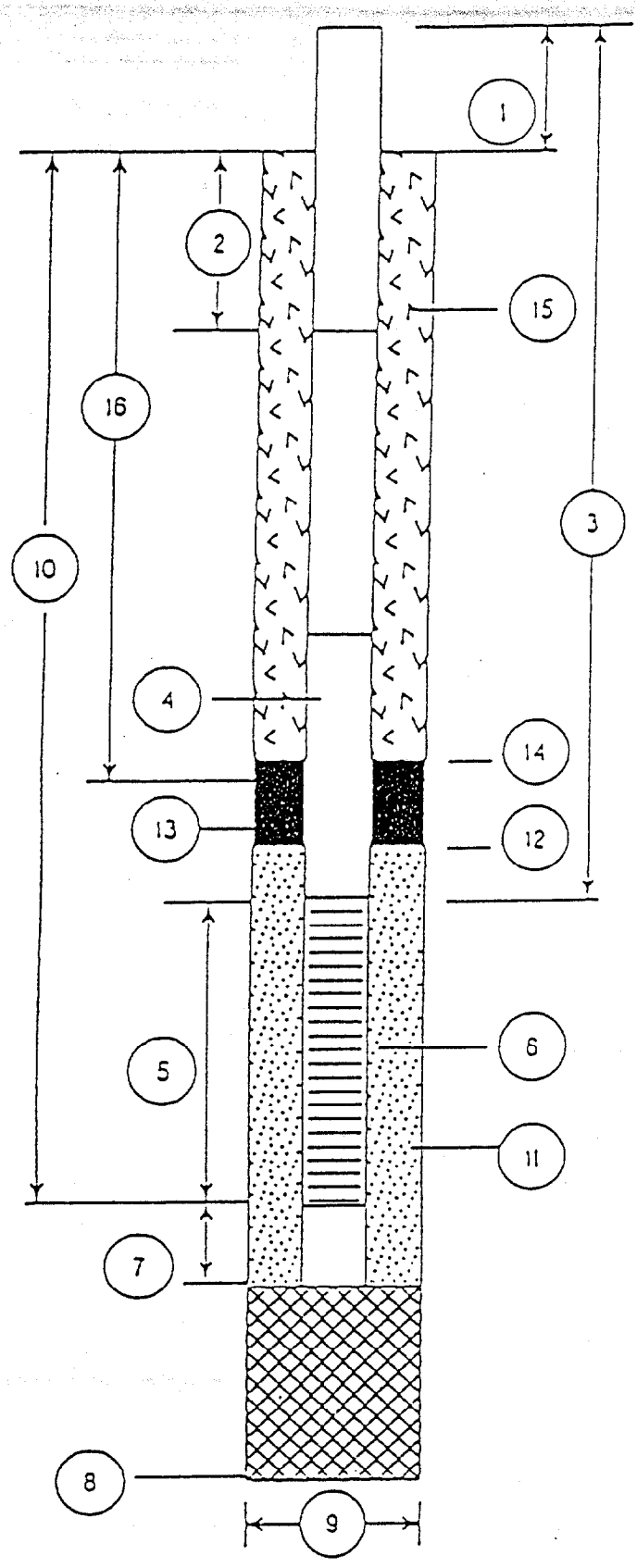

1. Height of Casing above ground: FM
2. Depth to first Coupling: 4'
   Coupling Interval Depths: NA
3. Total Length of Riser Pipe: 4'
4. Type of Riser Pipe: 2" sched 40 PVC
5. Length of Screen: 10'
6. Type of Screen: 2" sched 40 PVC 0.010 slot
7. Length of Sump: 6"
8. Total Depth of Boring: 14'
9. Diameter of Boring: 10"
10. Depth to Bottom of Screen: 14'
11. Type of Screen Filter: Silica Sand
    Quantity Used: 50 lb Size: 20/30
12. Depth to Top of Filter: 3'
13. Type of Seal: bentonite
    Quantity Used: ____
14. Depth to Top of Seal: 1.5
15. Type of Grout: Neat Cement
    Grout Mixture:
    Method of Placement: Pour
16. Tot. Depth of 6 in. Steel Casing: NA

GROUNDWATER SAMPLE FIELD DATA

Project: NTC ORLANDO SITE SCREENING Point of Interest: SA44
Project Number: 08519.10 Date: 8-6/96
Sample Location ID: OLD-44-10
Time: Start: 1402 End: 1455 Signature of Sampler: [illegible]

Water Level/Well Data

Well Depth 14 ft. — ___ Measured / X Historical — X Top of Well / ___ Top of Protective Casing / ___ ___ — Well Riser Stick-up (from ground) NA ft. — Protective Casing/Well Difference NA ft. — Protective Casing NA ft.

Depth to Water 5.13 ft. — Well Material: X PVC / ___ SS / ___ — Well Locked?: X Yes / ___ No — Well Dia. X 2 inch / ___ 4 inch / ___ 6 inch / ___ ___ — Water Level Equip. Used: X Elect. Cond. Probe / ___ Float Activated / ___ Press. Transducer / ___ ___

Height of Water Column 8.87 ft. X X .16 Gal/ft. (2 in.) / ___ .65 Gal/ft. (4 in.) / ___ 1.5 Gal/ft. (6 in.) / ___ ___ Gal/ft. (___ in.) = ___ Gal/Vol; 5 gal Total Gal Purged

Well Integrity:	Yes	No
Prot. Casing Secure	___	___
Concrete Collar Intact	X	___
Other ___	___	___

Equipment Documentation

Purging/Sampling Equipment Used:

(✓ If Used For) Purging	Sampling		Equipment ID
X	X	Peristaltic Pump	
___	___	Submersible Pump	
___	___	Bailer	
		PVC/Silicon Tubing	
X	X	Teflon/~~Silicon~~ Tubing	
___	___	Airlift	
___	___	Hand Pump	
___	___	In-line Filter	
___	___	Press/Vac Filter	
___	___		

Decontamination Fluids Used:

(✓ All That Apply at Location)
- ___ Methanol (100%)
- ___ 25% Methanol/75% ASTM Type II water
- X Deionized Water
- ___ Liquinox Solution
- ___ Hexane
- ___ HNO_3/D.I. Water Solution
- ___ Potable Water
- ___ None
- ___ ___
- ___ ___

Field Analysis Data

Ambient Air VOC Ø ppm Well Mouth Ø ppm Field Data Collected ___ In-line / X In Container

Sample Observations: X Turbid / ___ Clear / ___ Cloudy / X Colored / ___ Odor

Purge Data	@ ___ Gal.	@ ___ Gal.	@ ___ Gal.	@ ___ Gal.	@ ___ Gal.
Temperature, Deg. C	29.5	27.5	27	27	27
pH, units	5.93	5.69	6.10	6.14	6.17
Specific Conductivity	121	118	110	108	108
(umhos/cm. @ 25 Deg. C.)NTU	7200	7200	7200	7200	7200
~~Dissolved Oxygen, ppm~~					

Sample Collection Requirements

(✓ If Required at this Location)

Analytical Parameter	✓ If Field Filtered	Preservation Method	Volume Required	✓ If Sample Collected	Sample Bottle IDs
VOA	___	HCL	6x40ml	X	4460001, D / ___ / ___ / ___
SVOA	___	4OC		___	___ / ___ / ___ / ___
Pest/PCB	___	4OC		___	___ / ___ / ___ / ___
Inorganics	___	HNO_3		___	___ / ___ / ___ / ___
Explosives	___	4°C		___	___ / ___ / ___ / ___
TPH	___	H_2SO_4		___	___ / ___ / ___ / ___
TOC	___	H_2SO_4		___	___ / ___ / ___ / ___
Nitrate	___	H_2SO_4		___	___ / ___ / ___ / ___

Notes: ___

APPENDIX D

GEOPHYSICAL SURVEY TECHNICAL MEMORANDUM, ALLEGED SILK SCREENING DISPOSAL AREA STUDY AREA 44

TECHNICAL MEMORANDUM
GEOPHYSICAL SURVEYS

STUDY AREA 44, ALLEGED DISPOSAL AREA FOR SILK SCREENING SUPPLIES

NAVAL TRAINING CENTER, ORLANDO
ORLANDO, FLORIDA

Unit Identification Code (UIC): N65928

Contract No. N62467-89-D-0317

Prepared by:

ABB Environmental Services, Inc.
2590 Executive Center Circle, East
Tallahassee, Florida 32301

Prepared for:

Department of the Navy, Southern Division
Naval Facilities Engineering Command
2155 Eagle Drive
North Charleston, South Carolina 29418

Barbara Nwokike, Code 1873, Engineer-in-Charge

MARCH 1996

INTRODUCTION

The alleged disposal area for old silk-screening supplies was named in an ABB Environmental Services, Inc., report entitled "Technical Memorandum, U.S. Air Force records Search, Naval Training Center, Orlando," (September 1995). The Alleged Silk Screening Disposal Area (designated AEC-MB-8 in the above-referenced document) is reportedly under a grassy area north of Building 2723 and south of Building 2720 (Figure 1). Material buried may have included xylenes, microthinners, inks, and paints. Geophysical surveys were conducted to locate the alleged disposal site(s) to guide additional site exploration activities.

1.0 GEOPHYSICAL SURVEYS

Geophysical surveys at the alleged disposal area for old silk-screening supplies consisted of time domain metal detector (TDMD) and ground-penetrating radar (GPR). TDMD instrumentation consisted of a Geonics EM-61 with high capacity data logger. GPR instrumentation consisted of a GSSI SIR System III with 500 MHz antenna.

1.1 **TDMD SURVEY**. The TDMD survey was completed on September 20, 1995. Individual traverses were operated in a north-south orientation with a spacing between traverses of 5 feet (Figure 1). Thirty-one traverses of 225-foot length were completed. Data were acquired along each traverse at the rate of 1.60 readings per foot (1 reading every 19 centimeters).

The EM-61 TDMD was designed to map buried conductive objects, such as metal tanks, drums, and utilities. The instrument incorporates an antenna system consisting of a transmitter and receiver. The transmitter produces a series of electromagnetic (EM) wavelets that pulse into the earth 75 times per second. After each pulse, a secondary EM field is produced briefly from moderately conductive shallow soils, and for a longer period of time from buried metallic objects. Between primary EM pulses, a time delay is imposed upon the data logger to permit the secondary response from the soils to dissipate prior to the somewhat later and longer response from any buried metal that is present. The receiver senses the secondary responses from metallic objects and they are recorded by the data logger.

1.2 **GPR SURVEY**. The GPR survey was also completed on September 20, 1995. GPR traverses were identical to the TDMD survey.

The GPR technique uses high frequency radio waves to determine the presence of subsurface objects and structures. The radio wave energy is reflected from surfaces where there is a contrast in the electrical properties of subsurface materials, such as naturally occurring geologic horizons or manmade objects (e.g., buried utilities, tanks, drums). Typical applications for GPR include mapping buried utilities, and delineating the boundaries of buried hazardous waste materials and abandoned landfills.

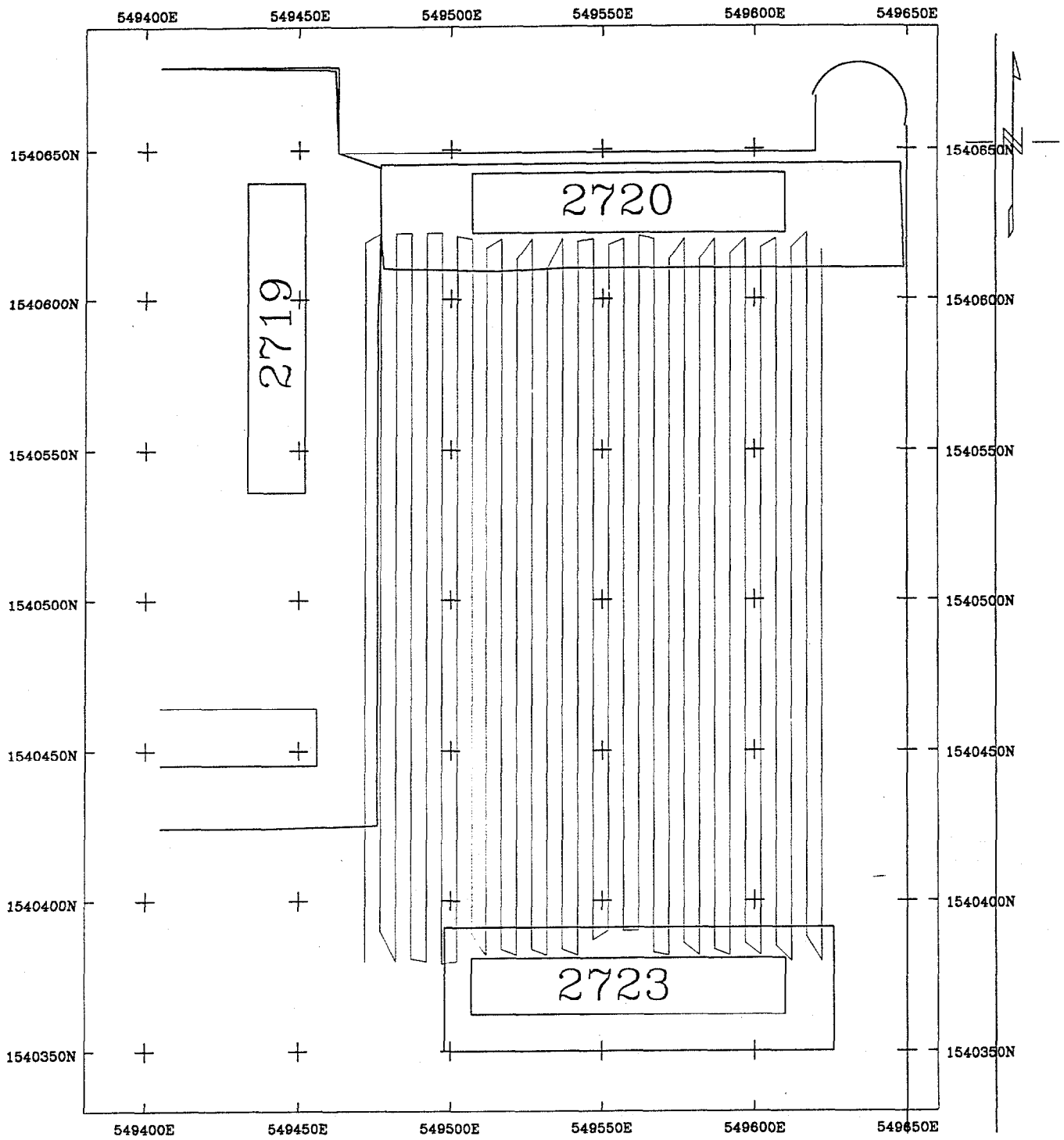

Scale 1:600

25 0 25 50

(feet)

SOUTHERN DIVISION

FIGURE 1. GEOPHYSICAL SURVEYS
TIME DOMAIN METAL DETECTOR AND
GROUND PENETRATING RADAR

STUDY AREA 44
ALLEGED DISPOSAL AREA FOR SILK SCREENING SUPPLIES
GROUPS I THROUGH V STUDY AREAS AND
MISCELLANEOUS ADDITIONAL SITES, ADDENDUM 1

ABB ENVIRONMENTAL SERVICES, INC.

2.0 DISCUSSION OF RESULTS

The results of the geophysical surveys are presented on Figures 2 through 4. Figure 2 presents TDMD contours (differential channel). Figures 3 and 4 show annotated GPR recordings, which illustrate significant features observed during this survey.

The TDMD contours show several features, including a utility corridor, high density contours associated with air handling equipment south of Building 2720 and north of Building 2723, and a rectangular anomaly in the north-central portion of the site, which is attributable to a concrete, steel-reinforced pad (presently a basketball court). The contours also show two elongated anomalies (Figure 2), which are not attributable to features observable at the surface (Figure 5).

One of the TDMD anomalies also is evidenced as an anomalous zone in GPR traverses (Figure 3). The locations for two monitoring wells were based on these two anomalies. The wells were sited downgradient from both geophysical anomalies.

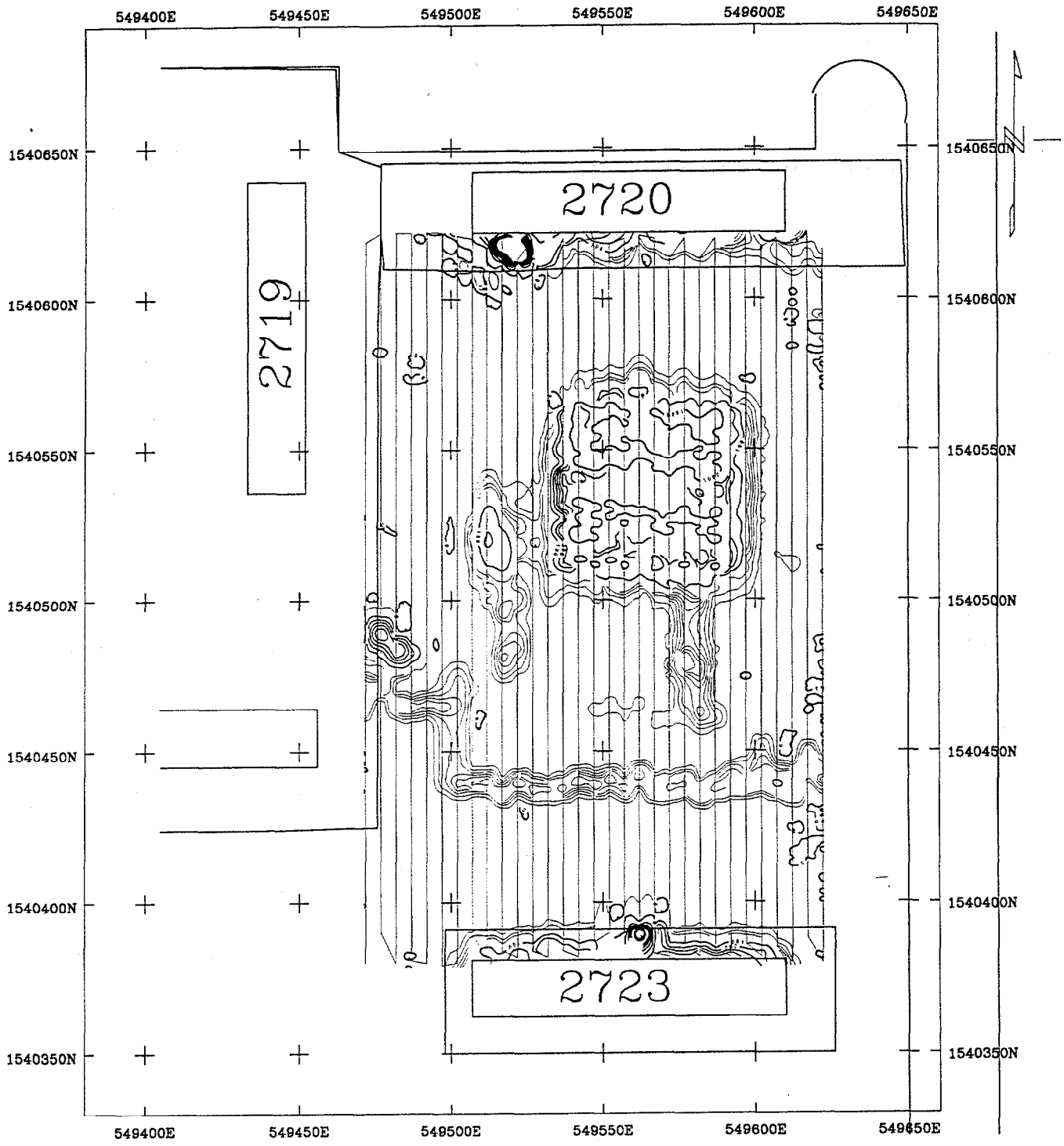

Scale 1:600

25 0 25 50

(feet)

SOUTHERN DIVISION

FIGURE 2. TIME DOMAIN METAL DETECTOR DIFFERENTIAL CONTOURS (CHANNEL 4)

STUDY AREA 44
ALLEGED DISPOSAL AREA FOR SILK SCREENING SUPPLIES
GROUPS I THROUGH V STUDY AREAS AND
MISCELLANEOUS ADDITIONAL SITES, ADDENDUM 1

ABB ENVIRONMENTAL SERVICES, INC.

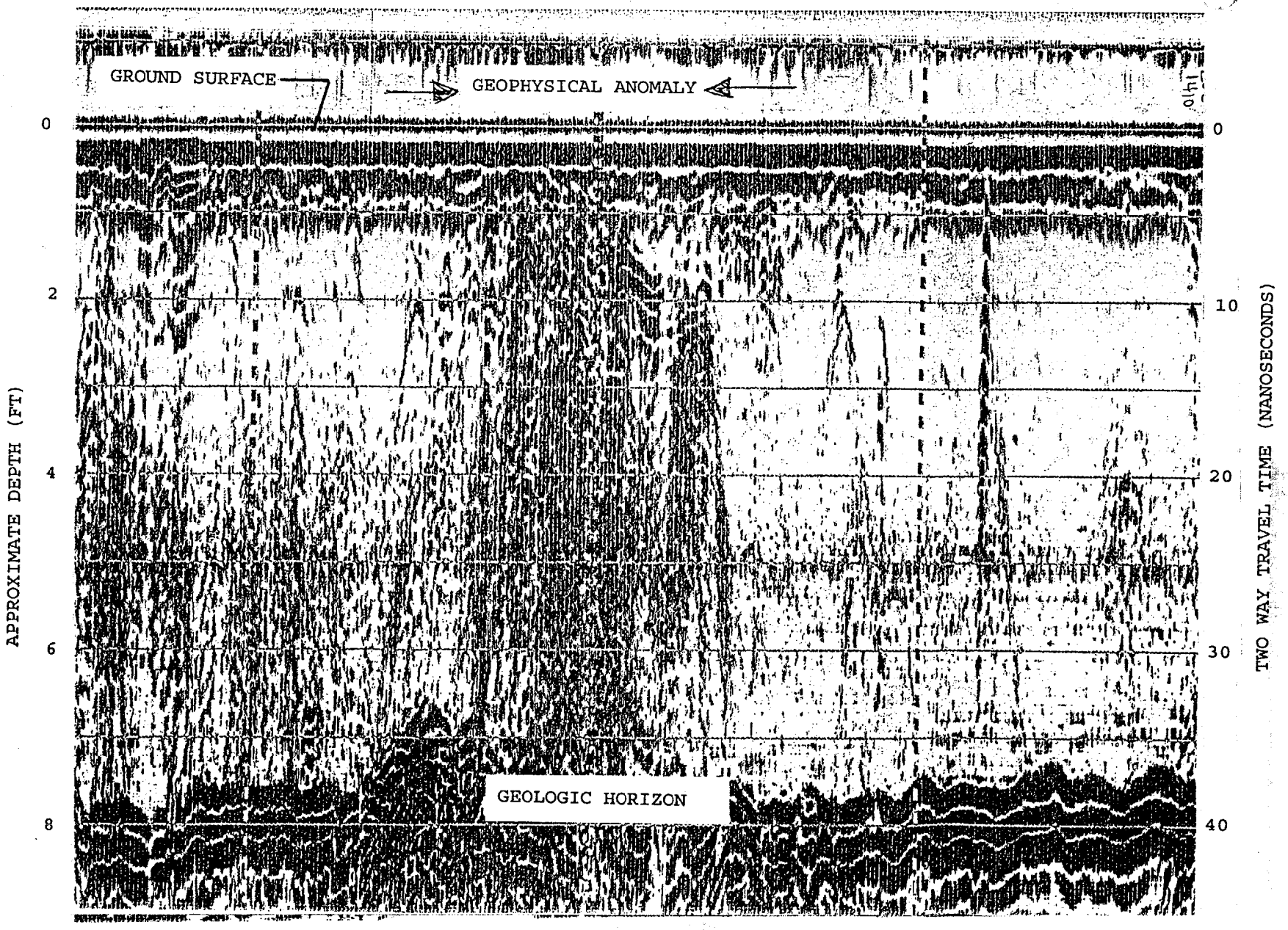

SOUTHERN DIVISION

FIGURE 3. GPR RECORDING

STUDY AREA 44
ALLEGED DISPOSAL AREA FOR SILK SCREENING SUPPLIES
GROUPS I THROUGH V STUDY AREAS AND
MISCELLANEOUS ADDITIONAL SITES, ADDENDUM 1

ABB ENVIRONMENTAL SERVICES, INC.

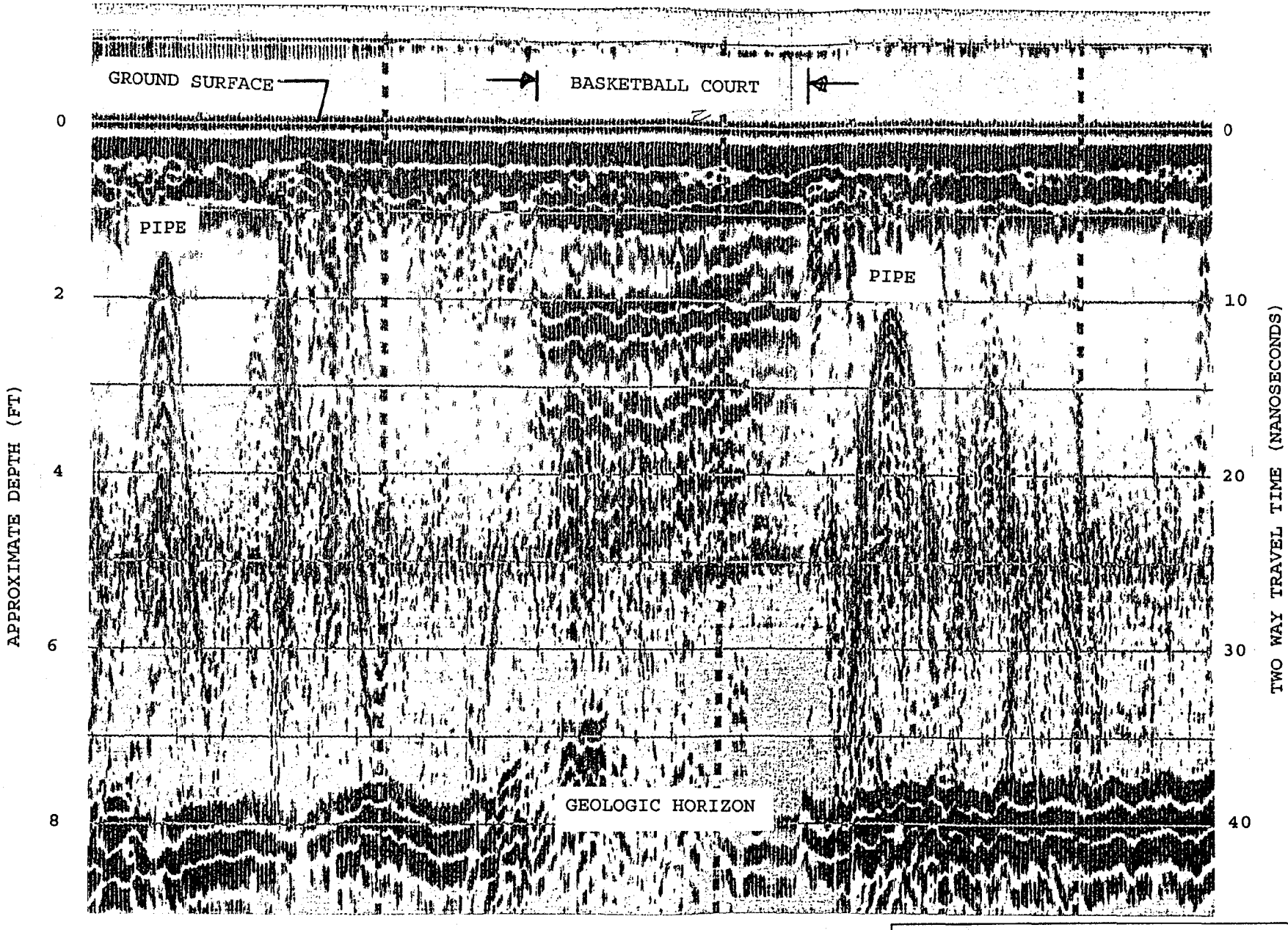

SOUTHERN DIVISION

FIGURE 4. GPR RECORDING

STUDY AREA 44
ALLEGED DISPOSAL AREA FOR SILK SCREENING SUPPLIES
GROUPS I THROUGH V STUDY AREAS AND
MISCELLANEOUS ADDITIONAL SITES, ADDENDUM 1

ABB ENVIRONMENTAL SERVICES

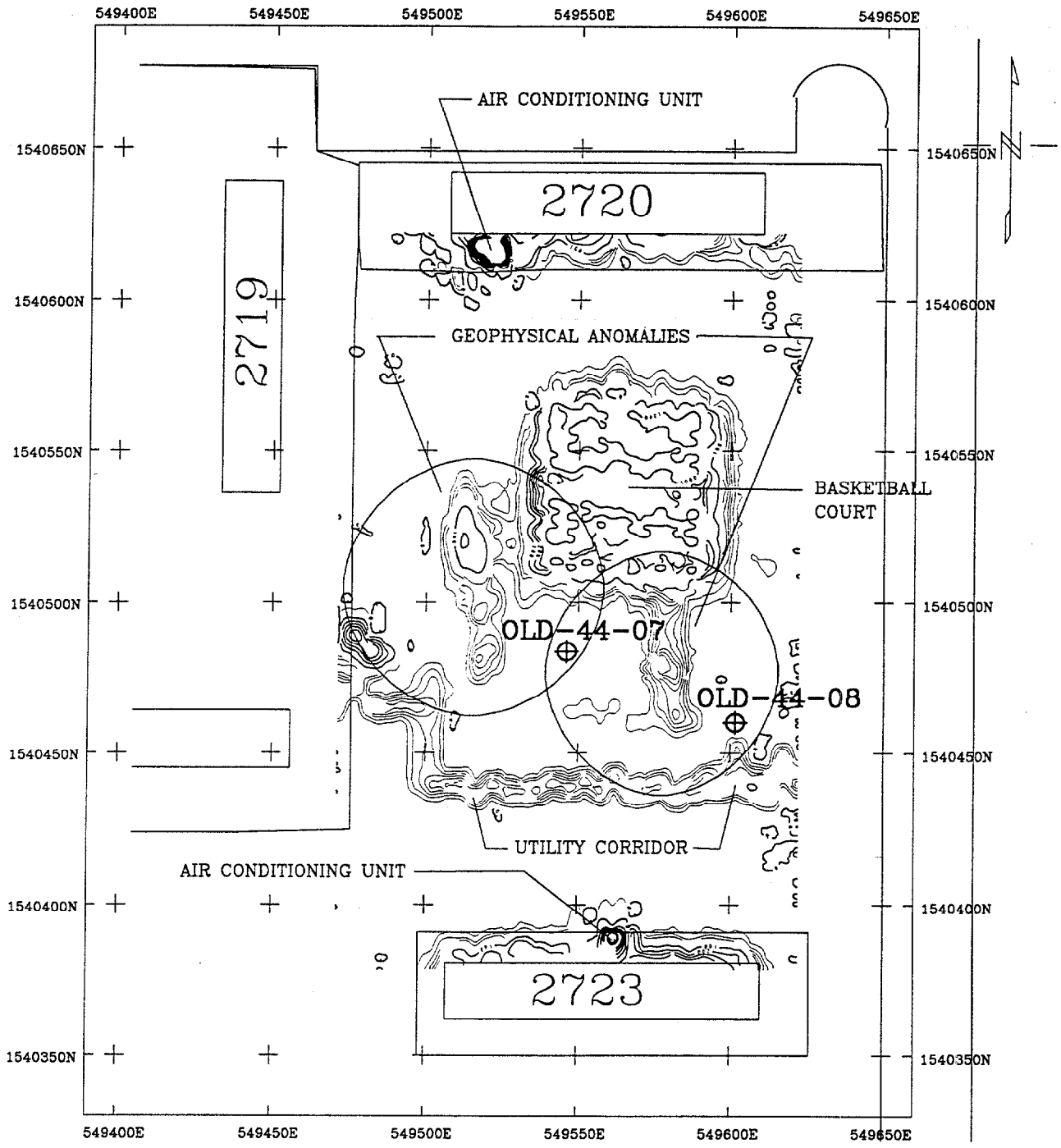

Scale 1:600

25 0 25 50

(feet)

SOUTHERN DIVISION

FIGURE 5. GEOPHYSICAL ANOMALIES AND MONITORING WELL LOCATION SELECTION

STUDY AREA 44
ALLEGED DISPOSAL AREA FOR SILK SCREENING SUPPLIES
GROUPS I THROUGH V STUDY AREAS AND
MISCELLANEOUS ADDITIONAL SITES, ADDENDUM 1

ABB ENVIRONMENTAL SERVICES, INC.

APPENDIX E

SUMMARY OF POSITIVE DETECTIONS
SOIL AND GROUNDWATER SAMPLES, STUDY AREA 44

E-1: Summary of Positive Detections in Subsurface Soil
E-2: Summary of Positive Detections in Groundwater

TABLE E-1

SUMMARY OF POSITIVE DETECTIONS IN SUBSURFACE SOIL

Appendix E

Table E-1. Summary of Positive Detections in Subsurface Soil
TCL Organics and TAL Inorganics
Study Area 44

Naval Training Center
Orlando, FL

Identifier	Background Screening [1]		SCG [2]		RBC [3] for Residential Soil		RBC [3] for Industrial Soil		44B00201		44B00401		44B00401D		44B00501		44B00601	
Lab_ID									G8772003		G8796006		G8796007		G8796005		G8796004	
Ft bls									10-12		3-4		3-4		2-3		8-10	
Sampling Date									16-Nov-95		20-Nov-95		20-Nov-95		20-Nov-95		20-Nov-95	
Inorganics, mg/kg																		
Aluminum	2,119		NC		78,000	n	1,000,000	n	451		14.1		13.3	B	200		18.3	B
Barium	3.6		NA		5,500	n	140,000	n			0.4	J	0.32	J	1.1	J	0.26	J
Calcium	115		NA		1,000,000		1,000,000		239	J	152	J	229	J	4750	J	232	J
Chromium	3.7		NA		390	n	10,000	n	1.5	B							2.3	B
Copper	NA		NA		3,100	n	82,000	n					0.47	B	1.6	B	0.93	B
Iron	264		NA		23,000	n	610,000.00	n	87.9	J					48.9	J	256	J
Lead	3.9		NA		400		400								2			
Magnesium	32.8		NA		460,468		460,468								46.2	B		
Manganese	2.1		NA		390	n	10,000	n	0.5	J					1.6	B	2	B
Mercury	NA		NA		23	n	610	n	0.01	B					0.03	B		
Volatile Organics, ug/kg																		
Acetone			NA		7,800,000	n	200,000,000	n	13		8	J	5	J	7	J	19	
Pesticides, ug/kg																		
4,4'-DDD			NA		2,700	c	24,000	c							12			
4,4'-DDE			NA		1,900	c	17,000	c							5.6			
4,4'-DDT			NA		1,900	c	17,000	c	1.7	J								
alpha-Chlordane			NA		490	c	4,400	c							3.9			
gamma-Chlordane			NA		490	c	4,400	c							4.8			

Appendix E

Table E-1. Summary of Positive Detections in Subsurface Soil
TCL Organics and TAL Inorganics
Study Area 44

Naval Training Center
Orlando, FL

Identifier	Background Screening [1]		SCG [2]		RBC [3] for Residential Soil		RBC [3] for Industrial Soil		44B00701		44B00801	
Lab_ID									G8796002		G8796003	
Ft bls									8-10		8-10	
Sampling Date									20-Nov-95		20-Nov-95	
Inorganics, mg/kg												
Aluminum	2,119		NC		78,000	n	1,000,000	n	543		17.1	B
Barium	3.6		NA		5,500	n	140,000	n	1.1	J	0.21	J
Calcium	115		NA		1,000,000		1,000,000		296	J		
Chromium	3.7		NA		390	n	10,000	n	2.4		1.5	B
Copper	NA		NA		3,100	n	82,000	n	1.5	B	0.74	B
Iron	264		NA		23,000	n	610,000.00	n	66.7	J	83.2	J
Lead	3.9		NA		400		400		2.5			
Magnesium	32.8		NA		460,468		460,468		5.3	B		
Manganese	2.1		NA		390	n	10,000	n	0.51	J	0.54	J
Mercury	NA		NA		23	n	610	n	0.02	B		
Volatile Organics, ug/kg												
Acetone			NA		7,800,000	n	200,000,000	n	6	J		
Pesticides, ug/kg												
4,4'-DDD			NA		2,700	c	24,000	c				
4,4'-DDE			NA		1,900	c	17,000	c				
4,4'-DDT			NA		1,900	c	17,000	c			1.8	J
alpha-Chlordane			NA		490	c	4,400	c				
gamma-Chlordane			NA		490	c	4,400	c				

Appendix E

Table E-1. Summary of Positive Detections in Subsurface Soil
TCL Organics and TAL Inorganics
Study Area 44

Naval Training Center
Orlando, FL

NOTES:

[1] The background screening value is twice the average of detected concentrations for inorganic analytes.
[2] SCG = Soil Cleanup Goals for Florida (Florida Department of Environmental Protection memorandum, September 29, 1995).
Leachability-based SCGs are not applicable for most metals (except aluminum) because groundwater standards for the specific analyte were not exceeded.
[3] RBC = Risk-Based Concentration Table, USEPA Region III, May, 1996, R.L. Smith. RBC for chromium is based on chromium VI. RBC for lead is not available, value is Interim Guidance on Establishing Soil Lead Cleanup Levels at Superfund Sites (OSWER directive 9355-4-12). For essential nutrients (calcium, magnesium) screening values were derived based on recommended daily allowances (RDAs).
RBC for alpha and gamma-chlordane are based on chlordane.

n = noncarcinogenic pathway
c = carcinogenic pathway
feet bls = feet below land surface
ug/kg = micrograms per kilogram.
mg/kg = milligrams per kilogram.
NA = not applicable
NC = not calculated

DDD = dichlorodiphenyldichloroethane.
DDE = dichlorodiphenyldichloroethene.
DDT = dichlorodiphenyltrichloroethane.

All inorganics results expressed in milligrams per kilogram (mg/kg) soil dry weight; organics in micrograms per kilogram (ug/kg) soil dry weight.
B = Reported concentration is between the instrument detection limit (IDL) and Contract Required Detection Limit (CRDL).
J = Reported concentration is an estimated quantity.
Blank cell in sample results indicate that the analyte or compound has not been detected at the reporting limit.
Bold/shaded values indicate exceedance of regulatory guidance and background.

TABLE E-2

SUMMARY OF POSITIVE DETECTIONS IN GROUNDWATER

Table E-2. Summary of Positive Detections in Groundwater, TCL Organics and TAL Inorganics
Study Area 44

Naval Training Center
Orlando, FL

Identifier	Background Screening [1]	FDEPG	Primary FEDMCL	RBC[2] for Tap Water	44G00101	44G00201	44G00301	44G00301D	44G00401	44G00501
Lab_ID					G8861003	G8861006	G8861004	G8861005	G8875004	G8875003
Sampling Date					5-Dec-95	5-Dec-95	5-Dec-95	5-Dec-95	6-Dec-95	6-Dec-95
Inorganics, ug/L										
Aluminum	4,067	200 [3]	ND	37,000 n	312	12500			702	435
Arsenic	5	50 [4]	50	0.045/11 c/n	6.4 B	2.4 B			2.2 B	
Barium	31.4	2,000 [5]	2,000	2,600 n	25.2 B	194 B	4.8 B	4.9 B	12.6 B	10.8 B
Beryllium		4 [5]	4	0.016 c		0.63 B				
Calcium	36,830	ND	ND	1,000,000	25200	13300	77600	76100	63000	72600
Chromium	7.8	100 [5]	100 [9]	180 [10]		21.2				
Copper	5.4	1,000 [3]	1,300 [8]	1,500 n						
Iron	1,227	300 [3]	ND	11,000 n	215	764			546	323
Lead	4	15 [5]	15 [11]	15	2.3 B	6.4	1.3 B		1.9 B	0.81 B
Magnesium	4,560	ND	ND	118,807	1850 B	1070 B	1470 B	1420 B	4480 B	3450 B
Manganese	17	50 [3]	ND	840 n	3.8 B	12.1 B	3 B	2.8 B	30.3	36.7
Mercury	0.12	2 [5]	2	11 c		0.06 B				
Potassium	5,400	ND	ND	297,016	4810 B	9440	1520 B	1830 B	3660 B	2430 B
Sodium	18,222	160,000 [5]	ND	396,022	7630	20100	1430 B	1430 B	3450 B	5030
Vanadium	20.6	49 [4]	ND	260 n		9.3 B	8.3 B	6.3 B	3.5 B	
Zinc	4	5,000 [3]	ND	11,000 n	4.2 B	18.9 B	7.6 B	6.8 B	5 B	2.5 B
Volatile Organics, ug/L										
1,1-Dichloroethene		7 [5]	7	0.044 c	0.3 J					
2-Butanone		4200 [4]	ND	1900 n	R	R	R	R	6 J	R
Bromodichloromethane		0.6 [7]	ND	0.17 c	0.5 J	0.7 J				
Carbon disulfide		700 [4]	ND	1,000 n		0.5 J	0.2 J	0.2 J		
Chloroform		100 / 6 [5/7]	100	0.15 c	2	3	0.4 J	0.3 J		
Styrene		100 [5]	ND	1,600 n		0.4 J				
Tetrachloroethene		3 [5]	5	1.1 c	0.3 J					
Trichloroethene		3 [5]	5	1.6 c	0.3 J					
Semivolatile Organics, ug/L										
2,4-Dinitrophenol		30 [4]	ND	73 n					10 J	
4,6-Dinitro-2-methylphenol		ND	ND	ND					2 J	
4-Methylphenol		35 [4]	ND	180 n					1 J	
bis(2-Ethylhexyl)phthalate		6 [6]	ND	4.8 c		2 J				
Di-n-octylphthalate		140 [4]	ND	730 n						2 J
Pentachlorophenol		1 [5]	1	0.56 c					1	

Table E-2. Summary of Positive Detections in Groundwater, TCL Organics and TAL Inorganics
Study Area 44

Naval Training Center
Orlando, FL

Identifier	Background Screening [1]		FDEPG		Primary FEDMCL		RBC[2] for Tap Water		44G00601		44G00701		44G00801	
Lab_ID									G8875002		G8875005		G8861007	
Sampling Date									6-Dec-95		6-Dec-95		5-Dec-95	
Inorganics, ug/L														
Aluminum	4,067		200	[3]	ND		37,000	n	172	B	14000		569	
Arsenic	5		50	[4]	50		0.045/11	c/n			1.8	J		
Barium	31.4		2,000	[5]	2,000		2,600	n	2.7	B	10.8	B	3.8	B
Beryllium			4	[5]	4		0.016	c			0.25	B		
Calcium	36,830		ND		ND		1,000,000		75800		10500		16100	
Chromium	7.8		100	[5]	100	[9]	180	[10]			26.7			
Copper	5.4		1,000	[3]	1,300	[8]	1,500	n			20.8	B		
Iron	1,227		300	[3]	ND		11,000	n	41.4	B	420		44.1	B
Lead	4		15	[5]	15	[11]	15		1.9	B	6.2		2.3	B
Magnesium	4,560		ND		ND		118,807		4850	B	1700	B	2290	B
Manganese	17		50	[3]	ND		840	n	1.4	B	6.9	B	4.1	B
Mercury	0.12		2	[5]	2		11	c			0.46			
Potassium	5,400		ND		ND		297,016		1010	B	1920	B	1620	B
Sodium	18,222		160,000	[5]	ND		396,022		3760	B	1130	B	2520	B
Vanadium	20.6		49	[4]	ND		260	n						
Zinc	4		5,000	[3]	ND		11,000	n			8.5	B	4.9	B
Volatile Organics, ug/L														
1,1-Dichloroethene			7	[5]	7		0.044	c						
2-Butanone			4200	[4]	ND		1900	n		R		R		R
Bromodichloromethane			0.6	[7]	ND		0.17	c						
Carbon disulfide			700	[4]	ND		1,000	n			0.3	J		
Chloroform			100 / 6	[5/7]	100		0.15	c						
Styrene			100	[5]	ND		1,600	n						
Tetrachloroethene			3	[5]	5		1.1	c						
Trichloroethene			3	[5]	5		1.6	c						
Semivolatile Organics, ug/L														
2,4-Dinitrophenol			30	[4]	ND		73	n						
4,6-Dinitro-2-methylphenol			ND		ND		ND							
4-Methylphenol			35	[4]	ND		180	n						
bis(2-Ethylhexyl)phthalate			6	[6]	ND		4.8	c			2	J		
Di-n-octylphthalate			140	[4]	ND		730	n						
Pentachlorophenol			1	[5]	1		0.56	c						

Table E-2. Summary of Positive Detections in Groundwater, TCL Organics and TAL Inorganics
Study Area 44

Naval Training Center
Orlando, FL

NOTES:

[1] Groundwater background screening value is twice the average of detected concentrations for inorganic analytes.
[2] RBC = Risk-Based Concentration Table, USEPA Region III, May 1996, R.L. Smith. RBC for chromium is based on chromium VI. RBC for lead is not available, value is treatment technology action limit for lead in drinking water distribution system identified in Drinking Water Standards and Health Advisories (USEPA, 1995). For essential nutrients (calcium, magnesium, potassium, and sodium) screening values were derived based on recommended daily allowances (RDAs).
[3] Secondary Standard.
[4] Systemic Toxicant
[5] Primary Standard
[6] Organoleptic
[7] Carcinogen
[8] Value is preliminary action level.
[9] Value shown is for total chromium compounds.
[10] Value shown is for Chromium VI. Value for Chromium III is 37,000 n.
[11] Treatment technique requirement. Value shown is the action level, to be measured at the tap. Value shown is the value to recommend as a preliminary cleanup goal.

n = noncarcinogenic effects.
c = carcinogenic effects.
ND = Not determined.
NA = Not analyzed.
ID = identifier.
USEPA = U.S. Environmental Protection Agency.
FDEPG = Florida Department of Environmental Protection, Groundwater Guidance Concentrations, June 1994.
FEDMCL= Federal Maximum Contaminant Levels, Primary Drinking Water Regulations and Health Advisories, October 1996.
B = Reported concentration is between the instrument detection limit (IDL) and the contract required detection limit (CRDL).
J = Reported concentration is an estimated quantity.
R = Rejected concentration due to significant QA/QC problems.
G = unfiltered water sample.
II = filtered water sample.
ug/l = micrograms per liter.
mg/l = miligrams per liter.
Bold/shaded numbers indicate exceedance of groundwater guidance and background.
Blank space indicates analyte/compound was not detected at the reporting limit.

APPENDIX F

SUMMARY OF LABORATORY ANALYTICAL RESULTS
SOIL AND GROUNDWATER SAMPLES
STUDY AREA 44

F-1: Summary of Subsurface Soil Analytical Results
F-2: Summary of Groundwater Analytical Results

TABLE F-1

SUMMARY OF SOIL ANALYTICAL RESULTS

Appendix F

Table F-1. Summary of Subsurface Soil Analytical Results
Study Area 44

Naval Training Center
Orlando, FL

Sample ID	44B00201		44B00401		44B00401D		44B00501		44B00601		44B00701		44B00801	
Lab ID	G8772003		G8796006		G8796007		G8796005		G8796004		G8796002		G8796003	
Sampling Date	11/16/95		11/20/95		11/20/95		11/20/95		11/20/95		11/20/95		11/20/95	
Ft bls	10-12		3-4		3-4		2-3		8-10		8-10		8-10	
Volatile organics, ug/kg														
1,1,1-Trichloroethane	11	U	11	U	11	U	12	U	12	U	12	U	11	U
1,1,2,2-Tetrachloroethane	11	U	11	U	11	U	12	U	12	U	12	U	11	U
1,1,2-Trichloroethane	11	U	11	U	11	U	12	U	12	U	12	U	11	U
1,1-Dichloroethane	11	U	11	U	11	U	12	U	12	U	12	U	11	U
1,1-Dichloroethene	11	U	11	U	11	U	12	U	12	U	12	U	11	U
1,2-Dichloroethane	11	U	11	U	11	U	12	U	12	U	12	U	11	U
1,2-Dichloroethene (total)	11	U	11	U	11	U	12	U	12	U	12	U	11	U
1,2-Dichloropropane	11	U	11	U	11	U	12	U	12	U	12	U	11	U
2-Butanone	11	U	11	U	11	U	12	U	12	U	12	U	11	U
2-Hexanone	11	U	11	U	11	U	12	U	12	U	12	U	11	U
4-Methyl-2-pentanone	11	U	11	U	11	U	12	U	12	U	12	U	11	U
Acetone	13		8	J	5	J	7	J	19		6	J	11	U
Benzene	11	U	11	U	11	U	12	U	12	U	12	U	11	U
Bromodichloromethane	11	U	11	U	11	U	12	U	12	U	12	U	11	U
Bromoform	11	U	11	U	11	U	12	U	12	U	12	U	11	U
Bromomethane	11	U	11	U	11	U	12	U	12	U	12	U	11	U
Carbon disulfide	11	U	11	U	11	U	12	U	12	U	12	U	11	U
Carbon tetrachloride	11	U	11	U	11	U	12	U	12	U	12	U	11	U
Chlorobenzene	11	U	11	U	11	U	12	U	12	U	12	U	11	U
Chloroethane	11	U	11	U	11	U	12	U	12	U	12	U	11	U
Chloroform	11	U	11	U	11	U	12	U	12	U	12	U	11	U
Chloromethane	11	U	11	U	11	U	12	U	12	U	12	U	11	U
cis-1,3-Dichloropropene	11	U	11	U	11	U	12	U	12	U	12	U	11	U
Dibromochloromethane	11	U	11	U	11	U	12	U	12	U	12	U	11	U
Ethylbenzene	11	U	11	U	11	U	12	U	12	U	12	U	11	U
Methylene chloride	11	U	11	U	11	U	12	U	12	U	12	U	11	U
Styrene	11	U	11	U	11	U	12	U	12	U	12	U	11	U
Tetrachloroethene	11	U	11	U	11	U	12	U	12	U	12	U	11	U
Toluene	11	U	11	U	11	U	12	U	12	U	12	U	11	U
trans-1,3-Dichloropropene	11	U	11	U	11	U	12	U	12	U	12	U	11	U
Trichloroethene	11	U	11	U	11	U	12	U	12	U	12	U	11	U
Vinyl chloride	11	U	11	U	11	U	12	U	12	U	12	U	11	U

Appendix F

Table F-1. Summary of Subsurface Soil Analytical Results
Study Area 44

Naval Training Center
Orlando, FL

Sample ID	44B00201		44B00401		44B00401D		44B00501		44B00601		44B00701		44B00801	
Lab ID	G8772003		G8796006		G8796007		G8796005		G8796004		G8796002		G8796003	
Sampling Date	11/16/95		11/20/95		11/20/95		11/20/95		11/20/95		11/20/95		11/20/95	
Ft bls	10-12		3-4		3-4		2-3		8-10		8-10		8-10	
Xylene (total)	11	U	11	U	11	U	12	U	12	U	12	U	11	U
Semivolatile organics, ug/kg														
1,2,4-Trichlorobenzene	360	U	380	U	380	U	400	U	400	U	390	U	380	U
1,2-Dichlorobenzene	360	U	380	U	380	U	400	U	400	U	390	U	380	U
1,3-Dichlorobenzene	360	U	380	U	380	U	400	U	400	U	390	U	380	U
1,4-Dichlorobenzene	360	U	380	U	380	U	400	U	400	U	390	U	380	U
2,2'-oxybis(1-Chloropropane)	360	U	380	U	380	U	400	U	400	U	390	U	380	U
2,4,5-Trichlorophenol	910	U	950	U	950	U	1,000	U	1000	U	970	U	960	U
2,4,6-Trichlorophenol	360	U	380	U	380	U	400	U	400	U	390	U	380	U
2,4-Dichlorophenol	360	U	380	U	380	U	400	U	400	U	390	U	380	U
2,4-Dimethylphenol	360	U	380	U	380	U	400	U	400	U	390	U	380	U
2,4-Dinitrophenol	910	U	950	U	950	U	1000	U	1000	U	970	U	960	U
2,4-Dinitrotoluene	360	U	380	U	380	U	400	U	400	U	390	U	380	U
2,6-Dinitrotoluene	360	U	380	U	380	U	400	U	400	U	390	U	380	U
2-Chloronaphthalene	360	U	380	U	380	U	400	U	400	U	390	U	380	U
2-Chlorophenol	360	U	380	U	380	U	400	U	400	U	390	U	380	U
2-Methylnaphthalene	360	U	380	U	380	U	400	U	400	U	390	U	380	U
2-Methylphenol	360	U	380	U	380	U	400	U	400	U	390	U	380	U
2-Nitroaniline	910	U	950	U	950	U	1000	U	1000	U	970	U	960	U
2-Nitrophenol	360	U	380	U	380	U	400	U	400	U	390	U	380	U
3,3'-Dichlorobenzidine	360	U	380	U	380	U	400	U	400	U	390	U	380	U
3-Nitroaniline	910	U	950	U	950	U	1000	U	1000	U	970	U	960	U
4,6-Dinitro-2-methylphenol	910	U	950	U	950	U	1000	U	1000	U	970	U	960	U
4-Bromophenyl-phenylether	360	U	380	U	380	U	400	U	400	U	390	U	380	U
4-Chloro-3-methylphenol	360	U	380	U	380	U	400	U	400	U	390	U	380	U
4-Chloroaniline	360	U	380	U	380	U	400	U	400	U	390	U	380	U
4-Chlorophenyl-phenylether	360	U	380	U	380	U	400	U	400	U	390	U	380	U
4-Methylphenol	360	U	380	U	380	U	400	U	400	U	390	U	380	U
4-Nitroaniline	910	U	950	U	950	U	1000	U	1000	U	970	U	960	U
4-Nitrophenol	910	U	950	U	950	U	1000	U	1000	U	970	U	960	U
Acenaphthene	360	U	380	U	380	U	400	U	400	U	390	U	380	U
Acenaphthylene	360	U	380	U	380	U	400	U	400	U	390	U	380	U
Anthracene	360	U	380	U	380	U	400	U	400	U	390	U	380	U

Appendix F

Table F-1. Summary of Subsurface Soil Analytical Results
Study Area 44

Naval Training Center
Orlando, FL

Sample ID	44B00201		44B00401		44B00401D		44B00501		44B00601		44B00701		44B00801	
Lab ID	G8772003		G8796006		G8796007		G8796005		G8796004		G8796002		G8796003	
Sampling Date	11/16/95		11/20/95		11/20/95		11/20/95		11/20/95		11/20/95		11/20/95	
Ft bls	10-12		3-4		3-4		2-3		8-10		8-10		8-10	
Benzo(a)anthracene	360	U	380	U	380	U	400	U	400	U	390	U	380	U
Benzo(a)pyrene	360	U	380	U	380	U	400	U	400	U	390	U	380	U
Benzo(b)fluoranthene	360	U	380	U	380	U	400	U	400	U	390	U	380	U
Benzo(g,h,i)perylene	360	U	380	U	380	U	400	U	400	U	390	U	380	U
Benzo(k)fluoranthene	360	U	380	U	380	U	400	U	400	U	390	U	380	U
bis(2-Chloroethoxy)methane	360	U	380	U	380	U	400	U	400	U	390	U	380	U
bis(2-Chloroethyl)ether	360	U	380	U	380	U	400	U	400	U	390	U	380	U
bis(2-Ethylhexyl)phthalate	360	U	380	U	380	U	400	U	400	U	390	U	380	U
Butylbenzylphthalate	360	U	380	U	380	U	400	U	400	U	390	U	380	U
Carbazole	360	U	380	U	380	U	400	U	400	U	390	U	380	U
Chrysene	360	U	380	U	380	U	400	U	400	U	390	U	380	U
Di-n-butylphthalate	360	U	380	U	380	U	400	U	400	U	390	U	380	U
Di-n-octylphthalate	360	U	380	U	380	U	400	U	400	U	390	U	380	U
Dibenz(a,h)anthracene	360	U	380	U	380	U	400	U	400	U	390	U	380	U
Dibenzofuran	360	U	380	U	380	U	400	U	400	U	390	U	380	U
Diethylphthalate	360	U	380	U	380	U	400	U	400	U	390	U	380	U
Dimethylphthalate	360	U	380	U	380	U	400	U	400	U	390	U	380	U
Fluoranthene	360	U	380	U	380	U	400	U	400	U	390	U	380	U
Fluorene	360	U	380	U	380	U	400	U	400	U	390	U	380	U
Hexachlorobenzene	360	U	380	U	380	U	400	U	400	U	390	U	380	U
Hexachlorobutadiene	360	U	380	U	380	U	400	U	400	U	390	U	380	U
Hexachlorocyclopentadiene	360	U	380	U	380	U	400	U	400	U	390	U	380	U
Hexachloroethane	360	U	380	U	380	U	400	U	400	U	390	U	380	U
Indeno(1,2,3-cd)pyrene	360	U	380	U	380	U	400	U	400	U	390	U	380	U
Isophorone	360	U	380	U	380	U	400	U	400	U	390	U	380	U
N-Nitroso-di-n-propylamine	360	U	380	U	380	U	400	U	400	U	390	U	380	U
N-Nitrosodiphenylamine (1)	360	U	380	U	380	U	400	U	400	U	390	U	380	U
Naphthalene	360	U	380	U	380	U	400	U	400	U	390	U	380	U
Nitrobenzene	360	U	380	U	380	U	400	U	400	U	390	U	380	U
Pentachlorophenol	910	U	950	U	950	U	1000	U	1000	U	970	U	960	U
Phenanthrene	360	U	380	U	380	U	400	U	400	U	390	U	380	U
Phenol	360	U	380	U	380	U	400	U	400	U	390	U	380	U
Pyrene	360	U	380	U	380	U	400	U	400	U	390	U	380	U

Appendix F

Table F-1. Summary of Subsurface Soil Analytical Results
Study Area 44

Naval Training Center
Orlando, FL

Sample ID	44B00201		44B00401		44B00401D		44B00501		44B00601		44B00701		44B00801	
Lab ID	G8772003		G8796006		G8796007		G8796005		G8796004		G8796002		G8796003	
Sampling Date	11/16/95		11/20/95		11/20/95		11/20/95		11/20/95		11/20/95		11/20/95	
Ft bls	10-12		3-4		3-4		2-3		8-10		8-10		8-10	
Pesticides/PCBs, ug/kg														
4,4'-DDD	3.6	U	3.7	U	3.7	U	12		3.9	U	3.8	U	3.8	U
4,4'-DDE	3.6	U	3.7	U	3.7	U	5.6		3.9	U	3.8	U	3.8	U
4,4'-DDT	1.7	J	3.7	U	3.7	U	4	U	3.9	U	3.8	U	1.8	J
Aldrin	1.9	U	1.9	U	1.9	U	2	U	2	U	2	U	2	U
alpha-BHC	1.9	UJ	1.9	UJ	1.9	UJ	2	UJ	2	UJ	2	UJ	2	UJ
alpha-Chlordane	1.9	U	1.9	U	1.9	U	3.9		2	U	2	U	2	U
Aroclor-1016	36	U	37	U	37	U	40	U	39	U	38	U	38	U
Aroclor-1221	74	U	76	U	76	U	81	U	80	U	78	U	77	U
Aroclor-1232	36	U	37	U	37	U	40	U	39	U	38	U	38	U
Aroclor-1242	36	U	37	U	37	U	40	U	39	U	38	U	38	U
Aroclor-1248	36	U	37	U	37	U	40	U	39	U	38	U	38	U
Aroclor-1254	36	U	37	U	37	U	40	U	39	U	38	U	38	U
Aroclor-1260	36	U	37	U	37	U	40	U	39	U	38	U	38	U
beta-BHC	1.9	U	1.9	U	1.9	U	2	U	2	U	2	U	2	U
delta-BHC	1.9	U	1.9	U	1.9	U	2	U	2	U	2	U	2	U
Dieldrin	3.6	U	3.7	U	3.7	U	4	U	3.9	U	3.8	U	3.8	U
Endosulfan I	1.9	U	1.9	U	1.9	U	2	U	2	U	2	U	2	U
Endosulfan II	3.6	U	3.7	U	3.7	U	4	U	3.9	U	3.8	U	3.8	U
Endosulfan sulfate	3.6	U	3.7	U	3.7	U	4	U	3.9	U	3.8	U	3.8	U
Endrin	3.6	U	3.7	U	3.7	U	4	U	3.9	U	3.8	U	3.8	U
Endrin aldehyde	3.6	U	3.7	U	3.7	U	4	U	3.9	U	3.8	U	3.8	U
Endrin ketone	3.6	U	3.7	U	3.7	U	4	U	3.9	U	3.8	U	3.8	U
gamma-BHC (Lindane)	1.9	U	1.9	U	1.9	U	2	U	2	U	2	U	2	U
gamma-Chlordane	1.9	U	1.9	U	1.9	U	4.8		2	U	2	U	2	U
Heptachlor	1.9	U	1.9	U	1.9	U	2	U	2	U	2	U	2	U
Heptachlor epoxide	1.9	U	1.9	U	1.9	U	2	U	2	U	2	U	2	U
Methoxychlor	19	U	19	U	19	U	20	U	20	U	20	U	20	U
Toxaphene	190	U	190	U	190	U	200	U	200	U	200	U	200	U
Inorganics, mg/kg														
Aluminum	451		14.1		13.3	B	200		18.3	B	543		17.1	B
Antimony	6.4	U	6.7	U	6.7	U	7	U	6.9	U	6.8	U	6.7	U
Arsenic	0.56	U	0.61	U	0.61	U	0.58	U	0.41	U	0.83	U	1.3	U

Appendix F

Table F-1. Summary of Subsurface Soil Analytical Results
Study Area 44

Naval Training Center
Orlando, FL

Sample ID	44B00201		44B00401		44B00401D		44B00501		44B00601		44B00701		44B00801	
Lab ID	G8772003		G8796006		G8796007		G8796005		G8796004		G8796002		G8796003	
Sampling Date	11/16/95		11/20/95		11/20/95		11/20/95		11/20/95		11/20/95		11/20/95	
Ft bls	10-12		3-4		3-4		2-3		8-10		8-10		8-10	
Barium	0.13	UJ	0.4	J	0.32	J	1.1	J	0.26	J	1.1	J	0.21	J
Beryllium	0.04	U	0.05	U	0.05	U	0.05	U	0.05	U	0.05	U	0.05	U
Cadmium	0.66	U	0.69	U	0.69	U	0.72	U	0.71	U	0.71	U	0.69	U
Calcium	239	J	152	J	229	J	4750	J	232	J	296	J	55.7	U
Chromium	1.5	B	0.85	U	0.85	U	0.89	U	2.3	B	2.4		1.5	B
Cobalt	0.42	U	0.44	U	0.44	U	0.46	U	0.45	U	0.45	U	0.44	U
Copper	0.39	U	0.41	U	0.47	B	1.6	B	0.93	B	1.5	B	0.74	B
Iron	87.9	J	10.1	U	10.4	U	48.9	J	256	J	66.7	J	83.2	J
Lead	0.43	U	0.34	U	0.26	U	2		0.52	U	2.5		0.38	U
Magnesium	4	U	4.2	U	4.2	U	46.2	B	4.3	U	5.3	B	4.2	U
Manganese	0.5	J	0.21	UJ	0.21	UJ	1.6	B	2	B	0.51	J	0.54	J
Mercury	0.01	B	0.01	U	0.01	U	0.03	B	0.01	U	0.02	B	0.01	U
Nickel	2.2	U	2.4	U	2.3	U	2.5	U	2.4	U	2.4	U	2.3	U
Potassium	134	U	140	U	140	U	147	U	144	U	143	U	140	U
Selenium	0.24	U	0.25	U	0.25	U	0.26	UJ	0.26	U	0.26	U	0.25	U
Silver	0.64	UJ	0.67	UJ	0.67	UJ	0.7	UJ	0.69	UJ	0.68	UJ	0.67	UJ
Sodium	3	U	5.6	U	3.1	U	8.6	U	7.1	U	5.9	U	5.4	U
Thallium	0.48	UJ	0.5	UJ	0.5	UJ	0.52	UJ	0.51	UJ	0.51	UJ	0.5	UJ
Vanadium	1.1	U	0.65	U	0.64	U	1.2	U	0.66	U	0.66	U	0.98	U
Zinc	0.33	U	0.48	U	0.35	U	1.8	U	0.58	U	0.43	U	0.66	U

TABLE F-2

SUMMARY OF GROUNDWATER ANALYTICAL RESULTS

Appendix F

Table F-2. Summary of Groundwater Analytical Results
Study Area 44

Naval Training Center
Orlando, FL

Sample ID	44G00101		44G00201		44G00301		44G00301D		44G00401		44G00501		44G00601		44G00701		44G00801		44G00901		44G01001		44G01001D	
Lab ID	G8861003		G8861006		G8861004		G8861005		G8875004		G8875003		G8875002		G8875005		G8861007		MB542002		MB542003		MB542004	
Sampling Date	12/5/95		12/5/95		12/5/95		12/5/95		12/6/95		12/6/95		12/6/95		12/6/95		12/5/95		8/6/96		8/6/96		8/6/96	
Volatile organics, ug/L																								
1,1,1-Trichloroethane	1	U	1	U	1	U	1	U	1	U	1	U	1	U	1	U	1	U	1	U	1	U	1	U
1,1,2,2-Tetrachloroethane	1	U	1	U	1	U	1	U	1	U	1	U	1	U	1	U	1	U	1	U	1	U	1	U
1,1,2-Trichloroethane	1	U	1	U	1	U	1	U	1	U	1	U	1	U	1	U	1	U	1	U	1	U	1	U
1,1-Dichloroethane	1	U	1	U	1	U	1	U	1	U	1	U	1	U	1	U	1	U	1	U	1	U	1	U
1,1-Dichloroethene	0.3	J	1	U	1	U	1	U	1	U	1	U	1	U	1	U	1	U	1	U	1	U	1	U
1,2-Dibromo-3-chloropropane	1	U	1	U	1	U	1	U	1	U	1	U	1	U	1	U	1	U	1	U	1	U	1	U
1,2-Dibromoethane	1	U	1	U	1	U	1	U	1	U	1	U	1	U	1	U	1	U	1	U	1	U	1	U
1,2-Dichlorobenzene	1	U	1	U	1	U	1	U	1	U	1	U	1	U	1	U	1	U	1	U	1	U	1	U
1,3-Dichlorobenzene	1	U	1	U	1	U	1	U	1	U	1	U	1	U	1	U	1	U	1	U	1	U	1	U
1,4-Dichlorobenzene	1	U	1	U	1	U	1	U	1	U	1	U	1	U	1	U	1	U	1	U	1	U	1	U
1,2-Dichloroethane	1	U	1	U	1	U	1	U	1	U	1	U	1	U	1	U	1	U	1	U	1	U	1	U
1,2-Dichloropropane	1	U	1	U	1	U	1	U	1	U	1	U	1	U	1	U	1	U	1	U	1	U	1	U
2-Butanone	5	UR	5	UR	5	UR	5	UR	6	J	5	UR	5	UR	5	UR	5	UR	5	UR	5	UR	5	UR
2-Hexanone	5	U	5	U	5	U	5	U	5	U	5	U	5	U	5	U	5	U	5	U	5	U	5	U
4-Methyl-2-pentanone	5	U	5	U	5	U	5	U	5	U	5	U	5	U	5	U	5	U	5	U	5	U	5	U
Acetone	4	R	2	R	5	R	5	R	8	R	5	UR	4	R	3	R	1	R	5	UR	5	UR	5	UR
Benzene	1	U	1	U	1	U	1	U	1	U	1	U	1	U	1	U	1	U	1	U	1	U	1	U
Bromochloromethane	1	U	1	U	1	U	1	U	1	U	1	U	1	U	1	U	1	U	1	U	1	U	1	U
Bromodichloromethane	0.5	J	0.7	J	1	U	1	U	1	U	1	U	1	U	1	U	1	U	1	U	1	U	1	U
Bromoform	1	U	1	U	1	U	1	U	1	U	1	U	1	U	1	U	1	U	1	U	1	U	1	U
Bromomethane	1	U	1	U	1	U	1	U	1	U	1	U	1	U	1	U	1	U	1	U	1	U	1	U
Carbon disulfide	1	U	0.5	J	0.2	J	0.2	J	1	U	1	U	1	U	0.3	J	1	U	1	U	1	U	1	U
Carbon tetrachloride	1	U	1	U	1	U	1	U	1	U	1	U	1	U	1	U	1	U	1	U	1	U	1	U
Chlorobenzene	1	U	1	U	1	U	1	U	1	U	1	U	1	U	1	U	1	U	1	U	1	U	1	U
Chloroethane	1	U	1	U	1	U	1	U	1	U	1	U	1	U	1	U	1	U	1	U	1	U	1	U
Chloroform	2		3		0.4	J	0.3	J	1	U	1	U	1	U	1	U	1	U	1	U	1	U	1	U
Chloromethane	1	U	1	U	1	U	1	U	1	U	1	U	1	U	1	U	1	U	1	U	1	U	1	U
cis-1,2-Dichloroethene	1	U	1	U	1	U	1	U	1	U	1	U	1	U	1	U	1	U	1	U	1	U	1	U
cis-1,3-Dichloropropene	1	U	1	U	1	U	1	U	1	U	1	U	1	U	1	U	1	U	1	U	1	U	1	U
Dibromochloromethane	1	U	1	U	1	U	1	U	1	U	1	U	1	U	1	U	1	U	1	U	1	U	1	U
Ethylbenzene	1	U	1	U	1	U	1	U	1	U	1	U	1	U	1	U	1	U	1	U	1	U	1	U
Methylene chloride	5	R	5	R	5	U	5	R	5	U	5	U	5	R	5	U	5	U	2	U	2	U	2	U
Styrene	1	U	0.4	J	1	U	1	U	1	U	1	U	1	U	1	U	1	U	1	U	1	U	1	U
Tetrachloroethene	0.3	J	1	U	1	U	1	U	1	U	1	U	1	U	1	U	1	U	1	U	1	U	1	U

Appendix F

Table F-2. Summary of Groundwater Analytical Results
Study Area 44

Naval Training Center
Orlando, FL

Sample ID	44G00101		44G00201		44G00301		44G00301D		44G00401		44G00501		44G00601		44G00701		44G00801		44G00901		44G01001		44G01001D	
Lab ID	G8861003		G8861006		G8861004		G8861005		G8875004		G8875003		G8875002		G8875005		G8861007		MB542002		MB542003		MB542004	
Sampling Date	12/5/95		12/5/95		12/5/95		12/5/95		12/6/95		12/6/95		12/6/95		12/6/95		12/5/95		8/6/96		8/6/96		8/6/96	
Toluene	1	U	1	U	1	U	1	U	1	U	1	U	1	U	1	U	1	U	1	U	1	U	1	U
trans-1,2-Dichloroethene	1	U	1	U	1	U	1	U	1	U	1	U	1	U	1	U	1	U	1	U	1	U	1	U
trans-1,3-Dichloropropene	1	U	1	U	1	U	1	U	1	U	1	U	1	U	1	U	1	U	1	U	1	U	1	U
Trichloroethene	0.3	J	1	U	1	U	1	U	1	U	1	U	1	U	1	U	1	U	1	U	1	U	1	U
Vinyl chloride	1	U	1	U	1	U	1	U	1	U	1	U	1	U	1	U	1	U	1	U	1	U	1	U
Xylene (total)	1	U	1	U	1	U	1	U	1	U	1	U	1	U	1	U	1	U	1	U	1	U	1	U
Semivolatile organics, ug/L																								
1,2,4-Trichlorobenzene	10	U	10	U	10	U	10	U	10	U	10	U	10	U	10	U	10	U	NA		NA		NA	
1,2-Dichlorobenzene	10	UR	10	UR	10	UR	10	UR	10	UR	10	UR	10	UR	10	UR	10	UR	NA		NA		NA	
1,3-Dichlorobenzene	10	UR	10	UR	10	UR	10	UR	10	UR	10	UR	10	UR	10	UR	10	UR	NA		NA		NA	
1,4-Dichlorobenzene	10	UR	10	UR	10	UR	10	UR	10	UR	10	UR	10	UR	10	UR	10	UR	NA		NA		NA	
2,2'-oxybis(1-Chloropropane)	10	U	10	U	10	U	10	U	10	U	10	U	10	U	10	U	10	U	NA		NA		NA	
2,4,5-Trichlorophenol	25	U	25	U	25	U	25	U	25	U	25	U	25	U	25	U	25	U	NA		NA		NA	
2,4,6-Trichlorophenol	10	U	10	U	10	U	10	U	10	U	10	U	10	U	10	U	10	U	NA		NA		NA	
2,4-Dichlorophenol	10	U	10	U	10	U	10	U	10	U	10	U	10	U	10	U	10	U	NA		NA		NA	
2,4-Dimethylphenol	10	U	10	U	10	U	10	U	10	U	10	U	10	U	10	U	10	U	NA		NA		NA	
2,4-Dinitrophenol	25	U	25	U	25	U	25	U	10	J	25	U	25	U	25	U	25	U	NA		NA		NA	
2,4-Dinitrotoluene	10	U	10	U	10	U	10	U	10	U	10	U	10	U	10	U	10	U	NA		NA		NA	
2,6-Dinitrotoluene	10	U	10	U	10	U	10	U	10	U	10	U	10	U	10	U	10	U	NA		NA		NA	
2-Chloronaphthalene	10	U	10	U	10	U	10	U	10	U	10	U	10	U	10	U	10	U	NA		NA		NA	
2-Chlorophenol	10	U	10	U	10	U	10	U	10	U	10	U	10	U	10	U	10	U	NA		NA		NA	
2-Methylnaphthalene	10	U	10	U	10	U	10	U	10	U	10	U	10	U	10	U	10	U	NA		NA		NA	
2-Methylphenol	10	U	10	U	10	U	10	U	10	U	10	U	10	U	10	U	10	U	NA		NA		NA	
2-Nitroaniline	25	U	25	U	25	U	25	U	25	U	25	U	25	U	25	U	25	U	NA		NA		NA	
2-Nitrophenol	10	U	10	U	10	U	10	U	10	U	10	U	10	U	10	U	10	U	NA		NA		NA	
3,3'-Dichlorobenzidine	10	U	10	U	10	U	10	U	10	U	10	U	10	U	10	U	10	U	NA		NA		NA	
3-Nitroaniline	25	U	25	U	25	U	25	U	25	U	25	U	25	U	25	U	25	U	NA		NA		NA	
4,6-Dinitro-2-methylphenol	25	U	25	U	25	U	25	U	2	J	25	U	25	U	25	U	25	U	NA		NA		NA	
4-Bromophenyl-phenylether	10	U	10	U	10	U	10	U	10	U	10	U	10	U	10	U	10	U	NA		NA		NA	
4-Chloro-3-methylphenol	10	U	10	U	10	U	10	U	10	U	10	U	10	U	10	U	10	U	NA		NA		NA	
4-Chloroaniline	10	U	10	U	10	U	10	U	10	U	10	U	10	U	10	U	10	U	NA		NA		NA	
4-Chlorophenyl-phenylether	10	U	10	U	10	U	10	U	10	U	10	U	10	U	10	U	10	U	NA		NA		NA	
4-Methylphenol	10	U	10	U	10	U	10	U	1	J	10	U	10	U	10	U	10	U	NA		NA		NA	
4-Nitroaniline	25	U	25	U	25	U	25	U	25	U	25	U	25	U	25	U	25	U	NA		NA		NA	
4-Nitrophenol	25	U	25	U	25	U	25	U	25	U	25	U	25	U	25	U	25	U	NA		NA		NA	

Appendix F

Table F-2. Summary of Groundwater Analytical Results
Study Area 44

Naval Training Center
Orlando, FL

Sample ID	44G00101		44G00201		44G00301		44G00301D		44G00401		44G00501		44G00601		44G00701		44G00801		44G00901	44G01001	44G01001D
Lab ID	G8861003		G8861006		G8861004		G8861005		G8875004		G8875003		G8875002		G8875005		G8861007		MB542002	MB542003	MB542004
Sampling Date	12/5/95		12/5/95		12/5/95		12/5/95		12/6/95		12/6/95		12/6/95		12/6/95		12/5/95		8/6/96	8/6/96	8/6/96
Acenaphthene	10	U	10	U	10	U	10	U	10	U	10	U	10	U	10	U	10	U	NA	NA	NA
Acenaphthylene	10	U	10	U	10	U	10	U	10	U	10	U	10	U	10	U	10	U	NA	NA	NA
Anthracene	10	U	10	U	10	U	10	U	10	U	10	U	10	U	10	U	10	U	NA	NA	NA
Benzo(a)anthracene	10	U	10	U	10	U	10	U	10	U	10	U	10	U	10	U	10	U	NA	NA	NA
Benzo(a)pyrene	10	U	10	U	10	U	10	U	10	U	10	U	10	U	10	U	10	U	NA	NA	NA
Benzo(b)fluoranthene	10	U	10	U	10	U	10	U	10	U	10	U	10	U	10	U	10	U	NA	NA	NA
Benzo(g,h,i)perylene	10	U	10	U	10	U	10	U	10	U	10	U	10	U	10	U	10	U	NA	NA	NA
Benzo(k)fluoranthene	10	U	10	U	10	U	10	U	10	U	10	U	10	U	10	U	10	U	NA	NA	NA
bis(2-Chloroethoxy)methane	10	U	10	U	10	U	10	U	10	U	10	U	10	U	10	U	10	U	NA	NA	NA
bis(2-Chloroethyl)ether	10	U	10	U	10	U	10	U	10	U	10	U	10	U	10	U	10	U	NA	NA	NA
bis(2-Ethylhexyl)phthalate	10	UR	2	JR	10	UR	10	UR	10	UR	10	UR	10	UR	2	JR	10	UR	NA	NA	NA
bis(2-Ethylhexyl)phthalate	5	U	5	U	5	U	5	U	5	U	5	U	5	U	5	U	5	U	NA	NA	NA
Butylbenzylphthalate	10	U	10	U	10	U	10	U	10	U	10	U	10	U	10	U	10	U	NA	NA	NA
Carbazole	10	U	10	U	10	U	10	U	10	U	10	U	10	U	10	U	10	U	NA	NA	NA
Chrysene	10	U	10	U	10	U	10	U	10	U	10	U	10	U	10	U	10	U	NA	NA	NA
Di-n-butylphthalate	10	U	10	U	10	U	10	U	10	U	10	U	10	U	10	U	10	U	NA	NA	NA
Di-n-octylphthalate	10	U	10	U	10	U	10	U	10	U	2	J	10	U	10	U	10	U	NA	NA	NA
Dibenz(a,h)anthracene	10	U	10	U	10	U	10	U	10	U	10	U	10	U	10	U	10	U	NA	NA	NA
Dibenzofuran	10	U	10	U	10	U	10	U	10	U	10	U	10	U	10	U	10	U	NA	NA	NA
Diethylphthalate	10	U	10	U	10	U	10	U	10	U	10	U	10	U	10	U	10	U	NA	NA	NA
Dimethylphthalate	10	U	10	U	10	U	10	U	10	U	10	U	10	U	10	U	10	U	NA	NA	NA
Fluoranthene	10	U	10	U	10	U	10	U	10	U	10	U	10	U	10	U	10	U	NA	NA	NA
Fluorene	10	U	10	U	10	U	10	U	10	U	10	U	10	U	10	U	10	U	NA	NA	NA
Hexachlorobenzene	10	UR	10	UR	10	UR	10	UR	10	UR	10	UR	10	UR	10	UR	10	UR	NA	NA	NA
Hexachlorobenzene	1	U	1	U	1	U	1	U	1	U	1	U	1	U	1	U	1	U	NA	NA	NA
Hexachlorobutadiene	10	U	10	U	10	U	10	U	10	U	10	U	10	U	10	U	10	U	NA	NA	NA
Hexachlorocyclopentadiene	10	U	10	U	10	U	10	U	10	U	10	U	10	U	10	U	10	U	NA	NA	NA
Hexachloroethane	10	U	10	U	10	U	10	U	10	U	10	U	10	U	10	U	10	U	NA	NA	NA
Indeno(1,2,3-cd)pyrene	10	U	10	U	10	U	10	U	10	U	10	U	10	U	10	U	10	U	NA	NA	NA
Isophorone	10	U	10	U	10	U	10	U	10	U	10	U	10	U	10	U	10	U	NA	NA	NA
N-Nitroso-di-n-propylamine	10	U	10	U	10	U	10	U	10	U	10	U	10	U	10	U	10	U	NA	NA	NA
N-Nitrosodiphenylamine (1)	10	U	10	U	10	U	10	U	10	U	10	U	10	U	10	U	10	U	NA	NA	NA
Naphthalene	10	U	10	U	10	U	10	U	10	U	10	U	10	U	10	U	10	U	NA	NA	NA
Nitrobenzene	10	U	10	U	10	U	10	U	10	U	10	U	10	U	10	U	10	U	NA	NA	NA
Pentachlorophenol	25	UR	25	UR	25	UR	25	UR	25	UR	25	UR	25	UR	25	UR	25	UR	NA	NA	NA

Appendix F

Table F-2. Summary of Groundwater Analytical Results
Study Area 44

Naval Training Center
Orlando, FL

Sample ID	44G00101		44G00201		44G00301		44G00301D		44G00401		44G00501		44G00601		44G00701		44G00801		44G00901		44G01001		44G01001D	
Lab ID	G8861003		G8861006		G8861004		G8861005		G8875004		G8875003		G8875002		G8875005		G8861007		MB542002		MB542003		MB542004	
Sampling Date	12/5/95		12/5/95		12/5/95		12/5/95		12/6/95		12/6/95		12/6/95		12/6/95		12/5/95		8/6/96		8/6/96		8/6/96	
Pentachlorophenol	1	U	1	U	1	U	1	U	1		1	U	1	U	1	U	1	U	NA		NA		NA	
Phenol	10	U	10	U	10	U	10	U	10	U	10	U	10	U	10	U	10	U	NA		NA		NA	
Pyrene	10	U	10	U	10	U	10	U	10	U	10	U	10	U	10	U	10	U	NA		NA		NA	
Pesticides/PCBs, ug/L																								
4,4'-DDD	0.1	U	0.1	UJ	0.1	U	0.1	U	0.1	UJ	0.1	U	0.1	U	0.1	UJ	0.1	U	NA		NA		NA	
4,4'-DDE	0.1	U	0.1	UJ	0.1	U	0.1	U	0.1	UJ	0.1	U	0.1	U	0.1	UJ	0.1	U	NA		NA		NA	
4,4'-DDT	0.1	U	0.1	UJ	0.1	U	0.1	U	0.1	UJ	0.1	U	0.1	U	0.1	UJ	0.1	U	NA		NA		NA	
Aldrin	0.05	U	0.05	UJ	0.05	U	0.05	U	0.05	UJ	0.05	U	0.05	U	0.05	UJ	0.05	U	NA		NA		NA	
alpha-BHC	0.05	UJ	0.05	UJ	0.05	UJ	0.05	UJ	0.05	UJ	0.05	UJ	0.05	UJ	0.05	UJ	0.05	UJ	NA		NA		NA	
alpha-Chlordane	0.05	U	0.05	UJ	0.05	U	0.05	U	0.05	UJ	0.05	U	0.05	U	0.05	UJ	0.05	U	NA		NA		NA	
Aroclor-1016	0.5	U	0.5	UJ	0.5	U	0.5	U	0.5	UJ	0.5	U	0.5	U	0.5	UJ	0.5	U	NA		NA		NA	
Aroclor-1221	0.5	U	0.5	UJ	0.5	U	0.5	U	0.5	UJ	0.5	U	0.5	U	0.5	UJ	0.5	U	NA		NA		NA	
Aroclor-1232	0.5	U	0.5	UJ	0.5	U	0.5	U	0.5	UJ	0.5	U	0.5	U	0.5	UJ	0.5	U	NA		NA		NA	
Aroclor-1242	0.5	U	0.5	UJ	0.5	U	0.5	U	0.5	UJ	0.5	U	0.5	U	0.5	UJ	0.5	U	NA		NA		NA	
Aroclor-1248	0.5	U	0.5	UJ	0.5	U	0.5	U	0.5	UJ	0.5	U	0.5	U	0.5	UJ	0.5	U	NA		NA		NA	
Aroclor-1254	0.5	U	0.5	UJ	0.5	U	0.5	U	0.5	UJ	0.5	U	0.5	U	0.5	UJ	0.5	U	NA		NA		NA	
Aroclor-1260	0.5	U	0.5	UJ	0.5	U	0.5	U	0.5	UJ	0.5	U	0.5	U	0.5	UJ	0.5	U	NA		NA		NA	
beta-BHC	0.05	U	0.05	UJ	0.05	U	0.05	U	0.05	UJ	0.05	U	0.05	U	0.05	UJ	0.05	U	NA		NA		NA	
delta-BHC	0.05	U	0.05	UJ	0.05	U	0.05	U	0.05	UJ	0.05	U	0.05	U	0.05	UJ	0.05	U	NA		NA		NA	
Dieldrin	0.1	U	0.1	UJ	0.1	U	0.1	U	0.1	UJ	0.1	U	0.1	U	0.1	UJ	0.1	U	NA		NA		NA	
Endosulfan I	0.05	U	0.05	UJ	0.05	U	0.05	U	0.05	UJ	0.05	U	0.05	U	0.05	UJ	0.05	U	NA		NA		NA	
Endosulfan II	0.1	U	0.1	UJ	0.1	U	0.1	U	0.1	UJ	0.1	U	0.1	U	0.1	UJ	0.1	U	NA		NA		NA	
Endosulfan sulfate	0.1	U	0.1	UJ	0.1	U	0.1	U	0.1	UJ	0.1	U	0.1	U	0.1	UJ	0.1	U	NA		NA		NA	
Endrin	0.1	U	0.1	UJ	0.1	U	0.1	U	0.1	UJ	0.1	U	0.1	U	0.1	UJ	0.1	U	NA		NA		NA	
Endrin aldehyde	0.1	U	0.1	UJ	0.1	U	0.1	U	0.1	UJ	0.1	U	0.1	U	0.1	UJ	0.1	U	NA		NA		NA	
Endrin ketone	0.1	U	0.1	UJ	0.1	U	0.1	U	0.1	UJ	0.1	U	0.1	U	0.1	UJ	0.1	U	NA		NA		NA	
gamma-BHC (Lindane)	0.05	U	0.05	UJ	0.05	U	0.05	U	0.05	UJ	0.05	U	0.05	U	0.05	UJ	0.05	U	NA		NA		NA	
gamma-Chlordane	0.05	U	0.05	UJ	0.05	U	0.05	U	0.05	UJ	0.05	U	0.05	U	0.05	UJ	0.05	U	NA		NA		NA	
Heptachlor	0.05	U	0.05	UJ	0.05	U	0.05	U	0.05	UJ	0.05	U	0.05	U	0.05	UJ	0.05	U	NA		NA		NA	
Heptachlor epoxide	0.05	U	0.05	UJ	0.05	U	0.05	U	0.05	UJ	0.05	U	0.05	U	0.05	UJ	0.05	U	NA		NA		NA	
Methoxychlor	0.5	U	0.5	UJ	0.5	U	0.5	U	0.5	UJ	0.5	U	0.5	U	0.5	UJ	0.5	U	NA		NA		NA	
Toxaphene	5	U	5	UJ	5	U	5	U	5	UJ	5	U	5	U	5	UJ	5	U	NA		NA		NA	
Inorganics, ug/L																								
Aluminum	312		12500		21	U	21	U	702		435		172	B	14000		569		NA		NA		NA	

Appendix F

Table F-2. Summary of Groundwater Analytical Results
Study Area 44

Naval Training Center
Orlando, FL

Sample ID	44G00101		44G00201		44G00301		44G00301D		44G00401		44G00501		44G00601		44G00701		44G00801		44G00901		44G01001		44G01001D	
Lab ID	G8861003		G8861006		G8861004		G8861005		G8875004		G8875003		G8875002		G8875005		G8861007		MB542002		MB542003		MB542004	
Sampling Date	12/5/95		12/5/95		12/5/95		12/5/95		12/6/95		12/6/95		12/6/95		12/6/95		12/5/95		8/6/96		8/6/96		8/6/96	
Antimony	1	U	1	U	1	U	1	U	1	U	1	U	1	U	1	U	1	U	NA		NA		NA	
Arsenic	6.4	B	2.4	B	1.7	U	1.7	U	2.2	B	1.7	U	1.7	U	1.8	J	1.7	U	NA		NA		NA	
Barium	25.2	B	194	B	4.8	B	4.9	B	12.6	B	10.8	B	2.7	B	10.8	B	3.8	B	NA		NA		NA	
Beryllium	0.2	U	0.63	B	0.2	U	0.2	U	0.2	U	0.2	U	0.2	U	0.25	B	0.2	U	NA		NA		NA	
Cadmium	3	U	3	U	3	U	3	U	3	U	3	U	3	U	3	U	3	U	NA		NA		NA	
Calcium	25200		13300		77600		76100		63000		72600		75800		10500		16100		NA		NA		NA	
Chromium	3.7	U	21.2		3.7	U	3.7	U	3.7	U	3.7	U	3.7	U	26.7		3.7	U	NA		NA		NA	
Cobalt	1.9	U	1.9	U	1.9	U	1.9	U	1.9	U	1.9	U	1.9	U	1.9	U	1.9	U	NA		NA		NA	
Copper	3.1	U	5.3	U	2	U	4.2	U	4.3	U	4.8	U	2.3	U	20.8	B	3.3	U	NA		NA		NA	
Iron	215		764		3	UJ	3	UJ	546		323		41.4	B	420		44.1	B	NA		NA		NA	
Lead	2.3	B	6.4		1.3	B	0.81	U	1.9	B	0.81	B	1.9	B	6.2		2.3	B	NA		NA		NA	
Magnesium	1850	B	1070	B	1470	B	1420	B	4480	B	3450	B	4850	B	1700	B	2290	B	NA		NA		NA	
Manganese	3.8	B	12.1	B	3	B	2.8	B	30.3		36.7		1.4	B	6.9	B	4.1	B	NA		NA		NA	
Mercury	0.02	UJ	0.06	B	0.02	UJ	0.02	UJ	0.02	UJ	0.02	UJ	0.02	UJ	0.46		0.02	UJ	NA		NA		NA	
Nickel	10.2	U	10.2	U	10.2	U	10.2	U	10.2	U	10.2	U	10.2	U	10.2	U	10.2	U	NA		NA		NA	
Potassium	4810	B	9440		1520	B	1830	B	3660	B	2430	B	1010	B	1920	B	1620	B	NA		NA		NA	
Selenium	1.7	U	2.5	U	1.2	U	1.2	U	1.3	U	1.8	U	1.4	U	1.9	U	1.2	U	NA		NA		NA	
Silver	2.9	U	2.9	U	2.9	U	2.9	U	2.9	U	2.9	U	2.9	U	2.9	U	2.9	U	NA		NA		NA	
Sodium	7630		20100		1430	B	1430	B	3450	B	5030		3760	B	1130	B	2520	B	NA		NA		NA	
Thallium	2.3	U	2.3	U	2.3	U	2.3	U	2.3	U	2.3	U	2.3	U	2.3	U	2.3	U	NA		NA		NA	
Vanadium	2.8	U	9.3	B	8.3	B	6.3	B	3.5	B	2.8	U	2.8	U	2.8	U	2.8	U	NA		NA		NA	
Zinc	4.2	B	18.9	B	7.6	B	6.8	B	5	B	2.5	B	1.5	U	8.5	B	4.9	B	NA		NA		NA	

Notes for Analytical Results Tables
Study Area 44

Naval Training Center, Orlando
Orlando Florida

NA = Identified parameter not analyzed.
Sample ID = Sample Identifier
Lab ID = Laboratory identifier

Units:

mg/kg milligram per kilogram
ug/kg microgram per kilogram
mg/L milligram per liter
ug/L microgram per liter

The following standard validation qualifiers have the following definitions:

U The analyte/compound was analyzed for but was not detected above the reported sample quantitation limit
The number preceding the U qualifier is the reported sample quantitation limit.

J The analyte/compound was positively identified and the associated numerical value is an estimated concentration of the analyte/compound in the sample.

B The inorganic analyte was positively identified and the associated numerical value is an estimated concentration because the detection was below the contract required detection limit (CRDL) and above the instrument detection limit.

UJ The analyte/compound was not detected above the reported sample quantitation limit.
The reported quantitation limit, however, is approximate and may or may not represent the actual limit of quantitation necessary to accurately measure the analyte/compound in the sample.

R The sample results are rejected during data validation because of serious deficiencies in meeting quality control criteria.

APPENDIX G

TEST-PITTING INVESTIGATION
ALLEGED SILK SCREENING DISPOSAL AREA
STUDY AREA 44

MEMORANDUM OF TEST-PITTING INVESTIGATION ALLEGED SILK SCREENING DISPOSAL AREA STUDY AREA 44

Date: September 11, 1996

From: Marc Hawes

To: John Kaiser, Rick Allen

Subject: Test Pitting Activities on September 6, 1996 at Study Area 44

Following review of the results of geophysical surveys conducted during the screening investigations at Study Area 44, ABB-ES recommended, and the Orlando Partnering Team concurred, that the source for several anomalies needed to be identified.

On September 6, 1996, ABB-ES employed the services of Groundwater Protection, Inc. to excavate small test pits in the areas of two geophysical anomalies at Study Area 44 to assist in their identification. The Groundwater Protection crew consisted of a certified backhoe operator, Kevin Pelkey, and a helper, Robert Detweiler. The backhoe that Mr. Pelkey operated was a John Deere 310D backhoe.

A decontamination pad was built for decontaminating the backhoe and investigative derived waste (IDW) was contained in 55-gallon drums (photographs 1 and 2). All personnel on site were 40-hour OSHA 29 CFR 1910.210-certified and were given a health and safety briefing by ABB-ES. At each location, the backhoe operator was instructed to remove 6 inches of soil at a time (photograph 3). Each buck of soil was analyzed for volatile organic vapors with a flame ionization detector and the results were recorded in a logbook (Photograph 4).

At Study Area 44, two anomalies were investigated between Building 2720 and 2723 at the Naval Training Center, Orlando, Orange County, Florida. Figure 1 shows the locations of the two anomalies. The area was cordoned off with caution tape to form the exclusion zone.

The first anomaly, 44TP1, was located approximately four feet from the southwest corner of the existing basketball court and six feet south of monitoring well OLD-44-07A (Figure 1). A concrete pad was located one foot below land surface. The pad was approximately 18 inches wide by 8 inches thick. The length of the concrete pad was not determined. The size of the excavation was approximately eight feet wide by ten feet long by one foot deep (Photograph 5). No volatile organic vapors were detected and the anomaly was identified as non-hazardous. The test pit was backfilled with the original soil (Photograph 6).

The second anomaly, 44TP2, was located approximately ten feet southeast of monitoring well OLD-44-08A and 22 feet south of the basketball court (Figure 1). Within the first six inches of trenching, a three foot metal pipe, 2-inches in diameter was unearthed (Photograph 7). The excavation continued and a concrete was found at one foot bls, resembling the concrete pad found at 44TP1. The length of the pad was not determined. The size of the excavation was approximately five feet by five feet by one foot deep (Photograph 8). No volatile organic vapors were detected by the FID and the anomalies were identified as non-hazardous. The test pit was backfilled with the original soil. The metal pipe was removed from

the test pit, set aside and reported to the NTC, Orlando Environmental Coordinator at the Public Works Office.

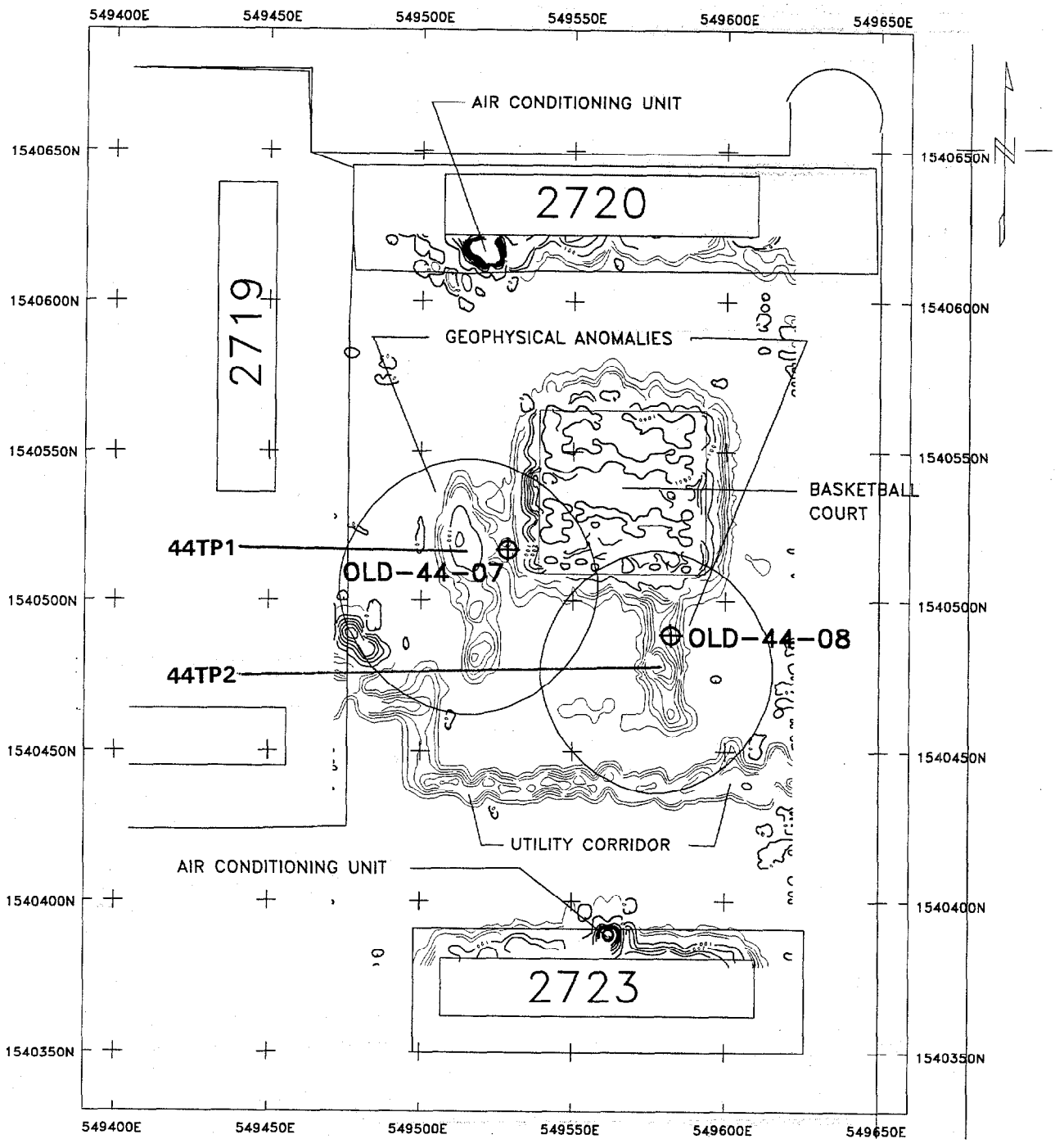

44TP1 = TEST PIT LOCATION

Scale 1:600

25 0 25 50

(feet)

SOUTHERN DIVISION

FIGURE 1. GEOPHYSICAL ANOMALIES AND MONITORING WELL LOCATION SELECTION

STUDY AREA 44
ALLEGED DISPOSAL AREA FOR SILK SCREENING SUPPLIES
GROUPS I THROUGH V STUDY AREAS AND
MISCELLANEOUS ADDITIONAL SITES, ADDENDUM 1

ABB ENVIRONMENTAL SERVICES, INC.

Photograph # 1: Backhoe being decontaminated.

Photograph # 2: 55-gallon drum for IDW storage.

Photograph # 3: Backhoe taking 6-inch buckets of soil at a time.

Photograph # 4: Monitoring each bucket for volatile organic vapors with a flame-ionization detector and recording any readings.

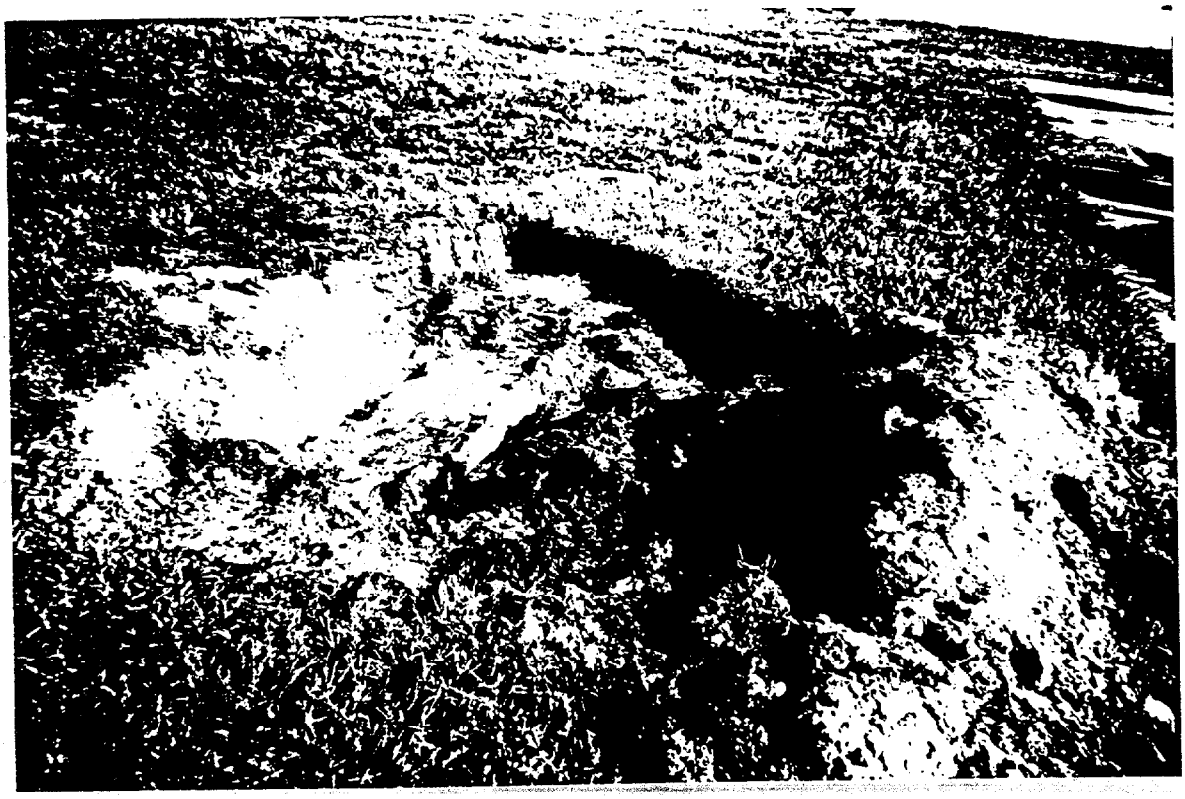

Photograph # 5: Excavation 44TP1 facing North.

Photograph # 6: Excavation 44TP1 backfilled with original soil.

Photograph # 7: Metal pipe found at 44TP2.

Photograph # 8: Concrete pad found at 44TP2.